Calculation Number:	Revision:	Total No. Pages (incl. cover):
RWA-1313-011	1	626

Calculation Title:

Cook Nuclear Plant Steam Generator Tube Rupture AST Radiological Analysis

Calculation Quality Classification: ☒ **Safety** ☐ **Non-safety**

Verification Performed: ☒ **Review** ☐ **Alternate Calculation** ☐ **Testing**

Description:

This calculation evaluates the control room dose to plant operators, and the offsite radiological consequences at the Exclusion Area Boundary and Low Population Zone for a steam generator tube rupture event using the Alternative Source Term Methodology.

Revision 1 was performed to incorporate a revision to the atmospheric dispersion factors driven by an update to the meteorological data (see RWA-1313-005, Rev. 1 for more information). In addition, the fraction of the ruptured tube break flow which flashes to vapor in the steam generator was modified to reflect ruptured steam generator tube flow data generated by the thermal hydraulic analysis code LOFTTR2. Dose consequences determined using a consistent set of inputs from the LOFTTR2 methodology have been included as Attachment H for information purposes.

Digital Signature or Printed Name, Signature, and Date:	Applicable Sections:
Preparer: Mark Pope Digitally signed by Mark Pope Date:2016.03.30 16:21:05 EDT	All
Reviewer: Nathan Block Digitally signed by Nathan Block Date: 2016.03.30 16:30:47 EDT	All
Approver: Joe Sinodis Digitally signed by Joe Sinodis Date:2016.03.30 18:20:47 EDT	All

Table of Contents

1 Purpose 5
2 Methodology 5
3 Inputs 6
4 Assumptions 11
5 Calculations 12
5.1 Noble Gas Release Model 12
5.1.1 Noble Gas Release Model Compartments 13
5.1.2 Noble Gas Release Model Pathways 16
5.1.3 Noble Gas Source Term Inputs 18
5.1.4 Noble Gas Release X/Q Inputs 19
5.1.5 Noble Gas Release Dose Results 22
5.2 Non-Noble Gas Release Model 23
5.2.1 Non-Noble Gas Release Model Compartments 25
5.2.2 Non-Noble Gas Release Model Pathways 27
5.2.3 Non-Noble Gas Release Model X/Q Inputs 36
5.3 Pre-Accident Iodine Spike Dose 36
5.3.1 Pre-Accident Iodine Spike Source Term Inputs 36
5.3.2 Pre-Accident Iodine Spike Dose Results 38
5.4 Concurrent Iodine Spike Dose – Iodine Release 38
5.4.1 Concurrent Iodine Spike Iodine Appearance Rates 38
5.4.2 Concurrent Iodine Spike Source Term Inputs (Iodine Release) 41
5.4.3 Concurrent Iodine Spike Filter Efficiency Adjustments (Iodine Release) 42
5.4.4 Concurrent Iodine Spike Dose Results (Iodine Release) 43
5.5 Concurrent Iodine Spike – RCS Activity Release 44
5.5.2 Concurrent Iodine Spike Source Term Inputs (RCS Activity Release) 46
5.5.3 Concurrent Iodine Spike Dose Results (RCS Activity Release) 47
5.6 Initial Steam Generator Iodine Release 47
5.6.1 Initial SG Iodine Release – Compartments 48
5.6.2 Initial SG Iodine Release – Pathways 48
5.6.3 Initial SG Iodine Release Source Term Inputs 48
5.6.4 Initial SG Iodine Gas Release Dose Results 49
5.7 Steam Generator Tube Rupture Dose Results 49
6 Electronic Files 50
7 References 52

Attachment A: Iodine Spike Inventory File A1-A24
Attachment B: Noble Gas Release RADTRAD Output B1-B53
Attachment C: Pre-Accident Spike RADTRAD Output C1-C167
Attachment D: Concurrent Accident Spike RADTRAD Output – Iodine Release D1-D96
Attachment E: Concurrent Accident Spike RADTRAD Output – RCS Release E1-E132
Attachment F: Steam Generator Iodine Release RADTRAD Output F1-F86
Attachment G: Owner's Review Comments G1-G5
Attachment H: LOFTTR2 Methodology Dose Consequences H1-H10

List of Figures

Figure 1: Noble Gas Release RADTRAD Model 13
Figure 2: Non-Noble Gas Release RADTRAD Model 24

List of Tables

Table 1: SGTR Dose Acceptance Criteria 6
Table 2: RCS Source Term 6
Table 3: Steam Release Rates 9
Table 4: Control Room Occupancy 10
Table 5: Breathing Rates 10
Table 6: Iodine Isotope Half Lives 11
Table 7: Noble Gas Release Model Compartments and Pathways 12
Table 8: EAB and LPZ Breathing Rates 14
Table 9: Control Room Occupancy Rate 14
Table 10: Control Room Recirculation Filters 15
Table 11: SGTR Noble Gas Release Fraction File 19
Table 12: RADTRAD X/Q Table 1 - EAB 20
Table 13: RADTRAD X/Q Table 2 - LPZ 20
Table 14: RADTRAD X/Q Table 3 - CR Makeup 21
Table 15: RADTRAD X/Q Table 4 - CR Inleakage 21
Table 16: Noble Gas Release Onsite X/Q Table Matrix 22
Table 17: SGTR Noble Gas Release TEDE Dose Results 22
Table 18: Non-Noble Gas Model Compartments and Pathways 23
Table 19: Integrated Break and Flashed Break Flow 28
Table 20: SGTR Flashing Fractions 29
Table 21: Flashed SG Tube Leakage and Break Flow Rates 30
Table 22: Unflashed Intact SG Tube Leakage Flow Rates 32
Table 23: Unflashed Ruptured SG Break and Leakage Flow Rates 33

Table 24: Non-Noble Gas Release Onsite X/Q Table Matrix 36
Table 25: SGTR Pre-Accident Spike Release Fraction File 37
Table 26: SGTR Pre-Accident Iodine Spike TEDE Dose Results 38
Table 27: Iodine Decay Removal Coefficients 39
Table 28: Total Iodine Removal Rate 40
Table 29: Equilibrium Iodine Appearance Rate 40
Table 30: SGTR Concurrent Iodine Appearance Rate 41
Table 31: SGTR Concurrent Spike Release Fraction File (Iodine Release) 42
Table 32: SGTR Concurrent Iodine Spike TEDE Dose Results (Iodine Release) 43
Table 33: SGTR Concurrent Spike Release Fraction File (RCS Activity) 47
Table 34: SGTR Concurrent Iodine Spike TEDE Dose Results (RCS Activity Release) 47
Table 35: SGTR SG Iodine Gas Release Fraction File 49
Table 36: SGTR Initial SG Iodine Release TEDE Dose Results 49
Table 37: SGTR Pre-Accident Iodine Spike TEDE Dose Results 50
Table 38: SGTR Concurrent Accident Iodine Spike TEDE Dose Results 50
Table 39: Electronic File Names and MD5 Checksums 51

1 Purpose

This calculation evaluates the control room dose to plant operators, and the offsite radiological consequences at the Exclusion Area Boundary (EAB) and Low Population Zone (LPZ), for a steam generator tube rupture (SGTR) event using the Alternative Source Term (AST) Methodology.

Revision 1 was performed to incorporate a revision to the atmospheric dispersion factors driven by an update to the meteorological data. In addition, the fraction of the ruptured tube break flow which flashes to vapor in the steam generator was modified to reflect ruptured steam generator tube flow data generated by the thermal hydraulic analysis code LOFTTR2. Dose consequences determined using a consistent set of inputs from the LOFTTR2 methodology have been included as Attachment H for information purposes.

2 Methodology

Control room and offsite doses are calculated for the steam generator tube rupture using the methodology outlined in Appendix F of Reg. Guide 1.183 (Reference [7.1]). Item G.3.1 of Reference [7.6] indicates that the SGTR event at Cook results in no fuel damage. Per Section 2 of Appendix F to Reference [7.1], when fuel damage is not postulated to occur, the activity release is to be based upon two different iodine spiking phenomena. In the first, an iodine spike is assumed to occur prior to the SGTR and results in an RCS iodine concentration that is equal to the maximum activity allowed by the Technical Specifications. In the second, iodine spiking occurs concurrently with the event and is produced at a rate that is 335 times greater than the appearance rate during normal operation. In both cases, the noble gases are assumed to be transported directly from the RCS to the environment without mitigation. The remaining isotopes are carried to the steam generators (SG) by primary-to-secondary leakage. Reduction in the fission product activity within the intact steam generators is dependent upon the steam generator water level; and the quantity of nuclides released to the environment is dependent upon the amount of steaming necessary to cool the RCS to 212 °F. In addition, the analysis considers the dose contribution from the release of the iodine initially present in the steam generator secondary during normal plant operation. Inputs and assumptions consider the occurrence and timing of a loss of offsite power with the objective of maximizing the postulated radiological consequences.

This analysis calculates the dose contribution from each of the radionuclide release pathways separately, which are then combined to obtain the total dose for the event. The following cases are considered:

Pre-Accident Iodine Spike

1.) Noble Gas Release (Section 5.1)
2.) Pre-Accident Iodine Spike Release (Section 5.3)
3.) Initial Steam Generator Iodine (Section 5.6)

Concurrent Iodine Spike

1.) Noble Gas Release (Section 5.1)
2.) Concurrent Iodine Spike – Iodine Release (Section 5.4)
3.) Concurrent Iodine Spike – RCS Activity Release (Section 5.5)
4.) Initial Steam Generator Iodine (Section 5.6)

The event acceptance criteria are discussed in Section 4.4 of Reference [7.1] and are based upon the requirements of 10CFR50.67. The dose limits for the steam generator tube rupture event are presented in Table 1, and the event is analyzed for 30 days.

Table 1: SGTR Dose Acceptance Criteria

Location	Limit (Rem TEDE)	Duration
EAB – Pre-accident Iodine Spike	25	Worst 2-hour period
LPZ – Pre-accident Iodine Spike	25	Until cold shutdown
EAB – Coincident Iodine Spike	2.5	Worst 2-hour period
LPZ – Coincident Iodine Spike	2.5	Until cold shutdown is established
Control Room	5	Duration of the accident

The release, transport, removal, and intake of radioisotopes are analyzed using RADTRAD 3.10 (References [7.2] through [7.5]), which is run on a computer (Red_Wolf_17) with an Intel® Core™ i7-4770 processor and 16GB of RAM running Windows 7 Professional. A review of all available RADTRAD software error notices confirmed that there are no open code errors that will adversely impact this project.

3 Inputs

3.1 The SGTR event is analyzed using the RCS source term from Table 16 of Reference [7.7], which is presented in Table 2. This source term represents the primary coolant activity with the iodine isotope activities set to the Technical Specification limit of 1.0 μCi/gm Dose Equivalent I-131 and the non-iodine isotope concentrations at the gross specific activity limit of 100/E-bar.

Table 2: RCS Source Term

Nuclide No.	Nuclide	Activity (μCi/gm)	Nuclide No.	Nuclide	Activity (μCi/gm)
1	Co-58	0.000E+00	51	Pr-143	6.713E-03
2	Co-60	0.000E+00	52	Nd-147	0.000E+00
3	Kr-85	2.385E+01	53	Np-239	0.000E+00
4	Kr-85m	5.204E-01	54	Pu-238	0.000E+00
5	Kr-87	3.299E-01	55	Pu-239	0.000E+00
6	Kr-88	9.148E-01	56	Pu-240	0.000E+00
7	Rb-86	8.797E-02	57	Pu-241	0.000E+00
8	Sr-89	1.335E-03	58	Am-241	0.000E+00
9	Sr-90	1.237E-04	59	Cm-242	0.000E+00
10	Sr-91	5.681E-04	60	Cm-244	0.000E+00
11	Sr-92	2.488E-04	61	Kr-83m	1.350E-01

Nuclide No.	Nuclide	Activity (µCi/gm)	Nuclide No.	Nuclide	Activity (µCi/gm)
12	Y-90	2.152E-04	62	Br-82	4.641E-03
13	Y-91	1.692E-02	63	Br-83	2.720E-02
14	Y-92	3.067E-04	64	Br-84	1.244E-02
15	Y-93	2.010E-04	65	Rb-89	2.530E-02
16	Zr-95	2.409E-02	66	Y-91m	3.314E-04
17	Zr-97	3.920E-04	67	Y-95	0.000E+00
18	Nb-95	3.478E-02	68	Nb-95m	1.867E-04
19	Mo-99	2.070E+00	69	Nb-97	4.900E-05
20	Tc-99m	1.980E+00	70	Rh-103m	1.988E-02
21	Ru-103	1.991E-02	71	Pd-109	0.000E+00
22	Ru-105	9.723E-05	72	Sb-124	0.000E+00
23	Ru-106	3.340E-02	73	Sb-125	0.000E+00
24	Rh-105	7.689E-04	74	Sb-126	0.000E+00
25	Sb-127	0.000E+00	75	Te-125m	2.449E-02
26	Sb-129	0.000E+00	76	Te-131	1.599E-02
27	Te-127	2.489E-01	77	Te-133	0.000E+00
28	Te-127m	2.465E-01	78	Te-133m	7.643E-03
29	Te-129	2.281E-01	79	Te-134	1.092E-02
30	Te-129m	3.463E-01	80	I-130	0.000E+00
31	Te-131m	5.787E-02	81	Xe-131m	1.600E+00
32	Te-132	9.639E-01	82	Xe-133m	1.423E+00
33	I-131	8.087E-01	83	Xe-135m	2.138E-01
34	I-132	6.411E-01	84	Xe-138	2.292E-01
35	I-133	1.0304E+00	85	Cs-134m	2.031E-02
36	I-134	1.231E-01	86	Cs-138	3.420E-01
37	I-135	5.365E-01	87	Ba-141	4.233E-05
38	Xe-133	1.037E+02	88	La-143	0.000E+00
39	Xe-135	3.361E+00	89	Pm-147	0.000E+00
40	Cs-134	3.327E+01	90	Pm-148	0.000E+00
41	Cs-136	2.188E+00	91	Pm-148m	0.000E+00
42	Cs-137	1.852E+01	92	Pm-149	0.000E+00
43	Ba-139	1.975E-04	93	Pm-151	0.000E+00
44	Ba-140	1.940E-03	94	Sm-153	0.000E+00
45	La-140	2.878E-03	95	Eu-154	0.000E+00
46	La-141	1.301E-04	96	Eu-155	0.000E+00
47	La-142	3.346E-05	97	Eu-156	0.000E+00
48	Ce-141	1.445E-02	98	Np-238	0.000E+00

Nuclide No.	Nuclide	Activity (μCi/gm)	Nuclide No.	Nuclide	Activity (μCi/gm)
49	Ce-143	6.911E-04	99	Pu-243	0.000E+00
50	Ce-144	4.229E-02	100	Am-242	0.000E+00

3.2 Prior to the event, the specific iodine activity in the steam generators secondary is at the Technical Specification limit of 0.1 μCi/gm Dose Equivalent I-131 from Item E.1 of Reference [7.6].

3.3 The maximum RCS iodine concentration allowed by the Technical Specifications during full power operation is 60 μCi/gm per Item B.14 of Reference [7.6].

3.4 The RADTRAD dose conversion factor file, **RWA-1205-004.inp**, is developed in Reference [7.8] is used in this analysis to supply the inhalation, ingestion, and submersion dose conversion factors from FGR 11 and FGR 12 (References [7.13] and [7.14]) for the source term isotopes.

3.5 Item B.2 of Reference [7.6] gives the minimum RCS volume as 12144.3 ft^3, which represents Unit 2 'cold' conditions and includes a full pressurizer volume. For conservatism, the larger Unit 1 pressurizer volume of 1834.4 ft^3 is subtracted from this value to determine the minimum RCS volume, excluding the fluid in the pressurizer:

$$Minimum\ RCS\ Volume = 12{,}144.3 - 1{,}834.4 = 10{,}309.9\ ft^3$$

The nominal RCS operating temperature is 571 °F for Unit 1 and 574 °F for Unit 2, with a nominal pressure of 2250 psia for both units (Reference [7.6], Items B.3 and B.4). These values are used to obtain the fluid density for the RCS volume-to-mass units conversion. For the minimum RCS mass, the Unit 2 conditions are applied which yield a fluid density of 45.213 lbm/ft^3. The corresponding minimum RCS mass is:

$$Minimum\ RCS\ Mass = 10{,}309.9\ ft^3 \times 45.213 \frac{lbm}{ft^3} = 466{,}141.5\ lbm$$

Conversely, Item B.2 of Reference [7.6] gives the maximum RCS volume as 12535.4 ft^3, which represents Unit 1 'cold' conditions and includes a full pressurizer volume. This same reference identifies that the volume at hot conditions can be obtained by applying a 3% volume expansion factor. Based upon a no-load temperature of 547.0 °F and a pressure of 2250 psia from Items B.3 and B.4 of Reference [7.6], with a fluid density of 47.035 lbm/ft^3, the maximum RCS mass is:

$$Maximum\ RCS\ Mass = (12{,}535.4\ ft^3) \times 1.03 \times \left(47.035 \frac{lbm}{ft^3}\right) = 607{,}290.6\ lbm$$

3.6 From Item E.2 of Reference [7.6], the primary-to-secondary leakage is limited to 0.25 gpm to any one steam generator and 1.0 gpm to all steam generators.

3.7 Item E.3 of Reference [7.6] gives the required fluid conditions for reported RCS leakage by the reactor coolant leak rate monitoring program as 70 °F. At atmospheric pressure, the corresponding fluid density is 62.30 lbm/ft^3.

3.8 The total integrated break flow from the RCS to the ruptured steam generator is given as 146,704 lbm in Item G.3.2 of Reference [7.6]. This value is based upon a break duration of 30 minutes.

3.9 The maximum letdown flow rate is listed as 120 gpm in Item B.8 of Reference [7.6]. NSAL-00-004 (Reference [7.15]) recommends applying a 10% uncertainty to the letdown flow when calculating the iodine appearance rates. Therefore, a conservative value for the maximum letdown flow rate is:

$$Maximum\ Letdown\ Flow\ Rate = 120\ gpm \times 1.1 = 132\ gpm$$

The letdown flow rate is based upon fluid conditions of 120 °F and 365 psia per Item B.9 of Reference [7.6], with a corresponding density of 61.78 lbm/ft^3.

3.10 Item B.13 of Reference [7.6] lists the Tech. Spec. limits for identified and unidentified RCS leakage as 10 gpm and 1 gpm, respectively.

3.11 The minimum liquid mass on the secondary side of the steam generators at Hot Full Power (HFP) conditions is 97,515.7 lbm/SG and the maximum secondary mass at Hot Zero Power (HZP) conditions is 161,000 lbm/SG from Item E.4 of Reference [7.6].

3.12 The steam generator moisture carryover fraction during normal plant operation is 0.045% for Unit 1 and 0.15% for Unit 2 (Reference [7.6], Item E.6). A conservative value of 0.2% is applied in this analysis.

3.13 Item E.5 of Reference [7.6] gives the time to cool the RCS to 212 °F and terminate steam releases as 24 hours, based upon a single train of RHR in service. Intact SG steam releases from Item G.3.4 of the same reference are provided which are based upon a cooldown to 212 °F in eight hours, with continued steaming for decay heat removal until 24 hours. These values are shown in Table 3. Note that the steam release values are conservatively high since no heat removal by the RHR system is credited in lowering the RCS temperature.

Table 3: Steam Release Rates

Time (hours)	Steam Release (lbm)
0 - 0.5	198,515
0.5 - 2	314,432
2 - 8	1,367,475
8 - 24	1,347,000

3.14 The total integrated steam release from the ruptured steam generator is given as 66,171 lbm in Item G.3.3 of Reference [7.6]. This value is based upon a release duration of 30 minutes.

3.15 Item G.3.7 of Reference [7.6] identifies a conservatively early reactor trip time of 101 seconds. Prior to the time of reactor trip, the total steam flow rate to the condenser is 17,153,800 lbm/hr per Item G.3.6 of Reference [7.6].

3.16 An iodine partition coefficient of 100 is provided by the condenser per Item G.3.5 of Reference [7.6].

3.17 The control room volume is given as 50,616 ft^3 in Item D.1 of Reference [7.6].

3.18 Item G.3.8 of Reference [7.6] indicates that a safety injection signal occurs within 334.74 seconds following the start of the event, which automatically places the control room ventilation into recirculation per Items D.3 and D.4 of the same reference. The 60 second delay time described in Item D.4 remains conservative for this event. Therefore, the control room ventilation is realigned by:

$$Control\ Room\ Ventilation\ Realignment\ = 334.74 + 60 = 394.74\,\text{sec} = 0.11\ hours$$

Items D.2 and D.5 of Reference [7.6] provide inputs related to the Control Room Ventilation system flow rates. During normal operation, a maximum unfiltered flow rate of 880 cfm enters the control room through the normal outdoor intake. When the control room ventilation system is placed into recirculation, the control room pressurization/cleanup fans circulate a minimum 5400 cfm through the control room filters, with 880 cfm of this flow supplied by fresh air from the emergency outdoor air intake.

3.19 A conservative control room unfiltered inleakage rate of 40 cfm is identified in Item D.6 of Reference [7.6]. This flow rate is applied throughout the duration of the event.

3.20 Item D.7 of Reference [7.6] lists the control room ventilation system filter efficiencies as 99% for particulates and 95% for organic and elemental iodine. These values do not include the 1% of the fan flow which bypasses the filters given in item D.8 of the same reference.

3.21 The occupancy rates for operators in the control room shown in Table 4 are taken from Section 4.2.6 of Reference [7.1].

Table 4: Control Room Occupancy

Time Period (hours)	Occupancy
$0.0 \leq t \leq 24.0$	1.0
$24.0 < t < 96.0$	0.6
$96.0 \leq t \leq 720.0$	0.4

3.22 Table 5 presents the offsite and control room breathing rates specified in Sections 4.1.3 and 4.2.6 of Reference [7.1].

Table 5: Breathing Rates

Time Period (hours)	Offsite (m^3/sec)	Control Room (m^3/sec)
$0.0 \leq t \leq 8.0$	3.5×10^{-4}	3.5×10^{-4}

Time Period (hours)	Offsite (m^3/sec)	Control Room (m^3/sec)
$8.0 < t \leq 24.0$	1.8×10^{-4}	3.5×10^{-4}
$24.0 < t \leq 720.0$	2.3×10^{-4}	3.5×10^{-4}

3.23 The half lives of the isotopes used in the development of the iodine appearance rates are taken from Table A.1 of Reference [7.14] and listed in Table 6.

Table 6: Iodine Isotope Half Lives

Nuclide	Half-Life	Half-Life Units	Half-Life (sec)
I-131	8.04	days	694656
I-132	2.3	hours	8280
I-133	20.8	hours	74880
I-134	52.6	minutes	3156
I-135	6.61	hours	23796

4 Assumptions

The following major assumptions are applied in the analysis.

4.1 Prior to the reactor trip, the main steam flow rate is assumed to be equally distributed between the four steam generators.

4.2 Uncovery of the tubes on the secondary side of the intact steam generators is assumed to occur following a reactor trip. Auxiliary feedwater is credited with recovering steam generator levels within 40 minutes per Item E.8 of Reference [7.6]. During the period of tube uncovery, a portion of the primary-to-secondary leakage is assumed to flash to vapor and be released to the environment without mitigation.

4.3 Radionuclide concentrations in the secondary side fluid of the intact steam generators assume operator action to maintain a constant secondary mass during periods of steam release.

4.4 As described in Section 5.5 of Reference [7.9], when the control room ventilation is aligned in the pressurization/cleanup mode, the control room envelope is at a positive pressure with respect to the surrounding areas and leakage is predominantly out of the control room. However, this flow configuration creates a negative pressure in the control room air conditioning intake ducting downstream of the isolated normal intake dampers. Therefore, in this analysis, the control room unfiltered inleakage is assumed to enter the control room at the location of the normal intakes.

5 Calculations

5.1 Noble Gas Release Model

Appendix F of Reference [7.1] provides guidance for evaluating the SGTR event. Per Section 5.5 of this reference, all of the noble gas radionuclides which escape from the primary system are assumed to be released to the environment without reduction or mitigation. Based upon this guidance, the RADTRAD model used to determine the noble gas dose contribution is comprised of the three compartments and four pathways described in Table 7 and shown in Figure 1.

Table 7: Noble Gas Release Model Compartments and Pathways

Compartment Number	Compartment Description
1	RCS
2	Environment
3	Control Room

Pathway Number	Pathway Description	Compartment Connections
1	Steam Generator Tube Leakage and Break Flow	1 to 2
2	Control Room Makeup	2 to 3
3	Control Room Unfiltered Inleakage	2 to 3
4	Control Room Exhaust	3 to 2

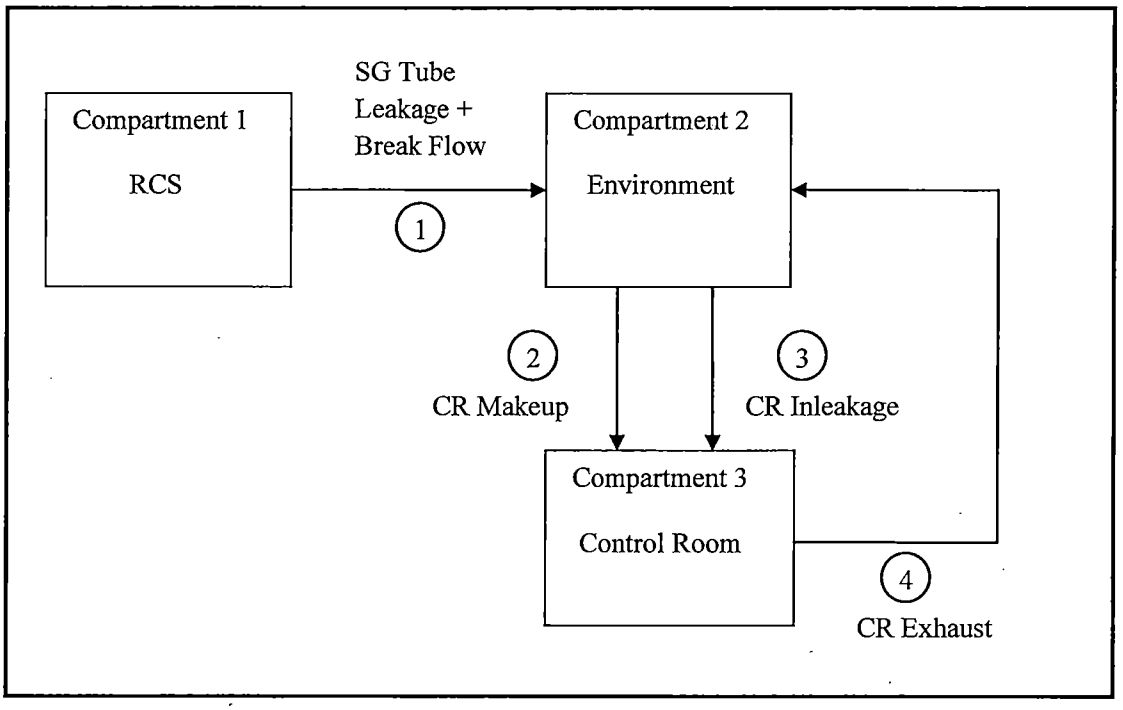

Figure 1: Noble Gas Release RADTRAD Model

5.1.1 Noble Gas Release Model Compartments

5.1.1.1 Compartment 1 – RCS

Section 3 of Appendix F to Reference [7.1] requires that the activity released from the fuel be instantaneously and homogeneously deposited into the primary coolant. As such, a source term multiplier of 1.0 is applied to the RCS compartment. Since this event does not result in fuel failures and the RCS activity is defined in terms of a specific activity, the volume of the RCS compartment is somewhat arbitrary. For convenience, the minimum RCS mass of 466,141.5 lbm from Input 3.5 is applied.

Compartment #1 Summary	
Compartment Name	RCS
Compartment Volume	466,141.5 lbm
Compartment Type	Normal
Source Multiplier	1.0
Sprays	No
Recirculating Filters	No
Natural Deposition	No
Overlying Pool	No
Dose Location	No

5.1.1.2 Compartment 2 – Environment

Compartment 2 represents the environment. Default inputs for a RADTRAD environment compartment type are applied. The environment is identified as a dose location, with offsite breathing rates from Input 3.22 entered for both EAB and LPZ dose locations.

Table 8: EAB and LPZ Breathing Rates

Time (hours)	Breathing Rate (m^3/sec)
0.0	3.5×10^{-4}
8.0	1.8×10^{-4}
24.0	2.3×10^{-4}
720.0	2.3×10^{-4}

Compartment #2 Summary	
Compartment Name	Environment
Compartment Volume	Default
Compartment Type	Environment
Source Multiplier	0.0
Sprays	N/A
Recirculating Filters	N/A
Natural Deposition	N/A
Overlying Pool	N/A
Dose Location	Yes

5.1.1.3 Compartment 3 – Control Room

Compartment 3 is designated as the Control Room. A volume of 50,616 ft^3 from Input 3.14 is specified. The control room is designated as a dose location with a constant breathing rate of 3.5×10^{-4} m^3/s from Input 3.22 and occupancy rates from Input 3.21.

Table 9: Control Room Occupancy Rate

Time (hours)	Occupancy Factor
0.0	1.0
24.0	0.6
96.0	0.4
720.0	0.4

Compartment #3 Summary	
Compartment Name	Control Room
Compartment Volume	50,616 ft^3
Compartment Type	Control Room
Source Multiplier	0.0
Sprays	No
Recirculating Filters	Yes
Natural Deposition	No
Overlying Pool	No
Dose Location	Yes

5.1.1.3.1 Control Room Recirculation Filters

Input 3.18 describes that the safety injection signal causes the control room ventilation system to automatically realign into the recirculation mode 0.11 hours into the event. Once in recirculation, the control room pressurization/cleanup fan delivers a minimum of 5400 cfm through the control room filters, with a maximum of 880 cfm of this flow being supplied by outside air. The minimum amount of control room air that is continuously filtered is therefore:

$$Recirculation\ Flow\ Rate = 5400\ cfm - 880\ cfm = 4520\ cfm$$

Input 3.20 lists the filter efficiencies as 99% for particulates and 95% for iodine. These values are adjusted to account for the 1% of the cleanup system flow which bypasses the filters:

$$Effective\ Particulate\ Filter\ Efficiency = 99\% \times 0.99 = 98.01\%$$

$$Effective\ Iodine\ Filter\ Efficiency = 95\% \times 0.99 = 94.05\%$$

The control room recirculation filter inputs are shown in Table 10. Note that the control room recirculation filters have no impact on the noble gas dose contribution.

Table 10: Control Room Recirculation Filters

		Filter Efficiencies (%)		
Time (hours)	**Flow Rate (cfm)**	**Aerosol**	**Elemental**	**Organic**
0.0	0.0	98.01	94.05	94.05
0.11	4520.0	98.01	94.05	94.05
720.0	4520.0	98.01	94.05	94.05

5.1.2 Noble Gas Release Model Pathways

All pathways in the noble gas model are defined with the RADTRAD filter transfer mechanism option.

5.1.2.1 Pathway 1 – Steam Generator Tube Leakage and Break Flow

Pathway 1 is used to simulate the release of the noble gases from the primary coolant to the environment. Section 5.2 of Appendix F to Reference [7.1] provides the following guidance regarding this leak rate:

The density used in converting volumetric leak rates (e.g., gpm) to mass leak rates (e.g., lbm/hr) should be consistent with the basis of surveillance tests used to show compliance with leak rate technical specifications. These tests are typically based on cool liquid. Facility instrumentation used to determine leakage is typically located on lines containing cool liquids. In most cases, the density should be assumed to be 1.0 gm/cc (62.4 lbm/ft^3).

Input 3.8 identifies that the integrated break flow from the ruptured steam generator tube over a 30 minute period is 146,704 lbm, for an average break flow rate of:

$$Average\ Ruptured\ Tube\ Break\ Flow = \frac{146{,}704\ lbm}{30\ min} = 4890.13\ lbm/min$$

In addition, Input 3.6 gives the total primary-to-secondary leakage to all steam generators as 1.0 gpm. Per Input 3.7, the applicable density to be used in converting the RCS volumetric leak rate to mass leak rate is 62.3 lbm/ft^3. This results in the following total steam generator tube leakage rate:

$$Total\ Steam\ Generator\ Tube\ Leakage = \frac{1.0\ gpm \times 62.3 \frac{lbm}{ft^3}}{7.4805\ gal/ft^3} = 8.328\ lbm/min$$

Thus, until the break flow is terminated at 30 minutes, the total break and tube leakage is:

$$Tube\ Leakage\ Plus\ Break\ Flow = 4890.13 + 8.328 = 4898.46\ lbm/min$$

Following isolation of the ruptured steam generator, leakage into the three intact steam generators continues at a rate of 0.25 gpm/SG:

$$Intact\ Tube\ Leakage\ Flow = 0.75 \times 8.328 = 6.246\ lbm/min$$

According to Section 5.3 of Appendix F to Reference [7.1], the primary-to-secondary leakage should be assumed to continue until the temperature of the leakage is less than 212 °F, and the release of radioactivity should be assumed to continue until shutdown cooling is in operation and releases from the steam generators have been terminated. Input 3.13 identifies that this condition is achieved after 24 hours.

Pathway #1 Summary				
Pathway Name:	Steam Generator Tube Leakage and Break Flow			
From Compartment: 1		**To Compartment:** 2		
		Decontamination Factor		
Time (hours)	**Flow Rate (lbm/min)**	**Aerosol**	**Elemental**	**Organic**
0.0	4898.46	0.0	0.0	0.0
0.5	6.246	0.0	0.0	0.0
24.0	0.0	0.0	0.0	0.0
720.0	0.0	0.0	0.0	0.0

5.1.2.2 Pathway 2 – Control Room Makeup

Pathway 2 represents the outside air flow into the control room both before and after the ventilation system is aligned to the recirculation mode. Input 3.18 gives the makeup flow rate as 880 cfm in all modes and identifies that the system is realigned at 0.11 hours. The same filters used by the control room recirculation fans described in Section 5.1.1.3.1 also filter the makeup flow following system realignment.

Pathway #2 Summary				
Pathway Name:	Control Room Makeup			
From Compartment: 2		**To Compartment:** 3		
		Filter Efficiencies (%)		
Time (hours)	**Flow Rate (cfm)**	**Aerosol**	**Elemental**	**Organic**
0.0	880.0	0.0	0.0	0.0
0.11	880.0	98.01	94.05	94.05
720.0	880.0	98.01	94.05	94.05

5.1.2.3 Pathway 3 – Control Room Unfiltered Inleakage

Pathway 3 models the unfiltered inleakage to the control room. A constant flow rate of 40 cfm is applied throughout the event (Input 3.19).

Pathway #3 Summary				
Pathway Name:	Control Room Unfiltered Inleakage			
From Compartment: 2		**To Compartment:** 3		
		Filter Efficiencies (%)		
Time (hours)	**Flow Rate (cfm)**	**Aerosol**	**Elemental**	**Organic**
0.0	40.0	0.0	0.0	0.0
720.0	40.0	0.0	0.0	0.0

5.1.2.4 Pathway 4 – Control Room Exhaust

Pathway 4 accounts for the exhaust flow from the control room. The flow rate through this pathway is equal to the sum of the makeup and unfiltered inleakage flows.

Pathway #4 Summary				
Pathway Name:	Control Room Exhaust			
From Compartment: 3		**To Compartment:** 2		
		Filter Efficiencies (%)		
Time (hours)	**Flow Rate (cfm)**	**Aerosol**	**Elemental**	**Organic**
0.0	920.0	0.0	0.0	0.0
720.0	920.0	0.0	0.0	0.0

5.1.3 Noble Gas Source Term Inputs

5.1.3.1 Plant Power

The plant power input is used in combination with the nuclear inventory file (.nif) to release the source term activity with units of Curies. The RCS source term listed in Table 2 is given in units of μCi/gm. This source term is converted to curies by using the plant power to multiply these specific activities by the mass of the RCS. The mass of the RCS should be consistent with the value entered for the RCS compartment in Section 5.1.1.1. The corresponding plant power is equal to:

$$Plant\ Power = \frac{466{,}141.5\ lbm \times 453.59\ gm/lbm}{1{,}000{,}000\ \mu Ci/Ci} = 211.44\ Ci - gm\mu Ci$$

5.1.3.2 Decay Options

The source term controls are set with a release time at 0.0 seconds and no delay time. This allows all of the release timing to be entered through the release fraction and timing file (RFT). Options are selected to allow for radioactive decay and the production of daughter products.

5.1.3.3 Iodine Fractions

Since there are no iodine isotopes involved in the noble gas release, the iodine fractions are not used. Placeholder values are entered into the model.

5.1.3.4 Inventory File

Data shown in Table 2 is formatted into RADTRAD nuclear inventory file **Cook_RCS.nif** as discussed in Section 6 of Reference [7.7]. Note that the Power Level and Inventory Type flag in this file are both set to 1.0 as shown on page D2 of Reference [7.7], which allows the units to be controlled by the user with the plant power input.

5.1.3.5 Release File

As discussed in Section 5.1, 100% of the noble gases in the RCS liquid are released directly to the environment. This is accomplished by setting the noble gas release fraction to 1.0 in the release fraction and timing file and by setting the fractions of all other nuclide groups to zero. The RFT file shown in Table 11 is saved as file **SGTR_NG_R1.rft**.

Table 11: SGTR Noble Gas Release Fraction File

```
Release Fraction and Timing Name:
 RWA-1313-011 - D. C. Cook SGTR Noble Gas
 Duration (h):
  0.1000E-04  0.0000E+00  0.0000E+00  0.0000E+00
 Noble Gases:
  0.1000E+01  0.0000E+00  0.0000E+00  0.0000E+00
 Iodine:
  0.0000E+00  0.0000E+00  0.0000E+00  0.0000E+00
 Cesium:
  0.0000E+00  0.0000E+00  0.0000E+00  0.0000E+00
 Tellurium:
  0.0000E+00  0.0000E+00  0.0000E+00  0.0000E+00
 Strontium:
  0.0000E+00  0.0000E+00  0.0000E+00  0.0000E+00
 Barium:
  0.0000E+00  0.0000E+00  0.0000E+00  0.0000E+00
 Ruthenium:
  0.0000E+00  0.0000E+00  0.0000E+00  0.0000E+00
 Cerium:
  0.0000E+00  0.0000E+00  0.0000E+00  0.0000E+00
 Lanthanum:
  0.0000E+00  0.0000E+00  0.0000E+00  0.0000E+00
 Non-Radioactive Aerosols (kg):
  0.0000E+00  0.0000E+00  0.0000E+00  0.0000E+00
 End of Release File
```

5.1.4 Noble Gas Release X/Q Inputs

This analysis addresses releases from either unit and must consider the dose impact on all receptor locations applicable to both units. As such, the X/Q values reflect the most limiting release-receptor pair combination without regard to the unit in which the event occurs. Prior to the reactor trip, noble gases exit the system from the steam jet air ejectors (SJAE) in the turbine building. Following the reactor trip, the release pathway is by way of the steam discharge used for plant cooldown, which occurs through the PORVs/MSSVs located in the main steam enclosures. Therefore, the X/Qs shift from the SJAEs to the PORVs/main steam enclosures at the time of reactor trip.

5.1.4.1 Offsite

Tables 41 and 42 of Reference [7.11] summarize the maximum atmospheric dispersion factors at the EAB and LPZ, respectively, for all release locations. These tables show that the X/Q value from the Unit 1 turbine

building exceeds the value from the Unit 2 turbine building during the first time period at both the EAB and the LPZ. From Input 3.15, the reactor trip occurs at 101 seconds (0.028 hours). Therefore, the 0-2 hour values from the Unit 1 turbine building are applied during the first 101 seconds of the event. Tables 41 and 42 of Reference [7.11] also show that the X/Q values from the Unit 1 main steam enclosures (EMSE/WMSE) exceed the values from both Unit 2 enclosures for all time periods for both receptor locations. Consequently, the Unit 1 enclosure X/Qs are applied in the model for the remainder of the event as shown in Table 12 and Table 13. The EAB dose acceptance criteria given in 10CFR50.67 applies to any 2-hour period. Therefore, the limiting WMSE EAB X/Q value for any time period from Table 41 of Reference [7.11] is used as the post-trip X/Q throughout the event to ensure that the 2-hour EAB doses are consistently calculated by RADTRAD without regard to long term average atmospheric dispersion factor values.

Table 12: RADTRAD X/Q Table 1 - EAB

Time (hours)	X/Q (sec/m^3)	Release Location
0.0	8.62E-04	Unit 1 Turbine Bldg.
0.028	5.87E-04	U1 WMSE
720.0	5.87E-04	U1 WMSE

Table 13: RADTRAD X/Q Table 2 - LPZ

Time (hours)	X/Q (sec/m^3)	Release Location
0.0	1.16E-04	Unit 1 Turbine Bldg.
0.028	1.13E-04	U1 WMSE
2.0	5.29E-05	U1 EMSE
8.0	3.63E-05	U1 EMSE
24.0	1.65E-05	U1 WMSE
96.0	6.36E-06	U1 WMSE
720.0	6.36E-06	U1 WMSE

5.1.4.2 Onsite

5.1.4.2.1 Control Room Makeup

Releases occur from the SJAEs until the reactor trips at 0.028 hours. During this time, makeup flow enters the control room through the normal intake. Tables 11 and 12 of Reference [7.10] show the highest X/Q for releases from the SJAEs to the normal intakes during this period is from the Unit 1 ejector. Immediately following the reactor trip, releases are from the PORVs/MSSVs while control room makeup flow continues to enter through the normal intakes. During this period, the limiting release-receptor combination is from the Unit 2 PORV/MSSV to the Unit 2 intake. From Input 3.18, the control room ventilation system is aligned to the pressurization mode after 0.11 hours when control room makeup flow enters through the emergency intake. The limiting release-receptor pair for releases from the PORVs/MSSVs to the emergency intakes also occurs on Unit 2 as shown in Tables 13 and 14 of Reference [7.10]. The RADTRAD X/Q inputs for the control room

makeup pathway presented in Table 14 reflect the both the reactor trip and control room ventilation realignment.

Table 14: RADTRAD X/Q Table 3 - CR Makeup

Time (hours)	X/Q (sec/m^3)	Release-Receptor Location
0.0	8.50E-04	Unit 1 SJAE – U1 Normal Intake
0.028	1.09E-02	U2 PORVs/MSSVs – U2 Normal Intake
0.11	1.26E-02	U2 PORVS/MSSVs – U2 Emergency Intake
2.0	9.72E-03	U2 PORVS/MSSVs – U2 Emergency Intake
8.0	3.26E-03	U2 PORVS/MSSVs – U2 Emergency Intake
24.0	3.17E-03	U2 PORVS/MSSVs – U2 Emergency Intake
96.0	2.80E-03	U2 PORVS/MSSVs – U2 Emergency Intake
720.0	2.80E-03	U2 PORVS/MSSVs – U2 Emergency Intake

5.1.4.2.2 Control Room Unfiltered Inleakage

As discussed in Assumption 4.4, the unfiltered inleakage enters the control room envelope through the normal intakes throughout the event. From Section 5.1.4.2.1, the limiting X/Q from the SJAEs to the normal intakes is on Unit 1 prior to the reactor trip. From Tables 11 and 12 of Reference [7.10], it can be seen that the higher X/Qs between the PORVs/MSSVs and the normal intakes occur for releases from Unit 2 to the Unit 2 intake for all time periods. The corresponding RADTRAD X/Q input for the control room inleakage pathway is shown in Table 15.

Table 15: RADTRAD X/Q Table 4 - CR Inleakage

Time (hours)	X/Q (sec/m^3)	Release-Receptor Location
0.0	8.50E-04	Unit 1 SJAE – U1 Normal Intake
0.028	1.09E-02	U2 PORVs/MSSVs – U2 Normal Intake
2.0	8.61E-03	U2 PORVs/MSSVs – U2 Normal Intake
8.0	2.87E-03	U2 PORVs/MSSVs – U2 Normal Intake
24.0	2.78E-03	U2 PORVs/MSSVs – U2 Normal Intake
96.0	2.50E-03	U2 PORVs/MSSVs – U2 Normal Intake
720.0	2.50E-03	U2 PORVs/MSSVs – U2 Normal Intake

The onsite X/Q table matrix which reflects the combination of release and intake pathways as input into RADTRAD is shown in Table 16.

Table 16: Noble Gas Release Onsite X/Q Table Matrix

Release Path	(2) Control Room Makeup	(3) CR Unfiltered Inleakage
(1) SG Tube Leakage and Break Flow	X/Q Table 3	X/Q Table 4

5.1.5 Noble Gas Release Dose Results

The results of the noble gas dose contribution to the SGTR event are presented in Table 17. The corresponding RADTRAD output file, **SGTR_NG_R1.o0**, is provided in Attachment B.

Table 17: SGTR Noble Gas Release TEDE Dose Results

EAB (rem)	LPZ (rem)	Control Room (rem)
4.1808E-02	7.8965E-03	2.3863E-02

5.2 Non-Noble Gas Release Model

The non-noble gas release RADTRAD model evaluates the transport of iodines and particulates that are deposited into the RCS, carried into the steam generators via tube leakage, and released into the environment as a result of blowdown from the ruptured steam generator and steam discharge from the intact steam generators during the plant cooldown. Section 5 of Appendix F to Reference [7.1] provides guidance related to this process, and refers to Sections 5.5 and 5.6 of Appendix E of this same reference for specific assumptions regarding partitioning within the steam generators and the direct release of the portion of the primary-to-secondary leakage that flashes to vapor. The RADTRAD compartments, flow paths, and release locations developed in this section are used as a base model for the specific release processes and dose consequences evaluated in Sections 5.3 through 5.6. The non-noble gas release RADTRAD model is represented by five compartments and eight pathways as described in Table 18, and is illustrated in Figure 2.

Table 18: Non-Noble Gas Model Compartments and Pathways

Compartment Number	Compartment Description
1	RCS
2	Intact Steam Generators
3	Environment
4	Control Room
5	Ruptured Steam Generator

Pathway Number	Pathway Description	Compartment Connections
1	Flashed Break Flow & SG Tube Leakage	1 to 3
2	Control Room Makeup	3 to 4
3	Control Room Unfiltered Inleakage	3 to 4
4	Control Room Exhaust	4 to 3
5	Unflashed Intact SG Tube Leakage	1 to 2
6	Unflashed Ruptured SG Break Flow & Tube Leakage	1 to 5
7	Intact Steam Generator Steam Release	2 to 3
8	Ruptured Steam Generator Steam Release	5 to 3

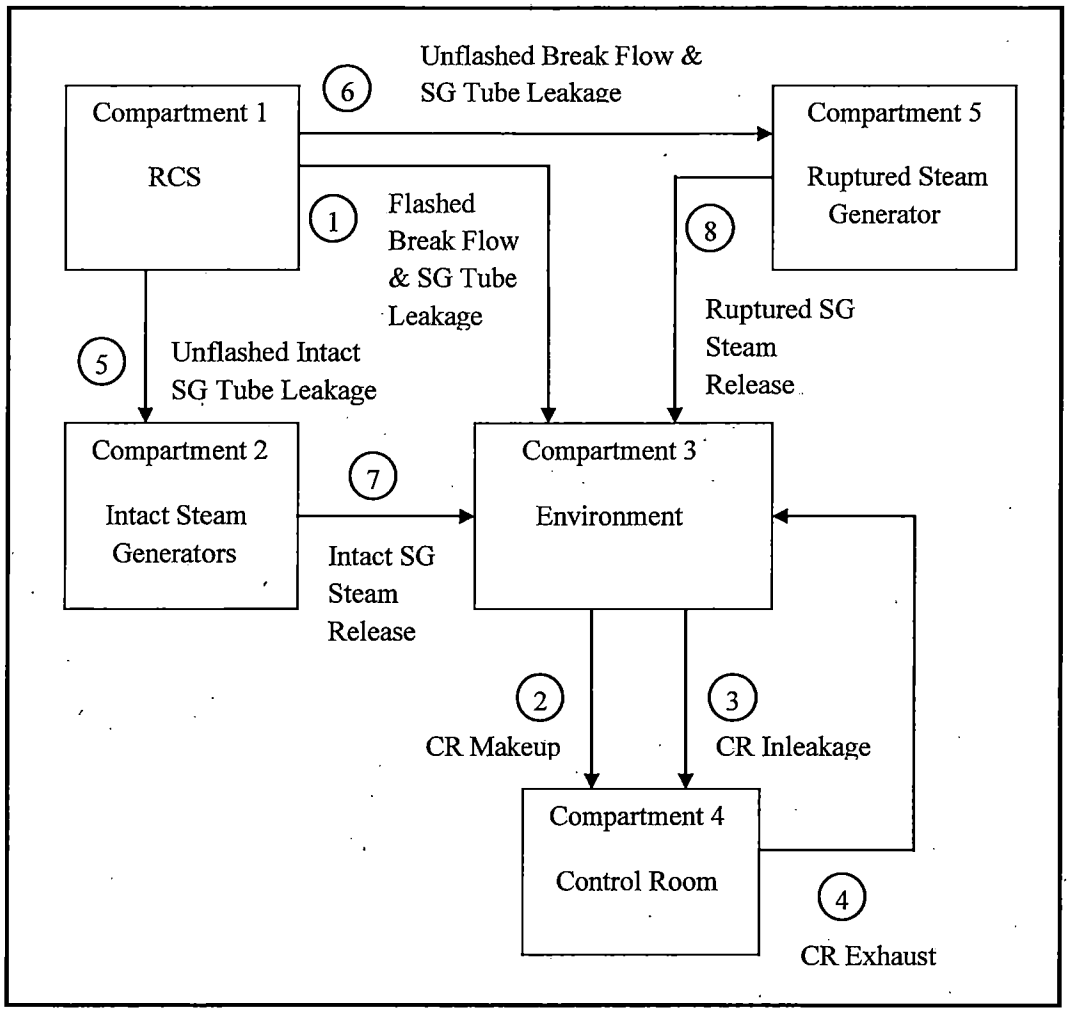

Figure 2: Non-Noble Gas Release RADTRAD Model

5.2.1 Non-Noble Gas Release Model Compartments

5.2.1.1 Compartment 1 – RCS

Compartment 1 represents the RCS. Inputs for this compartment are unchanged from those developed for the RCS volume described in Section 5.1.1.1.

Compartment #1 Summary	
Compartment Name	RCS
Compartment Volume	466,141.5 lbm
Compartment Type	Normal
Source Multiplier	1.0
Sprays	No
Recirculating Filters	No
Natural Deposition	No
Overlying Pool	No
Dose Location	No

5.2.1.2 Compartment 2 – Intact Steam Generators

Compartment 2 represents the mass of liquid in the three intact steam generators. Input 3.11 lists the minimum liquid mass of a single steam generator as 97,515.7 lbm. The compartment volume is therefore set to:

$$Steam\ Generator\ Compartment\ Volume = 3 \times 97{,}515.7\ lbm = 292{,}547.1\ lbm$$

Use of the minimum steam generator volume conservatively results in maximum nuclide concentrations in the steam generator secondary for a fixed primary-to-secondary leakage rate. The source multiplier is set to zero since the initial iodine activity in the steam generators is evaluated separately in Section 5.6.

Compartment #2 Summary	
Compartment Name	Intact Steam Generators
Compartment Volume	292,547.1 lbm
Compartment Type	Normal
Source Multiplier	0.0
Sprays	No
Recirculating Filters	No
Natural Deposition	No
Overlying Pool	No
Dose Location	No

5.2.1.3 Compartment 3 – Environment

Compartment 3 simulates the environment. Inputs for this compartment are documented in Section 5.1.1.2.

Compartment #3 Summary	
Compartment Name	Environment
Compartment Volume	Default
Compartment Type	Environment
Source Multiplier	0.0
Sprays	N/A
Recirculating Filters	N/A
Natural Deposition	N/A
Overlying Pool	N/A
Dose Location	Yes

5.2.1.4 Compartment 4 – Control Room

The control room compartment is documented in Section 5.1.1.3. Control room recirculation filter inputs are unchanged from those provided in Table 10. The breathing rate of 3.5×10^{-4} m^3/s from Input 3.22 continues to apply, as well as the occupancy rates from Input 3.21 listed in Table 9.

Compartment #4 Summary	
Compartment Name	Control Room
Compartment Volume	50,616 ft^3
Compartment Type	Control Room
Source Multiplier	0.0
Sprays	No
Recirculating Filters	Yes
Natural Deposition	No
Overlying Pool	No
Dose Location	Yes

5.2.1.5 Compartment 5 – Ruptured Steam Generator

This compartment represents the ruptured steam generator secondary side. To maximize the radionuclide concentration resulting from the tube break flow, the minimum volume of 97,515.7 lbm from Input 3.11 is applied.

Compartment #5 Summary	
Compartment Name	Ruptured Steam Generator
Compartment Volume	97,515.7 lbm
Compartment Type	Normal
Source Multiplier	0.0
Sprays	No
Recirculating Filters	No
Natural Deposition	No
Overlying Pool	No
Dose Location	No

5.2.2 Non-Noble Gas Release Model Pathways

The non-noble gas model pathways are defined using the RADTRAD filter transfer mechanism option.

5.2.2.1 Pathway 1 – Flashed Break Flow and Steam Generator Tube Leakage

The behavior of iodines and particulates in the steam generators is modeled using the guidance provided in Section 5.5 and 5.6 of Appendix E to Reference [7.1]. Section 5.5.1 of this reference states:

A portion of the primary-to-secondary leakage will flash to vapor, based on the thermodynamic conditions in the reactor and secondary coolant.

- *During periods of steam generator dryout, all of the primary-to-secondary leakage is assumed to flash to vapor and be released to the environment with no mitigation.*
- *With regard to the unaffected generators used for plant cooldown, the primary-to-secondary leakage can be assumed to mix with the secondary water without flashing during periods of total tube submergence.*

In addition, Section 5.6 of the Appendix E to the Reg. Guide adds:

Operating experience and analyses have shown that for some steam generator designs, tube uncovery may occur for a short period following any reactor trip (Ref. E-3). The potential impact of tube uncovery on the transport model parameters (e.g., flash fraction, scrubbing credit) needs to be considered. The impact of emergency operating procedure restoration strategies on steam generator water levels should be evaluated.

As discussed in Assumption 4.2, the intact steam generator water levels are assumed to temporarily drop below the top of the tubes following a reactor trip, with tube bundle recovery occurring after 40 minutes. During the time of tube uncovery, a portion of the primary-to-secondary leakage will flash to vapor and be released directly to the environment without mitigation. Therefore, this pathway represents both the flashed break flow from the ruptured steam generator and the flashed portion of the primary-to secondary leakage from all of the steam generators.

5.2.2.1.1 Steam Generator Tube Leakage Flashing Fractions

The fraction of the broken tube flow which flashes to vapor in the ruptured steam generator can be derived from the integrated break flow and the integrated flashed break flow from the Unit 2 SGTR analysis presented in Section 6.3.2 of Reference [7.17]. The figures on Pages 43 and 44 of this reference present the total break flow and the flashed break flow as a function of time. This allows the break flow flashing fraction to be determined for any incremental period during the event to be calculated using a simple ratio:

$$Flashing\ Fraction = \frac{Flashed\ Flow\ (lbm)}{Break\ Flow\ (lbm)}$$

As an example, Section 6.3.2 of Reference [7.17] identifies the reactor trip time as 101 seconds. The integrated break flow scaled from the figure on Page 43 of Reference [7.17] at 100 seconds is 8200 lbm. Similarly, the integrated flashed break flow scaled from Page 44 of this reference is 1500 lbm. Therefore, the average pre-trip flashing fraction is calculated as:

$$Flashing\ Fraction_{0-100\ sec} = \frac{1500 - 0\ lbm}{8200 - 0\ lbm} = 0.183$$

This method is applied to selected time intervals until flashing stops at approximately 1900 seconds due to the RCS cooldown as discussed in Section 6.3.2 of Reference [7.17]. Note that the RCS cooldown is initiated using the intact steam generators at 1662 seconds as shown in the event sequence table in Section 6.3.2 of this same reference. The resulting integrated flows and flashing fractions are shown in Table 19. Table 19 also includes average break flow rates for each interval, which are calculated from the integrated break flow over the period. These values can be compared to the break flow rates from Page 42 of Reference [7.17] as a means of validating the numerical values of the integrated break flows scaled from Page 43 of this reference.

Table 19: Integrated Break and Flashed Break Flow

Interval Start Time (t_1) (sec)	Interval End Time (t_2) (sec)	Integrated Break Flow at $t=t_2$ (lbm)	Integrated Flashed Break Flow at $t=t_2$ (lbm)	Flashing Fraction	Average Break Flow Rate (lbm/sec)
0.0	100.0	8200	1500	0.183	82.0
100.0	500.0	34000	3500	0.078	64.5
500.0	1000.0	65000	5200	0.055	62.0
1000.0	1500.0	96000	6850	0.053	62.0
1500.0	1890.0	120000	7617	0.032	61.5

The flashing fractions from Table 19 are conservatively adjusted to maintain the pre-cooldown value until the break flow is isolated at 30 minutes as shown in Table 20. This adjustment removes any relationship between the flashing fractions and the timing of the start of the cooldown. Note that the adjusted values conservatively result in a flashed flow mass that is approximately 30% greater than that shown on Page 44 of Reference [7.17]. Since the flashing fractions are primarily determined by the thermodynamic conditions in the reactor hot leg, and since the intact and ruptured steam generator pressures are comparable prior to the RCS cooldown, these flashing fractions can be applied to both the ruptured and to the intact steam generators.

Table 20: SGTR Flashing Fractions

SGTR Event Time (sec)	Time After Rx Trip (sec)	Analysis Flashing Fraction
0.0	Pre-Trip	0.19
100.0	0.0	0.08
500.0	400.0	0.06
1000.0	900.0	0.055
1500.0	1400.0	0.055
1800.0	1700.0	0.04

5.2.2.1.2 Flashed Flow Rates

From Section 5.1.2.1, the average break flow rate over 30 minutes is 4890.13 lbm/min. In addition, the individual steam generator primary-to-secondary tube leakage is given as 0.25 gpm in Input 3.6. Based upon a fluid density of 62.3 lbm/ft^3 (Input 3.7), the single steam generator tube leakage mass flow rate is:

$$Individual\ Steam\ Generator\ Tube\ Leakage = \frac{0.25\ gpm \times 62.3 \frac{lbm}{ft^3}}{7.4805\ gal/ft^3} = 2.082\ lbm/min$$

As such, the total steam generator tube leakage is equal to:

$$Total\ Steam\ Generator\ Tube\ Leakage = 4 \times 2.082\ lbm/min = 8.328\ lbm/min,$$

and the steam generator tube leakage into just the intact steam generators is equal to:

$$Intact\ Steam\ Generator\ Tube\ Leakage = 3 \times 2.082\ lbm/min = 6.246\ lbm/min$$

The ruptured tube flashed flow and the ruptured SG tube leakage continues until termination of the break flow at 30 minutes (0.50 hr), while the flashed tube leakage in the intact steam generators continues until the tube bundles are recovered after 40 minutes (0.667 hr, Assumption 4.2). By applying the flashing fractions from Table 20 to the applicable flow rates, the flashed portion of the primary-to-secondary flow is determined as shown in Table 21.

Table 21: Flashed SG Tube Leakage and Break Flow Rates

Time (sec)	Time (hr)	Break Flow (lbm/min)	Leakage Flow (lbm/min)	Total Flow (lbm/min)	Flashing Fraction	Total Flashed Flow (lbm/min)
0.0	0.0	4890.13	8.328	4898.46	0.19	930.70
100.0	0.028	4890.13	8.328	4898.46	0.08	391.88
500.0	0.139	4890.13	8.328	4898.46	0.06	293.91
1000.0	0.278	4890.13	8.328	4898.46	0.055	269.42
1800.0	0.50	0.0	6.246	6.246	0.04	0.25
2400.0	0.667	0.0	0.0	0.0	0.0	0.0

The flashed flow is modeled as a direct connection between the RCS and the environment, and the corresponding RADTRAD inputs for this pathway are summarized below:

Pathway #1 Summary				
Pathway Name:	Flashed Break and Leakage Flow			
From Compartment: 1		**To Compartment:** 3		
		Filter Efficiencies (%)		
Time (hours)	**Flow Rate (lbm/min)**	**Aerosol**	**Elemental**	**Organic**
0.0	930.70	0.0	0.0	0.0
0.028	391.88	0.0	0.0	0.0
0.139	293.91	0.0	0.0	0.0
0.278	269.42	0.0	0.0	0.0
0.50	0.25	0.0	0.0	0.0
0.667	0.0	0.0	0.0	0.0
720.0	0.0	0.0	0.0	0.0

5.2.2.2 Pathway 2 – Control Room Makeup

Pathway 2 represents the outside air flow into the control room both before and after the ventilation system is aligned to the recirculation mode. Inputs for this pathway are documented in Section 5.1.2.2.

Pathway #2 Summary				
Pathway Name:	Control Room Makeup			
From Compartment: 3		**To Compartment:** 4		
		Filter Efficiencies (%)		
Time (hours)	**Flow Rate (cfm)**	**Aerosol**	**Elemental**	**Organic**
0.0	880.0	0.0	0.0	0.0
0.11	880.0	98.01	94.05	94.05
720.0	880.0	98.01	94.05	94.05

5.2.2.3 Pathway 3 – Control Room Unfiltered Inleakage

Pathway 3 models the unfiltered inleakage to the control room. A constant flow rate of 40 cfm from Input 3.19 is applied throughout the event.

Pathway #3 Summary				
Pathway Name:	Control Room Unfiltered Inleakage			
From Compartment: 3		**To Compartment:** 4		
		Filter Efficiencies (%)		
Time (hours)	**Flow Rate (cfm)**	**Aerosol**	**Elemental**	**Organic**
0.0	40.0	0.0	0.0	0.0
720.0	40.0	0.0	0.0	0.0

5.2.2.4 Pathway 4 – Control Room Exhaust

Pathway 4 models the control room exhaust flow. The flow rate through this pathway is equal to the sum of the makeup and unfiltered inleakage flows.

Pathway #4 Summary				
Pathway Name:	Control Room Exhaust			
From Compartment: 4		**To Compartment:** 3		
		Filter Efficiencies (%)		
Time (hours)	**Flow Rate (cfm)**	**Aerosol**	**Elemental**	**Organic**
0.0	920.0	0.0	0.0	0.0
720.0	920.0	0.0	0.0	0.0

5.2.2.5 Pathway 5 – Unflashed Intact Steam Generator Tube Leakage

This pathway represents the primary-to-secondary tube leakage which does not flash and mixes with the secondary water in the intact steam generators. The intact leakage flow of 6.246 lbm/min is used in combination with the flashing fractions from Table 20 to determine the unflashed intact tube leakage flow rate as shown in Table 22. Once the tube bundles are fully recovered after 40 minutes, 100% of the steam generator tube leakage is unflashed. The unflashed primary-to-secondary leakage continues until 24 hours, which is consistent with Section 5.3 of Appendix F to Reference [7.1] and Input 3.13. This section of the Reg. Guide requires that the primary-to-secondary leakage be assumed to continue until the temperature of the leakage is less than 212 °F; and the release of radioactivity should be assumed to continue until shutdown cooling is in operation and releases from the steam generators have been terminated.

Table 22: Unflashed Intact SG Tube Leakage Flow Rates

Time (sec)	Time (hr)	Intact Leakage Flow (lbm/min)	Flashing Fraction	Unflashed Flow (lbm/min)
0.0	0.0	6.246	0.19	5.059
100.0	0.028	6.246	0.08	5.746
500.0	0.139	6.246	0.06	5.871
1000.0	0.278	6.246	0.055	5.902
1800.0	0.50	6.246	0.04	5.996
2400.0	0.667	6.246	0.0	6.246
86400.0	24.0	0.0	0.0	0.0

Pathway #5 Summary				
Pathway Name:	Unflashed Intact SG Tube Leakage			
From Compartment: 1		**To Compartment:** 2		
		Filter Efficiencies (%)		
Time (hours)	**Flow Rate (lbm/min)**	**Aerosol**	**Elemental**	**Organic**
0.0	5.059	0.0	0.0	0.0
0.028	5.746	0.0	0.0	0.0
0.139	5.871	0.0	0.0	0.0
0.278	5.902	0.0	0.0	0.0
0.50	5.996	0.0	0.0	0.0
0.667	6.246	0.0	0.0	0.0
24.0	0.0	0.0	0.0	0.0
720.0	0.0	0.0	0.0	0.0

5.2.2.6 Pathway 6 – Unflashed Break Flow & Ruptured SG Tube Leakage

The unflashed flow into the ruptured steam generator includes the unflashed break flow from the ruptured tube plus the unflashed primary-to-secondary leakage into the ruptured generator. From Section 5.2.2.1.2, the average ruptured tube break flow rate is 4890.13 lbm/min and the individual steam generator tube leakage flow rate is 2.082 lbm/min. These flow rates are used in combination with the flashing fractions from Table 20 to determine the unflashed primary-to-secondary flow rate into the ruptured steam generator as shown in Table 23. This flow continues until the break flow is terminated after 30 minutes.

Table 23: Unflashed Ruptured SG Break and Leakage Flow Rates

Time (sec)	Time (hr)	Break Flow (lbm/min)	Leakage Flow (lbm/min)	Total Flow (lbm/min)	Flashing Fraction	Total Flashed Flow (lbm/min)
0.0	0.0	4890.13	2.082	4892.21	0.19	3962.70
100.0	0.028	4890.13	2.082	4892.21	0.08	4500.84
500.0	0.139	4890.13	2.082	4892.21	0.06	4598.68
1000.0	0.278	4890.13	2.082	4892.21	0.055	4623.14
1800.0	0.50	0.0	0.0	0.0	0.04	0.0

Pathway #6 Summary				
Pathway Name:	Unflashed Ruptured SG Break Flow & Tube Leakage			
From Compartment: 1		**To Compartment:** 5		
		Filter Efficiencies (%)		
Time (hours)	**Flow Rate (lbm/min)**	**Aerosol**	**Elemental**	**Organic**
0.0	3962.70	0.0	0.0	0.0
0.028	4500.84	0.0	0.0	0.0
0.139	4598.68	0.0	0.0	0.0
0.278	4623.14	0.0	0.0	0.0
0.50	0.0	0.0	0.0	0.0
720.0	0.0	0.0	0.0	0.0

5.2.2.7 Pathway 7 – Intact SG Steam Release

The steam release from the intact steam generators to the environment is modeled using Pathway 7. Prior to the reactor trip at 101 seconds (0.028 hours), the steam release is dictated by the total plant steam flow rate from Input 3.15. Following the trip, integrated steam flows from Input 3.13 are assumed to represent constant flow rates over each time period. Adjustments are made to the flow rates to account for partitioning (i.e., liquid/vapor proportion) of iodine and particulates by the water in the steam generators and the condenser. This process is described in Section 5.5.4 of Appendix E to Reference [7.1], which states:

The radioactivity in the bulk water is assumed to become vapor at a rate that is the function of the steaming rate and the partition coefficient. A partition coefficient for iodine of 100 may be assumed. The retention of particulate radionuclides in the steam generators is limited by the moisture carryover from the steam generators.

To ensure that particulate iodine is removed at the same rate as the elemental and organic species, a partition factor of 100 is applied in the steam generators. This value can be adjusted to address removal of non-iodine particulates as necessary. In addition, the partition coefficient of the condenser is given as 100 in Input 3.16. These partition coefficients are implemented in RADTRAD by reducing the average steam flow rates. Steam releases continue until the RCS is cooled to 212 °F at 24 hours from Input 3.13 as directed by Section 5.3 of Appendix F to Reference [7.1].

The total pre-trip steam flow rate is listed in Input 3.15 as 17,153,800 lbm/hr. From Assumption 4.1, this flow rate is assumed to be equally distributed between the four steam generators. Therefore, the steam release rate from the three intact steam generators prior to the reactor trip, adjusted for partioning in both the steam generators and in the condenser, is:

$$Intact\ Steam\ Release_{0-0.028\ hr} = \frac{(0.75)\ (17{,}153{,}800\ lbm/hr)}{(100)(100)(60\ min/hr)} = 21.44\ lbm/min$$

The intact steam generator flow rates for the remaining periods are calculated from the values in Input 3.13:

$$Intact\ Steam\ Release_{0.028-0.5\ hr} = \frac{198{,}515\ lbm}{(100)(0.472\ hr)(60\ min/hr)} = 70.10\ lbm/min$$

$$Intact\ Steam\ Release_{0.5-2\ hr} = \frac{314{,}432\ lbm}{(100)(1.5\ hr)(60\ min/hr)} = 34.94\ lbm/min$$

$$Intact\ Steam\ Release_{2-8\ hr} = \frac{1{,}367{,}475\ lbm}{(100)(6\ hr)(60\ min/hr)} = 37.99\ lbm/min$$

$$Intact\ Steam\ Release_{8-24\ hr} = \frac{1{,}347{,}000\ lbm}{(100)(16\ hr)(60\ min/hr)} = 14.03\ lbm/min$$

Pathway #7 Summary				
Pathway Name:	Intact SG Steam Release			
From Compartment: 2		**To Compartment:** 3		
		Filter Efficiencies (%)		
Time (hours)	**Flow Rate (lbm/min)**	**Aerosol**	**Elemental**	**Organic**
0.0	21.44	0.0	0.0	0.0
0.028	70.10	0.0	0.0	0.0
0.5	34.94	0.0	0.0	0.0
2.0	37.99	0.0	0.0	0.0
8.0	14.03	0.0	0.0	0.0
24.0	0.0	0.0	0.0	0.0
720.0	0.0	0.0	0.0	0.0

5.2.2.8 Pathway 8 – Ruptured SG Steam Release

The steam flow rate from the ruptured steam generator prior to the reactor trip is one-quarter of the total plant steam flow from Input 3.15. Applying the method from Section 5.2.2.7, the initial ruptured steam generator steam release rate is:

$$Ruptured\ Steam\ Release_{0-0.028\ hr} = \frac{(0.25)\ (17{,}153{,}800\ lbm/hr)}{(100)(100)(60\ min/hr)} = 7.15\ lbm/min$$

For 30 minutes following the reactor trip, the integrated steam flow from the ruptured steam generator is given as 66,171 lbm in Input 3.14. Assuming a constant flow rate over this period, and adjusting for portioning by the steam generator liquid, the flow rate becomes:

$$Ruptured\ Steam\ Release_{0-0.5\ hr} = \frac{66{,}171\ lbm}{(100)(0.5\ hr)(60\ min/hr)} = 22.06\ lbm/min$$

Steam release from the ruptured steam generator is secured after 30 minutes.

Pathway #8 Summary				
Pathway Name:	Ruptured SG Steam Release			
From Compartment: 5		**To Compartment:** 3		
		Filter Efficiencies (%)		
Time (hours)	**Flow Rate (lbm/min)**	**Aerosol**	**Elemental**	**Organic**
0.0	7.15	0.0	0.0	0.0
0.028	22.06	0.0	0.0	0.0
0.50	0.0	0.0	0.0	0.0
720.0	0.0	0.0	0.0	0.0

5.2.3 Non-Noble Gas Release Model X/Q Inputs

The non-noble gas releases occur from the steam jet air ejectors prior to the reactor trip and from the PORVs/MSSVs following the trip. Consequently, the RADTRAD X/Q tables developed in Section 5.1.4 continue to apply. The onsite X/Q matrix shown in Table 24 presents the combination of release and intake pathways input into RADTRAD for the non-noble gas release.

Table 24: Non-Noble Gas Release Onsite X/Q Table Matrix

Release Path	(2) Control Room Makeup	(3) CR Unfiltered Inleakage
(1) Flashed Break Flow & SG Tube Leakage	X/Q Table 3	X/Q Table 4
(7) Intact SG Steam Release	X/Q Table 3	X/Q Table 4
(8) Ruptured SG Steam Release	X/Q Table 3	X/Q Table 4

5.3 Pre-Accident Iodine Spike Dose

Section 2.1 of Appendix F to Reference [7.1] defines the pre-accident iodine spike as a reactor transient that occurs prior to the event in which the primary coolant iodine concentration is raised to the maximum value permitted by the Technical Specifications. Input 3.3 gives the maximum RCS iodine concentration allowed by the Technical Specifications during full power operation as 60 μCi/gm. The evaluation of the pre-accident iodine spike uses the non-noble gas release RADTRAD model developed in Section 5.2 with applicable source term inputs as discussed below.

5.3.1 Pre-Accident Iodine Spike Source Term Inputs

5.3.1.1 Plant Power

As discussed in Section 5.1.3.1, the plant power input is used in combination with the nuclear inventory file to release the source term activity with units of Curies. The RCS source term from Table 2 serves as the source of the iodine activities in the pre-accident iodine spike case, which has units of μCi/gm. This source term is converted to curies by using the plant power input to multiply these specific activities by the mass of the RCS. The RCS mass from Input 3.5 of 466,141.5 lbm results in the following plant power value:

$$Plant\ Power = \frac{466{,}141.5\ lbm \times 453.59\ gm/lbm}{1{,}000{,}000\ \mu Ci/Ci} = 211.44\ \frac{Ci - gm}{\mu Ci}$$

5.3.1.2 Decay Options

The source term controls are set with a release time of 0.0 seconds and no delay time. This allows all of the release timing to be entered through the release fraction and timing file. Options are selected to allow for radioactive decay and the production of daughter products.

5.3.1.3 Iodine Fractions

From Section 4 of Appendix F to Reference [7.1], the iodine that is released from the steam generators to the environment has evolved into a composition of 97% elemental and 3% organic.

5.3.1.4 Inventory File

The RCS source term from Table 2 is formatted into RADTRAD nuclear inventory file **Cook_RCS.nif** as discussed in Section 5.1.3.4. Since the Power Level and Inventory Type flag in this file are both set to 1.0 as shown on page D2 of Reference [7.7], the iodine spiking activity can be set using the plant power and the RFT file.

5.3.1.5 Release File

Input 3.1 identifies that the RCS source term is developed based upon an iodine content of 1.0 μCi/gm. Since the iodine spike causes the RCS iodine activity to increase to a concentration of 60 μCi/gm, the pre-accident iodine spike can be modeled by setting the release fraction of the iodine group in the release fraction and timing file to 60. The release duration is set to 0.00001 hours to simulate the full 60 μCi/gm spike occurring prior to the event. Since the noble gas dose contribution is evaluated separately in Section 5.1, the release fraction of the noble gas group is set to zero. All other group release fractions are set to 1.0 to include the normal equilibrium activities in the RCS compartment. This RFT file is shown in Table 25 and is saved as file **SGTR_Pre_I_R1.rft**.

Table 25: SGTR Pre-Accident Spike Release Fraction File

```
Release Fraction and Timing Name:
 RWA-1313-011 - D. C. Cook SGTR Pre-Accident Iodine Spike
 Duration (h):
  0.1000E-04  0.0000E+00  0.0000E+00  0.0000E+00
 Noble Gases:
  0.0000E+00  0.0000E+00  0.0000E+00  0.0000E+00
 Iodine:
  0.6000E+02  0.0000E+00  0.0000E+00  0.0000E+00
 Cesium:
  0.1000E+01  0.0000E+00  0.0000E+00  0.0000E+00
 Tellurium:
  0.1000E+01  0.0000E+00  0.0000E+00  0.0000E+00
 Strontium:
  0.1000E+01  0.0000E+00  0.0000E+00  0.0000E+00
 Barium:
  0.1000E+01  0.0000E+00  0.0000E+00  0.0000E+00
 Ruthenium:
  0.1000E+01  0.0000E+00  0.0000E+00  0.0000E+00
 Cerium:
  0.1000E+01  0.0000E+00  0.0000E+00  0.0000E+00
 Lanthanum:
  0.1000E+01  0.0000E+00  0.0000E+00  0.0000E+00
 Non-Radioactive Aerosols (kg):
  0.0000E+00  0.0000E+00  0.0000E+00  0.0000E+00
 End of Release File
```

5.3.2 Pre-Accident Iodine Spike Dose Results

The results of the pre-accident iodine spike dose contribution for a SGTR event are presented in Table 26. The corresponding RADTRAD output file, **SGTR_Pre_I_R1.o0**, is provided in Attachment C.

Table 26: SGTR Pre-Accident Iodine Spike TEDE Dose Results

EAB (rem)	LPZ (rem)	Control Room (rem)
4.1154E+00	7.4309E-01	3.7895E+00

5.4 Concurrent Iodine Spike Dose – Iodine Release

Section 2.2 of Appendix F to Reference [7.1] describes the concurrent iodine spike as a transient in which the iodine release rate from the fuel rods to the primary coolant increases to a value that is 335 times greater than the release corresponding to the iodine concentration at the equilibrium value. The transient duration is assumed to occur over an 8-hour period. The evaluation of the concurrent iodine spike uses the non-noble gas release RADTRAD model developed in Section 5.2, and is performed in two parts. The first part assesses the dose contribution from the release of the iodine isotopes. The second part considers the dose contribution from the remainder of the RCS activity, which is evaluated in Section 5.5.

5.4.1 Concurrent Iodine Spike Iodine Appearance Rates

At equilibrium conditions, the appearance rate of iodine in the RCS is equal to the rate at which the iodine is being lost due to radioactive decay, removal by the purification system, and primary system leakage. This can be expressed as:

$$R = A \times \lambda_{total}$$

where: R = Appearance rate (Ci/min)

λ_{total} = Total removal coefficient (min^{-1})

A= Nuclide Activity (Ci)

The total iodine removal rate is equal to the sum of the individual removal rates by purification, RCS leakage, and radioactive decay:

$$\lambda_{total} = \lambda_{letdown} + \lambda_{leakage} + \lambda_{decay}$$

5.4.1.1 Letdown Removal

The iodine removal rate due to purification can be determined by a simple ratio:

$$\lambda_{Letdown} = \frac{Letdown\ Flow\ Rate}{RCS\ Mass}$$

Reference [7.15] describes that the appearance rates are conservatively derived using a maximum RCS inventory and a maximum letdown flow rate. Therefore, the RCS mass of 607,290.6 lbm from Input 3.5 is applied, which represents hot conditions with a full pressurizer. The maximum letdown flow rate of 132 gpm

is given is Input 3.9 and is based upon a fluid density of 61.78 lbm/ft^3. These inputs produce the following value for the letdown removal coefficient

$$Letdown\ Flow = \frac{(132\ gpm)(61.78\ lbm/ft^3)}{7.4805\ gal/ft^3} = 1090.16\ lbm/min$$

$$\lambda_{Letdown} = \frac{1090.16\ lbm/min}{607{,}290.6\ lbm} = 0.001795\ min^{-1}$$

5.4.1.2 Leakage Removal

Iodine removal by leakage from the RCS is similarly represented by:

$$\lambda_{Leakage} = \frac{Leakage\ Flow\ Rate}{RCS\ Mass}$$

The RCS leakage is based upon the maximum allowable identified and unidentified limits of 10 gpm and 1 gpm, respectively, from Input 3.10. These flow rates are assessed using a fluid density of 62.3 lbm/ft^3 per Input 3.7. Using the maximum RCS mass of 607,290.6 lbm from Input 3.5, the leakage removal coefficient is:

$$Leakage = \frac{(11\ gpm)(62.3\ lbm/ft^3)}{7.4805\ gal/ft^3} = 91.61\ lbm/min$$

$$\lambda_{Leakage} = \frac{91.61\ lbm/min}{607{,}290.6\ lbm} = 0.000151\ min^{-1}$$

5.4.1.3 Decay Removal

Equation 3.5 of Reference [7.16] expresses the decay constant in terms of the nuclide half-life ($t_{1/2}$):

$$\lambda_{decay} = \frac{\ln 2}{t_{1/2}}$$

The half lives of the iodine nuclides are given in Input 3.23, which yield the decay removal coefficients listed in Table 27.

Table 27: Iodine Decay Removal Coefficients

Nuclide	Half-life (sec)	λ_{decay} (sec^{-1})	λ_{decay} (min^{-1})
I-131	694656	9.978E-07	0.000060
I-132	8280	8.371E-05	0.005023
I-133	74880	9.257E-06	0.000555
I-134	3156	2.196E-04	0.013176
I-135	23796	2.913E-05	0.001748

5.4.1.4 Appearance Rates

The decay removal rates from Table 27 are combined with the letdown and leakage coefficients to give the total removal coefficients shown in Table 28.

Table 28: Total Iodine Removal Rate

Nuclide	λ_{decay} (min^{-1})	$\lambda_{Letdown}$ (min^{-1})	$\lambda_{Leakage}$ (min^{-1})	λ_{total} (min^{-1})
I-131	0.000060	0.001795	0.000151	0.002006
I-132	0.005023	0.001795	0.000151	0.006969
I-133	0.000555	0.001795	0.000151	0.002501
I-134	0.013176	0.001795	0.000151	0.015122
I-135	0.001748	0.001795	0.000151	0.003694

The equilibrium appearance rate for each iodine nuclide can then be calculated from the RCS equilibrium iodine concentration shown in Table 2 using the following equation from Section 5.4.1:

$$R = A \times \lambda_{total} = \text{Concentration} \times RCS\ Mass \times \lambda_{total}$$

The RCS mass is converted to units of grams and the equilibrium iodine appearance rates are presented in Table 29:

$$RCS\ Mass = 607{,}290.6\ lbm \times 453.59 \frac{gm}{lbm} = 275{,}460{,}943\ gm$$

Table 29: Equilibrium Iodine Appearance Rate

Nuclide	Equilibrium Concentration (μCi/gm)	RCS Mass (gm)	Iodine Activity (Ci)	λ_{total} (min^{-1})	Equilibrium Appearance (Ci/min)
I-131	0.8087	275460943	222.77	0.002006	0.4469
I-132	0.6411	275460943	176.60	0.006969	1.2307
I-133	1.0304	275460943	283.83	0.002501	0.7099
I-134	0.1231	275460943	33.91	0.015122	0.5128
I-135	0.5365	275460943	147.78	0.003694	0.5459

Finally, the SGTR concurrent iodine spike appearance rates are found by multiplying the equilibrium appearance rates by a factor of 335 as described in Section 2.2 of Appendix F to Reference [7.1]. These rates are used to calculate the total amount of iodine produced over the 8-hour spike duration as shown in Table 30.

Table 30: SGTR Concurrent Iodine Appearance Rate

Nuclide	Equilibrium Appearance (Ci/min)	Spike Multiple	Iodine Spike Appearance (Ci/min)	8-hour Production (Ci)
I-131	0.4469	335	149.71	71861
I-132	1.2307	335	412.28	197894
I-133	0.7099	335	237.82	114154
I-134	0.5128	335	171.79	82459
I-135	0.5459	335	182.88	87782

5.4.2 Concurrent Iodine Spike Source Term Inputs (Iodine Release)

5.4.2.1 Plant Power

The plant power input is used in combination with the nuclear inventory file to release the source term activity with units of Curies. Since the total iodine production from Table 30 has units of Curies, the plant power has a value of 1.0.

5.4.2.2 Decay Options

The source term controls are set with a release time at 0.0 seconds and no delay time. This allows all of the release timing to be entered through the release fraction and timing file. Options are selected to allow for radioactive decay and the production of daughter products.

5.4.2.3 Iodine Fractions

From Section 4 of Appendix F to Reference [7.1], the iodine that is released from the steam generators to the environment has evolved into a composition of 97% elemental and 3% organic. These values are entered into the model; however, the iodines are released in this case as aerosols as discussed in Section 5.4.3.

5.4.2.4 Inventory File

For the concurrent iodine release, a unique inventory file is created to release the iodine activities from Table 30. The generic .nif file, **RWA-1205-004.nif**, from Reference [7.8] is modified such that the activities of isotopes I-131 through I-135 are set to 1.0. The activities of all of the other nuclides remain at the default **RWA-1205-004.nif** value of zero. In addition, these five iodine nuclides are assigned release group numbers from 3 to 7, sequentially. This modified .nif file is saved as **SGTR_Spike_I.nif** and is listed in Attachment A.

5.4.2.5 Release File

The release fraction and timing file presented in Table 31 is designed to be used with .nif file **SGTR_Spike_I.nif** to release the concurrent iodine spike activities over an 8 hour period. Note that the release 'fractions' for groups 3 through 7 in the second time period correspond to the total iodine production values for the individual iodine isotopes in Table 30, and the duration of this period is set to 8 hours. Also note that since groups 3-7 are normally used to release aerosols, the control room filter efficiencies must be adjusted

to simulate filtration of iodine released by these groups as discussed in Section 5.4.3. This RFT file is saved as file **SGTR_Spike_I_R1.rft**.

Table 31: SGTR Concurrent Spike Release Fraction File (Iodine Release)

```
Release Fraction and Timing Name:
 RWA-1313-011 - D.C. Cook SGTR Concurrent Iodine Spike (Iodine)
 Duration (h):  Design Basis Accident
  0.1000E-04  0.8000E+01  0.0000E+00  0.0000E+00
 Noble Gases:
  0.0000E+00  0.0000E+00  0.0000E+00  0.0000E+00
 Iodine:
  0.0000E+00  0.0000E+00  0.0000E+00  0.0000E+00
 I-131:
  0.0000E+00  7.1861E+04  0.0000E+00  0.0000E+00
 I-132:
  0.0000E+00  1.9790E+05  0.0000E+00  0.0000E+00
 I-133:
  0.0000E+00  1.1416E+05  0.0000E+00  0.0000E+00
 I-134:
  0.0000E+00  8.2459E+04  0.0000E+00  0.0000E+00
 I-135:
  0.0000E+00  8.7782E+04  0.0000E+00  0.0000E+00
 Cerium:
  0.0000E+00  0.0000E+00  0.0000E+00  0.0000E+00
 Lanthanum:
  0.0000E+00  0.0000E+00  0.0000E+00  0.0000E+00
 Non-Radioactive Aerosols (kg):
  0.0000E+00  0.0000E+00  0.0000E+00  0.0000E+00
 End of Release File End of Release File
```

5.4.3 Concurrent Iodine Spike Filter Efficiency Adjustments (Iodine Release)

Since the iodine isotopes are being released in the aerosol groups by the RFT file, the control room filter aerosol efficiency must be changed to appropriately filter iodines. As discussed in Section 5.1.1.3.1, the effective control filter efficiency for both elemental and organic iodine is 94.05%. Therefore, the aerosol filter efficiency is set to this value in both the Control Room Recirculating Filter model in Section 5.1.1.3.1 and in the Control Room Makeup Pathway 2 from Section 5.1.2.2.

5.4.3.1 Compartment 4 - Control Room

		Filter Efficiencies (%)		
Time (hours)	Flow Rate (cfm)	Aerosol	Elemental	Organic
0.0	0.0	94.05	94.05	94.05
0.11	4520.0	94.05	94.05	94.05
720.0	4520.0	94.05	94.05	94.05

5.4.3.2 Pathway 2 – Control Room Makeup

Pathway #2 Summary				
Pathway Name:	Control Room Makeup			
From Compartment: 3		**To Compartment:** 4		
		Filter Efficiencies (%)		
Time (hours)	Flow Rate (cfm)	Aerosol	Elemental	Organic
0.0	880.0	0.0	0.0	0.0
0.11	880.0	94.05	94.05	94.05
720.0	880.0	94.05	94.05	94.05

5.4.4 Concurrent Iodine Spike Dose Results (Iodine Release)

The results of the iodine dose contribution for a SGTR event with a concurrent iodine spike are presented in Table 32. The corresponding RADTRAD output file, **SGTR_Spike_I_R1.o0**, is provided in Attachment D.

Table 32: SGTR Concurrent Iodine Spike TEDE Dose Results (Iodine Release)

EAB (rem)	LPZ (rem)	Control Room (rem)
4.0639E-01	8.8981E-02	2.4586E-01

5.5 Concurrent Iodine Spike – RCS Activity Release

Since the assessment of the concurrent iodine spike dose in Section 5.4 only addresses the release of iodine isotopes, a second case is performed to determine the dose contribution from the remainder of the RCS activity. Although non-iodine particulates are not volatile and unlikely to be transported directly to the environment, the flashed flow rates from Section 5.2.2.1 are conservatively applied to the particulate nuclides in this case. This case also uses the non-noble gas RADTRAD model developed in Section 5.2.

Pathway 7 – Intact SG Steam Release (RCS Activity Release)

For the non-iodine RCS activity release, a change is made to the intact steam generator steam release rate in Pathway 7 to account for a different partition coefficient for particulates as allowed by Section 5.5.4 of Appendix E to Reference [7.1]. Prior to the reactor trip at 101 seconds (0.028 hours), the steam release is dictated by the total plant steam flow rate from Input 3.15. Following the trip, integrated steam flows from Inputs 3.13 are assumed to represent constant flow rates over each time period. As discussed in Section 5.2.2.7, adjustments are made to the flow rates to account for partitioning of the particulates by the water in the steam generators and the condenser. Section 5.5.4 of Appendix E to Reference [7.1] permits the retention of particulates in the steam generators to be based upon the moisture carryover. From Input 3.12, a moisture carryover fraction of 0.2% is conservatively applied, which correlates to a partition coefficient of:

$$Particulate\ Partition\ Coefficient = \frac{1}{0.002} = 500$$

This partition coefficient is implemented in the RADTRAD model by reducing the average steam flow rates by a factor of 500. Steam releases continue until the RCS is cooled to 212 °F at 24 hours from Input 3.13 as directed by Section 5.3 of Appendix F to Reference [7.1].

$$Intact\ Steam\ Release_{0-0.028\ hr} = \frac{(0.75)\ (17{,}153{,}800\ lbm/hr)}{(500)(100)(60\ min/hr)} = 4.29\ lbm/min$$

$$Intact\ Steam\ Release_{0.028-0.5\ hr} = \frac{198{,}515\ lbm}{(500)(0.472\ hr)(60\ min/hr)} = 14.02\ lbm/min$$

$$Intact\ Steam\ Release_{0.5-2\ hr} = \frac{314{,}432\ lbm}{(500)(1.5\ hr)(60\ min/hr)} = 6.99\ lbm/min$$

$$Intact\ Steam\ Release_{2-8\ hr} = \frac{1{,}367{,}475\ lbm}{(500)(6\ hr)(60\ min/hr)} = 7.60\ lbm/min$$

$$Intact\ Steam\ Release_{8-24\ hr} = \frac{1{,}347{,}000\ lbm}{(500)(16\ hr)(60\ min/hr)} = 2.81\ lbm/min$$

Pathway #7 Summary				
Pathway Name:	Intact SG Steam Release			
From Compartment: 2		**To Compartment:** 3		
		Filter Efficiencies (%)		
Time (hours)	**Flow Rate (lbm/min)**	**Aerosol**	**Elemental**	**Organic**
0.0	4.29	0.0	0.0	0.0
0.028	14.02	0.0	0.0	0.0
0.5	6.99	0.0	0.0	0.0
2.0	7.60	0.0	0.0	0.0
8.0	2.81	0.0	0.0	0.0
24.0	0.0	0.0	0.0	0.0
720.0	0.0	0.0	0.0	0.0

5.5.1.1 Pathway 8 – Ruptured SG Steam Release (RCS Activity Release)

The steam flow rate from the ruptured steam generator prior to the reactor trip is one-quarter of the total plant steam flow from Input 3.15. Applying the method from Section 5.2.2.7, the initial ruptured steam generator flow is:

$$Ruptured\ Steam\ Release_{0-0.028\ hr} = \frac{(0.25)\ (17{,}153{,}800\ lbm/hr)}{(500)(100)(60\ min/hr)} = 1.43\ lbm/min$$

For the 30 minutes following the reactor trip, the integrated steam flow from the ruptured steam generator is given as 66,171 lbm in Input 3.14. Assuming a constant flow rate over this period, and adjusting for portioning by the steam generator liquid, the flow rate becomes:

$$Ruptured\ Steam\ Release_{0.028-0.5\ hr} = \frac{66{,}171\ lbm}{(500)(0.5\ hr)(60\ min/hr)} = 4.41\ lbm/min$$

Steam release from the ruptured steam generator is secured after 30 minutes.

Pathway #8 Summary				
Pathway Name:	Ruptured SG Steam Release			
From Compartment: 5		**To Compartment:** 3		
		Filter Efficiencies (%)		
Time (hours)	**Flow Rate (lbm/min)**	**Aerosol**	**Elemental**	**Organic**
0.0	1.43	0.0	0.0	0.0
0.028	4.41	0.0	0.0	0.0
0.50	0.0	0.0	0.0	0.0
720.0	0.0	0.0	0.0	0.0

5.5.2 Concurrent Iodine Spike Source Term Inputs (RCS Activity Release)

5.5.2.1 Plant Power

This case uses the RCS source term from Table 2, which has units of μCi/gm. The plant power converts the source term to units of curies by multiplying the specific activities by the mass of the RCS. The RCS mass from Input 3.5 of 466,141.5 lbm results in the following plant power value:

$$Plant\ Power = \frac{466{,}141.5\ lbm \times 453.59\ gm/lbm}{1{,}000{,}000\ \mu Ci/Ci} = 211.44\ \frac{Ci - gm}{\mu Ci}$$

5.5.2.2 Decay Options

The source term release time is specified as 0.0 seconds with no delay time. This allows all of the release timing to be entered through the release fraction and timing file. Options are selected to allow for radioactive decay and the production of daughter products.

5.5.2.3 Iodine Fractions

There are no iodine isotopes involved in the RCS activity release case. As such, the iodine fractions are not used and placeholder values are entered into the model.

5.5.2.4 Inventory File

The RCS source term from Table 2 is formatted into RADTRAD nuclear inventory file **Cook_RCS.nif** as discussed in Section 5.1.3.4 and is applied in this case.

5.5.2.5 Release File

Since the noble gas dose is calculated in Section 5.1 and the iodine contribution to the concurrent iodine spike case is evaluated in Section 5.4, the release fractions for both of these groups are set to zero. All other group release fractions are set to 1.0 to simulate the normal equilibrium activities in the RCS. This RFT file is shown in Table 33 and is saved as file **SGTR_Spike_RCS_R1.rft**.

Table 33: SGTR Concurrent Spike Release Fraction File (RCS Activity)

```
Release Fraction and Timing Name:
 RWA-1313-011 - D. C. Cook SGTR Concurrent Iodine Spike (RCS)
 Duration (h):
  0.1000E-04  0.0000E+00  0.0000E+00  0.0000E+00
 Noble Gases:
  0.0000E+00  0.0000E+00  0.0000E+00  0.0000E+00
 Iodine:
  0.0000E+00  0.0000E+00  0.0000E+00  0.0000E+00
 Cesium:
  0.1000E+01  0.0000E+00  0.0000E+00  0.0000E+00
 Tellurium:
  0.1000E+01  0.0000E+00  0.0000E+00  0.0000E+00
 Strontium:
  0.1000E+01  0.0000E+00  0.0000E+00  0.0000E+00
 Barium:
  0.1000E+01  0.0000E+00  0.0000E+00  0.0000E+00
 Ruthenium:
  0.1000E+01  0.0000E+00  0.0000E+00  0.0000E+00
 Cerium:
  0.1000E+01  0.0000E+00  0.0000E+00  0.0000E+00
 Lanthanum:
  0.1000E+01  0.0000E+00  0.0000E+00  0.0000E+00
 Non-Radioactive Aerosols (kg):
  0.0000E+00  0.0000E+00  0.0000E+00  0.0000E+00
End of Release File
```

5.5.3 Concurrent Iodine Spike Dose Results (RCS Activity Release)

The results of the RCS activity dose contribution for a SGTR event with a concurrent iodine spike are presented in Table 34. The corresponding RADTRAD output file, **SGTR_Spike_RCS_R1.o0**, is provided in Attachment E.

Table 34: SGTR Concurrent Iodine Spike TEDE Dose Results (RCS Activity Release)

EAB (rem)	LPZ (rem)	Control Room (rem)
2.0463E+00	3.6688E-01	1.8432E+00

5.6 Initial Steam Generator Iodine Release

In addition to the activity released to the environment as a result of primary-to-secondary leakage, there is also a small dose contribution from the iodine that is present in the steam generators during normal operation and released during the plant cooldown. To assess the dose impact of the initial iodine content in the steam generator secondary, the non-noble gas model developed in Section 5.2 is used. Changes to this model made to evaluate the steam generator iodine dose contribution are described below:

5.6.1 Initial SG Iodine Release – Compartments

The volume of the steam generator compartments (Compartments 2 and 5) are increased to maximize the nuclide inventory available for release. Input 3.11 lists the maximum liquid mass of a single steam generator as 161,000 lbm. The ruptured steam generator compartment volume (Compartment 5) is set to 161,000, and the intact steam generator compartment volume (Compartment 2) is changed to:

$$Intact\ Steam\ Generator\ Compartment\ Volume = 3 \times 161{,}000\ lbm = 483{,}000\ lbm$$

5.6.2 Initial SG Iodine Release – Pathways

The addition of fluid into the stream generator secondary from primary-to-secondary leakage is conservatively ignored. Consequently, the tube leakage flow rates in Pathways 1, 5, and 6 are set to zero.

5.6.3 Initial SG Iodine Release Source Term Inputs

5.6.3.1 Plant Power

The specific activity of the iodine in the steam generators is 0.1 μCi/gm from Input 3.2. This value is one-tenth of the specific iodine concentration in the RCS source term as discussed in Input 3.1. The plant power input can therefore be used to reduce the RCS source term by a factor of ten. Table 2 shows that the RCS source term is developed in units of μCi/gm. The plant power term also performs the units conversion by applying the liquid mass of a single steam generator:

$$Plant\ Power = \frac{\left(\frac{0.1}{1.0}\right)(161{,}000\ lbm)\left(453.59\frac{gm}{lbm}\right)}{1{,}000{,}000\ \mu Ci/Ci} = 7.3\ \frac{Ci - gm}{\mu Ci}$$

In addition, since this case only involves the activity initially present on the secondary side of the steam generators prior to the event, the location of the source term is reassigned from the RCS compartment to the steam generator compartments. The plant power for this case is calculated in based upon the mass of a single steam generator. Therefore, the source fraction in ruptured steam generator (Compartment 5) is set to 1.0 and the source fraction in the intact steam generator (Compartment 6) is set to 3.0.

5.6.3.2 Inventory File

The RCS source term from Table 2 is formatted into RADTRAD nuclear inventory file **Cook_RCS.nif** as discussed in Section 5.1.3.4 and is applied in this case.

5.6.3.3 Release File

This case only involves the release of iodine nuclides in the steam generator secondary. Therefore, the iodine release fraction is set to 1.0 and the remaining nuclide group release fractions are set to zero. Note that bromine isotopes are conservatively included in the source term since these nuclides are assigned to the halogen group in the .nif file. All isotopes are instantaneously released into the steam generator compartment at the start of the event. The RFT file shown in Table 35 is saved as file **SGTR_SG_I_R1.rft**.

Table 35: SGTR SG Iodine Gas Release Fraction File

```
Release Fraction and Timing Name:
 RWA-1313-011 - D. C. Cook SGTR Initial SG Iodine
 Duration (h):
  0.1000E-04  0.0000E+00  0.0000E+00  0.0000E+00
 Noble Gases:
  0.0000E+00  0.0000E+00  0.0000E+00  0.0000E+00
 Iodine:
  0.1000E+00  0.0000E+00  0.0000E+00  0.0000E+00
 Cesium:
  0.0000E+00  0.0000E+00  0.0000E+00  0.0000E+00
 Tellurium:
  0.0000E+00  0.0000E+00  0.0000E+00  0.0000E+00
 Strontium:
  0.0000E+00  0.0000E+00  0.0000E+00  0.0000E+00
 Barium:
  0.0000E+00  0.0000E+00  0.0000E+00  0.0000E+00
 Ruthenium:
  0.0000E+00  0.0000E+00  0.0000E+00  0.0000E+00
 Cerium:
  0.0000E+00  0.0000E+00  0.0000E+00  0.0000E+00
 Lanthanum:
  0.0000E+00  0.0000E+00  0.0000E+00  0.0000E+00
 Non-Radioactive Aerosols (kg):
  0.0000E+00  0.0000E+00  0.0000E+00  0.0000E+00
End of Release File
```

5.6.4 Initial SG Iodine Gas Release Dose Results

The dose contribution from the release of the initial steam generator iodine during the SGTR event are presented in Table 36. The corresponding RADTRAD output file, **SGTR_SG_I_R1.o0**, is provided in Attachment F.

Table 36: SGTR Initial SG Iodine Release TEDE Dose Results

EAB (rem)	LPZ (rem)	Control Room (rem)
1.8818E-03	8.3936E-04	2.6022E-03

5.7 Steam Generator Tube Rupture Dose Results

Table 37 and Table 38 present the total dose consequences for the steam generator tube rupture event. The contribution from control room shine shown in the summary table is developed in Reference [7.12] and conservatively reflects the dose from the control room ventilation filters during the LOCA event. Results for

the EAB, LPZ, and control room are all within the regulatory dose limits. Note that the dose consequences for this event are dominated by the contribution from non-iodine particulates in the RCS. This is due to the conservative modeling assumption that particulates in the break flow will be released directly to the environment along with the volatile iodine isotopes as the RCS fluid in the steam generator secondary flashes to vapor.

Table 37: SGTR Pre-Accident Iodine Spike TEDE Dose Results

Release	EAB (rem)	LPZ (rem)	Control Room (rem)
Noble Gas	4.1808E-02	7.8965E-03	2.3863E-02
Pre-Accident Iodine Spike	4.1154E+00	7.4309E-01	3.7895E+00
Initial SG Secondary Iodine	1.8818E-03	8.3936E-04	2.6022E-03
Control Room Shine			0.139
Total	**4.16**	**0.76**	**3.96**
Acceptance Limit	25	25	5

Table 38: SGTR Concurrent Accident Iodine Spike TEDE Dose Results

Release	EAB (rem)	LPZ (rem)	Control Room (rem)
Noble Gas	4.1808E-02	7.8965E-03	2.3863E-02
Iodine Release	4.0639E-01	8.8981E-02	2.4586E-01
RCS Activity Release	2.0463E+00	3.6688E-01	1.8432E+00
Initial SG Secondary Iodine	1.8818E-03	8.3936E-04	2.6022E-03
Control Room Shine			0.139
Total	**2.50***	**0.47**	**2.26**
Acceptance Limit	2.5	2.5	5

*Calculated value is 2.497 rem which is rounded up to 2.50.

6 Electronic Files

The RADTRAD input, output, and support files are electronically attached to this calculation and listed Table 39 along with a MD5 checksum for each file. The MD5 checksum is a 128-bit hash which is generated based on the content of a file which can be used for version integrity control since the possibility of getting two identical checksums for two files is negligibly small. It provides a more efficient and secure method of electronic file version control than simple file sizes and/or time/date stamps. A listing of the iodine spike .nif file is included in Attachment A, and copies of the RADTRAD output files are also provided in Attachments B through F.

Table 39: Electronic File Names and MD5 Checksums

Description	File Name	MD5 Checksum
Iodine Spike Source Term Nuclear Inventory File	SGTR_I_Spike.nif	6f1edf4ad0a0b28575519db637fb748c
Noble Gas Release Fraction Timing File	SGTR_NG_R1.rft	a365725be88ad61343aca4daf317d9c1
Pre-Accident Spike Release Fraction Timing File	SGTR_Pre_I_R1.rft	04c94ca50eb7115b1a0b3a2c7f380555
Concurrent-Accident Spike (Iodine) Noble Gas Release Fraction Timing File	SGTR_Spike_I_R1.rft	91a694bfd2a1aa0da9da84fe8ab124cb
Non-Noble Gas Release Fraction Timing File	SGTR_Spike_RCS_R1.rft	bf1eba7eea19fc4f9856f07f639402a0
Initial SG Iodine Release Fraction Timing File	SGTR_SG_I_R1.rft	620966a00ef68fd93a77e541299686c7
Noble Gas Release RADTRAD 3.10 Input File	SGTR_NG_R1.psf	821abb683b2a0a26a2620e446ce932c8
Noble Gas Release RADTRAD 3.10 Output File	SGTR_NG_R1.o0	3aa26ef175817587f792ba5968b04638
Pre-Accident Spike RADTRAD 3.10 Input File	SGTR_Pre_I_R1.psf	d99bb47a43c60c896897b3ad8cedfa89
Pre-Accident Spike RADTRAD 3.10 Output File	SGTR_Pre_I_R1.o0	99f67c82858d0a2cf6f69651d407095b
Concurrent-Accident Spike (Iodine) RADTRAD 3.10 Input File	SGTR_Spike_I_R1.psf	f092c18adeea23de2517ec8ff4975f65
Concurrent-Accident Spike (Iodine) RADTRAD 3.10 Output File	SGTR_Spike_I_R1.o0	b8f3459a00d25b7e7463b079287b5f45
Concurrent-Accident Spike (RCS) RADTRAD 3.10 Input File	SGTR_Spike_RCS_R1.psf	33fe8681d1c611ec2e786534bd1d3bf3
Concurrent-Accident Spike (RCS) RADTRAD 3.10 Output File	SGTR_Spike_RCS_R1.o0	981d0468f01e722e63f37a7b80a8a9d7
Initial SG Iodine Release RADTRAD 3.10 Input File	SGTR_SG_I_R1.psf	842b3cee4d8226c5a45e389b93c0edf5
Initial SG Iodine Release RADTRAD 3.10 Output File	SGTR_SG_I_R1.o0	3102b11353747a046f60a4985dab5ee9

7 References

7.1 USNRC Regulatory Guide 1.183, Alternative Radiological Source Terms for Evaluating Design Basis Accidents at Nuclear Power Reactors, July 2000.

7.2 ALION-UGM-RADTRRAD-2408-02, Alion RADTRAD 3.10 User's Manual, Revision 0.

7.3 NUREG/CR-6604, RADTRAD: A Simplified Model for Radionuclide Transport and Removal and Dose Estimation, December 1997.

7.4 NUREG/CR-6604, Supplement 1, RADTRAD: A Simplified Model for Radionuclide Transport and Removal and Dose Estimation, June 8, 1999.

7.5 NUREG/CR-6604, Supplement 2, RADTRAD: A Simplified Model for Radionuclide Transport and Removal and Dose Estimation, August 2002.

7.6 Calculation RWA-1313-001, Cook Nuclear Plant AST Radiological Analysis Input Parameter Development, Rev. 1.

7.7 Calculation RWA-1313-002, Cook Nuclear Plant AST Radiological Analysis Core and RCS Source Terms, Rev. 0.

7.8 Calculation RWA-1205-004, Development of RADTRAD 3.10 Nuclear Inventory and Dose Conversion Factor Files for AST Analyses, Rev. 0.

7.9 Calculation MD-12-HV-052-N, Control Room Ventilation Flow Rates and Charcoal Filter Efficiencies for Radiological Consequence Accident Analyses, Rev. 1.

7.10 Calculation RWA-1313-004, Cook Nuclear Plant On-Site Accident Atmospheric Dispersion Factor Analysis, Rev. 1.

7.11 Calculation RWA-1313-005, Cook Nuclear Plant Off-Site Accident Atmospheric Dispersion Factor Analysis, Rev. 1.

7.12 Calculation RWA-1313-014, Cook Nuclear Plant Control Room Shine Dose, Rev. 1.

7.13 EPA-520/1-88-020, Limiting Values of Radionuclide Intake and Air Concentration and Dose Conversion Factors for Inhalation, Submersion, and Ingestion, Federal Guidance Report No. 11, September 1988.

7.14 EPA-402-R-93-081, External Exposure to Radionuclides in Air, Water, and Soil, Federal Guidance Report No. 12, September 1993.

7.15 NSAL-00-004, Nuclear Safety Advisory Letter, Subject: Nonconservatisms in Iodine Spiking Calculations, March 7, 2000.

7.16 Connolly, Thomas L., Foundations of Nuclear Engineering, John Wiley & Sons, Inc., 1978.

7.17 Calculation TH-00-03, D.C. Cook Unit 2 Steam Generator Tube Rupture with Operator Actions, Rev. 0

7.18 Calculation CN-CRA-99-55, "Donald C. Cook Steam Generator Tube Rupture T&H Analysis for NUREG-1465 Dose Project - Revised", Rev. 1.

Attachment A

Iodine Spike Inventory File

(SGTR_I_Spike.nif)

```
Radtrad 3.10 Nuclide Inventory Name:
 RWA-1313-011 - D. C. Cook SGTR Iodine Spike
 Power Level:
  1.0000E+00
 Inventory Type: 1=Specific Inventory, 2=Concentration, 3=Rate
  1
 Nuclides:
 100
 Nuclide 001:
 Co-58
   7
  6.1171200000E+06
  5.8000E+01
  0.0000E+00
  0.034
  0.976
 none     0.0000E+00
 none     0.0000E+00
 none     0.0000E+00
 Nuclide 002:
 Co-60
   7
  1.6622625600E+08
  6.0000E+01
  0.0000E+00
  0.097
  2.504
 none     0.0000E+00
 none     0.0000E+00
 none     0.0000E+00
 Nuclide 003:
 Kr-85
   1
  3.3806592000E+08
  8.5000E+01
  0.0000E+00
  0.251
  0.002
 none     0.0000E+00
 none     0.0000E+00
 none     0.0000E+00
 Nuclide 004:
 Kr-85m
   1
  1.6128000000E+04
  8.5000E+01
  0.0000E+00
  0.255
```

```
 0.158
Kr-85     2.1100E-01
none      0.0000E+00
none      0.0000E+00
Nuclide 005:
Kr-87
  1
 4.5780000000E+03
 8.7000E+01
 0.0000E+00
 1.324
 0.793
Rb-87     1.0000E+00
none      0.0000E+00
none      0.0000E+00
Nuclide 006:
Kr-88
  1
 1.0224000000E+04
 8.8000E+01
 0.0000E+00
 0.364
 1.955
Rb-88     1.0000E+00
none      0.0000E+00
none      0.0000E+00
Nuclide 007:
Rb-86
  3
 1.6122240000E+06
 8.6000E+01
 0.0000E+00
 0.668
 0.095
none      0.0000E+00
none      0.0000E+00
none      0.0000E+00
Nuclide 008:
Sr-89
  5
 4.3632000000E+06
 8.9000E+01
 0.0000E+00
 0.583
 0.000
none      0.0000E+00
none      0.0000E+00
none      0.0000E+00
Nuclide 009:
```

```
Sr-90
  5
 9.1832832000E+08
 9.0000E+01
 0.0000E+00
 0.196
 0.000
Y-90      1.0000E+00
none      0.0000E+00
none      0.0000E+00
Nuclide 010:
Sr-91
  5
 3.4200000000E+04
 9.1000E+01
 0.0000E+00
 0.656
 0.697
Y-91m     5.7800E-01
Y-91      4.2200E-01
none      0.0000E+00
Nuclide 011:
Sr-92
  5
 9.7560000000E+03
 9.2000E+01
 0.0000E+00
 0.196
 1.339
Y-92      1.0000E+00
none      0.0000E+00
none      0.0000E+00
Nuclide 012:
Y-90
  9
 2.3040000000E+05
 9.0000E+01
 0.0000E+00
 0.935
 0.000
none      0.0000E+00
none      0.0000E+00
none      0.0000E+00
Nuclide 013:
Y-91
  9
 5.0552640000E+06
 9.1000E+01
 0.0000E+00
```

```
 0.602
 0.004
none      0.0000E+00
none      0.0000E+00
none      0.0000E+00
Nuclide 014:
Y-92
  9
 1.2744000000E+04
 9.2000E+01
 0.0000E+00
 1.446
 0.252
none      0.0000E+00
none      0.0000E+00
none      0.0000E+00
Nuclide 015:
Y-93
  9
 3.6360000000E+04
 9.3000E+01
 0.0000E+00
 1.174
 0.089
Zr-93     1.0000E+00
none      0.0000E+00
none      0.0000E+00
Nuclide 016:
Zr-95
  9
 5.5278720000E+06
 9.5000E+01
 0.0000E+00
 0.116
 0.739
Nb-95m    7.0000E-03
Nb-95     9.9300E-01
none      0.0000E+00
Nuclide 017:
Zr-97
  9
 6.0840000000E+04
 9.7000E+01
 0.0000E+00
 0.700
 0.179
Nb-97m    9.4700E-01
Nb-97     5.3000E-02
none      0.0000E+00
```

```
Nuclide 018:
Nb-95
  9
 3.0369600000E+06
 9.5000E+01
 0.0000E+00
 0.044
 0.766
none      0.0000E+00
none      0.0000E+00
none      0.0000E+00
Nuclide 019:
Mo-99
  7
 2.3760000000E+05
 9.9000E+01
 0.0000E+00
 0.392
 0.150
Tc-99m    8.7600E-01
Tc-99     1.2400E-01
none      0.0000E+00
Nuclide 020:
Tc-99m
  7
 2.1672000000E+04
 9.9000E+01
 0.0000E+00
 0.016
 0.126
Tc-99     1.0000E+00
none      0.0000E+00
none      0.0000E+00
Nuclide 021:
Ru-103
  7
 3.3937920000E+06
 1.0300E+02
 0.0000E+00
 0.075
 0.469
Rh-103m   9.9700E-01
none      0.0000E+00
none      0.0000E+00
Nuclide 022:
Ru-105
  7
 1.5984000000E+04
 1.0500E+02
```

```
 0.0000E+00
 0.400
 0.784
Rh-105    1.0000E+00
none      0.0000E+00
none      0.0000E+00
Nuclide 023:
Ru-106
  7
 3.1812480000E+07
 1.0600E+02
 0.0000E+00
 0.010
 0.000
Rh-106    1.0000E+00
none      0.0000E+00
none      0.0000E+00
Nuclide 024:
Rh-105
  7
 1.2729600000E+05
 1.0500E+02
 0.0000E+00
 0.154
 0.078
none      0.0000E+00
none      0.0000E+00
none      0.0000E+00
Nuclide 025:
Sb-127
  4
 3.3264000000E+05
 1.2700E+02
 0.0000E+00
 0.316
 0.688
Te-127m   1.7600E-01
Te-127    8.2400E-01
none      0.0000E+00
Nuclide 026:
Sb-129
  4
 1.5552000000E+04
 1.2900E+02
 0.0000E+00
 0.408
 1.437
Te-129m   2.2500E-01
Te-129    7.7500E-01
```

```
none      0.0000E+00
Nuclide 027:
Te-127
  4
 3.3660000000E+04
 1.2700E+02
 0.0000E+00
 0.223
 0.005
none      0.0000E+00
none      0.0000E+00
none      0.0000E+00
Nuclide 028:
Te-127m
  4
 9.4176000000E+06
 1.2700E+02
 0.0000E+00
 0.082
 0.011
Te-127    9.7600E-01
none      0.0000E+00
none      0.0000E+00
Nuclide 029:
Te-129
  4
 4.1760000000E+03
 1.2900E+02
 0.0000E+00
 0.544
 0.059
I-129     1.0000E+00
none      0.0000E+00
none      0.0000E+00
Nuclide 030:
Te-129m
  4
 2.9030400000E+06
 1.2900E+02
 0.0000E+00
 0.260
 0.038
I-129     3.5000E-01
Te-129    6.5000E-01
none      0.0000E+00
Nuclide 031:
Te-131m
  4
 1.0800000000E+05
```

```
 1.3100E+02
 0.0000E+00
 0.202
 1.425
I-131     7.7800E-01
Te-131    2.2200E-01
none      0.0000E+00
Nuclide 032:
Te-132
  4
 2.8152000000E+05
 1.3200E+02
 0.0000E+00
 0.102
 0.234
I-132     1.0000E+00
none      0.0000E+00
none      0.0000E+00
Nuclide 033:
I-131
  3
 6.9465600000E+05
 1.3100E+02
 1.0000E+00
 0.192
 0.382
Xe-131m   1.1100E-02
none      0.0000E+00
none      0.0000E+00
Nuclide 034:
I-132
  4
 8.2800000000E+03
 1.3200E+02
 1.0000E+00
 0.495
 2.280
none      0.0000E+00
none      0.0000E+00
none      0.0000E+00
Nuclide 035:
I-133
  5
 7.4880000000E+04
 1.3300E+02
 1.0000E+00
 0.411
 0.607
Xe-133m   2.9000E-02
```

```
Xe-133    9.7100E-01
none      0.0000E+00
Nuclide 036:
I-134
  6
 3.1560000000E+03
 1.3400E+02
 1.0000E+00
 0.622
 2.625
none      0.0000E+00
none      0.0000E+00
none      0.0000E+00
Nuclide 037:
I-135
  7
 2.3796000000E+04
 1.3500E+02
 1.0000E+00
 0.367
 1.576
Xe-135m   1.5400E-01
Xe-135    8.4600E-01
none      0.0000E+00
Nuclide 038:
Xe-133
  1
 4.5316800000E+05
 1.3300E+02
 0.0000E+00
 0.136
 0.046
none      0.0000E+00
none      0.0000E+00
none      0.0000E+00
Nuclide 039:
Xe-135
  1
 3.2724000000E+04
 1.3500E+02
 0.0000E+00
 0.317
 0.249
Cs-135    1.0000E+00
none      0.0000E+00
none      0.0000E+00
Nuclide 040:
Cs-134
  3
```

```
 6.5027232000E+07
 1.3400E+02
 0.0000E+00
 0.164
 1.555
none      0.0000E+00
none      0.0000E+00
none      0.0000E+00
Nuclide 041:
Cs-136
  3
 1.1318400000E+06
 1.3600E+02
 0.0000E+00
 0.139
 2.166
none      0.0000E+00
none      0.0000E+00
none      0.0000E+00
Nuclide 042:
Cs-137
  3
 9.4608000000E+08
 1.3700E+02
 0.0000E+00
 0.187
 0.000
Ba-137m  9.4600E-01
none      0.0000E+00
none      0.0000E+00
Nuclide 043:
Ba-139
  6
 4.9620000000E+03
 1.3900E+02
 0.0000E+00
 0.898
 0.043
none      0.0000E+00
none      0.0000E+00
none      0.0000E+00
Nuclide 044:
Ba-140
  6
 1.1007360000E+06
 1.4000E+02
 0.0000E+00
 0.313
 0.183
```

```
La-140    1.0000E+00
none      0.0000E+00
none      0.0000E+00
Nuclide 045:
La-140
  9
 1.4497900000E+05
 1.4000E+02
 0.0000E+00
 0.537
 2.315
none      0.0000E+00
none      0.0000E+00
none      0.0000E+00
Nuclide 046:
La-141
  9
 1.4148000000E+04
 1.4100E+02
 0.0000E+00
 0.948
 0.043
Ce-141    1.0000E+00
none      0.0000E+00
none      0.0000E+00
Nuclide 047:
La-142
  9
 5.5500000000E+03
 1.4200E+02
 0.0000E+00
 0.846
 2.753
none      0.0000E+00
none      0.0000E+00
none      0.0000E+00
Nuclide 048:
Ce-141
  8
 2.8080860000E+06
 1.4100E+02
 0.0000E+00
 0.171
 0.076
none      0.0000E+00
none      0.0000E+00
none      0.0000E+00
Nuclide 049:
Ce-143
```

```
  8
 1.1880000000E+05
 1.4300E+02
 0.0000E+00
 0.433
 0.282
Pr-143   1.0000E+00
none     0.0000E+00
none     0.0000E+00
Nuclide 050:
Ce-144
  8
 2.4563520000E+07
 1.4400E+02
 0.0000E+00
 0.092
 0.021
Pr-144m  1.7800E-02
Pr-144   9.8220E-01
none     0.0000E+00
Nuclide 051:
Pr-143
  9
 1.1715840000E+06
 1.4300E+02
 0.0000E+00
 0.314
 0.000
none     0.0000E+00
none     0.0000E+00
none     0.0000E+00
Nuclide 052:
Nd-147
  9
 9.4867200000E+05
 1.4700E+02
 0.0000E+00
 0.270
 0.140
Pm-147   1.0000E+00
none     0.0000E+00
none     0.0000E+00
Nuclide 053:
Np-239
  8
 2.0347200000E+05
 2.3900E+02
 0.0000E+00
 0.260
```

```
 0.173
Pu-239    1.0000E+00
none      0.0000E+00
none      0.0000E+00
Nuclide 054:
Pu-238
  8
 2.7669686400E+09
 2.3800E+02
 0.0000E+00
 0.011
 0.002
U-234     1.0000E+00
none      0.0000E+00
none      0.0000E+00
Nuclide 055:
Pu-239
  8
 7.5891384000E+11
 2.3900E+02
 0.0000E+00
 0.007
 0.000
U-235     1.0000E+00
none      0.0000E+00
none      0.0000E+00
Nuclide 056:
Pu-240
  8
 2.0615083200E+11
 2.4000E+02
 0.0000E+00
 0.011
 0.002
U-236     1.0000E+00
none      0.0000E+00
none      0.0000E+00
Nuclide 057:
Pu-241
  8
 4.5411840000E+08
 2.4100E+02
 0.0000E+00
 0.005
 0.000
U-237     2.4500E-05
Am-241    1.0000E+00
none      0.0000E+00
Nuclide 058:
```

```
Am-241
  9
 1.3629859200E+10
 2.4100E+02
 0.0000E+00
 0.052
 0.033
Np-237    1.0000E+00
none      0.0000E+00
none      0.0000E+00
Nuclide 059:
Cm-242
  9
 1.4065920000E+07
 2.4200E+02
 0.0000E+00
 0.010
 0.002
Pu-238    1.0000E+00
none      0.0000E+00
none      0.0000E+00
Nuclide 060:
Cm-244
  9
 5.7111696000E+08
 2.4400E+02
 0.0000E+00
 0.009
 0.002
Pu-240    1.0000E+00
none      0.0000E+00
none      0.0000E+00
Nuclide 061:
Kr-83m
  1
 6.5880000000E+03
 8.3000E+01
 0.0000E+00
 0.039
 0.003
none      0.0000E+00
none      0.0000E+00
none      0.0000E+00
Nuclide 062:
Br-82
  2
 1.2708000000E+05
 8.2000E+01
 0.0000E+00
```

```
 0.139
 2.642
none      0.0000E+00
none      0.0000E+00
none      0.0000E+00
Nuclide 063:
Br-83
  2
 8.6040000000E+03
 8.3000E+01
 0.0000E+00
 0.321
 0.008
Kr-83m    1.0000E+00
none      0.0000E+00
none      0.0000E+00
Nuclide 064:
Br-84
  2
 1.9080000000E+03
 8.4000E+01
 0.0000E+00
 1.229
 1.788
none      0.0000E+00
none      0.0000E+00
none      0.0000E+00
Nuclide 065:
Rb-89
  3
 9.1200000000E+02
 8.9000E+01
 0.0000E+00
 1.013
 2.071
Sr-89     1.0000E+00
none      0.0000E+00
none      0.0000E+00
Nuclide 066:
Y-91m
  9
 2.9830000000E+03
 9.1000E+01
 0.0000E+00
 0.027
 0.530
Y-91      1.0000E+00
none      0.0000E+00
none      0.0000E+00
```

```
Nuclide 067:
Y-95
  9
 6.4200000000E+02
 9.5000E+01
 0.0000E+00
 1.528
 0.894
Zr-95     1.0000E+00
none      0.0000E+00
none      0.0000E+00
Nuclide 068:
Nb-95m
  9
 3.1176000000E+05
 9.5000E+01
 0.0000E+00
 0.166
 0.068
Nb-95     1.0000E+00
none      0.0000E+00
none      0.0000E+00
Nuclide 069:
Nb-97
  9
 4.3260000000E+03
 9.7000E+01
 0.0000E+00
 0.468
 0.655
none      0.0000E+00
none      0.0000E+00
none      0.0000E+00
Nuclide 070:
Rh-103m
  7
 3.3670000000E+03
 1.0300E+02
 0.0000E+00
 0.038
 0.002
none      0.0000E+00
none      0.0000E+00
none      0.0000E+00
Nuclide 071:
Pd-109
  7
 4.8337000000E+04
 1.0900E+02
```

```
 0.0000E+00
 0.437
 0.012
none      0.0000E+00
none      0.0000E+00
none      0.0000E+00
Nuclide 072:
Sb-124
  4
 5.2012800000E+06
 1.2400E+02
 0.0000E+00
 0.387
 1.817
none      0.0000E+00
none      0.0000E+00
none      0.0000E+00
Nuclide 073:
Sb-125
  4
 8.7354720000E+07
 1.2500E+02
 0.0000E+00
 0.100
 0.431
Te-125m  2.2800E-01
none      0.0000E+00
none      0.0000E+00
Nuclide 074:
Sb-126
  4
 1.0713600000E+06
 1.2600E+02
 0.0000E+00
 0.283
 2.834
none      0.0000E+00
none      0.0000E+00
none      0.0000E+00
Nuclide 075:
Te-125m
  4
 5.0112000000E+06
 1.2500E+02
 0.0000E+00
 0.109
 0.036
none      0.0000E+00
none      0.0000E+00
```

```
none      0.0000E+00
Nuclide 076:
Te-131
  4
 1.5000000000E+03
 1.3100E+02
 0.0000E+00
 0.719
 0.420
I-131     1.0000E+00
none      0.0000E+00
none      0.0000E+00
Nuclide 077:
Te-133
  4
 7.4700000000E+02
 1.3300E+02
 0.0000E+00
 0.819
 0.929
I-133     1.0000E+00
none      0.0000E+00
none      0.0000E+00
Nuclide 078:
Te-133m
  4
 3.3240000000E+03
 1.3300E+02
 0.0000E+00
 0.705
 2.313
I-133     8.7000E-01
Te-133    1.3000E-01
none      0.0000E+00
Nuclide 079:
Te-134
  4
 2.5080000000E+03
 1.3400E+02
 0.0000E+00
 0.300
 0.886
I-134     1.0000E+00
none      0.0000E+00
none      0.0000E+00
Nuclide 080:
I-130
  2
 4.4496000000E+04
```

```
 1.3000E+02
 0.0000E+00
 0.297
 2.139
none      0.0000E+00
none      0.0000E+00
none      0.0000E+00
Nuclide 081:
Xe-131m
  1
 1.0281600000E+06
 1.3100E+02
 0.0000E+00
 0.144
 0.020
none      0.0000E+00
none      0.0000E+00
none      0.0000E+00
Nuclide 082:
Xe-133m
  1
 1.8904300000E+05
 1.3300E+02
 0.0000E+00
 0.192
 0.041
Xe-133    1.0000E+00
none      0.0000E+00
none      0.0000E+00
Nuclide 083:
Xe-135m
  1
 9.1700000000E+02
 1.3500E+02
 0.0000E+00
 0.098
 0.429
Cs-135    4.5000E-05
Xe-135    9.9900E-01
none      0.0000E+00
Nuclide 084:
Xe-138
  1
 8.5000000000E+02
 1.3800E+02
 0.0000E+00
 0.673
 1.125
Cs-138    1.0000E+00
```

```
none      0.0000E+00
none      0.0000E+00
Nuclide 085:
Cs-134m
  3
 1.0440000000E+04
 1.3400E+02
 0.0000E+00
 0.112
 0.027
Cs-134    1.0000E+00
none      0.0000E+00
none      0.0000E+00
Nuclide 086:
Cs-138
  3
 1.9320000000E+03
 1.3800E+02
 0.0000E+00
 1.207
 2.361
none      0.0000E+00
none      0.0000E+00
none      0.0000E+00
Nuclide 087:
Ba-141
  6
 1.0960000000E+03
 1.4100E+02
 0.0000E+00
 0.901
 0.845
La-141    1.0000E+00
none      0.0000E+00
none      0.0000E+00
Nuclide 088:
La-143
  9
 8.5400000000E+02
 1.4300E+02
 0.0000E+00
 1.324
 0.094
Ce-143    1.0000E+00
none      0.0000E+00
none      0.0000E+00
Nuclide 089:
Pm-147
  9
```

```
 8.2731542000E+07
 1.4700E+02
 0.0000E+00
 0.062
 0.000
Sm-147    1.0000E+00
none      0.0000E+00
none      0.0000E+00
Nuclide 090:
Pm-148
  9
 4.6396800000E+05
 1.4800E+02
 0.0000E+00
 0.724
 0.575
none      0.0000E+00
none      0.0000E+00
none      0.0000E+00
Nuclide 091:
Pm-148m
  9
 3.5683200000E+06
 1.4800E+02
 0.0000E+00
 0.170
 2.000
Pm-148    4.6000E-02
none      0.0000E+00
none      0.0000E+00
Nuclide 092:
Pm-149
  9
 1.9108800000E+05
 1.4900E+02
 0.0000E+00
 0.366
 0.011
none      0.0000E+00
none      0.0000E+00
none      0.0000E+00
Nuclide 093:
Pm-151
  9
 1.0224000000E+05
 1.5100E+02
 0.0000E+00
 0.306
 0.321
```

```
Sm-151    1.0000E+00
none      0.0000E+00
none      0.0000E+00
Nuclide 094:
Sm-153
  9
 1.6812000000E+05
 1.5300E+02
 0.0000E+00
 0.273
 0.062
none      0.0000E+00
none      0.0000E+00
none      0.0000E+00
Nuclide 095:
Eu-154
  9
 2.7751680000E+08
 1.5400E+02
 0.0000E+00
 0.292
 1.242
none      0.0000E+00
none      0.0000E+00
none      0.0000E+00
Nuclide 096:
Eu-155
  9
 1.5641856000E+08
 1.5500E+02
 0.0000E+00
 0.063
 0.061
none      0.0000E+00
none      0.0000E+00
none      0.0000E+00
Nuclide 097:
Eu-156
  9
 1.3124160000E+06
 1.5600E+02
 0.0000E+00
 0.423
 1.329
none      0.0000E+00
none      0.0000E+00
none      0.0000E+00
Nuclide 098:
Np-238
```

```
  8
 1.8290900000E+05
 2.3800E+02
 0.0000E+00
 0.264
 0.553
Pu-238   1.0000E+00
none     0.0000E+00
none     0.0000E+00
Nuclide 099:
Pu-243
  8
 1.7842000000E+04
 2.4300E+02
 0.0000E+00
 0.173
 0.026
Am-243   1.0000E+00
none     0.0000E+00
none     0.0000E+00
Nuclide 100:
Am-242
  9
 5.7672000000E+04
 2.4200E+02
 0.0000E+00
 0.179
 0.018
Cm-242   8.2700E-01
Pu-242   1.7300E-01
none     0.0000E+00
End of Nuclear Inventory File
```

Attachment B

Noble Gas Release RADTRAD Output

(SGTR_NG_R1.o0)

Note: The computer clock was set to 12/01/14 during model execution due to software date limitations

```
#######################################################################
    ALION RADTRAD Version 3.10 Rev 2 run on 12/01/2014  at 16:16:38

                Copyright © 2009 Alion Science and Technology
#######################################################################

            D. C. Cook - SGTR Noble Gas Release

#######################################################################
                     File information
#######################################################################

Input File Name      = C:\Projects\1537-Cook_Dose\SGTR\SGTR_NG_R1.psf
Output File Name     = C:\Projects\1537-Cook_Dose\SGTR\SGTR_NG_R1.o0

Inventory file       =  c:\projects\1537-cook_dose\source_term\cook_rcs.nif
Release file         =    c:\projects\1537-cook_dose\sgtr\sgtr_ng_r1.rft
Dose Conversion file =    c:\projects\1537-cook_dose\source_term\rwa-1205-004.inp
```

```
  Radtrad 3.10  10/15/2013
  D. C. Cook - SGTR Noble Gas Release
Dose Conversion Factor File:
  c:\projects\1537-cook_dose\source_term\rwa-1205-004.inp
Release Fraction & Timing Files:
  1
  c:\projects\1537-cook_dose\sgtr\sgtr_ng_r1.rft
Nuclide Inventory Files:
  1
  1 c:\projects\1537-cook_dose\source_term\cook_rcs.nif
Plant Power Level:
  2.1144E+02
Number of Compartments:
  3
Compartment 1:
  RCS
  3
  4.661415E+05
  0
  0
  0
  0
  0
Compartment 2:
  Environment
  2
  0.00E+00
  0
  0
  0
  0
  0
```

```
Compartment 3:
  Control Room
  1
  5.0616E+04
  0
  0
  1
  0
  0
Number of Pathways:
  4
Pathway 1:
  Steam Generator Tube Leakage
  1
  2
  2
Pathway 2:
  Control Room Makeup
  2
  3
  2
Pathway 3:
  CR Unfiltered Inleakage
  2
  3
  2
Pathway 4:
  Control Room Exhaust
  3
  2
  2
  End of Plant Model
Source Term Input:
```

```
  1
  1  1  1  1
  0.00E+00
  0.00E+00   7.2E+02
  1
  3   1.00E+00   0.00E+00   0.00E+00
Overlying Pool:
  0
  0.00E+00
  0
  0
  0
  0
Compartments:
  3
Compartment 1:
  1
  1
  0
  0
  0
  0
  0
  0
  0
Compartment 2:
  2
  1
  0
  0
  0
  0
  0
```

```
  0
  0
Compartment 3:
  1
  1
  0
  0
  0
  0
  1
  3
  0.00E+00   0.00E+00   9.801E+01   9.405E+01   9.405E+01
  1.1E-01   4.52E+03   9.801E+01   9.405E+01   9.405E+01
  7.2E+02   4.52E+03   9.801E+01   9.405E+01   9.405E+01
  0
  7.2E+02   0.00E+00   0.00E+00   0.00E+00   0.00E+00
  7.2E+02
  0
  0
Pathways:
  4
Pathway 1:
  0
  0
  0
  0
  0
  1
  4
  0.00E+00   4.89846E+03   0.00E+00   0.00E+00   0.00E+00
  5.00E-01   6.246E+00   0.00E+00   0.00E+00   0.00E+00
  2.4E+01   0.00E+00   0.00E+00   0.00E+00   0.00E+00
  7.2E+02   0.00E+00   0.00E+00   0.00E+00   0.00E+00
```

```
  0
  7.2E+02   0.00E+00   0.00E+00   0.00E+00   0.00E+00
  7.2E+02
  0
  0
  0
  0
  0
  0
Pathway 2:
  0
  0
  0
  0
  0
  1
  3
  0.00E+00   8.8E+02   0.00E+00   0.00E+00   0.00E+00
  1.1E-01   8.8E+02   9.801E+01   9.405E+01   9.405E+01
  7.2E+02   8.8E+02   9.801E+01   9.405E+01   9.405E+01
  0
  7.2E+02   0.00E+00   0.00E+00   0.00E+00   0.00E+00
  7.2E+02
  0
  0
  0
  0
  0
  0
Pathway 3:
  0
  0
  0
```

```
  0
  0
  1
  2
  0.00E+00   4.00E+01   0.00E+00   0.00E+00   0.00E+00
  7.2E+02   4.00E+01   0.00E+00   0.00E+00   0.00E+00
  0
  7.2E+02   0.00E+00   0.00E+00   0.00E+00   0.00E+00
  7.2E+02
  0
  0
  0
  0
  0
  0
Pathway 4:
  0
  0
  0
  0
  0
  1
  2
  0.00E+00   9.2E+02   0.00E+00   0.00E+00   0.00E+00
  7.2E+02   9.2E+02   0.00E+00   0.00E+00   0.00E+00
  0
  7.2E+02   0.00E+00   0.00E+00   0.00E+00   0.00E+00
  7.2E+02
  0
  0
  0
  0
  0
```

```
  0
Dose Locations:
  3
Location 1:
  Exclusion Area Boundary
  2
  1
  4
  0.00E+00   3.5E-04
  8.00E+00   1.8E-04
  2.4E+01   2.3E-04
  7.2E+02   2.3E-04
  0
Location 2:
  Low Population Zone
  2
  1
  4
  0.00E+00   3.5E-04
  8.00E+00   1.8E-04
  2.4E+01   2.3E-04
  7.2E+02   2.3E-04
  0
Location 3:
  Control Room
  3
  1
  2
  0.00E+00   3.5E-04
  7.2E+02   3.5E-04
  1
  4
  0.00E+00   1.00E+00
```

```
  2.4E+01   6.00E-01
  9.6E+01   4.00E-01
  7.2E+02   4.00E-01
X/Q Tables:
  4
  Exclusion Area Boundary
  3
  0.00E+00   8.62E-04
  2.8E-02   5.87E-04
  7.2E+02   5.87E-04
  Low Population Zone
  7
  0.00E+00   1.16E-04
  2.8E-02   1.13E-04
  2.00E+00   5.29E-05
  8.00E+00   3.63E-05
  2.4E+01   1.65E-05
  9.6E+01   6.36E-06
  7.2E+02   6.36E-06
  Control Room Makeup
  8
  0.00E+00   8.5E-04
  2.8E-02   1.09E-02
  1.1E-01   1.26E-02
  2.00E+00   9.72E-03
  8.00E+00   3.26E-03
  2.4E+01   3.17E-03
  9.6E+01   2.8E-03
  7.2E+02   2.8E-03
  CR Unfiltered Inleakage
  7
  0.00E+00   8.5E-04
  2.8E-02   1.09E-02
```

```
  2.00E+00   8.61E-03
  8.00E+00   2.87E-03
  2.4E+01   2.78E-03
  9.6E+01   2.5E-03
  7.2E+02   2.5E-03
Inflow Pathways:
  2  2 3
Exhaust Pathways:
  2  1 4
X/Q table ID for Exhaust-Inflow paths:
  3 4
  -1 -1
Simulation Parameters:
  0
Output Filename:
  C:\Projects\1537-Cook_Dose\SGTR\SGTR_NG_R1.o0
  1
  1
  0
  0
  1
  End of Scenario File
```

```
#######################################################################
    ALION RADTRAD Version 3.10 Rev 2 run on 12/01/2014  at 16:16:38

                Copyright © 2009 Alion Science and Technology
#######################################################################

          D. C. Cook - SGTR Noble Gas Release

#######################################################################
                     Plant Description
#######################################################################

Number of Nuclides = 100

Inventory Power   =   1.0000E+00 MWth
Plant Power Level =   2.1144E+02 MWth

Number of compartments    =   3

Compartment information

Compartment number  1
Name: RCS
Compartment volume =   4.6614E+05 (Cubic feet)
Compartment type is Normal
Pathways into and out of compartment  1
   Exit Pathway Number    1: Steam Generator Tube Leakage

Compartment number  2
Name: Environment
Compartment type is Environment
Pathways into and out of compartment  2
```

```
   Inlet Pathway Number   1: Steam Generator Tube Leakage
   Inlet Pathway Number   4: Control Room Exhaust
   Exit Pathway Number    2: Control Room Makeup
   Exit Pathway Number    3: CR Unfiltered Inleakage

Compartment number  3
Name: Control Room
Compartment volume =   5.0616E+04 (Cubic feet)
Compartment type is Control Room
Removal devices within compartment:
     Filter(s)
Pathways into and out of compartment  3
   Inlet Pathway Number   2: Control Room Makeup
   Inlet Pathway Number   3: CR Unfiltered Inleakage
   Exit Pathway Number    4: Control Room Exhaust

Total number of pathways =   4
```

```
#######################################################################
    ALION RADTRAD Version 3.10 Rev 2 run on 12/01/2014  at 16:16:38

                Copyright © 2009 Alion Science and Technology
#######################################################################

            D. C. Cook - SGTR Noble Gas Release

#######################################################################
                     Scenario Description
#######################################################################

Power Ratio                                =   2.1144E+02

End Time                                   =   7.2000E+02 (Hours)

Radioactive Decay is enabled
Calculation of Daughters is enabled

Source Number  1 is used in Compartment  1  RCS
   Nuclide Distribution given in Ci/MWt
Fraction of Nuclide Distribution in this Compartment   1.00000

Iodine fractions for source number 1
     Aerosol      =   1.0000E+00
     Elemental    =   0.0000E+00
     Organic      =   0.0000E+00

Inventory file =      c:\projects\1537-cook_dose\source_term\cook_rcs.nif
Release from file =     c:\projects\1537-cook_dose\sgtr\sgtr_ng_r1.rft
Dose Conversion file =     c:\projects\1537-cook_dose\source_term\rwa-1205-004.inp
```

Nuclide Name	Group	Specific Inventory (Ci/MWt)	half life (s)	Whole Body DCF (Sv-m3/Bq-s)	Inhaled Thyroid (Sv/Bq)	Inhaled Effective (Sv/Bq)
Kr-85	1	2.385E+01	3.381E+08	1.190E-16	0.000E+00	0.000E+00
Kr-85m	1	5.204E-01	1.613E+04	7.480E-15	0.000E+00	0.000E+00
Kr-87	1	3.299E-01	4.578E+03	4.120E-14	0.000E+00	0.000E+00
Kr-88	1	9.148E-01	1.022E+04	1.020E-13	0.000E+00	0.000E+00
I-131	2	8.087E-01	6.947E+05	1.820E-14	2.920E-07	8.890E-09
I-133	2	1.030E+00	7.488E+04	2.940E-14	4.860E-08	1.580E-09
I-135	2	5.365E-01	2.380E+04	7.980E-14	8.460E-09	3.320E-10
Xe-133	1	1.037E+02	4.532E+05	1.560E-15	0.000E+00	0.000E+00
Xe-135	1	3.361E+00	3.272E+04	1.190E-14	0.000E+00	0.000E+00
Kr-83m	1	1.350E-01	6.588E+03	1.500E-18	0.000E+00	0.000E+00
Br-83	2	2.720E-02	8.604E+03	3.820E-16	1.140E-12	2.410E-11
Xe-131m	1	1.600E+00	1.028E+06	3.890E-16	0.000E+00	0.000E+00
Xe-133m	1	1.423E+00	1.890E+05	1.370E-15	0.000E+00	0.000E+00
Xe-135m	1	2.138E-01	9.170E+02	2.040E-14	0.000E+00	0.000E+00
Xe-138	1	2.292E-01	8.500E+02	5.770E-14	0.000E+00	0.000E+00

Nuclide	Daughter	Fraction	Daughter	Fraction	Daughter	Fraction
Kr-85m	Kr-85	0.21	none	0.00	none	0.00
Kr-87	Rb-87	1.00	none	0.00	none	0.00
Kr-88	Rb-88	1.00	none	0.00	none	0.00
I-131	Xe-131m	0.01	none	0.00	none	0.00
I-133	Xe-133m	0.03	Xe-133	0.97	none	0.00
I-135	Xe-135m	0.15	Xe-135	0.85	none	0.00
Xe-135	Cs-135	1.00	none	0.00	none	0.00
Br-83	Kr-83m	1.00	none	0.00	none	0.00
Xe-133m	Xe-133	1.00	none	0.00	none	0.00
Xe-135m	Cs-135	0.00	Xe-135	1.00	none	0.00
Xe-138	Cs-138	1.00	none	0.00	none	0.00

Release Fractions and Timings
RWA-1313-011 - D. C. Cook SGTR Noble Gas
Duration (h):

	GAP	EARLY IN-VESSEL	LATE RELEASE	RELEASE MASS
	0.000010 hr	0.0000 hrs	0.0000 hrs	(Ci)
NOBLES	1.0000E+00	0.0000E+00	0.0000E+00	2.881E+04
IODINE	0.0000E+00	0.0000E+00	0.0000E+00	0.000E+00
CESIUM	0.0000E+00	0.0000E+00	0.0000E+00	0.000E+00
TELLURIUM	0.0000E+00	0.0000E+00	0.0000E+00	0.000E+00
STRONTIUM	0.0000E+00	0.0000E+00	0.0000E+00	0.000E+00
BARIUM	0.0000E+00	0.0000E+00	0.0000E+00	0.000E+00
RUTHENIUM	0.0000E+00	0.0000E+00	0.0000E+00	0.000E+00
CERIUM	0.0000E+00	0.0000E+00	0.0000E+00	0.000E+00
LANTHANUM	0.0000E+00	0.0000E+00	0.0000E+00	0.000E+00
AEROSOL	0.0000E+00	0.0000E+00	0.0000E+00	0.000E+00

COMPARTMENT DATA

Compartment number 1: RCS

Compartment number 2: Environment

Compartment number 3: Control Room

Compartment Filter Data

Time (hr)	Flow Rate (cfm)	Filter Efficiencies (%) Aerosol	Elemental	Organic
0.0000E+00	0.0000E+00	9.8010E+01	9.4050E+01	9.4050E+01
1.1000E-01	4.5200E+03	9.8010E+01	9.4050E+01	9.4050E+01
7.2000E+02	4.5200E+03	9.8010E+01	9.4050E+01	9.4050E+01

PATHWAY DATA

Pathway number 1: Steam Generator Tube Leakage

Pathway Filter: Removal Data

Time (hr)	Flow Rate (cfm)	Filter Efficiencies (%) Aerosol	Elemental	Organic
0.0000E+00	4.8985E+03	0.0000E+00	0.0000E+00	0.0000E+00
5.0000E-01	6.2460E+00	0.0000E+00	0.0000E+00	0.0000E+00
2.4000E+01	0.0000E+00	0.0000E+00	0.0000E+00	0.0000E+00
7.2000E+02	0.0000E+00	0.0000E+00	0.0000E+00	0.0000E+00

Pathway number 2: Control Room Makeup

Pathway Filter: Removal Data

Time (hr)	Flow Rate (cfm)	Filter Efficiencies (%) Aerosol	Elemental	Organic
0.0000E+00	8.8000E+02	0.0000E+00	0.0000E+00	0.0000E+00
1.1000E-01	8.8000E+02	9.8010E+01	9.4050E+01	9.4050E+01
7.2000E+02	8.8000E+02	9.8010E+01	9.4050E+01	9.4050E+01

Pathway number 3: CR Unfiltered Inleakage

Pathway Filter: Removal Data

Time (hr)	Flow Rate (cfm)	Filter Efficiencies (%) Aerosol	Elemental	Organic
0.0000E+00	4.0000E+01	0.0000E+00	0.0000E+00	0.0000E+00
7.2000E+02	4.0000E+01	0.0000E+00	0.0000E+00	0.0000E+00

Pathway number 4: Control Room Exhaust

Pathway Filter: Removal Data

Time (hr)	Flow Rate (cfm)	Filter Efficiencies (%) Aerosol	Elemental	Organic
0.0000E+00	9.2000E+02	0.0000E+00	0.0000E+00	0.0000E+00
7.2000E+02	9.2000E+02	0.0000E+00	0.0000E+00	0.0000E+00

DOSE INFORMATION
Number_Dose_Locations = 3

Dose Location Name = Exclusion Area Boundary
Located in compartment 2 the Environment

Exclusion Area Boundary Breathing Rate Data

Time (hr)	Breathing Rate (m^3 * sec^-1)
0.0000E+00	3.5000E-04
8.0000E+00	1.8000E-04
2.4000E+01	2.3000E-04
7.2000E+02	2.3000E-04

Dose Location Name = Low Population Zone
Located in compartment 2 the Environment

Low Population Zone Breathing Rate Data

Time (hr)	Breathing Rate (m^3 * sec^-1)
0.0000E+00	3.5000E-04
8.0000E+00	1.8000E-04
2.4000E+01	2.3000E-04
7.2000E+02	2.3000E-04

Dose Location Name = Control Room
Located in compartment 3 the Control Room

Control Room Breathing Rate Data

Time (hr)	Breathing Rate (m^3 * sec^-1)
0.0000E+00	3.5000E-04
7.2000E+02	3.5000E-04

Control Room Occupancy Factor Data

Time (hr)	Occupancy Factor
0.0000E+00	1.0000E+00
2.4000E+01	6.0000E-01
9.6000E+01	4.0000E-01
7.2000E+02	4.0000E-01

X/Q, ATMOSPHERIC DISPERSION INFORMATION

X/Q Table Name = Exclusion Area Boundary

Location X/Q Data

Time (hr)	X/Q (s * m^-3)
0.0000E+00	8.6200E-04
2.8000E-02	5.8700E-04
7.2000E+02	5.8700E-04

X/Q Table Name = Low Population Zone

Location X/Q Data

Time (hr)	X/Q (s * m^-3)
0.0000E+00	1.1600E-04
2.8000E-02	1.1300E-04
2.0000E+00	5.2900E-05
8.0000E+00	3.6300E-05
2.4000E+01	1.6500E-05
9.6000E+01	6.3600E-06
7.2000E+02	6.3600E-06

X/Q Table Name = Control Room Makeup

Location X/Q Data

Time (hr)	X/Q (s * m^-3)
0.0000E+00	8.5000E-04
2.8000E-02	1.0900E-02
1.1000E-01	1.2600E-02
2.0000E+00	9.7200E-03
8.0000E+00	3.2600E-03
2.4000E+01	3.1700E-03
9.6000E+01	2.8000E-03
7.2000E+02	2.8000E-03

This X/Q Table is used for these connected pathways
Path 1 Steam Generator Tube Leakage and Path 2 Control Room Makeup

X/Q Table Name = CR Unfiltered Inleakage

Location X/Q Data

Time (hr)	X/Q (s * m^-3)
0.0000E+00	8.5000E-04
2.8000E-02	1.0900E-02
2.0000E+00	8.6100E-03
8.0000E+00	2.8700E-03
2.4000E+01	2.7800E-03
9.6000E+01	2.5000E-03
7.2000E+02	2.5000E-03

This X/Q Table is used for these connected pathways
Path 1 Steam Generator Tube Leakage and Path 3 CR Unfiltered Inleakage

EDIT EACH MAJOR TIME STEP

DO NOT EDIT SUPPLEMENTAL TIME STEPS

DO NOT EDIT MODEL DECONTAMINATION

Masses in Curies in detailed output

```
#######################################################################
    ALION RADTRAD Version 3.10 Rev 2 run on 12/01/2014  at 16:16:38

                Copyright © 2009 Alion Science and Technology
#######################################################################


     ####   #    #  #####  #####   #    #  #####
    #    #  #    #    #    #    #  #    #    #
    #    #  #    #    #    #    #  #    #    #
    #    #  #    #    #    #####   #    #    #
    #    #  #    #    #    #       #    #    #
    #    #  #    #    #    #       #    #    #
     ####    ####     #    #        ####     #


           D. C. Cook - SGTR Noble Gas Release

#######################################################################
           Dose, Detailed model and Detailed Inventory Output
#######################################################################

#######################################################################
    ALION RADTRAD Version 3.10 Rev 2 run on 12/01/2014  at 16:16:38

                Copyright © 2009 Alion Science and Technology
#######################################################################

Exclusion Area Boundary Doses:
```

Time (h) = 0.0000	Whole Body	Thyroid	TEDE
Delta dose (rem)	7.1339E-07	0.0000E+00	7.1339E-07
Accumulated dose (rem)	7.1339E-07	0.0000E+00	7.1339E-07

Low Population Zone Doses:

Time (h) = 0.0000	Whole Body	Thyroid	TEDE
Delta dose (rem)	9.6001E-08	0.0000E+00	9.6001E-08
Accumulated dose (rem)	9.6001E-08	0.0000E+00	9.6001E-08

Control Room Doses:

Time (h) = 0.0000	Whole Body	Thyroid	TEDE	Skin
Delta dose (rem)	1.2723E-13	0.0000E+00	1.2723E-13	1.3361E-11
Accumulated dose (rem)	1.2723E-13	0.0000E+00	1.2723E-13	1.3361E-11

****

RCS Compartment Nuclide Inventory (Ci) at Time (h) = 0.0000

Nuclide	Compartment Atmosphere	Dose Fract	Exposure (Ci-hr)	Decays (Bq-s)
Kr-85	5.0428E+03	8.4580E-03	5.0428E-02	6.7170E+12
Kr-85m	1.1003E+02	1.1600E-02	1.1003E-03	1.4656E+11
Kr-87	6.9753E+01	4.0505E-02	6.9753E-04	9.2912E+10
Kr-88	1.9342E+02	2.7807E-01	1.9342E-03	2.5764E+11
Xe-133	2.1926E+04	4.8210E-01	2.1926E-01	2.9206E+13
Xe-135	7.1065E+02	1.1919E-01	7.1065E-03	9.4658E+11
Kr-83m	2.8544E+01	6.0347E-07	2.8544E-04	3.8021E+10
Xe-131m	3.3830E+02	1.8548E-03	3.3830E-03	4.5062E+11
Xe-133m	3.0088E+02	5.8098E-03	3.0088E-03	4.0077E+11
Xe-135m	4.5204E+01	1.2997E-02	4.5204E-04	6.0213E+10

Xe-138	4.8460E+01	3.9410E-02	4.8460E-04	6.4550E+10
Cs-138	6.2591E-04	1.1520E-06	6.2591E-09	0.0000E+00
Total	2.8814E+04	1.0000E+00	0.0000E+00	0.0000E+00

Dose Equivalent (Ci/cc) I-131 (Thyroid)	0.0000E+00
Dose Equivalent (Ci/cc) I-131 (CEDE)	0.0000E+00
Dose Equivalent (Ci/cc) I-131 (ICRP2 Thyroid)	0.0000E+00
Total I (Ci)	0.0000E+00
Dose Equivalent (Ci/cc) Xe-133 (EDE)	3.4456E-06

RCS Compartment Group Inventory Distribution:

Time (h) = 0.0000	Atmosphere	Sump
Noble gases (Ci)	2.8814E+04	0.0000E+00
Elemental I (Ci)	0.0000E+00	0.0000E+00
Organic I (Ci)	0.0000E+00	0.0000E+00
Aerosol I (Ci)	0.0000E+00	0.0000E+00
All Aerosols (Ci)	6.2591E-04	0.0000E+00
All Aerosols (kg)	1.4792E-14	0.0000E+00

Control Room Compartment Nuclide Inventory (Ci) at Time (h) = 0.0000

Nuclide	Compartment Atmosphere	Dose Fract	Exposure (Ci-hr)	Decays (Bq-s)
Kr-85	5.8673E-06	8.4580E-03	5.8673E-11	7.8152E+03
Xe-133	2.5511E-05	4.8210E-01	2.5511E-10	3.3981E+04
Total	3.3525E-05	1.0000E+00	0.0000E+00	0.0000E+00

Control Room Compartment Group Inventory Distribution:

Time (h) = 0.0000	Atmosphere	Sump
Noble gases (Ci)	3.3525E-05	0.0000E+00
Elemental I (Ci)	0.0000E+00	0.0000E+00

```
Organic I (Ci)           0.0000E+00   0.0000E+00
Aerosol I (Ci)           0.0000E+00   0.0000E+00
All Aerosols (Ci)        7.2824E-13   0.0000E+00
All Aerosols (kg)        1.7210E-23   0.0000E+00

                         Deposition  Recirculating
Time (h) =   0.0000       Surfaces      Filter
Noble gases (Ci)         0.0000E+00   0.0000E+00
Elemental I (Ci)         0.0000E+00   0.0000E+00
Organic I (Ci)           0.0000E+00   0.0000E+00
Aerosol I (Ci)           0.0000E+00   0.0000E+00
All Aerosols (Ci)        0.0000E+00   0.0000E+00
All Aerosols (kg)        0.0000E+00   0.0000E+00

#######################################################################
    ALION RADTRAD Version 3.10 Rev 2 run on 12/01/2014  at 16:16:38

                Copyright © 2009 Alion Science and Technology
#######################################################################

Exclusion Area Boundary Doses:

Time (h) =   0.0280    Whole Body   Thyroid       TEDE
Delta dose (rem)        3.9539E-03  3.4383E-08  3.9541E-03
Accumulated dose (rem)  3.9546E-03  3.4383E-08  3.9548E-03

Low Population Zone Doses:

Time (h) =   0.0280    Whole Body   Thyroid       TEDE
Delta dose (rem)        5.3207E-04  4.6270E-09  5.3211E-04
Accumulated dose (rem)  5.3217E-04  4.6270E-09  5.3220E-04

Control Room Doses:
```

Time (h) = 0.0280	Whole Body	Thyroid	TEDE	Skin
Delta dose (rem)	1.9562E-06	6.6902E-10	1.9613E-06	2.0558E-04
Accumulated dose (rem)	1.9562E-06	6.6902E-10	1.9613E-06	2.0558E-04

****

RCS Compartment Nuclide Inventory (Ci) at Time (h) = 0.0280

Nuclide	Compartment Atmosphere	Dose Fract	Exposure (Ci-hr)	Decays (Bq-s)	Pathway 1 Outflow
Kr-85	4.9546E+03	8.4813E-03	1.3944E+02	1.8573E+16	8.8232E+01
Kr-85m	1.0764E+02	1.1597E-02	3.0331E+00	4.0439E+14	1.9228E+00
Kr-87	6.7496E+01	4.0180E-02	1.9080E+00	2.5496E+14	1.2151E+00
Kr-88	1.8875E+02	2.7749E-01	5.3224E+00	7.0998E+14	3.3776E+00
Xe-133	2.1539E+04	4.8338E-01	6.0621E+02	8.0750E+16	3.8362E+02
Xe-135	6.9682E+02	1.1935E-01	1.9622E+01	2.6147E+15	1.2427E+01
Kr-83m	2.7749E+01	6.0060E-07	7.8335E-01	1.0458E+14	4.9791E-01
Xe-131m	3.3236E+02	1.8598E-03	9.3539E+00	1.2460E+15	5.9190E+00
Xe-133m	2.9551E+02	5.8242E-03	8.3173E+00	1.1080E+15	5.2637E+00
Xe-135m	4.1157E+01	1.2351E-02	1.1845E+00	1.6033E+14	7.7391E-01
Xe-138	4.3857E+01	3.7293E-02	1.2645E+00	1.7137E+14	8.2824E-01
Cs-138	1.6357E+00	2.1975E-03	3.2921E-02	1.7972E+12	8.6279E-03
Total	2.8297E+04	1.0000E+00	0.0000E+00	0.0000E+00	5.0408E+02

Dose Equivalent (Ci/cc) I-131 (Thyroid)	0.0000E+00
Dose Equivalent (Ci/cc) I-131 (CEDE)	0.0000E+00
Dose Equivalent (Ci/cc) I-131 (ICRP2 Thyroid)	0.0000E+00
Total I (Ci)	0.0000E+00
Dose Equivalent (Ci/cc) Xe-133 (EDE)	3.3619E-06

RCS Compartment Group Inventory Distribution:

Time (h) = 0.0280	Atmosphere	Sump
Noble gases (Ci)	2.8295E+04	0.0000E+00
Elemental I (Ci)	0.0000E+00	0.0000E+00
Organic I (Ci)	0.0000E+00	0.0000E+00
Aerosol I (Ci)	0.0000E+00	0.0000E+00
All Aerosols (Ci)	1.6357E+00	0.0000E+00
All Aerosols (kg)	3.8655E-11	0.0000E+00

Control Room Compartment Nuclide Inventory (Ci) at Time (h) = 0.0280

Nuclide	Compartment Atmosphere	Dose Fract	Exposure (Ci-hr)	Decays (Bq-s)	Pathway 2 Inflow	Pathway 3 Inflow	Pathway 4 Outflow
Kr-85	3.2069E-02	8.4868E-03	6.4164E-04	8.5466E+10	3.1036E-02	1.4107E-03	4.9267E-04
Kr-85m	6.9672E-04	1.1596E-02	1.3947E-05	1.8598E+09	6.7636E-04	3.0744E-05	1.0732E-05
Kr-87	4.3687E-04	4.0104E-02	8.7576E-06	1.1710E+09	4.2743E-04	1.9429E-05	6.7759E-06
Kr-88	1.2217E-03	2.7735E-01	2.4464E-05	3.2643E+09	1.1881E-03	5.4005E-05	1.8849E-05
Xe-133	1.3942E-01	4.8367E-01	2.7895E-03	3.7157E+11	1.3494E-01	6.1336E-03	2.1420E-03
Xe-135	4.5102E-03	1.1939E-01	9.0263E-05	1.2029E+10	4.3712E-03	1.9869E-04	6.9376E-05
Kr-83m	1.7961E-04	5.9993E-07	3.5984E-06	4.8059E+08	1.7514E-04	7.9611E-06	2.7776E-06
Xe-131m	2.1513E-03	1.8610E-03	4.3042E-05	5.7334E+09	2.0821E-03	9.4639E-05	3.3050E-05
Xe-133m	1.9127E-03	5.8276E-03	3.8271E-05	5.0981E+09	1.8516E-03	8.4162E-05	2.9391E-05
Xe-135m	2.6639E-04	1.2202E-02	5.3816E-06	7.3081E+08	2.7224E-04	1.2374E-05	4.2924E-06
Xe-138	2.8387E-04	3.6806E-02	5.7391E-06	7.8055E+08	2.9135E-04	1.3243E-05	4.5913E-06
Cs-138	1.0587E-05	2.7006E-03	1.8606E-07	1.0615E+07	3.0317E-06	1.3781E-07	1.6464E-07
Total	1.8316E-01	1.0000E+00	0.0000E+00	0.0000E+00	1.7731E-01	8.0597E-03	2.8147E-03

Control Room Compartment Group Inventory Distribution:

Time (h) = 0.0280	Atmosphere	Sump
Noble gases (Ci)	1.8315E-01	0.0000E+00
Elemental I (Ci)	0.0000E+00	0.0000E+00
Organic I (Ci)	0.0000E+00	0.0000E+00
Aerosol I (Ci)	0.0000E+00	0.0000E+00

```
All Aerosols (Ci)        1.0587E-05   0.0000E+00
All Aerosols (kg)        2.5020E-16   0.0000E+00

                         Deposition  Recirculating
Time (h) =   0.0280       Surfaces      Filter
Noble gases (Ci)         0.0000E+00   0.0000E+00
Elemental I (Ci)         0.0000E+00   0.0000E+00
Organic I (Ci)           0.0000E+00   0.0000E+00
Aerosol I (Ci)           0.0000E+00   0.0000E+00
All Aerosols (Ci)        0.0000E+00   0.0000E+00
All Aerosols (kg)        0.0000E+00   0.0000E+00

#######################################################################
    ALION RADTRAD Version 3.10 Rev 2 run on 12/01/2014  at 16:16:38

                Copyright © 2009 Alion Science and Technology
#######################################################################

Exclusion Area Boundary Doses:

Time (h) =   0.1100    Whole Body   Thyroid       TEDE
Delta dose (rem)        7.5754E-03  3.6152E-07  7.5782E-03
Accumulated dose (rem)  1.1530E-02  3.9591E-07  1.1533E-02

Low Population Zone Doses:

Time (h) =   0.1100    Whole Body   Thyroid       TEDE
Delta dose (rem)        1.4583E-03  6.9595E-08  1.4588E-03
Accumulated dose (rem)  1.9905E-03  7.4222E-08  1.9910E-03

Control Room Doses:

Time (h) =   0.1100    Whole Body   Thyroid       TEDE        Skin
```

Delta dose (rem)	2.1354E-04	3.6959E-07	2.1637E-04	2.2514E-02
Accumulated dose (rem)	2.1549E-04	3.7026E-07	2.1834E-04	2.2720E-02

****

RCS Compartment Nuclide Inventory (Ci) at Time (h) = 0.1100

Nuclide	Compartment Atmosphere	Dose Fract	Exposure (Ci-hr)	Decays (Bq-s)	Pathway 1 Outflow
Kr-85	4.7050E+03	8.5420E-03	5.3025E+02	7.0630E+16	3.3790E+02
Kr-85m	1.0093E+02	1.1588E-02	1.1443E+01	1.5282E+15	7.3302E+00
Kr-87	6.1293E+01	3.9359E-02	7.0569E+00	9.4859E+14	4.5796E+00
Kr-88	1.7568E+02	2.7601E-01	1.9989E+01	2.6735E+15	1.2842E+01
Xe-133	2.0445E+04	4.8670E-01	2.3046E+03	3.0701E+17	1.4689E+03
Xe-135	6.5780E+02	1.1976E-01	7.4343E+01	9.9141E+15	4.7489E+01
Kr-83m	2.5545E+01	5.9331E-07	2.9219E+00	3.9167E+14	1.8857E+00
Xe-131m	3.1555E+02	1.8729E-03	3.5566E+01	4.7376E+15	2.2666E+01
Xe-133m	2.8031E+02	5.8620E-03	3.1608E+01	4.2111E+15	2.0151E+01
Xe-135m	3.1266E+01	1.0866E-02	3.9346E+00	5.4815E+14	2.7412E+00
Xe-138	3.2737E+01	3.2472E-02	4.1573E+00	5.8118E+14	2.9163E+00
Cs-138	5.1593E+00	6.9653E-03	3.9400E-01	3.4479E+13	1.4185E-01
Total	2.6836E+04	1.0000E+00	0.0000E+00	0.0000E+00	1.9295E+03

Dose Equivalent (Ci/cc) I-131 (Thyroid)	0.0000E+00
Dose Equivalent (Ci/cc) I-131 (CEDE)	0.0000E+00
Dose Equivalent (Ci/cc) I-131 (ICRP2 Thyroid)	0.0000E+00
Total I (Ci)	0.0000E+00
Dose Equivalent (Ci/cc) Xe-133 (EDE)	3.1331E-06

RCS Compartment Group Inventory Distribution:

Time (h) = 0.1100	Atmosphere	Sump
Noble gases (Ci)	2.6831E+04	0.0000E+00

Elemental I (Ci)	0.0000E+00	0.0000E+00
Organic I (Ci)	0.0000E+00	0.0000E+00
Aerosol I (Ci)	0.0000E+00	0.0000E+00
All Aerosols (Ci)	5.1593E+00	0.0000E+00
All Aerosols (kg)	1.2193E-10	0.0000E+00

Control Room Compartment Nuclide Inventory (Ci) at Time (h) = 0.1100

Nuclide	Compartment Atmosphere	Dose Fract	Exposure (Ci-hr)	Decays (Bq-s)	Pathway 2 Inflow	Pathway 3 Inflow	Pathway 4 Outflow
Kr-85	1.1591E+00	8.5696E-03	7.3656E-02	9.8110E+12	1.1465E+00	5.2115E-02	5.4651E-02
Kr-85m	2.4865E-02	1.1583E-02	1.5839E-03	2.1163E+11	2.4836E-02	1.1289E-03	1.1818E-03
Kr-87	1.5100E-02	3.8988E-02	9.6789E-04	1.3034E+11	1.5459E-02	7.0269E-04	7.3240E-04
Kr-88	4.3282E-02	2.7534E-01	2.7610E-03	3.6957E+11	4.3476E-02	1.9762E-03	2.0667E-03
Xe-133	5.0369E+00	4.8821E-01	3.2009E-01	4.2641E+13	4.9838E+00	2.2654E-01	2.3755E-01
Xe-135	1.6206E-01	1.1995E-01	1.0310E-02	1.3752E+12	1.6103E-01	7.3194E-03	7.6695E-03
Kr-83m	6.2934E-03	5.9002E-07	4.0232E-04	5.3998E+10	6.3755E-03	2.8980E-04	3.0261E-04
Xe-131m	7.7741E-02	1.8789E-03	4.9401E-03	6.5806E+11	7.6907E-02	3.4958E-03	3.6658E-03
Xe-133m	6.9059E-02	5.8791E-03	4.3892E-03	5.8479E+11	6.8365E-02	3.1075E-03	3.2582E-03
Xe-135m	7.7029E-03	1.0206E-02	5.1171E-04	7.2031E+10	9.0614E-03	4.1188E-04	4.1885E-04
Xe-138	8.0652E-03	3.0334E-02	5.3772E-04	7.6028E+10	9.6197E-03	4.3726E-04	4.4358E-04
Cs-138	1.2711E-03	9.0573E-03	7.0938E-05	6.6910E+09	5.9855E-04	2.7207E-05	6.4350E-05
Total	6.6115E+00	1.0000E+00	0.0000E+00	0.0000E+00	6.5461E+00	2.9755E-01	3.1200E-01

Control Room Compartment Group Inventory Distribution:

Time (h) = 0.1100	Atmosphere	Sump
Noble gases (Ci)	6.6102E+00	0.0000E+00
Elemental I (Ci)	0.0000E+00	0.0000E+00
Organic I (Ci)	0.0000E+00	0.0000E+00
Aerosol I (Ci)	0.0000E+00	0.0000E+00
All Aerosols (Ci)	1.2711E-03	0.0000E+00
All Aerosols (kg)	3.0038E-14	0.0000E+00

Time (h) = 0.1100	Deposition Surfaces	Recirculating Filter
Noble gases (Ci)	0.0000E+00	0.0000E+00
Elemental I (Ci)	0.0000E+00	0.0000E+00
Organic I (Ci)	0.0000E+00	0.0000E+00
Aerosol I (Ci)	0.0000E+00	0.0000E+00
All Aerosols (Ci)	0.0000E+00	0.0000E+00
All Aerosols (kg)	0.0000E+00	0.0000E+00

```
#######################################################################
    ALION RADTRAD Version 3.10 Rev 2 run on 12/01/2014  at 16:16:38

                Copyright © 2009 Alion Science and Technology
#######################################################################
```

Exclusion Area Boundary Doses:

Time (h) = 0.5000	Whole Body	Thyroid	TEDE
Delta dose (rem)	3.0120E-02	5.0751E-06	3.0159E-02
Accumulated dose (rem)	4.1650E-02	5.4710E-06	4.1692E-02

Low Population Zone Doses:

Time (h) = 0.5000	Whole Body	Thyroid	TEDE
Delta dose (rem)	5.7982E-03	9.7698E-07	5.8057E-03
Accumulated dose (rem)	7.7887E-03	1.0512E-06	7.7968E-03

Control Room Doses:

Time (h) = 0.5000	Whole Body	Thyroid	TEDE	Skin
Delta dose (rem)	5.5275E-03	9.3028E-06	5.5989E-03	5.9694E-01
Accumulated dose (rem)	5.7430E-03	9.6731E-06	5.8172E-03	6.1966E-01

****

RCS Compartment Nuclide Inventory (Ci) at Time (h) = 0.5000

Nuclide	Compartment Atmosphere	Dose Fract	Exposure (Ci-hr)	Decays (Bq-s)	Pathway 1 Outflow
Kr-85	3.6793E+03	8.7658E-03	2.1352E+03	2.8441E+17	1.3636E+03
Kr-85m	7.4304E+01	1.1557E-02	4.4784E+01	5.9839E+15	2.8780E+01
Kr-87	3.8752E+01	3.6605E-02	2.5754E+01	3.4682E+15	1.6810E+01
Kr-88	1.2491E+02	2.7084E-01	7.6967E+01	1.0303E+16	4.9639E+01
Xe-133	1.5954E+04	4.9895E-01	9.2710E+03	1.2350E+18	5.9221E+03
Xe-135	4.9977E+02	1.2124E-01	2.9532E+02	3.9394E+16	1.8916E+02
Kr-83m	1.7233E+01	5.6826E-07	1.0981E+01	1.4739E+15	7.1206E+00
Xe-131m	2.4653E+02	1.9211E-03	1.4315E+02	1.9069E+16	9.1433E+01
Xe-133m	2.1808E+02	6.0008E-03	1.2697E+02	1.6916E+16	8.1129E+01
Xe-135m	8.4603E+00	7.2217E-03	1.0261E+01	1.4420E+15	7.2860E+00
Xe-138	8.1473E+00	2.0977E-02	1.0538E+01	1.4870E+15	7.5425E+00
Cs-138	8.2753E+00	1.5930E-02	3.5359E+00	4.2606E+14	2.0121E+00
Total	2.0878E+04	1.0000E+00	0.0000E+00	0.0000E+00	7.7667E+03

Dose Equivalent (Ci/cc) I-131 (Thyroid)	0.0000E+00
Dose Equivalent (Ci/cc) I-131 (CEDE)	0.0000E+00
Dose Equivalent (Ci/cc) I-131 (ICRP2 Thyroid)	0.0000E+00
Total I (Ci)	0.0000E+00
Dose Equivalent (Ci/cc) Xe-133 (EDE)	2.2924E-06

RCS Compartment Group Inventory Distribution:

Time (h) = 0.5000	Atmosphere	Sump
Noble gases (Ci)	2.0870E+04	0.0000E+00
Elemental I (Ci)	0.0000E+00	0.0000E+00
Organic I (Ci)	0.0000E+00	0.0000E+00

Aerosol I (Ci)	0.0000E+00	0.0000E+00
All Aerosols (Ci)	8.2753E+00	0.0000E+00
All Aerosols (kg)	1.9557E-10	0.0000E+00

Control Room Compartment Nuclide Inventory (Ci) at Time (h) = 0.5000

Nuclide	Compartment Atmosphere	Dose Fract	Exposure (Ci-hr)	Decays (Bq-s)	Compartment Recirc Filtr	Pathway 2 Inflow	Pathway 3 Inflow	Pathway 4 Outflow
Kr-85	5.2620E+00	8.9933E-03	1.5133E+00	2.0157E+14	0.0000E+00	6.4420E+00	2.6034E-01	1.5288E+00
Kr-85m	1.0627E-01	1.1692E-02	3.1298E-02	4.1825E+12	0.0000E+00	1.3557E-01	5.4832E-03	3.1790E-02
Kr-87	5.5422E-02	3.5719E-02	1.7360E-02	2.3391E+12	0.0000E+00	7.8601E-02	3.1855E-03	1.7872E-02
Kr-88	1.7864E-01	2.7177E-01	5.3351E-02	7.1431E+12	0.0000E+00	2.3344E-01	9.4459E-03	5.4358E-02
Xe-133	2.2817E+01	5.1165E-01	6.5673E+00	8.7486E+14	0.0000E+00	2.7974E+01	1.1306E+00	6.6361E+00
Xe-135	7.1475E-01	1.2356E-01	2.0791E-01	2.7736E+13	0.0000E+00	8.9244E-01	3.6080E-02	2.1059E-01
Kr-83m	2.4646E-02	5.6319E-07	7.5180E-03	1.0094E+12	0.0000E+00	3.3401E-02	1.3525E-03	7.6957E-03
Xe-131m	3.5258E-01	1.9706E-03	1.0143E-01	1.3512E+13	0.0000E+00	4.3192E-01	1.7456E-02	1.0248E-01
Xe-133m	3.1189E-01	6.1493E-03	8.9875E-02	1.1975E+13	0.0000E+00	3.8317E-01	1.5486E-02	9.0842E-02
Xe-135m	1.2100E-02	5.6660E-03	5.5614E-03	7.8531E+11	0.0000E+00	3.2522E-02	1.3344E-03	6.1602E-03
Xe-138	1.1652E-02	1.6089E-02	5.5833E-03	7.9209E+11	0.0000E+00	3.3501E-02	1.3763E-03	6.2279E-03
Cs-138	2.7605E-03	6.7368E-03	1.0330E-03	1.0773E+11	3.3212E-03	7.9070E-04	4.0688E-04	2.6833E-03
Total	2.9850E+01	1.0000E+00	0.0000E+00	0.0000E+00	3.3212E-03	3.6672E+01	1.4825E+00	8.6956E+00

Control Room Compartment Group Inventory Distribution:

Time (h) = 0.5000	Atmosphere	Sump
Noble gases (Ci)	2.9847E+01	0.0000E+00
Elemental I (Ci)	0.0000E+00	0.0000E+00
Organic I (Ci)	0.0000E+00	0.0000E+00
Aerosol I (Ci)	0.0000E+00	0.0000E+00
All Aerosols (Ci)	2.7605E-03	0.0000E+00
All Aerosols (kg)	6.5239E-14	0.0000E+00

	Deposition	Recirculating

```
Time (h) =   0.5000        Surfaces      Filter
Noble gases (Ci)          0.0000E+00   0.0000E+00
Elemental I (Ci)          0.0000E+00   0.0000E+00
Organic I (Ci)            0.0000E+00   0.0000E+00
Aerosol I (Ci)            0.0000E+00   0.0000E+00
All Aerosols (Ci)         0.0000E+00   3.3212E-03
All Aerosols (kg)         0.0000E+00   7.8488E-14

#######################################################################
    ALION RADTRAD Version 3.10 Rev 2 run on 12/01/2014  at 16:16:38

                Copyright © 2009 Alion Science and Technology
#######################################################################

Exclusion Area Boundary Doses:

Time (h) =   2.0000     Whole Body   Thyroid       TEDE
Delta dose (rem)         1.1613E-04  1.6896E-08  1.1626E-04
Accumulated dose (rem)   4.1766E-02  5.4879E-06  4.1808E-02

Low Population Zone Doses:

Time (h) =   2.0000     Whole Body   Thyroid       TEDE
Delta dose (rem)         2.2356E-05  3.2526E-09  2.2381E-05
Accumulated dose (rem)   7.8111E-03  1.0545E-06  7.8191E-03

Control Room Doses:

Time (h) =   2.0000     Whole Body   Thyroid       TEDE        Skin
Delta dose (rem)         1.4584E-02  9.9738E-06  1.4661E-02  1.6450E+00
Accumulated dose (rem)   2.0327E-02  1.9647E-05  2.0478E-02  2.2647E+00

*****************************************************
```

RCS Compartment Nuclide Inventory (Ci) at Time (h) = 2.0000

Nuclide	Compartment Atmosphere	Dose Fract	Exposure (Ci-hr)	Decays (Bq-s)	Pathway 1 Outflow
Kr-85	3.6748E+03	9.5598E-03	7.6507E+03	1.0191E+18	1.3681E+03
Kr-85m	5.8844E+01	1.1297E-02	1.4384E+02	1.9225E+16	2.8860E+01
Kr-87	1.7088E+01	2.8096E-02	6.4945E+01	8.7544E+15	1.6843E+01
Kr-88	8.6514E+01	2.4943E-01	2.3289E+02	3.1189E+16	4.9766E+01
Xe-133	1.5806E+04	5.4198E-01	3.3087E+04	4.4077E+18	5.9413E+03
Xe-135	4.4543E+02	1.2524E-01	1.0023E+03	1.3373E+17	1.8974E+02
Kr-83m	9.7519E+00	4.8067E-07	3.0518E+01	4.0991E+15	7.1366E+00
Xe-131m	2.4534E+02	2.0914E-03	5.1202E+02	6.8205E+16	9.1730E+01
Xe-133m	2.1355E+02	6.4816E-03	4.5057E+02	6.0033E+16	8.1389E+01
Xe-135m	1.4261E-01	2.8150E-03	1.3142E+01	1.8491E+15	7.2886E+00
Xe-138	9.9555E-02	7.9430E-03	1.3110E+01	1.8520E+15	7.5448E+00
Cs-138	2.0451E+00	1.5065E-02	1.0987E+01	1.4330E+15	2.0183E+00
Total	2.0559E+04	1.0000E+00	0.0000E+00	0.0000E+00	7.7917E+03

Dose Equivalent (Ci/cc) I-131 (Thyroid)	0.0000E+00
Dose Equivalent (Ci/cc) I-131 (CEDE)	0.0000E+00
Dose Equivalent (Ci/cc) I-131 (ICRP2 Thyroid)	0.0000E+00
Total I (Ci)	0.0000E+00
Dose Equivalent (Ci/cc) Xe-133 (EDE)	1.9795E-06

RCS Compartment Group Inventory Distribution:

Time (h) = 2.0000	Atmosphere	Sump
Noble gases (Ci)	2.0557E+04	0.0000E+00
Elemental I (Ci)	0.0000E+00	0.0000E+00
Organic I (Ci)	0.0000E+00	0.0000E+00
Aerosol I (Ci)	0.0000E+00	0.0000E+00
All Aerosols (Ci)	2.0451E+00	0.0000E+00

All Aerosols (kg)	4.8330E-11	0.0000E+00

Control Room Compartment Nuclide Inventory (Ci) at Time (h) = 2.0000

Nuclide	Compartment Atmosphere	Dose Fract	Exposure (Ci-hr)	Decays (Bq-s)	Compartment Recirc Filtr	Pathway 2 Inflow	Pathway 3 Inflow	Pathway 4 Outflow
Kr-85	1.0368E+00	9.5863E-03	5.3149E+00	7.0794E+14	0.0000E+00	6.4652E+00	2.6125E-01	5.7789E+00
Kr-85m	1.6602E-02	1.1525E-02	1.0165E-01	1.3586E+13	0.0000E+00	1.3599E-01	5.4997E-03	1.1098E-01
Kr-87	4.8213E-03	2.9532E-02	4.7291E-02	6.3747E+12	0.0000E+00	7.8770E-02	3.1922E-03	5.2142E-02
Kr-88	2.4409E-02	2.5664E-01	1.6600E-01	2.2231E+13	0.0000E+00	2.3410E-01	9.4719E-03	1.8166E-01
Xe-133	4.4595E+00	5.4384E-01	2.3001E+01	3.0640E+15	0.0000E+00	2.8074E+01	1.1345E+00	2.5012E+01
Xe-135	1.2568E-01	1.2670E-01	7.0246E-01	9.3723E+13	0.0000E+00	8.9542E-01	3.6197E-02	7.6535E-01
Kr-83m	2.7515E-03	5.0004E-07	2.1994E-02	2.9540E+12	0.0000E+00	3.3484E-02	1.3558E-03	2.4151E-02
Xe-131m	6.9220E-02	2.0978E-03	3.5580E-01	4.7396E+13	0.0000E+00	4.3347E-01	1.7517E-02	3.8690E-01
Xe-133m	6.0251E-02	6.5098E-03	3.1350E-01	4.1770E+13	0.0000E+00	3.8453E-01	1.5540E-02	3.4099E-01
Xe-135m	4.0238E-05	2.6228E-03	8.4825E-03	1.1975E+12	0.0000E+00	3.2536E-02	1.3349E-03	9.8144E-03
Xe-138	2.8089E-05	7.2041E-03	8.2374E-03	1.1682E+12	0.0000E+00	3.3513E-02	1.3768E-03	9.5760E-03
Cs-138	1.1539E-05	3.7366E-03	1.8878E-03	2.0921E+11	1.4454E-03	7.9135E-04	4.0816E-04	2.0718E-02
Total	5.8001E+00	1.0000E+00	0.0000E+00	0.0000E+00	1.4454E-03	3.6802E+01	1.4876E+00	3.2694E+01

Control Room Compartment Group Inventory Distribution:

Time (h) = 2.0000	Atmosphere	Sump
Noble gases (Ci)	5.8001E+00	0.0000E+00
Elemental I (Ci)	0.0000E+00	0.0000E+00
Organic I (Ci)	0.0000E+00	0.0000E+00
Aerosol I (Ci)	0.0000E+00	0.0000E+00
All Aerosols (Ci)	1.1539E-05	0.0000E+00
All Aerosols (kg)	2.7270E-16	0.0000E+00

Time (h) = 2.0000	Deposition Surfaces	Recirculating Filter
Noble gases (Ci)	0.0000E+00	0.0000E+00

```
Elemental I (Ci)          0.0000E+00   0.0000E+00
Organic I (Ci)            0.0000E+00   0.0000E+00
Aerosol I (Ci)            0.0000E+00   0.0000E+00
All Aerosols (Ci)         0.0000E+00   1.4454E-03
All Aerosols (kg)         0.0000E+00   3.4158E-14

#######################################################################
    ALION RADTRAD Version 3.10 Rev 2 run on 12/01/2014  at 16:16:38

                Copyright © 2009 Alion Science and Technology
#######################################################################

Exclusion Area Boundary Doses:

Time (h) =   8.0000    Whole Body   Thyroid       TEDE
Delta dose (rem)        3.6094E-04  3.6382E-09  3.6097E-04
Accumulated dose (rem)  4.2127E-02  5.4916E-06  4.2169E-02

Low Population Zone Doses:

Time (h) =   8.0000    Whole Body   Thyroid       TEDE
Delta dose (rem)        3.2528E-05  3.2787E-10  3.2530E-05
Accumulated dose (rem)  7.8436E-03  1.0548E-06  7.8517E-03

Control Room Doses:

Time (h) =   8.0000    Whole Body   Thyroid       TEDE        Skin
Delta dose (rem)        3.2268E-03  3.2354E-08  3.2271E-03  3.9470E-01
Accumulated dose (rem)  2.3554E-02  1.9679E-05  2.3705E-02  2.6594E+00

*****************************************************

RCS Compartment Nuclide Inventory (Ci)  at Time (h) =   8.0000
```

Nuclide	Compartment Atmosphere	Dose Fract	Exposure (Ci-hr)	Decays (Bq-s)	Pathway 1 Outflow
Kr-85	3.6569E+03	1.1704E-02	2.9645E+04	3.9488E+18	1.3858E+03
Kr-85m	2.3144E+01	9.2436E-03	3.7249E+02	4.9800E+16	2.9045E+01
Kr-87	6.4606E-01	1.2938E-02	9.4656E+01	1.2766E+16	1.6867E+01
Kr-88	1.9907E+01	1.7029E-01	5.0323E+02	6.7420E+16	4.9986E+01
Xe-133	1.5225E+04	6.5291E-01	1.2615E+05	1.6806E+19	6.0161E+03
Xe-135	2.8054E+02	1.2389E-01	3.1381E+03	4.1876E+17	1.9146E+02
Kr-83m	1.0000E+00	2.6553E-07	5.3357E+01	7.1703E+15	7.1553E+00
Xe-131m	2.4063E+02	2.5421E-03	1.9698E+03	2.6239E+17	9.2902E+01
Xe-133m	1.9634E+02	7.6316E-03	1.6791E+03	2.2372E+17	8.2377E+01
Xe-135m	1.1516E-08	8.9273E-04	1.3190E+01	1.8560E+15	7.2886E+00
Xe-138	2.2196E-09	2.5157E-03	1.3142E+01	1.8565E+15	7.5449E+00
Cs-138	9.1103E-04	5.4382E-03	1.2552E+01	1.6482E+15	2.0197E+00
Total	1.9644E+04	1.0000E+00	0.0000E+00	0.0000E+00	7.8885E+03

Dose Equivalent (Ci/cc) I-131 (Thyroid)	0.0000E+00
Dose Equivalent (Ci/cc) I-131 (CEDE)	0.0000E+00
Dose Equivalent (Ci/cc) I-131 (ICRP2 Thyroid)	0.0000E+00
Total I (Ci)	0.0000E+00
Dose Equivalent (Ci/cc) Xe-133 (EDE)	1.4626E-06

RCS Compartment Group Inventory Distribution:

Time (h) = 8.0000	Atmosphere	Sump
Noble gases (Ci)	1.9644E+04	0.0000E+00
Elemental I (Ci)	0.0000E+00	0.0000E+00
Organic I (Ci)	0.0000E+00	0.0000E+00
Aerosol I (Ci)	0.0000E+00	0.0000E+00
All Aerosols (Ci)	9.1103E-04	0.0000E+00
All Aerosols (kg)	2.1530E-14	0.0000E+00

Control Room Compartment Nuclide Inventory (Ci) at Time (h) = 8.0000

Nuclide	Compartment Atmosphere	Dose Fract	Exposure (Ci-hr)	Decays (Bq-s)	Compartment Recirc Filtr	Pathway 2 Inflow	Pathway 3 Inflow	Pathway 4 Outflow
Kr-85	1.2806E-02	9.8406E-03	6.2966E+00	8.3870E+14	0.0000E+00	6.5366E+00	2.6413E-01	6.8775E+00
Kr-85m	8.1044E-05	1.1310E-02	1.1513E-01	1.5389E+13	0.0000E+00	1.3674E-01	5.5298E-03	1.2619E-01
Kr-87	2.2623E-06	2.7152E-02	5.0181E-02	6.7649E+12	0.0000E+00	7.8869E-02	3.1962E-03	5.5468E-02
Kr-88	6.9710E-05	2.4692E-01	1.8433E-01	2.4686E+13	0.0000E+00	2.3499E-01	9.5077E-03	2.0243E-01
Xe-133	5.3314E-02	5.5723E-01	2.7198E+01	3.6233E+15	0.0000E+00	2.8377E+01	1.1467E+00	2.9711E+01
Xe-135	9.8236E-04	1.2697E-01	8.1243E-01	1.0840E+14	0.0000E+00	9.0238E-01	3.6477E-02	8.8890E-01
Kr-83m	3.5018E-06	4.6982E-07	2.3849E-02	3.2035E+12	0.0000E+00	3.3560E-02	1.3588E-03	2.6268E-02
Xe-131m	8.4261E-04	2.1517E-03	4.2117E-01	5.6104E+13	0.0000E+00	4.3821E-01	1.7707E-02	4.6005E-01
Xe-133m	6.8751E-04	6.6527E-03	3.6975E-01	4.9265E+13	0.0000E+00	3.8852E-01	1.5700E-02	4.0398E-01
Xe-135m	4.0324E-14	2.2752E-03	8.4922E-03	1.1988E+12	0.0000E+00	3.2536E-02	1.3349E-03	9.8268E-03
Xe-138	7.7723E-15	6.2470E-03	8.2438E-03	1.1691E+12	0.0000E+00	3.3513E-02	1.3768E-03	9.5842E-03
Cs-138	2.8055E-11	3.2422E-03	1.8904E-03	2.0954E+11	6.3266E-07	7.9145E-04	4.0838E-04	9.3203E-02
Total	6.8788E-02	1.0000E+00	0.0000E+00	0.0000E+00	6.3266E-07	3.7193E+01	1.5034E+00	3.8865E+01

Control Room Compartment Group Inventory Distribution:

Time (h) = 8.0000	Atmosphere	Sump
Noble gases (Ci)	6.8788E-02	0.0000E+00
Elemental I (Ci)	0.0000E+00	0.0000E+00
Organic I (Ci)	0.0000E+00	0.0000E+00
Aerosol I (Ci)	0.0000E+00	0.0000E+00
All Aerosols (Ci)	2.8055E-11	0.0000E+00
All Aerosols (kg)	6.6302E-22	0.0000E+00

Time (h) = 8.0000	Deposition Surfaces	Recirculating Filter
Noble gases (Ci)	0.0000E+00	0.0000E+00
Elemental I (Ci)	0.0000E+00	0.0000E+00
Organic I (Ci)	0.0000E+00	0.0000E+00

```
Aerosol I (Ci)            0.0000E+00   0.0000E+00
All Aerosols (Ci)         0.0000E+00   6.3266E-07
All Aerosols (kg)         0.0000E+00   1.4951E-17

#######################################################################
    ALION RADTRAD Version 3.10 Rev 2 run on 12/01/2014  at 16:16:38

                Copyright © 2009 Alion Science and Technology
#######################################################################

Exclusion Area Boundary Doses:

Time (h) =  24.0000    Whole Body   Thyroid       TEDE
Delta dose (rem)        7.2416E-04  8.1767E-13  7.2416E-04
Accumulated dose (rem)  4.2851E-02  5.4916E-06  4.2893E-02

Low Population Zone Doses:

Time (h) =  24.0000    Whole Body   Thyroid       TEDE
Delta dose (rem)        4.4782E-05  5.0565E-14  4.4782E-05
Accumulated dose (rem)  7.8884E-03  1.0548E-06  7.8965E-03

Control Room Doses:

Time (h) =  24.0000    Whole Body   Thyroid       TEDE        Skin
Delta dose (rem)        1.5327E-04  1.1658E-13  1.5327E-04  2.2815E-02
Accumulated dose (rem)  2.3707E-02  1.9679E-05  2.3858E-02  2.6822E+00

*******************************************************

RCS Compartment Nuclide Inventory (Ci)  at Time (h) =  24.0000

 Nuclide    Compartment  Dose Fract    Exposure     Decays      Pathway  1
```

	Atmosphere		(Ci-hr)	(Bq-s)	Outflow
Kr-85	3.6098E+03	1.4624E-02	8.7770E+04	1.1691E+19	1.4325E+03
Kr-85m	1.9220E+00	5.3029E-03	5.0633E+02	6.7974E+16	2.9157E+01
Kr-87	1.0403E-04	5.5270E-03	9.5812E+01	1.2924E+16	1.6868E+01
Kr-88	3.9580E-01	8.2988E-02	5.8109E+02	7.8033E+16	5.0051E+01
Xe-133	1.3778E+04	7.8135E-01	3.5772E+05	4.7681E+19	6.2027E+03
Xe-135	8.1759E+01	9.4757E-02	5.6871E+03	7.6231E+17	1.9356E+02
Kr-83m	2.3039E-03	1.1745E-07	5.5923E+01	7.5204E+15	7.1575E+00
Xe-131m	2.2850E+02	3.1153E-03	5.7197E+03	7.6211E+17	9.5920E+01
Xe-133m	1.5692E+02	8.6057E-03	4.4863E+03	5.9854E+17	8.4645E+01
Xe-135m	1.4026E-27	3.7676E-04	1.3190E+01	1.8560E+15	7.2886E+00
Xe-138	8.7392E-30	1.0617E-03	1.3142E+01	1.8565E+15	7.5449E+00
Cs-138	9.5310E-13	2.2952E-03	1.2553E+01	1.6483E+15	2.0197E+00
Total	1.7857E+04	1.0000E+00	0.0000E+00	0.0000E+00	8.1294E+03

Dose Equivalent (Ci/cc) I-131 (Thyroid)	0.0000E+00
Dose Equivalent (Ci/cc) I-131 (CEDE)	0.0000E+00
Dose Equivalent (Ci/cc) I-131 (ICRP2 Thyroid)	0.0000E+00
Total I (Ci)	0.0000E+00
Dose Equivalent (Ci/cc) Xe-133 (EDE)	1.1293E-06

RCS Compartment Group Inventory Distribution:

Time (h) = 24.0000	Atmosphere	Sump
Noble gases (Ci)	1.7857E+04	0.0000E+00
Elemental I (Ci)	0.0000E+00	0.0000E+00
Organic I (Ci)	0.0000E+00	0.0000E+00
Aerosol I (Ci)	0.0000E+00	0.0000E+00
All Aerosols (Ci)	9.5310E-13	0.0000E+00
All Aerosols (kg)	2.2524E-23	0.0000E+00

Control Room Compartment Nuclide Inventory (Ci) at Time (h) = 24.0000

Nuclide	Compartment Atmosphere	Dose Fract	Exposure (Ci-hr)	Decays (Bq-s)	Compartment Recirc Filtr	Pathway 2 Inflow	Pathway 3 Inflow	Pathway 4 Outflow
Kr-85	3.7499E-03	9.8835E-03	6.3650E+00	8.4782E+14	0.0000E+00	6.5998E+00	2.6666E-01	6.9523E+00
Kr-85m	1.9966E-06	1.1255E-02	1.1532E-01	1.5414E+13	0.0000E+00	1.3689E-01	5.5359E-03	1.2640E-01
Kr-87	1.0807E-10	2.6979E-02	5.0183E-02	6.7652E+12	0.0000E+00	7.8870E-02	3.1962E-03	5.5470E-02
Kr-88	4.1117E-07	2.4549E-01	1.8444E-01	2.4702E+13	0.0000E+00	2.3508E-01	9.5113E-03	2.0256E-01
Xe-133	1.4312E-02	5.5922E-01	2.7472E+01	3.6598E+15	0.0000E+00	2.8629E+01	1.1568E+00	3.0011E+01
Xe-135	8.4932E-05	1.2665E-01	8.1565E-01	1.0883E+14	0.0000E+00	9.0522E-01	3.6591E-02	8.9251E-01
Kr-83m	2.3934E-09	4.6688E-07	2.3853E-02	3.2041E+12	0.0000E+00	3.3563E-02	1.3589E-03	2.6273E-02
Xe-131m	2.3737E-04	2.1603E-03	4.2560E-01	5.6693E+13	0.0000E+00	4.4229E-01	1.7871E-02	4.6490E-01
Xe-133m	1.6302E-04	6.6696E-03	3.7309E-01	4.9711E+13	0.0000E+00	3.9159E-01	1.5823E-02	4.0765E-01
Xe-135m	1.4571E-33	2.2606E-03	8.4922E-03	1.1988E+12	0.0000E+00	3.2536E-02	1.3349E-03	9.8268E-03
Xe-138	9.0784E-36	6.2068E-03	8.2438E-03	1.1691E+12	0.0000E+00	3.3513E-02	1.3768E-03	9.5842E-03
Cs-138	9.8028E-21	3.2213E-03	1.8904E-03	2.0954E+11	6.7129E-16	7.9145E-04	4.0838E-04	2.8650E-01
Total	1.8550E-02	1.0000E+00	0.0000E+00	0.0000E+00	6.7129E-16	3.7519E+01	1.5164E+00	3.9445E+01

Control Room Compartment Group Inventory Distribution:

Time (h) = 24.0000	Atmosphere	Sump
Noble gases (Ci)	1.8550E-02	0.0000E+00
Elemental I (Ci)	0.0000E+00	0.0000E+00
Organic I (Ci)	0.0000E+00	0.0000E+00
Aerosol I (Ci)	0.0000E+00	0.0000E+00
All Aerosols (Ci)	9.8028E-21	0.0000E+00
All Aerosols (kg)	2.3167E-31	0.0000E+00

Time (h) = 24.0000	Deposition Surfaces	Recirculating Filter
Noble gases (Ci)	0.0000E+00	0.0000E+00
Elemental I (Ci)	0.0000E+00	0.0000E+00
Organic I (Ci)	0.0000E+00	0.0000E+00
Aerosol I (Ci)	0.0000E+00	0.0000E+00
All Aerosols (Ci)	0.0000E+00	6.7129E-16

```
All Aerosols (kg)        0.0000E+00   1.5864E-26

#######################################################################
    ALION RADTRAD Version 3.10 Rev 2 run on 12/01/2014  at 16:16:38

                Copyright © 2009 Alion Science and Technology
#######################################################################

Exclusion Area Boundary Doses:

Time (h) =  96.0000    Whole Body   Thyroid       TEDE
Delta dose (rem)        0.0000E+00  0.0000E+00  0.0000E+00
Accumulated dose (rem)  4.2851E-02  5.4916E-06  4.2893E-02

Low Population Zone Doses:

Time (h) =  96.0000    Whole Body   Thyroid       TEDE
Delta dose (rem)        0.0000E+00  0.0000E+00  0.0000E+00
Accumulated dose (rem)  7.8884E-03  1.0548E-06  7.8965E-03

Control Room Doses:

Time (h) =  96.0000    Whole Body   Thyroid       TEDE        Skin
Delta dose (rem)        4.1731E-06  1.8191E-23  4.1731E-06  6.5905E-04
Accumulated dose (rem)  2.3712E-02  1.9679E-05  2.3863E-02  2.6828E+00

*******************************************************

RCS Compartment Nuclide Inventory (Ci)  at Time (h) =  96.0000

 Nuclide    Compartment  Dose Fract    Exposure     Decays      Pathway  1
            Atmosphere                  (Ci-hr)      (Bq-s)       Outflow
  Kr-85     3.6079E+03   2.0161E-02   3.4760E+05   4.6301E+19   1.4325E+03
```

Kr-85m	2.7910E-05	1.8895E-03	5.1828E+02	6.9628E+16	2.9157E+01
Kr-87	9.4027E-22	1.9239E-03	9.5812E+01	1.2924E+16	1.6868E+01
Kr-88	9.2413E-09	2.8964E-02	5.8261E+02	7.8249E+16	5.0051E+01
Xe-133	9.3003E+03	8.9491E-01	1.1770E+06	1.5696E+20	6.2027E+03
Xe-135	3.3740E-01	3.9061E-02	6.7347E+03	9.0454E+17	1.9356E+02
Kr-83m	3.3012E-15	4.0888E-08	5.5928E+01	7.5212E+15	7.1575E+00
Xe-131m	1.9187E+02	3.9446E-03	2.0806E+04	2.7728E+18	9.5920E+01
Xe-133m	6.0666E+01	7.8489E-03	1.1755E+04	1.5699E+18	8.4645E+01
Xe-135m	1.1417-112	1.3115E-04	1.3190E+01	1.8560E+15	7.2886E+00
Xe-138	1.3965-121	3.6957E-04	1.3142E+01	1.8565E+15	7.5449E+00
Cs-138	3.9130E-53	7.9896E-04	1.2553E+01	1.6483E+15	2.0197E+00
Total	1.3161E+04	1.0000E+00	0.0000E+00	0.0000E+00	8.1294E+03

Dose Equivalent (Ci/cc) I-131 (Thyroid) 0.0000E+00
Dose Equivalent (Ci/cc) I-131 (CEDE) 0.0000E+00
Dose Equivalent (Ci/cc) I-131 (ICRP2 Thyroid) 0.0000E+00
Total I (Ci) 0.0000E+00
Dose Equivalent (Ci/cc) Xe-133 (EDE) 7.3329E-07

RCS Compartment Group Inventory Distribution:

Time (h) = 96.0000	Atmosphere	Sump
Noble gases (Ci)	1.3161E+04	0.0000E+00
Elemental I (Ci)	0.0000E+00	0.0000E+00
Organic I (Ci)	0.0000E+00	0.0000E+00
Aerosol I (Ci)	0.0000E+00	0.0000E+00
All Aerosols (Ci)	3.9130E-53	0.0000E+00
All Aerosols (kg)	9.2473E-64	0.0000E+00

Control Room Compartment Nuclide Inventory (Ci) at Time (h) = 96.0000

Nuclide	Compartment Atmosphere	Dose Fract	Exposure (Ci-hr)	Decays (Bq-s)	Compartment Recirc Filtr.	Pathway 2 Inflow	Pathway 3 Inflow	Pathway 4 Outflow

Kr-85	2.9697E-37	9.8854E-03	6.3676E+00	8.4816E+14	0.0000E+00	6.5998E+00	2.6666E-01	6.9562E+00
Kr-85m	2.2974E-45	1.1253E-02	1.1532E-01	1.5414E+13	0.0000E+00	1.3689E-01	5.5359E-03	1.2640E-01
Kr-87	7.7396E-62	2.6973E-02	5.0183E-02	6.7652E+12	0.0000E+00	7.8870E-02	3.1962E-03	5.5470E-02
Kr-88	7.6067E-49	2.4543E-01	1.8444E-01	2.4702E+13	0.0000E+00	2.3508E-01	9.5113E-03	2.0257E-01
Xe-133	7.6552E-37	5.5930E-01	2.7482E+01	3.6611E+15	0.0000E+00	2.8629E+01	1.1568E+00	3.0026E+01
Xe-135	2.7772E-41	1.2664E-01	8.1571E-01	1.0884E+14	0.0000E+00	9.0522E-01	3.6591E-02	8.9259E-01
Kr-83m	2.7173E-55	4.6678E-07	2.3853E-02	3.2041E+12	0.0000E+00	3.3563E-02	1.3589E-03	2.6273E-02
Xe-131m	1.5793E-38	2.1607E-03	4.2576E-01	5.6715E+13	0.0000E+00	4.4229E-01	1.7871E-02	4.6514E-01
Xe-133m	4.9935E-39	6.6702E-03	3.7320E-01	4.9726E+13	0.0000E+00	3.9159E-01	1.5823E-02	4.0782E-01
Xe-135m	9.3976-153	2.2601E-03	8.4922E-03	1.1988E+12	0.0000E+00	3.2536E-02	1.3349E-03	9.8268E-03
Xe-138	1.1495-161	6.2055E-03	8.2438E-03	1.1691E+12	0.0000E+00	3.3513E-02	1.3768E-03	9.5842E-03
Cs-138	1.3935-161	3.2206E-03	1.8904E-03	2.0954E+11	2.7561E-56	7.9145E-04	4.0838E-04	1.1563E+00
Total	1.0833E-36	1.0000E+00	0.0000E+00	0.0000E+00	2.7561E-56	3.7519E+01	1.5164E+00	4.0334E+01

```
#######################################################################
   ALION RADTRAD Version 3.10 Rev 2 run on 12/01/2014  at 16:16:43

                Copyright © 2009 Alion Science and Technology
#######################################################################
```

Exclusion Area Boundary Doses:

Time (h) = 720.0000	Whole Body	Thyroid	TEDE
Delta dose (rem)	0.0000E+00	0.0000E+00	0.0000E+00
Accumulated dose (rem)	4.2851E-02	5.4916E-06	4.2893E-02

Low Population Zone Doses:

Time (h) = 720.0000	Whole Body	Thyroid	TEDE
Delta dose (rem)	0.0000E+00	0.0000E+00	0.0000E+00
Accumulated dose (rem)	7.8884E-03	1.0548E-06	7.8965E-03

Control Room Doses:

Time (h) = 720.0000	Whole Body	Thyroid	TEDE	Skin
Delta dose (rem)	1.4346E-40	1.9460-164	1.4346E-40	2.7378E-38
Accumulated dose (rem)	2.3712E-02	1.9679E-05	2.3863E-02	2.6828E+00

****

RCS Compartment Nuclide Inventory (Ci) at Time (h) = 720.0000

Nuclide	Compartment Atmosphere	Dose Fract	Exposure (Ci-hr)	Decays (Bq-s)	Pathway 1 Outflow
Kr-85	3.5913E+03	6.2957E-02	2.5937E+06	3.4549E+20	1.4325E+03
Kr-85m	3.2854E-47	7.9075E-04	5.1828E+02	6.9628E+16	2.9157E+01
Kr-87	1.8174-169	8.0517E-04	9.5812E+01	1.2924E+16	1.6868E+01
Kr-88	6.6670E-75	1.2121E-02	5.8261E+02	7.8249E+16	5.0051E+01
Xe-133	3.0079E+02	8.9532E-01	2.8137E+06	3.7527E+20	6.2027E+03
Xe-135	7.3009E-22	1.6357E-02	6.7390E+03	9.0513E+17	1.9356E+02
Kr-83m	7.4537-118	1.7112E-08	5.5928E+01	7.5212E+15	7.1575E+00
Xe-131m	4.2198E+01	6.5410E-03	8.2437E+04	1.0987E+19	9.5920E+01
Xe-133m	1.6062E-02	4.5645E-03	1.6334E+04	2.1819E+18	8.4645E+01
Xe-135m	0.0000E+00	5.4886E-05	1.3190E+01	1.8560E+15	7.2886E+00
Xe-138	0.0000E+00	1.5467E-04	1.3142E+01	1.8565E+15	7.5449E+00
Cs-138	0.0000E+00	3.3436E-04	1.2553E+01	1.6483E+15	2.0197E+00
Total	3.9343E+03	1.0000E+00	0.0000E+00	0.0000E+00	8.1294E+03

Dose Equivalent (Ci/cc) I-131 (Thyroid)	0.0000E+00
Dose Equivalent (Ci/cc) I-131 (CEDE)	0.0000E+00
Dose Equivalent (Ci/cc) I-131 (ICRP2 Thyroid)	0.0000E+00
Total I (Ci)	0.0000E+00
Dose Equivalent (Ci/cc) Xe-133 (EDE)	4.4340E-08

RCS Compartment Group Inventory Distribution:

Time (h) = 720.0000	Atmosphere	Sump
Noble gases (Ci)	3.9343E+03	0.0000E+00
Elemental I (Ci)	0.0000E+00	0.0000E+00
Organic I (Ci)	0.0000E+00	0.0000E+00
Aerosol I (Ci)	0.0000E+00	0.0000E+00
All Aerosols (Ci)	0.0000E+00	0.0000E+00
All Aerosols (kg)	0.0000E+00	0.0000E+00

Environment Integral Nuclide Release (Ci): at Time (h) = 720.0000

Nuclide	Compartment Atmosphere	Dose Fract Pathway 1
Kr-85	1.4324E+03	0.00878
Kr-85m	2.9155E+01	0.01150
Kr-87	1.6867E+01	0.03684
Kr-88	5.0048E+01	0.26991
Xe-133	6.2040E+03	0.49940
Xe-135	1.9407E+02	0.12068
Kr-83m	7.1570E+00	0.00000
Xe-131m	9.5914E+01	0.00192
Xe-133m	8.4641E+01	0.00600
Xe-135m	7.2882E+00	0.00789
Xe-138	7.5444E+00	0.02312
Cs-138	2.0195E+00	0.01396

Environment Compartment Group Inventory Distribution:

Time (h) = 720.0000	Total Release	Release Rate/s
Noble gases (Ci)	8.1291E+03	3.1362E-03
Elemental I (Ci)	0.0000E+00	0.0000E+00
Organic I (Ci)	0.0000E+00	0.0000E+00
Aerosol I (Ci)	0.0000E+00	0.0000E+00

All Aerosols (Ci) 2.0195E+00 7.7914E-07

Control Room Compartment Nuclide Inventory (Ci) at Time (h) = 720.0000

Nuclide	Compartment Atmosphere	Dose Fract	Exposure (Ci-hr)	Decays (Bq-s)	Pathway 2 Inflow	Pathway 3 Inflow	Pathway 4 Outflow
Kr-85	0.0000E+00	9.8854E-03	6.3676E+00	8.4816E+14	6.5998E+00	2.6666E-01	6.9562E+00
Kr-85m	0.0000E+00	1.1253E-02	1.1532E-01	1.5414E+13	1.3689E-01	5.5359E-03	1.2640E-01
Kr-87	0.0000E+00	2.6973E-02	5.0183E-02	6.7652E+12	7.8870E-02	3.1962E-03	5.5470E-02
Kr-88	0.0000E+00	2.4543E-01	1.8444E-01	2.4702E+13	2.3508E-01	9.5113E-03	2.0257E-01
Xe-133	0.0000E+00	5.5930E-01	2.7482E+01	3.6611E+15	2.8629E+01	1.1568E+00	3.0026E+01
Xe-135	0.0000E+00	1.2664E-01	8.1571E-01	1.0884E+14	9.0522E-01	3.6591E-02	8.9259E-01
Kr-83m	0.0000E+00	4.6678E-07	2.3853E-02	3.2041E+12	3.3563E-02	1.3589E-03	2.6273E-02
Xe-131m	0.0000E+00	2.1607E-03	4.2576E-01	5.6715E+13	4.4229E-01	1.7871E-02	4.6514E-01
Xe-133m	0.0000E+00	6.6702E-03	3.7320E-01	4.9726E+13	3.9159E-01	1.5823E-02	4.0782E-01
Xe-135m	0.0000E+00	2.2601E-03	8.4922E-03	1.1988E+12	3.2536E-02	1.3349E-03	9.8268E-03
Xe-138	0.0000E+00	6.2055E-03	8.2438E-03	1.1691E+12	3.3513E-02	1.3768E-03	9.5842E-03
Cs-138	0.0000E+00	3.2206E-03	1.8904E-03	2.0954E+11	7.9145E-04	4.0838E-04	8.6947E+00
Total	0.0000E+00	1.0000E+00	0.0000E+00	0.0000E+00	3.7519E+01	1.5164E+00	4.7873E+01

1666

```
#######################################################################
   ALION RADTRAD Version 3.10 Rev 2 run on 12/01/2014  at 16:16:43

                Copyright © 2009 Alion Science and Technology
#######################################################################

#######################################################################
                              I-131 Summary
#######################################################################

                    RCS                Environment          Control Room
```

Time (hr)	I-131 (Curies)	I-131 (Curies)	I-131 (Curies)
0.000	0.0000E+00	0.0000E+00	0.0000E+00
0.028	0.0000E+00	0.0000E+00	0.0000E+00
0.110	0.0000E+00	0.0000E+00	0.0000E+00
0.328	0.0000E+00	0.0000E+00	0.0000E+00
0.500	0.0000E+00	0.0000E+00	0.0000E+00
0.734	0.0000E+00	0.0000E+00	0.0000E+00
0.945	0.0000E+00	0.0000E+00	0.0000E+00
1.178	0.0000E+00	0.0000E+00	0.0000E+00
1.378	0.0000E+00	0.0000E+00	0.0000E+00
1.578	0.0000E+00	0.0000E+00	0.0000E+00
1.778	0.0000E+00	0.0000E+00	0.0000E+00
1.978	0.0000E+00	0.0000E+00	0.0000E+00
2.000	0.0000E+00	0.0000E+00	0.0000E+00
2.200	0.0000E+00	0.0000E+00	0.0000E+00
2.400	0.0000E+00	0.0000E+00	0.0000E+00
2.600	0.0000E+00	0.0000E+00	0.0000E+00
2.800	0.0000E+00	0.0000E+00	0.0000E+00
3.000	0.0000E+00	0.0000E+00	0.0000E+00
3.200	0.0000E+00	0.0000E+00	0.0000E+00
3.400	0.0000E+00	0.0000E+00	0.0000E+00
3.600	0.0000E+00	0.0000E+00	0.0000E+00
3.800	0.0000E+00	0.0000E+00	0.0000E+00
4.000	0.0000E+00	0.0000E+00	0.0000E+00
4.200	0.0000E+00	0.0000E+00	0.0000E+00
4.400	0.0000E+00	0.0000E+00	0.0000E+00
4.600	0.0000E+00	0.0000E+00	0.0000E+00
4.800	0.0000E+00	0.0000E+00	0.0000E+00
5.000	0.0000E+00	0.0000E+00	0.0000E+00
5.200	0.0000E+00	0.0000E+00	0.0000E+00
5.400	0.0000E+00	0.0000E+00	0.0000E+00
5.600	0.0000E+00	0.0000E+00	0.0000E+00
5.800	0.0000E+00	0.0000E+00	0.0000E+00

6.000	0.0000E+00	0.0000E+00	0.0000E+00
6.200	0.0000E+00	0.0000E+00	0.0000E+00
6.400	0.0000E+00	0.0000E+00	0.0000E+00
6.600	0.0000E+00	0.0000E+00	0.0000E+00
6.800	0.0000E+00	0.0000E+00	0.0000E+00
7.000	0.0000E+00	0.0000E+00	0.0000E+00
7.200	0.0000E+00	0.0000E+00	0.0000E+00
7.400	0.0000E+00	0.0000E+00	0.0000E+00
7.600	0.0000E+00	0.0000E+00	0.0000E+00
7.800	0.0000E+00	0.0000E+00	0.0000E+00
8.000	0.0000E+00	0.0000E+00	0.0000E+00
8.200	0.0000E+00	0.0000E+00	0.0000E+00
8.400	0.0000E+00	0.0000E+00	0.0000E+00
8.600	0.0000E+00	0.0000E+00	0.0000E+00
8.800	0.0000E+00	0.0000E+00	0.0000E+00
9.000	0.0000E+00	0.0000E+00	0.0000E+00
9.200	0.0000E+00	0.0000E+00	0.0000E+00
9.400	0.0000E+00	0.0000E+00	0.0000E+00
9.600	0.0000E+00	0.0000E+00	0.0000E+00
9.800	0.0000E+00	0.0000E+00	0.0000E+00
10.000	0.0000E+00	0.0000E+00	0.0000E+00
10.200	0.0000E+00	0.0000E+00	0.0000E+00
24.000	0.0000E+00	0.0000E+00	0.0000E+00
96.000	0.0000E+00	0.0000E+00	0.0000E+00
720.000	0.0000E+00	0.0000E+00	0.0000E+00

##
Cumulative Dose Summary
##

	Exclusion Area Bounda		Low Population Zone		Control Room	
Time	Thyroid	TEDE	Thyroid	TEDE	Thyroid	TEDE
(hr)	(rem)	(rem)	(rem)	(rem)	(rem)	(rem)

0.000	0.0000E+00	0.0000E+00	0.0000E+00	0.0000E+00	0.0000E+00	0.0000E+00
0.028	3.4383E-08	3.9548E-03	4.6270E-09	5.3220E-04	6.6902E-10	1.9613E-06
0.110	3.9591E-07	1.1533E-02	7.4222E-08	1.9910E-03	3.7026E-07	2.1834E-04
0.328	2.9884E-06	2.9526E-02	5.7330E-07	5.4547E-03	4.6871E-06	2.6010E-03
0.500	5.4710E-06	4.1692E-02	1.0512E-06	7.7968E-03	9.6731E-06	5.8172E-03
0.734	5.4752E-06	4.1711E-02	1.0520E-06	7.8005E-03	1.5084E-05	1.0121E-02
0.945	5.4785E-06	4.1728E-02	1.0526E-06	7.8038E-03	1.7590E-05	1.3076E-02
1.178	5.4816E-06	4.1747E-02	1.0532E-06	7.8073E-03	1.8836E-05	1.5583E-02
1.378	5.4837E-06	4.1762E-02	1.0536E-06	7.8103E-03	1.9296E-05	1.7238E-02
1.578	5.4854E-06	4.1777E-02	1.0540E-06	7.8132E-03	1.9506E-05	1.8545E-02
1.778	5.4868E-06	4.1792E-02	1.0542E-06	7.8161E-03	1.9601E-05	1.9580E-02
1.978	5.4878E-06	4.1807E-02	1.0544E-06	7.8188E-03	1.9644E-05	2.0400E-02
2.000	5.4879E-06	4.1808E-02	1.0545E-06	7.8191E-03	1.9647E-05	2.0478E-02
2.200	5.4887E-06	4.1822E-02	1.0545E-06	7.8204E-03	1.9664E-05	2.1113E-02
2.400	5.4894E-06	4.1836E-02	1.0546E-06	7.8217E-03	1.9672E-05	2.1617E-02
2.600	5.4899E-06	4.1850E-02	1.0546E-06	7.8229E-03	1.9676E-05	2.2018E-02
2.800	5.4903E-06	4.1864E-02	1.0547E-06	7.8242E-03	1.9678E-05	2.2337E-02
3.000	5.4905E-06	4.1877E-02	1.0547E-06	7.8254E-03	1.9678E-05	2.2592E-02
3.200	5.4908E-06	4.1890E-02	1.0547E-06	7.8266E-03	1.9679E-05	2.2795E-02
3.400	5.4910E-06	4.1903E-02	1.0547E-06	7.8277E-03	1.9679E-05	2.2958E-02
3.600	5.4911E-06	4.1916E-02	1.0547E-06	7.8289E-03	1.9679E-05	2.3089E-02
3.800	5.4912E-06	4.1929E-02	1.0548E-06	7.8300E-03	1.9679E-05	2.3194E-02
4.000	5.4913E-06	4.1942E-02	1.0548E-06	7.8312E-03	1.9679E-05	2.3279E-02
4.200	5.4913E-06	4.1954E-02	1.0548E-06	7.8323E-03	1.9679E-05	2.3348E-02
4.400	5.4914E-06	4.1966E-02	1.0548E-06	7.8334E-03	1.9679E-05	2.3404E-02
4.600	5.4914E-06	4.1978E-02	1.0548E-06	7.8345E-03	1.9679E-05	2.3450E-02
4.800	5.4915E-06	4.1990E-02	1.0548E-06	7.8356E-03	1.9679E-05	2.3488E-02
5.000	5.4915E-06	4.2002E-02	1.0548E-06	7.8366E-03	1.9679E-05	2.3519E-02
5.200	5.4915E-06	4.2014E-02	1.0548E-06	7.8377E-03	1.9679E-05	2.3546E-02
5.400	5.4915E-06	4.2026E-02	1.0548E-06	7.8388E-03	1.9679E-05	2.3568E-02
5.600	5.4915E-06	4.2037E-02	1.0548E-06	7.8398E-03	1.9679E-05	2.3587E-02
5.800	5.4915E-06	4.2049E-02	1.0548E-06	7.8408E-03	1.9679E-05	2.3603E-02
6.000	5.4915E-06	4.2060E-02	1.0548E-06	7.8419E-03	1.9679E-05	2.3617E-02

6.200	5.4915E-06	4.2071E-02	1.0548E-06	7.8429E-03	1.9679E-05	2.3630E-02
6.400	5.4915E-06	4.2083E-02	1.0548E-06	7.8439E-03	1.9679E-05	2.3641E-02
6.600	5.4916E-06	4.2094E-02	1.0548E-06	7.8449E-03	1.9679E-05	2.3651E-02
6.800	5.4916E-06	4.2105E-02	1.0548E-06	7.8459E-03	1.9679E-05	2.3660E-02
7.000	5.4916E-06	4.2116E-02	1.0548E-06	7.8469E-03	1.9679E-05	2.3669E-02
7.200	5.4916E-06	4.2127E-02	1.0548E-06	7.8478E-03	1.9679E-05	2.3677E-02
7.400	5.4916E-06	4.2137E-02	1.0548E-06	7.8488E-03	1.9679E-05	2.3685E-02
7.600	5.4916E-06	4.2148E-02	1.0548E-06	7.8498E-03	1.9679E-05	2.3692E-02
7.800	5.4916E-06	4.2159E-02	1.0548E-06	7.8507E-03	1.9679E-05	2.3699E-02
8.000	5.4916E-06	4.2169E-02	1.0548E-06	7.8517E-03	1.9679E-05	2.3705E-02
8.200	5.4916E-06	4.2180E-02	1.0548E-06	7.8523E-03	1.9679E-05	2.3711E-02
8.400	5.4916E-06	4.2190E-02	1.0548E-06	7.8530E-03	1.9679E-05	2.3716E-02
8.600	5.4916E-06	4.2200E-02	1.0548E-06	7.8536E-03	1.9679E-05	2.3721E-02
8.800	5.4916E-06	4.2211E-02	1.0548E-06	7.8542E-03	1.9679E-05	2.3725E-02
9.000	5.4916E-06	4.2221E-02	1.0548E-06	7.8549E-03	1.9679E-05	2.3728E-02
9.200	5.4916E-06	4.2231E-02	1.0548E-06	7.8555E-03	1.9679E-05	2.3732E-02
9.400	5.4916E-06	4.2241E-02	1.0548E-06	7.8561E-03	1.9679E-05	2.3735E-02
9.600	5.4916E-06	4.2251E-02	1.0548E-06	7.8568E-03	1.9679E-05	2.3737E-02
9.800	5.4916E-06	4.2261E-02	1.0548E-06	7.8574E-03	1.9679E-05	2.3740E-02
10.000	5.4916E-06	4.2271E-02	1.0548E-06	7.8580E-03	1.9679E-05	2.3742E-02
10.200	5.4916E-06	4.2281E-02	1.0548E-06	7.8586E-03	1.9679E-05	2.3744E-02
24.000	5.4916E-06	4.2893E-02	1.0548E-06	7.8965E-03	1.9679E-05	2.3858E-02
96.000	5.4916E-06	4.2893E-02	1.0548E-06	7.8965E-03	1.9679E-05	2.3863E-02
720.000	5.4916E-06	4.2893E-02	1.0548E-06	7.8965E-03	1.9679E-05	2.3863E-02

```
#######################################################################
    ALION RADTRAD Version 3.10 Rev 2 run on 12/01/2014  at 16:16:43

                Copyright © 2009 Alion Science and Technology
#######################################################################

            D. C. Cook - SGTR Noble Gas Release

#####################################################################
                         Worst Two-Hour Doses
#####################################################################

Exclusion Area Boundary
   Time    Whole Body    Thyroid        TEDE
   (hr)      (rem)        (rem)         (rem)
    0.0   4.1766E-02   5.4879E-06   4.1808E-02

#####################################################################
                         Final Doses
#####################################################################

Low Population Zone
   Time    Whole Body    Thyroid        TEDE
   (hr)      (rem)        (rem)         (rem)
  720.0   7.8884E-03   1.0548E-06   7.8965E-03

Control Room
   Time    Whole Body    Thyroid        TEDE
   (hr)      (rem)        (rem)         (rem)
  720.0   2.3712E-02   1.9679E-05   2.3863E-02
```

Attachment C

Pre-Accident Iodine Spike RADTRAD Output

(SGTR_Pre_I_R1.o0)

Note: The computer clock was set to 12/01/14 during model execution due to software date limitations

```
#######################################################################
    ALION RADTRAD Version 3.10 Rev 2 run on 12/01/2014  at 16:18:07

                Copyright © 2009 Alion Science and Technology
#######################################################################

            D. C. Cook - SGTR Pre-Accident Iodine Spike

#######################################################################
                     File information
#######################################################################

Input File Name      = C:\Projects\1537-Cook_Dose\SGTR\SGTR_Pre_I_R1.psf
Output File Name     = C:\Projects\1537-Cook_Dose\SGTR\SGTR_Pre_I_R1.o0

Inventory file       =  c:\projects\1537-cook_dose\source_term\cook_rcs.nif
Release file         =    c:\projects\1537-cook_dose\sgtr\sgtr_pre_i_r1.rft
Dose Conversion file =    c:\projects\1537-cook_dose\source_term\rwa-1205-004.inp


    #####    ####   #####    #  #     #  #####   #    #  #####
    #    #  #      #        #  ##    #  #    #  #    #    #
    #    #  #      #        #  # #   #  #    #  #    #    #
    #####    ####   ####     #  #  #  #  #####   #    #    #
    #            #  #        #  #   # #  #       #    #    #
    #            #  #        #  #    ##  #       #    #    #
    #        ####   #        #  #     #  #        ####     #
```

```
  Radtrad 3.10  10/15/2013
  D. C. Cook - SGTR Pre-Accident Iodine Spike
Dose Conversion Factor File:
  c:\projects\1537-cook_dose\source_term\rwa-1205-004.inp
Release Fraction & Timing Files:
  1
  c:\projects\1537-cook_dose\sgtr\sgtr_pre_i_r1.rft
Nuclide Inventory Files:
  1
  1 c:\projects\1537-cook_dose\source_term\cook_rcs.nif
Plant Power Level:
  2.1144E+02
Number of Compartments:
  5
Compartment 1:
  RCS
  3
  4.661415E+05
  0
  0
  0
  0
  0
Compartment 2:
  Intact Steam Generators
  3
  2.925471E+05
  0
  0
  0
  0
  0
```

```
Compartment 3:
  Environment
  2
  0.00E+00
  0
  0
  0
  0
  0
Compartment 4:
  Control Room
  1
  5.0616E+04
  0
  0
  1
  0
  0
Compartment 5:
  Ruptured Steam Generator
  3
  9.75157E+04
  0
  0
  0
  0
  0
Number of Pathways:
  8
Pathway 1:
  Flashed Break Flow & SG Tube Leakage
  1
  3
```

```
  2
Pathway 2:
  Control Room Makeup
  3
  4
  2
Pathway 3:
  Control Room Unfiltered Inleakage
  3
  4
  2
Pathway 4:
  Control Room Exhaust
  4
  3
  2
Pathway 5:
  Unflashed Intact SG Tube Leakage
  1
  2
  2
Pathway 6:
  Unflashed Break Flow & Ruptured SG Tube Leakage
  1
  5
  2
Pathway 7:
  Intact SG Steam Release
  2
  3
  2
Pathway 8:
  Ruptured Steam Generator Steam Relase
```

```
  5
  3
  2
  End of Plant Model
Source Term Input:
  1
  1  1  1  1
  0.00E+00
  0.00E+00   7.2E+02
  1
  3   0.00E+00   9.7E-01   3.00E-02
Overlying Pool:
  0
  0.00E+00
  0
  0
  0
  0
Compartments:
  5
Compartment 1:
  1
  1
  0
  0
  0
  0
  0
  0
  0
Compartment 2:
  1
  1
```

```
  0
  0
  0
  0
  0
  0
  0
Compartment 3:
  2
  1
  0
  0
  0
  0
  0
  0
  0
Compartment 4:
  1
  1
  0
  0
  0
  0
  1
  3
  0.00E+00   0.00E+00   9.801E+01   9.405E+01   9.405E+01
  1.1E-01   4.52E+03   9.801E+01   9.405E+01   9.405E+01
  7.2E+02   4.52E+03   9.801E+01   9.405E+01   9.405E+01
  0
  7.2E+02   0.00E+00   0.00E+00   0.00E+00   0.00E+00
  7.2E+02
  0
```

```
  0
Compartment 5:
  1
  1
  0
  0
  0
  0
  0
  0
  0
Pathways:
  8
Pathway 1:
  0
  0
  0
  0
  0
  1
  7
  0.00E+00   9.307E+02   0.00E+00   0.00E+00   0.00E+00
  2.8E-02   3.9188E+02   0.00E+00   0.00E+00   0.00E+00
  1.39E-01   2.9391E+02   0.00E+00   0.00E+00   0.00E+00
  2.78E-01   2.6942E+02   0.00E+00   0.00E+00   0.00E+00
  5.00E-01   2.5E-01   0.00E+00   0.00E+00   0.00E+00
  6.67E-01   0.00E+00   0.00E+00   0.00E+00   0.00E+00
  7.2E+02   0.00E+00   0.00E+00   0.00E+00   0.00E+00
  0
  7.2E+02   0.00E+00   0.00E+00   0.00E+00   0.00E+00
  7.2E+02
  0
  0
```

```
  0
  0
  0
  0
Pathway 2:
  0
  0
  0
  0
  0
  1
  3
  0.00E+00   8.8E+02   0.00E+00   0.00E+00   0.00E+00
  1.1E-01   8.8E+02   9.801E+01   9.405E+01   9.405E+01
  7.2E+02   8.8E+02   9.801E+01   9.405E+01   9.405E+01
  0
  7.2E+02   0.00E+00   0.00E+00   0.00E+00   0.00E+00
  7.2E+02
  0
  0
  0
  0
  0
  0
Pathway 3:
  0
  0
  0
  0
  0
  1
  2
  0.00E+00   4.00E+01   0.00E+00   0.00E+00   0.00E+00
```

```
  7.2E+02   4.00E+01   0.00E+00   0.00E+00   0.00E+00
  0
  7.2E+02   0.00E+00   0.00E+00   0.00E+00   0.00E+00
  7.2E+02
  0
  0
  0
  0
  0
  0
Pathway 4:
  0
  0
  0
  0
  0
  1
  2
  0.00E+00   9.2E+02   0.00E+00   0.00E+00   0.00E+00
  7.2E+02   9.2E+02   0.00E+00   0.00E+00   0.00E+00
  0
  7.2E+02   0.00E+00   0.00E+00   0.00E+00   0.00E+00
  7.2E+02
  0
  0
  0
  0
  0
  0
Pathway 5:
  0
  0
  0
```

```
  0
  0
  1
  8
  0.00E+00   5.059E+00   0.00E+00   0.00E+00   0.00E+00
  2.8E-02   5.746E+00   0.00E+00   0.00E+00   0.00E+00
  1.39E-01   5.871E+00   0.00E+00   0.00E+00   0.00E+00
  2.78E-01   5.902E+00   0.00E+00   0.00E+00   0.00E+00
  5.00E-01   5.996E+00   0.00E+00   0.00E+00   0.00E+00
  6.67E-01   6.246E+00   0.00E+00   0.00E+00   0.00E+00
  2.4E+01   0.00E+00   0.00E+00   0.00E+00   0.00E+00
  7.2E+02   0.00E+00   0.00E+00   0.00E+00   0.00E+00
  0
  7.2E+02   0.00E+00   0.00E+00   0.00E+00   0.00E+00
  7.2E+02
  0
  0
  0
  0
  0
  0
Pathway 6:
  0
  0
  0
  0
  0
  1
  6
  0.00E+00   3.9627E+03   0.00E+00   0.00E+00   0.00E+00
  2.8E-02   4.50084E+03   0.00E+00   0.00E+00   0.00E+00
  1.39E-01   4.59868E+03   0.00E+00   0.00E+00   0.00E+00
  2.78E-01   4.62314E+03   0.00E+00   0.00E+00   0.00E+00
```

```
  5.00E-01   0.00E+00   0.00E+00   0.00E+00   0.00E+00
  7.2E+02   0.00E+00   0.00E+00   0.00E+00   0.00E+00
  0
  7.2E+02   0.00E+00   0.00E+00   0.00E+00   0.00E+00
  7.2E+02
  0
  0
  0
  0
  0
  0
Pathway 7:
  0
  0
  0
  0
  0
  1
  7
  0.00E+00   2.144E+01   0.00E+00   0.00E+00   0.00E+00
  2.8E-02   7.01E+01   0.00E+00   0.00E+00   0.00E+00
  5.00E-01   3.494E+01   0.00E+00   0.00E+00   0.00E+00
  2.00E+00   3.799E+01   0.00E+00   0.00E+00   0.00E+00
  8.00E+00   1.403E+01   0.00E+00   0.00E+00   0.00E+00
  2.4E+01   0.00E+00   0.00E+00   0.00E+00   0.00E+00
  7.2E+02   0.00E+00   0.00E+00   0.00E+00   0.00E+00
  0
  7.2E+02   0.00E+00   0.00E+00   0.00E+00   0.00E+00
  7.2E+02
  0
  0
  0
  0
```

```
  0
  0
Pathway 8:
  0
  0
  0
  0
  0
  1
  4
  0.00E+00   7.15E+00   0.00E+00   0.00E+00   0.00E+00
  2.8E-02   2.206E+01   0.00E+00   0.00E+00   0.00E+00
  5.00E-01   0.00E+00   0.00E+00   0.00E+00   0.00E+00
  7.2E+02   0.00E+00   0.00E+00   0.00E+00   0.00E+00
  0
  7.2E+02   0.00E+00   0.00E+00   0.00E+00   0.00E+00
  7.2E+02
  0
  0
  0
  0
  0
  0
Dose Locations:
  3
Location 1:
  Exclusion Area Boundary
  3
  1
  4
  0.00E+00   3.5E-04
  8.00E+00   1.8E-04
  2.4E+01   2.3E-04
```

```
  7.2E+02   2.3E-04
  0
Location 2:
  Low Population Zone
  3
  1
  4
  0.00E+00   3.5E-04
  8.00E+00   1.8E-04
  2.4E+01   2.3E-04
  7.2E+02   2.3E-04
  0
Location 3:
  Control Room
  4
  1
  2
  0.00E+00   3.5E-04
  7.2E+02   3.5E-04
  1
  4
  0.00E+00   1.00E+00
  2.4E+01   6.00E-01
  9.6E+01   4.00E-01
  7.2E+02   4.00E-01
X/Q Tables:
  4
  Exclusion Area Boundary
  3
  0.00E+00   8.62E-04
  2.8E-02   5.87E-04
  7.2E+02   5.87E-04
  Low Population Zone
```

```
  7
  0.00E+00   1.16E-04
  2.8E-02   1.13E-04
  2.00E+00   5.29E-05
  8.00E+00   3.63E-05
  2.4E+01   1.65E-05
  9.6E+01   6.36E-06
  7.2E+02   6.36E-06
  Control Room Makeup
  8
  0.00E+00   8.5E-04
  2.8E-02   1.09E-02
  1.1E-01   1.26E-02
  2.00E+00   9.72E-03
  8.00E+00   3.26E-03
  2.4E+01   3.17E-03
  9.6E+01   2.8E-03
  7.2E+02   2.8E-03
  Control Room Unfiltered Inleakage
  7
  0.00E+00   8.5E-04
  2.8E-02   1.09E-02
  2.00E+00   8.61E-03
  8.00E+00   2.87E-03
  2.4E+01   2.78E-03
  9.6E+01   2.5E-03
  7.2E+02   2.5E-03
Inflow Pathways:
  2  2 3
Exhaust Pathways:
  4  1 4 7 8
X/Q table ID for Exhaust-Inflow paths:
  3 4
```

```
  -1 -1
  3 4
  3 4
Simulation Parameters:
  1
  0.00E+00   0.00E+00
Output Filename:
  C:\Projects\1537-Cook_Dose\SGTR\SGTR_Pre_I_R1.o0
  1
  1
  0
  0
  1
  End of Scenario File
```

```
#######################################################################
    ALION RADTRAD Version 3.10 Rev 2 run on 12/01/2014  at 16:18:07

                Copyright © 2009 Alion Science and Technology
#######################################################################

            D. C. Cook - SGTR Pre-Accident Iodine Spike

#######################################################################
                     Plant Description
#######################################################################

Number of Nuclides = 100

Inventory Power   =   1.0000E+00 MWth
Plant Power Level =   2.1144E+02 MWth

Number of compartments    =   5

Compartment information

Compartment number  1
Name: RCS
Compartment volume =   4.6614E+05 (Cubic feet)
Compartment type is Normal
Pathways into and out of compartment  1
   Exit Pathway Number    1: Flashed Break Flow & SG Tube Leakage
   Exit Pathway Number    5: Unflashed Intact SG Tube Leakage
   Exit Pathway Number    6: Unflashed Break Flow & Ruptured SG Tube Leakage

Compartment number  2
Name: Intact Steam Generators
```

```
Compartment volume =   2.9255E+05 (Cubic feet)
Compartment type is Normal
Pathways into and out of compartment  2
   Inlet Pathway Number   5: Unflashed Intact SG Tube Leakage
   Exit Pathway Number    7: Intact SG Steam Release

Compartment number  3
Name: Environment
Compartment type is Environment
Pathways into and out of compartment  3
   Inlet Pathway Number   1: Flashed Break Flow & SG Tube Leakage
   Inlet Pathway Number   4: Control Room Exhaust
   Inlet Pathway Number   7: Intact SG Steam Release
   Inlet Pathway Number   8: Ruptured Steam Generator Steam Relase
   Exit Pathway Number    2: Control Room Makeup
   Exit Pathway Number    3: Control Room Unfiltered Inleakage

Compartment number  4
Name: Control Room
Compartment volume =   5.0616E+04 (Cubic feet)
Compartment type is Control Room
Removal devices within compartment:
     Filter(s)
Pathways into and out of compartment  4
   Inlet Pathway Number   2: Control Room Makeup
   Inlet Pathway Number   3: Control Room Unfiltered Inleakage
   Exit Pathway Number    4: Control Room Exhaust

Compartment number  5
Name: Ruptured Steam Generator
Compartment volume =   9.7516E+04 (Cubic feet)
Compartment type is Normal
Pathways into and out of compartment  5
```

```
   Inlet Pathway Number    6: Unflashed Break Flow & Ruptured SG Tube Leakage
   Exit Pathway Number     8: Ruptured Steam Generator Steam Relase

Total number of pathways =    8
```

```
#######################################################################
    ALION RADTRAD Version 3.10 Rev 2 run on 12/01/2014  at 16:18:07

                Copyright © 2009 Alion Science and Technology
#######################################################################

            D. C. Cook - SGTR Pre-Accident Iodine Spike

#######################################################################
                     Scenario Description
#######################################################################

Power Ratio                              =   2.1144E+02

End Time                                 =   7.2000E+02 (Hours)

Radioactive Decay is enabled
Calculation of Daughters is enabled

Source Number  1 is used in Compartment  1  RCS
   Nuclide Distribution given in Ci/MWt
Fraction of Nuclide Distribution in this Compartment   1.00000

Iodine fractions for source number 1
     Aerosol      =   0.0000E+00
     Elemental    =   9.7000E-01
     Organic      =   3.0000E-02

Inventory file =     c:\projects\1537-cook_dose\source_term\cook_rcs.nif
Release from file =    c:\projects\1537-cook_dose\sgtr\sgtr_pre_i_r1.rft
Dose Conversion file =    c:\projects\1537-cook_dose\source_term\rwa-1205-004.inp
```

Nuclide Name	Group	Specific Inventory (Ci/MWt)	half life (s)	Whole Body DCF (Sv-m3/Bq-s)	Inhaled Thyroid (Sv/Bq)	Inhaled Effective (Sv/Bq)
Rb-86	3	8.797E-02	1.612E+06	4.810E-15	1.330E-09	1.790E-09
Sr-89	5	1.335E-03	4.363E+06	7.730E-17	7.960E-12	1.120E-08
Sr-90	5	1.237E-04	9.183E+08	7.530E-18	2.690E-10	3.510E-07
Sr-91	5	5.681E-04	3.420E+04	3.450E-14	9.640E-12	4.490E-10
Sr-92	5	2.488E-04	9.756E+03	6.790E-14	3.920E-12	2.180E-10
Y-90	9	2.152E-04	2.304E+05	1.900E-16	5.170E-13	2.280E-09
Y-91	9	1.692E-02	5.055E+06	2.600E-16	8.500E-12	1.320E-08
Y-92	9	3.067E-04	1.274E+04	1.300E-14	1.050E-12	2.110E-10
Y-93	9	2.010E-04	3.636E+04	4.800E-15	9.260E-13	5.820E-10
Zr-95	9	2.409E-02	5.528E+06	3.600E-14	1.440E-09	6.390E-09
Zr-97	9	3.920E-04	6.084E+04	9.020E-15	2.310E-11	1.170E-09
Nb-95	9	3.478E-02	3.037E+06	3.740E-14	3.580E-10	1.570E-09
Mo-99	7	2.070E+00	2.376E+05	7.280E-15	1.520E-11	1.070E-09
Tc-99m	7	1.980E+00	2.167E+04	5.890E-15	5.010E-11	8.800E-12
Ru-103	7	1.991E-02	3.394E+06	2.250E-14	2.570E-10	2.420E-09
Ru-105	7	9.723E-05	1.598E+04	3.810E-14	4.150E-12	1.230E-10
Ru-106	7	3.340E-02	3.181E+07	0.000E+00	1.720E-09	1.290E-07
Rh-105	7	7.689E-04	1.273E+05	3.720E-15	2.880E-12	2.580E-10
Te-127	4	2.489E-01	3.366E+04	2.420E-16	1.840E-12	8.600E-11
Te-127m	4	2.465E-01	9.418E+06	1.470E-16	9.660E-11	5.810E-09
Te-129	4	2.281E-01	4.176E+03	2.750E-15	1.630E-12	2.420E-11
Te-129m	4	3.463E-01	2.903E+06	1.550E-15	1.560E-10	6.470E-09
Te-131m	4	5.787E-02	1.080E+05	7.010E-14	3.610E-08	1.730E-09
Te-132	4	9.639E-01	2.815E+05	1.030E-14	6.280E-08	2.550E-09
I-131	2	8.087E-01	6.947E+05	1.820E-14	2.920E-07	8.890E-09
I-132	2	6.411E-01	8.280E+03	1.120E-13	1.740E-09	1.030E-10
I-133	2	1.030E+00	7.488E+04	2.940E-14	4.860E-08	1.580E-09
I-134	2	1.231E-01	3.156E+03	1.300E-13	2.880E-10	3.550E-11
I-135	2	5.365E-01	2.380E+04	7.980E-14	8.460E-09	3.320E-10

Cs-134	3	3.327E+01	6.503E+07	7.570E-14	1.110E-08	1.250E-08
Cs-136	3	2.188E+00	1.132E+06	1.060E-13	1.730E-09	1.980E-09
Cs-137	3	1.852E+01	9.461E+08	7.740E-18	7.930E-09	8.630E-09
Ba-139	6	1.975E-04	4.962E+03	2.170E-15	2.400E-12	4.640E-11
Ba-140	6	1.940E-03	1.101E+06	8.580E-15	2.560E-10	1.010E-09
La-140	9	2.878E-03	1.450E+05	1.170E-13	6.870E-11	1.310E-09
La-141	9	1.301E-04	1.415E+04	2.390E-15	9.400E-12	1.570E-10
La-142	9	3.346E-05	5.550E+03	1.440E-13	8.740E-12	6.840E-11
Ce-141	8	1.445E-02	2.808E+06	3.430E-15	2.550E-11	2.420E-09
Ce-143	8	6.911E-04	1.188E+05	1.290E-14	6.230E-12	9.160E-10
Ce-144	8	4.229E-02	2.456E+07	8.530E-16	2.920E-10	1.010E-07
Pr-143	9	6.713E-03	1.172E+06	2.100E-17	1.680E-18	2.190E-09
Br-82	2	4.641E-03	1.271E+05	1.300E-13	2.060E-10	4.130E-10
Br-83	2	2.720E-02	8.604E+03	3.820E-16	1.140E-12	2.410E-11
Br-84	2	1.244E-02	1.908E+03	9.410E-14	3.120E-12	2.610E-11
Rb-89	3	2.530E-02	9.120E+02	1.060E-13	1.610E-12	1.160E-11
Y-91m	9	3.314E-04	2.983E+03	2.550E-14	5.020E-13	9.820E-12
Nb-95m	9	1.867E-04	3.118E+05	2.930E-15	3.860E-11	6.590E-10
Nb-97	9	4.900E-05	4.326E+03	3.180E-14	9.200E-13	2.240E-11
Rh-103m	7	1.988E-02	3.367E+03	8.800E-18	8.490E-14	1.380E-12
Te-125m	4	2.449E-02	5.011E+06	4.530E-16	3.870E-11	1.970E-09
Te-131	4	1.599E-02	1.500E+03	2.040E-14	2.630E-09	1.290E-10
Te-133m	4	7.643E-03	3.324E+03	1.140E-13	2.610E-09	1.170E-10
Te-134	4	1.092E-02	2.508E+03	4.240E-14	5.540E-10	3.440E-11
Xe-138	1	2.292E-01	8.500E+02	5.770E-14	0.000E+00	0.000E+00
Cs-134m	3	2.031E-02	1.044E+04	9.050E-16	3.340E-12	1.180E-11
Cs-138	3	3.420E-01	1.932E+03	1.210E-13	3.570E-12	2.740E-11
Ba-141	6	4.233E-05	1.096E+03	4.160E-14	1.330E-12	2.180E-11

Nuclide	Daughter	Fraction	Daughter	Fraction	Daughter	Fraction
Sr-90	Y-90	1.00	none	0.00	none	0.00
Sr-91	Y-91m	0.58	Y-91	0.42	none	0.00
Sr-92	Y-92	1.00	none	0.00	none	0.00

Y-93	Zr-93	1.00	none	0.00	none	0.00
Zr-95	Nb-95m	0.01	Nb-95	0.99	none	0.00
Zr-97	Nb-97m	0.95	Nb-97	0.05	none	0.00
Mo-99	Tc-99m	0.88	Tc-99	0.12	none	0.00
Tc-99m	Tc-99	1.00	none	0.00	none	0.00
Ru-103	Rh-103m	1.00	none	0.00	none	0.00
Ru-105	Rh-105	1.00	none	0.00	none	0.00
Ru-106	Rh-106	1.00	none	0.00	none	0.00
Te-127m	Te-127	0.98	none	0.00	none	0.00
Te-129	I-129	1.00	none	0.00	none	0.00
Te-129m	I-129	0.35	Te-129	0.65	none	0.00
Te-131m	I-131	0.78	Te-131	0.22	none	0.00
Te-132	I-132	1.00	none	0.00	none	0.00
I-131	Xe-131m	0.01	none	0.00	none	0.00
I-133	Xe-133m	0.03	Xe-133	0.97	none	0.00
I-135	Xe-135m	0.15	Xe-135	0.85	none	0.00
Cs-137	Ba-137m	0.95	none	0.00	none	0.00
Ba-140	La-140	1.00	none	0.00	none	0.00
La-141	Ce-141	1.00	none	0.00	none	0.00
Ce-143	Pr-143	1.00	none	0.00	none	0.00
Ce-144	Pr-144m	0.02	Pr-144	0.98	none	0.00
Br-83	Kr-83m	1.00	none	0.00	none	0.00
Rb-89	Sr-89	1.00	none	0.00	none	0.00
Y-91m	Y-91	1.00	none	0.00	none	0.00
Nb-95m	Nb-95	1.00	none	0.00	none	0.00
Te-131	I-131	1.00	none	0.00	none	0.00
Te-133m	I-133	0.87	Te-133	0.13	none	0.00
Te-134	I-134	1.00	none	0.00	none	0.00
Xe-138	Cs-138	1.00	none	0.00	none	0.00
Cs-134m	Cs-134	1.00	none	0.00	none	0.00
Ba-141	La-141	1.00	none	0.00	none	0.00

Release Fractions and Timings

RWA-1313-011 - D. C. Cook SGTR Pre-Accident Iodine Spike
Duration (h):

	GAP	EARLY IN-VESSEL	LATE RELEASE	RELEASE MASS
	0.000010 hr	0.0000 hrs	0.0000 hrs	(Ci)
NOBLES	0.0000E+00	0.0000E+00	0.0000E+00	0.000E+00
IODINE	6.0000E+01	0.0000E+00	0.0000E+00	4.039E+04
CESIUM	1.0000E+00	0.0000E+00	0.0000E+00	1.151E+04
TELLURIUM	1.0000E+00	0.0000E+00	0.0000E+00	4.547E+02
STRONTIUM	1.0000E+00	0.0000E+00	0.0000E+00	4.812E-01
BARIUM	1.0000E+00	0.0000E+00	0.0000E+00	4.609E-01
RUTHENIUM	1.0000E+00	0.0000E+00	0.0000E+00	8.720E+02
CERIUM	1.0000E+00	0.0000E+00	0.0000E+00	1.214E+01
LANTHANUM	1.0000E+00	0.0000E+00	0.0000E+00	1.844E+01
AEROSOL	0.0000E+00	0.0000E+00	0.0000E+00	0.000E+00

COMPARTMENT DATA

Compartment number 1: RCS

Compartment number 2: Intact Steam Generators

Compartment number 3: Environment

Compartment number 4: Control Room

Compartment Filter Data

Time (hr)	Flow Rate (cfm)	Filter Efficiencies (%) Aerosol	Elemental	Organic
0.0000E+00	0.0000E+00	9.8010E+01	9.4050E+01	9.4050E+01
1.1000E-01	4.5200E+03	9.8010E+01	9.4050E+01	9.4050E+01
7.2000E+02	4.5200E+03	9.8010E+01	9.4050E+01	9.4050E+01

Compartment number 5: Ruptured Steam Generator

PATHWAY DATA

Pathway number 1: Flashed Break Flow & SG Tube Leakage

Pathway Filter: Removal Data

Time (hr)	Flow Rate (cfm)	Filter Efficiencies (%) Aerosol	Elemental	Organic
0.0000E+00	9.3070E+02	0.0000E+00	0.0000E+00	0.0000E+00
2.8000E-02	3.9188E+02	0.0000E+00	0.0000E+00	0.0000E+00
1.3900E-01	2.9391E+02	0.0000E+00	0.0000E+00	0.0000E+00
2.7800E-01	2.6942E+02	0.0000E+00	0.0000E+00	0.0000E+00
5.0000E-01	2.5000E-01	0.0000E+00	0.0000E+00	0.0000E+00
6.6700E-01	0.0000E+00	0.0000E+00	0.0000E+00	0.0000E+00
7.2000E+02	0.0000E+00	0.0000E+00	0.0000E+00	0.0000E+00

Pathway number 2: Control Room Makeup

Pathway Filter: Removal Data

Time (hr)	Flow Rate (cfm)	Filter Efficiencies (%) Aerosol	Elemental	Organic
0.0000E+00	8.8000E+02	0.0000E+00	0.0000E+00	0.0000E+00
1.1000E-01	8.8000E+02	9.8010E+01	9.4050E+01	9.4050E+01
7.2000E+02	8.8000E+02	9.8010E+01	9.4050E+01	9.4050E+01

Pathway number 3: Control Room Unfiltered Inleakage

Pathway Filter: Removal Data

Time (hr) Flow Rate Filter Efficiencies (%)

	(cfm)	Aerosol	Elemental	Organic
0.0000E+00	4.0000E+01	0.0000E+00	0.0000E+00	0.0000E+00
7.2000E+02	4.0000E+01	0.0000E+00	0.0000E+00	0.0000E+00

Pathway number 4: Control Room Exhaust

Pathway Filter: Removal Data

Time (hr)	Flow Rate (cfm)	Filter Efficiencies (%) Aerosol	Elemental	Organic
0.0000E+00	9.2000E+02	0.0000E+00	0.0000E+00	0.0000E+00
7.2000E+02	9.2000E+02	0.0000E+00	0.0000E+00	0.0000E+00

Pathway number 5: Unflashed Intact SG Tube Leakage

Pathway Filter: Removal Data

Time (hr)	Flow Rate (cfm)	Filter Efficiencies (%) Aerosol	Elemental	Organic
0.0000E+00	5.0590E+00	0.0000E+00	0.0000E+00	0.0000E+00
2.8000E-02	5.7460E+00	0.0000E+00	0.0000E+00	0.0000E+00
1.3900E-01	5.8710E+00	0.0000E+00	0.0000E+00	0.0000E+00
2.7800E-01	5.9020E+00	0.0000E+00	0.0000E+00	0.0000E+00
5.0000E-01	5.9960E+00	0.0000E+00	0.0000E+00	0.0000E+00
6.6700E-01	6.2460E+00	0.0000E+00	0.0000E+00	0.0000E+00
2.4000E+01	0.0000E+00	0.0000E+00	0.0000E+00	0.0000E+00
7.2000E+02	0.0000E+00	0.0000E+00	0.0000E+00	0.0000E+00

Pathway number 6: Unflashed Break Flow & Ruptured SG Tube Leakage

Pathway Filter: Removal Data

Time (hr)	Flow Rate	Filter Efficiencies (%)

	(cfm)	Aerosol	Elemental	Organic
0.0000E+00	3.9627E+03	0.0000E+00	0.0000E+00	0.0000E+00
2.8000E-02	4.5008E+03	0.0000E+00	0.0000E+00	0.0000E+00
1.3900E-01	4.5987E+03	0.0000E+00	0.0000E+00	0.0000E+00
2.7800E-01	4.6231E+03	0.0000E+00	0.0000E+00	0.0000E+00
5.0000E-01	0.0000E+00	0.0000E+00	0.0000E+00	0.0000E+00
7.2000E+02	0.0000E+00	0.0000E+00	0.0000E+00	0.0000E+00

Pathway number 7: Intact SG Steam Release

Pathway Filter: Removal Data

Time (hr)	Flow Rate	Filter Efficiencies (%)		
	(cfm)	Aerosol	Elemental	Organic
0.0000E+00	2.1440E+01	0.0000E+00	0.0000E+00	0.0000E+00
2.8000E-02	7.0100E+01	0.0000E+00	0.0000E+00	0.0000E+00
5.0000E-01	3.4940E+01	0.0000E+00	0.0000E+00	0.0000E+00
2.0000E+00	3.7990E+01	0.0000E+00	0.0000E+00	0.0000E+00
8.0000E+00	1.4030E+01	0.0000E+00	0.0000E+00	0.0000E+00
2.4000E+01	0.0000E+00	0.0000E+00	0.0000E+00	0.0000E+00
7.2000E+02	0.0000E+00	0.0000E+00	0.0000E+00	0.0000E+00

Pathway number 8: Ruptured Steam Generator Steam Relase

Pathway Filter: Removal Data

Time (hr)	Flow Rate	Filter Efficiencies (%)		
	(cfm)	Aerosol	Elemental	Organic
0.0000E+00	7.1500E+00	0.0000E+00	0.0000E+00	0.0000E+00
2.8000E-02	2.2060E+01	0.0000E+00	0.0000E+00	0.0000E+00
5.0000E-01	0.0000E+00	0.0000E+00	0.0000E+00	0.0000E+00
7.2000E+02	0.0000E+00	0.0000E+00	0.0000E+00	0.0000E+00

```
DOSE INFORMATION
Number_Dose_Locations =  3

Dose Location Name = Exclusion Area Boundary
        Located in compartment  3 the Environment

Exclusion Area Boundary Breathing Rate Data
        Time (hr)          Breathing Rate (m^3 * sec^-1)
      0.0000E+00                 3.5000E-04
      8.0000E+00                 1.8000E-04
      2.4000E+01                 2.3000E-04
      7.2000E+02                 2.3000E-04

Dose Location Name = Low Population Zone
        Located in compartment  3 the Environment

Low Population Zone Breathing Rate Data
        Time (hr)          Breathing Rate (m^3 * sec^-1)
      0.0000E+00                 3.5000E-04
      8.0000E+00                 1.8000E-04
      2.4000E+01                 2.3000E-04
      7.2000E+02                 2.3000E-04

Dose Location Name = Control Room
        Located in compartment  4 the Control Room

Control Room Breathing Rate Data
        Time (hr)          Breathing Rate (m^3 * sec^-1)
      0.0000E+00                 3.5000E-04
      7.2000E+02                 3.5000E-04

Control Room Occupancy Factor Data
        Time (hr)          Occupancy Factor
```

```
       0.0000E+00            1.0000E+00
       2.4000E+01            6.0000E-01
       9.6000E+01            4.0000E-01
       7.2000E+02            4.0000E-01

X/Q, ATMOSPHERIC DISPERSION INFORMATION

X/Q Table Name =    Exclusion Area Boundary

     Location X/Q Data
      Time (hr)         X/Q (s * m^-3)
       0.0000E+00          8.6200E-04
       2.8000E-02          5.8700E-04
       7.2000E+02          5.8700E-04

X/Q Table Name =    Low Population Zone

     Location X/Q Data
      Time (hr)         X/Q (s * m^-3)
       0.0000E+00          1.1600E-04
       2.8000E-02          1.1300E-04
       2.0000E+00          5.2900E-05
       8.0000E+00          3.6300E-05
       2.4000E+01          1.6500E-05
       9.6000E+01          6.3600E-06
       7.2000E+02          6.3600E-06

X/Q Table Name =    Control Room Makeup

     Location X/Q Data
      Time (hr)         X/Q (s * m^-3)
       0.0000E+00          8.5000E-04
       2.8000E-02          1.0900E-02
```

1.1000E-01	1.2600E-02
2.0000E+00	9.7200E-03
8.0000E+00	3.2600E-03
2.4000E+01	3.1700E-03
9.6000E+01	2.8000E-03
7.2000E+02	2.8000E-03

This X/Q Table is used for these connected pathways
Path 1 Flashed Break Flow & SG Tube Leakage and Path 2 Control Room Makeup
Path 7 Intact SG Steam Release and Path 2 Control Room Makeup
Path 8 Ruptured Steam Generator Steam Relase and Path 2 Control Room Makeup

X/Q Table Name = Control Room Unfiltered Inleakage

Location X/Q Data

Time (hr)	X/Q (s * m^-3)
0.0000E+00	8.5000E-04
2.8000E-02	1.0900E-02
2.0000E+00	8.6100E-03
8.0000E+00	2.8700E-03
2.4000E+01	2.7800E-03
9.6000E+01	2.5000E-03
7.2000E+02	2.5000E-03

This X/Q Table is used for these connected pathways
Path 1 Flashed Break Flow & SG Tube Leakage and Path 3 Control Room Unfiltered Inleakage
Path 7 Intact SG Steam Release and Path 3 Control Room Unfiltered Inleakage
Path 8 Ruptured Steam Generator Steam Relase and Path 3 Control Room Unfiltered Inleakage

USER SPECIFIED TIME STEP DATA - SUPPLEMENTAL TIME STEPS

Time (hr)	Time step (hr)
0.0000E+00	0.0000E+00

```
EDIT EACH MAJOR TIME STEP

DO NOT EDIT SUPPLEMENTAL TIME STEPS

DO NOT EDIT MODEL DECONTAMINATION

     Masses in Curies in detailed output
```

```
#######################################################################
    ALION RADTRAD Version 3.10 Rev 2 run on 12/01/2014  at 16:18:07

                Copyright © 2009 Alion Science and Technology
#######################################################################


     ####   #    #  #####  #####   #    #  #####
    #    #  #    #    #    #    #  #    #    #
    #    #  #    #    #    #    #  #    #    #
    #    #  #    #    #    #####   #    #    #
    #    #  #    #    #    #       #    #    #
    #    #  #    #    #    #       #    #    #
     ####    ####     #    #        ####     #


          D. C. Cook - SGTR Pre-Accident Iodine Spike

#######################################################################
           Dose, Detailed model and Detailed Inventory Output
#######################################################################

#######################################################################
    ALION RADTRAD Version 3.10 Rev 2 run on 12/01/2014  at 16:18:07

                Copyright © 2009 Alion Science and Technology
#######################################################################

Exclusion Area Boundary Doses:
```

Time (h) = 0.0000	Whole Body	Thyroid	TEDE
Delta dose (rem)	5.4478E-06	2.5586E-03	1.6691E-04
Accumulated dose (rem)	5.4478E-06	2.5586E-03	1.6691E-04

Low Population Zone Doses:

Time (h) = 0.0000	Whole Body	Thyroid	TEDE
Delta dose (rem)	7.3311E-07	3.4431E-04	2.2461E-05
Accumulated dose (rem)	7.3311E-07	3.4431E-04	2.2461E-05

Control Room Doses:

Time (h) = 0.0000	Whole Body	Thyroid	TEDE	Skin
Delta dose (rem)	9.7159E-13	1.3757E-08	8.6912E-10	4.3608E-11
Accumulated dose (rem)	9.7159E-13	1.3757E-08	8.6912E-10	4.3608E-11

****

RCS Compartment Nuclide Inventory (Ci) at Time (h) = 0.0000

Nuclide	Compartment Atmosphere	Dose Fract	Exposure (Ci-hr)	Decays (Bq-s)
Rb-86	1.8600E+01	1.3440E-04	1.8600E-04	2.4776E+10
Sr-89	2.8227E-01	1.2665E-05	2.8227E-06	3.7599E+08
Sr-90	2.6155E-02	3.6777E-05	2.6155E-07	3.4838E+07
Sr-91	1.2012E-01	2.6349E-07	1.2012E-06	1.6000E+08
Sr-92	5.2606E-02	8.6826E-08	5.2606E-07	7.0071E+07
Y-90	4.5502E-02	4.1570E-07	4.5502E-07	6.0608E+07
Y-91	3.5776E+00	1.8919E-04	3.5776E-05	4.7653E+09
Y-92	6.4848E-02	6.4464E-08	6.4848E-07	8.6378E+07
Y-93	4.2499E-02	1.0142E-07	4.2499E-07	5.6609E+07
Zr-95	5.0936E+00	1.3249E-04	5.0936E-05	6.7846E+09

Zr-97	8.2884E-02	3.9704E-07	8.2884E-07	1.1040E+08
Nb-95	7.3539E+00	4.9400E-05	7.3539E-05	9.7953E+09
Mo-99	4.3768E+02	1.9126E-03	4.3768E-03	5.8299E+11
Tc-99m	4.1865E+02	4.2983E-05	4.1865E-03	5.5764E+11
Ru-103	4.2098E+00	4.1896E-05	4.2098E-05	5.6074E+09
Ru-105	2.0558E-02	1.9095E-08	2.0558E-07	2.7384E+07
Ru-106	7.0621E+00	3.6496E-03	7.0621E-05	9.4067E+09
Rh-105	1.6258E-01	1.7495E-07	1.6258E-06	2.1655E+08
Te-127	5.2627E+01	1.8277E-05	5.2627E-04	7.0099E+10
Te-127m	5.2120E+01	1.2132E-03	5.2120E-04	6.9424E+10
Te-129	4.8229E+01	6.1938E-06	4.8229E-04	6.4241E+10
Te-129m	7.3221E+01	1.8991E-03	7.3221E-04	9.7531E+10
Te-131m	1.2236E+01	9.4619E-05	1.2236E-04	1.6298E+10
Te-132	2.0381E+02	2.1060E-03	2.0381E-03	2.7147E+11
I-131	1.0259E+04	3.6752E-01	1.0259E-01	1.3666E+13
I-132	8.1332E+03	1.3782E-02	8.1332E-02	1.0833E+13
I-133	1.3072E+04	8.7139E-02	1.3072E-01	1.7412E+13
I-134	1.5617E+03	2.5458E-03	1.5617E-02	2.0802E+12
I-135	6.8062E+03	1.5269E-02	6.8062E-02	9.0659E+12
Xe-133	6.9893E-04	1.2480E-11	6.9893E-09	0.0000E+00
Xe-135	4.3907E-03	5.9805E-10	4.3907E-08	0.0000E+00
Cs-134	7.0346E+03	3.5836E-01	7.0346E-02	9.3701E+12
Cs-136	4.6263E+02	4.2309E-03	4.6263E-03	6.1622E+11
Cs-137	3.9159E+03	1.3538E-01	3.9159E-02	5.2159E+12
Ba-139	4.1759E-02	8.7994E-09	4.1759E-07	5.5623E+07
Ba-140	4.1019E-01	1.7000E-06	4.1019E-06	5.4638E+08
La-140	6.0852E-01	4.0084E-06	6.0852E-06	8.1055E+08
La-141	2.7508E-02	1.8054E-08	2.7508E-07	3.6641E+07
La-142	7.0747E-03	1.3599E-08	7.0747E-08	9.4236E+06
Ce-141	3.0553E+00	2.9740E-05	3.0553E-05	4.0697E+09
Ce-143	1.4613E-01	5.5779E-07	1.4613E-06	1.9464E+08
Ce-144	8.9418E+00	3.6180E-03	8.9418E-05	1.1910E+10
Pr-143	1.4194E+00	1.2453E-05	1.4194E-05	1.8906E+09

Kr-83m	1.3070E-03	2.2440E-14	1.3070E-08	0.0000E+00
Br-82	5.8877E+01	1.8502E-04	5.8877E-04	7.8425E+10
Br-83	3.4507E+02	3.4824E-05	3.4507E-03	4.5963E+11
Br-84	1.5782E+02	1.8648E-04	1.5782E-03	2.1021E+11
Rb-89	5.3493E+00	6.7387E-06	5.3493E-05	7.1253E+09
Y-91m	7.0071E-02	2.3208E-08	7.0071E-07	9.3334E+07
Nb-95m	3.9476E-02	1.0554E-07	3.9476E-07	5.2582E+07
Nb-97	1.0360E-02	4.7007E-09	1.0360E-07	1.3800E+07
Rh-103m	4.2034E+00	2.3661E-08	4.2034E-05	5.5989E+09
Te-125m	5.1781E+00	4.0893E-05	5.1781E-05	6.8973E+09
Te-131	3.3809E+00	2.5366E-06	3.3809E-05	4.5033E+09
Te-133	7.0178E-06	4.3950E-12	7.0178E-11	0.0000E+00
Te-133m	1.6160E+00	2.8661E-06	1.6160E-05	2.1525E+09
Te-134	2.3089E+00	1.4387E-06	2.3089E-05	3.0755E+09
Xe-131m	2.7639E-06	1.2306E-14	2.7639E-11	0.0000E+00
Xe-133m	5.0039E-05	7.8466E-13	5.0039E-10	0.0000E+00
Xe-135m	2.8522E-02	6.6599E-09	2.8522E-07	0.0000E+00
Cs-134m	4.2943E+00	2.4748E-07	4.2943E-05	5.7200E+09
Cs-138	7.2311E+01	1.0809E-04	7.2311E-04	9.6319E+10
Ba-141	8.9500E-03	5.0432E-09	8.9500E-08	1.1922E+07
Total	5.3266E+04	1.0000E+00	0.0000E+00	0.0000E+00

Dose Equivalent (Ci/cc) I-131 (Thyroid)	9.6081E-07
Dose Equivalent (Ci/cc) I-131 (CEDE)	9.8013E-07
Dose Equivalent (Ci/cc) I-131 (ICRP2 Thyroid)	1.1091E-06
Total I (Ci)	3.9833E+04
Dose Equivalent (Ci/cc) Xe-133 (EDE)	3.0851E-11

RCS Compartment Group Inventory Distribution:

Time (h) = 0.0000	Atmosphere	Sump
Noble gases (Ci)	3.4972E-02	0.0000E+00
Elemental I (Ci)	3.9183E+04	0.0000E+00

Organic I (Ci)	1.2118E+03	0.0000E+00
Aerosol I (Ci)	0.0000E+00	0.0000E+00
All Aerosols (Ci)	1.2872E+04	0.0000E+00
All Aerosols (kg)	5.0444E-02	0.0000E+00

Intact Steam Generators Compartment Nuclide Inventory (Ci) at Time (h) = 0.0000

Nuclide	Compartment Atmosphere	Dose Fract	Exposure (Ci-hr)	Decays (Bq-s)
Mo-99	1.4250E-06	1.9126E-03	1.4250E-11	1.8981E+03
Tc-99m	1.3631E-06	4.2983E-05	1.3631E-11	1.8156E+03
I-131	3.3404E-05	3.6752E-01	3.3404E-10	4.4494E+04
I-132	2.6481E-05	1.3782E-02	2.6481E-10	3.5272E+04
I-133	4.2561E-05	8.7139E-02	4.2561E-10	5.6691E+04
I-134	5.0846E-06	2.5458E-03	5.0846E-11	6.7728E+03
I-135	2.2160E-05	1.5269E-02	2.2160E-10	2.9517E+04
Cs-134	2.2904E-05	3.5836E-01	2.2904E-10	3.0508E+04
Cs-136	1.5063E-06	4.2309E-03	1.5063E-11	2.0063E+03
Cs-137	1.2750E-05	1.3538E-01	1.2750E-10	1.6982E+04
Br-83	1.1235E-06	3.4824E-05	1.1235E-11	1.4965E+03
Total	1.7343E-04	1.0000E+00	0.0000E+00	0.0000E+00

Dose Equivalent (Ci/cc) I-131 (Thyroid)	4.9846E-15
Dose Equivalent (Ci/cc) I-131 (CEDE)	5.0848E-15
Dose Equivalent (Ci/cc) I-131 (ICRP2 Thyroid)	5.7539E-15
Total I (Ci)	1.2969E-04
Dose Equivalent (Ci/cc) Xe-133 (EDE)	1.6005E-19

Intact Steam Generators Compartment Group Inventory Distribution:

Time (h) = 0.0000	Atmosphere	Sump
Noble gases (Ci)	1.1386E-10	0.0000E+00
Elemental I (Ci)	1.2757E-04	0.0000E+00

Organic I (Ci)	3.9456E-06	0.0000E+00
Aerosol I (Ci)	0.0000E+00	0.0000E+00
All Aerosols (Ci)	4.1909E-05	0.0000E+00
All Aerosols (kg)	1.6424E-10	0.0000E+00

Control Room Compartment Nuclide Inventory (Ci) at Time (h) = 0.0000

Nuclide	Compartment Atmosphere	Dose Fract	Exposure (Ci-hr)	Decays (Bq-s)
I-131	2.2680E-06	3.6752E-01	2.2680E-11	3.0209E+03
I-132	1.7979E-06	1.3782E-02	1.7979E-11	2.3949E+03
I-133	2.8897E-06	8.7139E-02	2.8897E-11	3.8491E+03
I-135	1.5046E-06	1.5269E-02	1.5046E-11	2.0041E+03
Cs-134	1.5551E-06	3.5836E-01	1.5551E-11	2.0714E+03
Total	1.1775E-05	1.0000E+00	0.0000E+00	0.0000E+00

Control Room Compartment Group Inventory Distribution:

Time (h) = 0.0000	Atmosphere	Sump
Noble gases (Ci)	7.7309E-12	0.0000E+00
Elemental I (Ci)	8.6617E-06	0.0000E+00
Organic I (Ci)	2.6789E-07	0.0000E+00
Aerosol I (Ci)	0.0000E+00	0.0000E+00
All Aerosols (Ci)	2.8455E-06	0.0000E+00
All Aerosols (kg)	1.1151E-11	0.0000E+00

Time (h) = 0.0000	Deposition Surfaces	Recirculating Filter
Noble gases (Ci)	0.0000E+00	0.0000E+00
Elemental I (Ci)	0.0000E+00	0.0000E+00
Organic I (Ci)	0.0000E+00	0.0000E+00
Aerosol I (Ci)	0.0000E+00	0.0000E+00
All Aerosols (Ci)	0.0000E+00	0.0000E+00

All Aerosols (kg) 0.0000E+00 0.0000E+00

Ruptured Steam Generator Compartment Nuclide Inventory (Ci) at Time (h) = 0.0000

Nuclide	Compartment Atmosphere	Dose Fract	Exposure (Ci-hr)	Decays (Bq-s)
Rb-86	4.7437E-05	1.3440E-04	4.7437E-10	6.3186E+04
Y-91	9.1239E-06	1.8919E-04	9.1239E-11	1.2153E+04
Zr-95	1.2990E-05	1.3249E-04	1.2990E-10	1.7303E+04
Nb-95	1.8755E-05	4.9400E-05	1.8755E-10	2.4981E+04
Mo-99	1.1162E-03	1.9126E-03	1.1162E-08	1.4868E+06
Tc-99m	1.0677E-03	4.2983E-05	1.0677E-08	1.4222E+06
Ru-103	1.0736E-05	4.1896E-05	1.0736E-10	1.4301E+04
Ru-106	1.8011E-05	3.6496E-03	1.8011E-10	2.3990E+04
Te-127	1.3422E-04	1.8277E-05	1.3422E-09	1.7878E+05
Te-127m	1.3292E-04	1.2132E-03	1.3292E-09	1.7705E+05
Te-129	1.2300E-04	6.1938E-06	1.2300E-09	1.6384E+05
Te-129m	1.8674E-04	1.8991E-03	1.8674E-09	2.4874E+05
Te-131m	3.1206E-05	9.4619E-05	3.1206E-10	4.1566E+04
Te-132	5.1977E-04	2.1060E-03	5.1977E-09	6.9234E+05
I-131	2.6165E-02	3.6752E-01	2.6165E-07	3.4852E+07
I-132	2.0742E-02	1.3782E-02	2.0742E-07	2.7629E+07
I-133	3.3338E-02	8.7139E-02	3.3338E-07	4.4406E+07
I-134	3.9828E-03	2.5458E-03	3.9828E-08	5.3051E+06
I-135	1.7358E-02	1.5269E-02	1.7358E-07	2.3121E+07
Cs-134	1.7940E-02	3.5836E-01	1.7940E-07	2.3897E+07
Cs-136	1.1799E-03	4.2309E-03	1.1799E-08	1.5716E+06
Cs-137	9.9867E-03	1.3538E-01	9.9867E-08	1.3302E+07
Ba-140	1.0461E-06	1.7000E-06	1.0461E-11	1.3934E+03
La-140	1.5519E-06	4.0084E-06	1.5519E-11	2.0672E+03
Ce-141	7.7920E-06	2.9740E-05	7.7920E-11	1.0379E+04
Ce-144	2.2804E-05	3.6180E-03	2.2804E-10	3.0375E+04
Pr-143	3.6199E-06	1.2453E-05	3.6199E-11	4.8217E+03

Br-82	1.5016E-04	1.8502E-04	1.5016E-09	2.0001E+05
Br-83	8.8003E-04	3.4824E-05	8.8003E-09	1.1722E+06
Br-84	4.0248E-04	1.8648E-04	4.0248E-09	5.3611E+05
Rb-89	1.3642E-05	6.7387E-06	1.3642E-10	1.8172E+04
Rh-103m	1.0720E-05	2.3661E-08	1.0720E-10	1.4279E+04
Te-125m	1.3206E-05	4.0893E-05	1.3206E-10	1.7590E+04
Te-131	8.6224E-06	2.5366E-06	8.6224E-11	1.1485E+04
Te-133m	4.1214E-06	2.8661E-06	4.1214E-11	5.4897E+03
Te-134	5.8884E-06	1.4387E-06	5.8884E-11	7.8434E+03
Cs-134m	1.0952E-05	2.4748E-07	1.0952E-10	1.4588E+04
Cs-138	1.8442E-04	1.0809E-04	1.8442E-09	2.4565E+05
Total	1.3585E-01	1.0000E+00	0.0000E+00	0.0000E+00

Dose Equivalent (Ci/cc) I-131 (Thyroid)	1.1713E-11
Dose Equivalent (Ci/cc) I-131 (CEDE)	1.1949E-11
Dose Equivalent (Ci/cc) I-131 (ICRP2 Thyroid)	1.3521E-11
Total I (Ci)	1.0159E-01
Dose Equivalent (Ci/cc) Xe-133 (EDE)	3.7610E-16

Ruptured Steam Generator Compartment Group Inventory Distribution:

Time (h) = 0.0000	Atmosphere	Sump
Noble gases (Ci)	8.9190E-08	0.0000E+00
Elemental I (Ci)	9.9928E-02	0.0000E+00
Organic I (Ci)	3.0906E-03	0.0000E+00
Aerosol I (Ci)	0.0000E+00	0.0000E+00
All Aerosols (Ci)	3.2827E-02	0.0000E+00
All Aerosols (kg)	1.2865E-07	0.0000E+00

##
ALION RADTRAD Version 3.10 Rev 2 run on 12/01/2014 at 16:18:07

```
#######################################################################

Exclusion Area Boundary Doses:

Time (h) =    0.0280    Whole Body   Thyroid       TEDE
Delta dose (rem)         3.0197E-02  1.4200E+01  9.2630E-01
Accumulated dose (rem)   3.0203E-02  1.4202E+01  9.2647E-01

Low Population Zone Doses:

Time (h) =    0.0280    Whole Body   Thyroid       TEDE
Delta dose (rem)         4.0637E-03  1.9109E+00  1.2465E-01
Accumulated dose (rem)   4.0644E-03  1.9112E+00  1.2468E-01

Control Room Doses:

Time (h) =    0.0280    Whole Body   Thyroid       TEDE        Skin
Delta dose (rem)         1.4939E-05  2.1186E-01  1.3385E-02  6.7053E-04
Accumulated dose (rem)   1.4939E-05  2.1186E-01  1.3385E-02  6.7053E-04

*******************************************************

RCS Compartment Nuclide Inventory (Ci)  at Time (h) =   0.0280
```

Nuclide	Compartment Atmosphere	Dose Fract	Exposure (Ci-hr)	Decays (Bq-s)	Pathway 1 Outflow	Pathway 5 Outflow	Pathway 6 Outflow
Rb-86	1.8274E+01	1.3443E-04	5.1430E-01	6.8505E+13	6.1832E-02	3.3610E-04	2.6327E-01
Sr-89	2.7741E-01	1.2671E-05	7.8065E-03	1.0397E+12	9.3843E-04	5.1010E-06	3.9956E-03
Sr-90	2.5698E-02	3.6786E-05	7.2320E-04	9.6331E+10	8.6947E-05	4.7262E-07	3.7020E-04
Sr-91	1.1778E-01	2.6317E-07	3.3165E-03	4.4196E+11	3.9908E-04	2.1693E-06	1.6992E-03
Sr-92	5.1317E-02	8.6406E-08	1.4472E-03	1.9306E+11	1.7452E-04	9.4864E-07	7.4306E-04
Y-90	4.4700E-02	4.1576E-07	1.2580E-03	1.6757E+11	1.5126E-04	8.2218E-07	6.4401E-04
Y-91	3.5149E+00	1.8923E-04	9.8921E-02	1.3176E+13	1.1893E-02	6.4646E-05	5.0637E-02

Y-92	6.3648E-02	6.4432E-08	1.7918E-03	2.3849E+11	2.1551E-04	1.1715E-06	9.1760E-04
Y-93	4.1676E-02	1.0131E-07	1.1735E-03	1.5638E+11	1.4120E-04	7.6753E-07	6.0121E-04
Zr-95	5.0044E+00	1.3252E-04	1.4084E-01	1.8760E+13	1.6933E-02	9.2040E-05	7.2095E-02
Zr-97	8.1341E-02	3.9681E-07	2.2899E-03	3.0509E+11	2.7544E-04	1.4972E-06	1.1728E-03
Nb-95	7.2252E+00	4.9411E-05	2.0334E-01	2.7085E+13	2.4446E-02	1.3288E-04	1.0409E-01
Mo-99	4.2990E+02	1.9126E-03	1.2100E+01	1.6118E+15	1.4549E+00	7.9081E-03	6.1944E+00
Tc-99m	4.1122E+02	4.2984E-05	1.1574E+01	1.5407E+15	1.3916E+00	7.5644E-03	5.9251E+00
Ru-103	4.1360E+00	4.1905E-05	1.1640E-01	1.5505E+13	1.3994E-02	7.6069E-05	5.9585E-02
Ru-105	2.0111E-02	1.9040E-08	5.6669E-04	7.5553E+10	6.8256E-05	3.7102E-07	2.9062E-04
Ru-106	6.9385E+00	3.6504E-03	1.9527E-01	2.6010E+13	2.3476E-02	1.2761E-04	9.9957E-02
Rh-105	1.5966E-01	1.7494E-07	4.4938E-03	5.9863E+11	5.4038E-04	2.9373E-06	2.3008E-03
Te-127	5.1703E+01	1.8280E-05	1.4551E+00	1.9374E+14	1.7495E-01	9.5095E-04	7.4488E-01
Te-127m	5.1208E+01	1.2135E-03	1.4411E+00	1.9196E+14	1.7326E-01	9.4180E-04	7.3771E-01
Te-129	4.7378E+01	6.1945E-06	1.3334E+00	1.7699E+14	1.6032E-01	8.7145E-04	6.8260E-01
Te-129m	7.1939E+01	1.8996E-03	2.0246E+00	2.6968E+14	2.4341E-01	1.3231E-03	1.0364E+00
Te-131m	1.2014E+01	9.4598E-05	3.3818E-01	4.5052E+13	4.0669E-02	2.2106E-04	1.7316E-01
Te-132	2.0019E+02	2.1061E-03	5.6344E+00	7.5054E+14	6.7747E-01	3.6825E-03	2.8845E+00
I-131	1.0079E+04	3.6758E-01	2.8366E+02	3.7784E+16	3.4105E+01	1.8538E-01	1.4521E+02
I-132	7.9255E+03	1.3705E-02	2.2358E+02	2.9831E+16	2.6974E+01	1.4662E-01	1.1485E+02
I-133	1.2831E+04	8.7102E-02	3.6121E+02	4.8123E+16	4.3444E+01	2.3615E-01	1.8497E+02
I-134	1.5008E+03	2.5068E-03	4.2510E+01	5.6889E+15	5.1588E+00	2.8041E-02	2.1965E+01
I-135	6.6676E+03	1.5241E-02	1.8780E+02	2.5031E+16	2.2607E+01	1.2288E-01	9.6255E+01
Xe-133	1.9218E+00	2.4819E-08	3.8425E-02	2.0644E+12	1.8653E-03	1.0139E-05	7.9422E-03
Xe-135	1.2101E+01	1.1917E-06	2.4187E-01	1.2970E+13	1.1725E-02	6.3736E-05	4.9924E-02
Cs-134	6.9115E+03	3.5844E-01	1.9451E+02	2.5909E+16	2.3385E+01	1.2711E-01	9.9568E+01
Cs-136	4.5451E+02	4.2317E-03	1.2791E+01	1.7038E+15	1.5379E+00	8.3595E-03	6.5480E+00
Cs-137	3.8474E+03	1.3541E-01	1.0828E+02	1.4422E+16	1.3017E+01	7.0759E-02	5.5425E+01
Ba-139	4.0455E-02	8.7140E-09	1.1432E-03	1.5273E+11	1.3826E-04	7.5155E-07	5.8868E-04
Ba-140	4.0299E-01	1.7003E-06	1.1342E-02	1.5107E+12	1.3636E-03	7.4120E-06	5.8058E-03
La-140	5.9778E-01	4.0089E-06	1.6824E-02	2.2409E+12	2.0228E-03	1.0995E-05	8.6127E-03
La-141	2.6936E-02	1.8015E-08	7.5880E-04	1.0111E+11	9.1358E-05	4.9659E-07	3.8898E-04
La-142	6.8640E-03	1.3481E-08	1.9388E-04	2.5894E+10	2.3434E-05	1.2738E-07	9.9776E-05
Ce-141	3.0018E+00	2.9746E-05	8.4480E-02	1.1253E+13	1.0157E-02	5.5208E-05	4.3245E-02

Ce-143	1.4349E-01	5.5769E-07	4.0388E-03	5.3803E+11	4.8568E-04	2.6400E-06	2.0679E-03
Ce-144	8.7853E+00	3.6189E-03	2.4725E-01	3.2933E+13	2.9725E-02	1.6158E-04	1.2656E-01
Pr-143	1.3945E+00	1.2455E-05	3.9246E-02	5.2276E+12	4.7184E-03	2.5648E-05	2.0090E-02
Kr-83m	3.5702E+00	4.4373E-11	7.1447E-02	3.8411E+12	3.4803E-03	1.8918E-05	1.4818E-02
Br-82	5.7816E+01	1.8499E-04	1.6274E+00	2.1679E+14	1.9570E-01	1.0637E-03	8.3322E-01
Br-83	3.3629E+02	3.4632E-05	9.4865E+00	1.2658E+15	1.1444E+00	6.2209E-03	4.8728E+00
Br-84	1.4948E+02	1.8175E-04	4.2521E+00	5.7077E+14	5.1916E-01	2.8220E-03	2.2105E+00
Rb-89	4.8682E+00	6.3856E-06	1.4013E-01	1.8969E+13	1.7398E-02	9.4571E-05	7.4077E-02
Y-91m	6.8837E-02	2.3211E-08	1.9373E-03	2.5679E+11	2.3293E-04	1.2661E-06	9.9174E-04
Nb-95m	3.8784E-02	1.0556E-07	1.0915E-03	1.4538E+11	1.3123E-04	7.1332E-07	5.5874E-04
Nb-97	1.0086E-02	4.6710E-09	2.8460E-04	3.7927E+10	3.4350E-05	1.8672E-07	1.4625E-04
Rh-103m	4.1301E+00	2.3668E-08	1.1623E-01	1.5414E+13	1.3973E-02	7.5956E-05	5.9496E-02
Te-125m	5.0875E+00	4.0902E-05	1.4318E-01	1.9071E+13	1.7214E-02	9.3568E-05	7.3292E-02
Te-131	3.2932E+00	2.5216E-06	9.2910E-02	1.2299E+13	1.1211E-02	6.0937E-05	4.7732E-02
Te-133	1.8604E-02	8.4703E-09	3.7389E-04	1.9992E+10	1.8510E-05	1.0061E-07	7.8811E-05
Te-133m	1.5547E+00	2.8243E-06	4.4023E-02	5.8900E+12	5.3399E-03	2.9026E-05	2.2736E-02
Te-134	2.2062E+00	1.4109E-06	6.2595E-02	8.3869E+12	7.6145E-03	4.1390E-05	3.2421E-02
Xe-131m	7.6029E-03	2.4483E-11	1.5201E-04	8.1650E+09	7.3776E-06	4.0103E-08	3.1412E-05
Xe-133m	1.3758E-01	1.5604E-09	2.7509E-03	1.4779E+11	1.3355E-04	7.2591E-07	5.6861E-04
Xe-135m	7.6677E+01	1.2992E-05	1.5381E+00	8.2028E+13	7.5606E-02	4.1097E-04	3.2191E-01
Cs-134m	4.1911E+00	2.4637E-07	1.1818E-01	1.5764E+13	1.4248E-02	7.7449E-05	6.0666E-02
Cs-138	6.8524E+01	1.0538E-04	1.9489E+00	2.6159E+14	2.3791E-01	1.2932E-03	1.0130E+00
Ba-141	8.2506E-03	4.8223E-09	2.3658E-04	3.1939E+10	2.9216E-05	1.5881E-07	1.2439E-04
Total	5.2286E+04	1.0000E+00	0.0000E+00	0.0000E+00	1.7703E+02	9.6226E-01	7.5374E+02

Dose Equivalent (Ci/cc) I-131 (Thyroid)	9.4370E-07
Dose Equivalent (Ci/cc) I-131 (CEDE)	9.6262E-07
Dose Equivalent (Ci/cc) I-131 (ICRP2 Thyroid)	1.0890E-06
Total I (Ci)	3.9004E+04
Dose Equivalent (Ci/cc) Xe-133 (EDE)	8.3112E-08

RCS Compartment Group Inventory Distribution:

Time (h) = 0.0280	Atmosphere	Sump
Noble gases (Ci)	9.4415E+01	0.0000E+00
Elemental I (Ci)	3.8361E+04	0.0000E+00
Organic I (Ci)	1.1864E+03	0.0000E+00
Aerosol I (Ci)	0.0000E+00	0.0000E+00
All Aerosols (Ci)	1.2643E+04	0.0000E+00
All Aerosols (kg)	4.9562E-02	0.0000E+00

Intact Steam Generators Compartment Nuclide Inventory (Ci) at Time (h) = 0.0280

Nuclide	Compartment Atmosphere	Dose Fract	Exposure (Ci-hr)	Decays (Bq-s)	Pathway 5 Inflow	Pathway 7 Outflow
Rb-86	3.3607E-04	1.3444E-04	6.7114E-06	8.9397E+08	3.3610E-04	2.0734E-08
Sr-89	5.1017E-06	1.2672E-05	1.0188E-07	1.3568E+07	5.1010E-06	3.1469E-10
Sr-91	2.1660E-06	2.6310E-07	4.3265E-08	5.7659E+06	2.1693E-06	1.3380E-10
Sr-92	9.4374E-07	8.6308E-08	1.8863E-08	2.5172E+06	9.4864E-07	5.8485E-11
Y-90	8.2205E-07	4.1578E-07	1.6417E-08	2.1867E+06	8.2218E-07	5.0720E-11
Y-91	6.4641E-05	1.8924E-04	1.2909E-06	1.7195E+08	6.4646E-05	3.9880E-09
Y-92	1.1705E-06	6.4424E-08	2.3378E-08	3.1113E+06	1.1715E-06	7.2261E-11
Y-93	7.6643E-07	1.0128E-07	1.5309E-08	2.0402E+06	7.6753E-07	4.7341E-11
Zr-95	9.2033E-05	1.3252E-04	1.8379E-06	2.4481E+08	9.2040E-05	5.6780E-09
Zr-97	1.4959E-06	3.9676E-07	2.9877E-08	3.9808E+06	1.4972E-06	9.2354E-11
Nb-95	1.3287E-04	4.9414E-05	2.6535E-06	3.5345E+08	1.3288E-04	8.1976E-09
Mo-99	7.9060E-03	1.9126E-03	1.5789E-04	2.1032E+10	7.9081E-03	4.8784E-07
Tc-99m	7.5624E-03	4.2985E-05	1.5103E-04	2.0103E+10	7.5644E-03	4.6664E-07
Ru-103	7.6063E-05	4.1908E-05	1.5190E-06	2.0233E+08	7.6069E-05	4.6927E-09
Ru-106	1.2760E-04	3.6506E-03	2.5482E-06	3.3943E+08	1.2761E-04	7.8723E-09
Rh-105	2.9361E-06	1.7493E-07	5.8638E-08	7.8114E+06	2.9373E-06	1.8120E-10
Te-127	9.5084E-04	1.8281E-05	1.8989E-05	2.5280E+09	9.5095E-04	5.8664E-08
Te-127m	9.4173E-04	1.2135E-03	1.8807E-05	2.5050E+09	9.4180E-04	5.8100E-08
Te-129	8.7130E-04	6.1946E-06	1.7400E-05	2.3081E+09	8.7145E-04	5.3759E-08
Te-129m	1.3230E-03	1.8996E-03	2.6420E-05	3.5192E+09	1.3231E-03	8.1622E-08
Te-131m	2.2095E-04	9.4592E-05	4.4127E-06	5.8786E+08	2.2106E-04	1.3637E-08

Te-132	3.6816E-03	2.1061E-03	7.3524E-05	9.7941E+09	3.6825E-03	2.2717E-07
I-131	1.8536E-01	3.6759E-01	3.7016E-03	4.9307E+11	1.8538E-01	1.1436E-05
I-132	1.4575E-01	1.3687E-02	2.9137E-03	3.8889E+11	1.4662E-01	9.0385E-06
I-133	2.3597E-01	8.7093E-02	4.7130E-03	6.2792E+11	2.3615E-01	1.4567E-05
I-134	2.7601E-02	2.4977E-03	5.5271E-04	7.4034E+10	2.8041E-02	1.7265E-06
I-135	1.2262E-01	1.5234E-02	2.4496E-03	3.2653E+11	1.2288E-01	7.5788E-06
Xe-133	3.5342E-05	3.0624E-08	6.1870E-07	3.4682E+07	1.0139E-05	8.1773E-10
Xe-135	2.2254E-04	1.4707E-06	3.8951E-06	2.1790E+08	6.3736E-05	5.1404E-09
Cs-134	1.2711E-01	3.5846E-01	2.5383E-03	3.3810E+11	1.2711E-01	7.8417E-06
Cs-136	8.3586E-03	4.2319E-03	1.6692E-04	2.2235E+10	8.3595E-03	5.1570E-07
Cs-137	7.0754E-02	1.3542E-01	1.4130E-03	1.8821E+11	7.0759E-02	4.3651E-06
Ba-139	7.4398E-07	8.6941E-09	1.4883E-08	1.9896E+06	7.5155E-07	4.6305E-11
Ba-140	7.4112E-06	1.7004E-06	1.4800E-07	1.9714E+07	7.4120E-06	4.5724E-10
La-140	1.0993E-05	4.0090E-06	2.1955E-07	2.9242E+07	1.0995E-05	6.7830E-10
Ce-141	5.5204E-05	2.9748E-05	1.1024E-06	1.4685E+08	5.5208E-05	3.4058E-09
Ce-143	2.6387E-06	5.5766E-07	5.2700E-08	7.0207E+06	2.6400E-06	1.6286E-10
Ce-144	1.6157E-04	3.6191E-03	3.2265E-06	4.2977E+08	1.6158E-04	9.9677E-09
Pr-143	2.5645E-05	1.2456E-05	5.1214E-07	6.8218E+07	2.5648E-05	1.5822E-09
Kr-83m	6.5656E-05	5.4726E-11	1.1498E-06	6.4514E+07	1.8918E-05	1.5254E-09
Br-82	1.0633E-03	1.8498E-04	2.1235E-05	2.8289E+09	1.0637E-03	6.5619E-08
Br-83	6.1845E-03	3.4587E-05	1.2363E-04	1.6501E+10	6.2209E-03	3.8349E-07
Br-84	2.7490E-03	1.8065E-04	5.5150E-05	7.4145E+09	2.8220E-03	1.7353E-07
Rb-89	8.9528E-05	6.3041E-06	1.8052E-06	2.4517E+08	9.4571E-05	5.7946E-09
Y-91m	1.2659E-06	2.3212E-08	2.5281E-08	3.3477E+06	1.2661E-06	7.8106E-11
Nb-95m	7.1326E-07	1.0557E-07	1.4244E-08	1.8972E+06	7.1332E-07	4.4005E-11
Rh-103m	7.5955E-05	2.3669E-08	1.5168E-06	2.0097E+08	7.5956E-05	4.6857E-09
Te-125m	9.3561E-05	4.0904E-05	1.8684E-06	2.4888E+08	9.3568E-05	5.7722E-09
Te-131	6.0564E-05	2.5182E-06	1.2107E-06	1.6007E+08	6.0937E-05	3.7563E-09
Te-133m	2.8592E-05	2.8146E-06	5.7248E-07	7.6663E+07	2.9026E-05	1.7873E-09
Te-134	4.0573E-05	1.4044E-06	8.1306E-07	1.0907E+08	4.1390E-05	2.5471E-09
Xe-133m	2.5301E-06	1.9254E-09	4.4292E-08	2.4829E+06	7.2591E-07	5.8543E-11
Xe-135m	1.4101E-03	1.6003E-05	2.4723E-05	1.3763E+09	4.1097E-04	3.3128E-08
Cs-134m	7.7075E-05	2.4611E-07	1.5405E-06	2.0554E+08	7.7449E-05	4.7750E-09

Cs-138	1.2602E-03	1.0475E-04	2.5280E-05	3.3983E+09	1.2932E-03	7.9524E-08
Total	9.6155E-01	1.0000E+00	0.0000E+00	0.0000E+00	9.6226E-01	5.9357E-05

Dose Equivalent (Ci/cc) I-131 (Thyroid)	2.7653E-11
Dose Equivalent (Ci/cc) I-131 (CEDE)	2.8208E-11
Dose Equivalent (Ci/cc) I-131 (ICRP2 Thyroid)	3.1912E-11
Total I (Ci)	7.1730E-01
Dose Equivalent (Ci/cc) Xe-133 (EDE)	2.4354E-12

Intact Steam Generators Compartment Group Inventory Distribution:

Time (h) = 0.0280	Atmosphere	Sump
Noble gases (Ci)	1.7363E-03	0.0000E+00
Elemental I (Ci)	7.0548E-01	0.0000E+00
Organic I (Ci)	2.1819E-02	0.0000E+00
Aerosol I (Ci)	0.0000E+00	0.0000E+00
All Aerosols (Ci)	2.3252E-01	0.0000E+00
All Aerosols (kg)	9.1146E-07	0.0000E+00

Control Room Compartment Nuclide Inventory (Ci) at Time (h) = 0.0280

Nuclide	Compartment Atmosphere	Dose Fract	Exposure (Ci-hr)	Decays (Bq-s)	Pathway 2 Inflow	Pathway 3 Inflow	Pathway 4 Outflow
Rb-86	2.2479E-05	1.3444E-04	4.4975E-07	5.9907E+07	2.1758E-05	9.8901E-07	3.4532E-07
Y-91	4.3238E-06	1.8924E-04	8.6506E-08	1.1523E+07	4.1850E-06	1.9023E-07	6.6420E-08
Zr-95	6.1560E-06	1.3252E-04	1.2316E-07	1.6406E+07	5.9584E-06	2.7084E-07	9.4566E-08
Nb-95	8.8878E-06	4.9414E-05	1.7782E-07	2.3686E+07	8.6024E-06	3.9102E-07	1.3653E-07
Mo-99	5.2882E-04	1.9126E-03	1.0581E-05	1.4094E+09	5.1195E-04	2.3270E-05	8.1250E-06
Tc-99m	5.0584E-04	4.2985E-05	1.0121E-05	1.3472E+09	4.8969E-04	2.2259E-05	7.7861E-06
Ru-103	5.0878E-06	4.1908E-05	1.0179E-07	1.3559E+07	4.9245E-06	2.2384E-07	7.8157E-08
Ru-106	8.5352E-06	3.6506E-03	1.7077E-07	2.2746E+07	8.2611E-06	3.7551E-07	1.3111E-07
Te-127	6.3601E-05	1.8281E-05	1.2725E-06	1.6941E+08	6.1562E-05	2.7983E-06	9.7827E-07
Te-127m	6.2991E-05	1.2135E-03	1.2603E-06	1.6787E+08	6.0969E-05	2.7713E-06	9.6764E-07

Te-129	5.8280E-05	6.1946E-06	1.1660E-06	1.5467E+08	5.6415E-05	2.5643E-06	9.0460E-07
Te-129m	8.8493E-05	1.8996E-03	1.7705E-06	2.3583E+08	8.5653E-05	3.8933E-06	1.3594E-06
Te-131m	1.4779E-05	9.4593E-05	2.9571E-07	3.9395E+07	1.4311E-05	6.5049E-07	2.2712E-07
Te-132	2.4626E-04	2.1061E-03	4.9271E-06	6.5633E+08	2.3839E-04	1.0836E-05	3.7835E-06
I-131	1.2398E-02	3.6759E-01	2.4806E-04	3.3042E+10	1.2001E-02	5.4550E-04	1.9047E-04
I-132	9.7493E-03	1.3687E-02	1.9526E-04	2.6061E+10	9.4918E-03	4.3144E-04	1.5056E-04
I-133	1.5784E-02	8.7093E-02	3.1583E-04	4.2079E+10	1.5287E-02	6.9488E-04	2.4261E-04
I-134	1.8462E-03	2.4978E-03	3.7039E-05	4.9613E+09	1.8153E-03	8.2515E-05	2.8756E-05
I-135	8.2019E-03	1.5234E-02	1.6416E-04	2.1882E+10	7.9552E-03	3.6160E-04	1.2622E-04
Xe-133	2.3640E-06	3.0594E-08	4.1419E-08	2.3212E+06	6.5577E-07	2.9808E-08	1.3606E-08
Xe-135	1.4885E-05	1.4692E-06	2.6076E-07	1.4583E+07	4.1221E-06	1.8737E-07	8.5530E-08
Cs-134	8.5020E-03	3.5846E-01	1.7010E-04	2.2657E+10	8.2290E-03	3.7404E-04	1.3060E-04
Cs-136	5.5910E-04	4.2319E-03	1.1186E-05	1.4900E+09	5.4117E-04	2.4599E-05	8.5889E-06
Cs-137	4.7327E-03	1.3542E-01	9.4688E-05	1.2612E+10	4.5807E-03	2.0821E-04	7.2701E-05
Ce-141	3.6925E-06	2.9748E-05	7.3877E-08	9.8405E+06	3.5740E-06	1.6246E-07	5.6724E-08
Ce-144	1.0807E-05	3.6191E-03	2.1622E-07	2.8800E+07	1.0460E-05	4.7545E-07	1.6601E-07
Pr-143	1.7154E-06	1.2456E-05	3.4320E-08	4.5715E+06	1.6604E-06	7.5471E-08	2.6352E-08
Kr-83m	4.3917E-06	5.4671E-11	7.6977E-08	4.3177E+06	1.2235E-06	5.5614E-08	2.5381E-08
Br-82	7.1120E-05	1.8498E-04	1.4230E-06	1.8957E+08	6.8863E-05	3.1301E-06	1.0929E-06
Br-83	4.1368E-04	3.4587E-05	8.2849E-06	1.1058E+09	4.0272E-04	1.8305E-05	6.3870E-06
Br-84	1.8388E-04	1.8065E-04	3.6959E-06	4.9688E+08	1.8269E-04	8.3041E-06	2.8901E-06
Rb-89	5.9885E-06	6.3045E-06	1.2098E-07	1.6431E+07	6.1224E-06	2.7829E-07	9.6511E-08
Rh-103m	5.0805E-06	2.3669E-08	1.0165E-07	1.3468E+07	4.9171E-06	2.2351E-07	7.9052E-08
Te-125m	6.2582E-06	4.0904E-05	1.2521E-07	1.6678E+07	6.0573E-06	2.7533E-07	9.6136E-08
Te-131	4.0510E-06	2.5182E-06	8.1136E-08	1.0727E+07	3.9449E-06	1.7931E-07	6.4030E-08
Te-133m	1.9125E-06	2.8147E-06	3.8364E-08	5.1375E+06	1.8791E-06	8.5413E-08	2.9768E-08
Te-134	2.7139E-06	1.4045E-06	5.4487E-08	7.3091E+06	2.6795E-06	1.2180E-07	4.2422E-08
Xe-135m	9.4322E-05	1.5987E-05	1.6551E-06	9.2112E+07	2.6580E-05	1.2082E-06	5.5121E-07
Cs-134m	5.1555E-06	2.4611E-07	1.0323E-07	1.3774E+07	5.0138E-06	2.2790E-07	7.9528E-08
Cs-138	8.4292E-05	1.0475E-04	1.6941E-06	2.2774E+08	8.3720E-05	3.8054E-06	1.3245E-06
Total	6.4317E-02	1.0000E+00	0.0000E+00	0.0000E+00	6.2294E-02	2.8315E-03	9.8864E-04

Control Room Compartment Group Inventory Distribution:

Time (h) = 0.0280	Atmosphere	Sump
Noble gases (Ci)	1.1614E-04	0.0000E+00
Elemental I (Ci)	4.7189E-02	0.0000E+00
Organic I (Ci)	1.4594E-03	0.0000E+00
Aerosol I (Ci)	0.0000E+00	0.0000E+00
All Aerosols (Ci)	1.5553E-02	0.0000E+00
All Aerosols (kg)	6.0967E-08	0.0000E+00

Time (h) = 0.0280	Deposition Surfaces	Recirculating Filter
Noble gases (Ci)	0.0000E+00	0.0000E+00
Elemental I (Ci)	0.0000E+00	0.0000E+00
Organic I (Ci)	0.0000E+00	0.0000E+00
Aerosol I (Ci)	0.0000E+00	0.0000E+00
All Aerosols (Ci)	0.0000E+00	0.0000E+00
All Aerosols (kg)	0.0000E+00	0.0000E+00

Ruptured Steam Generator Compartment Nuclide Inventory (Ci) at Time (h) = 0.0280

Nuclide	Compartment Atmosphere	Dose Fract	Exposure (Ci-hr)	Decays (Bq-s)	Pathway 6 Inflow	Pathway 8 Outflow
Rb-86	2.6324E-01	1.3444E-04	5.2570E-03	7.0024E+11	2.6327E-01	1.6249E-05
Sr-89	3.9961E-03	1.2672E-05	7.9801E-05	1.0628E+10	3.9956E-03	2.4661E-07
Sr-90	3.7018E-04	3.6788E-05	7.3925E-06	9.8468E+08	3.7020E-04	2.2848E-08
Sr-91	1.6966E-03	2.6310E-07	3.3890E-05	4.5165E+09	1.6992E-03	1.0485E-07
Sr-92	7.3923E-04	8.6308E-08	1.4776E-05	1.9717E+09	7.4306E-04	4.5832E-08
Y-90	6.4391E-04	4.1578E-07	1.2859E-05	1.7128E+09	6.4401E-04	3.9747E-08
Y-91	5.0633E-02	1.8924E-04	1.0112E-03	1.3469E+11	5.0637E-02	3.1252E-06
Y-92	9.1685E-04	6.4424E-08	1.8312E-05	2.4371E+09	9.1760E-04	5.6628E-08
Y-93	6.0034E-04	1.0128E-07	1.1992E-05	1.5981E+09	6.0121E-04	3.7100E-08
Zr-95	7.2089E-02	1.3252E-04	1.4396E-03	1.9176E+11	7.2095E-02	4.4496E-06
Zr-97	1.1717E-03	3.9676E-07	2.3403E-05	3.1182E+09	1.1728E-03	7.2374E-08

Nb-95	1.0408E-01	4.9414E-05	2.0785E-03	2.7685E+11	1.0409E-01	6.4241E-06
Mo-99	6.1927E+00	1.9126E-03	1.2367E-01	1.6475E+13	6.1944E+00	3.8230E-04
Tc-99m	5.9236E+00	4.2985E-05	1.1830E-01	1.5747E+13	5.9251E+00	3.6568E-04
Ru-103	5.9580E-02	4.1908E-05	1.1898E-03	1.5849E+11	5.9585E-02	3.6775E-06
Ru-105	2.8969E-04	1.9028E-08	5.7884E-06	7.7187E+08	2.9062E-04	1.7930E-08
Ru-106	9.9950E-02	3.6506E-03	1.9960E-03	2.6587E+11	9.9957E-02	6.1692E-06
Rh-105	2.2999E-03	1.7493E-07	4.5931E-05	6.1187E+09	2.3008E-03	1.4200E-07
Te-127	7.4479E-01	1.8281E-05	1.4874E-02	1.9802E+12	7.4488E-01	4.5973E-05
Te-127m	7.3765E-01	1.2135E-03	1.4731E-02	1.9622E+12	7.3771E-01	4.5530E-05
Te-129	6.8249E-01	6.1946E-06	1.3630E-02	1.8079E+12	6.8260E-01	4.2129E-05
Te-129m	1.0363E+00	1.8996E-03	2.0695E-02	2.7566E+12	1.0364E+00	6.3964E-05
Te-131m	1.7307E-01	9.4592E-05	3.4564E-03	4.6047E+11	1.7316E-01	1.0686E-05
Te-132	2.8838E+00	2.1061E-03	5.7591E-02	7.6717E+12	2.8845E+00	1.7802E-04
I-131	1.4519E+02	3.6759E-01	2.8995E+00	3.8622E+14	1.4521E+02	8.9621E-03
I-132	1.1417E+02	1.3687E-02	2.2823E+00	3.0462E+14	1.1485E+02	7.0831E-03
I-133	1.8484E+02	8.7093E-02	3.6917E+00	4.9185E+14	1.8497E+02	1.1415E-02
I-134	2.1620E+01	2.4977E-03	4.3293E-01	5.7991E+13	2.1965E+01	1.3530E-03
I-135	9.6047E+01	1.5234E-02	1.9188E+00	2.5577E+14	9.6255E+01	5.9392E-03
Xe-133	2.7683E-02	3.0624E-08	4.8462E-04	2.7167E+10	7.9422E-03	6.4082E-07
Xe-135	1.7431E-01	1.4707E-06	3.0510E-03	1.7068E+11	4.9924E-02	4.0283E-06
Cs-134	9.9561E+01	3.5846E-01	1.9883E+00	2.6484E+14	9.9568E+01	6.1452E-03
Cs-136	6.5472E+00	4.2319E-03	1.3075E-01	1.7416E+13	6.5480E+00	4.0413E-04
Cs-137	5.5422E+01	1.3542E-01	1.1068E+00	1.4742E+14	5.5425E+01	3.4208E-03
Ba-139	5.8276E-04	8.6941E-09	1.1658E-05	1.5584E+09	5.8868E-04	3.6288E-08
Ba-140	5.8051E-03	1.7004E-06	1.1593E-04	1.5442E+10	5.8058E-03	3.5833E-07
La-140	8.6111E-03	4.0090E-06	1.7197E-04	2.2905E+10	8.6127E-03	5.3156E-07
La-141	3.8802E-04	1.8006E-08	7.7520E-06	1.0330E+09	3.8898E-04	2.4000E-08
La-142	9.8877E-05	1.3454E-08	1.9777E-06	2.6427E+08	9.9776E-05	6.1512E-09
Ce-141	4.3241E-02	2.9748E-05	8.6353E-04	1.1502E+11	4.3245E-02	2.6690E-06
Ce-143	2.0669E-03	5.5766E-07	4.1280E-05	5.4993E+09	2.0679E-03	1.2762E-07
Ce-144	1.2655E-01	3.6191E-03	2.5273E-03	3.3664E+11	1.2656E-01	7.8113E-06
Pr-143	2.0088E-02	1.2456E-05	4.0116E-04	5.3435E+10	2.0090E-02	1.2399E-06
Kr-83m	5.1429E-02	5.4726E-11	9.0066E-04	5.0534E+10	1.4818E-02	1.1954E-06

Br-82	8.3284E-01	1.8498E-04	1.6633E-02	2.2158E+12	8.3322E-01	5.1423E-05
Br-83	4.8443E+00	3.4587E-05	9.6839E-02	1.2926E+13	4.8728E+00	3.0053E-04
Br-84	2.1533E+00	1.8065E-04	4.3199E-02	5.8078E+12	2.2105E+00	1.3599E-04
Rb-89	7.0127E-02	6.3041E-06	1.4140E-03	1.9204E+11	7.4077E-02	4.5410E-06
Y-91m	9.9160E-04	2.3212E-08	1.9803E-05	2.6222E+09	9.9174E-04	6.1209E-08
Nb-95m	5.5869E-04	1.0557E-07	1.1157E-05	1.4861E+09	5.5874E-04	3.4485E-08
Nb-97	1.4528E-04	4.6641E-09	2.9047E-06	3.8713E+08	1.4625E-04	9.0193E-09
Rh-103m	5.9495E-02	2.3669E-08	1.1881E-03	1.5742E+11	5.9496E-02	3.6720E-06
Te-125m	7.3286E-02	4.0904E-05	1.4635E-03	1.9494E+11	7.3292E-02	4.5235E-06
Te-131	4.7439E-02	2.5182E-06	9.4837E-04	1.2538E+11	4.7732E-02	2.9437E-06
Te-133	2.6799E-04	1.0423E-08	4.7025E-06	2.6261E+08	7.8811E-05	6.3536E-09
Te-133m	2.2396E-02	2.8146E-06	4.4842E-04	6.0050E+10	2.2736E-02	1.4006E-06
Te-134	3.1781E-02	1.4044E-06	6.3687E-04	8.5433E+10	3.2421E-02	1.9961E-06
Xe-131m	1.0952E-04	3.0210E-11	1.9172E-06	1.0745E+08	3.1412E-05	2.5346E-09
Xe-133m	1.9818E-03	1.9254E-09	3.4694E-05	1.9448E+09	5.6861E-04	4.5878E-08
Xe-135m	1.1045E+00	1.6003E-05	1.9365E-02	1.0781E+12	3.2191E-01	2.5961E-05
Cs-134m	6.0373E-02	2.4611E-07	1.2067E-03	1.6100E+11	6.0666E-02	3.7420E-06
Cs-138	9.8709E-01	1.0475E-04	1.9801E-02	2.6619E+12	1.0130E+00	6.2320E-05
Ba-141	1.1885E-04	4.7711E-09	2.3925E-06	3.2388E+08	1.2439E-04	7.6343E-09
Total	7.5318E+02	1.0000E+00	0.0000E+00	0.0000E+00	7.5374E+02	4.6516E-02

Dose Equivalent (Ci/cc) I-131 (Thyroid)	6.4982E-08
Dose Equivalent (Ci/cc) I-131 (CEDE)	6.6285E-08
Dose Equivalent (Ci/cc) I-131 (ICRP2 Thyroid)	7.4989E-08
Total I (Ci)	5.6186E+02
Dose Equivalent (Ci/cc) Xe-133 (EDE)	5.7230E-09

Ruptured Steam Generator Compartment Group Inventory Distribution:

Time (h) = 0.0280	Atmosphere	Sump
Noble gases (Ci)	1.3601E+00	0.0000E+00
Elemental I (Ci)	5.5260E+02	0.0000E+00
Organic I (Ci)	1.7091E+01	0.0000E+00

```
Aerosol I (Ci)            0.0000E+00   0.0000E+00
All Aerosols (Ci)         1.8213E+02   0.0000E+00
All Aerosols (kg)         7.1394E-04   0.0000E+00

#######################################################################
    ALION RADTRAD Version 3.10 Rev 2 run on 12/01/2014  at 16:18:07

                Copyright © 2009 Alion Science and Technology
#######################################################################

Exclusion Area Boundary Doses:

Time (h) =   0.1100    Whole Body   Thyroid       TEDE
Delta dose (rem)        2.4592E-02  1.1634E+01  7.5895E-01
Accumulated dose (rem)  5.4794E-02  2.5837E+01  1.6854E+00

Low Population Zone Doses:

Time (h) =   0.1100    Whole Body   Thyroid       TEDE
Delta dose (rem)        4.7340E-03  2.2397E+00  1.4610E-01
Accumulated dose (rem)  8.7984E-03  4.1509E+00  2.7078E-01

Control Room Doses:

Time (h) =   0.1100    Whole Body   Thyroid       TEDE        Skin
Delta dose (rem)        7.3957E-04  1.0565E+01  6.6760E-01  3.3202E-02
Accumulated dose (rem)  7.5451E-04  1.0776E+01  6.8098E-01  3.3873E-02

*******************************************************

RCS Compartment Nuclide Inventory (Ci)  at Time (h) =   0.1100

 Nuclide    Compartment  Dose Fract    Exposure     Decays      Pathway  1   Pathway  5   Pathway  6
```

	Atmosphere		(Ci-hr)	(Bq-s)	Outflow	Outflow	Outflow
Rb-86	1.7351E+01	1.3450E-04	1.9556E+00	2.6049E+14	1.3550E-01	1.4162E-03	1.1093E+00
Sr-89	2.6361E-01	1.2684E-05	2.9700E-02	3.9551E+12	2.0570E-03	2.1502E-05	1.6842E-02
Sr-90	2.4403E-02	3.6808E-05	2.7502E-03	3.6633E+11	1.9054E-04	1.9916E-06	1.5600E-03
Sr-91	1.1117E-01	2.6235E-07	1.2565E-02	1.6757E+12	8.7318E-04	9.1208E-06	7.1443E-03
Sr-92	4.7720E-02	8.5334E-08	5.4320E-03	7.2665E+11	3.8034E-04	3.9665E-06	3.1070E-03
Y-90	4.2432E-02	4.1591E-07	4.7829E-03	6.3710E+11	3.3144E-04	3.4641E-06	2.7135E-03
Y-91	3.3377E+00	1.8934E-04	3.7617E-01	5.0106E+13	2.6062E-02	2.7241E-04	2.1338E-01
Y-92	6.0247E-02	6.4342E-08	6.8003E-03	9.0509E+11	4.7190E-04	4.9308E-06	3.8623E-03
Y-93	3.9354E-02	1.0101E-07	4.4470E-03	5.9303E+11	3.0898E-04	3.2276E-06	2.5282E-03
Zr-95	4.7521E+00	1.3259E-04	5.3557E-01	7.1339E+13	3.7107E-02	3.8785E-04	3.0380E-01
Zr-97	7.6983E-02	3.9621E-07	8.6899E-03	1.1583E+12	6.0308E-04	6.3013E-06	4.9358E-03
Nb-95	6.8610E+00	4.9440E-05	7.7324E-01	1.0300E+14	5.3573E-02	5.5996E-04	4.3862E-01
Mo-99	4.0788E+02	1.9127E-03	4.5987E+01	6.1266E+15	3.1875E+00	3.3314E-02	2.6095E+01
Tc-99m	3.9019E+02	4.2989E-05	4.3991E+01	5.8549E+15	3.0490E+00	3.1867E-02	2.4961E+01
Ru-103	3.9274E+00	4.1929E-05	4.4263E-01	5.8959E+13	3.0668E-02	3.2055E-04	2.5108E-01
Ru-105	1.8854E-02	1.8900E-08	2.1378E-03	2.8551E+11	1.4908E-04	1.5560E-06	1.2188E-03
Ru-106	6.5889E+00	3.6525E-03	7.4257E-01	9.8911E+13	5.1448E-02	5.3774E-04	4.2121E-01
Rh-105	1.5140E-01	1.7489E-07	1.7074E-02	2.2749E+12	1.1838E-03	1.2371E-05	9.6904E-03
Te-127	4.9088E+01	1.8289E-05	5.5328E+00	7.3651E+14	3.8337E-01	4.0070E-03	3.1386E+00
Te-127m	4.8626E+01	1.2142E-03	5.4803E+00	7.2998E+14	3.7969E-01	3.9687E-03	3.1086E+00
Te-129	4.4976E+01	6.1968E-06	5.0696E+00	6.7166E+14	3.5130E-01	3.6717E-03	2.8761E+00
Te-129m	6.8309E+01	1.9006E-03	7.6987E+00	1.0255E+15	5.3341E-01	5.5753E-03	4.3671E+00
Te-131m	1.1387E+01	9.4541E-05	1.2845E+00	1.7116E+14	8.9079E-02	9.3089E-04	7.2916E-01
Te-132	1.8997E+02	2.1064E-03	2.1417E+01	2.8531E+15	1.4844E+00	1.5514E-02	1.2152E+01
I-131	9.5683E+03	3.6773E-01	1.0785E+03	1.4367E+17	7.4733E+01	7.8110E-01	6.1184E+02
I-132	7.3471E+03	1.3509E-02	8.3756E+02	1.1211E+17	5.8737E+01	6.1235E-01	4.7965E+02
I-133	1.2152E+04	8.7005E-02	1.3713E+03	1.8275E+17	9.5136E+01	9.9410E-01	7.7868E+02
I-134	1.3359E+03	2.4097E-03	1.5530E+02	2.0961E+16	1.1115E+01	1.1537E-01	9.0373E+01
I-135	6.2774E+03	1.5168E-02	7.1036E+02	9.4786E+16	4.9430E+01	5.1618E-01	4.0432E+02
Xe-133	7.1583E+00	8.8719E-08	5.2203E-01	4.4159E+13	1.5155E-02	2.0500E-04	1.6057E-01
Xe-135	4.5574E+01	4.2957E-06	3.3135E+00	2.7923E+14	9.5732E-02	1.2955E-03	1.0148E+00
Cs-134	6.5632E+03	3.5865E-01	7.3968E+02	9.8526E+16	5.1248E+01	5.3565E-01	4.1958E+02

Cs-136	4.3153E+02	4.2337E-03	4.8638E+01	6.4788E+15	3.3701E+00	3.5224E-02	2.7591E+01
Cs-137	3.6535E+03	1.3549E-01	4.1175E+02	5.4845E+16	2.8527E+01	2.9818E-01	2.3356E+02
Ba-139	3.6865E-02	8.4985E-09	4.2373E-03	5.6918E+11	2.9972E-04	3.1190E-06	2.4431E-03
Ba-140	3.8261E-01	1.7011E-06	4.3125E-02	5.7444E+12	2.9881E-03	3.1232E-05	2.4464E-02
La-140	5.6740E-01	4.0101E-06	6.3960E-02	8.5194E+12	4.4324E-03	4.6326E-05	3.6287E-02
La-141	2.5314E-02	1.7910E-08	2.8671E-03	3.8253E+11	1.9967E-04	2.0848E-06	1.6330E-03
La-142	6.2822E-03	1.3184E-08	7.2058E-04	9.6707E+10	5.0858E-05	5.2949E-07	4.1475E-04
Ce-141	2.8503E+00	2.9763E-05	3.2124E-01	4.2790E+13	2.2258E-02	2.3264E-04	1.8223E-01
Ce-143	1.3602E-01	5.5742E-07	1.5342E-02	2.0443E+12	1.0639E-03	1.1118E-05	8.7086E-03
Ce-144	8.3426E+00	3.6210E-03	9.4022E-01	1.2524E+14	6.5141E-02	6.8087E-04	5.3333E-01
Pr-143	1.3240E+00	1.2462E-05	1.4923E-01	1.9878E+13	1.0340E-02	1.0807E-04	8.4653E-02
Kr-83m	1.2975E+01	1.5567E-10	9.5263E-01	8.0850E+13	2.7954E-02	3.7777E-04	2.9591E-01
Br-82	5.4814E+01	1.8491E-04	6.1823E+00	8.2375E+14	4.2868E-01	4.4799E-03	3.5091E+00
Br-83	3.1184E+02	3.4142E-05	3.5545E+01	4.7576E+15	2.4923E+00	2.5984E-02	2.0353E+01
Br-84	1.2751E+02	1.7023E-04	1.5136E+01	2.0605E+15	1.1064E+00	1.1433E-02	8.9552E+00
Rb-89	3.6938E+00	5.5770E-06	4.6513E-01	6.4816E+13	3.6010E-02	3.6746E-04	2.8783E-01
Y-91m	6.5344E-02	2.3221E-08	7.3658E-03	9.7375E+11	5.1041E-04	5.3348E-06	4.1788E-03
Nb-95m	3.6828E-02	1.0562E-07	4.1506E-03	5.5283E+11	2.8758E-04	3.0058E-06	2.3545E-03
Nb-97	9.3248E-03	4.5964E-09	1.0644E-03	1.4222E+11	7.4743E-05	7.7899E-07	6.1018E-04
Rh-103m	3.9234E+00	2.3687E-08	4.4210E-01	5.8483E+13	3.0625E-02	3.2011E-04	2.5074E-01
Te-125m	4.8309E+00	4.0925E-05	5.4446E-01	7.2523E+13	3.7723E-02	3.9429E-04	3.0884E-01
Te-131	3.0567E+00	2.4869E-06	3.4825E-01	4.6020E+13	2.4412E-02	2.5450E-04	1.9935E-01
Te-133	5.9523E-02	2.7019E-08	4.5327E-03	3.8739E+11	1.4059E-04	1.8906E-06	1.4809E-03
Te-133m	1.3883E+00	2.7202E-06	1.6114E-01	2.1735E+13	1.1515E-02	1.1957E-04	9.3655E-02
Te-134	1.9309E+00	1.3423E-06	2.2633E-01	3.0652E+13	1.6335E-02	1.6925E-04	1.3258E-01
Xe-131m	2.8357E-02	8.7607E-11	2.0672E-03	1.7481E+11	5.9978E-05	8.1137E-07	6.3554E-04
Xe-133m	5.1230E-01	5.5766E-09	3.7364E-02	3.1607E+12	1.0848E-03	1.4674E-05	1.1494E-02
Xe-135m	2.5788E+02	4.3026E-05	1.9360E+01	1.6415E+15	5.8759E-01	7.9180E-03	6.2022E+00
Cs-134m	3.9026E+00	2.4352E-07	4.4395E-01	5.9372E+13	3.1063E-02	3.2400E-04	2.5379E-01
Cs-138	5.8532E+01	9.8779E-05	6.9431E+00	9.4494E+14	5.0720E-01	5.2417E-03	4.1058E+00
Ba-141	6.5005E-03	4.3063E-09	8.0293E-04	1.1106E+11	6.1032E-05	6.2532E-07	4.8981E-04
Total	4.9496E+04	1.0000E+00	0.0000E+00	0.0000E+00	3.8765E+02	4.0506E+00	3.1728E+03

Dose Equivalent (Ci/cc) I-131 (Thyroid)	8.9531E-07
Dose Equivalent (Ci/cc) I-131 (CEDE)	9.1312E-07
Dose Equivalent (Ci/cc) I-131 (ICRP2 Thyroid)	1.0323E-06
Total I (Ci)	3.6680E+04
Dose Equivalent (Ci/cc) Xe-133 (EDE)	2.8239E-07

RCS Compartment Group Inventory Distribution:

Time (h) = 0.1100	Atmosphere	Sump
Noble gases (Ci)	3.2412E+02	0.0000E+00
Elemental I (Ci)	3.6059E+04	0.0000E+00
Organic I (Ci)	1.1152E+03	0.0000E+00
Aerosol I (Ci)	0.0000E+00	0.0000E+00
All Aerosols (Ci)	1.1997E+04	0.0000E+00
All Aerosols (kg)	4.7064E-02	0.0000E+00

Intact Steam Generators Compartment Nuclide Inventory (Ci) at Time (h) = 0.1100

Nuclide	Compartment Atmosphere	Dose Fract	Exposure (Ci-hr)	Decays (Bq-s)	Pathway 5 Inflow	Pathway 7 Outflow
Rb-86	1.4150E-03	1.3452E-04	1.0111E-04	1.3468E+10	1.4162E-03	1.0571E-06
Sr-89	2.1497E-05	1.2688E-05	1.5358E-06	2.0452E+08	2.1502E-05	1.6052E-08
Sr-90	1.9900E-06	3.6815E-05	1.4219E-07	1.8940E+07	1.9916E-06	1.4866E-09
Sr-91	9.0662E-06	2.6206E-07	6.4880E-07	8.6543E+07	9.1208E-06	6.8005E-09
Sr-92	3.8915E-06	8.4961E-08	2.7956E-07	3.7423E+07	3.9665E-06	2.9489E-09
Y-90	3.4603E-06	4.1596E-07	2.4727E-07	3.2937E+07	3.4641E-06	2.5856E-09
Y-91	2.7218E-04	1.8938E-04	1.9449E-05	2.5906E+09	2.7241E-04	2.0334E-07
Y-92	4.9131E-06	6.4311E-08	3.5135E-07	4.6763E+07	4.9308E-06	3.6784E-09
Y-93	3.2093E-06	1.0091E-07	2.2964E-07	3.0629E+07	3.2276E-06	2.4067E-09
Zr-95	3.8753E-04	1.3262E-04	2.7690E-05	3.6884E+09	3.8785E-04	2.8951E-07
Zr-97	6.2779E-06	3.9600E-07	4.4896E-07	5.9849E+07	6.3013E-06	4.7006E-09
Nb-95	5.5950E-04	4.9450E-05	3.9979E-05	5.3252E+09	5.5996E-04	4.1798E-07
Mo-99	3.3263E-02	1.9128E-03	2.3772E-03	3.1671E+11	3.3314E-02	2.4863E-05

Tc-99m	3.1820E-02	4.2990E-05	2.2741E-03	3.0264E+11	3.1867E-02	2.3783E-05
Ru-103	3.2027E-04	4.1937E-05	2.2885E-05	3.0483E+09	3.2055E-04	2.3927E-07
Ru-105	1.5375E-06	1.8851E-08	1.1022E-07	1.4726E+07	1.5560E-06	1.1587E-09
Ru-106	5.3732E-04	3.6533E-03	3.8393E-05	5.1140E+09	5.3774E-04	4.0140E-07
Rh-105	1.2346E-05	1.7487E-07	8.8250E-07	1.1759E+08	1.2371E-05	9.2321E-09
Te-127	4.0031E-03	1.8292E-05	2.8605E-04	3.8076E+10	4.0070E-03	2.9909E-06
Te-127m	3.9654E-03	1.2144E-03	2.8334E-04	3.7742E+10	3.9687E-03	2.9624E-06
Te-129	3.6677E-03	6.1976E-06	2.6209E-04	3.4709E+10	3.6717E-03	2.7406E-06
Te-129m	5.5705E-03	1.9010E-03	3.9804E-04	5.3020E+10	5.5753E-03	4.1617E-06
Te-131m	9.2862E-04	9.4522E-05	6.6385E-05	8.8464E+09	9.3089E-04	6.9462E-07
Te-132	1.5492E-02	2.1065E-03	1.1071E-03	1.4749E+11	1.5514E-02	1.1579E-05
I-131	7.8029E-01	3.6778E-01	5.5758E-02	7.4275E+12	7.8110E-01	5.8303E-04
I-132	5.9915E-01	1.3441E-02	4.3077E-02	5.7702E+12	6.1235E-01	4.5499E-04
I-133	9.9095E-01	8.6971E-02	7.0856E-02	9.4442E+12	9.9410E-01	7.4166E-04
I-134	1.0894E-01	2.3760E-03	7.9157E-03	1.0707E+12	1.1537E-01	8.5057E-05
I-135	5.1191E-01	1.5143E-02	3.6659E-02	4.8929E+12	5.1618E-01	3.8467E-04
Xe-133	5.8375E-04	1.1097E-07	3.3752E-05	3.0144E+09	2.0500E-04	2.1529E-07
Xe-135	3.7165E-03	5.3787E-06	2.1446E-04	1.9075E+10	1.2955E-03	1.3618E-06
Cs-134	5.3523E-01	3.5873E-01	3.8244E-02	5.0941E+12	5.3565E-01	3.9984E-04
Cs-136	3.5191E-02	4.2344E-03	2.5146E-03	3.3496E+11	3.5224E-02	2.6292E-05
Cs-137	2.9794E-01	1.3552E-01	2.1289E-02	2.8357E+12	2.9818E-01	2.2258E-04
Ba-139	3.0063E-06	8.4237E-09	2.1711E-07	2.9203E+07	3.1190E-06	2.3098E-09
Ba-140	3.1202E-05	1.7014E-06	2.2296E-06	2.9699E+08	3.1232E-05	2.3312E-08
La-140	4.6271E-05	4.0105E-06	3.3066E-06	4.4044E+08	4.6326E-05	3.4578E-08
La-141	2.0643E-06	1.7874E-08	1.4790E-07	1.9740E+07	2.0848E-06	1.5532E-09
La-142	5.1231E-07	1.3080E-08	3.6956E-08	4.9657E+06	5.2949E-07	3.9245E-10
Ce-141	2.3244E-04	2.9768E-05	1.6609E-05	2.2124E+09	2.3264E-04	1.7365E-07
Ce-143	1.1092E-05	5.5732E-07	7.9294E-07	1.0566E+08	1.1118E-05	8.2962E-09
Ce-144	6.8033E-04	3.6217E-03	4.8612E-05	6.4751E+09	6.8087E-04	5.0824E-07
Pr-143	1.0797E-04	1.2464E-05	7.7153E-06	1.0277E+09	1.0807E-04	8.0669E-08
Kr-83m	1.0581E-03	1.9426E-10	6.1449E-05	5.5097E+09	3.7777E-04	3.9588E-07
Br-82	4.4700E-03	1.8489E-04	3.1953E-04	4.2578E+10	4.4799E-03	3.3430E-06
Br-83	2.5430E-02	3.3972E-05	1.8282E-03	2.4490E+11	2.5984E-02	1.9308E-05

Br-84	1.0399E-02	1.6625E-04	7.6413E-04	1.0441E+11	1.1433E-02	8.3595E-06
Rb-89	3.0123E-04	5.3005E-06	2.2852E-05	3.2108E+09	3.6746E-04	2.6261E-07
Y-91m	5.3288E-06	2.3224E-08	3.8081E-07	5.0311E+07	5.3348E-06	3.9820E-09
Nb-95m	3.0033E-06	1.0564E-07	2.1460E-07	2.8583E+07	3.0058E-06	2.2437E-09
Nb-97	7.6043E-07	4.5705E-09	5.4709E-08	7.3152E+06	7.7899E-07	5.7849E-10
Rh-103m	3.1995E-04	2.3694E-08	2.2860E-05	3.0222E+09	3.2011E-04	2.3896E-07
Te-125m	3.9396E-04	4.0933E-05	2.8150E-05	3.7496E+09	3.9429E-04	2.9432E-07
Te-131	2.4927E-04	2.4749E-06	1.7915E-05	2.3664E+09	2.5450E-04	1.8911E-07
Te-133	4.8541E-06	3.3293E-08	2.8872E-07	2.6168E+07	1.8906E-06	1.9592E-09
Te-133m	1.1321E-04	2.6841E-06	8.2193E-06	1.1109E+09	1.1957E-04	8.8201E-08
Te-134	1.5746E-04	1.3186E-06	1.1492E-05	1.5607E+09	1.6925E-04	1.2437E-07
Xe-131m	2.3125E-06	1.0959E-10	1.3368E-07	1.1934E+07	8.1137E-07	8.5220E-10
Xe-133m	4.1778E-05	6.9749E-09	2.4157E-06	2.1575E+08	1.4674E-05	1.5410E-08
Xe-135m	2.1030E-02	5.3281E-05	1.2393E-03	1.1128E+11	7.9180E-03	8.2429E-06
Cs-134m	3.1826E-04	2.4253E-07	2.2855E-05	3.0585E+09	3.2400E-04	2.4095E-07
Cs-138	4.7732E-03	9.6501E-05	3.5063E-04	4.7893E+10	5.2417E-03	3.8336E-06
Ba-141	5.3011E-07	4.1293E-09	3.9800E-08	5.5420E+06	6.2532E-07	4.5020E-10
Total	4.0363E+00	1.0000E+00	0.0000E+00	0.0000E+00	4.0506E+00	3.0219E-03

Dose Equivalent (Ci/cc) I-131 (Thyroid)	1.1634E-10
Dose Equivalent (Ci/cc) I-131 (CEDE)	1.1865E-10
Dose Equivalent (Ci/cc) I-131 (ICRP2 Thyroid)	1.3414E-10
Total I (Ci)	2.9912E+00
Dose Equivalent (Ci/cc) Xe-133 (EDE)	3.6694E-11

Intact Steam Generators Compartment Group Inventory Distribution:

Time (h) = 0.1100	Atmosphere	Sump
Noble gases (Ci)	2.6432E-02	0.0000E+00
Elemental I (Ci)	2.9406E+00	0.0000E+00
Organic I (Ci)	9.0946E-02	0.0000E+00
Aerosol I (Ci)	0.0000E+00	0.0000E+00
All Aerosols (Ci)	9.7838E-01	0.0000E+00

All Aerosols (kg) 3.8381E-06 0.0000E+00

Control Room Compartment Nuclide Inventory (Ci) at Time (h) = 0.1100

Nuclide	Compartment Atmosphere	Dose Fract	Exposure (Ci-hr)	Decays (Bq-s)	Pathway 2 Inflow	Pathway 3 Inflow	Pathway 4 Outflow
Rb-86	3.5739E-04	1.3453E-04	2.3183E-05	3.0881E+09	3.5544E-04	1.6156E-05	1.7573E-05
Sr-89	5.4298E-06	1.2689E-05	3.5217E-07	4.6897E+07	5.3968E-06	2.4531E-07	2.6697E-07
Sr-91	2.2899E-06	2.6199E-07	1.4872E-07	1.9839E+07	2.2879E-06	1.0400E-07	1.1302E-07
Sr-92	9.8291E-07	8.4873E-08	6.4033E-08	8.5728E+06	9.9368E-07	4.5167E-08	4.8985E-08
Y-91	6.8748E-05	1.8939E-04	4.4595E-06	5.9401E+08	6.8369E-05	3.1077E-06	3.3801E-06
Y-92	1.2410E-06	6.4303E-08	8.0550E-08	1.0721E+07	1.2372E-06	5.6235E-08	6.1647E-08
Zr-95	9.7881E-05	1.3263E-04	6.3492E-06	8.4573E+08	9.7340E-05	4.4246E-06	4.8125E-06
Zr-97	1.5857E-06	3.9595E-07	1.0293E-07	1.3721E+07	1.5810E-06	7.1865E-08	7.8129E-08
Nb-95	1.4132E-04	4.9452E-05	9.1669E-06	1.2210E+09	1.4054E-04	6.3880E-06	6.9483E-06
Mo-99	8.4014E-03	1.9128E-03	5.4507E-04	7.2618E+10	8.3604E-03	3.8002E-04	4.1329E-04
Tc-99m	8.0369E-03	4.2991E-05	5.2141E-04	6.9392E+10	7.9972E-03	3.6351E-04	3.9755E-04
Ru-103	8.0895E-05	4.1939E-05	5.2474E-06	6.9897E+08	8.0449E-05	3.6568E-06	3.9774E-06
Ru-106	1.3571E-04	3.6535E-03	8.8033E-06	1.1726E+09	1.3496E-04	6.1346E-06	6.6725E-06
Rh-105	3.1184E-06	1.7486E-07	2.0234E-07	2.6960E+07	3.1045E-06	1.4111E-07	1.5348E-07
Te-127	1.0111E-03	1.8293E-05	6.5589E-05	8.7306E+09	1.0056E-03	4.5711E-05	4.9906E-05
Te-127m	1.0016E-03	1.2145E-03	6.4970E-05	8.6540E+09	9.9604E-04	4.5275E-05	4.9244E-05
Te-129	9.2639E-04	6.1978E-06	6.0096E-05	7.9580E+09	9.2149E-04	4.1886E-05	4.6980E-05
Te-129m	1.4070E-03	1.9010E-03	9.1269E-05	1.2157E+10	1.3993E-03	6.3603E-05	6.9179E-05
Te-131m	2.3455E-04	9.4517E-05	1.5220E-05	2.0283E+09	2.3359E-04	1.0618E-05	1.1546E-05
Te-132	3.9128E-03	2.1065E-03	2.5385E-04	3.3819E+10	3.8933E-03	1.7697E-04	1.9247E-04
I-131	1.9708E-01	3.6779E-01	1.2785E-02	1.7031E+12	1.9603E-01	8.9107E-03	9.6915E-03
I-132	1.5133E-01	1.3425E-02	9.8650E-03	1.3216E+12	1.5336E-01	6.9711E-03	7.5602E-03
I-133	2.5029E-01	8.6963E-02	1.6245E-02	2.1652E+12	2.4944E-01	1.1338E-02	1.2328E-02
I-134	2.7515E-02	2.3680E-03	1.8089E-03	2.4477E+11	2.8793E-02	1.3088E-03	1.4109E-03
I-135	1.2930E-01	1.5137E-02	8.4019E-03	1.1215E+12	1.2945E-01	5.8842E-03	6.3925E-03
Xe-133	1.4744E-04	1.1627E-07	8.1082E-06	7.3323E+08	6.0968E-05	2.7713E-06	3.7613E-06
Xe-135	9.3871E-04	5.6368E-06	5.1533E-05	4.6408E+09	3.8538E-04	1.7517E-05	2.3798E-05

Cs-134	1.3519E-01	3.5874E-01	8.7691E-03	1.1680E+12	1.3444E-01	6.1108E-03	6.6465E-03
Cs-136	8.8884E-03	4.2346E-03	5.7658E-04	7.6804E+10	8.8403E-03	4.0183E-04	4.3705E-04
Cs-137	7.5253E-02	1.3553E-01	4.8814E-03	6.5020E+11	7.4835E-02	3.4016E-03	3.6998E-03
Ba-140	7.8809E-06	1.7014E-06	5.1123E-07	6.8098E+07	7.8383E-06	3.5629E-07	3.8752E-07
La-140	1.1687E-05	4.0106E-06	7.5817E-07	1.0099E+08	1.1626E-05	5.2847E-07	5.7512E-07
Ce-141	5.8710E-05	2.9770E-05	3.8083E-06	5.0728E+08	5.8387E-05	2.6540E-06	2.8866E-06
Ce-143	2.8017E-06	5.5730E-07	1.8180E-07	2.4226E+07	2.7899E-06	1.2681E-07	1.3790E-07
Ce-144	1.7184E-04	3.6219E-03	1.1146E-05	1.4847E+09	1.7088E-04	7.7675E-06	8.4485E-06
Pr-143	2.7271E-05	1.2464E-05	1.7691E-06	2.3565E+08	2.7123E-05	1.2329E-06	1.3410E-06
Kr-83m	2.6725E-04	2.0341E-10	1.4753E-05	1.3396E+09	1.1229E-04	5.1042E-06	6.9127E-06
Br-82	1.1290E-03	1.8488E-04	7.3261E-05	9.7622E+09	1.1242E-03	5.1099E-05	5.5567E-05
Br-83	6.4232E-03	3.3932E-05	4.1869E-04	5.6093E+10	6.5079E-03	2.9581E-04	3.2069E-04
Br-84	2.6265E-03	1.6531E-04	1.7421E-04	2.3821E+10	2.8424E-03	1.2920E-04	1.3845E-04
Rb-89	7.6084E-05	5.2356E-06	5.1754E-06	7.2845E+08	9.0405E-05	4.1093E-06	4.3319E-06
Y-91m	1.3459E-06	2.3224E-08	8.7315E-08	1.1535E+07	1.3389E-06	6.0859E-08	6.9087E-08
Rh-103m	8.0813E-05	2.3695E-08	5.2417E-06	6.9294E+08	8.0343E-05	3.6519E-06	4.1280E-06
Te-125m	9.9506E-05	4.0935E-05	6.4546E-06	8.5977E+08	9.8957E-05	4.4980E-06	4.8924E-06
Te-131	6.2961E-05	2.4721E-06	4.1029E-06	5.4196E+08	6.3740E-05	2.8973E-06	3.3670E-06
Te-133	1.2260E-06	3.4755E-08	6.9105E-08	6.3493E+06	5.6045E-07	2.5475E-08	6.7754E-08
Te-133m	2.8595E-05	2.6756E-06	1.8786E-06	2.5401E+08	2.9847E-05	1.3567E-06	1.4631E-06
Te-134	3.9772E-05	1.3130E-06	2.6238E-06	3.5652E+08	4.2176E-05	1.9171E-06	2.0617E-06
Xe-133m	1.0552E-05	7.3078E-09	5.8032E-07	5.2479E+07	4.3642E-06	1.9837E-07	2.6923E-07
Xe-135m	5.3116E-03	5.5689E-05	2.9699E-04	2.7024E+10	2.3499E-03	1.0681E-04	1.4370E-04
Cs-134m	8.0385E-05	2.4229E-07	5.2353E-06	7.0067E+08	8.1178E-05	3.6899E-06	4.0026E-06
Cs-138	1.2056E-03	9.5962E-05	7.9944E-05	1.0928E+10	1.3034E-03	5.9243E-05	6.3497E-05
Total	1.0195E+00	1.0000E+00	0.0000E+00	0.0000E+00	1.0164E+00	4.6198E-02	5.0235E-02

Control Room Compartment Group Inventory Distribution:

Time (h) = 0.1100	Atmosphere	Sump
Noble gases (Ci)	6.6762E-03	0.0000E+00
Elemental I (Ci)	7.4273E-01	0.0000E+00
Organic I (Ci)	2.2971E-02	0.0000E+00

Aerosol I (Ci)	0.0000E+00	0.0000E+00
All Aerosols (Ci)	2.4712E-01	0.0000E+00
All Aerosols (kg)	9.6941E-07	0.0000E+00

Time (h) = 0.1100	Deposition Surfaces	Recirculating Filter
Noble gases (Ci)	0.0000E+00	0.0000E+00
Elemental I (Ci)	0.0000E+00	0.0000E+00
Organic I (Ci)	0.0000E+00	0.0000E+00
Aerosol I (Ci)	0.0000E+00	0.0000E+00
All Aerosols (Ci)	0.0000E+00	0.0000E+00
All Aerosols (kg)	0.0000E+00	0.0000E+00

Ruptured Steam Generator Compartment Nuclide Inventory (Ci) at Time (h) = 0.1100

Nuclide	Compartment Atmosphere	Dose Fract	Exposure (Ci-hr)	Decays (Bq-s)	Pathway 6 Inflow	Pathway 8 Outflow
Rb-86	1.1084E+00	1.3452E-04	7.9200E-02	1.0550E+13	1.1093E+00	7.8269E-04
Sr-89	1.6840E-02	1.2688E-05	1.2030E-03	1.6020E+11	1.6842E-02	1.1885E-05
Sr-90	1.5588E-03	3.6815E-05	1.1138E-04	1.4836E+10	1.5600E-03	1.1007E-06
Sr-91	7.1018E-03	2.6206E-07	5.0822E-04	6.7791E+10	7.1443E-03	5.0350E-06
Sr-92	3.0483E-03	8.4961E-08	2.1899E-04	2.9315E+10	3.1070E-03	2.1834E-06
Y-90	2.7105E-03	4.1596E-07	1.9369E-04	2.5801E+10	2.7135E-03	1.9144E-06
Y-91	2.1321E-01	1.8938E-04	1.5235E-02	2.0293E+12	2.1338E-01	1.5055E-04
Y-92	3.8486E-03	6.4311E-08	2.7522E-04	3.6630E+10	3.8623E-03	2.7234E-06
Y-93	2.5139E-03	1.0091E-07	1.7988E-04	2.3993E+10	2.5282E-03	1.7819E-06
Zr-95	3.0356E-01	1.3262E-04	2.1690E-02	2.8892E+12	3.0380E-01	2.1435E-04
Zr-97	4.9177E-03	3.9600E-07	3.5168E-04	4.6881E+10	4.9358E-03	3.4803E-06
Nb-95	4.3828E-01	4.9450E-05	3.1316E-02	4.1713E+12	4.3862E-01	3.0947E-04
Mo-99	2.6056E+01	1.9128E-03	1.8621E+00	2.4809E+14	2.6095E+01	1.8408E-02
Tc-99m	2.4925E+01	4.2990E-05	1.7813E+00	2.3707E+14	2.4961E+01	1.7609E-02
Ru-103	2.5088E-01	4.1937E-05	1.7926E-02	2.3878E+12	2.5108E-01	1.7715E-04
Ru-105	1.2044E-03	1.8851E-08	8.6342E-05	1.1536E+10	1.2188E-03	8.5787E-07

Ru-106	4.2090E-01	3.6533E-03	3.0074E-02	4.0059E+12	4.2121E-01	2.9719E-04
Rh-105	9.6713E-03	1.7487E-07	6.9128E-04	9.2108E+10	9.6904E-03	6.8353E-06
Te-127	3.1357E+00	1.8292E-05	2.2407E-01	2.9826E+13	3.1386E+00	2.2144E-03
Te-127m	3.1062E+00	1.2144E-03	2.2195E-01	2.9564E+13	3.1086E+00	2.1933E-03
Te-129	2.8730E+00	6.1976E-06	2.0531E-01	2.7188E+13	2.8761E+00	2.0291E-03
Te-129m	4.3636E+00	1.9010E-03	3.1179E-01	4.1532E+13	4.3671E+00	3.0812E-03
Te-131m	7.2741E-01	9.4522E-05	5.2001E-02	6.9296E+12	7.2916E-01	5.1428E-04
Te-132	1.2135E+01	2.1065E-03	8.6724E-01	1.1554E+14	1.2152E+01	8.5727E-03
I-131	6.1122E+02	3.6778E-01	4.3677E+01	5.8181E+15	6.1184E+02	4.3166E-01
I-132	4.6933E+02	1.3441E-02	3.3743E+01	4.5200E+15	4.7965E+02	3.3687E-01
I-133	7.7624E+02	8.6971E-02	5.5503E+01	7.3978E+15	7.7868E+02	5.4912E-01
I-134	8.5335E+01	2.3760E-03	6.2006E+00	8.3868E+14	9.0373E+01	6.2977E-02
I-135	4.0100E+02	1.5143E-02	2.8716E+01	3.8327E+15	4.0432E+02	2.8480E-01
Xe-133	4.5727E-01	1.1097E-07	2.6439E-02	2.3613E+12	1.6057E-01	1.5925E-04
Xe-135	2.9112E+00	5.3787E-06	1.6800E-01	1.4942E+13	1.0148E+00	1.0073E-03
Cs-134	4.1926E+02	3.5873E-01	2.9957E+01	3.9903E+15	4.1958E+02	2.9604E-01
Cs-136	2.7566E+01	4.2344E-03	1.9698E+00	2.6238E+14	2.7591E+01	1.9466E-02
Cs-137	2.3338E+02	1.3552E-01	1.6676E+01	2.2212E+15	2.3356E+02	1.6479E-01
Ba-139	2.3549E-03	8.4237E-09	1.7007E-04	2.2875E+10	2.4431E-03	1.7102E-06
Ba-140	2.4441E-02	1.7014E-06	1.7465E-03	2.3264E+11	2.4464E-02	1.7260E-05
La-140	3.6246E-02	4.0105E-06	2.5901E-03	3.4500E+11	3.6287E-02	2.5601E-05
La-141	1.6171E-03	1.7874E-08	1.1586E-04	1.5463E+10	1.6330E-03	1.1500E-06
La-142	4.0131E-04	1.3080E-08	2.8949E-05	3.8898E+09	4.1475E-04	2.9057E-07
Ce-141	1.8208E-01	2.9768E-05	1.3010E-02	1.7330E+12	1.8223E-01	1.2857E-04
Ce-143	8.6890E-03	5.5732E-07	6.2112E-04	8.2768E+10	8.7086E-03	6.1424E-06
Ce-144	5.3292E-01	3.6217E-03	3.8079E-02	5.0721E+12	5.3333E-01	3.7629E-04
Pr-143	8.4578E-02	1.2464E-05	6.0436E-03	8.0503E+11	8.4653E-02	5.9726E-05
Kr-83m	8.2882E-01	1.9426E-10	4.8134E-02	4.3159E+12	2.9591E-01	2.9282E-04
Br-82	3.5015E+00	1.8489E-04	2.5030E-01	3.3352E+13	3.5091E+00	2.4751E-03
Br-83	1.9920E+01	3.3972E-05	1.4321E+00	1.9183E+14	2.0353E+01	1.4295E-02
Br-84	8.1456E+00	1.6625E-04	5.9856E-01	8.1784E+13	8.9552E+00	6.1896E-03
Rb-89	2.3596E-01	5.3005E-06	1.7900E-02	2.5151E+12	2.8783E-01	1.9446E-04
Y-91m	4.1742E-03	2.3224E-08	2.9829E-04	3.9410E+10	4.1788E-03	2.9482E-06

Nb-95m	2.3526E-03	1.0564E-07	1.6810E-04	2.2389E+10	2.3545E-03	1.6612E-06
Nb-97	5.9567E-04	4.5705E-09	4.2855E-05	5.7302E+09	6.1018E-04	4.2831E-07
Rh-103m	2.5063E-01	2.3694E-08	1.7907E-02	2.3674E+12	2.5074E-01	1.7693E-04
Te-125m	3.0860E-01	4.0933E-05	2.2051E-02	2.9372E+12	3.0884E-01	2.1791E-04
Te-131	1.9526E-01	2.4749E-06	1.4033E-02	1.8537E+12	1.9935E-01	1.4002E-04
Te-133	3.8023E-03	3.3293E-08	2.2616E-04	2.0498E+10	1.4809E-03	1.4492E-06
Te-133m	8.8681E-02	2.6841E-06	6.4384E-03	8.7020E+11	9.3655E-02	6.5305E-05
Te-134	1.2335E-01	1.3186E-06	9.0023E-03	1.2225E+12	1.3258E-01	9.2088E-05
Xe-131m	1.8114E-03	1.0959E-10	1.0471E-04	9.3484E+09	6.3554E-04	6.3036E-07
Xe-133m	3.2726E-02	6.9750E-09	1.8923E-03	1.6900E+11	1.1494E-02	1.1399E-05
Xe-135m	1.6473E+01	5.3281E-05	9.7076E-01	8.7168E+13	6.2022E+00	6.0972E-03
Cs-134m	2.4930E-01	2.4253E-07	1.7903E-02	2.3958E+12	2.5379E-01	1.7839E-04
Cs-138	3.7390E+00	9.6500E-05	2.7465E-01	3.7515E+13	4.1058E+00	2.8386E-03
Ba-141	4.1525E-04	4.1293E-09	3.1176E-05	4.3412E+09	4.8981E-04	3.3336E-07
Total	3.1618E+03	1.0000E+00	0.0000E+00	0.0000E+00	3.1728E+03	2.2374E+00

Dose Equivalent (Ci/cc) I-131 (Thyroid)	2.7339E-07
Dose Equivalent (Ci/cc) I-131 (CEDE)	2.7883E-07
Dose Equivalent (Ci/cc) I-131 (ICRP2 Thyroid)	3.1523E-07
Total I (Ci)	2.3431E+03
Dose Equivalent (Ci/cc) Xe-133 (EDE)	8.6231E-08

Ruptured Steam Generator Compartment Group Inventory Distribution:

Time (h) = 0.1100	Atmosphere	Sump
Noble gases (Ci)	2.0705E+01	0.0000E+00
Elemental I (Ci)	2.3035E+03	0.0000E+00
Organic I (Ci)	7.1241E+01	0.0000E+00
Aerosol I (Ci)	0.0000E+00	0.0000E+00
All Aerosols (Ci)	7.6640E+02	0.0000E+00
All Aerosols (kg)	3.0065E-03	0.0000E+00

##

ALION RADTRAD Version 3.10 Rev 2 run on 12/01/2014 at 16:18:07

##

Exclusion Area Boundary Doses:

Time (h) = 0.1390	Whole Body	Thyroid	TEDE
Delta dose (rem)	8.3887E-03	4.0062E+00	2.6133E-01
Accumulated dose (rem)	6.3183E-02	2.9843E+01	1.9467E+00

Low Population Zone Doses:

Time (h) = 0.1390	Whole Body	Thyroid	TEDE
Delta dose (rem)	1.6149E-03	7.7121E-01	5.0307E-02
Accumulated dose (rem)	1.0413E-02	4.9221E+00	3.2108E-01

Control Room Doses:

Time (h) = 0.1390	Whole Body	Thyroid	TEDE	Skin
Delta dose (rem)	4.4946E-04	6.4796E+00	4.0753E-01	2.0188E-02
Accumulated dose (rem)	1.2040E-03	1.7256E+01	1.0885E+00	5.4061E-02

****

RCS Compartment Nuclide Inventory (Ci) at Time (h) = 0.1390

Nuclide	Compartment Atmosphere	Dose Fract	Exposure (Ci-hr)	Decays (Bq-s)	Pathway 1 Outflow	Pathway 5 Outflow	Pathway 6 Outflow
Rb-86	1.7036E+01	1.3452E-04	2.4496E+00	3.2630E+14	1.6065E-01	1.7850E-03	1.3982E+00
Sr-89	2.5889E-01	1.2687E-05	3.7208E-02	4.9550E+12	2.4391E-03	2.7104E-05	2.1231E-02
Sr-90	2.3961E-02	3.6813E-05	3.4450E-03	4.5888E+11	2.2591E-04	2.5103E-06	1.9663E-03
Sr-91	1.0893E-01	2.6213E-07	1.5724E-02	2.0969E+12	1.0343E-03	1.1484E-05	8.9952E-03

Sr-92	4.6509E-02	8.5051E-08	6.7807E-03	9.0697E+11	4.4951E-04	4.9807E-06	3.9014E-03
Y-90	4.1657E-02	4.1595E-07	5.9910E-03	7.9801E+11	3.9295E-04	4.3660E-06	3.4199E-03
Y-91	3.2772E+00	1.8937E-04	4.7120E-01	6.2765E+13	3.0901E-02	3.4335E-04	2.6895E-01
Y-92	5.9086E-02	6.4317E-08	8.5138E-03	1.1329E+12	5.5923E-04	6.2113E-06	4.8653E-03
Y-93	3.8564E-02	1.0093E-07	5.5654E-03	7.4214E+11	3.6602E-04	4.0640E-06	3.1833E-03
Zr-95	4.6659E+00	1.3261E-04	6.7088E-01	8.9362E+13	4.3995E-02	4.8885E-04	3.8291E-01
Zr-97	7.5498E-02	3.9605E-07	1.0879E-02	1.4501E+12	7.1467E-04	7.9375E-06	6.2174E-03
Nb-95	6.7366E+00	4.9448E-05	9.6860E-01	1.2902E+14	6.3518E-02	7.0578E-04	5.5284E-01
Mo-99	4.0037E+02	1.9127E-03	5.7598E+01	7.6734E+15	3.7788E+00	4.1983E-02	3.2885E+01
Tc-99m	3.8301E+02	4.2990E-05	5.5098E+01	7.3323E+15	3.6146E+00	4.0160E-02	3.1457E+01
Ru-103	3.8561E+00	4.1935E-05	5.5446E-01	7.3855E+13	3.6361E-02	4.0402E-04	3.1647E-01
Ru-105	1.8429E-02	1.8863E-08	2.6723E-03	3.5686E+11	1.7641E-04	1.9568E-06	1.5327E-03
Ru-106	6.4695E+00	3.6531E-03	9.3019E-01	1.2390E+14	6.0999E-02	6.7779E-04	5.3091E-01
Rh-105	1.4858E-01	1.7487E-07	2.1383E-02	2.8489E+12	1.4032E-03	1.5589E-05	1.2211E-02
Te-127	4.8195E+01	1.8291E-05	6.9305E+00	9.2249E+14	4.5452E-01	5.0503E-03	3.9559E+00
Te-127m	4.7745E+01	1.2143E-03	6.8649E+00	9.1441E+14	4.5018E-01	5.0022E-03	3.9182E+00
Te-129	4.4158E+01	6.1975E-06	6.3502E+00	8.4077E+14	4.1650E-01	4.6277E-03	3.6248E+00
Te-129m	6.7070E+01	1.9009E-03	9.6438E+00	1.2846E+15	6.3243E-01	7.0272E-03	5.5044E+00
Te-131m	1.1173E+01	9.4526E-05	1.6085E+00	2.1434E+14	1.0559E-01	1.1729E-03	9.1874E-01
Te-132	1.8648E+02	2.1065E-03	2.6824E+01	3.5735E+15	1.7597E+00	1.9551E-02	1.5314E+01
I-131	9.3940E+03	3.6776E-01	1.3509E+03	1.7995E+17	8.8603E+01	9.8447E-01	7.7114E+02
I-132	7.1528E+03	1.3457E-02	1.0450E+03	1.3985E+17	6.9387E+01	7.6851E-01	6.0197E+02
I-133	1.1920E+04	8.6979E-02	1.7169E+03	2.2882E+17	1.1275E+02	1.2524E+00	9.8098E+02
I-134	1.2820E+03	2.3845E-03	1.9248E+02	2.5970E+16	1.3051E+01	1.4377E-01	1.1261E+02
I-135	6.1449E+03	1.5149E-02	8.8856E+02	1.1856E+17	5.8529E+01	6.4960E-01	5.0883E+02
Xe-133	8.8767E+00	1.0577E-07	7.7945E-01	7.1307E+13	2.5531E-02	3.5714E-04	2.7975E-01
Xe-135	5.6700E+01	5.1318E-06	4.9578E+00	4.5189E+14	1.6179E-01	2.2641E-03	1.7735E+00
Cs-134	6.4443E+03	3.5871E-01	9.2657E+02	1.2342E+17	6.0761E+01	6.7515E-01	5.2884E+02
Cs-136	4.2368E+02	4.2342E-03	6.0924E+01	8.1154E+15	3.9956E+00	4.4396E-02	3.4775E+01
Cs-137	3.5873E+03	1.3551E-01	5.1578E+02	6.8702E+16	3.3823E+01	3.7583E-01	2.9439E+02
Ba-139	3.5673E-02	8.4421E-09	5.2718E-03	7.0799E+11	3.5316E-04	3.9025E-06	3.0568E-03
Ba-140	3.7566E-01	1.7013E-06	5.4019E-02	7.1956E+12	3.5427E-03	3.9364E-05	3.0834E-02
La-140	5.5703E-01	4.0104E-06	8.0114E-02	1.0671E+13	5.2549E-03	5.8386E-05	4.5734E-02

La-141	2.4760E-02	1.7881E-08	3.5852E-03	4.7830E+11	2.3637E-04	2.6228E-06	2.0545E-03
La-142	6.0885E-03	1.3105E-08	8.9714E-04	1.2038E+11	5.9964E-05	6.6301E-07	5.1934E-04
Ce-141	2.7986E+00	2.9767E-05	4.0240E-01	5.3601E+13	2.6389E-02	2.9322E-04	2.2968E-01
Ce-143	1.3347E-01	5.5734E-07	1.9213E-02	2.5600E+12	1.2610E-03	1.4009E-05	1.0973E-02
Ce-144	8.1914E+00	3.6216E-03	1.1778E+00	1.5688E+14	7.7234E-02	8.5819E-04	6.7222E-01
Pr-143	1.3000E+00	1.2463E-05	1.8693E-01	2.4899E+13	1.2259E-02	1.3621E-04	1.0670E-01
Kr-83m	1.5950E+01	1.8464E-10	1.4152E+00	1.2979E+14	4.6762E-02	6.5354E-04	5.1192E-01
Br-82	5.3790E+01	1.8489E-04	7.7422E+00	1.0316E+15	5.0813E-01	5.6449E-03	4.4216E+00
Br-83	3.0363E+02	3.4013E-05	4.4350E+01	5.9354E+15	2.9443E+00	3.2612E-02	2.5545E+01
Br-84	1.2054E+02	1.6731E-04	1.8632E+01	2.5351E+15	1.2913E+00	1.4143E-02	1.1078E+01
Rb-89	3.3502E+00	5.3830E-06	5.6229E-01	7.8284E+13	4.1364E-02	4.4597E-04	3.4933E-01
Y-91m	6.4152E-02	2.3223E-08	9.2262E-03	1.2186E+12	6.0513E-04	6.7237E-06	5.2666E-03
Nb-95m	3.6160E-02	1.0564E-07	5.1993E-03	6.9250E+11	3.4096E-04	3.7886E-06	2.9676E-03
Nb-97	9.0710E-03	4.5769E-09	1.3274E-03	1.7730E+11	8.8260E-05	9.7718E-07	7.6542E-04
Rh-103m	3.8530E+00	2.3692E-08	5.5384E-01	7.3205E+13	3.6312E-02	4.0350E-04	3.1606E-01
Te-125m	4.7433E+00	4.0931E-05	6.8202E-01	9.0846E+13	4.4725E-02	4.9696E-04	3.8927E-01
Te-131	2.9797E+00	2.4783E-06	4.3466E-01	5.7339E+13	2.8843E-02	3.1947E-04	2.5024E-01
Te-133	7.0029E-02	3.1238E-08	6.5635E-03	6.0256E+11	2.2687E-04	3.1557E-06	2.4719E-03
Te-133m	1.3337E+00	2.6932E-06	1.9982E-01	2.6944E+13	1.3527E-02	1.4907E-04	1.1677E-01
Te-134	1.8420E+00	1.3247E-06	2.7974E-01	3.7871E+13	1.9134E-02	2.1029E-04	1.6472E-01
Xe-131m	3.5180E-02	1.0447E-10	3.0875E-03	2.8236E+11	1.0108E-04	1.4141E-06	1.1076E-03
Xe-133m	6.3521E-01	6.6477E-09	5.5785E-02	5.1034E+12	1.8274E-03	2.5563E-05	2.0023E-02
Xe-135m	3.0878E+02	5.0243E-05	2.8314E+01	2.5820E+15	9.6139E-01	1.3399E-02	1.0495E+01
Cs-134m	3.8055E+00	2.4276E-07	5.5431E-01	7.4122E+13	3.6720E-02	4.0695E-04	3.1876E-01
Cs-138	5.5358E+01	9.7104E-05	8.5485E+00	1.1628E+15	5.9204E-01	6.4857E-03	5.0803E+00
Ba-141	5.9749E-03	4.1803E-09	9.7620E-04	1.3492E+11	7.0455E-05	7.6348E-07	5.9804E-04
Total	4.8540E+04	1.0000E+00	0.0000E+00	0.0000E+00	4.5940E+02	5.1026E+00	3.9969E+03

Dose Equivalent (Ci/cc) I-131 (Thyroid)	8.7880E-07
Dose Equivalent (Ci/cc) I-131 (CEDE)	8.9623E-07
Dose Equivalent (Ci/cc) I-131 (ICRP2 Thyroid)	1.0130E-06
Total I (Ci)	3.5894E+04
Dose Equivalent (Ci/cc) Xe-133 (EDE)	3.3940E-07

RCS Compartment Group Inventory Distribution:

Time (h) = 0.1390	Atmosphere	Sump
Noble gases (Ci)	3.9098E+02	0.0000E+00
Elemental I (Ci)	3.5280E+04	0.0000E+00
Organic I (Ci)	1.0911E+03	0.0000E+00
Aerosol I (Ci)	0.0000E+00	0.0000E+00
All Aerosols (Ci)	1.1777E+04	0.0000E+00
All Aerosols (kg)	4.6212E-02	0.0000E+00

Intact Steam Generators Compartment Nuclide Inventory (Ci) at Time (h) = 0.1390

Nuclide	Compartment Atmosphere	Dose Fract	Exposure (Ci-hr)	Decays (Bq-s)	Pathway 5 Inflow	Pathway 7 Outflow
Rb-86	1.7830E-03	1.3455E-04	1.5281E-04	2.0355E+10	1.7850E-03	1.7238E-06
Sr-89	2.7096E-05	1.2692E-05	2.3216E-06	3.0916E+08	2.7104E-05	2.6181E-08
Sr-90	2.5077E-06	3.6822E-05	2.1492E-07	2.8627E+07	2.5103E-06	2.4243E-09
Sr-91	1.1401E-05	2.6179E-07	9.7942E-07	1.3063E+08	1.1484E-05	1.1072E-08
Sr-92	4.8677E-06	8.4612E-08	4.2073E-07	5.6296E+07	4.9807E-06	4.7825E-09
Y-90	4.3599E-06	4.1601E-07	3.7371E-07	4.9778E+07	4.3660E-06	4.2160E-09
Y-91	3.4299E-04	1.8941E-04	2.9395E-05	3.9155E+09	3.4335E-04	3.3159E-07
Y-92	6.1840E-06	6.4280E-08	5.3069E-07	7.0611E+07	6.2113E-06	5.9933E-09
Y-93	4.0361E-06	1.0081E-07	3.4669E-07	4.6235E+07	4.0640E-06	3.9188E-09
Zr-95	4.8834E-04	1.3264E-04	4.1852E-05	5.5747E+09	4.8885E-04	4.7210E-07
Zr-97	7.9017E-06	3.9581E-07	6.7811E-07	9.0390E+07	7.9375E-06	7.6586E-09
Nb-95	7.0506E-04	4.9459E-05	6.0425E-05	8.0486E+09	7.0578E-04	6.8161E-07
Mo-99	4.1903E-02	1.9128E-03	3.5924E-03	4.7860E+11	4.1983E-02	4.0536E-05
Tc-99m	4.0086E-02	4.2992E-05	3.4366E-03	4.5727E+11	4.0160E-02	3.8776E-05
Ru-103	4.0359E-04	4.1944E-05	3.4589E-05	4.6073E+09	4.0402E-04	3.9018E-07
Ru-105	1.9288E-06	1.8805E-08	1.6616E-07	2.2194E+07	1.9568E-06	1.8831E-09
Ru-106	6.7710E-04	3.6540E-03	5.8029E-05	7.7294E+09	6.7779E-04	6.5457E-07
Rh-105	1.5550E-05	1.7485E-07	1.3335E-06	1.7767E+08	1.5589E-05	1.5049E-08

Te-127	5.0442E-03	1.8295E-05	4.3233E-04	5.7541E+10	5.0503E-03	4.8771E-06
Te-127m	4.9970E-03	1.2146E-03	4.2826E-04	5.7044E+10	5.0022E-03	4.8308E-06
Te-129	4.6216E-03	6.1985E-06	3.9612E-04	5.2408E+10	4.6277E-03	4.4687E-06
Te-129m	7.0196E-03	1.9013E-03	6.0161E-04	8.0135E+10	7.0272E-03	6.7864E-06
Te-131m	1.1694E-03	9.4503E-05	1.0030E-04	1.3365E+10	1.1729E-03	1.1322E-06
Te-132	1.9517E-02	2.1066E-03	1.6731E-03	2.2289E+11	1.9551E-02	1.8878E-05
I-131	9.8318E-01	3.6783E-01	8.4270E-02	1.1226E+13	9.8447E-01	9.5068E-04
I-132	7.4862E-01	1.3377E-02	6.4787E-02	8.6740E+12	7.6851E-01	7.3729E-04
I-133	1.2475E+00	8.6939E-02	1.0703E-01	1.4265E+13	1.2524E+00	1.2086E-03
I-134	1.3417E-01	2.3452E-03	1.1807E-02	1.5949E+12	1.4377E-01	1.3639E-04
I-135	6.4313E-01	1.5119E-02	5.5310E-02	7.3810E+12	6.4960E-01	6.2587E-04
Xe-133	9.2904E-04	1.3205E-07	6.0694E-05	5.8557E+09	3.5714E-04	4.9033E-07
Xe-135	5.9343E-03	6.4155E-06	3.8656E-04	3.7146E+10	2.2641E-03	3.1129E-06
Cs-134	6.7447E-01	3.5879E-01	5.7803E-02	7.6994E+12	6.7515E-01	6.5202E-04
Cs-136	4.4343E-02	4.2351E-03	3.8006E-03	5.0625E+11	4.4396E-02	4.2873E-05
Cs-137	3.7545E-01	1.3555E-01	3.2177E-02	4.2859E+12	3.7583E-01	3.6296E-04
Ba-139	3.7335E-06	8.3543E-09	3.2538E-07	4.3730E+07	3.9025E-06	3.7263E-09
Ba-140	3.9316E-05	1.7016E-06	3.3698E-06	4.4887E+08	3.9364E-05	3.8014E-08
La-140	5.8299E-05	4.0109E-06	4.9973E-06	6.6562E+08	5.8386E-05	5.6379E-08
La-141	2.5914E-06	1.7838E-08	2.2306E-07	2.9763E+07	2.6228E-06	2.5259E-09
La-142	6.3723E-07	1.2984E-08	5.5436E-08	7.4433E+06	6.6301E-07	6.3384E-10
Ce-141	2.9290E-04	2.9774E-05	2.5103E-05	3.3438E+09	2.9322E-04	2.8317E-07
Ce-143	1.3970E-05	5.5723E-07	1.1981E-06	1.5964E+08	1.4009E-05	1.3523E-08
Ce-144	8.5732E-04	3.6224E-03	7.3474E-05	9.7868E+09	8.5819E-04	8.2879E-07
Pr-143	1.3605E-04	1.2466E-05	1.1661E-05	1.5533E+09	1.3621E-04	1.3154E-07
Kr-83m	1.6693E-03	2.2982E-10	1.0986E-04	1.0632E+10	6.5354E-04	8.9441E-07
Br-82	5.6297E-03	1.8486E-04	4.8279E-04	6.4330E+10	5.6449E-03	5.4492E-06
Br-83	3.1778E-02	3.3813E-05	2.7498E-03	3.6816E+11	3.2612E-02	3.1290E-05
Br-84	1.2616E-02	1.6269E-04	1.1300E-03	1.5408E+11	1.4143E-02	1.3259E-05
Rb-89	3.5064E-04	5.0684E-06	3.3020E-05	4.6205E+09	4.4597E-04	4.0454E-07
Y-91m	6.7142E-06	2.3226E-08	5.7552E-07	7.5938E+07	6.7237E-06	6.4928E-09
Nb-95m	3.7845E-06	1.0566E-07	3.2435E-07	4.3200E+07	3.7886E-06	3.6587E-09
Nb-97	9.4937E-07	4.5466E-09	8.2241E-08	1.0986E+07	9.7718E-07	9.3678E-10

Rh-103m	4.0326E-04	2.3700E-08	3.4554E-05	4.5630E+09	4.0350E-04	3.8972E-07
Te-125m	4.9644E-04	4.0940E-05	4.2547E-05	5.6673E+09	4.9696E-04	4.7994E-07
Te-131	3.1186E-04	2.4645E-06	2.6959E-05	3.5510E+09	3.1947E-04	3.0656E-07
Te-133	7.3293E-06	3.8251E-08	5.0127E-07	4.8688E+07	3.1557E-06	4.2463E-09
Te-133m	1.3959E-04	2.6510E-06	1.2267E-05	1.6560E+09	1.4907E-04	1.4154E-07
Te-134	1.9278E-04	1.2970E-06	1.7083E-05	2.3162E+09	2.1029E-04	1.9856E-07
Xe-131m	3.6820E-06	1.3045E-10	2.4045E-07	2.3190E+07	1.4141E-06	1.9418E-09
Xe-133m	6.6482E-05	8.2994E-09	4.3437E-06	4.1907E+08	2.5563E-05	3.5095E-08
Xe-135m	3.2317E-02	6.1923E-05	2.1765E-03	2.0971E+11	1.3399E-02	1.8151E-05
Cs-134m	3.9828E-04	2.4160E-07	3.4406E-05	4.6023E+09	4.0695E-04	3.9090E-07
Cs-138	5.7938E-03	9.4460E-05	5.1865E-04	7.0697E+10	6.4857E-03	6.0826E-06
Ba-141	6.2534E-07	3.9777E-09	5.7934E-08	8.0391E+06	7.6348E-07	6.9998E-10
Total	5.0802E+00	1.0000E+00	0.0000E+00	0.0000E+00	5.1026E+00	4.9237E-03

Dose Equivalent (Ci/cc) I-131 (Thyroid)	1.4655E-10
Dose Equivalent (Ci/cc) I-131 (CEDE)	1.4946E-10
Dose Equivalent (Ci/cc) I-131 (ICRP2 Thyroid)	1.6893E-10
Total I (Ci)	3.7566E+00
Dose Equivalent (Ci/cc) Xe-133 (EDE)	5.6599E-11

Intact Steam Generators Compartment Group Inventory Distribution:

Time (h) = 0.1390	Atmosphere	Sump
Noble gases (Ci)	4.0920E-02	0.0000E+00
Elemental I (Ci)	3.6925E+00	0.0000E+00
Organic I (Ci)	1.1420E-01	0.0000E+00
Aerosol I (Ci)	0.0000E+00	0.0000E+00
All Aerosols (Ci)	1.2326E+00	0.0000E+00
All Aerosols (kg)	4.8365E-06	0.0000E+00

Control Room Compartment Nuclide Inventory (Ci) at Time (h) = 0.1390

Nuclide	Compartment	Dose Fract	Exposure	Decays	Compartment	Pathway 2	Pathway 3	Pathway 4

	Atmosphere		(Ci-hr)	(Bq-s)	Recirc Filtr	Inflow	Inflow	Outflow
Rb-86	3.0460E-04	1.3415E-04	3.2017E-05	4.2647E+09	5.0406E-05	3.5810E-04	2.1398E-05	2.8041E-05
Sr-89	4.6289E-06	1.2655E-05	4.8640E-07	6.4773E+07	7.6600E-07	5.4371E-06	3.2494E-07	4.2612E-07
Sr-91	1.9476E-06	2.6101E-07	2.0520E-07	2.7370E+07	3.2230E-07	2.3049E-06	1.3758E-07	1.8010E-07
Y-91	5.8594E-05	1.8885E-04	6.1587E-06	8.2035E+08	9.6964E-06	6.8879E-05	4.1159E-06	5.3938E-06
Y-92	1.0564E-06	6.4089E-08	1.1119E-07	1.4795E+07	1.7482E-07	1.2464E-06	7.4434E-08	9.8436E-08
Zr-95	8.3424E-05	1.3225E-04	8.7686E-06	1.1680E+09	1.3805E-05	9.8067E-05	5.8600E-06	7.6795E-06
Zr-97	1.3499E-06	3.9463E-07	1.4207E-07	1.8938E+07	2.2338E-07	1.5928E-06	9.5119E-08	1.2457E-07
Nb-95	1.2045E-04	4.9313E-05	1.2660E-05	1.6863E+09	1.9932E-05	1.4159E-04	8.4606E-06	1.1088E-05
Mo-99	7.1585E-03	1.9071E-03	7.5266E-04	1.0027E+11	1.1846E-03	8.4228E-03	5.0323E-04	6.5937E-04
Tc-99m	6.8481E-03	4.2864E-05	7.2001E-04	9.5808E+10	1.1332E-03	8.0569E-03	4.8138E-04	6.3489E-04
Ru-103	6.8946E-05	4.1820E-05	7.2468E-06	9.6529E+08	1.1409E-05	8.1050E-05	4.8431E-06	6.3469E-06
Ru-106	1.1567E-04	3.6432E-03	1.2158E-05	1.6194E+09	1.9142E-05	1.3597E-04	8.1249E-06	1.0648E-05
Rh-105	2.6565E-06	1.7433E-07	2.7938E-07	3.7224E+07	4.3962E-07	3.1277E-06	1.8685E-07	2.4484E-07
Te-127	8.6171E-04	1.8240E-05	9.0579E-05	1.2056E+10	1.4260E-04	1.0131E-03	6.0539E-05	7.9687E-05
Te-127m	8.5366E-04	1.2110E-03	8.9726E-05	1.1952E+10	1.4127E-04	1.0035E-03	5.9963E-05	7.8581E-05
Te-129	7.8952E-04	6.1801E-06	8.2992E-05	1.0982E+10	1.3065E-04	9.2837E-04	5.5472E-05	7.5358E-05
Te-129m	1.1992E-03	1.8957E-03	1.2604E-04	1.6789E+10	1.9844E-04	1.4097E-03	8.4238E-05	1.1039E-04
Te-131m	1.9978E-04	9.4223E-05	2.1014E-05	2.8002E+09	3.3060E-05	2.3533E-04	1.4058E-05	1.8416E-05
Te-132	3.3341E-03	2.1004E-03	3.5054E-04	4.6699E+10	5.5174E-04	3.9224E-03	2.3435E-04	3.0708E-04
I-131	1.7167E-01	3.6897E-01	1.7763E-02	2.3662E+12	2.6943E-02	2.0041E-01	1.1801E-02	1.5523E-02
I-132	1.3071E-01	1.3418E-02	1.3656E-02	1.8287E+12	2.0515E-02	1.5672E-01	9.1905E-03	1.2041E-02
I-133	2.1783E-01	8.7208E-02	2.2562E-02	3.0071E+12	3.4187E-02	2.5499E-01	1.5009E-02	1.9733E-02
I-134	2.3427E-02	2.3520E-03	2.4882E-03	3.3631E+11	3.6768E-03	2.9403E-02	1.7123E-03	2.2251E-03
I-135	1.1229E-01	1.5166E-02	1.1658E-02	1.5559E+12	1.7624E-02	1.3232E-01	7.7804E-03	1.0218E-02
Xe-133	2.5216E-04	1.5966E-07	1.5421E-05	1.5038E+09	0.0000E+00	1.2956E-04	4.9336E-06	9.2474E-06
Xe-135	1.6107E-03	7.7591E-06	9.8243E-05	9.5414E+09	0.0000E+00	8.2020E-04	3.1284E-05	5.8726E-05
Cs-134	1.1522E-01	3.5773E-01	1.2111E-02	1.6131E+12	1.9067E-02	1.3544E-01	8.0933E-03	1.0606E-02
Cs-136	7.5753E-03	4.2225E-03	7.9627E-04	1.0607E+11	1.2536E-03	8.9063E-03	5.3219E-04	6.9741E-04
Cs-137	6.4139E-02	1.3514E-01	6.7414E-03	8.9796E+11	1.0614E-02	7.5394E-02	4.5052E-03	5.9041E-03
Ba-140	6.7166E-06	1.6966E-06	7.0601E-07	9.4044E+07	1.1115E-06	7.8968E-06	4.7186E-07	6.1835E-07
La-140	9.9595E-06	3.9990E-06	1.0470E-06	1.3946E+08	1.6481E-06	1.1713E-05	6.9987E-07	9.1776E-07
Ce-141	5.0038E-05	2.9685E-05	5.2594E-06	7.0057E+08	8.2804E-06	5.8823E-05	3.5150E-06	4.6063E-06

Ce-143	2.3865E-06	5.5558E-07	2.5101E-07	3.3447E+07	3.9492E-07	2.8107E-06	1.6790E-07	2.1996E-07
Ce-144	1.4646E-04	3.6117E-03	1.5394E-05	2.0505E+09	2.4237E-05	1.7216E-04	1.0288E-05	1.3482E-05
Pr-143	2.3243E-05	1.2429E-05	2.4431E-06	3.2543E+08	3.8463E-06	2.7326E-05	1.6328E-06	2.1398E-06
Kr-83m	4.5309E-04	2.7768E-10	2.7893E-05	2.7287E+09	0.0000E+00	2.3661E-04	9.0235E-06	1.6857E-05
Br-82	9.8298E-04	1.8544E-04	1.0177E-04	1.3560E+10	1.5427E-04	1.1492E-03	6.7657E-05	8.8974E-05
Br-83	5.5485E-03	3.3916E-05	5.7959E-04	7.7616E+10	8.7082E-04	6.6504E-03	3.9001E-04	5.1074E-04
Br-84	2.2029E-03	1.6313E-04	2.3810E-04	3.2494E+10	3.4573E-04	2.9007E-03	1.6772E-04	2.1617E-04
Rb-89	5.9901E-05	5.0493E-06	6.9125E-06	9.6926E+08	9.9126E-06	9.0969E-05	5.2251E-06	6.5605E-06
Y-91m	1.1470E-06	2.3157E-08	1.2058E-07	1.5913E+07	1.8981E-07	1.3489E-06	8.0597E-08	1.1103E-07
Rh-103m	6.8891E-05	2.3630E-08	7.2395E-06	9.5617E+08	1.1400E-05	8.0942E-05	4.8371E-06	6.6311E-06
Te-125m	8.4809E-05	4.0819E-05	8.9141E-06	1.1874E+09	1.4035E-05	9.9695E-05	5.9573E-06	7.8070E-06
Te-131	5.3276E-05	2.4571E-06	5.6479E-06	7.4432E+08	8.8162E-06	6.4207E-05	3.8206E-06	5.4084E-06
Te-133	1.2521E-06	3.8280E-08	1.0542E-07	1.0196E+07	2.0720E-07	5.6955E-07	4.3456E-08	1.3233E-07
Te-133m	2.3847E-05	2.6431E-06	2.5701E-06	3.4713E+08	3.9463E-06	3.0059E-05	1.7760E-06	2.3007E-06
Te-134	3.2934E-05	1.2931E-06	3.5789E-06	4.8559E+08	5.4500E-06	4.2471E-05	2.5004E-06	3.2267E-06
Xe-131m	9.9938E-07	1.5773E-10	6.1096E-08	5.9554E+06	0.0000E+00	5.1316E-07	1.9535E-08	3.6622E-08
Xe-133m	1.8045E-05	1.0035E-08	1.1036E-06	1.0762E+08	0.0000E+00	9.2739E-06	3.5313E-07	6.6186E-07
Xe-135m	8.7729E-03	7.4656E-05	5.5140E-04	5.3717E+10	0.0000E+00	4.8813E-03	1.8471E-04	3.4134E-04
Cs-134m	6.8040E-05	2.4088E-07	7.2085E-06	9.6441E+08	1.1260E-05	8.1775E-05	4.8688E-06	6.3571E-06
Cs-138	9.8978E-04	9.4167E-05	1.0865E-04	1.4824E+10	1.6379E-04	1.3123E-03	7.6924E-05	9.8811E-05
Total	8.8634E-01	1.0000E+00	0.0000E+00	0.0000E+00	1.3916E-01	1.0383E+00	6.1149E-02	8.0385E-02

Control Room Compartment Group Inventory Distribution:

Time (h) = 0.1390	Atmosphere	Sump
Noble gases (Ci)	1.1108E-02	0.0000E+00
Elemental I (Ci)	6.4472E-01	0.0000E+00
Organic I (Ci)	1.9940E-02	0.0000E+00
Aerosol I (Ci)	0.0000E+00	0.0000E+00
All Aerosols (Ci)	2.1057E-01	0.0000E+00
All Aerosols (kg)	8.2624E-07	0.0000E+00

	Deposition	Recirculating

Time (h) = 0.1390	Surfaces	Filter
Noble gases (Ci)	0.0000E+00	0.0000E+00
Elemental I (Ci)	0.0000E+00	1.0119E-01
Organic I (Ci)	0.0000E+00	3.1295E-03
Aerosol I (Ci)	0.0000E+00	0.0000E+00
All Aerosols (Ci)	0.0000E+00	3.4846E-02
All Aerosols (kg)	0.0000E+00	1.3673E-07

Ruptured Steam Generator Compartment Nuclide Inventory (Ci) at Time (h) = 0.1390

Nuclide	Compartment Atmosphere	Dose Fract	Exposure (Ci-hr)	Decays (Bq-s)	Pathway 6 Inflow	Pathway 8 Outflow
Rb-86	1.3967E+00	1.3455E-04	1.1970E-01	1.5945E+13	1.3982E+00	1.2757E-03
Sr-89	2.1225E-02	1.2692E-05	1.8186E-03	2.4217E+11	2.1231E-02	1.9376E-05
Sr-90	1.9644E-03	3.6822E-05	1.6835E-04	2.2424E+10	1.9663E-03	1.7941E-06
Sr-91	8.9306E-03	2.6179E-07	7.6721E-04	1.0233E+11	8.9952E-03	8.1941E-06
Sr-92	3.8130E-03	8.4612E-08	3.2957E-04	4.4098E+10	3.9014E-03	3.5394E-06
Y-90	3.4153E-03	4.1601E-07	2.9274E-04	3.8993E+10	3.4199E-03	3.1201E-06
Y-91	2.6868E-01	1.8941E-04	2.3026E-02	3.0671E+12	2.6895E-01	2.4539E-04
Y-92	4.8442E-03	6.4280E-08	4.1570E-04	5.5311E+10	4.8653E-03	4.4354E-06
Y-93	3.1616E-03	1.0081E-07	2.7157E-04	3.6218E+10	3.1833E-03	2.9001E-06
Zr-95	3.8253E-01	1.3264E-04	3.2784E-02	4.3669E+12	3.8291E-01	3.4938E-04
Zr-97	6.1897E-03	3.9581E-07	5.3118E-04	7.0805E+10	6.2174E-03	5.6678E-06
Nb-95	5.5230E-01	4.9459E-05	4.7333E-02	6.3047E+12	5.5284E-01	5.0443E-04
Mo-99	3.2824E+01	1.9128E-03	2.8141E+00	3.7490E+14	3.2885E+01	2.9999E-02
Tc-99m	3.1401E+01	4.2992E-05	2.6920E+00	3.5820E+14	3.1457E+01	2.8696E-02
Ru-103	3.1615E-01	4.1944E-05	2.7095E-02	3.6090E+12	3.1647E-01	2.8875E-04
Ru-105	1.5109E-03	1.8805E-08	1.3016E-04	1.7385E+10	1.5327E-03	1.3936E-06
Ru-106	5.3040E-01	3.6540E-03	4.5456E-02	6.0547E+12	5.3091E-01	4.8442E-04
Rh-105	1.2181E-02	1.7485E-07	1.0445E-03	1.3917E+11	1.2211E-02	1.1137E-05
Te-127	3.9513E+00	1.8295E-05	3.3866E-01	4.5074E+13	3.9559E+00	3.6093E-03
Te-127m	3.9144E+00	1.2146E-03	3.3547E-01	4.4684E+13	3.9182E+00	3.5751E-03
Te-129	3.6203E+00	6.1985E-06	3.1029E-01	4.1053E+13	3.6248E+00	3.3071E-03

Te-129m	5.4987E+00	1.9013E-03	4.7126E-01	6.2772E+13	5.5044E+00	5.0223E-03
Te-131m	9.1605E-01	9.4503E-05	7.8566E-02	1.0469E+13	9.1874E-01	8.3786E-04
Te-132	1.5288E+01	2.1066E-03	1.3106E+00	1.7460E+14	1.5314E+01	1.3971E-02
I-131	7.7016E+02	3.6783E-01	6.6011E+01	8.7933E+15	7.7114E+02	7.0355E-01
I-132	5.8642E+02	1.3377E-02	5.0750E+01	6.7946E+15	6.0197E+02	5.4564E-01
I-133	9.7725E+02	8.6939E-02	8.3844E+01	1.1175E+16	9.8098E+02	8.9441E-01
I-134	1.0510E+02	2.3452E-03	9.2485E+00	1.2493E+15	1.1261E+02	1.0094E-01
I-135	5.0379E+02	1.5119E-02	4.3326E+01	5.7817E+15	5.0883E+02	4.6318E-01
Xe-133	7.2775E-01	1.3205E-07	4.7544E-02	4.5870E+12	2.7975E-01	3.6265E-04
Xe-135	4.6486E+00	6.4155E-06	3.0280E-01	2.9098E+13	1.7735E+00	2.3023E-03
Cs-134	5.2834E+02	3.5879E-01	4.5279E+01	6.0312E+15	5.2884E+02	4.8253E-01
Cs-136	3.4736E+01	4.2351E-03	2.9771E+00	3.9656E+14	3.4775E+01	3.1729E-02
Cs-137	2.9410E+02	1.3555E-01	2.5205E+01	3.3573E+15	2.9439E+02	2.6861E-01
Ba-139	2.9246E-03	8.3543E-09	2.5488E-04	3.4255E+10	3.0568E-03	2.7577E-06
Ba-140	3.0798E-02	1.7016E-06	2.6396E-03	3.5161E+11	3.0834E-02	2.8132E-05
La-140	4.5668E-02	4.0109E-06	3.9145E-03	5.2140E+11	4.5734E-02	4.1724E-05
La-141	2.0300E-03	1.7838E-08	1.7473E-04	2.3314E+10	2.0545E-03	1.8693E-06
La-142	4.9917E-04	1.2984E-08	4.3424E-05	5.8306E+09	5.1934E-04	4.6909E-07
Ce-141	2.2944E-01	2.9774E-05	1.9664E-02	2.6193E+12	2.2968E-01	2.0956E-04
Ce-143	1.0943E-02	5.5723E-07	9.3847E-04	1.2505E+11	1.0973E-02	1.0008E-05
Ce-144	6.7157E-01	3.6224E-03	5.7554E-02	7.6663E+12	6.7222E-01	6.1335E-04
Pr-143	1.0658E-01	1.2466E-05	9.1343E-03	1.2167E+12	1.0670E-01	9.7349E-05
Kr-83m	1.3076E+00	2.2982E-10	8.6056E-02	8.3283E+12	5.1192E-01	6.6151E-04
Br-82	4.4100E+00	1.8486E-04	3.7819E-01	5.0392E+13	4.4216E+00	4.0327E-03
Br-83	2.4893E+01	3.3813E-05	2.1540E+00	2.8839E+14	2.5545E+01	2.3156E-02
Br-84	9.8829E+00	1.6269E-04	8.8517E-01	1.2069E+14	1.1078E+01	9.8130E-03
Rb-89	2.7467E-01	5.0684E-06	2.5866E-02	3.6194E+12	3.4933E-01	2.9942E-04
Y-91m	5.2595E-03	2.3226E-08	4.5082E-04	5.9484E+10	5.2666E-03	4.8050E-06
Nb-95m	2.9645E-03	1.0566E-07	2.5407E-04	3.3840E+10	2.9676E-03	2.7077E-06
Nb-97	7.4368E-04	4.5466E-09	6.4422E-05	8.6057E+09	7.6542E-04	6.9328E-07
Rh-103m	3.1589E-01	2.3700E-08	2.7067E-02	3.5744E+12	3.1606E-01	2.8841E-04
Te-125m	3.8888E-01	4.0940E-05	3.3328E-02	4.4393E+12	3.8927E-01	3.5518E-04
Te-131	2.4429E-01	2.4645E-06	2.1117E-02	2.7816E+12	2.5024E-01	2.2688E-04

Te-133	5.7414E-03	3.8251E-08	3.9266E-04	3.8139E+10	2.4719E-03	3.1406E-06
Te-133m	1.0935E-01	2.6510E-06	9.6095E-03	1.2972E+12	1.1677E-01	1.0475E-04
Te-134	1.5102E-01	1.2970E-06	1.3382E-02	1.8144E+12	1.6472E-01	1.4696E-04
Xe-131m	2.8843E-03	1.3045E-10	1.8836E-04	1.8166E+10	1.1076E-03	1.4361E-06
Xe-133m	5.2078E-02	8.2994E-09	3.4026E-03	3.2827E+11	2.0023E-02	2.5956E-05
Xe-135m	2.5316E+01	6.1923E-05	1.7049E+00	1.6427E+14	1.0495E+01	1.3425E-02
Cs-134m	3.1199E-01	2.4160E-07	2.6951E-02	3.6051E+12	3.1876E-01	2.8929E-04
Cs-138	4.5386E+00	9.4460E-05	4.0627E-01	5.5379E+13	5.0803E+00	4.5018E-03
Ba-141	4.8985E-04	3.9777E-09	4.5382E-05	6.2973E+09	5.9804E-04	5.1808E-07
Total	3.9795E+03	1.0000E+00	0.0000E+00	0.0000E+00	3.9969E+03	3.6438E+00

```
Dose Equivalent (Ci/cc) I-131 (Thyroid)            3.4440E-07
Dose Equivalent (Ci/cc) I-131 (CEDE)               3.5123E-07
Dose Equivalent (Ci/cc) I-131 (ICRP2 Thyroid)      3.9699E-07
Total I  (Ci)                                      2.9427E+03
Dose Equivalent (Ci/cc) Xe-133 (EDE)               1.3301E-07

Ruptured Steam Generator Compartment Group Inventory Distribution:

Time (h) =   0.1390      Atmosphere      Sump
Noble gases (Ci)         3.2054E+01   0.0000E+00
Elemental I (Ci)         2.8925E+03   0.0000E+00
Organic I (Ci)           8.9457E+01   0.0000E+00
Aerosol I (Ci)           0.0000E+00   0.0000E+00
All Aerosols (Ci)        9.6556E+02   0.0000E+00
All Aerosols (kg)        3.7887E-03   0.0000E+00

#######################################################################
    ALION RADTRAD Version 3.10 Rev 2 run on 12/01/2014  at 16:18:07

                Copyright © 2009 Alion Science and Technology
#######################################################################
```

Exclusion Area Boundary Doses:

Time (h) = 0.2780	Whole Body	Thyroid	TEDE
Delta dose (rem)	2.8982E-02	1.4001E+01	9.1325E-01
Accumulated dose (rem)	9.2165E-02	4.3844E+01	2.8600E+00

Low Population Zone Doses:

Time (h) = 0.2780	Whole Body	Thyroid	TEDE
Delta dose (rem)	5.5792E-03	2.6952E+00	1.7580E-01
Accumulated dose (rem)	1.5992E-02	7.6173E+00	4.9689E-01

Control Room Doses:

Time (h) = 0.2780	Whole Body	Thyroid	TEDE	Skin
Delta dose (rem)	1.4492E-03	2.1173E+01	1.2976E+00	6.5219E-02
Accumulated dose (rem)	2.6531E-03	3.8429E+01	2.3861E+00	1.1928E-01

****

RCS Compartment Nuclide Inventory (Ci) at Time (h) = 0.2780

Nuclide	Compartment Atmosphere	Dose Fract	Exposure (Ci-hr)	Decays (Bq-s)	Pathway 1 Outflow	Pathway 5 Outflow	Pathway 6 Outflow
Rb-86	1.5603E+01	1.3461E-04	4.6858E+00	6.2417E+14	2.4642E-01	3.4983E-03	2.7402E+00
Sr-89	2.3735E-01	1.2703E-05	7.1213E-02	9.4836E+12	3.7430E-03	5.3150E-05	4.1632E-02
Sr-90	2.1950E-02	3.6842E-05	6.5906E-03	8.7787E+11	3.4656E-04	4.9201E-06	3.8539E-03
Sr-91	9.8783E-02	2.6102E-07	2.9931E-02	3.9922E+12	1.5809E-03	2.2402E-05	1.7547E-02
Sr-92	4.1118E-02	8.3644E-08	1.2748E-02	1.7061E+12	6.8090E-04	9.6028E-06	7.5218E-03
Y-90	3.8137E-02	4.1614E-07	1.1458E-02	1.5262E+12	6.0264E-04	8.5548E-06	6.7009E-03
Y-91	3.0020E+00	1.8951E-04	9.0141E-01	1.2007E+14	4.7401E-02	6.7295E-04	5.2712E-01
Y-92	5.3801E-02	6.4182E-08	1.6241E-02	2.1614E+12	8.5613E-04	1.2142E-05	9.5108E-03
Y-93	3.4992E-02	1.0054E-07	1.0597E-02	1.4133E+12	5.5957E-04	7.9301E-06	6.2116E-03

Zr-95	4.2741E+00	1.3271E-04	1.2834E+00	1.7095E+14	6.7487E-02	9.5812E-04	7.5049E-01
Zr-97	6.8770E-02	3.9525E-07	2.0754E-02	2.7666E+12	1.0941E-03	1.5516E-05	1.2154E-02
Nb-95	6.1711E+00	4.9485E-05	1.8530E+00	2.4682E+14	9.7437E-02	1.3833E-03	1.0835E+00
Mo-99	3.6624E+02	1.9129E-03	1.1011E+02	1.4669E+16	5.7937E+00	8.2231E-02	6.4411E+01
Tc-99m	3.5041E+02	4.2995E-05	1.0534E+02	1.4018E+16	5.5422E+00	7.8664E-02	6.1617E+01
Ru-103	3.5322E+00	4.1965E-05	1.0607E+00	1.4128E+14	5.5776E-02	7.9184E-04	6.2024E-01
Ru-105	1.6520E-02	1.8677E-08	5.0579E-03	6.7569E+11	2.6852E-04	3.7968E-06	2.9740E-03
Ru-106	5.9265E+00	3.6559E-03	1.7795E+00	2.3703E+14	9.3572E-02	1.3285E-03	1.0406E+00
Rh-105	1.3579E-01	1.7480E-07	4.0858E-02	5.4439E+12	2.1507E-03	3.0521E-05	2.3907E-02
Te-127	4.4137E+01	1.8302E-05	1.3256E+01	1.7645E+15	6.9716E-01	9.8971E-03	7.7523E+00
Te-127m	4.3737E+01	1.2153E-03	1.3133E+01	1.7493E+15	6.9057E-01	9.8041E-03	7.6795E+00
Te-129	4.0432E+01	6.2008E-06	1.2145E+01	1.6078E+15	6.3879E-01	9.0681E-03	7.1030E+00
Te-129m	6.1435E+01	1.9022E-03	1.8448E+01	2.4573E+15	9.7011E-01	1.3773E-02	1.0788E+01
Te-131m	1.0203E+01	9.4450E-05	3.0723E+00	4.0941E+14	1.6178E-01	2.2955E-03	1.7980E+00
Te-132	1.7062E+02	2.1068E-03	5.1286E+01	6.8324E+15	2.6982E+00	3.8299E-02	2.9999E+01
I-131	8.6014E+03	3.6796E-01	2.5838E+03	3.4418E+17	1.3589E+02	1.9291E+00	1.5111E+03
I-132	6.2908E+03	1.3201E-02	1.9596E+03	2.6243E+17	1.0491E+02	1.4781E+00	1.1578E+03
I-133	1.0869E+04	8.6847E-02	3.2771E+03	4.3678E+17	1.7267E+02	2.4494E+00	1.9186E+03
I-134	1.0523E+03	2.2636E-03	3.4927E+02	4.7215E+16	1.9274E+01	2.6807E-01	2.0997E+02
I-135	5.5479E+03	1.5052E-02	1.6877E+03	2.2524E+17	8.9317E+01	1.2646E+00	9.9055E+02
Xe-133	1.6220E+01	1.9147E-07	2.6974E+00	2.9077E+14	8.5275E-02	1.5506E-03	1.2145E+00
Xe-135	1.0507E+02	9.3853E-06	1.7332E+01	1.8626E+15	5.4572E-01	9.9332E-03	7.7806E+00
Cs-134	5.9035E+03	3.5899E-01	1.7726E+03	2.3611E+17	9.3208E+01	1.3233E+00	1.0365E+03
Cs-136	3.8801E+02	4.2369E-03	1.1653E+02	1.5523E+16	6.1286E+00	8.7004E-02	6.8150E+01
Cs-137	3.2863E+03	1.3562E-01	9.8673E+02	1.3143E+17	5.1885E+01	7.3662E-01	5.7699E+02
Ba-139	3.0473E-02	8.1661E-09	9.7481E-03	1.3107E+12	5.2861E-04	7.4072E-06	5.8020E-03
Ba-140	3.4403E-01	1.7024E-06	1.0333E-01	1.3763E+13	5.4339E-03	7.7142E-05	6.0425E-02
La-140	5.0989E-01	4.0120E-06	1.5320E-01	2.0407E+13	8.0588E-03	1.1440E-04	8.9605E-02
La-141	2.2247E-02	1.7731E-08	6.7955E-03	9.0704E+11	3.6024E-04	5.0972E-06	3.9926E-03
La-142	5.2397E-03	1.2722E-08	1.6648E-03	2.2363E+11	8.9984E-05	1.2627E-06	9.8903E-04
Ce-141	2.5635E+00	2.9788E-05	7.6978E-01	1.0254E+14	4.0480E-02	5.7468E-04	4.5014E-01
Ce-143	1.2192E-01	5.5697E-07	3.6702E-02	4.8907E+12	1.9324E-03	2.7420E-05	2.1478E-02
Ce-144	7.5039E+00	3.6244E-03	2.2531E+00	3.0012E+14	1.1848E-01	1.6820E-03	1.3175E+00

Pr-143	1.1906E+00	1.2471E-05	3.5756E-01	4.7628E+13	1.8804E-02	2.6695E-04	2.0910E-01
Kr-83m	2.7899E+01	3.2483E-10	4.7591E+00	5.1453E+14	1.5227E-01	2.7611E-03	2.1628E+00
Br-82	4.9142E+01	1.8479E-04	1.4791E+01	1.9709E+15	7.7872E-01	1.1050E-02	8.6553E+00
Br-83	2.6716E+02	3.3373E-05	8.3183E+01	1.1141E+16	4.4525E+00	6.2738E-02	4.9142E+01
Br-84	9.2074E+01	1.5367E-04	3.2713E+01	4.4648E+15	1.8628E+00	2.5559E-02	2.0020E+01
Rb-89	2.0982E+00	4.5458E-06	9.0769E-01	1.2713E+14	5.6283E-02	7.4398E-04	5.8276E-01
Y-91m	5.8674E-02	2.3227E-08	1.7640E-02	2.3296E+12	9.2798E-04	1.3173E-05	1.0318E-02
Nb-95m	3.3122E-02	1.0571E-07	9.9460E-03	1.3247E+12	5.2302E-04	7.4252E-06	5.8161E-03
Nb-97	7.9529E-03	4.4819E-09	2.4848E-03	3.3208E+11	1.3326E-04	1.8760E-06	1.4695E-03
Rh-103m	3.5317E+00	2.3718E-08	1.0599E+00	1.4006E+14	5.5716E-02	7.9110E-04	6.1967E-01
Te-125m	4.3450E+00	4.0961E-05	1.3047E+00	1.7379E+14	6.8608E-02	9.7402E-04	7.6294E-01
Te-131	2.6429E+00	2.4387E-06	8.1759E-01	1.0781E+14	4.3677E-02	6.1580E-04	4.8235E-01
Te-133	9.8161E-02	4.7771E-08	1.9187E-02	2.0793E+12	6.5199E-04	1.1648E-05	9.1236E-03
Te-133m	1.1008E+00	2.5631E-06	3.6352E-01	4.9106E+13	2.0012E-02	2.7862E-04	2.1824E-01
Te-134	1.4695E+00	1.2410E-06	5.0096E-01	6.7979E+13	2.7991E-02	3.8722E-04	3.0331E-01
Xe-131m	6.4430E-02	1.8941E-10	1.0700E-02	1.1531E+12	3.3808E-04	6.1481E-06	4.8158E-03
Xe-133m	1.1601E+00	1.2030E-08	1.9298E-01	2.0802E+13	6.1018E-03	1.1095E-04	8.6902E-02
Xe-135m	4.7272E+02	8.1121E-05	8.7390E+01	9.4055E+15	2.8997E+00	5.2117E-02	4.0823E+01
Cs-134m	3.3722E+00	2.3902E-07	1.0433E+00	1.3959E+14	5.5668E-02	7.8543E-04	6.1522E-01
Cs-138	4.2379E+01	8.9279E-05	1.5024E+01	2.0500E+15	8.5469E-01	1.1732E-02	9.1898E+00
Ba-141	3.9887E-03	3.6229E-09	1.6173E-03	2.2466E+11	9.7594E-05	1.3056E-06	1.0227E-03
Total	4.4171E+04	1.0000E+00	0.0000E+00	0.0000E+00	7.0326E+02	9.9739E+00	7.8125E+03

Dose Equivalent (Ci/cc) I-131 (Thyroid)	8.0379E-07
Dose Equivalent (Ci/cc) I-131 (CEDE)	8.1953E-07
Dose Equivalent (Ci/cc) I-131 (ICRP2 Thyroid)	9.2525E-07
Total I (Ci)	3.2362E+04
Dose Equivalent (Ci/cc) Xe-133 (EDE)	5.3035E-07

RCS Compartment Group Inventory Distribution:

Time (h) = 0.2780	Atmosphere	Sump
Noble gases (Ci)	6.2313E+02	0.0000E+00

Elemental I (Ci)	3.1787E+04	0.0000E+00
Organic I (Ci)	9.8310E+02	0.0000E+00
Aerosol I (Ci)	0.0000E+00	0.0000E+00
All Aerosols (Ci)	1.0778E+04	0.0000E+00
All Aerosols (kg)	4.2334E-02	0.0000E+00

Intact Steam Generators Compartment Nuclide Inventory (Ci) at Time (h) = 0.2780

Nuclide	Compartment Atmosphere	Dose Fract	Exposure (Ci-hr)	Decays (Bq-s)	Pathway 5 Inflow	Pathway 7 Outflow
Rb-86	3.4903E-03	1.3467E-04	5.5776E-04	7.4296E+10	3.4983E-03	7.0163E-06
Sr-89	5.3093E-05	1.2713E-05	8.4798E-06	1.1293E+09	5.3150E-05	1.0664E-07
Sr-90	4.9100E-06	3.6862E-05	7.8454E-07	1.0450E+08	4.9201E-06	9.8685E-09
Sr-91	2.2097E-05	2.6027E-07	3.5509E-06	4.7368E+08	2.2402E-05	4.4780E-08
Sr-92	9.1977E-06	8.2694E-08	1.4994E-06	2.0077E+08	9.6028E-06	1.9032E-08
Y-90	8.5309E-06	4.1627E-07	1.3636E-06	1.8164E+08	8.5548E-06	1.7155E-08
Y-91	6.7151E-04	1.8961E-04	1.0730E-04	1.4293E+10	6.7295E-04	1.3497E-06
Y-92	1.2035E-05	6.4092E-08	1.9295E-06	2.5681E+08	1.2142E-05	2.4308E-08
Y-93	7.8275E-06	1.0027E-07	1.2574E-06	1.6772E+08	7.9301E-06	1.5855E-08
Zr-95	9.5608E-04	1.3278E-04	1.5277E-04	2.0349E+10	9.5812E-04	1.9217E-06
Zr-97	1.5383E-05	3.9470E-07	2.4659E-06	3.2873E+08	1.5516E-05	3.1062E-08
Nb-95	1.3804E-03	4.9511E-05	2.2057E-04	2.9380E+10	1.3833E-03	2.7746E-06
Mo-99	8.1924E-02	1.9129E-03	1.3101E-02	1.7454E+12	8.2231E-02	1.6485E-04
Tc-99m	7.8382E-02	4.2999E-05	1.2534E-02	1.6679E+12	7.8664E-02	1.5771E-04
Ru-103	7.9012E-04	4.1986E-05	1.2626E-04	1.6818E+10	7.9184E-04	1.5882E-06
Ru-105	3.6954E-06	1.8551E-08	5.9772E-07	7.9871E+07	3.7968E-06	7.5601E-09
Ru-106	1.3257E-03	3.6579E-03	2.1183E-04	2.8216E+10	1.3285E-03	2.6646E-06
Rh-105	3.0374E-05	1.7475E-07	4.8599E-06	6.4755E+08	3.0521E-05	6.1168E-08
Te-127	9.8729E-03	1.8310E-05	1.5778E-03	2.1001E+11	9.8971E-03	1.9849E-05
Te-127m	9.7835E-03	1.2159E-03	1.5633E-03	2.0823E+11	9.8041E-03	1.9664E-05
Te-129	9.0441E-03	6.2030E-06	1.4455E-03	1.9131E+11	9.0681E-03	1.8185E-05
Te-129m	1.3742E-02	1.9032E-03	2.1960E-03	2.9251E+11	1.3773E-02	2.7623E-05
Te-131m	2.2823E-03	9.4398E-05	3.6534E-04	4.8686E+10	2.2955E-03	4.5992E-06

Te-132	3.8166E-02	2.1071E-03	6.1025E-03	8.1300E+11	3.8299E-02	7.6786E-05
I-131	1.9240E+00	3.6809E-01	3.0752E-01	4.0965E+13	1.9291E+00	3.8687E-03
I-132	1.4072E+00	1.3028E-02	2.3009E-01	3.0829E+13	1.4781E+00	2.9242E-03
I-133	2.4313E+00	8.6759E-02	3.8950E-01	5.1917E+13	2.4494E+00	4.9052E-03
I-134	2.3540E-01	2.1818E-03	4.0054E-02	5.4219E+12	2.6807E-01	5.1796E-04
I-135	1.2410E+00	1.4987E-02	1.9992E-01	2.6687E+13	1.2646E+00	2.5241E-03
Xe-133	3.6283E-03	2.4932E-07	4.1788E-04	4.6963E+10	1.5506E-03	4.3330E-06
Xe-135	2.3502E-02	1.2254E-05	2.6925E-03	3.0156E+11	9.9332E-03	2.7826E-05
Cs-134	1.3206E+00	3.5918E-01	2.1101E-01	2.8106E+13	1.3233E+00	2.6542E-03
Cs-136	8.6794E-02	4.2387E-03	1.3871E-02	1.8477E+12	8.7004E-02	1.7449E-04
Cs-137	7.3511E-01	1.3569E-01	1.1746E-01	1.5646E+13	7.3662E-01	1.4775E-03
Ba-139	6.8165E-06	7.9797E-09	1.1333E-06	1.5251E+08	7.4072E-06	1.4510E-08
Ba-140	7.6955E-05	1.7031E-06	1.2298E-05	1.6382E+09	7.7142E-05	1.5471E-07
La-140	1.1406E-04	4.0131E-06	1.8233E-05	2.4286E+09	1.1440E-04	2.2939E-07
La-141	4.9764E-06	1.7629E-08	8.0388E-07	1.0733E+08	5.0972E-06	1.0161E-08
La-142	1.1721E-06	1.2463E-08	1.9404E-07	2.6084E+07	1.2627E-06	2.4796E-09
Ce-141	5.7342E-04	2.9803E-05	9.1630E-05	1.2205E+10	5.7468E-04	1.1526E-06
Ce-143	2.7272E-05	5.5672E-07	4.3648E-06	5.8164E+08	2.7420E-05	5.4944E-08
Ce-144	1.6786E-03	3.6263E-03	2.6821E-04	3.5726E+10	1.6820E-03	3.3738E-06
Pr-143	2.6632E-04	1.2477E-05	4.2560E-05	5.6691E+09	2.6695E-04	5.3538E-07
Kr-83m	6.2406E-03	4.1960E-10	7.3141E-04	8.2556E+10	2.7611E-03	7.6647E-06
Br-82	1.0993E-02	1.8472E-04	1.7592E-03	2.3441E+11	1.1050E-02	2.2143E-05
Br-83	5.9761E-02	3.2941E-05	9.7687E-03	1.3089E+12	6.2738E-02	1.2414E-04
Br-84	2.0596E-02	1.4443E-04	3.6581E-03	5.0045E+11	2.5559E-02	4.8162E-05
Rb-89	4.6934E-04	3.9758E-06	9.4452E-05	1.3305E+10	7.4398E-04	1.3054E-06
Y-91m	1.3125E-05	2.3230E-08	2.0990E-06	2.7713E+08	1.3173E-05	2.6413E-08
Nb-95m	7.4090E-06	1.0577E-07	1.1839E-06	1.5769E+08	7.4252E-06	1.4893E-08
Nb-97	1.7790E-06	4.4177E-09	2.9140E-07	3.8956E+07	1.8760E-06	3.7065E-09
Rh-103m	7.9001E-04	2.3736E-08	1.2619E-04	1.6671E+10	7.9110E-04	1.5871E-06
Te-125m	9.7194E-04	4.0982E-05	1.5531E-04	2.0687E+10	9.7402E-04	1.9536E-06
Te-131	5.9120E-04	2.4118E-06	9.6201E-05	1.2678E+10	6.1580E-04	1.2202E-06
Te-133	2.1958E-05	5.9106E-08	2.8245E-06	3.2201E+08	1.1648E-05	3.1197E-08
Te-133m	2.4623E-04	2.4751E-06	4.1765E-05	5.6491E+09	2.7862E-04	5.3936E-07

Te-134	3.2871E-04	1.1843E-06	5.6882E-05	7.7322E+09	3.8722E-04	7.4084E-07
Xe-131m	1.4412E-05	2.4673E-10	1.6584E-06	1.8630E+08	6.1481E-06	1.7187E-08
Xe-133m	2.5950E-04	1.5663E-08	2.9893E-05	3.3596E+09	1.1095E-04	3.1001E-07
Xe-135m	1.0574E-01	1.0215E-04	1.3092E-02	1.4777E+12	5.2117E-02	1.4162E-04
Cs-134m	7.5433E-04	2.3649E-07	1.2281E-04	1.6438E+10	7.8543E-04	1.5579E-06
Cs-138	9.4798E-03	8.3979E-05	1.6814E-03	2.2995E+11	1.1732E-02	2.2125E-05
Ba-141	8.9223E-07	3.2440E-09	1.7230E-07	2.4043E+07	1.3056E-06	2.3447E-09
Total	9.8806E+00	1.0000E+00	0.0000E+00	0.0000E+00	9.9739E+00	1.9966E-02

Dose Equivalent (Ci/cc) I-131 (Thyroid)	2.8649E-10
Dose Equivalent (Ci/cc) I-131 (CEDE)	2.9210E-10
Dose Equivalent (Ci/cc) I-131 (ICRP2 Thyroid)	3.2978E-10
Total I (Ci)	7.2390E+00
Dose Equivalent (Ci/cc) Xe-133 (EDE)	1.8903E-10

Intact Steam Generators Compartment Group Inventory Distribution:

Time (h) = 0.2780	Atmosphere	Sump
Noble gases (Ci)	1.3939E-01	0.0000E+00
Elemental I (Ci)	7.1104E+00	0.0000E+00
Organic I (Ci)	2.1991E-01	0.0000E+00
Aerosol I (Ci)	0.0000E+00	0.0000E+00
All Aerosols (Ci)	2.4109E+00	0.0000E+00
All Aerosols (kg)	9.4697E-06	0.0000E+00

Control Room Compartment Nuclide Inventory (Ci) at Time (h) = 0.2780

Nuclide	Compartment Atmosphere	Dose Fract	Exposure (Ci-hr)	Decays (Bq-s)	Compartment Recirc Filtr	Pathway 2 Inflow	Pathway 3 Inflow	Pathway 4 Outflow
Rb-86	1.4452E-04	1.3190E-04	5.8303E-05	7.7662E+09	2.0676E-04	3.6735E-04	3.9694E-05	6.0518E-05
Sr-89	2.1983E-06	1.2448E-05	8.8612E-07	1.1801E+08	3.1451E-06	5.5778E-06	6.0308E-07	9.2065E-07
Sr-91	9.1492E-07	2.5568E-07	3.7228E-07	4.9659E+07	1.3090E-06	2.3639E-06	2.5417E-07	3.8716E-07
Y-91	2.7804E-05	1.8570E-04	1.1216E-05	1.4940E+09	3.9779E-05	7.0660E-05	7.6356E-06	1.1642E-05

Zr-95	3.9587E-05	1.3004E-04	1.5969E-05	2.1270E+09	5.6636E-05	1.0060E-04	1.0871E-05	1.6575E-05
Zr-97	6.3694E-07	3.8722E-07	2.5818E-07	3.4418E+07	9.1126E-07	1.6337E-06	1.7605E-07	2.6828E-07
Nb-95	5.7157E-05	4.8491E-05	2.3056E-05	3.0710E+09	8.1773E-05	1.4525E-04	1.5696E-05	2.3933E-05
Mo-99	3.3921E-03	1.8743E-03	1.3700E-03	1.8252E+11	4.8530E-03	8.6403E-03	9.3303E-04	1.4224E-03
Tc-99m	3.2455E-03	4.2129E-05	1.3106E-03	1.7440E+11	4.6432E-03	8.2650E-03	8.9256E-04	1.3817E-03
Ru-103	3.2715E-05	4.1122E-05	1.3197E-05	1.7579E+09	4.6805E-05	8.3146E-05	8.9846E-06	1.3698E-05
Ru-106	5.4891E-05	3.5824E-03	2.2141E-05	2.9492E+09	7.8532E-05	1.3949E-04	1.5073E-05	2.2982E-05
Rh-105	1.2577E-06	1.7127E-07	5.0834E-07	6.7732E+07	1.7993E-06	3.2084E-06	3.4630E-07	5.2806E-07
Te-127	4.0879E-04	1.7934E-05	1.6494E-04	2.1953E+10	5.8485E-04	1.0393E-03	1.1230E-04	1.7300E-04
Te-127m	4.0509E-04	1.1908E-03	1.6340E-04	2.1765E+10	5.7956E-04	1.0294E-03	1.1124E-04	1.6961E-04
Te-129	3.7448E-04	6.0760E-06	1.5112E-04	1.9998E+10	5.3576E-04	9.5237E-04	1.0289E-04	1.7041E-04
Te-129m	5.6900E-04	1.8640E-03	2.2954E-04	3.0575E+10	8.1406E-04	1.4462E-03	1.5627E-04	2.3825E-04
Te-131m	9.4500E-05	9.2541E-05	3.8223E-05	5.0936E+09	1.3520E-04	2.4140E-04	2.6045E-05	3.9698E-05
Te-132	1.5803E-03	2.0644E-03	6.3809E-04	8.5009E+10	2.2609E-03	4.0237E-03	4.3455E-04	6.6247E-04
I-131	9.0326E-02	3.7572E-01	3.3499E-02	4.4624E+12	1.1514E-01	2.1567E-01	2.1889E-02	3.4620E-02
I-132	6.6056E-02	1.3448E-02	2.5346E-02	3.3957E+12	8.4210E-02	1.6819E-01	1.6767E-02	2.6434E-02
I-133	1.1414E-01	8.8657E-02	4.2479E-02	5.6619E+12	1.4550E-01	2.7433E-01	2.7791E-02	4.3936E-02
I-134	1.1051E-02	2.2957E-03	4.4979E-03	6.0864E+11	1.4087E-02	3.1411E-02	3.0393E-03	4.7503E-03
I-135	5.8259E-02	1.5357E-02	2.1864E-02	2.9184E+12	7.4265E-02	1.4226E-01	1.4348E-02	2.2659E-02
Xe-133	9.2174E-04	6.0091E-07	1.0749E-04	1.2033E+10	0.0000E+00	6.6893E-04	1.7703E-05	8.4606E-05
Xe-135	5.9664E-03	2.9523E-05	6.9231E-04	7.7249E+10	0.0000E+00	4.2345E-03	1.1335E-04	5.4322E-04
Cs-134	5.4678E-02	3.5177E-01	2.2055E-02	2.9378E+12	7.8227E-02	1.3894E-01	1.5015E-02	2.2892E-02
Cs-136	3.5938E-03	4.1517E-03	1.4500E-03	1.9314E+11	5.1415E-03	9.1366E-03	9.8719E-04	1.5051E-03
Cs-137	3.0437E-02	1.3289E-01	1.2277E-02	1.6353E+12	4.3546E-02	7.7344E-02	8.3581E-03	1.2743E-02
Ba-140	3.1864E-06	1.6681E-06	1.2856E-06	1.7125E+08	4.5587E-06	8.1010E-06	8.7529E-07	1.3345E-06
La-140	4.7226E-06	3.9312E-06	1.9062E-06	2.5390E+08	6.7565E-06	1.2016E-05	1.2980E-06	1.9822E-06
Ce-141	2.3743E-05	2.9189E-05	9.5779E-06	1.2758E+09	3.3968E-05	6.0344E-05	6.5206E-06	9.9416E-06
Ce-143	1.1292E-06	5.4572E-07	4.5662E-07	6.0848E+07	1.6155E-06	2.8832E-06	3.1112E-07	4.7422E-07
Ce-144	6.9501E-05	3.5515E-03	2.8035E-05	3.7342E+09	9.9434E-05	1.7661E-04	1.9085E-05	2.9098E-05
Pr-143	1.1027E-05	1.2221E-05	4.4488E-06	5.9261E+08	1.5776E-05	2.8032E-05	3.0289E-06	4.6181E-06
Kr-83m	1.5857E-03	1.0114E-09	1.8815E-04	2.1157E+10	0.0000E+00	1.1895E-03	3.1573E-05	1.4966E-04
Br-82	5.1606E-04	1.8866E-04	1.9175E-04	2.5551E+10	6.5784E-04	1.2366E-03	1.2538E-04	1.9825E-04
Br-83	2.8055E-03	3.3998E-05	1.0760E-03	1.4416E+11	3.5763E-03	7.1372E-03	7.1169E-04	1.1208E-03

Br-84	9.6689E-04	1.5503E-04	4.1906E-04	5.7298E+10	1.2325E-03	3.0851E-03	2.8957E-04	4.4874E-04
Rb-89	1.9433E-05	4.3555E-06	1.1043E-05	1.5536E+09	2.7803E-05	9.2578E-05	8.4043E-06	1.2317E-05
Rh-103m	3.2711E-05	2.3242E-08	1.3188E-05	1.7420E+09	4.6799E-05	8.3037E-05	8.9763E-06	1.5168E-05
Te-125m	4.0243E-05	4.0138E-05	1.6234E-05	2.1623E+09	5.7576E-05	1.0227E-04	1.1052E-05	1.6850E-05
Te-131	2.4479E-05	2.3856E-06	1.0156E-05	1.3385E+09	3.5021E-05	6.5809E-05	6.9848E-06	1.2758E-05
Te-133	9.0916E-07	4.9305E-08	2.5146E-07	2.7186E+07	1.3007E-06	6.1550E-07	1.3426E-07	5.3359E-07
Te-133m	1.0195E-05	2.5007E-06	4.5035E-06	6.0891E+08	1.4586E-05	3.0759E-05	3.1591E-06	4.7693E-06
Te-134	1.3610E-05	1.2087E-06	6.1956E-06	8.4179E+08	1.9472E-05	4.3427E-05	4.3891E-06	6.6039E-06
Xe-131m	3.6615E-06	5.9469E-10	4.2660E-07	4.7738E+07	0.0000E+00	2.6556E-06	7.0190E-08	3.3559E-07
Xe-133m	6.5924E-05	3.7751E-08	7.6894E-06	8.6084E+08	0.0000E+00	4.7873E-05	1.2667E-06	6.0532E-06
Xe-135m	2.7005E-02	2.4686E-04	3.3768E-03	3.7943E+11	0.0000E+00	2.4034E-02	5.9880E-04	2.7689E-03
Cs-134m	3.1233E-05	2.3393E-07	1.2965E-05	1.7351E+09	4.4685E-05	8.3820E-05	8.9102E-06	1.3543E-05
Cs-138	3.9251E-04	8.6760E-05	1.8539E-04	2.5339E+10	5.6156E-04	1.3406E-03	1.3292E-04	1.9916E-04
Total	4.7949E-01	1.0000E+00	0.0000E+00	0.0000E+00	5.8148E-01	1.1276E+00	1.1317E-01	1.7960E-01

Control Room Compartment Group Inventory Distribution:

Time (h) = 0.2780	Atmosphere	Sump
Noble gases (Ci)	3.5548E-02	0.0000E+00
Elemental I (Ci)	3.3380E-01	0.0000E+00
Organic I (Ci)	1.0324E-02	0.0000E+00
Aerosol I (Ci)	0.0000E+00	0.0000E+00
All Aerosols (Ci)	9.9823E-02	0.0000E+00
All Aerosols (kg)	3.9210E-07	0.0000E+00

Time (h) = 0.2780	Deposition Surfaces	Recirculating Filter
Noble gases (Ci)	0.0000E+00	0.0000E+00
Elemental I (Ci)	0.0000E+00	4.2551E-01
Organic I (Ci)	0.0000E+00	1.3160E-02
Aerosol I (Ci)	0.0000E+00	0.0000E+00
All Aerosols (Ci)	0.0000E+00	1.4281E-01
All Aerosols (kg)	0.0000E+00	5.6096E-07

Ruptured Steam Generator Compartment Nuclide Inventory (Ci) at Time (h) = 0.2780

Nuclide	Compartment Atmosphere	Dose Fract	Exposure (Ci-hr)	Decays (Bq-s)	Pathway 6 Inflow	Pathway 8 Outflow
Rb-86	2.7342E+00	1.3467E-04	4.3693E-01	5.8200E+13	2.7402E+00	5.1898E-03
Sr-89	4.1592E-02	1.2713E-05	6.6427E-03	8.8464E+11	4.1632E-02	7.8881E-05
Sr-90	3.8464E-03	3.6862E-05	6.1458E-04	8.1862E+10	3.8539E-03	7.2996E-06
Sr-91	1.7310E-02	2.6027E-07	2.7816E-03	3.7106E+11	1.7547E-02	3.3123E-05
Sr-92	7.2053E-03	8.2694E-08	1.1746E-03	1.5727E+11	7.5218E-03	1.4077E-05
Y-90	6.6830E-03	4.1627E-07	1.0682E-03	1.4229E+11	6.7009E-03	1.2689E-05
Y-91	5.2605E-01	1.8961E-04	8.4055E-02	1.1196E+13	5.2712E-01	9.9837E-04
Y-92	9.4278E-03	6.4092E-08	1.5115E-03	2.0117E+11	9.5108E-03	1.7980E-05
Y-93	6.1319E-03	1.0027E-07	9.8501E-04	1.3139E+11	6.2116E-03	1.1728E-05
Zr-95	7.4897E-01	1.3278E-04	1.1968E-01	1.5941E+13	7.5049E-01	1.4214E-03
Zr-97	1.2051E-02	3.9470E-07	1.9317E-03	2.5751E+11	1.2154E-02	2.2976E-05
Nb-95	1.0814E+00	4.9511E-05	1.7279E-01	2.3015E+13	1.0835E+00	2.0523E-03
Mo-99	6.4178E+01	1.9129E-03	1.0263E+01	1.3673E+15	6.4411E+01	1.2194E-01
Tc-99m	6.1403E+01	4.2999E-05	9.8184E+00	1.3066E+15	6.1617E+01	1.1666E-01
Ru-103	6.1896E-01	4.1986E-05	9.8904E-02	1.3174E+13	6.2024E-01	1.1747E-03
Ru-105	2.8949E-03	1.8551E-08	4.6823E-04	6.2567E+10	2.9740E-03	5.5920E-06
Ru-106	1.0385E+00	3.6579E-03	1.6594E-01	2.2103E+13	1.0406E+00	1.9709E-03
Rh-105	2.3795E-02	1.7475E-07	3.8070E-03	5.0726E+11	2.3907E-02	4.5245E-05
Te-127	7.7343E+00	1.8310E-05	1.2360E+00	1.6452E+14	7.7523E+00	1.4682E-02
Te-127m	7.6642E+00	1.2159E-03	1.2246E+00	1.6312E+14	7.6795E+00	1.4545E-02
Te-129	7.0850E+00	6.2030E-06	1.1324E+00	1.4987E+14	7.1030E+00	1.3451E-02
Te-129m	1.0765E+01	1.9032E-03	1.7202E+00	2.2914E+14	1.0788E+01	2.0432E-02
Te-131m	1.7879E+00	9.4398E-05	2.8619E-01	3.8138E+13	1.7980E+00	3.4019E-03
Te-132	2.9898E+01	2.1071E-03	4.7804E+00	6.3687E+14	2.9999E+01	5.6797E-02
I-131	1.5073E+03	3.6809E-01	2.4090E+02	3.2090E+16	1.5111E+03	2.8616E+00
I-132	1.1024E+03	1.3028E-02	1.8024E+02	2.4150E+16	1.1578E+03	2.1630E+00
I-133	1.9047E+03	8.6759E-02	3.0512E+02	4.0669E+16	1.9186E+03	3.6283E+00
I-134	1.8440E+02	2.1818E-03	3.1377E+01	4.2473E+15	2.0997E+02	3.8314E-01

I-135	9.7217E+02	1.4987E-02	1.5661E+02	2.0905E+16	9.9055E+02	1.8670E+00
Xe-133	2.8423E+00	2.4932E-07	3.2735E-01	3.6789E+13	1.2145E+00	3.2045E-03
Xe-135	1.8411E+01	1.2254E-05	2.1092E+00	2.3624E+14	7.7806E+00	2.0579E-02
Cs-134	1.0345E+03	3.5918E-01	1.6529E+02	2.2017E+16	1.0365E+03	1.9633E+00
Cs-136	6.7993E+01	4.2387E-03	1.0866E+01	1.4474E+15	6.8150E+01	1.2907E-01
Cs-137	5.7587E+02	1.3569E-01	9.2013E+01	1.2256E+16	5.7699E+02	1.0929E+00
Ba-139	5.3399E-03	7.9797E-09	8.8779E-04	1.1947E+11	5.8020E-03	1.0733E-05
Ba-140	6.0285E-02	1.7031E-06	9.6341E-03	1.2833E+12	6.0425E-02	1.1444E-04
La-140	8.9351E-02	4.0131E-06	1.4283E-02	1.9024E+12	8.9605E-02	1.6967E-04
La-141	3.8985E-03	1.7629E-08	6.2972E-04	8.4078E+10	3.9926E-03	7.5159E-06
La-142	9.1818E-04	1.2463E-08	1.5200E-04	2.0433E+10	9.8903E-04	1.8342E-06
Ce-141	4.4921E-01	2.9803E-05	7.1779E-02	9.5612E+12	4.5014E-01	8.5257E-04
Ce-143	2.1364E-02	5.5672E-07	3.4192E-03	4.5563E+11	2.1478E-02	4.0641E-05
Ce-144	1.3149E+00	3.6263E-03	2.1010E-01	2.7986E+13	1.3175E+00	2.4955E-03
Pr-143	2.0863E-01	1.2477E-05	3.3339E-02	4.4410E+12	2.0910E-01	3.9601E-04
Kr-83m	4.8888E+00	4.1960E-10	5.7296E-01	6.4671E+13	2.1628E+00	5.6685E-03
Br-82	8.6114E+00	1.8472E-04	1.3780E+00	1.8363E+14	8.6553E+00	1.6379E-02
Br-83	4.6815E+01	3.2941E-05	7.6524E+00	1.0254E+15	4.9142E+01	9.1824E-02
Br-84	1.6135E+01	1.4443E-04	2.8656E+00	3.9203E+14	2.0020E+01	3.5626E-02
Rb-89	3.6767E-01	3.9758E-06	7.3989E-02	1.0422E+13	5.8276E-01	9.6567E-04
Y-91m	1.0282E-02	2.3230E-08	1.6443E-03	2.1709E+11	1.0318E-02	1.9537E-05
Nb-95m	5.8041E-03	1.0577E-07	9.2744E-04	1.2353E+11	5.8161E-03	1.1016E-05
Nb-97	1.3936E-03	4.4177E-09	2.2827E-04	3.0516E+10	1.4695E-03	2.7416E-06
Rh-103m	6.1888E-01	2.3736E-08	9.8854E-02	1.3059E+13	6.1967E-01	1.1739E-03
Te-125m	7.6140E-01	4.0982E-05	1.2166E-01	1.6205E+13	7.6294E-01	1.4450E-03
Te-131	4.6313E-01	2.4118E-06	7.5360E-02	9.9315E+12	4.8235E-01	9.0260E-04
Te-133	1.7201E-02	5.9107E-08	2.2126E-03	2.5225E+11	9.1236E-03	2.3073E-05
Te-133m	1.9289E-01	2.4751E-06	3.2717E-02	4.4252E+12	2.1824E-01	3.9896E-04
Te-134	2.5750E-01	1.1843E-06	4.4559E-02	6.0571E+12	3.0331E-01	5.4800E-04
Xe-131m	1.1290E-02	2.4673E-10	1.2991E-03	1.4594E+11	4.8158E-03	1.2711E-05
Xe-133m	2.0328E-01	1.5663E-08	2.3417E-02	2.6318E+12	8.6902E-02	2.2927E-04
Xe-135m	8.2837E+01	1.0215E-04	1.0256E+01	1.1576E+15	4.0823E+01	1.0474E-01
Cs-134m	5.9093E-01	2.3649E-07	9.6205E-02	1.2877E+13	6.1522E-01	1.1523E-03

Cs-138	7.4263E+00	8.3979E-05	1.3172E+00	1.8014E+14	9.1898E+00	1.6366E-02
Ba-141	6.9896E-04	3.2440E-09	1.3497E-04	1.8834E+10	1.0227E-03	1.7345E-06
Total	7.7403E+03	1.0000E+00	0.0000E+00	0.0000E+00	7.8125E+03	1.4769E+01

Dose Equivalent (Ci/cc) I-131 (Thyroid)	6.7329E-07
Dose Equivalent (Ci/cc) I-131 (CEDE)	6.8647E-07
Dose Equivalent (Ci/cc) I-131 (ICRP2 Thyroid)	7.7504E-07
Total I (Ci)	5.6709E+03
Dose Equivalent (Ci/cc) Xe-133 (EDE)	4.4425E-07

Ruptured Steam Generator Compartment Group Inventory Distribution:

Time (h) = 0.2780	Atmosphere	Sump
Noble gases (Ci)	1.0919E+02	0.0000E+00
Elemental I (Ci)	5.5702E+03	0.0000E+00
Organic I (Ci)	1.7227E+02	0.0000E+00
Aerosol I (Ci)	0.0000E+00	0.0000E+00
All Aerosols (Ci)	1.8886E+03	0.0000E+00
All Aerosols (kg)	7.4184E-03	0.0000E+00

```
#######################################################################
    ALION RADTRAD Version 3.10 Rev 2 run on 12/01/2014  at 16:18:07

                Copyright © 2009 Alion Science and Technology
#######################################################################
```

Exclusion Area Boundary Doses:

Time (h) = 0.5000	Whole Body	Thyroid	TEDE
Delta dose (rem)	3.8721E-02	1.9213E+01	1.2532E+00
Accumulated dose (rem)	1.3089E-01	6.3056E+01	4.1132E+00

Low Population Zone Doses:

Time (h) = 0.5000	Whole Body	Thyroid	TEDE
Delta dose (rem)	7.4539E-03	3.6985E+00	2.4124E-01
Accumulated dose (rem)	2.3446E-02	1.1316E+01	7.3813E-01

Control Room Doses:

Time (h) = 0.5000	Whole Body	Thyroid	TEDE	Skin
Delta dose (rem)	1.1178E-03	1.6381E+01	9.4099E-01	5.0693E-02
Accumulated dose (rem)	3.7710E-03	5.4810E+01	3.3271E+00	1.6997E-01

****

RCS Compartment Nuclide Inventory (Ci) at Time (h) = 0.5000

Nuclide	Compartment Atmosphere	Dose Fract	Exposure (Ci-hr)	Decays (Bq-s)	Pathway 1 Outflow	Pathway 5 Outflow	Pathway 6 Outflow
Rb-86	1.3560E+01	1.3474E-04	7.8769E+00	1.0492E+15	3.5851E-01	5.9537E-03	4.6636E+00
Sr-89	2.0650E-01	1.2723E-05	1.1979E-01	1.5953E+13	5.4488E-03	9.0519E-05	7.0903E-02
Sr-90	1.9083E-02	3.6884E-05	1.1081E-02	1.4759E+12	5.0426E-04	8.3748E-06	6.5600E-03
Sr-91	8.4500E-02	2.5938E-07	4.9949E-02	6.6626E+12	2.2861E-03	3.7849E-05	2.9648E-02
Sr-92	3.3774E-02	8.1612E-08	2.0887E-02	2.7960E+12	9.6974E-04	1.5930E-05	1.2478E-02
Y-90	3.3122E-02	4.1642E-07	1.9254E-02	2.5647E+12	8.7653E-04	1.4555E-05	1.1401E-02
Y-91	2.6096E+00	1.8972E-04	1.5154E+00	2.0186E+14	6.8968E-02	1.1454E-03	8.9720E-01
Y-92	4.6265E-02	6.3957E-08	2.7178E-02	3.6173E+12	1.2410E-03	2.0574E-05	1.6116E-02
Y-93	2.9962E-02	9.9950E-08	1.7692E-02	2.3597E+12	8.0945E-04	1.3404E-05	1.0500E-02
Zr-95	3.7155E+00	1.3286E-04	2.1576E+00	2.8740E+14	9.8194E-02	1.6308E-03	1.2774E+00
Zr-97	5.9245E-02	3.9404E-07	3.4748E-02	4.6320E+12	1.5864E-03	2.6301E-05	2.0601E-02
Nb-95	5.3647E+00	4.9540E-05	3.1153E+00	4.1495E+14	1.4177E-01	2.3546E-03	1.8443E+00
Mo-99	3.1766E+02	1.9130E-03	1.8492E+02	2.4637E+16	8.4225E+00	1.3982E-01	1.0952E+02
Tc-99m	3.0399E+02	4.3002E-05	1.7693E+02	2.3544E+16	8.0576E+00	1.3377E-01	1.0478E+02
Ru-103	3.0703E+00	4.2010E-05	1.7831E+00	2.3752E+14	8.1151E-02	1.3477E-03	1.0557E+00
Ru-105	1.3873E-02	1.8405E-08	8.3702E-03	1.1183E+12	3.8559E-04	6.3613E-06	4.9828E-03

Ru-106	5.1523E+00	3.6601E-03	2.9918E+00	3.9851E+14	1.3615E-01	2.2612E-03	1.7712E+00
Rh-105	1.1760E-01	1.7469E-07	6.8573E-02	9.1367E+12	3.1248E-03	5.1859E-05	4.0622E-02
Te-127	3.8352E+01	1.8319E-05	2.2282E+01	2.9658E+15	1.0142E+00	1.6842E-02	1.3193E+01
Te-127m	3.8022E+01	1.2166E-03	2.2079E+01	2.9409E+15	1.0048E+00	1.6688E-02	1.3071E+01
Te-129	3.5125E+01	6.2056E-06	2.0412E+01	2.7018E+15	9.2919E-01	1.5430E-02	1.2086E+01
Te-129m	5.3400E+01	1.9042E-03	3.1013E+01	4.1311E+15	1.4115E+00	2.3441E-02	1.8361E+01
Te-131m	8.8249E+00	9.4334E-05	5.1532E+00	6.8672E+14	2.3494E-01	3.8980E-03	3.0533E+00
Te-132	1.4804E+02	2.1073E-03	8.6147E+01	1.1477E+16	3.9231E+00	6.5131E-02	5.1017E+01
I-131	7.4720E+03	3.6824E-01	4.3424E+03	5.7845E+17	1.9767E+02	3.2824E+00	2.5712E+03
I-132	5.1248E+03	1.2833E-02	3.1990E+03	4.2849E+17	1.4896E+02	2.4430E+00	1.9136E+03
I-133	9.3799E+03	8.6650E-02	5.4910E+03	7.3187E+17	2.5053E+02	4.1550E+00	3.2546E+03
I-134	7.6778E+02	2.0994E-03	5.4400E+02	7.3567E+16	2.6333E+01	4.2271E-01	3.3111E+02
I-135	4.7122E+03	1.4909E-02	2.8074E+03	3.7470E+17	1.2881E+02	2.1297E+00	1.6682E+03
Xe-133	2.5255E+01	3.1856E-07	7.5365E+00	8.8628E+14	2.3859E-01	4.9092E-03	3.8454E+00
Xe-135	1.6555E+02	1.5779E-05	4.8938E+01	5.7429E+15	1.5450E+00	3.1824E-02	2.4928E+01
Cs-134	5.1324E+03	3.5939E-01	2.9802E+03	3.9696E+17	1.3562E+02	2.2524E+00	1.7643E+03
Cs-136	3.3717E+02	4.2408E-03	1.9588E+02	2.6093E+16	8.9158E+00	1.4806E-01	1.1598E+02
Cs-137	2.8570E+03	1.3577E-01	1.6590E+03	2.2097E+17	7.5496E+01	1.2538E+00	9.8214E+02
Ba-139	2.3694E-02	7.7789E-09	1.5594E-02	2.0974E+12	7.3812E-04	1.1997E-05	9.3972E-03
Ba-140	2.9894E-01	1.7039E-06	1.7368E-01	2.3135E+13	7.9051E-03	1.3128E-04	1.0283E-01
La-140	4.4274E-01	4.0143E-06	2.5743E-01	3.4289E+13	1.1720E-02	1.9461E-04	1.5244E-01
La-141	1.8703E-02	1.7494E-08	1.1260E-02	1.5033E+12	5.1799E-04	8.5530E-06	6.6996E-03
La-142	4.1226E-03	1.2181E-08	2.6768E-03	3.5965E+11	1.2618E-04	2.0555E-06	1.6101E-03
Ce-141	2.2282E+00	2.9820E-05	1.2941E+00	1.7238E+14	5.8895E-02	9.7811E-04	7.6615E-01
Ce-143	1.0550E-01	5.5641E-07	6.1574E-02	8.2050E+12	2.8067E-03	4.6573E-05	3.6481E-02
Ce-144	6.5236E+00	3.6284E-03	3.7881E+00	5.0457E+14	1.7239E-01	2.8631E-03	2.2426E+00
Pr-143	1.0346E+00	1.2483E-05	6.0103E-01	8.0060E+13	2.7356E-02	4.5429E-04	3.5585E-01
Kr-83m	4.0508E+01	5.1737E-10	1.2729E+01	1.5006E+15	4.0793E-01	8.3616E-03	6.5497E+00
Br-82	4.2538E+01	1.8463E-04	2.4818E+01	3.3071E+15	1.1312E+00	1.8771E-02	1.4703E+01
Br-83	2.1778E+02	3.2453E-05	1.3584E+02	1.8196E+16	6.3236E+00	1.0373E-01	8.1250E+01
Br-84	5.9876E+01	1.3619E-04	4.8687E+01	6.6493E+15	2.4540E+00	3.8511E-02	3.0166E+01
Rb-89	9.9370E-01	3.6210E-06	1.2142E+00	1.7027E+14	6.8291E-02	1.0070E-03	7.8882E-01
Y-91m	5.0785E-02	2.3219E-08	2.9613E-02	3.9108E+12	1.3489E-03	2.2393E-05	1.7540E-02

Nb-95m	2.8791E-02	1.0583E-07	1.6721E-02	2.2270E+12	7.6097E-04	1.2638E-05	9.8993E-03
Nb-97	6.4646E-03	4.3493E-09	4.0493E-03	5.4111E+11	1.8888E-04	3.0945E-06	2.4240E-03
Rh-103m	3.0729E+00	2.3755E-08	1.7826E+00	2.3554E+14	8.1098E-02	1.3471E-03	1.0552E+00
Te-125m	3.7771E+00	4.1006E-05	2.1934E+00	2.9217E+14	9.9823E-02	1.6578E-03	1.2986E+00
Te-131	2.2059E+00	2.3891E-06	1.3451E+00	1.7720E+14	6.2343E-02	1.0247E-03	8.0265E-01
Te-133	1.0229E-01	6.2395E-08	4.2086E-02	4.9483E+12	1.4308E-03	2.8710E-05	2.2488E-02
Te-133m	8.1008E-01	2.3856E-06	5.6820E-01	7.6784E+13	2.7421E-02	4.4092E-04	3.4537E-01
Te-134	1.0243E+00	1.1299E-06	7.6599E-01	1.0399E+14	3.7678E-02	5.9943E-04	4.6954E-01
Xe-131m	1.0068E-01	3.1584E-10	2.9965E-02	3.5228E+12	9.4806E-04	1.9511E-05	1.5283E-02
Xe-133m	1.8046E+00	2.0004E-08	5.3888E-01	6.3371E+13	1.7063E-02	3.5106E-04	2.7499E-01
Xe-135m	5.6732E+02	1.1462E-04	2.0737E+02	2.4249E+16	6.8795E+00	1.3930E-01	1.0911E+02
Cs-134m	2.7802E+00	2.3360E-07	1.7123E+00	2.2913E+14	7.9391E-02	1.3051E-03	1.0223E+00
Cs-138	2.7659E+01	7.9232E-05	2.2392E+01	3.0571E+15	1.1272E+00	1.7702E-02	1.3866E+01
Ba-141	2.0919E-03	2.9780E-09	2.2325E-03	3.1046E+11	1.2126E-04	1.8241E-06	1.4288E-03
Total	3.7935E+04	1.0000E+00	0.0000E+00	0.0000E+00	1.0191E+03	1.6893E+01	1.3232E+04

Dose Equivalent (Ci/cc) I-131 (Thyroid)	6.9706E-07
Dose Equivalent (Ci/cc) I-131 (CEDE)	7.1043E-07
Dose Equivalent (Ci/cc) I-131 (ICRP2 Thyroid)	8.0071E-07
Total I (Ci)	2.7457E+04
Dose Equivalent (Ci/cc) Xe-133 (EDE)	6.5975E-07

RCS Compartment Group Inventory Distribution:

Time (h) = 0.5000	Atmosphere	Sump
Noble gases (Ci)	8.0054E+02	0.0000E+00
Elemental I (Ci)	2.6944E+04	0.0000E+00
Organic I (Ci)	8.3330E+02	0.0000E+00
Aerosol I (Ci)	0.0000E+00	0.0000E+00
All Aerosols (Ci)	9.3573E+03	0.0000E+00
All Aerosols (kg)	3.6804E-02	0.0000E+00

Intact Steam Generators Compartment Nuclide Inventory (Ci) at Time (h) = 0.5000

Nuclide	Compartment Atmosphere	Dose Fract	Exposure (Ci-hr)	Decays (Bq-s)	Pathway 5 Inflow	Pathway 7 Outflow
Rb-86	5.9287E-03	1.3486E-04	1.6585E-03	2.2092E+11	5.9537E-03	2.2139E-05
Sr-89	9.0281E-05	1.2742E-05	2.5235E-05	3.3609E+09	9.0519E-05	3.3680E-07
Sr-90	8.3431E-06	3.6920E-05	2.3333E-06	3.1080E+08	8.3748E-06	3.1146E-08
Sr-91	3.6944E-05	2.5796E-07	1.0450E-05	1.3940E+09	3.7849E-05	1.3984E-07
Sr-92	1.4766E-05	7.9848E-08	4.2991E-06	5.7562E+08	1.5930E-05	5.7887E-08
Y-90	1.4481E-05	4.1666E-07	4.0528E-06	5.3985E+08	1.4555E-05	5.4107E-08
Y-91	1.1409E-03	1.8990E-04	3.1911E-04	4.2505E+10	1.1454E-03	4.2596E-06
Y-92	2.0227E-05	6.3763E-08	5.7001E-06	7.5873E+08	2.0574E-05	7.6210E-08
Y-93	1.3099E-05	9.9442E-08	3.7029E-06	4.9391E+08	1.3404E-05	4.9543E-08
Zr-95	1.6244E-03	1.3298E-04	4.5433E-04	6.0518E+10	1.6308E-03	6.0646E-06
Zr-97	2.5902E-05	3.9300E-07	7.2905E-06	9.7190E+08	2.6301E-05	9.7451E-08
Nb-95	2.3455E-03	4.9588E-05	6.5599E-04	8.7378E+10	2.3546E-03	8.7564E-06
Mo-99	1.3888E-01	1.9131E-03	3.8905E-02	5.1832E+12	1.3982E-01	5.1950E-04
Tc-99m	1.3291E-01	4.3008E-05	3.7225E-02	4.9536E+12	1.3377E-01	4.9705E-04
Ru-103	1.3424E-03	4.2049E-05	3.7546E-04	5.0012E+10	1.3477E-03	5.0119E-06
Ru-105	6.0654E-06	1.8169E-08	1.7383E-06	2.3227E+08	6.3613E-06	2.3326E-08
Ru-106	2.2526E-03	3.6637E-03	6.3000E-04	8.3916E+10	2.2612E-03	8.4094E-06
Rh-105	5.1415E-05	1.7460E-07	1.4418E-05	1.9211E+09	5.1859E-05	1.9257E-07
Te-127	1.6767E-02	1.8333E-05	4.6911E-03	6.2438E+11	1.6842E-02	6.2623E-05
Te-127m	1.6623E-02	1.2178E-03	4.6492E-03	6.1928E+11	1.6688E-02	6.2060E-05
Te-129	1.5357E-02	6.2098E-06	4.2970E-03	5.6866E+11	1.5430E-02	5.7365E-05
Te-129m	2.3347E-02	1.9060E-03	6.5302E-03	8.6984E+11	2.3441E-02	8.7170E-05
Te-131m	3.8583E-03	9.4234E-05	1.0829E-03	1.4431E+11	3.8980E-03	1.4467E-05
Te-132	6.4724E-02	2.1078E-03	1.8126E-02	2.4149E+12	6.5131E-02	2.4203E-04
I-131	3.2668E+00	3.6849E-01	9.1413E-01	1.2177E+14	3.2824E+00	1.2203E-02
I-132	2.2406E+00	1.2513E-02	6.5622E-01	8.7920E+13	2.4430E+00	8.8469E-03
I-133	4.1009E+00	8.6480E-02	1.1529E+00	1.5367E+14	4.1550E+00	1.5406E-02
I-134	3.3568E-01	1.9560E-03	1.0663E-01	1.4431E+13	4.2271E-01	1.4617E-03
I-135	2.0602E+00	1.4786E-02	5.8569E-01	7.8179E+13	2.1297E+00	7.8458E-03
Xe-133	1.1042E-02	4.2859E-07	2.1330E-03	2.5845E+11	4.9092E-03	2.5674E-05

Xe-135	7.2379E-02	2.1305E-05	1.3900E-02	1.6804E+12	3.1824E-02	1.6701E-04
Cs-134	2.2439E+00	3.5975E-01	6.2756E-01	8.3590E+13	2.2524E+00	8.3768E-03
Cs-136	1.4741E-01	4.2441E-03	4.1240E-02	5.4935E+12	1.4806E-01	5.5053E-04
Cs-137	1.2491E+00	1.3591E-01	3.4934E-01	4.6532E+13	1.2538E+00	4.6630E-03
Ba-139	1.0359E-05	7.4420E-09	3.1385E-06	4.2232E+08	1.1997E-05	4.2612E-08
Ba-140	1.3070E-04	1.7053E-06	3.6565E-05	4.8707E+09	1.3128E-04	4.8812E-07
La-140	1.9357E-04	4.0162E-06	5.4182E-05	7.2170E+09	1.9461E-04	7.2338E-07
La-141	8.1771E-06	1.7291E-08	2.3412E-06	3.1267E+08	8.5530E-06	3.1408E-08
La-142	1.8024E-06	1.1710E-08	5.4136E-07	7.2769E+07	2.0555E-06	7.3371E-09
Ce-141	9.7418E-04	2.9847E-05	2.7248E-04	3.6296E+10	9.7811E-04	3.6373E-06
Ce-143	4.6125E-05	5.5593E-07	1.2942E-05	1.7246E+09	4.6573E-05	1.7288E-07
Ce-144	2.8522E-03	3.6320E-03	7.9768E-04	1.0625E+11	2.8631E-03	1.0648E-05
Pr-143	4.5234E-04	1.2493E-05	1.2654E-04	1.6856E+10	4.5429E-04	1.6892E-06
Kr-83m	1.7710E-02	6.8528E-10	3.5470E-03	4.3159E+11	8.3616E-03	4.3123E-05
Br-82	1.8598E-02	1.8449E-04	5.2171E-03	6.9519E+11	1.8771E-02	6.9686E-05
Br-83	9.5215E-02	3.1654E-05	2.7873E-02	3.7346E+12	1.0373E-01	3.7574E-04
Br-84	2.6178E-02	1.2083E-04	9.0870E-03	1.2430E+12	3.8511E-02	1.2672E-04
Rb-89	4.3445E-04	2.7914E-06	1.9691E-04	2.7733E+10	1.0070E-03	2.8749E-06
Y-91m	2.2204E-05	2.3213E-08	6.2282E-06	8.2240E+08	2.2393E-05	8.3185E-08
Nb-95m	1.2587E-05	1.0592E-07	3.5207E-06	4.6893E+08	1.2638E-05	4.6997E-08
Nb-97	2.8264E-06	4.2338E-09	8.2924E-07	1.1081E+08	3.0945E-06	1.1185E-08
Rh-103m	1.3435E-03	2.3787E-08	3.7552E-04	4.9605E+10	1.3471E-03	5.0118E-06
Te-125m	1.6514E-03	4.1045E-05	4.6187E-04	6.1522E+10	1.6578E-03	6.1652E-06
Te-131	9.6444E-04	2.3454E-06	2.7780E-04	3.6560E+10	1.0247E-03	3.7331E-06
Te-133	4.4721E-05	7.6003E-08	1.0785E-05	1.3211E+09	2.8710E-05	1.3738E-07
Te-133m	3.5417E-04	2.2307E-06	1.1177E-04	1.5116E+10	4.4092E-04	1.5302E-06
Te-134	4.4785E-04	1.0327E-06	1.4727E-04	2.0017E+10	5.9943E-04	2.0327E-06
Xe-131m	4.4017E-05	4.2527E-10	8.4878E-06	1.0280E+09	1.9511E-05	1.0211E-07
Xe-133m	7.8898E-04	2.6907E-08	1.5249E-04	1.8477E+10	3.5106E-04	1.8356E-06
Xe-135m	2.4803E-01	1.4475E-04	5.5090E-02	6.6830E+12	1.3930E-01	6.8818E-04
Cs-134m	1.2155E-03	2.2890E-07	3.5296E-04	4.7242E+10	1.3051E-03	4.7498E-06
Cs-138	1.2093E-02	7.0403E-05	4.1857E-03	5.7235E+11	1.7702E-02	5.8341E-05
Ba-141	9.1457E-07	2.4036E-09	3.7907E-07	5.2887E+07	1.8241E-06	5.4547E-09

Total	1.6585E+01	1.0000E+00	0.0000E+00	0.0000E+00	1.6893E+01	6.2553E-02

Dose Equivalent (Ci/cc) I-131 (Thyroid)	4.8560E-10
Dose Equivalent (Ci/cc) I-131 (CEDE)	4.9491E-10
Dose Equivalent (Ci/cc) I-131 (ICRP2 Thyroid)	5.5780E-10
Total I (Ci)	1.2004E+01
Dose Equivalent (Ci/cc) Xe-133 (EDE)	4.5961E-10

Intact Steam Generators Compartment Group Inventory Distribution:

Time (h) = 0.5000	Atmosphere	Sump
Noble gases (Ci)	3.5000E-01	0.0000E+00
Elemental I (Ci)	1.1780E+01	0.0000E+00
Organic I (Ci)	3.6433E-01	0.0000E+00
Aerosol I (Ci)	0.0000E+00	0.0000E+00
All Aerosols (Ci)	4.0911E+00	0.0000E+00
All Aerosols (kg)	1.6091E-05	0.0000E+00

Control Room Compartment Nuclide Inventory (Ci) at Time (h) = 0.5000

Nuclide	Compartment Atmosphere	Dose Fract	Exposure (Ci-hr)	Decays (Bq-s)	Compartment Recirc Filtr	Pathway 2 Inflow	Pathway 3 Inflow	Pathway 4 Outflow
Rb-86	5.5651E-05	1.2883E-04	7.6651E-05	1.0210E+10	3.1226E-04	3.8010E-04	6.4878E-05	8.2447E-05
Sr-89	8.4744E-07	1.2162E-05	1.1654E-06	1.5520E+08	4.7550E-06	5.7718E-06	9.8635E-07	1.2561E-06
Sr-91	3.4678E-07	2.4873E-07	4.8749E-07	6.5028E+07	1.9458E-06	2.4441E-06	4.1260E-07	5.2527E-07
Y-91	1.0710E-05	1.8138E-04	1.4746E-05	1.9642E+09	6.0091E-05	7.3112E-05	1.2481E-05	1.5861E-05
Zr-95	1.5248E-05	1.2702E-04	2.0995E-05	2.7966E+09	8.5556E-05	1.0409E-04	1.7771E-05	2.2582E-05
Nb-95	2.2016E-05	4.7364E-05	3.0313E-05	4.0377E+09	1.2353E-04	1.5029E-04	2.5657E-05	3.2610E-05
Mo-99	1.3037E-03	1.8297E-03	1.8002E-03	2.3983E+11	7.3148E-03	8.9392E-03	1.5237E-03	1.9367E-03
Tc-99m	1.2475E-03	4.1128E-05	1.7223E-03	2.2918E+11	6.9999E-03	8.5510E-03	1.4577E-03	1.9134E-03
Ru-103	1.2600E-05	4.0165E-05	1.7351E-05	2.3112E+09	7.0701E-05	8.6031E-05	1.4686E-05	1.8663E-05
Ru-106	2.1145E-05	3.4992E-03	2.9111E-05	3.8777E+09	1.1864E-04	1.4433E-04	2.4640E-05	3.1312E-05
Rh-105	4.8262E-07	1.6714E-07	6.6772E-07	8.8969E+07	2.7080E-06	3.3191E-06	5.6516E-07	7.1903E-07

Te-127	1.5739E-04	1.7516E-05	2.1683E-04	2.8861E+10	8.8312E-04	1.0754E-03	1.8353E-04	2.3841E-04
Te-127m	1.5604E-04	1.1632E-03	2.1484E-04	2.8617E+10	8.7553E-04	1.0652E-03	1.8184E-04	2.3108E-04
Te-129	1.4415E-04	5.9338E-06	1.9865E-04	2.6288E+10	8.0882E-04	9.8539E-04	1.6814E-04	2.5273E-04
Te-129m	2.1915E-04	1.8206E-03	3.0178E-04	4.0198E+10	1.2296E-03	1.4964E-03	2.5543E-04	3.2460E-04
Te-131m	3.6217E-05	9.0275E-05	5.0191E-05	6.6885E+09	2.0321E-04	2.4972E-04	4.2482E-05	5.4015E-05
Te-132	6.0755E-04	2.0155E-03	8.3855E-04	1.1172E+11	3.4089E-03	4.1630E-03	7.0976E-04	9.0213E-04
I-131	4.2167E-02	3.8465E-01	4.6164E-02	6.1495E+12	1.8365E-01	2.3668E-01	3.5769E-02	4.9474E-02
I-132	2.8911E-02	1.3519E-02	3.4299E-02	4.5951E+12	1.2594E-01	1.8316E-01	2.6661E-02	3.7112E-02
I-133	5.2934E-02	9.0592E-02	5.8427E-02	7.7877E+12	2.3054E-01	3.0080E-01	4.5285E-02	6.2663E-02
I-134	4.3327E-03	2.2418E-03	5.9124E-03	8.0002E+11	1.8871E-02	3.3809E-02	4.6240E-03	6.4637E-03
I-135	2.6593E-02	1.5621E-02	2.9936E-02	3.9959E+12	1.1582E-01	1.5568E-01	2.3220E-02	3.2165E-02
Xe-133	2.5398E-03	2.1321E-06	5.1336E-04	6.1593E+10	0.0000E+00	2.3071E-03	5.2252E-05	4.6805E-04
Xe-135	1.6605E-02	1.0579E-04	3.3392E-03	3.9983E+11	0.0000E+00	1.4598E-02	3.3854E-04	3.0400E-03
Cs-134	2.1063E-02	3.4360E-01	2.8998E-02	3.8626E+12	1.1818E-01	1.4377E-01	2.4545E-02	3.1190E-02
Cs-136	1.3837E-03	4.0548E-03	1.9062E-03	2.5392E+11	7.7639E-03	9.4535E-03	1.6134E-03	2.0504E-03
Cs-137	1.1725E-02	1.2981E-01	1.6142E-02	2.1502E+12	6.5789E-02	8.0028E-02	1.3663E-02	1.7362E-02
Ba-140	1.2268E-06	1.6292E-06	1.6901E-06	2.2513E+08	6.8837E-06	8.3820E-06	1.4305E-06	1.8180E-06
La-140	1.8170E-06	3.8388E-06	2.5055E-06	3.3373E+08	1.0195E-05	1.2432E-05	2.1207E-06	2.7049E-06
Ce-141	9.1443E-06	2.8510E-05	1.2592E-05	1.6773E+09	5.1308E-05	6.2438E-05	1.0658E-05	1.3545E-05
Ce-143	4.3297E-07	5.3243E-07	5.9967E-07	7.9909E+07	2.4294E-06	2.9826E-06	5.0756E-07	6.4532E-07
Ce-144	2.6773E-05	3.4690E-03	3.6860E-05	4.9097E+09	1.5022E-04	1.8274E-04	3.1199E-05	3.9646E-05
Pr-143	4.2460E-06	1.1935E-05	5.8488E-06	7.7908E+08	2.3824E-05	2.9005E-05	4.9504E-06	6.2915E-06
Kr-83m	4.0783E-03	3.4154E-09	8.5525E-04	1.0304E+11	0.0000E+00	3.9359E-03	8.9162E-05	7.8747E-04
Br-82	2.4006E-04	1.9294E-04	2.6397E-04	3.5175E+10	1.0455E-03	1.3564E-03	2.0457E-04	2.8301E-04
Br-83	1.2290E-03	3.4187E-05	1.4564E-03	1.9512E+11	5.3527E-03	7.7731E-03	1.1320E-03	1.5721E-03
Br-84	3.3791E-04	1.4725E-04	5.3577E-04	7.3252E+10	1.4717E-03	3.2858E-03	4.2223E-04	5.9295E-04
Rb-89	4.0781E-06	3.7730E-06	1.2877E-05	1.8114E+09	2.2882E-05	9.3940E-05	1.1095E-05	1.4758E-05
Rh-103m	1.2611E-05	2.2707E-08	1.7343E-05	2.2909E+09	7.0759E-05	8.5923E-05	1.4679E-05	2.2923E-05
Te-125m	1.5501E-05	3.9205E-05	2.1344E-05	2.8430E+09	8.6974E-05	1.0582E-04	1.8065E-05	2.2957E-05
Te-131	9.0529E-06	2.3030E-06	1.3197E-05	1.7385E+09	5.0795E-05	6.7931E-05	1.1178E-05	2.0456E-05
Te-133	4.1978E-07	5.5607E-08	3.8174E-07	4.3473E+07	2.3554E-06	7.0415E-07	3.0942E-07	1.2350E-06
Te-133m	3.3245E-06	2.3486E-06	5.6932E-06	7.6976E+08	1.8654E-05	3.1601E-05	4.8224E-06	6.2343E-06
Te-134	4.2038E-06	1.1220E-06	7.7416E-06	1.0518E+09	2.3588E-05	4.4527E-05	6.5633E-06	8.5262E-06

Xe-131m	1.0127E-05	2.1157E-09	2.0429E-06	2.4500E+08	0.0000E+00	9.1909E-06	2.0765E-07	1.8616E-06
Xe-133m	1.8149E-04	1.3386E-07	3.6701E-05	4.4035E+09	0.0000E+00	1.6507E-04	3.7366E-06	3.3466E-05
Xe-135m	5.8550E-02	7.3374E-04	1.3510E-02	1.6184E+12	0.0000E+00	7.6934E-02	1.4945E-03	1.2740E-02
Cs-134m	1.1410E-05	2.2553E-07	1.6825E-05	2.2517E+09	6.4021E-05	8.6517E-05	1.4239E-05	1.8201E-05
Cs-138	1.1351E-04	7.9461E-05	2.2855E-04	3.1237E+10	6.3690E-04	1.3716E-03	1.9407E-04	2.5346E-04
Total	2.7711E-01	1.0000E+00	0.0000E+00	0.0000E+00	8.9817E-01	1.2834E+00	1.8413E-01	2.6449E-01

Control Room Compartment Group Inventory Distribution:

Time (h) = 0.5000	Atmosphere	Sump
Noble gases (Ci)	8.1965E-02	0.0000E+00
Elemental I (Ci)	1.5204E-01	0.0000E+00
Organic I (Ci)	4.7023E-03	0.0000E+00
Aerosol I (Ci)	0.0000E+00	0.0000E+00
All Aerosols (Ci)	3.8402E-02	0.0000E+00
All Aerosols (kg)	1.5104E-07	0.0000E+00

Time (h) = 0.5000	Deposition Surfaces	Recirculating Filter
Noble gases (Ci)	0.0000E+00	0.0000E+00
Elemental I (Ci)	0.0000E+00	6.6222E-01
Organic I (Ci)	0.0000E+00	2.0481E-02
Aerosol I (Ci)	0.0000E+00	0.0000E+00
All Aerosols (Ci)	0.0000E+00	2.1547E-01
All Aerosols (kg)	0.0000E+00	8.4749E-07

Ruptured Steam Generator Compartment Nuclide Inventory (Ci) at Time (h) = 0.5000

Nuclide	Compartment Atmosphere	Dose Fract	Exposure (Ci-hr)	Decays (Bq-s)	Pathway 6 Inflow	Pathway 8 Outflow
Rb-86	4.6449E+00	1.3486E-04	1.2993E+00	1.7307E+14	4.6636E+00	1.6375E-02
Sr-89	7.0732E-02	1.2742E-05	1.9770E-02	2.6330E+12	7.0903E-02	2.4911E-04
Sr-90	6.5366E-03	3.6920E-05	1.8279E-03	2.4348E+11	6.5600E-03	2.3037E-05

Sr-91	2.8944E-02	2.5796E-07	8.1868E-03	1.0921E+12	2.9648E-02	1.0343E-04
Sr-92	1.1569E-02	7.9848E-08	3.3680E-03	4.5094E+11	1.2478E-02	4.2815E-05
Y-90	1.1346E-02	4.1666E-07	3.1750E-03	4.2292E+11	1.1401E-02	4.0019E-05
Y-91	8.9388E-01	1.8990E-04	2.4999E-01	3.3299E+13	8.9720E-01	3.1505E-03
Y-92	1.5847E-02	6.3763E-08	4.4655E-03	5.9440E+11	1.6116E-02	5.6368E-05
Y-93	1.0263E-02	9.9441E-08	2.9009E-03	3.8694E+11	1.0500E-02	3.6644E-05
Zr-95	1.2727E+00	1.3298E-04	3.5593E-01	4.7410E+13	1.2774E+00	4.4856E-03
Zr-97	2.0294E-02	3.9300E-07	5.7114E-03	7.6140E+11	2.0601E-02	7.2079E-05
Nb-95	1.8376E+00	4.9588E-05	5.1391E-01	6.8452E+13	1.8443E+00	6.4765E-03
Mo-99	1.0881E+02	1.9131E-03	3.0478E+01	4.0606E+15	1.0952E+02	3.8424E-01
Tc-99m	1.0413E+02	4.3008E-05	2.9163E+01	3.8807E+15	1.0478E+02	3.6764E-01
Ru-103	1.0517E+00	4.2049E-05	2.9414E-01	3.9180E+13	1.0557E+00	3.7070E-03
Ru-105	4.7521E-03	1.8169E-08	1.3618E-03	1.8196E+11	4.9828E-03	1.7253E-05
Ru-106	1.7649E+00	3.6637E-03	4.9355E-01	6.5741E+13	1.7712E+00	6.2199E-03
Rh-105	4.0282E-02	1.7460E-07	1.1295E-02	1.5050E+12	4.0622E-02	1.4243E-04
Te-127	1.3137E+01	1.8333E-05	3.6750E+00	4.8915E+14	1.3193E+01	4.6318E-02
Te-127m	1.3024E+01	1.2178E-03	3.6423E+00	4.8515E+14	1.3071E+01	4.5902E-02
Te-129	1.2032E+01	6.2098E-06	3.3663E+00	4.4549E+14	1.2086E+01	4.2429E-02
Te-129m	1.8291E+01	1.9060E-03	5.1158E+00	6.8144E+14	1.8361E+01	6.4474E-02
Te-131m	3.0229E+00	9.4234E-05	8.4838E-01	1.1306E+14	3.0533E+00	1.0700E-02
Te-132	5.0709E+01	2.1078E-03	1.4200E+01	1.8918E+15	5.1017E+01	1.7901E-01
I-131	2.5594E+03	3.6849E-01	7.1614E+02	9.5396E+16	2.5712E+03	9.0262E+00
I-132	1.7554E+03	1.2513E-02	5.1409E+02	6.8877E+16	1.9136E+03	6.5436E+00
I-133	3.2129E+03	8.6480E-02	9.0316E+02	1.2038E+17	3.2546E+03	1.1395E+01
I-134	2.6299E+02	1.9560E-03	8.3531E+01	1.1306E+16	3.3111E+02	1.0811E+00
I-135	1.6141E+03	1.4786E-02	4.5883E+02	6.1246E+16	1.6682E+03	5.8031E+00
Xe-133	8.6507E+00	4.2860E-07	1.6711E+00	2.0248E+14	3.8454E+00	1.8989E-02
Xe-135	5.6706E+01	2.1306E-05	1.0890E+01	1.3165E+15	2.4928E+01	1.2352E-01
Cs-134	1.7580E+03	3.5975E-01	4.9163E+02	6.5486E+16	1.7643E+03	6.1958E+00
Cs-136	1.1549E+02	4.2441E-03	3.2308E+01	4.3036E+15	1.1598E+02	4.0719E-01
Cs-137	9.7864E+02	1.3591E-01	2.7367E+02	3.6453E+16	9.8214E+02	3.4490E+00
Ba-139	8.1161E-03	7.4420E-09	2.4587E-03	3.3085E+11	9.3972E-03	3.1518E-05
Ba-140	1.0240E-01	1.7053E-06	2.8645E-02	3.8158E+12	1.0283E-01	3.6103E-04

La-140	1.5165E-01	4.0162E-06	4.2447E-02	5.6538E+12	1.5244E-01	5.3504E-04
La-141	6.4065E-03	1.7291E-08	1.8341E-03	2.4495E+11	6.6996E-03	2.3231E-05
La-142	1.4121E-03	1.1710E-08	4.2411E-04	5.7007E+10	1.6101E-03	5.4268E-06
Ce-141	7.6323E-01	2.9847E-05	2.1347E-01	2.8434E+13	7.6615E-01	2.6903E-03
Ce-143	3.6138E-02	5.5593E-07	1.0139E-02	1.3511E+12	3.6481E-02	1.2787E-04
Ce-144	2.2346E+00	3.6320E-03	6.2491E-01	8.3238E+13	2.2426E+00	7.8754E-03
Pr-143	3.5439E-01	1.2493E-05	9.9134E-02	1.3205E+13	3.5585E-01	1.2494E-03
Kr-83m	1.3875E+01	6.8529E-10	2.7788E+00	3.3812E+14	6.5497E+00	3.1894E-02
Br-82	1.4571E+01	1.8449E-04	4.0871E+00	5.4462E+14	1.4703E+01	5.1542E-02
Br-83	7.4597E+01	3.1654E-05	2.1836E+01	2.9257E+15	8.1250E+01	2.7791E-01
Br-84	2.0510E+01	1.2083E-04	7.1188E+00	9.7374E+14	3.0166E+01	9.3732E-02
Rb-89	3.4038E-01	2.7914E-06	1.5426E-01	2.1726E+13	7.8882E-01	2.1265E-03
Y-91m	1.7396E-02	2.3213E-08	4.8792E-03	6.4427E+11	1.7540E-02	6.1527E-05
Nb-95m	9.8618E-03	1.0592E-07	2.7582E-03	3.6737E+11	9.8993E-03	3.4761E-05
Nb-97	2.2144E-03	4.2338E-09	6.4963E-04	8.6812E+10	2.4240E-03	8.2726E-06
Rh-103m	1.0526E+00	2.3787E-08	2.9418E-01	3.8861E+13	1.0552E+00	3.7070E-03
Te-125m	1.2938E+00	4.1045E-05	3.6183E-01	4.8197E+13	1.2986E+00	4.5601E-03
Te-131	7.5560E-01	2.3454E-06	2.1763E-01	2.8641E+13	8.0265E-01	2.7612E-03
Te-133	3.5037E-02	7.6004E-08	8.4489E-03	1.0350E+12	2.2488E-02	1.0161E-04
Te-133m	2.7748E-01	2.2307E-06	8.7562E-02	1.1842E+13	3.4537E-01	1.1318E-03
Te-134	3.5088E-01	1.0327E-06	1.1538E-01	1.5681E+13	4.6954E-01	1.5035E-03
Xe-131m	3.4486E-02	4.2527E-10	6.6495E-03	8.0538E+11	1.5283E-02	7.5521E-05
Xe-133m	6.1814E-01	2.6908E-08	1.1946E-01	1.4475E+13	2.7499E-01	1.3576E-03
Xe-135m	1.9433E+02	1.4475E-04	4.3158E+01	5.2356E+15	1.0911E+02	5.0898E-01
Cs-134m	9.5233E-01	2.2890E-07	2.7651E-01	3.7010E+13	1.0223E+00	3.5131E-03
Cs-138	9.4742E+00	7.0403E-05	3.2791E+00	4.4838E+14	1.3866E+01	4.3152E-02
Ba-141	7.1653E-04	2.4036E-09	2.9696E-04	4.1432E+10	1.4288E-03	4.0346E-06
Total	1.2994E+04	1.0000E+00	0.0000E+00	0.0000E+00	1.3232E+04	4.6266E+01

Dose Equivalent (Ci/cc) I-131 (Thyroid)	1.1414E-06
Dose Equivalent (Ci/cc) I-131 (CEDE)	1.1632E-06
Dose Equivalent (Ci/cc) I-131 (ICRP2 Thyroid)	1.3111E-06
Total I (Ci)	9.4049E+03

```
Dose Equivalent (Ci/cc) Xe-133 (EDE)                1.0803E-06

Ruptured Steam Generator Compartment Group Inventory Distribution:

Time (h) =    0.5000      Atmosphere      Sump
Noble gases (Ci)          2.7421E+02   0.0000E+00
Elemental I (Ci)          9.2291E+03   0.0000E+00
Organic I (Ci)            2.8544E+02   0.0000E+00
Aerosol I (Ci)            0.0000E+00   0.0000E+00
All Aerosols (Ci)         3.2052E+03   0.0000E+00
All Aerosols (kg)         1.2607E-02   0.0000E+00

#######################################################################
    ALION RADTRAD Version 3.10 Rev 2 run on 12/01/2014  at 16:18:07

                Copyright © 2009 Alion Science and Technology
#######################################################################

Exclusion Area Boundary Doses:

Time (h) =    0.6670    Whole Body   Thyroid       TEDE
Delta dose (rem)         2.4692E-05  1.2600E-02  8.2186E-04
Accumulated dose (rem)  1.3091E-01  6.3069E+01  4.1140E+00

Low Population Zone Doses:

Time (h) =    0.6670    Whole Body   Thyroid       TEDE
Delta dose (rem)         4.7533E-06  2.4255E-03  1.5821E-04
Accumulated dose (rem)  2.3451E-02  1.1318E+01  7.3829E-01

Control Room Doses:

Time (h) =    0.6670    Whole Body   Thyroid       TEDE        Skin
```

Delta dose (rem)	3.9568E-04	5.3084E+00	2.8893E-01	1.8217E-02
Accumulated dose (rem)	4.1667E-03	6.0119E+01	3.6160E+00	1.8819E-01

****

RCS Compartment Nuclide Inventory (Ci) at Time (h) = 0.6670

Nuclide	Compartment Atmosphere	Dose Fract	Exposure (Ci-hr)	Decays (Bq-s)	Pathway 1 Outflow	Pathway 5 Outflow	Pathway 6 Outflow
Rb-86	1.3555E+01	1.3484E-04	1.0141E+01	1.3508E+15	3.5858E-01	7.7012E-03	4.6636E+00
Sr-89	2.0653E-01	1.2737E-05	1.5428E-01	2.0547E+13	5.4499E-03	1.1713E-04	7.0903E-02
Sr-90	1.9080E-02	3.6915E-05	1.4267E-02	1.9004E+12	5.0436E-04	1.0834E-05	6.5600E-03
Sr-91	8.3465E-02	2.5814E-07	6.3952E-02	8.5306E+12	2.2865E-03	4.8690E-05	2.9648E-02
Sr-92	3.2358E-02	8.0115E-08	2.6379E-02	3.5314E+12	9.6992E-04	2.0215E-05	1.2478E-02
Y-90	3.3092E-02	4.1662E-07	2.4782E-02	3.3011E+12	8.7671E-04	1.8822E-05	1.1401E-02
Y-91	2.6090E+00	1.8987E-04	1.9512E+00	2.5990E+14	6.8982E-02	1.4817E-03	8.9720E-01
Y-92	4.5837E-02	6.3765E-08	3.4860E-02	4.6400E+12	1.2413E-03	2.6516E-05	1.6116E-02
Y-93	2.9616E-02	9.9505E-08	2.2659E-02	3.0223E+12	8.0961E-04	1.7249E-05	1.0500E-02
Zr-95	3.7147E+00	1.3296E-04	2.7780E+00	3.7004E+14	9.8214E-02	2.1096E-03	1.2774E+00
Zr-97	5.8833E-02	3.9312E-07	4.4598E-02	5.9453E+12	1.5867E-03	3.3917E-05	2.0601E-02
Nb-95	5.3638E+00	4.9581E-05	4.0111E+00	5.3427E+14	1.4180E-01	3.0459E-03	1.8443E+00
Mo-99	3.1706E+02	1.9130E-03	2.3791E+02	3.1696E+16	8.4242E+00	1.8073E-01	1.0952E+02
Tc-99m	3.0346E+02	4.3006E-05	2.2764E+02	3.0292E+16	8.0592E+00	1.7292E-01	1.0478E+02
Ru-103	3.0695E+00	4.2043E-05	2.2958E+00	3.0580E+14	8.1168E-02	1.7434E-03	1.0557E+00
Ru-105	1.3514E-02	1.8201E-08	1.0649E-02	1.4229E+12	3.8566E-04	8.1320E-06	4.9828E-03
Ru-106	5.1516E+00	3.6631E-03	3.8521E+00	5.1311E+14	1.3618E-01	2.9252E-03	1.7712E+00
Rh-105	1.1724E-01	1.7461E-07	8.8175E-02	1.1749E+13	3.1255E-03	6.6999E-05	4.0622E-02
Te-127	3.8331E+01	1.8331E-05	2.8684E+01	3.8179E+15	1.0144E+00	2.1784E-02	1.3193E+01
Te-127m	3.8015E+01	1.2176E-03	2.8428E+01	3.7866E+15	1.0050E+00	2.1588E-02	1.3071E+01
Te-129	3.5105E+01	6.2093E-06	2.6276E+01	3.4772E+15	9.2938E-01	1.9956E-02	1.2086E+01
Te-129m	5.3385E+01	1.9057E-03	3.9930E+01	5.3187E+15	1.4117E+00	3.0323E-02	1.8361E+01
Te-131m	8.7898E+00	9.4245E-05	6.6233E+00	8.8263E+14	2.3498E-01	5.0337E-03	3.0533E+00
Te-132	1.4780E+02	2.1077E-03	1.1084E+02	1.4767E+16	3.9239E+00	8.4200E-02	5.1017E+01

I-131	7.4665E+03	3.6845E-01	5.5897E+03	7.4460E+17	1.9771E+02	4.2452E+00	2.5712E+03
I-132	4.8799E+03	1.2563E-02	4.0291E+03	5.3973E+17	1.4899E+02	3.0917E+00	1.9136E+03
I-133	9.3266E+03	8.6500E-02	7.0518E+03	9.3992E+17	2.5058E+02	5.3614E+00	3.2546E+03
I-134	6.7284E+02	1.9862E-03	6.6212E+02	8.9566E+16	2.6337E+01	5.1697E-01	3.3111E+02
I-135	4.6298E+03	1.4802E-02	3.5857E+03	4.7860E+17	1.2883E+02	2.7331E+00	1.6682E+03
Xe-133	3.3578E+01	4.1484E-07	1.2626E+01	1.5271E+15	2.3875E-01	8.5652E-03	3.8454E+00
Xe-135	2.2079E+02	2.0647E-05	8.2378E+01	9.9474E+15	1.5460E+00	5.5827E-02	2.4928E+01
Cs-134	5.1317E+03	3.5970E-01	3.8372E+03	5.1112E+17	1.3565E+02	2.9139E+00	1.7643E+03
Cs-136	3.3700E+02	4.2436E-03	2.5217E+02	3.3591E+16	8.9176E+00	1.9151E-01	1.1598E+02
Cs-137	2.8566E+03	1.3589E-01	2.1360E+03	2.8452E+17	7.5511E+01	1.6221E+00	9.8214E+02
Ba-139	2.1783E-02	7.5025E-09	1.9349E-02	2.6029E+12	7.3825E-04	1.4957E-05	9.3972E-03
Ba-140	2.9879E-01	1.7051E-06	2.2358E-01	2.9783E+13	7.9067E-03	1.6980E-04	1.0283E-01
La-140	4.4227E-01	4.0159E-06	3.3132E-01	4.4131E+13	1.1723E-02	2.5165E-04	1.5244E-01
La-141	1.8208E-02	1.7308E-08	1.4332E-02	1.9138E+12	5.1809E-04	1.0940E-05	6.6996E-03
La-142	3.8239E-03	1.1792E-08	3.3337E-03	4.4799E+11	1.2620E-04	2.5722E-06	1.6101E-03
Ce-141	2.2276E+00	2.9843E-05	1.6661E+00	2.2193E+14	5.8907E-02	1.2653E-03	7.6615E-01
Ce-143	1.0512E-01	5.5597E-07	7.9153E-02	1.0548E+13	2.8073E-03	6.0152E-05	3.6481E-02
Ce-144	6.5227E+00	3.6315E-03	4.8774E+00	6.4967E+14	1.7242E-01	3.7038E-03	2.2426E+00
Pr-143	1.0341E+00	1.2492E-05	7.7376E-01	1.0307E+14	2.7361E-02	5.8762E-04	3.5585E-01
Kr-83m	5.1106E+01	6.5147E-10	2.0621E+01	2.5001E+15	4.0817E-01	1.4105E-02	6.5497E+00
Br-82	4.2393E+01	1.8450E-04	3.1907E+01	4.2517E+15	1.1314E+00	2.4246E-02	1.4703E+01
Br-83	2.0746E+02	3.1778E-05	1.7112E+02	2.2924E+16	6.3248E+00	1.3129E-01	8.1250E+01
Br-84	4.8122E+01	1.2485E-04	5.7422E+01	7.8457E+15	2.4543E+00	4.5638E-02	3.0166E+01
Rb-89	6.2915E-01	3.1057E-06	1.3398E+00	1.8802E+14	6.8296E-02	1.1160E-03	7.8882E-01
Y-91m	5.0551E-02	2.3202E-08	3.8070E-02	5.0268E+12	1.3491E-03	2.8927E-05	1.7540E-02
Nb-95m	2.8783E-02	1.0591E-07	2.1528E-02	2.8673E+12	7.6112E-04	1.6348E-05	9.8993E-03
Nb-97	6.1595E-03	4.2551E-09	5.0966E-03	6.8097E+11	1.8892E-04	3.9128E-06	2.4240E-03
Rh-103m	3.0743E+00	2.3782E-08	2.2959E+00	3.0328E+14	8.1115E-02	1.7432E-03	1.0552E+00
Te-125m	3.7763E+00	4.1039E-05	2.8241E+00	3.7618E+14	9.9844E-02	2.1446E-03	1.2986E+00
Te-131	2.1546E+00	2.3579E-06	1.7079E+00	2.2477E+14	6.2355E-02	1.3064E-03	8.0265E-01
Te-133	1.0239E-01	6.8292E-08	5.9261E-02	7.1451E+12	1.4314E-03	4.1958E-05	2.2488E-02
Te-133m	7.1453E-01	2.2627E-06	6.9333E-01	9.3718E+13	2.7425E-02	5.4061E-04	3.4537E-01
Te-134	8.6742E-01	1.0552E-06	9.2028E-01	1.2499E+14	3.7683E-02	7.2365E-04	4.6954E-01

Xe-131m	1.3422E-01	4.1202E-10	5.0290E-02	6.0806E+12	9.4867E-04	3.4101E-05	1.5283E-02
Xe-133m	2.3977E+00	2.6038E-08	9.0239E-01	1.0914E+14	1.7074E-02	6.1223E-04	2.7499E-01
Xe-135m	6.3158E+02	1.3286E-04	3.0923E+02	3.7101E+16	6.8827E+00	2.1580E-01	1.0911E+02
Cs-134m	2.6711E+00	2.2960E-07	2.1651E+00	2.8975E+14	7.9406E-02	1.6582E-03	1.0223E+00
Cs-138	2.2290E+01	7.2703E-05	2.6433E+01	3.6105E+15	1.1273E+00	2.0997E-02	1.3866E+01
Ba-141	1.4300E-03	2.6017E-09	2.5092E-03	3.4916E+11	1.2127E-04	2.0594E-06	1.4288E-03
Total	3.7562E+04	1.0000E+00	0.0000E+00	0.0000E+00	1.0193E+03	2.1764E+01	1.3232E+04

Dose Equivalent (Ci/cc) I-131 (Thyroid)	6.9567E-07
Dose Equivalent (Ci/cc) I-131 (CEDE)	7.0882E-07
Dose Equivalent (Ci/cc) I-131 (ICRP2 Thyroid)	7.9790E-07
Total I (Ci)	2.6976E+04
Dose Equivalent (Ci/cc) Xe-133 (EDE)	7.5601E-07

RCS Compartment Group Inventory Distribution:

Time (h) = 0.6670	Atmosphere	Sump
Noble gases (Ci)	9.3958E+02	0.0000E+00
Elemental I (Ci)	2.6455E+04	0.0000E+00
Organic I (Ci)	8.1821E+02	0.0000E+00
Aerosol I (Ci)	0.0000E+00	0.0000E+00
All Aerosols (Ci)	9.3484E+03	0.0000E+00
All Aerosols (kg)	3.6799E-02	0.0000E+00

Intact Steam Generators Compartment Nuclide Inventory (Ci) at Time (h) = 0.6670

Nuclide	Compartment Atmosphere	Dose Fract	Exposure (Ci-hr)	Decays (Bq-s)	Pathway 5 Inflow	Pathway 7 Outflow
Rb-86	7.6662E-03	1.3499E-04	2.8305E-03	3.7703E+11	7.7012E-03	3.0274E-05
Sr-89	1.1680E-04	1.2760E-05	4.3089E-05	5.7388E+09	1.1713E-04	4.6071E-07
Sr-90	1.0791E-05	3.6964E-05	3.9829E-06	5.3052E+08	1.0834E-05	4.2595E-08
Sr-91	4.7205E-05	2.5623E-07	1.7697E-05	2.3608E+09	4.8690E-05	1.9030E-07
Sr-92	1.8300E-05	7.7775E-08	7.1395E-06	9.5600E+08	2.0215E-05	7.7814E-08

Y-90	1.8716E-05	4.1694E-07	6.9146E-06	9.2104E+08	1.8822E-05	7.3974E-08
Y-91	1.4756E-03	1.9011E-04	5.4467E-04	7.2551E+10	1.4817E-03	5.8252E-06
Y-92	2.5923E-05	6.3485E-08	9.6760E-06	1.2880E+09	2.6516E-05	1.0387E-07
Y-93	1.6750E-05	9.8819E-08	6.2738E-06	8.3685E+08	1.7249E-05	6.7439E-08
Zr-95	2.1009E-03	1.3313E-04	7.7549E-04	1.0330E+11	2.1096E-03	8.2938E-06
Zr-97	3.3274E-05	3.9171E-07	1.2389E-05	1.6516E+09	3.3917E-05	1.3290E-07
Nb-95	3.0336E-03	4.9645E-05	1.1197E-03	1.4915E+11	3.0459E-03	1.1975E-05
Mo-99	1.7932E-01	1.9131E-03	6.6333E-02	8.8375E+12	1.8073E-01	7.0996E-04
Tc-99m	1.7163E-01	4.3013E-05	6.3475E-02	8.4462E+12	1.7292E-01	6.7933E-04
Ru-103	1.7360E-03	4.2095E-05	6.4085E-04	8.5362E+10	1.7434E-03	6.8540E-06
Ru-105	7.6432E-06	1.7886E-08	2.9175E-06	3.8986E+08	8.1320E-06	3.1565E-08
Ru-106	2.9135E-03	3.6679E-03	1.0754E-03	1.4324E+11	2.9252E-03	1.1501E-05
Rh-105	6.6309E-05	1.7447E-07	2.4565E-05	3.2731E+09	6.6999E-05	2.6305E-07
Te-127	2.1679E-02	1.8350E-05	8.0054E-03	1.0655E+12	2.1784E-02	8.5630E-05
Te-127m	2.1500E-02	1.2192E-03	7.9358E-03	1.0571E+12	2.1588E-02	8.4872E-05
Te-129	1.9854E-02	6.2150E-06	7.3324E-03	9.7003E+11	1.9956E-02	7.8435E-05
Te-129m	3.0193E-02	1.9080E-03	1.1146E-02	1.4846E+12	3.0323E-02	1.1921E-04
Te-131m	4.9711E-03	9.4108E-05	1.8439E-03	2.4572E+11	5.0337E-03	1.9753E-05
Te-132	8.3591E-02	2.1082E-03	3.0911E-02	4.1181E+12	8.4200E-02	3.3080E-04
I-131	4.2227E+00	3.6878E-01	1.5598E+00	2.0778E+14	4.2452E+00	1.6686E-02
I-132	2.7599E+00	1.2141E-02	1.0855E+00	1.4545E+14	3.0917E+00	1.1863E-02
I-133	5.2747E+00	8.6268E-02	1.9608E+00	2.6135E+14	5.3614E+00	2.1022E-02
I-134	3.8053E-01	1.8035E-03	1.6762E-01	2.2693E+13	5.1697E-01	1.8993E-03
I-135	2.6184E+00	1.4636E-02	9.8845E-01	1.3195E+14	2.7331E+00	1.0654E-02
Xe-133	1.8990E-02	5.6339E-07	4.7806E-03	5.9191E+11	8.5652E-03	4.2797E-05
Xe-135	1.2487E-01	2.8135E-05	3.1297E-02	3.8684E+12	5.5827E-02	2.7944E-04
Cs-134	2.9023E+00	3.6017E-01	1.0712E+00	1.4268E+14	2.9139E+00	1.1456E-02
Cs-136	1.9059E-01	4.2481E-03	7.0379E-02	9.3749E+12	1.9151E-01	7.5279E-04
Cs-137	1.6156E+00	1.3607E-01	5.9630E-01	7.9428E+13	1.6221E+00	6.3772E-03
Ba-139	1.2319E-05	7.0640E-09	5.0792E-06	6.8359E+08	1.4957E-05	5.6370E-08
Ba-140	1.6898E-04	1.7068E-06	6.2400E-05	8.3120E+09	1.6980E-04	6.6745E-07
La-140	2.5013E-04	4.0185E-06	9.2431E-05	1.2312E+10	2.5165E-04	9.8892E-07
La-141	1.0298E-05	1.7026E-08	3.9305E-06	5.2504E+08	1.0940E-05	4.2513E-08

La-142	2.1626E-06	1.1177E-08	8.8095E-07	1.1843E+08	2.5722E-06	9.7391E-09
Ce-141	1.2598E-03	2.9879E-05	4.6507E-04	6.1949E+10	1.2653E-03	4.9741E-06
Ce-143	5.9450E-05	5.5531E-07	2.2041E-05	2.9371E+09	6.0152E-05	2.3609E-07
Ce-144	3.6890E-03	3.6362E-03	1.3616E-03	1.8136E+11	3.7038E-03	1.4562E-05
Pr-143	5.8487E-04	1.2505E-05	2.1596E-04	2.8767E+10	5.8762E-04	2.3099E-06
Kr-83m	2.8904E-02	8.6669E-10	7.6484E-03	9.5114E+11	1.4105E-02	6.9994E-05
Br-82	2.3976E-02	1.8431E-04	8.8864E-03	1.1841E+12	2.4246E-02	9.5175E-05
Br-83	1.1733E-01	3.0720E-05	4.6121E-02	6.1801E+12	1.3129E-01	5.0395E-04
Br-84	2.7216E-02	1.0599E-04	1.3591E-02	1.8598E+12	4.5638E-02	1.5975E-04
Rb-89	3.5582E-04	2.1732E-06	2.6138E-04	3.6839E+10	1.1160E-03	3.3773E-06
Y-91m	2.8589E-05	2.3184E-08	1.0606E-05	1.4000E+09	2.8927E-05	1.1360E-07
Nb-95m	1.6279E-05	1.0604E-07	6.0092E-06	8.0038E+08	1.6348E-05	6.4270E-08
Nb-97	3.4836E-06	4.1053E-09	1.3709E-06	1.8315E+08	3.9128E-06	1.4990E-08
Rh-103m	1.7387E-03	2.3824E-08	6.4124E-04	8.4673E+10	1.7432E-03	6.8559E-06
Te-125m	2.1357E-03	4.1090E-05	7.8835E-04	1.0501E+11	2.1446E-03	8.4314E-06
Te-131	1.2186E-03	2.3052E-06	4.6552E-04	6.1173E+10	1.3064E-03	5.0438E-06
Te-133	5.7909E-05	8.1321E-08	1.9674E-05	2.4580E+09	4.1958E-05	1.9906E-07
Te-133m	4.0411E-04	2.0648E-06	1.7640E-04	2.3862E+10	5.4061E-04	1.9931E-06
Te-134	4.9058E-04	9.3318E-07	2.2690E-04	3.0850E+10	7.2365E-04	2.6091E-06
Xe-131m	7.5909E-05	5.6014E-10	1.9061E-05	2.3591E+09	3.4101E-05	1.7045E-07
Xe-133m	1.3560E-03	3.5353E-08	3.4158E-04	4.2294E+10	6.1223E-04	3.0588E-06
Xe-135m	3.5720E-01	1.6631E-04	1.0791E-01	1.3347E+13	2.1580E-01	1.0452E-03
Cs-134m	1.5107E-03	2.2335E-07	5.8720E-04	7.8600E+10	1.6582E-03	6.3920E-06
Cs-138	1.2606E-02	6.1853E-05	6.2697E-03	8.5766E+11	2.0997E-02	7.3614E-05
Ba-141	8.0877E-07	1.9388E-09	5.2132E-07	7.2781E+07	2.0594E-06	6.5417E-09
Total	2.1243E+01	1.0000E+00	0.0000E+00	0.0000E+00	2.1764E+01	8.5226E-02

Dose Equivalent (Ci/cc) I-131 (Thyroid)	6.2691E-10
Dose Equivalent (Ci/cc) I-131 (CEDE)	6.3876E-10
Dose Equivalent (Ci/cc) I-131 (ICRP2 Thyroid)	7.1904E-10
Total I (Ci)	1.5256E+01
Dose Equivalent (Ci/cc) Xe-133 (EDE)	6.8128E-10

Intact Steam Generators Compartment Group Inventory Distribution:

Time (h) = 0.6670	Atmosphere	Sump
Noble gases (Ci)	5.3139E-01	0.0000E+00
Elemental I (Ci)	1.4962E+01	0.0000E+00
Organic I (Ci)	4.6275E-01	0.0000E+00
Aerosol I (Ci)	0.0000E+00	0.0000E+00
All Aerosols (Ci)	5.2871E+00	0.0000E+00
All Aerosols (kg)	2.0812E-05	0.0000E+00

Control Room Compartment Nuclide Inventory (Ci) at Time (h) = 0.6670

Nuclide	Compartment Atmosphere	Dose Fract	Exposure (Ci-hr)	Decays (Bq-s)	Compartment Recirc Filtr	Pathway 2 Inflow	Pathway 3 Inflow	Pathway 4 Outflow
Rb-86	1.9308E-05	1.2767E-04	8.1635E-05	1.0874E+10	3.4247E-04	3.8011E-04	6.4895E-05	8.8739E-05
Sr-89	2.9418E-07	1.2055E-05	1.2413E-06	1.6531E+08	5.2178E-06	5.7719E-06	9.8661E-07	1.3533E-06
Sr-91	1.1889E-07	2.4610E-07	5.1835E-07	6.9145E+07	2.1087E-06	2.4442E-06	4.1270E-07	5.6434E-07
Y-91	3.7164E-06	1.7976E-04	1.5706E-05	2.0920E+09	6.5916E-05	7.3114E-05	1.2485E-05	1.7072E-05
Zr-95	5.2913E-06	1.2589E-04	2.2361E-05	2.9785E+09	9.3850E-05	1.0410E-04	1.7775E-05	2.4306E-05
Nb-95	7.6404E-06	4.6941E-05	3.2285E-05	4.3004E+09	1.3551E-04	1.5029E-04	2.5664E-05	3.5103E-05
Mo-99	4.5164E-04	1.8129E-03	1.9169E-03	2.5538E+11	8.0105E-03	8.9394E-03	1.5241E-03	2.0841E-03
Tc-99m	4.3226E-04	4.0752E-05	1.8339E-03	2.4404E+11	7.6669E-03	8.5512E-03	1.4581E-03	2.0887E-03
Ru-103	4.3724E-06	3.9806E-05	1.8480E-05	2.4615E+09	7.7551E-05	8.6033E-05	1.4690E-05	2.0088E-05
Ru-106	7.3381E-06	3.4680E-03	3.1006E-05	4.1300E+09	1.3015E-04	1.4433E-04	2.4647E-05	3.3703E-05
Rh-105	1.6701E-07	1.6558E-07	7.1089E-07	9.4720E+07	2.9622E-06	3.3192E-06	5.6530E-07	7.7386E-07
Te-127	5.4601E-05	1.7358E-05	2.3093E-04	3.0737E+10	9.6843E-04	1.0754E-03	1.8358E-04	2.5915E-04
Te-127m	5.4150E-05	1.1528E-03	2.2882E-04	3.0479E+10	9.6044E-04	1.0652E-03	1.8189E-04	2.4872E-04
Te-129	5.0005E-05	5.8804E-06	2.1156E-04	2.7996E+10	8.8691E-04	9.8541E-04	1.6818E-04	2.9122E-04
Te-129m	7.6044E-05	1.8043E-03	3.2141E-04	4.2813E+10	1.3488E-03	1.4964E-03	2.5550E-04	3.4938E-04
Te-131m	1.2520E-05	8.9422E-05	5.3429E-05	7.1200E+09	2.2207E-04	2.4972E-04	4.2492E-05	5.8105E-05
Te-132	2.1054E-04	1.9971E-03	8.9294E-04	1.1896E+11	3.7342E-03	4.1631E-03	7.0994E-04	9.7079E-04
I-131	1.5155E-02	3.8778E-01	5.0015E-02	6.6625E+12	2.0587E-01	2.3669E-01	3.5778E-02	5.4310E-02
I-132	9.8970E-03	1.3522E-02	3.6869E-02	4.9396E+12	1.3451E-01	1.8317E-01	2.6667E-02	4.0429E-02

I-133	1.8930E-02	9.1254E-02	6.3248E-02	8.4303E+12	2.5716E-01	3.0082E-01	4.5296E-02	6.8725E-02
I-134	1.3655E-03	2.2160E-03	6.2805E-03	8.4991E+11	1.8552E-02	3.3811E-02	4.6249E-03	6.9433E-03
I-135	9.3972E-03	1.5704E-02	3.2342E-02	4.3171E+12	1.2766E-01	1.5569E-01	2.3226E-02	3.5199E-02
Xe-133	3.0194E-03	3.8225E-06	9.8910E-04	1.2067E+11	0.0000E+00	3.0256E-03	5.2287E-05	9.5350E-04
Xe-135	1.9745E-02	1.9018E-04	6.4512E-03	7.8592E+11	0.0000E+00	1.8928E-02	3.3877E-04	6.2154E-03
Cs-134	7.3097E-03	3.4053E-01	3.0885E-02	4.1139E+12	1.2965E-01	1.4377E-01	2.4551E-02	3.3572E-02
Cs-136	4.8003E-04	4.0184E-03	2.0301E-03	2.7042E+11	8.5141E-03	9.4537E-03	1.6138E-03	2.2068E-03
Cs-137	4.0691E-03	1.2865E-01	1.7193E-02	2.2901E+12	7.2172E-02	8.0030E-02	1.3667E-02	1.8688E-02
Ba-140	4.2560E-07	1.6146E-06	1.8000E-06	2.3977E+08	7.5488E-06	8.3821E-06	1.4309E-06	1.9566E-06
La-140	6.2999E-07	3.8040E-06	2.6682E-06	3.5540E+08	1.1174E-05	1.2432E-05	2.1212E-06	2.9158E-06
Ce-141	3.1730E-06	2.8255E-05	1.3412E-05	1.7865E+09	5.6279E-05	6.2439E-05	1.0661E-05	1.4578E-05
Ce-143	1.4973E-07	5.2742E-07	6.3838E-07	8.5068E+07	2.6557E-06	2.9827E-06	5.0769E-07	6.9422E-07
Ce-144	9.2911E-06	3.4380E-03	3.9258E-05	5.2292E+09	1.6479E-04	1.8275E-04	3.1207E-05	4.2673E-05
Pr-143	1.4731E-06	1.1828E-05	6.2290E-06	8.2974E+08	2.6127E-05	2.9005E-05	4.9517E-06	6.7718E-06
Kr-83m	4.6090E-03	5.9264E-09	1.5948E-03	1.9538E+11	0.0000E+00	5.0927E-03	8.9217E-05	1.5518E-03
Br-82	8.6046E-05	1.9443E-04	2.8586E-04	3.8092E+10	1.1689E-03	1.3565E-03	2.0462E-04	3.1052E-04
Br-83	4.2108E-04	3.4200E-05	1.5657E-03	2.0977E+11	5.7202E-03	7.7735E-03	1.1322E-03	1.7111E-03
Br-84	9.7675E-05	1.4403E-04	5.6317E-04	7.7007E+10	1.3269E-03	3.2859E-03	4.2230E-04	6.2937E-04
Rb-89	8.9619E-07	3.5888E-06	1.3163E-05	1.8519E+09	1.5895E-05	9.3940E-05	1.1096E-05	1.5165E-05
Rh-103m	4.3792E-06	2.2507E-08	1.8473E-05	2.4401E+09	7.7672E-05	8.5925E-05	1.4683E-05	2.6777E-05
Te-125m	5.3790E-06	3.8854E-05	2.2732E-05	3.0279E+09	9.5406E-05	1.0583E-04	1.8070E-05	2.4710E-05
Te-131	3.0691E-06	2.2729E-06	1.3997E-05	1.8435E+09	5.4436E-05	6.7932E-05	1.1181E-05	2.4982E-05
Te-133	1.4585E-07	5.6872E-08	4.1958E-07	4.8314E+07	2.5869E-06	7.0422E-07	3.0955E-07	1.7494E-06
Te-133m	1.0178E-06	2.2922E-06	5.9713E-06	8.0740E+08	1.8052E-05	3.1601E-05	4.8233E-06	6.5970E-06
Te-134	1.2356E-06	1.0905E-06	8.0856E-06	1.0986E+09	2.1915E-05	4.4528E-05	6.5645E-06	8.9796E-06
Xe-131m	1.2077E-05	3.8004E-09	3.9437E-06	4.8090E+08	0.0000E+00	1.2082E-05	2.0779E-07	3.7996E-06
Xe-133m	2.1565E-04	2.3990E-07	7.0686E-05	8.6236E+09	0.0000E+00	2.1651E-04	3.7391E-06	6.8149E-05
Xe-135m	6.0556E-02	1.1887E-03	2.3521E-02	2.8549E+12	0.0000E+00	1.0504E-01	1.4952E-03	2.3320E-02
Cs-134m	3.8048E-06	2.2233E-07	1.7825E-05	2.3856E+09	6.7484E-05	8.6519E-05	1.4243E-05	1.9476E-05
Cs-138	3.1750E-05	7.6866E-05	2.3760E-04	3.2476E+10	5.6314E-04	1.3716E-03	1.9410E-04	2.6554E-04
Total	1.5682E-01	1.0000E+00	0.0000E+00	0.0000E+00	9.8816E-01	1.3178E+00	1.8418E-01	3.0187E-01

Control Room Compartment Group Inventory Distribution:

Time (h) = 0.6670	Atmosphere	Sump
Noble gases (Ci)	8.8158E-02	0.0000E+00
Elemental I (Ci)	5.3689E-02	0.0000E+00
Organic I (Ci)	1.6605E-03	0.0000E+00
Aerosol I (Ci)	0.0000E+00	0.0000E+00
All Aerosols (Ci)	1.3316E-02	0.0000E+00
All Aerosols (kg)	5.2418E-08	0.0000E+00

Time (h) = 0.6670	Deposition Surfaces	Recirculating Filter
Noble gases (Ci)	0.0000E+00	0.0000E+00
Elemental I (Ci)	0.0000E+00	7.2942E-01
Organic I (Ci)	0.0000E+00	2.2559E-02
Aerosol I (Ci)	0.0000E+00	0.0000E+00
All Aerosols (Ci)	0.0000E+00	2.3618E-01
All Aerosols (kg)	0.0000E+00	9.2972E-07

Ruptured Steam Generator Compartment Nuclide Inventory (Ci) at Time (h) = 0.6670

Nuclide	Compartment Atmosphere	Dose Fract	Exposure (Ci-hr)	Decays (Bq-s)	Pathway 6 Inflow	Pathway 8 Outflow
Rb-86	4.6437E+00	1.3498E-04	2.0748E+00	2.7638E+14	4.6636E+00	1.6375E-02
Sr-89	7.0752E-02	1.2758E-05	3.1584E-02	4.2066E+12	7.0903E-02	2.4911E-04
Sr-90	6.5366E-03	3.6959E-05	2.9196E-03	3.8888E+11	6.5600E-03	2.3037E-05
Sr-91	2.8594E-02	2.5641E-07	1.2984E-02	1.7320E+12	2.9648E-02	1.0343E-04
Sr-92	1.1085E-02	7.7997E-08	5.2491E-03	7.0287E+11	1.2478E-02	4.2815E-05
Y-90	1.1337E-02	4.1691E-07	5.0688E-03	6.7518E+11	1.1401E-02	4.0019E-05
Y-91	8.9381E-01	1.9009E-04	3.9926E-01	5.3182E+13	8.9720E-01	3.1505E-03
Y-92	1.5703E-02	6.3515E-08	7.0970E-03	9.4472E+11	1.6116E-02	5.6368E-05
Y-93	1.0146E-02	9.8886E-08	4.6026E-03	6.1393E+11	1.0500E-02	3.6644E-05
Zr-95	1.2726E+00	1.3312E-04	5.6846E-01	7.5719E+13	1.2774E+00	4.4856E-03
Zr-97	2.0155E-02	3.9185E-07	9.0860E-03	1.2113E+12	2.0601E-02	7.2079E-05

Nb-95	1.8375E+00	4.9639E-05	8.2078E-01	1.0933E+14	1.8443E+00	6.4765E-03
Mo-99	1.0862E+02	1.9131E-03	4.8630E+01	6.4789E+15	1.0952E+02	3.8424E-01
Tc-99m	1.0396E+02	4.3013E-05	4.6534E+01	6.1921E+15	1.0478E+02	3.6764E-01
Ru-103	1.0516E+00	4.2090E-05	4.6976E-01	6.2573E+13	1.0557E+00	3.7070E-03
Ru-105	4.6298E-03	1.7916E-08	2.1425E-03	2.8630E+11	4.9828E-03	1.7253E-05
Ru-106	1.7648E+00	3.6675E-03	7.8828E-01	1.0500E+14	1.7712E+00	6.2199E-03
Rh-105	4.0166E-02	1.7449E-07	1.8010E-02	2.3997E+12	4.0622E-02	1.4243E-04
Te-127	1.3132E+01	1.8348E-05	5.8683E+00	7.8105E+14	1.3193E+01	4.6318E-02
Te-127m	1.3023E+01	1.2190E-03	5.8172E+00	7.7485E+14	1.3071E+01	4.5902E-02
Te-129	1.2026E+01	6.2144E-06	5.3750E+00	7.1112E+14	1.2086E+01	4.2429E-02
Te-129m	1.8289E+01	1.9078E-03	8.1702E+00	1.0883E+15	1.8361E+01	6.4474E-02
Te-131m	3.0112E+00	9.4121E-05	1.3520E+00	1.8017E+14	3.0533E+00	1.0700E-02
Te-132	5.0634E+01	2.1081E-03	2.2661E+01	3.0190E+15	5.1017E+01	1.7901E-01
I-131	2.5579E+03	3.6875E-01	1.1434E+03	1.5231E+17	2.5712E+03	9.0262E+00
I-132	1.6718E+03	1.2181E-02	7.9843E+02	1.0698E+17	1.9136E+03	6.5436E+00
I-133	3.1951E+03	8.6291E-02	1.4379E+03	1.9165E+17	3.2546E+03	1.1395E+01
I-134	2.3050E+02	1.8197E-03	1.2399E+02	1.6786E+16	3.3111E+02	1.0811E+00
I-135	1.5861E+03	1.4652E-02	7.2545E+02	9.6838E+16	1.6682E+03	5.8031E+00
Xe-133	1.1503E+01	5.4889E-07	3.4145E+00	4.2200E+14	3.8454E+00	1.8989E-02
Xe-135	7.5637E+01	2.7401E-05	2.2345E+01	2.7568E+15	2.4928E+01	1.2352E-01
Cs-134	1.7580E+03	3.6012E-01	7.8522E+02	1.0459E+17	1.7643E+03	6.1958E+00
Cs-136	1.1545E+02	4.2476E-03	5.1591E+01	6.8722E+15	1.1598E+02	4.0719E-01
Cs-137	9.7864E+02	1.3605E-01	4.3711E+02	5.8223E+16	9.8214E+02	3.4490E+00
Ba-139	7.4623E-03	7.1044E-09	3.7449E-03	5.0401E+11	9.3972E-03	3.1518E-05
Ba-140	1.0236E-01	1.7067E-06	4.5742E-02	6.0931E+12	1.0283E-01	3.6103E-04
La-140	1.5151E-01	4.0183E-06	6.7758E-02	9.0253E+12	1.5244E-01	5.3504E-04
La-141	6.2379E-03	1.7054E-08	2.8864E-03	3.8556E+11	6.6996E-03	2.3231E-05
La-142	1.3100E-03	1.1234E-08	6.4914E-04	8.7269E+10	1.6101E-03	5.4268E-06
Ce-141	7.6312E-01	2.9875E-05	3.4091E-01	4.5411E+13	7.6615E-01	2.6903E-03
Ce-143	3.6011E-02	5.5537E-07	1.6161E-02	2.1535E+12	3.6481E-02	1.2787E-04
Ce-144	2.2345E+00	3.6358E-03	9.9808E-01	1.3294E+14	2.2426E+00	7.8754E-03
Pr-143	3.5428E-01	1.2504E-05	1.5831E-01	2.1087E+13	3.5585E-01	1.2494E-03
Kr-83m	1.7508E+01	8.4737E-10	5.4822E+00	6.8048E+14	6.5497E+00	3.1894E-02

Br-82	1.4523E+01	1.8433E-04	6.5154E+00	8.6821E+14	1.4703E+01	5.1542E-02
Br-83	7.1071E+01	3.0820E-05	3.3922E+01	4.5455E+15	8.1250E+01	2.7791E-01
Br-84	1.6486E+01	1.0756E-04	1.0111E+01	1.3836E+15	3.0166E+01	9.3732E-02
Rb-89	2.1554E-01	2.2373E-06	1.9727E-01	2.7803E+13	7.8882E-01	2.1265E-03
Y-91m	1.7318E-02	2.3187E-08	7.7762E-03	1.0266E+12	1.7540E-02	6.1527E-05
Nb-95m	9.8606E-03	1.0602E-07	4.4050E-03	5.8670E+11	9.8993E-03	3.4761E-05
Nb-97	2.1101E-03	4.1190E-09	1.0084E-03	1.3472E+11	2.4240E-03	8.2726E-06
Rh-103m	1.0532E+00	2.3820E-08	4.7002E-01	6.2069E+13	1.0552E+00	3.7070E-03
Te-125m	1.2937E+00	4.1086E-05	5.7788E-01	7.6975E+13	1.2986E+00	4.5601E-03
Te-131	7.3813E-01	2.3095E-06	3.4191E-01	4.4939E+13	8.0265E-01	2.7612E-03
Te-133	3.5078E-02	8.0808E-08	1.4332E-02	1.7875E+12	2.2488E-02	1.0161E-04
Te-133m	2.4479E-01	2.0825E-06	1.3042E-01	1.7643E+13	3.4537E-01	1.1318E-03
Te-134	2.9716E-01	9.4373E-07	1.6823E-01	2.2872E+13	4.6954E-01	1.5035E-03
Xe-131m	4.5981E-02	5.4563E-10	1.3612E-02	1.6816E+12	1.5283E-02	7.5521E-05
Xe-133m	8.2141E-01	3.4444E-08	2.4399E-01	3.0155E+13	2.7499E-01	1.3576E-03
Xe-135m	2.1637E+02	1.6408E-04	7.8054E+01	9.6380E+15	1.0911E+02	5.0898E-01
Cs-134m	9.1507E-01	2.2394E-07	4.3163E-01	5.7777E+13	1.0223E+00	3.5131E-03
Cs-138	7.6361E+00	6.2756E-05	4.6636E+00	6.3795E+14	1.3866E+01	4.3152E-02
Ba-141	4.8990E-04	1.9873E-09	3.9175E-04	5.4690E+10	1.4288E-03	4.0346E-06
Total	1.2868E+04	1.0000E+00	0.0000E+00	0.0000E+00	1.3232E+04	4.6266E+01

Dose Equivalent (Ci/cc) I-131 (Thyroid)	1.1392E-06
Dose Equivalent (Ci/cc) I-131 (CEDE)	1.1608E-06
Dose Equivalent (Ci/cc) I-131 (ICRP2 Thyroid)	1.3066E-06
Total I (Ci)	9.2413E+03
Dose Equivalent (Ci/cc) Xe-133 (EDE)	1.2380E-06

Ruptured Steam Generator Compartment Group Inventory Distribution:

Time (h) = 0.6670	Atmosphere	Sump
Noble gases (Ci)	3.2188E+02	0.0000E+00
Elemental I (Ci)	9.0631E+03	0.0000E+00
Organic I (Ci)	2.8030E+02	0.0000E+00

```
Aerosol I (Ci)            0.0000E+00   0.0000E+00
All Aerosols (Ci)         3.2026E+03   0.0000E+00
All Aerosols (kg)         1.2607E-02   0.0000E+00

#######################################################################
    ALION RADTRAD Version 3.10 Rev 2 run on 12/01/2014  at 16:18:07

                Copyright © 2009 Alion Science and Technology
#######################################################################

Exclusion Area Boundary Doses:

Time (h) =   2.0000    Whole Body   Thyroid       TEDE
Delta dose (rem)        3.8600E-05  2.1898E-02  1.4295E-03
Accumulated dose (rem)  1.3095E-01  6.3091E+01  4.1154E+00

Low Population Zone Doses:

Time (h) =   2.0000    Whole Body   Thyroid       TEDE
Delta dose (rem)        7.4307E-06  4.2155E-03  2.7519E-04
Accumulated dose (rem)  2.3459E-02  1.1322E+01  7.3857E-01

Control Room Doses:

Time (h) =   2.0000    Whole Body   Thyroid       TEDE        Skin
Delta dose (rem)        7.7932E-04  2.9717E+00  1.5881E-01  3.8974E-02
Accumulated dose (rem)  4.9460E-03  6.3090E+01  3.7748E+00  2.2716E-01

*******************************************************

RCS Compartment Nuclide Inventory (Ci)  at Time (h) =   2.0000

 Nuclide    Compartment  Dose Fract    Exposure     Decays      Pathway  1   Pathway  5   Pathway  6
```

	Atmosphere		(Ci-hr)	(Bq-s)	Outflow	Outflow	Outflow
Rb-86	1.3513E+01	1.3558E-04	2.8181E+01	3.7538E+15	3.5858E-01	2.2206E-02	4.6636E+00
Sr-89	2.0627E-01	1.2829E-05	4.2944E-01	5.7199E+13	5.4499E-03	3.3836E-04	7.0903E-02
Sr-90	1.9060E-02	3.7155E-05	3.9687E-02	5.2863E+12	5.0436E-04	3.1271E-05	6.5600E-03
Sr-91	7.5649E-02	2.4789E-07	1.6973E-01	2.2645E+13	2.2865E-03	1.3403E-04	2.9648E-02
Sr-92	2.2985E-02	6.8889E-08	6.2688E-02	8.3971E+12	9.6992E-04	4.9761E-05	1.2478E-02
Y-90	3.2856E-02	4.1808E-07	6.8731E-02	9.1554E+12	8.7671E-04	5.4164E-05	1.1401E-02
Y-91	2.6046E+00	1.9105E-04	5.4259E+00	7.2274E+14	6.8982E-02	4.2754E-03	8.9720E-01
Y-92	4.1526E-02	6.1639E-08	9.3130E-02	1.2406E+13	1.2413E-03	7.3528E-05	1.6116E-02
Y-93	2.6998E-02	9.5819E-08	6.0304E-02	8.0448E+12	8.0961E-04	4.7613E-05	1.0500E-02
Zr-95	3.7085E+00	1.3379E-04	7.7254E+00	1.0290E+15	9.8214E-02	6.0873E-03	1.2774E+00
Zr-97	5.5643E-02	3.8529E-07	1.2080E-01	1.6105E+13	1.5867E-03	9.5301E-05	2.0601E-02
Nb-95	5.3563E+00	4.9896E-05	1.1156E+01	1.4860E+15	1.4180E-01	8.7902E-03	1.8443E+00
Mo-99	3.1232E+02	1.9123E-03	6.5727E+02	8.7569E+16	8.4242E+00	5.1806E-01	1.0952E+02
Tc-99m	2.9924E+02	4.3014E-05	6.2924E+02	8.3744E+16	8.0592E+00	4.9595E-01	1.0478E+02
Ru-103	3.0633E+00	4.2296E-05	6.3832E+00	8.5025E+14	8.1168E-02	5.0297E-03	1.0557E+00
Ru-105	1.0964E-02	1.6601E-08	2.6844E-02	3.5880E+12	3.8566E-04	2.1249E-05	4.9828E-03
Ru-106	5.1455E+00	3.6868E-03	1.0715E+01	1.4272E+15	1.3618E-01	8.4428E-03	1.7712E+00
Rh-105	1.1441E-01	1.7376E-07	2.4251E-01	3.2314E+13	3.1255E-03	1.9118E-04	4.0622E-02
Te-127	3.8177E+01	1.8423E-05	7.9673E+01	1.0605E+16	1.0144E+00	6.2782E-02	1.3193E+01
Te-127m	3.7961E+01	1.2253E-03	7.9065E+01	1.0531E+16	1.0050E+00	6.2299E-02	1.3071E+01
Te-129	3.4937E+01	6.2380E-06	7.2956E+01	9.6605E+15	9.2938E-01	5.7490E-02	1.2086E+01
Te-129m	5.3267E+01	1.9170E-03	1.1101E+02	1.4787E+16	1.4117E+00	8.7472E-02	1.8361E+01
Te-131m	8.5140E+00	9.3440E-05	1.8149E+01	2.4187E+15	2.3498E-01	1.4310E-02	3.0533E+00
Te-132	1.4591E+02	2.1091E-03	3.0656E+02	4.0841E+16	3.9239E+00	2.4161E-01	5.1017E+01
I-131	7.4229E+03	3.6998E-01	1.5512E+04	2.0664E+18	1.9771E+02	1.2224E+01	2.5712E+03
I-132	3.3106E+03	1.0584E-02	9.3813E+03	1.2575E+18	1.4899E+02	7.4540E+00	1.9136E+03
I-133	8.9118E+03	8.5197E-02	1.9196E+04	2.5588E+18	2.5058E+02	1.5140E+01	3.2546E+03
I-134	2.3455E+02	1.3094E-03	1.2064E+03	1.6341E+17	2.6337E+01	9.7096E-01	3.3111E+02
I-135	4.0215E+03	1.3933E-02	9.3279E+03	1.2454E+18	1.2883E+02	7.3726E+00	1.6682E+03
Xe-133	9.8042E+01	1.2157E-06	1.0226E+02	1.3181E+16	2.3875E-01	7.8173E-02	3.8454E+00
Xe-135	6.1556E+02	5.9791E-05	6.5932E+02	8.4999E+16	1.5460E+00	5.0466E-01	2.4928E+01
Cs-134	5.1259E+03	3.6203E-01	1.0674E+04	1.4217E+18	1.3565E+02	8.4103E+00	1.7643E+03

Cs-136	3.3565E+02	4.2650E-03	7.0046E+02	9.3305E+16	8.9176E+00	5.5196E-01	1.1598E+02
Cs-137	2.8536E+03	1.3677E-01	5.9418E+03	7.9145E+17	7.5511E+01	4.6818E+00	9.8214E+02
Ba-139	1.1131E-02	5.6467E-09	4.0248E-02	5.4197E+12	7.3825E-04	3.2161E-05	9.3972E-03
Ba-140	2.9757E-01	1.7136E-06	6.2102E-01	8.2725E+13	7.9067E-03	4.8937E-04	1.0283E-01
La-140	4.3854E-01	4.0273E-06	9.1828E-01	1.2232E+14	1.1723E-02	7.2367E-04	1.5244E-01
La-141	1.4467E-02	1.5711E-08	3.5954E-02	4.8055E+12	5.1809E-04	2.8465E-05	6.6996E-03
La-142	2.0977E-03	9.1196E-09	7.1256E-03	9.5845E+11	1.2620E-04	5.6859E-06	1.6101E-03
Ce-141	2.2226E+00	3.0020E-05	4.6320E+00	6.1700E+14	5.8907E-02	3.6499E-03	7.6615E-01
Ce-143	1.0211E-01	5.5198E-07	2.1719E-01	2.8943E+13	2.8073E-03	1.7124E-04	3.6481E-02
Ce-144	6.5148E+00	3.6549E-03	1.3567E+01	1.8071E+15	1.7242E-01	1.0690E-02	2.2426E+00
Pr-143	1.0304E+00	1.2557E-05	2.1497E+00	2.8635E+14	2.7361E-02	1.6939E-03	3.5585E-01
Kr-83m	9.8092E+01	1.4576E-09	1.2751E+02	1.6481E+16	4.0817E-01	9.8281E-02	6.5497E+00
Br-82	4.1253E+01	1.8334E-04	8.7627E+01	1.1677E+16	1.1314E+00	6.9085E-02	1.4703E+01
Br-83	1.4079E+02	2.6796E-05	3.9880E+02	5.3458E+16	6.3248E+00	3.1686E-01	8.1250E+01
Br-84	8.4093E+00	6.8337E-05	8.6863E+01	1.1888E+16	2.4543E+00	7.0778E-02	3.0166E+01
Rb-89	1.6380E-02	1.3003E-06	1.5503E+00	2.1784E+14	6.8296E-02	1.3072E-03	7.8882E-01
Y-91m	4.7382E-02	2.2814E-08	1.0345E-01	1.3681E+13	1.3491E-03	8.1615E-05	1.7540E-02
Nb-95m	2.8723E-02	1.0654E-07	5.9854E-02	7.9721E+12	7.6112E-04	4.7163E-05	9.8993E-03
Nb-97	4.4811E-03	3.6318E-09	1.2022E-02	1.6057E+12	1.8892E-04	9.5440E-06	2.4240E-03
Rh-103m	3.0741E+00	2.3970E-08	6.3957E+00	8.4554E+14	8.1115E-02	5.0392E-03	1.0552E+00
Te-125m	3.7697E+00	4.1292E-05	7.8534E+00	1.0461E+15	9.9844E-02	6.1881E-03	1.2986E+00
Te-131	1.9607E+00	2.2076E-06	4.4194E+00	5.8112E+14	6.2355E-02	3.4935E-03	8.0265E-01
Te-133	4.5019E-02	6.4995E-08	1.5588E-01	1.9847E+13	1.4314E-03	1.2183E-04	2.2488E-02
Te-133m	2.6240E-01	1.5167E-06	1.2845E+00	1.7385E+14	2.7425E-02	1.0328E-03	3.4537E-01
Te-134	2.3002E-01	6.4127E-07	1.5457E+00	2.1025E+14	3.7683E-02	1.2503E-03	4.6954E-01
Xe-131m	4.0041E-01	1.2250E-09	4.1323E-01	5.3246E+13	9.4867E-04	3.1574E-04	1.5283E-02
Xe-133m	6.9628E+00	7.6029E-08	7.2822E+00	9.3866E+14	1.7074E-02	5.5675E-03	2.7499E-01
Xe-135m	6.5573E+02	1.8813E-04	1.2101E+03	1.5396E+17	6.8827E+00	9.3943E-01	1.0911E+02
Cs-134m	1.9402E+00	1.9935E-07	5.1954E+00	6.9567E+14	7.9406E-02	4.1221E-03	1.0223E+00
Cs-138	3.9804E+00	3.9989E-05	4.0183E+01	5.4975E+15	1.1273E+00	3.2729E-02	1.3866E+01
Ba-141	6.8680E-05	1.1543E-09	3.0768E-03	4.2878E+11	1.2127E-04	2.5651E-06	1.4288E-03
Total	3.4872E+04	1.0000E+00	0.0000E+00	0.0000E+00	1.0193E+03	6.0558E+01	1.3232E+04

Dose Equivalent (Ci/cc) I-131 (Thyroid)	6.8507E-07
Dose Equivalent (Ci/cc) I-131 (CEDE)	6.9670E-07
Dose Equivalent (Ci/cc) I-131 (ICRP2 Thyroid)	7.7751E-07
Total I (Ci)	2.3901E+04
Dose Equivalent (Ci/cc) Xe-133 (EDE)	1.0133E-06

RCS Compartment Group Inventory Distribution:

Time (h) = 2.0000	Atmosphere	Sump
Noble gases (Ci)	1.4748E+03	0.0000E+00
Elemental I (Ci)	2.3369E+04	0.0000E+00
Organic I (Ci)	7.2275E+02	0.0000E+00
Aerosol I (Ci)	0.0000E+00	0.0000E+00
All Aerosols (Ci)	9.3054E+03	0.0000E+00
All Aerosols (kg)	3.6760E-02	0.0000E+00

Intact Steam Generators Compartment Nuclide Inventory (Ci) at Time (h) = 2.0000

Nuclide	Compartment Atmosphere	Dose Fract	Exposure (Ci-hr)	Decays (Bq-s)	Pathway 5 Inflow	Pathway 7 Outflow
Rb-86	2.1998E-02	1.3597E-04	2.2964E-02	3.0590E+12	2.2206E-02	1.7213E-04
Sr-89	3.3580E-04	1.2877E-05	3.5025E-04	4.6652E+10	3.3836E-04	2.6247E-06
Sr-90	3.1028E-05	3.7282E-05	3.2359E-05	4.3102E+09	3.1271E-05	2.4250E-07
Sr-91	1.2315E-04	2.4240E-07	1.3486E-04	1.7995E+10	1.3403E-04	1.0185E-06
Sr-92	3.7418E-05	6.2984E-08	4.6572E-05	6.2407E+09	4.9761E-05	3.5892E-07
Y-90	5.3488E-05	4.1884E-07	5.5950E-05	7.4529E+09	5.4164E-05	4.1950E-07
Y-91	4.2401E-03	1.9167E-04	4.4233E-03	5.8919E+11	4.2754E-03	3.3151E-05
Y-92	6.7602E-05	6.0448E-08	7.4212E-05	9.8904E+09	7.3528E-05	5.6013E-07
Y-93	4.3952E-05	9.3841E-08	4.7990E-05	6.4026E+09	4.7613E-05	3.6227E-07
Zr-95	6.0372E-03	1.3423E-04	6.2979E-03	8.3889E+11	6.0873E-03	4.7200E-05
Zr-97	9.0583E-05	3.8106E-07	9.7083E-05	1.2944E+10	9.5301E-05	7.3070E-07
Nb-95	8.7196E-03	5.0062E-05	9.0950E-03	1.2115E+12	8.7902E-03	6.8162E-05
Mo-99	5.0844E-01	1.9118E-03	5.3394E-01	7.1138E+13	5.1806E-01	4.0058E-03

Tc-99m	4.8715E-01	4.3015E-05	5.1132E-01	6.8055E+13	4.9595E-01	3.8358E-03
Ru-103	4.9868E-03	4.2430E-05	5.2031E-03	6.9307E+11	5.0297E-03	3.8996E-05
Ru-105	1.7848E-05	1.5751E-08	2.0696E-05	2.7669E+09	2.1249E-05	1.5773E-07
Ru-106	8.3766E-03	3.6993E-03	8.7362E-03	1.1637E+12	8.4428E-03	6.5471E-05
Rh-105	1.8626E-04	1.7329E-07	1.9652E-04	2.6187E+10	1.9118E-04	1.4755E-06
Te-127	6.2149E-02	1.8471E-05	6.4909E-02	8.6405E+12	6.2782E-02	4.8655E-04
Te-127m	6.1798E-02	1.2294E-03	6.4459E-02	8.5860E+12	6.2299E-02	4.8308E-04
Te-129	5.6875E-02	6.2530E-06	5.9424E-02	7.8718E+12	5.7490E-02	4.4547E-04
Te-129m	8.6715E-02	1.9230E-03	9.0485E-02	1.2053E+13	8.7472E-02	6.7817E-04
Te-131m	1.3860E-02	9.3002E-05	1.4678E-02	1.9562E+12	1.4310E-02	1.1027E-04
Te-132	2.3753E-01	2.1098E-03	2.4917E-01	3.3197E+13	2.4161E-01	1.8691E-03
I-131	1.2084E+01	3.7078E-01	1.2632E+01	1.6827E+15	1.2224E+01	9.4703E-02
I-132	5.3895E+00	9.5477E-03	6.8763E+00	9.2208E+14	7.4540E+00	5.3210E-02
I-133	1.4508E+01	8.4492E-02	1.5469E+01	2.0621E+15	1.5140E+01	1.1633E-01
I-134	3.8184E-01	9.6851E-04	7.2507E-01	9.8353E+13	9.7096E-01	5.9714E-03
I-135	6.5467E+00	1.3468E-02	7.3270E+00	9.7837E+14	7.3726E+00	5.5526E-02
Xe-133	1.5961E-01	1.6457E-06	1.1248E-01	1.4621E+13	7.8173E-02	7.7807E-04
Xe-135	1.0021E+00	8.0583E-05	7.2204E-01	9.3907E+13	5.0466E-01	5.0042E-03
Cs-134	8.3446E+00	3.6326E-01	8.7027E+00	1.1592E+15	8.4103E+00	6.5220E-02
Cs-136	5.4641E-01	4.2763E-03	5.7067E-01	7.6018E+13	5.5196E-01	4.2777E-03
Cs-137	4.6454E+00	1.3724E-01	4.8446E+00	6.4531E+14	4.6818E+00	3.6307E-02
Ba-139	1.8120E-05	4.6913E-09	2.7171E-05	3.6618E+09	3.2161E-05	2.1566E-07
Ba-140	4.8442E-04	1.7181E-06	5.0595E-04	6.7396E+10	4.8937E-04	3.7926E-06
La-140	7.1391E-04	4.0332E-06	7.4726E-04	9.9537E+10	7.2367E-04	5.6033E-06
La-141	2.3552E-05	1.4856E-08	2.7626E-05	3.6942E+09	2.8465E-05	2.1079E-07
La-142	3.4150E-06	7.7378E-09	4.9128E-06	6.6127E+08	5.6859E-06	3.8739E-08
Ce-141	3.6182E-03	3.0113E-05	3.7755E-03	5.0291E+11	3.6499E-03	2.8297E-05
Ce-143	1.6622E-04	5.4980E-07	1.7578E-04	2.3426E+10	1.7124E-04	1.3202E-06
Ce-144	1.0606E-02	3.6672E-03	1.1061E-02	1.4734E+12	1.0690E-02	8.2895E-05
Pr-143	1.6774E-03	1.2592E-05	1.7516E-03	2.3332E+11	1.6939E-03	1.3129E-05
Kr-83m	1.5969E-01	1.8619E-09	1.3235E-01	1.7298E+13	9.8281E-02	9.3323E-04
Br-82	6.7158E-02	1.8270E-04	7.0955E-02	9.4556E+12	6.9085E-02	5.3285E-04
Br-83	2.2919E-01	2.4184E-05	2.9246E-01	3.9221E+13	3.1686E-01	2.2628E-03

Br-84	1.3690E-02	4.0761E-05	4.2100E-02	5.7762E+12	7.0778E-02	3.7288E-04
Rb-89	2.6666E-05	4.5364E-07	4.3949E-04	6.2103E+10	1.3072E-03	4.7925E-06
Y-91m	7.7135E-05	2.2583E-08	8.3214E-05	1.1014E+10	8.1615E-05	6.2633E-07
Nb-95m	4.6759E-05	1.0688E-07	4.8788E-05	6.4983E+09	4.7163E-05	3.6566E-07
Nb-97	7.2950E-06	3.3115E-09	8.9076E-06	1.1895E+09	9.5440E-06	6.8659E-08
Rh-103m	5.0044E-03	2.4067E-08	5.2179E-03	6.9020E+11	5.0392E-03	3.9098E-05
Te-125m	6.1368E-03	4.1426E-05	6.4021E-03	8.5277E+11	6.1881E-03	4.7981E-05
Te-131	3.1919E-03	2.1337E-06	3.4708E-03	4.5631E+11	3.4935E-03	2.6278E-05
Te-133	7.3287E-05	6.1718E-08	1.2027E-04	1.5720E+10	1.2183E-04	9.2871E-07
Te-133m	4.2717E-04	1.1400E-06	7.8448E-04	1.0632E+11	1.0328E-03	6.4272E-06
Te-134	3.7446E-04	4.3566E-07	8.5328E-04	1.1628E+11	1.2503E-03	7.2270E-06
Xe-131m	6.5185E-04	1.6628E-09	4.5579E-04	5.9220E+10	3.1574E-04	3.1498E-06
Xe-133m	1.1335E-02	1.0285E-07	8.0044E-03	1.0405E+12	5.5675E-03	5.5382E-05
Xe-135m	1.0675E+00	2.1293E-04	1.1129E+00	1.4400E+14	9.3943E-01	8.1296E-03
Cs-134m	3.1586E-03	1.8341E-07	3.8842E-03	5.2028E+11	4.1221E-03	2.9878E-05
Cs-138	6.4798E-03	2.4013E-05	1.9607E-02	2.6892E+12	3.2729E-02	1.7324E-04
Ba-141	1.1181E-07	4.7128E-10	1.0207E-06	1.4291E+08	2.5651E-06	1.0435E-08
Total	5.6769E+01	1.0000E+00	0.0000E+00	0.0000E+00	6.0558E+01	4.6244E-01

Dose Equivalent (Ci/cc) I-131 (Thyroid)	1.7770E-09
Dose Equivalent (Ci/cc) I-131 (CEDE)	1.8072E-09
Dose Equivalent (Ci/cc) I-131 (ICRP2 Thyroid)	2.0168E-09
Total I (Ci)	3.8910E+01
Dose Equivalent (Ci/cc) Xe-133 (EDE)	2.6284E-09

Intact Steam Generators Compartment Group Inventory Distribution:

Time (h) = 2.0000	Atmosphere	Sump
Noble gases (Ci)	2.4009E+00	0.0000E+00
Elemental I (Ci)	3.8043E+01	0.0000E+00
Organic I (Ci)	1.1766E+00	0.0000E+00
Aerosol I (Ci)	0.0000E+00	0.0000E+00
All Aerosols (Ci)	1.5149E+01	0.0000E+00

All Aerosols (kg) 5.9842E-05 0.0000E+00

Control Room Compartment Nuclide Inventory (Ci) at Time (h) = 2.0000

Nuclide	Compartment Atmosphere	Dose Fract	Exposure (Ci-hr)	Decays (Bq-s)	Compartment Recirc Filtr	Pathway 2 Inflow	Pathway 3 Inflow	Pathway 4 Outflow
Rb-86	1.1217E-08	1.2642E-04	8.4293E-05	1.1228E+10	3.5784E-04	3.8012E-04	6.4924E-05	9.2084E-05
Sr-89	1.7123E-10	1.1937E-05	1.2818E-06	1.7071E+08	5.4625E-06	5.7722E-06	9.8706E-07	1.4156E-06
Y-91	2.1620E-09	1.7800E-04	1.6217E-05	2.1602E+09	6.8974E-05	7.3117E-05	1.2490E-05	1.7717E-05
Zr-95	3.0784E-09	1.2465E-04	2.3090E-05	3.0756E+09	9.8207E-05	1.0410E-04	1.7783E-05	2.5223E-05
Nb-95	4.4462E-09	4.6481E-05	3.3337E-05	4.4405E+09	1.4184E-04	1.5030E-04	2.5676E-05	3.6454E-05
Mo-99	2.5925E-07	1.7948E-03	1.9789E-03	2.6365E+11	8.2708E-03	8.9397E-03	1.5248E-03	2.1622E-03
Tc-99m	2.4840E-07	4.0346E-05	1.8933E-03	2.5194E+11	7.9245E-03	8.5515E-03	1.4588E-03	2.4532E-03
Ru-103	2.5428E-09	3.9416E-05	1.9082E-05	2.5417E+09	8.1120E-05	8.6036E-05	1.4697E-05	2.0845E-05
Ru-106	4.2712E-09	3.4341E-03	3.2016E-05	4.2646E+09	1.3626E-04	1.4434E-04	2.4658E-05	3.4974E-05
Rh-105	9.4973E-11	1.6390E-07	7.3382E-07	9.7775E+07	3.0299E-06	3.3193E-06	5.6556E-07	8.0528E-07
Te-127	3.1690E-08	1.7188E-05	2.3845E-04	3.1737E+10	1.0110E-03	1.0755E-03	1.8366E-04	2.9341E-04
Te-127m	3.1511E-08	1.1415E-03	2.3628E-04	3.1472E+10	1.0053E-03	1.0652E-03	1.8197E-04	2.5811E-04
Te-129	2.9001E-08	5.8225E-06	2.1844E-04	2.8906E+10	9.2520E-04	9.8545E-04	1.6826E-04	4.8688E-04
Te-129m	4.4216E-08	1.7866E-03	3.3189E-04	4.4208E+10	1.4106E-03	1.4964E-03	2.5562E-04	3.6256E-04
Te-131m	7.0674E-09	8.8508E-05	5.5146E-05	7.3488E+09	2.2547E-04	2.4973E-04	4.2511E-05	6.0268E-05
Te-132	1.2112E-07	1.9772E-03	9.2188E-04	1.2282E+11	3.8639E-03	4.1632E-03	7.1026E-04	1.0072E-03
I-131	1.0989E-05	3.8799E-01	5.2183E-02	6.9513E+12	2.1739E-01	2.3671E-01	3.5795E-02	5.7026E-02
I-132	4.8856E-06	1.3440E-02	3.8212E-02	5.1196E+12	9.6788E-02	1.8318E-01	2.6676E-02	4.2534E-02
I-133	1.3193E-05	9.1235E-02	6.5941E-02	8.7893E+12	2.6099E-01	3.0085E-01	4.5316E-02	7.2103E-02
I-134	3.4714E-07	2.1826E-03	6.4507E-03	8.7296E+11	6.8680E-03	3.3812E-02	4.6258E-03	7.1730E-03
I-135	5.9533E-06	1.5674E-02	3.3662E-02	4.4932E+12	1.1777E-01	1.5571E-01	2.3235E-02	3.6859E-02
Xe-133	4.7264E-03	2.4059E-05	6.4920E-03	8.2065E+11	0.0000E+00	8.6190E-03	5.2441E-05	6.7189E-03
Xe-135	2.8994E-02	1.1698E-03	4.1379E-02	5.2325E+12	0.0000E+00	5.0895E-02	3.3976E-04	4.2892E-02
Cs-134	4.2549E-06	3.3720E-01	3.1892E-02	4.2480E+12	1.3574E-01	1.4377E-01	2.4562E-02	3.4838E-02
Cs-136	2.7862E-07	3.9789E-03	2.0962E-03	2.7923E+11	8.8885E-03	9.4541E-03	1.6146E-03	2.2900E-03
Cs-137	2.3687E-06	1.2739E-01	1.7753E-02	2.3647E+12	7.5568E-02	8.0033E-02	1.3673E-02	1.9393E-02
Ba-140	2.4701E-10	1.5987E-06	1.8586E-06	2.4757E+08	7.8801E-06	8.3825E-06	1.4316E-06	2.0304E-06

La-140	3.6402E-10	3.7664E-06	2.7548E-06	3.6694E+08	1.1613E-05	1.2433E-05	2.1222E-06	3.0713E-06
Ce-141	1.8449E-09	2.7978E-05	1.3848E-05	1.8446E+09	5.8857E-05	6.2442E-05	1.0666E-05	1.5128E-05
Ce-143	8.4756E-11	5.2205E-07	6.5892E-07	8.7805E+07	2.7039E-06	2.9828E-06	5.0791E-07	7.2010E-07
Ce-144	5.4078E-09	3.4044E-03	4.0538E-05	5.3996E+09	1.7252E-04	1.8275E-04	3.1221E-05	4.4283E-05
Pr-143	8.5532E-10	1.1712E-05	6.4318E-06	8.5675E+08	2.7287E-05	2.9007E-05	4.9540E-06	7.0291E-06
Kr-83m	4.9101E-03	2.9986E-08	8.4148E-03	1.0675E+12	0.0000E+00	1.2565E-02	8.9398E-05	8.7903E-03
Br-82	6.1070E-08	1.9445E-04	2.9814E-04	3.9728E+10	1.2081E-03	1.3566E-03	2.0471E-04	3.2590E-04
Br-83	2.0842E-07	3.3994E-05	1.6229E-03	2.1744E+11	4.1231E-03	7.7741E-03	1.1326E-03	1.7836E-03
Br-84	1.2449E-08	1.4086E-04	5.7437E-04	7.8540E+10	2.4628E-04	3.2860E-03	4.2234E-04	6.4417E-04
Rb-89	1.3597E-11	3.4628E-06	1.3244E-05	1.8634E+09	4.3378E-07	9.3940E-05	1.1096E-05	1.5280E-05
Y-91m	3.9331E-11	2.1780E-08	3.1683E-07	4.1826E+07	1.2548E-06	1.4317E-06	2.4420E-07	8.4491E-07
Rh-103m	2.5518E-09	2.2288E-08	1.9076E-05	2.5197E+09	8.1408E-05	8.5929E-05	1.4690E-05	4.7990E-05
Te-125m	3.1292E-09	3.8474E-05	2.3473E-05	3.1266E+09	9.9828E-05	1.0583E-04	1.8078E-05	2.5642E-05
Te-131	1.6275E-09	2.2442E-06	1.4412E-05	1.8978E+09	5.1922E-05	6.7934E-05	1.1185E-05	5.5059E-05
Te-133	3.7369E-11	5.6988E-08	4.3843E-07	5.0755E+07	1.1922E-06	7.0429E-07	3.0970E-07	5.6489E-06
Te-133m	2.1782E-10	2.2435E-06	6.0946E-06	8.2409E+08	6.9488E-06	3.1602E-05	4.8243E-06	6.7570E-06
Te-134	1.9094E-10	1.0643E-06	8.2295E-06	1.1182E+09	6.0914E-06	4.4528E-05	6.5655E-06	9.1683E-06
Xe-131m	1.9474E-05	2.4308E-08	2.6304E-05	3.3233E+09	0.0000E+00	3.5093E-05	2.0841E-07	2.7203E-05
Xe-133m	3.3655E-04	1.5069E-06	4.6299E-04	5.8525E+10	0.0000E+00	6.1696E-04	3.7501E-06	4.7921E-04
Xe-135m	5.5031E-02	4.9258E-03	1.0164E-01	1.2666E+13	0.0000E+00	3.1258E-01	1.4967E-03	1.0666E-01
Cs-134m	1.6106E-09	2.1921E-07	1.8327E-05	2.4528E+09	5.1381E-05	8.6521E-05	1.4247E-05	2.0114E-05
Cs-138	3.3041E-09	7.4808E-05	2.4113E-04	3.2959E+10	1.0541E-04	1.3716E-03	1.9412E-04	2.7023E-04
Total	9.4061E-02	1.0000E+00	0.0000E+00	0.0000E+00	9.5181E-01	1.5709E+00	1.8425E-01	4.4839E-01

Control Room Compartment Group Inventory Distribution:

Time (h) = 2.0000	Atmosphere	Sump
Noble gases (Ci)	9.4018E-02	0.0000E+00
Elemental I (Ci)	3.4580E-05	0.0000E+00
Organic I (Ci)	1.0695E-06	0.0000E+00
Aerosol I (Ci)	0.0000E+00	0.0000E+00
All Aerosols (Ci)	7.7243E-06	0.0000E+00
All Aerosols (kg)	3.0514E-11	0.0000E+00

Time (h) = 2.0000	Deposition Surfaces	Recirculating Filter
Noble gases (Ci)	0.0000E+00	0.0000E+00
Elemental I (Ci)	0.0000E+00	6.8422E-01
Organic I (Ci)	0.0000E+00	2.1162E-02
Aerosol I (Ci)	0.0000E+00	0.0000E+00
All Aerosols (Ci)	0.0000E+00	2.4642E-01
All Aerosols (kg)	0.0000E+00	9.7346E-07

Ruptured Steam Generator Compartment Nuclide Inventory (Ci) at Time (h) = 2.0000

Nuclide	Compartment Atmosphere	Dose Fract	Exposure (Ci-hr)	Decays (Bq-s)	Pathway 6 Inflow	Pathway 8 Outflow
Rb-86	4.6342E+00	1.3574E-04	8.2583E+00	1.1000E+15	4.6636E+00	1.6375E-02
Sr-89	7.0742E-02	1.2850E-05	1.2590E-01	1.6770E+13	7.0903E-02	2.4911E-04
Sr-90	6.5365E-03	3.7207E-05	1.1633E-02	1.5495E+12	6.5600E-03	2.3037E-05
Sr-91	2.5944E-02	2.4570E-07	4.9242E-02	6.5699E+12	2.9648E-02	1.0343E-04
Sr-92	7.8826E-03	6.6432E-08	1.7695E-02	2.3707E+12	1.2478E-02	4.2815E-05
Y-90	1.1268E-02	4.1840E-07	2.0133E-02	2.6819E+12	1.1401E-02	4.0019E-05
Y-91	8.9324E-01	1.9130E-04	1.5903E+00	2.1183E+14	8.9720E-01	3.1505E-03
Y-92	1.4241E-02	6.1212E-08	2.7070E-02	3.6067E+12	1.6116E-02	5.6368E-05
Y-93	9.2591E-03	9.5031E-08	1.7506E-02	2.3355E+12	1.0500E-02	3.6644E-05
Zr-95	1.2718E+00	1.3397E-04	2.2643E+00	3.0161E+14	1.2774E+00	4.4856E-03
Zr-97	1.9083E-02	3.8362E-07	3.5206E-02	4.6939E+12	2.0601E-02	7.2079E-05
Nb-95	1.8369E+00	4.9964E-05	3.2698E+00	4.3554E+14	1.8443E+00	6.4765E-03
Mo-99	1.0711E+02	1.9122E-03	1.9238E+02	2.5631E+16	1.0952E+02	3.8424E-01
Tc-99m	1.0262E+02	4.3016E-05	1.8419E+02	2.4514E+16	1.0478E+02	3.6764E-01
Ru-103	1.0505E+00	4.2351E-05	1.8708E+00	2.4919E+14	1.0557E+00	3.7070E-03
Ru-105	3.7599E-03	1.6255E-08	7.6937E-03	1.0284E+12	4.9828E-03	1.7253E-05
Ru-106	1.7647E+00	3.6919E-03	3.1407E+00	4.1834E+14	1.7712E+00	6.2199E-03
Rh-105	3.9238E-02	1.7358E-07	7.0911E-02	9.4489E+12	4.0622E-02	1.4243E-04
Te-127	1.3093E+01	1.8443E-05	2.3346E+01	3.1076E+15	1.3193E+01	4.6318E-02

Te-127m	1.3019E+01	1.2270E-03	2.3174E+01	3.0868E+15	1.3071E+01	4.5902E-02
Te-129	1.1982E+01	6.2442E-06	2.1375E+01	2.8306E+15	1.2086E+01	4.2429E-02
Te-129m	1.8268E+01	1.9195E-03	3.2535E+01	4.3337E+15	1.8361E+01	6.4474E-02
Te-131m	2.9199E+00	9.3271E-05	5.3026E+00	7.0668E+14	3.0533E+00	1.0700E-02
Te-132	5.0040E+01	2.1095E-03	8.9745E+01	1.1956E+16	5.1017E+01	1.7901E-01
I-131	2.5457E+03	3.7031E-01	4.5446E+03	6.0539E+17	2.5712E+03	9.0262E+00
I-132	1.1354E+03	1.0149E-02	2.6330E+03	3.5299E+17	1.9136E+03	6.5436E+00
I-133	3.0563E+03	8.4921E-02	5.6004E+03	7.4655E+17	3.2546E+03	1.1395E+01
I-134	8.0439E+01	1.1515E-03	3.1053E+02	4.2096E+16	3.3111E+02	1.0811E+00
I-135	1.3792E+03	1.3746E-02	2.6937E+03	3.5966E+17	1.6682E+03	5.8031E+00
Xe-133	3.3624E+01	1.3867E-06	3.4142E+01	4.4170E+15	3.8454E+00	1.8989E-02
Xe-135	2.1111E+02	6.8199E-05	2.2012E+02	2.8485E+16	2.4928E+01	1.2352E-01
Cs-134	1.7579E+03	3.6253E-01	3.1286E+03	4.1673E+17	1.7643E+03	6.1958E+00
Cs-136	1.1511E+02	4.2697E-03	2.0525E+02	2.7341E+16	1.1598E+02	4.0719E-01
Cs-137	9.7863E+02	1.3696E-01	1.7416E+03	2.3198E+17	9.8214E+02	3.4490E+00
Ba-139	3.8172E-03	5.2285E-09	1.0908E-02	1.4695E+12	9.3972E-03	3.1518E-05
Ba-140	1.0205E-01	1.7155E-06	1.8197E-01	2.4240E+13	1.0283E-01	3.6103E-04
La-140	1.5040E-01	4.0299E-06	2.6895E-01	3.5825E+13	1.5244E-01	5.3504E-04
La-141	4.9616E-03	1.5374E-08	1.0298E-02	1.3767E+12	6.6996E-03	2.3231E-05
La-142	7.1942E-04	8.5212E-09	1.9488E-03	2.6223E+11	1.6101E-03	5.4268E-06
Ce-141	7.6222E-01	3.0058E-05	1.3575E+00	1.8083E+14	7.6615E-01	2.6903E-03
Ce-143	3.5017E-02	5.5114E-07	6.3474E-02	8.4588E+12	3.6481E-02	1.2787E-04
Ce-144	2.2342E+00	3.6599E-03	3.9765E+00	5.2967E+14	2.2426E+00	7.8754E-03
Pr-143	3.5337E-01	1.2572E-05	6.2993E-01	8.3911E+13	3.5585E-01	1.2494E-03
Kr-83m	3.3641E+01	1.6450E-09	4.2123E+01	5.4731E+15	6.5497E+00	3.1894E-02
Br-82	1.4148E+01	1.8310E-04	2.5615E+01	3.4134E+15	1.4703E+01	5.1542E-02
Br-83	4.8283E+01	2.5701E-05	1.1196E+02	1.5011E+16	8.1250E+01	2.7791E-01
Br-84	2.8840E+00	5.4296E-05	2.0201E+01	2.7689E+15	3.0166E+01	9.3732E-02
Rb-89	5.6176E-03	7.7198E-07	2.6941E-01	3.8023E+13	7.8882E-01	2.1265E-03
Y-91m	1.6250E-02	2.2744E-08	3.0188E-02	3.9930E+12	1.7540E-02	6.1527E-05
Nb-95m	9.8504E-03	1.0668E-07	1.7542E-02	2.3365E+12	9.8993E-03	3.4761E-05
Nb-97	1.5368E-03	3.4907E-09	3.3823E-03	4.5170E+11	2.4240E-03	8.2726E-06
Rh-103m	1.0543E+00	2.4012E-08	1.8753E+00	2.4794E+14	1.0552E+00	3.7070E-03

Te-125m	1.2928E+00	4.1348E-05	2.3018E+00	3.0660E+14	1.2986E+00	4.5601E-03
Te-131	6.7242E-01	2.1697E-06	1.2713E+00	1.6709E+14	8.0265E-01	2.7612E-03
Te-133	1.5439E-02	6.7590E-08	4.7447E-02	6.1412E+12	2.2488E-02	1.0161E-04
Te-133m	8.9990E-02	1.3435E-06	3.3304E-01	4.5109E+13	3.4537E-01	1.1318E-03
Te-134	7.8886E-02	5.4227E-07	3.8259E-01	5.2094E+13	4.6954E-01	1.5035E-03
Xe-131m	1.3732E-01	1.3979E-09	1.3803E-01	1.7850E+13	1.5283E-02	7.5521E-05
Xe-133m	2.3879E+00	8.6711E-08	2.4310E+00	3.1451E+14	2.7499E-01	1.3576E-03
Xe-135m	2.2488E+02	2.0547E-04	3.8685E+02	4.9696E+16	1.0911E+02	5.0898E-01
Cs-134m	6.6540E-01	1.9274E-07	1.4703E+00	1.9691E+14	1.0223E+00	3.5131E-03
Cs-138	1.3651E+00	3.1878E-05	9.3757E+00	1.2847E+15	1.3866E+01	4.3152E-02
Ba-141	2.3554E-05	7.5141E-10	5.8624E-04	8.1974E+10	1.4288E-03	4.0346E-06
Total	1.1959E+04	1.0000E+00	0.0000E+00	0.0000E+00	1.3232E+04	4.6266E+01

```
Dose Equivalent (Ci/cc) I-131 (Thyroid)          1.1231E-06
Dose Equivalent (Ci/cc) I-131 (CEDE)             1.1421E-06
Dose Equivalent (Ci/cc) I-131 (ICRP2 Thyroid)    1.2746E-06
Total I  (Ci)                                    8.1970E+03
Dose Equivalent (Ci/cc) Xe-133 (EDE)             1.6611E-06

Ruptured Steam Generator Compartment Group Inventory Distribution:

Time (h) =   2.0000      Atmosphere      Sump
Noble gases (Ci)         5.0578E+02   0.0000E+00
Elemental I (Ci)         8.0144E+03   0.0000E+00
Organic I (Ci)           2.4787E+02   0.0000E+00
Aerosol I (Ci)           0.0000E+00   0.0000E+00
All Aerosols (Ci)        3.1913E+03   0.0000E+00
All Aerosols (kg)        1.2607E-02   0.0000E+00

#####################################################################
    ALION RADTRAD Version 3.10 Rev 2 run on 12/01/2014  at 16:18:07
```

```
#######################################################################

Exclusion Area Boundary Doses:

Time (h) =    8.0000    Whole Body   Thyroid       TEDE
Delta dose (rem)         4.8589E-04  3.7176E-01  2.4535E-02
Accumulated dose (rem)  1.3144E-01  6.3462E+01  4.1400E+00

Low Population Zone Doses:

Time (h) =    8.0000    Whole Body   Thyroid       TEDE
Delta dose (rem)         4.3788E-05  3.3503E-02  2.2111E-03
Accumulated dose (rem)  2.3502E-02  1.1356E+01  7.4078E-01

Control Room Doses:

Time (h) =    8.0000    Whole Body   Thyroid       TEDE        Skin
Delta dose (rem)         2.0418E-03  1.0077E-01  7.1672E-03  1.0857E-01
Accumulated dose (rem)  6.9878E-03  6.3191E+01  3.7820E+00  3.3574E-01

*******************************************************

RCS Compartment Nuclide Inventory (Ci)  at Time (h) =   8.0000
```

Nuclide	Compartment Atmosphere	Dose Fract	Exposure (Ci-hr)	Decays (Bq-s)	Pathway 1 Outflow	Pathway 5 Outflow	Pathway 6 Outflow
Rb-86	1.3323E+01	1.3791E-04	1.0868E+02	1.4477E+16	3.5858E-01	8.6933E-02	4.6636E+00
Sr-89	2.0458E-01	1.3095E-05	1.6620E+00	2.2137E+14	5.4499E-03	1.3293E-03	7.0903E-02
Sr-90	1.8968E-02	3.7969E-05	1.5377E-01	2.0482E+13	5.0436E-04	1.2299E-04	6.5600E-03
Sr-91	4.8594E-02	2.0640E-07	5.3582E-01	7.1496E+13	2.2865E-03	4.2943E-04	2.9648E-02
Sr-92	4.9301E-03	3.8434E-08	1.3261E-01	1.7770E+13	9.6992E-04	1.0669E-04	1.2478E-02
Y-90	3.1834E-02	4.2153E-07	2.6275E-01	3.5000E+13	8.7671E-04	2.1018E-04	1.1401E-02
Y-91	2.5846E+00	1.9495E-04	2.0993E+01	2.7963E+15	6.8982E-02	1.6791E-02	8.9720E-01

Y-92	1.9747E-02	4.7753E-08	2.7355E-01	3.6495E+13	1.2413E-03	2.1945E-04	1.6116E-02
Y-93	1.7800E-02	8.0697E-08	1.9256E-01	2.5691E+13	8.0961E-04	1.5431E-04	1.0500E-02
Zr-95	3.6806E+00	1.3654E-04	2.9892E+01	3.9817E+15	9.8214E-02	2.3909E-02	1.2774E+00
Zr-97	4.3295E-02	3.4974E-07	4.1576E-01	5.5434E+13	1.5867E-03	3.3293E-04	2.0601E-02
Nb-95	5.3224E+00	5.0950E-05	4.3191E+01	5.7530E+15	1.4180E-01	3.4546E-02	1.8443E+00
Mo-99	2.9184E+02	1.8943E-03	2.4685E+03	3.2889E+17	8.4242E+00	1.9750E+00	1.0952E+02
Tc-99m	2.8053E+02	4.2690E-05	2.3678E+03	3.1517E+17	8.0592E+00	1.8944E+00	1.0478E+02
Ru-103	3.0351E+00	4.3128E-05	2.4677E+01	3.2871E+15	8.1168E-02	1.9738E-02	1.0557E+00
Ru-105	4.2762E-03	1.1303E-08	6.9295E-02	9.2645E+12	3.8566E-04	5.5645E-05	4.9828E-03
Ru-106	5.1183E+00	3.7667E-03	4.1506E+01	5.5286E+15	1.3618E-01	3.3198E-02	1.7712E+00
Rh-105	1.0201E-01	1.6839E-07	8.9108E-01	1.1874E+14	3.1255E-03	7.1310E-04	4.0622E-02
Te-127	3.7587E+01	1.8715E-05	3.0687E+02	4.0851E+16	1.0144E+00	2.4546E-01	1.3193E+01
Te-127m	3.7718E+01	1.2512E-03	3.0610E+02	4.0772E+16	1.0050E+00	2.4483E-01	1.3071E+01
Te-129	3.4502E+01	6.3401E-06	2.8113E+02	3.7253E+16	9.2938E-01	2.2487E-01	1.2086E+01
Te-129m	5.2738E+01	1.9540E-03	4.2901E+02	5.7145E+16	1.4117E+00	3.4315E-01	1.8361E+01
Te-131m	7.3762E+00	8.9229E-05	6.5710E+01	8.7574E+15	2.3498E-01	5.2592E-02	3.0533E+00
Te-132	1.3769E+02	2.0993E-03	1.1569E+03	1.5413E+17	3.9239E+00	9.2557E-01	5.1017E+01
I-131	7.2298E+03	3.7406E-01	5.9463E+04	7.9212E+18	1.9771E+02	4.7566E+01	2.5712E+03
I-132	6.5779E+02	5.6376E-03	1.8945E+04	2.5398E+18	1.4899E+02	1.5249E+01	1.9136E+03
I-133	7.2616E+03	7.9023E-02	6.7506E+04	8.9991E+18	2.5058E+02	5.4045E+01	3.2546E+03
I-134	2.0372E+00	4.2787E-04	1.4946E+03	2.0257E+17	2.6337E+01	1.2120E+00	3.3111E+02
I-135	2.1333E+03	1.0696E-02	2.7150E+04	3.6256E+18	1.2883E+02	2.1777E+01	1.6682E+03
Xe-133	3.4846E+02	4.6372E-06	1.4789E+03	1.9543E+17	2.3875E-01	1.1749E+00	3.8454E+00
Xe-135	1.4597E+03	1.8007E-04	7.5286E+03	9.9564E+17	1.5460E+00	5.9933E+00	2.4928E+01
Cs-134	5.1001E+03	3.6992E-01	4.1351E+04	5.5079E+18	1.3565E+02	3.3074E+01	1.7643E+03
Cs-136	3.2964E+02	4.3299E-03	2.6961E+03	3.5914E+17	8.9176E+00	2.1566E+00	1.1598E+02
Cs-137	2.8398E+03	1.3977E-01	2.3022E+04	3.0665E+18	7.5511E+01	1.8414E+01	9.8214E+02
Ba-139	5.4202E-04	2.2575E-09	6.1007E-02	8.2198E+12	7.3825E-04	4.9274E-05	9.3972E-03
Ba-140	2.9213E-01	1.7393E-06	2.3899E+00	3.1836E+14	7.9067E-03	1.9117E-03	1.0283E-01
La-140	4.2246E-01	4.0489E-06	3.5003E+00	4.6625E+14	1.1723E-02	2.8001E-03	1.5244E-01
La-141	4.9989E-03	1.0279E-08	8.9188E-02	1.1928E+13	5.1809E-04	7.1643E-05	6.6996E-03
La-142	1.4063E-04	3.8556E-09	1.1422E-02	1.5372E+12	1.2620E-04	9.2185E-06	1.6101E-03
Ce-141	2.2001E+00	3.0596E-05	1.7899E+01	2.3843E+15	5.8907E-02	1.4317E-02	7.6615E-01

Ce-143	8.9582E-02	5.3030E-07	7.9111E-01	1.0543E+14	2.8073E-03	6.3315E-04	3.6481E-02
Ce-144	6.4795E+00	3.7338E-03	5.2549E+01	6.9995E+15	1.7242E-01	4.2031E-02	2.2426E+00
Pr-143	1.0136E+00	1.2759E-05	8.2813E+00	1.1031E+15	2.7361E-02	6.6241E-03	3.5585E-01
Kr-83m	5.3523E+01	1.9410E-09	6.4378E+02	8.5227E+16	4.0817E-01	5.1512E-01	6.5497E+00
Br-82	3.6492E+01	1.7684E-04	3.2045E+02	4.2704E+16	1.1314E+00	2.5645E-01	1.4703E+01
Br-83	2.4589E+01	1.4097E-05	7.9545E+02	1.0668E+17	6.3248E+00	6.4041E-01	8.1250E+01
Br-84	3.2717E-03	1.9314E-05	9.3080E+01	1.2743E+16	2.4543E+00	7.6112E-02	3.0166E+01
Rb-89	1.2094E-09	3.4418E-07	1.5559E+00	2.1863E+14	6.8296E-02	1.3123E-03	7.8882E-01
Y-91m	3.0980E-02	1.9537E-08	3.3590E-01	4.4499E+13	1.3491E-03	2.6915E-04	1.7540E-02
Nb-95m	2.8454E-02	1.0863E-07	2.3137E-01	3.0818E+13	7.6112E-04	1.8507E-04	9.8993E-03
Nb-97	2.5225E-03	2.4753E-09	3.1067E-02	4.1389E+12	1.8892E-04	2.4934E-05	2.4240E-03
Rh-103m	3.0477E+00	2.4479E-08	2.4764E+01	3.2772E+15	8.1115E-02	1.9807E-02	1.0552E+00
Te-125m	3.7404E+00	4.2134E-05	3.0383E+01	4.0470E+15	9.9844E-02	2.4302E-02	1.2986E+00
Te-131	1.6836E+00	2.0140E-06	1.5286E+01	2.0098E+15	6.2355E-02	1.2241E-02	8.0265E-01
Te-133	4.9790E-04	2.3563E-08	2.1426E-01	2.7600E+13	1.4314E-03	1.7055E-04	2.2488E-02
Te-133m	2.8888E-03	5.0559E-07	1.6234E+00	2.1985E+14	2.7425E-02	1.3157E-03	3.4537E-01
Te-134	5.8489E-04	1.9373E-07	1.7705E+00	2.4094E+14	3.7683E-02	1.4401E-03	4.6954E-01
Xe-131m	1.5654E+00	4.9780E-09	6.3668E+00	8.4105E+14	9.4867E-04	5.0553E-03	1.5283E-02
Xe-133m	2.4131E+01	2.8529E-07	1.0361E+02	1.3691E+16	1.7074E-02	8.2317E-02	2.7499E-01
Xe-135m	3.4942E+02	1.6931E-04	4.1292E+03	5.3539E+17	6.8827E+00	3.2985E+00	1.0911E+02
Cs-134m	4.6019E-01	1.1466E-07	1.1330E+01	1.5177E+15	7.9406E-02	9.1134E-03	1.0223E+00
Cs-138	1.7072E-03	1.1330E-05	4.3163E+01	5.9076E+15	1.1273E+00	3.5285E-02	1.3866E+01
Ba-141	7.9804E-11	3.0727E-10	3.1053E-03	4.3279E+11	1.2127E-04	2.5907E-06	1.4288E-03
Total	2.8785E+04	1.0000E+00	0.0000E+00	0.0000E+00	1.0193E+03	2.1183E+02	1.3232E+04

Dose Equivalent (Ci/cc) I-131 (Thyroid)	6.4427E-07
Dose Equivalent (Ci/cc) I-131 (CEDE)	6.5212E-07
Dose Equivalent (Ci/cc) I-131 (ICRP2 Thyroid)	7.1003E-07
Total I (Ci)	1.7285E+04
Dose Equivalent (Ci/cc) Xe-133 (EDE)	1.2178E-06

RCS Compartment Group Inventory Distribution:

Time (h) = 8.0000	Atmosphere	Sump
Noble gases (Ci)	2.2367E+03	0.0000E+00
Elemental I (Ci)	1.6825E+04	0.0000E+00
Organic I (Ci)	5.2037E+02	0.0000E+00
Aerosol I (Ci)	0.0000E+00	0.0000E+00
All Aerosols (Ci)	9.2025E+03	0.0000E+00
All Aerosols (kg)	3.6581E-02	0.0000E+00

Intact Steam Generators Compartment Nuclide Inventory (Ci) at Time (h) = 8.0000

Nuclide	Compartment Atmosphere	Dose Fract	Exposure (Ci-hr)	Decays (Bq-s)	Pathway 5 Inflow	Pathway 7 Outflow
Rb-86	8.3739E-02	1.3889E-04	3.4390E-01	4.5809E+13	8.6933E-02	2.6608E-03
Sr-89	1.2858E-03	1.3208E-05	5.2668E-03	7.0154E+11	1.3293E-03	4.0748E-05
Sr-90	1.1922E-04	3.8320E-05	4.8757E-04	6.4945E+10	1.2299E-04	3.7722E-06
Sr-91	3.0542E-04	1.8804E-07	1.5337E-03	2.0465E+11	4.2943E-04	1.1902E-05
Sr-92	3.0986E-05	2.6333E-08	2.8545E-04	3.8263E+10	1.0669E-04	2.2334E-06
Y-90	2.0008E-04	4.2287E-07	8.2811E-04	1.1031E+11	2.1018E-04	6.4080E-06
Y-91	1.6244E-02	1.9663E-04	6.6522E-02	8.8609E+12	1.6791E-02	5.1467E-04
Y-92	1.2411E-04	4.1278E-08	7.4293E-04	9.9190E+10	2.1945E-04	5.7758E-06
Y-93	1.1187E-04	7.3983E-08	5.5465E-04	7.4005E+10	1.5431E-04	4.3035E-06
Zr-95	2.3133E-02	1.3772E-04	9.4726E-02	1.2618E+13	2.3909E-02	7.3288E-04
Zr-97	2.7212E-04	3.3359E-07	1.2459E-03	1.6613E+11	3.3293E-04	9.6559E-06
Nb-95	3.3452E-02	5.1404E-05	1.3691E-01	1.8236E+13	3.4546E-02	1.0592E-03
Mo-99	1.8342E+00	1.8849E-03	7.7171E+00	1.0282E+15	1.9750E+00	5.9731E-02
Tc-99m	1.7632E+00	4.2513E-05	7.4083E+00	9.8616E+14	1.8944E+00	5.7339E-02
Ru-103	1.9076E-02	4.3484E-05	7.8171E-02	1.0413E+13	1.9738E-02	6.0480E-04
Ru-105	2.6877E-05	9.0786E-09	1.7487E-04	2.3383E+10	5.5645E-05	1.3619E-06
Ru-106	3.2170E-02	3.8011E-03	1.3160E-01	1.7529E+13	3.3198E-02	1.0181E-03
Rh-105	6.4113E-04	1.6582E-07	2.7569E-03	3.6738E+11	7.1310E-04	2.1345E-05
Te-127	2.3624E-01	1.8840E-05	9.7055E-01	1.2920E+14	2.4546E-01	7.5094E-03
Te-127m	2.3707E-01	1.2623E-03	9.7024E-01	1.2924E+14	2.4483E-01	7.5065E-03
Te-129	2.1685E-01	6.3850E-06	8.8952E-01	1.1790E+14	2.2487E-01	6.8823E-03

Te-129m	3.3146E-01	1.9698E-03	1.3588E+00	1.8099E+14	3.4315E-01	1.0513E-02
Te-131m	4.6361E-02	8.7265E-05	2.0190E-01	2.6909E+13	5.2592E-02	1.5636E-03
Te-132	8.6538E-01	2.0935E-03	3.6248E+00	4.8293E+14	9.2557E-01	2.8054E-02
I-131	4.5441E+01	3.7570E-01	1.8764E+02	2.4996E+16	4.7566E+01	1.4519E+00
I-132	4.1343E+00	3.7156E-03	3.9230E+01	5.2596E+15	1.5249E+01	3.0725E-01
I-133	4.5640E+01	7.6193E-02	2.0450E+02	2.7261E+16	5.4045E+01	1.5843E+00
I-134	1.2804E-02	1.3437E-04	1.4747E+00	2.0019E+14	1.2120E+00	1.2001E-02
I-135	1.3408E+01	9.2941E-03	7.4121E+01	9.8986E+15	2.1777E+01	5.7599E-01
Xe-133	2.1901E+00	6.1779E-06	6.1902E+00	8.1980E+14	1.1749E+00	4.7548E-02
Xe-135	9.1741E+00	2.2882E-04	3.0057E+01	3.9860E+15	5.9933E+00	2.3142E-01
Cs-134	3.2055E+01	3.7332E-01	1.3111E+02	1.7464E+16	3.3074E+01	1.0144E+00
Cs-136	2.0719E+00	4.3570E-03	8.5237E+00	1.1354E+15	2.1566E+00	6.5951E-02
Cs-137	1.7849E+01	1.4106E-01	7.2998E+01	9.7233E+15	1.8414E+01	5.6476E-01
Ba-139	3.4066E-06	1.0448E-09	8.8709E-05	1.1962E+10	4.9274E-05	7.0409E-07
Ba-140	1.8361E-03	1.7501E-06	7.5551E-03	1.0064E+12	1.9117E-03	5.8457E-05
La-140	2.6552E-03	4.0564E-06	1.1018E-02	1.4676E+12	2.8001E-03	8.5259E-05
La-141	3.1419E-05	8.0182E-09	2.1858E-04	2.9241E+10	7.1643E-05	1.7037E-06
La-142	8.8388E-07	1.9361E-09	1.8020E-05	2.4270E+09	9.2185E-06	1.4252E-07
Ce-141	1.3828E-02	3.0842E-05	5.6689E-02	7.5512E+12	1.4317E-02	4.3860E-04
Ce-143	5.6303E-04	5.2013E-07	2.4379E-03	3.2489E+11	6.3315E-04	1.8878E-05
Ce-144	4.0725E-02	3.7678E-03	1.6660E-01	2.2191E+13	4.2031E-02	1.2889E-03
Pr-143	6.3708E-03	1.2843E-05	2.6191E-02	3.4888E+12	6.6241E-03	2.0265E-04
Kr-83m	3.3640E-01	1.9790E-09	2.0622E+00	2.7454E+14	5.1512E-01	1.5979E-02
Br-82	2.2936E-01	1.7377E-04	9.8936E-01	1.3185E+14	2.5645E-01	7.6606E-03
Br-83	1.5455E-01	9.1369E-06	1.6198E+00	2.1731E+14	6.4041E-01	1.2695E-02
Br-84	2.0563E-05	3.7036E-06	5.6077E-02	7.6999E+12	7.6112E-02	4.8809E-04
Rb-89	7.6012E-12	3.1707E-08	4.5031E-04	6.3647E+10	1.3123E-03	4.8881E-06
Y-91m	1.9471E-04	1.8006E-08	9.7263E-04	1.2894E+11	2.6915E-04	7.5457E-06
Nb-95m	1.7884E-04	1.0952E-07	7.3290E-04	9.7619E+10	1.8507E-04	5.6704E-06
Nb-97	1.5854E-05	2.0507E-09	8.0866E-05	1.0756E+10	2.4934E-05	6.2888E-07
Rh-103m	1.9155E-02	2.4693E-08	7.8484E-02	1.0389E+13	1.9807E-02	6.0722E-04
Te-125m	2.3509E-02	4.2495E-05	9.6275E-02	1.2824E+13	2.4302E-02	7.4486E-04
Te-131	1.0581E-02	1.9386E-06	4.6229E-02	6.0780E+12	1.2241E-02	3.5819E-04

Te-133	3.1294E-06	9.6085E-09	2.7450E-04	3.6204E+10	1.7055E-04	2.1669E-06
Te-133m	1.8157E-05	1.6649E-07	1.6796E-03	2.2780E+11	1.3157E-03	1.3614E-05
Te-134	3.6761E-06	4.8710E-08	1.3986E-03	1.9074E+11	1.4401E-03	1.1656E-05
Xe-131m	9.8390E-03	6.7031E-09	2.6935E-02	3.5656E+12	5.0553E-03	2.0677E-04
Xe-133m	1.5166E-01	3.7900E-07	4.3242E-01	5.7270E+13	8.2317E-02	3.3220E-03
Xe-135m	2.1961E+00	1.5732E-04	1.2054E+01	1.5738E+15	3.2985E+00	9.3383E-02
Cs-134m	2.8924E-03	8.0718E-08	2.5059E-02	3.3577E+12	9.1134E-03	1.9590E-04
Cs-138	1.0730E-05	2.1997E-06	2.6330E-02	3.6141E+12	3.5285E-02	2.2862E-04
Ba-141	5.0158E-13	3.3938E-11	1.0776E-06	1.5092E+08	2.5907E-06	1.0925E-08
Total	1.8092E+02	1.0000E+00	0.0000E+00	0.0000E+00	2.1183E+02	6.1794E+00

Dose Equivalent (Ci/cc) I-131 (Thyroid)	6.4522E-09
Dose Equivalent (Ci/cc) I-131 (CEDE)	6.5307E-09
Dose Equivalent (Ci/cc) I-131 (ICRP2 Thyroid)	7.1107E-09
Total I (Ci)	1.0864E+02
Dose Equivalent (Ci/cc) Xe-133 (EDE)	1.2195E-08

Intact Steam Generators Compartment Group Inventory Distribution:

Time (h) = 8.0000	Atmosphere	Sump
Noble gases (Ci)	1.4058E+01	0.0000E+00
Elemental I (Ci)	1.0575E+02	0.0000E+00
Organic I (Ci)	3.2706E+00	0.0000E+00
Aerosol I (Ci)	0.0000E+00	0.0000E+00
All Aerosols (Ci)	5.7839E+01	0.0000E+00
All Aerosols (kg)	2.2992E-04	0.0000E+00

Control Room Compartment Nuclide Inventory (Ci) at Time (h) = 8.0000

Nuclide	Compartment Atmosphere	Dose Fract	Exposure (Ci-hr)	Decays (Bq-s)	Compartment Recirc Filtr	Pathway 2 Inflow	Pathway 3 Inflow	Pathway 4 Outflow
Rb-86	2.4513E-08	1.2440E-04	8.4387E-05	1.1241E+10	3.5502E-04	3.8032E-04	6.5331E-05	9.2186E-05
Sr-89	3.7640E-10	1.1746E-05	1.2833E-06	1.7090E+08	5.4514E-06	5.7752E-06	9.9329E-07	1.4685E-06

Y-91	4.7552E-09	1.7515E-04	1.6235E-05	2.1626E+09	6.8869E-05	7.3156E-05	1.2569E-05	1.7742E-05
Zr-95	6.7718E-09	1.2266E-04	2.3115E-05	3.0790E+09	9.8076E-05	1.0416E-04	1.7895E-05	2.5251E-05
Nb-95	9.7924E-09	4.5737E-05	3.3375E-05	4.4455E+09	1.4182E-04	1.5038E-04	2.5838E-05	3.6619E-05
Mo-99	5.3693E-07	1.7660E-03	1.9810E-03	2.6393E+11	7.7764E-03	8.9442E-03	1.5339E-03	2.1645E-03
Tc-99m	5.1613E-07	3.9698E-05	1.8954E-03	2.5221E+11	7.4751E-03	8.5558E-03	1.4675E-03	3.7643E-03
Ru-103	5.5841E-09	3.8785E-05	1.9103E-05	2.5446E+09	8.0874E-05	8.6082E-05	1.4789E-05	2.0868E-05
Ru-106	9.4169E-09	3.3791E-03	3.2052E-05	4.2693E+09	1.3639E-04	1.4441E-04	2.4814E-05	3.5013E-05
Rh-105	1.8768E-10	1.6126E-07	7.3456E-07	9.7875E+07	2.7181E-06	3.3209E-06	5.6880E-07	8.1763E-07
Te-127	6.9155E-08	1.6912E-05	2.3871E-04	3.1772E+10	1.0016E-03	1.0760E-03	1.8481E-04	4.0580E-04
Te-127m	6.9396E-08	1.1232E-03	2.3654E-04	3.1507E+10	1.0051E-03	1.0658E-03	1.8312E-04	2.5839E-04
Te-129	6.3479E-08	5.7293E-06	2.1868E-04	2.8938E+10	9.1936E-04	9.8597E-04	1.6931E-04	1.3324E-03
Te-129m	9.7029E-08	1.7580E-03	3.3225E-04	4.4257E+10	1.4053E-03	1.4972E-03	2.5722E-04	3.6296E-04
Te-131m	1.3571E-08	8.7081E-05	5.5200E-05	7.3561E+09	1.9655E-04	2.4985E-04	4.2749E-05	6.0328E-05
Te-132	2.5332E-07	1.9455E-03	9.2287E-04	1.2295E+11	3.6689E-03	4.1653E-03	7.1454E-04	1.0083E-03
I-131	2.2805E-05	3.8199E-01	5.2271E-02	6.9630E+12	2.1319E-01	2.3704E-01	3.6016E-02	5.7125E-02
I-132	2.0652E-06	1.3216E-02	3.8228E-02	5.1218E+12	1.9036E-02	1.8324E-01	2.6718E-02	4.4374E-02
I-133	2.2905E-05	8.9803E-02	6.6036E-02	8.8019E+12	2.1413E-01	3.0121E-01	4.5556E-02	7.2210E-02
I-134	6.4258E-09	2.1454E-03	6.4511E-03	8.7301E+11	6.0048E-05	3.3813E-02	4.6268E-03	7.2166E-03
I-135	6.7290E-06	1.5421E-02	3.3695E-02	4.4977E+12	6.2905E-02	1.5583E-01	2.3320E-02	3.6896E-02
Xe-133	4.4281E-03	1.2766E-04	3.5046E-02	4.4916E+12	0.0000E+00	3.1188E-02	6.0076E-05	3.7055E-02
Xe-135	1.7801E-02	5.1356E-03	1.8482E-01	2.3703E+13	0.0000E+00	1.5156E-01	3.7673E-04	1.9580E-01
Cs-134	9.3833E-06	3.3181E-01	3.1928E-02	4.2528E+12	1.3590E-01	1.4385E-01	2.4717E-02	3.4877E-02
Cs-136	6.0649E-07	3.9152E-03	2.0985E-03	2.7954E+11	8.7838E-03	9.4591E-03	1.6246E-03	2.2925E-03
Cs-137	5.2248E-06	1.2535E-01	1.7773E-02	2.3673E+12	7.5670E-02	8.0076E-02	1.3759E-02	1.9415E-02
Ba-140	5.3748E-10	1.5731E-06	1.8606E-06	2.4785E+08	7.7843E-06	8.3869E-06	1.4405E-06	2.0326E-06
La-140	7.7727E-10	3.7060E-06	2.7578E-06	3.6734E+08	1.1257E-05	1.2439E-05	2.1352E-06	3.2843E-06
Ce-141	4.0479E-09	2.7530E-05	1.3864E-05	1.8467E+09	5.8626E-05	6.2475E-05	1.0733E-05	1.5146E-05
Ce-143	1.6482E-10	5.1363E-07	6.5958E-07	8.7893E+07	2.3870E-06	2.9842E-06	5.1078E-07	7.2081E-07
Ce-144	1.1921E-08	3.3499E-03	4.0583E-05	5.4057E+09	1.7266E-04	1.8285E-04	3.1418E-05	4.4332E-05
Pr-143	1.8649E-09	1.1525E-05	6.4390E-06	8.5770E+08	2.7010E-05	2.9022E-05	4.9849E-06	7.0460E-06
Kr-83m	9.5632E-04	8.1755E-08	2.3342E-02	2.9964E+12	0.0000E+00	2.5707E-02	9.1856E-05	2.4849E-02
Br-82	1.1511E-07	1.9142E-04	2.9860E-04	3.9789E+10	1.0761E-03	1.3583E-03	2.0587E-04	3.2640E-04
Br-83	7.7562E-08	3.3426E-05	1.6236E-03	2.1753E+11	7.2508E-04	7.7766E-03	1.1343E-03	1.7843E-03

Br-84	1.0320E-11	1.3846E-04	5.7438E-04	7.8541E+10	9.6477E-08	3.2860E-03	4.2236E-04	6.4418E-04
Rb-89	2.2251E-18	3.4036E-06	1.3244E-05	1.8634E+09	3.2226E-14	9.3940E-05	1.1096E-05	1.5280E-05
Y-91m	5.6998E-11	2.1425E-08	3.1709E-07	4.1861E+07	8.2551E-07	1.4322E-06	2.4533E-07	2.5411E-06
Rh-103m	5.6072E-09	2.1931E-08	1.9098E-05	2.5226E+09	8.1209E-05	8.5975E-05	1.4783E-05	1.4047E-04
Te-125m	6.8817E-09	3.7858E-05	2.3499E-05	3.1301E+09	9.9667E-05	1.0589E-04	1.8192E-05	2.5670E-05
Te-131	3.0975E-09	2.2077E-06	1.4424E-05	1.8995E+09	4.4861E-05	6.7961E-05	1.1239E-05	1.8865E-04
Te-133	9.1606E-13	5.6020E-08	4.3847E-07	5.0761E+07	1.3267E-08	7.0439E-07	3.0990E-07	2.3146E-05
Te-133m	5.3149E-12	2.2052E-06	6.0949E-06	8.2413E+08	7.6976E-08	3.1602E-05	4.8254E-06	6.7573E-06
Te-134	1.0761E-12	1.0461E-06	8.2297E-06	1.1182E+09	1.5585E-08	4.4529E-05	6.5662E-06	9.1684E-06
Xe-131m	2.1639E-05	1.4011E-07	1.5425E-04	1.9758E+10	0.0000E+00	1.3845E-04	2.4165E-07	1.6295E-04
Xe-133m	3.1455E-04	7.9741E-06	2.4927E-03	3.1945E+11	0.0000E+00	2.2325E-03	4.2834E-06	2.6356E-03
Xe-135m	2.9543E-02	1.6527E-02	3.4695E-01	4.3604E+13	0.0000E+00	9.6089E-01	1.5106E-03	3.6846E-01
Cs-134m	8.4668E-10	2.1554E-07	1.8333E-05	2.4537E+09	1.2262E-05	8.6535E-05	1.4275E-05	2.0121E-05
Cs-138	3.1409E-12	7.3529E-05	2.4113E-04	3.2960E+10	4.5490E-08	1.3716E-03	1.9413E-04	2.7023E-04
Total	5.3136E-02	1.0000E+00	0.0000E+00	0.0000E+00	7.5634E-01	2.3584E+00	1.8519E-01	9.1649E-01

Control Room Compartment Group Inventory Distribution:

Time (h) = 8.0000	Atmosphere	Sump
Noble gases (Ci)	5.3064E-02	0.0000E+00
Elemental I (Ci)	5.3063E-05	0.0000E+00
Organic I (Ci)	1.6411E-06	0.0000E+00
Aerosol I (Ci)	0.0000E+00	0.0000E+00
All Aerosols (Ci)	1.6931E-05	0.0000E+00
All Aerosols (kg)	6.7303E-11	0.0000E+00

Time (h) = 8.0000	Deposition Surfaces	Recirculating Filter
Noble gases (Ci)	0.0000E+00	0.0000E+00
Elemental I (Ci)	0.0000E+00	4.9579E-01
Organic I (Ci)	0.0000E+00	1.5334E-02
Aerosol I (Ci)	0.0000E+00	0.0000E+00
All Aerosols (Ci)	0.0000E+00	2.4521E-01

All Aerosols (kg) 0.0000E+00 9.7475E-07

Ruptured Steam Generator Compartment Nuclide Inventory (Ci) at Time (h) = 8.0000

Nuclide	Compartment Atmosphere	Dose Fract	Exposure (Ci-hr)	Decays (Bq-s)	Pathway 6 Inflow	Pathway 8 Outflow
Rb-86	4.5913E+00	1.3804E-04	3.5934E+01	4.7865E+15	4.6636E+00	1.6375E-02
Sr-89	7.0501E-02	1.3111E-05	5.4963E-01	7.3211E+13	7.0903E-02	2.4911E-04
Sr-90	6.5364E-03	3.8015E-05	5.0852E-02	6.7734E+12	6.5600E-03	2.3037E-05
Sr-91	1.6746E-02	2.0417E-07	1.7507E-01	2.3361E+13	2.9648E-02	1.0343E-04
Sr-92	1.6990E-03	3.6606E-08	4.1717E-02	5.5909E+12	1.2478E-02	4.2815E-05
Y-90	1.0970E-02	4.2175E-07	8.6831E-02	1.1567E+13	1.1401E-02	4.0019E-05
Y-91	8.9066E-01	1.9517E-04	6.9419E+00	9.2468E+14	8.9720E-01	3.1505E-03
Y-92	6.8050E-03	4.7078E-08	8.9079E-02	1.1886E+13	1.6116E-02	5.6368E-05
Y-93	6.1339E-03	7.9888E-08	6.2965E-02	8.4010E+12	1.0500E-02	3.6644E-05
Zr-95	1.2684E+00	1.3669E-04	9.8848E+00	1.3167E+15	1.2774E+00	4.4856E-03
Zr-97	1.4920E-02	3.4788E-07	1.3660E-01	1.8213E+13	2.0601E-02	7.2079E-05
Nb-95	1.8341E+00	5.1010E-05	1.4283E+01	1.9025E+15	1.8443E+00	6.4765E-03
Mo-99	1.0057E+02	1.8935E-03	8.1504E+02	1.0859E+17	1.0952E+02	3.8424E-01
Tc-99m	9.6673E+01	4.2677E-05	7.8186E+02	1.0407E+17	1.0478E+02	3.6764E-01
Ru-103	1.0459E+00	4.3175E-05	8.1601E+00	1.0869E+15	1.0557E+00	3.7070E-03
Ru-105	1.4736E-03	1.1003E-08	2.2282E-02	2.9792E+12	4.9828E-03	1.7253E-05
Ru-106	1.7638E+00	3.7712E-03	1.3726E+01	1.8283E+15	1.7712E+00	6.2199E-03
Rh-105	3.5152E-02	1.6813E-07	2.9387E-01	3.9160E+13	4.0622E-02	1.4243E-04
Te-127	1.2953E+01	1.8732E-05	1.0145E+02	1.3506E+16	1.3193E+01	4.6318E-02
Te-127m	1.2998E+01	1.2526E-03	1.0122E+02	1.3483E+16	1.3071E+01	4.5902E-02
Te-129	1.1890E+01	6.3457E-06	9.2943E+01	1.2316E+16	1.2086E+01	4.2429E-02
Te-129m	1.8174E+01	1.9561E-03	1.4186E+02	1.8896E+16	1.8361E+01	6.4474E-02
Te-131m	2.5419E+00	8.9016E-05	2.1652E+01	2.8857E+15	3.0533E+00	1.0700E-02
Te-132	4.7448E+01	2.0990E-03	3.8207E+02	5.0903E+16	5.1017E+01	1.7901E-01
I-131	2.4915E+03	3.7431E-01	1.9654E+04	2.6182E+18	2.5712E+03	9.0262E+00
I-132	2.2668E+02	5.3322E-03	5.9187E+03	7.9357E+17	1.9136E+03	6.5436E+00
I-133	2.5024E+03	7.8703E-02	2.2207E+04	2.9604E+18	3.2546E+03	1.1395E+01

I-134	7.0203E-01	3.5489E-04	4.0949E+02	5.5540E+16	3.3111E+02	1.0811E+00
I-135	7.3514E+02	1.0519E-02	8.8193E+03	1.1777E+18	1.6682E+03	5.8031E+00
Xe-133	1.2008E+02	4.8187E-06	5.0762E+02	6.7098E+16	3.8454E+00	1.8989E-02
Xe-135	5.0301E+02	1.8700E-04	2.5823E+03	3.4164E+17	2.4928E+01	1.2352E-01
Cs-134	1.7575E+03	3.7036E-01	1.3675E+04	1.8215E+18	1.7643E+03	6.1958E+00
Cs-136	1.1360E+02	4.3337E-03	8.9132E+02	1.1873E+17	1.1598E+02	4.0719E-01
Cs-137	9.7862E+02	1.3994E-01	7.6134E+03	1.0141E+18	9.8214E+02	3.4490E+00
Ba-139	1.8678E-04	2.0207E-09	1.8037E-02	2.4311E+12	9.3972E-03	3.1518E-05
Ba-140	1.0067E-01	1.7408E-06	7.9009E-01	1.0525E+14	1.0283E-01	3.6103E-04
La-140	1.4558E-01	4.0504E-06	1.1566E+00	1.5406E+14	1.5244E-01	5.3504E-04
La-141	1.7227E-03	9.9761E-09	2.8591E-02	3.8242E+12	6.6996E-03	2.3231E-05
La-142	4.8462E-05	3.4996E-09	3.4245E-03	4.6100E+11	1.6101E-03	5.4268E-06
Ce-141	7.5819E-01	3.0629E-05	5.9187E+00	7.8838E+14	7.6615E-01	2.6903E-03
Ce-143	3.0871E-02	5.2921E-07	2.6077E-01	3.4753E+13	3.6481E-02	1.2787E-04
Ce-144	2.2329E+00	3.7382E-03	1.7378E+01	2.3147E+15	2.2426E+00	7.8754E-03
Pr-143	3.4930E-01	1.2770E-05	2.7379E+00	3.6470E+14	3.5585E-01	1.2494E-03
Kr-83m	1.8444E+01	2.0041E-09	2.1956E+02	2.9101E+16	6.5497E+00	3.1894E-02
Br-82	1.2575E+01	1.7651E-04	1.0565E+02	1.4080E+16	1.4703E+01	5.1542E-02
Br-83	8.4736E+00	1.3318E-05	2.4823E+02	3.3295E+16	8.1250E+01	2.7791E-01
Br-84	1.1275E-03	1.4031E-05	2.2335E+01	3.0625E+15	3.0166E+01	9.3732E-02
Rb-89	4.1676E-10	1.8171E-07	2.7132E-01	3.8296E+13	7.8882E-01	2.1265E-03
Y-91m	1.0676E-02	1.9385E-08	1.1009E-01	1.4586E+13	1.7540E-02	6.1527E-05
Nb-95m	9.8054E-03	1.0875E-07	7.6508E-02	1.0190E+13	9.8993E-03	3.4761E-05
Nb-97	8.6928E-04	2.3948E-09	9.9282E-03	1.3224E+12	2.4240E-03	8.2726E-06
Rh-103m	1.0502E+00	2.4510E-08	8.1900E+00	1.0839E+15	1.0552E+00	3.7070E-03
Te-125m	1.2890E+00	4.2182E-05	1.0047E+01	1.3383E+15	1.2986E+00	4.5601E-03
Te-131	5.8017E-01	1.9972E-06	5.0069E+00	6.5822E+14	8.0265E-01	2.7612E-03
Te-133	1.7158E-04	2.2470E-08	6.7489E-02	8.8028E+12	2.2488E-02	1.0161E-04
Te-133m	9.9550E-04	4.2372E-07	4.4938E-01	6.0900E+13	3.4537E-01	1.1318E-03
Te-134	2.0156E-04	1.5230E-07	4.5973E-01	6.2628E+13	4.6954E-01	1.5035E-03
Xe-131m	5.3946E-01	5.1739E-09	2.1857E+00	2.8881E+14	1.5283E-02	7.5521E-05
Xe-133m	8.3156E+00	2.9645E-07	3.5560E+01	4.7005E+15	2.7499E-01	1.3576E-03
Xe-135m	1.2041E+02	1.7257E-04	1.3901E+03	1.8079E+17	1.0911E+02	5.0898E-01

Cs-134m	1.5859E-01	1.0963E-07	3.5781E+00	4.7935E+14	1.0223E+00	3.5131E-03
Cs-138	5.8831E-04	8.2634E-06	1.0399E+01	1.4254E+15	1.3866E+01	4.3152E-02
Ba-141	2.7501E-11	1.7855E-10	5.9602E-04	8.3352E+10	1.4288E-03	4.0346E-06
Total	9.9195E+03	1.0000E+00	0.0000E+00	0.0000E+00	1.3232E+04	4.6266E+01

Dose Equivalent (Ci/cc) I-131 (Thyroid)	1.0613E-06
Dose Equivalent (Ci/cc) I-131 (CEDE)	1.0742E-06
Dose Equivalent (Ci/cc) I-131 (ICRP2 Thyroid)	1.1696E-06
Total I (Ci)	5.9564E+03
Dose Equivalent (Ci/cc) Xe-133 (EDE)	2.0060E-06

Ruptured Steam Generator Compartment Group Inventory Distribution:

Time (h) = 8.0000	Atmosphere	Sump
Noble gases (Ci)	7.7080E+02	0.0000E+00
Elemental I (Ci)	5.7981E+03	0.0000E+00
Organic I (Ci)	1.7932E+02	0.0000E+00
Aerosol I (Ci)	0.0000E+00	0.0000E+00
All Aerosols (Ci)	3.1713E+03	0.0000E+00
All Aerosols (kg)	1.2606E-02	0.0000E+00

```
#######################################################################
    ALION RADTRAD Version 3.10 Rev 2 run on 12/01/2014  at 16:18:07

                Copyright © 2009 Alion Science and Technology
#######################################################################
```

Exclusion Area Boundary Doses:

Time (h) = 24.0000	Whole Body	Thyroid	TEDE
Delta dose (rem)	1.0356E-03	5.3809E-01	3.7461E-02
Accumulated dose (rem)	1.3247E-01	6.4000E+01	4.1774E+00

Low Population Zone Doses:

Time (h) = 24.0000	Whole Body	Thyroid	TEDE
Delta dose (rem)	6.4039E-05	3.3275E-02	2.3166E-03
Accumulated dose (rem)	2.3566E-02	1.1389E+01	7.4309E-01

Control Room Doses:

Time (h) = 24.0000	Whole Body	Thyroid	TEDE	Skin
Delta dose (rem)	1.9324E-03	9.9660E-02	7.1652E-03	1.0385E-01
Accumulated dose (rem)	8.9201E-03	6.3291E+01	3.7892E+00	4.3958E-01

****

RCS Compartment Nuclide Inventory (Ci) at Time (h) = 24.0000

Nuclide	Compartment Atmosphere	Dose Fract	Exposure (Ci-hr)	Decays (Bq-s)	Pathway 1 Outflow	Pathway 5 Outflow	Pathway 6 Outflow
Rb-86	1.2831E+01	1.4140E-04	3.1785E+02	4.2342E+16	3.5858E-01	2.5516E-01	4.6636E+00
Sr-89	2.0013E-01	1.3534E-05	4.8991E+00	6.5258E+14	5.4499E-03	3.9323E-03	7.0903E-02
Sr-90	1.8725E-02	3.9414E-05	4.5528E-01	6.0643E+13	5.0436E-04	3.6541E-04	6.5600E-03
Sr-91	1.4928E-02	1.3361E-07	9.8932E-01	1.3228E+14	2.2865E-03	7.9864E-04	2.9648E-02
Sr-92	8.1278E-05	1.5367E-08	1.5123E-01	2.0287E+13	9.6992E-04	1.2211E-04	1.2478E-02
Y-90	2.9407E-02	4.2293E-07	7.5190E-01	1.0018E+14	8.7671E-04	6.0378E-04	1.1401E-02
Y-91	2.5317E+00	2.0159E-04	6.1917E+01	8.2476E+15	6.8982E-02	4.9698E-02	8.9720E-01
Y-92	1.2779E-03	2.3564E-08	3.8501E-01	5.1514E+13	1.2413E-03	3.1121E-04	1.6116E-02
Y-93	5.8607E-03	5.3406E-08	3.6348E-01	4.8594E+13	8.0961E-04	2.9337E-04	1.0500E-02
Zr-95	3.6075E+00	1.4123E-04	8.8188E+01	1.1747E+16	9.8214E-02	7.0784E-02	1.2774E+00
Zr-97	2.2175E-02	2.7101E-07	9.1890E-01	1.2270E+14	1.5867E-03	7.4049E-04	2.0601E-02
Nb-95	5.2331E+00	5.2784E-05	1.2762E+02	1.7000E+16	1.4180E-01	1.0244E-01	1.8443E+00
Mo-99	2.4354E+02	1.8121E-03	6.7353E+03	8.9780E+17	8.4242E+00	5.4125E+00	1.0952E+02
Tc-99m	2.3482E+02	4.0942E-05	6.4770E+03	8.6258E+17	8.0592E+00	5.2049E+00	1.0478E+02
Ru-103	2.9613E+00	4.4508E-05	7.2639E+01	9.6760E+15	8.1168E-02	5.8306E-02	1.0557E+00

Ru-105	3.4728E-04	5.3785E-09	9.4052E-02	1.2599E+13	3.8566E-04	7.6001E-05	4.9828E-03
Ru-106	5.0466E+00	3.9077E-03	1.2282E+02	1.6359E+16	1.3618E-01	9.8575E-02	1.7712E+00
Rh-105	7.3985E-02	1.5144E-07	2.2857E+00	3.0484E+14	3.1255E-03	1.8385E-03	4.0622E-02
Te-127	3.6528E+01	1.9222E-05	8.9900E+02	1.1968E+17	1.0144E+00	7.2163E-01	1.3193E+01
Te-127m	3.7079E+01	1.2961E-03	9.0440E+02	1.2047E+17	1.0050E+00	7.2590E-01	1.3071E+01
Te-129	3.3594E+01	6.5291E-06	8.2577E+02	1.0945E+17	9.2938E-01	6.6285E-01	1.2086E+01
Te-129m	5.1353E+01	2.0145E-03	1.2615E+03	1.6805E+17	1.4117E+00	1.0126E+00	1.8361E+01
Te-131m	5.0315E+00	7.7869E-05	1.6356E+02	2.1819E+16	2.3498E-01	1.3161E-01	3.0533E+00
Te-132	1.1795E+02	2.0333E-03	3.1961E+03	4.2598E+17	3.9239E+00	2.5679E+00	5.1017E+01
I-131	6.7391E+03	3.7741E-01	1.7112E+05	2.2799E+19	1.9771E+02	1.3740E+02	2.5712E+03
I-132	1.2593E+02	2.3701E-03	2.2717E+04	3.0454E+18	1.4899E+02	1.8328E+01	1.9136E+03
I-133	4.2062E+03	6.4334E-02	1.5675E+05	2.0923E+19	2.5058E+02	1.2624E+02	3.2546E+03
I-134	6.4540E-06	1.5026E-04	1.4971E+03	2.0292E+17	2.6337E+01	1.2141E+00	3.3111E+02
I-135	3.9336E+02	6.0051E-03	4.3477E+04	5.8187E+18	1.2883E+02	3.5127E+01	1.6682E+03
Xe-133	7.7153E+02	1.1958E-05	1.0877E+04	1.4416E+18	2.3875E-01	8.6687E+00	3.8454E+00
Xe-135	1.0382E+03	2.4608E-04	2.9344E+04	3.9077E+18	1.5460E+00	2.3625E+01	2.4928E+01
Cs-134	5.0318E+03	3.8389E-01	1.2240E+05	1.6303E+19	1.3565E+02	9.8238E+01	1.7643E+03
Cs-136	3.1415E+02	4.4166E-03	7.8440E+03	1.0450E+18	8.9176E+00	6.2974E+00	1.1598E+02
Cs-137	2.8034E+03	1.4509E-01	6.8163E+04	9.0793E+18	7.5511E+01	5.4708E+01	9.8214E+02
Ba-139	1.7140E-07	8.0517E-10	6.2063E-02	8.3630E+12	7.3825E-04	5.0155E-05	9.3972E-03
Ba-140	2.7813E-01	1.7733E-06	6.9497E+00	9.2586E+14	7.9067E-03	5.5795E-03	1.0283E-01
La-140	3.8480E-01	4.0334E-06	9.9455E+00	1.3251E+15	1.1723E-02	7.9872E-03	1.5244E-01
La-141	2.9358E-04	4.6640E-09	1.1542E-01	1.5465E+13	5.1809E-04	9.3254E-05	6.6996E-03
La-142	1.0430E-07	1.3880E-09	1.1729E-02	1.5788E+12	1.2620E-04	9.4739E-06	1.6101E-03
Ce-141	2.1414E+00	3.1537E-05	5.2624E+01	7.0100E+15	5.8907E-02	4.2241E-02	7.6615E-01
Ce-143	6.3195E-02	4.6970E-07	1.9986E+00	2.6658E+14	2.8073E-03	1.6078E-03	3.6481E-02
Ce-144	6.3863E+00	3.8729E-03	1.5546E+02	2.0708E+16	1.7242E-01	1.2478E-01	2.2426E+00
Pr-143	9.6966E-01	1.3041E-05	2.4142E+01	3.2161E+15	2.7361E-02	1.9381E-02	3.5585E-01
Kr-83m	8.8418E-01	9.1229E-10	8.6306E+02	1.1483E+17	4.0817E-01	6.9664E-01	6.5497E+00
Br-82	2.6313E+01	1.5816E-04	8.1750E+02	1.0903E+17	1.1314E+00	6.5758E-01	1.4703E+01
Br-83	2.3437E-01	5.4547E-06	8.7791E+02	1.1783E+17	6.3248E+00	7.0879E-01	8.1250E+01
Br-84	2.6393E-12	6.7717E-06	9.3083E+01	1.2744E+16	2.4543E+00	7.6114E-02	3.0166E+01
Rb-89	1.1603E-28	1.2067E-07	1.5559E+00	2.1863E+14	6.8296E-02	1.3123E-03	7.8882E-01

Y-91m	9.5189E-03	1.2747E-08	6.2508E-01	8.3013E+13	1.3491E-03	5.0458E-04	1.7540E-02
Nb-95m	2.7760E-02	1.1209E-07	6.8098E-01	9.0705E+13	7.6112E-04	5.4661E-04	9.8993E-03
Nb-97	1.2713E-03	1.6755E-09	5.9982E-02	7.9877E+12	1.8892E-04	4.8357E-05	2.4240E-03
Rh-103m	2.9736E+00	2.5274E-08	7.2925E+01	9.6533E+15	8.1115E-02	5.8536E-02	1.0552E+00
Te-125m	3.6633E+00	4.3565E-05	8.9602E+01	1.1935E+16	9.9844E-02	7.1920E-02	1.2986E+00
Te-131	1.1485E+00	1.7378E-06	3.7622E+01	4.9509E+15	6.2355E-02	3.0277E-02	8.0265E-01
Te-133	2.9873E-09	8.2862E-09	2.1491E-01	2.7687E+13	1.4314E-03	1.7109E-04	2.2488E-02
Te-133m	1.7327E-08	1.7767E-07	1.6271E+00	2.2036E+14	2.7425E-02	1.3188E-03	3.4537E-01
Te-134	7.0450E-11	6.7944E-08	1.7710E+00	2.4102E+14	3.7683E-02	1.4406E-03	4.6954E-01
Xe-131m	4.4186E+00	1.5075E-08	5.4993E+01	7.2775E+15	9.4867E-04	4.3703E-02	1.5283E-02
Xe-133m	4.9683E+01	7.0356E-07	7.2875E+02	9.6615E+16	1.7074E-02	5.8124E-01	2.7499E-01
Xe-135m	6.4446E+01	9.7815E-05	6.8041E+03	8.8697E+17	6.8827E+00	5.4857E+00	1.0911E+02
Cs-134m	9.9197E-03	4.6768E-08	1.3181E+01	1.7678E+15	7.9406E-02	1.0645E-02	1.0223E+00
Cs-138	1.7860E-12	3.9723E-06	4.3165E+01	5.9078E+15	1.1273E+00	3.5286E-02	1.3866E+01
Ba-141	1.1909E-26	1.0773E-10	3.1053E-03	4.3279E+11	1.2127E-04	2.5907E-06	1.4288E-03
Total	2.2380E+04	1.0000E+00	0.0000E+00	0.0000E+00	1.0193E+03	5.3560E+02	1.3232E+04

Dose Equivalent (Ci/cc) I-131 (Thyroid)	5.6451E-07
Dose Equivalent (Ci/cc) I-131 (CEDE)	5.6841E-07
Dose Equivalent (Ci/cc) I-131 (ICRP2 Thyroid)	5.9856E-07
Total I (Ci)	1.1465E+04
Dose Equivalent (Ci/cc) Xe-133 (EDE)	7.2566E-07

RCS Compartment Group Inventory Distribution:

Time (h) = 24.0000	Atmosphere	Sump
Noble gases (Ci)	1.9291E+03	0.0000E+00
Elemental I (Ci)	1.1146E+04	0.0000E+00
Organic I (Ci)	3.4473E+02	0.0000E+00
Aerosol I (Ci)	0.0000E+00	0.0000E+00
All Aerosols (Ci)	8.9599E+03	0.0000E+00
All Aerosols (kg)	3.6109E-02	0.0000E+00

Intact Steam Generators Compartment Nuclide Inventory (Ci) at Time (h) = 24.0000

Nuclide	Compartment Atmosphere	Dose Fract	Exposure (Ci-hr)	Decays (Bq-s)	Pathway 5 Inflow	Pathway 7 Outflow
Rb-86	2.4036E-01	1.4314E-04	2.9751E+00	3.9634E+14	2.5516E-01	1.0190E-02
Sr-89	3.7489E-03	1.3755E-05	4.6041E-02	6.1330E+12	3.9323E-03	1.5739E-04
Sr-90	3.5076E-04	4.0148E-05	4.2882E-03	5.7119E+11	3.6541E-04	1.4644E-05
Sr-91	2.7963E-04	9.7928E-08	6.7048E-03	8.9837E+11	7.9864E-04	2.6908E-05
Sr-92	1.5225E-06	5.0106E-09	4.5595E-04	6.1374E+10	1.2211E-04	2.7389E-06
Y-90	5.5086E-04	4.2337E-07	6.9599E-03	9.2737E+11	6.0378E-04	2.3963E-05
Y-91	4.7425E-02	2.0495E-04	5.8205E-01	7.7532E+13	4.9698E-02	1.9895E-03
Y-92	2.3938E-05	1.2339E-08	1.8642E-03	2.5062E+11	3.1121E-04	9.0765E-06
Y-93	1.0978E-04	3.9968E-08	2.5153E-03	3.3693E+11	2.9337E-04	9.9888E-06
Zr-95	6.7576E-02	1.4359E-04	8.2912E-01	1.1044E+14	7.0784E-02	2.8338E-03
Zr-97	4.1538E-04	2.3102E-07	7.2430E-03	9.6829E+11	7.4049E-04	2.6956E-05
Nb-95	9.8028E-02	5.3712E-05	1.2009E+00	1.5996E+14	1.0244E-01	4.1028E-03
Mo-99	4.5621E+00	1.7675E-03	6.0747E+01	8.0997E+15	5.4125E+00	2.1176E-01
Tc-99m	4.3987E+00	3.9986E-05	5.8493E+01	7.7922E+15	5.2049E+00	2.0379E-01
Ru-103	5.5472E-02	4.5202E-05	6.8215E-01	9.0869E+13	5.8306E-02	2.3327E-03
Ru-105	6.5054E-06	2.6448E-09	4.2765E-04	5.7499E+10	7.6001E-05	2.1046E-06
Ru-106	9.4535E-02	3.9792E-03	1.1564E+00	1.5404E+14	9.8575E-02	3.9497E-03
Rh-105	1.3859E-03	1.4247E-07	1.9884E-02	2.6533E+12	1.8385E-03	7.0537E-05
Te-127	6.8425E-01	1.9482E-05	8.4250E+00	1.1216E+15	7.2163E-01	2.8837E-02
Te-127m	6.9457E-01	1.3188E-03	8.5094E+00	1.1335E+15	7.2590E-01	2.9073E-02
Te-129	6.2930E-01	6.6243E-06	7.7470E+00	1.0269E+15	6.6285E-01	2.6502E-02
Te-129m	9.6196E-01	2.0449E-03	1.1841E+01	1.5774E+15	1.0126E+00	4.0503E-02
Te-131m	9.4252E-02	7.1946E-05	1.3973E+00	1.8653E+14	1.3161E-01	4.9997E-03
Te-132	2.2096E+00	1.9970E-03	2.9025E+01	3.8694E+15	2.5679E+00	1.0085E-01
I-131	1.2624E+02	3.7886E-01	1.5884E+03	2.1165E+17	1.3740E+02	5.4618E+00
I-132	2.3590E+00	9.0410E-04	8.0130E+01	1.0739E+16	1.8328E+01	4.2604E-01
I-133	7.8792E+01	5.6796E-02	1.2796E+03	1.7096E+17	1.2624E+02	4.6811E+00
I-134	1.2090E-07	1.6206E-05	1.4930E+00	2.0270E+14	1.2141E+00	1.2056E-02
I-135	7.3686E+00	3.7690E-03	2.5232E+02	3.3867E+16	3.5127E+01	1.0959E+00

Xe-133	1.4453E+01	1.5675E-05	1.3184E+02	1.7481E+16	8.6687E+00	4.0396E-01
Xe-135	1.9447E+01	2.6915E-04	2.9678E+02	3.9614E+16	2.3625E+01	9.9929E-01
Cs-134	9.4257E+01	3.9098E-01	1.1527E+03	1.5354E+17	9.8238E+01	3.9366E+00
Cs-136	5.8848E+00	4.4587E-03	7.3223E+01	9.7554E+15	6.2974E+00	2.5111E-01
Cs-137	5.2514E+01	1.4779E-01	6.4202E+02	8.5517E+16	5.4708E+01	2.1924E+00
Ba-139	3.2107E-09	1.3610E-10	9.7002E-05	1.3091E+10	5.0155E-05	7.2889E-07
Ba-140	5.2100E-03	1.7897E-06	6.4859E-02	8.6412E+12	5.5795E-03	2.2245E-04
La-140	7.2083E-03	4.0226E-06	9.1716E-02	1.2221E+13	7.9872E-03	3.1634E-04
La-141	5.4994E-06	2.0973E-09	4.7995E-04	6.4556E+10	9.3254E-05	2.4734E-06
La-142	1.9538E-09	2.6215E-10	2.0482E-05	2.7617E+09	9.4739E-06	1.4987E-07
Ce-141	4.0113E-02	3.2010E-05	4.9389E-01	6.5791E+13	4.2241E-02	1.6894E-03
Ce-143	1.1838E-03	4.3798E-07	1.7232E-02	2.2998E+12	1.6078E-03	6.1384E-05
Ce-144	1.1963E-01	3.9434E-03	1.4637E+00	1.9497E+14	1.2478E-01	4.9994E-03
Pr-143	1.8164E-02	1.3178E-05	2.2559E-01	3.0055E+13	1.9381E-02	7.7327E-04
Kr-83m	1.6563E-02	4.6671E-10	4.0827E+00	5.4811E+14	6.9664E-01	2.1971E-02
Br-82	4.9290E-01	1.4836E-04	7.0907E+00	9.4622E+14	6.5758E-01	2.5186E-02
Br-83	4.3902E-03	1.5806E-06	2.3523E+00	3.1668E+14	7.0879E-01	1.4871E-02
Br-84	4.9441E-14	4.4132E-07	5.6094E-02	7.7022E+12	7.6114E-02	4.8814E-04
Rb-89	2.1735E-30	3.7771E-09	4.5031E-04	6.3647E+10	1.3123E-03	4.8881E-06
Y-91m	1.7831E-04	9.4167E-09	4.2700E-03	5.6848E+11	5.0458E-04	1.7114E-05
Nb-95m	5.2001E-04	1.1383E-07	6.3947E-03	8.5179E+11	5.4661E-04	2.1868E-05
Nb-97	2.3815E-05	1.2846E-09	4.2522E-04	5.6612E+10	4.8357E-05	1.6223E-06
Rh-103m	5.5703E-02	2.5673E-08	6.8498E-01	9.0684E+13	5.8536E-02	2.3423E-03
Te-125m	6.8622E-02	4.4287E-05	8.4226E-01	1.1219E+14	7.1920E-02	2.8790E-03
Te-131	2.1514E-02	1.5941E-06	3.1911E-01	4.2019E+13	3.0277E-02	1.1425E-03
Te-133	5.5959E-11	1.1645E-09	2.7926E-04	3.6839E+10	1.7109E-04	2.1812E-06
Te-133m	3.2458E-10	2.0160E-08	1.7072E-03	2.3157E+11	1.3188E-03	1.3697E-05
Te-134	1.3197E-12	5.8195E-09	1.4027E-03	1.9130E+11	1.4406E-03	1.1668E-05
Xe-131m	8.2771E-02	2.0412E-08	6.8853E-01	9.1135E+13	4.3703E-02	2.0771E-03
Xe-133m	9.3068E-01	9.1307E-07	8.7452E+00	1.1601E+15	5.8124E-01	2.6925E-02
Xe-135m	1.2072E+00	6.4132E-05	4.1251E+01	5.4161E+15	5.4857E+00	1.7856E-01
Cs-134m	1.8582E-04	1.6224E-08	4.2281E-02	5.6908E+12	1.0645E-02	2.4691E-04
Cs-138	3.3456E-14	2.6213E-07	2.6339E-02	3.6153E+12	3.5286E-02	2.2865E-04

Ba-141	2.2309E-28	4.0429E-12	1.0776E-06	1.5092E+08	2.5907E-06	1.0925E-08
Total	4.1923E+02	1.0000E+00	0.0000E+00	0.0000E+00	5.3560E+02	2.0417E+01

Dose Equivalent (Ci/cc) I-131 (Thyroid)	1.6849E-08
Dose Equivalent (Ci/cc) I-131 (CEDE)	1.6966E-08
Dose Equivalent (Ci/cc) I-131 (ICRP2 Thyroid)	1.7866E-08
Total I (Ci)	2.1476E+02
Dose Equivalent (Ci/cc) Xe-133 (EDE)	2.1659E-08

Intact Steam Generators Compartment Group Inventory Distribution:

Time (h) = 24.0000	Atmosphere	Sump
Noble gases (Ci)	3.6137E+01	0.0000E+00
Elemental I (Ci)	2.0880E+02	0.0000E+00
Organic I (Ci)	6.4577E+00	0.0000E+00
Aerosol I (Ci)	0.0000E+00	0.0000E+00
All Aerosols (Ci)	1.6784E+02	0.0000E+00
All Aerosols (kg)	6.7642E-04	0.0000E+00

Control Room Compartment Nuclide Inventory (Ci) at Time (h) = 24.0000

Nuclide	Compartment Atmosphere	Dose Fract	Exposure (Ci-hr)	Decays (Bq-s)	Compartment Recirc Filtr	Pathway 2 Inflow	Pathway 3 Inflow	Pathway 4 Outflow
Rb-86	8.7912E-09	1.2246E-04	8.4486E-05	1.1254E+10	3.4685E-04	3.8053E-04	6.5741E-05	9.2294E-05
Sr-89	1.3711E-10	1.1564E-05	1.2848E-06	1.7110E+08	5.4097E-06	5.7784E-06	9.9964E-07	1.6068E-06
Sr-91	1.0228E-11	2.3547E-07	5.3512E-07	7.1382E+07	4.0352E-07	2.4455E-06	4.1547E-07	5.8540E-07
Y-91	1.7345E-09	1.7243E-04	1.6255E-05	2.1652E+09	6.8435E-05	7.3196E-05	1.2649E-05	1.7803E-05
Y-92	8.7553E-13	5.8033E-08	2.9103E-07	3.8734E+07	3.4543E-08	1.3228E-06	2.2543E-07	1.4585E-06
Zr-95	2.4716E-09	1.2075E-04	2.3143E-05	3.0827E+09	9.7514E-05	1.0421E-04	1.8010E-05	2.5281E-05
Nb-95	3.5854E-09	4.5028E-05	3.3415E-05	4.4508E+09	1.4146E-04	1.5046E-04	2.6004E-05	3.6996E-05
Mo-99	1.6686E-07	1.7383E-03	1.9830E-03	2.6419E+11	6.5833E-03	8.9484E-03	1.5422E-03	2.1667E-03
Tc-99m	1.6088E-07	3.9075E-05	1.8973E-03	2.5247E+11	6.3474E-03	8.5598E-03	1.4755E-03	7.2608E-03
Ru-103	2.0289E-09	3.8183E-05	1.9126E-05	2.5476E+09	8.0047E-05	8.6129E-05	1.4883E-05	2.0893E-05

Ru-106	3.4576E-09	3.3267E-03	3.2090E-05	4.2745E+09	1.3642E-04	1.4449E-04	2.4973E-05	3.5055E-05
Rh-105	5.0690E-11	1.5871E-07	7.3521E-07	9.7961E+07	1.9999E-06	3.3223E-06	5.7148E-07	8.4910E-07
Te-127	2.5026E-08	1.6649E-05	2.3899E-04	3.1809E+10	9.8740E-04	1.0766E-03	1.8597E-04	7.0540E-04
Te-127m	2.5404E-08	1.1058E-03	2.3682E-04	3.1545E+10	1.0023E-03	1.0664E-03	1.8430E-04	2.5870E-04
Te-129	2.3016E-08	5.6402E-06	2.1894E-04	2.8972E+10	9.0809E-04	9.8650E-04	1.7038E-04	3.5894E-03
Te-129m	3.5183E-08	1.7307E-03	3.3265E-04	4.4310E+10	1.3881E-03	1.4980E-03	2.5886E-04	3.6339E-04
Te-131m	3.4473E-09	8.5697E-05	5.5245E-05	7.3621E+09	1.3601E-04	2.4994E-04	4.2936E-05	6.0377E-05
Te-132	8.0814E-08	1.9149E-03	9.2382E-04	1.2308E+11	3.1885E-03	4.1673E-03	7.1851E-04	1.0093E-03
I-131	7.9325E-06	3.7626E-01	5.2361E-02	6.9750E+12	2.0174E-01	2.3737E-01	3.6235E-02	5.7247E-02
I-132	1.4374E-07	1.2996E-02	3.8231E-02	5.1222E+12	3.4171E-03	1.8325E-01	2.6724E-02	4.9241E-02
I-133	4.9510E-06	8.8397E-02	6.6106E-02	8.8113E+12	1.2591E-01	3.0146E-01	4.5725E-02	7.2314E-02
I-134	7.5969E-15	2.1096E-03	6.4511E-03	8.7301E+11	1.9311E-10	3.3813E-02	4.6268E-03	7.3316E-03
I-135	4.6302E-07	1.5169E-02	3.3707E-02	4.4993E+12	1.1776E-02	1.5587E-01	2.3348E-02	3.6909E-02
Xe-133	2.9059E-03	3.3522E-04	9.3589E-02	1.1537E+13	0.0000E+00	7.3803E-02	7.9503E-05	9.5390E-02
Xe-135	3.7248E-03	8.9884E-03	3.2897E-01	4.1342E+13	0.0000E+00	2.4592E-01	4.1858E-04	3.4271E-01
Cs-134	3.4474E-06	3.2666E-01	3.1966E-02	4.2579E+12	1.3602E-01	1.4393E-01	2.4876E-02	3.4919E-02
Cs-136	2.1523E-07	3.8542E-03	2.1009E-03	2.7986E+11	8.4919E-03	9.4641E-03	1.6347E-03	2.2951E-03
Cs-137	1.9207E-06	1.2341E-01	1.7794E-02	2.3702E+12	7.5779E-02	8.0120E-02	1.3848E-02	1.9438E-02
Ba-140	1.9055E-10	1.5486E-06	1.8628E-06	2.4813E+08	7.5181E-06	8.3913E-06	1.4494E-06	2.0350E-06
La-140	2.6364E-10	3.6481E-06	2.7609E-06	3.6774E+08	1.0402E-05	1.2446E-05	2.1478E-06	3.8477E-06
Ce-141	1.4671E-09	2.7103E-05	1.3880E-05	1.8489E+09	5.7885E-05	6.2509E-05	1.0801E-05	1.5167E-05
Ce-143	4.3297E-11	5.0548E-07	6.6014E-07	8.7968E+07	1.7082E-06	2.9853E-06	5.1310E-07	7.2143E-07
Ce-144	4.3755E-09	3.2979E-03	4.0632E-05	5.4121E+09	1.7263E-04	1.8295E-04	3.1620E-05	4.4385E-05
Pr-143	6.6435E-10	1.1345E-05	6.4464E-06	8.5870E+08	2.6211E-05	2.9037E-05	5.0160E-06	7.0787E-06
Kr-83m	1.0226E-05	9.1713E-08	2.6630E-02	3.4126E+12	0.0000E+00	2.8493E-02	9.2182E-05	2.8342E-02
Br-82	3.0972E-08	1.8848E-04	2.9899E-04	3.9842E+10	7.8769E-04	1.3598E-03	2.0683E-04	3.2684E-04
Br-83	2.7587E-10	3.2869E-05	1.6237E-03	2.1753E+11	7.0159E-06	7.7768E-03	1.1344E-03	1.7844E-03
Br-84	3.1067E-21	1.3615E-04	5.7438E-04	7.8541E+10	7.9010E-17	3.2860E-03	4.2236E-04	6.4418E-04
Rb-89	7.9494E-38	3.3468E-06	1.3244E-05	1.8634E+09	3.1364E-33	9.3940E-05	1.1096E-05	1.5280E-05
Y-91m	6.5217E-12	2.1076E-08	3.1722E-07	4.1878E+07	2.5731E-07	1.4325E-06	2.4585E-07	7.0664E-06
Rh-103m	2.0373E-09	2.1591E-08	1.9121E-05	2.5256E+09	8.0380E-05	8.6022E-05	1.4877E-05	3.8733E-04
Te-125m	2.5098E-09	3.7270E-05	2.3527E-05	3.1338E+09	9.9023E-05	1.0594E-04	1.8309E-05	2.5701E-05
Te-131	7.8688E-10	2.1724E-06	1.4434E-05	1.9008E+09	3.1046E-05	6.7982E-05	1.1282E-05	5.4520E-04

Te-133	2.0467E-18	5.5084E-08	4.3847E-07	5.0761E+07	8.0750E-14	7.0439E-07	3.0990E-07	6.9804E-05
Te-133m	1.1871E-17	2.1684E-06	6.0949E-06	8.2413E+08	4.6838E-13	3.1602E-05	4.8254E-06	6.7573E-06
Te-134	4.8268E-20	1.0287E-06	8.2297E-06	1.1182E+09	1.9044E-15	4.4529E-05	6.5662E-06	9.1684E-06
Xe-131m	2.2758E-05	4.6080E-07	5.1593E-04	6.2961E+10	0.0000E+00	4.0607E-04	3.4359E-07	5.1971E-04
Xe-133m	2.0613E-04	2.0919E-05	6.6504E-03	8.1979E+11	0.0000E+00	5.2808E-03	5.5699E-06	6.7784E-03
Xe-135m	5.9736E-03	2.7477E-02	5.8663E-01	7.2534E+13	0.0000E+00	1.5672E+00	1.5153E-03	6.1270E-01
Cs-134m	6.7963E-12	2.1195E-07	1.8334E-05	2.4538E+09	2.6814E-07	8.6536E-05	1.4277E-05	2.0122E-05
Cs-138	1.2237E-21	7.2301E-05	2.4113E-04	3.2960E+10	4.8278E-17	1.3716E-03	1.9413E-04	2.7023E-04
Total	1.2863E-02	1.0000E+00	0.0000E+00	0.0000E+00	5.8584E-01	3.1085E+00	1.8596E-01	1.3860E+00

Control Room Compartment Group Inventory Distribution:

Time (h) = 24.0000	Atmosphere	Sump
Noble gases (Ci)	1.2843E-02	0.0000E+00
Elemental I (Ci)	1.3116E-05	0.0000E+00
Organic I (Ci)	4.0564E-07	0.0000E+00
Aerosol I (Ci)	0.0000E+00	0.0000E+00
All Aerosols (Ci)	6.1387E-06	0.0000E+00
All Aerosols (kg)	2.4740E-11	0.0000E+00

Time (h) = 24.0000	Deposition Surfaces	Recirculating Filter
Noble gases (Ci)	0.0000E+00	0.0000E+00
Elemental I (Ci)	0.0000E+00	3.3333E-01
Organic I (Ci)	0.0000E+00	1.0309E-02
Aerosol I (Ci)	0.0000E+00	0.0000E+00
All Aerosols (Ci)	0.0000E+00	2.4220E-01
All Aerosols (kg)	0.0000E+00	9.7609E-07

Ruptured Steam Generator Compartment Nuclide Inventory (Ci) at Time (h) = 24.0000

Nuclide	Compartment	Dose Fract	Exposure	Decays	Pathway 6	Pathway 8
	Atmosphere		(Ci-hr)	(Bq-s)	Inflow	Outflow

Rb-86	4.4790E+00	1.4151E-04	1.0848E+02	1.4451E+16	4.6636E+00	1.6375E-02
Sr-89	6.9858E-02	1.3547E-05	1.6724E+00	2.2278E+14	7.0903E-02	2.4911E-04
Sr-90	6.5362E-03	3.9456E-05	1.5543E-01	2.0704E+13	6.5600E-03	2.3037E-05
Sr-91	5.2109E-03	1.3155E-07	3.3218E-01	4.4419E+13	2.9648E-02	1.0343E-04
Sr-92	2.8372E-05	1.4348E-08	4.8153E-02	6.4609E+12	1.2478E-02	4.2815E-05
Y-90	1.0265E-02	4.2302E-07	2.5648E-01	3.4172E+13	1.1401E-02	4.0019E-05
Y-91	8.8374E-01	2.0179E-04	2.1136E+01	2.8155E+15	8.9720E-01	3.1505E-03
Y-92	4.4607E-04	2.2906E-08	1.2764E-01	1.7081E+13	1.6116E-02	5.6368E-05
Y-93	2.0458E-03	5.2639E-08	1.2218E-01	1.6336E+13	1.0500E-02	3.6644E-05
Zr-95	1.2593E+00	1.4136E-04	3.0105E+01	4.0101E+15	1.2774E+00	4.4856E-03
Zr-97	7.7405E-03	2.6894E-07	3.1099E-01	4.1529E+13	2.0601E-02	7.2079E-05
Nb-95	1.8267E+00	5.2837E-05	4.3569E+01	5.8035E+15	1.8443E+00	6.4765E-03
Mo-99	8.5013E+01	1.8103E-03	2.2947E+03	3.0588E+17	1.0952E+02	3.8424E-01
Tc-99m	8.1967E+01	4.0905E-05	2.2069E+03	2.9391E+17	1.0478E+02	3.6764E-01
Ru-103	1.0337E+00	4.4549E-05	2.4795E+01	3.3029E+15	1.0557E+00	3.7070E-03
Ru-105	1.2122E-04	5.1726E-09	3.0848E-02	4.1331E+12	4.9828E-03	1.7253E-05
Ru-106	1.7616E+00	3.9118E-03	4.1929E+01	5.5850E+15	1.7712E+00	6.2199E-03
Rh-105	2.5826E-02	1.5103E-07	7.7742E-01	1.0369E+14	4.0622E-02	1.4243E-04
Te-127	1.2751E+01	1.9237E-05	3.0683E+02	4.0848E+16	1.3193E+01	4.6318E-02
Te-127m	1.2943E+01	1.2974E-03	3.0875E+02	4.1126E+16	1.3071E+01	4.5902E-02
Te-129	1.1727E+01	6.5345E-06	2.8185E+02	3.7356E+16	1.2086E+01	4.2429E-02
Te-129m	1.7926E+01	2.0163E-03	4.3062E+02	5.7363E+16	1.8361E+01	6.4474E-02
Te-131m	1.7563E+00	7.7587E-05	5.5578E+01	7.4145E+15	3.0533E+00	1.0700E-02
Te-132	4.1174E+01	2.0320E-03	1.0893E+03	1.4518E+17	5.1017E+01	1.7901E-01
I-131	2.3524E+03	3.7755E-01	5.8381E+04	7.7784E+18	2.5712E+03	9.0262E+00
I-132	4.3959E+01	2.2102E-03	7.2249E+03	9.6861E+17	1.9136E+03	6.5436E+00
I-133	1.4682E+03	6.3956E-02	5.3145E+04	7.0941E+18	3.2546E+03	1.1395E+01
I-134	2.2529E-06	1.2077E-04	4.1036E+02	5.5658E+16	3.3111E+02	1.0811E+00
I-135	1.3731E+02	5.8613E-03	1.4472E+04	1.9371E+18	1.6682E+03	5.8031E+00
Xe-133	2.6932E+02	1.2153E-05	3.7701E+03	4.9967E+17	3.8454E+00	1.8989E-02
Xe-135	3.6239E+02	2.4949E-04	1.0146E+04	1.3513E+18	2.4928E+01	1.2352E-01
Cs-134	1.7564E+03	3.8429E-01	4.1787E+04	5.5660E+18	1.7643E+03	6.1958E+00
Cs-136	1.0966E+02	4.4194E-03	2.6768E+03	3.5661E+17	1.1598E+02	4.0719E-01

Cs-137	9.7858E+02	1.4524E-01	2.3271E+04	3.0997E+18	9.8214E+02	3.4490E+00
Ba-139	5.9829E-08	7.0001E-10	1.8402E-02	2.4805E+12	9.3972E-03	3.1518E-05
Ba-140	9.7085E-02	1.7744E-06	2.3716E+00	3.1595E+14	1.0283E-01	3.6103E-04
La-140	1.3432E-01	4.0336E-06	3.3920E+00	4.5193E+14	1.5244E-01	5.3504E-04
La-141	1.0248E-04	4.4629E-09	3.7667E-02	5.0478E+12	6.6996E-03	2.3231E-05
La-142	3.6408E-08	1.2251E-09	3.5303E-03	4.7535E+11	1.6101E-03	5.4268E-06
Ce-141	7.4749E-01	3.1565E-05	1.7963E+01	2.3928E+15	7.6615E-01	2.6903E-03
Ce-143	2.2059E-02	4.6821E-07	6.7944E-01	9.0630E+13	3.6481E-02	1.2787E-04
Ce-144	2.2293E+00	3.8769E-03	5.3075E+01	7.0696E+15	2.2426E+00	7.8754E-03
Pr-143	3.3848E-01	1.3050E-05	8.2390E+00	1.0976E+15	3.5585E-01	1.2494E-03
Kr-83m	3.0864E-01	9.1544E-10	2.9535E+02	3.9333E+16	6.5497E+00	3.1894E-02
Br-82	9.1850E+00	1.5771E-04	2.7800E+02	3.7079E+16	1.4703E+01	5.1542E-02
Br-83	8.1810E-02	5.0415E-06	2.7672E+02	3.7149E+16	8.1250E+01	2.7791E-01
Br-84	9.2131E-13	4.7645E-06	2.2335E+01	3.0626E+15	3.0166E+01	9.3732E-02
Rb-89	4.0501E-29	6.1704E-08	2.7132E-01	3.8296E+13	7.8882E-01	2.1265E-03
Y-91m	3.3227E-03	1.2572E-08	2.1027E-01	2.7928E+13	1.7540E-02	6.1527E-05
Nb-95m	9.6902E-03	1.1219E-07	2.3245E-01	3.0963E+13	9.8993E-03	3.4761E-05
Nb-97	4.4378E-04	1.6341E-09	1.9950E-02	2.6564E+12	2.4240E-03	8.2726E-06
Rh-103m	1.0380E+00	2.5298E-08	2.4895E+01	3.2954E+15	1.0552E+00	3.7070E-03
Te-125m	1.2787E+00	4.3607E-05	3.0587E+01	4.0744E+15	1.2986E+00	4.5601E-03
Te-131	4.0091E-01	1.7271E-06	1.2751E+01	1.6780E+15	8.0265E-01	2.7612E-03
Te-133	1.0428E-09	7.6555E-09	6.7713E-02	8.8326E+12	2.2488E-02	1.0161E-04
Te-133m	6.0484E-09	1.4430E-07	4.5068E-01	6.1077E+13	3.4537E-01	1.1318E-03
Te-134	2.4592E-11	5.1737E-08	4.5993E-01	6.2655E+13	4.6954E-01	1.5035E-03
Xe-131m	1.5424E+00	1.5328E-08	1.9069E+01	2.5236E+15	1.5283E-02	7.5521E-05
Xe-133m	1.7343E+01	7.1493E-07	2.5255E+02	3.3484E+16	2.7499E-01	1.3576E-03
Xe-135m	2.2496E+01	9.7640E-05	2.3163E+03	3.0253E+17	1.0911E+02	5.0898E-01
Cs-134m	3.4626E-03	4.3883E-08	4.2179E+00	5.6580E+14	1.0223E+00	3.5131E-03
Cs-138	6.2344E-13	2.8061E-06	1.0399E+01	1.4255E+15	1.3866E+01	4.3152E-02
Ba-141	4.1572E-27	6.0630E-11	5.9602E-04	8.3352E+10	1.4288E-03	4.0346E-06
Total	7.8122E+03	1.0000E+00	0.0000E+00	0.0000E+00	1.3232E+04	4.6266E+01

Dose Equivalent (Ci/cc) I-131 (Thyroid) 9.4194E-07

```
Dose Equivalent (Ci/cc) I-131 (CEDE)                9.4845E-07
Dose Equivalent (Ci/cc) I-131 (ICRP2 Thyroid)       9.9876E-07
Total I  (Ci)                                       4.0019E+03
Dose Equivalent (Ci/cc) Xe-133 (EDE)                1.2108E-06

Ruptured Steam Generator Compartment Group Inventory Distribution:

Time (h) =  24.0000      Atmosphere      Sump
Noble gases (Ci)         6.7340E+02   0.0000E+00
Elemental I (Ci)         3.8909E+03   0.0000E+00
Organic I (Ci)           1.2034E+02   0.0000E+00
Aerosol I (Ci)           0.0000E+00   0.0000E+00
All Aerosols (Ci)        3.1276E+03   0.0000E+00
All Aerosols (kg)        1.2605E-02   0.0000E+00

#######################################################################
    ALION RADTRAD Version 3.10 Rev 2 run on 12/01/2014  at 16:18:08

                Copyright © 2009 Alion Science and Technology
#######################################################################

Exclusion Area Boundary Doses:

Time (h) =  96.0000    Whole Body   Thyroid       TEDE
Delta dose (rem)        0.0000E+00  0.0000E+00  0.0000E+00
Accumulated dose (rem)  1.3247E-01  6.4000E+01  4.1774E+00

Low Population Zone Doses:

Time (h) =  96.0000    Whole Body   Thyroid       TEDE
Delta dose (rem)        0.0000E+00  0.0000E+00  0.0000E+00
Accumulated dose (rem)  2.3566E-02  1.1389E+01  7.4309E-01
```

Control Room Doses:

Time (h) = 96.0000	Whole Body	Thyroid	TEDE	Skin
Delta dose (rem)	2.8573E-04	9.9046E-04	3.3828E-04	1.6292E-02
Accumulated dose (rem)	9.2059E-03	6.3292E+01	3.7895E+00	4.5587E-01

****

RCS Compartment Nuclide Inventory (Ci) at Time (h) = 96.0000

Nuclide	Compartment Atmosphere	Dose Fract	Exposure (Ci-hr)	Decays (Bq-s)	Pathway 1 Outflow	Pathway 5 Outflow	Pathway 6 Outflow
Rb-86	1.1478E+01	1.4692E-04	1.1919E+03	1.5879E+17	3.5858E-01	2.5516E-01	4.6636E+00
Sr-89	1.9205E-01	1.4554E-05	1.9014E+01	2.5329E+15	5.4499E-03	3.9323E-03	7.0903E-02
Sr-90	1.8721E-02	4.3257E-05	1.8033E+00	2.4020E+14	5.0436E-04	3.6541E-04	6.5600E-03
Sr-91	7.8074E-05	4.4550E-08	1.1905E+00	1.5939E+14	2.2865E-03	7.9864E-04	2.9648E-02
Sr-92	8.1682E-13	4.2667E-09	1.5153E-01	2.0329E+13	9.6992E-04	1.2211E-04	1.2478E-02
Y-90	2.3622E-02	4.1039E-07	2.6332E+00	3.5088E+14	8.7671E-04	6.0378E-04	1.1401E-02
Y-91	2.4434E+00	2.1741E-04	2.4099E+02	3.2102E+16	6.8982E-02	4.9698E-02	8.9720E-01
Y-92	1.1612E-09	6.6421E-09	3.9167E-01	5.2425E+13	1.2413E-03	3.1121E-04	1.6116E-02
Y-93	4.1878E-05	1.8212E-08	4.4733E-01	5.9887E+13	8.0961E-04	2.9337E-04	1.0500E-02
Zr-95	3.4921E+00	1.5252E-04	3.4373E+02	4.5788E+16	9.8214E-02	7.0784E-02	1.2774E+00
Zr-97	1.1571E-03	1.1669E-07	1.4279E+00	1.9096E+14	1.5867E-03	7.4049E-04	2.0601E-02
Nb-95	5.1365E+00	5.7404E-05	5.0092E+02	6.6724E+16	1.4180E-01	1.0244E-01	1.8443E+00
Mo-99	1.1433E+02	1.4176E-03	1.9016E+04	2.5365E+18	8.4242E+00	5.4125E+00	1.0952E+02
Tc-99m	1.1032E+02	3.2095E-05	1.8325E+04	2.4422E+18	8.0592E+00	5.2049E+00	1.0478E+02
Ru-103	2.8086E+00	4.7585E-05	2.8028E+02	3.7337E+16	8.1168E-02	5.8306E-02	1.0557E+00
Ru-105	4.5616E-09	1.5247E-09	9.6225E-02	1.2896E+13	3.8566E-04	7.6001E-05	4.9828E-03
Ru-106	5.0182E+00	4.2770E-03	4.8514E+02	6.4622E+16	1.3618E-01	9.8575E-02	1.7712E+00
Rh-105	1.8050E-02	9.4213E-08	5.1319E+00	6.8521E+14	3.1255E-03	1.8385E-03	4.0622E-02
Te-127	3.5655E+01	2.0695E-05	3.4931E+03	4.6503E+17	1.0144E+00	7.2163E-01	1.3193E+01
Te-127m	3.6378E+01	1.4091E-03	3.5486E+03	4.7270E+17	1.0050E+00	7.2590E-01	1.3071E+01
Te-129	3.1578E+01	6.9468E-06	3.1709E+03	4.2031E+17	9.2938E-01	6.6285E-01	1.2086E+01

Te-129m	4.8271E+01	2.1443E-03	4.8463E+03	6.4561E+17	1.4117E+00	1.0126E+00	1.8361E+01
Te-131m	9.5329E-01	4.4770E-05	3.3938E+02	4.5330E+16	2.3498E-01	1.3161E-01	3.0533E+00
Te-132	6.2309E+01	1.6684E-03	9.4644E+03	1.2622E+18	3.9239E+00	2.5679E+00	5.1017E+01
I-131	5.2038E+03	3.6570E-01	5.9843E+05	7.9752E+19	1.9771E+02	1.3740E+02	2.5712E+03
I-132	6.4358E+01	8.4427E-04	2.9205E+04	3.9088E+18	1.4899E+02	1.8328E+01	1.9136E+03
I-133	3.8182E+02	3.0804E-02	2.7088E+05	3.6210E+19	2.5058E+02	1.2624E+02	3.2546E+03
I-134	1.2203E-30	4.1636E-05	1.4971E+03	2.0292E+17	2.6337E+01	1.2141E+00	3.3111E+02
I-135	2.0692E-01	1.8051E-03	4.7166E+04	6.3181E+18	1.2883E+02	3.5127E+01	1.6682E+03
Xe-133	1.0068E+03	2.5424E-05	8.3467E+04	1.1105E+19	2.3875E-01	8.6687E+00	3.8454E+00
Xe-135	8.0850E+00	1.0795E-04	4.6459E+04	6.2095E+18	1.5460E+00	2.3625E+01	2.4928E+01
Cs-134	5.0179E+03	4.2078E-01	4.8418E+05	6.4494E+19	1.3565E+02	9.8238E+01	1.7643E+03
Cs-136	2.6804E+02	4.4855E-03	2.8751E+04	3.8309E+18	8.9176E+00	6.2974E+00	1.1598E+02
Cs-137	2.8029E+03	1.5923E-01	2.6999E+05	3.5962E+19	7.5511E+01	5.4708E+01	9.8214E+02
Ba-139	3.2292E-23	2.2310E-10	6.2063E-02	8.3631E+12	7.3825E-04	5.0155E-05	9.3972E-03
Ba-140	2.3624E-01	1.7971E-06	2.5419E+01	3.3869E+15	7.9067E-03	5.5795E-03	1.0283E-01
La-140	2.9078E-01	3.8062E-06	3.3871E+01	4.5138E+15	1.1723E-02	7.9872E-03	1.5244E-01
La-141	8.9675E-10	1.3105E-09	1.1705E-01	1.5687E+13	5.1809E-04	9.3254E-05	6.6996E-03
La-142	9.1070E-22	3.8461E-10	1.1729E-02	1.5788E+12	1.2620E-04	9.4739E-06	1.6101E-03
Ce-141	2.0087E+00	3.3535E-05	2.0195E+02	2.6904E+16	5.8907E-02	4.2241E-02	7.6615E-01
Ce-143	1.3928E-02	2.8234E-07	4.3358E+00	5.7901E+14	2.8073E-03	1.6078E-03	3.6481E-02
Ce-144	6.3397E+00	4.2354E-03	6.1359E+02	8.1732E+16	1.7242E-01	1.2478E-01	2.2426E+00
Pr-143	8.3635E-01	1.3329E-05	8.9056E+01	1.1866E+16	2.7361E-02	1.9381E-02	3.5585E-01
Kr-83m	8.5645E-10	2.5367E-10	8.6609E+02	1.1525E+17	4.0817E-01	6.9664E-01	6.5497E+00
Br-82	6.3998E+00	9.8010E-05	1.8282E+03	2.4411E+17	1.1314E+00	6.5758E-01	1.4703E+01
Br-83	2.0008E-10	1.5127E-06	8.7868E+02	1.1794E+17	6.3248E+00	7.0879E-01	8.1250E+01
Br-84	3.3640E-53	1.8763E-06	9.3083E+01	1.2744E+16	2.4543E+00	7.6114E-02	3.0166E+01
Rb-89	3.2260-114	3.3436E-08	1.5559E+00	2.1863E+14	6.8296E-02	1.3123E-03	7.8882E-01
Y-91m	4.9785E-05	4.2566E-09	7.5335E-01	1.0019E+14	1.3491E-03	5.0458E-04	1.7540E-02
Nb-95m	2.6468E-02	1.2001E-07	2.6313E+00	3.5050E+14	7.6112E-04	5.4661E-04	9.8993E-03
Nb-97	6.6337E-05	6.9012E-10	8.9162E-02	1.1884E+13	1.8892E-04	4.8357E-05	2.4240E-03
Rh-103m	2.8203E+00	2.7025E-08	2.8143E+02	3.7259E+16	8.1115E-02	5.8536E-02	1.0552E+00
Te-125m	3.5343E+00	4.6972E-05	3.4866E+02	4.6445E+16	9.9844E-02	7.1920E-02	1.2986E+00
Te-131	2.1760E-01	9.9521E-07	7.7755E+01	1.0245E+16	6.2355E-02	3.0277E-02	8.0265E-01

Te-133	1.0034E-32	2.2960E-09	2.1491E-01	2.7687E+13	1.4314E-03	1.7109E-04	2.2488E-02
Te-133m	5.8198E-32	4.9230E-08	1.6271E+00	2.2036E+14	2.7425E-02	1.3188E-03	3.4537E-01
Te-134	5.4531E-42	1.8826E-08	1.7710E+00	2.4102E+14	3.7683E-02	1.4406E-03	4.6954E-01
Xe-131m	1.4239E+01	5.7458E-08	7.5646E+02	1.0048E+17	9.4867E-04	4.3703E-02	1.5283E-02
Xe-133m	4.2877E+01	1.2229E-06	4.5714E+03	6.0860E+17	1.7074E-02	5.8124E-01	2.7499E-01
Xe-135m	3.3900E-02	2.9510E-05	7.4084E+03	9.6703E+17	6.8827E+00	5.4857E+00	1.0911E+02
Cs-134m	3.3316E-10	1.2998E-08	1.3221E+01	1.7733E+15	7.9406E-02	1.0645E-02	1.0223E+00
Cs-138	7.3325E-53	1.1007E-06	4.3165E+01	5.9078E+15	1.1273E+00	3.5286E-02	1.3866E+01
Ba-141	7.6452E-98	2.9850E-11	3.1053E-03	4.3279E+11	1.2127E-04	2.5907E-06	1.4288E-03
Total	1.5304E+04	1.0000E+00	0.0000E+00	0.0000E+00	1.0193E+03	5.3560E+02	1.3232E+04

Dose Equivalent (Ci/cc) I-131 (Thyroid)	3.9908E-07
Dose Equivalent (Ci/cc) I-131 (CEDE)	3.9944E-07
Dose Equivalent (Ci/cc) I-131 (ICRP2 Thyroid)	4.0215E-07
Total I (Ci)	5.6502E+03
Dose Equivalent (Ci/cc) Xe-133 (EDE)	8.4103E-08

RCS Compartment Group Inventory Distribution:

Time (h) = 96.0000	Atmosphere	Sump
Noble gases (Ci)	1.0720E+03	0.0000E+00
Elemental I (Ci)	5.4869E+03	0.0000E+00
Organic I (Ci)	1.6970E+02	0.0000E+00
Aerosol I (Ci)	0.0000E+00	0.0000E+00
All Aerosols (Ci)	8.5755E+03	0.0000E+00
All Aerosols (kg)	3.6091E-02	0.0000E+00

Intact Steam Generators Compartment Nuclide Inventory (Ci) at Time (h) = 96.0000

Nuclide	Compartment Atmosphere	Dose Fract	Exposure (Ci-hr)	Decays (Bq-s)	Pathway 5 Inflow	Pathway 7 Outflow
Rb-86	2.1501E-01	1.4810E-04	1.9347E+01	2.5777E+15	2.5516E-01	1.0190E-02
Sr-89	3.5976E-03	1.4756E-05	3.1045E-01	4.1356E+13	3.9323E-03	1.5739E-04

Sr-90	3.5069E-04	4.4001E-05	2.9540E-02	3.9347E+12	3.6541E-04	1.4644E-05
Sr-91	1.4625E-06	2.4336E-08	1.0473E-02	1.4062E+12	7.9864E-04	2.6908E-05
Sr-92	1.5301E-14	8.0722E-10	4.6169E-04	6.2166E+10	1.2211E-04	2.7389E-06
Y-90	4.4250E-04	4.0842E-07	4.2201E-02	5.6236E+12	6.0378E-04	2.3963E-05
Y-91	4.5771E-02	2.2052E-04	3.9365E+00	5.2438E+14	4.9698E-02	1.9895E-03
Y-92	2.1753E-11	2.0944E-09	1.9889E-03	2.6770E+11	3.1121E-04	9.0765E-06
Y-93	7.8448E-07	1.0330E-08	4.0861E-03	5.4849E+11	2.9337E-04	9.9888E-06
Zr-95	6.5415E-02	1.5474E-04	5.6160E+00	7.4811E+14	7.0784E-02	2.8338E-03
Zr-97	2.1675E-05	8.5136E-08	1.6777E-02	2.2469E+12	7.4049E-04	2.6956E-05
Nb-95	9.6218E-02	5.8306E-05	8.1935E+00	1.0914E+15	1.0244E-01	4.1028E-03
Mo-99	2.1418E+00	1.3461E-03	2.9080E+02	3.8797E+16	5.4125E+00	2.1176E-01
Tc-99m	2.0665E+00	3.0500E-05	2.8043E+02	3.7381E+16	5.2049E+00	2.0379E-01
Ru-103	5.2611E-02	4.8198E-05	4.5717E+00	6.0903E+14	5.8306E-02	2.3327E-03
Ru-105	8.5449E-11	4.6084E-10	4.6836E-04	6.3050E+10	7.6001E-05	2.1046E-06
Ru-106	9.4002E-02	4.3487E-03	7.9437E+00	1.0581E+15	9.8575E-02	3.9497E-03
Rh-105	3.3812E-04	8.3447E-08	7.3200E-02	9.7787E+12	1.8385E-03	7.0537E-05
Te-127	6.6791E-01	2.0977E-05	5.7019E+01	7.5907E+15	7.2163E-01	2.8837E-02
Te-127m	6.8145E-01	1.4312E-03	5.8042E+01	7.7316E+15	7.2590E-01	2.9073E-02
Te-129	5.9153E-01	7.0301E-06	5.1676E+01	6.8501E+15	6.6285E-01	2.6502E-02
Te-129m	9.0423E-01	2.1704E-03	7.8993E+01	1.0523E+16	1.0126E+00	4.0503E-02
Te-131m	1.7857E-02	3.8426E-05	4.6909E+00	6.2694E+14	1.3161E-01	4.9997E-03
Te-132	1.1672E+00	1.6031E-03	1.4645E+02	1.9534E+16	2.5679E+00	1.0085E-01
I-131	9.7480E+01	3.6402E-01	9.5929E+03	1.2785E+18	1.3740E+02	5.4618E+00
I-132	1.2056E+00	3.6199E-04	2.0166E+02	2.6913E+16	1.8328E+01	4.2604E-01
I-133	7.1524E+00	2.4132E-02	3.4175E+03	4.5731E+17	1.2624E+02	4.6811E+00
I-134	2.2859E-32	2.5783E-06	1.4930E+00	2.0270E+14	1.2141E+00	1.2056E-02
I-135	3.8761E-03	7.6384E-04	3.2142E+02	4.3221E+16	3.5127E+01	1.0959E+00
Xe-133	1.8860E+01	2.8214E-05	1.4916E+03	1.9850E+17	8.6687E+00	4.0396E-01
Xe-135	1.5145E-01	8.9080E-05	6.1738E+02	8.2732E+16	2.3625E+01	9.9929E-01
Cs-134	9.3997E+01	4.2793E-01	7.9298E+03	1.0563E+18	9.8238E+01	3.9366E+00
Cs-136	5.0210E+00	4.5035E-03	4.6486E+02	6.1941E+16	6.2974E+00	2.5111E-01
Cs-137	5.2504E+01	1.6197E-01	4.4227E+03	5.8910E+17	5.4708E+01	2.1924E+00
Ba-139	6.0491E-25	2.1654E-11	9.7008E-05	1.3091E+10	5.0155E-05	7.2889E-07

Ba-140	4.4254E-03	1.8036E-06	4.1083E-01	5.4742E+13	5.5795E-03	2.2245E-04
La-140	5.4470E-03	3.7674E-06	5.3990E-01	7.1953E+13	7.9872E-03	3.1634E-04
La-141	1.6798E-11	3.5480E-10	5.1033E-04	6.8709E+10	9.3254E-05	2.4734E-06
La-142	1.7060E-23	4.1715E-11	2.0486E-05	2.7623E+09	9.4739E-06	1.4987E-07
Ce-141	3.7627E-02	3.3936E-05	3.2912E+00	4.3845E+14	4.2241E-02	1.6894E-03
Ce-143	2.6090E-04	2.4672E-07	6.1014E-02	8.1523E+12	1.6078E-03	6.1384E-05
Ce-144	1.1876E-01	4.3058E-03	1.0046E+01	1.3381E+15	1.2478E-01	4.9994E-03
Pr-143	1.5667E-02	1.3398E-05	1.4416E+00	1.9208E+14	1.9381E-02	7.7327E-04
Kr-83m	1.6043E-11	7.5283E-11	4.1393E+00	5.5596E+14	6.9664E-01	2.1971E-02
Br-82	1.1988E-01	8.6632E-05	2.6024E+01	3.4766E+15	6.5758E-01	2.5186E-02
Br-83	3.7480E-12	2.5302E-07	2.3668E+00	3.1870E+14	7.0879E-01	1.4871E-02
Br-84	6.3015E-55	7.0214E-08	5.6094E-02	7.7022E+12	7.6114E-02	4.8814E-04
Rb-89	6.0431-116	6.0093E-10	4.5031E-04	6.3647E+10	1.3123E-03	4.8881E-06
Y-91m	9.3258E-07	2.3412E-09	6.6728E-03	8.9025E+11	5.0458E-04	1.7114E-05
Nb-95m	4.9580E-04	1.2158E-07	4.2929E-02	5.7184E+12	5.4661E-04	2.1868E-05
Nb-97	1.2427E-06	4.6709E-10	9.7183E-04	1.2959E+11	4.8357E-05	1.6223E-06
Rh-103m	5.2831E-02	2.7375E-08	4.5908E+00	6.0780E+14	5.8536E-02	2.3423E-03
Te-125m	6.6205E-02	4.7643E-05	5.6951E+00	7.5865E+14	7.1920E-02	2.8790E-03
Te-131	4.0762E-03	8.5114E-07	1.0709E+00	1.4119E+14	3.0277E-02	1.1425E-03
Te-133	1.8795E-34	1.8527E-10	2.7926E-04	3.6840E+10	1.7109E-04	2.1812E-06
Te-133m	1.0902E-33	3.2074E-09	1.7072E-03	2.3157E+11	1.3188E-03	1.3697E-05
Te-134	1.0215E-43	9.2586E-10	1.4027E-03	1.9130E+11	1.4406E-03	1.1668E-05
Xe-131m	2.6673E-01	6.5224E-08	1.3829E+01	1.8370E+15	4.3703E-02	2.0771E-03
Xe-133m	8.0318E-01	1.3410E-06	8.0728E+01	1.0751E+16	5.8124E-01	2.6925E-02
Xe-135m	6.3503E-04	1.3003E-05	5.2570E+01	6.9159E+15	5.4857E+00	1.7856E-01
Cs-134m	6.2408E-12	2.6271E-09	4.3033E-02	5.7944E+12	1.0645E-02	2.4691E-04
Cs-138	1.3736E-54	4.1705E-08	2.6339E-02	3.6153E+12	3.5286E-02	2.2865E-04
Ba-141	1.4321E-99	6.4321E-13	1.0776E-06	1.5092E+08	2.5907E-06	1.0925E-08
Total	2.8668E+02	1.0000E+00	0.0000E+00	0.0000E+00	5.3560E+02	2.0417E+01

Dose Equivalent (Ci/cc) I-131 (Thyroid) 1.1912E-08
Dose Equivalent (Ci/cc) I-131 (CEDE) 1.1922E-08
Dose Equivalent (Ci/cc) I-131 (ICRP2 Thyroid) 1.2003E-08

Total I (Ci)	1.0584E+02
Dose Equivalent (Ci/cc) Xe-133 (EDE)	2.5103E-09

Intact Steam Generators Compartment Group Inventory Distribution:

Time (h) = 96.0000	Atmosphere	Sump
Noble gases (Ci)	2.0082E+01	0.0000E+00
Elemental I (Ci)	1.0278E+02	0.0000E+00
Organic I (Ci)	3.1789E+00	0.0000E+00
Aerosol I (Ci)	0.0000E+00	0.0000E+00
All Aerosols (Ci)	1.6064E+02	0.0000E+00
All Aerosols (kg)	6.7607E-04	0.0000E+00

Control Room Compartment Nuclide Inventory (Ci) at Time (h) = 96.0000

Nuclide	Compartment Atmosphere	Dose Fract	Exposure (Ci-hr)	Decays (Bq-s)	Compartment Recirc Filtr	Pathway 2 Inflow	Pathway 3 Inflow	Pathway 4 Outflow
Rb-86	3.8753-207	1.2197E-04	8.4486E-05	1.1254E+10	3.1028E-04	3.8053E-04	6.5741E-05	9.2295E-05
Sr-89	6.4842-209	1.1518E-05	1.2848E-06	1.7110E+08	5.1916E-06	5.7784E-06	9.9964E-07	2.2219E-06
Sr-91	2.6360-212	2.3452E-07	5.3512E-07	7.1382E+07	2.1105E-09	2.4455E-06	4.1547E-07	5.8540E-07
Y-91	8.2495-208	1.7174E-04	1.6255E-05	2.1652E+09	6.6050E-05	7.3196E-05	1.2649E-05	1.8420E-05
Y-92	3.9206-217	5.7800E-08	2.9103E-07	3.8734E+07	3.1391E-14	1.3228E-06	2.2543E-07	4.9128E-06
Zr-95	1.1790-207	1.2027E-04	2.3143E-05	3.0827E+09	9.4398E-05	1.0421E-04	1.8010E-05	2.5282E-05
Nb-95	1.7342-207	4.4847E-05	3.3415E-05	4.4509E+09	1.3885E-04	1.5046E-04	2.6004E-05	3.8498E-05
Mo-99	3.8602-206	1.7313E-03	1.9830E-03	2.6420E+11	3.0907E-03	8.9484E-03	1.5422E-03	2.1667E-03
Tc-99m	3.7245-206	3.8918E-05	1.8973E-03	2.5247E+11	2.9821E-03	8.5598E-03	1.4755E-03	2.2994E-02
Ru-103	9.4824-208	3.8030E-05	1.9126E-05	2.5476E+09	7.5922E-05	8.6129E-05	1.4883E-05	2.0893E-05
Ru-106	1.6943-207	3.3133E-03	3.2091E-05	4.2745E+09	1.3565E-04	1.4449E-04	2.4973E-05	3.5056E-05
Rh-105	6.0942-210	1.5807E-07	7.3521E-07	9.7961E+07	4.8793E-07	3.3223E-06	5.7148E-07	9.8754E-07
Te-127	1.2038-206	1.6583E-05	2.3899E-04	3.1810E+10	9.6383E-04	1.0766E-03	1.8597E-04	2.0531E-03
Te-127m	1.2282-206	1.1014E-03	2.3682E-04	3.1545E+10	9.8337E-04	1.0664E-03	1.8430E-04	2.5871E-04
Te-129	1.0662-206	5.6176E-06	2.1894E-04	2.8973E+10	8.5362E-04	9.8650E-04	1.7038E-04	1.3752E-02
Te-129m	1.6297-206	1.7238E-03	3.3265E-04	4.4310E+10	1.3049E-03	1.4980E-03	2.5886E-04	3.6339E-04

Te-131m	3.2186-208	8.5353E-05	5.5246E-05	7.3621E+09	2.5769E-05	2.4994E-04	4.2936E-05	6.0378E-05
Te-132	2.1037-206	1.9073E-03	9.2383E-04	1.2308E+11	1.6843E-03	4.1673E-03	7.1851E-04	1.0094E-03
I-131	1.3014-197	3.7476E-01	5.2362E-02	6.9751E+12	1.5578E-01	2.3737E-01	3.6235E-02	5.7604E-02
I-132	7.6162-206	1.2944E-02	3.8231E-02	5.1222E+12	1.7397E-03	1.8325E-01	2.6724E-02	7.1141E-02
I-133	9.5494-199	8.8043E-02	6.6106E-02	8.8113E+12	1.1430E-02	3.0146E-01	4.5725E-02	7.2737E-02
I-134	3.0519-231	2.1011E-03	6.4511E-03	8.7301E+11	3.6513E-35	3.3813E-02	4.6268E-03	7.8492E-03
I-135	5.1750-202	1.5108E-02	3.3707E-02	4.4993E+12	6.1944E-06	1.5587E-01	2.3348E-02	3.6909E-02
Xe-133	2.7317E-04	6.2471E-04	1.7511E-01	2.0703E+13	0.0000E+00	1.2847E-01	7.9503E-05	1.7154E-01
Xe-135	2.0286E-06	9.9217E-03	3.6459E-01	4.5426E+13	0.0000E+00	2.6747E-01	4.1858E-04	3.7706E-01
Cs-134	1.6942-204	3.2535E-01	3.1966E-02	4.2579E+12	1.3564E-01	1.4393E-01	2.4876E-02	3.4920E-02
Cs-136	9.0497-206	3.8388E-03	2.1010E-03	2.7986E+11	7.2457E-03	9.4641E-03	1.6347E-03	2.2952E-03
Cs-137	9.4631-205	1.2291E-01	1.7794E-02	2.3702E+12	7.5767E-02	8.0120E-02	1.3848E-02	1.9439E-02
Ba-140	7.9761-209	1.5424E-06	1.8628E-06	2.4814E+08	6.3861E-06	8.3913E-06	1.4494E-06	2.0350E-06
La-140	9.8174-209	3.6335E-06	2.7609E-06	3.6774E+08	7.8603E-06	1.2446E-05	2.1478E-06	6.3695E-06
Ce-141	6.7818-208	2.6994E-05	1.3880E-05	1.8489E+09	5.4298E-05	6.2509E-05	1.0801E-05	1.5194E-05
Ce-143	4.7024-210	5.0346E-07	6.6014E-07	8.7968E+07	3.7650E-07	2.9853E-06	5.1310E-07	7.2144E-07
Ce-144	2.1405-207	3.2847E-03	4.0632E-05	5.4122E+09	1.7138E-04	1.8295E-04	3.1620E-05	4.4386E-05
Pr-143	2.8237-208	1.1300E-05	6.4465E-06	8.5870E+08	2.2608E-05	2.9037E-05	5.0160E-06	7.1895E-06
Kr-83m	9.1447E-15	9.1463E-08	2.6664E-02	3.4167E+12	0.0000E+00	2.8520E-02	9.2182E-05	2.8378E-02
Br-82	1.6006-200	1.8772E-04	2.9899E-04	3.9842E+10	1.9159E-04	1.3598E-03	2.0683E-04	3.2684E-04
Br-83	5.0041-211	3.2737E-05	1.6237E-03	2.1753E+11	5.9898E-15	7.7768E-03	1.1344E-03	1.7844E-03
Br-84	8.4133-254	1.3560E-04	5.7438E-04	7.8541E+10	1.0071E-57	3.2860E-03	4.2236E-04	6.4418E-04
Rb-89	1.0869-321	3.3333E-06	1.3244E-05	1.8634E+09	8.7206-119	9.3940E-05	1.1096E-05	1.5280E-05
Y-91m	1.6808-212	2.0991E-08	3.1722E-07	4.1878E+07	1.3458E-09	1.4325E-06	2.4585E-07	2.7433E-05
Nb-97	2.2397-212	3.9339E-09	4.3397E-08	5.7999E+06	1.7932E-09	2.0774E-07	3.3939E-08	1.2391E-06
Rh-103m	9.5219-208	2.1504E-08	1.9121E-05	2.5256E+09	7.6238E-05	8.6022E-05	1.4877E-05	1.4989E-03
Te-125m	1.1933-207	3.7121E-05	2.3527E-05	3.1338E+09	9.5538E-05	1.0594E-04	1.8309E-05	2.5701E-05
Te-131	7.3468-209	2.1637E-06	1.4434E-05	1.9008E+09	5.8822E-06	6.7982E-05	1.1282E-05	2.1504E-03
Te-133	3.3876-240	5.4863E-08	4.3847E-07	5.0761E+07	2.7123E-37	7.0439E-07	3.0990E-07	2.7977E-04
Te-133m	1.9649-239	2.1597E-06	6.0949E-06	8.2413E+08	1.5732E-36	3.1602E-05	4.8254E-06	6.7573E-06
Te-134	1.8411-249	1.0245E-06	8.2297E-06	1.1182E+09	1.4741E-46	4.4529E-05	6.5662E-06	9.1684E-06
Xe-131m	1.8284E-05	1.7992E-06	2.0225E-03	2.3093E+11	0.0000E+00	1.4323E-03	3.4359E-07	1.9082E-03
Xe-133m	1.9408E-05	3.8982E-05	1.2443E-02	1.4710E+12	0.0000E+00	9.1945E-03	5.5699E-06	1.2189E-02

Xe-135m	3.2613E-06	3.0094E-02	6.4508E-01	7.9249E+13	0.0000E+00	1.7071E+00	1.5153E-03	6.6903E-01
Cs-134m	1.1248-217	2.1110E-07	1.8334E-05	2.4538E+09	9.0059E-15	8.6536E-05	1.4277E-05	2.0122E-05
Cs-138	2.4756-260	7.2011E-05	2.4113E-04	3.2960E+10	1.9821E-57	1.3716E-03	1.9413E-04	2.7023E-04
Total	3.1615E-04	1.0000E+00	0.0000E+00	0.0000E+00	4.0097E-01	3.3296E+00	1.8596E-01	1.6130E+00

Control Room Compartment Group Inventory Distribution:

Time (h) = 96.0000	Atmosphere	Sump
Noble gases (Ci)	3.1615E-04	0.0000E+00
Elemental I (Ci)	1.3565-197	0.0000E+00
Organic I (Ci)	4.1955-199	0.0000E+00
Aerosol I (Ci)	0.0000E+00	0.0000E+00
All Aerosols (Ci)	2.8953-204	0.0000E+00
All Aerosols (kg)	1.2185-209	0.0000E+00

Time (h) = 96.0000	Deposition Surfaces	Recirculating Filter
Noble gases (Ci)	0.0000E+00	0.0000E+00
Elemental I (Ci)	0.0000E+00	1.6408E-01
Organic I (Ci)	0.0000E+00	5.0745E-03
Aerosol I (Ci)	0.0000E+00	0.0000E+00
All Aerosols (Ci)	0.0000E+00	2.3181E-01
All Aerosols (kg)	0.0000E+00	9.7562E-07

Ruptured Steam Generator Compartment Nuclide Inventory (Ci) at Time (h) = 96.0000

Nuclide	Compartment Atmosphere	Dose Fract	Exposure (Ci-hr)	Decays (Bq-s)	Pathway 6 Inflow	Pathway 8 Outflow
Rb-86	4.0067E+00	1.4698E-04	4.1357E+02	5.5100E+16	4.6636E+00	1.6375E-02
Sr-89	6.7040E-02	1.4564E-05	6.5996E+00	8.7914E+14	7.0903E-02	2.4911E-04
Sr-90	6.5349E-03	4.3293E-05	6.2599E-01	8.3382E+13	6.5600E-03	2.3037E-05
Sr-91	2.7253E-05	4.3415E-08	4.0240E-01	5.3883E+13	2.9648E-02	1.0343E-04
Sr-92	2.8513E-13	3.9177E-09	4.8260E-02	6.4757E+12	1.2478E-02	4.2815E-05

Y-90	8.2458E-03	4.1034E-07	9.1318E-01	1.2168E+14	1.1401E-02	4.0019E-05
Y-91	8.5292E-01	2.1756E-04	8.3645E+01	1.1142E+16	8.9720E-01	3.1505E-03
Y-92	4.0535E-10	6.3542E-09	1.2996E-01	1.7400E+13	1.6116E-02	5.6368E-05
Y-93	1.4618E-05	1.7777E-08	1.5145E-01	2.0278E+13	1.0500E-02	3.6644E-05
Zr-95	1.2190E+00	1.5263E-04	1.1931E+02	1.5893E+16	1.2774E+00	4.4856E-03
Zr-97	4.0390E-04	1.1513E-07	4.8866E-01	6.5356E+13	2.0601E-02	7.2079E-05
Nb-95	1.7930E+00	5.7448E-05	1.7387E+02	2.3161E+16	1.8443E+00	6.4765E-03
Mo-99	3.9911E+01	1.4146E-03	6.5816E+03	8.7792E+17	1.0952E+02	3.8424E-01
Tc-99m	3.8508E+01	3.2029E-05	6.3426E+03	8.4529E+17	1.0478E+02	3.6764E-01
Ru-103	9.8039E-01	4.7616E-05	9.7276E+01	1.2959E+16	1.0557E+00	3.7070E-03
Ru-105	1.5923E-09	1.4439E-09	3.1607E-02	4.2365E+12	4.9828E-03	1.7253E-05
Ru-106	1.7517E+00	4.2805E-03	1.6841E+02	2.2432E+16	1.7712E+00	6.2199E-03
Rh-105	6.3007E-03	9.3736E-08	1.7710E+00	2.3647E+14	4.0622E-02	1.4243E-04
Te-127	1.2446E+01	2.0709E-05	1.2124E+03	1.6140E+17	1.3193E+01	4.6318E-02
Te-127m	1.2698E+01	1.4102E-03	1.2318E+03	1.6408E+17	1.3071E+01	4.5902E-02
Te-129	1.1023E+01	6.9509E-06	1.1005E+03	1.4587E+17	1.2086E+01	4.2429E-02
Te-129m	1.6850E+01	2.1457E-03	1.6820E+03	2.2406E+17	1.8361E+01	6.4474E-02
Te-131m	3.3277E-01	4.4481E-05	1.1695E+02	1.5621E+16	3.0533E+00	1.0700E-02
Te-132	2.1750E+01	1.6657E-03	3.2773E+03	4.3708E+17	5.1017E+01	1.7901E-01
I-131	1.8165E+03	3.6567E-01	2.0754E+05	2.7659E+19	2.5712E+03	9.0262E+00
I-132	2.2466E+01	7.9091E-04	9.4895E+03	1.2700E+18	1.9136E+03	6.5436E+00
I-133	1.3328E+02	3.0486E-02	9.2983E+04	1.2430E+19	3.2546E+03	1.1395E+01
I-134	4.2598E-31	3.2902E-05	4.1036E+02	5.5658E+16	3.3111E+02	1.0811E+00
I-135	7.2228E-02	1.7390E-03	1.5760E+04	2.1114E+18	1.6682E+03	5.8031E+00
Xe-133	3.5145E+02	2.5564E-05	2.9109E+04	3.8728E+18	3.8454E+00	1.8989E-02
Xe-135	2.8222E+00	1.0799E-04	1.6120E+04	2.1548E+18	2.4928E+01	1.2352E-01
Cs-134	1.7516E+03	4.2112E-01	1.6807E+05	2.2388E+19	1.7643E+03	6.1958E+00
Cs-136	9.3564E+01	4.4867E-03	9.9748E+03	1.3291E+18	1.1598E+02	4.0719E-01
Cs-137	9.7839E+02	1.5937E-01	9.3722E+04	1.2484E+19	9.8214E+02	3.4490E+00
Ba-139	1.1272E-23	1.9072E-10	1.8402E-02	2.4806E+12	9.3972E-03	3.1518E-05
Ba-140	8.2465E-02	1.7976E-06	8.8186E+00	1.1750E+15	1.0283E-01	3.6103E-04
La-140	1.0150E-01	3.8048E-06	1.1744E+01	1.5650E+15	1.5244E-01	5.3504E-04
La-141	3.1303E-10	1.2342E-09	3.8233E-02	5.1252E+12	6.6996E-03	2.3231E-05

La-142	3.1790E-22	3.3377E-10	3.5303E-03	4.7536E+11	1.6101E-03	5.4268E-06
Ce-141	7.0117E-01	3.3556E-05	7.0089E+01	9.3370E+15	7.6615E-01	2.6903E-03
Ce-143	4.8618E-03	2.8074E-07	1.4953E+00	1.9969E+14	3.6481E-02	1.2787E-04
Ce-144	2.2130E+00	4.2388E-03	2.1299E+02	2.8371E+16	2.2426E+00	7.8754E-03
Pr-143	2.9194E-01	1.3333E-05	3.0899E+01	4.1169E+15	3.5585E-01	1.2494E-03
Kr-83m	2.9896E-10	2.5030E-10	2.9641E+02	3.9479E+16	6.5497E+00	3.1894E-02
Br-82	2.2340E+00	9.7500E-05	6.3082E+02	8.4231E+16	1.4703E+01	5.1542E-02
Br-83	6.9842E-11	1.3749E-06	2.7699E+02	3.7187E+16	8.1250E+01	2.7791E-01
Br-84	1.1743E-53	1.2981E-06	2.2335E+01	3.0626E+15	3.0166E+01	9.3732E-02
Rb-89	1.1261-114	1.6811E-08	2.7132E-01	3.8296E+13	7.8882E-01	2.1265E-03
Y-91m	1.7378E-05	4.1547E-09	2.5504E-01	3.3924E+13	1.7540E-02	6.1527E-05
Nb-95m	9.2390E-03	1.2009E-07	9.1324E-01	1.2165E+14	9.8993E-03	3.4761E-05
Nb-97	2.3156E-05	6.7251E-10	3.0136E-02	4.0163E+12	2.4240E-03	8.2726E-06
Rh-103m	9.8447E-01	2.7043E-08	9.7677E+01	1.2932E+16	1.0552E+00	3.7070E-03
Te-125m	1.2337E+00	4.7005E-05	1.2102E+02	1.6121E+16	1.2986E+00	4.5601E-03
Te-131	7.5958E-02	9.8752E-07	2.6760E+01	3.5259E+15	8.0265E-01	2.7612E-03
Te-133	3.5024E-33	2.0857E-09	6.7713E-02	8.8326E+12	2.2488E-02	1.0161E-04
Te-133m	2.0315E-32	3.9313E-08	4.5068E-01	6.1077E+13	3.4537E-01	1.1318E-03
Te-134	1.9035E-42	1.4096E-08	4.5993E-01	6.2655E+13	4.6954E-01	1.5035E-03
Xe-131m	4.9704E+00	5.7799E-08	2.6393E+02	3.5057E+16	1.5283E-02	7.5521E-05
Xe-133m	1.4967E+01	1.2293E-06	1.5939E+03	2.1220E+17	2.7499E-01	1.3576E-03
Xe-135m	1.1833E-02	2.9024E-05	2.5273E+03	3.3047E+17	1.0911E+02	5.0898E-01
Cs-134m	1.1629E-10	1.1995E-08	4.2319E+00	5.6773E+14	1.0223E+00	3.5131E-03
Cs-138	2.5595E-53	7.6451E-07	1.0399E+01	1.4255E+15	1.3866E+01	4.3152E-02
Ba-141	2.6687E-98	1.6518E-11	5.9602E-04	8.3352E+10	1.4288E-03	4.0346E-06
Total	5.3422E+03	1.0000E+00	0.0000E+00	0.0000E+00	1.3232E+04	4.6266E+01

Dose Equivalent (Ci/cc) I-131 (Thyroid)	6.6591E-07
Dose Equivalent (Ci/cc) I-131 (CEDE)	6.6651E-07
Dose Equivalent (Ci/cc) I-131 (ICRP2 Thyroid)	6.7103E-07
Total I (Ci)	1.9723E+03
Dose Equivalent (Ci/cc) Xe-133 (EDE)	1.4034E-07

Ruptured Steam Generator Compartment Group Inventory Distribution:

Time (h) = 96.0000	Atmosphere	Sump
Noble gases (Ci)	3.7422E+02	0.0000E+00
Elemental I (Ci)	1.9153E+03	0.0000E+00
Organic I (Ci)	5.9236E+01	0.0000E+00
Aerosol I (Ci)	0.0000E+00	0.0000E+00
All Aerosols (Ci)	2.9935E+03	0.0000E+00
All Aerosols (kg)	1.2598E-02	0.0000E+00

```
#######################################################################
    ALION RADTRAD Version 3.10 Rev 2 run on 12/01/2014 at 16:18:14

                Copyright © 2009 Alion Science and Technology
#######################################################################
```

Exclusion Area Boundary Doses:

Time (h) = 720.0000	Whole Body	Thyroid	TEDE
Delta dose (rem)	0.0000E+00	0.0000E+00	0.0000E+00
Accumulated dose (rem)	1.3247E-01	6.4000E+01	4.1774E+00

Low Population Zone Doses:

Time (h) = 720.0000	Whole Body	Thyroid	TEDE
Delta dose (rem)	0.0000E+00	0.0000E+00	0.0000E+00
Accumulated dose (rem)	2.3566E-02	1.1389E+01	7.4309E-01

Control Room Doses:

Time (h) = 720.0000	Whole Body	Thyroid	TEDE	Skin
Delta dose (rem)	1.7069E-06	9.7213-196	1.7069E-06	2.2276E-04
Accumulated dose (rem)	9.2076E-03	6.3292E+01	3.7895E+00	4.5610E-01

****

RCS Compartment Nuclide Inventory (Ci) at Time (h) = 720.0000

Nuclide	Compartment Atmosphere	Dose Fract	Exposure (Ci-hr)	Decays (Bq-s)	Pathway 1 Outflow	Pathway 5 Outflow	Pathway 6 Outflow
Rb-86	4.3695E+00	1.2721E-04	5.7832E+03	7.7057E+17	3.5858E-01	2.5516E-01	4.6636E+00
Sr-89	1.3441E-01	1.6362E-05	1.1979E+02	1.5958E+16	5.4499E-03	3.9323E-03	7.0903E-02
Sr-90	1.8689E-02	5.7680E-05	1.3475E+01	1.7949E+15	5.0436E-04	3.6541E-04	6.5600E-03
Sr-91	1.3170E-24	7.9566E-09	1.1915E+00	1.5953E+14	2.2865E-03	7.9864E-04	2.9648E-02
Sr-92	3.9580E-82	7.6135E-10	1.5153E-01	2.0329E+13	9.6992E-04	1.2211E-04	1.2478E-02
Y-90	1.8701E-02	4.1048E-07	1.4760E+01	1.9661E+15	8.7671E-04	6.0378E-04	1.1401E-02
Y-91	1.7957E+00	2.5002E-04	1.5531E+03	2.0689E+17	6.8982E-02	4.9698E-02	8.9720E-01
Y-92	1.0069E-62	1.1852E-09	3.9167E-01	5.2425E+13	1.2413E-03	3.1121E-04	1.6116E-02
Y-93	1.0561E-23	3.2541E-09	4.4794E-01	5.9968E+13	8.0961E-04	2.9337E-04	1.0500E-02
Zr-95	2.6348E+00	1.7757E-04	2.2426E+03	2.9874E+17	9.8214E-02	7.0784E-02	1.2774E+00
Zr-97	8.8799E-15	2.1230E-08	1.4559E+00	1.9472E+14	1.5867E-03	7.4049E-04	2.0601E-02
Nb-95	4.2828E+00	7.0336E-05	3.4396E+03	4.5818E+17	1.4180E-01	1.0244E-01	1.8443E+00
Mo-99	1.6296E-01	3.9729E-04	2.9866E+04	3.9846E+18	8.4242E+00	5.4125E+00	1.0952E+02
Tc-99m	1.5723E-01	8.9990E-06	2.8793E+04	3.8381E+18	8.0592E+00	5.2049E+00	1.0478E+02
Ru-103	1.7751E+00	5.1066E-05	1.6856E+03	2.2456E+17	8.1168E-02	5.8306E-02	1.0557E+00
Ru-105	2.2501E-51	2.7208E-10	9.6226E-02	1.2896E+13	3.8566E-04	7.6001E-05	4.9828E-03
Ru-106	4.7785E+00	5.5706E-03	3.5410E+03	4.7167E+17	1.3618E-01	9.8575E-02	1.7712E+00
Rh-105	8.7940E-08	1.9818E-08	6.0495E+00	8.0787E+14	3.1255E-03	1.8385E-03	4.0622E-02
Te-127	3.0221E+01	2.5371E-05	2.3998E+04	3.1948E+18	1.0144E+00	7.2163E-01	1.3193E+01
Te-127m	3.0834E+01	1.7339E-03	2.4470E+04	3.2596E+18	1.0050E+00	7.2590E-01	1.3071E+01
Te-129	1.8469E+01	7.2005E-06	1.8419E+04	2.4416E+18	9.2938E-01	6.6285E-01	1.2086E+01
Te-129m	2.8232E+01	2.2229E-03	2.8155E+04	3.7509E+18	1.4117E+00	1.0126E+00	1.8361E+01
Te-131m	5.2216E-07	8.9562E-06	3.8047E+02	5.0826E+16	2.3498E-01	1.3161E-01	3.0533E+00
Te-132	2.4687E-01	5.1759E-04	1.6454E+04	2.1948E+18	3.9239E+00	2.5679E+00	5.1017E+01
I-131	5.5317E+02	2.0633E-01	1.8922E+06	2.5221E+20	1.9771E+02	1.3740E+02	2.5712E+03
I-132	2.5499E-01	1.8790E-04	3.6425E+04	4.8698E+18	1.4899E+02	1.8328E+01	1.9136E+03

I-133	3.5560E-07	5.7279E-03	2.8227E+05	3.7736E+19	2.5058E+02	1.2624E+02	3.2546E+03
I-134	6.5647-245	7.4295E-06	1.4971E+03	2.0292E+17	2.6337E+01	1.2141E+00	3.3111E+02
I-135	7.9038E-30	3.2211E-04	4.7168E+04	6.3183E+18	1.2883E+02	3.5127E+01	1.6682E+03
Xe-133	3.5875E+01	1.4910E-05	2.7430E+05	3.6551E+19	2.3875E-01	8.6687E+00	3.8454E+00
Xe-135	1.8696E-20	1.9307E-05	4.6566E+04	6.2239E+18	1.5460E+00	2.3625E+01	2.4928E+01
Cs-134	4.8992E+03	5.5488E-01	3.5781E+06	4.7661E+20	1.3565E+02	9.8238E+01	1.7643E+03
Cs-136	6.7723E+01	3.3287E-03	1.1957E+05	1.5933E+19	8.9176E+00	6.2974E+00	1.1598E+02
Cs-137	2.7982E+03	2.1233E-01	2.0175E+06	2.6873E+20	7.5511E+01	5.4708E+01	9.8214E+02
Ba-139	1.6850-159	3.9811E-11	6.2063E-02	8.3631E+12	7.3825E-04	5.0155E-05	9.3972E-03
Ba-140	5.7413E-02	1.3154E-06	1.0426E+02	1.3894E+16	7.9067E-03	5.5795E-03	1.0283E-01
La-140	6.6132E-02	2.5220E-06	1.2577E+02	1.6760E+16	1.1723E-02	7.9872E-03	1.5244E-01
La-141	1.4307E-57	2.3385E-10	1.1705E-01	1.5687E+13	5.1809E-04	9.3254E-05	6.6996E-03
La-142	1.3045-143	6.8631E-11	1.1729E-02	1.5788E+12	1.2620E-04	9.4739E-06	1.6101E-03
Ce-141	1.1537E+00	3.4488E-05	1.1639E+03	1.5506E+17	5.8907E-02	4.2241E-02	7.6615E-01
Ce-143	2.8293E-08	5.8059E-08	4.9965E+00	6.6733E+14	2.8073E-03	1.6078E-03	3.6481E-02
Ce-144	5.9503E+00	5.4771E-03	4.4467E+03	5.9232E+17	1.7242E-01	1.2478E-01	2.2426E+00
Pr-143	2.2182E-01	1.0098E-05	3.7811E+02	5.0386E+16	2.7361E-02	1.9381E-02	3.5585E-01
Kr-83m	2.1753E-88	4.5265E-11	8.6609E+02	1.1525E+17	4.0817E-01	6.9664E-01	6.5497E+00
Br-82	3.0538E-05	2.0596E-05	2.1530E+03	2.8753E+17	1.1314E+00	6.5758E-01	1.4703E+01
Br-83	5.0808E-89	2.6994E-07	8.7868E+02	1.1794E+17	6.3248E+00	7.0879E-01	8.1250E+01
Br-84	0.0000E+00	3.3482E-07	9.3083E+01	1.2744E+16	2.4543E+00	7.6114E-02	3.0166E+01
Rb-89	0.0000E+00	5.9664E-09	1.5559E+00	2.1863E+14	6.8296E-02	1.3123E-03	7.8882E-01
Y-91m	8.3980E-25	7.6024E-10	7.5402E-01	1.0028E+14	1.3491E-03	5.0458E-04	1.7540E-02
Nb-95m	1.9551E-02	1.3663E-07	1.6788E+01	2.2363E+15	7.6112E-04	5.4661E-04	9.8993E-03
Nb-97	5.0910E-16	1.2536E-10	9.0768E-02	1.2098E+13	1.8892E-04	4.8357E-05	2.4240E-03
Rh-103m	1.7825E+00	2.9004E-08	1.6926E+03	2.2410E+17	8.1115E-02	5.8536E-02	1.0552E+00
Te-125m	2.5903E+00	5.3947E-05	2.2441E+03	2.9894E+17	9.9844E-02	7.1920E-02	1.2986E+00
Te-131	1.1919E-07	1.9901E-07	8.7135E+01	1.1482E+16	6.2355E-02	3.0277E-02	8.0265E-01
Te-133	3.6449-236	4.0970E-10	2.1491E-01	2.7687E+13	1.4314E-03	1.7109E-04	2.2488E-02
Te-133m	2.1142-235	8.7847E-09	1.6271E+00	2.2036E+14	2.7425E-02	1.3188E-03	3.4537E-01
Te-134	1.2763-311	3.3594E-09	1.7710E+00	2.4102E+14	3.7683E-02	1.4406E-03	4.6954E-01
Xe-131m	1.6804E+01	1.9071E-07	1.4071E+04	1.8739E+18	9.4867E-04	4.3703E-02	1.5283E-02
Xe-133m	1.3275E-02	3.8871E-07	8.1432E+03	1.0854E+18	1.7074E-02	5.8124E-01	2.7499E-01

Xe-135m	1.2949E-30	5.2661E-06	7.4087E+03	9.6707E+17	6.8827E+00	5.4857E+00	1.0911E+02
Cs-134m	5.6143E-75	2.3194E-09	1.3221E+01	1.7733E+15	7.9406E-02	1.0645E-02	1.0223E+00
Cs-138	0.0000E+00	1.9640E-07	4.3165E+01	5.9078E+15	1.1273E+00	3.5286E-02	1.3866E+01
Ba-141	0.0000E+00	5.3265E-12	3.1053E-03	4.3279E+11	1.2127E-04	2.5907E-06	1.4288E-03
Total	8.5112E+03	1.0000E+00	0.0000E+00	0.0000E+00	1.0193E+03	5.3560E+02	1.3232E+04

Dose Equivalent (Ci/cc) I-131 (Thyroid)	4.1908E-08
Dose Equivalent (Ci/cc) I-131 (CEDE)	4.1908E-08
Dose Equivalent (Ci/cc) I-131 (ICRP2 Thyroid)	4.1909E-08
Total I (Ci)	5.5342E+02
Dose Equivalent (Ci/cc) Xe-133 (EDE)	3.0362E-09

RCS Compartment Group Inventory Distribution:

Time (h) = 720.0000	Atmosphere	Sump
Noble gases (Ci)	5.2692E+01	0.0000E+00
Elemental I (Ci)	5.3682E+02	0.0000E+00
Organic I (Ci)	1.6603E+01	0.0000E+00
Aerosol I (Ci)	0.0000E+00	0.0000E+00
All Aerosols (Ci)	7.9051E+03	0.0000E+00
All Aerosols (kg)	3.5942E-02	0.0000E+00

Intact Steam Generators Compartment Nuclide Inventory (Ci) at Time (h) = 720.0000

Nuclide	Compartment Atmosphere	Dose Fract	Exposure (Ci-hr)	Decays (Bq-s)	Pathway 5 Inflow	Pathway 7 Outflow
Rb-86	8.1851E-02	1.2689E-04	1.0535E+02	1.4038E+16	2.5516E-01	1.0190E-02
Sr-89	2.5179E-03	1.6440E-05	2.1982E+00	2.9284E+14	3.9323E-03	1.5739E-04
Sr-90	3.5009E-04	5.8167E-05	2.4818E-01	3.3058E+13	3.6541E-04	1.4644E-05
Sr-91	2.4671E-26	3.8364E-09	1.0493E-02	1.4089E+12	7.9864E-04	2.6908E-05
Sr-92	7.4142E-84	1.2701E-10	4.6169E-04	6.2166E+10	1.2211E-04	2.7389E-06
Y-90	3.5032E-04	4.1017E-07	2.6936E-01	3.5881E+13	6.0378E-04	2.3963E-05
Y-91	3.3637E-02	2.5134E-04	2.8515E+01	3.7986E+15	4.9698E-02	1.9895E-03

Y-92	1.8862E-64	3.2955E-10	1.9889E-03	2.6770E+11	3.1121E-04	9.0765E-06
Y-93	1.9783E-25	1.6298E-09	4.0974E-03	5.5001E+11	2.9337E-04	9.9888E-06
Zr-95	4.9357E-02	1.7856E-04	4.1186E+01	5.4866E+15	7.0784E-02	2.8338E-03
Zr-97	1.6634E-16	1.3815E-08	1.7302E-02	2.3173E+12	7.4049E-04	2.6956E-05
Nb-95	8.0228E-02	7.0810E-05	6.3242E+01	8.4243E+15	1.0244E-01	4.1028E-03
Mo-99	3.0526E-03	3.5984E-04	4.9404E+02	6.5923E+16	5.4125E+00	2.1176E-01
Tc-99m	2.9453E-03	8.1548E-06	4.7653E+02	6.3530E+16	5.2049E+00	2.0379E-01
Ru-103	3.3252E-02	5.1252E-05	3.0897E+01	4.1161E+15	5.8306E-02	2.3327E-03
Ru-105	4.2149E-53	7.2510E-11	4.6836E-04	6.3050E+10	7.6001E-05	2.1046E-06
Ru-106	8.9512E-02	5.6150E-03	6.5188E+01	8.6832E+15	9.8575E-02	3.9497E-03
Rh-105	1.6473E-09	1.6213E-08	9.0390E-02	1.2076E+13	1.8385E-03	7.0537E-05
Te-127	5.6611E-01	2.5535E-05	4.4113E+02	5.8726E+16	7.2163E-01	2.8837E-02
Te-127m	5.7760E-01	1.7457E-03	4.4995E+02	5.9937E+16	7.2590E-01	2.9073E-02
Te-129	3.4597E-01	7.2201E-06	3.3731E+02	4.4715E+16	6.6285E-01	2.6502E-02
Te-129m	5.2886E-01	2.2291E-03	5.1561E+02	6.8692E+16	1.0126E+00	4.0503E-02
Te-131m	9.7813E-09	7.0383E-06	5.4607E+00	7.2989E+14	1.3161E-01	4.9997E-03
Te-132	4.6245E-03	4.7776E-04	2.7739E+02	3.7004E+16	2.5679E+00	1.0085E-01
I-131	1.0362E+01	2.0198E-01	3.3828E+04	4.5090E+18	1.3740E+02	5.4618E+00
I-132	4.7766E-03	9.5158E-05	3.3691E+02	4.4914E+16	1.8328E+01	4.2604E-01
I-133	6.6612E-09	4.0342E-03	3.6308E+03	4.8590E+17	1.2624E+02	4.6811E+00
I-134	1.2297-246	4.0568E-07	1.4930E+00	2.0270E+14	1.2141E+00	1.2056E-02
I-135	1.4806E-31	1.2020E-04	3.2145E+02	4.3226E+16	3.5127E+01	1.0959E+00
Xe-133	6.7202E-01	1.5079E-05	5.0665E+03	6.7516E+17	8.6687E+00	4.0396E-01
Xe-135	3.5023E-22	1.4062E-05	6.1938E+02	8.3002E+16	2.3625E+01	9.9929E-01
Cs-134	9.1773E+01	5.5945E-01	6.5887E+04	8.7762E+18	9.8238E+01	3.9366E+00
Cs-136	1.2686E+00	3.3018E-03	2.1661E+03	2.8865E+17	6.2974E+00	2.5111E-01
Cs-137	5.2418E+01	2.1412E-01	3.7158E+04	4.9495E+18	5.4708E+01	2.1924E+00
Ba-139	3.1564-161	3.4072E-12	9.7008E-05	1.3091E+10	5.0155E-05	7.2889E-07
Ba-140	1.0755E-03	1.3040E-06	1.8878E+00	2.5157E+14	5.5795E-03	2.2245E-04
La-140	1.2388E-03	2.4829E-06	2.2614E+00	3.0135E+14	7.9872E-03	3.1634E-04
La-141	2.6800E-59	5.5826E-11	5.1033E-04	6.8709E+10	9.3254E-05	2.4734E-06
La-142	2.4437-145	6.5637E-12	2.0486E-05	2.7623E+09	9.4739E-06	1.4987E-07
Ce-141	2.1612E-02	3.4575E-05	2.1311E+01	2.8391E+15	4.2241E-02	1.6894E-03

Ce-143	5.3000E-10	4.6694E-08	7.3389E-02	9.8068E+12	1.6078E-03	6.1384E-05
Ce-144	1.1146E-01	5.5201E-03	8.1849E+01	1.0903E+16	1.2478E-01	4.9994E-03
Pr-143	4.1553E-03	1.0026E-05	6.8563E+00	9.1366E+14	1.9381E-02	7.7327E-04
Kr-83m	4.0748E-90	1.1845E-11	4.1393E+00	5.5596E+14	6.9664E-01	2.1971E-02
Br-82	5.7205E-07	1.6818E-05	3.2109E+01	4.2898E+15	6.5758E-01	2.5186E-02
Br-83	9.5175E-91	3.9812E-08	2.3668E+00	3.1870E+14	7.0879E-01	1.4871E-02
Br-84	0.0000E+00	1.1048E-08	5.6094E-02	7.7022E+12	7.6114E-02	4.8814E-04
Rb-89	0.0000E+00	9.4553E-11	4.5031E-04	6.3647E+10	1.3123E-03	4.8881E-06
Y-91m	1.5731E-26	3.6907E-10	6.6854E-03	8.9194E+11	5.0458E-04	1.7114E-05
Nb-95m	3.6624E-04	1.3731E-07	3.0812E-01	4.1044E+13	5.4661E-04	2.1868E-05
Nb-97	9.5367E-18	7.5769E-11	1.0019E-03	1.3361E+11	4.8357E-05	1.6223E-06
Rh-103m	3.3391E-02	2.9110E-08	3.1025E+01	4.1078E+15	5.8536E-02	2.3423E-03
Te-125m	4.8523E-02	5.4232E-05	4.1201E+01	5.4886E+15	7.1920E-02	2.8790E-03
Te-131	2.2327E-09	1.5590E-07	1.2466E+00	1.6437E+14	3.0277E-02	1.1425E-03
Te-133	6.8278-238	2.9151E-11	2.7926E-04	3.6840E+10	1.7109E-04	2.1812E-06
Te-133m	3.9604-237	5.0467E-10	1.7072E-03	2.3157E+11	1.3188E-03	1.3697E-05
Te-134	2.3908-313	1.4568E-10	1.4027E-03	1.9130E+11	1.4406E-03	1.1668E-05
Xe-131m	3.1478E-01	1.9536E-07	2.6324E+02	3.5058E+16	4.3703E-02	2.0771E-03
Xe-133m	2.4868E-04	3.8587E-07	1.4764E+02	1.9682E+16	5.8124E-01	2.6925E-02
Xe-135m	2.4257E-32	2.0462E-06	5.2576E+01	6.9166E+15	5.4857E+00	1.7856E-01
Cs-134m	1.0517E-76	4.1336E-10	4.3033E-02	5.7944E+12	1.0645E-02	2.4691E-04
Cs-138	0.0000E+00	6.5621E-09	2.6339E-02	3.6153E+12	3.5286E-02	2.2865E-04
Ba-141	0.0000E+00	1.0121E-13	1.0776E-06	1.5092E+08	2.5907E-06	1.0925E-08
Total	1.5944E+02	1.0000E+00	0.0000E+00	0.0000E+00	5.3560E+02	2.0417E+01

Dose Equivalent (Ci/cc) I-131 (Thyroid)	1.2509E-09
Dose Equivalent (Ci/cc) I-131 (CEDE)	1.2509E-09
Dose Equivalent (Ci/cc) I-131 (ICRP2 Thyroid)	1.2509E-09
Total I (Ci)	1.0367E+01
Dose Equivalent (Ci/cc) Xe-133 (EDE)	9.0624E-11

Intact Steam Generators Compartment Group Inventory Distribution:

Time (h) = 720.0000	Atmosphere	Sump
Noble gases (Ci)	9.8705E-01	0.0000E+00
Elemental I (Ci)	1.0056E+01	0.0000E+00
Organic I (Ci)	3.1101E-01	0.0000E+00
Aerosol I (Ci)	0.0000E+00	0.0000E+00
All Aerosols (Ci)	1.4808E+02	0.0000E+00
All Aerosols (kg)	6.7327E-04	0.0000E+00

Environment Integral Nuclide Release (Ci): at Time (h) = 720.0000

Nuclide	Compartment Atmosphere	Dose Fract Pathway 1	Dose Fract Pathway 7	Dose Fract Pathway 8
Rb-86	3.8513E-01	0.00013	0.00000	0.00001
Sr-89	5.8562E-03	0.00001	0.00000	0.00000
Sr-90	5.4202E-04	0.00003	0.00000	0.00000
Sr-91	2.4168E-03	0.00000	0.00000	0.00000
Sr-92	1.0154E-03	0.00000	0.00000	0.00000
Y-90	9.4067E-04	0.00000	0.00000	0.00000
Y-91	7.4119E-02	0.00018	0.00000	0.00001
Y-92	1.3067E-03	0.00000	0.00000	0.00000
Y-93	8.5622E-04	0.00000	0.00000	0.00000
Zr-95	1.0553E-01	0.00013	0.00000	0.00001
Zr-97	1.6857E-03	0.00000	0.00000	0.00000
Nb-95	1.5238E-01	0.00005	0.00000	0.00000
Mo-99	9.0199E+00	0.00181	0.00002	0.00008
Tc-99m	8.6304E+00	0.00004	0.00000	0.00000
Ru-103	8.7205E-02	0.00004	0.00000	0.00000
Ru-105	4.0501E-04	0.00000	0.00000	0.00000
Ru-106	1.4634E-01	0.00347	0.00004	0.00016
Rh-105	3.3383E-03	0.00000	0.00000	0.00000
Te-127	1.0895E+00	0.00002	0.00000	0.00000
Te-127m	1.0799E+00	0.00115	0.00001	0.00005
Te-129	9.9828E-01	0.00001	0.00000	0.00000

Te-129m	1.5167E+00	0.00180	0.00002	0.00008
Te-131m	2.5068E-01	0.00009	0.00000	0.00000
Te-132	4.2036E+00	0.00200	0.00002	0.00009
I-131	2.1219E+02	0.34874	0.00354	0.01585
I-132	1.5595E+02	0.01243	0.00002	0.00054
I-133	2.6665E+02	0.08225	0.00059	0.00372
I-134	2.7429E+01	0.00212	0.00000	0.00009
I-135	1.3573E+02	0.01423	0.00005	0.00064
Xe-133	1.0198E+00	0.00000	0.00000	0.00000
Xe-135	3.9767E+01	0.00001	0.00000	0.00000
Cs-134	1.4578E+02	0.34026	0.00362	0.01547
Cs-136	9.5756E+00	0.00402	0.00004	0.00018
Cs-137	8.1150E+01	0.12855	0.00137	0.00584
Ba-139	7.7047E-04	0.00000	0.00000	0.00000
Ba-140	8.4900E-03	0.00000	0.00000	0.00000
La-140	1.2574E-02	0.00000	0.00000	0.00000
La-141	5.4378E-04	0.00000	0.00000	0.00000
La-142	1.3177E-04	0.00000	0.00000	0.00000
Ce-141	6.3285E-02	0.00003	0.00000	0.00000
Ce-143	2.9965E-03	0.00000	0.00000	0.00000
Ce-144	1.8529E-01	0.00344	0.00004	0.00016
Pr-143	2.9383E-02	0.00001	0.00000	0.00000
Kr-83m	9.4731E-01	0.00000	0.00000	0.00000
Br-82	1.2081E+00	0.00018	0.00000	0.00001
Br-83	6.6173E+00	0.00003	0.00000	0.00000
Br-84	2.5485E+00	0.00014	0.00000	0.00001
Rb-89	7.0425E-02	0.00000	0.00000	0.00000
Y-91m	1.4277E-03	0.00000	0.00000	0.00000
Nb-95m	8.1773E-04	0.00000	0.00000	0.00000
Nb-97	1.9880E-04	0.00000	0.00000	0.00000
Rh-103m	8.7162E-02	0.00000	0.00000	0.00000
Te-125m	1.0728E-01	0.00004	0.00000	0.00000
Te-131	6.6257E-02	0.00000	0.00000	0.00000

Te-133	1.5351E-03	0.00000	0.00000	0.00000
Te-133m	2.8570E-02	0.00000	0.00000	0.00000
Te-134	3.9197E-02	0.00000	0.00000	0.00000
Xe-131m	4.3444E-03	0.00000	0.00000	0.00000
Xe-133m	6.7534E-02	0.00000	0.00000	0.00000
Xe-135m	1.8693E+01	0.00008	0.00000	0.00001
Cs-134m	8.3164E-02	0.00000	0.00000	0.00000
Cs-138	1.1707E+00	0.00008	0.00000	0.00000
Ba-141	1.2532E-04	0.00000	0.00000	0.00000

Environment Compartment Group Inventory Distribution:

Time (h) = 720.0000	Total Release	Release Rate/s
Noble gases (Ci)	6.0498E+01	2.3340E-05
Elemental I (Ci)	7.8408E+02	3.0250E-04
Organic I (Ci)	2.4250E+01	9.3556E-06
Aerosol I (Ci)	0.0000E+00	0.0000E+00
All Aerosols (Ci)	2.6622E+02	1.0271E-04

Control Room Compartment Nuclide Inventory (Ci) at Time (h) = 720.0000

Nuclide	Compartment Atmosphere	Dose Fract	Exposure (Ci-hr)	Decays (Bq-s)	Compartment Recirc Filtr	Pathway 2 Inflow	Pathway 3 Inflow	Pathway 4 Outflow
Rb-86	0.0000E+00	1.2197E-04	8.4486E-05	1.1254E+10	1.1812E-04	3.8053E-04	6.5741E-05	9.2295E-05
Sr-89	0.0000E+00	1.1517E-05	1.2848E-06	1.7110E+08	3.6334E-06	5.7784E-06	9.9964E-07	7.5523E-06
Sr-91	0.0000E+00	2.3452E-07	5.3512E-07	7.1382E+07	3.5601E-29	2.4455E-06	4.1547E-07	5.8540E-07
Y-90	0.0000E+00	3.7691E-07	2.0650E-07	2.7507E+07	5.0553E-07	9.3068E-07	1.6065E-07	1.2377E-06
Y-91	0.0000E+00	1.7174E-04	1.6255E-05	2.1652E+09	4.8541E-05	7.3196E-05	1.2649E-05	5.3883E-05
Y-92	0.0000E+00	5.7798E-08	2.9103E-07	3.8734E+07	2.7220E-67	1.3228E-06	2.2543E-07	3.4850E-05
Zr-95	0.0000E+00	1.2027E-04	2.3143E-05	3.0827E+09	7.1225E-05	1.0421E-04	1.8010E-05	2.5282E-05
Nb-95	0.0000E+00	4.4845E-05	3.3415E-05	4.4509E+09	1.1577E-04	1.5046E-04	2.6004E-05	5.1766E-05
Mo-99	0.0000E+00	1.7312E-03	1.9830E-03	2.6420E+11	4.4051E-06	8.9484E-03	1.5422E-03	2.1667E-03

Tc-99m	0.0000E+00	3.8917E-05	1.8973E-03	2.5247E+11	4.2502E-06	8.5598E-03	1.4755E-03	1.5935E-01
Ru-103	0.0000E+00	3.8028E-05	1.9126E-05	2.5476E+09	4.7985E-05	8.6129E-05	1.4883E-05	2.0893E-05
Ru-106	0.0000E+00	3.3132E-03	3.2091E-05	4.2745E+09	1.2917E-04	1.4449E-04	2.4973E-05	3.5056E-05
Rh-105	0.0000E+00	1.5807E-07	7.3521E-07	9.7961E+07	2.3772E-12	3.3223E-06	5.7148E-07	2.1873E-06
Te-127	0.0000E+00	1.6582E-05	2.3899E-04	3.1810E+10	8.1693E-04	1.0766E-03	1.8597E-04	1.3733E-02
Te-127m	0.0000E+00	1.1013E-03	2.3682E-04	3.1545E+10	8.3351E-04	1.0664E-03	1.8430E-04	2.5871E-04
Te-129	0.0000E+00	5.6174E-06	2.1894E-04	2.8973E+10	4.9926E-04	9.8650E-04	1.7038E-04	1.0182E-01
Te-129m	0.0000E+00	1.7237E-03	3.3265E-04	4.4310E+10	7.6317E-04	1.4980E-03	2.5886E-04	3.6339E-04
Te-131m	0.0000E+00	8.5350E-05	5.5246E-05	7.3621E+09	1.4115E-11	2.4994E-04	4.2936E-05	6.0378E-05
Te-132	0.0000E+00	1.9072E-03	9.2383E-04	1.2308E+11	6.6734E-06	4.1673E-03	7.1851E-04	1.0094E-03
I-131	0.0000E+00	3.7474E-01	5.2362E-02	6.9751E+12	1.6560E-02	2.3737E-01	3.6235E-02	7.7840E-02
I-132	0.0000E+00	1.2943E-02	3.8231E-02	5.1222E+12	6.8929E-06	1.8325E-01	2.6724E-02	2.6094E-01
I-133	0.0000E+00	8.8040E-02	6.6106E-02	8.8113E+12	1.0645E-11	3.0146E-01	4.5725E-02	9.6919E-02
I-134	0.0000E+00	2.1010E-03	6.4511E-03	8.7301E+11	1.9642-249	3.3813E-02	4.6268E-03	1.2335E-02
I-135	0.0000E+00	1.5108E-02	3.3707E-02	4.4993E+12	2.3661E-34	1.5587E-01	2.3348E-02	3.6909E-02
Xe-133	2.7356E-13	6.5396E-04	1.8332E-01	2.1619E+13	0.0000E+00	1.3393E-01	7.9503E-05	1.7917E-01
Xe-135	8.3444E-35	9.9219E-03	3.6461E-01	4.5428E+13	0.0000E+00	2.6748E-01	4.1858E-04	3.7708E-01
Cs-134	0.0000E+00	3.2534E-01	3.1966E-02	4.2579E+12	1.3243E-01	1.4393E-01	2.4876E-02	3.4920E-02
Cs-136	0.0000E+00	3.8387E-03	2.1010E-03	2.7986E+11	1.8307E-03	9.4641E-03	1.6347E-03	2.2952E-03
Cs-137	0.0000E+00	1.2291E-01	1.7794E-02	2.3702E+12	7.5642E-02	8.0120E-02	1.3848E-02	1.9439E-02
Ba-140	0.0000E+00	1.5424E-06	1.8628E-06	2.4814E+08	1.5520E-06	8.3913E-06	1.4494E-06	2.0350E-06
La-140	0.0000E+00	3.6334E-06	2.7609E-06	3.6774E+08	1.7877E-06	1.2446E-05	2.1478E-06	2.8225E-05
La-141	0.0000E+00	1.5805E-08	1.2054E-07	1.6094E+07	3.8674E-62	5.5813E-07	9.3614E-08	3.5859E-06
Ce-141	0.0000E+00	2.6993E-05	1.3880E-05	1.8489E+09	3.1187E-05	6.2509E-05	1.0801E-05	1.6350E-05
Ce-143	0.0000E+00	5.0344E-07	6.6014E-07	8.7968E+07	7.6483E-13	2.9853E-06	5.1310E-07	7.2144E-07
Ce-144	0.0000E+00	3.2846E-03	4.0632E-05	5.4122E+09	1.6085E-04	1.8295E-04	3.1620E-05	4.4386E-05
Pr-143	0.0000E+00	1.1300E-05	6.4465E-06	8.5870E+08	5.9963E-06	2.9037E-05	5.0160E-06	8.1481E-06
Kr-83m	2.4928E-93	9.1460E-08	2.6664E-02	3.4167E+12	0.0000E+00	2.8520E-02	9.2182E-05	2.8378E-02
Br-82	0.0000E+00	1.8771E-04	2.9899E-04	3.9842E+10	9.1422E-10	1.3598E-03	2.0683E-04	3.2684E-04
Br-83	0.0000E+00	3.2736E-05	1.6237E-03	2.1753E+11	1.5210E-93	7.7768E-03	1.1344E-03	1.7844E-03
Br-84	0.0000E+00	1.3559E-04	5.7438E-04	7.8541E+10	0.0000E+00	3.2860E-03	4.2236E-04	6.4418E-04
Rb-89	0.0000E+00	3.3332E-06	1.3244E-05	1.8634E+09	0.0000E+00	9.3940E-05	1.1096E-05	1.5280E-05
Y-91m	0.0000E+00	2.0991E-08	3.1722E-07	4.1878E+07	2.2702E-29	1.4325E-06	2.4585E-07	2.0395E-04

Nb-95m	0.0000E+00	9.5794E-08	1.7935E-07	2.3887E+07	5.2851E-07	8.0765E-07	1.3956E-07	1.2154E-06
Nb-97	0.0000E+00	3.9338E-09	4.3397E-08	5.7999E+06	1.3762E-20	2.0774E-07	3.3939E-08	9.0033E-06
Rh-103m	0.0000E+00	2.1503E-08	1.9121E-05	2.5256E+09	4.8185E-05	8.6022E-05	1.4877E-05	1.1132E-02
Te-125m	0.0000E+00	3.7120E-05	2.3527E-05	3.1338E+09	7.0022E-05	1.0594E-04	1.8309E-05	2.5701E-05
Te-131	0.0000E+00	2.1636E-06	1.4434E-05	1.9008E+09	3.2219E-12	6.7982E-05	1.1282E-05	1.6062E-02
Te-133	0.0000E+00	5.4861E-08	4.3847E-07	5.0761E+07	9.8530-241	7.0439E-07	3.0990E-07	2.0995E-03
Te-133m	0.0000E+00	2.1596E-06	6.0949E-06	8.2413E+08	5.7151-240	3.1602E-05	4.8254E-06	6.7573E-06
Te-134	0.0000E+00	1.0245E-06	8.2297E-06	1.1182E+09	3.4501-316	4.4529E-05	6.5662E-06	9.1684E-06
Xe-131m	2.0891E-06	6.0176E-06	6.7649E-03	7.4285E+11	0.0000E+00	4.5396E-03	3.4359E-07	6.1404E-03
Xe-133m	1.9434E-14	4.0808E-05	1.3026E-02	1.5361E+12	0.0000E+00	9.5853E-03	5.5699E-06	1.2731E-02
Xe-135m	1.2970E-34	3.0094E-02	6.4511E-01	7.9253E+13	0.0000E+00	1.7072E+00	1.5153E-03	6.6906E-01
Cs-134m	0.0000E+00	2.1109E-07	1.8334E-05	2.4538E+09	1.5177E-79	8.6536E-05	1.4277E-05	2.0122E-05
Cs-138	0.0000E+00	7.2008E-05	2.4113E-04	3.2960E+10	0.0000E+00	1.3716E-03	1.9413E-04	2.7023E-04
Total	2.0891E-06	1.0000E+00	0.0000E+00	0.0000E+00	2.3026E-01	3.3387E+00	1.8596E-01	2.1260E+00

Control Room Compartment Group Inventory Distribution:

Time (h) = 720.0000	Atmosphere	Sump
Noble gases (Ci)	2.0891E-06	0.0000E+00
Elemental I (Ci)	0.0000E+00	0.0000E+00
Organic I (Ci)	0.0000E+00	0.0000E+00
Aerosol I (Ci)	0.0000E+00	0.0000E+00
All Aerosols (Ci)	0.0000E+00	0.0000E+00
All Aerosols (kg)	0.0000E+00	0.0000E+00

Time (h) = 720.0000	Deposition Surfaces	Recirculating Filter
Noble gases (Ci)	0.0000E+00	0.0000E+00
Elemental I (Ci)	0.0000E+00	1.6070E-02
Organic I (Ci)	0.0000E+00	4.9700E-04
Aerosol I (Ci)	0.0000E+00	0.0000E+00
All Aerosols (Ci)	0.0000E+00	2.1369E-01
All Aerosols (kg)	0.0000E+00	9.7157E-07

Ruptured Steam Generator Compartment Nuclide Inventory (Ci) at Time (h) = 720.0000

Nuclide	Compartment Atmosphere	Dose Fract	Exposure (Ci-hr)	Decays (Bq-s)	Pathway 6 Inflow	Pathway 8 Outflow
Rb-86	1.5253E+00	1.2720E-04	2.0163E+03	2.6865E+17	4.6636E+00	1.6375E-02
Sr-89	4.6919E-02	1.6366E-05	4.1778E+01	5.5655E+15	7.0903E-02	2.4911E-04
Sr-90	6.5238E-03	5.7702E-05	4.7003E+00	6.2608E+14	6.5600E-03	2.3037E-05
Sr-91	4.5973E-25	7.7136E-09	4.0277E-01	5.3932E+13	2.9648E-02	1.0343E-04
Sr-92	1.3816E-82	6.9542E-10	4.8260E-02	6.4757E+12	1.2478E-02	4.2815E-05
Y-90	6.5280E-03	4.1047E-07	5.1461E+00	6.8551E+14	1.1401E-02	4.0019E-05
Y-91	6.2681E-01	2.5008E-04	5.4165E+02	7.2156E+16	8.9720E-01	3.1505E-03
Y-92	3.5149E-63	1.1279E-09	1.2996E-01	1.7400E+13	1.6116E-02	5.6368E-05
Y-93	3.6865E-24	3.1599E-09	1.5166E-01	2.0306E+13	1.0500E-02	3.6644E-05
Zr-95	9.1974E-01	1.7762E-04	7.8214E+02	1.0419E+17	1.2774E+00	4.4856E-03
Zr-97	3.0997E-15	2.0846E-08	4.9843E-01	6.6668E+13	2.0601E-02	7.2079E-05
Nb-95	1.4950E+00	7.0359E-05	1.1997E+03	1.5981E+17	1.8443E+00	6.4765E-03
Mo-99	5.6884E-02	3.9559E-04	1.0369E+04	1.3834E+18	1.0952E+02	3.8424E-01
Tc-99m	5.4884E-02	8.9609E-06	9.9969E+03	1.3326E+18	1.0478E+02	3.6764E-01
Ru-103	6.1964E-01	5.1076E-05	5.8783E+02	7.8311E+16	1.0557E+00	3.7070E-03
Ru-105	7.8543E-52	2.5631E-10	3.1607E-02	4.2365E+12	4.9828E-03	1.7253E-05
Ru-106	1.6680E+00	5.5726E-03	1.2351E+03	1.6452E+17	1.7712E+00	6.2199E-03
Rh-105	3.0697E-08	1.9648E-08	2.0913E+00	2.7928E+14	4.0622E-02	1.4243E-04
Te-127	1.0549E+01	2.5379E-05	8.3701E+03	1.1143E+18	1.3193E+01	4.6318E-02
Te-127m	1.0763E+01	1.7344E-03	8.5348E+03	1.1369E+18	1.3071E+01	4.5902E-02
Te-129	6.4470E+00	7.2015E-06	6.4230E+03	8.5146E+17	1.2086E+01	4.2429E-02
Te-129m	9.8550E+00	2.2233E-03	9.8182E+03	1.3080E+18	1.8361E+01	6.4474E-02
Te-131m	1.8227E-07	8.8641E-06	1.3130E+02	1.7540E+16	3.0533E+00	1.0700E-02
Te-132	8.6175E-02	5.1580E-04	5.7174E+03	7.6263E+17	5.1017E+01	1.7901E-01
I-131	1.9309E+02	2.0615E-01	6.5914E+05	8.7857E+19	2.5712E+03	9.0262E+00
I-132	8.9010E-02	1.7768E-04	1.2010E+04	1.6054E+18	1.9136E+03	6.5436E+00
I-133	1.2413E-07	5.6429E-03	9.6959E+04	1.2963E+19	3.2546E+03	1.1395E+01
I-134	2.2915-245	5.8404E-06	4.1036E+02	5.5658E+16	3.3111E+02	1.0811E+00

I-135	2.7590E-30	3.0869E-04	1.5761E+04	2.1115E+18	1.6682E+03	5.8031E+00
Xe-133	1.2523E+01	1.4922E-05	9.5724E+04	1.2755E+19	3.8454E+00	1.8989E-02
Xe-135	6.5264E-21	1.9214E-05	1.6158E+04	2.1598E+18	2.4928E+01	1.2352E-01
Cs-134	1.7102E+03	5.5509E-01	1.2481E+06	1.6625E+20	1.7643E+03	6.1958E+00
Cs-136	2.3640E+01	3.3276E-03	4.1676E+04	5.5537E+18	1.1598E+02	4.0719E-01
Cs-137	9.7678E+02	2.1241E-01	7.0373E+05	9.3737E+19	9.8214E+02	3.4490E+00
Ba-139	5.8817-160	3.3854E-11	1.8402E-02	2.4806E+12	9.3972E-03	3.1518E-05
Ba-140	2.0041E-02	1.3149E-06	3.6341E+01	4.8428E+15	1.0283E-01	3.6103E-04
La-140	2.3085E-02	2.5202E-06	4.3823E+01	5.8397E+15	1.5244E-01	5.3504E-04
La-141	4.9941E-58	2.1907E-10	3.8233E-02	5.1252E+12	6.6996E-03	2.3231E-05
La-142	4.5537-144	5.9247E-11	3.5303E-03	4.7536E+11	1.6101E-03	5.4268E-06
Ce-141	4.0272E-01	3.4492E-05	4.0587E+02	5.4072E+16	7.6615E-01	2.6903E-03
Ce-143	9.8763E-09	5.7518E-08	1.7259E+00	2.3052E+14	3.6481E-02	1.2787E-04
Ce-144	2.0771E+00	5.4791E-03	1.5510E+03	2.0660E+17	2.2426E+00	7.8754E-03
Pr-143	7.7432E-02	1.0096E-05	1.3180E+02	1.7563E+16	3.5585E-01	1.2494E-03
Kr-83m	7.5931E-89	4.4430E-11	2.9641E+02	3.9479E+16	6.5497E+00	3.1894E-02
Br-82	1.0660E-05	2.0417E-05	7.4419E+02	9.9385E+16	1.4703E+01	5.1542E-02
Br-83	1.7735E-89	2.4405E-07	2.7699E+02	3.7187E+16	8.1250E+01	2.7791E-01
Br-84	0.0000E+00	2.3042E-07	2.2335E+01	3.0626E+15	3.0166E+01	9.3732E-02
Rb-89	0.0000E+00	2.9841E-09	2.7132E-01	3.8296E+13	7.8882E-01	2.1265E-03
Y-91m	2.9315E-25	7.3817E-10	2.5527E-01	3.3956E+13	1.7540E-02	6.1527E-05
Nb-95m	6.8248E-03	1.3666E-07	5.8550E+00	7.7992E+14	9.8993E-03	3.4761E-05
Nb-97	1.7771E-16	1.2160E-10	3.0697E-02	4.0912E+12	2.4240E-03	8.2726E-06
Rh-103m	6.2222E-01	2.9009E-08	5.9027E+02	7.8153E+16	1.0552E+00	3.7070E-03
Te-125m	9.0420E-01	5.3961E-05	7.8265E+02	1.0426E+17	1.2986E+00	4.5601E-03
Te-131	4.1605E-08	1.9674E-07	3.0035E+01	3.9579E+15	8.0265E-01	2.7612E-03
Te-133	1.2723-236	3.7023E-10	6.7713E-02	8.8326E+12	2.2488E-02	1.0161E-04
Te-133m	7.3799-236	6.9784E-09	4.5068E-01	6.1077E+13	3.4537E-01	1.1318E-03
Te-134	4.4552-312	2.5021E-09	4.5993E-01	6.2655E+13	4.6954E-01	1.5035E-03
Xe-131m	5.8658E+00	1.9093E-07	4.9116E+03	6.5412E+17	1.5283E-02	7.5521E-05
Xe-133m	4.6340E-03	3.8890E-07	2.8407E+03	3.7863E+17	2.7499E-01	1.3576E-03
Xe-135m	4.5201E-31	5.1522E-06	2.5274E+03	3.3049E+17	1.0911E+02	5.0898E-01
Cs-134m	1.9598E-75	2.1293E-09	4.2319E+00	5.6773E+14	1.0223E+00	3.5131E-03

Cs-138	0.0000E+00	1.3571E-07	1.0399E+01	1.4255E+15	1.3866E+01	4.3152E-02
Ba-141	0.0000E+00	2.9321E-12	5.9602E-04	8.3352E+10	1.4288E-03	4.0346E-06
Total	2.9710E+03	1.0000E+00	0.0000E+00	0.0000E+00	1.3232E+04	4.6266E+01

```
Dose Equivalent (Ci/cc) I-131 (Thyroid)            6.9928E-08
Dose Equivalent (Ci/cc) I-131 (CEDE)               6.9928E-08
Dose Equivalent (Ci/cc) I-131 (ICRP2 Thyroid)      6.9929E-08
Total I  (Ci)                                      1.9318E+02
Dose Equivalent (Ci/cc) Xe-133 (EDE)               5.0662E-09

Ruptured Steam Generator Compartment Group Inventory Distribution:

Time (h) = 720.0000      Atmosphere     Sump
Noble gases (Ci)         1.8393E+01   0.0000E+00
Elemental I (Ci)         1.8739E+02   0.0000E+00
Organic I (Ci)           5.7955E+00   0.0000E+00
Aerosol I (Ci)           0.0000E+00   0.0000E+00
All Aerosols (Ci)        2.7594E+03   0.0000E+00
All Aerosols (kg)        1.2546E-02   0.0000E+00

   1921

#######################################################################
    ALION RADTRAD Version 3.10 Rev 2 run on 12/01/2014  at 16:18:14

                Copyright © 2009 Alion Science and Technology
#######################################################################

#################################################################
                          I-131 Summary
#################################################################

                  RCS          Intact Steam Generato      Environment
```

Time (hr)	I-131 (Curies)	I-131 (Curies)	I-131 (Curies)
0.000	1.0259E+04	3.3404E-05	6.1452E-03
0.028	1.0079E+04	1.8536E-01	3.4113E+01
0.110	9.5683E+03	7.8029E-01	7.5163E+01
0.139	9.3940E+03	9.8318E-01	8.9305E+01
0.278	8.6014E+03	1.9240E+00	1.3875E+02
0.477	7.5801E+03	3.1385E+00	2.0001E+02
0.500	7.4720E+03	3.2668E+00	2.0670E+02
0.667	7.4665E+03	4.2227E+00	2.0675E+02
0.878	7.4595E+03	5.4797E+00	2.0676E+02
1.089	7.4526E+03	6.7297E+00	2.0676E+02
1.289	7.4461E+03	7.9118E+00	2.0677E+02
1.489	7.4396E+03	9.0902E+00	2.0679E+02
1.689	7.4330E+03	1.0265E+01	2.0680E+02
1.889	7.4265E+03	1.1436E+01	2.0682E+02
2.000	7.4229E+03	1.2084E+01	2.0683E+02
2.243	7.4150E+03	1.3500E+01	2.0685E+02
2.443	7.4085E+03	1.4660E+01	2.0687E+02
2.643	7.4019E+03	1.5816E+01	2.0690E+02
2.843	7.3954E+03	1.6968E+01	2.0692E+02
3.043	7.3890E+03	1.8117E+01	2.0695E+02
3.243	7.3825E+03	1.9262E+01	2.0698E+02
3.443	7.3760E+03	2.0403E+01	2.0701E+02
3.643	7.3695E+03	2.1541E+01	2.0704E+02
3.843	7.3630E+03	2.2675E+01	2.0708E+02
4.043	7.3566E+03	2.3805E+01	2.0711E+02
4.243	7.3501E+03	2.4932E+01	2.0715E+02
4.443	7.3437E+03	2.6056E+01	2.0719E+02
4.643	7.3372E+03	2.7175E+01	2.0723E+02
4.843	7.3308E+03	2.8292E+01	2.0727E+02
5.043	7.3243E+03	2.9404E+01	2.0732E+02
5.243	7.3179E+03	3.0513E+01	2.0737E+02
5.443	7.3115E+03	3.1619E+01	2.0741E+02

5.643	7.3051E+03	3.2720E+01	2.0746E+02
5.843	7.2986E+03	3.3819E+01	2.0752E+02
6.043	7.2922E+03	3.4914E+01	2.0757E+02
6.243	7.2858E+03	3.6005E+01	2.0763E+02
6.443	7.2794E+03	3.7093E+01	2.0768E+02
6.643	7.2730E+03	3.8177E+01	2.0774E+02
6.843	7.2667E+03	3.9258E+01	2.0780E+02
7.043	7.2603E+03	4.0335E+01	2.0786E+02
7.243	7.2539E+03	4.1409E+01	2.0793E+02
7.443	7.2475E+03	4.2479E+01	2.0799E+02
7.643	7.2412E+03	4.3546E+01	2.0806E+02
7.843	7.2348E+03	4.4610E+01	2.0813E+02
8.000	7.2298E+03	4.5441E+01	2.0818E+02
8.227	7.2226E+03	4.6690E+01	2.0821E+02
8.427	7.2163E+03	4.7790E+01	2.0824E+02
8.627	7.2100E+03	4.8887E+01	2.0827E+02
8.827	7.2036E+03	4.9982E+01	2.0830E+02
9.027	7.1973E+03	5.1074E+01	2.0833E+02
9.227	7.1910E+03	5.2164E+01	2.0836E+02
9.427	7.1847E+03	5.3252E+01	2.0839E+02
9.627	7.1784E+03	5.4337E+01	2.0842E+02
9.827	7.1721E+03	5.5420E+01	2.0845E+02
10.027	7.1658E+03	5.6500E+01	2.0848E+02
10.227	7.1595E+03	5.7578E+01	2.0851E+02
24.000	6.7391E+03	1.2624E+02	2.1219E+02
96.000	5.2038E+03	9.7480E+01	2.1219E+02
720.000	5.5317E+02	1.0362E+01	2.1219E+02

Time (hr)	Control Room I-131 (Curies)	Ruptured Steam Genera I-131 (Curies)
0.000	2.2680E-06	2.6165E-02
0.028	1.2398E-02	1.4519E+02
0.110	1.9708E-01	6.1122E+02

0.139	1.7167E-01	7.7016E+02
0.278	9.0326E-02	1.5073E+03
0.477	4.4746E-02	2.4589E+03
0.500	4.2167E-02	2.5594E+03
0.667	1.5155E-02	2.5579E+03
0.878	4.1482E-03	2.5559E+03
1.089	1.1411E-03	2.5540E+03
1.289	3.3781E-04	2.5522E+03
1.489	1.0275E-04	2.5503E+03
1.689	3.4316E-05	2.5485E+03
1.889	1.4747E-05	2.5467E+03
2.000	1.0989E-05	2.5457E+03
2.243	7.6112E-06	2.5435E+03
2.443	7.3649E-06	2.5416E+03
2.643	7.7112E-06	2.5398E+03
2.843	8.2300E-06	2.5380E+03
3.043	8.7980E-06	2.5362E+03
3.243	9.3791E-06	2.5343E+03
3.443	9.9628E-06	2.5325E+03
3.643	1.0546E-05	2.5307E+03
3.843	1.1127E-05	2.5289E+03
4.043	1.1707E-05	2.5271E+03
4.243	1.2285E-05	2.5253E+03
4.443	1.2861E-05	2.5235E+03
4.643	1.3436E-05	2.5216E+03
4.843	1.4008E-05	2.5198E+03
5.043	1.4579E-05	2.5180E+03
5.243	1.5148E-05	2.5162E+03
5.443	1.5715E-05	2.5144E+03
5.643	1.6280E-05	2.5126E+03
5.843	1.6844E-05	2.5108E+03
6.043	1.7405E-05	2.5090E+03
6.243	1.7965E-05	2.5072E+03

6.443	1.8523E-05	2.5054E+03
6.643	1.9079E-05	2.5036E+03
6.843	1.9634E-05	2.5018E+03
7.043	2.0186E-05	2.5000E+03
7.243	2.0737E-05	2.4982E+03
7.443	2.1286E-05	2.4964E+03
7.643	2.1833E-05	2.4946E+03
7.843	2.2379E-05	2.4929E+03
8.000	2.2805E-05	2.4915E+03
8.227	7.8724E-06	2.4894E+03
8.427	4.4240E-06	2.4876E+03
8.627	3.4618E-06	2.4859E+03
8.827	3.2286E-06	2.4841E+03
9.027	3.2090E-06	2.4823E+03
9.227	3.2520E-06	2.4805E+03
9.427	3.3133E-06	2.4787E+03
9.627	3.3798E-06	2.4770E+03
9.827	3.4477E-06	2.4752E+03
10.027	3.5159E-06	2.4734E+03
10.227	3.5841E-06	2.4716E+03
24.000	7.9325E-06	2.3524E+03
96.000	1.3014-197	1.8165E+03
720.000	0.0000E+00	1.9309E+02

```
#################################################################
                    Cumulative Dose Summary
#################################################################
```

	Exclusion Area Bounda		Low Population Zone		Control Room	
Time	Thyroid	TEDE	Thyroid	TEDE	Thyroid	TEDE
(hr)	(rem)	(rem)	(rem)	(rem)	(rem)	(rem)
0.000	0.0000E+00	0.0000E+00	0.0000E+00	0.0000E+00	0.0000E+00	0.0000E+00
0.028	1.4202E+01	9.2647E-01	1.9112E+00	1.2468E-01	2.1186E-01	1.3385E-02

0.110	2.5837E+01	1.6854E+00	4.1509E+00	2.7078E-01	1.0776E+01	6.8098E-01
0.139	2.9843E+01	1.9467E+00	4.9221E+00	3.2108E-01	1.7256E+01	1.0885E+00
0.278	4.3844E+01	2.8600E+00	7.6173E+00	4.9689E-01	3.8429E+01	2.3861E+00
0.477	6.1166E+01	3.9899E+00	1.0952E+01	7.1440E-01	5.3630E+01	3.2622E+00
0.500	6.3056E+01	4.1132E+00	1.1316E+01	7.3813E-01	5.4810E+01	3.3271E+00
0.667	6.3069E+01	4.1140E+00	1.1318E+01	7.3829E-01	6.0119E+01	3.6160E+00
0.878	6.3071E+01	4.1141E+00	1.1319E+01	7.3832E-01	6.2275E+01	3.7317E+00
1.089	6.3073E+01	4.1143E+00	1.1319E+01	7.3835E-01	6.2864E+01	3.7628E+00
1.289	6.3076E+01	4.1145E+00	1.1320E+01	7.3839E-01	6.3021E+01	3.7710E+00
1.489	6.3080E+01	4.1147E+00	1.1320E+01	7.3843E-01	6.3069E+01	3.7735E+00
1.689	6.3084E+01	4.1150E+00	1.1321E+01	7.3848E-01	6.3083E+01	3.7744E+00
1.889	6.3088E+01	4.1153E+00	1.1322E+01	7.3853E-01	6.3089E+01	3.7747E+00
2.000	6.3091E+01	4.1154E+00	1.1322E+01	7.3857E-01	6.3090E+01	3.7748E+00
2.243	6.3097E+01	4.1159E+00	1.1323E+01	7.3861E-01	6.3093E+01	3.7751E+00
2.443	6.3103E+01	4.1163E+00	1.1324E+01	7.3864E-01	6.3095E+01	3.7752E+00
2.643	6.3110E+01	4.1167E+00	1.1324E+01	7.3868E-01	6.3096E+01	3.7754E+00
2.843	6.3117E+01	4.1172E+00	1.1325E+01	7.3872E-01	6.3098E+01	3.7756E+00
3.043	6.3125E+01	4.1177E+00	1.1325E+01	7.3877E-01	6.3100E+01	3.7758E+00
3.243	6.3133E+01	4.1182E+00	1.1326E+01	7.3882E-01	6.3102E+01	3.7760E+00
3.443	6.3141E+01	4.1188E+00	1.1327E+01	7.3887E-01	6.3105E+01	3.7762E+00
3.643	6.3150E+01	4.1194E+00	1.1328E+01	7.3892E-01	6.3107E+01	3.7764E+00
3.843	6.3160E+01	4.1200E+00	1.1329E+01	7.3898E-01	6.3109E+01	3.7766E+00
4.043	6.3170E+01	4.1206E+00	1.1330E+01	7.3904E-01	6.3112E+01	3.7768E+00
4.243	6.3181E+01	4.1213E+00	1.1331E+01	7.3910E-01	6.3115E+01	3.7770E+00
4.443	6.3191E+01	4.1221E+00	1.1332E+01	7.3916E-01	6.3118E+01	3.7772E+00
4.643	6.3203E+01	4.1228E+00	1.1333E+01	7.3923E-01	6.3121E+01	3.7774E+00
4.843	6.3215E+01	4.1236E+00	1.1334E+01	7.3930E-01	6.3124E+01	3.7777E+00
5.043	6.3227E+01	4.1244E+00	1.1335E+01	7.3937E-01	6.3127E+01	3.7779E+00
5.243	6.3240E+01	4.1252E+00	1.1336E+01	7.3945E-01	6.3131E+01	3.7781E+00
5.443	6.3253E+01	4.1261E+00	1.1337E+01	7.3953E-01	6.3134E+01	3.7784E+00
5.643	6.3267E+01	4.1270E+00	1.1338E+01	7.3961E-01	6.3138E+01	3.7786E+00
5.843	6.3281E+01	4.1280E+00	1.1340E+01	7.3969E-01	6.3142E+01	3.7789E+00
6.043	6.3296E+01	4.1289E+00	1.1341E+01	7.3978E-01	6.3146E+01	3.7792E+00

6.243	6.3311E+01	4.1299E+00	1.1342E+01	7.3987E-01	6.3150E+01	3.7794E+00
6.443	6.3326E+01	4.1310E+00	1.1344E+01	7.3996E-01	6.3154E+01	3.7797E+00
6.643	6.3342E+01	4.1320E+00	1.1345E+01	7.4006E-01	6.3158E+01	3.7800E+00
6.843	6.3359E+01	4.1331E+00	1.1347E+01	7.4016E-01	6.3163E+01	3.7803E+00
7.043	6.3376E+01	4.1342E+00	1.1348E+01	7.4026E-01	6.3167E+01	3.7806E+00
7.243	6.3393E+01	4.1354E+00	1.1350E+01	7.4036E-01	6.3172E+01	3.7808E+00
7.443	6.3411E+01	4.1365E+00	1.1351E+01	7.4047E-01	6.3177E+01	3.7811E+00
7.643	6.3429E+01	4.1377E+00	1.1353E+01	7.4058E-01	6.3182E+01	3.7815E+00
7.843	6.3447E+01	4.1390E+00	1.1355E+01	7.4069E-01	6.3187E+01	3.7818E+00
8.000	6.3462E+01	4.1400E+00	1.1356E+01	7.4078E-01	6.3191E+01	3.7820E+00
8.227	6.3466E+01	4.1403E+00	1.1356E+01	7.4079E-01	6.3195E+01	3.7822E+00
8.427	6.3470E+01	4.1405E+00	1.1356E+01	7.4081E-01	6.3196E+01	3.7824E+00
8.627	6.3474E+01	4.1408E+00	1.1357E+01	7.4083E-01	6.3197E+01	3.7825E+00
8.827	6.3478E+01	4.1410E+00	1.1357E+01	7.4084E-01	6.3197E+01	3.7825E+00
9.027	6.3482E+01	4.1413E+00	1.1357E+01	7.4086E-01	6.3198E+01	3.7826E+00
9.227	6.3486E+01	4.1416E+00	1.1357E+01	7.4088E-01	6.3199E+01	3.7827E+00
9.427	6.3490E+01	4.1419E+00	1.1358E+01	7.4089E-01	6.3200E+01	3.7828E+00
9.627	6.3495E+01	4.1422E+00	1.1358E+01	7.4091E-01	6.3200E+01	3.7829E+00
9.827	6.3499E+01	4.1425E+00	1.1358E+01	7.4093E-01	6.3201E+01	3.7829E+00
10.027	6.3503E+01	4.1428E+00	1.1358E+01	7.4095E-01	6.3202E+01	3.7830E+00
10.227	6.3508E+01	4.1431E+00	1.1359E+01	7.4097E-01	6.3203E+01	3.7831E+00
24.000	6.4000E+01	4.1774E+00	1.1389E+01	7.4309E-01	6.3291E+01	3.7892E+00
96.000	6.4000E+01	4.1774E+00	1.1389E+01	7.4309E-01	6.3292E+01	3.7895E+00
720.000	6.4000E+01	4.1774E+00	1.1389E+01	7.4309E-01	6.3292E+01	3.7895E+00

```
#######################################################################
    ALION RADTRAD Version 3.10 Rev 2 run on 12/01/2014  at 16:18:14

                Copyright © 2009 Alion Science and Technology
#######################################################################

            D. C. Cook - SGTR Pre-Accident Iodine Spike

#######################################################################
                         Worst Two-Hour Doses
#######################################################################

Exclusion Area Boundary
   Time    Whole Body    Thyroid        TEDE
   (hr)      (rem)        (rem)         (rem)
    0.0   1.3095E-01   6.3091E+01   4.1154E+00

#######################################################################
                         Final Doses
#######################################################################

Low Population Zone
   Time    Whole Body    Thyroid        TEDE
   (hr)      (rem)        (rem)         (rem)
  720.0   2.3566E-02   1.1389E+01   7.4309E-01

Control Room
   Time    Whole Body    Thyroid        TEDE
   (hr)      (rem)        (rem)         (rem)
  720.0   9.2076E-03   6.3292E+01   3.7895E+00
```

Attachment D

Concurrent Accident Iodine Spike RADTRAD Output – Iodine Release

(SGTR_Spike_I_R1.o0)

Note: The computer clock was set to 12/01/14 during model execution due to software date limitations

```
#######################################################################
   ALION RADTRAD Version 3.10 Rev 2 run on 12/01/2014  at 16:21:10

                Copyright © 2009 Alion Science and Technology
#######################################################################

           D. C. Cook - SGTR Concurrent Iodine Spike - Iodine Release

#######################################################################
                     File information
#######################################################################

Input File Name      = C:\Projects\1537-Cook_Dose\SGTR\SGTR_Spike_I_R1.psf
Output File Name     = C:\Projects\1537-Cook_Dose\SGTR\SGTR_Spike_I_R1.o0

Inventory file       =  c:\projects\1537-cook_dose\source_term\sgtr_i_spike.nif
Release file         =    c:\projects\1537-cook_dose\sgtr\sgtr_spike_i_r1.rft
Dose Conversion file =    c:\projects\1537-cook_dose\source_term\rwa-1205-004.inp


    #####    ####   #####    #  #     #  #####   #    #  #####
    #    #  #       #        #  ##    #  #    #  #    #    #
    #    #  #       #        #  # #   #  #    #  #    #    #
    #####    ####   ####     #  #  #  #  #####   #    #    #
    #            #  #        #  #   # #  #       #    #    #
    #            #  #        #  #    ##  #       #    #    #
    #        ####   #        #  #     #  #        ####     #
```

```
  Radtrad 3.10  10/15/2013
  D. C. Cook - SGTR Concurrent Iodine Spike - Iodine Release
Dose Conversion Factor File:
  c:\projects\1537-cook_dose\source_term\rwa-1205-004.inp
Release Fraction & Timing Files:
  1
  c:\projects\1537-cook_dose\sgtr\sgtr_spike_i_r1.rft
Nuclide Inventory Files:
  1
  1 c:\projects\1537-cook_dose\source_term\sgtr_i_spike.nif
Plant Power Level:
  1.00E+00
Number of Compartments:
  5
Compartment 1:
  RCS
  3
  4.661415E+05
  0
  0
  0
  0
  0
Compartment 2:
  Intact Steam Generators
  3
  2.925471E+05
  0
  0
  0
  0
  0
Compartment 3:
  Environment
```

```
  2
  0.00E+00
  0
  0
  0
  0
  0
Compartment 4:
  Control Room
  1
  5.0616E+04
  0
  0
  1
  0
  0
Compartment 5:
  Ruptured Steam Generator
  3
  9.75157E+04
  0
  0
  0
  0
  0
Number of Pathways:
  8
Pathway 1:
  Flashed Break Flow & SG Tube Leakage
  1
  3
  2
Pathway 2:
  Control Room Makeup
```

```
  3
  4
  2
Pathway 3:
  Control Room Unfiltered Inleakage
  3
  4
  2
Pathway 4:
  Control Room Exhaust
  4
  3
  2
Pathway 5:
  Unflashed Intact SG Tube Leakage
  1
  2
  2
Pathway 6:
  Unflashed Break Flow & Ruptured SG Tube Leakage
  1
  5
  2
Pathway 7:
  Intact SG Steam Release
  2
  3
  2
Pathway 8:
  Ruptured Steam Generator Steam Relase
  5
  3
  2
  End of Plant Model
```

```
Source Term Input:
  1
  1  1  1  1
  0.00E+00
  0.00E+00   7.2E+02
  1
  3   0.00E+00   9.7E-01   3.00E-02
Overlying Pool:
  0
  0.00E+00
  0
  0
  0
  0
Compartments:
  5
Compartment 1:
  1
  1
  0
  0
  0
  0
  0
  0
  0
Compartment 2:
  1
  1
  0
  0
  0
  0
  0
```

```
  0
  0
Compartment 3:
  2
  1
  0
  0
  0
  0
  0
  0
  0
Compartment 4:
  1
  1
  0
  0
  0
  0
  1
  3
  0.00E+00   0.00E+00   9.405E+01   9.405E+01   9.405E+01
  1.1E-01   4.52E+03   9.405E+01   9.405E+01   9.405E+01
  7.2E+02   4.52E+03   9.405E+01   9.405E+01   9.405E+01
  0
  7.2E+02   0.00E+00   0.00E+00   0.00E+00   0.00E+00
  7.2E+02
  0
  0
Compartment 5:
  1
  1
  0
  0
```

```
  0
  0
  0
  0
  0
Pathways:
  8
Pathway 1:
  0
  0
  0
  0
  0
  1
  7
  0.00E+00   9.307E+02   0.00E+00   0.00E+00   0.00E+00
  2.8E-02   3.9188E+02   0.00E+00   0.00E+00   0.00E+00
  1.39E-01   2.9391E+02   0.00E+00   0.00E+00   0.00E+00
  2.78E-01   2.6942E+02   0.00E+00   0.00E+00   0.00E+00
  5.00E-01   2.5E-01   0.00E+00   0.00E+00   0.00E+00
  6.67E-01   0.00E+00   0.00E+00   0.00E+00   0.00E+00
  7.2E+02   0.00E+00   0.00E+00   0.00E+00   0.00E+00
  0
  7.2E+02   0.00E+00   0.00E+00   0.00E+00   0.00E+00
  7.2E+02
  0
  0
  0
  0
  0
  0
Pathway 2:
  0
  0
```

```
  0
  0
  0
  1
  3
  0.00E+00   8.8E+02   0.00E+00   0.00E+00   0.00E+00
  1.1E-01   8.8E+02   9.405E+01   9.405E+01   9.405E+01
  7.2E+02   8.8E+02   9.405E+01   9.405E+01   9.405E+01
  0
  7.2E+02   0.00E+00   0.00E+00   0.00E+00   0.00E+00
  7.2E+02
  0
  0
  0
  0
  0
  0
Pathway 3:
  0
  0
  0
  0
  0
  1
  2
  0.00E+00   4.00E+01   0.00E+00   0.00E+00   0.00E+00
  7.2E+02   4.00E+01   0.00E+00   0.00E+00   0.00E+00
  0
  7.2E+02   0.00E+00   0.00E+00   0.00E+00   0.00E+00
  7.2E+02
  0
  0
  0
  0
```

```
  0
  0
Pathway 4:
  0
  0
  0
  0
  0
  1
  2
  0.00E+00   9.2E+02   0.00E+00   0.00E+00   0.00E+00
  7.2E+02   9.2E+02   0.00E+00   0.00E+00   0.00E+00
  0
  7.2E+02   0.00E+00   0.00E+00   0.00E+00   0.00E+00
  7.2E+02
  0
  0
  0
  0
  0
  0
Pathway 5:
  0
  0
  0
  0
  0
  1
  8
  0.00E+00   5.059E+00   0.00E+00   0.00E+00   0.00E+00
  2.8E-02   5.746E+00   0.00E+00   0.00E+00   0.00E+00
  1.39E-01   5.871E+00   0.00E+00   0.00E+00   0.00E+00
  2.78E-01   5.902E+00   0.00E+00   0.00E+00   0.00E+00
  5.00E-01   5.996E+00   0.00E+00   0.00E+00   0.00E+00
```

```
  6.67E-01   6.246E+00   0.00E+00   0.00E+00   0.00E+00
  2.4E+01   0.00E+00   0.00E+00   0.00E+00   0.00E+00
  7.2E+02   0.00E+00   0.00E+00   0.00E+00   0.00E+00
  0
  7.2E+02   0.00E+00   0.00E+00   0.00E+00   0.00E+00
  7.2E+02
  0
  0
  0
  0
  0
  0
Pathway 6:
  0
  0
  0
  0
  0
  1
  6
  0.00E+00   3.9627E+03   0.00E+00   0.00E+00   0.00E+00
  2.8E-02   4.50084E+03   0.00E+00   0.00E+00   0.00E+00
  1.39E-01   4.59868E+03   0.00E+00   0.00E+00   0.00E+00
  2.78E-01   4.62314E+03   0.00E+00   0.00E+00   0.00E+00
  5.00E-01   0.00E+00   0.00E+00   0.00E+00   0.00E+00
  7.2E+02   0.00E+00   0.00E+00   0.00E+00   0.00E+00
  0
  7.2E+02   0.00E+00   0.00E+00   0.00E+00   0.00E+00
  7.2E+02
  0
  0
  0
  0
  0
```

```
  0
Pathway 7:
  0
  0
  0
  0
  0
  1
  7
  0.00E+00   2.144E+01   0.00E+00   0.00E+00   0.00E+00
  2.8E-02   7.01E+01   0.00E+00   0.00E+00   0.00E+00
  5.00E-01   3.494E+01   0.00E+00   0.00E+00   0.00E+00
  2.00E+00   3.799E+01   0.00E+00   0.00E+00   0.00E+00
  8.00E+00   1.403E+01   0.00E+00   0.00E+00   0.00E+00
  2.4E+01   0.00E+00   0.00E+00   0.00E+00   0.00E+00
  7.2E+02   0.00E+00   0.00E+00   0.00E+00   0.00E+00
  0
  7.2E+02   0.00E+00   0.00E+00   0.00E+00   0.00E+00
  7.2E+02
  0
  0
  0
  0
  0
  0
Pathway 8:
  0
  0
  0
  0
  0
  1
  4
  0.00E+00   7.15E+00   0.00E+00   0.00E+00   0.00E+00
```

```
  2.8E-02   2.206E+01   0.00E+00   0.00E+00   0.00E+00
  5.00E-01   0.00E+00   0.00E+00   0.00E+00   0.00E+00
  7.2E+02   0.00E+00   0.00E+00   0.00E+00   0.00E+00
  0
  7.2E+02   0.00E+00   0.00E+00   0.00E+00   0.00E+00
  7.2E+02
  0
  0
  0
  0
  0
  0
Dose Locations:
  3
Location 1:
  Exclusion Area Boundary
  3
  1
  4
  0.00E+00   3.5E-04
  8.00E+00   1.8E-04
  2.4E+01   2.3E-04
  7.2E+02   2.3E-04
  0
Location 2:
  Low Population Zone
  3
  1
  4
  0.00E+00   3.5E-04
  8.00E+00   1.8E-04
  2.4E+01   2.3E-04
  7.2E+02   2.3E-04
  0
```

```
Location 3:
  Control Room
  4
  1
  2
  0.00E+00   3.5E-04
  7.2E+02   3.5E-04
  1
  4
  0.00E+00   1.00E+00
  2.4E+01   6.00E-01
  9.6E+01   4.00E-01
  7.2E+02   4.00E-01
X/Q Tables:
  4
  Exclusion Area Boundary
  3
  0.00E+00   8.62E-04
  2.8E-02   5.87E-04
  7.2E+02   5.87E-04
  Low Population Zone
  7
  0.00E+00   1.16E-04
  2.8E-02   1.13E-04
  2.00E+00   5.29E-05
  8.00E+00   3.63E-05
  2.4E+01   1.65E-05
  9.6E+01   6.36E-06
  7.2E+02   6.36E-06
  Control Room Makeup
  8
  0.00E+00   8.5E-04
  2.8E-02   1.09E-02
  1.1E-01   1.26E-02
```

```
  2.00E+00   9.72E-03
  8.00E+00   3.26E-03
  2.4E+01   3.17E-03
  9.6E+01   2.8E-03
  7.2E+02   2.8E-03
  Control Room Unfiltered Inleakage
  7
  0.00E+00   8.5E-04
  2.8E-02   1.09E-02
  2.00E+00   8.61E-03
  8.00E+00   2.87E-03
  2.4E+01   2.78E-03
  9.6E+01   2.5E-03
  7.2E+02   2.5E-03
Inflow Pathways:
  2  2 3
Exhaust Pathways:
  4  1 4 7 8
X/Q table ID for Exhaust-Inflow paths:
  3 4
  -1 -1
  3 4
  3 4
Simulation Parameters:
  1
  0.00E+00   0.00E+00
Output Filename:
  C:\Projects\1537-Cook_Dose\SGTR\SGTR_Spike_I_R1.o0
  1
  1
  0
  0
  1
  End of Scenario File
```

```
#######################################################################
   ALION RADTRAD Version 3.10 Rev 2 run on 12/01/2014  at 16:21:11

                Copyright © 2009 Alion Science and Technology
#######################################################################

           D. C. Cook - SGTR Concurrent Iodine Spike - Iodine Release

#######################################################################
                     Plant Description
#######################################################################

Number of Nuclides = 100

Inventory Power   =   1.0000E+00 MWth
Plant Power Level =   1.0000E+00 MWth

Number of compartments    =   5

Compartment information

Compartment number  1
Name: RCS
Compartment volume =   4.6614E+05 (Cubic feet)
Compartment type is Normal
Pathways into and out of compartment  1
   Exit Pathway Number    1: Flashed Break Flow & SG Tube Leakage
   Exit Pathway Number    5: Unflashed Intact SG Tube Leakage
   Exit Pathway Number    6: Unflashed Break Flow & Ruptured SG Tube Leakage

Compartment number  2
Name: Intact Steam Generators
Compartment volume =   2.9255E+05 (Cubic feet)
```

```
Compartment type is Normal
Pathways into and out of compartment  2
   Inlet Pathway Number   5: Unflashed Intact SG Tube Leakage
   Exit Pathway Number    7: Intact SG Steam Release

Compartment number  3
Name: Environment
Compartment type is Environment
Pathways into and out of compartment  3
   Inlet Pathway Number   1: Flashed Break Flow & SG Tube Leakage
   Inlet Pathway Number   4: Control Room Exhaust
   Inlet Pathway Number   7: Intact SG Steam Release
   Inlet Pathway Number   8: Ruptured Steam Generator Steam Relase
   Exit Pathway Number    2: Control Room Makeup
   Exit Pathway Number    3: Control Room Unfiltered Inleakage

Compartment number  4
Name: Control Room
Compartment volume =   5.0616E+04 (Cubic feet)
Compartment type is Control Room
Removal devices within compartment:
     Filter(s)
Pathways into and out of compartment  4
   Inlet Pathway Number   2: Control Room Makeup
   Inlet Pathway Number   3: Control Room Unfiltered Inleakage
   Exit Pathway Number    4: Control Room Exhaust

Compartment number  5
Name: Ruptured Steam Generator
Compartment volume =   9.7516E+04 (Cubic feet)
Compartment type is Normal
Pathways into and out of compartment  5
   Inlet Pathway Number   6: Unflashed Break Flow & Ruptured SG Tube Leakage
   Exit Pathway Number    8: Ruptured Steam Generator Steam Relase
```

```
Total number of pathways =   8
```

```
#######################################################################
    ALION RADTRAD Version 3.10 Rev 2 run on 12/01/2014  at 16:21:11

                Copyright © 2009 Alion Science and Technology
#######################################################################

            D. C. Cook - SGTR Concurrent Iodine Spike - Iodine Release

#######################################################################
                      Scenario Description
#######################################################################

Power Ratio                                =   1.0000E+00

End Time                                   =   7.2000E+02 (Hours)

Radioactive Decay is enabled
Calculation of Daughters is enabled

Source Number  1 is used in Compartment  1  RCS
   Nuclide Distribution given in Ci/MWt
Fraction of Nuclide Distribution in this Compartment   1.00000

Iodine fractions for source number 1
     Aerosol     =   0.0000E+00
     Elemental   =   9.7000E-01
     Organic     =   3.0000E-02

Inventory file =     c:\projects\1537-cook_dose\source_term\sgtr_i_spike.nif
Release from file =    c:\projects\1537-cook_dose\sgtr\sgtr_spike_i_r1.rft
Dose Conversion file =    c:\projects\1537-cook_dose\source_term\rwa-1205-004.inp
```

Nuclide Name	Group	Specific Inventory (Ci/MWt)	half life (s)	Whole Body DCF (Sv-m3/Bq-s)	Inhaled Thyroid (Sv/Bq)	Inhaled Effective (Sv/Bq)
I-131	3	1.000E+00	6.947E+05	1.820E-14	2.920E-07	8.890E-09
I-132	4	1.000E+00	8.280E+03	1.120E-13	1.740E-09	1.030E-10
I-133	5	1.000E+00	7.488E+04	2.940E-14	4.860E-08	1.580E-09
I-134	6	1.000E+00	3.156E+03	1.300E-13	2.880E-10	3.550E-11
I-135	7	1.000E+00	2.380E+04	7.980E-14	8.460E-09	3.320E-10

Nuclide	Daughter	Fraction	Daughter	Fraction	Daughter	Fraction
I-131	Xe-131m	0.01	none	0.00	none	0.00
I-133	Xe-133m	0.03	Xe-133	0.97	none	0.00
I-135	Xe-135m	0.15	Xe-135	0.85	none	0.00

Release Fractions and Timings
RWA-1313-011 - D.C. Cook SGTR Concurrent Iodine Spike (Iodi
Duration (h): Design Basis Accident

	GAP 0.000010 hr	EARLY IN-VESSEL 8.0000 hrs	LATE RELEASE 0.0000 hrs	RELEASE MASS (Ci)
NOBLES	0.0000E+00	0.0000E+00	0.0000E+00	0.000E+00
IODINE	0.0000E+00	0.0000E+00	0.0000E+00	0.000E+00
CESIUM	0.0000E+00	7.1861E+04	0.0000E+00	7.186E+04
TELLURIUM	0.0000E+00	1.9790E+05	0.0000E+00	1.979E+05
STRONTIUM	0.0000E+00	1.1416E+05	0.0000E+00	1.142E+05
BARIUM	0.0000E+00	8.2459E+04	0.0000E+00	8.246E+04
RUTHENIUM	0.0000E+00	8.7782E+04	0.0000E+00	8.778E+04
CERIUM	0.0000E+00	0.0000E+00	0.0000E+00	0.000E+00
LANTHANUM	0.0000E+00	0.0000E+00	0.0000E+00	0.000E+00
AEROSOL	0.0000E+00	0.0000E+00	0.0000E+00	0.000E+00

COMPARTMENT DATA

Compartment number 1: RCS

Compartment number 2: Intact Steam Generators

Compartment number 3: Environment

Compartment number 4: Control Room

Compartment Filter Data

Time (hr)	Flow Rate (cfm)	Filter Efficiencies (%) Aerosol	Elemental	Organic
0.0000E+00	0.0000E+00	9.4050E+01	9.4050E+01	9.4050E+01
1.1000E-01	4.5200E+03	9.4050E+01	9.4050E+01	9.4050E+01
7.2000E+02	4.5200E+03	9.4050E+01	9.4050E+01	9.4050E+01

Compartment number 5: Ruptured Steam Generator

PATHWAY DATA

Pathway number 1: Flashed Break Flow & SG Tube Leakage

Pathway Filter: Removal Data

Time (hr)	Flow Rate (cfm)	Filter Efficiencies (%) Aerosol	Elemental	Organic
0.0000E+00	9.3070E+02	0.0000E+00	0.0000E+00	0.0000E+00
2.8000E-02	3.9188E+02	0.0000E+00	0.0000E+00	0.0000E+00
1.3900E-01	2.9391E+02	0.0000E+00	0.0000E+00	0.0000E+00
2.7800E-01	2.6942E+02	0.0000E+00	0.0000E+00	0.0000E+00
5.0000E-01	2.5000E-01	0.0000E+00	0.0000E+00	0.0000E+00
6.6700E-01	0.0000E+00	0.0000E+00	0.0000E+00	0.0000E+00
7.2000E+02	0.0000E+00	0.0000E+00	0.0000E+00	0.0000E+00

Pathway number 2: Control Room Makeup

Pathway Filter: Removal Data

Time (hr)	Flow Rate (cfm)	Filter Efficiencies (%) Aerosol	Elemental	Organic
0.0000E+00	8.8000E+02	0.0000E+00	0.0000E+00	0.0000E+00
1.1000E-01	8.8000E+02	9.4050E+01	9.4050E+01	9.4050E+01
7.2000E+02	8.8000E+02	9.4050E+01	9.4050E+01	9.4050E+01

Pathway number 3: Control Room Unfiltered Inleakage

Pathway Filter: Removal Data

Time (hr)	Flow Rate (cfm)	Filter Efficiencies (%) Aerosol	Elemental	Organic
0.0000E+00	4.0000E+01	0.0000E+00	0.0000E+00	0.0000E+00
7.2000E+02	4.0000E+01	0.0000E+00	0.0000E+00	0.0000E+00

Pathway number 4: Control Room Exhaust

Pathway Filter: Removal Data

Time (hr)	Flow Rate (cfm)	Filter Efficiencies (%) Aerosol	Elemental	Organic
0.0000E+00	9.2000E+02	0.0000E+00	0.0000E+00	0.0000E+00
7.2000E+02	9.2000E+02	0.0000E+00	0.0000E+00	0.0000E+00

Pathway number 5: Unflashed Intact SG Tube Leakage

Pathway Filter: Removal Data

Time (hr)	Flow Rate (cfm)	Filter Efficiencies (%) Aerosol	Elemental	Organic
0.0000E+00	5.0590E+00	0.0000E+00	0.0000E+00	0.0000E+00
2.8000E-02	5.7460E+00	0.0000E+00	0.0000E+00	0.0000E+00

1.3900E-01	5.8710E+00	0.0000E+00	0.0000E+00	0.0000E+00
2.7800E-01	5.9020E+00	0.0000E+00	0.0000E+00	0.0000E+00
5.0000E-01	5.9960E+00	0.0000E+00	0.0000E+00	0.0000E+00
6.6700E-01	6.2460E+00	0.0000E+00	0.0000E+00	0.0000E+00
2.4000E+01	0.0000E+00	0.0000E+00	0.0000E+00	0.0000E+00
7.2000E+02	0.0000E+00	0.0000E+00	0.0000E+00	0.0000E+00

Pathway number 6: Unflashed Break Flow & Ruptured SG Tube Leakage

Pathway Filter: Removal Data

Time (hr)	Flow Rate (cfm)	Filter Efficiencies (%) Aerosol	Elemental	Organic
0.0000E+00	3.9627E+03	0.0000E+00	0.0000E+00	0.0000E+00
2.8000E-02	4.5008E+03	0.0000E+00	0.0000E+00	0.0000E+00
1.3900E-01	4.5987E+03	0.0000E+00	0.0000E+00	0.0000E+00
2.7800E-01	4.6231E+03	0.0000E+00	0.0000E+00	0.0000E+00
5.0000E-01	0.0000E+00	0.0000E+00	0.0000E+00	0.0000E+00
7.2000E+02	0.0000E+00	0.0000E+00	0.0000E+00	0.0000E+00

Pathway number 7: Intact SG Steam Release

Pathway Filter: Removal Data

Time (hr)	Flow Rate (cfm)	Filter Efficiencies (%) Aerosol	Elemental	Organic
0.0000E+00	2.1440E+01	0.0000E+00	0.0000E+00	0.0000E+00
2.8000E-02	7.0100E+01	0.0000E+00	0.0000E+00	0.0000E+00
5.0000E-01	3.4940E+01	0.0000E+00	0.0000E+00	0.0000E+00
2.0000E+00	3.7990E+01	0.0000E+00	0.0000E+00	0.0000E+00
8.0000E+00	1.4030E+01	0.0000E+00	0.0000E+00	0.0000E+00
2.4000E+01	0.0000E+00	0.0000E+00	0.0000E+00	0.0000E+00
7.2000E+02	0.0000E+00	0.0000E+00	0.0000E+00	0.0000E+00

Pathway number 8: Ruptured Steam Generator Steam Relase

Pathway Filter: Removal Data

Time (hr)	Flow Rate (cfm)	Filter Efficiencies (%) Aerosol	Elemental	Organic
0.0000E+00	7.1500E+00	0.0000E+00	0.0000E+00	0.0000E+00
2.8000E-02	2.2060E+01	0.0000E+00	0.0000E+00	0.0000E+00
5.0000E-01	0.0000E+00	0.0000E+00	0.0000E+00	0.0000E+00
7.2000E+02	0.0000E+00	0.0000E+00	0.0000E+00	0.0000E+00

DOSE INFORMATION
Number_Dose_Locations = 3

Dose Location Name = Exclusion Area Boundary
Located in compartment 3 the Environment

Exclusion Area Boundary Breathing Rate Data

Time (hr)	Breathing Rate (m^3 * sec^-1)
0.0000E+00	3.5000E-04
8.0000E+00	1.8000E-04
2.4000E+01	2.3000E-04
7.2000E+02	2.3000E-04

Dose Location Name = Low Population Zone
Located in compartment 3 the Environment

Low Population Zone Breathing Rate Data

Time (hr)	Breathing Rate (m^3 * sec^-1)
0.0000E+00	3.5000E-04
8.0000E+00	1.8000E-04
2.4000E+01	2.3000E-04
7.2000E+02	2.3000E-04

Dose Location Name = Control Room
Located in compartment 4 the Control Room

Control Room Breathing Rate Data

Time (hr)	Breathing Rate (m^3 * sec^-1)
0.0000E+00	3.5000E-04
7.2000E+02	3.5000E-04

Control Room Occupancy Factor Data

Time (hr)	Occupancy Factor
0.0000E+00	1.0000E+00
2.4000E+01	6.0000E-01
9.6000E+01	4.0000E-01
7.2000E+02	4.0000E-01

X/Q, ATMOSPHERIC DISPERSION INFORMATION

X/Q Table Name = Exclusion Area Boundary

Location X/Q Data

Time (hr)	X/Q (s * m^-3)
0.0000E+00	8.6200E-04
2.8000E-02	5.8700E-04
7.2000E+02	5.8700E-04

X/Q Table Name = Low Population Zone

Location X/Q Data

Time (hr)	X/Q (s * m^-3)
0.0000E+00	1.1600E-04
2.8000E-02	1.1300E-04
2.0000E+00	5.2900E-05
8.0000E+00	3.6300E-05
2.4000E+01	1.6500E-05

9.6000E+01	6.3600E-06
7.2000E+02	6.3600E-06

X/Q Table Name = Control Room Makeup

Location X/Q Data

Time (hr)	X/Q (s * m^-3)
0.0000E+00	8.5000E-04
2.8000E-02	1.0900E-02
1.1000E-01	1.2600E-02
2.0000E+00	9.7200E-03
8.0000E+00	3.2600E-03
2.4000E+01	3.1700E-03
9.6000E+01	2.8000E-03
7.2000E+02	2.8000E-03

This X/Q Table is used for these connected pathways
Path 1 Flashed Break Flow & SG Tube Leakage and Path 2 Control Room Makeup
Path 7 Intact SG Steam Release and Path 2 Control Room Makeup
Path 8 Ruptured Steam Generator Steam Relase and Path 2 Control Room Makeup

X/Q Table Name = Control Room Unfiltered Inleakage

Location X/Q Data

Time (hr)	X/Q (s * m^-3)
0.0000E+00	8.5000E-04
2.8000E-02	1.0900E-02
2.0000E+00	8.6100E-03
8.0000E+00	2.8700E-03
2.4000E+01	2.7800E-03
9.6000E+01	2.5000E-03
7.2000E+02	2.5000E-03

This X/Q Table is used for these connected pathways

```
 Path  1  Flashed Break Flow & SG Tube Leakage and Path  3  Control Room Unfiltered Inleakage
 Path  7  Intact SG Steam Release and Path  3  Control Room Unfiltered Inleakage
 Path  8  Ruptured Steam Generator Steam Relase and Path  3  Control Room Unfiltered Inleakage

USER SPECIFIED TIME STEP DATA - SUPPLEMENTAL TIME STEPS
        Time (hr)       Time step (hr)
       0.0000E+00        0.0000E+00

 EDIT EACH MAJOR TIME STEP

 DO NOT EDIT SUPPLEMENTAL TIME STEPS

 DO NOT EDIT MODEL DECONTAMINATION

      Masses in Curies in detailed output
```

```
#######################################################################
    ALION RADTRAD Version 3.10 Rev 2 run on 12/01/2014  at 16:21:11

                Copyright © 2009 Alion Science and Technology
#######################################################################


     ####   #    #  #####  #####   #    #  #####
    #    #  #    #    #    #    #  #    #    #
    #    #  #    #    #    #    #  #    #    #
    #    #  #    #    #    #####   #    #    #
    #    #  #    #    #    #       #    #    #
    #    #  #    #    #    #       #    #    #
     ####    ####     #    #        ####     #

           D. C. Cook - SGTR Concurrent Iodine Spike - Iodine Release

#######################################################################
           Dose, Detailed model and Detailed Inventory Output
#######################################################################

#######################################################################
    ALION RADTRAD Version 3.10 Rev 2 run on 12/01/2014  at 16:21:11

                Copyright © 2009 Alion Science and Technology
#######################################################################

Exclusion Area Boundary Doses:
```

```
Time (h) =    0.0000    Whole Body   Thyroid       TEDE
Delta dose (rem)         0.0000E+00  0.0000E+00  0.0000E+00
Accumulated dose (rem)   0.0000E+00  0.0000E+00  0.0000E+00

Low Population Zone Doses:

Time (h) =    0.0000    Whole Body   Thyroid       TEDE
Delta dose (rem)         0.0000E+00  0.0000E+00  0.0000E+00
Accumulated dose (rem)   0.0000E+00  0.0000E+00  0.0000E+00

Control Room Doses:

Time (h) =    0.0000    Whole Body   Thyroid       TEDE        Skin
Delta dose (rem)         0.0000E+00  0.0000E+00  0.0000E+00  0.0000E+00
Accumulated dose (rem)   0.0000E+00  0.0000E+00  0.0000E+00  0.0000E+00

*******************************************************

#######################################################################
    ALION RADTRAD Version 3.10 Rev 2 run on 12/01/2014  at 16:21:11

                Copyright © 2009 Alion Science and Technology
#######################################################################

Exclusion Area Boundary Doses:

Time (h) =    0.0280    Whole Body   Thyroid       TEDE
Delta dose (rem)         8.2575E-04  1.7994E-01  6.4996E-03
Accumulated dose (rem)   8.2575E-04  1.7994E-01  6.4996E-03

Low Population Zone Doses:

Time (h) =    0.0280    Whole Body   Thyroid       TEDE
Delta dose (rem)         1.1112E-04  2.4215E-02  8.7466E-04
```

Accumulated dose (rem) 1.1112E-04 2.4215E-02 8.7466E-04

Control Room Doses:

Time (h) = 0.0280	Whole Body	Thyroid	TEDE	Skin
Delta dose (rem)	3.0133E-07	1.9802E-03	6.2741E-05	1.3302E-05
Accumulated dose (rem)	3.0133E-07	1.9802E-03	6.2741E-05	1.3302E-05

****

RCS Compartment Nuclide Inventory (Ci) at Time (h) = 0.0280

Nuclide	Compartment Atmosphere	Dose Fract	Exposure (Ci-hr)	Decays (Bq-s)	Pathway 1 Outflow	Pathway 5 Outflow	Pathway 6 Outflow
I-131	2.4919E+02	6.4419E-01	4.9761E+00	6.6283E+14	4.1878E-01	2.2764E-03	1.7831E+00
I-132	6.8056E+02	8.3311E-02	1.3604E+01	1.8159E+15	1.1497E+00	6.2494E-03	4.8951E+00
I-133	3.9554E+02	1.9030E-01	7.8994E+00	1.0524E+15	6.6508E-01	3.6152E-03	2.8317E+00
I-134	2.7971E+02	3.2996E-02	5.6008E+00	7.5023E+14	4.7659E-01	2.5906E-03	2.0292E+00
I-135	3.0354E+02	4.9159E-02	6.0635E+00	8.0826E+14	5.1102E-01	2.7777E-03	2.1758E+00
Xe-133	4.2154E-02	4.8081E-08	7.4512E-04	1.9249E+10	1.7398E-05	9.4569E-08	7.4076E-05
Xe-135	3.9115E-01	3.4032E-06	6.9138E-03	1.7844E+11	1.6137E-04	8.7716E-07	6.8707E-04
Xe-131m	1.3377E-04	3.8045E-11	2.3644E-06	6.1066E+07	5.5191E-08	3.0000E-10	2.3499E-07
Xe-133m	3.0179E-03	3.0230E-09	5.3345E-05	1.3780E+09	1.2456E-06	6.7705E-09	5.3034E-06
Xe-135m	2.5142E+00	3.7535E-05	4.4481E-02	1.1335E+12	1.0462E-03	5.6868E-06	4.4545E-03
Total	1.9115E+03	1.0000E+00	0.0000E+00	0.0000E+00	3.2224E+00	1.7516E-02	1.3720E+01

Dose Equivalent (Ci/cc) I-131 (Thyroid)	0.0000E+00
Dose Equivalent (Ci/cc) I-131 (CEDE)	0.0000E+00
Dose Equivalent (Ci/cc) I-131 (ICRP2 Thyroid)	0.0000E+00
Total I (Ci)	0.0000E+00
Dose Equivalent (Ci/cc) Xe-133 (EDE)	2.7203E-09

RCS Compartment Group Inventory Distribution:

Time (h) = 0.0280	Atmosphere	Sump
Noble gases (Ci)	2.9507E+00	0.0000E+00
Elemental I (Ci)	0.0000E+00	0.0000E+00
Organic I (Ci)	0.0000E+00	0.0000E+00
Aerosol I (Ci)	0.0000E+00	0.0000E+00
All Aerosols (Ci)	1.9086E+03	0.0000E+00
All Aerosols (kg)	2.5221E-06	0.0000E+00

Intact Steam Generators Compartment Nuclide Inventory (Ci) at Time (h) = 0.0280

Nuclide	Compartment Atmosphere	Dose Fract	Exposure (Ci-hr)	Decays (Bq-s)	Pathway 5 Inflow	Pathway 7 Outflow
I-131	2.2775E-03	6.4426E-01	3.9860E-05	5.3094E+09	2.2764E-03	1.0340E-07
I-132	6.2201E-03	8.3273E-02	1.0891E-04	1.4540E+10	6.2494E-03	2.8379E-07
I-133	3.6151E-03	1.9031E-01	6.3272E-05	8.4300E+09	3.6152E-03	1.6421E-07
I-134	2.5565E-03	3.2951E-02	4.4797E-05	6.0026E+09	2.5906E-03	1.1759E-07
I-135	2.7742E-03	4.9155E-02	4.8560E-05	6.4734E+09	2.7777E-03	1.2616E-07
Xe-135	4.0200E-06	4.0856E-06	6.6478E-08	2.5427E+06	8.7716E-07	5.4128E-11
Xe-135m	2.5723E-05	4.4840E-05	4.2560E-07	1.6142E+07	5.6868E-06	3.5070E-10
Total	1.7474E-02	1.0000E+00	0.0000E+00	0.0000E+00	1.7516E-02	7.9556E-07

Dose Equivalent (Ci/cc) I-131 (Thyroid)	0.0000E+00
Dose Equivalent (Ci/cc) I-131 (CEDE)	0.0000E+00
Dose Equivalent (Ci/cc) I-131 (ICRP2 Thyroid)	0.0000E+00
Total I (Ci)	0.0000E+00
Dose Equivalent (Ci/cc) Xe-133 (EDE)	4.4362E-14

Intact Steam Generators Compartment Group Inventory Distribution:

Time (h) = 0.0280	Atmosphere	Sump
Noble gases (Ci)	3.0208E-05	0.0000E+00
Elemental I (Ci)	0.0000E+00	0.0000E+00
Organic I (Ci)	0.0000E+00	0.0000E+00
Aerosol I (Ci)	0.0000E+00	0.0000E+00

All Aerosols (Ci)	1.7443E-02	0.0000E+00
All Aerosols (kg)	2.3051E-11	0.0000E+00

Control Room Compartment Nuclide Inventory (Ci) at Time (h) = 0.0280

Nuclide	Compartment Atmosphere	Dose Fract	Exposure (Ci-hr)	Decays (Bq-s)	Pathway 2 Inflow	Pathway 3 Inflow	Pathway 4 Outflow
I-131	1.5311E-04	6.4426E-01	2.6810E-06	3.5712E+08	2.1050E-04	9.5681E-06	1.7263E-06
I-132	4.1814E-04	8.3273E-02	7.3255E-06	9.7798E+08	5.7792E-04	2.6269E-05	4.7378E-06
I-133	2.4302E-04	1.9031E-01	4.2558E-06	5.6702E+08	3.3430E-04	1.5195E-05	2.7414E-06
I-134	1.7186E-04	3.2951E-02	3.0132E-06	4.0375E+08	2.3959E-04	1.0890E-05	1.9631E-06
I-135	1.8650E-04	4.9155E-02	3.2663E-06	4.3541E+08	2.5687E-04	1.1676E-05	2.1063E-06
Xe-135m	1.7281E-06	4.4799E-05	2.8601E-08	1.0829E+06	3.6767E-07	1.6712E-08	5.8448E-09
Total	1.1747E-03	1.0000E+00	0.0000E+00	0.0000E+00	1.6196E-03	7.3618E-05	1.3282E-05

Control Room Compartment Group Inventory Distribution:

Time (h) = 0.0280	Atmosphere	Sump
Noble gases (Ci)	2.0294E-06	0.0000E+00
Elemental I (Ci)	0.0000E+00	0.0000E+00
Organic I (Ci)	0.0000E+00	0.0000E+00
Aerosol I (Ci)	0.0000E+00	0.0000E+00
All Aerosols (Ci)	1.1726E-03	0.0000E+00
All Aerosols (kg)	1.5496E-12	0.0000E+00

Time (h) = 0.0280	Deposition Surfaces	Recirculating Filter
Noble gases (Ci)	0.0000E+00	0.0000E+00
Elemental I (Ci)	0.0000E+00	0.0000E+00
Organic I (Ci)	0.0000E+00	0.0000E+00
Aerosol I (Ci)	0.0000E+00	0.0000E+00
All Aerosols (Ci)	0.0000E+00	0.0000E+00
All Aerosols (kg)	0.0000E+00	0.0000E+00

Ruptured Steam Generator Compartment Nuclide Inventory (Ci) at Time (h) = 0.0280

Nuclide	Compartment Atmosphere	Dose Fract	Exposure (Ci-hr)	Decays (Bq-s)	Pathway 6 Inflow	Pathway 8 Outflow
I-131	1.7840E+00	6.4426E-01	3.1222E-02	4.1589E+12	1.7831E+00	8.1031E-05
I-132	4.8722E+00	8.3273E-02	8.5309E-02	1.1389E+13	4.8951E+00	2.2240E-04
I-133	2.8317E+00	1.9031E-01	4.9561E-02	6.6032E+12	2.8317E+00	1.2868E-04
I-134	2.0025E+00	3.2951E-02	3.5089E-02	4.7019E+12	2.0292E+00	9.2149E-05
I-135	2.1731E+00	4.9155E-02	3.8037E-02	5.0706E+12	2.1758E+00	9.8869E-05
Xe-133	3.3912E-04	5.7683E-08	5.6082E-06	2.1484E+08	7.4076E-05	4.5728E-09
Xe-135	3.1489E-03	4.0856E-06	5.2072E-05	1.9917E+09	6.8707E-04	4.2418E-08
Xe-131m	1.0761E-06	4.5642E-11	1.7796E-08	6.8154E+05	2.3499E-07	1.4506E-11
Xe-133m	2.4278E-05	3.6266E-09	4.0150E-07	1.5380E+07	5.3034E-06	3.2739E-10
Xe-135m	2.0148E-02	4.4840E-05	3.3337E-04	1.2644E+10	4.4545E-03	2.7483E-07
Total	1.3687E+01	1.0000E+00	0.0000E+00	0.0000E+00	1.3720E+01	6.2345E-04

Dose Equivalent (Ci/cc) I-131 (Thyroid)	0.0000E+00
Dose Equivalent (Ci/cc) I-131 (CEDE)	0.0000E+00
Dose Equivalent (Ci/cc) I-131 (ICRP2 Thyroid)	0.0000E+00
Total I (Ci)	0.0000E+00
Dose Equivalent (Ci/cc) Xe-133 (EDE)	1.0425E-10

Ruptured Steam Generator Compartment Group Inventory Distribution:

Time (h) = 0.0280	Atmosphere	Sump
Noble gases (Ci)	2.3662E-02	0.0000E+00
Elemental I (Ci)	0.0000E+00	0.0000E+00
Organic I (Ci)	0.0000E+00	0.0000E+00
Aerosol I (Ci)	0.0000E+00	0.0000E+00
All Aerosols (Ci)	1.3663E+01	0.0000E+00
All Aerosols (kg)	1.8055E-08	0.0000E+00

##
ALION RADTRAD Version 3.10 Rev 2 run on 12/01/2014 at 16:21:11

##

Exclusion Area Boundary Doses:

Time (h) = 0.1100	Whole Body	Thyroid	TEDE
Delta dose (rem)	3.3253E-03	7.3529E-01	2.6504E-02
Accumulated dose (rem)	4.1511E-03	9.1523E-01	3.3004E-02

Low Population Zone Doses:

Time (h) = 0.1100	Whole Body	Thyroid	TEDE
Delta dose (rem)	6.4014E-04	1.4155E-01	5.1022E-03
Accumulated dose (rem)	7.5126E-04	1.6576E-01	5.9769E-03

Control Room Doses:

Time (h) = 0.1100	Whole Body	Thyroid	TEDE	Skin
Delta dose (rem)	7.8163E-05	5.2203E-01	1.6534E-02	3.4521E-03
Accumulated dose (rem)	7.8464E-05	5.2401E-01	1.6597E-02	3.4654E-03

****

RCS Compartment Nuclide Inventory (Ci) at Time (h) = 0.1100

Nuclide	Compartment Atmosphere	Dose Fract	Exposure (Ci-hr)	Decays (Bq-s)	Pathway 1 Outflow	Pathway 5 Outflow	Pathway 6 Outflow
I-131	9.5414E+02	6.4663E-01	6.9078E+01	9.2019E+15	2.9171E+00	3.8908E-02	3.0477E+01
I-132	2.5430E+03	8.2052E-02	1.8530E+02	2.4826E+16	7.9186E+00	1.0550E-01	8.2638E+01
I-133	1.5108E+03	1.9066E-01	1.0945E+02	1.4588E+16	4.6275E+00	6.1714E-02	4.8341E+01
I-134	1.0041E+03	3.1502E-02	7.3950E+01	1.0002E+16	3.2227E+00	4.2856E-02	3.3569E+01
I-135	1.1526E+03	4.9027E-02	8.3631E+01	1.1162E+16	3.5459E+00	4.7278E-02	3.7033E+01
Xe-133	5.7766E-01	1.6296E-07	3.4926E-02	2.3692E+12	6.3665E-04	9.1744E-06	7.1863E-03

Xe-135	5.3964E+00	1.1596E-05	3.2581E-01	2.2035E+13	5.9231E-03	8.5360E-05	6.6862E-02
Xe-131m	1.8361E-03	1.2912E-10	1.1098E-04	7.5252E+09	2.0217E-06	2.9134E-08	2.2821E-05
Xe-133m	4.1347E-02	1.0244E-08	2.5000E-03	1.6958E+11	4.5575E-05	6.5676E-07	5.1444E-04
Xe-135m	3.1954E+01	1.1975E-04	1.9626E+00	1.3269E+14	3.6850E-02	5.3067E-04	4.1567E-01
Total	7.2026E+03	1.0000E+00	0.0000E+00	0.0000E+00	2.2275E+01	2.9688E-01	2.3255E+02

Dose Equivalent (Ci/cc) I-131 (Thyroid)	0.0000E+00
Dose Equivalent (Ci/cc) I-131 (CEDE)	0.0000E+00
Dose Equivalent (Ci/cc) I-131 (ICRP2 Thyroid)	0.0000E+00
Total I (Ci)	0.0000E+00
Dose Equivalent (Ci/cc) Xe-133 (EDE)	3.4822E-08

RCS Compartment Group Inventory Distribution:

Time (h) = 0.1100	Atmosphere	Sump
Noble gases (Ci)	3.7971E+01	0.0000E+00
Elemental I (Ci)	0.0000E+00	0.0000E+00
Organic I (Ci)	0.0000E+00	0.0000E+00
Aerosol I (Ci)	0.0000E+00	0.0000E+00
All Aerosols (Ci)	7.1646E+03	0.0000E+00
All Aerosols (kg)	9.6422E-06	0.0000E+00

Intact Steam Generators Compartment Nuclide Inventory (Ci) at Time (h) = 0.1100

Nuclide	Compartment Atmosphere	Dose Fract	Exposure (Ci-hr)	Decays (Bq-s)	Pathway 5 Inflow	Pathway 7 Outflow
I-131	3.8928E-02	6.4690E-01	2.2504E-03	2.9978E+11	3.8908E-02	2.1276E-05
I-132	1.0375E-01	8.1902E-02	6.0230E-03	8.0705E+11	1.0550E-01	5.7565E-05
I-133	6.1641E-02	1.9070E-01	3.5649E-03	4.7516E+11	6.1714E-02	3.3739E-05
I-134	4.0965E-02	3.1327E-02	2.3947E-03	3.2401E+11	4.2856E-02	2.3301E-05
I-135	4.7026E-02	4.9010E-02	2.7224E-03	3.6338E+11	4.7278E-02	2.5833E-05
Xe-133	2.8235E-05	2.0477E-07	1.4291E-06	1.1509E+08	9.1744E-06	7.2039E-09
Xe-135	2.6432E-04	1.4605E-05	1.3363E-05	1.0720E+09	8.5360E-05	6.7092E-08
Xe-133m	2.0209E-06	1.2871E-08	1.0229E-07	8.2379E+06	6.5676E-07	5.1569E-10

Xe-135m	1.5430E-03	1.4806E-04	7.9021E-05	6.3848E+09	5.3067E-04	4.1384E-07
Total	2.9415E-01	1.0000E+00	0.0000E+00	0.0000E+00	2.9688E-01	1.6220E-04

Dose Equivalent (Ci/cc) I-131 (Thyroid)	0.0000E+00
Dose Equivalent (Ci/cc) I-131 (CEDE)	0.0000E+00
Dose Equivalent (Ci/cc) I-131 (ICRP2 Thyroid)	0.0000E+00
Total I (Ci)	0.0000E+00
Dose Equivalent (Ci/cc) Xe-133 (EDE)	2.6828E-12

Intact Steam Generators Compartment Group Inventory Distribution:

Time (h) = 0.1100	Atmosphere	Sump
Noble gases (Ci)	1.8377E-03	0.0000E+00
Elemental I (Ci)	0.0000E+00	0.0000E+00
Organic I (Ci)	0.0000E+00	0.0000E+00
Aerosol I (Ci)	0.0000E+00	0.0000E+00
All Aerosols (Ci)	2.9231E-01	0.0000E+00
All Aerosols (kg)	3.9339E-10	0.0000E+00

Control Room Compartment Nuclide Inventory (Ci) at Time (h) = 0.1100

Nuclide	Compartment Atmosphere	Dose Fract	Exposure (Ci-hr)	Decays (Bq-s)	Pathway 2 Inflow	Pathway 3 Inflow	Pathway 4 Outflow
I-131	1.1630E-02	6.4696E-01	6.5153E-04	8.6790E+10	1.4957E-02	6.7984E-04	4.5711E-04
I-132	3.0995E-02	8.1874E-02	1.7430E-03	2.3356E+11	4.0554E-02	1.8434E-03	1.2363E-03
I-133	1.8415E-02	1.9070E-01	1.0320E-03	1.3756E+11	2.3723E-02	1.0783E-03	7.2486E-04
I-134	1.2238E-02	3.1294E-02	6.9253E-04	9.3708E+10	1.6473E-02	7.4879E-04	5.0014E-04
I-135	1.4049E-02	4.9007E-02	7.8807E-04	1.0519E+11	1.8174E-02	8.2608E-04	5.5496E-04
Xe-133	8.3289E-06	2.0467E-07	4.1352E-07	3.3189E+07	2.8079E-06	1.2763E-07	1.5318E-07
Xe-135	7.7951E-05	1.4596E-05	3.8660E-06	3.0910E+08	2.6126E-05	1.1876E-06	1.4264E-06
Xe-135m	4.5574E-04	1.4808E-04	2.2879E-05	1.8423E+09	1.6235E-04	7.3797E-06	8.8037E-06
Total	8.7868E-02	1.0000E+00	0.0000E+00	0.0000E+00	1.1407E-01	5.1851E-03	3.4838E-03

Control Room Compartment Group Inventory Distribution:

Time (h) = 0.1100	Atmosphere	Sump
Noble gases (Ci)	5.4264E-04	0.0000E+00
Elemental I (Ci)	0.0000E+00	0.0000E+00
Organic I (Ci)	0.0000E+00	0.0000E+00
Aerosol I (Ci)	0.0000E+00	0.0000E+00
All Aerosols (Ci)	8.7325E-02	0.0000E+00
All Aerosols (kg)	1.1752E-10	0.0000E+00

Time (h) = 0.1100	Deposition Surfaces	Recirculating Filter
Noble gases (Ci)	0.0000E+00	0.0000E+00
Elemental I (Ci)	0.0000E+00	0.0000E+00
Organic I (Ci)	0.0000E+00	0.0000E+00
Aerosol I (Ci)	0.0000E+00	0.0000E+00
All Aerosols (Ci)	0.0000E+00	0.0000E+00
All Aerosols (kg)	0.0000E+00	0.0000E+00

Ruptured Steam Generator Compartment Nuclide Inventory (Ci) at Time (h) = 0.1100

Nuclide	Compartment Atmosphere	Dose Fract	Exposure (Ci-hr)	Decays (Bq-s)	Pathway 6 Inflow	Pathway 8 Outflow
I-131	3.0493E+01	6.4690E-01	1.7628E+00	2.3482E+14	3.0477E+01	1.5738E-02
I-132	8.1271E+01	8.1902E-02	4.7179E+00	6.3218E+14	8.2638E+01	4.2583E-02
I-133	4.8284E+01	1.9070E-01	2.7925E+00	3.7220E+14	4.8341E+01	2.4958E-02
I-134	3.2089E+01	3.1327E-02	1.8758E+00	2.5380E+14	3.3569E+01	1.7237E-02
I-135	3.6837E+01	4.9010E-02	2.1325E+00	2.8464E+14	3.7033E+01	1.9110E-02
Xe-133	2.2118E-02	2.0477E-07	1.1195E-03	9.0153E+10	7.1863E-03	5.3277E-06
Xe-135	2.0705E-01	1.4605E-05	1.0467E-02	8.3976E+11	6.6862E-02	4.9618E-05
Xe-131m	7.0290E-05	1.6224E-10	3.5570E-06	2.8635E+08	2.2821E-05	1.6919E-08
Xe-133m	1.5830E-03	1.2871E-08	8.0126E-05	6.4529E+09	5.1444E-04	3.8138E-07
Xe-135m	1.2087E+00	1.4806E-04	6.1899E-02	5.0013E+12	4.1567E-01	3.0606E-04
Total	2.3041E+02	1.0000E+00	0.0000E+00	0.0000E+00	2.3255E+02	1.1999E-01

```
Dose Equivalent (Ci/cc) I-131 (Thyroid)            0.0000E+00
Dose Equivalent (Ci/cc) I-131 (CEDE)               0.0000E+00
Dose Equivalent (Ci/cc) I-131 (ICRP2 Thyroid)      0.0000E+00
Total I  (Ci)                                      0.0000E+00
Dose Equivalent (Ci/cc) Xe-133 (EDE)               6.3045E-09

Ruptured Steam Generator Compartment Group Inventory Distribution:

Time (h) =   0.1100      Atmosphere      Sump
Noble gases (Ci)         1.4395E+00   0.0000E+00
Elemental I (Ci)         0.0000E+00   0.0000E+00
Organic I (Ci)           0.0000E+00   0.0000E+00
Aerosol I (Ci)           0.0000E+00   0.0000E+00
All Aerosols (Ci)        2.2897E+02   0.0000E+00
All Aerosols (kg)        3.0815E-07   0.0000E+00

#######################################################################
    ALION RADTRAD Version 3.10 Rev 2 run on 12/01/2014  at 16:21:11

                Copyright © 2009 Alion Science and Technology
#######################################################################

Exclusion Area Boundary Doses:

Time (h) =   0.1390    Whole Body   Thyroid       TEDE
Delta dose (rem)        2.0591E-03  4.6362E-01  1.6669E-02
Accumulated dose (rem)  6.2102E-03  1.3788E+00  4.9673E-02

Low Population Zone Doses:

Time (h) =   0.1390    Whole Body   Thyroid       TEDE
Delta dose (rem)        3.9639E-04  8.9248E-02  3.2089E-03
Accumulated dose (rem)  1.1477E-03  2.5501E-01  9.1858E-03
```

Control Room Doses:

Time (h) = 0.1390	Whole Body	Thyroid	TEDE	Skin
Delta dose (rem)	5.9085E-05	4.0073E-01	1.2687E-02	2.6108E-03
Accumulated dose (rem)	1.3755E-04	9.2474E-01	2.9284E-02	6.0762E-03

****

RCS Compartment Nuclide Inventory (Ci) at Time (h) = 0.1390

Nuclide	Compartment Atmosphere	Dose Fract	Exposure (Ci-hr)	Decays (Bq-s)	Pathway 1 Outflow	Pathway 5 Outflow	Pathway 6 Outflow
I-131	1.1948E+03	6.4727E-01	1.0373E+02	1.3817E+16	4.4889E+00	6.1955E-02	4.8529E+01
I-132	3.1569E+03	8.1722E-02	2.7685E+02	3.7074E+16	1.2108E+01	1.6692E-01	1.3075E+02
I-133	1.8902E+03	1.9075E-01	1.6427E+02	2.1893E+16	7.1163E+00	9.8207E-02	7.6926E+01
I-134	1.2289E+03	3.1120E-02	1.0959E+02	1.4804E+16	4.8767E+00	6.7108E-02	5.2566E+01
I-135	1.4391E+03	4.8991E-02	1.2536E+02	1.6729E+16	5.4447E+00	7.5119E-02	5.8840E+01
Xe-133	8.6034E-01	1.8624E-07	5.9875E-02	4.5600E+12	1.4740E-03	2.1452E-05	1.6803E-02
Xe-135	8.0499E+00	1.3269E-05	5.5926E-01	4.2480E+13	1.3745E-02	2.0006E-04	1.5670E-01
Xe-131m	2.7361E-03	1.4762E-10	1.9032E-04	1.4489E+10	4.6832E-06	6.8158E-08	5.3388E-05
Xe-133m	6.1575E-02	1.1707E-08	4.2856E-03	3.2637E+11	1.0551E-04	1.5356E-06	1.2028E-03
Xe-135m	4.6509E+01	1.3469E-04	3.3114E+00	2.4922E+14	8.3169E-02	1.2098E-03	9.4766E-01
Total	8.9652E+03	1.0000E+00	0.0000E+00	0.0000E+00	3.4133E+01	4.7075E-01	3.6873E+02

Dose Equivalent (Ci/cc) I-131 (Thyroid)	0.0000E+00
Dose Equivalent (Ci/cc) I-131 (CEDE)	0.0000E+00
Dose Equivalent (Ci/cc) I-131 (ICRP2 Thyroid)	0.0000E+00
Total I (Ci)	0.0000E+00
Dose Equivalent (Ci/cc) Xe-133 (EDE)	5.0798E-08

RCS Compartment Group Inventory Distribution:

Time (h) = 0.1390	Atmosphere	Sump
Noble gases (Ci)	5.5484E+01	0.0000E+00

Elemental I (Ci)	0.0000E+00	0.0000E+00
Organic I (Ci)	0.0000E+00	0.0000E+00
Aerosol I (Ci)	0.0000E+00	0.0000E+00
All Aerosols (Ci)	8.9098E+03	0.0000E+00
All Aerosols (kg)	1.2067E-05	0.0000E+00

Intact Steam Generators Compartment Nuclide Inventory (Ci) at Time (h) = 0.1390

Nuclide	Compartment Atmosphere	Dose Fract	Exposure (Ci-hr)	Decays (Bq-s)	Pathway 5 Inflow	Pathway 7 Outflow
I-131	6.1956E-02	6.4762E-01	4.0472E-03	5.3911E+11	6.1955E-02	4.2308E-05
I-132	1.6370E-01	8.1528E-02	1.0770E-02	1.4422E+12	1.6692E-01	1.1362E-04
I-133	9.8018E-02	1.9080E-01	6.4074E-03	8.5397E+11	9.8207E-02	6.7043E-05
I-134	6.3725E-02	3.0896E-02	4.2428E-03	5.7301E+11	6.7108E-02	4.5434E-05
I-135	7.4624E-02	4.8969E-02	4.8865E-03	6.5208E+11	7.5119E-02	5.1241E-05
Xe-133	5.5698E-05	2.4282E-07	3.0444E-06	2.7152E+08	2.1452E-05	2.1533E-08
Xe-135	5.2258E-04	1.7351E-05	2.8517E-05	2.5340E+09	2.0006E-04	2.0118E-07
Xe-133m	3.9862E-06	1.5262E-08	2.1789E-07	1.9433E+07	1.5356E-06	1.5413E-09
Xe-135m	2.9611E-03	1.7199E-04	1.6489E-04	1.4636E+10	1.2098E-03	1.1986E-06
Total	4.6557E-01	1.0000E+00	0.0000E+00	0.0000E+00	4.7075E-01	3.2107E-04

Dose Equivalent (Ci/cc) I-131 (Thyroid)	0.0000E+00
Dose Equivalent (Ci/cc) I-131 (CEDE)	0.0000E+00
Dose Equivalent (Ci/cc) I-131 (ICRP2 Thyroid)	0.0000E+00
Total I (Ci)	0.0000E+00
Dose Equivalent (Ci/cc) Xe-133 (EDE)	5.1627E-12

Intact Steam Generators Compartment Group Inventory Distribution:

Time (h) = 0.1390	Atmosphere	Sump
Noble gases (Ci)	3.5435E-03	0.0000E+00
Elemental I (Ci)	0.0000E+00	0.0000E+00
Organic I (Ci)	0.0000E+00	0.0000E+00
Aerosol I (Ci)	0.0000E+00	0.0000E+00

All Aerosols (Ci)	4.6203E-01	0.0000E+00
All Aerosols (kg)	6.2577E-10	0.0000E+00

Control Room Compartment Nuclide Inventory (Ci) at Time (h) = 0.1390

Nuclide	Compartment Atmosphere	Dose Fract	Exposure (Ci-hr)	Decays (Bq-s)	Compartment Recirc Filtr	Pathway 2 Inflow	Pathway 3 Inflow	Pathway 4 Outflow
I-131	1.0489E-02	6.4741E-01	9.5572E-04	1.2731E+11	1.6161E-03	1.5507E-02	1.0434E-03	8.0689E-04
I-132	2.7715E-02	8.1610E-02	2.5468E-03	3.4109E+11	4.2701E-03	4.2020E-02	2.8124E-03	2.1686E-03
I-133	1.6595E-02	1.9076E-01	1.5133E-03	2.0169E+11	2.5568E-03	2.4595E-02	1.6541E-03	1.2787E-03
I-134	1.0789E-02	3.0994E-02	1.0054E-03	1.3586E+11	1.6623E-03	1.7052E-02	1.1314E-03	8.6822E-04
I-135	1.2634E-02	4.8976E-02	1.1545E-03	1.5407E+11	1.9465E-03	1.8838E-02	1.2653E-03	9.7751E-04
Xe-133	1.7712E-05	3.1307E-07	9.2718E-07	8.1891E+07	0.0000E+00	9.3492E-06	3.0093E-07	4.8428E-07
Xe-135	1.6609E-04	2.2364E-05	8.6825E-06	7.6415E+08	0.0000E+00	8.6922E-05	2.8065E-06	4.5240E-06
Xe-133m	1.2676E-06	1.9678E-08	6.6360E-08	5.8610E+06	0.0000E+00	6.6925E-07	2.1541E-08	3.4663E-08
Xe-135m	9.4501E-04	2.2203E-04	5.0284E-05	4.4149E+09	0.0000E+00	5.3359E-04	1.6965E-05	2.6963E-05
Total	7.9352E-02	1.0000E+00	0.0000E+00	0.0000E+00	1.2052E-02	1.1864E-01	7.9267E-03	6.1319E-03

Control Room Compartment Group Inventory Distribution:

Time (h) = 0.1390	Atmosphere	Sump
Noble gases (Ci)	1.1301E-03	0.0000E+00

Elemental I (Ci)	0.0000E+00	0.0000E+00
Organic I (Ci)	0.0000E+00	0.0000E+00
Aerosol I (Ci)	0.0000E+00	0.0000E+00
All Aerosols (Ci)	7.8222E-02	0.0000E+00
All Aerosols (kg)	1.0594E-10	0.0000E+00

Time (h) = 0.1390	Deposition Surfaces	Recirculating Filter
Noble gases (Ci)	0.0000E+00	0.0000E+00
Elemental I (Ci)	0.0000E+00	0.0000E+00
Organic I (Ci)	0.0000E+00	0.0000E+00
Aerosol I (Ci)	0.0000E+00	0.0000E+00
All Aerosols (Ci)	0.0000E+00	1.2052E-02
All Aerosols (kg)	0.0000E+00	1.6323E-11

Ruptured Steam Generator Compartment Nuclide Inventory (Ci) at Time (h) = 0.1390

Nuclide	Compartment Atmosphere	Dose Fract	Exposure (Ci-hr)	Decays (Bq-s)	Pathway 6 Inflow	Pathway 8 Outflow
I-131	4.8532E+01	6.4762E-01	3.1702E+00	4.2230E+14	4.8529E+01	3.1292E-02
I-132	1.2823E+02	8.1528E-02	8.4367E+00	1.1297E+15	1.3075E+02	8.4037E-02
I-133	7.6780E+01	1.9080E-01	5.0191E+00	6.6893E+14	7.6926E+01	4.9587E-02
I-134	4.9918E+01	3.0896E-02	3.3235E+00	4.4885E+14	5.2566E+01	3.3604E-02
I-135	5.8455E+01	4.8969E-02	3.8277E+00	5.1079E+14	5.8840E+01	3.7899E-02
Xe-133	4.3630E-02	2.4282E-07	2.3847E-03	2.1269E+11	1.6803E-02	1.5924E-05
Xe-135	4.0935E-01	1.7351E-05	2.2339E-02	1.9849E+12	1.5670E-01	1.4878E-04
Xe-131m	1.3873E-04	1.9247E-10	7.5803E-06	6.7580E+08	5.3388E-05	5.0596E-08
Xe-133m	3.1225E-03	1.5263E-08	1.7068E-04	1.5222E+10	1.2028E-03	1.1398E-06
Xe-135m	2.3195E+00	1.7199E-04	1.2916E-01	1.1465E+13	9.4766E-01	8.8641E-04
Total	3.6469E+02	1.0000E+00	0.0000E+00	0.0000E+00	3.6873E+02	2.3747E-01

Dose Equivalent (Ci/cc) I-131 (Thyroid)	0.0000E+00
Dose Equivalent (Ci/cc) I-131 (CEDE)	0.0000E+00
Dose Equivalent (Ci/cc) I-131 (ICRP2 Thyroid)	0.0000E+00

```
Total I  (Ci)                                        0.0000E+00
Dose Equivalent (Ci/cc) Xe-133 (EDE)                 1.2132E-08

Ruptured Steam Generator Compartment Group Inventory Distribution:

Time (h) =   0.1390      Atmosphere      Sump
Noble gases (Ci)         2.7758E+00   0.0000E+00
Elemental I (Ci)         0.0000E+00   0.0000E+00
Organic I (Ci)           0.0000E+00   0.0000E+00
Aerosol I (Ci)           0.0000E+00   0.0000E+00
All Aerosols (Ci)        3.6192E+02   0.0000E+00
All Aerosols (kg)        4.9018E-07   0.0000E+00

#######################################################################
    ALION RADTRAD Version 3.10 Rev 2 run on 12/01/2014  at 16:21:11

                Copyright © 2009 Alion Science and Technology
#######################################################################

Exclusion Area Boundary Doses:

Time (h) =   0.2780    Whole Body   Thyroid       TEDE
Delta dose (rem)        1.1869E-02  2.7459E+00  9.8360E-02
Accumulated dose (rem)  1.8080E-02  4.1247E+00  1.4803E-01

Low Population Zone Doses:

Time (h) =   0.2780    Whole Body   Thyroid       TEDE
Delta dose (rem)        2.2849E-03  5.2860E-01  1.8935E-02
Accumulated dose (rem)  3.4326E-03  7.8361E-01  2.8121E-02

Control Room Doses:

Time (h) =   0.2780    Whole Body   Thyroid       TEDE        Skin
```

Delta dose (rem)	2.2163E-04	1.5266E+00	4.8310E-02	9.8063E-03
Accumulated dose (rem)	3.5918E-04	2.4513E+00	7.7594E-02	1.5882E-02

****

RCS Compartment Nuclide Inventory (Ci) at Time (h) = 0.2780

Nuclide	Compartment Atmosphere	Dose Fract	Exposure (Ci-hr)	Decays (Bq-s)	Pathway 1 Outflow	Pathway 5 Outflow	Pathway 6 Outflow
I-131	2.2882E+03	6.5074E-01	3.7040E+02	4.9341E+16	1.3686E+01	2.4566E-01	1.9242E+02
I-132	5.8009E+03	7.9911E-02	9.6154E+02	1.2887E+17	3.6017E+01	6.4452E-01	5.0484E+02
I-133	3.6052E+03	1.9124E-01	5.8495E+02	7.7969E+16	2.1642E+01	3.8837E-01	3.0421E+02
I-134	2.1097E+03	2.9094E-02	3.6391E+02	4.9260E+16	1.3942E+01	2.4819E-01	1.9440E+02
I-135	2.7176E+03	4.8789E-02	4.4344E+02	5.9193E+16	1.6461E+01	2.9517E-01	2.3120E+02
Xe-133	2.9790E+00	3.1643E-07	3.6134E-01	3.5075E+13	9.3382E-03	1.7854E-04	1.3985E-01
Xe-135	2.8083E+01	2.2683E-05	3.3956E+00	3.2890E+14	8.7590E-02	1.6751E-03	1.3121E+00
Xe-131m	9.5016E-03	2.5136E-10	1.1511E-03	1.1169E+11	2.9727E-05	5.6841E-07	4.4523E-04
Xe-133m	2.1313E-01	1.9885E-08	2.5856E-02	2.5098E+12	6.6827E-04	1.2777E-05	1.0008E-02
Xe-135m	1.4261E+02	2.0890E-04	1.8242E+01	1.7559E+15	4.8589E-01	9.2545E-03	7.2489E+00
Total	1.6695E+04	1.0000E+00	0.0000E+00	0.0000E+00	1.0233E+02	1.8330E+00	1.4358E+03

Dose Equivalent (Ci/cc) I-131 (Thyroid)	0.0000E+00
Dose Equivalent (Ci/cc) I-131 (CEDE)	0.0000E+00
Dose Equivalent (Ci/cc) I-131 (ICRP2 Thyroid)	0.0000E+00
Total I (Ci)	0.0000E+00
Dose Equivalent (Ci/cc) Xe-133 (EDE)	1.5776E-07

RCS Compartment Group Inventory Distribution:

Time (h) = 0.2780	Atmosphere	Sump
Noble gases (Ci)	1.7390E+02	0.0000E+00
Elemental I (Ci)	0.0000E+00	0.0000E+00
Organic I (Ci)	0.0000E+00	0.0000E+00
Aerosol I (Ci)	0.0000E+00	0.0000E+00

All Aerosols (Ci)	1.6521E+04	0.0000E+00
All Aerosols (kg)	2.3054E-05	0.0000E+00

Intact Steam Generators Compartment Nuclide Inventory (Ci) at Time (h) = 0.2780

Nuclide	Compartment Atmosphere	Dose Fract	Exposure (Ci-hr)	Decays (Bq-s)	Pathway 5 Inflow	Pathway 7 Outflow
I-131	2.4537E-01	6.5159E-01	2.8125E-02	3.7465E+12	2.4566E-01	3.3226E-04
I-132	6.2205E-01	7.9437E-02	7.2483E-02	9.7152E+12	6.4452E-01	8.6587E-04
I-133	3.8659E-01	1.9135E-01	4.4385E-02	5.9161E+12	3.8837E-01	5.2493E-04
I-134	2.2623E-01	2.8571E-02	2.7099E-02	3.6693E+12	2.4819E-01	3.2968E-04
I-135	2.9141E-01	4.8734E-02	3.3589E-02	4.4837E+12	2.9517E-01	3.9831E-04
Xe-133	4.1548E-04	4.4806E-07	3.8800E-05	4.1705E+09	1.7854E-04	3.6458E-07
Xe-135	3.9361E-03	3.2292E-05	3.6658E-04	3.9274E+10	1.6751E-03	3.4348E-06
Xe-131m	1.3247E-06	3.5594E-10	1.2361E-07	1.3280E+07	5.6841E-07	1.1607E-09
Xe-133m	2.9722E-05	2.8153E-08	2.7760E-06	2.9839E+08	1.2777E-05	2.6087E-08
Xe-135m	1.9218E-02	2.8286E-04	1.8731E-03	2.0186E+11	9.2545E-03	1.8276E-05
Total	1.7953E+00	1.0000E+00	0.0000E+00	0.0000E+00	1.8330E+00	2.4732E-03

Dose Equivalent (Ci/cc) I-131 (Thyroid)	0.0000E+00
Dose Equivalent (Ci/cc) I-131 (CEDE)	0.0000E+00
Dose Equivalent (Ci/cc) I-131 (ICRP2 Thyroid)	0.0000E+00
Total I (Ci)	0.0000E+00
Dose Equivalent (Ci/cc) Xe-133 (EDE)	3.4015E-11

Intact Steam Generators Compartment Group Inventory Distribution:

Time (h) = 0.2780	Atmosphere	Sump
Noble gases (Ci)	2.3601E-02	0.0000E+00
Elemental I (Ci)	0.0000E+00	0.0000E+00
Organic I (Ci)	0.0000E+00	0.0000E+00
Aerosol I (Ci)	0.0000E+00	0.0000E+00
All Aerosols (Ci)	1.7717E+00	0.0000E+00
All Aerosols (kg)	2.4722E-09	0.0000E+00

Control Room Compartment Nuclide Inventory (Ci) at Time (h) = 0.2780

Nuclide	Compartment Atmosphere	Dose Fract	Exposure (Ci-hr)	Decays (Bq-s)	Compartment Recirc Filtr	Pathway 2 Inflow	Pathway 3 Inflow	Pathway 4 Outflow
I-131	7.8945E-03	6.4920E-01	2.1211E-03	2.8255E+11	7.7762E-03	1.8728E-02	3.1724E-03	2.1407E-03
I-132	2.0014E-02	8.0293E-02	5.5456E-03	7.4315E+11	1.9714E-02	5.0397E-02	8.3486E-03	5.6463E-03
I-133	1.2438E-02	1.9092E-01	3.3521E-03	4.4680E+11	1.2252E-02	2.9683E-02	5.0169E-03	3.3860E-03
I-134	7.2785E-03	2.9576E-02	2.1235E-03	2.8737E+11	7.1695E-03	2.0230E-02	3.2312E-03	2.1932E-03
I-135	9.3758E-03	4.8792E-02	2.5455E-03	3.3978E+11	9.2354E-03	2.2698E-02	3.8157E-03	2.5767E-03
Xe-133	1.1769E-04	1.7182E-06	1.1263E-05	1.1890E+09	0.0000E+00	9.8221E-05	1.9573E-06	7.9838E-06
Xe-135	1.1135E-03	1.2368E-04	1.0628E-04	1.1187E+10	0.0000E+00	9.0937E-04	1.8362E-05	7.5154E-05
Xe-133m	8.4194E-06	1.0796E-07	8.0582E-07	8.5068E+07	0.0000E+00	7.0305E-06	1.4007E-07	5.7129E-07
Xe-135m	5.4951E-03	1.0941E-03	5.4842E-04	5.7909E+10	0.0000E+00	5.4617E-03	1.0171E-04	4.0261E-04
Total	6.3735E-02	1.0000E+00	0.0000E+00	0.0000E+00	5.6147E-02	1.4821E-01	2.3707E-02	1.6429E-02

Control Room Compartment Group Inventory Distribution:

Time (h) = 0.2780	Atmosphere	Sump
Noble gases (Ci)	6.7350E-03	0.0000E+00
Elemental I (Ci)	0.0000E+00	0.0000E+00
Organic I (Ci)	0.0000E+00	0.0000E+00

Aerosol I (Ci)	0.0000E+00	0.0000E+00
All Aerosols (Ci)	5.7000E-02	0.0000E+00
All Aerosols (kg)	7.9539E-11	0.0000E+00

Time (h) = 0.2780	Deposition Surfaces	Recirculating Filter
Noble gases (Ci)	0.0000E+00	0.0000E+00
Elemental I (Ci)	0.0000E+00	0.0000E+00
Organic I (Ci)	0.0000E+00	0.0000E+00
Aerosol I (Ci)	0.0000E+00	0.0000E+00
All Aerosols (Ci)	0.0000E+00	5.6147E-02
All Aerosols (kg)	0.0000E+00	7.8348E-11

Ruptured Steam Generator Compartment Nuclide Inventory (Ci) at Time (h) = 0.2780

Nuclide	Compartment Atmosphere	Dose Fract	Exposure (Ci-hr)	Decays (Bq-s)	Pathway 6 Inflow	Pathway 8 Outflow
I-131	1.9221E+02	6.5159E-01	2.2031E+01	2.9348E+15	1.9242E+02	2.4572E-01
I-132	4.8728E+02	7.9437E-02	5.6779E+01	7.6103E+15	5.0484E+02	6.4035E-01
I-133	3.0284E+02	1.9135E-01	3.4768E+01	4.6343E+15	3.0421E+02	3.8821E-01
I-134	1.7721E+02	2.8571E-02	2.1228E+01	2.8743E+15	1.9440E+02	2.4381E-01
I-135	2.2828E+02	4.8734E-02	2.6311E+01	3.5123E+15	2.3120E+02	2.9457E-01
Xe-133	3.2547E-01	4.4807E-07	3.0394E-02	3.2669E+12	1.3985E-01	2.6962E-04
Xe-135	3.0834E+00	3.2292E-05	2.8716E-01	3.0765E+13	1.3121E+00	2.5402E-03
Xe-131m	1.0377E-03	3.5594E-10	9.6829E-05	1.0403E+10	4.4523E-04	8.5839E-07
Xe-133m	2.3283E-02	2.8153E-08	2.1746E-03	2.3374E+11	1.0008E-02	1.9292E-05
Xe-135m	1.5055E+01	2.8286E-04	1.4673E+00	1.5813E+14	7.2489E+00	1.3516E-02
Total	1.4063E+03	1.0000E+00	0.0000E+00	0.0000E+00	1.4358E+03	1.8290E+00

Dose Equivalent (Ci/cc) I-131 (Thyroid)	0.0000E+00
Dose Equivalent (Ci/cc) I-131 (CEDE)	0.0000E+00
Dose Equivalent (Ci/cc) I-131 (ICRP2 Thyroid)	0.0000E+00
Total I (Ci)	0.0000E+00
Dose Equivalent (Ci/cc) Xe-133 (EDE)	7.9938E-08

Ruptured Steam Generator Compartment Group Inventory Distribution:

Time (h) = 0.2780	Atmosphere	Sump
Noble gases (Ci)	1.8488E+01	0.0000E+00
Elemental I (Ci)	0.0000E+00	0.0000E+00
Organic I (Ci)	0.0000E+00	0.0000E+00
Aerosol I (Ci)	0.0000E+00	0.0000E+00
All Aerosols (Ci)	1.3878E+03	0.0000E+00
All Aerosols (kg)	1.9366E-06	0.0000E+00

```
#######################################################################
    ALION RADTRAD Version 3.10 Rev 2 run on 12/01/2014  at 16:21:11

                Copyright © 2009 Alion Science and Technology
#######################################################################
```

Exclusion Area Boundary Doses:

Time (h) = 0.5000	Whole Body	Thyroid	TEDE
Delta dose (rem)	2.9540E-02	7.2444E+00	2.5750E-01
Accumulated dose (rem)	4.7619E-02	1.1369E+01	4.0553E-01

Low Population Zone Doses:

Time (h) = 0.5000	Whole Body	Thyroid	TEDE
Delta dose (rem)	5.6865E-03	1.3946E+00	4.9569E-02
Accumulated dose (rem)	9.1191E-03	2.1782E+00	7.7690E-02

Control Room Doses:

Time (h) = 0.5000	Whole Body	Thyroid	TEDE	Skin
Delta dose (rem)	3.2907E-04	2.2986E+00	7.2661E-02	1.4644E-02
Accumulated dose (rem)	6.8825E-04	4.7499E+00	1.5025E-01	3.0526E-02

****

RCS Compartment Nuclide Inventory (Ci) at Time (h) = 0.5000

Nuclide	Compartment Atmosphere	Dose Fract	Exposure (Ci-hr)	Decays (Bq-s)	Pathway 1 Outflow	Pathway 5 Outflow	Pathway 6 Outflow
I-131	3.8453E+03	6.5584E-01	1.0864E+03	1.4472E+17	3.7434E+01	7.6590E-01	5.9994E+02
I-132	9.1247E+03	7.7191E-02	2.7030E+03	3.6224E+17	9.4467E+01	1.9249E+00	1.5078E+03
I-133	6.0185E+03	1.9191E-01	1.7083E+03	2.2770E+17	5.8948E+01	1.2056E+00	9.4436E+02
I-134	2.9769E+03	2.6264E-02	9.5602E+02	1.2940E+17	3.4206E+01	6.9209E-01	5.4212E+02
I-135	4.4653E+03	4.8462E-02	1.2818E+03	1.7110E+17	4.4382E+01	9.0682E-01	7.1032E+02
Xe-133	8.2946E+00	5.0617E-07	1.6822E+00	1.8602E+14	4.7241E-02	1.0089E-03	7.9025E-01
Xe-135	7.8606E+01	3.6488E-05	1.5896E+01	1.7554E+15	4.4602E-01	9.5270E-03	7.4626E+00
Xe-131m	2.6580E-02	4.0346E-10	5.3769E-03	5.9434E+11	1.5090E-04	3.2228E-06	2.5245E-03
Xe-133m	5.9309E-01	3.1795E-08	1.2032E-01	1.3305E+13	3.3792E-03	7.2164E-05	5.6527E-02
Xe-135m	3.3383E+02	2.9343E-04	7.4571E+01	8.1491E+15	2.1505E+00	4.5720E-02	3.5813E+01
Total	2.6852E+04	1.0000E+00	0.0000E+00	0.0000E+00	2.7208E+02	5.5517E+00	4.3487E+03

Dose Equivalent (Ci/cc) I-131 (Thyroid)	0.0000E+00
Dose Equivalent (Ci/cc) I-131 (CEDE)	0.0000E+00
Dose Equivalent (Ci/cc) I-131 (ICRP2 Thyroid)	0.0000E+00
Total I (Ci)	0.0000E+00
Dose Equivalent (Ci/cc) Xe-133 (EDE)	3.7682E-07

RCS Compartment Group Inventory Distribution:

Time (h) = 0.5000	Atmosphere	Sump
Noble gases (Ci)	4.2135E+02	0.0000E+00
Elemental I (Ci)	0.0000E+00	0.0000E+00
Organic I (Ci)	0.0000E+00	0.0000E+00
Aerosol I (Ci)	0.0000E+00	0.0000E+00
All Aerosols (Ci)	2.6431E+04	0.0000E+00
All Aerosols (kg)	3.8596E-05	0.0000E+00

Intact Steam Generators Compartment Nuclide Inventory (Ci) at Time (h) = 0.5000

Nuclide	Compartment Atmosphere	Dose Fract	Exposure (Ci-hr)	Decays (Bq-s)	Pathway 5 Inflow	Pathway 7 Outflow
I-131	7.6375E-01	6.5737E-01	1.4589E-01	1.9434E+13	7.6590E-01	1.8759E-03
I-132	1.8124E+00	7.6331E-02	3.5810E-01	4.7990E+13	1.9249E+00	4.6536E-03
I-133	1.1954E+00	1.9211E-01	2.2910E-01	3.0537E+13	1.2056E+00	2.9491E-03
I-134	5.9127E-01	2.5376E-02	1.2375E-01	1.6750E+13	6.9209E-01	1.6362E-03
I-135	8.8690E-01	4.8355E-02	1.7135E-01	2.2873E+13	9.0682E-01	2.2113E-03
Xe-133	2.2292E-03	7.5345E-07	3.3546E-04	3.9579E+10	1.0089E-03	3.8232E-06
Xe-135	2.1282E-02	5.4720E-05	3.1938E-03	3.7594E+11	9.5270E-03	3.6345E-05
Xe-131m	7.1385E-06	6.0060E-10	1.0724E-06	1.2646E+08	3.2228E-06	1.2214E-08
Xe-133m	1.5936E-04	4.7316E-08	2.3988E-05	2.8302E+09	7.2164E-05	2.7342E-07
Xe-135m	8.4331E-02	4.0453E-04	1.3773E-02	1.6243E+12	4.5720E-02	1.6223E-04
Total	5.3577E+00	1.0000E+00	0.0000E+00	0.0000E+00	5.5517E+00	1.3529E-02

Dose Equivalent (Ci/cc) I-131 (Thyroid)	0.0000E+00
Dose Equivalent (Ci/cc) I-131 (CEDE)	0.0000E+00
Dose Equivalent (Ci/cc) I-131 (ICRP2 Thyroid)	0.0000E+00
Total I (Ci)	0.0000E+00
Dose Equivalent (Ci/cc) Xe-133 (EDE)	1.5301E-10

Intact Steam Generators Compartment Group Inventory Distribution:

Time (h) = 0.5000	Atmosphere	Sump
Noble gases (Ci)	1.0801E-01	0.0000E+00
Elemental I (Ci)	0.0000E+00	0.0000E+00
Organic I (Ci)	0.0000E+00	0.0000E+00
Aerosol I (Ci)	0.0000E+00	0.0000E+00
All Aerosols (Ci)	5.2497E+00	0.0000E+00
All Aerosols (kg)	7.6661E-09	0.0000E+00

Control Room Compartment Nuclide Inventory (Ci) at Time (h) = 0.5000

Nuclide	Compartment Atmosphere	Dose Fract	Exposure (Ci-hr)	Decays (Bq-s)	Compartment Recirc Filtr	Pathway 2 Inflow	Pathway 3 Inflow	Pathway 4 Outflow
I-131	9.4646E-03	6.5113E-01	3.9992E-03	5.3274E+11	1.7067E-02	2.6851E-02	8.5403E-03	4.1537E-03
I-132	2.2459E-02	7.7942E-02	1.0120E-02	1.3561E+12	4.0500E-02	7.0389E-02	2.1560E-02	1.0609E-02
I-133	1.4814E-02	1.9086E-01	6.2994E-03	8.3963E+11	2.6714E-02	4.2442E-02	1.3449E-02	6.5488E-03
I-134	7.3272E-03	2.7282E-02	3.6821E-03	4.9830E+11	1.3213E-02	2.7161E-02	7.8117E-03	3.9181E-03
I-135	1.0991E-02	4.8390E-02	4.7458E-03	6.3347E+11	1.9819E-02	3.2247E-02	1.0127E-02	4.9448E-03
Xe-133	5.5298E-04	7.0754E-06	8.7184E-05	1.0127E+10	0.0000E+00	5.5091E-04	1.0222E-05	7.5087E-05
Xe-135	5.2655E-03	5.1273E-04	8.2823E-04	9.6013E+10	0.0000E+00	5.0831E-03	9.6547E-05	7.1247E-04
Xe-131m	1.7712E-06	5.6406E-09	2.7873E-07	3.2360E+07	0.0000E+00	1.7635E-06	3.2651E-08	2.3990E-07
Xe-133m	3.9535E-05	4.4435E-07	6.2347E-06	7.2420E+08	0.0000E+00	3.9426E-05	7.3117E-07	5.3702E-06
Xe-135m	2.1388E-02	3.8766E-03	3.6529E-03	4.2266E+11	0.0000E+00	2.8857E-02	4.6345E-04	3.2399E-03
Total	9.2303E-02	1.0000E+00	0.0000E+00	0.0000E+00	1.1731E-01	2.3362E-01	6.2059E-02	3.4207E-02

Control Room Compartment Group Inventory Distribution:

Time (h) = 0.5000	Atmosphere	Sump
Noble gases (Ci)	2.7248E-02	0.0000E+00
Elemental I (Ci)	0.0000E+00	0.0000E+00
Organic I (Ci)	0.0000E+00	0.0000E+00

Aerosol I (Ci)	0.0000E+00	0.0000E+00
All Aerosols (Ci)	6.5055E-02	0.0000E+00
All Aerosols (kg)	9.5000E-11	0.0000E+00

Time (h) = 0.5000	Deposition Surfaces	Recirculating Filter
Noble gases (Ci)	0.0000E+00	0.0000E+00
Elemental I (Ci)	0.0000E+00	0.0000E+00
Organic I (Ci)	0.0000E+00	0.0000E+00
Aerosol I (Ci)	0.0000E+00	0.0000E+00
All Aerosols (Ci)	0.0000E+00	1.1731E-01
All Aerosols (kg)	0.0000E+00	1.7131E-10

Ruptured Steam Generator Compartment Nuclide Inventory (Ci) at Time (h) = 0.5000

Nuclide	Compartment Atmosphere	Dose Fract	Exposure (Ci-hr)	Decays (Bq-s)	Pathway 6 Inflow	Pathway 8 Outflow
I-131	5.9833E+02	6.5737E-01	1.1429E+02	1.5224E+16	5.9994E+02	1.3874E+00
I-132	1.4198E+03	7.6331E-02	2.8053E+02	3.7595E+16	1.5078E+03	3.4417E+00
I-133	9.3650E+02	1.9211E-01	1.7948E+02	2.3922E+16	9.4436E+02	2.1811E+00
I-134	4.6321E+02	2.5375E-02	9.6943E+01	1.3122E+16	5.4212E+02	1.2101E+00
I-135	6.9481E+02	4.8355E-02	1.3424E+02	1.7918E+16	7.1032E+02	1.6354E+00
Xe-133	1.7464E+00	7.5347E-07	2.6280E-01	3.1006E+13	7.9025E-01	2.8276E-03
Xe-135	1.6673E+01	5.4721E-05	2.5021E+00	2.9452E+14	7.4626E+00	2.6880E-02
Xe-131m	5.5925E-03	6.0061E-10	8.4010E-04	9.9073E+10	2.5245E-03	9.0336E-06
Xe-133m	1.2485E-01	4.7316E-08	1.8792E-02	2.2172E+12	5.6527E-02	2.0222E-04
Xe-135m	6.6067E+01	4.0453E-04	1.0790E+01	1.2725E+15	3.5813E+01	1.1998E-01
Total	4.1973E+03	1.0000E+00	0.0000E+00	0.0000E+00	4.3487E+03	1.0006E+01

Dose Equivalent (Ci/cc) I-131 (Thyroid)	0.0000E+00
Dose Equivalent (Ci/cc) I-131 (CEDE)	0.0000E+00
Dose Equivalent (Ci/cc) I-131 (ICRP2 Thyroid)	0.0000E+00
Total I (Ci)	0.0000E+00
Dose Equivalent (Ci/cc) Xe-133 (EDE)	3.5961E-07

Ruptured Steam Generator Compartment Group Inventory Distribution:

Time (h) = 0.5000	Atmosphere	Sump
Noble gases (Ci)	8.4617E+01	0.0000E+00
Elemental I (Ci)	0.0000E+00	0.0000E+00
Organic I (Ci)	0.0000E+00	0.0000E+00
Aerosol I (Ci)	0.0000E+00	0.0000E+00
All Aerosols (Ci)	4.1127E+03	0.0000E+00
All Aerosols (kg)	6.0057E-06	0.0000E+00

```
#######################################################################
    ALION RADTRAD Version 3.10 Rev 2 run on 12/01/2014  at 16:21:11

                Copyright © 2009 Alion Science and Technology
#######################################################################
```

Exclusion Area Boundary Doses:

Time (h) = 0.6670	Whole Body	Thyroid	TEDE
Delta dose (rem)	2.8966E-05	7.5278E-03	2.6561E-04
Accumulated dose (rem)	4.7648E-02	1.1377E+01	4.0580E-01

Low Population Zone Doses:

Time (h) = 0.6670	Whole Body	Thyroid	TEDE
Delta dose (rem)	5.5762E-06	1.4491E-03	5.1132E-05
Accumulated dose (rem)	9.1247E-03	2.1796E+00	7.7741E-02

Control Room Doses:

Time (h) = 0.6670	Whole Body	Thyroid	TEDE	Skin
Delta dose (rem)	1.8520E-04	1.2372E+00	3.9083E-02	8.3319E-03
Accumulated dose (rem)	8.7345E-04	5.9872E+00	1.8934E-01	3.8858E-02

****

RCS Compartment Nuclide Inventory (Ci) at Time (h) = 0.6670

Nuclide	Compartment Atmosphere	Dose Fract	Exposure (Ci-hr)	Decays (Bq-s)	Pathway 1 Outflow	Pathway 5 Outflow	Pathway 6 Outflow
I-131	5.3388E+03	6.5964E-01	1.8849E+03	2.5109E+17	3.7458E+01	1.3578E+00	5.9994E+02
I-132	1.2054E+04	7.5122E-02	4.5378E+03	6.0819E+17	9.4524E+01	3.3021E+00	1.5078E+03
I-133	8.3149E+03	1.9238E-01	2.9541E+03	3.9376E+17	5.8987E+01	2.1302E+00	9.4436E+02
I-134	3.6241E+03	2.4271E-02	1.5240E+03	2.0633E+17	3.4224E+01	1.1272E+00	5.4212E+02
I-135	6.0957E+03	4.8194E-02	2.1990E+03	2.9354E+17	4.4410E+01	1.5896E+00	7.1032E+02
Xe-133	1.4949E+01	6.5194E-07	3.7374E+00	4.3015E+14	4.7298E-02	2.3789E-03	7.9025E-01
Xe-135	1.4171E+02	4.7079E-05	3.5380E+01	4.0676E+15	4.4656E-01	2.2515E-02	7.4626E+00
Xe-131m	4.8074E-02	5.2103E-10	1.1978E-02	1.3780E+12	1.5108E-04	7.6198E-06	2.5245E-03
Xe-133m	1.0685E+00	4.0937E-08	2.6723E-01	3.0756E+13	3.3833E-03	1.7011E-04	5.6527E-02
Xe-135m	5.3534E+02	3.4452E-04	1.5103E+02	1.7137E+16	2.1527E+00	9.8167E-02	3.5813E+01
Total	3.6121E+04	1.0000E+00	0.0000E+00	0.0000E+00	2.7225E+02	9.6302E+00	4.3487E+03

Dose Equivalent (Ci/cc) I-131 (Thyroid)	0.0000E+00
Dose Equivalent (Ci/cc) I-131 (CEDE)	0.0000E+00
Dose Equivalent (Ci/cc) I-131 (ICRP2 Thyroid)	0.0000E+00
Total I (Ci)	0.0000E+00
Dose Equivalent (Ci/cc) Xe-133 (EDE)	6.1346E-07

RCS Compartment Group Inventory Distribution:

Time (h) = 0.6670	Atmosphere	Sump
Noble gases (Ci)	6.9311E+02	0.0000E+00
Elemental I (Ci)	0.0000E+00	0.0000E+00
Organic I (Ci)	0.0000E+00	0.0000E+00
Aerosol I (Ci)	0.0000E+00	0.0000E+00
All Aerosols (Ci)	3.5428E+04	0.0000E+00
All Aerosols (kg)	5.3443E-05	0.0000E+00

Intact Steam Generators Compartment Nuclide Inventory (Ci) at Time (h) = 0.6670

Nuclide	Compartment Atmosphere	Dose Fract	Exposure (Ci-hr)	Decays (Bq-s)	Pathway 5 Inflow	Pathway 7 Outflow
I-131	1.3538E+00	6.6157E-01	3.3261E-01	4.4307E+13	1.3578E+00	3.1252E-03
I-132	3.0566E+00	7.4028E-02	7.8677E-01	1.0545E+14	3.3021E+00	7.5573E-03
I-133	2.1084E+00	1.9261E-01	5.2039E-01	6.9364E+13	2.1302E+00	4.9004E-03
I-134	9.1895E-01	2.3195E-02	2.5626E-01	3.4696E+13	1.1272E+00	2.5522E-03
I-135	1.5457E+00	4.8051E-02	3.8575E-01	5.1493E+13	1.5896E+00	3.6518E-03
Xe-133	5.1507E-03	9.8251E-07	9.9101E-04	1.1997E+11	2.3789E-03	7.8501E-06
Xe-135	4.9235E-02	7.1539E-05	9.4593E-03	1.1430E+12	2.2515E-02	7.4806E-05
Xe-131m	1.6548E-05	7.8526E-10	3.1763E-06	3.8435E+08	7.6198E-06	2.5129E-08
Xe-133m	3.6804E-04	6.1676E-08	7.0836E-05	8.5757E+09	1.7011E-04	5.6124E-07
Xe-135m	1.7020E-01	4.7135E-04	3.6356E-02	4.3891E+12	9.8167E-02	3.0610E-04
Total	9.2083E+00	1.0000E+00	0.0000E+00	0.0000E+00	9.6302E+00	2.2176E-02

Dose Equivalent (Ci/cc) I-131 (Thyroid)	0.0000E+00
Dose Equivalent (Ci/cc) I-131 (CEDE)	0.0000E+00
Dose Equivalent (Ci/cc) I-131 (ICRP2 Thyroid)	0.0000E+00
Total I (Ci)	0.0000E+00
Dose Equivalent (Ci/cc) Xe-133 (EDE)	3.1466E-10

Intact Steam Generators Compartment Group Inventory Distribution:

Time (h) = 0.6670	Atmosphere	Sump
Noble gases (Ci)	2.2497E-01	0.0000E+00
Elemental I (Ci)	0.0000E+00	0.0000E+00
Organic I (Ci)	0.0000E+00	0.0000E+00
Aerosol I (Ci)	0.0000E+00	0.0000E+00
All Aerosols (Ci)	8.9833E+00	0.0000E+00
All Aerosols (kg)	1.3552E-08	0.0000E+00

Control Room Compartment Nuclide Inventory (Ci) at Time (h) = 0.6670

Nuclide	Compartment Atmosphere	Dose Fract	Exposure (Ci-hr)	Decays (Bq-s)	Compartment Recirc Filtr	Pathway 2 Inflow	Pathway 3 Inflow	Pathway 4 Outflow
I-131	3.4070E-03	6.5088E-01	4.8642E-03	6.4796E+11	2.2073E-02	2.6859E-02	8.5459E-03	5.2396E-03
I-132	7.6924E-03	7.6698E-02	1.2117E-02	1.6239E+12	4.9837E-02	7.0409E-02	2.1573E-02	1.3149E-02
I-133	5.3061E-03	1.9048E-01	7.6495E-03	1.0196E+12	3.4377E-02	4.2456E-02	1.3458E-02	8.2459E-03
I-134	2.3127E-03	2.6216E-02	4.3052E-03	5.8272E+11	1.4983E-02	2.7167E-02	7.8158E-03	4.7276E-03
I-135	3.8900E-03	4.8109E-02	5.7409E-03	7.6631E+11	2.5202E-02	3.2257E-02	1.0133E-02	6.1995E-03
Xe-133	7.3936E-04	1.3310E-05	1.9956E-04	2.3771E+10	0.0000E+00	8.1319E-04	1.0234E-05	1.8645E-04
Xe-135	7.0572E-03	9.6683E-04	1.9003E-03	2.2601E+11	0.0000E+00	7.4171E-03	9.6667E-05	1.7743E-03
Xe-131m	2.3758E-06	1.0635E-08	6.3941E-07	7.6128E+07	0.0000E+00	2.6099E-06	3.2691E-08	5.9706E-07
Xe-133m	5.2832E-05	8.3563E-07	1.4266E-05	1.6994E+09	0.0000E+00	5.8203E-05	7.3208E-07	1.3330E-05
Xe-135m	2.4786E-02	6.6389E-03	7.6117E-03	9.0096E+11	0.0000E+00	4.4012E-02	4.6393E-04	7.3051E-03
Total	5.5245E-02	1.0000E+00	0.0000E+00	0.0000E+00	1.4647E-01	2.5145E-01	6.2098E-02	4.6841E-02

Control Room Compartment Group Inventory Distribution:

Time (h) = 0.6670	Atmosphere	Sump
Noble gases (Ci)	3.2637E-02	0.0000E+00
Elemental I (Ci)	0.0000E+00	0.0000E+00
Organic I (Ci)	0.0000E+00	0.0000E+00

Aerosol I (Ci)	0.0000E+00	0.0000E+00
All Aerosols (Ci)	2.2608E-02	0.0000E+00
All Aerosols (kg)	3.4105E-11	0.0000E+00

Time (h) = 0.6670	Deposition Surfaces	Recirculating Filter
Noble gases (Ci)	0.0000E+00	0.0000E+00
Elemental I (Ci)	0.0000E+00	0.0000E+00
Organic I (Ci)	0.0000E+00	0.0000E+00
Aerosol I (Ci)	0.0000E+00	0.0000E+00
All Aerosols (Ci)	0.0000E+00	1.4647E-01
All Aerosols (kg)	0.0000E+00	2.2095E-10

Ruptured Steam Generator Compartment Nuclide Inventory (Ci) at Time (h) = 0.6670

Nuclide	Compartment Atmosphere	Dose Fract	Exposure (Ci-hr)	Decays (Bq-s)	Pathway 6 Inflow	Pathway 8 Outflow
I-131	5.9798E+02	6.6074E-01	2.1417E+02	2.8530E+16	5.9994E+02	1.3874E+00
I-132	1.3501E+03	7.4473E-02	5.1030E+02	6.8397E+16	1.5078E+03	3.4417E+00
I-133	9.3130E+02	1.9251E-01	3.3533E+02	4.4696E+16	9.4436E+02	2.1811E+00
I-134	4.0591E+02	2.3615E-02	1.6820E+02	2.2774E+16	5.4212E+02	1.2101E+00
I-135	6.8275E+02	4.8110E-02	2.4900E+02	3.3239E+16	7.1032E+02	1.6354E+00
Xe-133	2.5785E+00	9.8667E-07	6.4162E-01	7.7760E+13	7.9025E-01	2.8276E-03
Xe-135	2.4741E+01	7.1925E-05	6.1315E+00	7.4164E+14	7.4626E+00	2.6880E-02
Xe-131m	8.2808E-03	7.8818E-10	2.0555E-03	2.4899E+11	2.5245E-03	9.0336E-06
Xe-133m	1.8422E-01	6.1936E-08	4.5862E-02	5.5583E+12	5.6527E-02	2.0222E-04
Xe-135m	8.1976E+01	4.7429E-04	2.3586E+01	2.8532E+15	3.5813E+01	1.1998E-01
Total	4.0776E+03	1.0000E+00	0.0000E+00	0.0000E+00	4.3487E+03	1.0006E+01

Dose Equivalent (Ci/cc) I-131 (Thyroid)	0.0000E+00
Dose Equivalent (Ci/cc) I-131 (CEDE)	0.0000E+00
Dose Equivalent (Ci/cc) I-131 (ICRP2 Thyroid)	0.0000E+00
Total I (Ci)	0.0000E+00
Dose Equivalent (Ci/cc) Xe-133 (EDE)	4.5755E-07

Ruptured Steam Generator Compartment Group Inventory Distribution:

Time (h) = 0.6670	Atmosphere	Sump
Noble gases (Ci)	1.0949E+02	0.0000E+00
Elemental I (Ci)	0.0000E+00	0.0000E+00
Organic I (Ci)	0.0000E+00	0.0000E+00
Aerosol I (Ci)	0.0000E+00	0.0000E+00
All Aerosols (Ci)	3.9681E+03	0.0000E+00
All Aerosols (kg)	5.9859E-06	0.0000E+00

```
#######################################################################
    ALION RADTRAD Version 3.10 Rev 2 run on 12/01/2014  at 16:21:11

                Copyright © 2009 Alion Science and Technology
#######################################################################
```

Exclusion Area Boundary Doses:

Time (h) = 2.0000	Whole Body	Thyroid	TEDE
Delta dose (rem)	5.1595E-05	1.7302E-02	5.9339E-04
Accumulated dose (rem)	4.7700E-02	1.1394E+01	4.0639E-01

Low Population Zone Doses:

Time (h) = 2.0000	Whole Body	Thyroid	TEDE
Delta dose (rem)	9.9322E-06	3.3308E-03	1.1423E-04
Accumulated dose (rem)	9.1346E-03	2.1830E+00	7.7855E-02

Control Room Doses:

Time (h) = 2.0000	Whole Body	Thyroid	TEDE	Skin
Delta dose (rem)	3.4854E-04	6.9678E-01	2.2228E-02	1.7195E-02
Accumulated dose (rem)	1.2220E-03	6.6840E+00	2.1157E-01	5.6053E-02

****

RCS Compartment Nuclide Inventory (Ci) at Time (h) = 2.0000

Nuclide	Compartment Atmosphere	Dose Fract	Exposure (Ci-hr)	Decays (Bq-s)	Pathway 1 Outflow	Pathway 5 Outflow	Pathway 6 Outflow
I-131	1.7189E+04	6.8555E-01	1.7195E+04	2.2905E+18	3.7458E+01	1.3442E+01	5.9994E+02
I-132	2.6096E+04	6.0165E-02	3.1900E+04	4.2793E+18	9.4524E+01	2.5197E+01	1.5078E+03
I-133	2.5731E+04	1.9465E-01	2.6235E+04	3.4973E+18	5.8987E+01	2.0531E+01	9.4436E+02
I-134	4.0866E+03	1.3209E-02	7.2799E+03	9.8760E+17	3.4224E+01	5.8363E+00	5.4212E+02
I-135	1.7148E+04	4.5746E-02	1.8321E+04	2.4465E+18	4.4410E+01	1.4374E+01	7.1032E+02
Xe-133	1.3901E+02	1.9006E-06	9.5639E+01	1.2124E+16	4.7298E-02	7.1471E-02	7.9025E-01
Xe-135	1.2622E+03	1.3426E-04	8.8566E+02	1.1232E+17	4.4656E-01	6.6285E-01	7.4626E+00
Xe-131m	4.5963E-01	1.5516E-09	3.1310E-01	3.9673E+13	1.5108E-04	2.3380E-04	2.5245E-03
Xe-133m	9.9000E+00	1.1903E-07	6.8201E+00	8.6459E+14	3.3833E-03	5.0971E-03	5.6527E-02
Xe-135m	2.2907E+03	5.4499E-04	2.0971E+03	2.6269E+17	2.1527E+00	1.5958E+00	3.5813E+01
Total	9.3953E+04	1.0000E+00	0.0000E+00	0.0000E+00	2.7225E+02	8.1716E+01	4.3487E+03

Dose Equivalent (Ci/cc) I-131 (Thyroid)	0.0000E+00
Dose Equivalent (Ci/cc) I-131 (CEDE)	0.0000E+00
Dose Equivalent (Ci/cc) I-131 (ICRP2 Thyroid)	0.0000E+00
Total I (Ci)	0.0000E+00
Dose Equivalent (Ci/cc) Xe-133 (EDE)	3.0101E-06

RCS Compartment Group Inventory Distribution:

Time (h) = 2.0000	Atmosphere	Sump
Noble gases (Ci)	3.7023E+03	0.0000E+00
Elemental I (Ci)	0.0000E+00	0.0000E+00
Organic I (Ci)	0.0000E+00	0.0000E+00
Aerosol I (Ci)	0.0000E+00	0.0000E+00
All Aerosols (Ci)	9.0251E+04	0.0000E+00
All Aerosols (kg)	1.6893E-04	0.0000E+00

Intact Steam Generators Compartment Nuclide Inventory (Ci) at Time (h) = 2.0000

Nuclide	Compartment Atmosphere	Dose Fract	Exposure (Ci-hr)	Decays (Bq-s)	Pathway 5 Inflow	Pathway 7 Outflow
I-131	1.3346E+01	6.9007E-01	9.0284E+00	1.2027E+15	1.3442E+01	6.3380E-02
I-132	2.0261E+01	5.7442E-02	1.5887E+01	2.1316E+15	2.5197E+01	1.1362E-01
I-133	1.9978E+01	1.9496E-01	1.3707E+01	1.8272E+15	2.0531E+01	9.6397E-02
I-134	3.1729E+00	1.1394E-02	3.2758E+00	4.4465E+14	5.8363E+00	2.4231E-02
I-135	1.3314E+01	4.5261E-02	9.4557E+00	1.2627E+15	1.4374E+01	6.6790E-02
Xe-133	1.4394E-01	2.8583E-06	7.5024E-02	9.6726E+12	7.1471E-02	5.0210E-04
Xe-135	1.3170E+00	2.0287E-04	6.9805E-01	9.0030E+13	6.6285E-01	4.6796E-03
Xe-131m	4.7483E-04	2.3337E-09	2.4565E-04	3.1655E+10	2.3380E-04	1.6426E-06
Xe-133m	1.0244E-02	1.7885E-07	5.3455E-03	6.8920E+11	5.0971E-03	3.5780E-05
Xe-135m	2.0279E+00	6.6920E-04	1.3432E+00	1.7285E+14	1.5958E+00	9.2883E-03
Total	7.3572E+01	1.0000E+00	0.0000E+00	0.0000E+00	8.1716E+01	3.7892E-01

Dose Equivalent (Ci/cc) I-131 (Thyroid)	0.0000E+00
Dose Equivalent (Ci/cc) I-131 (CEDE)	0.0000E+00
Dose Equivalent (Ci/cc) I-131 (ICRP2 Thyroid)	0.0000E+00
Total I (Ci)	0.0000E+00
Dose Equivalent (Ci/cc) Xe-133 (EDE)	4.4325E-09

Intact Steam Generators Compartment Group Inventory Distribution:

Time (h) = 2.0000	Atmosphere	Sump
Noble gases (Ci)	3.4996E+00	0.0000E+00
Elemental I (Ci)	0.0000E+00	0.0000E+00
Organic I (Ci)	0.0000E+00	0.0000E+00
Aerosol I (Ci)	0.0000E+00	0.0000E+00
All Aerosols (Ci)	7.0072E+01	0.0000E+00
All Aerosols (kg)	1.3116E-07	0.0000E+00

Control Room Compartment Nuclide Inventory (Ci) at Time (h) = 2.0000

Nuclide	Compartment Atmosphere	Dose Fract	Exposure (Ci-hr)	Decays (Bq-s)	Compartment Recirc Filtr	Pathway 2 Inflow	Pathway 3 Inflow	Pathway 4 Outflow
I-131	7.7873E-06	6.3098E-01	5.3544E-03	7.1326E+11	2.4790E-02	2.6879E-02	8.5587E-03	5.8531E-03
I-132	1.1822E-05	7.3385E-02	1.3164E-02	1.7643E+12	3.7634E-02	7.0443E-02	2.1596E-02	1.4476E-02
I-133	1.1657E-05	1.8439E-01	8.4087E-03	1.1208E+12	3.7108E-02	4.2485E-02	1.3477E-02	9.1972E-03
I-134	1.8514E-06	2.4638E-02	4.5943E-03	6.2189E+11	5.8936E-03	2.7174E-02	7.8204E-03	5.1015E-03
I-135	7.7684E-06	4.6420E-02	6.2900E-03	8.3963E+11	2.4730E-02	3.2277E-02	1.0147E-02	6.8897E-03
Xe-133	1.4150E-03	1.0375E-04	1.7664E-03	2.2228E+11	0.0000E+00	2.8571E-03	1.0339E-05	1.8186E-03
Xe-135	1.2797E-02	7.3966E-03	1.6508E-02	2.0778E+12	0.0000E+00	2.4669E-02	9.7637E-05	1.7020E-02
Xe-131m	4.6808E-06	8.4283E-08	5.7543E-06	7.2378E+08	0.0000E+00	9.3541E-06	3.3032E-08	5.9201E-06
Xe-133m	1.0079E-04	6.4998E-06	1.2600E-04	1.5856E+10	0.0000E+00	2.0454E-04	7.3950E-07	1.2974E-04
Xe-135m	2.5081E-02	3.2675E-02	4.2539E-02	5.2770E+12	0.0000E+00	1.5597E-01	4.6583E-04	4.4438E-02
Total	3.9439E-02	1.0000E+00	0.0000E+00	0.0000E+00	1.3016E-01	3.8297E-01	6.2174E-02	1.0493E-01

Control Room Compartment Group Inventory Distribution:

Time (h) = 2.0000	Atmosphere	Sump
Noble gases (Ci)	3.9398E-02	0.0000E+00
Elemental I (Ci)	0.0000E+00	0.0000E+00
Organic I (Ci)	0.0000E+00	0.0000E+00

Aerosol I (Ci)	0.0000E+00	0.0000E+00
All Aerosols (Ci)	4.0886E-05	0.0000E+00
All Aerosols (kg)	7.6530E-14	0.0000E+00

Time (h) = 2.0000	Deposition Surfaces	Recirculating Filter
Noble gases (Ci)	0.0000E+00	0.0000E+00
Elemental I (Ci)	0.0000E+00	0.0000E+00
Organic I (Ci)	0.0000E+00	0.0000E+00
Aerosol I (Ci)	0.0000E+00	0.0000E+00
All Aerosols (Ci)	0.0000E+00	1.3016E-01
All Aerosols (kg)	0.0000E+00	2.4363E-10

Ruptured Steam Generator Compartment Nuclide Inventory (Ci) at Time (h) = 2.0000

Nuclide	Compartment Atmosphere	Dose Fract	Exposure (Ci-hr)	Decays (Bq-s)	Pathway 6 Inflow	Pathway 8 Outflow
I-131	5.9512E+02	6.8022E-01	1.0093E+03	1.3445E+17	5.9994E+02	1.3874E+00
I-132	9.0346E+02	6.3186E-02	1.9819E+03	2.6582E+17	1.5078E+03	3.4417E+00
I-133	8.9084E+02	1.9422E-01	1.5486E+03	2.0644E+17	9.4436E+02	2.1811E+00
I-134	1.4148E+02	1.5228E-02	4.9651E+02	6.7322E+16	5.4212E+02	1.2101E+00
I-135	5.9368E+02	4.6269E-02	1.0963E+03	1.4637E+17	7.1032E+02	1.6354E+00
Xe-133	9.0314E+00	2.8787E-06	8.5693E+00	1.1052E+15	7.9025E-01	2.8276E-03
Xe-135	8.3528E+01	2.0776E-04	8.1076E+01	1.0458E+16	7.4626E+00	2.6880E-02
Xe-131m	2.9642E-02	2.3334E-09	2.7856E-02	3.5913E+12	2.5245E-03	9.0336E-06
Xe-133m	6.4178E-01	1.8008E-07	6.1041E-01	7.8727E+13	5.6527E-02	2.0222E-04
Xe-135m	9.6506E+01	6.7104E-04	1.5275E+02	1.9565E+16	3.5813E+01	1.1998E-01
Total	3.3143E+03	1.0000E+00	0.0000E+00	0.0000E+00	4.3487E+03	1.0006E+01

Dose Equivalent (Ci/cc) I-131 (Thyroid)	0.0000E+00
Dose Equivalent (Ci/cc) I-131 (CEDE)	0.0000E+00
Dose Equivalent (Ci/cc) I-131 (ICRP2 Thyroid)	0.0000E+00
Total I (Ci)	0.0000E+00
Dose Equivalent (Ci/cc) Xe-133 (EDE)	6.9125E-07

Ruptured Steam Generator Compartment Group Inventory Distribution:

Time (h) = 2.0000	Atmosphere	Sump
Noble gases (Ci)	1.8974E+02	0.0000E+00
Elemental I (Ci)	0.0000E+00	0.0000E+00
Organic I (Ci)	0.0000E+00	0.0000E+00
Aerosol I (Ci)	0.0000E+00	0.0000E+00
All Aerosols (Ci)	3.1246E+03	0.0000E+00
All Aerosols (kg)	5.8486E-06	0.0000E+00

```
#######################################################################
    ALION RADTRAD Version 3.10 Rev 2 run on 12/01/2014  at 16:21:11

                Copyright © 2009 Alion Science and Technology
#######################################################################
```

Exclusion Area Boundary Doses:

Time (h) = 8.0000	Whole Body	Thyroid	TEDE
Delta dose (rem)	1.6827E-03	1.2243E+00	3.9661E-02
Accumulated dose (rem)	4.9383E-02	1.2618E+01	4.4605E-01

Low Population Zone Doses:

Time (h) = 8.0000	Whole Body	Thyroid	TEDE
Delta dose (rem)	1.5164E-04	1.1033E-01	3.5742E-03
Accumulated dose (rem)	9.2862E-03	2.2933E+00	8.1430E-02

Control Room Doses:

Time (h) = 8.0000	Whole Body	Thyroid	TEDE	Skin
Delta dose (rem)	9.6721E-04	3.2501E-01	1.1049E-02	5.1357E-02
Accumulated dose (rem)	2.1892E-03	7.0090E+00	2.2261E-01	1.0741E-01

****

RCS Compartment Nuclide Inventory (Ci) at Time (h) = 8.0000

Nuclide	Compartment Atmosphere	Dose Fract	Exposure (Ci-hr)	Decays (Bq-s)	Pathway 1 Outflow	Pathway 5 Outflow	Pathway 6 Outflow
I-131	6.8985E+04	7.5023E-01	2.7826E+05	3.7068E+19	3.7458E+01	2.2231E+02	5.9994E+02
I-132	1.7544E+04	2.3504E-02	1.8429E+05	2.4730E+19	9.4524E+01	1.4881E+02	1.5078E+03
I-133	8.6392E+04	1.8943E-01	3.7757E+05	5.0334E+19	5.8987E+01	3.0201E+02	9.4436E+02
I-134	1.4586E+02	1.9041E-03	1.5520E+04	2.1070E+18	3.4224E+01	1.2673E+01	5.4212E+02
I-135	3.7481E+04	3.3995E-02	2.0134E+05	2.6888E+19	4.4410E+01	1.6149E+02	7.1032E+02
Xe-133	1.9869E+03	7.5028E-06	5.5829E+03	7.3479E+17	4.7298E-02	4.4088E+00	7.9025E-01
Xe-135	1.2200E+04	4.0573E-04	3.9578E+04	5.2143E+18	4.4656E-01	3.1331E+01	7.4626E+00
Xe-131m	7.4304E+00	6.7154E-09	2.0040E+01	2.6362E+15	1.5108E-04	1.5813E-02	2.5245E-03
Xe-133m	1.3915E+02	4.6411E-07	3.9324E+02	5.1756E+16	3.3833E-03	3.1057E-01	5.6527E-02
Xe-135m	5.8611E+03	5.2312E-04	2.9767E+04	3.8508E+18	2.1527E+00	2.3698E+01	3.5813E+01
Total	2.3074E+05	1.0000E+00	0.0000E+00	0.0000E+00	2.7225E+02	9.0705E+02	4.3487E+03

Dose Equivalent (Ci/cc) I-131 (Thyroid)	0.0000E+00
Dose Equivalent (Ci/cc) I-131 (CEDE)	0.0000E+00
Dose Equivalent (Ci/cc) I-131 (ICRP2 Thyroid)	0.0000E+00
Total I (Ci)	0.0000E+00
Dose Equivalent (Ci/cc) Xe-133 (EDE)	1.3017E-05

RCS Compartment Group Inventory Distribution:

Time (h) = 8.0000	Atmosphere	Sump
Noble gases (Ci)	2.0195E+04	0.0000E+00
Elemental I (Ci)	0.0000E+00	0.0000E+00
Organic I (Ci)	0.0000E+00	0.0000E+00
Aerosol I (Ci)	0.0000E+00	0.0000E+00
All Aerosols (Ci)	2.1055E+05	0.0000E+00
All Aerosols (kg)	6.4508E-04	0.0000E+00

Intact Steam Generators Compartment Nuclide Inventory (Ci) at Time (h) = 8.0000

Nuclide	Compartment Atmosphere	Dose Fract	Exposure (Ci-hr)	Decays (Bq-s)	Pathway 5 Inflow	Pathway 7 Outflow
I-131	2.1572E+02	7.5946E-01	5.8328E+02	7.7700E+16	2.2231E+02	4.4988E+00
I-132	5.4860E+01	1.8581E-02	3.0167E+02	4.0486E+16	1.4881E+02	2.3505E+00
I-133	2.7015E+02	1.8793E-01	7.7561E+02	1.0340E+17	3.0201E+02	5.9891E+00
I-134	4.5611E-01	8.8912E-04	1.5005E+01	2.0383E+15	1.2673E+01	1.1799E-01
I-135	1.1720E+02	3.1991E-02	3.9232E+02	5.2394E+16	1.6149E+02	3.0376E+00
Xe-133	8.3368E+00	1.1340E-05	1.7473E+01	2.3093E+15	4.4088E+00	1.3369E-01
Xe-135	5.1355E+01	5.9812E-04	1.2081E+02	1.5990E+16	3.1331E+01	9.2690E-01
Xe-131m	3.0897E-02	1.0161E-08	6.2787E-02	8.2941E+12	1.5813E-02	4.8005E-04
Xe-133m	5.8227E-01	6.9913E-07	1.2266E+00	1.6212E+14	3.1057E-01	9.3867E-03
Xe-135m	1.9112E+01	5.3776E-04	6.3363E+01	8.2692E+15	2.3698E+01	4.9008E-01
Total	7.3780E+02	1.0000E+00	0.0000E+00	0.0000E+00	9.0705E+02	1.7554E+01

Dose Equivalent (Ci/cc) I-131 (Thyroid)	0.0000E+00
Dose Equivalent (Ci/cc) I-131 (CEDE)	0.0000E+00
Dose Equivalent (Ci/cc) I-131 (ICRP2 Thyroid)	0.0000E+00
Total I (Ci)	0.0000E+00
Dose Equivalent (Ci/cc) Xe-133 (EDE)	7.8528E-08

Intact Steam Generators Compartment Group Inventory Distribution:

Time (h) = 8.0000	Atmosphere	Sump
Noble gases (Ci)	7.9417E+01	0.0000E+00
Elemental I (Ci)	0.0000E+00	0.0000E+00
Organic I (Ci)	0.0000E+00	0.0000E+00
Aerosol I (Ci)	0.0000E+00	0.0000E+00
All Aerosols (Ci)	6.5839E+02	0.0000E+00
All Aerosols (kg)	2.0172E-06	0.0000E+00

Control Room Compartment Nuclide Inventory (Ci) at Time (h) = 8.0000

Nuclide	Compartment Atmosphere	Dose Fract	Exposure (Ci-hr)	Decays (Bq-s)	Compartment Recirc Filtr	Pathway 2 Inflow	Pathway 3 Inflow	Pathway 4 Outflow
I-131	1.0603E-04	5.7119E-01	5.6321E-03	7.5025E+11	2.5639E-02	2.7953E-02	9.2861E-03	6.1532E-03
I-132	2.6964E-05	6.3814E-02	1.3301E-02	1.7827E+12	6.5203E-03	7.0986E-02	2.1963E-02	1.4626E-02
I-133	1.3278E-04	1.6564E-01	8.7768E-03	1.1699E+12	3.2108E-02	4.3913E-02	1.4444E-02	9.5957E-03
I-134	2.2418E-07	2.1230E-02	4.5999E-03	6.2264E+11	5.4210E-05	2.7197E-02	7.8359E-03	5.1077E-03
I-135	5.7607E-05	4.1123E-02	6.4747E-03	8.6429E+11	1.3930E-02	3.2998E-02	1.0634E-02	7.0902E-03
Xe-133	1.6126E-03	5.5585E-04	1.0996E-02	1.4097E+12	0.0000E+00	1.1783E-02	3.2120E-05	1.1622E-02
Xe-135	9.6116E-03	3.2629E-02	8.4614E-02	1.0853E+13	0.0000E+00	8.3460E-02	2.4847E-04	8.9599E-02
Xe-131m	6.2823E-06	4.9116E-07	3.8964E-05	4.9928E+09	0.0000E+00	4.2142E-05	1.1127E-07	4.1146E-05
Xe-133m	1.1434E-04	3.4707E-05	7.8179E-04	1.0022E+11	0.0000E+00	8.4283E-04	2.2687E-06	8.2630E-04
Xe-135m	1.4608E-02	1.0378E-01	1.5699E-01	1.9713E+13	0.0000E+00	5.1550E-01	5.4466E-04	1.6655E-01
Total	2.6276E-02	1.0000E+00	0.0000E+00	0.0000E+00	7.8251E-02	8.1468E-01	6.4991E-02	3.1121E-01

Control Room Compartment Group Inventory Distribution:

Time (h) = 8.0000	Atmosphere	Sump
Noble gases (Ci)	2.5953E-02	0.0000E+00
Elemental I (Ci)	0.0000E+00	0.0000E+00
Organic I (Ci)	0.0000E+00	0.0000E+00

Aerosol I (Ci)	0.0000E+00	0.0000E+00
All Aerosols (Ci)	3.2360E-04	0.0000E+00
All Aerosols (kg)	9.9146E-13	0.0000E+00

Time (h) = 8.0000	Deposition Surfaces	Recirculating Filter
Noble gases (Ci)	0.0000E+00	0.0000E+00
Elemental I (Ci)	0.0000E+00	0.0000E+00
Organic I (Ci)	0.0000E+00	0.0000E+00
Aerosol I (Ci)	0.0000E+00	0.0000E+00
All Aerosols (Ci)	0.0000E+00	7.8251E-02
All Aerosols (kg)	0.0000E+00	2.3975E-10

Ruptured Steam Generator Compartment Nuclide Inventory (Ci) at Time (h) = 8.0000

Nuclide	Compartment Atmosphere	Dose Fract	Exposure (Ci-hr)	Decays (Bq-s)	Pathway 6 Inflow	Pathway 8 Outflow
I-131	5.8243E+02	7.3084E-01	4.5415E+03	6.0498E+17	5.9994E+02	1.3874E+00
I-132	1.4812E+02	3.4024E-02	4.4695E+03	5.9967E+17	1.5078E+03	3.4417E+00
I-133	7.2940E+02	1.9133E-01	6.3892E+03	8.5173E+17	9.4436E+02	2.1811E+00
I-134	1.2315E+00	4.9098E-03	6.7043E+02	9.0950E+16	5.4212E+02	1.2101E+00
I-135	3.1645E+02	3.7622E-02	3.7331E+03	4.9852E+17	7.1032E+02	1.6354E+00
Xe-133	3.4255E+01	1.1393E-05	1.4203E+02	1.8770E+16	7.9025E-01	2.8276E-03
Xe-135	2.1187E+02	6.5018E-04	1.0626E+03	1.4054E+17	7.4626E+00	2.6880E-02
Xe-131m	1.2369E-01	9.8389E-09	4.9190E-01	6.4984E+13	2.5245E-03	9.0336E-06
Xe-133m	2.3737E+00	7.0118E-07	9.9539E+00	1.3155E+15	5.6527E-02	2.0222E-04
Xe-135m	5.1833E+01	6.1313E-04	5.8452E+02	7.5982E+16	3.5813E+01	1.1998E-01
Total	2.0781E+03	1.0000E+00	0.0000E+00	0.0000E+00	4.3487E+03	1.0006E+01

Dose Equivalent (Ci/cc) I-131 (Thyroid)	0.0000E+00
Dose Equivalent (Ci/cc) I-131 (CEDE)	0.0000E+00
Dose Equivalent (Ci/cc) I-131 (ICRP2 Thyroid)	0.0000E+00
Total I (Ci)	0.0000E+00
Dose Equivalent (Ci/cc) Xe-133 (EDE)	8.4393E-07

Ruptured Steam Generator Compartment Group Inventory Distribution:

Time (h) = 8.0000	Atmosphere	Sump
Noble gases (Ci)	3.0046E+02	0.0000E+00
Elemental I (Ci)	0.0000E+00	0.0000E+00
Organic I (Ci)	0.0000E+00	0.0000E+00
Aerosol I (Ci)	0.0000E+00	0.0000E+00
All Aerosols (Ci)	1.7776E+03	0.0000E+00
All Aerosols (kg)	5.4464E-06	0.0000E+00

```
#######################################################################
    ALION RADTRAD Version 3.10 Rev 2 run on 12/01/2014  at 16:21:11

                Copyright © 2009 Alion Science and Technology
#######################################################################
```

Exclusion Area Boundary Doses:

Time (h) = 8.0000	Whole Body	Thyroid	TEDE
Delta dose (rem)	1.7774E-09	8.6851E-07	2.8654E-08
Accumulated dose (rem)	4.9383E-02	1.2618E+01	4.4605E-01

Low Population Zone Doses:

Time (h) = 8.0000	Whole Body	Thyroid	TEDE
Delta dose (rem)	1.0991E-10	5.3709E-08	1.7719E-09
Accumulated dose (rem)	9.2862E-03	2.2933E+00	8.1430E-02

Control Room Doses:

Time (h) = 8.0000	Whole Body	Thyroid	TEDE	Skin
Delta dose (rem)	1.3209E-09	1.2343E-06	3.9515E-08	7.1053E-08
Accumulated dose (rem)	2.1892E-03	7.0090E+00	2.2261E-01	1.0741E-01

****

RCS Compartment Nuclide Inventory (Ci) at Time (h) = 8.0000

Nuclide	Compartment Atmosphere	Dose Fract	Exposure (Ci-hr)	Decays (Bq-s)	Pathway 1 Outflow	Pathway 5 Outflow	Pathway 6 Outflow
I-131	6.8985E+04	7.5023E-01	2.7826E+05	3.7068E+19	3.7458E+01	2.2231E+02	5.9994E+02
I-132	1.7544E+04	2.3504E-02	1.8429E+05	2.4730E+19	9.4524E+01	1.4881E+02	1.5078E+03
I-133	8.6392E+04	1.8943E-01	3.7757E+05	5.0334E+19	5.8987E+01	3.0201E+02	9.4436E+02
I-134	1.4586E+02	1.9041E-03	1.5520E+04	2.1070E+18	3.4224E+01	1.2673E+01	5.4212E+02
I-135	3.7481E+04	3.3995E-02	2.0134E+05	2.6888E+19	4.4410E+01	1.6149E+02	7.1032E+02
Xe-133	1.9869E+03	7.5028E-06	5.5830E+03	7.3479E+17	4.7298E-02	4.4088E+00	7.9025E-01
Xe-135	1.2200E+04	4.0573E-04	3.9579E+04	5.2144E+18	4.4656E-01	3.1331E+01	7.4626E+00
Xe-131m	7.4305E+00	6.7154E-09	2.0040E+01	2.6362E+15	1.5108E-04	1.5813E-02	2.5245E-03
Xe-133m	1.3915E+02	4.6411E-07	3.9324E+02	5.1756E+16	3.3833E-03	3.1058E-01	5.6527E-02
Xe-135m	5.8611E+03	5.2312E-04	2.9767E+04	3.8508E+18	2.1527E+00	2.3698E+01	3.5813E+01
Total	2.3074E+05	1.0000E+00	0.0000E+00	0.0000E+00	2.7225E+02	9.0705E+02	4.3487E+03

Dose Equivalent (Ci/cc) I-131 (Thyroid)	0.0000E+00
Dose Equivalent (Ci/cc) I-131 (CEDE)	0.0000E+00
Dose Equivalent (Ci/cc) I-131 (ICRP2 Thyroid)	0.0000E+00
Total I (Ci)	0.0000E+00
Dose Equivalent (Ci/cc) Xe-133 (EDE)	1.3017E-05

RCS Compartment Group Inventory Distribution:

Time (h) = 8.0000	Atmosphere	Sump
Noble gases (Ci)	2.0195E+04	0.0000E+00
Elemental I (Ci)	0.0000E+00	0.0000E+00
Organic I (Ci)	0.0000E+00	0.0000E+00
Aerosol I (Ci)	0.0000E+00	0.0000E+00
All Aerosols (Ci)	2.1055E+05	0.0000E+00
All Aerosols (kg)	6.4508E-04	0.0000E+00

Intact Steam Generators Compartment Nuclide Inventory (Ci) at Time (h) = 8.0000

Nuclide	Compartment Atmosphere	Dose Fract	Exposure (Ci-hr)	Decays (Bq-s)	Pathway 5 Inflow	Pathway 7 Outflow
I-131	2.1572E+02	7.5946E-01	5.8328E+02	7.7700E+16	2.2231E+02	4.4988E+00
I-132	5.4860E+01	1.8581E-02	3.0167E+02	4.0486E+16	1.4881E+02	2.3505E+00
I-133	2.7015E+02	1.8793E-01	7.7561E+02	1.0340E+17	3.0201E+02	5.9891E+00
I-134	4.5611E-01	8.8912E-04	1.5005E+01	2.0383E+15	1.2673E+01	1.1799E-01
I-135	1.1720E+02	3.1991E-02	3.9233E+02	5.2395E+16	1.6149E+02	3.0376E+00
Xe-133	8.3368E+00	1.1340E-05	1.7473E+01	2.3093E+15	4.4088E+00	1.3369E-01
Xe-135	5.1355E+01	5.9813E-04	1.2082E+02	1.5990E+16	3.1331E+01	9.2690E-01
Xe-131m	3.0897E-02	1.0161E-08	6.2787E-02	8.2941E+12	1.5813E-02	4.8005E-04
Xe-133m	5.8227E-01	6.9913E-07	1.2266E+00	1.6212E+14	3.1058E-01	9.3867E-03
Xe-135m	1.9112E+01	5.3776E-04	6.3363E+01	8.2692E+15	2.3698E+01	4.9008E-01
Total	7.3781E+02	1.0000E+00	0.0000E+00	0.0000E+00	9.0705E+02	1.7554E+01

Dose Equivalent (Ci/cc) I-131 (Thyroid)	0.0000E+00
Dose Equivalent (Ci/cc) I-131 (CEDE)	0.0000E+00
Dose Equivalent (Ci/cc) I-131 (ICRP2 Thyroid)	0.0000E+00
Total I (Ci)	0.0000E+00
Dose Equivalent (Ci/cc) Xe-133 (EDE)	7.8529E-08

Intact Steam Generators Compartment Group Inventory Distribution:

Time (h) = 8.0000	Atmosphere	Sump
Noble gases (Ci)	7.9417E+01	0.0000E+00
Elemental I (Ci)	0.0000E+00	0.0000E+00
Organic I (Ci)	0.0000E+00	0.0000E+00
Aerosol I (Ci)	0.0000E+00	0.0000E+00
All Aerosols (Ci)	6.5839E+02	0.0000E+00
All Aerosols (kg)	2.0172E-06	0.0000E+00

Control Room Compartment Nuclide Inventory (Ci) at Time (h) = 8.0000

Nuclide	Compartment Atmosphere	Dose Fract	Exposure (Ci-hr)	Decays (Bq-s)	Compartment Recirc Filtr	Pathway 2 Inflow	Pathway 3 Inflow	Pathway 4 Outflow
I-131	1.0602E-04	5.7119E-01	5.6321E-03	7.5025E+11	2.5639E-02	2.7953E-02	9.2861E-03	6.1532E-03
I-132	2.6963E-05	6.3814E-02	1.3301E-02	1.7827E+12	6.5203E-03	7.0986E-02	2.1963E-02	1.4626E-02
I-133	1.3277E-04	1.6564E-01	8.7768E-03	1.1699E+12	3.2108E-02	4.3913E-02	1.4444E-02	9.5957E-03
I-134	2.2417E-07	2.1230E-02	4.5999E-03	6.2264E+11	5.4209E-05	2.7197E-02	7.8359E-03	5.1077E-03
I-135	5.7604E-05	4.1123E-02	6.4747E-03	8.6429E+11	1.3930E-02	3.2998E-02	1.0634E-02	7.0902E-03
Xe-133	1.6126E-03	5.5585E-04	1.0996E-02	1.4097E+12	0.0000E+00	1.1783E-02	3.2120E-05	1.1622E-02
Xe-135	9.6115E-03	3.2629E-02	8.4614E-02	1.0853E+13	0.0000E+00	8.3460E-02	2.4847E-04	8.9599E-02
Xe-131m	6.2823E-06	4.9116E-07	3.8964E-05	4.9928E+09	0.0000E+00	4.2142E-05	1.1127E-07	4.1146E-05
Xe-133m	1.1434E-04	3.4708E-05	7.8179E-04	1.0022E+11	0.0000E+00	8.4283E-04	2.2687E-06	8.2630E-04
Xe-135m	1.4608E-02	1.0378E-01	1.5699E-01	1.9713E+13	0.0000E+00	5.1550E-01	5.4466E-04	1.6655E-01
Total	2.6276E-02	1.0000E+00	0.0000E+00	0.0000E+00	7.8251E-02	8.1468E-01	6.4991E-02	3.1121E-01

Control Room Compartment Group Inventory Distribution:

Time (h) = 8.0000	Atmosphere	Sump
Noble gases (Ci)	2.5953E-02	0.0000E+00
Elemental I (Ci)	0.0000E+00	0.0000E+00
Organic I (Ci)	0.0000E+00	0.0000E+00

Aerosol I (Ci)	0.0000E+00	0.0000E+00
All Aerosols (Ci)	3.2358E-04	0.0000E+00
All Aerosols (kg)	9.9141E-13	0.0000E+00

Time (h) = 8.0000	Deposition Surfaces	Recirculating Filter
Noble gases (Ci)	0.0000E+00	0.0000E+00
Elemental I (Ci)	0.0000E+00	0.0000E+00
Organic I (Ci)	0.0000E+00	0.0000E+00
Aerosol I (Ci)	0.0000E+00	0.0000E+00
All Aerosols (Ci)	0.0000E+00	7.8251E-02
All Aerosols (kg)	0.0000E+00	2.3975E-10

Ruptured Steam Generator Compartment Nuclide Inventory (Ci) at Time (h) = 8.0000

Nuclide	Compartment Atmosphere	Dose Fract	Exposure (Ci-hr)	Decays (Bq-s)	Pathway 6 Inflow	Pathway 8 Outflow
I-131	5.8243E+02	7.3084E-01	4.5415E+03	6.0498E+17	5.9994E+02	1.3874E+00
I-132	1.4812E+02	3.4024E-02	4.4695E+03	5.9967E+17	1.5078E+03	3.4417E+00
I-133	7.2940E+02	1.9133E-01	6.3892E+03	8.5173E+17	9.4436E+02	2.1811E+00
I-134	1.2315E+00	4.9098E-03	6.7043E+02	9.0950E+16	5.4212E+02	1.2101E+00
I-135	3.1645E+02	3.7622E-02	3.7331E+03	4.9852E+17	7.1032E+02	1.6354E+00
Xe-133	3.4255E+01	1.1393E-05	1.4203E+02	1.8770E+16	7.9025E-01	2.8276E-03
Xe-135	2.1187E+02	6.5018E-04	1.0626E+03	1.4054E+17	7.4626E+00	2.6880E-02
Xe-131m	1.2369E-01	9.8389E-09	4.9190E-01	6.4984E+13	2.5245E-03	9.0336E-06
Xe-133m	2.3737E+00	7.0118E-07	9.9539E+00	1.3155E+15	5.6527E-02	2.0222E-04
Xe-135m	5.1833E+01	6.1313E-04	5.8452E+02	7.5982E+16	3.5813E+01	1.1998E-01
Total	2.0781E+03	1.0000E+00	0.0000E+00	0.0000E+00	4.3487E+03	1.0006E+01

Dose Equivalent (Ci/cc) I-131 (Thyroid)	0.0000E+00
Dose Equivalent (Ci/cc) I-131 (CEDE)	0.0000E+00
Dose Equivalent (Ci/cc) I-131 (ICRP2 Thyroid)	0.0000E+00
Total I (Ci)	0.0000E+00
Dose Equivalent (Ci/cc) Xe-133 (EDE)	8.4393E-07

Ruptured Steam Generator Compartment Group Inventory Distribution:

Time (h) = 8.0000	Atmosphere	Sump
Noble gases (Ci)	3.0046E+02	0.0000E+00
Elemental I (Ci)	0.0000E+00	0.0000E+00
Organic I (Ci)	0.0000E+00	0.0000E+00
Aerosol I (Ci)	0.0000E+00	0.0000E+00
All Aerosols (Ci)	1.7776E+03	0.0000E+00
All Aerosols (kg)	5.4464E-06	0.0000E+00

```
#######################################################################
    ALION RADTRAD Version 3.10 Rev 2 run on 12/01/2014  at 16:21:11

                Copyright © 2009 Alion Science and Technology
#######################################################################
```

Exclusion Area Boundary Doses:

Time (h) = 24.0000	Whole Body	Thyroid	TEDE
Delta dose (rem)	4.4966E-03	3.8212E+00	1.2211E-01
Accumulated dose (rem)	5.3879E-02	1.6439E+01	5.6817E-01

Low Population Zone Doses:

Time (h) = 24.0000	Whole Body	Thyroid	TEDE
Delta dose (rem)	2.7807E-04	2.3630E-01	7.5515E-03
Accumulated dose (rem)	9.5643E-03	2.5296E+00	8.8981E-02

Control Room Doses:

Time (h) = 24.0000	Whole Body	Thyroid	TEDE	Skin
Delta dose (rem)	1.0348E-03	7.0702E-01	2.2800E-02	5.6212E-02
Accumulated dose (rem)	3.2240E-03	7.7160E+00	2.4541E-01	1.6362E-01

****

RCS Compartment Nuclide Inventory (Ci) at Time (h) = 24.0000

Nuclide	Compartment Atmosphere	Dose Fract	Exposure (Ci-hr)	Decays (Bq-s)	Pathway 1 Outflow	Pathway 5 Outflow	Pathway 6 Outflow
I-131	6.4299E+04	8.1156E-01	1.3435E+06	1.7902E+20	3.7458E+01	1.0796E+03	5.9994E+02
I-132	1.3945E+02	6.8807E-03	2.4079E+05	3.2402E+19	9.4524E+01	1.9602E+02	1.5078E+03
I-133	5.0041E+04	1.6167E-01	1.4382E+06	1.9219E+20	5.8987E+01	1.1619E+03	9.4436E+02
I-134	4.6160E-04	4.3158E-04	1.5700E+04	2.1316E+18	3.4224E+01	1.2825E+01	5.4212E+02
I-135	6.9113E+03	1.8439E-02	4.8742E+05	6.5420E+19	4.4410E+01	3.9667E+02	7.1032E+02
Xe-133	7.2164E+03	2.5483E-05	8.4633E+04	1.1172E+19	4.7298E-02	6.6929E+01	7.9025E-01
Xe-135	1.4320E+04	6.8866E-04	2.9983E+05	3.9901E+19	4.4656E-01	2.4112E+02	7.4626E+00
Xe-131m	3.5032E+01	2.7625E-08	3.6794E+02	4.8458E+16	1.5108E-04	2.8968E-01	2.5245E-03
Xe-133m	4.7284E+02	1.5133E-06	5.7229E+03	7.5586E+17	3.3833E-03	4.5311E+00	5.6527E-02
Xe-135m	1.1323E+03	3.0138E-04	7.6541E+04	1.0014E+19	2.1527E+00	6.2140E+01	3.5813E+01
Total	1.4457E+05	1.0000E+00	0.0000E+00	0.0000E+00	2.7225E+02	3.2220E+03	4.3487E+03

Dose Equivalent (Ci/cc) I-131 (Thyroid)	0.0000E+00
Dose Equivalent (Ci/cc) I-131 (CEDE)	0.0000E+00
Dose Equivalent (Ci/cc) I-131 (ICRP2 Thyroid)	0.0000E+00
Total I (Ci)	0.0000E+00
Dose Equivalent (Ci/cc) Xe-133 (EDE)	9.9761E-06

RCS Compartment Group Inventory Distribution:

Time (h) = 24.0000	Atmosphere	Sump
Noble gases (Ci)	2.3176E+04	0.0000E+00
Elemental I (Ci)	0.0000E+00	0.0000E+00
Organic I (Ci)	0.0000E+00	0.0000E+00
Aerosol I (Ci)	0.0000E+00	0.0000E+00
All Aerosols (Ci)	1.2139E+05	0.0000E+00
All Aerosols (kg)	5.6480E-04	0.0000E+00

Intact Steam Generators Compartment Nuclide Inventory (Ci) at Time (h) = 24.0000

Nuclide	Compartment Atmosphere	Dose Fract	Exposure (Ci-hr)	Decays (Bq-s)	Pathway 5 Inflow	Pathway 7 Outflow
I-131	1.0080E+03	8.3414E-01	1.0666E+04	1.4214E+18	1.0796E+03	3.3231E+01
I-132	2.1862E+00	2.2992E-03	6.2149E+02	8.4206E+16	1.9602E+02	3.3113E+00
I-133	7.8451E+02	1.4957E-01	1.0278E+04	1.3753E+18	1.1619E+03	3.3303E+01
I-134	7.2367E-06	5.6059E-05	1.5751E+01	2.1403E+15	1.2825E+01	1.2024E-01
I-135	1.0835E+02	1.2861E-02	2.6259E+03	3.5407E+17	3.9667E+02	9.5760E+00
Xe-133	1.1500E+02	3.4773E-05	8.9203E+02	1.1784E+17	6.6929E+01	2.5856E+00
Xe-135	2.2822E+02	8.1109E-04	2.7276E+03	3.6399E+17	2.4112E+02	8.3908E+00
Xe-131m	5.5624E-01	3.8598E-08	3.9707E+00	5.2325E+14	2.8968E-01	1.1383E-02
Xe-133m	7.5266E+00	2.0463E-06	5.9772E+01	7.9015E+15	4.5311E+00	1.7375E-01
Xe-135m	1.7752E+01	2.1881E-04	4.2924E+02	5.6623E+16	6.2140E+01	1.5611E+00
Total	2.2721E+03	1.0000E+00	0.0000E+00	0.0000E+00	3.2220E+03	9.2264E+01

Dose Equivalent (Ci/cc) I-131 (Thyroid)	0.0000E+00
Dose Equivalent (Ci/cc) I-131 (CEDE)	0.0000E+00
Dose Equivalent (Ci/cc) I-131 (ICRP2 Thyroid)	0.0000E+00
Total I (Ci)	0.0000E+00
Dose Equivalent (Ci/cc) Xe-133 (EDE)	2.5287E-07

Intact Steam Generators Compartment Group Inventory Distribution:

Time (h) = 24.0000	Atmosphere	Sump
Noble gases (Ci)	3.6906E+02	0.0000E+00
Elemental I (Ci)	0.0000E+00	0.0000E+00
Organic I (Ci)	0.0000E+00	0.0000E+00
Aerosol I (Ci)	0.0000E+00	0.0000E+00
All Aerosols (Ci)	1.9031E+03	0.0000E+00
All Aerosols (kg)	8.8546E-06	0.0000E+00

Control Room Compartment Nuclide Inventory (Ci) at Time (h) = 24.0000

Nuclide	Compartment Atmosphere	Dose Fract	Exposure (Ci-hr)	Decays (Bq-s)	Compartment Recirc Filtr	Pathway 2 Inflow	Pathway 3 Inflow	Pathway 4 Outflow
I-131	6.3255E-05	5.3252E-01	6.2745E-03	8.3586E+11	2.7347E-02	3.0293E-02	1.0860E-02	6.8493E-03
I-132	1.3718E-07	5.3495E-02	1.3324E-02	1.7858E+12	5.9310E-05	7.1064E-02	2.2016E-02	1.4652E-02
I-133	4.9228E-05	1.4823E-01	9.3857E-03	1.2514E+12	2.1283E-02	4.6138E-02	1.5940E-02	1.0262E-02
I-134	4.5410E-13	1.7766E-02	4.5999E-03	6.2265E+11	1.9632E-10	2.7197E-02	7.8360E-03	5.1078E-03
I-135	6.7991E-06	3.5190E-02	6.6207E-03	8.8400E+11	2.9395E-03	3.3530E-02	1.0992E-02	7.2533E-03
Xe-133	1.5539E-03	1.4863E-03	3.5134E-02	4.2678E+12	0.0000E+00	3.2889E-02	1.6635E-04	3.5171E-02
Xe-135	2.9782E-03	5.4545E-02	1.6903E-01	2.1051E+13	0.0000E+00	1.5087E-01	6.5712E-04	1.7440E-01
Xe-131m	9.2050E-06	1.6677E-06	1.5809E-04	1.8942E+10	0.0000E+00	1.4724E-04	7.0816E-07	1.5569E-04
Xe-133m	1.0812E-04	9.2295E-05	2.4843E-03	3.0164E+11	0.0000E+00	2.3386E-03	1.1267E-05	2.4864E-03
Xe-135m	3.5611E-03	1.5667E-01	2.8321E-01	3.4703E+13	0.0000E+00	8.8855E-01	6.0330E-04	2.9227E-01
Total	8.3300E-03	1.0000E+00	0.0000E+00	0.0000E+00	5.1629E-02	1.2830E+00	6.9082E-02	5.4861E-01

Control Room Compartment Group Inventory Distribution:

Time (h) = 24.0000	Atmosphere	Sump
Noble gases (Ci)	8.2105E-03	0.0000E+00
Elemental I (Ci)	0.0000E+00	0.0000E+00
Organic I (Ci)	0.0000E+00	0.0000E+00

Aerosol I (Ci)	0.0000E+00	0.0000E+00
All Aerosols (Ci)	1.1942E-04	0.0000E+00
All Aerosols (kg)	5.5563E-13	0.0000E+00

Time (h) = 24.0000	Deposition Surfaces	Recirculating Filter
Noble gases (Ci)	0.0000E+00	0.0000E+00
Elemental I (Ci)	0.0000E+00	0.0000E+00
Organic I (Ci)	0.0000E+00	0.0000E+00
Aerosol I (Ci)	0.0000E+00	0.0000E+00
All Aerosols (Ci)	0.0000E+00	5.1629E-02
All Aerosols (kg)	0.0000E+00	2.4022E-10

Ruptured Steam Generator Compartment Nuclide Inventory (Ci) at Time (h) = 24.0000

Nuclide	Compartment Atmosphere	Dose Fract	Exposure (Ci-hr)	Decays (Bq-s)	Pathway 6 Inflow	Pathway 8 Outflow
I-131	5.4990E+02	7.9344E-01	1.3593E+04	1.8113E+18	5.9994E+02	1.3874E+00
I-132	1.1926E+00	1.3662E-02	4.9478E+03	6.6461E+17	1.5078E+03	3.4417E+00
I-133	4.2796E+02	1.6724E-01	1.5397E+04	2.0566E+18	9.4436E+02	2.1811E+00
I-134	3.9477E-06	1.7849E-03	6.7195E+02	9.1157E+16	5.4212E+02	1.2101E+00
I-135	5.9107E+01	2.2518E-02	6.1600E+03	8.2540E+17	7.1032E+02	1.6354E+00
Xe-133	7.7813E+01	3.1506E-05	1.0829E+03	1.4333E+17	7.9025E-01	2.8276E-03
Xe-135	1.5462E+02	9.4822E-04	4.2724E+03	5.6944E+17	7.4626E+00	2.6880E-02
Xe-131m	3.5823E-01	3.1985E-08	4.4088E+00	5.8235E+14	2.5245E-03	9.0336E-06
Xe-133m	5.0144E+00	1.8539E-06	7.2558E+01	9.6089E+15	5.6527E-02	2.0222E-04
Xe-135m	9.6837E+00	3.7366E-04	9.8212E+02	1.2838E+17	3.5813E+01	1.1998E-01
Total	1.2856E+03	1.0000E+00	0.0000E+00	0.0000E+00	4.3487E+03	1.0006E+01

Dose Equivalent (Ci/cc) I-131 (Thyroid)	0.0000E+00
Dose Equivalent (Ci/cc) I-131 (CEDE)	0.0000E+00
Dose Equivalent (Ci/cc) I-131 (ICRP2 Thyroid)	0.0000E+00
Total I (Ci)	0.0000E+00
Dose Equivalent (Ci/cc) Xe-133 (EDE)	5.0281E-07

Ruptured Steam Generator Compartment Group Inventory Distribution:

Time (h) = 24.0000	Atmosphere	Sump
Noble gases (Ci)	2.4749E+02	0.0000E+00
Elemental I (Ci)	0.0000E+00	0.0000E+00
Organic I (Ci)	0.0000E+00	0.0000E+00
Aerosol I (Ci)	0.0000E+00	0.0000E+00
All Aerosols (Ci)	1.0382E+03	0.0000E+00
All Aerosols (kg)	4.8303E-06	0.0000E+00

```
#######################################################################
    ALION RADTRAD Version 3.10 Rev 2 run on 12/01/2014  at 16:21:12

                Copyright © 2009 Alion Science and Technology
#######################################################################
```

Exclusion Area Boundary Doses:

Time (h) = 96.0000	Whole Body	Thyroid	TEDE
Delta dose (rem)	0.0000E+00	0.0000E+00	0.0000E+00
Accumulated dose (rem)	5.3879E-02	1.6439E+01	5.6817E-01

Low Population Zone Doses:

Time (h) = 96.0000	Whole Body	Thyroid	TEDE
Delta dose (rem)	0.0000E+00	0.0000E+00	0.0000E+00
Accumulated dose (rem)	9.5643E-03	2.5296E+00	8.8981E-02

Control Room Doses:

Time (h) = 96.0000	Whole Body	Thyroid	TEDE	Skin
Delta dose (rem)	1.6350E-04	9.0358E-03	4.4095E-04	9.1705E-03
Accumulated dose (rem)	3.3875E-03	7.7250E+00	2.4586E-01	1.7279E-01

****

RCS Compartment Nuclide Inventory (Ci) at Time (h) = 96.0000

Nuclide	Compartment Atmosphere	Dose Fract	Exposure (Ci-hr)	Decays (Bq-s)	Pathway 1 Outflow	Pathway 5 Outflow	Pathway 6 Outflow
I-131	4.9646E+04	9.0484E-01	5.4202E+06	7.2239E+20	3.7458E+01	1.0796E+03	5.9994E+02
I-132	5.2586E-08	1.9050E-03	2.4123E+05	3.2464E+19	9.4524E+01	1.9602E+02	1.5078E+03
I-133	4.5425E+03	8.6845E-02	2.7956E+06	3.7406E+20	5.8987E+01	1.1619E+03	9.4436E+02
I-134	8.7275E-29	1.1927E-04	1.5700E+04	2.1316E+18	3.4224E+01	1.2825E+01	5.4212E+02
I-135	3.6355E+00	5.7719E-03	5.5209E+05	7.4194E+19	4.4410E+01	3.9667E+02	7.1032E+02
Xe-133	1.0634E+04	6.9118E-05	8.3064E+05	1.1045E+20	4.7298E-02	6.6929E+01	7.9025E-01
Xe-135	1.2587E+02	3.4899E-04	5.4981E+05	7.3523E+19	4.4656E-01	2.4112E+02	7.4626E+00
Xe-131m	1.2987E+02	1.3675E-07	6.5904E+03	8.7496E+17	1.5108E-04	2.8968E-01	2.5245E-03
Xe-133m	4.6440E+02	3.3585E-06	4.5960E+04	6.1150E+18	3.3833E-03	4.5311E+00	5.6527E-02
Xe-135m	5.9562E-01	9.4816E-05	8.7136E+04	1.1421E+19	2.1527E+00	6.2140E+01	3.5813E+01
Total	6.5546E+04	1.0000E+00	0.0000E+00	0.0000E+00	2.7225E+02	3.2220E+03	4.3487E+03

Dose Equivalent (Ci/cc) I-131 (Thyroid)	0.0000E+00
Dose Equivalent (Ci/cc) I-131 (CEDE)	0.0000E+00
Dose Equivalent (Ci/cc) I-131 (ICRP2 Thyroid)	0.0000E+00
Total I (Ci)	0.0000E+00
Dose Equivalent (Ci/cc) Xe-133 (EDE)	9.1229E-07

RCS Compartment Group Inventory Distribution:

Time (h) = 96.0000	Atmosphere	Sump
Noble gases (Ci)	1.1355E+04	0.0000E+00
Elemental I (Ci)	0.0000E+00	0.0000E+00
Organic I (Ci)	0.0000E+00	0.0000E+00
Aerosol I (Ci)	0.0000E+00	0.0000E+00
All Aerosols (Ci)	5.4192E+04	0.0000E+00
All Aerosols (kg)	4.0446E-04	0.0000E+00

Intact Steam Generators Compartment Nuclide Inventory (Ci) at Time (h) = 96.0000

Nuclide	Compartment Atmosphere	Dose Fract	Exposure (Ci-hr)	Decays (Bq-s)	Pathway 5 Inflow	Pathway 7 Outflow
I-131	7.7831E+02	9.2363E-01	7.4578E+04	9.9399E+18	1.0796E+03	3.3231E+01
I-132	8.2441E-10	3.6813E-04	6.2837E+02	8.5172E+16	1.9602E+02	3.3113E+00
I-133	7.1215E+01	7.2729E-02	3.1558E+04	4.2264E+18	1.1619E+03	3.3303E+01
I-134	1.3682E-30	8.8773E-06	1.5751E+01	2.1403E+15	1.2825E+01	1.2024E-01
I-135	5.6995E-02	2.8230E-03	3.6398E+03	4.9163E+17	3.9667E+02	9.5760E+00
Xe-133	1.6799E+02	7.8395E-05	1.2699E+04	1.6892E+18	6.6929E+01	2.5856E+00
Xe-135	1.9887E+00	3.1525E-04	6.6947E+03	8.9758E+17	2.4112E+02	8.3908E+00
Xe-131m	2.0419E+00	1.5699E-07	1.0199E+02	1.3542E+16	2.8968E-01	1.1383E-02
Xe-133m	7.3245E+00	3.7724E-06	6.9585E+02	9.2623E+16	4.5311E+00	1.7375E-01
Xe-135m	9.3377E-03	4.8060E-05	5.9535E+02	7.8676E+16	6.2140E+01	1.5611E+00
Total	1.0289E+03	1.0000E+00	0.0000E+00	0.0000E+00	3.2220E+03	9.2264E+01

Dose Equivalent (Ci/cc) I-131 (Thyroid)	0.0000E+00
Dose Equivalent (Ci/cc) I-131 (CEDE)	0.0000E+00
Dose Equivalent (Ci/cc) I-131 (ICRP2 Thyroid)	0.0000E+00
Total I (Ci)	0.0000E+00
Dose Equivalent (Ci/cc) Xe-133 (EDE)	2.2963E-08

Intact Steam Generators Compartment Group Inventory Distribution:

Time (h) = 96.0000	Atmosphere	Sump
Noble gases (Ci)	1.7935E+02	0.0000E+00
Elemental I (Ci)	0.0000E+00	0.0000E+00
Organic I (Ci)	0.0000E+00	0.0000E+00
Aerosol I (Ci)	0.0000E+00	0.0000E+00
All Aerosols (Ci)	8.4958E+02	0.0000E+00
All Aerosols (kg)	6.3409E-06	0.0000E+00

Control Room Compartment Nuclide Inventory (Ci) at Time (h) = 96.0000

Nuclide	Compartment Atmosphere	Dose Fract	Exposure (Ci-hr)	Decays (Bq-s)	Compartment Recirc Filtr	Pathway 2 Inflow	Pathway 3 Inflow	Pathway 4 Outflow
I-131	1.0379-196	5.1840E-01	6.2774E-03	8.3625E+11	2.1169E-02	3.0293E-02	1.0860E-02	6.8645E-03
I-132	1.0994-208	5.2052E-02	1.3324E-02	1.7858E+12	2.2423E-14	7.1064E-02	2.2016E-02	1.4653E-02
I-133	9.4969-198	1.4427E-01	9.3880E-03	1.2517E+12	1.9370E-03	4.6138E-02	1.5940E-02	1.0274E-02
I-134	1.8246-229	1.7287E-02	4.5999E-03	6.2265E+11	3.7215E-35	2.7197E-02	7.8360E-03	5.1078E-03
I-135	7.6006-201	3.4243E-02	6.6210E-03	8.8404E+11	1.5502E-06	3.3530E-02	1.0992E-02	7.2549E-03
Xe-133	1.0680E-04	2.7867E-03	6.7698E-02	7.9099E+12	0.0000E+00	5.8451E-02	1.6635E-04	6.5516E-02
Xe-135	1.1711E-06	5.9848E-02	1.9060E-01	2.3496E+13	0.0000E+00	1.6575E-01	6.5712E-04	1.9515E-01
Xe-131m	5.7317E-06	6.5253E-06	6.3572E-04	7.2055E+10	0.0000E+00	5.3205E-04	7.0816E-07	5.9511E-04
Xe-133m	7.5875E-06	1.7338E-04	4.7961E-03	5.6018E+11	0.0000E+00	4.1687E-03	1.1267E-05	4.6400E-03
Xe-135m	1.8875E-06	1.7093E-01	3.1754E-01	3.8606E+13	0.0000E+00	9.8521E-01	6.0330E-04	3.2492E-01
Total	1.2317E-04	1.0000E+00	0.0000E+00	0.0000E+00	2.3108E-02	1.4223E+00	6.9082E-02	6.3497E-01

Control Room Compartment Group Inventory Distribution:

Time (h) = 96.0000	Atmosphere	Sump
Noble gases (Ci)	1.2317E-04	0.0000E+00
Elemental I (Ci)	0.0000E+00	0.0000E+00
Organic I (Ci)	0.0000E+00	0.0000E+00

Aerosol I (Ci)	0.0000E+00	0.0000E+00
All Aerosols (Ci)	1.1330-196	0.0000E+00
All Aerosols (kg)	8.4559-205	0.0000E+00

Time (h) = 96.0000	Deposition Surfaces	Recirculating Filter
Noble gases (Ci)	0.0000E+00	0.0000E+00
Elemental I (Ci)	0.0000E+00	0.0000E+00
Organic I (Ci)	0.0000E+00	0.0000E+00
Aerosol I (Ci)	0.0000E+00	0.0000E+00
All Aerosols (Ci)	0.0000E+00	2.3108E-02
All Aerosols (kg)	0.0000E+00	1.7247E-10

Ruptured Steam Generator Compartment Nuclide Inventory (Ci) at Time (h) = 96.0000

Nuclide	Compartment Atmosphere	Dose Fract	Exposure (Ci-hr)	Decays (Bq-s)	Pathway 6 Inflow	Pathway 8 Outflow
I-131	4.2458E+02	8.9396E-01	4.8458E+04	6.4582E+18	5.9994E+02	1.3874E+00
I-132	4.4972E-10	4.3211E-03	4.9516E+03	6.6514E+17	1.5078E+03	3.4417E+00
I-133	3.8849E+01	9.2710E-02	2.7006E+04	3.6119E+18	9.4436E+02	2.1811E+00
I-134	7.4639E-31	5.6412E-04	6.7195E+02	9.1157E+16	5.4212E+02	1.2101E+00
I-135	3.1092E-02	7.7558E-03	6.7131E+03	9.0044E+17	7.1032E+02	1.6354E+00
Xe-133	1.0197E+02	7.7497E-05	8.4278E+03	1.1210E+18	7.9025E-01	2.8276E-03
Xe-135	1.2092E+00	4.7872E-04	6.8247E+03	9.1292E+17	7.4626E+00	2.6880E-02
Xe-131m	1.1599E+00	1.4101E-07	6.1496E+01	8.1666E+15	2.5245E-03	9.0336E-06
Xe-133m	4.3468E+00	3.7282E-06	4.6167E+02	6.1449E+16	5.6527E-02	2.0222E-04
Xe-135m	5.0938E-03	1.2899E-04	1.0727E+03	1.4041E+17	3.5813E+01	1.1998E-01
Total	5.7215E+02	1.0000E+00	0.0000E+00	0.0000E+00	4.3487E+03	1.0006E+01

Dose Equivalent (Ci/cc) I-131 (Thyroid)	0.0000E+00
Dose Equivalent (Ci/cc) I-131 (CEDE)	0.0000E+00
Dose Equivalent (Ci/cc) I-131 (ICRP2 Thyroid)	0.0000E+00
Total I (Ci)	0.0000E+00
Dose Equivalent (Ci/cc) Xe-133 (EDE)	4.1779E-08

Ruptured Steam Generator Compartment Group Inventory Distribution:

Time (h) = 96.0000	Atmosphere	Sump
Noble gases (Ci)	1.0869E+02	0.0000E+00
Elemental I (Ci)	0.0000E+00	0.0000E+00
Organic I (Ci)	0.0000E+00	0.0000E+00
Aerosol I (Ci)	0.0000E+00	0.0000E+00
All Aerosols (Ci)	4.6346E+02	0.0000E+00
All Aerosols (kg)	3.4590E-06	0.0000E+00

```
#######################################################################
    ALION RADTRAD Version 3.10 Rev 2 run on 12/01/2014  at 16:21:18

                Copyright © 2009 Alion Science and Technology
#######################################################################
```

Exclusion Area Boundary Doses:

Time (h) = 720.0000	Whole Body	Thyroid	TEDE
Delta dose (rem)	0.0000E+00	0.0000E+00	0.0000E+00
Accumulated dose (rem)	5.3879E-02	1.6439E+01	5.6817E-01

Low Population Zone Doses:

Time (h) = 720.0000	Whole Body	Thyroid	TEDE
Delta dose (rem)	0.0000E+00	0.0000E+00	0.0000E+00
Accumulated dose (rem)	9.5643E-03	2.5296E+00	8.8981E-02

Control Room Doses:

Time (h) = 720.0000	Whole Body	Thyroid	TEDE	Skin
Delta dose (rem)	6.7296E-07	8.8609-195	6.7296E-07	8.2953E-05
Accumulated dose (rem)	3.3882E-03	7.7250E+00	2.4586E-01	1.7288E-01

****

RCS Compartment Nuclide Inventory (Ci) at Time (h) = 720.0000

Nuclide	Compartment Atmosphere	Dose Fract	Exposure (Ci-hr)	Decays (Bq-s)	Pathway 1 Outflow	Pathway 5 Outflow	Pathway 6 Outflow
I-131	5.2772E+03	9.6752E-01	1.7763E+07	2.3676E+21	3.7458E+01	1.0796E+03	5.9994E+02
I-132	1.1223E-89	6.2157E-04	2.4123E+05	3.2464E+19	9.4524E+01	1.9602E+02	1.5078E+03
I-133	4.2306E-06	2.9710E-02	2.9311E+06	3.9221E+20	5.8987E+01	1.1619E+03	9.4436E+02
I-134	4.6950-243	3.8916E-05	1.5700E+04	2.1316E+18	3.4224E+01	1.2825E+01	5.4212E+02
I-135	1.3887E-28	1.8834E-03	5.5213E+05	7.4199E+19	4.4410E+01	3.9667E+02	7.1032E+02
Xe-133	3.8248E+02	7.7699E-05	2.8618E+06	3.8127E+20	4.7298E-02	6.6929E+01	7.9025E-01
Xe-135	2.9348E-19	1.1421E-04	5.5147E+05	7.3747E+19	4.4656E-01	2.4112E+02	7.4626E+00
Xe-131m	1.5900E+02	8.9158E-07	1.3169E+05	1.7538E+19	1.5108E-04	2.8968E-01	2.5245E-03
Xe-133m	1.4583E-01	2.0267E-06	8.5001E+04	1.1326E+19	3.3833E-03	4.5311E+00	5.6527E-02
Xe-135m	2.2751E-29	3.0939E-05	8.7142E+04	1.1422E+19	2.1527E+00	6.2140E+01	3.5813E+01
Total	5.8188E+03	1.0000E+00	0.0000E+00	0.0000E+00	2.7225E+02	3.2220E+03	4.3487E+03

Dose Equivalent (Ci/cc) I-131 (Thyroid)	0.0000E+00
Dose Equivalent (Ci/cc) I-131 (CEDE)	0.0000E+00
Dose Equivalent (Ci/cc) I-131 (ICRP2 Thyroid)	0.0000E+00
Total I (Ci)	0.0000E+00
Dose Equivalent (Ci/cc) Xe-133 (EDE)	3.1990E-08

RCS Compartment Group Inventory Distribution:

Time (h) = 720.0000	Atmosphere	Sump
Noble gases (Ci)	5.4162E+02	0.0000E+00
Elemental I (Ci)	0.0000E+00	0.0000E+00
Organic I (Ci)	0.0000E+00	0.0000E+00
Aerosol I (Ci)	0.0000E+00	0.0000E+00
All Aerosols (Ci)	5.2772E+03	0.0000E+00
All Aerosols (kg)	4.2567E-05	0.0000E+00

Intact Steam Generators Compartment Nuclide Inventory (Ci) at Time (h) = 720.0000

Nuclide	Compartment Atmosphere	Dose Fract	Exposure (Ci-hr)	Decays (Bq-s)	Pathway 5 Inflow	Pathway 7 Outflow
I-131	8.2732E+01	9.7605E-01	2.6807E+05	3.5732E+19	1.0796E+03	3.3231E+01
I-132	1.7595E-91	1.0823E-04	6.2837E+02	8.5172E+16	1.9602E+02	3.3113E+00
I-133	6.6324E-08	2.2821E-02	3.3682E+04	4.5110E+18	1.1619E+03	3.3303E+01
I-134	7.3604-245	2.6099E-06	1.5751E+01	2.1403E+15	1.2825E+01	1.2024E-01
I-135	2.1771E-30	8.3007E-04	3.6404E+03	4.9170E+17	3.9667E+02	9.5760E+00
Xe-133	6.0385E+00	8.1251E-05	4.4770E+04	5.9653E+18	6.6929E+01	2.5856E+00
Xe-135	4.6343E-21	9.3045E-05	6.7210E+03	9.0113E+17	2.4112E+02	8.3908E+00
Xe-131m	2.4939E+00	9.3457E-07	2.0651E+03	2.7503E+17	2.8968E-01	1.1383E-02
Xe-133m	2.2979E-03	2.0898E-06	1.3112E+03	1.7477E+17	4.5311E+00	1.7375E-01
Xe-135m	3.5668E-31	1.4131E-05	5.9544E+02	7.8687E+16	6.2140E+01	1.5611E+00
Total	9.1267E+01	1.0000E+00	0.0000E+00	0.0000E+00	3.2220E+03	9.2264E+01

Dose Equivalent (Ci/cc) I-131 (Thyroid)	0.0000E+00
Dose Equivalent (Ci/cc) I-131 (CEDE)	0.0000E+00
Dose Equivalent (Ci/cc) I-131 (ICRP2 Thyroid)	0.0000E+00
Total I (Ci)	0.0000E+00
Dose Equivalent (Ci/cc) Xe-133 (EDE)	8.0425E-10

Intact Steam Generators Compartment Group Inventory Distribution:

Time (h) = 720.0000	Atmosphere	Sump
Noble gases (Ci)	8.5347E+00	0.0000E+00
Elemental I (Ci)	0.0000E+00	0.0000E+00
Organic I (Ci)	0.0000E+00	0.0000E+00
Aerosol I (Ci)	0.0000E+00	0.0000E+00
All Aerosols (Ci)	8.2732E+01	0.0000E+00
All Aerosols (kg)	6.6733E-07	0.0000E+00

Environment Integral Nuclide Release (Ci): at Time (h) = 720.0000

Nuclide	Compartment Atmosphere	Dose Fract Pathway 1	Dose Fract Pathway 7	Dose Fract Pathway 8
I-131	7.2086E+01	0.51162	0.15524	0.01894
I-132	1.0130E+02	0.06107	0.00095	0.00222
I-133	9.4485E+01	0.14992	0.02955	0.00554
I-134	3.5563E+01	0.02127	0.00004	0.00075
I-135	5.5632E+01	0.03799	0.00304	0.00140
Xe-133	2.6936E+00	0.00000	0.00001	0.00000
Xe-135	2.6366E+01	0.00002	0.00015	0.00000
Xe-131m	1.1676E-02	0.00000	0.00000	0.00000
Xe-133m	1.8016E-01	0.00000	0.00000	0.00000
Xe-135m	6.0181E+00	0.00019	0.00005	0.00001

Environment Compartment Group Inventory Distribution:

Time (h) = 720.0000	Total Release	Release Rate/s
Noble gases (Ci)	3.5269E+01	1.3607E-05
Elemental I (Ci)	0.0000E+00	0.0000E+00
Organic I (Ci)	0.0000E+00	0.0000E+00
Aerosol I (Ci)	0.0000E+00	0.0000E+00
All Aerosols (Ci)	3.5907E+02	1.3853E-04

Control Room Compartment Nuclide Inventory (Ci) at Time (h) = 720.0000

Nuclide	Compartment Atmosphere	Dose Fract	Exposure (Ci-hr)	Decays (Bq-s)	Compartment Recirc Filtr	Pathway 2 Inflow	Pathway 3 Inflow	Pathway 4 Outflow
I-131	0.0000E+00	5.1832E-01	6.2774E-03	8.3625E+11	2.2502E-03	3.0293E-02	1.0860E-02	6.8645E-03
I-132	0.0000E+00	5.2043E-02	1.3324E-02	1.7858E+12	4.7857E-96	7.1064E-02	2.2016E-02	1.4653E-02

I-133	0.0000E+00	1.4425E-01	9.3880E-03	1.2517E+12	1.8040E-12	4.6138E-02	1.5940E-02
1.0274E-02							
I-134	0.0000E+00	1.7284E-02	4.5999E-03	6.2265E+11	2.0020-249	2.7197E-02	7.8360E-03
5.1078E-03							
I-135	0.0000E+00	3.4237E-02	6.6210E-03	8.8404E+11	5.9215E-35	3.3530E-02	1.0992E-02
7.2549E-03							
Xe-133	1.0653E-13	2.9189E-03	7.0921E-02	8.2698E+12	0.0000E+00	6.1003E-02	1.6635E-04
6.8507E-02							
Xe-135	4.8007E-35	5.9842E-02	1.9061E-01	2.3497E+13	0.0000E+00	1.6576E-01	6.5712E-04
1.9517E-01							
Xe-131m	6.5222E-07	2.1785E-05	2.1228E-03	2.3311E+11	0.0000E+00	1.6972E-03	7.0816E-07
1.9266E-03							
Xe-133m	7.5673E-15	1.8163E-04	5.0251E-03	5.8575E+11	0.0000E+00	4.3514E-03	1.1267E-05
4.8525E-03							
Xe-135m	7.3948E-35	1.7091E-01	3.1756E-01	3.8608E+13	0.0000E+00	9.8526E-01	6.0330E-04
3.2493E-01							
Total	6.5222E-07	1.0000E+00	0.0000E+00	0.0000E+00	2.2502E-03	1.4263E+00	6.9082E-02
6.3954E-01							

Ruptured Steam Generator Compartment Nuclide Inventory (Ci) at Time (h) = 720.0000

Nuclide	Compartment Atmosphere	Dose Fract	Exposure (Ci-hr)	Decays (Bq-s)	Pathway 6 Inflow	Pathway 8 Outflow
I-131	4.5131E+01	9.6266E-01	1.5401E+05	2.0528E+19	5.9994E+02	1.3874E+00
I-132	9.5984E-92	1.4641E-03	4.9516E+03	6.6514E+17	1.5078E+03	3.4417E+00
I-133	3.6181E-08	3.2760E-02	2.8165E+04	3.7672E+18	9.4436E+02	2.1811E+00
I-134	4.0152-245	1.9114E-04	6.7195E+02	9.1157E+16	5.4212E+02	1.2101E+00
I-135	1.1876E-30	2.6279E-03	6.7134E+03	9.0048E+17	7.1032E+02	1.6354E+00
Xe-133	3.6346E+00	8.6493E-05	2.7761E+04	3.6989E+18	7.9025E-01	2.8276E-03
Xe-135	2.7971E-21	1.6258E-04	6.8407E+03	9.1508E+17	7.4626E+00	2.6880E-02
Xe-131m	1.3706E+00	8.9126E-07	1.1472E+03	1.5278E+17	2.5245E-03	9.0336E-06
Xe-133m	1.3465E-03	2.2543E-06	8.2391E+02	1.0980E+17	5.6527E-02	2.0222E-04
Xe-135m	1.9457E-31	4.3708E-05	1.0728E+03	1.4042E+17	3.5813E+01	1.1998E-01
Total	5.0138E+01	1.0000E+00	0.0000E+00	0.0000E+00	4.3487E+03	1.0006E+01

```
Dose Equivalent (Ci/cc) I-131 (Thyroid)              0.0000E+00
Dose Equivalent (Ci/cc) I-131 (CEDE)                 0.0000E+00
Dose Equivalent (Ci/cc) I-131 (ICRP2 Thyroid)        0.0000E+00
Total I  (Ci)                                        0.0000E+00
Dose Equivalent (Ci/cc) Xe-133 (EDE)                 1.4404E-09

Ruptured Steam Generator Compartment Group Inventory Distribution:

Time (h) = 720.0000       Atmosphere      Sump
Noble gases (Ci)          5.0065E+00   0.0000E+00
Elemental I (Ci)          0.0000E+00   0.0000E+00
Organic I (Ci)            0.0000E+00   0.0000E+00
Aerosol I (Ci)            0.0000E+00   0.0000E+00
All Aerosols (Ci)         4.5131E+01   0.0000E+00
All Aerosols (kg)         3.6404E-07   0.0000E+00

   1931

#######################################################################
    ALION RADTRAD Version 3.10 Rev 2 run on 12/01/2014  at 16:21:18

                Copyright © 2009 Alion Science and Technology
#######################################################################

#######################################################################
                              I-131 Summary
#######################################################################

                    RCS          Intact Steam Generato      Environment
Time (hr)    I-131 (Curies)         I-131 (Curies)       I-131 (Curies)
   0.000       0.0000E+00             0.0000E+00           0.0000E+00
   0.028       2.4919E+02             2.2775E-03           4.1911E-01
   0.110       9.5414E+02             3.8928E-02           2.9355E+00
```

0.139	1.1948E+03	6.1956E-02	4.5233E+00
0.278	2.2882E+03	2.4537E-01	1.3937E+01
0.477	3.6962E+03	6.9912E-01	3.5691E+01
0.500	3.8453E+03	7.6375E-01	3.8832E+01
0.667	5.3388E+03	1.3538E+00	3.8858E+01
0.878	7.2261E+03	2.4170E+00	3.8861E+01
1.089	9.1057E+03	3.7942E+00	3.8865E+01
1.289	1.0886E+04	5.3916E+00	3.8872E+01
1.489	1.2663E+04	7.2713E+00	3.8881E+01
1.689	1.4437E+04	9.4322E+00	3.8893E+01
1.889	1.6209E+04	1.1873E+01	3.8908E+01
2.000	1.7189E+04	1.3346E+01	3.8918E+01
2.243	1.9339E+04	1.6878E+01	3.8947E+01
2.443	2.1103E+04	2.0087E+01	3.8975E+01
2.643	2.2864E+04	2.3572E+01	3.9009E+01
2.843	2.4622E+04	2.7332E+01	3.9049E+01
3.043	2.6377E+04	3.1365E+01	3.9095E+01
3.243	2.8129E+04	3.5671E+01	3.9147E+01
3.443	2.9879E+04	4.0248E+01	3.9206E+01
3.643	3.1626E+04	4.5096E+01	3.9273E+01
3.843	3.3370E+04	5.0213E+01	3.9347E+01
4.043	3.5111E+04	5.5598E+01	3.9429E+01
4.243	3.6849E+04	6.1250E+01	3.9520E+01
4.443	3.8585E+04	6.7169E+01	3.9620E+01
4.643	4.0317E+04	7.3352E+01	3.9730E+01
4.843	4.2047E+04	7.9800E+01	3.9849E+01
5.043	4.3774E+04	8.6510E+01	3.9979E+01
5.243	4.5499E+04	9.3483E+01	4.0119E+01
5.443	4.7220E+04	1.0072E+02	4.0270E+01
5.643	4.8939E+04	1.0821E+02	4.0433E+01
5.843	5.0655E+04	1.1596E+02	4.0608E+01
6.043	5.2369E+04	1.2397E+02	4.0794E+01
6.243	5.4079E+04	1.3224E+02	4.0994E+01
6.443	5.5787E+04	1.4076E+02	4.1207E+01

6.643	5.7492E+04	1.4954E+02	4.1433E+01
6.843	5.9194E+04	1.5857E+02	4.1673E+01
7.043	6.0894E+04	1.6785E+02	4.1927E+01
7.243	6.2590E+04	1.7738E+02	4.2196E+01
7.443	6.4284E+04	1.8717E+02	4.2480E+01
7.643	6.5976E+04	1.9720E+02	4.2780E+01
7.843	6.7664E+04	2.0749E+02	4.3095E+01
8.000	6.8985E+04	2.1572E+02	4.3353E+01
8.000	6.8985E+04	2.1572E+02	4.3353E+01
8.200	6.8924E+04	2.2652E+02	4.3481E+01
8.400	6.8864E+04	2.3730E+02	4.3614E+01
8.600	6.8803E+04	2.4805E+02	4.3754E+01
8.800	6.8743E+04	2.5878E+02	4.3900E+01
9.000	6.8682E+04	2.6949E+02	4.4052E+01
9.200	6.8622E+04	2.8017E+02	4.4210E+01
9.400	6.8562E+04	2.9083E+02	4.4374E+01
9.600	6.8501E+04	3.0147E+02	4.4545E+01
9.800	6.8441E+04	3.1208E+02	4.4721E+01
10.000	6.8381E+04	3.2267E+02	4.4904E+01
10.200	6.8321E+04	3.3323E+02	4.5093E+01
24.000	6.4299E+04	1.0080E+03	7.2086E+01
96.000	4.9646E+04	7.7831E+02	7.2086E+01
720.000	5.2772E+03	8.2732E+01	7.2086E+01

Time (hr)	Control Room I-131 (Curies)	Ruptured Steam Genera I-131 (Curies)
0.000	0.0000E+00	0.0000E+00
0.028	1.5311E-04	1.7840E+00
0.110	1.1630E-02	3.0493E+01
0.139	1.0489E-02	4.8532E+01
0.278	7.8945E-03	1.9221E+02
0.477	9.1330E-03	5.4769E+02
0.500	9.4646E-03	5.9833E+02
0.667	3.4070E-03	5.9798E+02

0.878	9.3293E-04	5.9752E+02
1.089	2.5742E-04	5.9707E+02
1.289	7.7513E-05	5.9664E+02
1.489	2.5506E-05	5.9621E+02
1.689	1.1129E-05	5.9578E+02
1.889	7.9067E-06	5.9536E+02
2.000	7.7873E-06	5.9512E+02
2.243	7.8989E-06	5.9460E+02
2.443	9.1068E-06	5.9417E+02
2.643	1.0681E-05	5.9375E+02
2.843	1.2463E-05	5.9332E+02
3.043	1.4404E-05	5.9289E+02
3.243	1.6491E-05	5.9247E+02
3.443	1.8719E-05	5.9204E+02
3.643	2.1086E-05	5.9162E+02
3.843	2.3591E-05	5.9119E+02
4.043	2.6234E-05	5.9077E+02
4.243	2.9014E-05	5.9034E+02
4.443	3.1931E-05	5.8992E+02
4.643	3.4984E-05	5.8949E+02
4.843	3.8172E-05	5.8907E+02
5.043	4.1496E-05	5.8865E+02
5.243	4.4954E-05	5.8823E+02
5.443	4.8545E-05	5.8780E+02
5.643	5.2270E-05	5.8738E+02
5.843	5.6128E-05	5.8696E+02
6.043	6.0119E-05	5.8654E+02
6.243	6.4241E-05	5.8612E+02
6.443	6.8494E-05	5.8570E+02
6.643	7.2878E-05	5.8527E+02
6.843	7.7392E-05	5.8485E+02
7.043	8.2036E-05	5.8443E+02
7.243	8.6809E-05	5.8401E+02
7.443	9.1711E-05	5.8360E+02

7.643	9.6740E-05	5.8318E+02
7.843	1.0190E-04	5.8276E+02
8.000	1.0603E-04	5.8243E+02
8.000	1.0602E-04	5.8243E+02
8.200	4.1021E-05	5.8201E+02
8.400	2.2439E-05	5.8159E+02
8.600	1.7470E-05	5.8118E+02
8.800	1.6492E-05	5.8076E+02
9.000	1.6685E-05	5.8034E+02
9.200	1.7219E-05	5.7992E+02
9.400	1.7852E-05	5.7951E+02
9.600	1.8513E-05	5.7909E+02
9.800	1.9182E-05	5.7868E+02
10.000	1.9851E-05	5.7826E+02
10.200	2.0520E-05	5.7784E+02
24.000	6.3255E-05	5.4990E+02
96.000	1.0379-196	4.2458E+02
720.000	0.0000E+00	4.5131E+01

##
Cumulative Dose Summary
##

	Exclusion Area Bounda		Low Population Zone		Control Room	
Time (hr)	Thyroid (rem)	TEDE (rem)	Thyroid (rem)	TEDE (rem)	Thyroid (rem)	TEDE (rem)
0.000	0.0000E+00	0.0000E+00	0.0000E+00	0.0000E+00	0.0000E+00	0.0000E+00
0.028	1.7994E-01	6.4996E-03	2.4215E-02	8.7466E-04	1.9802E-03	6.2741E-05
0.110	9.1523E-01	3.3004E-02	1.6576E-01	5.9769E-03	5.2401E-01	1.6597E-02
0.139	1.3788E+00	4.9673E-02	2.5501E-01	9.1858E-03	9.2474E-01	2.9284E-02
0.278	4.1247E+00	1.4803E-01	7.8361E-01	2.8121E-02	2.4513E+00	7.7594E-02
0.477	1.0456E+01	3.7321E-01	2.0025E+00	7.1468E-02	4.4878E+00	1.4197E-01
0.500	1.1369E+01	4.0553E-01	2.1782E+00	7.7690E-02	4.7499E+00	1.5025E-01
0.667	1.1377E+01	4.0580E-01	2.1796E+00	7.7741E-02	5.9872E+00	1.8934E-01

0.878	1.1378E+01	4.0583E-01	2.1798E+00	7.7747E-02	6.4904E+00	2.0525E-01
1.089	1.1379E+01	4.0587E-01	2.1801E+00	7.7756E-02	6.6279E+00	2.0962E-01
1.289	1.1381E+01	4.0594E-01	2.1804E+00	7.7768E-02	6.6651E+00	2.1083E-01
1.489	1.1383E+01	4.0603E-01	2.1809E+00	7.7785E-02	6.6765E+00	2.1123E-01
1.689	1.1387E+01	4.0614E-01	2.1816E+00	7.7808E-02	6.6807E+00	2.1140E-01
1.889	1.1391E+01	4.0629E-01	2.1824E+00	7.7837E-02	6.6829E+00	2.1151E-01
2.000	1.1394E+01	4.0639E-01	2.1830E+00	7.7855E-02	6.6840E+00	2.1157E-01
2.243	1.1402E+01	4.0667E-01	2.1837E+00	7.7880E-02	6.6862E+00	2.1169E-01
2.443	1.1410E+01	4.0694E-01	2.1844E+00	7.7905E-02	6.6883E+00	2.1179E-01
2.643	1.1420E+01	4.0727E-01	2.1853E+00	7.7934E-02	6.6907E+00	2.1190E-01
2.843	1.1431E+01	4.0764E-01	2.1863E+00	7.7968E-02	6.6935E+00	2.1203E-01
3.043	1.1444E+01	4.0807E-01	2.1875E+00	7.8007E-02	6.6968E+00	2.1217E-01
3.243	1.1459E+01	4.0857E-01	2.1888E+00	7.8051E-02	6.7005E+00	2.1232E-01
3.443	1.1476E+01	4.0912E-01	2.1903E+00	7.8101E-02	6.7047E+00	2.1249E-01
3.643	1.1494E+01	4.0974E-01	2.1920E+00	7.8157E-02	6.7095E+00	2.1268E-01
3.843	1.1515E+01	4.1043E-01	2.1939E+00	7.8219E-02	6.7149E+00	2.1288E-01
4.043	1.1538E+01	4.1119E-01	2.1960E+00	7.8288E-02	6.7209E+00	2.1310E-01
4.243	1.1564E+01	4.1202E-01	2.1983E+00	7.8363E-02	6.7275E+00	2.1334E-01
4.443	1.1592E+01	4.1294E-01	2.2008E+00	7.8446E-02	6.7348E+00	2.1360E-01
4.643	1.1622E+01	4.1394E-01	2.2035E+00	7.8536E-02	6.7428E+00	2.1388E-01
4.843	1.1656E+01	4.1503E-01	2.2065E+00	7.8634E-02	6.7515E+00	2.1418E-01
5.043	1.1692E+01	4.1620E-01	2.2098E+00	7.8740E-02	6.7610E+00	2.1451E-01
5.243	1.1731E+01	4.1747E-01	2.2133E+00	7.8854E-02	6.7713E+00	2.1486E-01
5.443	1.1773E+01	4.1883E-01	2.2171E+00	7.8977E-02	6.7824E+00	2.1524E-01
5.643	1.1818E+01	4.2030E-01	2.2212E+00	7.9109E-02	6.7943E+00	2.1564E-01
5.843	1.1866E+01	4.2186E-01	2.2255E+00	7.9250E-02	6.8072E+00	2.1606E-01
6.043	1.1918E+01	4.2353E-01	2.2302E+00	7.9400E-02	6.8209E+00	2.1652E-01
6.243	1.1973E+01	4.2531E-01	2.2351E+00	7.9560E-02	6.8356E+00	2.1700E-01
6.443	1.2031E+01	4.2720E-01	2.2404E+00	7.9731E-02	6.8512E+00	2.1752E-01
6.643	1.2093E+01	4.2920E-01	2.2460E+00	7.9911E-02	6.8678E+00	2.1806E-01
6.843	1.2159E+01	4.3133E-01	2.2519E+00	8.0103E-02	6.8855E+00	2.1864E-01
7.043	1.2229E+01	4.3357E-01	2.2582E+00	8.0305E-02	6.9042E+00	2.1924E-01
7.243	1.2303E+01	4.3593E-01	2.2649E+00	8.0518E-02	6.9239E+00	2.1988E-01
7.443	1.2380E+01	4.3843E-01	2.2718E+00	8.0742E-02	6.9448E+00	2.2056E-01

7.643	1.2462E+01	4.4105E-01	2.2792E+00	8.0979E-02	6.9668E+00	2.2126E-01
7.843	1.2548E+01	4.4380E-01	2.2870E+00	8.1227E-02	6.9900E+00	2.2201E-01
8.000	1.2618E+01	4.4605E-01	2.2933E+00	8.1430E-02	7.0090E+00	2.2261E-01
8.000	1.2618E+01	4.4605E-01	2.2933E+00	8.1430E-02	7.0090E+00	2.2261E-01
8.200	1.2636E+01	4.4664E-01	2.2944E+00	8.1466E-02	7.0246E+00	2.2312E-01
8.400	1.2655E+01	4.4725E-01	2.2956E+00	8.1504E-02	7.0316E+00	2.2336E-01
8.600	1.2674E+01	4.4789E-01	2.2968E+00	8.1543E-02	7.0361E+00	2.2353E-01
8.800	1.2695E+01	4.4856E-01	2.2980E+00	8.1585E-02	7.0400E+00	2.2367E-01
9.000	1.2716E+01	4.4925E-01	2.2993E+00	8.1628E-02	7.0438E+00	2.2381E-01
9.200	1.2738E+01	4.4997E-01	2.3007E+00	8.1672E-02	7.0477E+00	2.2396E-01
9.400	1.2760E+01	4.5072E-01	2.3021E+00	8.1718E-02	7.0518E+00	2.2410E-01
9.600	1.2784E+01	4.5149E-01	2.3036E+00	8.1766E-02	7.0560E+00	2.2425E-01
9.800	1.2808E+01	4.5229E-01	2.3051E+00	8.1815E-02	7.0603E+00	2.2441E-01
10.000	1.2834E+01	4.5311E-01	2.3066E+00	8.1866E-02	7.0648E+00	2.2457E-01
10.200	1.2860E+01	4.5396E-01	2.3082E+00	8.1919E-02	7.0695E+00	2.2473E-01
24.000	1.6439E+01	5.6817E-01	2.5296E+00	8.8981E-02	7.7160E+00	2.4541E-01
96.000	1.6439E+01	5.6817E-01	2.5296E+00	8.8981E-02	7.7250E+00	2.4586E-01
720.000	1.6439E+01	5.6817E-01	2.5296E+00	8.8981E-02	7.7250E+00	2.4586E-01

```
#######################################################################
    ALION RADTRAD Version 3.10 Rev 2 run on 12/01/2014  at 16:21:18

                 Copyright © 2009 Alion Science and Technology
#######################################################################

            D. C. Cook - SGTR Concurrent Iodine Spike - Iodine Release

#######################################################################
                          Worst Two-Hour Doses
#######################################################################

Exclusion Area Boundary
   Time    Whole Body    Thyroid        TEDE
   (hr)      (rem)        (rem)         (rem)
    0.0   4.7700E-02   1.1394E+01   4.0639E-01

#######################################################################
                          Final Doses
#######################################################################

Low Population Zone
   Time    Whole Body    Thyroid        TEDE
   (hr)      (rem)        (rem)         (rem)
  720.0   9.5643E-03   2.5296E+00   8.8981E-02

Control Room
   Time    Whole Body    Thyroid        TEDE
   (hr)      (rem)        (rem)         (rem)
  720.0   3.3882E-03   7.7250E+00   2.4586E-01
```

Attachment E

Concurrent Accident Iodine Spike RADTRAD Output – RCS Release

(SGTR_Spike_RCS_R1.o0)

Note: The computer clock was set to 12/01/14 during model execution due to software date limitations

```
#######################################################################
    ALION RADTRAD Version 3.10 Rev 2 run on 12/01/2014  at 16:22:43

                Copyright © 2009 Alion Science and Technology
#######################################################################

            D. C. Cook - SGTR Concurrent Iodine Spike - RCS Activity

#######################################################################
                      File information
#######################################################################

Input File Name      = C:\Projects\1537-Cook_Dose\SGTR\SGTR_Spike_RCS_R1.psf
Output File Name     = C:\Projects\1537-Cook_Dose\SGTR\SGTR_Spike_RCS_R1.o0

Inventory file       =  c:\projects\1537-cook_dose\source_term\cook_rcs.nif
Release file         =    c:\projects\1537-cook_dose\sgtr\sgtr_spike_rcs_r1.rft
Dose Conversion file =    c:\projects\1537-cook_dose\source_term\rwa-1205-004.inp



    #####    ####   #####    #  #     #  #####   #    #  #####
    #    #  #       #        #  ##    #  #    #  #    #    #
    #    #  #       #        #  # #   #  #    #  #    #    #
    #####    ####   ####     #  #  #  #  #####   #    #    #
    #            #  #        #  #   # #  #       #    #    #
    #            #  #        #  #    ##  #       #    #    #
    #        ####   #        #  #     #  #        ####     #


  Radtrad 3.10  10/15/2013
  D. C. Cook - SGTR Concurrent Iodine Spike - RCS Activity
Dose Conversion Factor File:
  c:\projects\1537-cook_dose\source_term\rwa-1205-004.inp
```

```
Release Fraction & Timing Files:
  1
  c:\projects\1537-cook_dose\sgtr\sgtr_spike_rcs_r1.rft
Nuclide Inventory Files:
  1
  1 c:\projects\1537-cook_dose\source_term\cook_rcs.nif
Plant Power Level:
  2.1144E+02
Number of Compartments:
  5
Compartment 1:
  RCS
  3
  4.661415E+05
  0
  0
  0
  0
  0
Compartment 2:
  Intact Steam Generators
  3
  2.925471E+05
  0
  0
  0
  0
  0
Compartment 3:
  Environment
  2
  0.00E+00
  0
  0
  0
  0
  0
Compartment 4:
```

```
  Control Room
  1
  5.0616E+04
  0
  0
  1
  0
  0
Compartment 5:
  Ruptured Steam Generator
  3
  9.75157E+04
  0
  0
  0
  0
  0
Number of Pathways:
  8
Pathway 1:
  Flashed Break Flow & SG Tube Leakage
  1
  3
  2
Pathway 2:
  Control Room Makeup
  3
  4
  2
Pathway 3:
  Control Room Unfiltered Inleakage
  3
  4
  2
Pathway 4:
  Control Room Exhaust
  4
  3
```

```
  2
Pathway 5:
  Unflashed Intact SG Tube Leakage
  1
  2
  2
Pathway 6:
  Unflashed Break Flow & Ruptured SG Tube Leakage
  1
  5
  2
Pathway 7:
  Intact SG Steam Release
  2
  3
  2
Pathway 8:
  Ruptured Steam Generator Steam Relase
  5
  3
  2
  End of Plant Model
Source Term Input:
  1
  1  1  1  1
  0.00E+00
  0.00E+00   7.2E+02
  1
  3   0.00E+00   9.7E-01   3.00E-02
Overlying Pool:
  0
  0.00E+00
  0
  0
  0
  0
Compartments:
  5
```

```
Compartment 1:
  1
  1
  0
  0
  0
  0
  0
  0
  0
Compartment 2:
  1
  1
  0
  0
  0
  0
  0
  0
  0
Compartment 3:
  2
  1
  0
  0
  0
  0
  0
  0
  0
Compartment 4:
  1
  1
  0
  0
  0
  0
  1
```

```
  3
  0.00E+00   0.00E+00   9.801E+01   9.405E+01   9.405E+01
  1.1E-01   4.52E+03   9.801E+01   9.405E+01   9.405E+01
  7.2E+02   4.52E+03   9.801E+01   9.405E+01   9.405E+01
  0
  7.2E+02   0.00E+00   0.00E+00   0.00E+00   0.00E+00
  7.2E+02
  0
  0
Compartment 5:
  1
  1
  0
  0
  0
  0
  0
  0
  0
Pathways:
  8
Pathway 1:
  0
  0
  0
  0
  0
  1
  7
  0.00E+00   9.307E+02   0.00E+00   0.00E+00   0.00E+00
  2.8E-02   3.9188E+02   0.00E+00   0.00E+00   0.00E+00
  1.39E-01   2.9391E+02   0.00E+00   0.00E+00   0.00E+00
  2.78E-01   2.6896E+02   0.00E+00   0.00E+00   0.00E+00
  5.00E-01   2.5E-01   0.00E+00   0.00E+00   0.00E+00
  6.67E-01   0.00E+00   0.00E+00   0.00E+00   0.00E+00
  7.2E+02   0.00E+00   0.00E+00   0.00E+00   0.00E+00
  0
  7.2E+02   0.00E+00   0.00E+00   0.00E+00   0.00E+00
```

```
  7.2E+02
  0
  0
  0
  0
  0
  0
Pathway 2:
  0
  0
  0
  0
  0
  1
  3
  0.00E+00   8.8E+02   0.00E+00   0.00E+00   0.00E+00
  1.1E-01   8.8E+02   9.801E+01   9.405E+01   9.405E+01
  7.2E+02   8.8E+02   9.801E+01   9.405E+01   9.405E+01
  0
  7.2E+02   0.00E+00   0.00E+00   0.00E+00   0.00E+00
  7.2E+02
  0
  0
  0
  0
  0
  0
Pathway 3:
  0
  0
  0
  0
  0
  1
  2
  0.00E+00   4.00E+01   0.00E+00   0.00E+00   0.00E+00
  7.2E+02   4.00E+01   0.00E+00   0.00E+00   0.00E+00
  0
```

```
  7.2E+02   0.00E+00   0.00E+00   0.00E+00   0.00E+00
  7.2E+02
  0
  0
  0
  0
  0
  0
Pathway 4:
  0
  0
  0
  0
  0
  1
  2
  0.00E+00   9.2E+02   0.00E+00   0.00E+00   0.00E+00
  7.2E+02   9.2E+02   0.00E+00   0.00E+00   0.00E+00
  0
  7.2E+02   0.00E+00   0.00E+00   0.00E+00   0.00E+00
  7.2E+02
  0
  0
  0
  0
  0
  0
Pathway 5:
  0
  0
  0
  0
  0
  1
  8
  0.00E+00   5.059E+00   0.00E+00   0.00E+00   0.00E+00
  2.8E-02   5.746E+00   0.00E+00   0.00E+00   0.00E+00
  1.39E-01   5.871E+00   0.00E+00   0.00E+00   0.00E+00
```

```
  2.78E-01   5.902E+00   0.00E+00   0.00E+00   0.00E+00
  5.00E-01   5.996E+00   0.00E+00   0.00E+00   0.00E+00
  6.67E-01   6.246E+00   0.00E+00   0.00E+00   0.00E+00
  2.4E+01   0.00E+00   0.00E+00   0.00E+00   0.00E+00
  7.2E+02   0.00E+00   0.00E+00   0.00E+00   0.00E+00
  0
  7.2E+02   0.00E+00   0.00E+00   0.00E+00   0.00E+00
  7.2E+02
  0
  0
  0
  0
  0
  0
Pathway 6:
  0
  0
  0
  0
  0
  1
  6
  0.00E+00   3.9627E+03   0.00E+00   0.00E+00   0.00E+00
  2.8E-02   4.50084E+03   0.00E+00   0.00E+00   0.00E+00
  1.39E-01   4.59868E+03   0.00E+00   0.00E+00   0.00E+00
  2.78E-01   4.62314E+03   0.00E+00   0.00E+00   0.00E+00
  5.00E-01   0.00E+00   0.00E+00   0.00E+00   0.00E+00
  7.2E+02   0.00E+00   0.00E+00   0.00E+00   0.00E+00
  0
  7.2E+02   0.00E+00   0.00E+00   0.00E+00   0.00E+00
  7.2E+02
  0
  0
  0
  0
  0
  0
Pathway 7:
```

```
  0
  0
  0
  0
  0
  1
  7
  0.00E+00   4.29E+00   0.00E+00   0.00E+00   0.00E+00
  2.8E-02   1.402E+01   0.00E+00   0.00E+00   0.00E+00
  5.00E-01   6.99E+00   0.00E+00   0.00E+00   0.00E+00
  2.00E+00   7.6E+00   0.00E+00   0.00E+00   0.00E+00
  8.00E+00   2.81E+00   0.00E+00   0.00E+00   0.00E+00
  2.4E+01   0.00E+00   0.00E+00   0.00E+00   0.00E+00
  7.2E+02   0.00E+00   0.00E+00   0.00E+00   0.00E+00
  0
  7.2E+02   0.00E+00   0.00E+00   0.00E+00   0.00E+00
  7.2E+02
  0
  0
  0
  0
  0
  0
Pathway 8:
  0
  0
  0
  0
  0
  1
  4
  0.00E+00   1.43E+00   0.00E+00   0.00E+00   0.00E+00
  2.8E-02   4.41E+00   0.00E+00   0.00E+00   0.00E+00
  5.00E-01   0.00E+00   0.00E+00   0.00E+00   0.00E+00
  7.2E+02   0.00E+00   0.00E+00   0.00E+00   0.00E+00
  0
  7.2E+02   0.00E+00   0.00E+00   0.00E+00   0.00E+00
  7.2E+02
```

```
  0
  0
  0
  0
  0
  0
Dose Locations:
  3
Location 1:
  Exclusion Area Boundary
  3
  1
  4
  0.00E+00   3.5E-04
  8.00E+00   1.8E-04
  2.4E+01   2.3E-04
  7.2E+02   2.3E-04
  0
Location 2:
  Low Population Zone
  3
  1
  4
  0.00E+00   3.5E-04
  8.00E+00   1.8E-04
  2.4E+01   2.3E-04
  7.2E+02   2.3E-04
  0
Location 3:
  Control Room
  4
  1
  2
  0.00E+00   3.5E-04
  7.2E+02   3.5E-04
  1
  4
  0.00E+00   1.00E+00
```

```
  2.4E+01   6.00E-01
  9.6E+01   4.00E-01
  7.2E+02   4.00E-01
X/Q Tables:
  4
  Exclusion Area Boundary     …
  3
  0.00E+00   8.62E-04
  2.8E-02   5.87E-04
  7.2E+02   5.87E-04
  Low Population Zone
  7
  0.00E+00   1.16E-04
  2.8E-02   1.13E-04
  2.00E+00   5.29E-05
  8.00E+00   3.63E-05
  2.4E+01   1.65E-05
  9.6E+01   6.36E-06
  7.2E+02   6.36E-06
  Control Room Makeup
  8
  0.00E+00   8.5E-04
  2.8E-02   1.09E-02
  1.1E-01   1.26E-02
  2.00E+00   9.72E-03
  8.00E+00   3.26E-03
  2.4E+01   3.17E-03
  9.6E+01   2.8E-03
  7.2E+02   2.8E-03
  Control Room Unfiltered Inleakage
  7
  0.00E+00   8.5E-04
  2.8E-02   1.09E-02
  2.00E+00   8.61E-03
  8.00E+00   2.87E-03
  2.4E+01   2.78E-03
  9.6E+01   2.5E-03
  7.2E+02   2.5E-03
```

```
Inflow Pathways:
  2  2 3
Exhaust Pathways:
  4  1 4 7 8
X/Q table ID for Exhaust-Inflow paths:
  3 4
  -1 -1
  3 4
  3 4
Simulation Parameters:
  1
  0.00E+00   0.00E+00
Output Filename:
  C:\Projects\1537-Cook_Dose\SGTR\SGTR_Spike_RCS_R1.o0
  1
  1
  0
  0
  1
  End of Scenario File
```

```
#######################################################################
    ALION RADTRAD Version 3.10 Rev 2 run on 12/01/2014  at 16:22:43

                Copyright © 2009 Alion Science and Technology
#######################################################################

            D. C. Cook - SGTR Concurrent Iodine Spike - RCS Activity

#######################################################################
                      Plant Description
#######################################################################

Number of Nuclides = 100

Inventory Power    =   1.0000E+00 MWth
Plant Power Level =   2.1144E+02 MWth

Number of compartments    =   5

Compartment information

Compartment number  1
Name: RCS
Compartment volume =   4.6614E+05 (Cubic feet)
Compartment type is Normal
Pathways into and out of compartment  1
   Exit Pathway Number    1: Flashed Break Flow & SG Tube Leakage
   Exit Pathway Number    5: Unflashed Intact SG Tube Leakage
   Exit Pathway Number    6: Unflashed Break Flow & Ruptured SG Tube Leakage

Compartment number  2
Name: Intact Steam Generators
Compartment volume =   2.9255E+05 (Cubic feet)
Compartment type is Normal
Pathways into and out of compartment  2
   Inlet Pathway Number   5: Unflashed Intact SG Tube Leakage
   Exit Pathway Number    7: Intact SG Steam Release
```

```
Compartment number  3
Name: Environment
Compartment type is Environment
Pathways into and out of compartment  3
   Inlet Pathway Number   1: Flashed Break Flow & SG Tube Leakage
   Inlet Pathway Number   4: Control Room Exhaust
   Inlet Pathway Number   7: Intact SG Steam Release
   Inlet Pathway Number   8: Ruptured Steam Generator Steam Relase
   Exit Pathway Number    2: Control Room Makeup
   Exit Pathway Number    3: Control Room Unfiltered Inleakage

Compartment number  4
Name: Control Room
Compartment volume =   5.0616E+04 (Cubic feet)
Compartment type is Control Room
Removal devices within compartment:
     Filter(s)
Pathways into and out of compartment  4
   Inlet Pathway Number   2: Control Room Makeup
   Inlet Pathway Number   3: Control Room Unfiltered Inleakage
   Exit Pathway Number    4: Control Room Exhaust

Compartment number  5
Name: Ruptured Steam Generator
Compartment volume =   9.7516E+04 (Cubic feet)
Compartment type is Normal
Pathways into and out of compartment  5
   Inlet Pathway Number   6: Unflashed Break Flow & Ruptured SG Tube Leakage
   Exit Pathway Number    8: Ruptured Steam Generator Steam Relase

Total number of pathways =   8
```

```
#######################################################################
    ALION RADTRAD Version 3.10 Rev 2 run on 12/01/2014  at 16:22:43

                Copyright © 2009 Alion Science and Technology
#######################################################################

            D. C. Cook - SGTR Concurrent Iodine Spike - RCS Activity

#######################################################################
                     Scenario Description
#######################################################################

Power Ratio                              =   2.1144E+02

End Time                                 =   7.2000E+02 (Hours)

Radioactive Decay is enabled
Calculation of Daughters is enabled

Source Number  1 is used in Compartment  1  RCS
   Nuclide Distribution given in Ci/MWt
Fraction of Nuclide Distribution in this Compartment   1.00000

Iodine fractions for source number 1
     Aerosol     =   0.0000E+00
     Elemental   =   9.7000E-01
     Organic     =   3.0000E-02

Inventory file =     c:\projects\1537-cook_dose\source_term\cook_rcs.nif
Release from file =    c:\projects\1537-cook_dose\sgtr\sgtr_spike_rcs_r1.rft
Dose Conversion file =    c:\projects\1537-cook_dose\source_term\rwa-1205-004.inp


Nuclide  Group  Specific     half     Whole Body   Inhaled     Inhaled
 Name          Inventory     life        DCF       Thyroid    Effective
               (Ci/MWt)      (s)     (Sv-m3/Bq-s)  (Sv/Bq)     (Sv/Bq)
 Rb-86     3   8.797E-02  1.612E+06   4.810E-15   1.330E-09   1.790E-09
```

Sr-89	5	1.335E-03	4.363E+06	7.730E-17	7.960E-12	1.120E-08
Sr-90	5	1.237E-04	9.183E+08	7.530E-18	2.690E-10	3.510E-07
Sr-91	5	5.681E-04	3.420E+04	3.450E-14	9.640E-12	4.490E-10
Sr-92	5	2.488E-04	9.756E+03	6.790E-14	3.920E-12	2.180E-10
Y-90	9	2.152E-04	2.304E+05	1.900E-16	5.170E-13	2.280E-09
Y-91	9	1.692E-02	5.055E+06	2.600E-16	8.500E-12	1.320E-08
Y-92	9	3.067E-04	1.274E+04	1.300E-14	1.050E-12	2.110E-10
Y-93	9	2.010E-04	3.636E+04	4.800E-15	9.260E-13	5.820E-10
Zr-95	9	2.409E-02	5.528E+06	3.600E-14	1.440E-09	6.390E-09
Zr-97	9	3.920E-04	6.084E+04	9.020E-15	2.310E-11	1.170E-09
Nb-95	9	3.478E-02	3.037E+06	3.740E-14	3.580E-10	1.570E-09
Mo-99	7	2.070E+00	2.376E+05	7.280E-15	1.520E-11	1.070E-09
Tc-99m	7	1.980E+00	2.167E+04	5.890E-15	5.010E-11	8.800E-12
Ru-103	7	1.991E-02	3.394E+06	2.250E-14	2.570E-10	2.420E-09
Ru-105	7	9.723E-05	1.598E+04	3.810E-14	4.150E-12	1.230E-10
Ru-106	7	3.340E-02	3.181E+07	0.000E+00	1.720E-09	1.290E-07
Rh-105	7	7.689E-04	1.273E+05	3.720E-15	2.880E-12	2.580E-10
Te-127	4	2.489E-01	3.366E+04	2.420E-16	1.840E-12	8.600E-11
Te-127m	4	2.465E-01	9.418E+06	1.470E-16	9.660E-11	5.810E-09
Te-129	4	2.281E-01	4.176E+03	2.750E-15	1.630E-12	2.420E-11
Te-129m	4	3.463E-01	2.903E+06	1.550E-15	1.560E-10	6.470E-09
Te-131m	4	5.787E-02	1.080E+05	7.010E-14	3.610E-08	1.730E-09
Te-132	4	9.639E-01	2.815E+05	1.030E-14	6.280E-08	2.550E-09
Cs-134	3	3.327E+01	6.503E+07	7.570E-14	1.110E-08	1.250E-08
Cs-136	3	2.188E+00	1.132E+06	1.060E-13	1.730E-09	1.980E-09
Cs-137	3	1.852E+01	9.461E+08	7.740E-18	7.930E-09	8.630E-09
Ba-139	6	1.975E-04	4.962E+03	2.170E-15	2.400E-12	4.640E-11
Ba-140	6	1.940E-03	1.101E+06	8.580E-15	2.560E-10	1.010E-09
La-140	9	2.878E-03	1.450E+05	1.170E-13	6.870E-11	1.310E-09
La-141	9	1.301E-04	1.415E+04	2.390E-15	9.400E-12	1.570E-10
La-142	9	3.346E-05	5.550E+03	1.440E-13	8.740E-12	6.840E-11
Ce-141	8	1.445E-02	2.808E+06	3.430E-15	2.550E-11	2.420E-09
Ce-143	8	6.911E-04	1.188E+05	1.290E-14	6.230E-12	9.160E-10
Ce-144	8	4.229E-02	2.456E+07	8.530E-16	2.920E-10	1.010E-07
Pr-143	9	6.713E-03	1.172E+06	2.100E-17	1.680E-18	2.190E-09
Rb-89	3	2.530E-02	9.120E+02	1.060E-13	1.610E-12	1.160E-11
Y-91m	9	3.314E-04	2.983E+03	2.550E-14	5.020E-13	9.820E-12
Nb-95m	9	1.867E-04	3.118E+05	2.930E-15	3.860E-11	6.590E-10

Nb-97	9	4.900E-05	4.326E+03	3.180E-14	9.200E-13	2.240E-11
Rh-103m	7	1.988E-02	3.367E+03	8.800E-18	8.490E-14	1.380E-12
Te-125m	4	2.449E-02	5.011E+06	4.530E-16	3.870E-11	1.970E-09
Te-131	4	1.599E-02	1.500E+03	2.040E-14	2.630E-09	1.290E-10
Te-133m	4	7.643E-03	3.324E+03	1.140E-13	2.610E-09	1.170E-10
Te-134	4	1.092E-02	2.508E+03	4.240E-14	5.540E-10	3.440E-11
Xe-138	1	2.292E-01	8.500E+02	5.770E-14	0.000E+00	0.000E+00
Cs-134m	3	2.031E-02	1.044E+04	9.050E-16	3.340E-12	1.180E-11
Cs-138	3	3.420E-01	1.932E+03	1.210E-13	3.570E-12	2.740E-11
Ba-141	6	4.233E-05	1.096E+03	4.160E-14	1.330E-12	2.180E-11

Nuclide	Daughter	Fraction	Daughter	Fraction	Daughter	Fraction
Sr-90	Y-90	1.00	none	0.00	none	0.00
Sr-91	Y-91m	0.58	Y-91	0.42	none	0.00
Sr-92	Y-92	1.00	none	0.00	none	0.00
Y-93	Zr-93	1.00	none	0.00	none	0.00
Zr-95	Nb-95m	0.01	Nb-95	0.99	none	0.00
Zr-97	Nb-97m	0.95	Nb-97	0.05	none	0.00
Mo-99	Tc-99m	0.88	Tc-99	0.12	none	0.00
Tc-99m	Tc-99	1.00	none	0.00	none	0.00
Ru-103	Rh-103m	1.00	none	0.00	none	0.00
Ru-105	Rh-105	1.00	none	0.00	none	0.00
Ru-106	Rh-106	1.00	none	0.00	none	0.00
Te-127m	Te-127	0.98	none	0.00	none	0.00
Te-129	I-129	1.00	none	0.00	none	0.00
Te-129m	I-129	0.35	Te-129	0.65	none	0.00
Te-131m	I-131	0.78	Te-131	0.22	none	0.00
Te-132	I-132	1.00	none	0.00	none	0.00
Cs-137	Ba-137m	0.95	none	0.00	none	0.00
Ba-140	La-140	1.00	none	0.00	none	0.00
La-141	Ce-141	1.00	none	0.00	none	0.00
Ce-143	Pr-143	1.00	none	0.00	none	0.00
Ce-144	Pr-144m	0.02	Pr-144	0.98	none	0.00
Rb-89	Sr-89	1.00	none	0.00	none	0.00
Y-91m	Y-91	1.00	none	0.00	none	0.00
Nb-95m	Nb-95	1.00	none	0.00	none	0.00
Te-131	I-131	1.00	none	0.00	none	0.00
Te-133m	I-133	0.87	Te-133	0.13	none	0.00

Te-134	I-134	1.00	none	0.00	none	0.00
Xe-138	Cs-138	1.00	none	0.00	none	0.00
Cs-134m	Cs-134	1.00	none	0.00	none	0.00
Ba-141	La-141	1.00	none	0.00	none	0.00

Release Fractions and Timings
RWA-1313-011 - D.C. Cook SGTR Concurrent Iodine Spike - RCS
Duration (h):

	GAP	EARLY IN-VESSEL	LATE RELEASE	RELEASE MASS
	0.000010 hr	0.0000 hrs	0.0000 hrs	(Ci)
NOBLES	0.0000E+00	0.0000E+00	0.0000E+00	0.000E+00
IODINE	0.0000E+00	0.0000E+00	0.0000E+00	0.000E+00
CESIUM	1.0000E+00	0.0000E+00	0.0000E+00	1.151E+04
TELLURIUM	1.0000E+00	0.0000E+00	0.0000E+00	4.547E+02
STRONTIUM	1.0000E+00	0.0000E+00	0.0000E+00	4.812E-01
BARIUM	1.0000E+00	0.0000E+00	0.0000E+00	4.609E-01
RUTHENIUM	1.0000E+00	0.0000E+00	0.0000E+00	8.720E+02
CERIUM	1.0000E+00	0.0000E+00	0.0000E+00	1.214E+01
LANTHANUM	1.0000E+00	0.0000E+00	0.0000E+00	1.844E+01
AEROSOL	0.0000E+00	0.0000E+00	0.0000E+00	0.000E+00

COMPARTMENT DATA

Compartment number 1: RCS

Compartment number 2: Intact Steam Generators

Compartment number 3: Environment

Compartment number 4: Control Room

Compartment Filter Data

Time (hr)	Flow Rate (cfm)	Filter Efficiencies (%) Aerosol	Elemental	Organic
0.0000E+00	0.0000E+00	9.8010E+01	9.4050E+01	9.4050E+01
1.1000E-01	4.5200E+03	9.8010E+01	9.4050E+01	9.4050E+01
7.2000E+02	4.5200E+03	9.8010E+01	9.4050E+01	9.4050E+01

Compartment number 5: Ruptured Steam Generator

PATHWAY DATA

Pathway number 1: Flashed Break Flow & SG Tube Leakage

Pathway Filter: Removal Data

Time (hr)	Flow Rate (cfm)	Filter Efficiencies (%) Aerosol	Elemental	Organic
0.0000E+00	9.3070E+02	0.0000E+00	0.0000E+00	0.0000E+00
2.8000E-02	3.9188E+02	0.0000E+00	0.0000E+00	0.0000E+00
1.3900E-01	2.9391E+02	0.0000E+00	0.0000E+00	0.0000E+00
2.7800E-01	2.6896E+02	0.0000E+00	0.0000E+00	0.0000E+00
5.0000E-01	2.5000E-01	0.0000E+00	0.0000E+00	0.0000E+00
6.6700E-01	0.0000E+00	0.0000E+00	0.0000E+00	0.0000E+00
7.2000E+02	0.0000E+00	0.0000E+00	0.0000E+00	0.0000E+00

Pathway number 2: Control Room Makeup

Pathway Filter: Removal Data

Time (hr)	Flow Rate (cfm)	Filter Efficiencies (%) Aerosol	Elemental	Organic
0.0000E+00	8.8000E+02	0.0000E+00	0.0000E+00	0.0000E+00
1.1000E-01	8.8000E+02	9.8010E+01	9.4050E+01	9.4050E+01
7.2000E+02	8.8000E+02	9.8010E+01	9.4050E+01	9.4050E+01

Pathway number 3: Control Room Unfiltered Inleakage

Pathway Filter: Removal Data

Time (hr)	Flow Rate (cfm)	Filter Efficiencies (%) Aerosol	Elemental	Organic
0.0000E+00	4.0000E+01	0.0000E+00	0.0000E+00	0.0000E+00
7.2000E+02	4.0000E+01	0.0000E+00	0.0000E+00	0.0000E+00

Pathway number 4: Control Room Exhaust

Pathway Filter: Removal Data

Time (hr)	Flow Rate (cfm)	Filter Efficiencies (%) Aerosol	Elemental	Organic
0.0000E+00	9.2000E+02	0.0000E+00	0.0000E+00	0.0000E+00
7.2000E+02	9.2000E+02	0.0000E+00	0.0000E+00	0.0000E+00

Pathway number 5: Unflashed Intact SG Tube Leakage

Pathway Filter: Removal Data

Time (hr)	Flow Rate (cfm)	Filter Efficiencies (%) Aerosol	Elemental	Organic
0.0000E+00	5.0590E+00	0.0000E+00	0.0000E+00	0.0000E+00
2.8000E-02	5.7460E+00	0.0000E+00	0.0000E+00	0.0000E+00
1.3900E-01	5.8710E+00	0.0000E+00	0.0000E+00	0.0000E+00
2.7800E-01	5.9020E+00	0.0000E+00	0.0000E+00	0.0000E+00
5.0000E-01	5.9960E+00	0.0000E+00	0.0000E+00	0.0000E+00
6.6700E-01	6.2460E+00	0.0000E+00	0.0000E+00	0.0000E+00
2.4000E+01	0.0000E+00	0.0000E+00	0.0000E+00	0.0000E+00
7.2000E+02	0.0000E+00	0.0000E+00	0.0000E+00	0.0000E+00

Pathway number 6: Unflashed Break Flow & Ruptured SG Tube Leakage

Pathway Filter: Removal Data

Time (hr)	Flow Rate (cfm)	Filter Efficiencies (%) Aerosol	Elemental	Organic
0.0000E+00	3.9627E+03	0.0000E+00	0.0000E+00	0.0000E+00
2.8000E-02	4.5008E+03	0.0000E+00	0.0000E+00	0.0000E+00
1.3900E-01	4.5987E+03	0.0000E+00	0.0000E+00	0.0000E+00
2.7800E-01	4.6231E+03	0.0000E+00	0.0000E+00	0.0000E+00
5.0000E-01	0.0000E+00	0.0000E+00	0.0000E+00	0.0000E+00
7.2000E+02	0.0000E+00	0.0000E+00	0.0000E+00	0.0000E+00

Pathway number 7: Intact SG Steam Release

Pathway Filter: Removal Data

Time (hr)	Flow Rate (cfm)	Filter Efficiencies (%) Aerosol	Elemental	Organic
0.0000E+00	4.2900E+00	0.0000E+00	0.0000E+00	0.0000E+00
2.8000E-02	1.4020E+01	0.0000E+00	0.0000E+00	0.0000E+00
5.0000E-01	6.9900E+00	0.0000E+00	0.0000E+00	0.0000E+00
2.0000E+00	7.6000E+00	0.0000E+00	0.0000E+00	0.0000E+00
8.0000E+00	2.8100E+00	0.0000E+00	0.0000E+00	0.0000E+00
2.4000E+01	0.0000E+00	0.0000E+00	0.0000E+00	0.0000E+00
7.2000E+02	0.0000E+00	0.0000E+00	0.0000E+00	0.0000E+00

Pathway number 8: Ruptured Steam Generator Steam Relase

Pathway Filter: Removal Data

Time (hr)	Flow Rate (cfm)	Filter Efficiencies (%) Aerosol	Elemental	Organic
0.0000E+00	1.4300E+00	0.0000E+00	0.0000E+00	0.0000E+00
2.8000E-02	4.4100E+00	0.0000E+00	0.0000E+00	0.0000E+00
5.0000E-01	0.0000E+00	0.0000E+00	0.0000E+00	0.0000E+00
7.2000E+02	0.0000E+00	0.0000E+00	0.0000E+00	0.0000E+00

DOSE INFORMATION
Number_Dose_Locations = 3

Dose Location Name = Exclusion Area Boundary
Located in compartment 3 the Environment

Exclusion Area Boundary Breathing Rate Data

Time (hr)	Breathing Rate (m^3 * sec^-1)
0.0000E+00	3.5000E-04
8.0000E+00	1.8000E-04
2.4000E+01	2.3000E-04
7.2000E+02	2.3000E-04

Dose Location Name = Low Population Zone

Located in compartment 3 the Environment

Low Population Zone Breathing Rate Data

Time (hr)	Breathing Rate (m^3 * sec^-1)
0.0000E+00	3.5000E-04
8.0000E+00	1.8000E-04
2.4000E+01	2.3000E-04
7.2000E+02	2.3000E-04

Dose Location Name = Control Room
Located in compartment 4 the Control Room

Control Room Breathing Rate Data

Time (hr)	Breathing Rate (m^3 * sec^-1)
0.0000E+00	3.5000E-04
7.2000E+02	3.5000E-04

Control Room Occupancy Factor Data

Time (hr)	Occupancy Factor
0.0000E+00	1.0000E+00
2.4000E+01	6.0000E-01
9.6000E+01	4.0000E-01
7.2000E+02	4.0000E-01

X/Q, ATMOSPHERIC DISPERSION INFORMATION

X/Q Table Name = Exclusion Area Boundary

Location X/Q Data

Time (hr)	X/Q (s * m^-3)
0.0000E+00	8.6200E-04
2.8000E-02	5.8700E-04
7.2000E+02	5.8700E-04

X/Q Table Name = Low Population Zone

Location X/Q Data

Time (hr)	X/Q (s * m^-3)

0.0000E+00	1.1600E-04
2.8000E-02	1.1300E-04
2.0000E+00	5.2900E-05
8.0000E+00	3.6300E-05
2.4000E+01	1.6500E-05
9.6000E+01	6.3600E-06
7.2000E+02	6.3600E-06

X/Q Table Name = Control Room Makeup

Location X/Q Data

Time (hr)	X/Q (s * m^-3)
0.0000E+00	8.5000E-04
2.8000E-02	1.0900E-02
1.1000E-01	1.2600E-02
2.0000E+00	9.7200E-03
8.0000E+00	3.2600E-03
2.4000E+01	3.1700E-03
9.6000E+01	2.8000E-03
7.2000E+02	2.8000E-03

This X/Q Table is used for these connected pathways
Path 1 Flashed Break Flow & SG Tube Leakage and Path 2 Control Room Makeup
Path 7 Intact SG Steam Release and Path 2 Control Room Makeup
Path 8 Ruptured Steam Generator Steam Relase and Path 2 Control Room Makeup

X/Q Table Name = Control Room Unfiltered Inleakage

Location X/Q Data

Time (hr)	X/Q (s * m^-3)
0.0000E+00	8.5000E-04
2.8000E-02	1.0900E-02
2.0000E+00	8.6100E-03
8.0000E+00	2.8700E-03
2.4000E+01	2.7800E-03
9.6000E+01	2.5000E-03
7.2000E+02	2.5000E-03

```
This X/Q Table is used for these connected pathways
 Path  1  Flashed Break Flow & SG Tube Leakage and Path  3  Control Room Unfiltered Inleakage
 Path  7  Intact SG Steam Release and Path  3  Control Room Unfiltered Inleakage
 Path  8  Ruptured Steam Generator Steam Relase and Path  3  Control Room Unfiltered Inleakage

USER SPECIFIED TIME STEP DATA - SUPPLEMENTAL TIME STEPS
        Time (hr)       Time step (hr)
       0.0000E+00        0.0000E+00

 EDIT EACH MAJOR TIME STEP

 DO NOT EDIT SUPPLEMENTAL TIME STEPS

 DO NOT EDIT MODEL DECONTAMINATION

      Masses in Curies in detailed output
```

```
#######################################################################
   ALION RADTRAD Version 3.10 Rev 2 run on 12/01/2014  at 16:22:43

                Copyright © 2009 Alion Science and Technology
#######################################################################


    ####   #    #  #####  #####   #    #  #####
   #    #  #    #    #    #    #  #    #    #
   #    #  #    #    #    #    #  #    #    #
   #    #  #    #    #    #####   #    #    #
   #    #  #    #    #    #       #    #    #
   #    #  #    #    #    #       #    #    #
    ####    ####     #    #        ####     #

            D. C. Cook - SGTR Concurrent Iodine Spike - RCS Activity

#######################################################################
            Dose, Detailed model and Detailed Inventory Output
#######################################################################

#######################################################################
   ALION RADTRAD Version 3.10 Rev 2 run on 12/01/2014  at 16:22:43

                Copyright © 2009 Alion Science and Technology
#######################################################################

Exclusion Area Boundary Doses:

Time (h) =   0.0000    Whole Body   Thyroid       TEDE
Delta dose (rem)        1.1479E-06  8.2435E-05  8.5680E-05
Accumulated dose (rem)  1.1479E-06  8.2435E-05  8.5680E-05
```

Low Population Zone Doses:

Time (h) = 0.0000	Whole Body	Thyroid	TEDE
Delta dose (rem)	1.5448E-07	1.1093E-05	1.1530E-05
Accumulated dose (rem)	1.5448E-07	1.1093E-05	1.1530E-05

Control Room Doses:

Time (h) = 0.0000	Whole Body	Thyroid	TEDE	Skin
Delta dose (rem)	2.0473E-13	4.4324E-10	4.5472E-10	8.2158E-12
Accumulated dose (rem)	2.0473E-13	4.4324E-10	4.5472E-10	8.2158E-12

****

RCS Compartment Nuclide Inventory (Ci) at Time (h) = 0.0000

Nuclide	Compartment Atmosphere	Dose Fract	Exposure (Ci-hr)	Decays (Bq-s)
Rb-86	1.8600E+01	2.6182E-04	1.8600E-04	2.4776E+10
Sr-89	2.8227E-01	2.4672E-05	2.8227E-06	3.7599E+08
Sr-90	2.6155E-02	7.1643E-05	2.6155E-07	3.4838E+07
Sr-91	1.2012E-01	5.1329E-07	1.2012E-06	1.6000E+08
Sr-92	5.2606E-02	1.6914E-07	5.2606E-07	7.0071E+07
Y-90	4.5502E-02	8.0980E-07	4.5502E-07	6.0608E+07
Y-91	3.5776E+00	3.6855E-04	3.5776E-05	4.7653E+09
Y-92	6.4848E-02	1.2558E-07	6.4848E-07	8.6378E+07
Y-93	4.2499E-02	1.9758E-07	4.2499E-07	5.6609E+07
Zr-95	5.0936E+00	2.5809E-04	5.0936E-05	6.7846E+09
Zr-97	8.2884E-02	7.7345E-07	8.2884E-07	1.1040E+08
Nb-95	7.3539E+00	9.6233E-05	7.3539E-05	9.7953E+09
Mo-99	4.3768E+02	3.7258E-03	4.3768E-03	5.8299E+11
Tc-99m	4.1865E+02	8.3731E-05	4.1865E-03	5.5764E+11
Ru-103	4.2098E+00	8.1615E-05	4.2098E-05	5.6074E+09
Ru-105	2.0558E-02	3.7198E-08	2.0558E-07	2.7384E+07
Ru-106	7.0621E+00	7.1094E-03	7.0621E-05	9.4067E+09
Rh-105	1.6258E-01	3.4082E-07	1.6258E-06	2.1655E+08
Te-127	5.2627E+01	3.5604E-05	5.2627E-04	7.0099E+10
Te-127m	5.2120E+01	2.3633E-03	5.2120E-04	6.9424E+10

Te-129	4.8229E+01	1.2066E-05	4.8229E-04	6.4241E+10
Te-129m	7.3221E+01	3.6996E-03	7.3221E-04	9.7531E+10
Te-131m	1.2236E+01	1.8432E-04	1.2236E-04	1.6298E+10
Te-132	2.0381E+02	4.1026E-03	2.0381E-03	2.7147E+11
I-132	6.1421E-04	2.0275E-09	6.1421E-09	0.0000E+00
I-134	1.8256E-05	5.7973E-11	1.8256E-10	0.0000E+00
Cs-134	7.0346E+03	6.9809E-01	7.0346E-02	9.3701E+12
Cs-136	4.6263E+02	8.2419E-03	4.6263E-03	6.1622E+11
Cs-137	3.9159E+03	2.6373E-01	3.9159E-02	5.2159E+12
Ba-139	4.1759E-02	1.7142E-08	4.1759E-07	5.5623E+07
Ba-140	4.1019E-01	3.3116E-06	4.1019E-06	5.4638E+08
La-140	6.0852E-01	7.8085E-06	6.0852E-06	8.1055E+08
La-141	2.7508E-02	3.5169E-08	2.7508E-07	3.6641E+07
La-142	7.0747E-03	2.6492E-08	7.0747E-08	9.4236E+06
Ce-141	3.0553E+00	5.7935E-05	3.0553E-05	4.0697E+09
Ce-143	1.4613E-01	1.0866E-06	1.4613E-06	1.9464E+08
Ce-144	8.9418E+00	7.0480E-03	8.9418E-05	1.1910E+10
Pr-143	1.4194E+00	2.4259E-05	1.4194E-05	1.8906E+09
Rb-89	5.3493E+00	1.3127E-05	5.3493E-05	7.1253E+09
Y-91m	7.0071E-02	4.5210E-08	7.0071E-07	9.3334E+07
Nb-95m	3.9476E-02	2.0559E-07	3.9476E-07	5.2582E+07
Nb-97	1.0360E-02	9.1571E-09	1.0360E-07	1.3800E+07
Rh-103m	4.2034E+00	4.6093E-08	4.2034E-05	5.5989E+09
Te-125m	5.1781E+00	7.9660E-05	5.1781E-05	6.8973E+09
Te-131	3.3809E+00	4.9414E-06	3.3809E-05	4.5033E+09
Te-133	7.0178E-06	8.5615E-12	7.0178E-11	0.0000E+00
Te-133m	1.6160E+00	5.5832E-06	1.6160E-05	2.1525E+09
Te-134	2.3089E+00	2.8026E-06	2.3089E-05	3.0755E+09
Cs-134m	4.2943E+00	4.8210E-07	4.2943E-05	5.7200E+09
Cs-138	7.2311E+01	2.1055E-04	7.2311E-04	9.6319E+10
Ba-141	8.9500E-03	9.8242E-09	8.9500E-08	1.1922E+07
Total	1.2872E+04	1.0000E+00	0.0000E+00	0.0000E+00

Dose Equivalent (Ci/cc) I-131 (Thyroid)	3.1966E-16
Dose Equivalent (Ci/cc) I-131 (CEDE)	5.8606E-16
Dose Equivalent (Ci/cc) I-131 (ICRP2 Thyroid)	1.7456E-15
Total I (Ci)	6.3340E-04

RCS Compartment Group Inventory Distribution:

Time (h) = 0.0000	Atmosphere	Sump
Noble gases (Ci)	0.0000E+00	0.0000E+00
Elemental I (Ci)	6.1439E-04	0.0000E+00
Organic I (Ci)	1.9002E-05	0.0000E+00
Aerosol I (Ci)	0.0000E+00	0.0000E+00
All Aerosols (Ci)	1.2872E+04	0.0000E+00
All Aerosols (kg)	5.0444E-02	0.0000E+00

Intact Steam Generators Compartment Nuclide Inventory (Ci) at Time (h) = 0.0000

Nuclide	Compartment Atmosphere	Dose Fract	Exposure (Ci-hr)	Decays (Bq-s)
Mo-99	1.4250E-06	3.7258E-03	1.4250E-11	1.8981E+03
Tc-99m	1.3631E-06	8.3731E-05	1.3631E-11	1.8156E+03
Cs-134	2.2904E-05	6.9809E-01	2.2904E-10	3.0508E+04
Cs-136	1.5063E-06	8.2419E-03	1.5063E-11	2.0063E+03
Cs-137	1.2750E-05	2.6373E-01	1.2750E-10	1.6982E+04
Total	4.1909E-05	1.0000E+00	0.0000E+00	0.0000E+00

Dose Equivalent (Ci/cc) I-131 (Thyroid)	1.6584E-24
Dose Equivalent (Ci/cc) I-131 (CEDE)	3.0404E-24
Dose Equivalent (Ci/cc) I-131 (ICRP2 Thyroid)	9.0562E-24
Total I (Ci)	2.0623E-12

Intact Steam Generators Compartment Group Inventory Distribution:

Time (h) = 0.0000	Atmosphere	Sump
Noble gases (Ci)	0.0000E+00	0.0000E+00
Elemental I (Ci)	0.0000E+00	0.0000E+00
Organic I (Ci)	0.0000E+00	0.0000E+00
Aerosol I (Ci)	0.0000E+00	0.0000E+00
All Aerosols (Ci)	4.1909E-05	0.0000E+00
All Aerosols (kg)	1.6424E-10	0.0000E+00

Control Room Compartment Nuclide Inventory (Ci) at Time (h) = 0.0000

Nuclide	Compartment Atmosphere	Dose Fract	Exposure (Ci-hr)	Decays (Bq-s)
Cs-134	1.5551E-06	6.9809E-01	1.5551E-11	2.0714E+03
Total	2.8455E-06	1.0000E+00	0.0000E+00	0.0000E+00

Control Room Compartment Group Inventory Distribution:

Time (h) = 0.0000	Atmosphere	Sump
Noble gases (Ci)	0.0000E+00	0.0000E+00
Elemental I (Ci)	0.0000E+00	0.0000E+00
Organic I (Ci)	0.0000E+00	0.0000E+00
Aerosol I (Ci)	0.0000E+00	0.0000E+00
All Aerosols (Ci)	2.8455E-06	0.0000E+00
All Aerosols (kg)	1.1151E-11	0.0000E+00

Time (h) = 0.0000	Deposition Surfaces	Recirculating Filter
Noble gases (Ci)	0.0000E+00	0.0000E+00
Elemental I (Ci)	0.0000E+00	0.0000E+00
Organic I (Ci)	0.0000E+00	0.0000E+00
Aerosol I (Ci)	0.0000E+00	0.0000E+00
All Aerosols (Ci)	0.0000E+00	0.0000E+00
All Aerosols (kg)	0.0000E+00	0.0000E+00

Ruptured Steam Generator Compartment Nuclide Inventory (Ci) at Time (h) = 0.0000

Nuclide	Compartment Atmosphere	Dose Fract	Exposure (Ci-hr)	Decays (Bq-s)
Rb-86	4.7437E-05	2.6182E-04	4.7437E-10	6.3186E+04
Y-91	9.1239E-06	3.6855E-04	9.1239E-11	1.2153E+04
Zr-95	1.2990E-05	2.5809E-04	1.2990E-10	1.7303E+04
Nb-95	1.8755E-05	9.6233E-05	1.8755E-10	2.4981E+04
Mo-99	1.1162E-03	3.7258E-03	1.1162E-08	1.4868E+06
Tc-99m	1.0677E-03	8.3731E-05	1.0677E-08	1.4222E+06
Ru-103	1.0736E-05	8.1615E-05	1.0736E-10	1.4301E+04
Ru-106	1.8011E-05	7.1094E-03	1.8011E-10	2.3990E+04
Te-127	1.3422E-04	3.5604E-05	1.3422E-09	1.7878E+05
Te-127m	1.3292E-04	2.3633E-03	1.3292E-09	1.7705E+05

Te-129	1.2300E-04	1.2066E-05	1.2300E-09	1.6384E+05
Te-129m	1.8674E-04	3.6996E-03	1.8674E-09	2.4874E+05
Te-131m	3.1206E-05	1.8432E-04	3.1206E-10	4.1566E+04
Te-132	5.1977E-04	4.1026E-03	5.1977E-09	6.9234E+05
Cs-134	1.7940E-02	6.9809E-01	1.7940E-07	2.3897E+07
Cs-136	1.1799E-03	8.2419E-03	1.1799E-08	1.5716E+06
Cs-137	9.9867E-03	2.6373E-01	9.9867E-08	1.3302E+07
Ba-140	1.0461E-06	3.3116E-06	1.0461E-11	1.3934E+03
La-140	1.5519E-06	7.8085E-06	1.5519E-11	2.0672E+03
Ce-141	7.7920E-06	5.7935E-05	7.7920E-11	1.0379E+04
Ce-144	2.2804E-05	7.0480E-03	2.2804E-10	3.0375E+04
Pr-143	3.6199E-06	2.4259E-05	3.6199E-11	4.8217E+03
Rb-89	1.3642E-05	1.3127E-05	1.3642E-10	1.8172E+04
Rh-103m	1.0720E-05	4.6093E-08	1.0720E-10	1.4279E+04
Te-125m	1.3206E-05	7.9660E-05	1.3206E-10	1.7590E+04
Te-131	8.6224E-06	4.9414E-06	8.6224E-11	1.1485E+04
Te-133m	4.1214E-06	5.5832E-06	4.1214E-11	5.4897E+03
Te-134	5.8884E-06	2.8026E-06	5.8884E-11	7.8434E+03
Cs-134m	1.0952E-05	4.8210E-07	1.0952E-10	1.4588E+04
Cs-138	1.8442E-04	2.1055E-04	1.8442E-09	2.4565E+05
Total	3.2827E-02	1.0000E+00	0.0000E+00	0.0000E+00

```
Dose Equivalent (Ci/cc) I-131 (Thyroid)            3.8970E-21
Dose Equivalent (Ci/cc) I-131 (CEDE)               7.1447E-21
Dose Equivalent (Ci/cc) I-131 (ICRP2 Thyroid)      2.1281E-20
Total I  (Ci)                                      1.6154E-09
```

Ruptured Steam Generator Compartment Group Inventory Distribution:

Time (h) = 0.0000	Atmosphere	Sump
Noble gases (Ci)	0.0000E+00	0.0000E+00
Elemental I (Ci)	0.0000E+00	0.0000E+00
Organic I (Ci)	0.0000E+00	0.0000E+00
Aerosol I (Ci)	0.0000E+00	0.0000E+00
All Aerosols (Ci)	3.2827E-02	0.0000E+00
All Aerosols (kg)	1.2865E-07	0.0000E+00

##

ALION RADTRAD Version 3.10 Rev 2 run on 12/01/2014 at 16:22:43

##

Exclusion Area Boundary Doses:

Time (h) = 0.0280	Whole Body	Thyroid	TEDE
Delta dose (rem)	6.3696E-03	4.5744E-01	4.7545E-01
Accumulated dose (rem)	6.3707E-03	4.5753E-01	4.7554E-01

Low Population Zone Doses:

Time (h) = 0.0280	Whole Body	Thyroid	TEDE
Delta dose (rem)	8.5716E-04	6.1559E-02	6.3982E-02
Accumulated dose (rem)	8.5731E-04	6.1570E-02	6.3993E-02

Control Room Doses:

Time (h) = 0.0280	Whole Body	Thyroid	TEDE	Skin
Delta dose (rem)	3.1524E-06	6.8258E-03	7.0026E-03	1.2650E-04
Accumulated dose (rem)	3.1524E-06	6.8258E-03	7.0026E-03	1.2650E-04

****

RCS Compartment Nuclide Inventory (Ci) at Time (h) = 0.0280

Nuclide	Compartment Atmosphere	Dose Fract	Exposure (Ci-hr)	Decays (Bq-s)	Pathway 1 Outflow	Pathway 5 Outflow	Pathway 6 Outflow
Rb-86	1.8274E+01	2.6182E-04	5.1430E-01	6.8505E+13	6.1832E-02	3.3610E-04	2.6327E-01
Sr-89	2.7741E-01	2.4677E-05	7.8065E-03	1.0397E+12	9.3843E-04	5.1010E-06	3.9956E-03
Sr-90	2.5698E-02	7.1644E-05	7.2320E-04	9.6331E+10	8.6947E-05	4.7262E-07	3.7020E-04
Sr-91	1.1778E-01	5.1255E-07	3.3165E-03	4.4196E+11	3.9908E-04	2.1693E-06	1.6992E-03
Sr-92	5.1317E-02	1.6828E-07	1.4472E-03	1.9306E+11	1.7452E-04	9.4864E-07	7.4306E-04
Y-90	4.4700E-02	8.0973E-07	1.2580E-03	1.6757E+11	1.5126E-04	8.2218E-07	6.4401E-04
Y-91	3.5149E+00	3.6855E-04	9.8921E-02	1.3176E+13	1.1893E-02	6.4646E-05	5.0637E-02
Y-92	6.3648E-02	1.2549E-07	1.7918E-03	2.3849E+11	2.1551E-04	1.1715E-06	9.1760E-04
Y-93	4.1676E-02	1.9731E-07	1.1735E-03	1.5638E+11	1.4120E-04	7.6753E-07	6.0121E-04

Zr-95	5.0044E+00	2.5809E-04	1.4084E-01	1.8760E+13	1.6933E-02	9.2040E-05	7.2095E-02
Zr-97	8.1341E-02	7.7282E-07	2.2899E-03	3.0509E+11	2.7544E-04	1.4972E-06	1.1728E-03
Nb-95	7.2252E+00	9.6233E-05	2.0334E-01	2.7085E+13	2.4446E-02	1.3288E-04	1.0409E-01
Mo-99	4.2990E+02	3.7250E-03	1.2100E+01	1.6118E+15	1.4549E+00	7.9081E-03	6.1944E+00
Tc-99m	4.1122E+02	8.3716E-05	1.1574E+01	1.5407E+15	1.3916E+00	7.5644E-03	5.9251E+00
Ru-103	4.1360E+00	8.1615E-05	1.1640E-01	1.5505E+13	1.3994E-02	7.6069E-05	5.9585E-02
Ru-105	2.0111E-02	3.7083E-08	5.6669E-04	7.5553E+10	6.8256E-05	3.7102E-07	2.9062E-04
Ru-106	6.9385E+00	7.1095E-03	1.9527E-01	2.6010E+13	2.3476E-02	1.2761E-04	9.9957E-02
Rh-105	1.5966E-01	3.4070E-07	4.4938E-03	5.9863E+11	5.4038E-04	2.9373E-06	2.3008E-03
Te-127	5.1703E+01	3.5603E-05	1.4551E+00	1.9374E+14	1.7495E-01	9.5095E-04	7.4488E-01
Te-127m	5.1208E+01	2.3633E-03	1.4411E+00	1.9196E+14	1.7326E-01	9.4180E-04	7.3771E-01
Te-129	4.7378E+01	1.2064E-05	1.3334E+00	1.7699E+14	1.6032E-01	8.7145E-04	6.8260E-01
Te-129m	7.1939E+01	3.6995E-03	2.0246E+00	2.6968E+14	2.4341E-01	1.3231E-03	1.0364E+00
Te-131m	1.2014E+01	1.8424E-04	3.3818E-01	4.5052E+13	4.0669E-02	2.2106E-04	1.7316E-01
Te-132	2.0019E+02	4.1019E-03	5.6344E+00	7.5054E+14	6.7747E-01	3.6825E-03	2.8845E+00
I-131	1.2704E-03	6.4125E-08	2.5409E-05	1.3668E+09	1.2350E-06	6.7131E-09	5.2584E-06
I-132	1.6854E+00	4.0244E-06	3.3709E-02	1.8092E+12	1.6383E-03	8.9053E-06	6.9755E-03
I-133	1.2801E-03	1.2029E-08	2.5614E-05	1.3797E+09	1.2469E-06	6.7780E-09	5.3092E-06
I-134	4.9213E-02	1.1331E-07	9.8656E-04	5.3231E+10	4.8377E-05	2.6296E-07	2.0598E-04
Cs-134	6.9115E+03	6.9809E-01	1.9451E+02	2.5909E+16	2.3385E+01	1.2711E-01	9.9568E+01
Cs-136	4.5451E+02	8.2415E-03	1.2791E+01	1.7038E+15	1.5379E+00	8.3595E-03	6.5480E+00
Cs-137	3.8474E+03	2.6373E-01	1.0828E+02	1.4422E+16	1.3017E+01	7.0759E-02	5.5425E+01
Ba-139	4.0455E-02	1.6971E-08	1.1432E-03	1.5273E+11	1.3826E-04	7.5155E-07	5.8868E-04
Ba-140	4.0299E-01	3.3115E-06	1.1342E-02	1.5107E+12	1.3636E-03	7.4120E-06	5.8058E-03
La-140	5.9778E-01	7.8077E-06	1.6824E-02	2.2409E+12	2.0228E-03	1.0995E-05	8.6127E-03
La-141	2.6936E-02	3.5086E-08	7.5880E-04	1.0111E+11	9.1358E-05	4.9659E-07	3.8898E-04
La-142	6.8640E-03	2.6256E-08	1.9388E-04	2.5894E+10	2.3434E-05	1.2738E-07	9.9776E-05
Ce-141	3.0018E+00	5.7934E-05	8.4480E-02	1.1253E+13	1.0157E-02	5.5208E-05	4.3245E-02
Ce-143	1.4349E-01	1.0861E-06	4.0388E-03	5.3803E+11	4.8568E-04	2.6400E-06	2.0679E-03
Ce-144	8.7853E+00	7.0481E-03	2.4725E-01	3.2933E+13	2.9725E-02	1.6158E-04	1.2656E-01
Pr-143	1.3945E+00	2.4258E-05	3.9246E-02	5.2276E+12	4.7184E-03	2.5648E-05	2.0090E-02
Rb-89	4.8682E+00	1.2436E-05	1.4013E-01	1.8969E+13	1.7398E-02	9.4571E-05	7.4077E-02
Y-91m	6.8837E-02	4.5206E-08	1.9373E-03	2.5679E+11	2.3293E-04	1.2661E-06	9.9174E-04
Nb-95m	3.8784E-02	2.0559E-07	1.0915E-03	1.4538E+11	1.3123E-04	7.1332E-07	5.5874E-04
Nb-97	1.0086E-02	9.0972E-09	2.8460E-04	3.7927E+10	3.4350E-05	1.8672E-07	1.4625E-04
Rh-103m	4.1301E+00	4.6095E-08	1.1623E-01	1.5414E+13	1.3973E-02	7.5956E-05	5.9496E-02
Te-125m	5.0875E+00	7.9659E-05	1.4318E-01	1.9071E+13	1.7214E-02	9.3568E-05	7.3292E-02
Te-131	3.2932E+00	4.9111E-06	9.2910E-02	1.2299E+13	1.1211E-02	6.0937E-05	4.7732E-02

Te-133	1.8604E-02	1.6497E-08	3.7389E-04	1.9992E+10	1.8510E-05	1.0061E-07	7.8811E-05
Te-133m	1.5547E+00	5.5007E-06	4.4023E-02	5.8900E+12	5.3399E-03	2.9026E-05	2.2736E-02
Te-134	2.2062E+00	2.7479E-06	6.2595E-02	8.3869E+12	7.6145E-03	4.1390E-05	3.2421E-02
Cs-134m	4.1911E+00	4.7982E-07	1.1818E-01	1.5764E+13	1.4248E-02	7.7449E-05	6.0666E-02
Cs-138	6.8524E+01	2.0523E-04	1.9489E+00	2.6159E+14	2.3791E-01	1.2932E-03	1.0130E+00
Ba-141	8.2506E-03	9.3917E-09	2.3658E-04	3.1939E+10	2.9216E-05	1.5881E-07	1.2439E-04
Total	1.2645E+04	1.0000E+00	0.0000E+00	0.0000E+00	4.2788E+01	2.3258E-01	1.8218E+02

Dose Equivalent (Ci/cc) I-131 (Thyroid)	8.7693E-13
Dose Equivalent (Ci/cc) I-131 (CEDE)	1.6077E-12
Dose Equivalent (Ci/cc) I-131 (ICRP2 Thyroid)	4.7888E-12
Total I (Ci)	1.7372E+00
Dose Equivalent (Ci/cc) Xe-133 (EDE)	4.4579E-18

RCS Compartment Group Inventory Distribution:

Time (h) = 0.0280	Atmosphere	Sump
Noble gases (Ci)	5.9532E-08	0.0000E+00
Elemental I (Ci)	1.6850E+00	0.0000E+00
Organic I (Ci)	5.2115E-02	0.0000E+00
Aerosol I (Ci)	0.0000E+00	0.0000E+00
All Aerosols (Ci)	1.2643E+04	0.0000E+00
All Aerosols (kg)	4.9562E-02	0.0000E+00

Intact Steam Generators Compartment Nuclide Inventory (Ci) at Time (h) = 0.0280

Nuclide	Compartment Atmosphere	Dose Fract	Exposure (Ci-hr)	Decays (Bq-s)	Pathway 5 Inflow	Pathway 7 Outflow
Rb-86	3.3608E-04	2.6181E-04	6.7117E-06	8.9401E+08	3.3610E-04	4.1489E-09
Sr-89	5.1019E-06	2.4678E-05	1.0188E-07	1.3569E+07	5.1010E-06	6.2970E-11
Sr-91	2.1661E-06	5.1238E-07	4.3267E-08	5.7662E+06	2.1693E-06	2.6773E-11
Sr-92	9.4379E-07	1.6808E-07	1.8864E-08	2.5173E+06	9.4864E-07	1.1703E-11
Y-90	8.2209E-07	8.0972E-07	1.6417E-08	2.1868E+06	8.2218E-07	1.0149E-11
Y-91	6.4644E-05	3.6855E-04	1.2909E-06	1.7195E+08	6.4646E-05	7.9800E-10
Y-92	1.1706E-06	1.2546E-07	2.3379E-08	3.1114E+06	1.1715E-06	1.4459E-11
Y-93	7.6647E-07	1.9724E-07	1.5310E-08	2.0403E+06	7.6753E-07	9.4730E-12
Zr-95	9.2037E-05	2.5809E-04	1.8380E-06	2.4482E+08	9.2040E-05	1.1362E-09
Zr-97	1.4960E-06	7.7268E-07	2.9879E-08	3.9810E+06	1.4972E-06	1.8480E-11

Nb-95	1.3288E-04	9.6233E-05	2.6536E-06	3.5346E+08	1.3288E-04	1.6403E-09
Mo-99	7.9063E-03	3.7248E-03	1.5790E-04	2.1033E+10	7.9081E-03	9.7617E-08
Tc-99m	7.5628E-03	8.3712E-05	1.5103E-04	2.0104E+10	7.5644E-03	9.3374E-08
Ru-103	7.6067E-05	8.1614E-05	1.5191E-06	2.0234E+08	7.6069E-05	9.3902E-10
Ru-106	1.2761E-04	7.1095E-03	2.5483E-06	3.3944E+08	1.2761E-04	1.5753E-09
Rh-105	2.9363E-06	3.4068E-07	5.8641E-08	7.8118E+06	2.9373E-06	3.6257E-11
Te-127	9.5089E-04	3.5602E-05	1.8989E-05	2.5281E+09	9.5095E-04	1.1739E-08
Te-127m	9.4177E-04	2.3633E-03	1.8807E-05	2.5051E+09	9.4180E-04	1.1626E-08
Te-129	8.7134E-04	1.2064E-05	1.7401E-05	2.3082E+09	8.7145E-04	1.0757E-08
Te-129m	1.3230E-03	3.6995E-03	2.6421E-05	3.5194E+09	1.3231E-03	1.6333E-08
Te-131m	2.2096E-04	1.8422E-04	4.4129E-06	5.8789E+08	2.2106E-04	2.7287E-09
Te-132	3.6818E-03	4.1017E-03	7.3528E-05	9.7945E+09	3.6825E-03	4.5457E-08
I-132	3.0997E-05	4.9646E-06	5.4270E-07	3.0392E+07	8.9053E-06	1.4371E-10
I-134	9.0509E-07	1.3960E-07	1.5863E-08	8.9370E+05	2.6296E-07	4.2414E-12
Cs-134	1.2711E-01	6.9809E-01	2.5384E-03	3.3812E+11	1.2711E-01	1.5691E-06
Cs-136	8.3590E-03	8.2415E-03	1.6693E-04	2.2236E+10	8.3595E-03	1.0319E-07
Cs-137	7.0758E-02	2.6373E-01	1.4130E-03	1.8822E+11	7.0759E-02	8.7347E-07
Ba-139	7.4402E-07	1.6932E-08	1.4884E-08	1.9897E+06	7.5155E-07	9.2657E-12
Ba-140	7.4115E-06	3.3114E-06	1.4801E-07	1.9715E+07	7.4120E-06	9.1495E-11
La-140	1.0994E-05	7.8075E-06	2.1956E-07	2.9244E+07	1.0995E-05	1.3573E-10
Ce-141	5.5207E-05	5.7934E-05	1.1025E-06	1.4685E+08	5.5208E-05	6.8150E-10
Ce-143	2.6389E-06	1.0860E-06	5.2702E-08	7.0210E+06	2.6400E-06	3.2587E-11
Ce-144	1.6157E-04	7.0481E-03	3.2266E-06	4.2979E+08	1.6158E-04	1.9945E-09
Pr-143	2.5646E-05	2.4258E-05	5.1216E-07	6.8221E+07	2.5648E-05	3.1660E-10
Rb-89	8.9533E-05	1.2277E-05	1.8053E-06	2.4518E+08	9.4571E-05	1.1595E-09
Y-91m	1.2660E-06	4.5206E-08	2.5282E-08	3.3478E+06	1.2661E-06	1.5629E-11
Nb-95m	7.1329E-07	2.0559E-07	1.4245E-08	1.8973E+06	7.1332E-07	8.8053E-12
Rh-103m	7.5958E-05	4.6096E-08	1.5169E-06	2.0098E+08	7.5956E-05	9.3762E-10
Te-125m	9.3566E-05	7.9659E-05	1.8685E-06	2.4889E+08	9.3568E-05	1.1550E-09
Te-131	6.0567E-05	4.9041E-06	1.2108E-06	1.6007E+08	6.0937E-05	7.5164E-10
Te-133m	2.8594E-05	5.4814E-06	5.7251E-07	7.6666E+07	2.9026E-05	3.5764E-10
Te-134	4.0575E-05	2.7351E-06	8.1309E-07	1.0907E+08	4.1390E-05	5.0968E-10
Cs-134m	7.7079E-05	4.7929E-07	1.5405E-06	2.0555E+08	7.7449E-05	9.5549E-10
Cs-138	1.2602E-03	2.0399E-04	2.5281E-05	3.3984E+09	1.2932E-03	1.5913E-08
Total	2.3256E-01	1.0000E+00	0.0000E+00	0.0000E+00	2.3258E-01	2.8710E-06

Dose Equivalent (Ci/cc) I-131 (Thyroid) 2.5698E-17
Dose Equivalent (Ci/cc) I-131 (CEDE) 4.7114E-17

Dose Equivalent (Ci/cc) I-131 (ICRP2 Thyroid) 1.4033E-16
Total I (Ci) 3.1949E-05
Dose Equivalent (Ci/cc) Xe-133 (EDE) 1.3064E-22

Intact Steam Generators Compartment Group Inventory Distribution:

Time (h) = 0.0280	Atmosphere	Sump
Noble gases (Ci)	1.0949E-12	0.0000E+00
Elemental I (Ci)	3.0990E-05	0.0000E+00
Organic I (Ci)	9.5846E-07	0.0000E+00
Aerosol I (Ci)	0.0000E+00	0.0000E+00
All Aerosols (Ci)	2.3253E-01	0.0000E+00
All Aerosols (kg)	9.1150E-07	0.0000E+00

Control Room Compartment Nuclide Inventory (Ci) at Time (h) = 0.0280

Nuclide	Compartment Atmosphere	Dose Fract	Exposure (Ci-hr)	Decays (Bq-s)	Pathway 2 Inflow	Pathway 3 Inflow	Pathway 4 Outflow
Rb-86	2.2475E-05	2.6181E-04	4.4967E-07	5.9896E+07	2.1752E-05	9.8871E-07	3.4527E-07
Y-91	4.3228E-06	3.6855E-04	8.6490E-08	1.1521E+07	4.1837E-06	1.9017E-07	6.6410E-08
Zr-95	6.1547E-06	2.5809E-04	1.2314E-07	1.6403E+07	5.9566E-06	2.7075E-07	9.4551E-08
Nb-95	8.8859E-06	9.6233E-05	1.7779E-07	2.3681E+07	8.5999E-06	3.9090E-07	1.3651E-07
Mo-99	5.2871E-04	3.7248E-03	1.0579E-05	1.4092E+09	5.1180E-04	2.3263E-05	8.1237E-06
Tc-99m	5.0573E-04	8.3712E-05	1.0119E-05	1.3469E+09	4.8955E-04	2.2252E-05	7.7849E-06
Ru-103	5.0867E-06	8.1614E-05	1.0177E-07	1.3556E+07	4.9230E-06	2.2377E-07	7.8145E-08
Ru-106	8.5334E-06	7.1095E-03	1.7073E-07	2.2742E+07	8.2586E-06	3.7539E-07	1.3109E-07
Te-127	6.3587E-05	3.5602E-05	1.2722E-06	1.6938E+08	6.1543E-05	2.7974E-06	9.7812E-07
Te-127m	6.2978E-05	2.3633E-03	1.2600E-06	1.6784E+08	6.0951E-05	2.7705E-06	9.6749E-07
Te-129	5.8268E-05	1.2064E-05	1.1658E-06	1.5464E+08	5.6398E-05	2.5635E-06	9.0446E-07
Te-129m	8.8474E-05	3.6995E-03	1.7702E-06	2.3579E+08	8.5627E-05	3.8921E-06	1.3592E-06
Te-131m	1.4776E-05	1.8422E-04	2.9565E-07	3.9387E+07	1.4307E-05	6.5030E-07	2.2708E-07
Te-132	2.4621E-04	4.1017E-03	4.9262E-06	6.5621E+08	2.3832E-04	1.0833E-05	3.7829E-06
I-132	2.0728E-06	4.9596E-06	3.6322E-08	2.0335E+06	5.7573E-07	2.6170E-08	3.1911E-08
Cs-134	8.5002E-03	6.9809E-01	1.7007E-04	2.2653E+10	8.2265E-03	3.7393E-04	1.3058E-04
Cs-136	5.5898E-04	8.2415E-03	1.1184E-05	1.4897E+09	5.4101E-04	2.4591E-05	8.5876E-06
Cs-137	4.7317E-03	2.6373E-01	9.4670E-05	1.2610E+10	4.5793E-03	2.0815E-04	7.2690E-05
Ce-141	3.6917E-06	5.7934E-05	7.3864E-08	9.8387E+06	3.5730E-06	1.6241E-07	5.6715E-08
Ce-144	1.0805E-05	7.0481E-03	2.1618E-07	2.8795E+07	1.0457E-05	4.7531E-07	1.6599E-07

Pr-143	1.7150E-06	2.4258E-05	3.4314E-08	4.5707E+06	1.6599E-06	7.5448E-08	2.6348E-08
Rb-89	5.9872E-06	1.2278E-05	1.2096E-07	1.6428E+07	6.1205E-06	2.7821E-07	9.6496E-08
Rh-103m	5.0795E-06	4.6096E-08	1.0163E-07	1.3465E+07	4.9157E-06	2.2344E-07	7.9039E-08
Te-125m	6.2569E-06	7.9659E-05	1.2519E-07	1.6675E+07	6.0555E-06	2.7525E-07	9.6121E-08
Te-131	4.0502E-06	4.9042E-06	8.1121E-08	1.0725E+07	3.9437E-06	1.7926E-07	6.4020E-08
Te-133m	1.9121E-06	5.4815E-06	3.8357E-08	5.1365E+06	1.8785E-06	8.5387E-08	2.9763E-08
Te-134	2.7133E-06	2.7352E-06	5.4477E-08	7.3078E+06	2.6787E-06	1.2176E-07	4.2416E-08
Cs-134m	5.1544E-06	4.7929E-07	1.0321E-07	1.3771E+07	5.0123E-06	2.2783E-07	7.9516E-08
Cs-138	8.4274E-05	2.0400E-04	1.6938E-06	2.2769E+08	8.3695E-05	3.8043E-06	1.3243E-06
Total	1.5552E-02	1.0000E+00	0.0000E+00	0.0000E+00	1.5052E-02	6.8419E-04	2.3898E-04

Control Room Compartment Group Inventory Distribution:

Time (h) = 0.0280	Atmosphere	Sump
Noble gases (Ci)	7.3216E-14	0.0000E+00
Elemental I (Ci)	2.0724E-06	0.0000E+00
Organic I (Ci)	6.4094E-08	0.0000E+00
Aerosol I (Ci)	0.0000E+00	0.0000E+00
All Aerosols (Ci)	1.5549E-02	0.0000E+00
All Aerosols (kg)	6.0954E-08	0.0000E+00

Time (h) = 0.0280	Deposition Surfaces	Recirculating Filter
Noble gases (Ci)	0.0000E+00	0.0000E+00
Elemental I (Ci)	0.0000E+00	0.0000E+00
Organic I (Ci)	0.0000E+00	0.0000E+00
Aerosol I (Ci)	0.0000E+00	0.0000E+00
All Aerosols (Ci)	0.0000E+00	0.0000E+00
All Aerosols (kg)	0.0000E+00	0.0000E+00

Ruptured Steam Generator Compartment Nuclide Inventory (Ci) at Time (h) = 0.0280

Nuclide	Compartment Atmosphere	Dose Fract	Exposure (Ci-hr)	Decays (Bq-s)	Pathway 6 Inflow	Pathway 8 Outflow
Rb-86	2.6325E-01	2.6181E-04	5.2572E-03	7.0027E+11	2.6327E-01	3.2498E-06
Sr-89	3.9963E-03	2.4678E-05	7.9804E-05	1.0628E+10	3.9956E-03	4.9324E-08
Sr-90	3.7019E-04	7.1644E-05	7.3928E-06	9.8472E+08	3.7020E-04	4.5698E-09
Sr-91	1.6967E-03	5.1238E-07	3.3891E-05	4.5166E+09	1.6992E-03	2.0971E-08

Sr-92	7.3926E-04	1.6808E-07	1.4776E-05	1.9718E+09	7.4306E-04	9.1668E-09
Y-90	6.4394E-04	8.0972E-07	1.2860E-05	1.7129E+09	6.4401E-04	7.9497E-09
Y-91	5.0635E-02	3.6855E-04	1.0112E-03	1.3469E+11	5.0637E-02	6.2507E-07
Y-92	9.1690E-04	1.2546E-07	1.8313E-05	2.4372E+09	9.1760E-04	1.1326E-08
Y-93	6.0037E-04	1.9724E-07	1.1992E-05	1.5982E+09	6.0121E-04	7.4202E-09
Zr-95	7.2093E-02	2.5809E-04	1.4397E-03	1.9177E+11	7.2095E-02	8.8995E-07
Zr-97	1.1718E-03	7.7268E-07	2.3404E-05	3.1183E+09	1.1728E-03	1.4475E-08
Nb-95	1.0408E-01	9.6233E-05	2.0786E-03	2.7687E+11	1.0409E-01	1.2849E-06
Mo-99	6.1930E+00	3.7248E-03	1.2368E-01	1.6475E+13	6.1944E+00	7.6463E-05
Tc-99m	5.9239E+00	8.3712E-05	1.1830E-01	1.5747E+13	5.9251E+00	7.3140E-05
Ru-103	5.9583E-02	8.1614E-05	1.1899E-03	1.5849E+11	5.9585E-02	7.3553E-07
Ru-105	2.8971E-04	3.7056E-08	5.7886E-06	7.7190E+08	2.9062E-04	3.5861E-09
Ru-106	9.9955E-02	7.1095E-03	1.9961E-03	2.6588E+11	9.9957E-02	1.2339E-06
Rh-105	2.3000E-03	3.4068E-07	4.5933E-05	6.1189E+09	2.3008E-03	2.8400E-08
Te-127	7.4483E-01	3.5602E-05	1.4874E-02	1.9803E+12	7.4488E-01	9.1949E-06
Te-127m	7.3769E-01	2.3633E-03	1.4732E-02	1.9623E+12	7.3771E-01	9.1064E-06
Te-129	6.8252E-01	1.2064E-05	1.3630E-02	1.8080E+12	6.8260E-01	8.4261E-06
Te-129m	1.0363E+00	3.6995E-03	2.0696E-02	2.7567E+12	1.0364E+00	1.2793E-05
Te-131m	1.7307E-01	1.8422E-04	3.4566E-03	4.6049E+11	1.7316E-01	2.1374E-06
Te-132	2.8839E+00	4.1017E-03	5.7594E-02	7.6720E+12	2.8845E+00	3.5606E-05
I-131	1.8301E-05	7.9107E-08	3.2042E-07	1.7986E+07	5.2584E-06	8.4849E-11
I-132	2.4280E-02	4.9646E-06	4.2509E-04	2.3806E+10	6.9755E-03	1.1257E-07
I-133	1.8441E-05	1.4836E-08	3.2293E-07	1.8154E+07	5.3092E-06	8.5660E-11
I-134	7.0896E-04	1.3960E-07	1.2426E-05	7.0003E+08	2.0598E-04	3.3223E-09
Cs-134	9.9566E+01	6.9809E-01	1.9883E+00	2.6485E+14	9.9568E+01	1.2291E-03
Cs-136	6.5476E+00	8.2415E-03	1.3076E-01	1.7417E+13	6.5480E+00	8.0829E-05
Cs-137	5.5424E+01	2.6373E-01	1.1068E+00	1.4743E+14	5.5425E+01	6.8418E-04
Ba-139	5.8279E-04	1.6932E-08	1.1659E-05	1.5585E+09	5.8868E-04	7.2578E-09
Ba-140	5.8054E-03	3.3114E-06	1.1594E-04	1.5443E+10	5.8058E-03	7.1668E-08
La-140	8.6116E-03	7.8075E-06	1.7198E-04	2.2906E+10	8.6127E-03	1.0632E-07
La-141	3.8803E-04	3.5066E-08	7.7523E-06	1.0331E+09	3.8898E-04	4.8002E-09
La-142	9.8882E-05	2.6201E-08	1.9778E-06	2.6428E+08	9.9776E-05	1.2303E-09
Ce-141	4.3243E-02	5.7934E-05	8.6357E-04	1.1503E+11	4.3245E-02	5.3382E-07
Ce-143	2.0670E-03	1.0860E-06	4.1282E-05	5.4995E+09	2.0679E-03	2.5526E-08
Ce-144	1.2656E-01	7.0481E-03	2.5274E-03	3.3665E+11	1.2656E-01	1.5623E-06
Pr-143	2.0089E-02	2.4258E-05	4.0118E-04	5.3437E+10	2.0090E-02	2.4799E-07
Rb-89	7.0131E-02	1.2277E-05	1.4141E-03	1.9205E+11	7.4077E-02	9.0824E-07
Y-91m	9.9165E-04	4.5206E-08	1.9804E-05	2.6224E+09	9.9174E-04	1.2242E-08

Nb-95m	5.5872E-04	2.0559E-07	1.1158E-05	1.4861E+09	5.5874E-04	6.8972E-09
Nb-97	1.4529E-04	9.0832E-09	2.9048E-06	3.8715E+08	1.4625E-04	1.8039E-09
Rh-103m	5.9498E-02	4.6096E-08	1.1882E-03	1.5743E+11	5.9496E-02	7.3443E-07
Te-125m	7.3290E-02	7.9659E-05	1.4636E-03	1.9495E+11	7.3292E-02	9.0473E-07
Te-131	4.7442E-02	4.9041E-06	9.4841E-04	1.2539E+11	4.7732E-02	5.8875E-07
Te-133	2.6801E-04	2.0298E-08	4.7028E-06	2.6262E+08	7.8811E-05	1.2708E-09
Te-133m	2.2397E-02	5.4814E-06	4.4844E-04	6.0052E+10	2.2736E-02	2.8014E-07
Te-134	3.1782E-02	2.7351E-06	6.3689E-04	8.5436E+10	3.2421E-02	3.9923E-07
Cs-134m	6.0376E-02	4.7929E-07	1.2067E-03	1.6101E+11	6.0666E-02	7.4843E-07
Cs-138	9.8714E-01	2.0399E-04	1.9802E-02	2.6620E+12	1.0130E+00	1.2464E-05
Ba-141	1.1886E-04	9.2917E-09	2.3926E-06	3.2389E+08	1.2439E-04	1.5269E-09
Total	1.8216E+02	1.0000E+00	0.0000E+00	0.0000E+00	1.8218E+02	2.2489E-03

```
Dose Equivalent (Ci/cc) I-131 (Thyroid)            6.0387E-14
Dose Equivalent (Ci/cc) I-131 (CEDE)               1.1071E-13
Dose Equivalent (Ci/cc) I-131 (ICRP2 Thyroid)      3.2977E-13
Total I  (Ci)                                      2.5025E-02
Dose Equivalent (Ci/cc) Xe-133 (EDE)               3.0698E-19

Ruptured Steam Generator Compartment Group Inventory Distribution:

Time (h) =   0.0280      Atmosphere      Sump
Noble gases (Ci)         8.5761E-10   0.0000E+00
Elemental I (Ci)         2.4275E-02   0.0000E+00
Organic I (Ci)           7.5076E-04   0.0000E+00
Aerosol I (Ci)           0.0000E+00   0.0000E+00
All Aerosols (Ci)        1.8214E+02   0.0000E+00
All Aerosols (kg)        7.1398E-04   0.0000E+00

#######################################################################
    ALION RADTRAD Version 3.10 Rev 2 run on 12/01/2014  at 16:22:43

                Copyright © 2009 Alion Science and Technology
#######################################################################

Exclusion Area Boundary Doses:

Time (h) =   0.1100    Whole Body   Thyroid       TEDE
```

Delta dose (rem)	5.1772E-03	3.7195E-01	3.8659E-01
Accumulated dose (rem)	1.1548E-02	8.2948E-01	8.6213E-01

Low Population Zone Doses:

Time (h) = 0.1100	Whole Body	Thyroid	TEDE
Delta dose (rem)	9.9664E-04	7.1603E-02	7.4421E-02
Accumulated dose (rem)	1.8540E-03	1.3317E-01	1.3841E-01

Control Room Doses:

Time (h) = 0.1100	Whole Body	Thyroid	TEDE	Skin
Delta dose (rem)	1.5625E-04	3.3847E-01	3.4724E-01	6.2681E-03
Accumulated dose (rem)	1.5940E-04	3.4530E-01	3.5424E-01	6.3946E-03

****

RCS Compartment Nuclide Inventory (Ci) at Time (h) = 0.1100

Nuclide	Compartment Atmosphere	Dose Fract	Exposure (Ci-hr)	Decays (Bq-s)	Pathway 1 Outflow	Pathway 5 Outflow	Pathway 6 Outflow
Rb-86	1.7351E+01	2.6180E-04	1.9556E+00	2.6049E+14	1.3550E-01	1.4162E-03	1.1093E+00
Sr-89	2.6361E-01	2.4688E-05	2.9700E-02	3.9551E+12	2.0570E-03	2.1502E-05	1.6842E-02
Sr-90	2.4403E-02	7.1644E-05	2.7502E-03	3.6633E+11	1.9054E-04	1.9916E-06	1.5600E-03
Sr-91	1.1117E-01	5.1064E-07	1.2565E-02	1.6757E+12	8.7318E-04	9.1208E-06	7.1443E-03
Sr-92	4.7720E-02	1.6610E-07	5.4320E-03	7.2665E+11	3.8034E-04	3.9665E-06	3.1070E-03
Y-90	4.2432E-02	8.0955E-07	4.7829E-03	6.3710E+11	3.3144E-04	3.4641E-06	2.7135E-03
Y-91	3.3377E+00	3.6854E-04	3.7617E-01	5.0106E+13	2.6062E-02	2.7241E-04	2.1338E-01
Y-92	6.0247E-02	1.2524E-07	6.8003E-03	9.0509E+11	4.7190E-04	4.9308E-06	3.8623E-03
Y-93	3.9354E-02	1.9662E-07	4.4470E-03	5.9303E+11	3.0898E-04	3.2276E-06	2.5282E-03
Zr-95	4.7521E+00	2.5809E-04	5.3557E-01	7.1339E+13	3.7107E-02	3.8785E-04	3.0380E-01
Zr-97	7.6983E-02	7.7121E-07	8.6899E-03	1.1583E+12	6.0308E-04	6.3013E-06	4.9358E-03
Nb-95	6.8610E+00	9.6233E-05	7.7324E-01	1.0300E+14	5.3573E-02	5.5996E-04	4.3862E-01
Mo-99	4.0788E+02	3.7230E-03	4.5987E+01	6.1266E+15	3.1875E+00	3.3314E-02	2.6095E+01
Tc-99m	3.9019E+02	8.3676E-05	4.3991E+01	5.8549E+15	3.0490E+00	3.1867E-02	2.4961E+01
Ru-103	3.9274E+00	8.1612E-05	4.4263E-01	5.8959E+13	3.0668E-02	3.2055E-04	2.5108E-01
Ru-105	1.8854E-02	3.6788E-08	2.1378E-03	2.8551E+11	1.4908E-04	1.5560E-06	1.2188E-03
Ru-106	6.5889E+00	7.1095E-03	7.4257E-01	9.8911E+13	5.1448E-02	5.3774E-04	4.2121E-01

Rh-105	1.5140E-01	3.4041E-07	1.7074E-02	2.2749E+12	1.1838E-03	1.2371E-05	9.6904E-03
Te-127	4.9088E+01	3.5599E-05	5.5328E+00	7.3651E+14	3.8337E-01	4.0070E-03	3.1386E+00
Te-127m	4.8626E+01	2.3633E-03	5.4803E+00	7.2998E+14	3.7969E-01	3.9687E-03	3.1086E+00
Te-129	4.4976E+01	1.2062E-05	5.0696E+00	6.7166E+14	3.5130E-01	3.6717E-03	2.8761E+00
Te-129m	6.8309E+01	3.6994E-03	7.6987E+00	1.0255E+15	5.3341E-01	5.5753E-03	4.3671E+00
Te-131m	1.1387E+01	1.8402E-04	1.2845E+00	1.7116E+14	8.9079E-02	9.3089E-04	7.2916E-01
Te-132	1.8997E+02	4.1000E-03	2.1417E+01	2.8531E+15	1.4844E+00	1.5514E-02	1.2152E+01
I-131	4.7154E-03	2.2838E-07	3.4413E-04	2.9136E+10	1.0005E-05	1.3531E-07	1.0599E-04
I-132	6.2145E+00	1.4269E-05	4.5450E-01	3.8446E+13	1.3253E-02	1.7921E-04	1.4037E-01
I-133	4.7039E-03	4.2513E-08	3.4424E-04	2.9221E+10	1.0053E-05	1.3590E-07	1.0645E-04
I-134	1.7108E-01	3.8403E-07	1.2716E-02	1.0883E+12	3.8042E-04	5.1317E-06	4.0196E-03
Xe-133	1.1603E-06	2.1564E-14	6.5188E-08	3.8295E+06	1.0100E-09	1.4662E-11	1.1485E-08
Cs-134	6.5632E+03	6.9810E-01	7.3968E+02	9.8526E+16	5.1248E+01	5.3565E-01	4.1958E+02
Cs-136	4.3153E+02	8.2407E-03	4.8638E+01	6.4788E+15	3.3701E+00	3.5224E-02	2.7591E+01
Cs-137	3.6535E+03	2.6373E-01	4.1175E+02	5.4845E+16	2.8527E+01	2.9818E-01	2.3356E+02
Ba-139	3.6865E-02	1.6542E-08	4.2373E-03	5.6918E+11	2.9972E-04	3.1190E-06	2.4431E-03
Ba-140	3.8261E-01	3.3111E-06	4.3125E-02	5.7444E+12	2.9881E-03	3.1232E-05	2.4464E-02
La-140	5.6740E-01	7.8055E-06	6.3960E-02	8.5194E+12	4.4324E-03	4.6326E-05	3.6287E-02
La-141	2.5314E-02	3.4861E-08	2.8671E-03	3.8253E+11	1.9967E-04	2.0848E-06	1.6330E-03
La-142	6.2822E-03	2.5661E-08	7.2058E-04	9.6707E+10	5.0858E-05	5.2949E-07	4.1475E-04
Ce-141	2.8503E+00	5.7932E-05	3.2124E-01	4.2790E+13	2.2258E-02	2.3264E-04	1.8223E-01
Ce-143	1.3602E-01	1.0850E-06	1.5342E-02	2.0443E+12	1.0639E-03	1.1118E-05	8.7086E-03
Ce-144	8.3426E+00	7.0481E-03	9.4022E-01	1.2524E+14	6.5141E-02	6.8087E-04	5.3333E-01
Pr-143	1.3240E+00	2.4256E-05	1.4923E-01	1.9878E+13	1.0340E-02	1.0807E-04	8.4653E-02
Rb-89	3.6938E+00	1.0855E-05	4.6513E-01	6.4816E+13	3.6010E-02	3.6746E-04	2.8783E-01
Y-91m	6.5344E-02	4.5198E-08	7.3658E-03	9.7375E+11	5.1041E-04	5.3348E-06	4.1788E-03
Nb-95m	3.6828E-02	2.0559E-07	4.1506E-03	5.5283E+11	2.8758E-04	3.0058E-06	2.3545E-03
Nb-97	9.3248E-03	8.9468E-09	1.0644E-03	1.4222E+11	7.4743E-05	7.7899E-07	6.1018E-04
Rh-103m	3.9234E+00	4.6106E-08	4.4210E-01	5.8483E+13	3.0625E-02	3.2011E-04	2.5074E-01
Te-125m	4.8309E+00	7.9658E-05	5.4446E-01	7.2523E+13	3.7723E-02	3.9429E-04	3.0884E-01
Te-131	3.0567E+00	4.8406E-06	3.4825E-01	4.6020E+13	2.4412E-02	2.5450E-04	1.9935E-01
Te-133	5.9523E-02	5.2590E-08	4.5327E-03	3.8739E+11	1.4059E-04	1.8906E-06	1.4809E-03
Te-133m	1.3883E+00	5.2948E-06	1.6114E-01	2.1735E+13	1.1515E-02	1.1957E-04	9.3655E-02
Te-134	1.9309E+00	2.6127E-06	2.2633E-01	3.0652E+13	1.6335E-02	1.6925E-04	1.3258E-01
Cs-134m	3.9026E+00	4.7400E-07	4.4395E-01	5.9372E+13	3.1063E-02	3.2400E-04	2.5379E-01
Cs-138	5.8532E+01	1.9227E-04	6.9431E+00	9.4494E+14	5.0720E-01	5.2417E-03	4.1058E+00
Ba-141	6.5005E-03	8.3820E-09	8.0293E-04	1.1106E+11	6.1032E-05	6.2532E-07	4.8981E-04
Total	1.2004E+04	1.0000E+00	0.0000E+00	0.0000E+00	9.3760E+01	9.7997E-01	7.6761E+02

Dose Equivalent (Ci/cc) I-131 (Thyroid)	3.2348E-12
Dose Equivalent (Ci/cc) I-131 (CEDE)	5.9271E-12
Dose Equivalent (Ci/cc) I-131 (ICRP2 Thyroid)	1.7646E-11
Total I (Ci)	6.3950E+00
Dose Equivalent (Ci/cc) Xe-133 (EDE)	9.3539E-17

RCS Compartment Group Inventory Distribution:

Time (h) = 0.1100	Atmosphere	Sump
Noble gases (Ci)	1.2492E-06	0.0000E+00
Elemental I (Ci)	6.2031E+00	0.0000E+00
Organic I (Ci)	1.9185E-01	0.0000E+00
Aerosol I (Ci)	0.0000E+00	0.0000E+00
All Aerosols (Ci)	1.1997E+04	0.0000E+00
All Aerosols (kg)	4.7064E-02	0.0000E+00

Intact Steam Generators Compartment Nuclide Inventory (Ci) at Time (h) = 0.1100

Nuclide	Compartment Atmosphere	Dose Fract	Exposure (Ci-hr)	Decays (Bq-s)	Pathway 5 Inflow	Pathway 7 Outflow
Rb-86	1.4158E-03	2.6179E-04	1.0115E-04	1.3474E+10	1.4162E-03	2.1152E-07
Sr-89	2.1510E-05	2.4692E-05	1.5365E-06	2.0461E+08	2.1502E-05	3.2118E-09
Sr-90	1.9912E-06	7.1645E-05	1.4226E-07	1.8949E+07	1.9916E-06	2.9745E-10
Sr-91	9.0716E-06	5.0998E-07	6.4911E-07	8.6584E+07	9.1208E-06	1.3607E-09
Sr-92	3.8938E-06	1.6534E-07	2.7970E-07	3.7441E+07	3.9665E-06	5.9004E-10
Y-90	3.4623E-06	8.0949E-07	2.4739E-07	3.2953E+07	3.4641E-06	5.1735E-10
Y-91	2.7235E-04	3.6854E-04	1.9458E-05	2.5918E+09	2.7241E-04	4.0685E-08
Y-92	4.9161E-06	1.2515E-07	3.5151E-07	4.6785E+07	4.9308E-06	7.3599E-10
Y-93	3.2112E-06	1.9638E-07	2.2975E-07	3.0643E+07	3.2276E-06	4.8154E-10
Zr-95	3.8776E-04	2.5808E-04	2.7703E-05	3.6901E+09	3.8785E-04	5.7926E-08
Zr-97	6.2816E-06	7.7065E-07	4.4917E-07	5.9877E+07	6.3013E-06	9.4052E-10
Nb-95	5.5984E-04	9.6233E-05	3.9997E-05	5.3276E+09	5.5996E-04	8.3632E-08
Mo-99	3.3282E-02	3.7223E-03	2.3783E-03	3.1686E+11	3.3314E-02	4.9748E-06
Tc-99m	3.1839E-02	8.3662E-05	2.2751E-03	3.0279E+11	3.1867E-02	4.7587E-06
Ru-103	3.2047E-04	8.1612E-05	2.2896E-05	3.0498E+09	3.2055E-04	4.7874E-08
Ru-105	1.5385E-06	3.6686E-08	1.1028E-07	1.4733E+07	1.5560E-06	2.3183E-10
Ru-106	5.3764E-04	7.1095E-03	3.8411E-05	5.1163E+09	5.3774E-04	8.0314E-08

Rh-105	1.2354E-05	3.4030E-07	8.8291E-07	1.1764E+08	1.2371E-05	1.8472E-09
Te-127	4.0055E-03	3.5597E-05	2.8618E-04	3.8094E+10	4.0070E-03	5.9843E-07
Te-127m	3.9678E-03	2.3633E-03	2.8348E-04	3.7759E+10	3.9687E-03	5.9273E-07
Te-129	3.6699E-03	1.2061E-05	2.6222E-04	3.4725E+10	3.6717E-03	5.4835E-07
Te-129m	5.5739E-03	3.6994E-03	3.9823E-04	5.3045E+10	5.5753E-03	8.3268E-07
Te-131m	9.2917E-04	1.8395E-04	6.6416E-05	8.8506E+09	9.3089E-04	1.3898E-07
Te-132	1.5501E-02	4.0994E-03	1.1076E-03	1.4756E+11	1.5514E-02	2.3167E-06
I-132	5.0709E-04	1.7827E-05	2.9372E-05	2.6241E+09	1.7921E-04	3.7626E-08
I-134	1.3960E-05	4.7709E-07	8.1711E-07	7.3970E+07	5.1317E-06	1.0717E-09
Cs-134	5.3555E-01	6.9810E-01	3.8262E-02	5.0964E+12	5.3565E-01	8.0002E-05
Cs-136	3.5212E-02	8.2404E-03	2.5158E-03	3.3512E+11	3.5224E-02	5.2607E-06
Cs-137	2.9812E-01	2.6373E-01	2.1299E-02	2.8370E+12	2.9818E-01	4.4534E-05
Ba-139	3.0081E-06	1.6393E-08	2.1721E-07	2.9216E+07	3.1190E-06	4.6216E-10
Ba-140	3.1220E-05	3.3110E-06	2.2306E-06	2.9713E+08	3.1232E-05	4.6644E-09
La-140	4.6299E-05	7.8047E-06	3.3082E-06	4.4064E+08	4.6326E-05	6.9184E-09
La-141	2.0656E-06	3.4783E-08	1.4797E-07	1.9749E+07	2.0848E-06	3.1077E-10
La-142	5.1262E-07	2.5455E-08	3.6973E-08	4.9680E+06	5.2949E-07	7.8524E-11
Ce-141	2.3258E-04	5.7931E-05	1.6617E-05	2.2134E+09	2.3264E-04	3.4745E-08
Ce-143	1.1099E-05	1.0846E-06	7.9331E-07	1.0571E+08	1.1118E-05	1.6599E-09
Ce-144	6.8074E-04	7.0481E-03	4.8635E-05	6.4781E+09	6.8087E-04	1.0169E-07
Pr-143	1.0804E-04	2.4255E-05	7.7189E-06	1.0282E+09	1.0807E-04	1.6141E-08
Rb-89	3.0141E-04	1.0315E-05	2.2862E-05	3.2123E+09	3.6746E-04	5.2544E-08
Y-91m	5.3320E-06	4.5195E-08	3.8098E-07	5.0334E+07	5.3348E-06	7.9674E-10
Nb-95m	3.0051E-06	2.0558E-07	2.1470E-07	2.8596E+07	3.0058E-06	4.4893E-10
Nb-97	7.6089E-07	8.8946E-09	5.4735E-08	7.3186E+06	7.7899E-07	1.1575E-10
Rh-103m	3.2014E-04	4.6109E-08	2.2870E-05	3.0236E+09	3.2011E-04	4.7813E-08
Te-125m	3.9420E-04	7.9658E-05	2.8163E-05	3.7514E+09	3.9429E-04	5.8888E-08
Te-131	2.4942E-04	4.8163E-06	1.7923E-05	2.3675E+09	2.5450E-04	3.7838E-08
Te-133	4.8570E-06	6.4793E-08	2.8886E-07	2.6181E+07	1.8906E-06	3.9202E-10
Te-133m	1.1328E-04	5.2234E-06	8.2231E-06	1.1114E+09	1.1957E-04	1.7648E-08
Te-134	1.5756E-04	2.5660E-06	1.1498E-05	1.5614E+09	1.6925E-04	2.4885E-08
Cs-134m	3.1845E-04	4.7197E-07	2.2866E-05	3.0599E+09	3.2400E-04	4.8209E-08
Cs-138	4.7761E-03	1.8780E-04	3.5079E-04	4.7915E+10	5.2417E-03	7.6705E-07
Ba-141	5.3043E-07	8.0359E-09	3.9818E-08	5.5446E+06	6.2532E-07	9.0078E-11
Total	9.7949E-01	1.0000E+00	0.0000E+00	0.0000E+00	9.7997E-01	1.4635E-04

Dose Equivalent (Ci/cc) I-131 (Thyroid) 4.2058E-16
Dose Equivalent (Ci/cc) I-131 (CEDE) 7.7063E-16

Dose Equivalent (Ci/cc) I-131 (ICRP2 Thyroid) 2.2943E-15
Total I (Ci) 5.2182E-04
Dose Equivalent (Ci/cc) Xe-133 (EDE) 1.2162E-20

Intact Steam Generators Compartment Group Inventory Distribution:

Time (h) = 0.1100	Atmosphere	Sump
Noble gases (Ci)	1.0193E-10	0.0000E+00
Elemental I (Ci)	5.0616E-04	0.0000E+00
Organic I (Ci)	1.5655E-05	0.0000E+00
Aerosol I (Ci)	0.0000E+00	0.0000E+00
All Aerosols (Ci)	9.7897E-01	0.0000E+00
All Aerosols (kg)	3.8404E-06	0.0000E+00

Control Room Compartment Nuclide Inventory (Ci) at Time (h) = 0.1100

Nuclide	Compartment Atmosphere	Dose Fract	Exposure (Ci-hr)	Decays (Bq-s)	Pathway 2 Inflow	Pathway 3 Inflow	Pathway 4 Outflow
Rb-86	3.5458E-04	2.6179E-04	2.3028E-05	3.0674E+09	3.5180E-04	1.5991E-05	1.7465E-05
Sr-89	5.3871E-06	2.4693E-05	3.4981E-07	4.6582E+07	5.3414E-06	2.4279E-07	2.6534E-07
Sr-91	2.2719E-06	5.0982E-07	1.4773E-07	1.9706E+07	2.2645E-06	1.0293E-07	1.1233E-07
Sr-92	9.7518E-07	1.6516E-07	6.3604E-08	8.5155E+06	9.8351E-07	4.4705E-08	4.8685E-08
Y-91	6.8207E-05	3.6854E-04	4.4296E-06	5.9003E+08	6.7667E-05	3.0758E-06	3.3594E-06
Y-92	1.2312E-06	1.2513E-07	8.0010E-08	1.0649E+07	1.2245E-06	5.5658E-08	6.1270E-08
Zr-95	9.7111E-05	2.5808E-04	6.3067E-06	8.4006E+08	9.6342E-05	4.3792E-06	4.7830E-06
Zr-97	1.5732E-06	7.7052E-07	1.0224E-07	1.3629E+07	1.5648E-06	7.1128E-08	7.7650E-08
Nb-95	1.4021E-04	9.6233E-05	9.1055E-06	1.2129E+09	1.3910E-04	6.3225E-06	6.9057E-06
Mo-99	8.3353E-03	3.7222E-03	5.4141E-04	7.2131E+10	8.2746E-03	3.7612E-04	4.1076E-04
Tc-99m	7.9737E-03	8.3658E-05	5.1792E-04	6.8927E+10	7.9152E-03	3.5978E-04	3.9511E-04
Ru-103	8.0258E-05	8.1611E-05	5.2123E-06	6.9428E+08	7.9624E-05	3.6193E-06	3.9530E-06
Ru-106	1.3465E-04	7.1095E-03	8.7443E-06	1.1647E+09	1.3358E-04	6.0717E-06	6.6316E-06
Rh-105	3.0939E-06	3.4028E-07	2.0098E-07	2.6779E+07	3.0727E-06	1.3967E-07	1.5254E-07
Te-127	1.0031E-03	3.5597E-05	6.5149E-05	8.6721E+09	9.9532E-04	4.5242E-05	4.9600E-05
Te-127m	9.9370E-04	2.3633E-03	6.4534E-05	8.5960E+09	9.8582E-04	4.4810E-05	4.8942E-05
Te-129	9.1910E-04	1.2061E-05	5.9693E-05	7.9047E+09	9.1204E-04	4.1456E-05	4.6693E-05
Te-129m	1.3959E-03	3.6994E-03	9.0657E-05	1.2076E+10	1.3849E-03	6.2951E-05	6.8755E-05
Te-131m	2.3270E-04	1.8393E-04	1.5118E-05	2.0147E+09	2.3120E-04	1.0509E-05	1.1475E-05
Te-132	3.8820E-03	4.0993E-03	2.5215E-04	3.3592E+10	3.8534E-03	1.7515E-04	1.9129E-04

I-132	1.2700E-04	1.8665E-05	7.0012E-06	6.3324E+08	5.2654E-05	2.3934E-06	6.3183E-06
I-134	3.4961E-06	4.9885E-07	1.9450E-07	1.7833E+07	1.5058E-06	6.8446E-08	1.7861E-07
Cs-134	1.3412E-01	6.9810E-01	8.7103E-03	1.1602E+12	1.3306E-01	6.0481E-03	6.6058E-03
Cs-136	8.8185E-03	8.2403E-03	5.7272E-04	7.6290E+10	8.7497E-03	3.9771E-04	4.3438E-04
Cs-137	7.4661E-02	2.6373E-01	4.8487E-03	6.4585E+11	7.4068E-02	3.3667E-03	3.6772E-03
Ba-140	7.8189E-06	3.3110E-06	5.0780E-07	6.7642E+07	7.7579E-06	3.5263E-07	3.8514E-07
La-140	1.1595E-05	7.8046E-06	7.5309E-07	1.0031E+08	1.1507E-05	5.2305E-07	5.7160E-07
Ce-141	5.8248E-05	5.7931E-05	3.7828E-06	5.0388E+08	5.7788E-05	2.6267E-06	2.8689E-06
Ce-143	2.7796E-06	1.0845E-06	1.8058E-07	2.4064E+07	2.7613E-06	1.2551E-07	1.3705E-07
Ce-144	1.7048E-04	7.0481E-03	1.1072E-05	1.4748E+09	1.6913E-04	7.6878E-06	8.3967E-06
Pr-143	2.7057E-05	2.4255E-05	1.7572E-06	2.3407E+08	2.6845E-05	1.2202E-06	1.3327E-06
Rb-89	7.5485E-05	1.0189E-05	5.1411E-06	7.2364E+08	8.9495E-05	4.0680E-06	4.3057E-06
Y-91m	1.3353E-06	4.5194E-08	8.6730E-08	1.1458E+07	1.3252E-06	6.0234E-08	6.8665E-08
Rh-103m	8.0177E-05	4.6110E-08	5.2066E-06	6.8830E+08	7.9518E-05	3.6145E-06	4.1028E-06
Te-125m	9.8723E-05	7.9658E-05	6.4114E-06	8.5401E+08	9.7941E-05	4.4519E-06	4.8624E-06
Te-131	6.2466E-05	4.8106E-06	4.0754E-06	5.3833E+08	6.3087E-05	2.8676E-06	3.3465E-06
Te-133	1.2164E-06	6.7612E-08	6.8622E-08	6.3037E+06	5.5384E-07	2.5175E-08	6.7341E-08
Te-133m	2.8370E-05	5.2067E-06	1.8660E-06	2.5231E+08	2.9542E-05	1.3428E-06	1.4542E-06
Te-134	3.9459E-05	2.5551E-06	2.6063E-06	3.5414E+08	4.1746E-05	1.8976E-06	2.0491E-06
Cs-134m	7.9752E-05	4.7150E-07	5.2003E-06	6.9598E+08	8.0347E-05	3.6521E-06	3.9781E-06
Cs-138	1.1961E-03	1.8675E-04	7.9412E-05	1.0855E+10	1.2901E-03	5.8641E-05	6.3110E-05
Total	2.4530E-01	1.0000E+00	0.0000E+00	0.0000E+00	2.4342E-01	1.1064E-02	1.2092E-02

Control Room Compartment Group Inventory Distribution:

Time (h) = 0.1100	Atmosphere	Sump
Noble gases (Ci)	2.5527E-11	0.0000E+00
Elemental I (Ci)	1.2676E-04	0.0000E+00
Organic I (Ci)	3.9205E-06	0.0000E+00
Aerosol I (Ci)	0.0000E+00	0.0000E+00
All Aerosols (Ci)	2.4517E-01	0.0000E+00
All Aerosols (kg)	9.6178E-07	0.0000E+00

Time (h) = 0.1100	Deposition Surfaces	Recirculating Filter
Noble gases (Ci)	0.0000E+00	0.0000E+00
Elemental I (Ci)	0.0000E+00	0.0000E+00
Organic I (Ci)	0.0000E+00	0.0000E+00

Aerosol I (Ci)	0.0000E+00	0.0000E+00
All Aerosols (Ci)	0.0000E+00	0.0000E+00
All Aerosols (kg)	0.0000E+00	0.0000E+00

Ruptured Steam Generator Compartment Nuclide Inventory (Ci) at Time (h) = 0.1100

Nuclide	Compartment Atmosphere	Dose Fract	Exposure (Ci-hr)	Decays (Bq-s)	Pathway 6 Inflow	Pathway 8 Outflow
Rb-86	1.1090E+00	2.6179E-04	7.9235E-02	1.0554E+13	1.1093E+00	1.5653E-04
Sr-89	1.6849E-02	2.4692E-05	1.2036E-03	1.6027E+11	1.6842E-02	2.3768E-06
Sr-90	1.5597E-03	7.1645E-05	1.1143E-04	1.4843E+10	1.5600E-03	2.2012E-07
Sr-91	7.1059E-03	5.0998E-07	5.0845E-04	6.7821E+10	7.1443E-03	1.0069E-06
Sr-92	3.0501E-03	1.6534E-07	2.1909E-04	2.9328E+10	3.1070E-03	4.3665E-07
Y-90	2.7121E-03	8.0949E-07	1.9378E-04	2.5812E+10	2.7135E-03	3.8285E-07
Y-91	2.1333E-01	3.6854E-04	1.5241E-02	2.0302E+12	2.1338E-01	3.0108E-05
Y-92	3.8508E-03	1.2515E-07	2.7534E-04	3.6646E+10	3.8623E-03	5.4466E-07
Y-93	2.5153E-03	1.9638E-07	1.7996E-04	2.4003E+10	2.5282E-03	3.5635E-07
Zr-95	3.0373E-01	2.5808E-04	2.1700E-02	2.8905E+12	3.0380E-01	4.2867E-05
Zr-97	4.9204E-03	7.7065E-07	3.5184E-04	4.6902E+10	4.9358E-03	6.9602E-07
Nb-95	4.3853E-01	9.6233E-05	3.1330E-02	4.1732E+12	4.3862E-01	6.1890E-05
Mo-99	2.6070E+01	3.7223E-03	1.8630E+00	2.4820E+14	2.6095E+01	3.6815E-03
Tc-99m	2.4939E+01	8.3662E-05	1.7821E+00	2.3717E+14	2.4961E+01	3.5216E-03
Ru-103	2.5102E-01	8.1612E-05	1.7934E-02	2.3889E+12	2.5108E-01	3.5428E-05
Ru-105	1.2051E-03	3.6686E-08	8.6380E-05	1.1541E+10	1.2188E-03	1.7156E-07
Ru-106	4.2113E-01	7.1095E-03	3.0087E-02	4.0076E+12	4.2121E-01	5.9435E-05
Rh-105	9.6767E-03	3.4030E-07	6.9159E-04	9.2148E+10	9.6904E-03	1.3670E-06
Te-127	3.1375E+00	3.5597E-05	2.2417E-01	2.9839E+13	3.1386E+00	4.4286E-04
Te-127m	3.1080E+00	2.3633E-03	2.2205E-01	2.9577E+13	3.1086E+00	4.3864E-04
Te-129	2.8747E+00	1.2061E-05	2.0540E-01	2.7200E+13	2.8761E+00	4.0580E-04
Te-129m	4.3661E+00	3.6994E-03	3.1193E-01	4.1550E+13	4.3671E+00	6.1621E-04
Te-131m	7.2783E-01	1.8395E-04	5.2024E-02	6.9327E+12	7.2916E-01	1.0285E-04
Te-132	1.2142E+01	4.0994E-03	8.6762E-01	1.1559E+14	1.2152E+01	1.7144E-03
I-131	3.0139E-04	2.8553E-07	1.7432E-05	1.5583E+09	1.0599E-04	2.1012E-08
I-132	3.9721E-01	1.7827E-05	2.3008E-02	2.0554E+12	1.4037E-01	2.7818E-05
I-133	3.0065E-04	5.3100E-08	1.7421E-05	1.5617E+09	1.0645E-04	2.1085E-08
I-134	1.0935E-02	4.7709E-07	6.4005E-04	5.7941E+10	4.0196E-03	7.9234E-07
Cs-134	4.1950E+02	6.9810E-01	2.9970E+01	3.9921E+15	4.1958E+02	5.9204E-02
Cs-136	2.7582E+01	8.2404E-03	1.9706E+00	2.6250E+14	2.7591E+01	3.8931E-03

Cs-137	2.3352E+02	2.6373E-01	1.6683E+01	2.2222E+15	2.3356E+02	3.2956E-02
Ba-139	2.3562E-03	1.6393E-08	1.7014E-04	2.2885E+10	2.4431E-03	3.4202E-07
Ba-140	2.4455E-02	3.3110E-06	1.7473E-03	2.3274E+11	2.4464E-02	3.4518E-06
La-140	3.6266E-02	7.8047E-06	2.5913E-03	3.4516E+11	3.6287E-02	5.1198E-06
La-141	1.6180E-03	3.4783E-08	1.1591E-04	1.5469E+10	1.6330E-03	2.2998E-07
La-142	4.0154E-04	2.5455E-08	2.8961E-05	3.8915E+09	4.1475E-04	5.8111E-08
Ce-141	1.8218E-01	5.7931E-05	1.3016E-02	1.7338E+12	1.8223E-01	2.5713E-05
Ce-143	8.6939E-03	1.0846E-06	6.2140E-04	8.2804E+10	8.7086E-03	1.2284E-06
Ce-144	5.3322E-01	7.0481E-03	3.8096E-02	5.0743E+12	5.3333E-01	7.5255E-05
Pr-143	8.4626E-02	2.4255E-05	6.0462E-03	8.0539E+11	8.4653E-02	1.1945E-05
Rb-89	2.3610E-01	1.0315E-05	1.7908E-02	2.5162E+12	2.8783E-01	3.8890E-05
Y-91m	4.1766E-03	4.5195E-08	2.9843E-04	3.9427E+10	4.1788E-03	5.8961E-07
Nb-95m	2.3539E-03	2.0558E-07	1.6817E-04	2.2399E+10	2.3545E-03	3.3222E-07
Nb-97	5.9601E-04	8.8946E-09	4.2874E-05	5.7327E+09	6.1018E-04	8.5658E-08
Rh-103m	2.5077E-01	4.6109E-08	1.7914E-02	2.3684E+12	2.5074E-01	3.5383E-05
Te-125m	3.0878E-01	7.9658E-05	2.2060E-02	2.9385E+12	3.0884E-01	4.3579E-05
Te-131	1.9537E-01	4.8163E-06	1.4039E-02	1.8545E+12	1.9935E-01	2.8002E-05
Te-133	3.8045E-03	6.4793E-08	2.2627E-04	2.0508E+10	1.4809E-03	2.8984E-07
Te-133m	8.8732E-02	5.2234E-06	6.4412E-03	8.7058E+11	9.3655E-02	1.3060E-05
Te-134	1.2342E-01	2.5660E-06	9.0063E-03	1.2231E+12	1.3258E-01	1.8416E-05
Cs-134m	2.4944E-01	4.7197E-07	1.7911E-02	2.3969E+12	2.5379E-01	3.5677E-05
Cs-138	3.7411E+00	1.8780E-04	2.7477E-01	3.7532E+13	4.1058E+00	5.6768E-04
Ba-141	4.1549E-04	8.0359E-09	3.1189E-05	4.3431E+09	4.8981E-04	6.6668E-08
Total	7.6724E+02	1.0000E+00	0.0000E+00	0.0000E+00	7.6761E+02	1.0831E-01

Dose Equivalent (Ci/cc) I-131 (Thyroid)	9.8833E-13
Dose Equivalent (Ci/cc) I-131 (CEDE)	1.8109E-12
Dose Equivalent (Ci/cc) I-131 (ICRP2 Thyroid)	5.3914E-12
Total I (Ci)	4.0874E-01
Dose Equivalent (Ci/cc) Xe-133 (EDE)	2.8579E-17

Ruptured Steam Generator Compartment Group Inventory Distribution:

Time (h) = 0.1100	Atmosphere	Sump
Noble gases (Ci)	7.9842E-08	0.0000E+00
Elemental I (Ci)	3.9648E-01	0.0000E+00
Organic I (Ci)	1.2262E-02	0.0000E+00
Aerosol I (Ci)	0.0000E+00	0.0000E+00

```
All Aerosols (Ci)        7.6683E+02   0.0000E+00
All Aerosols (kg)        3.0082E-03   0.0000E+00

#######################################################################
   ALION RADTRAD Version 3.10 Rev 2 run on 12/01/2014  at 16:22:43

                Copyright © 2009 Alion Science and Technology
#######################################################################

Exclusion Area Boundary Doses:

Time (h) =   0.1390    Whole Body   Thyroid       TEDE
Delta dose (rem)        1.7702E-03  1.2724E-01  1.3225E-01
Accumulated dose (rem)  1.3318E-02  9.5672E-01  9.9438E-01

Low Population Zone Doses:

Time (h) =   0.1390    Whole Body   Thyroid       TEDE
Delta dose (rem)        3.4077E-04  2.4494E-02  2.5458E-02
Accumulated dose (rem)  2.1947E-03  1.5767E-01  1.6387E-01

Control Room Doses:

Time (h) =   0.1390    Whole Body   Thyroid       TEDE        Skin
Delta dose (rem)        9.4753E-05  2.0534E-01  2.1065E-01  3.7998E-03
Accumulated dose (rem)  2.5416E-04  5.5063E-01  5.6489E-01  1.0194E-02

*******************************************************

RCS Compartment Nuclide Inventory (Ci)  at Time (h) =   0.1390
```

Nuclide	Compartment Atmosphere	Dose Fract	Exposure (Ci-hr)	Decays (Bq-s)	Pathway 1 Outflow	Pathway 5 Outflow	Pathway 6 Outflow
Rb-86	1.7036E+01	2.6179E-04	2.4496E+00	3.2630E+14	1.6065E-01	1.7850E-03	1.3982E+00
Sr-89	2.5889E-01	2.4691E-05	3.7208E-02	4.9550E+12	2.4391E-03	2.7104E-05	2.1231E-02
Sr-90	2.3961E-02	7.1645E-05	3.4450E-03	4.5888E+11	2.2591E-04	2.5103E-06	1.9663E-03
Sr-91	1.0893E-01	5.1014E-07	1.5724E-02	2.0969E+12	1.0343E-03	1.1484E-05	8.9952E-03
Sr-92	4.6509E-02	1.6552E-07	6.7807E-03	9.0697E+11	4.4951E-04	4.9807E-06	3.9014E-03

Y-90	4.1657E-02	8.0950E-07	5.9910E-03	7.9801E+11	3.9295E-04	4.3660E-06	3.4199E-03
Y-91	3.2772E+00	3.6854E-04	4.7120E-01	6.2765E+13	3.0901E-02	3.4335E-04	2.6895E-01
Y-92	5.9086E-02	1.2517E-07	8.5138E-03	1.1329E+12	5.5923E-04	6.2113E-06	4.8653E-03
Y-93	3.8564E-02	1.9643E-07	5.5654E-03	7.4214E+11	3.6602E-04	4.0640E-06	3.1833E-03
Zr-95	4.6659E+00	2.5809E-04	6.7088E-01	8.9362E+13	4.3995E-02	4.8885E-04	3.8291E-01
Zr-97	7.5498E-02	7.7078E-07	1.0879E-02	1.4501E+12	7.1467E-04	7.9375E-06	6.2174E-03
Nb-95	6.7366E+00	9.6233E-05	9.6860E-01	1.2902E+14	6.3518E-02	7.0578E-04	5.5284E-01
Mo-99	4.0037E+02	3.7225E-03	5.7598E+01	7.6734E+15	3.7788E+00	4.1983E-02	3.2885E+01
Tc-99m	3.8301E+02	8.3665E-05	5.5098E+01	7.3323E+15	3.6146E+00	4.0160E-02	3.1457E+01
Ru-103	3.8561E+00	8.1612E-05	5.5446E-01	7.3855E+13	3.6361E-02	4.0402E-04	3.1647E-01
Ru-105	1.8429E-02	3.6710E-08	2.6723E-03	3.5686E+11	1.7641E-04	1.9568E-06	1.5327E-03
Ru-106	6.4695E+00	7.1095E-03	9.3019E-01	1.2390E+14	6.0999E-02	6.7779E-04	5.3091E-01
Rh-105	1.4858E-01	3.4033E-07	2.1383E-02	2.8489E+12	1.4032E-03	1.5589E-05	1.2211E-02
Te-127	4.8195E+01	3.5597E-05	6.9305E+00	9.2249E+14	4.5452E-01	5.0503E-03	3.9559E+00
Te-127m	4.7745E+01	2.3633E-03	6.8649E+00	9.1441E+14	4.5018E-01	5.0022E-03	3.9182E+00
Te-129	4.4158E+01	1.2061E-05	6.3502E+00	8.4077E+14	4.1650E-01	4.6277E-03	3.6248E+00
Te-129m	6.7070E+01	3.6994E-03	9.6438E+00	1.2846E+15	6.3243E-01	7.0272E-03	5.5044E+00
Te-131m	1.1173E+01	1.8396E-04	1.6085E+00	2.1434E+14	1.0559E-01	1.1729E-03	9.1874E-01
Te-132	1.8648E+02	4.0995E-03	2.6824E+01	3.5735E+15	1.7597E+00	1.9551E-02	1.5314E+01
I-131	5.8406E-03	2.7206E-07	5.1350E-04	4.7020E+10	1.6841E-05	2.3553E-07	1.8449E-04
I-132	7.6787E+00	1.6972E-05	6.7718E-01	6.1914E+13	2.2261E-02	3.1129E-04	2.4383E-01
I-133	5.8017E-03	5.0526E-08	5.1249E-04	4.7053E+10	1.6871E-05	2.3588E-07	1.8476E-04
I-134	2.0702E-01	4.5132E-07	1.8719E-02	1.7298E+12	6.2841E-04	8.7678E-06	6.8678E-03
Xe-133	1.8549E-06	3.1420E-14	1.1898E-07	8.2299E+06	2.6919E-09	3.9323E-11	3.0802E-08
Cs-134	6.4443E+03	6.9810E-01	9.2657E+02	1.2342E+17	6.0761E+01	6.7515E-01	5.2884E+02
Cs-136	4.2368E+02	8.2405E-03	6.0924E+01	8.1154E+15	3.9956E+00	4.4396E-02	3.4775E+01
Cs-137	3.5873E+03	2.6373E-01	5.1578E+02	6.8702E+16	3.3823E+01	3.7583E-01	2.9439E+02
Ba-139	3.5673E-02	1.6430E-08	5.2718E-03	7.0799E+11	3.5316E-04	3.9025E-06	3.0568E-03
Ba-140	3.7566E-01	3.3110E-06	5.4019E-02	7.1956E+12	3.5427E-03	3.9364E-05	3.0834E-02
La-140	5.5703E-01	7.8049E-06	8.0114E-02	1.0671E+13	5.2549E-03	5.8386E-05	4.5734E-02
La-141	2.4760E-02	3.4800E-08	3.5852E-03	4.7830E+11	2.3637E-04	2.6228E-06	2.0545E-03
La-142	6.0885E-03	2.5505E-08	8.9714E-04	1.2038E+11	5.9964E-05	6.6301E-07	5.1934E-04
Ce-141	2.7986E+00	5.7931E-05	4.0240E-01	5.3601E+13	2.6389E-02	2.9322E-04	2.2968E-01
Ce-143	1.3347E-01	1.0847E-06	1.9213E-02	2.5600E+12	1.2610E-03	1.4009E-05	1.0973E-02
Ce-144	8.1914E+00	7.0481E-03	1.1778E+00	1.5688E+14	7.7234E-02	8.5819E-04	6.7222E-01
Pr-143	1.3000E+00	2.4255E-05	1.8693E-01	2.4899E+13	1.2259E-02	1.3621E-04	1.0670E-01
Rb-89	3.3502E+00	1.0476E-05	5.6229E-01	7.8284E+13	4.1364E-02	4.4597E-04	3.4933E-01
Y-91m	6.4152E-02	4.5195E-08	9.2262E-03	1.2186E+12	6.0513E-04	6.7237E-06	5.2666E-03

Nb-95m	3.6160E-02	2.0558E-07	5.1993E-03	6.9250E+11	3.4096E-04	3.7886E-06	2.9676E-03
Nb-97	9.0710E-03	8.9075E-09	1.3274E-03	1.7730E+11	8.8260E-05	9.7718E-07	7.6542E-04
Rh-103m	3.8530E+00	4.6109E-08	5.5384E-01	7.3205E+13	3.6312E-02	4.0350E-04	3.1606E-01
Te-125m	4.7433E+00	7.9658E-05	6.8202E-01	9.0846E+13	4.4725E-02	4.9696E-04	3.8927E-01
Te-131	2.9797E+00	4.8232E-06	4.3466E-01	5.7339E+13	2.8843E-02	3.1947E-04	2.5024E-01
Te-133	7.0029E-02	6.0794E-08	6.5635E-03	6.0256E+11	2.2687E-04	3.1557E-06	2.4719E-03
Te-133m	1.3337E+00	5.2414E-06	1.9982E-01	2.6944E+13	1.3527E-02	1.4907E-04	1.1677E-01
Te-134	1.8420E+00	2.5781E-06	2.7974E-01	3.7871E+13	1.9134E-02	2.1029E-04	1.6472E-01
Cs-134m	3.8055E+00	4.7246E-07	5.5431E-01	7.4122E+13	3.6720E-02	4.0695E-04	3.1876E-01
Cs-138	5.5358E+01	1.8898E-04	8.5485E+00	1.1628E+15	5.9204E-01	6.4857E-03	5.0803E+00
Ba-141	5.9749E-03	8.1355E-09	9.7620E-04	1.3492E+11	7.0455E-05	7.6348E-07	5.9804E-04
Total	1.1785E+04	1.0000E+00	0.0000E+00	0.0000E+00	1.1116E+02	1.2351E+00	9.6745E+02

Dose Equivalent (Ci/cc) I-131 (Thyroid)	3.9976E-12
Dose Equivalent (Ci/cc) I-131 (CEDE)	7.3233E-12
Dose Equivalent (Ci/cc) I-131 (ICRP2 Thyroid)	2.1799E-11
Total I (Ci)	7.8974E+00
Dose Equivalent (Ci/cc) Xe-133 (EDE)	1.4954E-16

RCS Compartment Group Inventory Distribution:

Time (h) = 0.1390	Atmosphere	Sump
Noble gases (Ci)	1.9970E-06	0.0000E+00
Elemental I (Ci)	7.6605E+00	0.0000E+00
Organic I (Ci)	2.3692E-01	0.0000E+00
Aerosol I (Ci)	0.0000E+00	0.0000E+00
All Aerosols (Ci)	1.1777E+04	0.0000E+00
All Aerosols (kg)	4.6212E-02	0.0000E+00

Intact Steam Generators Compartment Nuclide Inventory (Ci) at Time (h) = 0.1390

Nuclide	Compartment Atmosphere	Dose Fract	Exposure (Ci-hr)	Decays (Bq-s)	Pathway 5 Inflow	Pathway 7 Outflow
Rb-86	1.7844E-03	2.6179E-04	1.5290E-04	2.0367E+10	1.7850E-03	3.4495E-07
Sr-89	2.7117E-05	2.4696E-05	2.3229E-06	3.0934E+08	2.7104E-05	5.2390E-09
Sr-90	2.5097E-06	7.1645E-05	2.1504E-07	2.8643E+07	2.5103E-06	4.8511E-10
Sr-91	1.1409E-05	5.0935E-07	9.7998E-07	1.3070E+08	1.1484E-05	2.2156E-09
Sr-92	4.8714E-06	1.6463E-07	4.2097E-07	5.6328E+07	4.9807E-06	9.5701E-10

Y-90	4.3632E-06	8.0943E-07	3.7392E-07	4.9807E+07	4.3660E-06	8.4365E-10
Y-91	3.4326E-04	3.6854E-04	2.9412E-05	3.9177E+09	3.4335E-04	6.6352E-08
Y-92	6.1888E-06	1.2507E-07	5.3099E-07	7.0651E+07	6.2113E-06	1.1993E-09
Y-93	4.0392E-06	1.9615E-07	3.4689E-07	4.6262E+07	4.0640E-06	7.8417E-10
Zr-95	4.8871E-04	2.5808E-04	4.1876E-05	5.5779E+09	4.8885E-04	9.4470E-08
Zr-97	7.9078E-06	7.7012E-07	6.7850E-07	9.0442E+07	7.9375E-06	1.5325E-09
Nb-95	7.0560E-04	9.6233E-05	6.0460E-05	8.0532E+09	7.0578E-04	1.3639E-07
Mo-99	4.1935E-02	3.7217E-03	3.5945E-03	4.7887E+11	4.1983E-02	8.1114E-06
Tc-99m	4.0117E-02	8.3648E-05	3.4385E-03	4.5754E+11	4.0160E-02	7.7593E-06
Ru-103	4.0390E-04	8.1611E-05	3.4609E-05	4.6099E+09	4.0402E-04	7.8076E-08
Ru-105	1.9303E-06	3.6589E-08	1.6625E-07	2.2207E+07	1.9568E-06	3.7682E-10
Ru-106	6.7762E-04	7.1095E-03	5.8062E-05	7.7339E+09	6.7779E-04	1.3098E-07
Rh-105	1.5563E-05	3.4021E-07	1.3342E-06	1.7777E+08	1.5589E-05	3.0115E-09
Te-127	5.0481E-03	3.5596E-05	4.3258E-04	5.7574E+10	5.0503E-03	9.7593E-07
Te-127m	5.0009E-03	2.3633E-03	4.2850E-04	5.7077E+10	5.0022E-03	9.6667E-07
Te-129	4.6251E-03	1.2060E-05	3.9635E-04	5.2438E+10	4.6277E-03	8.9422E-07
Te-129m	7.0250E-03	3.6993E-03	6.0195E-04	8.0181E+10	7.0272E-03	1.3580E-06
Te-131m	1.1703E-03	1.8387E-04	1.0036E-04	1.3373E+10	1.1729E-03	2.2655E-07
Te-132	1.9532E-02	4.0988E-03	1.6741E-03	2.2302E+11	1.9551E-02	3.7776E-06
I-132	8.0428E-04	2.1158E-05	5.2697E-05	5.0821E+09	3.1129E-04	8.5416E-08
I-134	2.1684E-05	5.5851E-07	1.4459E-06	1.4116E+08	8.7678E-06	2.3873E-09
Cs-134	6.7499E-01	6.9810E-01	5.7836E-02	7.7038E+12	6.7515E-01	1.3047E-04
Cs-136	4.4377E-02	8.2401E-03	3.8027E-03	5.0654E+11	4.4396E-02	8.5792E-06
Cs-137	3.7574E-01	2.6373E-01	3.2195E-02	4.2884E+12	3.7583E-01	7.2629E-05
Ba-139	3.7364E-06	1.6255E-08	3.2556E-07	4.3755E+07	3.9025E-06	7.4565E-10
Ba-140	3.9347E-05	3.3109E-06	3.3717E-06	4.4913E+08	3.9364E-05	7.6067E-09
La-140	5.8344E-05	7.8040E-06	5.0001E-06	6.6600E+08	5.8386E-05	1.1282E-08
La-141	2.5934E-06	3.4706E-08	2.2318E-07	2.9780E+07	2.6228E-06	5.0544E-10
La-142	6.3772E-07	2.5263E-08	5.5467E-08	7.4476E+06	6.6301E-07	1.2683E-10
Ce-141	2.9313E-04	5.7930E-05	2.5117E-05	3.3457E+09	2.9322E-04	5.6664E-08
Ce-143	1.3980E-05	1.0842E-06	1.1987E-06	1.5973E+08	1.4009E-05	2.7060E-09
Ce-144	8.5798E-04	7.0481E-03	7.3516E-05	9.7923E+09	8.5819E-04	1.6585E-07
Pr-143	1.3616E-04	2.4255E-05	1.1667E-05	1.5542E+09	1.3621E-04	2.6322E-08
Rb-89	3.5091E-04	9.8615E-06	3.3038E-05	4.6230E+09	4.4597E-04	8.0949E-08
Y-91m	6.7193E-06	4.5191E-08	5.7584E-07	7.5981E+07	6.7237E-06	1.2992E-09
Nb-95m	3.7874E-06	2.0558E-07	3.2453E-07	4.3225E+07	3.7886E-06	7.3213E-10
Nb-97	9.5011E-07	8.8463E-09	8.2288E-08	1.0992E+07	9.7718E-07	1.8746E-10
Rh-103m	4.0357E-04	4.6114E-08	3.4574E-05	4.5656E+09	4.0350E-04	7.7984E-08

Te-125m	4.9683E-04	7.9657E-05	4.2571E-05	5.6705E+09	4.9696E-04	9.6038E-08
Te-131	3.1210E-04	4.7952E-06	2.6974E-05	3.5530E+09	3.1947E-04	6.1345E-08
Te-133	7.3350E-06	7.4428E-08	5.0158E-07	4.8719E+07	3.1557E-06	8.4976E-10
Te-133m	1.3970E-04	5.1580E-06	1.2274E-05	1.6570E+09	1.4907E-04	2.8323E-08
Te-134	1.9293E-04	2.5236E-06	1.7093E-05	2.3176E+09	2.1029E-04	3.9734E-08
Cs-134m	3.9859E-04	4.7008E-07	3.4425E-05	4.6050E+09	4.0695E-04	7.8221E-08
Cs-138	5.7983E-03	1.8379E-04	5.1894E-04	7.0737E+10	6.4857E-03	1.2172E-06
Ba-141	6.2582E-07	7.7393E-09	5.7967E-08	8.0436E+06	7.6348E-07	1.4007E-10
Total	1.2344E+00	1.0000E+00	0.0000E+00	0.0000E+00	1.2351E+00	2.3866E-04

Dose Equivalent (Ci/cc) I-131 (Thyroid)	6.6718E-16
Dose Equivalent (Ci/cc) I-131 (CEDE)	1.2222E-15
Dose Equivalent (Ci/cc) I-131 (ICRP2 Thyroid)	3.6381E-15
Total I (Ci)	8.2719E-04
Dose Equivalent (Ci/cc) Xe-133 (EDE)	2.4957E-20

Intact Steam Generators Compartment Group Inventory Distribution:

Time (h) = 0.1390	Atmosphere	Sump
Noble gases (Ci)	2.0917E-10	0.0000E+00
Elemental I (Ci)	8.0237E-04	0.0000E+00
Organic I (Ci)	2.4816E-05	0.0000E+00
Aerosol I (Ci)	0.0000E+00	0.0000E+00
All Aerosols (Ci)	1.2336E+00	0.0000E+00
All Aerosols (kg)	4.8403E-06	0.0000E+00

Control Room Compartment Nuclide Inventory (Ci) at Time (h) = 0.1390

Nuclide	Compartment Atmosphere	Dose Fract	Exposure (Ci-hr)	Decays (Bq-s)	Compartment Recirc Filtr	Pathway 2 Inflow	Pathway 3 Inflow	Pathway 4 Outflow
Rb-86	3.0214E-04	2.6179E-04	3.1790E-05	4.2346E+09	5.0005E-05	3.5440E-04	2.1141E-05	2.7850E-05
Sr-89	4.5916E-06	2.4696E-05	4.8296E-07	6.4315E+07	7.5991E-07	5.3810E-06	3.2105E-07	4.2322E-07
Sr-91	1.9319E-06	5.0936E-07	2.0375E-07	2.7176E+07	3.1974E-07	2.2812E-06	1.3593E-07	1.7887E-07
Y-91	5.8122E-05	3.6854E-04	6.1152E-06	8.1455E+08	9.6193E-06	6.8169E-05	4.0666E-06	5.3571E-06
Y-92	1.0479E-06	1.2507E-07	1.1040E-07	1.4690E+07	1.7343E-07	1.2335E-06	7.3543E-08	9.7766E-08
Zr-95	8.2753E-05	2.5808E-04	8.7065E-06	1.1597E+09	1.3696E-05	9.7056E-05	5.7898E-06	7.6272E-06
Zr-97	1.3390E-06	7.7012E-07	1.4107E-07	1.8805E+07	2.2161E-07	1.5764E-06	9.3980E-08	1.2373E-07
Nb-95	1.1948E-04	9.6233E-05	1.2570E-05	1.6744E+09	1.9774E-05	1.4013E-04	8.3592E-06	1.1012E-05

Mo-99	7.1008E-03	3.7217E-03	7.4734E-04	9.9565E+10	1.1752E-03	8.3359E-03	4.9720E-04	6.5488E-04
Tc-99m	6.7930E-03	8.3648E-05	7.1491E-04	9.5130E+10	1.1242E-03	7.9738E-03	4.7561E-04	6.3057E-04
Ru-103	6.8391E-05	8.1611E-05	7.1956E-06	9.5847E+08	1.1319E-05	8.0214E-05	4.7851E-06	6.3036E-06
Ru-106	1.1474E-04	7.1095E-03	1.2072E-05	1.6080E+09	1.8989E-05	1.3457E-04	8.0276E-06	1.0575E-05
Rh-105	2.6352E-06	3.4021E-07	2.7740E-07	3.6961E+07	4.3612E-07	3.0954E-06	1.8461E-07	2.4317E-07
Te-127	8.5477E-04	3.5596E-05	8.9938E-05	1.1971E+10	1.4147E-04	1.0027E-03	5.9814E-05	7.9144E-05
Te-127m	8.4678E-04	2.3633E-03	8.9091E-05	1.1867E+10	1.4014E-04	9.9313E-04	5.9245E-05	7.8046E-05
Te-129	7.8316E-04	1.2060E-05	8.2405E-05	1.0904E+10	1.2961E-04	9.1880E-04	5.4808E-05	7.4847E-05
Te-129m	1.1895E-03	3.6993E-03	1.2515E-04	1.6671E+10	1.9687E-04	1.3952E-03	8.3228E-05	1.0964E-04
Te-131m	1.9817E-04	1.8387E-04	2.0865E-05	2.7804E+09	3.2797E-05	2.3291E-04	1.3889E-05	1.8291E-05
Te-132	3.3073E-03	4.0988E-03	3.4806E-04	4.6369E+10	5.4735E-04	3.8819E-03	2.3155E-04	3.0499E-04
I-132	1.3854E-04	2.1279E-05	1.1019E-05	1.0586E+09	2.1994E-05	5.5445E-05	4.2381E-06	1.2741E-05
I-134	3.7356E-06	5.6261E-07	3.0284E-07	2.9460E+07	5.9286E-07	1.5827E-06	1.1923E-07	3.5448E-07
Cs-134	1.1429E-01	6.9810E-01	1.2025E-02	1.6017E+12	1.8916E-02	1.3404E-01	7.9964E-03	1.0534E-02
Cs-136	7.5143E-03	8.2401E-03	7.9063E-04	1.0532E+11	1.2436E-03	8.8145E-03	5.2581E-04	6.9266E-04
Cs-137	6.3623E-02	2.6373E-01	6.6938E-03	8.9161E+11	1.0530E-02	7.4616E-02	4.4513E-03	5.8639E-03
Ba-140	6.6625E-06	3.3109E-06	7.0101E-07	9.3379E+07	1.1026E-06	7.8154E-06	4.6621E-07	6.1414E-07
La-140	9.8793E-06	7.8040E-06	1.0396E-06	1.3847E+08	1.6350E-06	1.1592E-05	6.9149E-07	9.1151E-07
Ce-141	4.9635E-05	5.7930E-05	5.2222E-06	6.9561E+08	8.2146E-06	5.8216E-05	3.4728E-06	4.5749E-06
Ce-143	2.3673E-06	1.0842E-06	2.4923E-07	3.3211E+07	3.9178E-07	2.7817E-06	1.6589E-07	2.1847E-07
Ce-144	1.4528E-04	7.0481E-03	1.5285E-05	2.0359E+09	2.4044E-05	1.7038E-04	1.0164E-05	1.3390E-05
Pr-143	2.3055E-05	2.4255E-05	2.4258E-06	3.2313E+08	3.8157E-06	2.7044E-05	1.6133E-06	2.1252E-06
Rb-89	5.9419E-05	9.8545E-06	6.8643E-06	9.6251E+08	9.8338E-06	9.0050E-05	5.1645E-06	6.5165E-06
Y-91m	1.1378E-06	4.5191E-08	1.1973E-07	1.5800E+07	1.8830E-07	1.3350E-06	7.9632E-08	1.1028E-07
Rh-103m	6.8336E-05	4.6114E-08	7.1883E-06	9.4940E+08	1.1310E-05	8.0108E-05	4.7791E-06	6.5861E-06
Te-125m	8.4126E-05	7.9657E-05	8.8511E-06	1.1790E+09	1.3923E-05	9.8667E-05	5.8860E-06	7.7538E-06
Te-131	5.2847E-05	4.7950E-06	5.6080E-06	7.3907E+08	8.7461E-06	6.3547E-05	3.7750E-06	5.3719E-06
Te-133	1.2420E-06	7.4682E-08	1.0464E-07	1.0120E+07	2.0555E-07	5.6279E-07	4.2844E-08	1.3143E-07
Te-133m	2.3655E-05	5.1580E-06	2.5520E-06	3.4469E+08	3.9149E-06	2.9751E-05	1.7549E-06	2.2851E-06
Te-134	3.2669E-05	2.5235E-06	3.5537E-06	4.8217E+08	5.4067E-06	4.2036E-05	2.4707E-06	3.2048E-06
Cs-134m	6.7492E-05	4.7008E-07	7.1575E-06	9.5760E+08	1.1170E-05	8.0933E-05	4.8106E-06	6.3139E-06
Cs-138	9.8181E-04	1.8377E-04	1.0788E-04	1.4720E+10	1.6249E-04	1.2989E-03	7.6016E-05	9.8143E-05
Total	2.0902E-01	1.0000E+00	0.0000E+00	0.0000E+00	3.4592E-02	2.4522E-01	1.4628E-02	1.9283E-02

Control Room Compartment Group Inventory Distribution:

Time (h) = 0.1390	Atmosphere	Sump
Noble gases (Ci)	5.6192E-11	0.0000E+00

Elemental I (Ci)	1.3821E-04	0.0000E+00
Organic I (Ci)	4.2746E-06	0.0000E+00
Aerosol I (Ci)	0.0000E+00	0.0000E+00
All Aerosols (Ci)	2.0888E-01	0.0000E+00
All Aerosols (kg)	8.1959E-07	0.0000E+00

Time (h) = 0.1390	Deposition Surfaces	Recirculating Filter
Noble gases (Ci)	0.0000E+00	0.0000E+00
Elemental I (Ci)	0.0000E+00	2.1941E-05
Organic I (Ci)	0.0000E+00	6.7860E-07
Aerosol I (Ci)	0.0000E+00	0.0000E+00
All Aerosols (Ci)	0.0000E+00	3.4569E-02
All Aerosols (kg)	0.0000E+00	1.3564E-07

Ruptured Steam Generator Compartment Nuclide Inventory (Ci) at Time (h) = 0.1390

Nuclide	Compartment Atmosphere	Dose Fract	Exposure (Ci-hr)	Decays (Bq-s)	Pathway 6 Inflow	Pathway 8 Outflow
Rb-86	1.3977E+00	2.6179E-04	1.1977E-01	1.5954E+13	1.3982E+00	2.5516E-04
Sr-89	2.1241E-02	2.4696E-05	1.8195E-03	2.4231E+11	2.1231E-02	3.8753E-06
Sr-90	1.9658E-03	7.1645E-05	1.6844E-04	2.2436E+10	1.9663E-03	3.5884E-07
Sr-91	8.9371E-03	5.0935E-07	7.6763E-04	1.0238E+11	8.9952E-03	1.6389E-06
Sr-92	3.8158E-03	1.6463E-07	3.2975E-04	4.4122E+10	3.9014E-03	7.0790E-07
Y-90	3.4178E-03	8.0943E-07	2.9289E-04	3.9014E+10	3.4199E-03	6.2405E-07
Y-91	2.6887E-01	3.6854E-04	2.3039E-02	3.0688E+12	2.6895E-01	4.9081E-05
Y-92	4.8477E-03	1.2507E-07	4.1593E-04	5.5341E+10	4.8653E-03	8.8712E-07
Y-93	3.1640E-03	1.9615E-07	2.7172E-04	3.6237E+10	3.1833E-03	5.8005E-07
Zr-95	3.8281E-01	2.5808E-04	3.2802E-02	4.3692E+12	3.8291E-01	6.9879E-05
Zr-97	6.1942E-03	7.7012E-07	5.3147E-04	7.0843E+10	6.2174E-03	1.1336E-06
Nb-95	5.5270E-01	9.6233E-05	4.7358E-02	6.3081E+12	5.5284E-01	1.0089E-04
Mo-99	3.2848E+01	3.7217E-03	2.8156E+00	3.7510E+14	3.2885E+01	6.0000E-03
Tc-99m	3.1424E+01	8.3648E-05	2.6934E+00	3.5839E+14	3.1457E+01	5.7395E-03
Ru-103	3.1638E-01	8.1611E-05	2.7109E-02	3.6110E+12	3.1647E-01	5.7753E-05
Ru-105	1.5120E-03	3.6589E-08	1.3023E-04	1.7395E+10	1.5327E-03	2.7874E-07
Ru-106	5.3079E-01	7.1095E-03	4.5480E-02	6.0580E+12	5.3091E-01	9.6888E-05
Rh-105	1.2190E-02	3.4021E-07	1.0451E-03	1.3925E+11	1.2211E-02	2.2276E-06
Te-127	3.9542E+00	3.5596E-05	3.3884E-01	4.5098E+13	3.9559E+00	7.2189E-04

Te-127m	3.9172E+00	2.3633E-03	3.3565E-01	4.4709E+13	3.9182E+00	7.1505E-04
Te-129	3.6229E+00	1.2060E-05	3.1046E-01	4.1075E+13	3.6248E+00	6.6145E-04
Te-129m	5.5027E+00	3.6993E-03	4.7151E-01	6.2806E+13	5.5044E+00	1.0045E-03
Te-131m	9.1672E-01	1.8387E-04	7.8609E-02	1.0475E+13	9.1874E-01	1.6758E-04
Te-132	1.5299E+01	4.0988E-03	1.3113E+00	1.7469E+14	1.5314E+01	2.7943E-03
I-131	4.7919E-04	3.3947E-07	3.1329E-05	3.0255E+09	1.8449E-04	4.7816E-08
I-132	6.3000E-01	2.1158E-05	4.1278E-02	3.9808E+12	2.4383E-01	6.3143E-05
I-133	4.7600E-04	6.2963E-08	3.1225E-05	3.0248E+09	1.8476E-04	4.7823E-08
I-134	1.6985E-02	5.5851E-07	1.1326E-03	1.1057E+11	6.8678E-03	1.7648E-06
Cs-134	5.2872E+02	6.9810E-01	4.5303E+01	6.0344E+15	5.2884E+02	9.6511E-02
Cs-136	3.4761E+01	8.2401E-03	2.9787E+00	3.9678E+14	3.4775E+01	6.3460E-03
Cs-137	2.9432E+02	2.6373E-01	2.5219E+01	3.3591E+15	2.9439E+02	5.3724E-02
Ba-139	2.9268E-03	1.6255E-08	2.5502E-04	3.4274E+10	3.0568E-03	5.5157E-07
Ba-140	3.0821E-02	3.3109E-06	2.6411E-03	3.5180E+11	3.0834E-02	5.6267E-06
La-140	4.5701E-02	7.8040E-06	3.9166E-03	5.2168E+11	4.5734E-02	8.3451E-06
La-141	2.0315E-03	3.4706E-08	1.7482E-04	2.3327E+10	2.0545E-03	3.7387E-07
La-142	4.9953E-04	2.5263E-08	4.3448E-05	5.8337E+09	5.1934E-04	9.3821E-08
Ce-141	2.2961E-01	5.7930E-05	1.9675E-02	2.6207E+12	2.2968E-01	4.1915E-05
Ce-143	1.0951E-02	1.0842E-06	9.3898E-04	1.2512E+11	1.0973E-02	2.0016E-06
Ce-144	6.7206E-01	7.0481E-03	5.7585E-02	7.6704E+12	6.7222E-01	1.2268E-04
Pr-143	1.0665E-01	2.4255E-05	9.1392E-03	1.2174E+12	1.0670E-01	1.9471E-05
Rb-89	2.7487E-01	9.8615E-06	2.5879E-02	3.6212E+12	3.4933E-01	5.9886E-05
Y-91m	5.2633E-03	4.5191E-08	4.5106E-04	5.9516E+10	5.2666E-03	9.6105E-07
Nb-95m	2.9667E-03	2.0558E-07	2.5421E-04	3.3858E+10	2.9676E-03	5.4156E-07
Nb-97	7.4423E-04	8.8463E-09	6.4456E-05	8.6103E+09	7.6542E-04	1.3866E-07
Rh-103m	3.1612E-01	4.6114E-08	2.7082E-02	3.5763E+12	3.1606E-01	5.7685E-05
Te-125m	3.8917E-01	7.9657E-05	3.3346E-02	4.4417E+12	3.8927E-01	7.1039E-05
Te-131	2.4447E-01	4.7952E-06	2.1129E-02	2.7831E+12	2.5024E-01	4.5377E-05
Te-133	5.7456E-03	7.4428E-08	3.9289E-04	3.8162E+10	2.4719E-03	6.2819E-07
Te-133m	1.0943E-01	5.1580E-06	9.6146E-03	1.2979E+12	1.1677E-01	2.0951E-05
Te-134	1.5113E-01	2.5236E-06	1.3389E-02	1.8154E+12	1.6472E-01	2.9392E-05
Cs-134m	3.1222E-01	4.7008E-07	2.6965E-02	3.6071E+12	3.1876E-01	5.7861E-05
Cs-138	4.5419E+00	1.8379E-04	4.0649E-01	5.5409E+13	5.0803E+00	9.0039E-04
Ba-141	4.9021E-04	7.7393E-09	4.5406E-05	6.3006E+09	5.9804E-04	1.0362E-07
Total	9.6691E+02	1.0000E+00	0.0000E+00	0.0000E+00	9.6745E+02	1.7654E-01

Dose Equivalent (Ci/cc) I-131 (Thyroid) 1.5678E-12
Dose Equivalent (Ci/cc) I-131 (CEDE) 2.8721E-12

```
Dose Equivalent (Ci/cc) I-131 (ICRP2 Thyroid)       8.5493E-12
Total I  (Ci)                                       6.4794E-01
Dose Equivalent (Ci/cc) Xe-133 (EDE)                5.8646E-17

Ruptured Steam Generator Compartment Group Inventory Distribution:

Time (h) =   0.1390      Atmosphere      Sump
Noble gases (Ci)         1.6384E-07   0.0000E+00
Elemental I (Ci)         6.2850E-01   0.0000E+00
Organic I (Ci)           1.9438E-02   0.0000E+00
Aerosol I (Ci)           0.0000E+00   0.0000E+00
All Aerosols (Ci)        9.6626E+02   0.0000E+00
All Aerosols (kg)        3.7914E-03   0.0000E+00

#######################################################################
    ALION RADTRAD Version 3.10 Rev 2 run on 12/01/2014  at 16:22:43

                Copyright © 2009 Alion Science and Technology
#######################################################################

Exclusion Area Boundary Doses:

Time (h) =   0.2780    Whole Body   Thyroid       TEDE
Delta dose (rem)        6.0655E-03  4.3620E-01  4.5336E-01
Accumulated dose (rem)  1.9384E-02  1.3929E+00  1.4477E+00

Low Population Zone Doses:

Time (h) =   0.2780    Whole Body   Thyroid       TEDE
Delta dose (rem)        1.1676E-03  8.3970E-02  8.7274E-02
Accumulated dose (rem)  3.3623E-03  2.4164E-01  2.5115E-01

Control Room Doses:

Time (h) =   0.2780    Whole Body   Thyroid       TEDE        Skin
Delta dose (rem)        2.9351E-04  6.3629E-01  6.5276E-01  1.1766E-02
Accumulated dose (rem)  5.4767E-04  1.1869E+00  1.2177E+00  2.1961E-02
```

****

RCS Compartment Nuclide Inventory (Ci) at Time (h) = 0.2780

Nuclide	Compartment Atmosphere	Dose Fract	Exposure (Ci-hr)	Decays (Bq-s)	Pathway 1 Outflow	Pathway 5 Outflow	Pathway 6 Outflow
Rb-86	1.5603E+01	2.6177E-04	4.6858E+00	6.2417E+14	2.4642E-01	3.4983E-03	2.7402E+00
Sr-89	2.3735E-01	2.4703E-05	7.1213E-02	9.4836E+12	3.7430E-03	5.3150E-05	4.1632E-02
Sr-90	2.1950E-02	7.1646E-05	6.5906E-03	8.7787E+11	3.4656E-04	4.9201E-06	3.8539E-03
Sr-91	9.8783E-02	5.0759E-07	2.9931E-02	3.9922E+12	1.5809E-03	2.2402E-05	1.7547E-02
Sr-92	4.1118E-02	1.6266E-07	1.2748E-02	1.7061E+12	6.8090E-04	9.6028E-06	7.5218E-03
Y-90	3.8137E-02	8.0926E-07	1.1458E-02	1.5262E+12	6.0264E-04	8.5548E-06	6.7009E-03
Y-91	3.0020E+00	3.6854E-04	9.0141E-01	1.2007E+14	4.7401E-02	6.7295E-04	5.2712E-01
Y-92	5.3801E-02	1.2481E-07	1.6241E-02	2.1614E+12	8.5613E-04	1.2142E-05	9.5108E-03
Y-93	3.4992E-02	1.9551E-07	1.0597E-02	1.4133E+12	5.5957E-04	7.9301E-06	6.2116E-03
Zr-95	4.2741E+00	2.5808E-04	1.2834E+00	1.7095E+14	6.7487E-02	9.5812E-04	7.5049E-01
Zr-97	6.8770E-02	7.6862E-07	2.0754E-02	2.7666E+12	1.0941E-03	1.5516E-05	1.2154E-02
Nb-95	6.1711E+00	9.6232E-05	1.8530E+00	2.4682E+14	9.7437E-02	1.3833E-03	1.0835E+00
Mo-99	3.6624E+02	3.7199E-03	1.1011E+02	1.4669E+16	5.7937E+00	8.2231E-02	6.4411E+01
Tc-99m	3.5041E+02	8.3611E-05	1.0534E+02	1.4018E+16	5.5422E+00	7.8664E-02	6.1617E+01
Ru-103	3.5322E+00	8.1609E-05	1.0607E+00	1.4128E+14	5.5776E-02	7.9184E-04	6.2024E-01
Ru-105	1.6520E-02	3.6320E-08	5.0579E-03	6.7569E+11	2.6852E-04	3.7968E-06	2.9740E-03
Ru-106	5.9265E+00	7.1096E-03	1.7795E+00	2.3703E+14	9.3572E-02	1.3285E-03	1.0406E+00
Rh-105	1.3579E-01	3.3993E-07	4.0858E-02	5.4439E+12	2.1507E-03	3.0521E-05	2.3907E-02
Te-127	4.4137E+01	3.5592E-05	1.3256E+01	1.7645E+15	6.9716E-01	9.8971E-03	7.7523E+00
Te-127m	4.3737E+01	2.3633E-03	1.3133E+01	1.7493E+15	6.9057E-01	9.8041E-03	7.6795E+00
Te-129	4.0432E+01	1.2058E-05	1.2145E+01	1.6078E+15	6.3879E-01	9.0681E-03	7.1030E+00
Te-129m	6.1435E+01	3.6992E-03	1.8448E+01	2.4573E+15	9.7011E-01	1.3773E-02	1.0788E+01
Te-131m	1.0203E+01	1.8367E-04	3.0723E+00	4.0941E+14	1.6178E-01	2.2955E-03	1.7980E+00
Te-132	1.7062E+02	4.0971E-03	5.1286E+01	6.8324E+15	2.6982E+00	3.8299E-02	2.9999E+01
I-131	1.0637E-02	4.9085E-07	1.7724E-03	1.9118E+11	5.6095E-05	1.0197E-06	7.9869E-04
I-132	1.3773E+01	3.0330E-05	2.3151E+00	2.4950E+14	7.3563E-02	1.3361E-03	1.0465E+00
I-133	1.0315E-02	8.9827E-08	1.7430E-03	1.8866E+11	5.5514E-05	1.0078E-06	7.8938E-04
I-134	3.3514E-01	7.5467E-07	5.9880E-02	6.5249E+12	1.9571E-03	3.5308E-05	2.7656E-02
Xe-133	7.2341E-06	1.1518E-13	8.3439E-07	7.8839E+07	2.0835E-08	4.0174E-10	3.1467E-07
Cs-134	5.9035E+03	6.9811E-01	1.7726E+03	2.3611E+17	9.3208E+01	1.3233E+00	1.0365E+03
Cs-136	3.8801E+02	8.2393E-03	1.1653E+02	1.5523E+16	6.1286E+00	8.7004E-02	6.8150E+01
Cs-137	3.2863E+03	2.6373E-01	9.8673E+02	1.3143E+17	5.1885E+01	7.3662E-01	5.7699E+02

Ba-139	3.0473E-02	1.5880E-08	9.7481E-03	1.3107E+12	5.2861E-04	7.4072E-06	5.8020E-03
Ba-140	3.4403E-01	3.3105E-06	1.0333E-01	1.3763E+13	5.4339E-03	7.7142E-05	6.0425E-02
La-140	5.0989E-01	7.8020E-06	1.5320E-01	2.0407E+13	8.0588E-03	1.1440E-04	8.9605E-02
La-141	2.2247E-02	3.4480E-08	6.7955E-03	9.0704E+11	3.6024E-04	5.0972E-06	3.9926E-03
La-142	5.2397E-03	2.4740E-08	1.6648E-03	2.2363E+11	8.9984E-05	1.2627E-06	9.8903E-04
Ce-141	2.5635E+00	5.7928E-05	7.6978E-01	1.0254E+14	4.0480E-02	5.7468E-04	4.5014E-01
Ce-143	1.2192E-01	1.0831E-06	3.6702E-02	4.8907E+12	1.9324E-03	2.7420E-05	2.1478E-02
Ce-144	7.5039E+00	7.0481E-03	2.2531E+00	3.0012E+14	1.1848E-01	1.6820E-03	1.3175E+00
Pr-143	1.1906E+00	2.4253E-05	3.5756E-01	4.7628E+13	1.8804E-02	2.6695E-04	2.0910E-01
Rb-89	2.0982E+00	8.8401E-06	9.0769E-01	1.2713E+14	5.6283E-02	7.4398E-04	5.8276E-01
Y-91m	5.8674E-02	4.5169E-08	1.7640E-02	2.3296E+12	9.2798E-04	1.3173E-05	1.0318E-02
Nb-95m	3.3122E-02	2.0558E-07	9.9460E-03	1.3247E+12	5.2302E-04	7.4252E-06	5.8161E-03
Nb-97	7.9529E-03	8.7159E-09	2.4848E-03	3.3208E+11	1.3326E-04	1.8760E-06	1.4695E-03
Rh-103m	3.5317E+00	4.6124E-08	1.0599E+00	1.4006E+14	5.5716E-02	7.9110E-04	6.1967E-01
Te-125m	4.3450E+00	7.9656E-05	1.3047E+00	1.7379E+14	6.8608E-02	9.7402E-04	7.6294E-01
Te-131	2.6429E+00	4.7424E-06	8.1759E-01	1.0781E+14	4.3677E-02	6.1580E-04	4.8235E-01
Te-133	9.8161E-02	9.2898E-08	1.9187E-02	2.0793E+12	6.5199E-04	1.1648E-05	9.1236E-03
Te-133m	1.1008E+00	4.9843E-06	3.6352E-01	4.9106E+13	2.0012E-02	2.7862E-04	2.1824E-01
Te-134	1.4695E+00	2.4133E-06	5.0096E-01	6.7979E+13	2.7991E-02	3.8722E-04	3.0331E-01
Cs-134m	3.3722E+00	4.6481E-07	1.0433E+00	1.3959E+14	5.5668E-02	7.8543E-04	6.1522E-01
Cs-138	4.2379E+01	1.7362E-04	1.5024E+01	2.0500E+15	8.5469E-01	1.1732E-02	9.1898E+00
Ba-141	3.9887E-03	7.0453E-09	1.6173E-03	2.2466E+11	9.7594E-05	1.3056E-06	1.0227E-03
Total	1.0792E+04	1.0000E+00	0.0000E+00	0.0000E+00	1.7049E+02	2.4202E+00	1.8957E+03

Dose Equivalent (Ci/cc) I-131 (Thyroid)	7.1785E-12
Dose Equivalent (Ci/cc) I-131 (CEDE)	1.3135E-11
Dose Equivalent (Ci/cc) I-131 (ICRP2 Thyroid)	3.9062E-11
Total I (Ci)	1.4129E+01
Dose Equivalent (Ci/cc) Xe-133 (EDE)	5.8319E-16

RCS Compartment Group Inventory Distribution:

Time (h) = 0.2780	Atmosphere	Sump
Noble gases (Ci)	7.7887E-06	0.0000E+00
Elemental I (Ci)	1.3705E+01	0.0000E+00
Organic I (Ci)	4.2386E-01	0.0000E+00
Aerosol I (Ci)	0.0000E+00	0.0000E+00
All Aerosols (Ci)	1.0778E+04	0.0000E+00

All Aerosols (kg) 4.2334E-02 0.0000E+00

Intact Steam Generators Compartment Nuclide Inventory (Ci) at Time (h) = 0.2780

Nuclide	Compartment Atmosphere	Dose Fract	Exposure (Ci-hr)	Decays (Bq-s)	Pathway 5 Inflow	Pathway 7 Outflow
Rb-86	3.4959E-03	2.6175E-04	5.5839E-04	7.4380E+10	3.4983E-03	1.4048E-06
Sr-89	5.3178E-05	2.4710E-05	8.4895E-06	1.1306E+09	5.3150E-05	2.1351E-08
Sr-90	4.9179E-06	7.1646E-05	7.8544E-07	1.0462E+08	4.9201E-06	1.9758E-09
Sr-91	2.2132E-05	5.0588E-07	3.5549E-06	4.7422E+08	2.2402E-05	8.9656E-09
Sr-92	9.2125E-06	1.6073E-07	1.5011E-06	2.0100E+08	9.6028E-06	3.8103E-09
Y-90	8.5447E-06	8.0909E-07	1.3652E-06	1.8184E+08	8.5548E-06	3.4347E-09
Y-91	6.7259E-04	3.6853E-04	1.0742E-04	1.4309E+10	6.7295E-04	2.7024E-07
Y-92	1.2054E-05	1.2457E-07	1.9317E-06	2.5710E+08	1.2142E-05	4.8667E-09
Y-93	7.8400E-06	1.9489E-07	1.2589E-06	1.6791E+08	7.9301E-06	3.1744E-09
Zr-95	9.5761E-04	2.5808E-04	1.5295E-04	2.0373E+10	9.5812E-04	3.8475E-07
Zr-97	1.5408E-05	7.6716E-07	2.4687E-06	3.2910E+08	1.5516E-05	6.2191E-09
Nb-95	1.3826E-03	9.6232E-05	2.2083E-04	2.9414E+10	1.3833E-03	5.5551E-07
Mo-99	8.2056E-02	3.7181E-03	1.3116E-02	1.7474E+12	8.2231E-02	3.3006E-05
Tc-99m	7.8509E-02	8.3574E-05	1.2548E-02	1.6698E+12	7.8664E-02	3.1576E-05
Ru-103	7.9139E-04	8.1607E-05	1.2640E-04	1.6837E+10	7.9184E-04	3.1798E-07
Ru-105	3.7013E-06	3.6057E-08	5.9840E-07	7.9961E+07	3.7968E-06	1.5136E-09
Ru-106	1.3278E-03	7.1096E-03	2.1207E-04	2.8248E+10	1.3285E-03	5.3348E-07
Rh-105	3.0423E-05	3.3966E-07	4.8654E-06	6.4828E+08	3.0521E-05	1.2247E-08
Te-127	9.8888E-03	3.5588E-05	1.5796E-03	2.1025E+11	9.8971E-03	3.9740E-06
Te-127m	9.7993E-03	2.3633E-03	1.5651E-03	2.0847E+11	9.8041E-03	3.9371E-06
Te-129	9.0587E-03	1.2057E-05	1.4472E-03	1.9153E+11	9.0681E-03	3.6409E-06
Te-129m	1.3764E-02	3.6991E-03	2.1985E-03	2.9284E+11	1.3773E-02	5.5305E-06
Te-131m	2.2860E-03	1.8348E-04	3.6575E-04	4.8741E+10	2.2955E-03	9.2082E-07
Te-132	3.8227E-02	4.0954E-03	6.1095E-03	8.1393E+11	3.8299E-02	1.5374E-05
I-131	2.3831E-06	6.3844E-07	2.7473E-07	3.0898E+07	1.0197E-06	5.7019E-10
I-132	3.0857E-03	3.9345E-05	3.5791E-04	4.0239E+10	1.3361E-03	7.4554E-07
I-133	2.3112E-06	1.1635E-07	2.6906E-07	3.0391E+07	1.0078E-06	5.6170E-10
I-134	7.5088E-05	9.6031E-07	9.0807E-06	1.0357E+09	3.5308E-05	1.9389E-08
Cs-134	1.3227E+00	6.9811E-01	2.1125E-01	2.8138E+13	1.3233E+00	5.3141E-04
Cs-136	8.6934E-02	8.2385E-03	1.3887E-02	1.8498E+12	8.7004E-02	3.4935E-05
Cs-137	7.3629E-01	2.6374E-01	1.1759E-01	1.5663E+13	7.3662E-01	2.9581E-04
Ba-139	6.8275E-06	1.5510E-08	1.1346E-06	1.5269E+08	7.4072E-06	2.9050E-09

Ba-140	7.7079E-05	3.3102E-06	1.2312E-05	1.6401E+09	7.7142E-05	3.0975E-08
La-140	1.1424E-04	7.8000E-06	1.8253E-05	2.4313E+09	1.1440E-04	4.5927E-08
La-141	4.9845E-06	3.4265E-08	8.0479E-07	1.0745E+08	5.0972E-06	2.0344E-09
La-142	1.1740E-06	2.4224E-08	1.9426E-07	2.6114E+07	1.2627E-06	4.9645E-10
Ce-141	5.7434E-04	5.7927E-05	9.1734E-05	1.2219E+10	5.7468E-04	2.3077E-07
Ce-143	2.7316E-05	1.0821E-06	4.3697E-06	5.8230E+08	2.7420E-05	1.1001E-08
Ce-144	1.6813E-03	7.0482E-03	2.6852E-04	3.5766E+10	1.6820E-03	6.7547E-07
Pr-143	2.6674E-04	2.4251E-05	4.2608E-05	5.6756E+09	2.6695E-04	1.0719E-07
Rb-89	4.7010E-04	7.7269E-06	9.4552E-05	1.3319E+10	7.4398E-04	2.6135E-07
Y-91m	1.3146E-05	4.5152E-08	2.1014E-06	2.7745E+08	1.3173E-05	5.2882E-09
Nb-95m	7.4209E-06	2.0557E-07	1.1853E-06	1.5787E+08	7.4252E-06	2.9817E-09
Nb-97	1.7819E-06	8.5865E-09	2.9173E-07	3.9000E+07	1.8760E-06	7.4209E-10
Rh-103m	7.9128E-04	4.6134E-08	1.2634E-04	1.6690E+10	7.9110E-04	3.1776E-07
Te-125m	9.7350E-04	7.9655E-05	1.5548E-04	2.0711E+10	9.7402E-04	3.9114E-07
Te-131	5.9215E-04	4.6876E-06	9.6310E-05	1.2692E+10	6.1580E-04	2.4431E-07
Te-133	2.1993E-05	1.1489E-07	2.8280E-06	3.2242E+08	1.1648E-05	6.2469E-09
Te-133m	2.4662E-04	4.8106E-06	4.1812E-05	5.6554E+09	2.7862E-04	1.0799E-07
Te-134	3.2924E-04	2.3019E-06	5.6945E-05	7.7408E+09	3.8722E-04	1.4832E-07
Cs-134m	7.5555E-04	4.5966E-07	1.2295E-04	1.6457E+10	7.8543E-04	3.1190E-07
Cs-138	9.4950E-03	1.6322E-04	1.6833E-03	2.3021E+11	1.1732E-02	4.4296E-06
Ba-141	8.9366E-07	6.3049E-09	1.7248E-07	2.4069E+07	1.3056E-06	4.6942E-10
Total	2.4179E+00	1.0000E+00	0.0000E+00	0.0000E+00	2.4202E+00	9.7175E-04

Dose Equivalent (Ci/cc) I-131 (Thyroid)	2.5627E-15
Dose Equivalent (Ci/cc) I-131 (CEDE)	4.6892E-15
Dose Equivalent (Ci/cc) I-131 (ICRP2 Thyroid)	1.3945E-14
Total I (Ci)	3.1655E-03
Dose Equivalent (Ci/cc) Xe-133 (EDE)	2.0820E-19

Intact Steam Generators Compartment Group Inventory Distribution:

Time (h) = 0.2780	Atmosphere	Sump
Noble gases (Ci)	1.7450E-09	0.0000E+00
Elemental I (Ci)	3.0706E-03	0.0000E+00
Organic I (Ci)	9.4966E-05	0.0000E+00
Aerosol I (Ci)	0.0000E+00	0.0000E+00
All Aerosols (Ci)	2.4147E+00	0.0000E+00
All Aerosols (kg)	9.4849E-06	0.0000E+00

Control Room Compartment Nuclide Inventory (Ci) at Time (h) = 0.2780

Nuclide	Compartment Atmosphere	Dose Fract	Exposure (Ci-hr)	Decays (Bq-s)	Compartment Recirc Filtr	Pathway 2 Inflow	Pathway 3 Inflow	Pathway 4 Outflow
Rb-86	1.4282E-04	2.6177E-04	5.7819E-05	7.7017E+09	2.0491E-04	3.6330E-04	3.8728E-05	6.0027E-05
Sr-89	2.1726E-06	2.4704E-05	8.7876E-07	1.1702E+08	3.1171E-06	5.5163E-06	5.8839E-07	9.1319E-07
Sr-91	9.0421E-07	5.0741E-07	3.6919E-07	4.9247E+07	1.2973E-06	2.3379E-06	2.4800E-07	3.8403E-07
Y-91	2.7479E-05	3.6853E-04	1.1123E-05	1.4815E+09	3.9424E-05	6.9881E-05	7.4498E-06	1.1547E-05
Zr-95	3.9123E-05	2.5808E-04	1.5836E-05	2.1094E+09	5.6131E-05	9.9493E-05	1.0607E-05	1.6440E-05
Zr-97	6.2949E-07	7.6847E-07	2.5604E-07	3.4132E+07	9.0314E-07	1.6157E-06	1.7177E-07	2.6610E-07
Nb-95	5.6488E-05	9.6232E-05	2.2864E-05	3.0455E+09	8.1044E-05	1.4365E-04	1.5314E-05	2.3739E-05
Mo-99	3.3524E-03	3.7197E-03	1.3586E-03	1.8100E+11	4.8098E-03	8.5450E-03	9.1033E-04	1.4108E-03
Tc-99m	3.2075E-03	8.3607E-05	1.2997E-03	1.7295E+11	4.6018E-03	8.1738E-03	8.7084E-04	1.3705E-03
Ru-103	3.2332E-05	8.1608E-05	1.3088E-05	1.7433E+09	4.6388E-05	8.2229E-05	8.7660E-06	1.3587E-05
Ru-106	5.4249E-05	7.1096E-03	2.1957E-05	2.9247E+09	7.7832E-05	1.3795E-04	1.4706E-05	2.2795E-05
Rh-105	1.2429E-06	3.3990E-07	5.0411E-07	6.7169E+07	1.7833E-06	3.1730E-06	3.3788E-07	5.2378E-07
Te-127	4.0401E-04	3.5592E-05	1.6357E-04	2.1771E+10	5.7964E-04	1.0279E-03	1.0956E-04	1.7160E-04
Te-127m	4.0035E-04	2.3633E-03	1.6205E-04	2.1585E+10	5.7439E-04	1.0181E-03	1.0853E-04	1.6823E-04
Te-129	3.7009E-04	1.2058E-05	1.4986E-04	1.9832E+10	5.3098E-04	9.4186E-04	1.0039E-04	1.6904E-04
Te-129m	5.6234E-04	3.6992E-03	2.2763E-04	3.0321E+10	8.0681E-04	1.4302E-03	1.5247E-04	2.3632E-04
Te-131m	9.3394E-05	1.8365E-04	3.7906E-05	5.0513E+09	1.3399E-04	2.3874E-04	2.5412E-05	3.9377E-05
Te-132	1.5618E-03	4.0969E-03	6.3279E-04	8.4303E+10	2.2407E-03	3.9793E-03	4.2398E-04	6.5710E-04
I-132	1.3673E-04	3.2550E-05	3.0658E-05	3.3165E+09	1.8134E-04	7.1371E-05	1.4763E-05	5.5560E-05
I-134	3.3327E-06	8.1601E-07	7.9892E-07	8.7466E+07	4.4135E-06	1.9951E-06	3.9179E-07	1.4746E-06
Cs-134	5.4038E-02	6.9811E-01	2.1872E-02	2.9134E+12	7.7530E-02	1.3741E-01	1.4649E-02	2.2707E-02
Cs-136	3.5517E-03	8.2392E-03	1.4379E-03	1.9154E+11	5.0957E-03	9.0358E-03	9.6316E-04	1.4929E-03
Cs-137	3.0081E-02	2.6373E-01	1.2175E-02	1.6218E+12	4.3158E-02	7.6491E-02	8.1547E-03	1.2640E-02
Ba-140	3.1491E-06	3.3105E-06	1.2749E-06	1.6983E+08	4.5180E-06	8.0116E-06	8.5399E-07	1.3237E-06
La-140	4.6673E-06	7.8018E-06	1.8904E-06	2.5179E+08	6.6963E-06	1.1883E-05	1.2664E-06	1.9661E-06
Ce-141	2.3465E-05	5.7928E-05	9.4983E-06	1.2652E+09	3.3665E-05	5.9678E-05	6.3619E-06	9.8610E-06
Ce-143	1.1160E-06	1.0830E-06	4.5283E-07	6.0342E+07	1.6011E-06	2.8514E-06	3.0355E-07	4.7038E-07
Ce-144	6.8688E-05	7.0481E-03	2.7802E-05	3.7032E+09	9.8548E-05	1.7466E-04	1.8621E-05	2.8863E-05
Pr-143	1.0898E-05	2.4252E-05	4.4119E-06	5.8768E+08	1.5635E-05	2.7723E-05	2.9552E-06	4.5806E-06
Rb-89	1.9206E-05	8.6464E-06	1.0955E-05	1.5412E+09	2.7555E-05	9.1598E-05	8.2226E-06	1.2221E-05
Rh-103m	3.2328E-05	4.6125E-08	1.3078E-05	1.7275E+09	4.6381E-05	8.2121E-05	8.7577E-06	1.5046E-05
Te-125m	3.9772E-05	7.9656E-05	1.6099E-05	2.1444E+09	5.7062E-05	1.0115E-04	1.0783E-05	1.6713E-05
Te-131	2.4192E-05	4.7345E-06	1.0072E-05	1.3274E+09	3.4709E-05	6.5086E-05	6.8167E-06	1.2657E-05

Te-133	8.9852E-07	9.7795E-08	2.4923E-07	2.6940E+07	1.2891E-06	6.0692E-07	1.3004E-07	5.2935E-07
Te-133m	1.0076E-05	4.9632E-06	4.4664E-06	6.0390E+08	1.4456E-05	3.0424E-05	3.0846E-06	4.7310E-06
Te-134	1.3451E-05	2.3990E-06	6.1448E-06	8.3490E+08	1.9298E-05	4.2955E-05	4.2867E-06	6.5510E-06
Cs-134m	3.0868E-05	4.6425E-07	1.2857E-05	1.7208E+09	4.4287E-05	8.2899E-05	8.6955E-06	1.3434E-05
Cs-138	3.8792E-04	1.7221E-04	1.8388E-04	2.5132E+10	5.5656E-04	1.3262E-03	1.2986E-04	1.9757E-04
Total	9.8795E-02	1.0000E+00	0.0000E+00	0.0000E+00	1.4173E-01	2.5139E-01	2.6793E-02	4.1598E-02

Control Room Compartment Group Inventory Distribution:

Time (h) = 0.2780	Atmosphere	Sump
Noble gases (Ci)	4.3843E-10	0.0000E+00
Elemental I (Ci)	1.3607E-04	0.0000E+00
Organic I (Ci)	4.2082E-06	0.0000E+00
Aerosol I (Ci)	0.0000E+00	0.0000E+00
All Aerosols (Ci)	9.8654E-02	0.0000E+00
All Aerosols (kg)	3.8751E-07	0.0000E+00

Time (h) = 0.2780	Deposition Surfaces	Recirculating Filter
Noble gases (Ci)	0.0000E+00	0.0000E+00
Elemental I (Ci)	0.0000E+00	1.8045E-04
Organic I (Ci)	0.0000E+00	5.5809E-06
Aerosol I (Ci)	0.0000E+00	0.0000E+00
All Aerosols (Ci)	0.0000E+00	1.4154E-01
All Aerosols (kg)	0.0000E+00	5.5596E-07

Ruptured Steam Generator Compartment Nuclide Inventory (Ci) at Time (h) = 0.2780

Nuclide	Compartment Atmosphere	Dose Fract	Exposure (Ci-hr)	Decays (Bq-s)	Pathway 6 Inflow	Pathway 8 Outflow
Rb-86	2.7384E+00	2.6175E-04	4.3740E-01	5.8263E+13	2.7402E+00	1.0385E-03
Sr-89	4.1655E-02	2.4710E-05	6.6499E-03	8.8559E+11	4.1632E-02	1.5785E-05
Sr-90	3.8522E-03	7.1646E-05	6.1524E-04	8.1950E+10	3.8539E-03	1.4607E-06
Sr-91	1.7336E-02	5.0588E-07	2.7846E-03	3.7146E+11	1.7547E-02	6.6283E-06
Sr-92	7.2163E-03	1.6073E-07	1.1758E-03	1.5744E+11	7.5218E-03	2.8170E-06
Y-90	6.6931E-03	8.0909E-07	1.0693E-03	1.4244E+11	6.7009E-03	2.5393E-06
Y-91	5.2685E-01	3.6853E-04	8.4146E-02	1.1208E+13	5.2712E-01	1.9979E-04
Y-92	9.4421E-03	1.2457E-07	1.5131E-03	2.0139E+11	9.5108E-03	3.5980E-06

Y-93	6.1412E-03	1.9489E-07	9.8607E-04	1.3153E+11	6.2116E-03	2.3468E-06
Zr-95	7.5011E-01	2.5808E-04	1.1980E-01	1.5958E+13	7.5049E-01	2.8445E-04
Zr-97	1.2069E-02	7.6716E-07	1.9337E-03	2.5779E+11	1.2154E-02	4.5978E-06
Nb-95	1.0830E+00	9.6232E-05	1.7297E-01	2.3040E+13	1.0835E+00	4.1069E-04
Mo-99	6.4275E+01	3.7181E-03	1.0274E+01	1.3688E+15	6.4411E+01	2.4401E-02
Tc-99m	6.1497E+01	8.3574E-05	9.8289E+00	1.3080E+15	6.1617E+01	2.3344E-02
Ru-103	6.1990E-01	8.1607E-05	9.9010E-02	1.3188E+13	6.2024E-01	2.3508E-04
Ru-105	2.8993E-03	3.6057E-08	4.6873E-04	6.2634E+10	2.9740E-03	1.1190E-06
Ru-106	1.0401E+00	7.1096E-03	1.6612E-01	2.2127E+13	1.0406E+00	3.9440E-04
Rh-105	2.3831E-02	3.3966E-07	3.8111E-03	5.0780E+11	2.3907E-02	9.0540E-06
Te-127	7.7460E+00	3.5588E-05	1.2373E+00	1.6469E+14	7.7523E+00	2.9380E-03
Te-127m	7.6759E+00	2.3633E-03	1.2259E+00	1.6330E+14	7.6795E+00	2.9107E-03
Te-129	7.0958E+00	1.2057E-05	1.1336E+00	1.5003E+14	7.1030E+00	2.6918E-03
Te-129m	1.0782E+01	3.6991E-03	1.7221E+00	2.2938E+14	1.0788E+01	4.0887E-03
Te-131m	1.7906E+00	1.8348E-04	2.8650E-01	3.8179E+13	1.7980E+00	6.8076E-04
Te-132	2.9944E+01	4.0954E-03	4.7856E+00	6.3756E+14	2.9999E+01	1.1366E-02
I-131	1.8667E-03	6.3845E-07	2.1520E-04	2.4203E+10	7.9869E-04	4.2147E-07
I-132	2.4171E+00	3.9345E-05	2.8035E-01	3.1519E+13	1.0465E+00	5.5109E-04
I-133	1.8104E-03	1.1635E-07	2.1076E-04	2.3805E+10	7.8938E-04	4.1520E-07
I-134	5.8817E-02	9.6031E-07	7.1130E-03	8.1124E+11	2.7656E-02	1.4332E-05
Xe-133	1.2696E-06	1.7080E-13	1.1550E-07	1.1311E+07	3.1467E-07	1.8924E-10
Cs-134	1.0361E+03	6.9811E-01	1.6547E+02	2.2041E+16	1.0365E+03	3.9287E-01
Cs-136	6.8096E+01	8.2385E-03	1.0878E+01	1.4489E+15	6.8150E+01	2.5828E-02
Cs-137	5.7674E+02	2.6374E-01	9.2112E+01	1.2269E+16	5.7699E+02	2.1869E-01
Ba-139	5.3480E-03	1.5510E-08	8.8873E-04	1.1960E+11	5.8020E-03	2.1477E-06
Ba-140	6.0377E-02	3.3102E-06	9.6445E-03	1.2847E+12	6.0425E-02	2.2900E-05
La-140	8.9486E-02	7.8000E-06	1.4298E-02	1.9045E+12	8.9605E-02	3.3954E-05
La-141	3.9044E-03	3.4265E-08	6.3040E-04	8.4168E+10	3.9926E-03	1.5040E-06
La-142	9.1957E-04	2.4224E-08	1.5216E-04	2.0455E+10	9.8903E-04	3.6703E-07
Ce-141	4.4989E-01	5.7927E-05	7.1856E-02	9.5714E+12	4.5014E-01	1.7061E-04
Ce-143	2.1397E-02	1.0821E-06	3.4229E-03	4.5612E+11	2.1478E-02	8.1327E-06
Ce-144	1.3169E+00	7.0482E-03	2.1033E-01	2.8016E+13	1.3175E+00	4.9938E-04
Pr-143	2.0894E-01	2.4251E-05	3.3375E-02	4.4457E+12	2.0910E-01	7.9246E-05
Rb-89	3.6823E-01	7.7269E-06	7.4063E-02	1.0433E+13	5.8276E-01	1.9323E-04
Y-91m	1.0297E-02	4.5152E-08	1.6461E-03	2.1733E+11	1.0318E-02	3.9096E-06
Nb-95m	5.8129E-03	2.0557E-07	9.2843E-04	1.2366E+11	5.8161E-03	2.2044E-06
Nb-97	1.3957E-03	8.5865E-09	2.2851E-04	3.0549E+10	1.4695E-03	5.4863E-07
Rh-103m	6.1982E-01	4.6134E-08	9.8960E-02	1.3073E+13	6.1967E-01	2.3492E-04

Te-125m	7.6255E-01	7.9655E-05	1.2179E-01	1.6223E+13	7.6294E-01	2.8917E-04
Te-131	4.6383E-01	4.6876E-06	7.5440E-02	9.9421E+12	4.8235E-01	1.8062E-04
Te-133	1.7227E-02	1.1489E-07	2.2152E-03	2.5255E+11	9.1236E-03	4.6176E-06
Te-133m	1.9318E-01	4.8106E-06	3.2752E-02	4.4299E+12	2.1824E-01	7.9835E-05
Te-134	2.5789E-01	2.3019E-06	4.4605E-02	6.0634E+12	3.0331E-01	1.0966E-04
Cs-134m	5.9183E-01	4.5966E-07	9.6307E-02	1.2891E+13	6.1522E-01	2.3059E-04
Cs-138	7.4376E+00	1.6322E-04	1.3185E+00	1.8032E+14	9.1898E+00	3.2749E-03
Ba-141	7.0002E-04	6.3049E-09	1.3511E-04	1.8853E+10	1.0227E-03	3.4707E-07
Total	1.8940E+03	1.0000E+00	0.0000E+00	0.0000E+00	1.8957E+03	7.1841E-01

```
Dose Equivalent (Ci/cc) I-131 (Thyroid)            6.0222E-12
Dose Equivalent (Ci/cc) I-131 (CEDE)               1.1019E-11
Dose Equivalent (Ci/cc) I-131 (ICRP2 Thyroid)      3.2770E-11
Total I  (Ci)                                      2.4796E+00
Dose Equivalent (Ci/cc) Xe-133 (EDE)               4.8925E-16
```

Ruptured Steam Generator Compartment Group Inventory Distribution:

Time (h) = 0.2780	Atmosphere	Sump
Noble gases (Ci)	1.3669E-06	0.0000E+00
Elemental I (Ci)	2.4052E+00	0.0000E+00
Organic I (Ci)	7.4388E-02	0.0000E+00
Aerosol I (Ci)	0.0000E+00	0.0000E+00
All Aerosols (Ci)	1.8915E+03	0.0000E+00
All Aerosols (kg)	7.4296E-03	0.0000E+00

```
#######################################################################
    ALION RADTRAD Version 3.10 Rev 2 run on 12/01/2014  at 16:22:43

                Copyright © 2009 Alion Science and Technology
#######################################################################
```

Exclusion Area Boundary Doses:

Time (h) = 0.5000	Whole Body	Thyroid	TEDE
Delta dose (rem)	7.9947E-03	5.7537E-01	5.9801E-01
Accumulated dose (rem)	2.7378E-02	1.9683E+00	2.0457E+00

Low Population Zone Doses:

Time (h) = 0.5000	Whole Body	Thyroid	TEDE
Delta dose (rem)	1.5390E-03	1.1076E-01	1.1512E-01
Accumulated dose (rem)	4.9014E-03	3.5240E-01	3.6627E-01

Control Room Doses:

Time (h) = 0.5000	Whole Body	Thyroid	TEDE	Skin
Delta dose (rem)	1.9610E-04	4.2522E-01	4.3622E-01	7.8551E-03
Accumulated dose (rem)	7.4377E-04	1.6121E+00	1.6539E+00	2.9816E-02

****

RCS Compartment Nuclide Inventory (Ci) at Time (h) = 0.5000

Nuclide	Compartment Atmosphere	Dose Fract	Exposure (Ci-hr)	Decays (Bq-s)	Pathway 1 Outflow	Pathway 5 Outflow	Pathway 6 Outflow
Rb-86	1.3561E+01	2.6173E-04	7.8769E+00	1.0492E+15	3.5832E-01	5.9537E-03	4.6636E+00
Sr-89	2.0650E-01	2.4715E-05	1.1979E-01	1.5953E+13	5.4459E-03	9.0519E-05	7.0904E-02
Sr-90	1.9083E-02	7.1647E-05	1.1081E-02	1.4759E+12	5.0399E-04	8.3748E-06	6.5600E-03
Sr-91	8.4501E-02	5.0384E-07	4.9949E-02	6.6626E+12	2.2849E-03	3.7849E-05	2.9648E-02
Sr-92	3.3775E-02	1.5853E-07	2.0888E-02	2.7960E+12	9.6925E-04	1.5930E-05	1.2478E-02
Y-90	3.3123E-02	8.0889E-07	1.9254E-02	2.5647E+12	8.7607E-04	1.4555E-05	1.1401E-02
Y-91	2.6096E+00	3.6852E-04	1.5155E+00	2.0186E+14	6.8931E-02	1.1454E-03	8.9720E-01
Y-92	4.6266E-02	1.2423E-07	2.7178E-02	3.6173E+12	1.2404E-03	2.0574E-05	1.6116E-02
Y-93	2.9962E-02	1.9415E-07	1.7692E-02	2.3597E+12	8.0903E-04	1.3404E-05	1.0500E-02
Zr-95	3.7155E+00	2.5807E-04	2.1577E+00	2.8740E+14	9.8141E-02	1.6308E-03	1.2774E+00
Zr-97	5.9246E-02	7.6542E-07	3.4748E-02	4.6321E+12	1.5855E-03	2.6301E-05	2.0601E-02
Nb-95	5.3648E+00	9.6231E-05	3.1153E+00	4.1495E+14	1.4170E-01	2.3546E-03	1.8443E+00
Mo-99	3.1767E+02	3.7159E-03	1.8493E+02	2.4637E+16	8.4180E+00	1.3982E-01	1.0952E+02
Tc-99m	3.0399E+02	8.3530E-05	1.7693E+02	2.3544E+16	8.0533E+00	1.3377E-01	1.0478E+02
Ru-103	3.0704E+00	8.1604E-05	1.7831E+00	2.3752E+14	8.1108E-02	1.3477E-03	1.0557E+00
Ru-105	1.3873E-02	3.5751E-08	8.3702E-03	1.1183E+12	3.8539E-04	6.3613E-06	4.9829E-03
Ru-106	5.1524E+00	7.1096E-03	2.9918E+00	3.9851E+14	1.3608E-01	2.2612E-03	1.7712E+00
Rh-105	1.1760E-01	3.3934E-07	6.8573E-02	9.1367E+12	3.1232E-03	5.1860E-05	4.0622E-02
Te-127	3.8352E+01	3.5584E-05	2.2282E+01	2.9658E+15	1.0137E+00	1.6842E-02	1.3193E+01
Te-127m	3.8022E+01	2.3633E-03	2.2079E+01	2.9410E+15	1.0043E+00	1.6688E-02	1.3071E+01

Te-129	3.5125E+01	1.2054E-05	2.0412E+01	2.7018E+15	9.2869E-01	1.5430E-02	1.2086E+01
Te-129m	5.3401E+01	3.6989E-03	3.1014E+01	4.1311E+15	1.4107E+00	2.3441E-02	1.8361E+01
Te-131m	8.8250E+00	1.8324E-04	5.1532E+00	6.8672E+14	2.3481E-01	3.8980E-03	3.0533E+00
Te-132	1.4804E+02	4.0934E-03	8.6147E+01	1.1477E+16	3.9210E+00	6.5131E-02	5.1017E+01
I-131	1.6491E-02	8.1326E-07	4.9371E-03	5.8086E+11	1.5627E-04	3.2178E-06	2.5205E-03
I-132	2.0821E+01	4.9475E-05	6.3493E+00	7.4631E+14	2.0182E-01	4.1506E-03	3.2512E+00
I-133	1.5233E-02	1.4478E-07	4.7230E-03	5.5795E+11	1.5066E-04	3.0956E-06	2.4248E-03
I-134	4.3003E-01	1.1142E-06	1.4864E-01	1.7642E+13	4.8620E-03	9.9053E-05	7.7589E-02
Xe-133	2.0346E-05	3.3556E-13	4.0868E-06	4.5004E+08	1.1402E-07	2.4466E-09	1.9164E-06
Cs-134	5.1325E+03	6.9812E-01	2.9802E+03	3.9696E+17	1.3555E+02	2.2524E+00	1.7643E+03
Cs-136	3.3717E+02	8.2376E-03	1.9588E+02	2.6093E+16	8.9110E+00	1.4806E-01	1.1598E+02
Cs-137	2.8571E+03	2.6374E-01	1.6590E+03	2.2097E+17	7.5456E+01	1.2538E+00	9.8214E+02
Ba-139	2.3694E-02	1.5110E-08	1.5594E-02	2.0974E+12	7.3777E-04	1.1997E-05	9.3973E-03
Ba-140	2.9894E-01	3.3098E-06	1.7368E-01	2.3135E+13	7.9009E-03	1.3128E-04	1.0283E-01
La-140	4.4275E-01	7.7977E-06	2.5743E-01	3.4289E+13	1.1714E-02	1.9461E-04	1.5244E-01
La-141	1.8703E-02	3.3982E-08	1.1260E-02	1.5033E+12	5.1772E-04	8.5530E-06	6.6996E-03
La-142	4.1226E-03	2.3661E-08	2.6768E-03	3.5965E+11	1.2611E-04	2.0555E-06	1.6101E-03
Ce-141	2.2282E+00	5.7924E-05	1.2941E+00	1.7238E+14	5.8864E-02	9.7811E-04	7.6616E-01
Ce-143	1.0550E-01	1.0808E-06	6.1574E-02	8.2050E+12	2.8052E-03	4.6573E-05	3.6481E-02
Ce-144	6.5237E+00	7.0482E-03	3.7881E+00	5.0458E+14	1.7230E-01	2.8631E-03	2.2427E+00
Pr-143	1.0346E+00	2.4248E-05	6.0103E-01	8.0060E+13	2.7341E-02	4.5429E-04	3.5585E-01
Rb-89	9.9372E-01	7.0337E-06	1.2142E+00	1.7027E+14	6.8271E-02	1.0070E-03	7.8882E-01
Y-91m	5.0786E-02	4.5103E-08	2.9614E-02	3.9108E+12	1.3481E-03	2.2393E-05	1.7540E-02
Nb-95m	2.8791E-02	2.0556E-07	1.6721E-02	2.2270E+12	7.6056E-04	1.2638E-05	9.8993E-03
Nb-97	6.4647E-03	8.4484E-09	4.0493E-03	5.4111E+11	1.8879E-04	3.0945E-06	2.4240E-03
Rh-103m	3.0729E+00	4.6144E-08	1.7826E+00	2.3554E+14	8.1055E-02	1.3471E-03	1.0552E+00
Te-125m	3.7771E+00	7.9653E-05	2.1935E+00	2.9217E+14	9.9770E-02	1.6578E-03	1.2986E+00
Te-131	2.2059E+00	4.6408E-06	1.3451E+00	1.7720E+14	6.2311E-02	1.0247E-03	8.0265E-01
Te-133	1.0229E-01	1.2120E-07	4.2086E-02	4.9484E+12	1.4295E-03	2.8710E-05	2.2488E-02
Te-133m	8.1009E-01	4.6340E-06	5.6821E-01	7.6784E+13	2.7409E-02	4.4092E-04	3.4537E-01
Te-134	1.0244E+00	2.1948E-06	7.6599E-01	1.0399E+14	3.7662E-02	5.9943E-04	4.6954E-01
Xe-133m	1.4548E-06	2.1078E-14	2.9232E-07	3.2189E+07	8.1563E-09	1.7501E-10	1.3709E-07
Cs-134m	2.7803E+00	4.5376E-07	1.7123E+00	2.2913E+14	7.9351E-02	1.3051E-03	1.0223E+00
Cs-138	2.7659E+01	1.5391E-04	2.2392E+01	3.0571E+15	1.1267E+00	1.7702E-02	1.3866E+01
Ba-141	2.0919E-03	5.7848E-09	2.2325E-03	3.1046E+11	1.2122E-04	1.8241E-06	1.4288E-03
Total	9.3787E+03	1.0000E+00	0.0000E+00	0.0000E+00	2.4788E+02	4.1184E+00	3.2260E+03

Dose Equivalent (Ci/cc) I-131 (Thyroid) 1.0873E-11

Dose Equivalent (Ci/cc) I-131 (CEDE)	1.9860E-11
Dose Equivalent (Ci/cc) I-131 (ICRP2 Thyroid)	5.8977E-11
Total I (Ci)	2.1283E+01
Dose Equivalent (Ci/cc) Xe-133 (EDE)	1.6402E-15

RCS Compartment Group Inventory Distribution:

Time (h) = 0.5000	Atmosphere	Sump
Noble gases (Ci)	2.1908E-05	0.0000E+00
Elemental I (Ci)	2.0644E+01	0.0000E+00
Organic I (Ci)	6.3848E-01	0.0000E+00
Aerosol I (Ci)	0.0000E+00	0.0000E+00
All Aerosols (Ci)	9.3574E+03	0.0000E+00
All Aerosols (kg)	3.6805E-02	0.0000E+00

Intact Steam Generators Compartment Nuclide Inventory (Ci) at Time (h) = 0.5000

Nuclide	Compartment Atmosphere	Dose Fract	Exposure (Ci-hr)	Decays (Bq-s)	Pathway 5 Inflow	Pathway 7 Outflow
Rb-86	5.9464E-03	2.6170E-04	1.6618E-03	2.2136E+11	5.9537E-03	4.4364E-06
Sr-89	9.0551E-05	2.4726E-05	2.5286E-05	3.3677E+09	9.0519E-05	6.7492E-08
Sr-90	8.3681E-06	7.1648E-05	2.3380E-06	3.1143E+08	8.3748E-06	6.2413E-09
Sr-91	3.7054E-05	5.0059E-07	1.0471E-05	1.3968E+09	3.7849E-05	2.8022E-08
Sr-92	1.4810E-05	1.5495E-07	4.3078E-06	5.7677E+08	1.5930E-05	1.1600E-08
Y-90	1.4524E-05	8.0857E-07	4.0610E-06	5.4094E+08	1.4555E-05	1.0842E-08
Y-91	1.1443E-03	3.6851E-04	3.1975E-04	4.2591E+10	1.1454E-03	8.5357E-07
Y-92	2.0288E-05	1.2374E-07	5.7116E-06	7.6026E+08	2.0574E-05	1.5272E-08
Y-93	1.3139E-05	1.9297E-07	3.7104E-06	4.9491E+08	1.3404E-05	9.9279E-09
Zr-95	1.6293E-03	2.5807E-04	4.5525E-04	6.0640E+10	1.6308E-03	1.2153E-06
Zr-97	2.5980E-05	7.6265E-07	7.3052E-06	9.7386E+08	2.6301E-05	1.9528E-08
Nb-95	2.3525E-03	9.6231E-05	6.5732E-04	8.7555E+10	2.3546E-03	1.7547E-06
Mo-99	1.3930E-01	3.7125E-03	3.8984E-02	5.1937E+12	1.3982E-01	1.0410E-04
Tc-99m	1.3330E-01	8.3460E-05	3.7300E-02	4.9636E+12	1.3377E-01	9.9604E-05
Ru-103	1.3464E-03	8.1600E-05	3.7622E-04	5.0114E+10	1.3477E-03	1.0043E-06
Ru-105	6.0835E-06	3.5258E-08	1.7418E-06	2.3274E+08	6.3613E-06	4.6743E-09
Ru-106	2.2594E-03	7.1097E-03	6.3127E-04	8.4086E+10	2.2612E-03	1.6852E-06
Rh-105	5.1569E-05	3.3882E-07	1.4447E-05	1.9250E+09	5.1860E-05	3.8588E-08
Te-127	1.6818E-02	3.5577E-05	4.7006E-03	6.2565E+11	1.6842E-02	1.2549E-05

Te-127m	1.6673E-02	2.3633E-03	4.6587E-03	6.2054E+11	1.6688E-02	1.2436E-05
Te-129	1.5403E-02	1.2051E-05	4.3057E-03	5.6981E+11	1.5430E-02	1.1495E-05
Te-129m	2.3417E-02	3.6987E-03	6.5435E-03	8.7160E+11	2.3441E-02	1.7468E-05
Te-131m	3.8698E-03	1.8287E-04	1.0851E-03	1.4461E+11	3.8980E-03	2.8990E-06
Te-132	6.4918E-02	4.0903E-03	1.8163E-02	2.4197E+12	6.5131E-02	4.8500E-05
I-131	7.2316E-06	1.0922E-06	1.3990E-06	1.6961E+08	3.2178E-06	3.3697E-09
I-132	9.1301E-03	6.6081E-05	1.7893E-03	2.1687E+11	4.1506E-03	4.3255E-06
I-133	6.6797E-06	1.9253E-07	1.3252E-06	1.6154E+08	3.0956E-06	3.2142E-09
I-134	1.8857E-04	1.4327E-06	4.0327E-05	4.9571E+09	9.9053E-05	9.9788E-08
Cs-134	2.2506E+00	6.9812E-01	6.2883E-01	8.3760E+13	2.2524E+00	1.6786E-03
Cs-136	1.4785E-01	8.2361E-03	4.1324E-02	5.5046E+12	1.4806E-01	1.1032E-04
Cs-137	1.2528E+00	2.6374E-01	3.5004E-01	4.6626E+13	1.2538E+00	9.3443E-04
Ba-139	1.0390E-05	1.4441E-08	3.1447E-06	4.2316E+08	1.1997E-05	8.5387E-09
Ba-140	1.3109E-04	3.3092E-06	3.6639E-05	4.8806E+09	1.3128E-04	9.7814E-08
La-140	1.9415E-04	7.7939E-06	5.4292E-05	7.2316E+09	1.9461E-04	1.4496E-07
La-141	8.2015E-06	3.3554E-08	2.3459E-06	3.1330E+08	8.5530E-06	6.2937E-09
La-142	1.8078E-06	2.2723E-08	5.4243E-07	7.2913E+07	2.0555E-06	1.4702E-09
Ce-141	9.7709E-04	5.7920E-05	2.7304E-04	3.6369E+10	9.7811E-04	7.2888E-07
Ce-143	4.6263E-05	1.0788E-06	1.2968E-05	1.7281E+09	4.6573E-05	3.4643E-08
Ce-144	2.8607E-03	7.0482E-03	7.9929E-04	1.0647E+11	2.8631E-03	2.1337E-06
Pr-143	4.5369E-04	2.4244E-05	1.2680E-04	1.6890E+10	4.5429E-04	3.3850E-07
Rb-89	4.3575E-04	5.4156E-06	1.9726E-04	2.7782E+10	1.0070E-03	5.7596E-07
Y-91m	2.2270E-05	4.5047E-08	6.2408E-06	8.2406E+08	2.2393E-05	1.6669E-08
Nb-95m	1.2625E-05	2.0555E-07	3.5279E-06	4.6988E+08	1.2638E-05	9.4177E-09
Nb-97	2.8348E-06	8.2158E-09	8.3089E-07	1.1103E+08	3.0945E-06	2.2412E-09
Rh-103m	1.3475E-03	4.6161E-08	3.7628E-04	4.9705E+10	1.3471E-03	1.0043E-06
Te-125m	1.6563E-03	7.9651E-05	4.6280E-04	6.1646E+10	1.6578E-03	1.2355E-06
Te-131	9.6732E-04	4.5514E-06	2.7836E-04	3.6633E+10	1.0247E-03	7.4807E-07
Te-133	4.4855E-05	1.4751E-07	1.0808E-05	1.3240E+09	2.8710E-05	2.7533E-08
Te-133m	3.5523E-04	4.3286E-06	1.1199E-04	1.5146E+10	4.4092E-04	3.0662E-07
Te-134	4.4919E-04	2.0038E-06	1.4756E-04	2.0056E+10	5.9943E-04	4.0730E-07
Cs-134m	1.2192E-03	4.4419E-07	3.5367E-04	4.7337E+10	1.3051E-03	9.5179E-07
Cs-138	1.2129E-02	1.3661E-04	4.1937E-03	5.7344E+11	1.7702E-02	1.1690E-05
Ba-141	9.1730E-07	4.6634E-09	3.7975E-07	5.2983E+07	1.8241E-06	1.0928E-09
Total	4.1126E+00	1.0000E+00	0.0000E+00	0.0000E+00	4.1184E+00	3.0685E-03

Dose Equivalent (Ci/cc) I-131 (Thyroid) 7.5971E-15
Dose Equivalent (Ci/cc) I-131 (CEDE) 1.3877E-14

Dose Equivalent (Ci/cc) I-131 (ICRP2 Thyroid) 4.1208E-14
Total I (Ci) 9.3326E-03
Dose Equivalent (Ci/cc) Xe-133 (EDE) 1.1461E-18

Intact Steam Generators Compartment Group Inventory Distribution:

Time (h) = 0.5000	Atmosphere	Sump
Noble gases (Ci)	9.6069E-09	0.0000E+00
Elemental I (Ci)	9.0526E-03	0.0000E+00
Organic I (Ci)	2.7998E-04	0.0000E+00
Aerosol I (Ci)	0.0000E+00	0.0000E+00
All Aerosols (Ci)	4.1033E+00	0.0000E+00
All Aerosols (kg)	1.6139E-05	0.0000E+00

Control Room Compartment Nuclide Inventory (Ci) at Time (h) = 0.5000

Nuclide	Compartment Atmosphere	Dose Fract	Exposure (Ci-hr)	Decays (Bq-s)	Compartment Recirc Filtr	Pathway 2 Inflow	Pathway 3 Inflow	Pathway 4 Outflow
Rb-86	5.3630E-05	2.6175E-04	7.5764E-05	1.0092E+10	3.0834E-04	3.7505E-04	6.1945E-05	8.1525E-05
Sr-89	8.1667E-07	2.4711E-05	1.1519E-06	1.5340E+08	4.6953E-06	5.6951E-06	9.4173E-07	1.2420E-06
Sr-91	3.3419E-07	5.0539E-07	4.8188E-07	6.4280E+07	1.9213E-06	2.4118E-06	3.9406E-07	5.1942E-07
Y-91	1.0321E-05	3.6853E-04	1.4576E-05	1.9415E+09	5.9336E-05	7.2142E-05	1.1917E-05	1.5684E-05
Zr-95	1.4694E-05	2.5807E-04	2.0752E-05	2.7642E+09	8.4482E-05	1.0271E-04	1.6967E-05	2.2330E-05
Nb-95	2.1217E-05	9.6231E-05	2.9962E-05	3.9910E+09	1.2198E-04	1.4829E-04	2.4497E-05	3.2245E-05
Mo-99	1.2563E-03	3.7175E-03	1.7794E-03	2.3706E+11	7.2229E-03	8.8206E-03	1.4548E-03	1.9151E-03
Tc-99m	1.2022E-03	8.3563E-05	1.7023E-03	2.2653E+11	6.9121E-03	8.4375E-03	1.3919E-03	1.8921E-03
Ru-103	1.2143E-05	8.1605E-05	1.7150E-05	2.2845E+09	6.9813E-05	8.4889E-05	1.4022E-05	1.8454E-05
Ru-106	2.0377E-05	7.1096E-03	2.8775E-05	3.8328E+09	1.1715E-04	1.4241E-04	2.3526E-05	3.0962E-05
Rh-105	4.6510E-07	3.3958E-07	6.6001E-07	8.7940E+07	2.6740E-06	3.2751E-06	5.3964E-07	7.1100E-07
Te-127	1.5168E-04	3.5587E-05	2.1432E-04	2.8527E+10	8.7203E-04	1.0611E-03	1.7523E-04	2.3576E-04
Te-127m	1.5037E-04	2.3633E-03	2.1236E-04	2.8286E+10	8.6454E-04	1.0510E-03	1.7362E-04	2.2850E-04
Te-129	1.3892E-04	1.2056E-05	1.9635E-04	2.5984E+10	7.9867E-04	9.7231E-04	1.6054E-04	2.4999E-04
Te-129m	2.1119E-04	3.6990E-03	2.9829E-04	3.9733E+10	1.2142E-03	1.4765E-03	2.4388E-04	3.2097E-04
Te-131m	3.4902E-05	1.8342E-04	4.9611E-05	6.6113E+09	2.0066E-04	2.4641E-04	4.0565E-05	5.3412E-05
Te-132	5.8549E-04	4.0949E-03	8.2886E-04	1.1042E+11	3.3661E-03	4.1077E-03	6.7769E-04	8.9204E-04
I-132	1.0227E-04	4.5521E-05	5.6186E-05	6.4935E+09	4.8630E-04	1.1166E-04	4.1392E-05	1.3751E-04
I-134	2.1257E-06	1.0662E-06	1.3680E-06	1.5942E+08	1.0061E-05	2.9075E-06	9.9478E-07	3.4662E-06
Cs-134	2.0298E-02	6.9811E-01	2.8663E-02	3.8179E+12	1.1670E-01	1.4186E-01	2.3435E-02	3.0841E-02

Cs-136	1.3335E-03	8.2383E-03	1.8841E-03	2.5098E+11	7.6664E-03	9.3280E-03	1.5405E-03	2.0274E-03
Cs-137	1.1299E-02	2.6373E-01	1.5956E-02	2.1253E+12	6.4963E-02	7.8966E-02	1.3045E-02	1.7168E-02
Ba-140	1.1823E-06	3.3101E-06	1.6706E-06	2.2253E+08	6.7973E-06	8.2707E-06	1.3659E-06	1.7976E-06
La-140	1.7510E-06	7.7994E-06	2.4765E-06	3.2987E+08	1.0067E-05	1.2267E-05	2.0248E-06	2.6747E-06
Ce-141	8.8122E-06	5.7926E-05	1.2447E-05	1.6579E+09	5.0664E-05	6.1609E-05	1.0176E-05	1.3393E-05
Ce-143	4.1724E-07	1.0818E-06	5.9274E-07	7.8986E+07	2.3989E-06	2.9430E-06	4.8465E-07	6.3811E-07
Ce-144	2.5800E-05	7.0481E-03	3.6433E-05	4.8529E+09	1.4833E-04	1.8032E-04	2.9788E-05	3.9202E-05
Pr-143	4.0918E-06	2.4250E-05	5.7811E-06	7.7007E+08	2.3525E-05	2.8620E-05	4.7266E-06	6.2212E-06
Rb-89	3.9300E-06	7.6794E-06	1.2750E-05	1.7937E+09	2.2595E-05	9.2856E-05	1.0708E-05	1.4616E-05
Rh-103m	1.2153E-05	4.6136E-08	1.7142E-05	2.2644E+09	6.9871E-05	8.4782E-05	1.4015E-05	2.2676E-05
Te-125m	1.4938E-05	7.9654E-05	2.1097E-05	2.8101E+09	8.5883E-05	1.0442E-04	1.7249E-05	2.2700E-05
Te-131	8.7241E-06	4.6798E-06	1.3046E-05	1.7187E+09	5.0158E-05	6.7043E-05	1.0683E-05	2.0243E-05
Te-133	4.0454E-07	1.1277E-07	3.7662E-07	4.2864E+07	2.3258E-06	6.8858E-07	2.9140E-07	1.2225E-06
Te-133m	3.2038E-06	4.7744E-06	5.6305E-06	7.6128E+08	1.8419E-05	3.1200E-05	4.6189E-06	6.1676E-06
Te-134	4.0512E-06	2.2813E-06	7.6576E-06	1.0404E+09	2.3291E-05	4.3971E-05	6.2927E-06	8.4362E-06
Cs-134m	1.0996E-05	4.5830E-07	1.6633E-05	2.2261E+09	6.3217E-05	8.5386E-05	1.3609E-05	1.8000E-05
Cs-138	1.0939E-04	1.6159E-04	2.2612E-04	3.0904E+10	6.2891E-04	1.3547E-03	1.8629E-04	2.5083E-04
Total	3.7112E-02	1.0000E+00	0.0000E+00	0.0000E+00	2.1326E-01	2.5954E-01	4.2850E-02	5.6601E-02

Control Room Compartment Group Inventory Distribution:

Time (h) = 0.5000	Atmosphere	Sump
Noble gases (Ci)	2.1824E-09	0.0000E+00
Elemental I (Ci)	1.0142E-04	0.0000E+00
Organic I (Ci)	3.1367E-06	0.0000E+00
Aerosol I (Ci)	0.0000E+00	0.0000E+00
All Aerosols (Ci)	3.7007E-02	0.0000E+00
All Aerosols (kg)	1.4556E-07	0.0000E+00

Time (h) = 0.5000	Deposition Surfaces	Recirculating Filter
Noble gases (Ci)	0.0000E+00	0.0000E+00
Elemental I (Ci)	0.0000E+00	4.8219E-04
Organic I (Ci)	0.0000E+00	1.4913E-05
Aerosol I (Ci)	0.0000E+00	0.0000E+00
All Aerosols (Ci)	0.0000E+00	2.1277E-01
All Aerosols (kg)	0.0000E+00	8.3685E-07

Ruptured Steam Generator Compartment Nuclide Inventory (Ci) at Time (h) = 0.5000

Nuclide	Compartment Atmosphere	Dose Fract	Exposure (Ci-hr)	Decays (Bq-s)	Pathway 6 Inflow	Pathway 8 Outflow
Rb-86	4.6580E+00	2.6170E-04	1.3017E+00	1.7340E+14	4.6636E+00	3.2795E-03
Sr-89	7.0932E-02	2.4726E-05	1.9807E-02	2.6380E+12	7.0904E-02	4.9892E-05
Sr-90	6.5550E-03	7.1648E-05	1.8314E-03	2.4395E+11	6.5600E-03	4.6137E-06
Sr-91	2.9026E-02	5.0059E-07	8.2024E-03	1.0942E+12	2.9648E-02	2.0715E-05
Sr-92	1.1602E-02	1.5495E-07	3.3744E-03	4.5180E+11	1.2478E-02	8.5747E-06
Y-90	1.1378E-02	8.0857E-07	3.1811E-03	4.2373E+11	1.1401E-02	8.0150E-06
Y-91	8.9640E-01	3.6851E-04	2.5047E-01	3.3363E+13	8.9720E-01	6.3098E-04
Y-92	1.5892E-02	1.2374E-07	4.4740E-03	5.9553E+11	1.6116E-02	1.1289E-05
Y-93	1.0292E-02	1.9297E-07	2.9064E-03	3.8767E+11	1.0500E-02	7.3389E-06
Zr-95	1.2763E+00	2.5807E-04	3.5661E-01	4.7501E+13	1.2774E+00	8.9837E-04
Zr-97	2.0351E-02	7.6265E-07	5.7223E-03	7.6285E+11	2.0601E-02	1.4436E-05
Nb-95	1.8428E+00	9.6231E-05	5.1489E-01	6.8583E+13	1.8443E+00	1.2971E-03
Mo-99	1.0912E+02	3.7125E-03	3.0537E+01	4.0683E+15	1.0952E+02	7.6954E-02
Tc-99m	1.0442E+02	8.3460E-05	2.9218E+01	3.8881E+15	1.0478E+02	7.3630E-02
Ru-103	1.0547E+00	8.1600E-05	2.9470E-01	3.9255E+13	1.0557E+00	7.4242E-04
Ru-105	4.7655E-03	3.5258E-08	1.3644E-03	1.8231E+11	4.9829E-03	3.4554E-06
Ru-106	1.7698E+00	7.1097E-03	4.9449E-01	6.5866E+13	1.7712E+00	1.2457E-03
Rh-105	4.0396E-02	3.3882E-07	1.1317E-02	1.5079E+12	4.0622E-02	2.8525E-05
Te-127	1.3174E+01	3.5577E-05	3.6821E+00	4.9008E+14	1.3193E+01	9.2764E-03
Te-127m	1.3061E+01	2.3633E-03	3.6492E+00	4.8608E+14	1.3071E+01	9.1931E-03
Te-129	1.2066E+01	1.2051E-05	3.3728E+00	4.4634E+14	1.2086E+01	8.4975E-03
Te-129m	1.8343E+01	3.6987E-03	5.1256E+00	6.8274E+14	1.8361E+01	1.2913E-02
Te-131m	3.0314E+00	1.8287E-04	8.5000E-01	1.1327E+14	3.0533E+00	2.1430E-03
Te-132	5.0852E+01	4.0903E-03	1.4227E+01	1.8954E+15	5.1017E+01	3.5852E-02
I-131	5.6648E-03	1.0922E-06	1.0959E-03	1.3286E+11	2.5205E-03	2.4908E-06
I-132	7.1520E+00	6.6081E-05	1.4016E+00	1.6988E+14	3.2512E+00	3.1973E-03
I-133	5.2324E-03	1.9253E-07	1.0381E-03	1.2654E+11	2.4248E-03	2.3759E-06
I-134	1.4771E-01	1.4327E-06	3.1589E-02	3.8830E+12	7.7589E-02	7.3762E-05
Xe-133	6.9889E-06	5.1848E-13	1.0437E-06	1.1770E+08	1.9164E-06	2.1731E-09
Cs-134	1.7630E+03	6.9812E-01	4.9257E+02	6.5611E+16	1.7643E+03	1.2409E+00
Cs-136	1.1582E+02	8.2361E-03	3.2370E+01	4.3119E+15	1.1598E+02	8.1551E-02
Cs-137	9.8140E+02	2.6374E-01	2.7420E+02	3.6523E+16	9.8214E+02	6.9075E-01
Ba-139	8.1390E-03	1.4441E-08	2.4633E-03	3.3147E+11	9.3973E-03	6.3120E-06
Ba-140	1.0269E-01	3.3092E-06	2.8700E-02	3.8230E+12	1.0283E-01	7.2306E-05

La-140	1.5208E-01	7.7939E-06	4.2528E-02	5.6646E+12	1.5244E-01	1.0716E-04
La-141	6.4246E-03	3.3554E-08	1.8376E-03	2.4541E+11	6.6996E-03	4.6525E-06
La-142	1.4161E-03	2.2723E-08	4.2490E-04	5.7114E+10	1.6101E-03	1.0868E-06
Ce-141	7.6539E-01	5.7920E-05	2.1387E-01	2.8489E+13	7.6616E-01	5.3880E-04
Ce-143	3.6240E-02	1.0788E-06	1.0158E-02	1.3537E+12	3.6481E-02	2.5609E-05
Ce-144	2.2409E+00	7.0482E-03	6.2610E-01	8.3397E+13	2.2427E+00	1.5773E-03
Pr-143	3.5539E-01	2.4244E-05	9.9324E-02	1.3230E+13	3.5585E-01	2.5023E-04
Rb-89	3.4134E-01	5.4155E-06	1.5452E-01	2.1762E+13	7.8882E-01	4.2579E-04
Y-91m	1.7445E-02	4.5047E-08	4.8886E-03	6.4550E+11	1.7540E-02	1.2322E-05
Nb-95m	9.8897E-03	2.0555E-07	2.7634E-03	3.6807E+11	9.8993E-03	6.9618E-06
Nb-97	2.2206E-03	8.2158E-09	6.5085E-04	8.6976E+10	2.4240E-03	1.6568E-06
Rh-103m	1.0555E+00	4.6161E-08	2.9475E-01	3.8935E+13	1.0552E+00	7.4242E-04
Te-125m	1.2974E+00	7.9651E-05	3.6252E-01	4.8289E+13	1.2986E+00	9.1327E-04
Te-131	7.5773E-01	4.5514E-06	2.1804E-01	2.8695E+13	8.0265E-01	5.5299E-04
Te-133	3.5136E-02	1.4751E-07	8.4661E-03	1.0371E+12	2.2488E-02	2.0352E-05
Te-133m	2.7826E-01	4.3286E-06	8.7724E-02	1.1864E+13	3.4537E-01	2.2666E-04
Te-134	3.5187E-01	2.0038E-06	1.1559E-01	1.5710E+13	4.6954E-01	3.0109E-04
Cs-134m	9.5502E-01	4.4419E-07	2.7703E-01	3.7080E+13	1.0223E+00	7.0358E-04
Cs-138	9.5010E+00	1.3661E-04	3.2850E+00	4.4918E+14	1.3866E+01	8.6414E-03
Ba-141	7.1856E-04	4.6634E-09	2.9747E-04	4.1502E+10	1.4288E-03	8.0789E-07
Total	3.2216E+03	1.0000E+00	0.0000E+00	0.0000E+00	3.2260E+03	2.2683E+00

Dose Equivalent (Ci/cc) I-131 (Thyroid)	1.7853E-11
Dose Equivalent (Ci/cc) I-131 (CEDE)	3.2610E-11
Dose Equivalent (Ci/cc) I-131 (ICRP2 Thyroid)	9.6839E-11
Total I (Ci)	7.3106E+00
Dose Equivalent (Ci/cc) Xe-133 (EDE)	2.6932E-15

Ruptured Steam Generator Compartment Group Inventory Distribution:

Time (h) = 0.5000	Atmosphere	Sump
Noble gases (Ci)	7.5254E-06	0.0000E+00
Elemental I (Ci)	7.0912E+00	0.0000E+00
Organic I (Ci)	2.1932E-01	0.0000E+00
Aerosol I (Ci)	0.0000E+00	0.0000E+00
All Aerosols (Ci)	3.2143E+03	0.0000E+00
All Aerosols (kg)	1.2642E-02	0.0000E+00

```
#######################################################################
    ALION RADTRAD Version 3.10 Rev 2 run on 12/01/2014  at 16:22:43

                Copyright © 2009 Alion Science and Technology
#######################################################################

Exclusion Area Boundary Doses:

Time (h) =    0.6670    Whole Body   Thyroid       TEDE
Delta dose (rem)         5.2179E-06  3.7564E-04  3.9042E-04
Accumulated dose (rem)  2.7384E-02  1.9687E+00  2.0461E+00

Low Population Zone Doses:

Time (h) =    0.6670    Whole Body   Thyroid       TEDE
Delta dose (rem)         1.0045E-06  7.2311E-05  7.5158E-05
Accumulated dose (rem)  4.9024E-03  3.5247E-01  3.6634E-01

Control Room Doses:

Time (h) =    0.6670    Whole Body   Thyroid       TEDE        Skin
Delta dose (rem)         5.5347E-05  1.1997E-01  1.2307E-01  2.2156E-03
Accumulated dose (rem)  7.9911E-04  1.7321E+00  1.7769E+00  3.2031E-02

*******************************************************

RCS Compartment Nuclide Inventory (Ci)  at Time (h) =   0.6670
```

Nuclide	Compartment Atmosphere	Dose Fract	Exposure (Ci-hr)	Decays (Bq-s)	Pathway 1 Outflow	Pathway 5 Outflow	Pathway 6 Outflow
Rb-86	1.3555E+01	2.6170E-04	1.0141E+01	1.3508E+15	3.5839E-01	7.7013E-03	4.6636E+00
Sr-89	2.0653E-01	2.4722E-05	1.5428E-01	2.0547E+13	5.4470E-03	1.1714E-04	7.0904E-02
Sr-90	1.9081E-02	7.1647E-05	1.4267E-02	1.9004E+12	5.0409E-04	1.0834E-05	6.5600E-03
Sr-91	8.3466E-02	5.0101E-07	6.3952E-02	8.5307E+12	2.2853E-03	4.8690E-05	2.9648E-02
Sr-92	3.2358E-02	1.5549E-07	2.6379E-02	3.5314E+12	9.6943E-04	2.0215E-05	1.2478E-02
Y-90	3.3093E-02	8.0861E-07	2.4783E-02	3.3011E+12	8.7625E-04	1.8822E-05	1.1401E-02
Y-91	2.6091E+00	3.6851E-04	1.9512E+00	2.5990E+14	6.8945E-02	1.4817E-03	8.9720E-01
Y-92	4.5837E-02	1.2376E-07	3.4860E-02	4.6400E+12	1.2406E-03	2.6517E-05	1.6116E-02

Y-93	2.9617E-02	1.9313E-07	2.2659E-02	3.0223E+12	8.0919E-04	1.7249E-05	1.0500E-02
Zr-95	3.7147E+00	2.5807E-04	2.7781E+00	3.7004E+14	9.8161E-02	2.1096E-03	1.2774E+00
Zr-97	5.8834E-02	7.6300E-07	4.4599E-02	5.9453E+12	1.5858E-03	3.3917E-05	2.0601E-02
Nb-95	5.3639E+00	9.6230E-05	4.0111E+00	5.3428E+14	1.4173E-01	3.0460E-03	1.8443E+00
Mo-99	3.1707E+02	3.7129E-03	2.3791E+02	3.1697E+16	8.4197E+00	1.8073E-01	1.0952E+02
Tc-99m	3.0347E+02	8.3469E-05	2.2764E+02	3.0292E+16	8.0550E+00	1.7292E-01	1.0478E+02
Ru-103	3.0696E+00	8.1600E-05	2.2958E+00	3.0581E+14	8.1125E-02	1.7434E-03	1.0557E+00
Ru-105	1.3515E-02	3.5326E-08	1.0649E-02	1.4229E+12	3.8546E-04	8.1321E-06	4.9829E-03
Ru-106	5.1516E+00	7.1097E-03	3.8522E+00	5.1311E+14	1.3611E-01	2.9253E-03	1.7712E+00
Rh-105	1.1725E-01	3.3889E-07	8.8175E-02	1.1749E+13	3.1238E-03	6.7000E-05	4.0622E-02
Te-127	3.8332E+01	3.5578E-05	2.8685E+01	3.8179E+15	1.0139E+00	2.1784E-02	1.3193E+01
Te-127m	3.8016E+01	2.3632E-03	2.8428E+01	3.7867E+15	1.0045E+00	2.1588E-02	1.3071E+01
Te-129	3.5105E+01	1.2051E-05	2.6276E+01	3.4772E+15	9.2888E-01	1.9956E-02	1.2086E+01
Te-129m	5.3386E+01	3.6987E-03	3.9930E+01	5.3188E+15	1.4110E+00	3.0323E-02	1.8361E+01
Te-131m	8.7899E+00	1.8292E-04	6.6233E+00	8.8263E+14	2.3486E-01	5.0338E-03	3.0533E+00
Te-132	1.4780E+02	4.0907E-03	1.1085E+02	1.4767E+16	3.9218E+00	8.4200E-02	5.1017E+01
I-131	2.1871E-02	1.0561E-06	8.2551E-03	9.9885E+11	1.5636E-04	5.6027E-06	2.5205E-03
I-132	2.7083E+01	6.3461E-05	1.0486E+01	1.2675E+15	2.0195E-01	7.1385E-03	3.2512E+00
I-133	1.9371E-02	1.8347E-07	7.7067E-03	9.3683E+11	1.5075E-04	5.2628E-06	2.4248E-03
I-134	4.9443E-01	1.3250E-06	2.2758E-01	2.7774E+13	4.8644E-03	1.5786E-04	7.7589E-02
Xe-133	3.5529E-05	5.7555E-13	9.0255E-06	1.0400E+09	1.1416E-07	5.7645E-09	1.9164E-06
Cs-134	5.1317E+03	6.9812E-01	3.8372E+03	5.1112E+17	1.3558E+02	2.9139E+00	1.7643E+03
Cs-136	3.3700E+02	8.2363E-03	2.5217E+02	3.3591E+16	8.9128E+00	1.9151E-01	1.1598E+02
Cs-137	2.8567E+03	2.6374E-01	2.1360E+03	2.8452E+17	7.5471E+01	1.6221E+00	9.8214E+02
Ba-139	2.1783E-02	1.4561E-08	1.9349E-02	2.6029E+12	7.3789E-04	1.4957E-05	9.3973E-03
Ba-140	2.9879E-01	3.3093E-06	2.2359E-01	2.9783E+13	7.9025E-03	1.6980E-04	1.0283E-01
La-140	4.4227E-01	7.7943E-06	3.3132E-01	4.4131E+13	1.1716E-02	2.5165E-04	1.5244E-01
La-141	1.8209E-02	3.3592E-08	1.4332E-02	1.9138E+12	5.1782E-04	1.0940E-05	6.6996E-03
La-142	3.8239E-03	2.2886E-08	3.3337E-03	4.4799E+11	1.2614E-04	2.5723E-06	1.6101E-03
Ce-141	2.2276E+00	5.7921E-05	1.6661E+00	2.2193E+14	5.8876E-02	1.2653E-03	7.6616E-01
Ce-143	1.0512E-01	1.0791E-06	7.9153E-02	1.0548E+13	2.8058E-03	6.0152E-05	3.6481E-02
Ce-144	6.5227E+00	7.0482E-03	4.8775E+00	6.4968E+14	1.7233E-01	3.7038E-03	2.2427E+00
Pr-143	1.0342E+00	2.4245E-05	7.7377E-01	1.0307E+14	2.7347E-02	5.8762E-04	3.5585E-01
Rb-89	6.2916E-01	6.0277E-06	1.3398E+00	1.8802E+14	6.8275E-02	1.1160E-03	7.8882E-01
Y-91m	5.0551E-02	4.5033E-08	3.8070E-02	5.0268E+12	1.3484E-03	2.8927E-05	1.7540E-02
Nb-95m	2.8783E-02	2.0555E-07	2.1528E-02	2.8673E+12	7.6072E-04	1.6348E-05	9.8993E-03
Nb-97	6.1596E-03	8.2585E-09	5.0966E-03	6.8097E+11	1.8882E-04	3.9128E-06	2.4240E-03
Rh-103m	3.0744E+00	4.6157E-08	2.2960E+00	3.0329E+14	8.1072E-02	1.7433E-03	1.0552E+00

Te-125m	3.7763E+00	7.9651E-05	2.8241E+00	3.7618E+14	9.9791E-02	2.1446E-03	1.2986E+00
Te-131	2.1547E+00	4.5764E-06	1.7079E+00	2.2477E+14	6.2323E-02	1.3064E-03	8.0265E-01
Te-133	1.0239E-01	1.3254E-07	5.9261E-02	7.1452E+12	1.4301E-03	4.1958E-05	2.2488E-02
Te-133m	7.1454E-01	4.3915E-06	6.9333E-01	9.3719E+13	2.7413E-02	5.4061E-04	3.4537E-01
Te-134	8.6743E-01	2.0480E-06	9.2028E-01	1.2499E+14	3.7667E-02	7.2366E-04	4.6954E-01
Xe-133m	2.5393E-06	3.6141E-14	6.4535E-07	7.4359E+07	8.1662E-09	4.1221E-10	1.3709E-07
Cs-134m	2.6711E+00	4.4562E-07	2.1651E+00	2.8975E+14	7.9366E-02	1.6582E-03	1.0223E+00
Cs-138	2.2290E+01	1.4111E-04	2.6433E+01	3.6105E+15	1.1269E+00	2.0997E-02	1.3866E+01
Ba-141	1.4300E-03	5.0496E-09	2.5092E-03	3.4916E+11	1.2123E-04	2.0595E-06	1.4288E-03
Total	9.3761E+03	1.0000E+00	0.0000E+00	0.0000E+00	2.4793E+02	5.3271E+00	3.2260E+03

Dose Equivalent (Ci/cc) I-131 (Thyroid)	1.4165E-11
Dose Equivalent (Ci/cc) I-131 (CEDE)	2.5840E-11
Dose Equivalent (Ci/cc) I-131 (ICRP2 Thyroid)	7.6654E-11
Total I (Ci)	2.7619E+01
Dose Equivalent (Ci/cc) Xe-133 (EDE)	2.8642E-15

RCS Compartment Group Inventory Distribution:

Time (h) = 0.6670	Atmosphere	Sump
Noble gases (Ci)	3.8260E-05	0.0000E+00
Elemental I (Ci)	2.6790E+01	0.0000E+00
Organic I (Ci)	8.2857E-01	0.0000E+00
Aerosol I (Ci)	0.0000E+00	0.0000E+00
All Aerosols (Ci)	9.3485E+03	0.0000E+00
All Aerosols (kg)	3.6800E-02	0.0000E+00

Intact Steam Generators Compartment Nuclide Inventory (Ci) at Time (h) = 0.6670

Nuclide	Compartment Atmosphere	Dose Fract	Exposure (Ci-hr)	Decays (Bq-s)	Pathway 5 Inflow	Pathway 7 Outflow
Rb-86	7.6905E-03	2.6166E-04	2.8374E-03	3.7796E+11	7.7013E-03	6.0689E-06
Sr-89	1.1717E-04	2.4734E-05	4.3195E-05	5.7530E+09	1.1714E-04	9.2357E-08
Sr-90	1.0825E-05	7.1649E-05	3.9927E-06	5.3183E+08	1.0834E-05	8.5389E-09
Sr-91	4.7354E-05	4.9665E-07	1.7741E-05	2.3666E+09	4.8690E-05	3.8147E-08
Sr-92	1.8358E-05	1.5075E-07	7.1569E-06	9.5833E+08	2.0215E-05	1.5599E-08
Y-90	1.8775E-05	8.0818E-07	6.9316E-06	9.2331E+08	1.8822E-05	1.4829E-08
Y-91	1.4802E-03	3.6850E-04	5.4601E-04	7.2730E+10	1.4817E-03	1.1678E-06

Y-92	2.6005E-05	1.2305E-07	9.6998E-06	1.2912E+09	2.6517E-05	2.0822E-08
Y-93	1.6803E-05	1.9154E-07	6.2892E-06	8.3891E+08	1.7249E-05	1.3519E-08
Zr-95	2.1075E-03	2.5806E-04	7.7740E-04	1.0355E+11	2.1096E-03	1.6626E-06
Zr-97	3.3379E-05	7.5927E-07	1.2420E-05	1.6557E+09	3.3917E-05	2.6642E-08
Nb-95	3.0431E-03	9.6229E-05	1.1225E-03	1.4951E+11	3.0460E-03	2.4006E-06
Mo-99	1.7988E-01	3.7083E-03	6.6496E-02	8.8592E+12	1.8073E-01	1.4232E-04
Tc-99m	1.7217E-01	8.3374E-05	6.3632E-02	8.4671E+12	1.7292E-01	1.3618E-04
Ru-103	1.7415E-03	8.1594E-05	6.4243E-04	8.5572E+10	1.7434E-03	1.3740E-06
Ru-105	7.6673E-06	3.4668E-08	2.9247E-06	3.9082E+08	8.1321E-06	6.3276E-09
Ru-106	2.9227E-03	7.1097E-03	1.0780E-03	1.4359E+11	2.9253E-03	2.3055E-06
Rh-105	6.6519E-05	3.3819E-07	2.4625E-05	3.2811E+09	6.7000E-05	5.2731E-08
Te-127	2.1747E-02	3.5568E-05	8.0251E-03	1.0681E+12	2.1784E-02	1.7166E-05
Te-127m	2.1568E-02	2.3632E-03	7.9554E-03	1.0597E+12	2.1588E-02	1.7014E-05
Te-129	1.9917E-02	1.2047E-05	7.3504E-03	9.7242E+11	1.9956E-02	1.5723E-05
Te-129m	3.0288E-02	3.6984E-03	1.1173E-02	1.4883E+12	3.0323E-02	2.3897E-05
Te-131m	4.9869E-03	1.8241E-04	1.8484E-03	2.4633E+11	5.0338E-03	3.9599E-06
Te-132	8.3855E-02	4.0864E-03	3.0987E-02	4.1283E+12	8.4200E-02	6.6314E-05
I-131	1.2408E-05	1.4310E-06	3.1303E-06	3.8778E+08	5.6027E-06	5.6111E-09
I-132	1.5365E-02	8.5360E-05	3.9471E-03	4.8882E+11	7.1385E-03	7.1324E-06
I-133	1.0990E-05	2.4508E-07	2.8809E-06	3.5915E+08	5.2628E-06	5.2492E-09
I-134	2.8051E-04	1.6938E-06	8.1414E-05	1.0232E+10	1.5786E-04	1.5489E-07
Cs-134	2.9114E+00	6.9813E-01	1.0738E+00	1.4304E+14	2.9139E+00	2.2966E-03
Cs-136	1.9119E-01	8.2342E-03	7.0552E-02	9.3980E+12	1.9151E-01	1.5091E-04
Cs-137	1.6207E+00	2.6374E-01	5.9777E-01	7.9624E+13	1.6221E+00	1.2784E-03
Ba-139	1.2358E-05	1.3692E-08	5.0914E-06	6.8523E+08	1.4957E-05	1.1299E-08
Ba-140	1.6952E-04	3.3084E-06	6.2554E-05	8.3325E+09	1.6980E-04	1.3380E-07
La-140	2.5092E-04	7.7893E-06	9.2658E-05	1.2342E+10	2.5165E-04	1.9824E-07
La-141	1.0331E-05	3.3002E-08	3.9401E-06	5.2632E+08	1.0940E-05	8.5223E-09
La-142	2.1695E-06	2.1663E-08	8.8307E-07	1.1872E+08	2.5723E-06	1.9522E-09
Ce-141	1.2638E-03	5.7916E-05	4.6622E-04	6.2102E+10	1.2653E-03	9.9713E-07
Ce-143	5.9638E-05	1.0764E-06	2.2095E-05	2.9444E+09	6.0152E-05	4.7328E-08
Ce-144	3.7006E-03	7.0482E-03	1.3649E-03	1.8181E+11	3.7038E-03	2.9191E-06
Pr-143	5.8672E-04	2.4240E-05	2.1649E-04	2.8837E+10	5.8762E-04	4.6305E-07
Rb-89	3.5695E-04	4.2109E-06	2.6192E-04	3.6916E+10	1.1160E-03	6.7677E-07
Y-91m	2.8680E-05	4.4939E-08	1.0632E-05	1.4035E+09	2.8927E-05	2.2773E-08
Nb-95m	1.6330E-05	2.0554E-07	6.0241E-06	8.0235E+08	1.6348E-05	1.2884E-08
Nb-97	3.4946E-06	7.9572E-09	1.3742E-06	1.8359E+08	3.9128E-06	3.0049E-09
Rh-103m	1.7442E-03	4.6179E-08	6.4282E-04	8.4882E+10	1.7433E-03	1.3744E-06

Te-125m	2.1425E-03	7.9648E-05	7.9029E-04	1.0527E+11	2.1446E-03	1.6902E-06
Te-131	1.2224E-03	4.4683E-06	4.6666E-04	6.1322E+10	1.3064E-03	1.0111E-06
Te-133	5.8092E-05	1.5765E-07	1.9725E-05	2.4644E+09	4.1958E-05	3.9912E-08
Te-133m	4.0539E-04	4.0020E-06	1.7681E-04	2.3919E+10	5.4061E-04	3.9952E-07
Te-134	4.9213E-04	1.8086E-06	2.2743E-04	3.0922E+10	7.2366E-04	5.2296E-07
Cs-134m	1.5154E-03	4.3292E-07	5.8863E-04	7.8791E+10	1.6582E-03	1.2813E-06
Cs-138	1.2646E-02	1.1987E-04	6.2841E-03	8.5963E+11	2.0997E-02	1.4754E-05
Ba-141	8.1133E-07	3.7570E-09	5.2245E-07	7.2938E+07	2.0595E-06	1.3110E-09
Total	5.3195E+00	1.0000E+00	0.0000E+00	0.0000E+00	5.3271E+00	4.1976E-03

Dose Equivalent (Ci/cc) I-131 (Thyroid)	1.2805E-14
Dose Equivalent (Ci/cc) I-131 (CEDE)	2.3359E-14
Dose Equivalent (Ci/cc) I-131 (ICRP2 Thyroid)	6.9295E-14
Total I (Ci)	1.5669E-02
Dose Equivalent (Ci/cc) Xe-133 (EDE)	2.5892E-18

Intact Steam Generators Compartment Group Inventory Distribution:

Time (h) = 0.6670	Atmosphere	Sump
Noble gases (Ci)	2.1706E-08	0.0000E+00
Elemental I (Ci)	1.5199E-02	0.0000E+00
Organic I (Ci)	4.7008E-04	0.0000E+00
Aerosol I (Ci)	0.0000E+00	0.0000E+00
All Aerosols (Ci)	5.3038E+00	0.0000E+00
All Aerosols (kg)	2.0878E-05	0.0000E+00

Control Room Compartment Nuclide Inventory (Ci) at Time (h) = 0.6670

Nuclide	Compartment Atmosphere	Dose Fract	Exposure (Ci-hr)	Decays (Bq-s)	Compartment Recirc Filtr	Pathway 2 Inflow	Pathway 3 Inflow	Pathway 4 Outflow
Rb-86	1.8607E-05	2.6174E-04	8.0567E-05	1.0732E+10	3.3745E-04	3.7506E-04	6.1960E-05	8.7588E-05
Sr-89	2.8349E-07	2.4713E-05	1.2251E-06	1.6315E+08	5.1413E-06	5.6952E-06	9.4196E-07	1.3358E-06
Sr-91	1.1457E-07	5.0457E-07	5.1162E-07	6.8247E+07	2.0778E-06	2.4119E-06	3.9416E-07	5.5707E-07
Y-91	3.5813E-06	3.6852E-04	1.5500E-05	2.0646E+09	6.4950E-05	7.2143E-05	1.1920E-05	1.6851E-05
Zr-95	5.0990E-06	2.5807E-04	2.2069E-05	2.9396E+09	9.2475E-05	1.0271E-04	1.6971E-05	2.3991E-05
Nb-95	7.3627E-06	9.6231E-05	3.1863E-05	4.2441E+09	1.3353E-04	1.4830E-04	2.4503E-05	3.4648E-05
Mo-99	4.3522E-04	3.7167E-03	1.8918E-03	2.5204E+11	7.8931E-03	8.8208E-03	1.4552E-03	2.0571E-03
Tc-99m	4.1655E-04	8.3545E-05	1.8099E-03	2.4085E+11	7.5545E-03	8.4377E-03	1.3922E-03	2.0619E-03

Ru-103	4.2135E-06	8.1604E-05	1.8238E-05	2.4293E+09	7.6415E-05	8.4890E-05	1.4026E-05	1.9827E-05
Ru-106	7.0714E-06	7.1096E-03	3.0600E-05	4.0759E+09	1.2825E-04	1.4241E-04	2.3532E-05	3.3265E-05
Rh-105	1.6094E-07	3.3945E-07	7.0160E-07	9.3483E+07	2.9187E-06	3.2752E-06	5.3978E-07	7.6384E-07
Te-127	5.2616E-05	3.5585E-05	2.2791E-04	3.0335E+10	9.5424E-04	1.0611E-03	1.7528E-04	2.5581E-04
Te-127m	5.2182E-05	2.3633E-03	2.2583E-04	3.0080E+10	9.4636E-04	1.0510E-03	1.7366E-04	2.4550E-04
Te-129	4.8187E-05	1.2055E-05	2.0879E-04	2.7630E+10	8.7391E-04	9.7233E-04	1.6058E-04	2.8761E-04
Te-129m	7.3280E-05	3.6990E-03	3.1721E-04	4.2253E+10	1.3290E-03	1.4765E-03	2.4394E-04	3.4485E-04
Te-131m	1.2065E-05	1.8333E-04	5.2731E-05	7.0270E+09	2.1882E-04	2.4641E-04	4.0575E-05	5.7353E-05
Te-132	2.0288E-04	4.0941E-03	8.8126E-04	1.1741E+11	3.6794E-03	4.1078E-03	6.7786E-04	9.5821E-04
I-132	4.5113E-05	5.0830E-05	6.6718E-05	7.8348E+09	6.9523E-04	1.1170E-04	4.1418E-05	1.9729E-04
I-134	8.3360E-07	1.1528E-06	1.5729E-06	1.8598E+08	1.2730E-05	2.9083E-06	9.9529E-07	4.8590E-06
Cs-134	7.0440E-03	6.9811E-01	3.0481E-02	4.0601E+12	1.2775E-01	1.4186E-01	2.3441E-02	3.3136E-02
Cs-136	4.6258E-04	8.2379E-03	2.0036E-03	2.6689E+11	8.3893E-03	9.3282E-03	1.5409E-03	2.1782E-03
Cs-137	3.9212E-03	2.6374E-01	1.6968E-02	2.2601E+12	7.1115E-02	7.8967E-02	1.3048E-02	1.8446E-02
Ba-140	4.1013E-07	3.3099E-06	1.7764E-06	2.3663E+08	7.4381E-06	8.2708E-06	1.3662E-06	1.9313E-06
La-140	6.0709E-07	7.7985E-06	2.6333E-06	3.5075E+08	1.1010E-05	1.2267E-05	2.0253E-06	2.8781E-06
Ce-141	3.0577E-06	5.7925E-05	1.3236E-05	1.7631E+09	5.5454E-05	6.1610E-05	1.0179E-05	1.4389E-05
Ce-143	1.4429E-07	1.0813E-06	6.3004E-07	8.3957E+07	2.6168E-06	2.9431E-06	4.8477E-07	6.8524E-07
Ce-144	8.9534E-06	7.0481E-03	3.8745E-05	5.1608E+09	1.6238E-04	1.8032E-04	2.9795E-05	4.2119E-05
Pr-143	1.4195E-06	2.4249E-05	6.1476E-06	8.1889E+08	2.5744E-05	2.8620E-05	4.7278E-06	6.6840E-06
Rb-89	8.6362E-07	7.3775E-06	1.3026E-05	1.8327E+09	1.5662E-05	9.2857E-05	1.0709E-05	1.5009E-05
Rh-103m	4.2200E-06	4.6139E-08	1.8231E-05	2.4082E+09	7.6534E-05	8.4784E-05	1.4019E-05	2.6448E-05
Te-125m	5.1835E-06	7.9653E-05	2.2435E-05	2.9883E+09	9.4008E-05	1.0442E-04	1.7253E-05	2.4389E-05
Te-131	2.9576E-06	4.6608E-06	1.3817E-05	1.8199E+09	5.3638E-05	6.7044E-05	1.0685E-05	2.4688E-05
Te-133	1.4055E-07	1.1631E-07	4.1308E-07	4.7529E+07	2.5490E-06	6.8863E-07	2.9152E-07	1.7297E-06
Te-133m	9.8081E-07	4.7033E-06	5.8985E-06	7.9756E+08	1.7788E-05	3.1201E-05	4.6198E-06	6.5172E-06
Te-134	1.1907E-06	2.2381E-06	7.9891E-06	1.0855E+09	2.1594E-05	4.3971E-05	6.2938E-06	8.8732E-06
Cs-134m	3.6665E-06	4.5593E-07	1.7597E-05	2.3551E+09	6.6495E-05	8.5387E-05	1.3612E-05	1.9229E-05
Cs-138	3.0596E-05	1.5781E-04	2.3484E-04	3.2098E+10	5.5489E-04	1.3547E-03	1.8632E-04	2.6247E-04
Total	1.2878E-02	1.0000E+00	0.0000E+00	0.0000E+00	2.3343E-01	2.5955E-01	4.2861E-02	6.0911E-02

Control Room Compartment Group Inventory Distribution:

Time (h) = 0.6670	Atmosphere	Sump
Noble gases (Ci)	3.5172E-09	0.0000E+00
Elemental I (Ci)	4.4635E-05	0.0000E+00
Organic I (Ci)	1.3805E-06	0.0000E+00
Aerosol I (Ci)	0.0000E+00	0.0000E+00

All Aerosols (Ci)	1.2832E-02	0.0000E+00
All Aerosols (kg)	5.0513E-08	0.0000E+00

Time (h) = 0.6670	Deposition Surfaces	Recirculating Filter
Noble gases (Ci)	0.0000E+00	0.0000E+00
Elemental I (Ci)	0.0000E+00	6.8775E-04
Organic I (Ci)	0.0000E+00	2.1271E-05
Aerosol I (Ci)	0.0000E+00	0.0000E+00
All Aerosols (Ci)	0.0000E+00	2.3272E-01
All Aerosols (kg)	0.0000E+00	9.1610E-07

Ruptured Steam Generator Compartment Nuclide Inventory (Ci) at Time (h) = 0.6670

Nuclide	Compartment Atmosphere	Dose Fract	Exposure (Ci-hr)	Decays (Bq-s)	Pathway 6 Inflow	Pathway 8 Outflow
Rb-86	4.6568E+00	2.6166E-04	2.0795E+00	2.7700E+14	4.6636E+00	3.2795E-03
Sr-89	7.0951E-02	2.4733E-05	3.1655E-02	4.2160E+12	7.0904E-02	4.9892E-05
Sr-90	6.5550E-03	7.1648E-05	2.9261E-03	3.8976E+11	6.5600E-03	4.6137E-06
Sr-91	2.8674E-02	4.9707E-07	1.3013E-02	1.7359E+12	2.9648E-02	2.0715E-05
Sr-92	1.1116E-02	1.5120E-07	5.2608E-03	7.0443E+11	1.2478E-02	8.5747E-06
Y-90	1.1369E-02	8.0822E-07	5.0802E-03	6.7670E+11	1.1401E-02	8.0150E-06
Y-91	8.9633E-01	3.6850E-04	4.0016E-01	5.3302E+13	8.9720E-01	6.3098E-04
Y-92	1.5747E-02	1.2313E-07	7.1130E-03	9.4684E+11	1.6116E-02	1.1289E-05
Y-93	1.0175E-02	1.9170E-07	4.6129E-03	6.1531E+11	1.0500E-02	7.3389E-06
Zr-95	1.2762E+00	2.5806E-04	5.6974E-01	7.5890E+13	1.2774E+00	8.9837E-04
Zr-97	2.0212E-02	7.5963E-07	9.1064E-03	1.2140E+12	2.0601E-02	1.4436E-05
Nb-95	1.8427E+00	9.6229E-05	8.2263E-01	1.0957E+14	1.8443E+00	1.2971E-03
Mo-99	1.0893E+02	3.7088E-03	4.8739E+01	6.4935E+15	1.0952E+02	7.6954E-02
Tc-99m	1.0425E+02	8.3384E-05	4.6639E+01	6.2060E+15	1.0478E+02	7.3630E-02
Ru-103	1.0545E+00	8.1595E-05	4.7082E-01	6.2714E+13	1.0557E+00	7.4242E-04
Ru-105	4.6428E-03	3.4731E-08	2.1473E-03	2.8694E+11	4.9829E-03	3.4554E-06
Ru-106	1.7698E+00	7.1097E-03	7.9005E-01	1.0523E+14	1.7712E+00	1.2457E-03
Rh-105	4.0279E-02	3.3826E-07	1.8051E-02	2.4051E+12	4.0622E-02	2.8525E-05
Te-127	1.3169E+01	3.5569E-05	5.8815E+00	7.8281E+14	1.3193E+01	9.2764E-03
Te-127m	1.3060E+01	2.3632E-03	5.8303E+00	7.7660E+14	1.3071E+01	9.1931E-03
Te-129	1.2060E+01	1.2047E-05	5.3871E+00	7.1272E+14	1.2086E+01	8.4975E-03
Te-129m	1.8340E+01	3.6984E-03	8.1886E+00	1.0907E+15	1.8361E+01	1.2913E-02

Te-131m	3.0197E+00	1.8246E-04	1.3550E+00	1.8057E+14	3.0533E+00	2.1430E-03
Te-132	5.0777E+01	4.0868E-03	2.2712E+01	3.0258E+15	5.1017E+01	3.5852E-02
I-131	7.5137E-03	1.3946E-06	2.2357E-03	2.7645E+11	2.5205E-03	2.4908E-06
I-132	9.3043E+00	8.3295E-05	2.8227E+00	3.4894E+14	3.2512E+00	3.1973E-03
I-133	6.6549E-03	2.3948E-07	2.0631E-03	2.5669E+11	2.4248E-03	2.3759E-06
I-134	1.6986E-01	1.6666E-06	5.8709E-02	7.3637E+12	7.7589E-02	7.3762E-05
Xe-133	1.2206E-05	8.5203E-13	2.7403E-06	3.2036E+08	1.9164E-06	2.1731E-09
Cs-134	1.7630E+03	6.9813E-01	7.8699E+02	1.0483E+17	1.7643E+03	1.2409E+00
Cs-136	1.1577E+02	8.2344E-03	5.1707E+01	6.8877E+15	1.1598E+02	8.1551E-02
Cs-137	9.8140E+02	2.6374E-01	4.3809E+02	5.8354E+16	9.8214E+02	6.9075E-01
Ba-139	7.4834E-03	1.3772E-08	3.7531E-03	5.0512E+11	9.3973E-03	6.3120E-06
Ba-140	1.0265E-01	3.3085E-06	4.5845E-02	6.1068E+12	1.0283E-01	7.2306E-05
La-140	1.5194E-01	7.7898E-06	6.7911E-02	9.0456E+12	1.5244E-01	1.0716E-04
La-141	6.2555E-03	3.3061E-08	2.8928E-03	3.8642E+11	6.6996E-03	4.6525E-06
La-142	1.3137E-03	2.1776E-08	6.5057E-04	8.7461E+10	1.6101E-03	1.0868E-06
Ce-141	7.6527E-01	5.7916E-05	3.4168E-01	4.5513E+13	7.6616E-01	5.3880E-04
Ce-143	3.6113E-02	1.0766E-06	1.6197E-02	2.1584E+12	3.6481E-02	2.5609E-05
Ce-144	2.2409E+00	7.0482E-03	1.0003E+00	1.3324E+14	2.2427E+00	1.5773E-03
Pr-143	3.5528E-01	2.4240E-05	1.5866E-01	2.1135E+13	3.5585E-01	2.5023E-04
Rb-89	2.1614E-01	4.3358E-06	1.9765E-01	2.7857E+13	7.8882E-01	4.2579E-04
Y-91m	1.7367E-02	4.4951E-08	7.7937E-03	1.0289E+12	1.7540E-02	1.2322E-05
Nb-95m	9.8884E-03	2.0554E-07	4.4149E-03	5.8802E+11	9.8993E-03	6.9618E-06
Nb-97	2.1161E-03	7.9848E-09	1.0106E-03	1.3502E+11	2.4240E-03	1.6568E-06
Rh-103m	1.0562E+00	4.6177E-08	4.7108E-01	6.2209E+13	1.0552E+00	7.4242E-04
Te-125m	1.2973E+00	7.9648E-05	5.7918E-01	7.7148E+13	1.2986E+00	9.1327E-04
Te-131	7.4022E-01	4.4770E-06	3.4267E-01	4.5039E+13	8.0265E-01	5.5299E-04
Te-133	3.5176E-02	1.5667E-07	1.4366E-02	1.7918E+12	2.2488E-02	2.0352E-05
Te-133m	2.4548E-01	4.0367E-06	1.3071E-01	1.7682E+13	3.4537E-01	2.2666E-04
Te-134	2.9800E-01	1.8293E-06	1.6859E-01	2.2921E+13	4.6954E-01	3.0109E-04
Xe-133m	8.7235E-07	5.3498E-14	1.9592E-07	2.2904E+07	1.3709E-07	1.5544E-10
Cs-134m	9.1765E-01	4.3413E-07	4.3259E-01	5.7905E+13	1.0223E+00	7.0358E-04
Cs-138	7.6576E+00	1.2164E-04	4.6734E+00	6.3929E+14	1.3866E+01	8.6414E-03
Ba-141	4.9129E-04	3.8515E-09	3.9252E-04	5.4799E+10	1.4288E-03	8.0789E-07
Total	3.2211E+03	1.0000E+00	0.0000E+00	0.0000E+00	3.2260E+03	2.2683E+00

Dose Equivalent (Ci/cc) I-131 (Thyroid) 2.3261E-11
Dose Equivalent (Ci/cc) I-131 (CEDE) 4.2434E-11
Dose Equivalent (Ci/cc) I-131 (ICRP2 Thyroid) 1.2588E-10

```
Total I  (Ci)                                        9.4883E+00
Dose Equivalent (Ci/cc) Xe-133 (EDE)                 4.7036E-15

Ruptured Steam Generator Compartment Group Inventory Distribution:

Time (h) =   0.6670      Atmosphere      Sump
Noble gases (Ci)         1.3144E-05   0.0000E+00
Elemental I (Ci)         9.2036E+00   0.0000E+00
Organic I (Ci)           2.8465E-01   0.0000E+00
Aerosol I (Ci)           0.0000E+00   0.0000E+00
All Aerosols (Ci)        3.2116E+03   0.0000E+00
All Aerosols (kg)        1.2642E-02   0.0000E+00

#######################################################################
    ALION RADTRAD Version 3.10 Rev 2 run on 12/01/2014  at 16:22:43

                Copyright © 2009 Alion Science and Technology
#######################################################################

Exclusion Area Boundary Doses:

Time (h) =   2.0000    Whole Body   Thyroid       TEDE
Delta dose (rem)        2.0041E-06  1.4394E-04  1.4964E-04
Accumulated dose (rem)  2.7386E-02  1.9688E+00  2.0463E+00

Low Population Zone Doses:

Time (h) =   2.0000    Whole Body   Thyroid       TEDE
Delta dose (rem)        3.8579E-07  2.7710E-05  2.8807E-05
Accumulated dose (rem)  4.9028E-03  3.5250E-01  3.6637E-01

Control Room Doses:

Time (h) =   2.0000    Whole Body   Thyroid       TEDE        Skin
Delta dose (rem)        2.9412E-05  6.3718E-02  6.5363E-02  1.1767E-03
Accumulated dose (rem)  8.2852E-04  1.7958E+00  1.8423E+00  3.3208E-02

*******************************************************
```

RCS Compartment Nuclide Inventory (Ci) at Time (h) = 2.0000

Nuclide	Compartment Atmosphere	Dose Fract	Exposure (Ci-hr)	Decays (Bq-s)	Pathway 1 Outflow	Pathway 5 Outflow	Pathway 6 Outflow
Rb-86	1.3513E+01	2.6145E-04	2.8181E+01	3.7538E+15	3.5839E-01	2.2206E-02	4.6636E+00
Sr-89	2.0628E-01	2.4740E-05	4.2945E-01	5.7199E+13	5.4470E-03	3.3837E-04	7.0904E-02
Sr-90	1.9060E-02	7.1651E-05	3.9687E-02	5.2864E+12	5.0409E-04	3.1271E-05	6.5600E-03
Sr-91	7.5650E-02	4.7804E-07	1.6973E-01	2.2645E+13	2.2853E-03	1.3403E-04	2.9648E-02
Sr-92	2.2985E-02	1.3285E-07	6.2689E-02	8.3972E+12	9.6943E-04	4.9761E-05	1.2478E-02
Y-90	3.2857E-02	8.0623E-07	6.8732E-02	9.1555E+12	8.7625E-04	5.4164E-05	1.1401E-02
Y-91	2.6046E+00	3.6842E-04	5.4260E+00	7.2275E+14	6.8945E-02	4.2754E-03	8.9720E-01
Y-92	4.1527E-02	1.1887E-07	9.3131E-02	1.2406E+13	1.2406E-03	7.3529E-05	1.6116E-02
Y-93	2.6999E-02	1.8478E-07	6.0305E-02	8.0448E+12	8.0919E-04	4.7614E-05	1.0500E-02
Zr-95	3.7085E+00	2.5800E-04	7.7255E+00	1.0290E+15	9.8161E-02	6.0874E-03	1.2774E+00
Zr-97	5.5644E-02	7.4300E-07	1.2080E-01	1.6106E+13	1.5858E-03	9.5302E-05	2.0601E-02
Nb-95	5.3563E+00	9.6220E-05	1.1156E+01	1.4860E+15	1.4173E-01	8.7903E-03	1.8443E+00
Mo-99	3.1232E+02	3.6877E-03	6.5728E+02	8.7570E+16	8.4197E+00	5.1806E-01	1.0952E+02
Tc-99m	2.9925E+02	8.2948E-05	6.2925E+02	8.3745E+16	8.0550E+00	4.9595E-01	1.0478E+02
Ru-103	3.0633E+00	8.1565E-05	6.3832E+00	8.5026E+14	8.1125E-02	5.0297E-03	1.0557E+00
Ru-105	1.0964E-02	3.2014E-08	2.6845E-02	3.5881E+12	3.8546E-04	2.1249E-05	4.9829E-03
Ru-106	5.1456E+00	7.1097E-03	1.0715E+01	1.4273E+15	1.3611E-01	8.4429E-03	1.7712E+00
Rh-105	1.1441E-01	3.3507E-07	2.4251E-01	3.2314E+13	3.1238E-03	1.9118E-04	4.0622E-02
Te-127	3.8177E+01	3.5526E-05	7.9673E+01	1.0605E+16	1.0139E+00	6.2782E-02	1.3193E+01
Te-127m	3.7961E+01	2.3630E-03	7.9066E+01	1.0532E+16	1.0045E+00	6.2300E-02	1.3071E+01
Te-129	3.4938E+01	1.2030E-05	7.2956E+01	9.6606E+15	9.2888E-01	5.7491E-02	1.2086E+01
Te-129m	5.3268E+01	3.6968E-03	1.1101E+02	1.4787E+16	1.4110E+00	8.7473E-02	1.8361E+01
Te-131m	8.5142E+00	1.8019E-04	1.8149E+01	2.4187E+15	2.3486E-01	1.4310E-02	3.0533E+00
Te-132	1.4591E+02	4.0672E-03	3.0656E+02	4.0842E+16	3.9218E+00	2.4162E-01	5.1017E+01
I-131	6.3461E-02	3.0515E-06	6.6345E-02	8.5524E+12	1.5636E-04	5.0721E-05	2.5205E-03
I-132	6.6780E+01	1.6501E-04	7.5843E+01	9.7743E+15	2.0195E-01	5.8179E-02	3.2512E+00
I-133	3.8602E-02	4.2011E-07	4.9085E-02	6.3618E+12	1.5075E-04	3.7808E-05	2.4248E-03
I-134	4.5293E-01	1.9325E-06	9.2328E-01	1.1993E+14	4.8644E-03	7.1914E-04	7.7589E-02
Xe-133	2.5226E-04	4.3803E-12	1.9107E-04	2.4328E+10	1.1416E-07	1.4378E-07	1.9164E-06
Cs-134	5.1260E+03	6.9814E-01	1.0674E+04	1.4218E+18	1.3558E+02	8.4104E+00	1.7643E+03
Cs-136	3.3565E+02	8.2248E-03	7.0046E+02	9.3306E+16	8.9128E+00	5.5196E-01	1.1598E+02
Cs-137	2.8536E+03	2.6375E-01	5.9419E+03	7.9146E+17	7.5471E+01	4.6819E+00	9.8214E+02
Ba-139	1.1131E-02	1.0889E-08	4.0248E-02	5.4198E+12	7.3789E-04	3.2161E-05	9.3973E-03

Ba-140	2.9757E-01	3.3045E-06	6.2103E-01	8.2725E+13	7.9025E-03	4.8937E-04	1.0283E-01
La-140	4.3854E-01	7.7664E-06	9.1829E-01	1.2232E+14	1.1716E-02	7.2368E-04	1.5244E-01
La-141	1.4467E-02	3.0297E-08	3.5955E-02	4.8055E+12	5.1782E-04	2.8466E-05	6.6996E-03
La-142	2.0978E-03	1.7586E-08	7.1257E-03	9.5846E+11	1.2614E-04	5.6860E-06	1.6101E-03
Ce-141	2.2226E+00	5.7890E-05	4.6321E+00	6.1700E+14	5.8876E-02	3.6499E-03	7.6616E-01
Ce-143	1.0211E-01	1.0644E-06	2.1719E-01	2.8943E+13	2.8058E-03	1.7124E-04	3.6481E-02
Ce-144	6.5149E+00	7.0481E-03	1.3567E+01	1.8071E+15	1.7233E-01	1.0690E-02	2.2427E+00
Pr-143	1.0304E+00	2.4216E-05	2.1497E+00	2.8635E+14	2.7347E-02	1.6939E-03	3.5585E-01
Rb-89	1.6380E-02	2.5074E-06	1.5503E+00	2.1784E+14	6.8275E-02	1.3072E-03	7.8882E-01
Y-91m	4.7382E-02	4.3995E-08	1.0346E-01	1.3681E+13	1.3484E-03	8.1615E-05	1.7540E-02
Nb-95m	2.8723E-02	2.0546E-07	5.9855E-02	7.9722E+12	7.6072E-04	4.7163E-05	9.8993E-03
Nb-97	4.4812E-03	7.0036E-09	1.2022E-02	1.6057E+12	1.8882E-04	9.5441E-06	2.4240E-03
Rh-103m	3.0742E+00	4.6225E-08	6.3957E+00	8.4555E+14	8.1072E-02	5.0393E-03	1.0552E+00
Te-125m	3.7698E+00	7.9629E-05	7.8534E+00	1.0461E+15	9.9791E-02	6.1882E-03	1.2986E+00
Te-131	1.9607E+00	4.2573E-06	4.4194E+00	5.8113E+14	6.2323E-02	3.4935E-03	8.0265E-01
Te-133	4.5019E-02	1.2534E-07	1.5588E-01	1.9848E+13	1.4301E-03	1.2183E-04	2.2488E-02
Te-133m	2.6240E-01	2.9249E-06	1.2845E+00	1.7386E+14	2.7413E-02	1.0328E-03	3.4537E-01
Te-134	2.3003E-01	1.2366E-06	1.5457E+00	2.1025E+14	3.7667E-02	1.2503E-03	4.6954E-01
Xe-131m	1.7156E-06	6.8005E-15	1.1896E-06	1.5084E+08	5.8877E-10	8.8954E-10	9.8883E-09
Xe-133m	1.7955E-05	2.7425E-13	1.3622E-05	1.7345E+09	8.1662E-09	1.0252E-08	1.3709E-07
Cs-134m	1.9403E+00	3.8443E-07	5.1955E+00	6.9568E+14	7.9366E-02	4.1222E-03	1.0223E+00
Cs-138	3.9804E+00	7.7116E-05	4.0183E+01	5.4976E+15	1.1269E+00	3.2730E-02	1.3866E+01
Ba-141	6.8681E-05	2.2260E-09	3.0768E-03	4.2878E+11	1.2123E-04	2.5651E-06	1.4288E-03
Total	9.3729E+03	1.0000E+00	0.0000E+00	0.0000E+00	2.4793E+02	1.5372E+01	3.2260E+03

Dose Equivalent (Ci/cc) I-131 (Thyroid)	3.5476E-11
Dose Equivalent (Ci/cc) I-131 (CEDE)	6.4081E-11
Dose Equivalent (Ci/cc) I-131 (ICRP2 Thyroid)	1.8855E-10
Total I (Ci)	6.7335E+01
Dose Equivalent (Ci/cc) Xe-133 (EDE)	2.0338E-14

RCS Compartment Group Inventory Distribution:

Time (h) = 2.0000	Atmosphere	Sump
Noble gases (Ci)	2.7193E-04	0.0000E+00
Elemental I (Ci)	6.5315E+01	0.0000E+00
Organic I (Ci)	2.0200E+00	0.0000E+00
Aerosol I (Ci)	0.0000E+00	0.0000E+00

All Aerosols (Ci)	9.3056E+03	0.0000E+00
All Aerosols (kg)	3.6760E-02	0.0000E+00

Intact Steam Generators Compartment Nuclide Inventory (Ci) at Time (h) = 2.0000

Nuclide	Compartment Atmosphere	Dose Fract	Exposure (Ci-hr)	Decays (Bq-s)	Pathway 5 Inflow	Pathway 7 Outflow
Rb-86	2.2135E-02	2.6132E-04	2.3070E-02	3.0730E+12	2.2206E-02	3.4585E-05
Sr-89	3.3790E-04	2.4748E-05	3.5186E-04	4.6867E+10	3.3837E-04	5.2736E-07
Sr-90	3.1222E-05	7.1653E-05	3.2507E-05	4.3300E+09	3.1271E-05	4.8725E-08
Sr-91	1.2392E-04	4.6585E-07	1.3548E-04	1.8076E+10	1.3403E-04	2.0464E-07
Sr-92	3.7652E-05	1.2103E-07	4.6779E-05	6.2684E+09	4.9761E-05	7.2104E-08
Y-90	5.3823E-05	8.0496E-07	5.6207E-05	7.4871E+09	5.4164E-05	8.4289E-08
Y-91	4.2666E-03	3.6837E-04	4.4436E-03	5.9189E+11	4.2754E-03	6.6608E-06
Y-92	6.8025E-05	1.1617E-07	7.4550E-05	9.9355E+09	7.3529E-05	1.1254E-07
Y-93	4.4226E-05	1.8035E-07	4.8208E-05	6.4318E+09	4.7614E-05	7.2785E-08
Zr-95	6.0749E-03	2.5797E-04	6.3268E-03	8.4274E+11	6.0874E-03	9.4837E-06
Zr-97	9.1150E-05	7.3235E-07	9.7527E-05	1.3003E+10	9.5302E-05	1.4681E-07
Nb-95	8.7742E-03	9.6214E-05	9.1368E-03	1.2170E+12	8.7903E-03	1.3696E-05
Mo-99	5.1162E-01	3.6743E-03	5.3639E-01	7.1465E+13	5.1806E-01	8.0487E-04
Tc-99m	4.9019E-01	8.2670E-05	5.1366E-01	6.8368E+13	4.9595E-01	7.7070E-04
Ru-103	5.0180E-03	8.1546E-05	5.2270E-03	6.9625E+11	5.0297E-03	7.8354E-06
Ru-105	1.7960E-05	3.0270E-08	2.0789E-05	2.7793E+09	2.1249E-05	3.1688E-08
Ru-106	8.4290E-03	7.1096E-03	8.7763E-03	1.1690E+12	8.4429E-03	1.3155E-05
Rh-105	1.8742E-04	3.3304E-07	1.9742E-04	2.6307E+10	1.9118E-04	2.9646E-07
Te-127	6.2538E-02	3.5499E-05	6.5207E-02	8.6802E+12	6.2782E-02	9.7762E-05
Te-127m	6.2185E-02	2.3628E-03	6.4755E-02	8.6255E+12	6.2300E-02	9.7064E-05
Te-129	5.7231E-02	1.2018E-05	5.9697E-02	7.9080E+12	5.7491E-02	8.9506E-05
Te-129m	8.7257E-02	3.6958E-03	9.0900E-02	1.2108E+13	8.7473E-02	1.3626E-04
Te-131m	1.3947E-02	1.7874E-04	1.4745E-02	1.9651E+12	1.4310E-02	2.2155E-05
Te-132	2.3902E-01	4.0547E-03	2.5032E-01	3.3349E+13	2.4162E-01	3.7555E-04
I-131	1.0396E-04	4.1139E-06	7.3261E-05	9.5240E+09	5.0721E-05	1.0140E-07
I-132	1.0939E-01	2.1772E-04	8.1963E-02	1.0664E+13	5.8179E-02	1.1427E-04
I-133	6.3234E-05	5.3838E-07	5.1521E-05	6.7492E+09	3.7808E-05	7.2523E-08
I-134	7.4195E-04	2.1793E-06	8.5282E-04	1.1268E+11	7.1914E-04	1.2491E-06
Cs-134	8.3968E+00	6.9815E-01	8.7426E+00	1.1645E+15	8.4104E+00	1.3104E-02
Cs-136	5.4983E-01	8.2187E-03	5.7329E-01	7.6367E+13	5.5196E-01	8.5951E-04
Cs-137	4.6745E+00	2.6376E-01	4.8669E+00	6.4827E+14	4.6819E+00	7.2950E-03

Ba-139	1.8233E-05	9.0135E-09	2.7287E-05	3.6775E+09	3.2161E-05	4.3315E-08
Ba-140	4.8745E-04	3.3020E-06	5.0827E-04	6.7705E+10	4.8937E-04	7.6203E-07
La-140	7.1837E-04	7.7514E-06	7.5069E-04	9.9994E+10	7.2368E-04	1.1259E-06
La-141	2.3699E-05	2.8550E-08	2.7750E-05	3.7109E+09	2.8466E-05	4.2348E-08
La-142	3.4363E-06	1.4867E-08	4.9340E-06	6.6413E+08	5.6860E-06	7.7810E-09
Ce-141	3.6408E-03	5.7874E-05	3.7929E-03	5.0522E+11	3.6499E-03	5.6856E-06
Ce-143	1.6726E-04	1.0566E-06	1.7659E-04	2.3533E+10	1.7124E-04	2.6527E-07
Ce-144	1.0672E-02	7.0480E-03	1.1112E-02	1.4801E+12	1.0690E-02	1.6656E-05
Pr-143	1.6879E-03	2.4200E-05	1.7596E-03	2.3439E+11	1.6939E-03	2.6380E-06
Rb-89	2.6833E-05	8.7036E-07	4.4075E-04	6.2282E+10	1.3072E-03	9.6103E-07
Y-91m	7.7617E-05	4.3402E-08	8.3594E-05	1.1065E+10	8.1615E-05	1.2584E-07
Nb-95m	4.7051E-05	2.0541E-07	4.9013E-05	6.5282E+09	4.7163E-05	7.3471E-08
Nb-97	7.3406E-06	6.3635E-09	8.9472E-06	1.1948E+09	9.5441E-06	1.3793E-08
Rh-103m	5.0358E-03	4.6254E-08	5.2419E-03	6.9337E+11	5.0393E-03	7.8558E-06
Te-125m	6.1752E-03	7.9617E-05	6.4315E-03	8.5668E+11	6.1882E-03	9.6406E-06
Te-131	3.2118E-03	4.1006E-06	3.4866E-03	4.5839E+11	3.4935E-03	5.2795E-06
Te-133	7.3746E-05	1.1858E-07	1.2079E-04	1.5789E+10	1.2183E-04	1.8656E-07
Te-133m	4.2984E-04	2.1900E-06	7.8772E-04	1.0676E+11	1.0328E-03	1.2907E-06
Te-134	3.7681E-04	8.3677E-07	8.5667E-04	1.1674E+11	1.2503E-03	1.4510E-06
Cs-134m	3.1783E-03	3.5245E-07	3.9015E-03	5.2259E+11	4.1222E-03	6.0021E-06
Cs-138	6.5204E-03	4.6113E-05	1.9680E-02	2.6993E+12	3.2730E-02	3.4774E-05
Ba-141	1.1251E-07	9.0444E-10	1.0239E-06	1.4336E+08	2.5651E-06	2.0930E-09
Total	1.5354E+01	1.0000E+00	0.0000E+00	0.0000E+00	1.5372E+01	2.3950E-02

Dose Equivalent (Ci/cc) I-131 (Thyroid)	9.2596E-14
Dose Equivalent (Ci/cc) I-131 (CEDE)	1.6726E-13
Dose Equivalent (Ci/cc) I-131 (ICRP2 Thyroid)	4.9215E-13
Total I (Ci)	1.1030E-01
Dose Equivalent (Ci/cc) Xe-133 (EDE)	5.3085E-17

Intact Steam Generators Compartment Group Inventory Distribution:

Time (h) = 2.0000	Atmosphere	Sump
Noble gases (Ci)	4.4545E-07	0.0000E+00
Elemental I (Ci)	1.0699E-01	0.0000E+00
Organic I (Ci)	3.3090E-03	0.0000E+00
Aerosol I (Ci)	0.0000E+00	0.0000E+00
All Aerosols (Ci)	1.5243E+01	0.0000E+00

All Aerosols (kg) 6.0216E-05 0.0000E+00

Control Room Compartment Nuclide Inventory (Ci) at Time (h) = 2.0000

Nuclide	Compartment Atmosphere	Dose Fract	Exposure (Ci-hr)	Decays (Bq-s)	Compartment Recirc Filtr	Pathway 2 Inflow	Pathway 3 Inflow	Pathway 4 Outflow
Rb-86	5.3876E-09	2.6173E-04	8.3124E-05	1.1073E+10	3.5222E-04	3.7506E-04	6.1966E-05	9.0807E-05
Sr-89	8.2244E-11	2.4714E-05	1.2640E-06	1.6834E+08	5.3768E-06	5.6953E-06	9.4205E-07	1.3961E-06
Y-91	1.0385E-09	3.6852E-04	1.5992E-05	2.1302E+09	6.7891E-05	7.2144E-05	1.1921E-05	1.7471E-05
Zr-95	1.4786E-09	2.5807E-04	2.2769E-05	3.0329E+09	9.6666E-05	1.0272E-04	1.6973E-05	2.4873E-05
Nb-95	2.1356E-09	9.6231E-05	3.2875E-05	4.3790E+09	1.3962E-04	1.4830E-04	2.4506E-05	3.5949E-05
Mo-99	1.2452E-07	3.7159E-03	1.9515E-03	2.6000E+11	8.1410E-03	8.8208E-03	1.4553E-03	2.1323E-03
Tc-99m	1.1931E-07	8.3530E-05	1.8671E-03	2.4845E+11	7.8001E-03	8.4378E-03	1.3923E-03	2.4195E-03
Ru-103	1.2213E-09	8.1603E-05	1.8817E-05	2.5065E+09	7.9847E-05	8.4891E-05	1.4027E-05	2.0556E-05
Ru-106	2.0516E-09	7.1096E-03	3.1572E-05	4.2054E+09	1.3412E-04	1.4241E-04	2.3534E-05	3.4489E-05
Rh-105	4.5617E-11	3.3934E-07	7.2366E-07	9.6422E+07	2.9823E-06	3.2752E-06	5.3983E-07	7.9414E-07
Te-127	1.5221E-08	3.5584E-05	2.3514E-04	3.1297E+10	9.9512E-04	1.0611E-03	1.7529E-04	2.8937E-04
Te-127m	1.5135E-08	2.3633E-03	2.3300E-04	3.1036E+10	9.8950E-04	1.0510E-03	1.7368E-04	2.5453E-04
Te-129	1.3930E-08	1.2054E-05	2.1541E-04	2.8505E+10	9.1068E-04	9.7233E-04	1.6059E-04	4.8037E-04
Te-129m	2.1238E-08	3.6989E-03	3.2728E-04	4.3595E+10	1.3885E-03	1.4765E-03	2.4397E-04	3.5753E-04
Te-131m	3.3946E-09	1.8325E-04	5.4383E-05	7.2472E+09	2.2193E-04	2.4641E-04	4.0578E-05	5.9435E-05
Te-132	5.8176E-08	4.0935E-03	9.0911E-04	1.2111E+11	3.8033E-03	4.1078E-03	6.7792E-04	9.9328E-04
I-132	3.6389E-08	5.4863E-05	7.4300E-05	8.8137E+09	1.7589E-03	1.1174E-04	4.1441E-05	6.0401E-04
I-134	2.5737E-10	1.2041E-06	1.6950E-06	2.0202E+08	1.1996E-05	2.9086E-06	9.9552E-07	1.4449E-05
Cs-134	2.0437E-06	6.9811E-01	3.1449E-02	4.1891E+12	1.3361E-01	1.4186E-01	2.3443E-02	3.4355E-02
Cs-136	1.3383E-07	8.2375E-03	2.0671E-03	2.7535E+11	8.7490E-03	9.3283E-03	1.5410E-03	2.2582E-03
Cs-137	1.1377E-06	2.6374E-01	1.7507E-02	2.3319E+12	7.4382E-02	7.8968E-02	1.3050E-02	1.9124E-02
Ba-140	1.1864E-10	3.3098E-06	1.8328E-06	2.4414E+08	7.7564E-06	8.2709E-06	1.3663E-06	2.0022E-06
La-140	1.7485E-10	7.7977E-06	2.7167E-06	3.6185E+08	1.1431E-05	1.2267E-05	2.0255E-06	3.0288E-06
Ce-141	8.8615E-10	5.7924E-05	1.3656E-05	1.8191E+09	5.7933E-05	6.1611E-05	1.0180E-05	1.4919E-05
Ce-143	4.0710E-11	1.0808E-06	6.4980E-07	8.6590E+07	2.6615E-06	2.9431E-06	4.8481E-07	7.1013E-07
Ce-144	2.5975E-09	7.0481E-03	3.9975E-05	5.3247E+09	1.6982E-04	1.8032E-04	2.9798E-05	4.3669E-05
Pr-143	4.1083E-10	2.4248E-05	6.3426E-06	8.4487E+08	2.6858E-05	2.8621E-05	4.7283E-06	6.9316E-06
Rb-89	6.5309E-12	7.1933E-06	1.3104E-05	1.8437E+09	4.2697E-07	9.2857E-05	1.0709E-05	1.5119E-05
Y-91m	1.8892E-11	4.5093E-08	3.1245E-07	4.1247E+07	1.2351E-06	1.4126E-06	2.3308E-07	8.3374E-07
Rh-103m	1.2257E-09	4.6142E-08	1.8812E-05	2.4848E+09	8.0130E-05	8.4785E-05	1.4020E-05	4.7350E-05
Te-125m	1.5030E-09	7.9653E-05	2.3147E-05	3.0832E+09	9.8262E-05	1.0442E-04	1.7255E-05	2.5286E-05
Te-131	7.8174E-10	4.6477E-06	1.4216E-05	1.8721E+09	5.1107E-05	6.7044E-05	1.0686E-05	5.4340E-05

Te-133	1.7949E-11	1.1768E-07	4.3122E-07	4.9878E+07	1.1735E-06	6.8865E-07	2.9155E-07	5.5793E-06
Te-133m	1.0462E-10	4.6502E-06	6.0172E-06	8.1362E+08	6.8398E-06	3.1201E-05	4.6200E-06	6.6712E-06
Te-134	9.1713E-11	2.2068E-06	8.1277E-06	1.1044E+09	5.9958E-06	4.3971E-05	6.2940E-06	9.0548E-06
Cs-134m	7.7359E-10	4.5402E-07	1.8080E-05	2.4198E+09	5.0574E-05	8.5388E-05	1.3613E-05	1.9843E-05
Cs-138	1.5870E-09	1.5517E-04	2.3824E-04	3.2564E+10	1.0375E-04	1.3547E-03	1.8632E-04	2.6698E-04
Total	3.7627E-06	1.0000E+00	0.0000E+00	0.0000E+00	2.4433E-01	2.5955E-01	4.2865E-02	6.4095E-02

Control Room Compartment Group Inventory Distribution:

Time (h) = 2.0000	Atmosphere	Sump
Noble gases (Ci)	1.5820E-08	0.0000E+00
Elemental I (Ci)	3.5603E-08	0.0000E+00
Organic I (Ci)	1.1011E-09	0.0000E+00
Aerosol I (Ci)	0.0000E+00	0.0000E+00
All Aerosols (Ci)	3.7102E-06	0.0000E+00
All Aerosols (kg)	1.4656E-11	0.0000E+00

Time (h) = 2.0000	Deposition Surfaces	Recirculating Filter
Noble gases (Ci)	0.0000E+00	0.0000E+00
Elemental I (Ci)	0.0000E+00	1.7204E-03
Organic I (Ci)	0.0000E+00	5.3209E-05
Aerosol I (Ci)	0.0000E+00	0.0000E+00
All Aerosols (Ci)	0.0000E+00	2.4256E-01
All Aerosols (kg)	0.0000E+00	9.5818E-07

Ruptured Steam Generator Compartment Nuclide Inventory (Ci) at Time (h) = 2.0000

Nuclide	Compartment Atmosphere	Dose Fract	Exposure (Ci-hr)	Decays (Bq-s)	Pathway 6 Inflow	Pathway 8 Outflow
Rb-86	4.6472E+00	2.6140E-04	8.2804E+00	1.1030E+15	4.6636E+00	3.2795E-03
Sr-89	7.0941E-02	2.4746E-05	1.2624E-01	1.6815E+13	7.0904E-02	4.9892E-05
Sr-90	6.5550E-03	7.1652E-05	1.1664E-02	1.5536E+12	6.5600E-03	4.6137E-06
Sr-91	2.6017E-02	4.7316E-07	4.9373E-02	6.5875E+12	2.9648E-02	2.0715E-05
Sr-92	7.9048E-03	1.2793E-07	1.7741E-02	2.3769E+12	1.2478E-02	8.5747E-06
Y-90	1.1300E-02	8.0573E-07	2.0187E-02	2.6890E+12	1.1401E-02	8.0150E-06
Y-91	8.9576E-01	3.6840E-04	1.5946E+00	2.1240E+14	8.9720E-01	6.3098E-04
Y-92	1.4282E-02	1.1788E-07	2.7143E-02	3.6163E+12	1.6116E-02	1.1289E-05

Y-93	9.2852E-03	1.8300E-07	1.7553E-02	2.3417E+12	1.0500E-02	7.3389E-06
Zr-95	1.2754E+00	2.5799E-04	2.2703E+00	3.0241E+14	1.2774E+00	8.9837E-04
Zr-97	1.9137E-02	7.3876E-07	3.5300E-02	4.7064E+12	2.0601E-02	1.4436E-05
Nb-95	1.8421E+00	9.6217E-05	3.2786E+00	4.3670E+14	1.8443E+00	1.2971E-03
Mo-99	1.0741E+02	3.6824E-03	1.9289E+02	2.5699E+16	1.0952E+02	7.6954E-02
Tc-99m	1.0291E+02	8.2839E-05	1.8469E+02	2.4580E+16	1.0478E+02	7.3630E-02
Ru-103	1.0535E+00	8.1558E-05	1.8758E+00	2.4986E+14	1.0557E+00	7.4242E-04
Ru-105	3.7706E-03	3.1303E-08	7.7141E-03	1.0312E+12	4.9829E-03	3.4554E-06
Ru-106	1.7696E+00	7.1097E-03	3.1491E+00	4.1946E+14	1.7712E+00	1.2457E-03
Rh-105	3.9349E-02	3.3427E-07	7.1100E-02	9.4742E+12	4.0622E-02	2.8525E-05
Te-127	1.3130E+01	3.5516E-05	2.3408E+01	3.1159E+15	1.3193E+01	9.2764E-03
Te-127m	1.3055E+01	2.3629E-03	2.3236E+01	3.0951E+15	1.3071E+01	9.1931E-03
Te-129	1.2015E+01	1.2025E-05	2.1433E+01	2.8382E+15	1.2086E+01	8.4975E-03
Te-129m	1.8319E+01	3.6964E-03	3.2622E+01	4.3453E+15	1.8361E+01	1.2913E-02
Te-131m	2.9281E+00	1.7962E-04	5.3168E+00	7.0857E+14	3.0533E+00	2.1430E-03
Te-132	5.0181E+01	4.0623E-03	8.9986E+01	1.1989E+16	5.1017E+01	3.5852E-02
I-131	2.1825E-02	3.4751E-06	2.2205E-02	2.8731E+12	2.5205E-03	2.4908E-06
I-132	2.2966E+01	1.8722E-04	2.5290E+01	3.2732E+15	3.2512E+00	3.1973E-03
I-133	1.3276E-02	4.7432E-07	1.6287E-02	2.1216E+12	2.4248E-03	2.3759E-06
I-134	1.5577E-01	2.1212E-06	2.9784E-01	3.9042E+13	7.7589E-02	7.3762E-05
Xe-133	8.6755E-05	5.0956E-12	6.5323E-05	8.3266E+09	1.9164E-06	2.1731E-09
Cs-134	1.7629E+03	6.9815E-01	3.1370E+03	4.1785E+17	1.7643E+03	1.2409E+00
Cs-136	1.1543E+02	8.2224E-03	2.0580E+02	2.7414E+16	1.1598E+02	8.1551E-02
Cs-137	9.8139E+02	2.6376E-01	1.7463E+03	2.3261E+17	9.8214E+02	6.9075E-01
Ba-139	3.8280E-03	1.0068E-08	1.0937E-02	1.4733E+12	9.3973E-03	6.3120E-06
Ba-140	1.0234E-01	3.3035E-06	1.8246E-01	2.4305E+13	1.0283E-01	7.2306E-05
La-140	1.5082E-01	7.7605E-06	2.6967E-01	3.5921E+13	1.5244E-01	1.0716E-04
La-141	4.9756E-03	2.9605E-08	1.0325E-02	1.3804E+12	6.6996E-03	4.6525E-06
La-142	7.2145E-04	1.6409E-08	1.9539E-03	2.6292E+11	1.6101E-03	1.0868E-06
Ce-141	7.6438E-01	5.7884E-05	1.3612E+00	1.8131E+14	7.6616E-01	5.3880E-04
Ce-143	3.5116E-02	1.0614E-06	6.3644E-02	8.4815E+12	3.6481E-02	2.5609E-05
Ce-144	2.2405E+00	7.0481E-03	3.9872E+00	5.3109E+14	2.2427E+00	1.5773E-03
Pr-143	3.5437E-01	2.4210E-05	6.3162E-01	8.4135E+13	3.5585E-01	2.5023E-04
Rb-89	5.6334E-03	1.4859E-06	2.6999E-01	3.8105E+13	7.8882E-01	4.2579E-04
Y-91m	1.6295E-02	4.3798E-08	3.0269E-02	4.0037E+12	1.7540E-02	1.2322E-05
Nb-95m	9.8782E-03	2.0544E-07	1.7589E-02	2.3427E+12	9.8993E-03	6.9618E-06
Nb-97	1.5411E-03	6.7219E-09	3.3912E-03	4.5289E+11	2.4240E-03	1.6568E-06
Rh-103m	1.0572E+00	4.6241E-08	1.8803E+00	2.4861E+14	1.0552E+00	7.4242E-04

Te-125m	1.2965E+00	7.9625E-05	2.3079E+00	3.0742E+14	1.2986E+00	9.1327E-04
Te-131	6.7431E-01	4.1782E-06	1.2747E+00	1.6753E+14	8.0265E-01	5.5299E-04
Te-133	1.5483E-02	1.3016E-07	4.7574E-02	6.1577E+12	2.2488E-02	2.0352E-05
Te-133m	9.0244E-02	2.5870E-06	3.3389E-01	4.5225E+13	3.4537E-01	2.2666E-04
Te-134	7.9109E-02	1.0441E-06	3.8355E-01	5.2226E+13	4.6954E-01	3.0109E-04
Xe-133m	6.1751E-06	3.1903E-13	4.6570E-06	5.9362E+08	1.3709E-07	1.5544E-10
Cs-134m	6.6728E-01	3.7116E-07	1.4742E+00	1.9743E+14	1.0223E+00	7.0358E-04
Cs-138	1.3689E+00	6.1375E-05	9.3988E+00	1.2878E+15	1.3866E+01	8.6414E-03
Ba-141	2.3620E-05	1.4464E-09	5.8757E-04	8.2159E+10	1.4288E-03	8.0789E-07
Total	3.2235E+03	1.0000E+00	0.0000E+00	0.0000E+00	3.2260E+03	2.2683E+00

```
Dose Equivalent (Ci/cc) I-131 (Thyroid)            5.8321E-11
Dose Equivalent (Ci/cc) I-131 (CEDE)               1.0535E-10
Dose Equivalent (Ci/cc) I-131 (ICRP2 Thyroid)      3.0997E-10
Total I  (Ci)                                      2.3157E+01
Dose Equivalent (Ci/cc) Xe-133 (EDE)               3.3435E-14
```

Ruptured Steam Generator Compartment Group Inventory Distribution:

Time (h) = 2.0000	Atmosphere	Sump
Noble gases (Ci)	9.3520E-05	0.0000E+00
Elemental I (Ci)	2.2463E+01	0.0000E+00
Organic I (Ci)	6.9472E-01	0.0000E+00
Aerosol I (Ci)	0.0000E+00	0.0000E+00
All Aerosols (Ci)	3.2003E+03	0.0000E+00
All Aerosols (kg)	1.2642E-02	0.0000E+00

```
#######################################################################
   ALION RADTRAD Version 3.10 Rev 2 run on 12/01/2014  at 16:22:43

                Copyright © 2009 Alion Science and Technology
#######################################################################
```

Exclusion Area Boundary Doses:

Time (h) = 8.0000	Whole Body	Thyroid	TEDE
Delta dose (rem)	3.6252E-05	2.5671E-03	2.6749E-03
Accumulated dose (rem)	2.7422E-02	1.9714E+00	2.0490E+00

Low Population Zone Doses:

Time (h) = 8.0000	Whole Body	Thyroid	TEDE
Delta dose (rem)	3.2670E-06	2.3135E-04	2.4106E-04
Accumulated dose (rem)	4.9060E-03	3.5273E-01	3.6661E-01

Control Room Doses:

Time (h) = 8.0000	Whole Body	Thyroid	TEDE	Skin
Delta dose (rem)	2.0135E-07	4.2265E-04	4.3385E-04	8.0600E-06
Accumulated dose (rem)	8.2873E-04	1.7963E+00	1.8427E+00	3.3216E-02

****

RCS Compartment Nuclide Inventory (Ci) at Time (h) = 8.0000

Nuclide	Compartment Atmosphere	Dose Fract	Exposure (Ci-hr)	Decays (Bq-s)	Pathway 1 Outflow	Pathway 5 Outflow	Pathway 6 Outflow
Rb-86	1.3324E+01	2.6030E-04	1.0868E+02	1.4477E+16	3.5839E-01	8.6934E-02	4.6636E+00
Sr-89	2.0458E-01	2.4716E-05	1.6620E+00	2.2138E+14	5.4470E-03	1.3293E-03	7.0904E-02
Sr-90	1.8968E-02	7.1665E-05	1.5377E-01	2.0482E+13	5.0409E-04	1.2299E-04	6.5600E-03
Sr-91	4.8595E-02	3.8957E-07	5.3582E-01	7.1497E+13	2.2853E-03	4.2943E-04	2.9648E-02
Sr-92	4.9302E-03	7.2543E-08	1.3261E-01	1.7770E+13	9.6943E-04	1.0670E-04	1.2478E-02
Y-90	3.1835E-02	7.9562E-07	2.6275E-01	3.5000E+13	8.7625E-04	2.1018E-04	1.1401E-02
Y-91	2.5846E+00	3.6796E-04	2.0993E+01	2.7963E+15	6.8945E-02	1.6791E-02	8.9720E-01
Y-92	1.9747E-02	9.0132E-08	2.7356E-01	3.6495E+13	1.2406E-03	2.1946E-04	1.6116E-02
Y-93	1.7800E-02	1.5231E-07	1.9256E-01	2.5692E+13	8.0919E-04	1.5431E-04	1.0500E-02
Zr-95	3.6807E+00	2.5771E-04	2.9892E+01	3.9817E+15	9.8161E-02	2.3909E-02	1.2774E+00
Zr-97	4.3296E-02	6.6013E-07	4.1577E-01	5.5435E+13	1.5858E-03	3.3293E-04	2.0601E-02
Nb-95	5.3225E+00	9.6166E-05	4.3191E+01	5.7531E+15	1.4173E-01	3.4546E-02	1.8443E+00
Mo-99	2.9184E+02	3.5753E-03	2.4686E+03	3.2890E+17	8.4197E+00	1.9751E+00	1.0952E+02
Tc-99m	2.8053E+02	8.0575E-05	2.3678E+03	3.1518E+17	8.0550E+00	1.8944E+00	1.0478E+02
Ru-103	3.0351E+00	8.1402E-05	2.4678E+01	3.2871E+15	8.1125E-02	1.9739E-02	1.0557E+00
Ru-105	4.2763E-03	2.1333E-08	6.9295E-02	9.2646E+12	3.8546E-04	5.5645E-05	4.9829E-03
Ru-106	5.1184E+00	7.1094E-03	4.1506E+01	5.5287E+15	1.3611E-01	3.3199E-02	1.7712E+00
Rh-105	1.0201E-01	3.1784E-07	8.9109E-01	1.1874E+14	3.1238E-03	7.1311E-04	4.0622E-02
Te-127	3.7588E+01	3.5324E-05	3.0687E+02	4.0852E+16	1.0139E+00	2.4546E-01	1.3193E+01

Te-127m	3.7719E+01	2.3616E-03	3.0610E+02	4.0773E+16	1.0045E+00	2.4483E-01	1.3071E+01
Te-129	3.4503E+01	1.1967E-05	2.8114E+02	3.7253E+16	9.2888E-01	2.2487E-01	1.2086E+01
Te-129m	5.2738E+01	3.6881E-03	4.2901E+02	5.7146E+16	1.4110E+00	3.4315E-01	1.8361E+01
Te-131m	7.3763E+00	1.6842E-04	6.5710E+01	8.7575E+15	2.3486E-01	5.2593E-02	3.0533E+00
Te-132	1.3769E+02	3.9624E-03	1.1569E+03	1.5413E+17	3.9218E+00	9.2559E-01	5.1017E+01
I-131	2.3105E-01	1.1501E-05	9.6865E-01	1.2799E+14	1.5636E-04	7.6940E-04	2.5205E-03
I-132	1.2852E+02	4.0635E-04	7.2348E+02	9.5548E+16	2.0195E-01	5.7637E-01	3.2512E+00
I-133	4.1633E-02	6.8633E-07	3.1063E-01	4.1176E+13	1.5075E-04	2.4796E-04	2.4248E-03
I-134	9.4076E-03	9.2090E-07	1.7044E+00	2.2524E+14	4.8644E-03	1.3649E-03	7.7589E-02
Xe-133	1.6165E-03	3.4636E-11	5.8524E-03	7.7232E+11	1.1416E-07	4.6405E-06	1.9164E-06
Cs-134	5.1001E+03	6.9820E-01	4.1351E+04	5.5080E+18	1.3558E+02	3.3075E+01	1.7643E+03
Cs-136	3.2965E+02	8.1725E-03	2.6962E+03	3.5915E+17	8.9128E+00	2.1566E+00	1.1598E+02
Cs-137	2.8398E+03	2.6380E-01	2.3022E+04	3.0665E+18	7.5471E+01	1.8414E+01	9.8214E+02
Ba-139	5.4202E-04	4.2609E-09	6.1008E-02	8.2198E+12	7.3789E-04	4.9275E-05	9.3973E-03
Ba-140	2.9214E-01	3.2829E-06	2.3900E+00	3.1836E+14	7.9025E-03	1.9117E-03	1.0283E-01
La-140	4.2247E-01	7.6422E-06	3.5003E+00	4.6626E+14	1.1716E-02	2.8001E-03	1.5244E-01
La-141	4.9990E-03	1.9401E-08	8.9189E-02	1.1928E+13	5.1782E-04	7.1644E-05	6.6996E-03
La-142	1.4063E-04	7.2773E-09	1.1422E-02	1.5372E+12	1.2614E-04	9.2186E-06	1.6101E-03
Ce-141	2.2002E+00	5.7749E-05	1.7900E+01	2.3843E+15	5.8876E-02	1.4317E-02	7.6616E-01
Ce-143	8.9583E-02	1.0009E-06	7.9112E-01	1.0543E+14	2.8058E-03	6.3316E-04	3.6481E-02
Ce-144	6.4796E+00	7.0474E-03	5.2549E+01	6.9996E+15	1.7233E-01	4.2031E-02	2.2427E+00
Pr-143	1.0136E+00	2.4082E-05	8.2814E+00	1.1031E+15	2.7347E-02	6.6242E-03	3.5585E-01
Rb-89	1.2094E-09	6.4963E-07	1.5559E+00	2.1864E+14	6.8275E-02	1.3123E-03	7.8882E-01
Y-91m	3.0980E-02	3.6875E-08	3.3591E-01	4.4499E+13	1.3484E-03	2.6915E-04	1.7540E-02
Nb-95m	2.8454E-02	2.0503E-07	2.3138E-01	3.0818E+13	7.6072E-04	1.8507E-04	9.8993E-03
Nb-97	2.5226E-03	4.6720E-09	3.1068E-02	4.1389E+12	1.8882E-04	2.4934E-05	2.4240E-03
Rh-103m	3.0477E+00	4.6203E-08	2.4764E+01	3.2772E+15	8.1072E-02	1.9808E-02	1.0552E+00
Te-125m	3.7404E+00	7.9527E-05	3.0383E+01	4.0471E+15	9.9791E-02	2.4302E-02	1.2986E+00
Te-131	1.6836E+00	3.8013E-06	1.5286E+01	2.0098E+15	6.2323E-02	1.2241E-02	8.0265E-01
Te-133	4.9791E-04	4.4474E-08	2.1426E-01	2.7600E+13	1.4301E-03	1.7055E-04	2.2488E-02
Te-133m	2.8888E-03	9.5428E-07	1.6234E+00	2.1985E+14	2.7413E-02	1.3157E-03	3.4537E-01
Te-134	5.8490E-04	3.6566E-07	1.7705E+00	2.4094E+14	3.7667E-02	1.4401E-03	4.6954E-01
Xe-131m	2.5650E-05	1.0416E-13	7.0578E-05	9.2867E+09	5.8877E-10	5.5714E-08	9.8883E-09
Xe-133m	1.1249E-04	2.1365E-12	4.1108E-04	5.4250E+10	8.1662E-09	3.2600E-07	1.3709E-07
Cs-134m	4.6020E-01	2.1642E-07	1.1330E+01	1.5177E+15	7.9366E-02	9.1135E-03	1.0223E+00
Cs-138	1.7072E-03	2.1384E-05	4.3164E+01	5.9076E+15	1.1269E+00	3.5285E-02	1.3866E+01
Ba-141	7.9805E-11	5.7996E-10	3.1053E-03	4.3280E+11	1.2123E-04	2.5907E-06	1.4288E-03
Total	9.3315E+03	1.0000E+00	0.0000E+00	0.0000E+00	2.4793E+02	6.0522E+01	3.2260E+03

Dose Equivalent (Ci/cc) I-131 (Thyroid)	7.6051E-11
Dose Equivalent (Ci/cc) I-131 (CEDE)	1.3088E-10
Dose Equivalent (Ci/cc) I-131 (ICRP2 Thyroid)	3.6936E-10
Total I (Ci)	1.2881E+02
Dose Equivalent (Ci/cc) Xe-133 (EDE)	1.3043E-13

RCS Compartment Group Inventory Distribution:

Time (h) = 8.0000	Atmosphere	Sump
Noble gases (Ci)	1.7546E-03	0.0000E+00
Elemental I (Ci)	1.2494E+02	0.0000E+00
Organic I (Ci)	3.8642E+00	0.0000E+00
Aerosol I (Ci)	0.0000E+00	0.0000E+00
All Aerosols (Ci)	9.2027E+03	0.0000E+00
All Aerosols (kg)	3.6582E-02	0.0000E+00

Intact Steam Generators Compartment Nuclide Inventory (Ci) at Time (h) = 8.0000

Nuclide	Compartment Atmosphere	Dose Fract	Exposure (Ci-hr)	Decays (Bq-s)	Pathway 5 Inflow	Pathway 7 Outflow
Rb-86	8.5851E-02	2.5978E-04	3.4967E-01	4.6578E+13	8.6934E-02	5.4120E-04
Sr-89	1.3183E-03	2.4704E-05	5.3552E-03	7.1332E+11	1.3293E-03	8.2881E-06
Sr-90	1.2222E-04	7.1672E-05	4.9576E-04	6.6035E+10	1.2299E-04	7.6726E-07
Sr-91	3.1312E-04	3.5140E-07	1.5581E-03	2.0791E+11	4.2943E-04	2.4188E-06
Sr-92	3.1768E-05	4.9099E-08	2.8934E-04	3.8784E+10	1.0670E-04	4.5284E-07
Y-90	2.0513E-04	7.9087E-07	8.4197E-04	1.1216E+11	2.1018E-04	1.3033E-06
Y-91	1.6654E-02	3.6776E-04	6.7639E-02	9.0096E+12	1.6791E-02	1.0468E-04
Y-92	1.2724E-04	7.7097E-08	7.5434E-04	1.0071E+11	2.1946E-04	1.1732E-06
Y-93	1.1469E-04	1.3827E-07	5.6352E-04	7.5188E+10	1.5431E-04	8.7464E-07
Zr-95	2.3717E-02	2.5757E-04	9.6316E-02	1.2829E+13	2.3909E-02	1.4907E-04
Zr-97	2.7898E-04	6.2365E-07	1.2663E-03	1.6884E+11	3.3293E-04	1.9631E-06
Nb-95	3.4296E-02	9.6143E-05	1.3920E-01	1.8542E+13	3.4546E-02	2.1544E-04
Mo-99	1.8805E+00	3.5249E-03	7.8458E+00	1.0453E+15	1.9751E+00	1.2148E-02
Tc-99m	1.8076E+00	7.9505E-05	7.5318E+00	1.0026E+15	1.8944E+00	1.1662E-02
Ru-103	1.9557E-02	8.1329E-05	7.9483E-02	1.0587E+13	1.9739E-02	1.2302E-04
Ru-105	2.7554E-05	1.6949E-08	1.7748E-04	2.3732E+10	5.5645E-05	2.7650E-07
Ru-106	3.2981E-02	7.1094E-03	1.3380E-01	1.7823E+13	3.3199E-02	2.0708E-04

Rh-105	6.5730E-04	3.1008E-07	2.8026E-03	3.7347E+11	7.1311E-04	4.3407E-06
Te-127	2.4220E-01	3.5236E-05	9.8683E-01	1.3137E+14	2.4546E-01	1.5274E-03
Te-127m	2.4304E-01	2.3610E-03	9.8653E-01	1.3141E+14	2.4483E-01	1.5268E-03
Te-129	2.2232E-01	1.1942E-05	9.0444E-01	1.1987E+14	2.2487E-01	1.3998E-03
Te-129m	3.3982E-01	3.6842E-03	1.3816E+00	1.8403E+14	3.4315E-01	2.1383E-03
Te-131m	4.7530E-02	1.6317E-04	2.0524E-01	2.7353E+13	5.2593E-02	3.1795E-04
Te-132	8.8720E-01	3.9153E-03	3.6852E+00	4.9098E+14	9.2559E-01	5.7056E-03
I-131	1.4888E-03	1.5252E-05	4.1411E-03	5.4837E+11	7.6940E-04	6.3621E-06
I-132	8.2815E-01	4.9683E-04	2.8517E+00	3.7776E+14	5.7637E-01	4.3955E-03
I-133	2.6827E-04	7.6355E-07	1.1141E-03	1.4826E+11	2.4796E-04	1.7209E-06
I-134	6.0618E-05	5.1330E-07	3.0625E-03	4.1090E+11	1.3649E-03	4.7715E-06
Xe-133	1.0416E-05	4.8757E-11	2.6559E-05	3.5117E+09	4.6405E-06	4.0742E-08
Cs-134	3.2863E+01	6.9823E-01	1.3331E+02	1.7757E+16	3.3075E+01	2.0632E-01
Cs-136	2.1241E+00	8.1489E-03	8.6666E+00	1.1545E+15	2.1566E+00	1.3414E-02
Cs-137	1.8299E+01	2.6383E-01	7.4223E+01	9.8866E+15	1.8414E+01	1.1487E-01
Ba-139	3.4926E-06	1.9421E-09	8.9644E-05	1.2088E+10	4.9275E-05	1.4232E-07
Ba-140	1.8824E-03	3.2732E-06	7.6817E-03	1.0233E+12	1.9117E-03	1.1890E-05
La-140	2.7222E-03	7.5865E-06	1.1202E-02	1.4922E+12	2.8001E-03	1.7341E-05
La-141	3.2211E-05	1.4965E-08	2.2178E-04	2.9670E+10	7.1644E-05	3.4579E-07
La-142	9.0617E-07	3.6012E-09	1.8222E-05	2.4541E+09	9.2186E-06	2.8826E-08
Ce-141	1.4177E-02	5.7686E-05	5.7640E-02	7.6779E+12	1.4317E-02	8.9211E-05
Ce-143	5.7723E-04	9.7261E-07	2.4782E-03	3.3027E+11	6.3316E-04	3.8388E-06
Ce-144	4.1752E-02	7.0471E-03	1.6940E-01	2.2564E+13	4.2031E-02	2.6217E-04
Pr-143	6.5315E-03	2.4021E-05	2.6630E-02	3.5473E+12	6.6242E-03	4.1218E-05
Rb-89	7.7929E-12	5.8498E-08	4.5166E-04	6.3838E+10	1.3123E-03	9.8030E-07
Y-91m	1.9962E-04	3.3650E-08	9.8817E-04	1.3100E+11	2.6915E-04	1.5336E-06
Nb-95m	1.8335E-04	2.0484E-07	7.4520E-04	9.9257E+10	1.8507E-04	1.1534E-06
Nb-97	1.6254E-05	3.8309E-09	8.2123E-05	1.0923E+10	2.4934E-05	1.2775E-07
Rh-103m	1.9638E-02	4.6185E-08	7.9801E-02	1.0564E+13	1.9808E-02	1.2351E-04
Te-125m	2.4102E-02	7.9481E-05	9.7891E-02	1.3039E+13	2.4302E-02	1.5150E-04
Te-131	1.0848E-02	3.6249E-06	4.6991E-02	6.1781E+12	1.2241E-02	7.2834E-05
Te-133	3.2083E-06	1.7823E-08	2.7681E-04	3.6510E+10	1.7055E-04	4.3711E-07
Te-133m	1.8614E-05	3.0875E-07	1.6932E-03	2.2965E+11	1.3157E-03	2.7450E-06
Te-134	3.7688E-06	9.0181E-08	1.4077E-03	1.9198E+11	1.4401E-03	2.3461E-06
Xe-133m	7.2481E-07	3.0017E-12	1.8618E-06	2.4619E+08	3.2600E-07	2.8565E-09
Cs-134m	2.9653E-03	1.5053E-07	2.5406E-02	3.4041E+12	9.1135E-03	3.9731E-05
Cs-138	1.1000E-05	4.0675E-06	2.6467E-02	3.6330E+12	3.5285E-02	4.5956E-05
Ba-141	5.1423E-13	6.2639E-11	1.0812E-06	1.5143E+08	2.5907E-06	2.1919E-09

Total	6.0128E+01	1.0000E+00	0.0000E+00	0.0000E+00	6.0522E+01	3.7767E-01

Dose Equivalent (Ci/cc) I-131 (Thyroid)	7.8082E-13
Dose Equivalent (Ci/cc) I-131 (CEDE)	1.3438E-12
Dose Equivalent (Ci/cc) I-131 (ICRP2 Thyroid)	3.7923E-12
Total I (Ci)	8.2996E-01
Dose Equivalent (Ci/cc) Xe-133 (EDE)	1.3392E-15

Intact Steam Generators Compartment Group Inventory Distribution:

Time (h) = 8.0000	Atmosphere	Sump
Noble gases (Ci)	1.1306E-05	0.0000E+00
Elemental I (Ci)	8.0507E-01	0.0000E+00
Organic I (Ci)	2.4899E-02	0.0000E+00
Aerosol I (Ci)	0.0000E+00	0.0000E+00
All Aerosols (Ci)	5.9298E+01	0.0000E+00
All Aerosols (kg)	2.3572E-04	0.0000E+00

Control Room Compartment Nuclide Inventory (Ci) at Time (h) = 8.0000

Nuclide	Compartment Atmosphere	Dose Fract	Exposure (Ci-hr)	Decays (Bq-s)	Compartment Recirc Filtr	Pathway 2 Inflow	Pathway 3 Inflow	Pathway 4 Outflow
Rb-86	5.0251E-09	2.6173E-04	8.3144E-05	1.1075E+10	3.4907E-04	3.7510E-04	6.2049E-05	9.0828E-05
Sr-89	7.7161E-11	2.4714E-05	1.2643E-06	1.6838E+08	5.3600E-06	5.6959E-06	9.4332E-07	1.4471E-06
Y-91	9.7481E-10	3.6852E-04	1.5996E-05	2.1307E+09	6.7715E-05	7.2152E-05	1.1937E-05	1.7481E-05
Zr-95	1.3882E-09	2.5807E-04	2.2775E-05	3.0336E+09	9.6432E-05	1.0273E-04	1.6996E-05	2.4879E-05
Nb-95	2.0074E-09	9.6231E-05	3.2883E-05	4.3800E+09	1.3945E-04	1.4831E-04	2.4539E-05	3.6080E-05
Mo-99	1.1007E-07	3.7159E-03	1.9520E-03	2.6006E+11	7.6460E-03	8.8217E-03	1.4572E-03	2.1327E-03
Tc-99m	1.0581E-07	8.3529E-05	1.8675E-03	2.4851E+11	7.3498E-03	8.4386E-03	1.3941E-03	3.7104E-03
Ru-103	1.1447E-09	8.1603E-05	1.8822E-05	2.5071E+09	7.9519E-05	8.4900E-05	1.4046E-05	2.0561E-05
Ru-106	1.9305E-09	7.1096E-03	3.1579E-05	4.2064E+09	1.3410E-04	1.4243E-04	2.3566E-05	3.4497E-05
Rh-105	3.8474E-11	3.3933E-07	7.2381E-07	9.6443E+07	2.6726E-06	3.2755E-06	5.4049E-07	8.0568E-07
Te-127	1.4177E-08	3.5584E-05	2.3519E-04	3.1304E+10	9.8478E-04	1.0613E-03	1.7553E-04	3.9994E-04
Te-127m	1.4226E-08	2.3633E-03	2.3305E-04	3.1043E+10	9.8821E-04	1.0512E-03	1.7391E-04	2.5459E-04
Te-129	1.3013E-08	1.2054E-05	2.1546E-04	2.8512E+10	9.0395E-04	9.7244E-04	1.6081E-04	1.3137E-03
Te-129m	1.9891E-08	3.6989E-03	3.2736E-04	4.3605E+10	1.3817E-03	1.4767E-03	2.4430E-04	3.5761E-04
Te-131m	2.7821E-09	1.8324E-04	5.4394E-05	7.2487E+09	1.9326E-04	2.4644E-04	4.0627E-05	5.9447E-05
Te-132	5.1931E-08	4.0934E-03	9.0931E-04	1.2114E+11	3.6074E-03	4.1083E-03	6.7879E-04	9.9350E-04

I-131	1.4807E-10	9.1719E-07	5.8773E-08	6.9879E+06	6.0770E-06	8.7105E-08	3.3121E-08	4.1189E-06
I-132	8.1124E-08	5.5050E-05	7.4571E-05	8.8499E+09	3.3705E-03	1.1277E-04	4.2140E-05	2.4004E-03
I-133	2.6915E-11	1.6079E-07	5.5368E-08	6.5948E+06	1.1085E-06	8.4369E-08	3.1194E-08	4.4850E-06
I-134	6.0591E-12	1.2039E-06	1.6953E-06	2.0205E+08	2.4816E-07	2.9095E-06	9.9610E-07	5.7050E-05
Cs-134	1.9236E-06	6.9811E-01	3.1457E-02	4.1901E+12	1.3362E-01	1.4188E-01	2.3474E-02	3.4363E-02
Cs-136	1.2433E-07	8.2375E-03	2.0676E-03	2.7542E+11	8.6366E-03	9.3293E-03	1.5431E-03	2.2587E-03
Cs-137	1.0711E-06	2.6374E-01	1.7511E-02	2.3324E+12	7.4402E-02	7.8977E-02	1.3067E-02	1.9129E-02
Ba-140	1.1018E-10	3.3098E-06	1.8332E-06	2.4420E+08	7.6538E-06	8.2718E-06	1.3681E-06	2.0027E-06
La-140	1.5934E-10	7.7976E-06	2.7173E-06	3.6194E+08	1.1068E-05	1.2269E-05	2.0282E-06	3.2363E-06
Ce-141	8.2982E-10	5.7924E-05	1.3660E-05	1.8195E+09	5.7643E-05	6.1617E-05	1.0194E-05	1.4923E-05
Ce-143	3.3787E-11	1.0808E-06	6.4994E-07	8.6609E+07	2.3470E-06	2.9434E-06	4.8540E-07	7.1028E-07
Ce-144	2.4438E-09	7.0481E-03	3.9985E-05	5.3260E+09	1.6976E-04	1.8034E-04	2.9838E-05	4.3679E-05
Pr-143	3.8231E-10	2.4248E-05	6.3441E-06	8.4507E+08	2.6557E-05	2.8624E-05	4.7346E-06	6.9423E-06
Rb-89	4.5614E-19	7.1916E-06	1.3104E-05	1.8437E+09	3.1686E-14	9.2857E-05	1.0709E-05	1.5119E-05
Y-91m	1.1685E-11	4.5090E-08	3.1250E-07	4.1255E+07	8.1167E-07	1.4127E-06	2.3331E-07	2.5059E-06
Rh-103m	1.1495E-09	4.6142E-08	1.8816E-05	2.4854E+09	7.9848E-05	8.4794E-05	1.4039E-05	1.3850E-04
Te-125m	1.4107E-09	7.9653E-05	2.3153E-05	3.0840E+09	9.7997E-05	1.0443E-04	1.7278E-05	2.5292E-05
Te-131	6.3498E-10	4.6475E-06	1.4219E-05	1.8725E+09	4.4109E-05	6.7050E-05	1.0697E-05	1.8603E-04
Te-133	1.8779E-13	1.1765E-07	4.3123E-07	4.9879E+07	1.3045E-08	6.8867E-07	2.9159E-07	2.2853E-05
Te-133m	1.0896E-12	4.6491E-06	6.0173E-06	8.1363E+08	7.5686E-08	3.1201E-05	4.6202E-06	6.6713E-06
Te-134	2.2060E-13	2.2063E-06	8.1278E-06	1.1044E+09	1.5324E-08	4.3971E-05	6.2942E-06	9.0549E-06
Cs-134m	1.7357E-10	4.5395E-07	1.8081E-05	2.4200E+09	1.2057E-05	8.5391E-05	1.3619E-05	1.9845E-05
Cs-138	6.4389E-13	1.5513E-04	2.3824E-04	3.2564E+10	4.4728E-08	1.3547E-03	1.8633E-04	2.6698E-04
Total	3.5783E-06	1.0000E+00	0.0000E+00	0.0000E+00	2.4448E-01	2.5958E-01	4.2922E-02	6.8433E-02

Control Room Compartment Group Inventory Distribution:

Time (h) = 8.0000	Atmosphere	Sump
Noble gases (Ci)	2.6102E-08	0.0000E+00
Elemental I (Ci)	7.8865E-08	0.0000E+00
Organic I (Ci)	2.4391E-09	0.0000E+00
Aerosol I (Ci)	0.0000E+00	0.0000E+00
All Aerosols (Ci)	3.4709E-06	0.0000E+00
All Aerosols (kg)	1.3797E-11	0.0000E+00

Time (h) = 8.0000	Deposition Surfaces	Recirculating Filter
Noble gases (Ci)	0.0000E+00	0.0000E+00

Elemental I (Ci)	0.0000E+00	3.2766E-03
Organic I (Ci)	0.0000E+00	1.0134E-04
Aerosol I (Ci)	0.0000E+00	0.0000E+00
All Aerosols (Ci)	0.0000E+00	2.4110E-01
All Aerosols (kg)	0.0000E+00	9.5842E-07

Ruptured Steam Generator Compartment Nuclide Inventory (Ci) at Time (h) = 8.0000

Nuclide	Compartment Atmosphere	Dose Fract	Exposure (Ci-hr)	Decays (Bq-s)	Pathway 6 Inflow	Pathway 8 Outflow
Rb-86	4.6043E+00	2.6024E-04	3.6034E+01	4.7999E+15	4.6636E+00	3.2795E-03
Sr-89	7.0699E-02	2.4717E-05	5.5116E-01	7.3415E+13	7.0904E-02	4.9892E-05
Sr-90	6.5549E-03	7.1665E-05	5.0994E-02	6.7923E+12	6.5600E-03	4.6137E-06
Sr-91	1.6793E-02	3.8491E-07	1.7556E-01	2.3426E+13	2.9648E-02	2.0715E-05
Sr-92	1.7037E-03	6.9006E-08	4.1831E-02	5.6063E+12	1.2478E-02	8.5747E-06
Y-90	1.1001E-02	7.9508E-07	8.7074E-02	1.1599E+13	1.1401E-02	8.0150E-06
Y-91	8.9317E-01	3.6794E-04	6.9613E+00	9.2726E+14	8.9720E-01	6.3098E-04
Y-92	6.8242E-03	8.8750E-08	8.9326E-02	1.1919E+13	1.6116E-02	1.1289E-05
Y-93	6.1512E-03	1.5060E-07	6.3140E-02	8.4244E+12	1.0500E-02	7.3389E-06
Zr-95	1.2720E+00	2.5769E-04	9.9124E+00	1.3203E+15	1.2774E+00	8.9837E-04
Zr-97	1.4962E-02	6.5583E-07	1.3698E-01	1.8264E+13	2.0601E-02	1.4436E-05
Nb-95	1.8393E+00	9.6164E-05	1.4323E+01	1.9078E+15	1.8443E+00	1.2971E-03
Mo-99	1.0085E+02	3.5696E-03	8.1731E+02	1.0889E+17	1.0952E+02	7.6954E-02
Tc-99m	9.6946E+01	8.0455E-05	7.8404E+02	1.0436E+17	1.0478E+02	7.3630E-02
Ru-103	1.0489E+00	8.1394E-05	8.1828E+00	1.0900E+15	1.0557E+00	7.4242E-04
Ru-105	1.4778E-03	2.0742E-08	2.2344E-02	2.9874E+12	4.9829E-03	3.4554E-06
Ru-106	1.7688E+00	7.1094E-03	1.3764E+01	1.8334E+15	1.7712E+00	1.2457E-03
Rh-105	3.5252E-02	3.1696E-07	2.9469E-01	3.9270E+13	4.0622E-02	2.8525E-05
Te-127	1.2989E+01	3.5313E-05	1.0174E+02	1.3543E+16	1.3193E+01	9.2764E-03
Te-127m	1.3035E+01	2.3615E-03	1.0151E+02	1.3521E+16	1.3071E+01	9.1931E-03
Te-129	1.1923E+01	1.1963E-05	9.3202E+01	1.2351E+16	1.2086E+01	8.4975E-03
Te-129m	1.8225E+01	3.6876E-03	1.4225E+02	1.8948E+16	1.8361E+01	1.2913E-02
Te-131m	2.5491E+00	1.6781E-04	2.1713E+01	2.8938E+15	3.0533E+00	2.1430E-03
Te-132	4.7582E+01	3.9570E-03	3.8314E+02	5.1045E+16	5.1017E+01	3.5852E-02
I-131	7.9845E-02	1.1937E-05	3.3341E-01	4.4068E+13	2.5205E-03	2.4908E-06
I-132	4.4414E+01	4.2106E-04	2.4861E+02	3.2850E+16	3.2512E+00	3.1973E-03
I-133	1.4387E-02	7.0927E-07	1.0646E-01	1.4124E+13	2.4248E-03	2.3759E-06
I-134	3.2510E-03	9.2348E-07	5.6679E-01	7.5300E+13	7.7589E-02	7.3762E-05

Xe-133	5.5862E-04	3.6018E-11	2.0182E-03	2.6635E+11	1.9164E-06	2.1731E-09
Cs-134	1.7625E+03	6.9820E-01	1.3713E+04	1.8266E+18	1.7643E+03	1.2409E+00
Cs-136	1.1392E+02	8.1698E-03	8.9381E+02	1.1906E+17	1.1598E+02	8.1551E-02
Cs-137	9.8138E+02	2.6381E-01	7.6346E+03	1.0169E+18	9.8214E+02	6.9075E-01
Ba-139	1.8731E-04	3.8090E-09	1.8086E-02	2.4376E+12	9.3973E-03	6.3120E-06
Ba-140	1.0096E-01	3.2818E-06	7.9230E-01	1.0554E+14	1.0283E-01	7.2306E-05
La-140	1.4600E-01	7.6358E-06	1.1598E+00	1.5449E+14	1.5244E-01	1.0716E-04
La-141	1.7275E-03	1.8807E-08	2.8670E-02	3.8347E+12	6.6996E-03	4.6525E-06
La-142	4.8599E-05	6.5969E-09	3.4337E-03	4.6225E+11	1.6101E-03	1.0868E-06
Ce-141	7.6033E-01	5.7742E-05	5.9352E+00	7.9058E+14	7.6616E-01	5.3880E-04
Ce-143	3.0958E-02	9.9766E-07	2.6150E-01	3.4850E+13	3.6481E-02	2.5609E-05
Ce-144	2.2392E+00	7.0473E-03	1.7426E+01	2.3212E+15	2.2427E+00	1.5773E-03
Pr-143	3.5029E-01	2.4075E-05	2.7455E+00	3.6572E+14	3.5585E-01	2.5023E-04
Rb-89	4.1794E-10	3.4235E-07	2.7191E-01	3.8379E+13	7.8882E-01	4.2579E-04
Y-91m	1.0706E-02	3.6544E-08	1.1039E-01	1.4626E+13	1.7540E-02	1.2322E-05
Nb-95m	9.8331E-03	2.0501E-07	7.6721E-02	1.0219E+13	9.8993E-03	6.9618E-06
Nb-97	8.7174E-04	4.5146E-09	9.9556E-03	1.3260E+12	2.4240E-03	1.6568E-06
Rh-103m	1.0532E+00	4.6206E-08	8.2128E+00	1.0869E+15	1.0552E+00	7.4242E-04
Te-125m	1.2926E+00	7.9522E-05	1.0075E+01	1.3420E+15	1.2986E+00	9.1327E-04
Te-131	5.8181E-01	3.7650E-06	5.0208E+00	6.6005E+14	8.0265E-01	5.5299E-04
Te-133	1.7206E-04	4.2359E-08	6.7673E-02	8.8268E+12	2.2488E-02	2.0352E-05
Te-133m	9.9831E-04	7.9867E-07	4.5056E-01	6.1060E+13	3.4537E-01	2.2666E-04
Te-134	2.0213E-04	2.8705E-07	4.6091E-01	6.2789E+13	4.6954E-01	3.0109E-04
Xe-131m	8.8641E-06	1.0835E-13	2.4349E-05	3.2039E+09	9.8883E-09	1.1247E-11
Xe-133m	3.8872E-05	2.2218E-12	1.4176E-04	1.8709E+10	1.3709E-07	1.5544E-10
Cs-134m	1.5903E-01	2.0666E-07	3.5880E+00	4.8067E+14	1.0223E+00	7.0358E-04
Cs-138	5.8997E-04	1.5574E-05	1.0425E+01	1.4290E+15	1.3866E+01	8.6414E-03
Ba-141	2.7579E-11	3.3643E-10	5.9737E-04	8.3541E+10	1.4288E-03	8.0789E-07
Total	3.2247E+03	1.0000E+00	0.0000E+00	0.0000E+00	3.2260E+03	2.2683E+00

Dose Equivalent (Ci/cc) I-131 (Thyroid) 1.2563E-10
Dose Equivalent (Ci/cc) I-131 (CEDE) 2.1620E-10
Dose Equivalent (Ci/cc) I-131 (ICRP2 Thyroid) 6.1015E-10
Total I (Ci) 4.4512E+01
Dose Equivalent (Ci/cc) Xe-133 (EDE) 2.1546E-13

Ruptured Steam Generator Compartment Group Inventory Distribution:

```
Time (h) =   8.0000      Atmosphere      Sump
Noble gases (Ci)         6.0635E-04   0.0000E+00
Elemental I (Ci)         4.3177E+01   0.0000E+00
Organic I (Ci)           1.3354E+00   0.0000E+00
Aerosol I (Ci)           0.0000E+00   0.0000E+00
All Aerosols (Ci)        3.1802E+03   0.0000E+00
All Aerosols (kg)        1.2642E-02   0.0000E+00

#######################################################################
    ALION RADTRAD Version 3.10 Rev 2 run on 12/01/2014  at 16:22:43

                Copyright © 2009 Alion Science and Technology
#######################################################################

Exclusion Area Boundary Doses:

Time (h) =  24.0000    Whole Body   Thyroid       TEDE
Delta dose (rem)        1.1293E-04  4.0731E-03  4.3349E-03
Accumulated dose (rem)  2.7535E-02  1.9754E+00  2.0533E+00

Low Population Zone Doses:

Time (h) =  24.0000    Whole Body   Thyroid       TEDE
Delta dose (rem)        6.9837E-06  2.5188E-04  2.6807E-04
Accumulated dose (rem)  4.9130E-03  3.5298E-01  3.6688E-01

Control Room Doses:

Time (h) =  24.0000    Whole Body   Thyroid       TEDE        Skin
Delta dose (rem)        2.1503E-07  4.4568E-04  4.6087E-04  8.6077E-06
Accumulated dose (rem)  8.2894E-04  1.7967E+00  1.8432E+00  3.3225E-02

*******************************************************

RCS Compartment Nuclide Inventory (Ci)  at Time (h) =  24.0000

 Nuclide    Compartment  Dose Fract    Exposure     Decays      Pathway  1   Pathway  5   Pathway  6
            Atmosphere                 (Ci-hr)      (Bq-s)       Outflow      Outflow      Outflow
```

Rb-86	1.2831E+01	2.5733E-04	3.1785E+02	4.2343E+16	3.5839E-01	2.5516E-01	4.6636E+00
Sr-89	2.0013E-01	2.4628E-05	4.8991E+00	6.5259E+14	5.4470E-03	3.9324E-03	7.0904E-02
Sr-90	1.8725E-02	7.1725E-05	4.5528E-01	6.0644E+13	5.0409E-04	3.6542E-04	6.5600E-03
Sr-91	1.4928E-02	2.4315E-07	9.8934E-01	1.3228E+14	2.2853E-03	7.9865E-04	2.9648E-02
Sr-92	8.1279E-05	2.7965E-08	1.5123E-01	2.0287E+13	9.6943E-04	1.2211E-04	1.2478E-02
Y-90	2.9407E-02	7.6964E-07	7.5191E-01	1.0018E+14	8.7625E-04	6.0379E-04	1.1401E-02
Y-91	2.5317E+00	3.6686E-04	6.1917E+01	8.2477E+15	6.8945E-02	4.9699E-02	8.9720E-01
Y-92	1.2779E-03	4.2881E-08	3.8501E-01	5.1514E+13	1.2406E-03	3.1122E-04	1.6116E-02
Y-93	5.8607E-03	9.7187E-08	3.6349E-01	4.8594E+13	8.0919E-04	2.9338E-04	1.0500E-02
Zr-95	3.6075E+00	2.5700E-04	8.8189E+01	1.1747E+16	9.8161E-02	7.0785E-02	1.2774E+00
Zr-97	2.2175E-02	4.9318E-07	9.1891E-01	1.2270E+14	1.5858E-03	7.4050E-04	2.0601E-02
Nb-95	5.2331E+00	9.6055E-05	1.2763E+02	1.7000E+16	1.4173E-01	1.0244E-01	1.8443E+00
Mo-99	2.4355E+02	3.2975E-03	6.7354E+03	8.9781E+17	8.4197E+00	5.4126E+00	1.0952E+02
Tc-99m	2.3482E+02	7.4505E-05	6.4771E+03	8.6260E+17	8.0550E+00	5.2049E+00	1.0478E+02
Ru-103	2.9613E+00	8.0995E-05	7.2640E+01	9.6761E+15	8.1125E-02	5.8307E-02	1.0557E+00
Ru-105	3.4729E-04	9.7877E-09	9.4053E-02	1.2600E+13	3.8546E-04	7.6002E-05	4.9829E-03
Ru-106	5.0467E+00	7.1111E-03	1.2282E+02	1.6360E+16	1.3611E-01	9.8577E-02	1.7712E+00
Rh-105	7.3986E-02	2.7558E-07	2.2857E+00	3.0484E+14	3.1238E-03	1.8385E-03	4.0622E-02
Te-127	3.6528E+01	3.4981E-05	8.9902E+02	1.1968E+17	1.0139E+00	7.2164E-01	1.3193E+01
Te-127m	3.7079E+01	2.3586E-03	9.0441E+02	1.2047E+17	1.0045E+00	7.2591E-01	1.3071E+01
Te-129	3.3594E+01	1.1882E-05	8.2578E+02	1.0945E+17	9.2888E-01	6.6286E-01	1.2086E+01
Te-129m	5.1353E+01	3.6660E-03	1.2616E+03	1.6805E+17	1.4110E+00	1.0127E+00	1.8361E+01
Te-131m	5.0316E+00	1.4170E-04	1.6356E+02	2.1820E+16	2.3486E-01	1.3161E-01	3.0533E+00
Te-132	1.1796E+02	3.7002E-03	3.1961E+03	4.2599E+17	3.9218E+00	2.5679E+00	5.1017E+01
I-131	5.5586E-01	3.0118E-05	7.5043E+00	9.9405E+14	1.5636E-04	5.9748E-03	2.5205E-03
I-132	1.2173E+02	5.2884E-04	2.7855E+03	3.6967E+17	2.0195E-01	2.2360E+00	3.2512E+00
I-133	2.4196E-02	6.1529E-07	8.2385E-01	1.0975E+14	1.5075E-04	6.6313E-04	2.4248E-03
I-134	3.6709E-08	3.1352E-07	1.7166E+00	2.2690E+14	4.8644E-03	1.3751E-03	7.7589E-02
Xe-133	4.0846E-03	1.0800E-10	5.3985E-02	7.1502E+12	1.1416E-07	4.2974E-05	1.9164E-06
Cs-134	5.0319E+03	6.9859E-01	1.2240E+05	1.6304E+19	1.3558E+02	9.8240E+01	1.7643E+03
Cs-136	3.1415E+02	8.0372E-03	7.8441E+03	1.0450E+18	8.9128E+00	6.2975E+00	1.1598E+02
Cs-137	2.8034E+03	2.6403E-01	6.8164E+04	9.0794E+18	7.5471E+01	5.4709E+01	9.8214E+02
Ba-139	1.7140E-07	1.4652E-09	6.2064E-02	8.3631E+12	7.3789E-04	5.0156E-05	9.3973E-03
Ba-140	2.7813E-01	3.2270E-06	6.9498E+00	9.2587E+14	7.9025E-03	5.5796E-03	1.0283E-01
La-140	3.8481E-01	7.3399E-06	9.9456E+00	1.3251E+15	1.1716E-02	7.9873E-03	1.5244E-01
La-141	2.9358E-04	8.4875E-09	1.1543E-01	1.5465E+13	5.1782E-04	9.3255E-05	6.6996E-03
La-142	1.0430E-07	2.5259E-09	1.1729E-02	1.5788E+12	1.2614E-04	9.4740E-06	1.6101E-03
Ce-141	2.1414E+00	5.7391E-05	5.2625E+01	7.0101E+15	5.8876E-02	4.2242E-02	7.6616E-01

Ce-143	6.3195E-02	8.5475E-07	1.9986E+00	2.6659E+14	2.8058E-03	1.6079E-03	3.6481E-02
Ce-144	6.3864E+00	7.0477E-03	1.5547E+02	2.0708E+16	1.7233E-01	1.2478E-01	2.2427E+00
Pr-143	9.6967E-01	2.3731E-05	2.4142E+01	3.2162E+15	2.7347E-02	1.9381E-02	3.5585E-01
Rb-89	1.1603E-28	2.1959E-07	1.5559E+00	2.1864E+14	6.8275E-02	1.3123E-03	7.8882E-01
Y-91m	9.5190E-03	2.3196E-08	6.2509E-01	8.3014E+13	1.3484E-03	5.0458E-04	1.7540E-02
Nb-95m	2.7760E-02	2.0398E-07	6.8099E-01	9.0706E+13	7.6072E-04	5.4662E-04	9.8993E-03
Nb-97	1.2713E-03	3.0491E-09	5.9983E-02	7.9878E+12	1.8882E-04	4.8358E-05	2.4240E-03
Rh-103m	2.9736E+00	4.5993E-08	7.2926E+01	9.6534E+15	8.1072E-02	5.8537E-02	1.0552E+00
Te-125m	3.6633E+00	7.9279E-05	8.9603E+01	1.1936E+16	9.9791E-02	7.1921E-02	1.2986E+00
Te-131	1.1485E+00	3.1625E-06	3.7622E+01	4.9510E+15	6.2323E-02	3.0278E-02	8.0265E-01
Te-133	2.9873E-09	1.5079E-08	2.1491E-01	2.7687E+13	1.4301E-03	1.7110E-04	2.2488E-02
Te-133m	1.7327E-08	3.2332E-07	1.6272E+00	2.2036E+14	2.7413E-02	1.3188E-03	3.4537E-01
Te-134	7.0451E-11	1.2364E-07	1.7711E+00	2.4102E+14	3.7667E-02	1.4406E-03	4.6954E-01
Xe-131m	1.9567E-04	8.4044E-13	1.6848E-03	2.2169E+11	5.8877E-10	1.3246E-06	9.8883E-09
Xe-133m	2.6470E-04	6.3764E-12	3.6294E-03	4.8089E+11	8.1662E-09	2.8915E-06	1.3709E-07
Cs-134m	9.9198E-03	8.5107E-08	1.3181E+01	1.7678E+15	7.9366E-02	1.0645E-02	1.0223E+00
Cs-138	1.7860E-12	7.2287E-06	4.3165E+01	5.9078E+15	1.1269E+00	3.5286E-02	1.3866E+01
Ba-141	1.1909E-26	1.9604E-10	3.1053E-03	4.3280E+11	1.2123E-04	2.5907E-06	1.4288E-03
Total	9.0823E+03	1.0000E+00	0.0000E+00	0.0000E+00	2.4793E+02	1.7899E+02	3.2260E+03

Dose Equivalent (Ci/cc) I-131 (Thyroid)	9.7370E-11
Dose Equivalent (Ci/cc) I-131 (CEDE)	1.4928E-10
Dose Equivalent (Ci/cc) I-131 (ICRP2 Thyroid)	3.7504E-10
Total I (Ci)	1.2231E+02
Dose Equivalent (Ci/cc) Xe-133 (EDE)	3.3075E-13

RCS Compartment Group Inventory Distribution:

Time (h) = 24.0000	Atmosphere	Sump
Noble gases (Ci)	4.5449E-03	0.0000E+00
Elemental I (Ci)	1.1864E+02	0.0000E+00
Organic I (Ci)	3.6692E+00	0.0000E+00
Aerosol I (Ci)	0.0000E+00	0.0000E+00
All Aerosols (Ci)	8.9600E+03	0.0000E+00
All Aerosols (kg)	3.6110E-02	0.0000E+00

Intact Steam Generators Compartment Nuclide Inventory (Ci) at Time (h) = 24.0000

Nuclide	Compartment Atmosphere	Dose Fract	Exposure (Ci-hr)	Decays (Bq-s)	Pathway 5 Inflow	Pathway 7 Outflow
Rb-86	2.4834E-01	2.5582E-04	3.0548E+00	4.0695E+14	2.5516E-01	2.0914E-03
Sr-89	3.8733E-03	2.4583E-05	4.7275E-02	6.2974E+12	3.9324E-03	3.2306E-05
Sr-90	3.6240E-04	7.1757E-05	4.4033E-03	5.8651E+11	3.6542E-04	3.0057E-06
Sr-91	2.8892E-04	1.7465E-07	6.8700E-03	9.2051E+11	7.9865E-04	5.5059E-06
Sr-92	1.5731E-06	8.8791E-09	4.6418E-04	6.2484E+10	1.2211E-04	5.5669E-07
Y-90	5.6914E-04	7.5661E-07	7.1458E-03	9.5215E+11	6.0379E-04	4.9177E-06
Y-91	4.8999E-02	3.6629E-04	5.9765E-01	7.9611E+13	4.9699E-02	4.0834E-04
Y-92	2.4733E-05	2.1946E-08	1.9049E-03	2.5611E+11	3.1122E-04	1.8515E-06
Y-93	1.1343E-04	7.1293E-08	2.5777E-03	3.4529E+11	2.9338E-04	2.0443E-06
Zr-95	6.9819E-02	2.5664E-04	8.5136E-01	1.1341E+14	7.0785E-02	5.8165E-04
Zr-97	4.2917E-04	4.1243E-07	7.4289E-03	9.9314E+11	7.4050E-04	5.5234E-06
Nb-95	1.0128E-01	9.5999E-05	1.2331E+00	1.6425E+14	1.0244E-01	8.4211E-04
Mo-99	4.7136E+00	3.1581E-03	6.2360E+01	8.3147E+15	5.4126E+00	4.3447E-02
Tc-99m	4.5447E+00	7.1448E-05	6.0046E+01	7.9991E+15	5.2049E+00	4.1812E-02
Ru-103	5.7313E-02	8.0789E-05	7.0044E-01	9.3305E+13	5.8307E-02	4.7879E-04
Ru-105	6.7213E-06	4.7032E-09	4.3691E-04	5.8745E+10	7.6002E-05	4.2916E-07
Ru-106	9.7673E-02	7.1120E-03	1.1875E+00	1.5817E+14	9.8577E-02	8.1070E-04
Rh-105	1.4319E-03	2.5451E-07	2.0407E-02	2.7231E+12	1.8385E-03	1.4467E-05
Te-127	7.0697E-01	3.4819E-05	8.6508E+00	1.1517E+15	7.2164E-01	5.9186E-03
Te-127m	7.1763E-01	2.3571E-03	8.7376E+00	1.1639E+15	7.2591E-01	5.9674E-03
Te-129	6.5018E-01	1.1839E-05	7.9547E+00	1.0544E+15	6.6286E-01	5.4394E-03
Te-129m	9.9389E-01	3.6548E-03	1.2159E+01	1.6197E+15	1.0127E+00	8.3132E-03
Te-131m	9.7381E-02	1.2851E-04	1.4339E+00	1.9141E+14	1.3161E-01	1.0253E-03
Te-132	2.2829E+00	3.5684E-03	2.9797E+01	3.9723E+15	2.5679E+00	2.0692E-02
I-131	1.0758E-02	3.9263E-05	9.4573E-02	1.2532E+13	5.9748E-03	5.7674E-05
I-132	2.3559E+00	5.7784E-04	2.9423E+01	3.9107E+15	2.2360E+00	1.9638E-02
I-133	4.6829E-04	5.7700E-07	7.4687E-03	9.9760E+11	6.6313E-04	5.3865E-06
I-134	7.1047E-10	5.9592E-08	3.1542E-03	4.2340E+11	1.3751E-03	4.8267E-06
Xe-133	7.9052E-05	1.4355E-10	6.9371E-04	9.1922E+10	4.2974E-05	4.1931E-07
Cs-134	9.7386E+01	6.9880E-01	1.1836E+03	1.5766E+17	9.8240E+01	8.0801E-01
Cs-136	6.0801E+00	7.9686E-03	7.5184E+01	1.0017E+16	6.2975E+00	5.1537E-02
Cs-137	5.4257E+01	2.6414E-01	6.5924E+02	8.7811E+16	5.4709E+01	4.5001E-01
Ba-139	3.3172E-09	2.3968E-10	9.8143E-05	1.3245E+10	5.0156E-05	1.4741E-07
Ba-140	5.3829E-03	3.1986E-06	6.6595E-02	8.8725E+12	5.5796E-03	4.5656E-05
La-140	7.4475E-03	7.1886E-06	9.4164E-02	1.2547E+13	7.9873E-03	6.4918E-05
La-141	5.6820E-06	3.7269E-09	4.8997E-04	6.5907E+10	9.3255E-05	5.0398E-07

La-142	2.0187E-09	4.6214E-10	2.0745E-05	2.7971E+09	9.4740E-06	3.0336E-08
Ce-141	4.1445E-02	5.7209E-05	5.0713E-01	6.7555E+13	4.2242E-02	3.4675E-04
Ce-143	1.2231E-03	7.8236E-07	1.7685E-02	2.3602E+12	1.6079E-03	1.2589E-05
Ce-144	1.2360E-01	7.0480E-03	1.5030E+00	2.0020E+14	1.2478E-01	1.0261E-03
Pr-143	1.8767E-02	2.3553E-05	2.3163E-01	3.0860E+13	1.9381E-02	1.5871E-04
Rb-89	2.2456E-30	6.5941E-09	4.5166E-04	6.3838E+10	1.3123E-03	9.8030E-07
Y-91m	1.8423E-04	1.6795E-08	4.3753E-03	5.8251E+11	5.0458E-04	3.5021E-06
Nb-95m	5.3727E-04	2.0345E-07	6.5662E-03	8.7462E+11	5.4662E-04	4.4885E-06
Nb-97	2.4605E-05	2.2925E-09	4.3598E-04	5.8045E+10	4.8358E-05	3.3220E-07
Rh-103m	5.7552E-02	4.5885E-08	7.0334E-01	9.3116E+13	5.8537E-02	4.8077E-04
Te-125m	7.0899E-02	7.9154E-05	8.6485E-01	1.1520E+14	7.1921E-02	5.9091E-04
Te-131	2.2228E-02	2.8474E-06	3.2746E-01	4.3119E+13	3.0278E-02	2.3429E-04
Te-133	5.7816E-11	2.0445E-09	2.8169E-04	3.7162E+10	1.7110E-04	4.4005E-07
Te-133m	3.3535E-10	3.5385E-08	1.7215E-03	2.3351E+11	1.3188E-03	2.7620E-06
Te-134	1.3635E-12	1.0195E-08	1.4118E-03	1.9255E+11	1.4406E-03	2.3486E-06
Xe-131m	3.7870E-06	1.2530E-12	2.4283E-05	3.1957E+09	1.3246E-06	1.3930E-08
Xe-133m	5.1230E-06	8.4028E-12	4.6237E-05	6.1296E+09	2.8915E-06	2.8062E-08
Cs-134m	1.9199E-04	2.8766E-08	4.3069E-02	5.7971E+12	1.0645E-02	5.0209E-05
Cs-138	3.4567E-14	4.5865E-07	2.6476E-02	3.6342E+12	3.5286E-02	4.5962E-05
Ba-141	2.3049E-28	7.0608E-12	1.0812E-06	1.5143E+08	2.5907E-06	2.1919E-09
Total	1.7578E+02	1.0000E+00	0.0000E+00	0.0000E+00	1.7899E+02	1.4702E+00

Dose Equivalent (Ci/cc) I-131 (Thyroid)	3.0027E-12
Dose Equivalent (Ci/cc) I-131 (CEDE)	4.6037E-12
Dose Equivalent (Ci/cc) I-131 (ICRP2 Thyroid)	1.1566E-11
Total I (Ci)	2.3671E+00
Dose Equivalent (Ci/cc) Xe-133 (EDE)	1.0200E-14

Intact Steam Generators Compartment Group Inventory Distribution:

Time (h) = 24.0000	Atmosphere	Sump
Noble gases (Ci)	8.7962E-05	0.0000E+00
Elemental I (Ci)	2.2961E+00	0.0000E+00
Organic I (Ci)	7.1014E-02	0.0000E+00
Aerosol I (Ci)	0.0000E+00	0.0000E+00
All Aerosols (Ci)	1.7341E+02	0.0000E+00
All Aerosols (kg)	6.9887E-04	0.0000E+00

Control Room Compartment Nuclide Inventory (Ci) at Time (h) = 24.0000

Nuclide	Compartment Atmosphere	Dose Fract	Exposure (Ci-hr)	Decays (Bq-s)	Compartment Recirc Filtr	Pathway 2 Inflow	Pathway 3 Inflow	Pathway 4 Outflow
Rb-86	1.8189E-09	2.6173E-04	8.3164E-05	1.1078E+10	3.4064E-04	3.7515E-04	6.2133E-05	9.0851E-05
Sr-89	2.8369E-11	2.4714E-05	1.2647E-06	1.6842E+08	5.3128E-06	5.6966E-06	9.4463E-07	1.5827E-06
Y-91	3.5888E-10	3.6852E-04	1.6000E-05	2.1312E+09	6.7209E-05	7.2160E-05	1.1954E-05	1.7524E-05
Y-92	1.8115E-13	1.2418E-07	2.8683E-07	3.8175E+07	3.3925E-08	1.3048E-06	2.1443E-07	1.4384E-06
Zr-95	5.1138E-10	2.5807E-04	2.2780E-05	3.0344E+09	9.5768E-05	1.0274E-04	1.7019E-05	2.4885E-05
Nb-95	7.4182E-10	9.6231E-05	3.2891E-05	4.3811E+09	1.3892E-04	1.4833E-04	2.4573E-05	3.6417E-05
Mo-99	3.4524E-08	3.7157E-03	1.9524E-03	2.6011E+11	6.4654E-03	8.8226E-03	1.4589E-03	2.1332E-03
Tc-99m	3.3287E-08	8.3526E-05	1.8679E-03	2.4856E+11	6.2337E-03	8.4395E-03	1.3958E-03	7.1527E-03
Ru-103	4.1978E-10	8.1603E-05	1.8826E-05	2.5077E+09	7.8613E-05	8.4910E-05	1.4065E-05	2.0566E-05
Ru-106	7.1539E-10	7.1096E-03	3.1587E-05	4.2074E+09	1.3397E-04	1.4245E-04	2.3599E-05	3.4506E-05
Rh-105	1.0488E-11	3.3931E-07	7.2395E-07	9.6460E+07	1.9641E-06	3.2758E-06	5.4104E-07	8.3616E-07
Te-127	5.1780E-09	3.5584E-05	2.3525E-04	3.1312E+10	9.6971E-04	1.0614E-03	1.7577E-04	6.9476E-04
Te-127m	5.2561E-09	2.3633E-03	2.3311E-04	3.1051E+10	9.8434E-04	1.0513E-03	1.7416E-04	2.5465E-04
Te-129	4.7622E-09	1.2054E-05	2.1552E-04	2.8519E+10	8.9183E-04	9.7255E-04	1.6103E-04	3.5363E-03
Te-129m	7.2796E-09	3.6989E-03	3.2744E-04	4.3616E+10	1.3633E-03	1.4769E-03	2.4463E-04	3.5770E-04
Te-131m	7.1325E-10	1.8323E-04	5.4404E-05	7.2499E+09	1.3357E-04	2.4646E-04	4.0665E-05	5.9457E-05
Te-132	1.6721E-08	4.0933E-03	9.0951E-04	1.2117E+11	3.1314E-03	4.1087E-03	6.7961E-04	9.9372E-04
I-131	1.3487E-10	9.3485E-07	5.9919E-08	7.1402E+06	1.4781E-05	9.1264E-08	3.5918E-08	2.7267E-05
I-132	2.8716E-08	5.5281E-05	7.4903E-05	8.8945E+09	3.2317E-03	1.1401E-04	4.2970E-05	7.1914E-03
I-133	5.8926E-12	1.6099E-07	5.5451E-08	6.6059E+06	6.5287E-07	8.4666E-08	3.1394E-08	3.1344E-05
I-134	8.9384E-18	1.2036E-06	1.6953E-06	2.0205E+08	9.8012E-13	2.9095E-06	9.9610E-07	1.7065E-04
Cs-134	7.1329E-07	6.9811E-01	3.1465E-02	4.1911E+12	1.3358E-01	1.4189E-01	2.3507E-02	3.4372E-02
Cs-136	4.4533E-08	8.2375E-03	2.0681E-03	2.7548E+11	8.3398E-03	9.3303E-03	1.5451E-03	2.2593E-03
Cs-137	3.9740E-07	2.6374E-01	1.7515E-02	2.3330E+12	7.4422E-02	7.8986E-02	1.3086E-02	1.9134E-02
Ba-140	3.9426E-11	3.3098E-06	1.8337E-06	2.4426E+08	7.3835E-06	8.2727E-06	1.3700E-06	2.0032E-06
La-140	5.4548E-11	7.7974E-06	2.7179E-06	3.6202E+08	1.0215E-05	1.2270E-05	2.0308E-06	3.7885E-06
Ce-141	3.0355E-10	5.7924E-05	1.3663E-05	1.8199E+09	5.6848E-05	6.1624E-05	1.0208E-05	1.4930E-05
Ce-143	8.9582E-12	1.0807E-06	6.5006E-07	8.6624E+07	1.6776E-06	2.9437E-06	4.8587E-07	7.1041E-07
Ce-144	9.0530E-10	7.0481E-03	3.9995E-05	5.3273E+09	1.6954E-04	1.8036E-04	2.9880E-05	4.3690E-05
Pr-143	1.3746E-10	2.4248E-05	6.3457E-06	8.4527E+08	2.5742E-05	2.8627E-05	4.7410E-06	6.9682E-06
Rb-89	1.6448E-38	7.1898E-06	1.3104E-05	1.8437E+09	3.0802E-33	9.2857E-05	1.0709E-05	1.5119E-05
Y-91m	1.3494E-12	4.5083E-08	3.1253E-07	4.1258E+07	2.5270E-07	1.4128E-06	2.3342E-07	6.9655E-06
Rh-103m	4.2153E-10	4.6142E-08	1.8821E-05	2.4860E+09	7.8941E-05	8.4804E-05	1.4058E-05	3.8160E-04
Te-125m	5.1929E-10	7.9653E-05	2.3158E-05	3.0847E+09	9.7249E-05	1.0444E-04	1.7302E-05	2.5298E-05

Te-131	1.6281E-10	4.6470E-06	1.4221E-05	1.8728E+09	3.0490E-05	6.7054E-05	1.0706E-05	5.3726E-04
Te-133	4.2347E-19	1.1762E-07	4.3123E-07	4.9879E+07	7.9304E-14	6.8867E-07	2.9159E-07	6.8917E-05
Te-133m	2.4562E-18	4.6480E-06	6.0173E-06	8.1363E+08	4.5999E-13	3.1201E-05	4.6202E-06	6.6713E-06
Te-134	9.9867E-21	2.2058E-06	8.1278E-06	1.1044E+09	1.8703E-15	4.3971E-05	6.2942E-06	9.0549E-06
Cs-134m	1.4062E-12	4.5384E-07	1.8081E-05	2.4200E+09	2.6334E-07	8.5391E-05	1.3619E-05	1.9845E-05
Cs-138	2.5318E-22	1.5509E-04	2.3824E-04	3.2564E+10	4.7414E-17	1.3547E-03	1.8633E-04	2.6698E-04
Total	1.3174E-06	1.0000E+00	0.0000E+00	0.0000E+00	2.4111E-01	2.5961E-01	4.2982E-02	8.0010E-02

Control Room Compartment Group Inventory Distribution:

Time (h) = 24.0000	Atmosphere	Sump
Noble gases (Ci)	1.8449E-08	0.0000E+00
Elemental I (Ci)	2.7991E-08	0.0000E+00
Organic I (Ci)	8.6570E-10	0.0000E+00
Aerosol I (Ci)	0.0000E+00	0.0000E+00
All Aerosols (Ci)	1.2701E-06	0.0000E+00
All Aerosols (kg)	5.1187E-12	0.0000E+00

Time (h) = 24.0000	Deposition Surfaces	Recirculating Filter
Noble gases (Ci)	0.0000E+00	0.0000E+00
Elemental I (Ci)	0.0000E+00	3.1497E-03
Organic I (Ci)	0.0000E+00	9.7413E-05
Aerosol I (Ci)	0.0000E+00	0.0000E+00
All Aerosols (Ci)	0.0000E+00	2.3786E-01
All Aerosols (kg)	0.0000E+00	9.5860E-07

Ruptured Steam Generator Compartment Nuclide Inventory (Ci) at Time (h) = 24.0000

Nuclide	Compartment Atmosphere	Dose Fract	Exposure (Ci-hr)	Decays (Bq-s)	Pathway 6 Inflow	Pathway 8 Outflow
Rb-86	4.4917E+00	2.5725E-04	1.0879E+02	1.4492E+16	4.6636E+00	3.2795E-03
Sr-89	7.0056E-02	2.4627E-05	1.6771E+00	2.2340E+14	7.0904E-02	4.9892E-05
Sr-90	6.5546E-03	7.1727E-05	1.5587E-01	2.0762E+13	6.5600E-03	4.6137E-06
Sr-91	5.2256E-03	2.3913E-07	3.3311E-01	4.4544E+13	2.9648E-02	2.0715E-05
Sr-92	2.8452E-05	2.6081E-08	4.8286E-02	6.4787E+12	1.2478E-02	8.5747E-06
Y-90	1.0294E-02	7.6901E-07	2.5721E-01	3.4268E+13	1.1401E-02	8.0150E-06
Y-91	8.8623E-01	3.6683E-04	2.1196E+01	2.8234E+15	8.9720E-01	6.3098E-04

Y-92	4.4733E-04	4.1639E-08	1.2799E-01	1.7129E+13	1.6116E-02	1.1289E-05
Y-93	2.0515E-03	9.5691E-08	1.2252E-01	1.6381E+13	1.0500E-02	7.3389E-06
Zr-95	1.2628E+00	2.5698E-04	3.0189E+01	4.0214E+15	1.2774E+00	8.9837E-04
Zr-97	7.7623E-03	4.8891E-07	3.1186E-01	4.1646E+13	2.0601E-02	1.4436E-05
Nb-95	1.8319E+00	9.6052E-05	4.3691E+01	5.8198E+15	1.8443E+00	1.2971E-03
Mo-99	8.5253E+01	3.2908E-03	2.3012E+03	3.0674E+17	1.0952E+02	7.6954E-02
Tc-99m	8.2199E+01	7.4360E-05	2.2131E+03	2.9474E+17	1.0478E+02	7.3630E-02
Ru-103	1.0366E+00	8.0985E-05	2.4865E+01	3.3122E+15	1.0557E+00	7.4242E-04
Ru-105	1.2157E-04	9.4030E-09	3.0934E-02	4.1446E+12	4.9829E-03	3.4554E-06
Ru-106	1.7666E+00	7.1111E-03	4.2047E+01	5.6007E+15	1.7712E+00	1.2457E-03
Rh-105	2.5899E-02	2.7456E-07	7.7961E-01	1.0398E+14	4.0622E-02	2.8525E-05
Te-127	1.2787E+01	3.4971E-05	3.0770E+02	4.0963E+16	1.3193E+01	9.2764E-03
Te-127m	1.2980E+01	2.3585E-03	3.0961E+02	4.1241E+16	1.3071E+01	9.1931E-03
Te-129	1.1760E+01	1.1879E-05	2.8264E+02	3.7461E+16	1.2086E+01	8.4975E-03
Te-129m	1.7976E+01	3.6655E-03	4.3183E+02	5.7524E+16	1.8361E+01	1.2913E-02
Te-131m	1.7613E+00	1.4104E-04	5.5734E+01	7.4353E+15	3.0533E+00	2.1430E-03
Te-132	4.1290E+01	3.6939E-03	1.0923E+03	1.4559E+17	5.1017E+01	3.5852E-02
I-131	1.9458E-01	3.0582E-05	2.6087E+00	3.4557E+14	2.5205E-03	2.4908E-06
I-132	4.2610E+01	5.3559E-04	9.6579E+02	1.2819E+17	3.2512E+00	3.1973E-03
I-133	8.4698E-03	6.2145E-07	2.8486E-01	3.7961E+13	2.4248E-03	2.3759E-06
I-134	1.2850E-08	3.0463E-07	5.7101E-01	7.5874E+13	7.7589E-02	7.3762E-05
Xe-133	1.4298E-03	1.0971E-10	1.8775E-02	2.4868E+12	1.9164E-06	2.1731E-09
Cs-134	1.7614E+03	6.9860E-01	4.1904E+04	5.5816E+18	1.7643E+03	1.2409E+00
Cs-136	1.0997E+02	8.0339E-03	2.6843E+03	3.5761E+17	1.1598E+02	8.1551E-02
Cs-137	9.8134E+02	2.6403E-01	2.3336E+04	3.1084E+18	9.8214E+02	6.9075E-01
Ba-139	5.9998E-08	1.2724E-09	1.8451E-02	2.4872E+12	9.3973E-03	6.3120E-06
Ba-140	9.7359E-02	3.2256E-06	2.3783E+00	3.1684E+14	1.0283E-01	7.2306E-05
La-140	1.3470E-01	7.3326E-06	3.4015E+00	4.5320E+14	1.5244E-01	1.0716E-04
La-141	1.0277E-04	8.1127E-09	3.7771E-02	5.0618E+12	6.6996E-03	4.6525E-06
La-142	3.6511E-08	2.2268E-09	3.5398E-03	4.7664E+11	1.6101E-03	1.0868E-06
Ce-141	7.4960E-01	5.7382E-05	1.8013E+01	2.3995E+15	7.6616E-01	5.3880E-04
Ce-143	2.2122E-02	8.5115E-07	6.8135E-01	9.0884E+13	3.6481E-02	2.5609E-05
Ce-144	2.2355E+00	7.0477E-03	5.3224E+01	7.0895E+15	2.2427E+00	1.5773E-03
Pr-143	3.3943E-01	2.3723E-05	8.2621E+00	1.1007E+15	3.5585E-01	2.5023E-04
Rb-89	4.0616E-29	1.1210E-07	2.7191E-01	3.8379E+13	7.8882E-01	4.2579E-04
Y-91m	3.3321E-03	2.2855E-08	2.1085E-01	2.8007E+13	1.7540E-02	1.2322E-05
Nb-95m	9.7175E-03	2.0396E-07	2.3311E-01	3.1050E+13	9.8993E-03	6.9618E-06
Nb-97	4.4503E-04	2.9705E-09	2.0006E-02	2.6638E+12	2.4240E-03	1.6568E-06

Rh-103m	1.0409E+00	4.5990E-08	2.4965E+01	3.3047E+15	1.0552E+00	7.4242E-04
Te-125m	1.2823E+00	7.9273E-05	3.0673E+01	4.0858E+15	1.2986E+00	9.1327E-04
Te-131	4.0204E-01	3.1396E-06	1.2787E+01	1.6827E+15	8.0265E-01	5.5299E-04
Te-133	1.0457E-09	1.3916E-08	6.7897E-02	8.8567E+12	2.2488E-02	2.0352E-05
Te-133m	6.0654E-09	2.6227E-07	4.5187E-01	6.1237E+13	3.4537E-01	2.2666E-04
Te-134	2.4661E-11	9.4030E-08	4.6111E-01	6.2816E+13	4.6954E-01	3.0109E-04
Xe-131m	6.8495E-05	8.5513E-13	5.8686E-04	7.7224E+10	9.8883E-09	1.1247E-11
Xe-133m	9.2658E-05	6.4769E-12	1.2621E-03	1.6723E+11	1.3709E-07	1.5544E-10
Cs-134m	3.4724E-03	7.9770E-08	4.2296E+00	5.6736E+14	1.0223E+00	7.0358E-04
Cs-138	6.2520E-13	5.0996E-06	1.0425E+01	1.4290E+15	1.3866E+01	8.6414E-03
Ba-141	4.1689E-27	1.1016E-10	5.9737E-04	8.3541E+10	1.4288E-03	8.0789E-07
Total	3.1793E+03	1.0000E+00	0.0000E+00	0.0000E+00	3.2260E+03	2.2683E+00

```
Dose Equivalent (Ci/cc) I-131 (Thyroid)          1.6293E-10
Dose Equivalent (Ci/cc) I-131 (CEDE)             2.4980E-10
Dose Equivalent (Ci/cc) I-131 (ICRP2 Thyroid)    6.2756E-10
Total I  (Ci)                                    4.2814E+01
Dose Equivalent (Ci/cc) Xe-133 (EDE)             5.5345E-13

Ruptured Steam Generator Compartment Group Inventory Distribution:

Time (h) =  24.0000      Atmosphere      Sump
Noble gases (Ci)         1.5910E-03   0.0000E+00
Elemental I (Ci)         4.1529E+01   0.0000E+00
Organic I (Ci)           1.2844E+00   0.0000E+00
Aerosol I (Ci)           0.0000E+00   0.0000E+00
All Aerosols (Ci)        3.1364E+03   0.0000E+00
All Aerosols (kg)        1.2640E-02   0.0000E+00

#######################################################################
    ALION RADTRAD Version 3.10 Rev 2 run on 12/01/2014  at 16:22:44

                Copyright © 2009 Alion Science and Technology
#######################################################################

Exclusion Area Boundary Doses:

Time (h) =  96.0000    Whole Body   Thyroid       TEDE
```

Delta dose (rem)	0.0000E+00	0.0000E+00	0.0000E+00
Accumulated dose (rem)	2.7535E-02	1.9754E+00	2.0533E+00

Low Population Zone Doses:

Time (h) = 96.0000	Whole Body	Thyroid	TEDE
Delta dose (rem)	0.0000E+00	0.0000E+00	0.0000E+00
Accumulated dose (rem)	4.9130E-03	3.5298E-01	3.6688E-01

Control Room Doses:

Time (h) = 96.0000	Whole Body	Thyroid	TEDE	Skin
Delta dose (rem)	2.3287E-09	4.5546E-06	4.7330E-06	1.0475E-07
Accumulated dose (rem)	8.2894E-04	1.7967E+00	1.8432E+00	3.3225E-02

****

RCS Compartment Nuclide Inventory (Ci) at Time (h) = 96.0000

Nuclide	Compartment Atmosphere	Dose Fract	Exposure (Ci-hr)	Decays (Bq-s)	Pathway 1 Outflow	Pathway 5 Outflow	Pathway 6 Outflow
Rb-86	1.1478E+01	2.4450E-04	1.1918E+03	1.5879E+17	3.5839E-01	2.5516E-01	4.6636E+00
Sr-89	1.9206E-01	2.4222E-05	1.9014E+01	2.5329E+15	5.4470E-03	3.9324E-03	7.0904E-02
Sr-90	1.8721E-02	7.1994E-05	1.8033E+00	2.4020E+14	5.0409E-04	3.6542E-04	6.5600E-03
Sr-91	7.8075E-05	7.4097E-08	1.1897E+00	1.5939E+14	2.2853E-03	7.9865E-04	2.9648E-02
Sr-92	8.1683E-13	7.1010E-09	1.5153E-01	2.0329E+13	9.6943E-04	1.2211E-04	1.2478E-02
Y-90	2.3622E-02	6.8293E-07	2.6328E+00	3.5088E+14	8.7625E-04	6.0379E-04	1.1401E-02
Y-91	2.4434E+00	3.6183E-04	2.4099E+02	3.2102E+16	6.8945E-02	4.9699E-02	8.9720E-01
Y-92	1.1613E-09	1.1053E-08	3.9164E-01	5.2426E+13	1.2406E-03	3.1122E-04	1.6116E-02
Y-93	4.1879E-05	3.0289E-08	4.4703E-01	5.9888E+13	8.0919E-04	2.9338E-04	1.0500E-02
Zr-95	3.4921E+00	2.5384E-04	3.4373E+02	4.5788E+16	9.8161E-02	7.0785E-02	1.2774E+00
Zr-97	1.1571E-03	1.9403E-07	1.4266E+00	1.9096E+14	1.5858E-03	7.4050E-04	2.0601E-02
Nb-95	5.1365E+00	9.5538E-05	5.0092E+02	6.6725E+16	1.4173E-01	1.0244E-01	1.8443E+00
Mo-99	1.1434E+02	2.3582E-03	1.9008E+04	2.5366E+18	8.4197E+00	5.4126E+00	1.0952E+02
Tc-99m	1.1032E+02	5.3393E-05	1.8317E+04	2.4422E+18	8.0550E+00	5.2049E+00	1.0478E+02
Ru-103	2.8086E+00	7.9194E-05	2.8027E+02	3.7338E+16	8.1125E-02	5.8307E-02	1.0557E+00
Ru-105	4.5616E-09	2.5373E-09	9.6215E-02	1.2896E+13	3.8546E-04	7.6002E-05	4.9829E-03
Ru-106	5.0182E+00	7.1183E-03	4.8515E+02	6.4623E+16	1.3611E-01	9.8577E-02	1.7712E+00

Rh-105	1.8050E-02	1.5669E-07	5.1283E+00	6.8522E+14	3.1238E-03	1.8385E-03	4.0622E-02
Te-127	3.5656E+01	3.4443E-05	3.4931E+03	4.6503E+17	1.0139E+00	7.2164E-01	1.3193E+01
Te-127m	3.6379E+01	2.3452E-03	3.5486E+03	4.7270E+17	1.0045E+00	7.2591E-01	1.3071E+01
Te-129	3.1578E+01	1.1561E-05	3.1708E+03	4.2032E+17	9.2888E-01	6.6286E-01	1.2086E+01
Te-129m	4.8271E+01	3.5687E-03	4.8462E+03	6.4562E+17	1.4110E+00	1.0127E+00	1.8361E+01
Te-131m	9.5331E-01	7.4454E-05	3.3912E+02	4.5331E+16	2.3486E-01	1.3161E-01	3.0533E+00
Te-132	6.2310E+01	2.7756E-03	9.4607E+03	1.2622E+18	3.9218E+00	2.5679E+00	5.1017E+01
I-131	9.7060E-01	7.0401E-05	6.9219E+01	9.2012E+15	1.5636E-04	5.9748E-03	2.5205E-03
I-132	6.4359E+01	4.4532E-04	9.2559E+03	1.2312E+18	2.0195E-01	2.2360E+00	3.2512E+00
I-133	2.1964E-03	2.7992E-07	1.4790E+00	1.9768E+14	1.5075E-04	6.6313E-04	2.4248E-03
I-134	6.9925E-33	7.9450E-08	1.7166E+00	2.2690E+14	4.8644E-03	1.3751E-03	7.7589E-02
Xe-133	5.5495E-03	2.2835E-10	4.5043E-01	5.9912E+13	1.1416E-07	4.2974E-05	1.9164E-06
Cs-134	5.0180E+03	7.0031E-01	4.8419E+05	6.4495E+19	1.3558E+02	9.8240E+01	1.7643E+03
Cs-136	2.6804E+02	7.4646E-03	2.8748E+04	3.8309E+18	8.9128E+00	6.2975E+00	1.1598E+02
Cs-137	2.8029E+03	2.6502E-01	2.6999E+05	3.5963E+19	7.5471E+01	5.4709E+01	9.8214E+02
Ba-139	3.2293E-23	3.7131E-10	6.2064E-02	8.3632E+12	7.3789E-04	5.0156E-05	9.3973E-03
Ba-140	2.3624E-01	2.9906E-06	2.5416E+01	3.3869E+15	7.9025E-03	5.5796E-03	1.0283E-01
La-140	2.9078E-01	6.3335E-06	3.3865E+01	4.5138E+15	1.1716E-02	7.9873E-03	1.5244E-01
La-141	8.9676E-10	2.1809E-09	1.1704E-01	1.5687E+13	5.1782E-04	9.3255E-05	6.6996E-03
La-142	9.1071E-22	6.4012E-10	1.1729E-02	1.5788E+12	1.2614E-04	9.4740E-06	1.6101E-03
Ce-141	2.0087E+00	5.5811E-05	2.0195E+02	2.6904E+16	5.8876E-02	4.2242E-02	7.6616E-01
Ce-143	1.3928E-02	4.6956E-07	4.3326E+00	5.7902E+14	2.8058E-03	1.6079E-03	3.6481E-02
Ce-144	6.3398E+00	7.0490E-03	6.1360E+02	8.1733E+16	1.7233E-01	1.2478E-01	2.2427E+00
Pr-143	8.3636E-01	2.2182E-05	8.9048E+01	1.1866E+16	2.7347E-02	1.9381E-02	3.5585E-01
Rb-89	3.2260-114	5.5648E-08	1.5559E+00	2.1864E+14	6.8275E-02	1.3123E-03	7.8882E-01
Y-91m	4.9785E-05	7.0797E-09	7.5286E-01	1.0019E+14	1.3484E-03	5.0458E-04	1.7540E-02
Nb-95m	2.6468E-02	1.9973E-07	2.6312E+00	3.5050E+14	7.6072E-04	5.4662E-04	9.8993E-03
Nb-97	6.6338E-05	1.1476E-09	8.9090E-02	1.1884E+13	1.8882E-04	4.8358E-05	2.4240E-03
Rh-103m	2.8203E+00	4.4977E-08	2.8142E+02	3.7259E+16	8.1072E-02	5.8537E-02	1.0552E+00
Te-125m	3.5343E+00	7.8175E-05	3.4866E+02	4.6446E+16	9.9791E-02	7.1921E-02	1.2986E+00
Te-131	2.1760E-01	1.6551E-06	7.7696E+01	1.0245E+16	6.2323E-02	3.0278E-02	8.0265E-01
Te-133	1.0034E-32	3.8212E-09	2.1491E-01	2.7687E+13	1.4301E-03	1.7110E-04	2.2488E-02
Te-133m	5.8199E-32	8.1934E-08	1.6272E+00	2.2036E+14	2.7413E-02	1.3188E-03	3.4537E-01
Te-134	5.4532E-42	3.1333E-08	1.7711E+00	2.4102E+14	3.7667E-02	1.4406E-03	4.6954E-01
Xe-131m	1.6971E-03	8.5140E-12	6.7350E-02	8.9177E+12	5.8877E-10	1.3246E-06	9.8883E-09
Xe-133m	2.3849E-04	1.1020E-11	2.4752E-02	3.2954E+12	8.1662E-09	2.8915E-06	1.3709E-07
Cs-134m	3.3316E-10	2.1633E-08	1.3221E+01	1.7733E+15	7.9366E-02	1.0645E-02	1.0223E+00
Cs-138	7.3326E-53	1.8318E-06	4.3165E+01	5.9078E+15	1.1269E+00	3.5286E-02	1.3866E+01

Ba-141	7.6453E-98	4.9680E-11	3.1053E-03	4.3280E+11	1.2123E-04	2.5907E-06	1.4288E-03
Total	8.6410E+03	1.0000E+00	0.0000E+00	0.0000E+00	2.4793E+02	1.7899E+02	3.2260E+03

Dose Equivalent (Ci/cc) I-131 (Thyroid)	1.0261E-10
Dose Equivalent (Ci/cc) I-131 (CEDE)	1.3005E-10
Dose Equivalent (Ci/cc) I-131 (ICRP2 Thyroid)	2.4934E-10
Total I (Ci)	6.5332E+01
Dose Equivalent (Ci/cc) Xe-133 (EDE)	4.6835E-13

RCS Compartment Group Inventory Distribution:

Time (h) = 96.0000	Atmosphere	Sump
Noble gases (Ci)	7.4851E-03	0.0000E+00
Elemental I (Ci)	6.3372E+01	0.0000E+00
Organic I (Ci)	1.9600E+00	0.0000E+00
Aerosol I (Ci)	0.0000E+00	0.0000E+00
All Aerosols (Ci)	8.5757E+03	0.0000E+00
All Aerosols (kg)	3.6092E-02	0.0000E+00

Intact Steam Generators Compartment Nuclide Inventory (Ci) at Time (h) = 96.0000

Nuclide	Compartment Atmosphere	Dose Fract	Exposure (Ci-hr)	Decays (Bq-s)	Pathway 5 Inflow	Pathway 7 Outflow
Rb-86	2.2215E-01	2.4242E-04	1.9969E+01	2.6607E+15	2.5516E-01	2.0914E-03
Sr-89	3.7171E-03	2.4157E-05	3.2045E-01	4.2690E+13	3.9324E-03	3.2306E-05
Sr-90	3.6233E-04	7.2038E-05	3.0493E-02	4.0617E+12	3.6542E-04	3.0057E-06
Sr-91	1.5111E-06	3.9612E-08	1.0748E-02	1.4452E+12	7.9865E-04	5.5059E-06
Sr-92	1.5809E-14	1.3035E-09	4.7008E-04	6.3304E+10	1.2211E-04	5.5669E-07
Y-90	4.5719E-04	6.6844E-07	4.3549E-02	5.8043E+12	6.0379E-04	4.9177E-06
Y-91	4.7290E-02	3.6102E-04	4.0633E+00	5.4129E+14	4.9699E-02	4.0834E-04
Y-92	2.2475E-11	3.3955E-09	2.0331E-03	2.7376E+11	3.1122E-04	1.8515E-06
Y-93	8.1052E-07	1.6818E-08	4.1946E-03	5.6387E+11	2.9338E-04	2.0443E-06
Zr-95	6.7587E-02	2.5333E-04	5.7970E+00	7.7224E+14	7.0785E-02	5.8165E-04
Zr-97	2.2394E-05	1.3887E-07	1.7255E-02	2.3142E+12	7.4050E-04	5.5234E-06
Nb-95	9.9412E-02	9.5455E-05	8.4577E+00	1.1266E+15	1.0244E-01	8.4211E-04
Mo-99	2.2129E+00	2.2016E-03	2.9988E+02	4.0031E+16	5.4126E+00	4.3447E-02
Tc-99m	2.1351E+00	4.9883E-05	2.8919E+02	3.8570E+16	5.2049E+00	4.1812E-02
Ru-103	5.4358E-02	7.8903E-05	4.7189E+00	6.2866E+14	5.8307E-02	4.7879E-04

Ru-105	8.8285E-11	7.4707E-10	4.7873E-04	6.4480E+10	7.6002E-05	4.2916E-07
Ru-106	9.7123E-02	7.1195E-03	8.1999E+00	1.0923E+15	9.8577E-02	8.1070E-04
Rh-105	3.4934E-04	1.3636E-07	7.5422E-02	1.0085E+13	1.8385E-03	1.4467E-05
Te-127	6.9008E-01	3.4342E-05	5.8857E+01	7.8355E+15	7.2164E-01	5.9186E-03
Te-127m	7.0407E-01	2.3431E-03	5.9914E+01	7.9810E+15	7.2591E-01	5.9674E-03
Te-129	6.1117E-01	1.1509E-05	5.3339E+01	7.0709E+15	6.6286E-01	5.4394E-03
Te-129m	9.3424E-01	3.5530E-03	8.1535E+01	1.0862E+16	1.0127E+00	8.3132E-03
Te-131m	1.8450E-02	6.2773E-05	4.8317E+00	6.4645E+14	1.3161E-01	1.0253E-03
Te-132	1.2059E+00	2.6222E-03	1.5104E+02	2.0156E+16	2.5679E+00	2.0692E-02
I-131	1.8785E-02	7.7578E-05	1.2890E+00	1.7137E+14	5.9748E-03	5.7674E-05
I-132	1.2456E+00	4.4029E-04	1.5465E+02	2.0586E+16	2.2360E+00	1.9638E-02
I-133	4.2509E-05	2.2565E-07	2.0148E-02	2.6995E+12	6.6313E-04	5.3865E-06
I-134	1.3533E-34	8.6389E-09	3.1542E-03	4.2340E+11	1.3751E-03	4.8267E-06
Xe-133	1.0740E-04	2.5099E-10	8.3665E-03	1.1131E+12	4.2974E-05	4.1931E-07
Cs-134	9.7117E+01	7.0059E-01	8.1857E+03	1.0903E+18	9.8240E+01	8.0801E-01
Cs-136	5.1877E+00	7.3714E-03	4.7976E+02	6.3935E+16	6.2975E+00	5.1537E-02
Cs-137	5.4247E+01	2.6518E-01	4.5654E+03	6.0811E+17	5.4709E+01	4.5001E-01
Ba-139	6.2499E-25	3.4747E-11	9.8150E-05	1.3246E+10	5.0156E-05	1.4741E-07
Ba-140	4.5723E-03	2.9522E-06	4.2399E-01	5.6504E+13	5.5796E-03	4.5656E-05
La-140	5.6278E-03	6.1654E-06	5.5710E-01	7.4262E+13	7.9873E-03	6.4918E-05
La-141	1.7356E-11	5.7469E-10	5.2118E-04	7.0198E+10	9.3255E-05	5.0398E-07
La-142	1.7626E-23	6.7009E-11	2.0749E-05	2.7977E+09	9.4740E-06	3.0336E-08
Ce-141	3.8876E-02	5.5555E-05	3.3971E+00	4.5258E+14	4.2242E-02	3.4675E-04
Ce-143	2.6956E-04	4.0312E-07	6.2857E-02	8.4070E+12	1.6079E-03	1.2589E-05
Ce-144	1.2270E-01	7.0492E-03	1.0370E+01	1.3813E+15	1.2478E-01	1.0261E-03
Pr-143	1.6187E-02	2.1931E-05	1.4878E+00	1.9827E+14	1.9381E-02	1.5871E-04
Rb-89	6.2437-116	9.5592E-10	4.5166E-04	6.3838E+10	1.3123E-03	9.8030E-07
Y-91m	9.6354E-07	3.8108E-09	6.8482E-03	9.1496E+11	5.0458E-04	3.5021E-06
Nb-95m	5.1226E-04	1.9903E-07	4.4311E-02	5.9027E+12	5.4662E-04	4.4885E-06
Nb-97	1.2839E-06	7.6176E-10	9.9932E-04	1.3345E+11	4.8358E-05	3.3220E-07
Rh-103m	5.4584E-02	4.4814E-08	4.7386E+00	6.2740E+14	5.8537E-02	4.8077E-04
Te-125m	6.8403E-02	7.7996E-05	5.8786E+00	7.8311E+14	7.1921E-02	5.9091E-04
Te-131	4.2115E-03	1.3904E-06	1.1030E+00	1.4558E+14	3.0278E-02	2.3429E-04
Te-133	1.9419E-34	2.9639E-10	2.8169E-04	3.7162E+10	1.7110E-04	4.4005E-07
Te-133m	1.1264E-33	5.1296E-09	1.7215E-03	2.3351E+11	1.3188E-03	2.7620E-06
Te-134	1.0554E-43	1.4780E-09	1.4118E-03	1.9255E+11	1.4406E-03	2.3486E-06
Xe-131m	3.2846E-05	9.6885E-12	1.2952E-03	1.7150E+11	1.3246E-06	1.3930E-08
Xe-133m	4.6157E-06	1.1988E-11	4.5505E-04	6.0602E+10	2.8915E-06	2.8062E-08

Cs-134m	6.4480E-12	4.2448E-09	4.3841E-02	5.9041E+12	1.0645E-02	5.0209E-05
Cs-138	1.4191E-54	6.6489E-08	2.6476E-02	3.6342E+12	3.5286E-02	4.5962E-05
Ba-141	1.4797E-99	1.0236E-12	1.0812E-06	1.5143E+08	2.5907E-06	2.1919E-09
Total	1.6724E+02	1.0000E+00	0.0000E+00	0.0000E+00	1.7899E+02	1.4702E+00

Dose Equivalent (Ci/cc) I-131 (Thyroid)	3.1645E-12
Dose Equivalent (Ci/cc) I-131 (CEDE)	4.0106E-12
Dose Equivalent (Ci/cc) I-131 (ICRP2 Thyroid)	7.6894E-12
Total I (Ci)	1.2644E+00
Dose Equivalent (Ci/cc) Xe-133 (EDE)	1.4443E-14

Intact Steam Generators Compartment Group Inventory Distribution:

Time (h) = 96.0000	Atmosphere	Sump
Noble gases (Ci)	1.4487E-04	0.0000E+00
Elemental I (Ci)	1.2265E+00	0.0000E+00
Organic I (Ci)	3.7933E-02	0.0000E+00
Aerosol I (Ci)	0.0000E+00	0.0000E+00
All Aerosols (Ci)	1.6597E+02	0.0000E+00
All Aerosols (kg)	6.9852E-04	0.0000E+00

Control Room Compartment Nuclide Inventory (Ci) at Time (h) = 96.0000

Nuclide	Compartment Atmosphere	Dose Fract	Exposure (Ci-hr)	Decays (Bq-s)	Compartment Recirc Filtr	Pathway 2 Inflow	Pathway 3 Inflow	Pathway 4 Outflow
Rb-86	7.9866-208	2.6173E-04	8.3164E-05	1.1078E+10	3.0472E-04	3.7515E-04	6.2133E-05	9.0851E-05
Sr-89	1.3363-209	2.4714E-05	1.2647E-06	1.6842E+08	5.0985E-06	5.6966E-06	9.4463E-07	2.1912E-06
Y-91	1.7001-208	3.6852E-04	1.6000E-05	2.1312E+09	6.4866E-05	7.2160E-05	1.1954E-05	1.8133E-05
Y-92	8.0800-218	1.2418E-07	2.8683E-07	3.8175E+07	3.0828E-14	1.3048E-06	2.1443E-07	4.8454E-06
Zr-95	2.4298-208	2.5807E-04	2.2780E-05	3.0344E+09	9.2706E-05	1.0274E-04	1.7019E-05	2.4886E-05
Nb-95	3.5740-208	9.6231E-05	3.2891E-05	4.3811E+09	1.3636E-04	1.4833E-04	2.4573E-05	3.7895E-05
Mo-99	7.9555-207	3.7157E-03	1.9524E-03	2.6011E+11	3.0353E-03	8.8226E-03	1.4589E-03	2.1332E-03
Tc-99m	7.6758-207	8.3526E-05	1.8679E-03	2.4856E+11	2.9286E-03	8.4395E-03	1.3958E-03	2.2643E-02
Ru-103	1.9542-208	8.1603E-05	1.8826E-05	2.5077E+09	7.4560E-05	8.4910E-05	1.4065E-05	2.0566E-05
Ru-106	3.4917-208	7.1096E-03	3.1587E-05	4.2075E+09	1.3322E-04	1.4245E-04	2.3599E-05	3.4506E-05
Rh-105	1.2559-210	3.3931E-07	7.2395E-07	9.6460E+07	4.7918E-07	3.2758E-06	5.4104E-07	9.7265E-07
Te-127	2.4809-207	3.5584E-05	2.3525E-04	3.1312E+10	9.4655E-04	1.0614E-03	1.7577E-04	2.0214E-03
Te-127m	2.5312-207	2.3633E-03	2.3311E-04	3.1051E+10	9.6574E-04	1.0513E-03	1.7416E-04	2.5465E-04

Te-129	2.1972-207	1.2054E-05	2.1552E-04	2.8519E+10	8.3831E-04	9.7255E-04	1.6103E-04	1.3539E-02
Te-129m	3.3587-207	3.6989E-03	3.2744E-04	4.3616E+10	1.2815E-03	1.4769E-03	2.4463E-04	3.5770E-04
Te-131m	6.6331-209	1.8323E-04	5.4404E-05	7.2499E+09	2.5307E-05	2.4646E-04	4.0665E-05	5.9457E-05
Te-132	4.3355-207	4.0933E-03	9.0951E-04	1.2117E+11	1.6541E-03	4.1087E-03	6.7961E-04	9.9372E-04
I-131	2.3812-202	9.3499E-07	5.9929E-08	7.1414E+06	2.5786E-05	9.1264E-08	3.5918E-08	3.7783E-04
I-132	1.5464-206	5.5283E-05	7.4905E-05	8.8948E+09	1.7085E-03	1.1401E-04	4.2970E-05	2.8752E-02
I-133	1.1332-204	1.6099E-07	5.5452E-08	6.6059E+06	5.9265E-08	8.4666E-08	3.1394E-08	4.4785E-04
I-134	3.5877-234	1.2036E-06	1.6953E-06	2.0205E+08	1.8669E-37	2.9095E-06	9.9610E-07	6.8188E-04
Cs-134	3.4915-205	6.9811E-01	3.1465E-02	4.1911E+12	1.3321E-01	1.4189E-01	2.3507E-02	3.4372E-02
Cs-136	1.8650-206	8.2375E-03	2.0681E-03	2.7549E+11	7.1157E-03	9.3303E-03	1.5451E-03	2.2593E-03
Cs-137	1.9502-205	2.6374E-01	1.7515E-02	2.3330E+12	7.4408E-02	7.8986E-02	1.3086E-02	1.9134E-02
Ba-140	1.6438-209	3.3098E-06	1.8337E-06	2.4426E+08	6.2716E-06	8.2727E-06	1.3700E-06	2.0032E-06
La-140	2.0233-209	7.7974E-06	2.7179E-06	3.6202E+08	7.7194E-06	1.2270E-05	2.0308E-06	6.2709E-06
Ce-141	1.3976-208	5.7924E-05	1.3663E-05	1.8199E+09	5.3325E-05	6.1624E-05	1.0208E-05	1.4956E-05
Ce-143	9.6912-211	1.0807E-06	6.5006E-07	8.6624E+07	3.6975E-07	2.9437E-06	4.8587E-07	7.1041E-07
Ce-144	4.4112-208	7.0481E-03	3.9995E-05	5.3273E+09	1.6830E-04	1.8036E-04	2.9880E-05	4.3690E-05
Pr-143	5.8194-209	2.4248E-05	6.3457E-06	8.4527E+08	2.2203E-05	2.8627E-05	4.7410E-06	7.0771E-06
Rb-89	2.2233-322	7.1898E-06	1.3104E-05	1.8437E+09	8.5642-119	9.2857E-05	1.0709E-05	1.5119E-05
Y-91m	3.4640-213	4.5083E-08	3.1253E-07	4.1258E+07	1.3216E-09	1.4128E-06	2.3342E-07	2.7034E-05
Nb-97	4.6158-213	8.4557E-09	4.2790E-08	5.7188E+06	1.7611E-09	2.0497E-07	3.2329E-08	1.2207E-06
Rh-103m	1.9624-208	4.6142E-08	1.8821E-05	2.4860E+09	7.4871E-05	8.4804E-05	1.4058E-05	1.4757E-03
Te-125m	2.4592-208	7.9653E-05	2.3158E-05	3.0847E+09	9.3825E-05	1.0444E-04	1.7302E-05	2.5298E-05
Te-131	1.5141-209	4.6470E-06	1.4221E-05	1.8728E+09	5.7767E-06	6.7054E-05	1.0706E-05	2.1179E-03
Te-133	6.9815-241	1.1762E-07	4.3123E-07	4.9879E+07	2.6637E-37	6.8867E-07	2.9159E-07	2.7621E-04
Te-133m	4.0495-240	4.6480E-06	6.0173E-06	8.1363E+08	1.5450E-36	3.1201E-05	4.6202E-06	6.6713E-06
Te-134	3.7943-250	2.2058E-06	8.1278E-06	1.1044E+09	1.4477E-46	4.3971E-05	6.2942E-06	9.0549E-06
Cs-134m	2.3181-218	4.5384E-07	1.8081E-05	2.4200E+09	8.8444E-15	8.5391E-05	1.3619E-05	1.9845E-05
Cs-138	5.1020-261	1.5509E-04	2.3824E-04	3.2564E+10	1.9466E-57	1.3547E-03	1.8633E-04	2.6698E-04
Total	5.0904E-09	1.0000E+00	0.0000E+00	0.0000E+00	2.2939E-01	2.5961E-01	4.2982E-02	1.3258E-01

Ruptured Steam Generator Compartment Nuclide Inventory (Ci) at Time (h) = 96.0000

Nuclide	Compartment Atmosphere	Dose Fract	Exposure (Ci-hr)	Decays (Bq-s)	Pathway 6 Inflow	Pathway 8 Outflow
Rb-86	4.0180E+00	2.4441E-04	4.1470E+02	5.5255E+16	4.6636E+00	3.2795E-03
Sr-89	6.7229E-02	2.4220E-05	6.6180E+00	8.8162E+14	7.0904E-02	4.9892E-05
Sr-90	6.5533E-03	7.1996E-05	6.2775E-01	8.3617E+13	6.5600E-03	4.6137E-06
Sr-91	2.7330E-05	7.2149E-08	4.0325E-01	5.4034E+13	2.9648E-02	2.0715E-05

Sr-92	2.8593E-13	6.5146E-09	4.8392E-02	6.4935E+12	1.2478E-02	8.5747E-06
Y-90	8.2690E-03	6.8228E-07	9.1562E-01	1.2203E+14	1.1401E-02	8.0150E-06
Y-91	8.5532E-01	3.6179E-04	8.3879E+01	1.1174E+16	8.9720E-01	6.3098E-04
Y-92	4.0650E-10	1.0566E-08	1.3031E-01	1.7448E+13	1.6116E-02	1.1289E-05
Y-93	1.4660E-05	2.9541E-08	1.5177E-01	2.0335E+13	1.0500E-02	7.3389E-06
Zr-95	1.2224E+00	2.5382E-04	1.1964E+02	1.5937E+16	1.2774E+00	8.9837E-04
Zr-97	4.0504E-04	1.9129E-07	4.8958E-01	6.5540E+13	2.0601E-02	1.4436E-05
Nb-95	1.7980E+00	9.5535E-05	1.7436E+02	2.3226E+16	1.8443E+00	1.2971E-03
Mo-99	4.0023E+01	2.3513E-03	6.5971E+03	8.8039E+17	1.0952E+02	7.6954E-02
Tc-99m	3.8616E+01	5.3238E-05	6.3575E+03	8.4767E+17	1.0478E+02	7.3630E-02
Ru-103	9.8315E-01	7.9182E-05	9.7547E+01	1.2995E+16	1.0557E+00	7.4242E-04
Ru-105	1.5968E-09	2.4008E-09	3.1690E-02	4.2483E+12	4.9829E-03	3.4554E-06
Ru-106	1.7566E+00	7.1184E-03	1.6888E+02	2.2495E+16	1.7712E+00	1.2457E-03
Rh-105	6.3185E-03	1.5577E-07	1.7747E+00	2.3713E+14	4.0622E-02	2.8525E-05
Te-127	1.2481E+01	3.4438E-05	1.2158E+03	1.6185E+17	1.3193E+01	9.2764E-03
Te-127m	1.2734E+01	2.3451E-03	1.2352E+03	1.6454E+17	1.3071E+01	9.1931E-03
Te-129	1.1054E+01	1.1559E-05	1.1035E+03	1.4628E+17	1.2086E+01	8.4975E-03
Te-129m	1.6897E+01	3.5681E-03	1.6866E+03	2.2470E+17	1.8361E+01	1.2913E-02
Te-131m	3.3370E-01	7.3913E-05	1.1719E+02	1.5665E+16	3.0533E+00	2.1430E-03
Te-132	2.1812E+01	2.7689E-03	3.2853E+03	4.3831E+17	5.1017E+01	3.5852E-02
I-131	3.3976E-01	7.0742E-05	2.4212E+01	3.2185E+15	2.5205E-03	2.4908E-06
I-132	2.2529E+01	4.4653E-04	3.2307E+03	4.2979E+17	3.2512E+00	3.1973E-03
I-133	7.6886E-04	2.7957E-07	5.1419E-01	6.8742E+13	2.4248E-03	2.3759E-06
I-134	2.4477E-33	7.5923E-08	5.7101E-01	7.5874E+13	7.7589E-02	7.3762E-05
Xe-133	1.9426E-03	2.2945E-10	1.5755E-01	2.0956E+13	1.9164E-06	2.1731E-09
Cs-134	1.7565E+03	7.0032E-01	1.6855E+05	2.2451E+19	1.7643E+03	1.2409E+00
Cs-136	9.3828E+01	7.4605E-03	1.0002E+04	1.3328E+18	1.1598E+02	8.1551E-02
Cs-137	9.8115E+02	2.6502E-01	9.3986E+04	1.2519E+19	9.8214E+02	6.9075E-01
Ba-139	1.1304E-23	3.1712E-10	1.8451E-02	2.4872E+12	9.3973E-03	6.3120E-06
Ba-140	8.2697E-02	2.9890E-06	8.8425E+00	1.1783E+15	1.0283E-01	7.2306E-05
La-140	1.0179E-01	6.3261E-06	1.1775E+01	1.5694E+15	1.5244E-01	1.0716E-04
La-141	3.1391E-10	2.0521E-09	3.8336E-02	5.1394E+12	6.6996E-03	4.6525E-06
La-142	3.1879E-22	5.5500E-10	3.5399E-03	4.7665E+11	1.6101E-03	1.0868E-06
Ce-141	7.0314E-01	5.5800E-05	7.0283E+01	9.3634E+15	7.6616E-01	5.3880E-04
Ce-143	4.8755E-03	4.6651E-07	1.4984E+00	2.0025E+14	3.6481E-02	2.5609E-05
Ce-144	2.2193E+00	7.0490E-03	2.1359E+02	2.8451E+16	2.2427E+00	1.5773E-03
Pr-143	2.9277E-01	2.2171E-05	3.0982E+01	4.1285E+15	3.5585E-01	2.5023E-04
Rb-89	1.1293-114	2.7938E-08	2.7191E-01	3.8379E+13	7.8882E-01	4.2579E-04

Y-91m	1.7427E-05	6.9044E-09	2.5558E-01	3.4019E+13	1.7540E-02	1.2322E-05
Nb-95m	9.2651E-03	1.9970E-07	9.1579E-01	1.2199E+14	9.8993E-03	6.9618E-06
Nb-97	2.3222E-05	1.1174E-09	3.0195E-02	4.0276E+12	2.4240E-03	1.6568E-06
Rh-103m	9.8725E-01	4.4971E-08	9.7949E+01	1.2968E+16	1.0552E+00	7.4242E-04
Te-125m	1.2372E+00	7.8167E-05	1.2136E+02	1.6166E+16	1.2986E+00	9.1327E-04
Te-131	7.6172E-02	1.6409E-06	2.6815E+01	3.5358E+15	8.0265E-01	5.5299E-04
Te-133	3.5123E-33	3.4682E-09	6.7897E-02	8.8567E+12	2.2488E-02	2.0352E-05
Te-133m	2.0372E-32	6.5365E-08	4.5187E-01	6.1237E+13	3.4537E-01	2.2666E-04
Te-134	1.9089E-42	2.3435E-08	4.6111E-01	6.2816E+13	4.6954E-01	3.0109E-04
Xe-131m	5.9407E-04	8.5607E-12	2.3573E-02	3.1213E+12	9.8883E-09	1.1247E-11
Xe-133m	8.3484E-05	1.1071E-11	8.6562E-03	1.1525E+12	1.3709E-07	1.5544E-10
Cs-134m	1.1662E-10	1.9947E-08	4.2435E+00	5.6930E+14	1.0223E+00	7.0358E-04
Cs-138	2.5668E-53	1.2710E-06	1.0425E+01	1.4290E+15	1.3866E+01	8.6414E-03
Ba-141	2.6762E-98	2.7455E-11	5.9737E-04	8.3541E+10	1.4288E-03	8.0789E-07
Total	3.0248E+03	1.0000E+00	0.0000E+00	0.0000E+00	3.2260E+03	2.2683E+00

Dose Equivalent (Ci/cc) I-131 (Thyroid)	1.7170E-10
Dose Equivalent (Ci/cc) I-131 (CEDE)	2.1762E-10
Dose Equivalent (Ci/cc) I-131 (ICRP2 Thyroid)	4.1723E-10
Total I (Ci)	2.2869E+01
Dose Equivalent (Ci/cc) Xe-133 (EDE)	7.8370E-13

Ruptured Steam Generator Compartment Group Inventory Distribution:

Time (h) = 96.0000	Atmosphere	Sump
Noble gases (Ci)	2.6202E-03	0.0000E+00
Elemental I (Ci)	2.2183E+01	0.0000E+00
Organic I (Ci)	6.8608E-01	0.0000E+00
Aerosol I (Ci)	0.0000E+00	0.0000E+00
All Aerosols (Ci)	3.0019E+03	0.0000E+00
All Aerosols (kg)	1.2634E-02	0.0000E+00

```
#######################################################################
    ALION RADTRAD Version 3.10 Rev 2 run on 12/01/2014  at 16:22:50

                Copyright © 2009 Alion Science and Technology
#######################################################################
```

Exclusion Area Boundary Doses:

Time (h) = 720.0000	Whole Body	Thyroid	TEDE
Delta dose (rem)	0.0000E+00	0.0000E+00	0.0000E+00
Accumulated dose (rem)	2.7535E-02	1.9754E+00	2.0533E+00

Low Population Zone Doses:

Time (h) = 720.0000	Whole Body	Thyroid	TEDE
Delta dose (rem)	0.0000E+00	0.0000E+00	0.0000E+00
Accumulated dose (rem)	4.9130E-03	3.5298E-01	3.6688E-01

Control Room Doses:

Time (h) = 720.0000	Whole Body	Thyroid	TEDE	Skin
Delta dose (rem)	4.6016E-11	2.4850-200	4.6016E-11	1.5060E-08
Accumulated dose (rem)	8.2894E-04	1.7967E+00	1.8432E+00	3.3225E-02

****

RCS Compartment Nuclide Inventory (Ci) at Time (h) = 720.0000

Nuclide	Compartment Atmosphere	Dose Fract	Exposure (Ci-hr)	Decays (Bq-s)	Pathway 1 Outflow	Pathway 5 Outflow	Pathway 6 Outflow
Rb-86	4.3696E+00	1.6153E-04	5.7830E+03	7.7058E+17	3.5839E-01	2.5516E-01	4.6636E+00
Sr-89	1.3441E-01	2.0777E-05	1.1979E+02	1.5958E+16	5.4470E-03	3.9324E-03	7.0904E-02
Sr-90	1.8689E-02	7.3246E-05	1.3475E+01	1.7949E+15	5.0409E-04	3.6542E-04	6.5600E-03
Sr-91	1.3170E-24	1.0097E-08	1.1908E+00	1.5954E+14	2.2853E-03	7.9865E-04	2.9648E-02
Sr-92	3.9580E-82	9.6681E-10	1.5153E-01	2.0329E+13	9.6943E-04	1.2211E-04	1.2478E-02
Y-90	1.8701E-02	5.2123E-07	1.4759E+01	1.9661E+15	8.7625E-04	6.0379E-04	1.1401E-02
Y-91	1.7957E+00	3.1749E-04	1.5531E+03	2.0689E+17	6.8945E-02	4.9699E-02	8.9720E-01
Y-92	1.0070E-62	1.5049E-09	3.9164E-01	5.2426E+13	1.2406E-03	3.1122E-04	1.6116E-02
Y-93	1.0561E-23	4.1294E-09	4.4763E-01	5.9969E+13	8.0919E-04	2.9338E-04	1.0500E-02
Zr-95	2.6349E+00	2.2549E-04	2.2426E+03	2.9875E+17	9.8161E-02	7.0785E-02	1.2774E+00
Zr-97	8.8800E-15	2.6934E-08	1.4545E+00	1.9472E+14	1.5858E-03	7.4050E-04	2.0601E-02
Nb-95	4.2829E+00	8.9318E-05	3.4396E+03	4.5818E+17	1.4173E-01	1.0244E-01	1.8443E+00
Mo-99	1.6296E-01	5.0423E-04	2.9850E+04	3.9846E+18	8.4197E+00	5.4126E+00	1.0952E+02
Tc-99m	1.5723E-01	1.1421E-05	2.8778E+04	3.8381E+18	8.0550E+00	5.2049E+00	1.0478E+02

Ru-103	1.7752E+00	6.4846E-05	1.6856E+03	2.2456E+17	8.1125E-02	5.8307E-02	1.0557E+00
Ru-105	2.2501E-51	3.4546E-10	9.6215E-02	1.2896E+13	3.8546E-04	7.6002E-05	4.9829E-03
Ru-106	4.7785E+00	7.0739E-03	3.5411E+03	4.7168E+17	1.3611E-01	9.8577E-02	1.7712E+00
Rh-105	8.7941E-08	2.5145E-08	6.0446E+00	8.0788E+14	3.1238E-03	1.8385E-03	4.0622E-02
Te-127	3.0221E+01	3.2218E-05	2.3998E+04	3.1948E+18	1.0139E+00	7.2164E-01	1.3193E+01
Te-127m	3.0835E+01	2.2018E-03	2.4470E+04	3.2596E+18	1.0045E+00	7.2591E-01	1.3071E+01
Te-129	1.8469E+01	9.1435E-06	1.8418E+04	2.4417E+18	9.2888E-01	6.6286E-01	1.2086E+01
Te-129m	2.8233E+01	2.8228E-03	2.8154E+04	3.7509E+18	1.4110E+00	1.0127E+00	1.8361E+01
Te-131m	5.2217E-07	1.1363E-05	3.8014E+02	5.0827E+16	2.3486E-01	1.3161E-01	3.0533E+00
Te-132	2.4687E-01	6.5697E-04	1.6447E+04	2.1949E+18	3.9218E+00	2.5679E+00	5.1017E+01
I-131	1.2189E-01	4.8004E-05	3.4667E+02	4.6185E+16	1.5636E-04	5.9748E-03	2.5205E-03
I-132	2.5499E-01	1.0790E-04	1.6472E+04	2.1922E+18	2.0195E-01	2.2360E+00	3.2512E+00
I-133	2.0456E-12	3.9795E-08	1.5443E+00	2.0646E+14	1.5075E-04	6.6313E-04	2.4248E-03
I-134	3.7616-247	1.0817E-08	1.7166E+00	2.2690E+14	4.8644E-03	1.3751E-03	7.7589E-02
Xe-133	1.9839E-04	1.0387E-10	1.5049E+00	2.0054E+14	1.1416E-07	4.2974E-05	1.9164E-06
Cs-134	4.8992E+03	7.0462E-01	3.5782E+06	4.7662E+20	1.3558E+02	9.8240E+01	1.7643E+03
Cs-136	6.7724E+01	4.2267E-03	1.1956E+05	1.5934E+19	8.9128E+00	6.2975E+00	1.1598E+02
Cs-137	2.7983E+03	2.6963E-01	2.0176E+06	2.6874E+20	7.5471E+01	5.4709E+01	9.8214E+02
Ba-139	1.6850-159	5.0554E-11	6.2064E-02	8.3632E+12	7.3789E-04	5.0156E-05	9.3973E-03
Ba-140	5.7414E-02	1.6702E-06	1.0426E+02	1.3895E+16	7.9025E-03	5.5796E-03	1.0283E-01
La-140	6.6133E-02	3.2022E-06	1.2576E+02	1.6760E+16	1.1716E-02	7.9873E-03	1.5244E-01
La-141	1.4307E-57	2.9693E-10	1.1704E-01	1.5687E+13	5.1782E-04	9.3255E-05	6.6996E-03
La-142	1.3045-143	8.7153E-11	1.1729E-02	1.5788E+12	1.2614E-04	9.4740E-06	1.6101E-03
Ce-141	1.1537E+00	4.3794E-05	1.1639E+03	1.5506E+17	5.8876E-02	4.2242E-02	7.6616E-01
Ce-143	2.8294E-08	7.3665E-08	4.9923E+00	6.6734E+14	2.8058E-03	1.6079E-03	3.6481E-02
Ce-144	5.9504E+00	6.9552E-03	4.4468E+03	5.9232E+17	1.7233E-01	1.2478E-01	2.2427E+00
Pr-143	2.2183E-01	1.2823E-05	3.7809E+02	5.0386E+16	2.7347E-02	1.9381E-02	3.5585E-01
Rb-89	0.0000E+00	7.5765E-09	1.5559E+00	2.1864E+14	6.8275E-02	1.3123E-03	7.8882E-01
Y-91m	8.3981E-25	9.6476E-10	7.5353E-01	1.0028E+14	1.3484E-03	5.0458E-04	1.7540E-02
Nb-95m	1.9552E-02	1.7350E-07	1.6788E+01	2.2363E+15	7.6072E-04	5.4662E-04	9.8993E-03
Nb-97	5.0911E-16	1.5906E-10	9.0691E-02	1.2098E+13	1.8882E-04	4.8358E-05	2.4240E-03
Rh-103m	1.7825E+00	3.6830E-08	1.6926E+03	2.2411E+17	8.1072E-02	5.8537E-02	1.0552E+00
Te-125m	2.5904E+00	6.8505E-05	2.2441E+03	2.9895E+17	9.9791E-02	7.1921E-02	1.2986E+00
Te-131	1.1919E-07	2.5250E-07	8.7060E+01	1.1483E+16	6.2323E-02	3.0278E-02	8.0265E-01
Te-133	3.6450-236	5.2026E-10	2.1491E-01	2.7687E+13	1.4301E-03	1.7110E-04	2.2488E-02
Te-133m	2.1142-235	1.1155E-08	1.6272E+00	2.2036E+14	2.7413E-02	1.3188E-03	3.4537E-01
Te-134	1.2763-311	4.2660E-09	1.7711E+00	2.4102E+14	3.7667E-02	1.4406E-03	4.6954E-01
Xe-131m	3.3354E-03	4.2594E-11	2.4748E+00	3.2952E+14	5.8877E-10	1.3246E-06	9.8883E-09

Xe-133m	7.4206E-08	2.7075E-12	4.4667E-02	5.9559E+12	8.1662E-09	2.8915E-06	1.3709E-07
Cs-134m	5.6144E-75	2.9453E-09	1.3221E+01	1.7733E+15	7.9366E-02	1.0645E-02	1.0223E+00
Cs-138	0.0000E+00	2.4941E-07	4.3165E+01	5.9078E+15	1.1269E+00	3.5286E-02	1.3866E+01
Ba-141	0.0000E+00	6.7639E-12	3.1053E-03	4.3280E+11	1.2123E-04	2.5907E-06	1.4288E-03
Total	7.9056E+03	1.0000E+00	0.0000E+00	0.0000E+00	2.4793E+02	1.7899E+02	3.2260E+03

Dose Equivalent (Ci/cc) I-131 (Thyroid)	9.3492E-12
Dose Equivalent (Ci/cc) I-131 (CEDE)	9.4579E-12
Dose Equivalent (Ci/cc) I-131 (ICRP2 Thyroid)	9.9304E-12
Total I (Ci)	3.7688E-01
Dose Equivalent (Ci/cc) Xe-133 (EDE)	7.8045E-14

RCS Compartment Group Inventory Distribution:

Time (h) = 720.0000	Atmosphere	Sump
Noble gases (Ci)	3.5339E-03	0.0000E+00
Elemental I (Ci)	3.6557E-01	0.0000E+00
Organic I (Ci)	1.1306E-02	0.0000E+00
Aerosol I (Ci)	0.0000E+00	0.0000E+00
All Aerosols (Ci)	7.9052E+03	0.0000E+00
All Aerosols (kg)	3.5942E-02	0.0000E+00

Intact Steam Generators Compartment Nuclide Inventory (Ci) at Time (h) = 720.0000

Nuclide	Compartment Atmosphere	Dose Fract	Exposure (Ci-hr)	Decays (Bq-s)	Pathway 5 Inflow	Pathway 7 Outflow
Rb-86	8.4568E-02	1.5982E-04	1.0883E+02	1.4501E+16	2.5516E-01	2.0914E-03
Sr-89	2.6014E-03	2.0709E-05	2.2709E+00	3.0252E+14	3.9324E-03	3.2306E-05
Sr-90	3.6171E-04	7.3273E-05	2.5639E-01	3.4152E+13	3.6542E-04	3.0057E-06
Sr-91	2.5490E-26	4.8009E-09	1.0768E-02	1.4480E+12	7.9865E-04	5.5059E-06
Sr-92	7.6603E-84	1.5769E-10	4.7008E-04	6.3304E+10	1.2211E-04	5.5669E-07
Y-90	3.6195E-04	5.1664E-07	2.7824E-01	3.7066E+13	6.0379E-04	4.9177E-06
Y-91	3.4754E-02	3.1661E-04	2.9457E+01	3.9242E+15	4.9699E-02	4.0834E-04
Y-92	1.9489E-64	4.1076E-10	2.0331E-03	2.7376E+11	3.1122E-04	1.8515E-06
Y-93	2.0440E-25	2.0401E-09	4.2062E-03	5.6544E+11	2.9338E-04	2.0443E-06
Zr-95	5.0995E-02	2.2493E-04	4.2548E+01	5.6680E+15	7.0785E-02	5.8165E-04
Zr-97	1.7186E-16	1.7325E-08	1.7795E-02	2.3869E+12	7.4050E-04	5.5234E-06
Nb-95	8.2891E-02	8.9198E-05	6.5333E+01	8.7029E+15	1.0244E-01	8.4211E-04

Mo-99	3.1539E-03	4.5270E-04	5.0973E+02	6.8057E+16	5.4126E+00	4.3447E-02
Tc-99m	3.0430E-03	1.0259E-05	4.9166E+02	6.5587E+16	5.2049E+00	4.1812E-02
Ru-103	3.4356E-02	6.4559E-05	3.1917E+01	4.2521E+15	5.8307E-02	4.7879E-04
Ru-105	4.3548E-53	9.0374E-11	4.7873E-04	6.4480E+10	7.6002E-05	4.2916E-07
Ru-106	9.2483E-02	7.0732E-03	6.7344E+01	8.9704E+15	9.8577E-02	8.1070E-04
Rh-105	1.7020E-09	2.0375E-08	9.3156E-02	1.2459E+13	1.8385E-03	1.4467E-05
Te-127	5.8490E-01	3.2166E-05	4.5571E+02	6.0668E+16	7.2164E-01	5.9186E-03
Te-127m	5.9677E-01	2.1990E-03	4.6483E+02	6.1919E+16	7.2591E-01	5.9674E-03
Te-129	3.5745E-01	9.0946E-06	3.4844E+02	4.6192E+16	6.6286E-01	5.4394E-03
Te-129m	5.4641E-01	2.8078E-03	5.3264E+02	7.0962E+16	1.0127E+00	8.3132E-03
Te-131m	1.0106E-08	8.8415E-06	5.6256E+00	7.5281E+14	1.3161E-01	1.0253E-03
Te-132	4.7780E-03	6.0118E-04	2.8626E+02	3.8207E+16	2.5679E+00	2.0692E-02
I-131	2.3590E-03	4.8479E-05	6.6587E+00	8.8716E+14	5.9748E-03	5.7674E-05
I-132	4.9351E-03	1.0136E-04	2.9431E+02	3.9184E+16	2.2360E+00	1.9638E-02
I-133	3.9590E-14	2.9011E-08	2.1413E-02	2.8694E+12	6.6313E-04	5.3865E-06
I-134	7.2802-249	1.0451E-09	3.1542E-03	4.2340E+11	1.3751E-03	4.8267E-06
Xe-133	3.8395E-06	1.0442E-10	2.8774E-02	3.8348E+12	4.2974E-05	4.1931E-07
Cs-134	9.4820E+01	7.0473E-01	6.8067E+04	9.0665E+18	9.8240E+01	8.0801E-01
Cs-136	1.3107E+00	4.1585E-03	2.2373E+03	2.9817E+17	6.2975E+00	5.1537E-02
Cs-137	5.4158E+01	2.6973E-01	3.8388E+04	5.1132E+18	5.4709E+01	4.5001E-01
Ba-139	3.2611-161	4.2034E-12	9.8150E-05	1.3246E+10	5.0156E-05	1.4741E-07
Ba-140	1.1112E-03	1.6424E-06	1.9499E+00	2.5987E+14	5.5796E-03	4.5656E-05
La-140	1.2799E-03	3.1268E-06	2.3356E+00	3.1127E+14	7.9873E-03	6.4918E-05
La-141	2.7690E-59	6.9520E-11	5.2118E-04	7.0198E+10	9.3255E-05	5.0398E-07
La-142	2.5248-145	8.1061E-12	2.0749E-05	2.7977E+09	9.4740E-06	3.0336E-08
Ce-141	2.2329E-02	4.3552E-05	2.2014E+01	2.9329E+15	4.2242E-02	3.4675E-04
Ce-143	5.4759E-10	5.8670E-08	7.5624E-02	1.0116E+13	1.6079E-03	1.2589E-05
Ce-144	1.1516E-01	6.9536E-03	8.4557E+01	1.1263E+16	1.2478E-01	1.0261E-03
Pr-143	4.2932E-03	1.2628E-05	7.0819E+00	9.4379E+14	1.9381E-02	1.5871E-04
Rb-89	0.0000E+00	1.1564E-10	4.5166E-04	6.3838E+10	1.3123E-03	9.8030E-07
Y-91m	1.6254E-26	4.6187E-10	6.8612E-03	9.1670E+11	5.0458E-04	3.5021E-06
Nb-95m	3.7840E-04	1.7296E-07	3.1830E-01	4.2401E+13	5.4662E-04	4.4885E-06
Nb-97	9.8532E-18	9.5008E-11	1.0303E-03	1.3760E+11	4.8358E-05	3.3220E-07
Rh-103m	3.4499E-02	3.6667E-08	3.2050E+01	4.2436E+15	5.8537E-02	4.8077E-04
Te-125m	5.0133E-02	6.8314E-05	4.2563E+01	5.6700E+15	7.1921E-02	5.9091E-04
Te-131	2.3068E-09	1.9584E-07	1.2843E+00	1.6953E+14	3.0278E-02	2.3429E-04
Te-133	7.0545-238	3.5854E-11	2.8169E-04	3.7162E+10	1.7110E-04	4.4005E-07
Te-133m	4.0918-237	6.2053E-10	1.7215E-03	2.3351E+11	1.3188E-03	2.7620E-06

Te-134	2.4702-313	1.7880E-10	1.4118E-03	1.9255E+11	1.4406E-03	2.3486E-06
Xe-131m	6.4554E-05	4.3335E-11	4.7888E-02	6.3765E+12	1.3246E-06	1.3930E-08
Xe-133m	1.4362E-09	2.6786E-12	8.4047E-04	1.1209E+11	2.8915E-06	2.8062E-08
Cs-134m	1.0866E-76	5.1350E-10	4.3841E-02	5.9041E+12	1.0645E-02	5.0209E-05
Cs-138	0.0000E+00	8.0432E-09	2.6476E-02	3.6342E+12	3.5286E-02	4.5962E-05
Ba-141	0.0000E+00	1.2382E-13	1.0812E-06	1.5143E+08	2.5907E-06	2.1919E-09
Total	1.5300E+02	1.0000E+00	0.0000E+00	0.0000E+00	1.7899E+02	1.4702E+00

Dose Equivalent (Ci/cc) I-131 (Thyroid)	2.8831E-13
Dose Equivalent (Ci/cc) I-131 (CEDE)	2.9166E-13
Dose Equivalent (Ci/cc) I-131 (ICRP2 Thyroid)	3.0624E-13
Total I (Ci)	7.2941E-03
Dose Equivalent (Ci/cc) Xe-133 (EDE)	2.4068E-15

Intact Steam Generators Compartment Group Inventory Distribution:

Time (h) = 720.0000	Atmosphere	Sump
Noble gases (Ci)	6.8395E-05	0.0000E+00
Elemental I (Ci)	7.0753E-03	0.0000E+00
Organic I (Ci)	2.1882E-04	0.0000E+00
Aerosol I (Ci)	0.0000E+00	0.0000E+00
All Aerosols (Ci)	1.5300E+02	0.0000E+00
All Aerosols (kg)	6.9562E-04	0.0000E+00

Environment Integral Nuclide Release (Ci): at Time (h) = 720.0000

Nuclide	Compartment Atmosphere	Dose Fract Pathway 1	Dose Fract Pathway 7	Dose Fract Pathway 8
Rb-86	3.6374E-01	0.00026	0.00000	0.00000
Sr-89	5.5289E-03	0.00002	0.00000	0.00000
Sr-90	5.1169E-04	0.00007	0.00000	0.00000
Sr-91	2.3114E-03	0.00000	0.00000	0.00000
Sr-92	9.7852E-04	0.00000	0.00000	0.00000
Y-90	8.8914E-04	0.00000	0.00000	0.00000
Y-91	6.9981E-02	0.00036	0.00000	0.00000
Y-92	1.2537E-03	0.00000	0.00000	0.00000
Y-93	8.1854E-04	0.00000	0.00000	0.00000
Zr-95	9.9637E-02	0.00026	0.00000	0.00000

Zr-97	1.6057E-03	0.00000	0.00000	0.00000
Nb-95	1.4386E-01	0.00010	0.00000	0.00000
Mo-99	8.5398E+00	0.00368	0.00001	0.00003
Tc-99m	8.1701E+00	0.00008	0.00000	0.00000
Ru-103	8.2342E-02	0.00008	0.00000	0.00000
Ru-105	3.8933E-04	0.00000	0.00000	0.00000
Ru-106	1.3816E-01	0.00703	0.00002	0.00006
Rh-105	3.1666E-03	0.00000	0.00000	0.00000
Te-127	1.0290E+00	0.00004	0.00000	0.00000
Te-127m	1.0196E+00	0.00234	0.00001	0.00002
Te-129	9.4278E-01	0.00001	0.00000	0.00000
Te-129m	1.4322E+00	0.00366	0.00001	0.00003
Te-131m	2.3802E-01	0.00018	0.00000	0.00000
Te-132	3.9782E+00	0.00405	0.00001	0.00004
I-131	2.1652E-04	0.00000	0.00000	0.00000
I-132	2.2477E-01	0.00003	0.00000	0.00000
I-133	1.5850E-04	0.00000	0.00000	0.00000
I-134	4.9428E-03	0.00000	0.00000	0.00000
Xe-133	3.1287E-02	0.00000	0.00000	0.00000
Cs-134	1.3762E+02	0.69032	0.00150	0.00629
Cs-136	9.0455E+00	0.00815	0.00002	0.00007
Cs-137	7.6608E+01	0.26079	0.00057	0.00238
Ba-139	7.4432E-04	0.00000	0.00000	0.00000
Ba-140	8.0201E-03	0.00000	0.00000	0.00000
La-140	1.1888E-02	0.00001	0.00000	0.00000
La-141	5.2296E-04	0.00000	0.00000	0.00000
La-142	1.2725E-04	0.00000	0.00000	0.00000
Ce-141	5.9759E-02	0.00006	0.00000	0.00000
Ce-143	2.8439E-03	0.00000	0.00000	0.00000
Ce-144	1.7493E-01	0.00697	0.00002	0.00006
Pr-143	2.7755E-02	0.00002	0.00000	0.00000
Rb-89	6.8699E-02	0.00001	0.00000	0.00000
Y-91m	1.3642E-03	0.00000	0.00000	0.00000
Nb-95m	7.7213E-04	0.00000	0.00000	0.00000
Nb-97	1.9080E-04	0.00000	0.00000	0.00000
Rh-103m	8.2291E-02	0.00000	0.00000	0.00000
Te-125m	1.0129E-01	0.00008	0.00000	0.00000
Te-131	6.3108E-02	0.00000	0.00000	0.00000

Te-133	1.4508E-03	0.00000	0.00000	0.00000
Te-133m	2.7641E-02	0.00000	0.00000	0.00000
Te-134	3.7969E-02	0.00000	0.00000	0.00000
Xe-131m	1.3176E-04	0.00000	0.00000	0.00000
Xe-133m	2.2400E-03	0.00000	0.00000	0.00000
Cs-134m	8.0116E-02	0.00000	0.00000	0.00000
Cs-138	1.1355E+00	0.00017	0.00000	0.00000
Ba-141	1.2204E-04	0.00000	0.00000	0.00000

Environment Compartment Group Inventory Distribution:

Time (h) = 720.0000	Total Release	Release Rate/s
Noble gases (Ci)	3.3659E-02	1.2986E-08
Elemental I (Ci)	2.2319E-01	8.6107E-08
Organic I (Ci)	6.9027E-03	2.6631E-09
Aerosol I (Ci)	0.0000E+00	0.0000E+00
All Aerosols (Ci)	2.5143E+02	9.7001E-05

Control Room Compartment Nuclide Inventory (Ci) at Time (h) = 720.0000

Nuclide	Compartment Atmosphere	Dose Fract	Exposure (Ci-hr)	Decays (Bq-s)	Compartment Recirc Filtr	Pathway 2 Inflow	Pathway 3 Inflow	Pathway 4 Outflow
Rb-86	0.0000E+00	2.6173E-04	8.3164E-05	1.1078E+10	1.1600E-04	3.7515E-04	6.2133E-05	9.0851E-05
Sr-89	0.0000E+00	2.4714E-05	1.2647E-06	1.6842E+08	3.5683E-06	5.6966E-06	9.4463E-07	7.4655E-06
Y-90	0.0000E+00	8.0887E-07	2.0328E-07	2.7078E+07	4.9647E-07	9.1754E-07	1.5188E-07	1.2183E-06
Y-91	0.0000E+00	3.6852E-04	1.6000E-05	2.1312E+09	4.7670E-05	7.2160E-05	1.1954E-05	5.3077E-05
Y-92	0.0000E+00	1.2418E-07	2.8683E-07	3.8175E+07	2.6732E-67	1.3048E-06	2.1443E-07	3.4372E-05
Zr-95	0.0000E+00	2.5807E-04	2.2780E-05	3.0344E+09	6.9948E-05	1.0274E-04	1.7019E-05	2.4886E-05
Nb-95	0.0000E+00	9.6231E-05	3.2891E-05	4.3811E+09	1.1370E-04	1.4833E-04	2.4573E-05	5.0955E-05
Mo-99	0.0000E+00	3.7157E-03	1.9524E-03	2.6011E+11	4.3261E-06	8.8226E-03	1.4589E-03	2.1332E-03
Tc-99m	0.0000E+00	8.3526E-05	1.8679E-03	2.4856E+11	4.1740E-06	8.4395E-03	1.3958E-03	1.5689E-01
Ru-103	0.0000E+00	8.1603E-05	1.8826E-05	2.5077E+09	4.7125E-05	8.4910E-05	1.4065E-05	2.0566E-05
Ru-106	0.0000E+00	7.1096E-03	3.1587E-05	4.2075E+09	1.2686E-04	1.4245E-04	2.3599E-05	3.4506E-05
Rh-105	0.0000E+00	3.3931E-07	7.2395E-07	9.6460E+07	2.3346E-12	3.2758E-06	5.4104E-07	2.1555E-06
Te-127	0.0000E+00	3.5584E-05	2.3525E-04	3.1312E+10	8.0228E-04	1.0614E-03	1.7577E-04	1.3519E-02
Te-127m	0.0000E+00	2.3633E-03	2.3311E-04	3.1051E+10	8.1857E-04	1.0513E-03	1.7416E-04	2.5465E-04
Te-129	0.0000E+00	1.2054E-05	2.1552E-04	2.8519E+10	4.9030E-04	9.7255E-04	1.6103E-04	1.0023E-01

Te-129m	0.0000E+00	3.6989E-03	3.2744E-04	4.3616E+10	7.4949E-04	1.4769E-03	2.4463E-04	3.5770E-04
Te-131m	0.0000E+00	1.8323E-04	5.4404E-05	7.2499E+09	1.3862E-11	2.4646E-04	4.0665E-05	5.9457E-05
Te-132	0.0000E+00	4.0933E-03	9.0951E-04	1.2117E+11	6.5538E-06	4.1087E-03	6.7961E-04	9.9372E-04
I-131	0.0000E+00	9.3499E-07	5.9929E-08	7.1414E+06	3.2377E-06	9.1264E-08	3.5918E-08	2.0306E-02
I-132	0.0000E+00	5.5283E-05	7.4905E-05	8.8948E+09	6.7693E-06	1.1401E-04	4.2970E-05	2.1561E-01
I-133	0.0000E+00	1.6099E-07	5.5452E-08	6.6059E+06	5.5195E-17	8.4666E-08	3.1394E-08	2.4322E-02
I-134	0.0000E+00	1.2036E-06	1.6953E-06	2.0205E+08	1.0043-251	2.9095E-06	9.9610E-07	5.1125E-03
Cs-134	0.0000E+00	6.9811E-01	3.1465E-02	4.1911E+12	1.3006E-01	1.4189E-01	2.3507E-02	3.4373E-02
Cs-136	0.0000E+00	8.2375E-03	2.0681E-03	2.7549E+11	1.7979E-03	9.3303E-03	1.5451E-03	2.2593E-03
Cs-137	0.0000E+00	2.6374E-01	1.7515E-02	2.3330E+12	7.4286E-02	7.8986E-02	1.3086E-02	1.9134E-02
Ba-140	0.0000E+00	3.3098E-06	1.8337E-06	2.4426E+08	1.5242E-06	8.2727E-06	1.3700E-06	2.0032E-06
La-140	0.0000E+00	7.7974E-06	2.7179E-06	3.6202E+08	1.7556E-06	1.2270E-05	2.0308E-06	2.7785E-05
La-141	0.0000E+00	3.3972E-08	1.1885E-07	1.5868E+07	3.7981E-62	5.5065E-07	8.9192E-08	3.5462E-06
Ce-141	0.0000E+00	5.7924E-05	1.3663E-05	1.8199E+09	3.0628E-05	6.1624E-05	1.0208E-05	1.6100E-05
Ce-143	0.0000E+00	1.0807E-06	6.5006E-07	8.6624E+07	7.5111E-13	2.9437E-06	4.8587E-07	7.1041E-07
Ce-144	0.0000E+00	7.0481E-03	3.9995E-05	5.3273E+09	1.5797E-04	1.8036E-04	2.9880E-05	4.3690E-05
Pr-143	0.0000E+00	2.4248E-05	6.3457E-06	8.4527E+08	5.8888E-06	2.8627E-05	4.7410E-06	8.0211E-06
Rb-89	0.0000E+00	7.1898E-06	1.3104E-05	1.8437E+09	0.0000E+00	9.2857E-05	1.0709E-05	1.5119E-05
Y-91m	0.0000E+00	4.5083E-08	3.1253E-07	4.1258E+07	2.2295E-29	1.4128E-06	2.3342E-07	2.0096E-04
Nb-95m	0.0000E+00	2.0556E-07	1.7654E-07	2.3513E+07	5.1904E-07	7.9622E-07	1.3189E-07	1.1964E-06
Nb-97	0.0000E+00	8.4557E-09	4.2790E-08	5.7188E+06	1.3515E-20	2.0497E-07	3.2329E-08	8.8686E-06
Rh-103m	0.0000E+00	4.6142E-08	1.8821E-05	2.4860E+09	4.7321E-05	8.4804E-05	1.4058E-05	1.0958E-02
Te-125m	0.0000E+00	7.9653E-05	2.3158E-05	3.0847E+09	6.8766E-05	1.0444E-04	1.7302E-05	2.5298E-05
Te-131	0.0000E+00	4.6470E-06	1.4221E-05	1.8728E+09	3.1642E-12	6.7054E-05	1.0706E-05	1.5817E-02
Te-133	0.0000E+00	1.1762E-07	4.3123E-07	4.9879E+07	9.6764-241	6.8867E-07	2.9159E-07	2.0727E-03
Te-133m	0.0000E+00	4.6480E-06	6.0173E-06	8.1363E+08	5.6126-240	3.1201E-05	4.6202E-06	6.6713E-06
Te-134	0.0000E+00	2.2058E-06	8.1278E-06	1.1044E+09	3.3882-316	4.3971E-05	6.2942E-06	9.0549E-06
Xe-131m	4.4164E-10	2.4165E-09	1.2461E-06	1.3040E+08	0.0000E+00	8.0668E-07	9.3811E-13	1.0773E-06
Cs-134m	0.0000E+00	4.5384E-07	1.8081E-05	2.4200E+09	1.4905E-79	8.5391E-05	1.3619E-05	1.9845E-05
Cs-138	0.0000E+00	1.5509E-04	2.3824E-04	3.2564E+10	0.0000E+00	1.3547E-03	1.8633E-04	2.6698E-04
Total	4.4164E-10	1.0000E+00	0.0000E+00	0.0000E+00	2.0987E-01	2.5961E-01	4.2982E-02	6.2539E-01

Ruptured Steam Generator Compartment Nuclide Inventory (Ci) at Time (h) = 720.0000

Nuclide	Compartment Atmosphere	Dose Fract	Exposure (Ci-hr)	Decays (Bq-s)	Pathway 6 Inflow	Pathway 8 Outflow
Rb-86	1.5296E+00	1.6146E-04	2.0218E+03	2.6941E+17	4.6636E+00	3.2795E-03
Sr-89	4.7052E-02	2.0774E-05	4.1895E+01	5.5812E+15	7.0904E-02	4.9892E-05

Sr-90	6.5422E-03	7.3247E-05	4.7136E+00	6.2785E+14	6.5600E-03	4.6137E-06
Sr-91	4.6103E-25	9.7847E-09	4.0362E-01	5.4083E+13	2.9648E-02	2.0715E-05
Sr-92	1.3855E-82	8.8269E-10	4.8392E-02	6.4935E+12	1.2478E-02	8.5747E-06
Y-90	6.5464E-03	5.2102E-07	5.1604E+00	6.8744E+14	1.1401E-02	8.0150E-06
Y-91	6.2858E-01	3.1745E-04	5.4317E+02	7.2359E+16	8.9720E-01	6.3098E-04
Y-92	3.5249E-63	1.4316E-09	1.3031E-01	1.7448E+13	1.6116E-02	1.1289E-05
Y-93	3.6969E-24	4.0082E-09	1.5198E-01	2.0363E+13	1.0500E-02	7.3389E-06
Zr-95	9.2234E-01	2.2546E-04	7.8434E+02	1.0449E+17	1.2774E+00	8.9837E-04
Zr-97	3.1085E-15	2.6436E-08	4.9936E-01	6.6855E+13	2.0601E-02	1.4436E-05
Nb-95	1.4992E+00	8.9312E-05	1.2030E+03	1.6026E+17	1.8443E+00	1.2971E-03
Mo-99	5.7044E-02	5.0188E-04	1.0393E+04	1.3873E+18	1.0952E+02	7.6954E-02
Tc-99m	5.5039E-02	1.1369E-05	1.0020E+04	1.3363E+18	1.0478E+02	7.3630E-02
Ru-103	6.2139E-01	6.4834E-05	5.8947E+02	7.8532E+16	1.0557E+00	7.4242E-04
Ru-105	7.8764E-52	3.2530E-10	3.1690E-02	4.2483E+12	4.9829E-03	3.4554E-06
Ru-106	1.6727E+00	7.0739E-03	1.2386E+03	1.6499E+17	1.7712E+00	1.2457E-03
Rh-105	3.0784E-08	2.4920E-08	2.0954E+00	2.8007E+14	4.0622E-02	2.8525E-05
Te-127	1.0579E+01	3.2215E-05	8.3936E+03	1.1174E+18	1.3193E+01	9.2764E-03
Te-127m	1.0794E+01	2.2017E-03	8.5588E+03	1.1401E+18	1.3071E+01	9.1931E-03
Te-129	6.4652E+00	9.1413E-06	6.4410E+03	8.5386E+17	1.2086E+01	8.4975E-03
Te-129m	9.8828E+00	2.8221E-03	9.8456E+03	1.3117E+18	1.8361E+01	1.2913E-02
Te-131m	1.8278E-07	1.1242E-05	1.3155E+02	1.7589E+16	3.0533E+00	2.1430E-03
Te-132	8.6418E-02	6.5445E-04	5.7308E+03	7.6478E+17	5.1017E+01	3.5852E-02
I-131	4.2666E-02	4.8034E-05	1.2133E+02	1.6165E+16	2.5205E-03	2.4908E-06
I-132	8.9261E-02	1.0781E-04	5.7567E+03	7.6618E+17	3.2512E+00	3.1973E-03
I-133	7.1606E-13	3.9566E-08	5.3707E-01	7.1815E+13	2.4248E-03	2.3759E-06
I-134	1.3168-247	1.0287E-08	5.7101E-01	7.5874E+13	7.7589E-02	7.3762E-05
Xe-133	6.9445E-05	1.0392E-10	5.2666E-01	7.0183E+13	1.9164E-06	2.1731E-09
Cs-134	1.7150E+03	7.0463E-01	1.2516E+06	1.6671E+20	1.7643E+03	1.2409E+00
Cs-136	2.3707E+01	4.2237E-03	4.1790E+04	5.5694E+18	1.1598E+02	8.1551E-02
Cs-137	9.7954E+02	2.6964E-01	7.0572E+05	9.4002E+19	9.8214E+02	6.9075E-01
Ba-139	5.8983-160	4.2968E-11	1.8451E-02	2.4872E+12	9.3973E-03	6.3120E-06
Ba-140	2.0098E-02	1.6690E-06	3.6441E+01	4.8565E+15	1.0283E-01	7.2306E-05
La-140	2.3150E-02	3.1988E-06	4.3942E+01	5.8562E+15	1.5244E-01	1.0716E-04
La-141	5.0081E-58	2.7805E-10	3.8336E-02	5.1394E+12	6.6996E-03	4.6525E-06
La-142	4.5665-144	7.5199E-11	3.5399E-03	4.7665E+11	1.6101E-03	1.0868E-06
Ce-141	4.0386E-01	4.3783E-05	4.0701E+02	5.4225E+16	7.6616E-01	5.3880E-04
Ce-143	9.9042E-09	7.2950E-08	1.7293E+00	2.3117E+14	3.6481E-02	2.5609E-05
Ce-144	2.0829E+00	6.9551E-03	1.5554E+03	2.0718E+17	2.2427E+00	1.5773E-03

Pr-143	7.7650E-02	1.2814E-05	1.3216E+02	1.7613E+16	3.5585E-01	2.5023E-04
Rb-89	0.0000E+00	3.7855E-09	2.7191E-01	3.8379E+13	7.8882E-01	4.2579E-04
Y-91m	2.9398E-25	9.3637E-10	2.5582E-01	3.4051E+13	1.7540E-02	1.2322E-05
Nb-95m	6.8440E-03	1.7348E-07	5.8714E+00	7.8212E+14	9.8993E-03	6.9618E-06
Nb-97	1.7821E-16	1.5421E-10	3.0755E-02	4.1026E+12	2.4240E-03	1.6568E-06
Rh-103m	6.2398E-01	3.6823E-08	5.9193E+02	7.8374E+16	1.0552E+00	7.4242E-04
Te-125m	9.0675E-01	6.8497E-05	7.8485E+02	1.0455E+17	1.2986E+00	9.1327E-04
Te-131	4.1723E-08	2.4951E-07	3.0092E+01	3.9690E+15	8.0265E-01	5.5299E-04
Te-133	1.2759-236	4.6992E-10	6.7897E-02	8.8567E+12	2.2488E-02	2.0352E-05
Te-133m	7.4008-236	8.8566E-09	4.5187E-01	6.1237E+13	3.4537E-01	2.2666E-04
Te-134	4.4677-312	3.1753E-09	4.6111E-01	6.2816E+13	4.6954E-01	3.0109E-04
Xe-131m	1.1676E-03	4.2627E-11	8.6629E-01	1.1535E+14	9.8883E-09	1.1247E-11
Xe-133m	2.5976E-08	2.7081E-12	1.5627E-02	2.0838E+12	1.3709E-07	1.5544E-10
Cs-134m	1.9653E-75	2.7027E-09	4.2435E+00	5.6930E+14	1.0223E+00	7.0358E-04
Cs-138	0.0000E+00	1.7221E-07	1.0425E+01	1.4290E+15	1.3866E+01	8.6414E-03
Ba-141	0.0000E+00	3.7200E-12	5.9737E-04	8.3541E+10	1.4288E-03	8.0789E-07
Total	2.7674E+03	1.0000E+00	0.0000E+00	0.0000E+00	3.2260E+03	2.2683E+00

```
Dose Equivalent (Ci/cc) I-131 (Thyroid)            1.5644E-11
Dose Equivalent (Ci/cc) I-131 (CEDE)               1.5826E-11
Dose Equivalent (Ci/cc) I-131 (ICRP2 Thyroid)      1.6617E-11
Total I  (Ci)                                      1.3193E-01
Dose Equivalent (Ci/cc) Xe-133 (EDE)               1.3059E-13

Ruptured Steam Generator Compartment Group Inventory Distribution:

Time (h) = 720.0000      Atmosphere      Sump
Noble gases (Ci)         1.2370E-03   0.0000E+00
Elemental I (Ci)         1.2797E-01   0.0000E+00
Organic I (Ci)           3.9578E-03   0.0000E+00
Aerosol I (Ci)           0.0000E+00   0.0000E+00
All Aerosols (Ci)        2.7672E+03   0.0000E+00
All Aerosols (kg)        1.2582E-02   0.0000E+00

   1701

#######################################################################
    ALION RADTRAD Version 3.10 Rev 2 run on 12/01/2014  at 16:22:50
```

##

##

I-131 Summary

##

Time (hr)	RCS I-131 (Curies)	Intact Steam Generato I-131 (Curies)	Environment I-131 (Curies)
0.000	4.6341E-07	1.5088E-15	0.0000E+00
0.028	1.2704E-03	2.3364E-08	1.2351E-06
0.110	4.7154E-03	3.8477E-07	1.0026E-05
0.139	5.8406E-03	6.1175E-07	1.6888E-05
0.278	1.0637E-02	2.3831E-06	5.6514E-05
0.477	1.5983E-02	6.6366E-06	1.4597E-04
0.500	1.6491E-02	7.2316E-06	1.5875E-04
0.667	2.1871E-02	1.2408E-05	1.5885E-04
0.878	2.8613E-02	2.1092E-05	1.5886E-04
1.089	3.5272E-02	3.1976E-05	1.5887E-04
1.289	4.1544E-02	4.4336E-05	1.5888E-04
1.489	4.7766E-02	5.8650E-05	1.5889E-04
1.689	5.3943E-02	7.4900E-05	1.5891E-04
1.889	6.0078E-02	9.3067E-05	1.5893E-04
2.000	6.3461E-02	1.0396E-04	1.5895E-04
2.243	7.0845E-02	1.2989E-04	1.5899E-04
2.443	7.6874E-02	1.5328E-04	1.5904E-04
2.643	8.2866E-02	1.7853E-04	1.5909E-04
2.843	8.8823E-02	2.0561E-04	1.5915E-04
3.043	9.4744E-02	2.3452E-04	1.5921E-04
3.243	1.0063E-01	2.6523E-04	1.5929E-04
3.443	1.0648E-01	2.9774E-04	1.5938E-04
3.643	1.1230E-01	3.3202E-04	1.5948E-04
3.843	1.1809E-01	3.6805E-04	1.5958E-04
4.043	1.2384E-01	4.0583E-04	1.5970E-04
4.243	1.2956E-01	4.4534E-04	1.5984E-04
4.443	1.3525E-01	4.8656E-04	1.5998E-04
4.643	1.4090E-01	5.2948E-04	1.6014E-04

4.843	1.4652E-01	5.7407E-04	1.6031E-04
5.043	1.5211E-01	6.2033E-04	1.6049E-04
5.243	1.5766E-01	6.6824E-04	1.6069E-04
5.443	1.6319E-01	7.1779E-04	1.6091E-04
5.643	1.6868E-01	7.6896E-04	1.6114E-04
5.843	1.7414E-01	8.2173E-04	1.6139E-04
6.043	1.7957E-01	8.7609E-04	1.6165E-04
6.243	1.8497E-01	9.3202E-04	1.6193E-04
6.443	1.9033E-01	9.8952E-04	1.6223E-04
6.643	1.9567E-01	1.0486E-03	1.6255E-04
6.843	2.0097E-01	1.1091E-03	1.6288E-04
7.043	2.0625E-01	1.1712E-03	1.6324E-04
7.243	2.1149E-01	1.2348E-03	1.6361E-04
7.443	2.1670E-01	1.2999E-03	1.6400E-04
7.643	2.2188E-01	1.3665E-03	1.6442E-04
7.843	2.2703E-01	1.4345E-03	1.6485E-04
8.000	2.3105E-01	1.4888E-03	1.6521E-04
8.227	2.3682E-01	1.5692E-03	1.6541E-04
8.427	2.4189E-01	1.6418E-03	1.6559E-04
8.627	2.4692E-01	1.7157E-03	1.6579E-04
8.827	2.5193E-01	1.7911E-03	1.6599E-04
9.027	2.5691E-01	1.8678E-03	1.6620E-04
9.227	2.6185E-01	1.9460E-03	1.6642E-04
9.427	2.6677E-01	2.0255E-03	1.6665E-04
9.627	2.7166E-01	2.1064E-03	1.6688E-04
9.827	2.7652E-01	2.1887E-03	1.6713E-04
10.027	2.8135E-01	2.2723E-03	1.6739E-04
10.227	2.8616E-01	2.3572E-03	1.6765E-04
24.000	5.5586E-01	1.0758E-02	2.1652E-04
96.000	9.7060E-01	1.8785E-02	2.1652E-04
720.000	1.2189E-01	2.3590E-03	2.1652E-04

Time (hr)	Control Room I-131 (Curies)	Ruptured Steam Genera I-131 (Curies)
0.000	1.0244E-16	1.1818E-12
0.028	1.5624E-09	1.8301E-05
0.110	9.6361E-08	3.0139E-04
0.139	1.0539E-07	4.7919E-04

0.278	1.0573E-07	1.8667E-03
0.477	8.3086E-08	5.1986E-03
0.500	8.1382E-08	5.6648E-03
0.667	3.6752E-08	7.5137E-03
0.878	1.2530E-08	9.8314E-03
1.089	4.0836E-09	1.2122E-02
1.289	1.3712E-09	1.4279E-02
1.489	4.5438E-10	1.6421E-02
1.689	1.5263E-10	1.8547E-02
1.889	5.6087E-11	2.0660E-02
2.000	3.5560E-11	2.1825E-02
2.243	1.8333E-11	2.4369E-02
2.443	1.6221E-11	2.6447E-02
2.643	1.7320E-11	2.8513E-02
2.843	1.9553E-11	3.0568E-02
3.043	2.2267E-11	3.2611E-02
3.243	2.5258E-11	3.4643E-02
3.443	2.8460E-11	3.6664E-02
3.643	3.1854E-11	3.8674E-02
3.843	3.5432E-11	4.0672E-02
4.043	3.9190E-11	4.2660E-02
4.243	4.3125E-11	4.4638E-02
4.443	4.7237E-11	4.6604E-02
4.643	5.1523E-11	4.8560E-02
4.843	5.5983E-11	5.0505E-02
5.043	6.0613E-11	5.2440E-02
5.243	6.5414E-11	5.4364E-02
5.443	7.0383E-11	5.6278E-02
5.643	7.5518E-11	5.8181E-02
5.843	8.0819E-11	6.0074E-02
6.043	8.6283E-11	6.1957E-02
6.243	9.1909E-11	6.3830E-02
6.443	9.7696E-11	6.5692E-02
6.643	1.0364E-10	6.7544E-02
6.843	1.0975E-10	6.9386E-02
7.043	1.1601E-10	7.1219E-02
7.243	1.2242E-10	7.3041E-02
7.443	1.2899E-10	7.4853E-02

7.643	1.3571E-10	7.6655E-02
7.843	1.4258E-10	7.8448E-02
8.000	1.4807E-10	7.9845E-02
8.227	5.2111E-11	8.1855E-02
8.427	2.9960E-11	8.3619E-02
8.627	2.4038E-11	8.5374E-02
8.827	2.2949E-11	8.7119E-02
9.027	2.3308E-11	8.8854E-02
9.227	2.4108E-11	9.0579E-02
9.427	2.5051E-11	9.2295E-02
9.627	2.6049E-11	9.4002E-02
9.827	2.7075E-11	9.5699E-02
10.027	2.8121E-11	9.7387E-02
10.227	2.9186E-11	9.9066E-02
24.000	1.3487E-10	1.9458E-01
96.000	2.3812-202	3.3976E-01
720.000	0.0000E+00	4.2666E-02

```
#####################################################################
                    Cumulative Dose Summary
#####################################################################
```

	Exclusion Area Bounda		Low Population Zone		Control Room	
Time (hr)	Thyroid (rem)	TEDE (rem)	Thyroid (rem)	TEDE (rem)	Thyroid (rem)	TEDE (rem)
0.000	0.0000E+00	0.0000E+00	0.0000E+00	0.0000E+00	0.0000E+00	0.0000E+00
0.028	4.5753E-01	4.7554E-01	6.1570E-02	6.3993E-02	6.8258E-03	7.0026E-03
0.110	8.2948E-01	8.6213E-01	1.3317E-01	1.3841E-01	3.4530E-01	3.5424E-01
0.139	9.5672E-01	9.9438E-01	1.5767E-01	1.6387E-01	5.5063E-01	5.6489E-01
0.278	1.3929E+00	1.4477E+00	2.4164E-01	2.5115E-01	1.1869E+00	1.2177E+00
0.477	1.9128E+00	1.9881E+00	3.4172E-01	3.5517E-01	1.5848E+00	1.6258E+00
0.500	1.9683E+00	2.0457E+00	3.5240E-01	3.6627E-01	1.6121E+00	1.6539E+00
0.667	1.9687E+00	2.0461E+00	3.5247E-01	3.6634E-01	1.7321E+00	1.7769E+00
0.878	1.9687E+00	2.0462E+00	3.5247E-01	3.6634E-01	1.7791E+00	1.8252E+00
1.089	1.9687E+00	2.0462E+00	3.5248E-01	3.6635E-01	1.7914E+00	1.8378E+00
1.289	1.9687E+00	2.0462E+00	3.5248E-01	3.6635E-01	1.7946E+00	1.8410E+00
1.489	1.9687E+00	2.0462E+00	3.5248E-01	3.6636E-01	1.7955E+00	1.8419E+00
1.689	1.9688E+00	2.0462E+00	3.5249E-01	3.6636E-01	1.7957E+00	1.8422E+00

1.889	1.9688E+00	2.0463E+00	3.5249E-01	3.6637E-01	1.7958E+00	1.8423E+00
2.000	1.9688E+00	2.0463E+00	3.5250E-01	3.6637E-01	1.7958E+00	1.8423E+00
2.243	1.9689E+00	2.0463E+00	3.5250E-01	3.6637E-01	1.7958E+00	1.8423E+00
2.443	1.9689E+00	2.0464E+00	3.5251E-01	3.6638E-01	1.7959E+00	1.8423E+00
2.643	1.9689E+00	2.0464E+00	3.5251E-01	3.6638E-01	1.7959E+00	1.8423E+00
2.843	1.9690E+00	2.0465E+00	3.5251E-01	3.6639E-01	1.7959E+00	1.8423E+00
3.043	1.9690E+00	2.0465E+00	3.5252E-01	3.6639E-01	1.7959E+00	1.8424E+00
3.243	1.9691E+00	2.0466E+00	3.5252E-01	3.6640E-01	1.7959E+00	1.8424E+00
3.443	1.9691E+00	2.0466E+00	3.5253E-01	3.6640E-01	1.7959E+00	1.8424E+00
3.643	1.9692E+00	2.0467E+00	3.5253E-01	3.6641E-01	1.7959E+00	1.8424E+00
3.843	1.9693E+00	2.0468E+00	3.5254E-01	3.6641E-01	1.7959E+00	1.8424E+00
4.043	1.9693E+00	2.0468E+00	3.5255E-01	3.6642E-01	1.7959E+00	1.8424E+00
4.243	1.9694E+00	2.0469E+00	3.5255E-01	3.6643E-01	1.7959E+00	1.8424E+00
4.443	1.9695E+00	2.0470E+00	3.5256E-01	3.6643E-01	1.7959E+00	1.8424E+00
4.643	1.9696E+00	2.0471E+00	3.5257E-01	3.6644E-01	1.7960E+00	1.8424E+00
4.843	1.9696E+00	2.0472E+00	3.5257E-01	3.6645E-01	1.7960E+00	1.8425E+00
5.043	1.9697E+00	2.0472E+00	3.5258E-01	3.6646E-01	1.7960E+00	1.8425E+00
5.243	1.9698E+00	2.0473E+00	3.5259E-01	3.6646E-01	1.7960E+00	1.8425E+00
5.443	1.9699E+00	2.0474E+00	3.5260E-01	3.6647E-01	1.7960E+00	1.8425E+00
5.643	1.9700E+00	2.0475E+00	3.5261E-01	3.6648E-01	1.7960E+00	1.8425E+00
5.843	1.9701E+00	2.0476E+00	3.5261E-01	3.6649E-01	1.7960E+00	1.8425E+00
6.043	1.9702E+00	2.0477E+00	3.5262E-01	3.6650E-01	1.7961E+00	1.8425E+00
6.243	1.9703E+00	2.0479E+00	3.5263E-01	3.6651E-01	1.7961E+00	1.8426E+00
6.443	1.9704E+00	2.0480E+00	3.5264E-01	3.6652E-01	1.7961E+00	1.8426E+00
6.643	1.9705E+00	2.0481E+00	3.5265E-01	3.6653E-01	1.7961E+00	1.8426E+00
6.843	1.9706E+00	2.0482E+00	3.5266E-01	3.6654E-01	1.7961E+00	1.8426E+00
7.043	1.9708E+00	2.0483E+00	3.5267E-01	3.6655E-01	1.7962E+00	1.8426E+00
7.243	1.9709E+00	2.0485E+00	3.5268E-01	3.6656E-01	1.7962E+00	1.8427E+00
7.443	1.9710E+00	2.0486E+00	3.5270E-01	3.6658E-01	1.7962E+00	1.8427E+00
7.643	1.9711E+00	2.0487E+00	3.5271E-01	3.6659E-01	1.7962E+00	1.8427E+00
7.843	1.9713E+00	2.0489E+00	3.5272E-01	3.6660E-01	1.7962E+00	1.8427E+00
8.000	1.9714E+00	2.0490E+00	3.5273E-01	3.6661E-01	1.7963E+00	1.8427E+00
8.227	1.9714E+00	2.0490E+00	3.5273E-01	3.6661E-01	1.7963E+00	1.8428E+00
8.427	1.9714E+00	2.0490E+00	3.5273E-01	3.6661E-01	1.7963E+00	1.8428E+00
8.627	1.9715E+00	2.0491E+00	3.5273E-01	3.6662E-01	1.7963E+00	1.8428E+00
8.827	1.9715E+00	2.0491E+00	3.5274E-01	3.6662E-01	1.7963E+00	1.8428E+00
9.027	1.9715E+00	2.0491E+00	3.5274E-01	3.6662E-01	1.7963E+00	1.8428E+00
9.227	1.9715E+00	2.0491E+00	3.5274E-01	3.6662E-01	1.7963E+00	1.8428E+00

9.427	1.9716E+00	2.0492E+00	3.5274E-01	3.6662E-01	1.7963E+00	1.8428E+00
9.627	1.9716E+00	2.0492E+00	3.5274E-01	3.6663E-01	1.7963E+00	1.8428E+00
9.827	1.9716E+00	2.0492E+00	3.5275E-01	3.6663E-01	1.7963E+00	1.8428E+00
10.027	1.9717E+00	2.0493E+00	3.5275E-01	3.6663E-01	1.7963E+00	1.8428E+00
10.227	1.9717E+00	2.0493E+00	3.5275E-01	3.6663E-01	1.7963E+00	1.8428E+00
24.000	1.9754E+00	2.0533E+00	3.5298E-01	3.6688E-01	1.7967E+00	1.8432E+00
96.000	1.9754E+00	2.0533E+00	3.5298E-01	3.6688E-01	1.7967E+00	1.8432E+00
720.000	1.9754E+00	2.0533E+00	3.5298E-01	3.6688E-01	1.7967E+00	1.8432E+00

```
#######################################################################
    ALION RADTRAD Version 3.10 Rev 2 run on 12/01/2014  at 16:22:50

                Copyright © 2009 Alion Science and Technology
#######################################################################

            D. C. Cook - SGTR Concurrent Iodine Spike - RCS Activity

#######################################################################
                           Worst Two-Hour Doses
#######################################################################

Exclusion Area Boundary
   Time    Whole Body     Thyroid        TEDE
   (hr)      (rem)         (rem)         (rem)
    0.0   2.7386E-02   1.9688E+00   2.0463E+00

#######################################################################
                           Final Doses
#######################################################################

Low Population Zone
   Time    Whole Body     Thyroid        TEDE
   (hr)      (rem)         (rem)         (rem)
  720.0   4.9130E-03   3.5298E-01   3.6688E-01

Control Room
   Time    Whole Body     Thyroid        TEDE
   (hr)      (rem)         (rem)         (rem)
  720.0   8.2894E-04   1.7967E+00   1.8432E+00
```

Attachment F

Steam Generator Iodine Release RADTRAD Output

(SGTR_SG_I_R1.o0)

Note: The computer clock was set to 12/01/14 during model execution due to software date limitations

```
#######################################################################
    ALION RADTRAD Version 3.10 Rev 2 run on 12/01/2014  at 16:19:30

                Copyright © 2009 Alion Science and Technology
#######################################################################

            D. C. Cook - SGTR Initial SG Iodine

#######################################################################
                      File information
#######################################################################

Input File Name      = C:\Projects\1537-Cook_Dose\SGTR\SGTR_SG_I_R1.psf
Output File Name     = C:\Projects\1537-Cook_Dose\SGTR\SGTR_SG_I_R1.o0

Inventory file       =  c:\projects\1537-cook_dose\source_term\cook_rcs.nif
Release file         =    c:\projects\1537-cook_dose\sgtr\sgtr_sg_i_r1.rft
Dose Conversion file =    c:\projects\1537-cook_dose\source_term\rwa-1205-004.inp
```

```
#####    ####   #####    #  #    #  #####   #    #  #####
#    #  #       #        #  ##   #  #    #  #    #    #
#    #  #       #        #  # #  #  #    #  #    #    #
#####    ####   ####     #  #  # #  #####   #    #    #
#            #  #        #  #   # #  #       #    #    #
#            #  #        #  #    ##  #       #    #    #
#        ####   #        #  #     #  #        ####     #
```

```
  Radtrad 3.10  10/15/2013
  D. C. Cook - SGTR Initial SG Iodine
Dose Conversion Factor File:
  c:\projects\1537-cook_dose\source_term\rwa-1205-004.inp
Release Fraction & Timing Files:
  1
  c:\projects\1537-cook_dose\sgtr\sgtr_sg_i_r1.rft
Nuclide Inventory Files:
  1
  1 c:\projects\1537-cook_dose\source_term\cook_rcs.nif
Plant Power Level:
  7.3E+00
Number of Compartments:
  5
Compartment 1:
  RCS
  3
  4.661415E+05
  0
  0
  0
  0
  0
Compartment 2:
  Intact Steam Generators
  3
  4.83E+05
  0
  0
  0
  0
  0
```

```
Compartment 3:
  Environment
  2
  0.00E+00
  0
  0
  0
  0
  0
Compartment 4:
  Control Room
  1
  5.0616E+04
  0
  0
  1
  0
  0
Compartment 5:
  Ruptured Steam Generator
  3
  1.61E+05
  0
  0
  0
  0
  0
Number of Pathways:
  8
Pathway 1:
  Flashed Break Flow & SG Tube Leakage
  1
  3
```

```
  2
Pathway 2:
  Control Room Makeup
  3
  4
  2
Pathway 3:
  Control Room Unfiltered Inleakage
  3
  4
  2
Pathway 4:
  Control Room Exhaust
  4
  3
  2
Pathway 5:
  Unflashed Intact SG Tube Leakage
  1
  2
  2
Pathway 6:
  Unflashed Break Flow & Ruptured SG Tube Leakage
  1
  5
  2
Pathway 7:
  Intact SG Steam Release
  2
  3
  2
Pathway 8:
  Ruptured Steam Generator Steam Relase
```

```
  5
  3
  2
  End of Plant Model
Source Term Input:
  2
  2  1  1  3
  5  1  1  1
  0.00E+00
  0.00E+00   7.2E+02
  1
  3   0.00E+00   9.7E-01   3.00E-02
  3   0.00E+00   9.7E-01   3.00E-02
Overlying Pool:
  0
  0.00E+00
  0
  0
  0
  0
Compartments:
  5
Compartment 1:
  1
  1
  0
  0
  0
  0
  0
  0
  0
Compartment 2:
```

```
  1
  1
  0
  0
  0
  0
  0
  0
  0
Compartment 3:
  2
  1
  0
  0
  0
  0
  0
  0
  0
Compartment 4:
  1
  1
  0
  0
  0
  0
  1
  3
  0.00E+00   0.00E+00   9.801E+01   9.405E+01   9.405E+01
  1.1E-01   4.52E+03   9.801E+01   9.405E+01   9.405E+01
  7.2E+02   4.52E+03   9.801E+01   9.405E+01   9.405E+01
  0
  7.2E+02   0.00E+00   0.00E+00   0.00E+00   0.00E+00
```

```
  7.2E+02
  0
  0
Compartment 5:
  1
  1
  0
  0
  0
  0
  0
  0
  0
Pathways:
  8
Pathway 1:
  0
  0
  0
  0
  0
  1
  7
  0.00E+00   0.00E+00   0.00E+00   0.00E+00   0.00E+00
  2.8E-02   0.00E+00   0.00E+00   0.00E+00   0.00E+00
  1.39E-01   0.00E+00   0.00E+00   0.00E+00   0.00E+00
  2.78E-01   0.00E+00   0.00E+00   0.00E+00   0.00E+00
  5.00E-01   0.00E+00   0.00E+00   0.00E+00   0.00E+00
  6.67E-01   0.00E+00   0.00E+00   0.00E+00   0.00E+00
  7.2E+02   0.00E+00   0.00E+00   0.00E+00   0.00E+00
  0
  7.2E+02   0.00E+00   0.00E+00   0.00E+00   0.00E+00
  7.2E+02
```

```
  0
  0
  0
  0
  0
  0
Pathway 2:
  0
  0
  0
  0
  0
  1
  3
  0.00E+00   8.8E+02   0.00E+00   0.00E+00   0.00E+00
  1.1E-01   8.8E+02   9.801E+01   9.405E+01   9.405E+01
  7.2E+02   8.8E+02   9.801E+01   9.405E+01   9.405E+01
  0
  7.2E+02   0.00E+00   0.00E+00   0.00E+00   0.00E+00
  7.2E+02
  0
  0
  0
  0
  0
  0
Pathway 3:
  0
  0
  0
  0
  0
  1
```

```
  2
  0.00E+00   4.00E+01   0.00E+00   0.00E+00   0.00E+00
  7.2E+02   4.00E+01   0.00E+00   0.00E+00   0.00E+00
  0
  7.2E+02   0.00E+00   0.00E+00   0.00E+00   0.00E+00
  7.2E+02
  0
  0
  0
  0
  0
  0
Pathway 4:
  0
  0
  0
  0
  0
  1
  2
  0.00E+00   9.2E+02   0.00E+00   0.00E+00   0.00E+00
  7.2E+02   9.2E+02   0.00E+00   0.00E+00   0.00E+00
  0
  7.2E+02   0.00E+00   0.00E+00   0.00E+00   0.00E+00
  7.2E+02
  0
  0
  0
  0
  0
  0
Pathway 5:
  0
```

```
  0
  0
  0
  0
  1
  8
  0.00E+00   0.00E+00   0.00E+00   0.00E+00   0.00E+00
  2.8E-02   0.00E+00   0.00E+00   0.00E+00   0.00E+00
  1.39E-01   0.00E+00   0.00E+00   0.00E+00   0.00E+00
  2.78E-01   0.00E+00   0.00E+00   0.00E+00   0.00E+00
  5.00E-01   0.00E+00   0.00E+00   0.00E+00   0.00E+00
  6.67E-01   0.00E+00   0.00E+00   0.00E+00   0.00E+00
  2.4E+01   0.00E+00   0.00E+00   0.00E+00   0.00E+00
  7.2E+02   0.00E+00   0.00E+00   0.00E+00   0.00E+00
  0
  7.2E+02   0.00E+00   0.00E+00   0.00E+00   0.00E+00
  7.2E+02
  0
  0
  0
  0
  0
  0
Pathway 6:
  0
  0
  0
  0
  0
  1
  6
  0.00E+00   0.00E+00   0.00E+00   0.00E+00   0.00E+00
  2.8E-02   0.00E+00   0.00E+00   0.00E+00   0.00E+00
```

```
  1.39E-01   0.00E+00   0.00E+00   0.00E+00   0.00E+00
  2.78E-01   0.00E+00   0.00E+00   0.00E+00   0.00E+00
  5.00E-01   0.00E+00   0.00E+00   0.00E+00   0.00E+00
  7.2E+02   0.00E+00   0.00E+00   0.00E+00   0.00E+00
  0
  7.2E+02   0.00E+00   0.00E+00   0.00E+00   0.00E+00
  7.2E+02
  0
  0
  0
  0
  0
  0
Pathway 7:
  0
  0
  0
  0
  0
  1
  7
  0.00E+00   2.144E+01   0.00E+00   0.00E+00   0.00E+00
  2.8E-02   7.01E+01   0.00E+00   0.00E+00   0.00E+00
  5.00E-01   3.494E+01   0.00E+00   0.00E+00   0.00E+00
  2.00E+00   3.799E+01   0.00E+00   0.00E+00   0.00E+00
  8.00E+00   1.403E+01   0.00E+00   0.00E+00   0.00E+00
  2.4E+01   0.00E+00   0.00E+00   0.00E+00   0.00E+00
  7.2E+02   0.00E+00   0.00E+00   0.00E+00   0.00E+00
  0
  7.2E+02   0.00E+00   0.00E+00   0.00E+00   0.00E+00
  7.2E+02
  0
  0
```

```
  0
  0
  0
  0
Pathway 8:
  0
  0
  0
  0
  0
  1
  4
  0.00E+00   7.15E+00   0.00E+00   0.00E+00   0.00E+00
  2.8E-02   2.206E+01   0.00E+00   0.00E+00   0.00E+00
  5.00E-01   0.00E+00   0.00E+00   0.00E+00   0.00E+00
  7.2E+02   0.00E+00   0.00E+00   0.00E+00   0.00E+00
  0
  7.2E+02   0.00E+00   0.00E+00   0.00E+00   0.00E+00
  7.2E+02
  0
  0
  0
  0
  0
  0
Dose Locations:
  3
Location 1:
  Exclusion Area Boundary
  3
  1
  4
  0.00E+00   3.5E-04
```

```
  8.00E+00   1.8E-04
  2.4E+01   2.3E-04
  7.2E+02   2.3E-04
  0
Location 2:
  Low Population Zone
  3
  1
  4
  0.00E+00   3.5E-04
  8.00E+00   1.8E-04
  2.4E+01   2.3E-04
  7.2E+02   2.3E-04
  0
Location 3:
  Control Room
  4
  1
  2
  0.00E+00   3.5E-04
  7.2E+02   3.5E-04
  1
  4
  0.00E+00   1.00E+00
  2.4E+01   6.00E-01
  9.6E+01   4.00E-01
  7.2E+02   4.00E-01
X/Q Tables:
  4
  Exclusion Area Boundary
  3
  0.00E+00   8.62E-04
  2.8E-02   5.87E-04
```

```
  7.2E+02   5.87E-04
  Low Population Zone
  7
  0.00E+00   1.16E-04
  2.8E-02   1.13E-04
  2.00E+00   5.29E-05
  8.00E+00   3.63E-05
  2.4E+01   1.65E-05
  9.6E+01   6.36E-06
  7.2E+02   6.36E-06
  Control Room Makeup
  8
  0.00E+00   8.5E-04
  2.8E-02   1.09E-02
  1.1E-01   1.26E-02
  2.00E+00   9.72E-03
  8.00E+00   3.26E-03
  2.4E+01   3.17E-03
  9.6E+01   2.8E-03
  7.2E+02   2.8E-03
  Control Room Unfiltered Inleakage
  7
  0.00E+00   8.5E-04
  2.8E-02   1.09E-02
  2.00E+00   8.61E-03
  8.00E+00   2.87E-03
  2.4E+01   2.78E-03
  9.6E+01   2.5E-03
  7.2E+02   2.5E-03
Inflow Pathways:
  2  2 3
Exhaust Pathways:
  4  1 4 7 8
```

```
X/Q table ID for Exhaust-Inflow paths:
  3 4
  -1 -1
  3 4
  3 4
Simulation Parameters:
  1
  0.00E+00   0.00E+00
Output Filename:
  C:\Projects\1537-Cook_Dose\SGTR\SGTR_SG_I_R1.o0
  1
  1
  0
  0
  1
  End of Scenario File
```

```
#######################################################################
    ALION RADTRAD Version 3.10 Rev 2 run on 12/01/2014  at 16:19:30

                Copyright © 2009 Alion Science and Technology
#######################################################################

            D. C. Cook - SGTR Initial SG Iodine

#######################################################################
                     Plant Description
#######################################################################

Number of Nuclides = 100

Inventory Power    =   1.0000E+00 MWth
Plant Power Level =   7.3000E+00 MWth

Number of compartments    =  5

Compartment information

Compartment number  1
Name: RCS
Compartment volume =   4.6614E+05 (Cubic feet)
Compartment type is Normal
Pathways into and out of compartment  1
   Exit Pathway Number    1: Flashed Break Flow & SG Tube Leakage
   Exit Pathway Number    5: Unflashed Intact SG Tube Leakage
   Exit Pathway Number    6: Unflashed Break Flow & Ruptured SG Tube Leakage

Compartment number  2
Name: Intact Steam Generators
```

```
Compartment volume =   4.8300E+05 (Cubic feet)
Compartment type is Normal
Pathways into and out of compartment  2
   Inlet Pathway Number   5: Unflashed Intact SG Tube Leakage
   Exit Pathway Number    7: Intact SG Steam Release

Compartment number  3
Name: Environment
Compartment type is Environment
Pathways into and out of compartment  3
   Inlet Pathway Number   1: Flashed Break Flow & SG Tube Leakage
   Inlet Pathway Number   4: Control Room Exhaust
   Inlet Pathway Number   7: Intact SG Steam Release
   Inlet Pathway Number   8: Ruptured Steam Generator Steam Relase
   Exit Pathway Number    2: Control Room Makeup
   Exit Pathway Number    3: Control Room Unfiltered Inleakage

Compartment number  4
Name: Control Room
Compartment volume =   5.0616E+04 (Cubic feet)
Compartment type is Control Room
Removal devices within compartment:
     Filter(s)
Pathways into and out of compartment  4
   Inlet Pathway Number   2: Control Room Makeup
   Inlet Pathway Number   3: Control Room Unfiltered Inleakage
   Exit Pathway Number    4: Control Room Exhaust

Compartment number  5
Name: Ruptured Steam Generator
Compartment volume =   1.6100E+05 (Cubic feet)
Compartment type is Normal
Pathways into and out of compartment  5
```

```
   Inlet Pathway Number    6: Unflashed Break Flow & Ruptured SG Tube Leakage
   Exit Pathway Number     8: Ruptured Steam Generator Steam Relase

Total number of pathways =   8
```

```
#######################################################################
    ALION RADTRAD Version 3.10 Rev 2 run on 12/01/2014  at 16:19:30

                Copyright © 2009 Alion Science and Technology
#######################################################################

        D. C. Cook - SGTR Initial SG Iodine

#######################################################################
                    Scenario Description
#######################################################################

Power Ratio                                =   7.3000E+00

End Time                                   =   7.2000E+02 (Hours)

Radioactive Decay is enabled
Calculation of Daughters is enabled

Source Number  1 is used in Compartment  2  Intact Steam Generators
   Nuclide Distribution given in Ci/MWt
Fraction of Nuclide Distribution in this Compartment      3.00

Iodine fractions for source number 1
     Aerosol     =   0.0000E+00
     Elemental   =   9.7000E-01
     Organic     =   3.0000E-02

Inventory file =     c:\projects\1537-cook_dose\source_term\cook_rcs.nif
Release from file =    c:\projects\1537-cook_dose\sgtr\sgtr_sg_i_r1.rft
Dose Conversion file =    c:\projects\1537-cook_dose\source_term\rwa-1205-004.inp
```

Nuclide Name	Group	Specific Inventory (Ci/MWt)	half life (s)	Whole Body DCF (Sv-m3/Bq-s)	Inhaled Thyroid (Sv/Bq)	Inhaled Effective (Sv/Bq)
Te-131m	4	5.787E-02	1.080E+05	7.010E-14	3.610E-08	1.730E-09
Te-132	4	9.639E-01	2.815E+05	1.030E-14	6.280E-08	2.550E-09
I-131	2	8.087E-01	6.947E+05	1.820E-14	2.920E-07	8.890E-09
I-132	2	6.411E-01	8.280E+03	1.120E-13	1.740E-09	1.030E-10
I-133	2	1.030E+00	7.488E+04	2.940E-14	4.860E-08	1.580E-09
I-134	2	1.231E-01	3.156E+03	1.300E-13	2.880E-10	3.550E-11
I-135	2	5.365E-01	2.380E+04	7.980E-14	8.460E-09	3.320E-10
Br-82	2	4.641E-03	1.271E+05	1.300E-13	2.060E-10	4.130E-10
Br-83	2	2.720E-02	8.604E+03	3.820E-16	1.140E-12	2.410E-11
Br-84	2	1.244E-02	1.908E+03	9.410E-14	3.120E-12	2.610E-11
Te-131	4	1.599E-02	1.500E+03	2.040E-14	2.630E-09	1.290E-10
Te-133m	4	7.643E-03	3.324E+03	1.140E-13	2.610E-09	1.170E-10
Te-134	4	1.092E-02	2.508E+03	4.240E-14	5.540E-10	3.440E-11

Nuclide	Daughter	Fraction	Daughter	Fraction	Daughter	Fraction
Te-131m	I-131	0.78	Te-131	0.22	none	0.00
Te-132	I-132	1.00	none	0.00	none	0.00
I-131	Xe-131m	0.01	none	0.00	none	0.00
I-133	Xe-133m	0.03	Xe-133	0.97	none	0.00
I-135	Xe-135m	0.15	Xe-135	0.85	none	0.00
Br-83	Kr-83m	1.00	none	0.00	none	0.00
Te-131	I-131	1.00	none	0.00	none	0.00
Te-133m	I-133	0.87	Te-133	0.13	none	0.00
Te-134	I-134	1.00	none	0.00	none	0.00

Release Fractions and Timings
RWA-1313-011 - D. C. Cook SGTR Initial SG Iodine
Duration (h):

GAP	EARLY IN-VESSEL	LATE RELEASE	RELEASE MASS

	0.000010 hr	0.0000 hrs	0.0000 hrs	(Ci)
NOBLES	0.0000E+00	0.0000E+00	0.0000E+00	0.000E+00
IODINE	1.0000E+00	0.0000E+00	0.0000E+00	6.973E+01
CESIUM	0.0000E+00	0.0000E+00	0.0000E+00	0.000E+00
TELLURIUM	0.0000E+00	0.0000E+00	0.0000E+00	0.000E+00
STRONTIUM	0.0000E+00	0.0000E+00	0.0000E+00	0.000E+00
BARIUM	0.0000E+00	0.0000E+00	0.0000E+00	0.000E+00
RUTHENIUM	0.0000E+00	0.0000E+00	0.0000E+00	0.000E+00
CERIUM	0.0000E+00	0.0000E+00	0.0000E+00	0.000E+00
LANTHANUM	0.0000E+00	0.0000E+00	0.0000E+00	0.000E+00
AEROSOL	0.0000E+00	0.0000E+00	0.0000E+00	0.000E+00

Source Number 2 is used in Compartment 5 Ruptured Steam Generator
Nuclide Distribution given in Ci/MWt
Fraction of Nuclide Distribution in this Compartment 1.00000

Iodine fractions for source number 2
Aerosol = 0.0000E+00
Elemental = 9.7000E-01
Organic = 3.0000E-02

Inventory file = c:\projects\1537-cook_dose\source_term\cook_rcs.nif
Release from file = c:\projects\1537-cook_dose\sgtr\sgtr_sg_i_r1.rft
Dose Conversion file = c:\projects\1537-cook_dose\source_term\rwa-1205-004.inp

Nuclide Name	Group	Specific Inventory (Ci/MWt)	half life (s)	Whole Body DCF (Sv-m3/Bq-s)	Inhaled Thyroid (Sv/Bq)	Inhaled Effective (Sv/Bq)
Te-131m	4	5.787E-02	1.080E+05	7.010E-14	3.610E-08	1.730E-09
Te-132	4	9.639E-01	2.815E+05	1.030E-14	6.280E-08	2.550E-09
I-131	2	8.087E-01	6.947E+05	1.820E-14	2.920E-07	8.890E-09
I-132	2	6.411E-01	8.280E+03	1.120E-13	1.740E-09	1.030E-10

I-133	2	1.030E+00	7.488E+04	2.940E-14	4.860E-08	1.580E-09
I-134	2	1.231E-01	3.156E+03	1.300E-13	2.880E-10	3.550E-11
I-135	2	5.365E-01	2.380E+04	7.980E-14	8.460E-09	3.320E-10
Br-82	2	4.641E-03	1.271E+05	1.300E-13	2.060E-10	4.130E-10
Br-83	2	2.720E-02	8.604E+03	3.820E-16	1.140E-12	2.410E-11
Br-84	2	1.244E-02	1.908E+03	9.410E-14	3.120E-12	2.610E-11
Te-131	4	1.599E-02	1.500E+03	2.040E-14	2.630E-09	1.290E-10
Te-133m	4	7.643E-03	3.324E+03	1.140E-13	2.610E-09	1.170E-10
Te-134	4	1.092E-02	2.508E+03	4.240E-14	5.540E-10	3.440E-11

Nuclide	Daughter	Fraction	Daughter	Fraction	Daughter	Fraction
Te-131m	I-131	0.78	Te-131	0.22	none	0.00
Te-132	I-132	1.00	none	0.00	none	0.00
I-131	Xe-131m	0.01	none	0.00	none	0.00
I-133	Xe-133m	0.03	Xe-133	0.97	none	0.00
I-135	Xe-135m	0.15	Xe-135	0.85	none	0.00
Br-83	Kr-83m	1.00	none	0.00	none	0.00
Te-131	I-131	1.00	none	0.00	none	0.00
Te-133m	I-133	0.87	Te-133	0.13	none	0.00
Te-134	I-134	1.00	none	0.00	none	0.00

Release Fractions and Timings
RWA-1313-011 - D. C. Cook SGTR Initial SG Iodine
Duration (h):

	GAP	EARLY IN-VESSEL	LATE RELEASE	RELEASE MASS
	0.000010 hr	0.0000 hrs	0.0000 hrs	(Ci)
NOBLES	0.0000E+00	0.0000E+00	0.0000E+00	0.000E+00
IODINE	1.0000E+00	0.0000E+00	0.0000E+00	2.324E+01
CESIUM	0.0000E+00	0.0000E+00	0.0000E+00	0.000E+00
TELLURIUM	0.0000E+00	0.0000E+00	0.0000E+00	0.000E+00
STRONTIUM	0.0000E+00	0.0000E+00	0.0000E+00	0.000E+00
BARIUM	0.0000E+00	0.0000E+00	0.0000E+00	0.000E+00
RUTHENIUM	0.0000E+00	0.0000E+00	0.0000E+00	0.000E+00

CERIUM	0.0000E+00	0.0000E+00	0.0000E+00	0.000E+00
LANTHANUM	0.0000E+00	0.0000E+00	0.0000E+00	0.000E+00
AEROSOL	0.0000E+00	0.0000E+00	0.0000E+00	0.000E+00

COMPARTMENT DATA

Compartment number 1: RCS

Compartment number 2: Intact Steam Generators

Compartment number 3: Environment

Compartment number 4: Control Room

Compartment Filter Data

Time (hr)	Flow Rate (cfm)	Filter Efficiencies (%) Aerosol	Elemental	Organic
0.0000E+00	0.0000E+00	9.8010E+01	9.4050E+01	9.4050E+01
1.1000E-01	4.5200E+03	9.8010E+01	9.4050E+01	9.4050E+01
7.2000E+02	4.5200E+03	9.8010E+01	9.4050E+01	9.4050E+01

Compartment number 5: Ruptured Steam Generator

PATHWAY DATA

Pathway number 1: Flashed Break Flow & SG Tube Leakage

Pathway Filter: Removal Data

Time (hr)	Flow Rate (cfm)	Filter Efficiencies (%) Aerosol	Elemental	Organic
0.0000E+00	0.0000E+00	0.0000E+00	0.0000E+00	0.0000E+00

2.8000E-02	0.0000E+00	0.0000E+00	0.0000E+00	0.0000E+00
1.3900E-01	0.0000E+00	0.0000E+00	0.0000E+00	0.0000E+00
2.7800E-01	0.0000E+00	0.0000E+00	0.0000E+00	0.0000E+00
5.0000E-01	0.0000E+00	0.0000E+00	0.0000E+00	0.0000E+00
6.6700E-01	0.0000E+00	0.0000E+00	0.0000E+00	0.0000E+00
7.2000E+02	0.0000E+00	0.0000E+00	0.0000E+00	0.0000E+00

Pathway number 2: Control Room Makeup

Pathway Filter: Removal Data

Time (hr)	Flow Rate (cfm)	Filter Efficiencies (%) Aerosol	Elemental	Organic
0.0000E+00	8.8000E+02	0.0000E+00	0.0000E+00	0.0000E+00
1.1000E-01	8.8000E+02	9.8010E+01	9.4050E+01	9.4050E+01
7.2000E+02	8.8000E+02	9.8010E+01	9.4050E+01	9.4050E+01

Pathway number 3: Control Room Unfiltered Inleakage

Pathway Filter: Removal Data

Time (hr)	Flow Rate (cfm)	Filter Efficiencies (%) Aerosol	Elemental	Organic
0.0000E+00	4.0000E+01	0.0000E+00	0.0000E+00	0.0000E+00
7.2000E+02	4.0000E+01	0.0000E+00	0.0000E+00	0.0000E+00

Pathway number 4: Control Room Exhaust

Pathway Filter: Removal Data

Time (hr)	Flow Rate (cfm)	Filter Efficiencies (%) Aerosol	Elemental	Organic
0.0000E+00	9.2000E+02	0.0000E+00	0.0000E+00	0.0000E+00

7.2000E+02	9.2000E+02	0.0000E+00	0.0000E+00	0.0000E+00

Pathway number 5: Unflashed Intact SG Tube Leakage

Pathway Filter: Removal Data

Time (hr)	Flow Rate (cfm)	Filter Efficiencies (%) Aerosol	Elemental	Organic
0.0000E+00	0.0000E+00	0.0000E+00	0.0000E+00	0.0000E+00
2.8000E-02	0.0000E+00	0.0000E+00	0.0000E+00	0.0000E+00
1.3900E-01	0.0000E+00	0.0000E+00	0.0000E+00	0.0000E+00
2.7800E-01	0.0000E+00	0.0000E+00	0.0000E+00	0.0000E+00
5.0000E-01	0.0000E+00	0.0000E+00	0.0000E+00	0.0000E+00
6.6700E-01	0.0000E+00	0.0000E+00	0.0000E+00	0.0000E+00
2.4000E+01	0.0000E+00	0.0000E+00	0.0000E+00	0.0000E+00
7.2000E+02	0.0000E+00	0.0000E+00	0.0000E+00	0.0000E+00

Pathway number 6: Unflashed Break Flow & Ruptured SG Tube Leakage

Pathway Filter: Removal Data

Time (hr)	Flow Rate (cfm)	Filter Efficiencies (%) Aerosol	Elemental	Organic
0.0000E+00	0.0000E+00	0.0000E+00	0.0000E+00	0.0000E+00
2.8000E-02	0.0000E+00	0.0000E+00	0.0000E+00	0.0000E+00
1.3900E-01	0.0000E+00	0.0000E+00	0.0000E+00	0.0000E+00
2.7800E-01	0.0000E+00	0.0000E+00	0.0000E+00	0.0000E+00
5.0000E-01	0.0000E+00	0.0000E+00	0.0000E+00	0.0000E+00
7.2000E+02	0.0000E+00	0.0000E+00	0.0000E+00	0.0000E+00

Pathway number 7: Intact SG Steam Release

Pathway Filter: Removal Data

Time (hr)	Flow Rate (cfm)	Filter Efficiencies (%) Aerosol	Elemental	Organic
0.0000E+00	2.1440E+01	0.0000E+00	0.0000E+00	0.0000E+00
2.8000E-02	7.0100E+01	0.0000E+00	0.0000E+00	0.0000E+00
5.0000E-01	3.4940E+01	0.0000E+00	0.0000E+00	0.0000E+00
2.0000E+00	3.7990E+01	0.0000E+00	0.0000E+00	0.0000E+00
8.0000E+00	1.4030E+01	0.0000E+00	0.0000E+00	0.0000E+00
2.4000E+01	0.0000E+00	0.0000E+00	0.0000E+00	0.0000E+00
7.2000E+02	0.0000E+00	0.0000E+00	0.0000E+00	0.0000E+00

Pathway number 8: Ruptured Steam Generator Steam Relase

Pathway Filter: Removal Data

Time (hr)	Flow Rate (cfm)	Filter Efficiencies (%) Aerosol	Elemental	Organic
0.0000E+00	7.1500E+00	0.0000E+00	0.0000E+00	0.0000E+00
2.8000E-02	2.2060E+01	0.0000E+00	0.0000E+00	0.0000E+00
5.0000E-01	0.0000E+00	0.0000E+00	0.0000E+00	0.0000E+00
7.2000E+02	0.0000E+00	0.0000E+00	0.0000E+00	0.0000E+00

DOSE INFORMATION
Number_Dose_Locations = 3

Dose Location Name = Exclusion Area Boundary
Located in compartment 3 the Environment

Exclusion Area Boundary Breathing Rate Data

Time (hr)	Breathing Rate (m^3 * sec^-1)
0.0000E+00	3.5000E-04
8.0000E+00	1.8000E-04
2.4000E+01	2.3000E-04

```
      7.2000E+02                2.3000E-04

Dose Location Name = Low Population Zone
        Located in compartment  3 the Environment

Low Population Zone Breathing Rate Data
        Time (hr)         Breathing Rate (m^3 * sec^-1)
      0.0000E+00                3.5000E-04
      8.0000E+00                1.8000E-04
      2.4000E+01                2.3000E-04
      7.2000E+02                2.3000E-04

Dose Location Name = Control Room
        Located in compartment  4 the Control Room

Control Room Breathing Rate Data
        Time (hr)         Breathing Rate (m^3 * sec^-1)
      0.0000E+00                3.5000E-04
      7.2000E+02                3.5000E-04

Control Room Occupancy Factor Data
        Time (hr)         Occupancy Factor
      0.0000E+00           1.0000E+00
      2.4000E+01           6.0000E-01
      9.6000E+01           4.0000E-01
      7.2000E+02           4.0000E-01

X/Q, ATMOSPHERIC DISPERSION INFORMATION

X/Q Table Name =    Exclusion Area Boundary

     Location X/Q Data
      Time (hr)         X/Q (s * m^-3)
```

0.0000E+00	8.6200E-04
2.8000E-02	5.8700E-04
7.2000E+02	5.8700E-04

X/Q Table Name = Low Population Zone

Location X/Q Data

Time (hr)	X/Q (s * m^-3)
0.0000E+00	1.1600E-04
2.8000E-02	1.1300E-04
2.0000E+00	5.2900E-05
8.0000E+00	3.6300E-05
2.4000E+01	1.6500E-05
9.6000E+01	6.3600E-06
7.2000E+02	6.3600E-06

X/Q Table Name = Control Room Makeup

Location X/Q Data

Time (hr)	X/Q (s * m^-3)
0.0000E+00	8.5000E-04
2.8000E-02	1.0900E-02
1.1000E-01	1.2600E-02
2.0000E+00	9.7200E-03
8.0000E+00	3.2600E-03
2.4000E+01	3.1700E-03
9.6000E+01	2.8000E-03
7.2000E+02	2.8000E-03

This X/Q Table is used for these connected pathways
Path 1 Flashed Break Flow & SG Tube Leakage and Path 2 Control Room Makeup
Path 7 Intact SG Steam Release and Path 2 Control Room Makeup
Path 8 Ruptured Steam Generator Steam Relase and Path 2 Control Room Makeup

X/Q Table Name = Control Room Unfiltered Inleakage

Location X/Q Data

Time (hr)	X/Q (s * m^-3)
0.0000E+00	8.5000E-04
2.8000E-02	1.0900E-02
2.0000E+00	8.6100E-03
8.0000E+00	2.8700E-03
2.4000E+01	2.7800E-03
9.6000E+01	2.5000E-03
7.2000E+02	2.5000E-03

This X/Q Table is used for these connected pathways
Path 1 Flashed Break Flow & SG Tube Leakage and Path 3 Control Room Unfiltered Inleakage
Path 7 Intact SG Steam Release and Path 3 Control Room Unfiltered Inleakage
Path 8 Ruptured Steam Generator Steam Relase and Path 3 Control Room Unfiltered Inleakage

USER SPECIFIED TIME STEP DATA - SUPPLEMENTAL TIME STEPS

Time (hr)	Time step (hr)
0.0000E+00	0.0000E+00

EDIT EACH MAJOR TIME STEP

DO NOT EDIT SUPPLEMENTAL TIME STEPS

DO NOT EDIT MODEL DECONTAMINATION

Masses in Curies in detailed output

```
#######################################################################
    ALION RADTRAD Version 3.10 Rev 2 run on 12/01/2014  at 16:19:30

                Copyright © 2009 Alion~Science and Technology
#######################################################################



     ####   #    #  #####  #####   #    #  #####
    #    #  #    #    #    #    #  #    #    #
    #    #  #    #    #    #    #  #    #    #
    #    #  #    #    #    #####   #    #    #
    #    #  #    #    #    #       #    #    #
    #    #  #    #    #    #       #    #    #
     ####    ####     #    #        ####     #


           D. C. Cook - SGTR Initial SG Iodine

#######################################################################
           Dose, Detailed model and Detailed Inventory Output
#######################################################################

#######################################################################
    ALION RADTRAD Version 3.10 Rev 2 run on 12/01/2014  at 16:19:30

                Copyright © 2009 Alion Science and Technology
#######################################################################

Exclusion Area Boundary Doses:
```

Time (h) = 0.0000	Whole Body	Thyroid	TEDE
Delta dose (rem)	2.2006E-10	1.2672E-07	4.1570E-09
Accumulated dose (rem)	2.2006E-10	1.2672E-07	4.1570E-09

Low Population Zone Doses:

Time (h) = 0.0000	Whole Body	Thyroid	TEDE
Delta dose (rem)	2.9613E-11	1.7053E-08	5.5941E-10
Accumulated dose (rem)	2.9613E-11	1.7053E-08	5.5941E-10

Control Room Doses:

Time (h) = 0.0000	Whole Body	Thyroid	TEDE	Skin
Delta dose (rem)	3.9246E-17	6.8138E-13	2.1208E-14	1.8113E-15
Accumulated dose (rem)	3.9246E-17	6.8138E-13	2.1208E-14	1.8113E-15

****

Intact Steam Generators Compartment Nuclide Inventory (Ci) at Time (h) = 0.0000

Nuclide	Compartment Atmosphere	Dose Fract	Exposure (Ci-hr)	Decays (Bq-s)
I-131	1.7711E+01	7.5518E-01	1.7711E-04	2.3590E+10
I-132	1.4040E+01	2.8320E-02	1.4040E-04	1.8701E+10
I-133	2.2566E+01	1.7906E-01	2.2566E-04	3.0058E+10
I-134	2.6959E+00	5.2312E-03	2.6959E-05	3.5909E+09
I-135	1.1749E+01	3.1375E-02	1.1749E-04	1.5650E+10
Xe-133	1.2065E-06	2.5644E-11	1.2065E-11	0.0000E+00
Xe-135	7.5796E-06	1.2289E-09	7.5796E-11	0.0000E+00
Kr-83m	2.2562E-06	4.6110E-14	2.2562E-11	0.0000E+00
Br-82	1.0164E-01	3.8018E-04	1.0164E-06	1.3538E+08
Br-83	5.9568E-01	7.1557E-05	5.9568E-06	7.9344E+08

Br-84	2.7243E-01	3.8318E-04	2.7243E-06	3.6288E+08
Xe-135m	4.9237E-05	1.3685E-08	4.9237E-10	0.0000E+00
Total	6.9731E+01	1.0000E+00	0.0000E+00	0.0000E+00

Dose Equivalent (Ci/cc) I-131 (Thyroid)	1.6007E-09
Dose Equivalent (Ci/cc) I-131 (CEDE)	1.6329E-09
Dose Equivalent (Ci/cc) I-131 (ICRP2 Thyroid)	1.8478E-09
Total I (Ci)	6.8762E+01
Dose Equivalent (Ci/cc) Xe-133 (EDE)	5.1398E-14

Intact Steam Generators Compartment Group Inventory Distribution:

Time (h) = 0.0000	Atmosphere	Sump
Noble gases (Ci)	6.0371E-05	0.0000E+00
Elemental I (Ci)	6.7639E+01	0.0000E+00
Organic I (Ci)	2.0919E+00	0.0000E+00
Aerosol I (Ci)	0.0000E+00	0.0000E+00
All Aerosols (Ci)	0.0000E+00	0.0000E+00
All Aerosols (kg)	0.0000E+00	0.0000E+00

Ruptured Steam Generator Compartment Nuclide Inventory (Ci) at Time (h) = 0.0000

Nuclide	Compartment Atmosphere	Dose Fract	Exposure (Ci-hr)	Decays (Bq-s)
I-131	5.9035E+00	7.5518E-01	5.9035E-05	7.8635E+09
I-132	4.6800E+00	2.8320E-02	4.6800E-05	6.2338E+09
I-133	7.5219E+00	1.7906E-01	7.5219E-05	1.0019E+10
I-134	8.9862E-01	5.2312E-03	8.9862E-06	1.1970E+09
I-135	3.9164E+00	3.1375E-02	3.9164E-05	5.2167E+09
Xe-135	2.5265E-06	1.2289E-09	2.5265E-11	0.0000E+00
Br-82	3.3879E-02	3.8018E-04	3.3879E-07	4.5127E+07
Br-83	1.9856E-01	7.1557E-05	1.9856E-06	2.6448E+08
Br-84	9.0811E-02	3.8318E-04	9.0811E-07	1.2096E+08

```
  Xe-135m   1.6412E-05   1.3685E-08   1.6412E-10   0.0000E+00
  Total     2.3244E+01   1.0000E+00   0.0000E+00   0.0000E+00

Dose Equivalent (Ci/cc) I-131 (Thyroid)             1.6007E-09
Dose Equivalent (Ci/cc) I-131 (CEDE)                1.6329E-09
Dose Equivalent (Ci/cc) I-131 (ICRP2 Thyroid)       1.8478E-09
Total I  (Ci)                                       2.2921E+01
Dose Equivalent (Ci/cc) Xe-133 (EDE)                5.1398E-14

Ruptured Steam Generator Compartment Group Inventory Distribution:

Time (h) =   0.0000      Atmosphere      Sump
Noble gases (Ci)         2.0124E-05   0.0000E+00
Elemental I (Ci)         2.2546E+01   0.0000E+00
Organic I (Ci)           6.9731E-01   0.0000E+00
Aerosol I (Ci)           0.0000E+00   0.0000E+00
All Aerosols (Ci)        0.0000E+00   0.0000E+00
All Aerosols (kg)        0.0000E+00   0.0000E+00

#######################################################################
    ALION RADTRAD Version 3.10 Rev 2 run on 12/01/2014  at 16:19:30

                Copyright © 2009 Alion Science and Technology
#######################################################################

Exclusion Area Boundary Doses:

Time (h) =   0.0280    Whole Body   Thyroid       TEDE
Delta dose (rem)        1.2298E-06  7.0930E-04  2.3266E-05
Accumulated dose (rem)  1.2300E-06  7.0943E-04  2.3270E-05

Low Population Zone Doses:
```

Time (h) = 0.0280	Whole Body	Thyroid	TEDE
Delta dose (rem)	1.6549E-07	9.5452E-05	3.1309E-06
Accumulated dose (rem)	1.6552E-07	9.5469E-05	3.1314E-06

Control Room Doses:

Time (h) = 0.0280	Whole Body	Thyroid	TEDE	Skin
Delta dose (rem)	6.0698E-10	1.0560E-05	3.2866E-07	2.8017E-08
Accumulated dose (rem)	6.0698E-10	1.0560E-05	3.2866E-07	2.8017E-08

****

Intact Steam Generators Compartment Nuclide Inventory (Ci) at Time (h) = 0.0280

Nuclide	Compartment Atmosphere	Dose Fract	Exposure (Ci-hr)	Decays (Bq-s)	Pathway 7 Outflow
I-131	1.7707E+01	7.5548E-01	4.9583E-01	6.6046E+13	1.3204E-03
I-132	1.3921E+01	2.8164E-02	3.9075E-01	5.2141E+13	1.0443E-03
I-133	2.2543E+01	1.7902E-01	6.3139E-01	8.4118E+13	1.6820E-03
I-134	2.6367E+00	5.1520E-03	7.4302E-02	9.9436E+12	1.9973E-04
I-135	1.1714E+01	3.1324E-02	3.2828E-01	4.3754E+13	8.7527E-04
Xe-133	3.3763E-03	5.1159E-08	6.7362E-05	3.6214E+09	7.2414E-08
Xe-135	2.1259E-02	2.4564E-06	4.2400E-04	2.2752E+10	4.5519E-07
Kr-83m	6.2723E-03	9.1465E-11	1.2525E-04	6.7381E+09	1.3511E-07
Br-82	1.0157E-01	3.8022E-04	2.8446E-03	3.7894E+11	7.5767E-06
Br-83	5.9082E-01	7.1178E-05	1.6582E-02	2.2125E+12	4.4309E-05
Br-84	2.6262E-01	3.7352E-04	7.4319E-03	9.9765E+11	2.0100E-05
Xe-131m	1.3357E-05	5.0466E-11	2.6648E-07	1.4323E+07	2.8641E-10
Xe-133m	2.4171E-04	3.2164E-09	4.8224E-06	2.5925E+08	5.1843E-09
Xe-135m	1.3471E-01	2.6779E-05	2.6964E-03	1.4389E+11	2.9351E-06
Total	6.9643E+01	1.0000E+00	0.0000E+00	0.0000E+00	5.1973E-03

Dose Equivalent (Ci/cc) I-131 (Thyroid) 1.6001E-09

```
Dose Equivalent (Ci/cc) I-131 (CEDE)                1.6322E-09
Dose Equivalent (Ci/cc) I-131 (ICRP2 Thyroid)       1.8465E-09
Total I  (Ci)                                       6.8522E+01
Dose Equivalent (Ci/cc) Xe-133 (EDE)                1.4092E-10

Intact Steam Generators Compartment Group Inventory Distribution:

Time (h) =   0.0280      Atmosphere      Sump
Noble gases (Ci)         1.6588E-01   0.0000E+00
Elemental I (Ci)         6.7393E+01   0.0000E+00
Organic I (Ci)           2.0843E+00   0.0000E+00
Aerosol I (Ci)           0.0000E+00   0.0000E+00
All Aerosols (Ci)        0.0000E+00   0.0000E+00
All Aerosols (kg)        0.0000E+00   0.0000E+00

Control Room Compartment Group Inventory Distribution:

Time (h) =   0.0280      Atmosphere      Sump
Noble gases (Ci)         5.9949E-09   0.0000E+00
Elemental I (Ci)         2.4357E-06   0.0000E+00
Organic I (Ci)           7.5330E-08   0.0000E+00
Aerosol I (Ci)           0.0000E+00   0.0000E+00
All Aerosols (Ci)        0.0000E+00   0.0000E+00
All Aerosols (kg)        0.0000E+00   0.0000E+00

                         Deposition  Recirculating
Time (h) =   0.0280       Surfaces      Filter
Noble gases (Ci)         0.0000E+00   0.0000E+00
Elemental I (Ci)         0.0000E+00   0.0000E+00
Organic I (Ci)           0.0000E+00   0.0000E+00
Aerosol I (Ci)           0.0000E+00   0.0000E+00
All Aerosols (Ci)        0.0000E+00   0.0000E+00
All Aerosols (kg)        0.0000E+00   0.0000E+00
```

Ruptured Steam Generator Compartment Nuclide Inventory (Ci) at Time (h) = 0.0280

Nuclide	Compartment Atmosphere	Dose Fract	Exposure (Ci-hr)	Decays (Bq-s)	Pathway 8 Outflow
I-131	5.9025E+00	7.5548E-01	1.6528E-01	2.2015E+13	4.4035E-04
I-132	4.6404E+00	2.8164E-02	1.3025E-01	1.7380E+13	3.4825E-04
I-133	7.5143E+00	1.7902E-01	2.1046E-01	2.8039E+13	5.6093E-04
I-134	8.7889E-01	5.1520E-03	2.4767E-02	3.3145E+12	6.6606E-05
I-135	3.9047E+00	3.1324E-02	1.0943E-01	1.4585E+13	2.9189E-04
Xe-133	1.1254E-03	5.1159E-08	2.2454E-05	1.2071E+09	2.4149E-08
Xe-135	7.0865E-03	2.4564E-06	1.4133E-04	7.5840E+09	1.5180E-07
Kr-83m	2.0908E-03	9.1465E-11	4.1750E-05	2.2460E+09	4.5057E-08
Br-82	3.3858E-02	3.8022E-04	9.4820E-04	1.2631E+11	2.5267E-06
Br-83	1.9694E-01	7.1178E-05	5.5273E-03	7.3751E+11	1.4777E-05
Br-84	8.7540E-02	3.7352E-04	2.4773E-03	3.3255E+11	6.7031E-06
Xe-131m	4.4524E-06	5.0466E-11	8.8827E-08	4.7744E+06	9.5513E-11
Xe-133m	8.0570E-05	3.2164E-09	1.6075E-06	8.6416E+07	1.7289E-09
Xe-135m	4.4904E-02	2.6779E-05	8.9880E-04	4.7964E+10	9.7881E-07
Total	2.3214E+01	1.0000E+00	0.0000E+00	0.0000E+00	1.7332E-03

Dose Equivalent (Ci/cc) I-131 (Thyroid)	1.6001E-09
Dose Equivalent (Ci/cc) I-131 (CEDE)	1.6322E-09
Dose Equivalent (Ci/cc) I-131 (ICRP2 Thyroid)	1.8465E-09
Total I (Ci)	2.2841E+01
Dose Equivalent (Ci/cc) Xe-133 (EDE)	1.4092E-10

Ruptured Steam Generator Compartment Group Inventory Distribution:

Time (h) = 0.0280	Atmosphere	Sump
Noble gases (Ci)	5.5292E-02	0.0000E+00
Elemental I (Ci)	2.2464E+01	0.0000E+00
Organic I (Ci)	6.9477E-01	0.0000E+00

```
Aerosol I (Ci)            0.0000E+00   0.0000E+00
All Aerosols (Ci)         0.0000E+00   0.0000E+00
All Aerosols (kg)         0.0000E+00   0.0000E+00

#######################################################################
    ALION RADTRAD Version 3.10 Rev 2 run on 12/01/2014  at 16:19:30

                Copyright © 2009 Alion Science and Technology
#######################################################################

Exclusion Area Boundary Doses:

Time (h) =   0.1100    Whole Body   Thyroid       TEDE
Delta dose (rem)        7.8408E-06  4.5576E-03  1.4942E-04
Accumulated dose (rem)  9.0708E-06  5.2670E-03  1.7269E-04

Low Population Zone Doses:

Time (h) =   0.1100    Whole Body   Thyroid       TEDE
Delta dose (rem)        1.5094E-06  8.7735E-04  2.8764E-05
Accumulated dose (rem)  1.6749E-06  9.7282E-04  3.1895E-05

Control Room Doses:

Time (h) =   0.1100    Whole Body   Thyroid       TEDE        Skin
Delta dose (rem)        2.1176E-07  3.7187E-03  1.1573E-04  9.7801E-06
Accumulated dose (rem)  2.1236E-07  3.7292E-03  1.1605E-04  9.8081E-06

*******************************************************

Intact Steam Generators Compartment Nuclide Inventory (Ci)  at Time (h) =   0.1100

 Nuclide    Compartment  Dose Fract    Exposure     Decays      Pathway  7
```

	Atmosphere		(Ci-hr)	(Bq-s)	Outflow
I-131	1.7690E+01	7.5626E-01	1.9467E+00	2.5932E+14	1.3959E-02
I-132	1.3572E+01	2.7762E-02	1.5107E+00	2.0225E+14	1.0921E-02
I-133	2.2465E+01	1.7893E-01	2.4751E+00	3.2987E+14	1.7762E-02
I-134	2.4694E+00	4.9524E-03	2.8013E-01	3.7814E+13	2.0521E-03
I-135	1.1605E+01	3.1192E-02	1.2821E+00	1.7108E+14	9.2190E-03
Xe-133	1.3234E-02	1.8439E-07	9.5226E-04	8.0786E+10	4.2307E-06
Xe-135	8.4255E-02	8.9286E-06	6.0447E-03	5.1085E+11	2.6742E-05
Kr-83m	2.3987E-02	3.2351E-10	1.7375E-03	1.4790E+11	7.7926E-06
Br-82	1.0134E-01	3.8029E-04	1.1159E-02	1.4869E+12	8.0052E-05
Br-83	5.7652E-01	7.0202E-05	6.4146E-02	8.5861E+12	4.6357E-04
Br-84	2.3575E-01	3.4975E-04	2.7294E-02	3.7162E+12	2.0272E-04
Xe-131m	5.2425E-05	1.8208E-10	3.7710E-06	3.1981E+08	1.6745E-08
Xe-133m	9.4712E-04	1.1590E-08	6.8157E-05	5.7822E+09	3.0284E-07
Xe-135m	4.7676E-01	8.9377E-05	3.5297E-02	3.0019E+12	1.6309E-04
Total	6.9314E+01	1.0000E+00	0.0000E+00	0.0000E+00	5.4862E-02

Dose Equivalent (Ci/cc) I-131 (Thyroid)	1.5974E-09
Dose Equivalent (Ci/cc) I-131 (CEDE)	1.6292E-09
Dose Equivalent (Ci/cc) I-131 (ICRP2 Thyroid)	1.8419E-09
Total I (Ci)	6.7801E+01
Dose Equivalent (Ci/cc) Xe-133 (EDE)	5.0386E-10

Intact Steam Generators Compartment Group Inventory Distribution:

Time (h) = 0.1100	Atmosphere	Sump
Noble gases (Ci)	5.9923E-01	0.0000E+00
Elemental I (Ci)	6.6654E+01	0.0000E+00
Organic I (Ci)	2.0615E+00	0.0000E+00
Aerosol I (Ci)	0.0000E+00	0.0000E+00
All Aerosols (Ci)	0.0000E+00	0.0000E+00
All Aerosols (kg)	0.0000E+00	0.0000E+00

Control Room Compartment Nuclide Inventory (Ci) at Time (h) = 0.1100

Nuclide	Compartment Atmosphere	Dose Fract	Exposure (Ci-hr)	Decays (Bq-s)	Pathway 2 Inflow	Pathway 3 Inflow	Pathway 4 Outflow
I-131	7.5794E-05	7.5661E-01	4.7366E-06	6.3097E+08	7.5828E-05	3.4467E-06	3.4655E-06
I-132	5.8149E-05	2.7584E-02	3.6505E-06	4.8920E+08	5.9261E-05	2.6937E-06	2.6996E-06
I-133	9.6257E-05	1.7889E-01	6.0182E-06	8.0216E+08	9.6479E-05	4.3854E-06	4.4079E-06
I-134	1.0580E-05	4.8646E-03	6.6921E-07	9.0573E+07	1.1116E-05	5.0529E-07	5.0367E-07
I-135	4.9725E-05	3.1134E-02	3.1123E-06	4.1543E+08	5.0062E-05	2.2755E-06	2.2854E-06
Br-83	2.4702E-06	6.9772E-05	1.5505E-07	2.0773E+07	2.5157E-06	1.1435E-07	1.1461E-07
Br-84	1.0101E-06	3.3934E-04	6.4403E-08	8.8085E+06	1.0961E-06	4.9824E-08	4.9382E-08
Xe-135m	2.0427E-06	1.1644E-04	1.1184E-07	1.0230E+07	9.5439E-07	4.3381E-08	5.3079E-08
Total	2.9699E-04	1.0000E+00	0.0000E+00	0.0000E+00	2.9798E-04	1.3544E-05	1.3612E-05

Control Room Compartment Group Inventory Distribution:

Time (h) = 0.1100	Atmosphere	Sump
Noble gases (Ci)	2.5675E-06	0.0000E+00
Elemental I (Ci)	2.8559E-04	0.0000E+00
Organic I (Ci)	8.8326E-06	0.0000E+00
Aerosol I (Ci)	0.0000E+00	0.0000E+00
All Aerosols (Ci)	0.0000E+00	0.0000E+00
All Aerosols (kg)	0.0000E+00	0.0000E+00

Time (h) = 0.1100	Deposition Surfaces	Recirculating Filter
Noble gases (Ci)	0.0000E+00	0.0000E+00
Elemental I (Ci)	0.0000E+00	0.0000E+00
Organic I (Ci)	0.0000E+00	0.0000E+00
Aerosol I (Ci)	0.0000E+00	0.0000E+00
All Aerosols (Ci)	0.0000E+00	0.0000E+00
All Aerosols (kg)	0.0000E+00	0.0000E+00

Ruptured Steam Generator Compartment Nuclide Inventory (Ci) at Time (h) = 0.1100

Nuclide	Compartment Atmosphere	Dose Fract	Exposure (Ci-hr)	Decays (Bq-s)	Pathway 8 Outflow
I-131	5.8968E+00	7.5626E-01	6.4893E-01	8.6442E+13	4.4178E-03
I-132	4.5240E+00	2.7762E-02	5.0357E-01	6.7418E+13	3.4564E-03
I-133	7.4888E+00	1.7893E-01	8.2506E-01	1.0996E+14	5.6214E-03
I-134	8.2316E-01	4.9524E-03	9.3380E-02	1.2605E+13	6.4953E-04
I-135	3.8686E+00	3.1192E-02	4.2739E-01	5.7029E+13	2.9177E-03
Xe-133	4.4115E-03	1.8439E-07	3.1743E-04	2.6930E+10	1.3328E-06
Xe-135	2.8086E-02	8.9287E-06	2.0150E-03	1.7029E+11	8.4243E-06
Kr-83m	7.9961E-03	3.2351E-10	5.7920E-04	4.9300E+10	2.4549E-06
Br-82	3.3781E-02	3.8029E-04	3.7198E-03	4.9564E+11	2.5335E-05
Br-83	1.9218E-01	7.0202E-05	2.1382E-02	2.8621E+12	1.4672E-04
Br-84	7.8585E-02	3.4975E-04	9.0981E-03	1.2388E+12	6.4172E-05
Xe-131m	1.7476E-05	1.8208E-10	1.2570E-06	1.0661E+08	5.2752E-09
Xe-133m	3.1572E-04	1.1590E-08	2.2720E-05	1.9275E+09	9.5403E-08
Xe-135m	1.5892E-01	8.9378E-05	1.1766E-02	1.0007E+12	5.1380E-05
Total	2.3106E+01	1.0000E+00	0.0000E+00	0.0000E+00	1.7363E-02

Dose Equivalent (Ci/cc) I-131 (Thyroid)	1.5975E-09
Dose Equivalent (Ci/cc) I-131 (CEDE)	1.6293E-09
Dose Equivalent (Ci/cc) I-131 (ICRP2 Thyroid)	1.8420E-09
Total I (Ci)	2.2601E+01
Dose Equivalent (Ci/cc) Xe-133 (EDE)	5.0388E-10

Ruptured Steam Generator Compartment Group Inventory Distribution:

Time (h) = 0.1100	Atmosphere	Sump
Noble gases (Ci)	1.9975E-01	0.0000E+00
Elemental I (Ci)	2.2219E+01	0.0000E+00
Organic I (Ci)	6.8718E-01	0.0000E+00
Aerosol I (Ci)	0.0000E+00	0.0000E+00

```
All Aerosols (Ci)        0.0000E+00   0.0000E+00
All Aerosols (kg)        0.0000E+00   0.0000E+00

#######################################################################
    ALION RADTRAD Version 3.10 Rev 2 run on 12/01/2014  at 16:19:30

                Copyright © 2009 Alion Science and Technology
#######################################################################

Exclusion Area Boundary Doses:

Time (h) =   0.1390    Whole Body   Thyroid       TEDE
Delta dose (rem)        2.7368E-06  1.6099E-03  5.2741E-05
Accumulated dose (rem)  1.1808E-05  6.8769E-03  2.2543E-04

Low Population Zone Doses:

Time (h) =   0.1390    Whole Body   Thyroid       TEDE
Delta dose (rem)        5.2686E-07  3.0992E-04  1.0153E-05
Accumulated dose (rem)  2.2018E-06  1.2827E-03  4.2048E-05

Control Room Doses:

Time (h) =   0.1390    Whole Body   Thyroid       TEDE        Skin
Delta dose (rem)        1.3632E-07  2.4158E-03  7.5171E-05  6.3002E-06
Accumulated dose (rem)  3.4869E-07  6.1450E-03  1.9123E-04  1.6108E-05

*******************************************************

Intact Steam Generators Compartment Nuclide Inventory (Ci)  at Time (h) =   0.1390

 Nuclide    Compartment  Dose Fract    Exposure     Decays      Pathway  7
            Atmosphere                  (Ci-hr)      (Bq-s)       Outflow
```

I-131	1.7683E+01	7.5647E-01	2.4596E+00	3.2763E+14	1.8426E-02
I-132	1.3450E+01	2.7654E-02	1.9007E+00	2.5443E+14	1.4348E-02
I-133	2.2438E+01	1.7890E-01	3.1258E+00	4.1659E+14	2.3435E-02
I-134	2.4128E+00	4.9003E-03	3.5010E-01	4.7242E+13	2.6756E-03
I-135	1.1567E+01	3.1157E-02	1.6176E+00	2.1583E+14	1.2149E-02
Xe-133	1.6710E-02	2.2028E-07	1.4368E-03	1.3189E+11	7.5723E-06
Xe-135	1.0673E-01	1.0689E-05	9.1400E-03	8.3587E+11	4.8017E-05
Kr-83m	3.0024E-02	3.8448E-10	2.6082E-03	2.4002E+11	1.3849E-05
Br-82	1.0126E-01	3.8031E-04	1.4096E-02	1.8781E+12	1.0564E-04
Br-83	5.7155E-01	6.9942E-05	8.0721E-02	1.0803E+13	6.0914E-04
Br-84	2.2691E-01	3.4366E-04	3.3874E-02	4.6096E+12	2.6224E-04
Xe-131m	6.6224E-05	2.1757E-10	5.6915E-06	5.2225E+08	2.9983E-08
Xe-133m	1.1957E-03	1.3845E-08	1.0283E-04	9.4392E+09	5.4200E-07
Xe-135m	5.8126E-01	1.0456E-04	5.2153E-02	4.7723E+12	2.8347E-04
Total	6.9187E+01	1.0000E+00	0.0000E+00	0.0000E+00	7.2364E-02

Dose Equivalent (Ci/cc) I-131 (Thyroid)	1.5965E-09
Dose Equivalent (Ci/cc) I-131 (CEDE)	1.6282E-09
Dose Equivalent (Ci/cc) I-131 (ICRP2 Thyroid)	1.8403E-09
Total I (Ci)	6.7552E+01
Dose Equivalent (Ci/cc) Xe-133 (EDE)	6.1658E-10

Intact Steam Generators Compartment Group Inventory Distribution:

Time (h) = 0.1390	Atmosphere	Sump
Noble gases (Ci)	7.3599E-01	0.0000E+00
Elemental I (Ci)	6.6398E+01	0.0000E+00
Organic I (Ci)	2.0535E+00	0.0000E+00
Aerosol I (Ci)	0.0000E+00	0.0000E+00
All Aerosols (Ci)	0.0000E+00	0.0000E+00
All Aerosols (kg)	0.0000E+00	0.0000E+00

Control Room Compartment Nuclide Inventory (Ci) at Time (h) = 0.1390

Nuclide	Compartment Atmosphere	Dose Fract	Exposure (Ci-hr)	Decays (Bq-s)	Compartment Recirc Filtr	Pathway 2 Inflow	Pathway 3 Inflow	Pathway 4 Outflow
I-131	6.6225E-05	7.5678E-01	6.6572E-06	8.8679E+08	1.0376E-05	7.7657E-05	4.6549E-06	5.7114E-06
I-132	5.0372E-05	2.7486E-02	5.1112E-06	6.8463E+08	7.8925E-06	6.0664E-05	3.6206E-06	4.4226E-06
I-133	8.4032E-05	1.7886E-01	8.4551E-06	1.1269E+09	1.3167E-05	9.8800E-05	5.9198E-06	7.2601E-06
I-134	9.0361E-06	4.8176E-03	9.3126E-07	1.2588E+08	1.4158E-06	1.1372E-05	6.7395E-07	8.1718E-07
I-135	4.3320E-05	3.1101E-02	4.3686E-06	5.8303E+08	6.7876E-06	5.1261E-05	3.0682E-06	3.7588E-06
Br-83	2.1405E-06	6.9534E-05	2.1712E-07	2.9076E+07	3.3538E-07	2.5752E-06	1.5372E-07	1.8781E-07
Xe-135m	3.4519E-06	1.5705E-04	2.1194E-07	2.0728E+07	0.0000E+00	2.0125E-06	7.5944E-08	1.3008E-07
Total	2.6073E-04	1.0000E+00	0.0000E+00	0.0000E+00	4.0167E-05	3.0640E-04	1.8279E-05	2.2433E-05

Control Room Compartment Group Inventory Distribution:

Time (h) = 0.1390	Atmosphere	Sump
Noble gases (Ci)	4.3706E-06	0.0000E+00
Elemental I (Ci)	2.4866E-04	0.0000E+00
Organic I (Ci)	7.6906E-06	0.0000E+00
Aerosol I (Ci)	0.0000E+00	0.0000E+00
All Aerosols (Ci)	0.0000E+00	0.0000E+00
All Aerosols (kg)	0.0000E+00	0.0000E+00

Time (h) = 0.1390	Deposition Surfaces	Recirculating Filter
Noble gases (Ci)	0.0000E+00	0.0000E+00
Elemental I (Ci)	0.0000E+00	3.8962E-05
Organic I (Ci)	0.0000E+00	1.2050E-06
Aerosol I (Ci)	0.0000E+00	0.0000E+00
All Aerosols (Ci)	0.0000E+00	0.0000E+00
All Aerosols (kg)	0.0000E+00	0.0000E+00

Ruptured Steam Generator Compartment Nuclide Inventory (Ci) at Time (h) = 0.1390

Nuclide	Compartment Atmosphere	Dose Fract	Exposure (Ci-hr)	Decays (Bq-s)	Pathway 8 Outflow
I-131	5.8947E+00	7.5647E-01	8.1988E-01	1.0921E+14	5.8235E-03
I-132	4.4836E+00	2.7654E-02	6.3359E-01	8.4813E+13	4.5348E-03
I-133	7.4798E+00	1.7890E-01	1.0420E+00	1.3887E+14	7.4067E-03
I-134	8.0431E-01	4.9003E-03	1.1670E-01	1.5748E+13	8.4576E-04
I-135	3.8560E+00	3.1157E-02	5.3921E-01	7.1946E+13	3.8399E-03
Xe-133	5.5701E-03	2.2028E-07	4.7896E-04	4.3965E+10	2.3844E-06
Xe-135	3.5580E-02	1.0689E-05	3.0468E-03	2.7863E+11	1.5120E-05
Kr-83m	1.0008E-02	3.8448E-10	8.6944E-04	8.0011E+10	4.3610E-06
Br-82	3.3754E-02	3.8031E-04	4.6987E-03	6.2606E+11	3.3388E-05
Br-83	1.9053E-01	6.9942E-05	2.6908E-02	3.6012E+12	1.9253E-04
Br-84	7.5642E-02	3.4366E-04	1.1292E-02	1.5366E+12	8.2906E-05
Xe-131m	2.2076E-05	2.1758E-10	1.8972E-06	1.7409E+08	9.4411E-09
Xe-133m	3.9860E-04	1.3845E-08	3.4279E-05	3.1465E+09	1.7067E-07
Xe-135m	1.9376E-01	1.0456E-04	1.7385E-02	1.5908E+12	8.9265E-05
Total	2.3064E+01	1.0000E+00	0.0000E+00	0.0000E+00	2.2871E-02

Dose Equivalent (Ci/cc) I-131 (Thyroid)	1.5966E-09
Dose Equivalent (Ci/cc) I-131 (CEDE)	1.6283E-09
Dose Equivalent (Ci/cc) I-131 (ICRP2 Thyroid)	1.8404E-09
Total I (Ci)	2.2518E+01
Dose Equivalent (Ci/cc) Xe-133 (EDE)	6.1661E-10

Ruptured Steam Generator Compartment Group Inventory Distribution:

Time (h) = 0.1390	Atmosphere	Sump
Noble gases (Ci)	2.4534E-01	0.0000E+00
Elemental I (Ci)	2.2134E+01	0.0000E+00
Organic I (Ci)	6.8455E-01	0.0000E+00
Aerosol I (Ci)	0.0000E+00	0.0000E+00
All Aerosols (Ci)	0.0000E+00	0.0000E+00
All Aerosols (kg)	0.0000E+00	0.0000E+00

```
#######################################################################
    ALION RADTRAD Version 3.10 Rev 2 run on 12/01/2014  at 16:19:30

                Copyright © 2009 Alion Science and Technology
#######################################################################

Exclusion Area Boundary Doses:

Time (h) =   0.2780    Whole Body   Thyroid       TEDE
Delta dose (rem)        1.2905E-05  7.7042E-03  2.5216E-04
Accumulated dose (rem)  2.4712E-05  1.4581E-02  4.7759E-04

Low Population Zone Doses:

Time (h) =   0.2780    Whole Body   Thyroid       TEDE
Delta dose (rem)        2.4842E-06  1.4831E-03  4.8543E-05
Accumulated dose (rem)  4.6860E-06  2.7658E-03  9.0591E-05

Control Room Doses:

Time (h) =   0.2780    Whole Body   Thyroid       TEDE        Skin
Delta dose (rem)        4.6154E-07  8.2049E-03  2.5527E-04  2.1356E-05
Accumulated dose (rem)  8.1023E-07  1.4350E-02  4.4650E-04  3.7465E-05

*****************************************************

Intact Steam Generators Compartment Nuclide Inventory (Ci)  at Time (h) =   0.2780

 Nuclide    Compartment  Dose Fract   Exposure     Decays      Pathway  7
            Atmosphere                (Ci-hr)      (Bq-s)       Outflow
  I-131     1.7653E+01   7.5754E-01  4.9148E+00   6.5469E+14   3.9813E-02
  I-132     1.2883E+01   2.7112E-02  3.7184E+00   4.9812E+14   3.0386E-02
```

I-133	2.2307E+01	1.7877E-01	6.2328E+00	8.3074E+14	5.0535E-02
I-134	2.1591E+00	4.6440E-03	6.6208E-01	8.9513E+13	5.4871E-03
I-135	1.1386E+01	3.0975E-02	3.2089E+00	4.2828E+14	2.6072E-02
Xe-133	3.3290E-02	4.0492E-07	5.2705E-03	5.7089E+11	3.4727E-05
Xe-135	2.1563E-01	1.9854E-05	3.3877E-02	3.6581E+12	2.2254E-04
Kr-83m	5.7258E-02	6.8633E-10	9.2905E-03	1.0094E+12	6.1792E-05
Br-82	1.0086E-01	3.8041E-04	2.8134E-02	3.7488E+12	2.2801E-04
Br-83	5.4830E-01	6.8625E-05	1.5804E-01	2.1167E+13	1.2910E-03
Br-84	1.8897E-01	3.1464E-04	6.1886E-02	8.4481E+12	5.2040E-04
Xe-131m	1.3223E-04	4.0057E-10	2.0909E-05	2.2641E+09	1.3770E-07
Xe-133m	2.3809E-03	2.5441E-08	3.7706E-04	4.0843E+10	2.4848E-06
Xe-135m	9.7019E-01	1.7091E-04	1.7011E-01	1.8408E+13	1.1634E-03
Total	6.8505E+01	1.0000E+00	0.0000E+00	0.0000E+00	1.5582E-01

Dose Equivalent (Ci/cc) I-131 (Thyroid) 1.5921E-09
Dose Equivalent (Ci/cc) I-131 (CEDE) 1.6232E-09
Dose Equivalent (Ci/cc) I-131 (ICRP2 Thyroid) 1.8326E-09
Total I (Ci) 6.6388E+01
Dose Equivalent (Ci/cc) Xe-133 (EDE) 1.0505E-09

Intact Steam Generators Compartment Group Inventory Distribution:

Time (h) = 0.2780	Atmosphere	Sump
Noble gases (Ci)	1.2789E+00	0.0000E+00
Elemental I (Ci)	6.5210E+01	0.0000E+00
Organic I (Ci)	2.0168E+00	0.0000E+00
Aerosol I (Ci)	0.0000E+00	0.0000E+00
All Aerosols (Ci)	0.0000E+00	0.0000E+00
All Aerosols (kg)	0.0000E+00	0.0000E+00

Control Room Compartment Nuclide Inventory (Ci) at Time (h) = 0.2780

Nuclide	Compartment	Dose Fract	Exposure	Decays	Compartment	Pathway 2	Pathway 3	Pathway 4

	Atmosphere		(Ci-hr)	(Bq-s)	Recirc Filtr	Inflow	Inflow	Outflow
I-131	3.8017E-05	7.5731E-01	1.3040E-05	1.7370E+09	4.5624E-05	8.6410E-05	1.0440E-05	1.3343E-05
I-132	2.7743E-05	2.7044E-02	9.8436E-06	1.3191E+09	3.3295E-05	6.7228E-05	7.9586E-06	1.0156E-05
I-133	4.8040E-05	1.7868E-01	1.6533E-05	2.2037E+09	5.7654E-05	1.0989E-04	1.3250E-05	1.6932E-05
I-134	4.6496E-06	4.6135E-03	1.7456E-06	2.3623E+08	5.5801E-06	1.2522E-05	1.4344E-06	1.8252E-06
I-135	2.4520E-05	3.0943E-02	8.5075E-06	1.1356E+09	2.9427E-05	5.6959E-05	6.8340E-06	8.7301E-06
Xe-135	2.8954E-06	6.9644E-05	3.1538E-07	3.5349E+07	0.0000E+00	2.2342E-06	6.0078E-08	2.4376E-07
Br-83	1.1808E-06	6.8459E-05	4.1841E-07	5.6058E+07	1.4171E-06	2.8543E-06	3.3816E-07	4.3155E-07
Xe-135m	1.3108E-05	5.7919E-04	1.5300E-06	1.7278E+08	0.0000E+00	1.2582E-05	3.1395E-07	1.2366E-06
Total	1.6203E-04	1.0000E+00	0.0000E+00	0.0000E+00	1.7375E-04	3.5341E-04	4.0851E-05	5.3255E-05

Control Room Compartment Group Inventory Distribution:

Time (h) = 0.2780	Atmosphere	Sump
Noble gases (Ci)	1.7254E-05	0.0000E+00
Elemental I (Ci)	1.4043E-04	0.0000E+00
Organic I (Ci)	4.3432E-06	0.0000E+00
Aerosol I (Ci)	0.0000E+00	0.0000E+00
All Aerosols (Ci)	0.0000E+00	0.0000E+00
All Aerosols (kg)	0.0000E+00	0.0000E+00

Time (h) = 0.2780	Deposition Surfaces	Recirculating Filter
Noble gases (Ci)	0.0000E+00	0.0000E+00
Elemental I (Ci)	0.0000E+00	1.6853E-04
Organic I (Ci)	0.0000E+00	5.2124E-06
Aerosol I (Ci)	0.0000E+00	0.0000E+00
All Aerosols (Ci)	0.0000E+00	0.0000E+00
All Aerosols (kg)	0.0000E+00	0.0000E+00

Ruptured Steam Generator Compartment Nuclide Inventory (Ci) at Time (h) = 0.2780

Nuclide	Compartment	Dose Fract	Exposure	Decays	Pathway 8

	Atmosphere		(Ci-hr)	(Bq-s)	Outflow
I-131	5.8851E+00	7.5754E-01	1.6384E+00	2.1824E+14	1.2555E-02
I-132	4.2948E+00	2.7112E-02	1.2395E+00	1.6605E+14	9.5824E-03
I-133	7.4367E+00	1.7877E-01	2.0777E+00	2.7693E+14	1.5936E-02
I-134	7.1977E-01	4.6440E-03	2.2071E-01	2.9840E+13	1.7306E-03
I-135	3.7958E+00	3.0975E-02	1.0697E+00	1.4277E+14	8.2217E-03
Xe-133	1.1098E-02	4.0493E-07	1.7570E-03	1.9031E+11	1.0931E-05
Xe-135	7.1886E-02	1.9854E-05	1.1293E-02	1.2195E+12	7.0045E-05
Kr-83m	1.9088E-02	6.8634E-10	3.0971E-03	3.3651E+11	1.9450E-05
Br-82	3.3623E-02	3.8041E-04	9.3785E-03	1.2497E+12	7.1901E-05
Br-83	1.8279E-01	6.8625E-05	5.2683E-02	7.0560E+12	4.0714E-04
Br-84	6.2997E-02	3.1464E-04	2.0630E-02	2.8162E+12	1.6415E-04
Xe-131m	4.4083E-05	4.0058E-10	6.9702E-06	7.5476E+08	4.3343E-08
Xe-133m	7.9372E-04	2.5441E-08	1.2570E-04	1.3616E+10	7.8210E-07
Xe-135m	3.2344E-01	1.7091E-04	5.6709E-02	6.1364E+12	3.6621E-04
Total	2.2838E+01	1.0000E+00	0.0000E+00	0.0000E+00	4.9135E-02

Dose Equivalent (Ci/cc) I-131 (Thyroid)	1.5923E-09
Dose Equivalent (Ci/cc) I-131 (CEDE)	1.6234E-09
Dose Equivalent (Ci/cc) I-131 (ICRP2 Thyroid)	1.8328E-09
Total I (Ci)	2.2132E+01
Dose Equivalent (Ci/cc) Xe-133 (EDE)	1.0506E-09

Ruptured Steam Generator Compartment Group Inventory Distribution:

Time (h) = 0.2780	Atmosphere	Sump
Noble gases (Ci)	4.2635E-01	0.0000E+00
Elemental I (Ci)	2.1739E+01	0.0000E+00
Organic I (Ci)	6.7235E-01	0.0000E+00
Aerosol I (Ci)	0.0000E+00	0.0000E+00
All Aerosols (Ci)	0.0000E+00	0.0000E+00
All Aerosols (kg)	0.0000E+00	0.0000E+00

```
#######################################################################
    ALION RADTRAD Version 3.10 Rev 2 run on 12/01/2014  at 16:19:30

                Copyright © 2009 Alion Science and Technology
#######################################################################

Exclusion Area Boundary Doses:

Time (h) =   0.5000    Whole Body   Thyroid       TEDE
Delta dose (rem)        1.9835E-05  1.2260E-02  4.0045E-04
Accumulated dose (rem)  4.4547E-05  2.6841E-02  8.7805E-04

Low Population Zone Doses:

Time (h) =   0.5000    Whole Body   Thyroid       TEDE
Delta dose (rem)        3.8183E-06  2.3601E-03  7.7089E-05
Accumulated dose (rem)  8.5043E-06  5.1260E-03  1.6768E-04

Control Room Doses:

Time (h) =   0.5000    Whole Body   Thyroid       TEDE        Skin
Delta dose (rem)        4.3134E-07  7.4212E-03  2.3083E-04  2.0069E-05
Accumulated dose (rem)  1.2416E-06  2.1771E-02  6.7733E-04  5.7533E-05

*******************************************************

Intact Steam Generators Compartment Nuclide Inventory (Ci)  at Time (h) =   0.5000

 Nuclide    Compartment  Dose Fract    Exposure     Decays      Pathway  7
            Atmosphere                  (Ci-hr)      (Bq-s)       Outflow
  I-131     1.7605E+01   7.5915E-01   8.8274E+00   1.1759E+15   7.3896E-02
  I-132     1.2026E+01   2.6301E-02   6.4650E+00   8.6619E+14   5.4598E-02
  I-133     2.2100E+01   1.7856E-01   1.1158E+01   1.4872E+15   9.3488E-02
```

I-134	1.8080E+00	4.2825E-03	1.0943E+00	1.4800E+14	9.3726E-03
I-135	1.1103E+01	3.0695E-02	5.6993E+00	7.6070E+14	4.7854E-02
Xe-133	5.9504E-02	6.9024E-07	1.6102E-02	1.9044E+12	1.1988E-04
Xe-135	3.9006E-01	3.4213E-05	1.0463E-01	1.2349E+13	7.7761E-04
Kr-83m	9.5443E-02	1.1177E-09	2.7118E-02	3.2160E+12	2.0367E-04
Br-82	1.0022E-01	3.8054E-04	5.0441E-02	6.7213E+12	4.2245E-04
Br-83	5.1312E-01	6.6653E-05	2.7511E-01	3.6852E+13	2.3226E-03
Br-84	1.4108E-01	2.7605E-04	9.7311E-02	1.3293E+13	8.4555E-04
Xe-131m	2.3721E-04	6.8445E-10	6.4032E-05	7.5708E+09	4.7649E-07
Xe-133m	4.2519E-03	4.3341E-08	1.1513E-03	1.3617E+11	8.5723E-06
Xe-135m	1.3367E+00	2.4548E-04	4.3791E-01	5.1554E+13	3.3674E-03
Total	6.7282E+01	1.0000E+00	0.0000E+00	0.0000E+00	2.8728E-01

Dose Equivalent (Ci/cc) I-131 (Thyroid) 1.5850E-09
Dose Equivalent (Ci/cc) I-131 (CEDE) 1.6154E-09
Dose Equivalent (Ci/cc) I-131 (ICRP2 Thyroid) 1.8206E-09
Total I (Ci) 6.4641E+01
Dose Equivalent (Ci/cc) Xe-133 (EDE) 1.5002E-09

Intact Steam Generators Compartment Group Inventory Distribution:

Time (h) = 0.5000	Atmosphere	Sump
Noble gases (Ci)	1.8862E+00	0.0000E+00
Elemental I (Ci)	6.3434E+01	0.0000E+00
Organic I (Ci)	1.9619E+00	0.0000E+00
Aerosol I (Ci)	0.0000E+00	0.0000E+00
All Aerosols (Ci)	0.0000E+00	0.0000E+00
All Aerosols (kg)	0.0000E+00	0.0000E+00

Control Room Compartment Nuclide Inventory (Ci) at Time (h) = 0.5000

Nuclide	Compartment Atmosphere	Dose Fract	Exposure (Ci-hr)	Decays (Bq-s)	Compartment Recirc Filtr	Pathway 2 Inflow	Pathway 3 Inflow	Pathway 4 Outflow

I-131	2.2395E-05	7.5734E-01	1.9068E-05	2.5401E+09	7.7513E-05	1.0036E-04	1.9659E-05	2.0256E-05
I-132	1.5298E-05	2.6467E-02	1.4087E-05	1.8877E+09	5.2948E-05	7.7138E-05	1.4508E-05	1.5080E-05
I-133	2.8113E-05	1.7830E-01	2.4124E-05	3.2154E+09	9.7306E-05	1.2747E-04	2.4868E-05	2.5646E-05
I-134	2.2999E-06	4.3673E-03	2.4163E-06	3.2699E+08	7.9604E-06	1.4112E-05	2.4854E-06	2.6190E-06
I-135	1.4123E-05	3.0714E-02	1.2348E-05	1.6482E+09	4.8884E-05	6.5874E-05	1.2726E-05	1.3152E-05
Xe-133	1.4329E-06	5.3233E-06	2.6889E-07	3.2377E+07	0.0000E+00	1.3827E-06	3.2407E-08	2.4345E-07
Xe-135	9.3696E-06	2.6427E-04	1.7500E-06	2.1029E+08	0.0000E+00	8.7645E-06	2.1022E-07	1.5821E-06
Kr-83m	2.3008E-06	8.5056E-09	4.4682E-07	5.4033E+07	0.0000E+00	2.3515E-06	5.5056E-08	4.0861E-07
Br-83	6.5272E-07	6.7053E-05	5.9926E-07	8.0287E+07	2.2592E-06	3.2765E-06	6.1719E-07	6.4134E-07
Xe-135m	3.2989E-05	1.8134E-03	7.0048E-06	8.4254E+08	0.0000E+00	4.5360E-05	9.1009E-07	6.5631E-06
Total	1.2939E-04	1.0000E+00	0.0000E+00	0.0000E+00	2.8793E-04	4.4813E-04	7.6409E-05	8.6566E-05

Control Room Compartment Group Inventory Distribution:

Time (h) = 0.5000	Atmosphere	Sump
Noble gases (Ci)	4.6200E-05	0.0000E+00
Elemental I (Ci)	8.0693E-05	0.0000E+00
Organic I (Ci)	2.4956E-06	0.0000E+00
Aerosol I (Ci)	0.0000E+00	0.0000E+00
All Aerosols (Ci)	0.0000E+00	0.0000E+00
All Aerosols (kg)	0.0000E+00	0.0000E+00

Time (h) = 0.5000	Deposition Surfaces	Recirculating Filter
Noble gases (Ci)	0.0000E+00	0.0000E+00
Elemental I (Ci)	0.0000E+00	2.7930E-04
Organic I (Ci)	0.0000E+00	8.6380E-06
Aerosol I (Ci)	0.0000E+00	0.0000E+00
All Aerosols (Ci)	0.0000E+00	0.0000E+00
All Aerosols (kg)	0.0000E+00	0.0000E+00

Ruptured Steam Generator Compartment Nuclide Inventory (Ci) at Time (h) = 0.5000

Nuclide	Compartment Atmosphere	Dose Fract	Exposure (Ci-hr)	Decays (Bq-s)	Pathway 8 Outflow
I-131	5.8697E+00	7.5915E-01	2.9428E+00	3.9201E+14	2.3282E-02
I-132	4.0095E+00	2.6301E-02	2.1552E+00	2.8876E+14	1.7203E-02
I-133	7.3684E+00	1.7856E-01	3.7197E+00	4.9579E+14	2.9455E-02
I-134	6.0280E-01	4.2825E-03	3.6480E-01	4.9340E+13	2.9536E-03
I-135	3.7017E+00	3.0695E-02	1.9000E+00	2.5360E+14	1.5078E-02
Xe-133	1.9839E-02	6.9027E-07	5.3682E-03	6.3492E+11	3.7732E-05
Xe-135	1.3005E-01	3.4214E-05	3.4882E-02	4.1169E+12	2.4475E-04
Kr-83m	3.1822E-02	1.1178E-09	9.0406E-03	1.0722E+12	6.4106E-05
Br-82	3.3416E-02	3.8054E-04	1.6816E-02	2.2407E+12	1.3310E-04
Br-83	1.7108E-01	6.6653E-05	9.1714E-02	1.2285E+13	7.3182E-04
Br-84	4.7037E-02	2.7604E-04	3.2440E-02	4.4313E+12	2.6649E-04
Xe-131m	7.9088E-05	6.8447E-10	2.1347E-05	2.5240E+09	1.4998E-07
Xe-133m	1.4176E-03	4.3343E-08	3.8383E-04	4.5397E+10	2.6981E-06
Xe-135m	4.4566E-01	2.4548E-04	1.4599E-01	1.7187E+13	1.0599E-03
Total	2.2433E+01	1.0000E+00	0.0000E+00	0.0000E+00	9.0512E-02

Dose Equivalent (Ci/cc) I-131 (Thyroid)	1.5854E-09
Dose Equivalent (Ci/cc) I-131 (CEDE)	1.6158E-09
Dose Equivalent (Ci/cc) I-131 (ICRP2 Thyroid)	1.8210E-09
Total I (Ci)	2.1552E+01
Dose Equivalent (Ci/cc) Xe-133 (EDE)	1.5006E-09

Ruptured Steam Generator Compartment Group Inventory Distribution:

Time (h) = 0.5000	Atmosphere	Sump
Noble gases (Ci)	6.2887E-01	0.0000E+00
Elemental I (Ci)	2.1150E+01	0.0000E+00
Organic I (Ci)	6.5411E-01	0.0000E+00
Aerosol I (Ci)	0.0000E+00	0.0000E+00
All Aerosols (Ci)	0.0000E+00	0.0000E+00
All Aerosols (kg)	0.0000E+00	0.0000E+00

```
#######################################################################
    ALION RADTRAD Version 3.10 Rev 2 run on 12/01/2014  at 16:19:30

                Copyright © 2009 Alion Science and Technology
#######################################################################

Exclusion Area Boundary Doses:

Time (h) =    0.6670     Whole Body   Thyroid       TEDE
Delta dose (rem)          5.4358E-06  3.4842E-03  1.1357E-04
Accumulated dose (rem)    4.9983E-05  3.0325E-02  9.9161E-04

Low Population Zone Doses:

Time (h) =    0.6670     Whole Body   Thyroid       TEDE
Delta dose (rem)          1.0464E-06  6.7072E-04  2.1862E-05
Accumulated dose (rem)    9.5507E-06  5.7967E-03  1.8954E-04

Control Room Doses:

Time (h) =    0.6670     Whole Body   Thyroid       TEDE        Skin
Delta dose (rem)          2.0898E-07  3.2181E-03  1.0008E-04  9.8349E-06
Accumulated dose (rem)    1.4506E-06  2.4989E-02  7.7741E-04  6.7368E-05

*******************************************************

Intact Steam Generators Compartment Nuclide Inventory (Ci)  at Time (h) =   0.6670

 Nuclide    Compartment  Dose Fract    Exposure     Decays      Pathway  7
            Atmosphere                  (Ci-hr)      (Bq-s)       Outflow
  I-131     1.7582E+01   7.6034E-01   1.1765E+01   1.5672E+15   8.6649E-02
  I-132     1.1427E+01   2.5711E-02   8.4102E+00   1.1270E+15   6.3151E-02
```

I-133	2.1962E+01	1.7840E-01	1.4834E+01	1.9772E+15	1.0947E-01
I-134	1.5832E+00	4.0359E-03	1.3723E+00	1.8566E+14	1.0621E-02
I-135	1.0902E+01	3.0486E-02	7.5324E+00	1.0054E+15	5.5847E-02
Xe-133	7.9067E-02	9.0484E-07	2.8089E-02	3.4137E+12	1.6831E-04
Xe-135	5.1990E-01	4.5064E-05	1.8339E-01	2.2251E+13	1.0956E-03
Kr-83m	1.2034E-01	1.4157E-09	4.5704E-02	5.5699E+12	2.7975E-04
Br-82	9.9824E-02	3.8062E-04	6.7137E-02	8.9461E+12	4.9499E-04
Br-83	4.8851E-01	6.5218E-05	3.5821E-01	4.7989E+13	2.6878E-03
Br-84	1.1332E-01	2.5130E-04	1.1788E-01	1.6110E+13	9.3996E-04
Xe-131m	3.1605E-04	8.9886E-10	1.1190E-04	1.3595E+10	6.6976E-07
Xe-133m	5.6460E-03	5.6790E-08	2.0074E-03	2.4397E+11	1.2032E-05
Xe-135m	1.4872E+00	2.8554E-04	6.7783E-01	8.1821E+13	4.3807E-03
Total	6.6370E+01	1.0000E+00	0.0000E+00	0.0000E+00	3.3579E-01

Dose Equivalent (Ci/cc) I-131 (Thyroid)	1.5809E-09
Dose Equivalent (Ci/cc) I-131 (CEDE)	1.6108E-09
Dose Equivalent (Ci/cc) I-131 (ICRP2 Thyroid)	1.8131E-09
Total I (Ci)	6.3456E+01
Dose Equivalent (Ci/cc) Xe-133 (EDE)	1.7181E-09

Intact Steam Generators Compartment Group Inventory Distribution:

Time (h) = 0.6670	Atmosphere	Sump
Noble gases (Ci)	2.2125E+00	0.0000E+00
Elemental I (Ci)	6.2233E+01	0.0000E+00
Organic I (Ci)	1.9247E+00	0.0000E+00
Aerosol I (Ci)	0.0000E+00	0.0000E+00
All Aerosols (Ci)	0.0000E+00	0.0000E+00
All Aerosols (kg)	0.0000E+00	0.0000E+00

Control Room Compartment Nuclide Inventory (Ci) at Time (h) = 0.6670

Nuclide	Compartment	Dose Fract	Exposure	Decays	Compartment	Pathway 2	Pathway 3	Pathway 4

	Atmosphere		(Ci-hr)	(Bq-s)	Recirc Filtr	Inflow	Inflow	Outflow
I-131	1.2167E-05	7.5686E-01	2.1600E-05	2.8773E+09	9.1332E-05	1.0433E-04	2.2283E-05	2.3258E-05
I-132	7.9081E-06	2.6135E-02	1.5767E-05	2.1130E+09	5.9362E-05	7.9801E-05	1.6268E-05	1.7098E-05
I-133	1.5198E-05	1.7796E-01	2.7293E-05	3.6378E+09	1.1409E-04	1.3245E-04	2.8156E-05	2.9409E-05
I-134	1.0956E-06	4.2372E-03	2.6572E-06	3.5963E+08	8.2244E-06	1.4501E-05	2.7421E-06	2.9147E-06
I-135	7.5446E-06	3.0566E-02	1.3929E-05	1.8593E+09	5.6633E-05	6.8363E-05	1.4370E-05	1.5035E-05
Xe-133	1.9886E-06	9.8812E-06	5.6575E-07	6.9292E+07	0.0000E+00	2.1132E-06	4.2372E-08	5.4081E-07
Xe-135	1.3015E-05	4.9201E-04	3.6929E-06	4.5168E+08	0.0000E+00	1.3302E-05	2.7564E-07	3.5280E-06
Kr-83m	3.0342E-06	1.5248E-08	9.0794E-07	1.1169E+08	0.0000E+00	3.5173E-06	7.0710E-08	8.7639E-07
Br-83	3.3807E-07	6.6240E-05	6.7103E-07	8.9906E+07	2.5377E-06	3.3902E-06	6.9232E-07	7.2750E-07
Xe-135m	3.9521E-05	3.0163E-03	1.3206E-05	1.6097E+09	0.0000E+00	6.9333E-05	1.1186E-06	1.3003E-05
Total	1.0211E-04	1.0000E+00	0.0000E+00	0.0000E+00	3.3328E-04	4.9324E-04	8.6392E-05	1.0683E-04

Control Room Compartment Group Inventory Distribution:

Time (h) = 0.6670	Atmosphere	Sump
Noble gases (Ci)	5.7709E-05	0.0000E+00
Elemental I (Ci)	4.3067E-05	0.0000E+00
Organic I (Ci)	1.3320E-06	0.0000E+00
Aerosol I (Ci)	0.0000E+00	0.0000E+00
All Aerosols (Ci)	0.0000E+00	0.0000E+00
All Aerosols (kg)	0.0000E+00	0.0000E+00

Time (h) = 0.6670	Deposition Surfaces	Recirculating Filter
Noble gases (Ci)	0.0000E+00	0.0000E+00
Elemental I (Ci)	0.0000E+00	3.2328E-04
Organic I (Ci)	0.0000E+00	9.9985E-06
Aerosol I (Ci)	0.0000E+00	0.0000E+00
All Aerosols (Ci)	0.0000E+00	0.0000E+00
All Aerosols (kg)	0.0000E+00	0.0000E+00

Ruptured Steam Generator Compartment Nuclide Inventory (Ci) at Time (h) = 0.6670

Nuclide	Compartment Atmosphere	Dose Fract	Exposure (Ci-hr)	Decays (Bq-s)	Pathway 8 Outflow
I-131	5.8661E+00	7.6034E-01	3.9227E+00	5.2254E+14	2.3282E-02
I-132	3.8127E+00	2.5711E-02	2.8041E+00	3.7574E+14	1.7203E-02
I-133	7.3275E+00	1.7840E-01	4.9460E+00	6.5924E+14	2.9455E-02
I-134	5.2824E-01	4.0357E-03	4.5753E-01	6.1901E+13	2.9536E-03
I-135	3.6375E+00	3.0486E-02	2.5114E+00	3.3522E+14	1.5078E-02
Xe-133	2.6381E-02	9.0495E-07	9.3666E-03	1.1384E+12	3.7732E-05
Xe-135	1.7346E-01	4.5070E-05	6.1153E-02	7.4200E+12	2.4475E-04
Kr-83m	4.0152E-02	1.4158E-09	1.5240E-02	1.8573E+12	6.4106E-05
Br-82	3.3306E-02	3.8062E-04	2.2385E-02	2.9828E+12	1.3310E-04
Br-83	1.6299E-01	6.5217E-05	1.1943E-01	1.6000E+13	7.3182E-04
Br-84	3.7808E-02	2.5129E-04	3.9302E-02	5.3712E+12	2.6649E-04
Xe-131m	1.0545E-04	8.9898E-10	3.7315E-05	4.5335E+09	1.4998E-07
Xe-133m	1.8838E-03	5.6798E-08	6.6941E-04	8.1356E+10	2.6981E-06
Xe-135m	4.9621E-01	2.8556E-04	2.2602E-01	2.7283E+13	1.0599E-03
Total	2.2144E+01	1.0000E+00	0.0000E+00	0.0000E+00	9.0512E-02

Dose Equivalent (Ci/cc) I-131 (Thyroid)	1.5824E-09
Dose Equivalent (Ci/cc) I-131 (CEDE)	1.6123E-09
Dose Equivalent (Ci/cc) I-131 (ICRP2 Thyroid)	1.8148E-09
Total I (Ci)	2.1172E+01
Dose Equivalent (Ci/cc) Xe-133 (EDE)	1.7197E-09

Ruptured Steam Generator Compartment Group Inventory Distribution:

Time (h) = 0.6670	Atmosphere	Sump
Noble gases (Ci)	7.3820E-01	0.0000E+00
Elemental I (Ci)	2.0764E+01	0.0000E+00
Organic I (Ci)	6.4219E-01	0.0000E+00
Aerosol I (Ci)	0.0000E+00	0.0000E+00
All Aerosols (Ci)	0.0000E+00	0.0000E+00

```
All Aerosols (kg)        0.0000E+00   0.0000E+00

#######################################################################
    ALION RADTRAD Version 3.10 Rev 2 run on 12/01/2014  at 16:19:30

                Copyright © 2009 Alion Science and Technology
#######################################################################

Exclusion Area Boundary Doses:

Time (h) =   2.0000    Whole Body   Thyroid       TEDE
Delta dose (rem)        3.7830E-05  2.7496E-02  8.9017E-04
Accumulated dose (rem)  8.7813E-05  5.7822E-02  1.8818E-03

Low Population Zone Doses:

Time (h) =   2.0000    Whole Body   Thyroid       TEDE
Delta dose (rem)        7.2825E-06  5.2931E-03  1.7136E-04
Accumulated dose (rem)  1.6833E-05  1.1090E-02  3.6090E-04

Control Room Doses:

Time (h) =   2.0000    Whole Body   Thyroid       TEDE        Skin
Delta dose (rem)        1.1196E-06  1.1028E-02  3.4299E-04  5.5733E-05
Accumulated dose (rem)  2.5702E-06  3.6017E-02  1.1204E-03  1.2310E-04

*****************************************************

Intact Steam Generators Compartment Nuclide Inventory (Ci)  at Time (h) =   2.0000

 Nuclide    Compartment  Dose Fract    Exposure     Decays      Pathway  7
            Atmosphere                  (Ci-hr)      (Bq-s)       Outflow
  I-131     1.7397E+01   7.6890E-01   3.5073E+01   4.6722E+15   1.8784E-01
```

I-132	7.6026E+00	2.1603E-02	2.0831E+01	2.7932E+15	1.1784E-01
I-133	2.0886E+01	1.7689E-01	4.3361E+01	5.7800E+15	2.3349E-01
I-134	5.4865E-01	2.6434E-03	2.6496E+00	3.5898E+14	1.6373E-02
I-135	9.4251E+00	2.8861E-02	2.1022E+01	2.8066E+15	1.1469E-01
Xe-133	2.2978E-01	2.6069E-06	2.3856E-01	3.0778E+13	1.0508E-03
Xe-135	1.4427E+00	1.2821E-04	1.5381E+00	1.9848E+14	6.7859E-03
Kr-83m	2.2990E-01	3.1178E-09	2.9673E-01	3.8404E+13	1.3471E-03
Br-82	9.6684E-02	3.8083E-04	1.9802E-01	2.6388E+13	1.0637E-03
Br-83	3.2996E-01	5.5158E-05	8.9310E-01	1.1972E+14	5.0416E-03
Br-84	1.9709E-02	1.3529E-04	1.8709E-01	2.5612E+13	1.2590E-03
Xe-131m	9.3843E-04	2.6270E-09	9.6412E-04	1.2434E+11	4.2403E-06
Xe-133m	1.6319E-02	1.6302E-07	1.6988E-02	2.1918E+12	7.4854E-05
Xe-135m	1.5368E+00	3.9925E-04	2.7940E+00	3.5633E+14	1.3558E-02
Total	5.9762E+01	1.0000E+00	0.0000E+00	0.0000E+00	7.0043E-01

Dose Equivalent (Ci/cc) I-131 (Thyroid)	1.5494E-09
Dose Equivalent (Ci/cc) I-131 (CEDE)	1.5757E-09
Dose Equivalent (Ci/cc) I-131 (ICRP2 Thyroid)	1.7582E-09
Total I (Ci)	5.5859E+01
Dose Equivalent (Ci/cc) Xe-133 (EDE)	2.2919E-09

Intact Steam Generators Compartment Group Inventory Distribution:

Time (h) = 2.0000	Atmosphere	Sump
Noble gases (Ci)	3.4564E+00	0.0000E+00
Elemental I (Ci)	5.4616E+01	0.0000E+00
Organic I (Ci)	1.6892E+00	0.0000E+00
Aerosol I (Ci)	0.0000E+00	0.0000E+00
All Aerosols (Ci)	0.0000E+00	0.0000E+00
All Aerosols (kg)	0.0000E+00	0.0000E+00

Control Room Compartment Nuclide Inventory (Ci) at Time (h) = 2.0000

Nuclide	Compartment Atmosphere	Dose Fract	Exposure (Ci-hr)	Decays (Bq-s)	Compartment Recirc Filtr	Pathway 2 Inflow	Pathway 3 Inflow	Pathway 4 Outflow
I-131	6.3763E-06	7.4948E-01	3.0958E-05	4.1239E+09	1.3855E-04	1.3584E-04	4.3103E-05	3.3599E-05
I-132	2.7865E-06	2.3846E-02	2.0822E-05	2.7910E+09	6.0548E-05	9.6826E-05	2.7519E-05	2.2772E-05
I-133	7.6553E-06	1.7462E-01	3.8761E-05	5.1665E+09	1.6634E-04	1.7106E-04	5.3674E-05	4.2101E-05
I-134	2.0109E-07	3.5139E-03	3.1894E-06	4.3183E+08	4.3695E-06	1.6292E-05	3.9258E-06	3.5274E-06
I-135	3.4545E-06	2.9367E-02	1.9369E-05	2.5857E+09	7.5063E-05	8.6683E-05	2.6478E-05	2.1079E-05
Xe-133	7.4639E-06	8.2792E-05	6.8608E-06	8.7597E+08	0.0000E+00	1.2885E-05	2.2394E-07	7.0760E-06
Xe-135	4.6200E-05	4.0234E-03	4.3708E-05	5.5847E+09	0.0000E+00	7.8051E-05	1.4464E-06	4.5166E-05
Kr-83m	7.6342E-06	9.8092E-08	8.4538E-06	1.0838E+09	0.0000E+00	1.7160E-05	2.9031E-07	8.8135E-06
Br-83	1.2094E-07	6.0605E-05	8.8859E-07	1.1908E+08	2.6278E-06	4.1230E-06	1.1766E-06	9.7154E-07
Xe-133m	5.3089E-07	5.1807E-06	4.8886E-07	6.2415E+07	0.0000E+00	9.2053E-07	1.5955E-08	5.0424E-07
Xe-135m	7.2700E-05	1.4408E-02	9.1300E-05	1.1476E+10	0.0000E+00	3.4455E-04	3.0069E-06	9.5611E-05
Total	1.5520E-04	1.0000E+00	0.0000E+00	0.0000E+00	4.4843E-04	9.6670E-04	1.6141E-04	2.8174E-04

Control Room Compartment Group Inventory Distribution:

Time (h) = 2.0000	Atmosphere	Sump
Noble gases (Ci)	1.3456E-04	0.0000E+00
Elemental I (Ci)	2.0018E-05	0.0000E+00
Organic I (Ci)	6.1912E-07	0.0000E+00
Aerosol I (Ci)	0.0000E+00	0.0000E+00
All Aerosols (Ci)	0.0000E+00	0.0000E+00
All Aerosols (kg)	0.0000E+00	0.0000E+00

Time (h) = 2.0000	Deposition Surfaces	Recirculating Filter
Noble gases (Ci)	0.0000E+00	0.0000E+00
Elemental I (Ci)	0.0000E+00	4.3497E-04
Organic I (Ci)	0.0000E+00	1.3453E-05
Aerosol I (Ci)	0.0000E+00	0.0000E+00
All Aerosols (Ci)	0.0000E+00	0.0000E+00
All Aerosols (kg)	0.0000E+00	0.0000E+00

Ruptured Steam Generator Compartment Nuclide Inventory (Ci) at Time (h) = 2.0000

Nuclide	Compartment Atmosphere	Dose Fract	Exposure (Ci-hr)	Decays (Bq-s)	Pathway 8 Outflow
I-131	5.8381E+00	7.6892E-01	1.1723E+01	1.5616E+15	2.3282E-02
I-132	2.5513E+00	2.1595E-02	6.9599E+00	9.3325E+14	1.7203E-02
I-133	7.0092E+00	1.7689E-01	1.4492E+01	1.9318E+15	2.9455E-02
I-134	1.8412E-01	2.6410E-03	8.8478E-01	1.1987E+14	2.9536E-03
I-135	3.1629E+00	2.8858E-02	7.0253E+00	9.3797E+14	1.5078E-02
Xe-133	7.7111E-02	2.6101E-06	7.9835E-02	1.0300E+13	3.7732E-05
Xe-135	4.8414E-01	1.2837E-04	5.1472E-01	6.6423E+13	2.4475E-04
Kr-83m	7.7150E-02	3.1207E-09	9.9270E-02	1.2849E+13	6.4106E-05
Br-82	3.2446E-02	3.8083E-04	6.6186E-02	8.8198E+12	1.3310E-04
Br-83	1.1073E-01	5.5139E-05	2.9840E-01	4.0002E+13	7.3182E-04
Br-84	6.6140E-03	1.3510E-04	6.2443E-02	8.5483E+12	2.6649E-04
Xe-131m	3.1493E-04	2.6304E-09	3.2265E-04	4.1614E+10	1.4998E-07
Xe-133m	5.4763E-03	1.6323E-07	5.6850E-03	7.3350E+11	2.6981E-06
Xe-135m	5.1574E-01	3.9940E-04	9.3420E-01	1.1915E+14	1.0599E-03
Total	2.0055E+01	1.0000E+00	0.0000E+00	0.0000E+00	9.0512E-02

Dose Equivalent (Ci/cc) I-131 (Thyroid)	1.5599E-09
Dose Equivalent (Ci/cc) I-131 (CEDE)	1.5864E-09
Dose Equivalent (Ci/cc) I-131 (ICRP2 Thyroid)	1.7701E-09
Total I (Ci)	1.8746E+01
Dose Equivalent (Ci/cc) Xe-133 (EDE)	2.3074E-09

Ruptured Steam Generator Compartment Group Inventory Distribution:

Time (h) = 2.0000	Atmosphere	Sump
Noble gases (Ci)	1.1599E+00	0.0000E+00
Elemental I (Ci)	1.8329E+01	0.0000E+00
Organic I (Ci)	5.6686E-01	0.0000E+00

```
Aerosol I (Ci)            0.0000E+00   0.0000E+00
All Aerosols (Ci)         0.0000E+00   0.0000E+00
All Aerosols (kg)         0.0000E+00   0.0000E+00

#######################################################################
    ALION RADTRAD Version 3.10 Rev 2 run on 12/01/2014  at 16:19:31

                Copyright © 2009 Alion Science and Technology
#######################################################################

Exclusion Area Boundary Doses:

Time (h) =   8.0000    Whole Body   Thyroid       TEDE
Delta dose (rem)        1.1599E-04  1.2761E-01  4.0574E-03
Accumulated dose (rem)  2.0381E-04  1.8543E-01  5.9392E-03

Low Population Zone Doses:

Time (h) =   8.0000    Whole Body   Thyroid       TEDE
Delta dose (rem)        1.0453E-05  1.1500E-02  3.6565E-04
Accumulated dose (rem)  2.7286E-05  2.2590E-02  7.2655E-04

Control Room Doses:

Time (h) =   8.0000    Whole Body   Thyroid       TEDE        Skin
Delta dose (rem)        6.5749E-06  3.6089E-02  1.1212E-03  3.6335E-04
Accumulated dose (rem)  9.1451E-06  7.2106E-02  2.2416E-03  4.8645E-04

*******************************************************

Intact Steam Generators Compartment Nuclide Inventory (Ci)  at Time (h) =   8.0000

 Nuclide    Compartment  Dose Fract    Exposure     Decays      Pathway  7
```

	Atmosphere		(Ci-hr)	(Bq-s)	Outflow
I-131	1.6550E+01	7.9577E-01	1.3687E+02	1.8233E+16	6.6840E-01
I-132	1.2116E+00	1.1428E-02	4.1551E+01	5.5740E+15	2.1712E-01
I-133	1.6624E+01	1.6802E-01	1.5530E+02	2.0702E+16	7.6269E-01
I-134	4.6421E-03	8.7844E-04	3.3201E+00	4.5007E+14	1.9665E-02
I-135	4.8836E+00	2.2703E-02	6.2352E+01	8.3263E+15	3.1079E-01
Xe-133	7.9770E-01	9.9117E-06	3.4202E+00	4.5197E+14	1.5930E-02
Xe-135	3.3415E+00	3.8522E-04	1.7426E+01	2.3047E+15	8.1309E-02
Kr-83m	1.2253E-01	4.1631E-09	1.4940E+00	1.9783E+14	7.0220E-03
Br-82	8.3539E-02	3.7609E-04	7.3741E-01	9.8269E+13	3.6120E-03
Br-83	5.6291E-02	2.9725E-05	1.8148E+00	2.4339E+14	9.4552E-03
Br-84	7.4899E-06	3.8665E-05	2.0161E-01	2.7611E+13	1.3322E-03
Xe-131m	3.5836E-03	1.0638E-08	1.4721E-02	1.9448E+12	6.8534E-05
Xe-133m	5.5241E-02	6.0983E-07	2.3962E-01	3.1666E+13	1.1162E-03
Xe-135m	7.9991E-01	3.6241E-04	9.5632E+00	1.2409E+15	4.5674E-02
Total	4.4534E+01	1.0000E+00	0.0000E+00	0.0000E+00	2.1442E+00

Dose Equivalent (Ci/cc) I-131 (Thyroid)	1.4233E-09
Dose Equivalent (Ci/cc) I-131 (CEDE)	1.4405E-09
Dose Equivalent (Ci/cc) I-131 (ICRP2 Thyroid)	1.5679E-09
Total I (Ci)	3.9274E+01
Dose Equivalent (Ci/cc) Xe-133 (EDE)	2.6904E-09

Intact Steam Generators Compartment Group Inventory Distribution:

Time (h) = 8.0000	Atmosphere	Sump
Noble gases (Ci)	5.1205E+00	0.0000E+00
Elemental I (Ci)	3.8231E+01	0.0000E+00
Organic I (Ci)	1.1824E+00	0.0000E+00
Aerosol I (Ci)	0.0000E+00	0.0000E+00
All Aerosols (Ci)	0.0000E+00	0.0000E+00
All Aerosols (kg)	0.0000E+00	0.0000E+00

Control Room Compartment Nuclide Inventory (Ci) at Time (h) = 8.0000

Nuclide	Compartment Atmosphere	Dose Fract	Exposure (Ci-hr)	Decays (Bq-s)	Compartment Recirc Filtr	Pathway 2 Inflow	Pathway 3 Inflow	Pathway 4 Outflow
I-131	5.1356E-06	7.2457E-01	6.2683E-05	8.3501E+09	2.9388E-04	2.5125E-04	1.2120E-04	6.8233E-05
I-132	3.7596E-07	1.4932E-02	2.7308E-05	3.6615E+09	2.1515E-05	1.2067E-04	4.3654E-05	2.9964E-05
I-133	5.1583E-06	1.5844E-01	7.3658E-05	9.8188E+09	2.9518E-04	2.9815E-04	1.3968E-04	8.0257E-05
I-134	1.4405E-09	1.7892E-03	3.4013E-06	4.6061E+08	8.2430E-08	1.7083E-05	4.4608E-06	3.7684E-06
I-135	1.5154E-06	2.3358E-02	3.2267E-05	4.3082E+09	8.6717E-05	1.3378E-04	5.8347E-05	3.5233E-05
Xe-133	2.7168E-05	6.5795E-04	1.1419E-04	1.4854E+10	0.0000E+00	1.3745E-04	2.6422E-06	1.2164E-04
Xe-135	1.1143E-04	2.4986E-02	5.6849E-04	7.4049E+10	0.0000E+00	6.5627E-04	1.3558E-05	6.0715E-04
Kr-83m	5.0036E-06	2.9043E-07	5.2424E-05	6.8298E+09	0.0000E+00	7.3225E-05	1.2126E-06	5.6266E-05
Br-82	2.5922E-08	3.4894E-04	3.4412E-07	4.5857E+07	1.4834E-06	1.3866E-06	6.5845E-07	3.7478E-07
Br-83	1.7467E-08	3.8331E-05	1.1771E-06	1.5778E+08	9.9955E-07	5.1830E-06	1.8939E-06	1.2912E-06
Xe-133m	1.9050E-06	4.0773E-05	8.0579E-06	1.0480E+09	0.0000E+00	9.7420E-06	1.8520E-07	8.5832E-06
Xe-135m	1.0723E-04	5.0730E-02	6.7330E-04	8.5053E+10	0.0000E+00	2.2763E-03	8.2263E-06	7.1525E-04
Total	2.6509E-04	1.0000E+00	0.0000E+00	0.0000E+00	6.9986E-04	3.9826E-03	3.9605E-04	1.7288E-03

Control Room Compartment Group Inventory Distribution:

Time (h) = 8.0000	Atmosphere	Sump
Noble gases (Ci)	2.5286E-04	0.0000E+00
Elemental I (Ci)	1.1863E-05	0.0000E+00
Organic I (Ci)	3.6690E-07	0.0000E+00
Aerosol I (Ci)	0.0000E+00	0.0000E+00
All Aerosols (Ci)	0.0000E+00	0.0000E+00
All Aerosols (kg)	0.0000E+00	0.0000E+00

Time (h) = 8.0000	Deposition Surfaces	Recirculating Filter
Noble gases (Ci)	0.0000E+00	0.0000E+00
Elemental I (Ci)	0.0000E+00	6.7887E-04
Organic I (Ci)	0.0000E+00	2.0996E-05

Aerosol I (Ci)	0.0000E+00	0.0000E+00
All Aerosols (Ci)	0.0000E+00	0.0000E+00
All Aerosols (kg)	0.0000E+00	0.0000E+00

Ruptured Steam Generator Compartment Nuclide Inventory (Ci) at Time (h) = 8.0000

Nuclide	Compartment Atmosphere	Dose Fract	Exposure (Ci-hr)	Decays (Bq-s)	Pathway 8 Outflow
I-131	5.7136E+00	7.9598E-01	4.6374E+01	6.1775E+15	2.3282E-02
I-132	4.1828E-01	1.1355E-02	1.3985E+01	1.8760E+15	1.7203E-02
I-133	5.7389E+00	1.6794E-01	5.2578E+01	7.0090E+15	2.9455E-02
I-134	1.6026E-03	8.6790E-04	1.1111E+00	1.5062E+14	2.9536E-03
I-135	1.6859E+00	2.2653E-02	2.1074E+01	2.8141E+15	1.5078E-02
Xe-133	2.7539E-01	9.9732E-06	1.1657E+00	1.5405E+14	3.7732E-05
Xe-135	1.1536E+00	3.8716E-04	5.9322E+00	7.8460E+14	2.4475E-04
Kr-83m	4.2300E-02	4.1643E-09	5.0620E-01	6.7035E+13	6.4106E-05
Br-82	2.8840E-02	3.7605E-04	2.4974E-01	3.3281E+13	1.3310E-04
Br-83	1.9433E-02	2.9542E-05	6.1092E-01	8.1933E+13	7.3182E-04
Br-84	2.5857E-06	3.8124E-05	6.7336E-02	9.2217E+12	2.6649E-04
Xe-131m	1.2372E-03	1.0707E-08	5.0187E-03	6.6303E+11	1.4998E-07
Xe-133m	1.9071E-02	6.1357E-07	8.1661E-02	1.0792E+13	2.6981E-06
Xe-135m	2.7615E-01	3.6194E-04	3.2351E+00	4.1980E+14	1.0599E-03
Total	1.5374E+01	1.0000E+00	0.0000E+00	0.0000E+00	9.0512E-02

Dose Equivalent (Ci/cc) I-131 (Thyroid)	1.4740E-09
Dose Equivalent (Ci/cc) I-131 (CEDE)	1.4919E-09
Dose Equivalent (Ci/cc) I-131 (ICRP2 Thyroid)	1.6238E-09
Total I (Ci)	1.3558E+01
Dose Equivalent (Ci/cc) Xe-133 (EDE)	2.7864E-09

Ruptured Steam Generator Compartment Group Inventory Distribution:

Time (h) = 8.0000 Atmosphere Sump

Noble gases (Ci)	1.7677E+00	0.0000E+00
Elemental I (Ci)	1.3198E+01	0.0000E+00
Organic I (Ci)	4.0820E-01	0.0000E+00
Aerosol I (Ci)	0.0000E+00	0.0000E+00
All Aerosols (Ci)	0.0000E+00	0.0000E+00
All Aerosols (kg)	0.0000E+00	0.0000E+00

```
#######################################################################
    ALION RADTRAD Version 3.10 Rev 2 run on 12/01/2014  at 16:19:31

                Copyright © 2009 Alion Science and Technology
#######################################################################
```

Exclusion Area Boundary Doses:

Time (h) = 24.0000	Whole Body	Thyroid	TEDE
Delta dose (rem)	5.6829E-05	5.7515E-02	1.8242E-03
Accumulated dose (rem)	2.6064E-04	2.4295E-01	7.7634E-03

Low Population Zone Doses:

Time (h) = 24.0000	Whole Body	Thyroid	TEDE
Delta dose (rem)	3.5143E-06	3.5567E-03	1.1281E-04
Accumulated dose (rem)	3.0801E-05	2.6147E-02	8.3936E-04

Control Room Doses:

Time (h) = 24.0000	Whole Body	Thyroid	TEDE	Skin
Delta dose (rem)	8.1415E-06	1.1347E-02	3.5689E-04	4.5114E-04
Accumulated dose (rem)	1.7287E-05	8.3452E-02	2.5985E-03	9.3760E-04

```
*****************************************************
```

Intact Steam Generators Compartment Nuclide Inventory (Ci) at Time (h) = 24.0000

Nuclide	Compartment Atmosphere	Dose Fract	Exposure (Ci-hr)	Decays (Bq-s)	Pathway 7 Outflow
I-131	1.5196E+01	8.3765E-01	3.9051E+02	5.2034E+16	1.1110E+00
I-132	9.4871E-03	4.6109E-03	4.5442E+01	6.1022E+15	2.2416E-01
I-133	9.4854E+00	1.4289E-01	3.5797E+02	4.7811E+16	1.1189E+00
I-134	1.4472E-08	3.2465E-04	3.3258E+00	4.5085E+14	1.9676E-02
I-135	8.8708E-01	1.3355E-02	9.9419E+01	1.3319E+16	3.7685E-01
Xe-133	1.7399E+00	2.6497E-05	2.4783E+01	3.2804E+15	5.2755E-02
Xe-135	2.3412E+00	5.4610E-04	6.6958E+01	8.9233E+15	1.6829E-01
Kr-83m	1.9939E-03	2.0482E-09	1.9923E+00	2.6535E+14	7.9232E-03
Br-82	5.9339E-02	3.5118E-04	1.8663E+00	2.4902E+14	5.5898E-03
Br-83	5.2852E-04	1.2100E-05	2.0023E+00	2.6884E+14	9.7948E-03
Br-84	5.9520E-15	1.4265E-05	2.0162E-01	2.7612E+13	1.3322E-03
Xe-131m	9.9640E-03	3.3401E-08	1.2528E-01	1.6549E+13	2.5827E-04
Xe-133m	1.1204E-01	1.5591E-06	1.6604E+00	2.1990E+14	3.5686E-03
Xe-135m	1.4533E-01	2.1862E-04	1.5636E+01	2.0412E+15	5.6498E-02
Total	2.9989E+01	1.0000E+00	0.0000E+00	0.0000E+00	3.1566E+00

Dose Equivalent (Ci/cc) I-131 (Thyroid)	1.2284E-09
Dose Equivalent (Ci/cc) I-131 (CEDE)	1.2368E-09
Dose Equivalent (Ci/cc) I-131 (ICRP2 Thyroid)	1.3019E-09
Total I (Ci)	2.5578E+01
Dose Equivalent (Ci/cc) Xe-133 (EDE)	1.5793E-09

Intact Steam Generators Compartment Group Inventory Distribution:

Time (h) = 24.0000	Atmosphere	Sump
Noble gases (Ci)	4.3504E+00	0.0000E+00
Elemental I (Ci)	2.4869E+01	0.0000E+00
Organic I (Ci)	7.6914E-01	0.0000E+00
Aerosol I (Ci)	0.0000E+00	0.0000E+00

All Aerosols (Ci)	0.0000E+00	0.0000E+00
All Aerosols (kg)	0.0000E+00	0.0000E+00

Control Room Compartment Nuclide Inventory (Ci) at Time (h) = 24.0000

Nuclide	Compartment Atmosphere	Dose Fract	Exposure (Ci-hr)	Decays (Bq-s)	Compartment Recirc Filtr	Pathway 2 Inflow	Pathway 3 Inflow	Pathway 4 Outflow
I-131	5.8233E-07	6.7927E-01	7.3037E-05	9.7298E+09	3.2860E-04	2.8689E-04	1.4518E-04	7.9651E-05
I-132	3.6355E-10	1.2099E-02	2.7501E-05	3.6876E+09	2.0515E-07	1.2124E-04	4.4036E-05	3.0190E-05
I-133	3.6349E-07	1.4202E-01	8.2058E-05	1.0942E+10	2.0511E-04	3.2685E-04	1.5898E-04	8.9606E-05
I-134	5.5457E-16	1.4397E-03	3.4016E-06	4.6066E+08	3.1293E-13	1.7083E-05	4.4613E-06	3.7688E-06
I-135	3.3993E-08	1.9728E-02	3.3871E-05	4.5240E+09	1.9182E-05	1.3910E-04	6.1926E-05	3.7052E-05
Xe-133	1.6546E-05	1.8658E-03	4.0249E-04	4.9278E+10	0.0000E+00	3.8702E-04	4.6368E-06	4.0576E-04
Xe-135	2.1455E-05	4.4925E-02	1.2704E-03	1.5969E+11	0.0000E+00	1.2089E-03	1.8269E-05	1.3202E-03
Kr-83m	4.9451E-08	2.9679E-07	6.6583E-05	8.6211E+09	0.0000E+00	8.6989E-05	1.2614E-06	7.1344E-05
Br-82	2.2739E-09	3.1865E-04	3.9057E-07	5.2059E+07	1.2831E-06	1.5459E-06	7.6559E-07	4.2627E-07
Br-83	2.0253E-11	3.1082E-05	1.1863E-06	1.5903E+08	1.1429E-08	5.2104E-06	1.9123E-06	1.3020E-06
Xe-131m	1.2180E-07	2.5892E-06	2.2399E-06	2.7009E+08	0.0000E+00	2.1345E-06	2.1630E-08	2.2193E-06
Xe-133m	1.1495E-06	1.1522E-04	2.8302E-05	3.4623E+09	0.0000E+00	2.7361E-05	3.1803E-07	2.8515E-05
Xe-135m	2.6366E-05	9.8106E-02	1.6183E-03	1.9721E+11	0.0000E+00	5.1163E-03	8.8126E-06	1.6558E-03
Total	6.6671E-05	1.0000E+00	0.0000E+00	0.0000E+00	5.5439E-04	7.7281E-03	4.5089E-04	3.7262E-03

Control Room Compartment Group Inventory Distribution:

Time (h) = 24.0000	Atmosphere	Sump
Noble gases (Ci)	6.5688E-05	0.0000E+00
Elemental I (Ci)	9.5299E-07	0.0000E+00
Organic I (Ci)	2.9474E-08	0.0000E+00
Aerosol I (Ci)	0.0000E+00	0.0000E+00
All Aerosols (Ci)	0.0000E+00	0.0000E+00
All Aerosols (kg)	0.0000E+00	0.0000E+00

	Deposition	Recirculating

Time (h) = 24.0000	Surfaces	Filter
Noble gases (Ci)	0.0000E+00	0.0000E+00
Elemental I (Ci)	0.0000E+00	5.3776E-04
Organic I (Ci)	0.0000E+00	1.6632E-05
Aerosol I (Ci)	0.0000E+00	0.0000E+00
All Aerosols (Ci)	0.0000E+00	0.0000E+00
All Aerosols (kg)	0.0000E+00	0.0000E+00

Ruptured Steam Generator Compartment Nuclide Inventory (Ci) at Time (h) = 24.0000

Nuclide	Compartment Atmosphere	Dose Fract	Exposure (Ci-hr)	Decays (Bq-s)	Pathway 8 Outflow
I-131	5.3945E+00	8.3833E-01	1.3517E+02	1.8011E+16	2.3282E-02
I-132	3.3678E-03	4.4991E-03	1.5335E+01	2.0594E+15	1.7203E-02
I-133	3.3672E+00	1.4248E-01	1.2345E+02	1.6489E+16	2.9455E-02
I-134	5.1373E-09	3.1415E-04	1.1131E+00	1.5089E+14	2.9536E-03
I-135	3.1490E-01	1.3207E-02	3.4003E+01	4.5556E+15	1.5078E-02
Xe-133	6.1764E-01	2.6767E-05	8.6585E+00	1.1461E+15	3.7732E-05
Xe-135	8.3110E-01	5.4852E-04	2.3261E+01	3.1001E+15	2.4475E-04
Kr-83m	7.0782E-04	2.0193E-09	6.7935E-01	9.0501E+13	6.4106E-05
Br-82	2.1064E-02	3.5077E-04	6.4473E-01	8.6026E+13	1.3310E-04
Br-83	1.8762E-04	1.1812E-05	6.7603E-01	9.0772E+13	7.3182E-04
Br-84	2.1129E-15	1.3776E-05	6.7338E-02	9.2219E+12	2.6649E-04
Xe-131m	3.5371E-03	3.3777E-08	4.3817E-02	5.7881E+12	1.4998E-07
Xe-133m	3.9773E-02	1.5744E-06	5.7992E-01	7.6803E+13	2.6981E-06
Xe-135m	5.1591E-02	2.1641E-04	5.3534E+00	6.9899E+14	1.0599E-03
Total	1.0646E+01	1.0000E+00	0.0000E+00	0.0000E+00	9.0512E-02

Dose Equivalent (Ci/cc) I-131 (Thyroid)	1.3082E-09
Dose Equivalent (Ci/cc) I-131 (CEDE)	1.3171E-09
Dose Equivalent (Ci/cc) I-131 (ICRP2 Thyroid)	1.3865E-09
Total I (Ci)	9.0800E+00
Dose Equivalent (Ci/cc) Xe-133 (EDE)	1.6819E-09

Ruptured Steam Generator Compartment Group Inventory Distribution:

Time (h) = 24.0000	Atmosphere	Sump
Noble gases (Ci)	1.5443E+00	0.0000E+00
Elemental I (Ci)	8.8282E+00	0.0000E+00
Organic I (Ci)	2.7304E-01	0.0000E+00
Aerosol I (Ci)	0.0000E+00	0.0000E+00
All Aerosols (Ci)	0.0000E+00	0.0000E+00
All Aerosols (kg)	0.0000E+00	0.0000E+00

```
#######################################################################
    ALION RADTRAD Version 3.10 Rev 2 run on 12/01/2014  at 16:19:32

                Copyright © 2009 Alion Science and Technology
#######################################################################
```

Exclusion Area Boundary Doses:

Time (h) = 96.0000	Whole Body	Thyroid	TEDE
Delta dose (rem)	0.0000E+00	0.0000E+00	0.0000E+00
Accumulated dose (rem)	2.6064E-04	2.4295E-01	7.7634E-03

Low Population Zone Doses:

Time (h) = 96.0000	Whole Body	Thyroid	TEDE
Delta dose (rem)	0.0000E+00	0.0000E+00	0.0000E+00
Accumulated dose (rem)	3.0801E-05	2.6147E-02	8.3936E-04

Control Room Doses:

Time (h) = 96.0000	Whole Body	Thyroid	TEDE	Skin
Delta dose (rem)	1.2428E-06	8.1199E-05	3.7322E-06	7.1171E-05

Accumulated dose (rem) 1.8529E-05 8.3534E-02 2.6022E-03 1.0088E-03

****

Intact Steam Generators Compartment Nuclide Inventory (Ci) at Time (h) = 96.0000

Nuclide	Compartment Atmosphere	Dose Fract	Exposure (Ci-hr)	Decays (Bq-s)	Pathway 7 Outflow
I-131	1.1733E+01	9.1578E-01	1.3540E+03	1.8045E+17	1.1110E+00
I-132	3.5776E-12	1.4548E-03	4.5471E+01	6.1064E+15	2.2416E-01
I-133	8.6105E-01	7.7438E-02	6.1527E+02	8.2283E+16	1.1189E+00
I-134	2.7362E-33	1.0237E-04	3.3258E+00	4.5085E+14	1.9676E-02
I-135	4.6662E-04	4.5627E-03	1.0772E+02	1.4445E+16	3.7685E-01
Xe-133	2.2705E+00	6.3545E-05	1.8849E+02	2.5072E+16	5.2755E-02
Xe-135	1.8233E-02	2.7138E-04	1.0553E+02	1.4114E+16	1.6829E-01
Kr-83m	1.9314E-12	6.4802E-10	1.9991E+00	2.6630E+14	7.9232E-03
Br-82	1.4432E-02	2.4596E-04	4.1454E+00	5.5364E+14	5.5898E-03
Br-83	4.5121E-13	3.8185E-06	2.0040E+00	2.6908E+14	9.7948E-03
Br-84	7.5862E-56	4.4981E-06	2.0162E-01	2.7612E+13	1.3322E-03
Xe-131m	3.2107E-02	1.4351E-07	1.7071E+00	2.2671E+14	2.5827E-04
Xe-133m	9.6692E-02	3.0573E-06	1.0326E+01	1.3745E+15	3.5686E-03
Xe-135m	7.6448E-05	7.4929E-05	1.6996E+01	2.2218E+15	5.6498E-02
Total	1.5027E+01	1.0000E+00	0.0000E+00	0.0000E+00	3.1566E+00

Dose Equivalent (Ci/cc) I-131 (Thyroid) 8.6835E-10
Dose Equivalent (Ci/cc) I-131 (CEDE) 8.6906E-10
Dose Equivalent (Ci/cc) I-131 (ICRP2 Thyroid) 8.7470E-10
Total I (Ci) 1.2595E+01
Dose Equivalent (Ci/cc) Xe-133 (EDE) 1.8304E-10

Intact Steam Generators Compartment Group Inventory Distribution:

Time (h) = 96.0000 Atmosphere Sump

Noble gases (Ci)	2.4176E+00	0.0000E+00
Elemental I (Ci)	1.2231E+01	0.0000E+00
Organic I (Ci)	3.7827E-01	0.0000E+00
Aerosol I (Ci)	0.0000E+00	0.0000E+00
All Aerosols (Ci)	0.0000E+00	0.0000E+00
All Aerosols (kg)	0.0000E+00	0.0000E+00

Control Room Compartment Nuclide Inventory (Ci) at Time (h) = 96.0000

Nuclide	Compartment Atmosphere	Dose Fract	Exposure (Ci-hr)	Decays (Bq-s)	Compartment Recirc Filtr	Pathway 2 Inflow	Pathway 3 Inflow	Pathway 4 Outflow
I-131	9.5552-199	6.6415E-01	7.3064E-05	9.7334E+09	2.5421E-04	2.8689E-04	1.4518E-04	7.9792E-05
I-132	2.9135-211	1.1825E-02	2.7501E-05	3.6876E+09	7.7513E-17	1.2124E-04	4.4036E-05	3.0190E-05
I-133	7.0122-200	1.3883E-01	8.2075E-05	1.0944E+10	1.8656E-05	3.2685E-04	1.5898E-04	8.9694E-05
I-134	2.2283-232	1.4071E-03	3.4016E-06	4.6066E+08	5.9283E-38	1.7083E-05	4.4613E-06	3.7688E-06
I-135	3.8001-203	1.9283E-02	3.3873E-05	4.5242E+09	1.0110E-08	1.3910E-04	6.1926E-05	3.7060E-05
Xe-133	1.1710E-06	3.4397E-03	7.5917E-04	8.9163E+10	0.0000E+00	6.7144E-04	4.6368E-06	7.3798E-04
Xe-135	8.6950E-09	4.9429E-02	1.4301E-03	1.7778E+11	0.0000E+00	1.3211E-03	1.8269E-05	1.4736E-03
Kr-83m	3.9192E-17	2.9075E-07	6.6736E-05	8.6391E+09	0.0000E+00	8.7131E-05	1.2614E-06	7.1501E-05
Br-82	1.1753-201	3.1153E-04	3.9067E-07	5.2073E+07	3.1270E-07	1.5459E-06	7.6559E-07	4.2682E-07
Br-83	3.6746-212	3.0379E-05	1.1863E-06	1.5903E+08	9.7761E-18	5.2104E-06	1.9123E-06	1.3020E-06
Xe-131m	7.8357E-08	9.9045E-06	8.7664E-06	9.9580E+08	0.0000E+00	7.4730E-06	2.1630E-08	8.2224E-06
Xe-133m	8.3194E-08	2.1337E-04	5.3624E-05	6.2936E+09	0.0000E+00	4.7723E-05	3.1803E-07	5.2092E-05
Xe-135m	1.4013E-08	1.1099E-01	1.8732E-03	2.2618E+11	0.0000E+00	5.8446E-03	8.8126E-06	1.8982E-03
Total	1.3552E-06	1.0000E+00	0.0000E+00	0.0000E+00	2.7319E-04	8.8788E-03	4.5089E-04	4.4841E-03

Control Room Compartment Group Inventory Distribution:

Time (h) = 96.0000	Atmosphere	Sump
Noble gases (Ci)	1.3552E-06	0.0000E+00
Elemental I (Ci)	9.9605-199	0.0000E+00
Organic I (Ci)	3.0806-200	0.0000E+00
Aerosol I (Ci)	0.0000E+00	0.0000E+00

All Aerosols (Ci)	0.0000E+00	0.0000E+00
All Aerosols (kg)	0.0000E+00	0.0000E+00

Time (h) = 96.0000	Deposition Surfaces	Recirculating Filter
Noble gases (Ci)	0.0000E+00	0.0000E+00
Elemental I (Ci)	0.0000E+00	2.6500E-04
Organic I (Ci)	0.0000E+00	8.1958E-06
Aerosol I (Ci)	0.0000E+00	0.0000E+00
All Aerosols (Ci)	0.0000E+00	0.0000E+00
All Aerosols (kg)	0.0000E+00	0.0000E+00

Ruptured Steam Generator Compartment Nuclide Inventory (Ci) at Time (h) = 96.0000

Nuclide	Compartment Atmosphere	Dose Fract	Exposure (Ci-hr)	Decays (Bq-s)	Pathway 8 Outflow
I-131	4.1651E+00	9.1662E-01	4.7720E+02	6.3597E+16	2.3282E-02
I-132	1.2700E-12	1.3944E-03	1.5346E+01	2.0609E+15	1.7203E-02
I-133	3.0566E-01	7.6776E-02	2.1479E+02	2.8726E+16	2.9455E-02
I-134	9.7132E-34	9.7299E-05	1.1131E+00	1.5089E+14	2.9536E-03
I-135	1.6565E-04	4.4448E-03	3.6950E+01	4.9554E+15	1.5078E-02
Xe-133	8.0599E-01	6.3931E-05	6.6772E+01	8.8819E+15	3.7732E-05
Xe-135	6.4724E-03	2.6989E-04	3.6953E+01	4.9429E+15	2.4475E-04
Kr-83m	6.8563E-13	6.2763E-10	6.8175E-01	9.0836E+13	6.4106E-05
Br-82	5.1233E-03	2.4497E-04	1.4538E+00	1.9416E+14	1.3310E-04
Br-83	1.6017E-13	3.6616E-06	6.7664E-01	9.0858E+13	7.3182E-04
Br-84	2.6930E-56	4.2665E-06	6.7338E-02	9.2219E+12	2.6649E-04
Xe-131m	1.1398E-02	1.4453E-07	6.0535E-01	8.0391E+13	1.4998E-07
Xe-133m	3.4324E-02	3.0743E-06	3.6563E+00	4.8666E+14	2.6981E-06
Xe-135m	2.7138E-05	7.3072E-05	5.8362E+00	7.6308E+14	1.0599E-03
Total	5.3343E+00	1.0000E+00	0.0000E+00	0.0000E+00	9.0512E-02

Dose Equivalent (Ci/cc) I-131 (Thyroid) 9.2476E-10

```
Dose Equivalent (Ci/cc) I-131 (CEDE)                9.2552E-10
Dose Equivalent (Ci/cc) I-131 (ICRP2 Thyroid)       9.3152E-10
Total I  (Ci)                                       4.4709E+00
Dose Equivalent (Ci/cc) Xe-133 (EDE)                1.9493E-10

Ruptured Steam Generator Compartment Group Inventory Distribution:

Time (h) =  96.0000      Atmosphere      Sump
Noble gases (Ci)         8.5821E-01   0.0000E+00
Elemental I (Ci)         4.3418E+00   0.0000E+00
Organic I (Ci)           1.3428E-01   0.0000E+00
Aerosol I (Ci)           0.0000E+00   0.0000E+00
All Aerosols (Ci)        0.0000E+00   0.0000E+00
All Aerosols (kg)        0.0000E+00   0.0000E+00

#######################################################################
    ALION RADTRAD Version 3.10 Rev 2 run on 12/01/2014  at 16:19:38

                Copyright © 2009 Alion Science and Technology
#######################################################################

Exclusion Area Boundary Doses:

Time (h) = 720.0000    Whole Body   Thyroid       TEDE
Delta dose (rem)        0.0000E+00  0.0000E+00  0.0000E+00
Accumulated dose (rem)  2.6064E-04  2.4295E-01  7.7634E-03

Low Population Zone Doses:

Time (h) = 720.0000    Whole Body   Thyroid       TEDE
Delta dose (rem)        0.0000E+00  0.0000E+00  0.0000E+00
Accumulated dose (rem)  3.0801E-05  2.6147E-02  8.3936E-04
```

Control Room Doses:

Time (h) = 720.0000	Whole Body	Thyroid	TEDE	Skin
Delta dose (rem)	7.3494E-09	8.1332-197	7.3494E-09	9.5941E-07
Accumulated dose (rem)	1.8537E-05	8.3534E-02	2.6022E-03	1.0097E-03

****

Intact Steam Generators Compartment Nuclide Inventory (Ci) at Time (h) = 720.0000

Nuclide	Compartment Atmosphere	Dose Fract	Exposure (Ci-hr)	Decays (Bq-s)	Pathway 7 Outflow
I-131	1.2472E+00	9.7055E-01	4.2708E+03	5.6927E+17	1.1110E+00
I-132	7.6355E-94	4.8882E-04	4.5471E+01	6.1064E+15	2.2416E-01
I-133	8.0191E-10	2.7105E-02	6.4095E+02	8.5725E+16	1.1189E+00
I-134	1.4719-247	3.4395E-05	3.3258E+00	4.5085E+14	1.9676E-02
I-135	1.7824E-32	1.5331E-03	1.0772E+02	1.4446E+16	3.7685E-01
Xe-133	8.0902E-02	7.0097E-05	6.1883E+02	8.2455E+16	5.2755E-02
Xe-135	4.2163E-23	9.1393E-05	1.0577E+02	1.4147E+16	1.6829E-01
Kr-83m	4.9055E-91	2.1773E-10	1.9991E+00	2.6630E+14	7.9232E-03
Br-82	6.8867E-08	9.7242E-05	4.8778E+00	6.5154E+14	5.5898E-03
Br-83	1.1458E-91	1.2830E-06	2.0040E+00	2.6908E+14	9.7948E-03
Br-84	0.0000E+00	1.5113E-06	2.0162E-01	2.7612E+13	1.3322E-03
Xe-131m	3.7888E-02	8.9618E-07	3.1728E+01	4.2254E+15	2.5827E-04
Xe-133m	2.9937E-05	1.8284E-06	1.8380E+01	2.4497E+15	3.5686E-03
Xe-135m	2.9202E-33	2.5177E-05	1.6997E+01	2.2219E+15	5.6498E-02
Total	1.3660E+00	1.0000E+00	0.0000E+00	0.0000E+00	3.1566E+00

Dose Equivalent (Ci/cc) I-131 (Thyroid)	9.1189E-11
Dose Equivalent (Ci/cc) I-131 (CEDE)	9.1189E-11
Dose Equivalent (Ci/cc) I-131 (ICRP2 Thyroid)	9.1189E-11
Total I (Ci)	1.2472E+00
Dose Equivalent (Ci/cc) Xe-133 (EDE)	6.6078E-12

Intact Steam Generators Compartment Group Inventory Distribution:

Time (h) = 720.0000	Atmosphere	Sump
Noble gases (Ci)	1.1882E-01	0.0000E+00
Elemental I (Ci)	1.2098E+00	0.0000E+00
Organic I (Ci)	3.7416E-02	0.0000E+00
Aerosol I (Ci)	0.0000E+00	0.0000E+00
All Aerosols (Ci)	0.0000E+00	0.0000E+00
All Aerosols (kg)	0.0000E+00	0.0000E+00

Environment Integral Nuclide Release (Ci): at Time (h) = 720.0000

Nuclide	Compartment Atmosphere	Dose Fract Pathway 1	Dose Fract Pathway 7	Dose Fract Pathway 8
I-131	1.1343E+00	0.00000	0.77050	0.03234
I-132	2.4137E-01	0.00000	0.01094	0.00113
I-133	1.1484E+00	0.00000	0.15389	0.00761
I-134	2.2629E-02	0.00000	0.00113	0.00019
I-135	3.9193E-01	0.00000	0.01980	0.00131
Xe-133	5.3342E-02	0.00000	0.00001	0.00000
Xe-135	2.7021E-01	0.00000	0.00037	0.00000
Kr-83m	8.3408E-03	0.00000	0.00000	0.00000
Br-82	5.7229E-03	0.00000	0.00035	0.00002
Br-83	1.0527E-02	0.00000	0.00003	0.00000
Br-84	1.5987E-03	0.00000	0.00006	0.00001
Xe-131m	2.5996E-04	0.00000	0.00000	0.00000
Xe-133m	3.5959E-03	0.00000	0.00000	0.00000
Xe-135m	6.8688E-02	0.00000	0.00029	0.00001

Environment Compartment Group Inventory Distribution:

	Total	Release

Time (h) = 720.0000	Release	Rate/s
Noble gases (Ci)	4.0443E-01	1.5603E-07
Elemental I (Ci)	2.8677E+00	1.1064E-06
Organic I (Ci)	8.8693E-02	3.4218E-08
Aerosol I (Ci)	0.0000E+00	0.0000E+00
All Aerosols (Ci)	0.0000E+00	0.0000E+00

Control Room Compartment Nuclide Inventory (Ci) at Time (h) = 720.0000

Nuclide	Compartment Atmosphere	Dose Fract	Exposure (Ci-hr)	Decays (Bq-s)	Compartment Recirc Filtr	Pathway 2 Inflow	Pathway 3 Inflow	Pathway 4 Outflow
I-131	0.0000E+00	6.6401E-01	7.3064E-05	9.7334E+09	2.7022E-05	2.8689E-04	1.4518E-04	7.9792E-05
I-132	0.0000E+00	1.1823E-02	2.7501E-05	3.6876E+09	1.6543E-98	1.2124E-04	4.4036E-05	3.0190E-05
I-133	0.0000E+00	1.3880E-01	8.2075E-05	1.0944E+10	1.7375E-14	3.2685E-04	1.5898E-04	8.9694E-05
I-134	0.0000E+00	1.4068E-03	3.4016E-06	4.6066E+08	3.1891-252	1.7083E-05	4.4613E-06	3.7688E-06
I-135	0.0000E+00	1.9279E-02	3.3873E-05	4.5242E+09	3.8618E-37	1.3910E-04	6.1926E-05	3.7060E-05
Xe-133	1.1905E-15	3.5993E-03	7.9454E-04	9.3110E+10	0.0000E+00	6.9984E-04	4.6368E-06	7.7078E-04
Xe-135	3.6285E-37	4.9421E-02	1.4302E-03	1.7779E+11	0.0000E+00	1.3211E-03	1.8269E-05	1.4737E-03
Kr-83m	1.0860E-95	2.9069E-07	6.6736E-05	8.6391E+09	0.0000E+00	8.7131E-05	1.2614E-06	7.1501E-05
Br-82	0.0000E+00	3.1146E-04	3.9067E-07	5.2073E+07	1.4921E-12	1.5459E-06	7.6559E-07	4.2682E-07
Br-83	0.0000E+00	3.0373E-05	1.1863E-06	1.5903E+08	2.4825E-96	5.2104E-06	1.9123E-06	1.3020E-06
Xe-131m	9.0913E-09	3.3189E-05	2.9381E-05	3.2026E+09	0.0000E+00	2.3637E-05	2.1630E-08	2.6467E-05
Xe-133m	8.4576E-17	2.2333E-04	5.6137E-05	6.5740E+09	0.0000E+00	4.9756E-05	3.1803E-07	5.4423E-05
Xe-135m	5.7410E-37	1.1097E-01	1.8734E-03	2.2620E+11	0.0000E+00	5.8449E-03	8.8126E-06	1.8983E-03
Total	9.0913E-09	1.0000E+00	0.0000E+00	0.0000E+00	2.7022E-05	8.9258E-03	4.5089E-04	4.5377E-03

Ruptured Steam Generator Compartment Nuclide Inventory (Ci) at Time (h) = 720.0000

Nuclide	Compartment Atmosphere	Dose Fract	Exposure (Ci-hr)	Decays (Bq-s)	Pathway 8 Outflow
I-131	4.4274E-01	9.7098E-01	1.5126E+03	2.0163E+17	2.3282E-02
I-132	2.7105E-94	4.6599E-04	1.5346E+01	2.0609E+15	1.7203E-02
I-133	2.8467E-10	2.6747E-02	2.2391E+02	2.9948E+16	2.9455E-02

I-134	5.2252-248	3.2516E-05	1.1131E+00	1.5089E+14	2.9536E-03
I-135	6.3273E-33	1.4855E-03	3.6951E+01	4.9556E+15	1.5078E-02
Xe-133	2.8719E-02	7.0244E-05	2.1954E+02	2.9252E+16	3.7732E-05
Xe-135	1.4967E-23	9.0401E-05	3.7038E+01	4.9544E+15	2.4475E-04
Kr-83m	1.7414E-91	2.0974E-10	6.8175E-01	9.0836E+13	6.4106E-05
Br-82	2.4447E-08	9.6505E-05	1.7138E+00	2.2892E+14	1.3310E-04
Br-83	4.0674E-92	1.2236E-06	6.7664E-01	9.0858E+13	7.3182E-04
Br-84	0.0000E+00	1.4258E-06	6.7338E-02	9.2219E+12	2.6649E-04
Xe-131m	1.3450E-02	8.9858E-07	1.1262E+01	1.4999E+15	1.4998E-07
Xe-133m	1.0627E-05	1.8308E-06	6.5153E+00	8.6836E+14	2.6981E-06
Xe-135m	1.0366E-33	2.4420E-05	5.8364E+00	7.6311E+14	1.0599E-03
Total	4.8492E-01	1.0000E+00	0.0000E+00	0.0000E+00	9.0512E-02

```
Dose Equivalent (Ci/cc) I-131 (Thyroid)            9.7113E-11
Dose Equivalent (Ci/cc) I-131 (CEDE)               9.7113E-11
Dose Equivalent (Ci/cc) I-131 (ICRP2 Thyroid)      9.7113E-11
Total I  (Ci)                                      4.4274E-01
Dose Equivalent (Ci/cc) Xe-133 (EDE)               7.0371E-12

Ruptured Steam Generator Compartment Group Inventory Distribution:

Time (h) = 720.0000      Atmosphere      Sump
Noble gases (Ci)         4.2179E-02   0.0000E+00
Elemental I (Ci)         4.2946E-01   0.0000E+00
Organic I (Ci)           1.3282E-02   0.0000E+00
Aerosol I (Ci)           0.0000E+00   0.0000E+00
All Aerosols (Ci)        0.0000E+00   0.0000E+00
All Aerosols (kg)        0.0000E+00   0.0000E+00

   1851

#######################################################################
    ALION RADTRAD Version 3.10 Rev 2 run on 12/01/2014  at 16:19:38
```

##

##

I-131 Summary

##

Time (hr)	RCS I-131 (Curies)	Intact Steam Generato I-131 (Curies)	Environment I-131 (Curies)
0.000	0.0000E+00	1.7711E+01	3.1450E-07
0.028	0.0000E+00	1.7707E+01	1.7608E-03
0.110	0.0000E+00	1.7690E+01	1.8377E-02
0.139	0.0000E+00	1.7683E+01	2.4249E-02
0.278	0.0000E+00	1.7653E+01	5.2368E-02
0.477	0.0000E+00	1.7610E+01	9.2609E-02
0.500	0.0000E+00	1.7605E+01	9.7178E-02
0.667	0.0000E+00	1.7582E+01	1.0993E-01
0.878	0.0000E+00	1.7552E+01	1.2605E-01
1.089	0.0000E+00	1.7523E+01	1.4210E-01
1.289	0.0000E+00	1.7495E+01	1.5730E-01
1.489	0.0000E+00	1.7467E+01	1.7247E-01
1.689	0.0000E+00	1.7440E+01	1.8762E-01
1.889	0.0000E+00	1.7412E+01	2.0275E-01
2.000	0.0000E+00	1.7397E+01	2.1113E-01
2.243	0.0000E+00	1.7362E+01	2.3109E-01
2.443	0.0000E+00	1.7333E+01	2.4746E-01
2.643	0.0000E+00	1.7304E+01	2.6381E-01
2.843	0.0000E+00	1.7275E+01	2.8013E-01
3.043	0.0000E+00	1.7246E+01	2.9642E-01
3.243	0.0000E+00	1.7218E+01	3.1269E-01
3.443	0.0000E+00	1.7189E+01	3.2893E-01
3.643	0.0000E+00	1.7161E+01	3.4514E-01

3.843	0.0000E+00	1.7132E+01	3.6132E-01
4.043	0.0000E+00	1.7104E+01	3.7748E-01
4.243	0.0000E+00	1.7075E+01	3.9361E-01
4.443	0.0000E+00	1.7047E+01	4.0972E-01
4.643	0.0000E+00	1.7019E+01	4.2580E-01
4.843	0.0000E+00	1.6990E+01	4.4185E-01
5.043	0.0000E+00	1.6962E+01	4.5787E-01
5.243	0.0000E+00	1.6934E+01	4.7387E-01
5.443	0.0000E+00	1.6906E+01	4.8984E-01
5.643	0.0000E+00	1.6878E+01	5.0578E-01
5.843	0.0000E+00	1.6850E+01	5.2170E-01
6.043	0.0000E+00	1.6822E+01	5.3760E-01
6.243	0.0000E+00	1.6794E+01	5.5346E-01
6.443	0.0000E+00	1.6766E+01	5.6930E-01
6.643	0.0000E+00	1.6738E+01	5.8511E-01
6.843	0.0000E+00	1.6710E+01	6.0090E-01
7.043	0.0000E+00	1.6683E+01	6.1666E-01
7.243	0.0000E+00	1.6655E+01	6.3239E-01
7.443	0.0000E+00	1.6627E+01	6.4810E-01
7.643	0.0000E+00	1.6600E+01	6.6378E-01
7.843	0.0000E+00	1.6572E+01	6.7944E-01
8.000	0.0000E+00	1.6550E+01	6.9168E-01
8.227	0.0000E+00	1.6530E+01	6.9822E-01
8.427	0.0000E+00	1.6513E+01	7.0398E-01
8.627	0.0000E+00	1.6495E+01	7.0973E-01
8.827	0.0000E+00	1.6478E+01	7.1548E-01
9.027	0.0000E+00	1.6460E+01	7.2122E-01
9.227	0.0000E+00	1.6442E+01	7.2696E-01
9.427	0.0000E+00	1.6425E+01	7.3268E-01
9.627	0.0000E+00	1.6407E+01	7.3841E-01
9.827	0.0000E+00	1.6390E+01	7.4412E-01
10.027	0.0000E+00	1.6372E+01	7.4983E-01
10.227	0.0000E+00	1.6355E+01	7.5554E-01

24.000	0.0000E+00	1.5196E+01	1.1343E+00
96.000	0.0000E+00	1.1733E+01	1.1343E+00
720.000	0.0000E+00	1.2472E+00	1.1343E+00

Time (hr)	Control Room I-131 (Curies)	Ruptured Steam Genera I-131 (Curies)
0.000	1.1607E-10	5.9035E+00
0.028	6.3997E-07	5.9025E+00
0.110	7.5794E-05	5.8968E+00
0.139	6.6225E-05	5.8947E+00
0.278	3.8017E-05	5.8851E+00
0.477	2.3200E-05	5.8712E+00
0.500	2.2395E-05	5.8697E+00
0.667	1.2167E-05	5.8661E+00
0.878	7.9978E-06	5.8617E+00
1.089	6.8507E-06	5.8572E+00
1.289	6.5368E-06	5.8530E+00
1.489	6.4375E-06	5.8488E+00
1.689	6.4012E-06	5.8446E+00
1.889	6.3835E-06	5.8404E+00
2.000	6.3763E-06	5.8381E+00
2.243	5.6072E-06	5.8330E+00
2.443	5.4428E-06	5.8288E+00
2.643	5.3883E-06	5.8246E+00
2.843	5.3660E-06	5.8205E+00
3.043	5.3532E-06	5.8163E+00
3.243	5.3432E-06	5.8121E+00
3.443	5.3339E-06	5.8079E+00
3.643	5.3250E-06	5.8038E+00
3.843	5.3161E-06	5.7996E+00
4.043	5.3073E-06	5.7954E+00
4.243	5.2985E-06	5.7913E+00
4.443	5.2897E-06	5.7871E+00

4.643	5.2809E-06	5.7829E+00
4.843	5.2721E-06	5.7788E+00
5.043	5.2633E-06	5.7746E+00
5.243	5.2546E-06	5.7705E+00
5.443	5.2459E-06	5.7663E+00
5.643	5.2372E-06	5.7622E+00
5.843	5.2285E-06	5.7581E+00
6.043	5.2198E-06	5.7539E+00
6.243	5.2111E-06	5.7498E+00
6.443	5.2025E-06	5.7457E+00
6.643	5.1938E-06	5.7415E+00
6.843	5.1852E-06	5.7374E+00
7.043	5.1766E-06	5.7333E+00
7.243	5.1680E-06	5.7292E+00
7.443	5.1594E-06	5.7251E+00
7.643	5.1508E-06	5.7210E+00
7.843	5.1423E-06	5.7168E+00
8.000	5.1356E-06	5.7136E+00
8.227	1.7544E-06	5.7090E+00
8.427	9.6151E-07	5.7049E+00
8.627	7.2851E-07	5.7008E+00
8.827	6.5970E-07	5.6967E+00
9.027	6.3905E-07	5.6926E+00
9.227	6.3252E-07	5.6885E+00
9.427	6.3013E-07	5.6844E+00
9.627	6.2895E-07	5.6803E+00
9.827	6.2813E-07	5.6763E+00
10.027	6.2742E-07	5.6722E+00
10.227	6.2674E-07	5.6681E+00
24.000	5.8233E-07	5.3945E+00
96.000	9.5552-199	4.1651E+00
720.000	0.0000E+00	4.4274E-01

```
#####################################################################
                        Cumulative Dose Summary
#####################################################################
```

	Exclusion Area Bounda		Low Population Zone		Control Room	
Time	Thyroid	TEDE	Thyroid	TEDE	Thyroid	TEDE
(hr)	(rem)	(rem)	(rem)	(rem)	(rem)	(rem)
0.000	0.0000E+00	0.0000E+00	0.0000E+00	0.0000E+00	0.0000E+00	0.0000E+00
0.028	7.0943E-04	2.3270E-05	9.5469E-05	3.1314E-06	1.0560E-05	3.2866E-07
0.110	5.2670E-03	1.7269E-04	9.7282E-04	3.1895E-05	3.7292E-03	1.1605E-04
0.139	6.8769E-03	2.2543E-04	1.2827E-03	4.2048E-05	6.1450E-03	1.9123E-04
0.278	1.4581E-02	4.7759E-04	2.7658E-03	9.0591E-05	1.4350E-02	4.4650E-04
0.477	2.5592E-02	8.3729E-04	4.8855E-03	1.5983E-04	2.1167E-02	6.5853E-04
0.500	2.6841E-02	8.7805E-04	5.1260E-03	1.6768E-04	2.1771E-02	6.7733E-04
0.667	3.0325E-02	9.9161E-04	5.7967E-03	1.8954E-04	2.4989E-02	7.7741E-04
0.878	3.4722E-02	1.1346E-03	6.6430E-03	2.1707E-04	2.7373E-02	8.5156E-04
1.089	3.9093E-02	1.2766E-03	7.4846E-03	2.4440E-04	2.9170E-02	9.0744E-04
1.289	4.3228E-02	1.4105E-03	8.2804E-03	2.7019E-04	3.0721E-02	9.5571E-04
1.489	4.7350E-02	1.5439E-03	9.0739E-03	2.9586E-04	3.2227E-02	1.0025E-03
1.689	5.1459E-02	1.6766E-03	9.8650E-03	3.2141E-04	3.3717E-02	1.0489E-03
1.889	5.5556E-02	1.8088E-03	1.0654E-02	3.4685E-04	3.5198E-02	1.0949E-03
2.000	5.7822E-02	1.8818E-03	1.1090E-02	3.6090E-04	3.6017E-02	1.1204E-03
2.243	6.3215E-02	2.0553E-03	1.1576E-02	3.7654E-04	3.7678E-02	1.1721E-03
2.443	6.7633E-02	2.1973E-03	1.1974E-02	3.8934E-04	3.8951E-02	1.2116E-03
2.643	7.2038E-02	2.3387E-03	1.2371E-02	4.0208E-04	4.0199E-02	1.2504E-03
2.843	7.6429E-02	2.4795E-03	1.2767E-02	4.1477E-04	4.1437E-02	1.2889E-03
3.043	8.0808E-02	2.6197E-03	1.3161E-02	4.2741E-04	4.2669E-02	1.3273E-03
3.243	8.5174E-02	2.7594E-03	1.3555E-02	4.4000E-04	4.3898E-02	1.3655E-03
3.443	8.9527E-02	2.8986E-03	1.3947E-02	4.5253E-04	4.5123E-02	1.4035E-03
3.643	9.3867E-02	3.0372E-03	1.4338E-02	4.6503E-04	4.6344E-02	1.4415E-03
3.843	9.8195E-02	3.1752E-03	1.4728E-02	4.7747E-04	4.7562E-02	1.4794E-03
4.043	1.0251E-01	3.3128E-03	1.5117E-02	4.8987E-04	4.8776E-02	1.5171E-03
4.243	1.0681E-01	3.4499E-03	1.5505E-02	5.0222E-04	4.9986E-02	1.5547E-03

4.443	1.1110E-01	3.5864E-03	1.5892E-02	5.1452E-04	5.1193E-02	1.5922E-03
4.643	1.1538E-01	3.7225E-03	1.6277E-02	5.2679E-04	5.2397E-02	1.6296E-03
4.843	1.1965E-01	3.8581E-03	1.6662E-02	5.3901E-04	5.3597E-02	1.6669E-03
5.043	1.2390E-01	3.9932E-03	1.7045E-02	5.5118E-04	5.4794E-02	1.7041E-03
5.243	1.2814E-01	4.1279E-03	1.7427E-02	5.6332E-04	5.5988E-02	1.7412E-03
5.443	1.3237E-01	4.2621E-03	1.7808E-02	5.7541E-04	5.7178E-02	1.7781E-03
5.643	1.3659E-01	4.3958E-03	1.8189E-02	5.8746E-04	5.8365E-02	1.8150E-03
5.843	1.4080E-01	4.5291E-03	1.8568E-02	5.9947E-04	5.9548E-02	1.8518E-03
6.043	1.4499E-01	4.6619E-03	1.8946E-02	6.1145E-04	6.0728E-02	1.8884E-03
6.243	1.4918E-01	4.7943E-03	1.9323E-02	6.2338E-04	6.1905E-02	1.9250E-03
6.443	1.5335E-01	4.9263E-03	1.9699E-02	6.3527E-04	6.3079E-02	1.9614E-03
6.643	1.5751E-01	5.0578E-03	2.0074E-02	6.4712E-04	6.4249E-02	1.9978E-03
6.843	1.6166E-01	5.1889E-03	2.0448E-02	6.5894E-04	6.5417E-02	2.0340E-03
7.043	1.6580E-01	5.3196E-03	2.0820E-02	6.7072E-04	6.6581E-02	2.0701E-03
7.243	1.6992E-01	5.4499E-03	2.1192E-02	6.8246E-04	6.7742E-02	2.1062E-03
7.443	1.7404E-01	5.5798E-03	2.1563E-02	6.9417E-04	6.8900E-02	2.1421E-03
7.643	1.7814E-01	5.7093E-03	2.1933E-02	7.0583E-04	7.0054E-02	2.1779E-03
7.843	1.8224E-01	5.8383E-03	2.2302E-02	7.1746E-04	7.1206E-02	2.2137E-03
8.000	1.8543E-01	5.9392E-03	2.2590E-02	7.2655E-04	7.2106E-02	2.2416E-03
8.227	1.8631E-01	5.9674E-03	2.2644E-02	7.2830E-04	7.2886E-02	2.2659E-03
8.427	1.8708E-01	5.9922E-03	2.2692E-02	7.2983E-04	7.3172E-02	2.2749E-03
8.627	1.8785E-01	6.0169E-03	2.2740E-02	7.3136E-04	7.3356E-02	2.2808E-03
8.827	1.8862E-01	6.0416E-03	2.2787E-02	7.3289E-04	7.3509E-02	2.2857E-03
9.027	1.8939E-01	6.0662E-03	2.2835E-02	7.3441E-04	7.3653E-02	2.2903E-03
9.227	1.9016E-01	6.0908E-03	2.2882E-02	7.3593E-04	7.3794E-02	2.2948E-03
9.427	1.9092E-01	6.1153E-03	2.2929E-02	7.3744E-04	7.3934E-02	2.2993E-03
9.627	1.9168E-01	6.1397E-03	2.2977E-02	7.3895E-04	7.4074E-02	2.3038E-03
9.827	1.9244E-01	6.1641E-03	2.3024E-02	7.4046E-04	7.4213E-02	2.3082E-03
10.027	1.9320E-01	6.1884E-03	2.3071E-02	7.4196E-04	7.4352E-02	2.3127E-03
10.227	1.9396E-01	6.2127E-03	2.3118E-02	7.4346E-04	7.4491E-02	2.3171E-03
24.000	2.4295E-01	7.7634E-03	2.6147E-02	8.3936E-04	8.3452E-02	2.5985E-03
96.000	2.4295E-01	7.7634E-03	2.6147E-02	8.3936E-04	8.3534E-02	2.6022E-03
720.000	2.4295E-01	7.7634E-03	2.6147E-02	8.3936E-04	8.3534E-02	2.6022E-03

```
#######################################################################
    ALION RADTRAD Version 3.10 Rev 2 run on 12/01/2014  at 16:19:38

                Copyright © 2009 Alion Science and Technology
#######################################################################

            D. C. Cook - SGTR Initial SG Iodine

#####################################################################
                        Worst Two-Hour Doses
#####################################################################

Exclusion Area Boundary
   Time    Whole Body    Thyroid        TEDE
   (hr)      (rem)        (rem)         (rem)
    0.0   8.7813E-05   5.7822E-02   1.8818E-03

#####################################################################
                        Final Doses
#####################################################################

Low Population Zone
   Time    Whole Body    Thyroid        TEDE
   (hr)      (rem)        (rem)         (rem)
  720.0   3.0801E-05   2.6147E-02   8.3936E-04

Control Room
   Time    Whole Body    Thyroid        TEDE
   (hr)      (rem)        (rem)         (rem)
  720.0   1.8537E-05   8.3534E-02   2.6022E-03
```

Attachment G

Owner's Review Comments

Revision 0

AEP Comments for RWA-1313-011			RWA Response	AEP Acceptance/Additional Comments
Comment No.	Document Location	Description		
1	General	Any time that the primary to secondary leakage is mentioned add that it is a TS change that requires NRC approval.	In response to a Cook comment on the input document (RWA-1313-001), a statement has been added to Item E.2, which defines the value of the primary-to-secondary leakage, that a Tech. Spec. change is required to support the value used in the analysis. In general, however, these kind of time-related statements in design documents should be avoided. This is because once the licensing change is implemented, RWA-1313-001 will become obsolete since the statement will remain in the calculation but the TS change will no longer be required.	Acceptable. JJW - 07/14/2014
2	Page 5, Section 2	Under "Concurrent Iodine Spike", Item 3, correct the section number.	The link to Section 5.5 was repaired	Acceptable. JJW - 07/14/2014
3	Page 10, Section 3	Fix the typo ("Ventialation") in the calculation performed under Item 3.18.	Text corrected	Acceptable. JJW - 07/14/2014
4	Page 15, Section 5.1.1.3.1	In the last sentence above Table 10, remove the extra period.	Text corrected	Acceptable. JJW - 07/14/2014
5	Page 25, Section 5.2.1.3	Fix the dash in the title.	Text corrected	Acceptable. JJW - 07/14/2014
6	Page 25, Section 5.2.1.5	Correct "of as 97,515.7 lbm".	Text corrected	Acceptable. JJW - 07/14/2014

7	Page 27, Section 5.2.2.1.1	Are there any differences between the Simulator run and the accident assumptions that need to be discussed or justified further?	The two key plant parameters that affect flashing fractions are the RCS hot leg temperature and the steam generator PORV setpoint. While the details of the simulator setup are not specified, the flashing fractions derived from the simulator data closely match those developed from design calculation TH-00-03. TH-00-03 is based upon a vessel average temperature of 573.8 F, an NSSS power of 3600 MW, and a PORV setpoint of 1025 psig. Based upon the agreement with values from the SGTR overfill analysis, the applicability of the simulator data to the dose analysis is appropriate.	Acceptable. JJW - 07/14/2014
8	Page 37, Section 5.3	At the end of the first sentence. Add a parenthetical for 60uCi/g. Within the context of Reference 7.1 the maximum permitted by tech specs is clear, however to the unfamiliar reader it is subjective and potentially confusing.	The value of 60 μCi/gm has been moved into Section 5.3 for clarification.	Acceptable. JJW - 07/14/2014
9	Page 39, Section 5.4	Correct "Section 0" at the end of the last paragraph.	The link to Section 5.5 was repaired	Acceptable. JJW - 07/14/2014
10	Page 47, Section 5.5.2.1	In the second sentence, change "multiply" to "multiplying".	Text corrected	Acceptable. JJW - 07/14/2014
11	Page 49, Section 5.6.3.3	What is the impact of including the bromine isotopes in the source term?	The impact is small since there are only three isotopes in the RCS source term with relatively low concentrations. They are included simply because modifying the .nif file to remove them would add complexity to both the analysis and the documentation with little dose benefit.	Acceptable. JJW - 07/14/2014
12	Page 51, Table 40	Why does the Pre-Accident Iodine Spike case not consider RCS activity?	The RCS activity is included in the Pre-Accident spike as discussed in Section 5.3.1.5. Since the pre-accident iodine spike is applied as a straight multiplier on the iodines in RCS source term in the .nif file, the dose from both the iodines and the remaining RCS nuclides can be evaluated in a single RADTRAD run. For the concurrent spike case, the iodine activities are not a simple linear function of the RCS source term and must be evaluated in a separate case from the remaining RCS nuclides.	Acceptable. JJW - 07/14/2014

Revision 1

AEP Comments for RWA-1313-011_R1			RWA Response	AEP Acceptance/Additional Comments
Comment No.	Document Location*	Description		
1	GENERAL	Check/confirm formatting of tables (specifically, Pathway #1 Summary table from Section 5.1.2.1) and internal document links (references, inputs, and assumptions). The tables seem to be misaligned and several of the links are broken. This may be due to the reviewer's use of a different version of MS WORD.	Table formatting and all links have been reviewed. A final page numbering and linkage check will be performed prior to approval when the calculation is converted to .pdf format.	Response accepted. -JJW 03/11/16
2	GENERAL	It is noted that slight modifications to the text have been made throughout the document for grammatical/clarity purposes. No response required.	RWA agrees with the AEP comment and conclusion.	Response accepted. -JJW 03/11/16
3	Page 1, Description	Modify the last sentence of the description to read as follows: "...as Attachment H for information purposes."	Text has been added.	Response accepted. -JJW 03/11/16
4	Page 5, Section 1	Modify the last sentence of Section 1 to read as follows: "...as Attachment H for information purposes."	Text has been added.	Response accepted. -JJW 03/11/16
5	Page 16, Section 5.1.2.1	Please explain the addition of the break flow to this pathway. This does not appear to be due to the changes associated with the revised meteorological data and flashing fractions. Response to this comment should be sufficient, no text changes to document are required.	This change is not related to the flashing fractions and was made to correct an error in Rev 0 that was identified when the calculation was opened to apply the revised X/Qs. The noble gas release rate should reflect both the break flow and the tube leakage. Since the noble gases have only a minor dose contribution, the impact on the total dose is small. This error has been captured in the RWA corrective action program.	Response accepted. -JJW 03/11/16
6	Page 18, Section 5.1.3.1	It is noted that there was a slight computational error in the calculation of plant power in Revision 0 of this document that has been corrected. Plant power has been appropriately revised in the remainder of the calculation. No response required.	RWA agrees with the AEP comment and conclusion. The typographical error in the calculation did translate into a small technical error in the RADTRAD model, which was corrected in Revision 1.	Response accepted. As this error appears in other calculations as well, it is recommended that the issue be placed in RWA's corrective actions program. -JJW 03/11/16
7	Page 28, Section 5.2.2.1.1	Second Paragraph, Second Sentence: Revise the sentence for clarity. I believe removal of the word "from" is all that is required.	The text has been revised for clarification.	Response accepted. -JJW 03/11/16
8	Page 28, Section 5.2.2.1.1	Third Paragraph, First Sentence: Please provide a reference for the time of 1662 seconds.	Text has been added to cite the event sequence table in Section 6.3.2 of the thermal hydraulic report for this value.	Response accepted. -JJW 03/11/16

9	Page 28, Section 5.2.2.1.1	Fourth Paragraph, Last Sentence: Provide reasoning behind statement that the flashing fractions can be applied to both the ruptured and intact steam generators.	Text has been added to state that the flashing fractions are primarily a function of the thermodynamic conditions of the reactor hot leg, and that the intact and ruptured steam pressures are comparable prior to the RCS cooldown. Therefore, the calculated fractions may be applied to both the ruptured and intact steam generators.	Response accepted. -JJW 03/11/16
10	Page 28, Section 5.2.2.1.1	Table 20: There appear to be unused columns in the table that can be removed.	Table 20 appears clean in the RWA version of the calculation. It contains only three columns - SGTR Event Time, Time after RX Trip, and Analysis Flashing Fraction. The second column is included to facilitate referencing by the MSLB, Rotor, and CRE event calculations.	Response accepted. -JJW 03/11/16
11	Page H5	Table H5: 3600 sec time entry is missing from the table.	The last row from Table H5 has been deleted since the full unflashed tube flow is achieved at 2400 seconds. No change to the model is required.	Response accepted. -JJW 03/11/16
12	Page H6	Sentence immediately preceding Table H6: Revise to read "...from this pathway ends...".	Text has been corrected.	Response accepted. -JJW 03/11/16

Attachment H

LOFTTR2 Methodology Dose Consequences

Introduction

The flashing fractions developed in Section 5.2.2.1.1 are derived from the Unit 2 SGTR analysis presented in Section 6.3.2 of Reference [7.17]. The Reference [7.17] analysis uses the Westinghouse LOFTTR2 methodology to perform an SGTR calculation which applies realistic operator actions based upon simulator runs. However, the remaining SGTR AST inputs continue to be obtained from the simplified 'hand calculation' method documented in Reference [7.18] in which operator actions are not explicitly modeled. The Reference [7.17] evaluation concludes that the 'hand calculation' methodology is more limiting from a dose standpoint than the more realistic LOFTTR2 approach which accounts for specific operator actions. To quantify the level of conservatism in the SGTR AST dose consequences, this event is re-evaluated here using a consistent set of inputs from Reference [7.17]. Only parameters impacted by the different methodology are discussed in this attachment. All remaining RADTRAD inputs remain unchanged.

Break Flow Rates

Table 19 presents the integrated broken tube flow and flashed break flow obtained from Reference [7.17]. These values can be used to determine the respective flow rates during the event, which can then be applied in the RADTRAD models. The broken tube flow and flashed break flow rates calculated from the integrated flows are shown in Table H1. The unflashed break flow rate is simply the difference between these values.

Table H1 - Break Flow Rates

Interval Start Time (t_1) (sec)	Interval End Time (t_2) (sec)	Integrated Break Flow at $t=t_2$ (lbm)	Integrated Flashed Break Flow at $t=t_2$ (lbm)	Break Flow Rate (lbm/min)	Flashed Break Flow Rate (lbm/min)	Unflashed Break Flow Rate (lbm/min)
0.0	100.0	8200	1500	4920	900	4020
100.0	500.0	34000	3500	3870	300	3570
500.0	1000.0	65000	5200	3720	204	3516
1000.0	1500.0	96000	6850	3720	198	3522

For completeness, the primary-to-secondary leakage is also included. The total leak rate is given as 8.328 lbm/min in Section 5.1.2.1, which is equally divided between the four steam generators (2.082 lbm/min, Input 3.6). The fraction of the tube leakage which flashes to vapor on the secondary side of the steam generators is presented in Table 20. These flashing fractions are applied to the leakage rate for selected configurations in Table H2.

Table H2 - Tube Leakage Flow Rates

SGTR Event Time (sec)	Flashing Fraction	4 SG Tubes Flashed (lbm/min)	3 SG Tubes Flashed (lbm/min)	1 SG Tube Unflashed (lbm/min)	3 SG Tubes Unflashed (lbm/min)
0.0	0.19	1.582	1.187	1.686	5.059
100.0	0.08	0.666	0.500	1.915	5.746
500.0	0.055	0.458	0.344	1.967	5.902
-	0.0	0.0	0.0	2.082	6.246

RADTRAD Pathways

The following sections describe changes to the RADTRAD pathway inputs documented in Section 5.

Noble Gas Pathway 1 – Break and Tube Leakage Flow

The noble gas break flow and tube leakage pathway is described in Section 5.1.2.1. Since the noble gases are assumed to be released directly to the environment, this pathway initially includes the total broken tube flow rate plus the primary-to secondary leakage from all four steam generators. The sequence of events table presented in Section 6.3.2 of Reference [7.17] identifies that releases from the ruptured steam generator are isolated by the plant operators at 1302 seconds (0.362 hours) into the event. At this time, the release to the environment is limited to the tube leakage from the three intact steam generators only. All tube leakage is assumed to be terminated at 24 hours as discussed in Section 5.1.2.1. The revised noble release rate based upon flow rates from Tables H1 and H2 are presented in Table H3.

Table H3 – Noble Gas Model Break and Leakage Flow Rates

Time (sec)	Time (hr)	Break Flow Rate (lbm/min)	Leakage Flow Rate (lbm/min)	Total Flow Rate (lbm/min)
0.0	0.0	4920	8.328	4928.33
100.0	0.028	3870	8.328	3878.33
500.0	0.139	3720	8.328	3728.33
1302.0	0.362	0.0	6.246	6.246
86400.0	24.0	0.0	0.0	0.0

The flashed flow is modeled as a direct connection between the RCS and the environment, and the corresponding RADTRAD inputs for this pathway are summarized below:

Noble Gas Pathway #1 Summary				
Pathway Name:	Steam Generator Tube Leakage and Break Flow			
From Compartment: 1		**To Compartment:** 2		
		Decontamination Factor		
Time (hours)	**Flow Rate (lbm/min)**	**Aerosol**	**Elemental**	**Organic**
0.0	4928.33	0.0	0.0	0.0
0.028	3878.33	0.0	0.0	0.0
0.139	3728.33	0.0	0.0	0.0
0.362	6.246	0.0	0.0	0.0
24.0	0.0	0.0	0.0	0.0
720.0	0.0	0.0	0.0	0.0

Non-NG Pathway 1 – Flashed Break Flow and Steam Generator Tube Leakage

Flashed flow in the non-noble gas model is described in Section 5.2.2.1. This pathway represents the portion of the ruptured tube flow and the fraction of primary-to-secondary leakage which flashed to vapor on the secondary side of the steam generators. Prior to the isolation of release from the ruptured steam generator at 1302 seconds, the flashed leakage from all four steam generators is considered. After isolation, only the flashed flow from the three intact steam generator tube leakage remains. This flow continues until the tube bundles are recovered after 40 minutes (0.667 hr, Assumption 4.2). The total flashed flow is summarized in Table H4.

Table H4 - Flashed Break Flow Rates and SG Tube Leakage

Time (sec)	Time (hr)	Flashed Break Flow Rate (lbm/min)	Flashed Leakage Flow Rate (lbm/min)	Total Flashed Flow Rate (lbm/min)
0.0	0.0	900.0	1.582	901.58
100.0	0.028	300.0	0.666	300.67
500.0	0.139	204.0	0.500	204.50
1000.0	0.278	198.0	0.458	198.46
1302.0	0.362	0.0	0.344	0.344
2400.0	0.667	0.0	0.0	0.0

The flashed flow is modeled as a direct connection between the RCS and the environment, and the corresponding RADTRAD inputs for this pathway are summarized below:

Non Noble Gas Pathway #1 Summary				
Pathway Name:	Flashed Break and Leakage Flow			
From Compartment: 1		**To Compartment:** 3		
		Filter Efficiencies (%)		
Time (hours)	**Flow Rate (lbm/min)**	**Aerosol**	**Elemental**	**Organic**
0.0	901.58	0.0	0.0	0.0
0.028	300.67	0.0	0.0	0.0
0.139	204.50	0.0	0.0	0.0
0.278	198.46	0.0	0.0	0.0
0.362	0.344	0.0	0.0	0.0
0.667	0.0	0.0	0.0	0.0
720.0	0.0	0.0	0.0	0.0

Non-NG Pathway 5 – Unflashed Intact Steam Generator Tube Leakage

The unflashed primary-to-secondary tube leakage to the intact steam generators for the non-noble gas model is discussed in Section 5.2.2.5. The unflashed flow rates from three steam generator tubes shown in Table H2 are directly applied to this RADTRAD pathway. Once the tube bundles are fully recovered after 40 minutes, 100% of the steam generator tube leakage is unflashed and continues until 24 hours.

Table H5 - Unflashed Intact SG Tube Leakage Flow Rates

Time (sec)	Time (hr)	Unflashed Leakage Flow Rate (lbm/min)
0.0	0.0	5.059
100.0	0.028	5.746
500.0	0.139	5.871
1000.0	0.278	5.902
2400.0	0.667	6.246

Non-Noble Gas Pathway #5 Summary				
Pathway Name:	Unflashed Intact SG Tube Leakage			
From Compartment: 1		**To Compartment:** 2		
		Filter Efficiencies (%)		
Time (hours)	**Flow Rate (lbm/min)**	**Aerosol**	**Elemental**	**Organic**
0.0	5.059	0.0	0.0	0.0
0.028	5.746	0.0	0.0	0.0
0.139	5.871	0.0	0.0	0.0
0.278	5.902	0.0	0.0	0.0
0.667	6.246	0.0	0.0	0.0
24.0	0.0	0.0	0.0	0.0
720.0	0.0	0.0	0.0	0.0

Non-NG Pathway 6 – Unflashed Break Flow & Ruptured SG Tube Leakage

The unflashed flow into the ruptured steam generator includes the unflashed break flow from the ruptured tube plus the unflashed primary-to-secondary leakage into the ruptured generator as discussed in Section 5.2.2.6. Applicable values from Tables H1 and H2 are applied as shown in Table H6. All flow from this pathway ends when the ruptured steam generator is isolated at 1302 seconds.

Table H6 - Unflashed Ruptured SG Break and Leakage Flow Rates

Time (sec)	Time (hr)	Unflashed Break Flow (lbm/min)	Unflashed Leakage Flow Rate (lbm/min)	Total Unflashed Flow Rate (lbm/min)
0.0	0.0	4020	1.686	4021.69
100.0	0.028	3570	1.915	3571.92
500.0	0.139	3516	1.957	3517.96
1000.0	0.278	3522	1.967	3523.97
1302.0	0.362	0.0	0.0	0.0

Non-Noble Gas Pathway #6 Summary				
Pathway Name:	Unflashed Ruptured SG Tube Leakage			
From Compartment: 1		**To Compartment:** 5		
		Filter Efficiencies (%)		
Time (hours)	**Flow Rate (lbm/min)**	**Aerosol**	**Elemental**	**Organic**
0.0	4021.69	0.0	0.0	0.0
0.028	3571.92	0.0	0.0	0.0
0.139	3517.96	0.0	0.0	0.0
0.278	3523.97	0.0	0.0	0.0
0.362	0.0	0.0	0.0	0.0
720.0	0.0	0.0	0.0	0.0

Non-NG Pathway 8 – Ruptured SG Steam Release

The integrated steam release from the ruptured generator is given as 48,500 lbm in Section 6.3.2 of Reference [7.17]. The steam flow rate is assumed to be uniform between the time of reactor trip (101 seconds) and the time that the ruptured steamline is isolated (1302 seconds), similar to the methodology applied in Section 5.2.2.8. The value entered into RADTRAD is adjusted to account for the partitioning by the fluid in the steam generator secondary. Note that the partition coefficient is 100 for iodines and 500 for particulates. Therefore, the post-trip ruptured steam releases applied in the RADTRAD models are:

Iodines:

$$Ruptured\ Steam\ Release_{0.028-0.362\ hr} = \frac{48{,}500\ lbm\ (60\ sec/min)}{(100)(1302 - 101\ sec)} = 24.23\ lbm/min$$

Particulates:

$$Ruptured\ Steam\ Release_{0.028-0.362\ hr} = \frac{48{,}500\ lbm\ (60\ sec/min)}{(500)(1302 - 101\ sec)} = 4.85\ lbm/min$$

Steam release from the ruptured steam generator is secured after 1302 seconds (0.362 hours).

Pathway #8 Summary				
Pathway Name:	Ruptured SG Steam Release – Iodine Release			
From Compartment: 5		**To Compartment:** 3		
		Filter Efficiencies (%)		
Time (hours)	**Flow Rate (lbm/min)**	**Aerosol**	**Elemental**	**Organic**
0.0	7.15	0.0	0.0	0.0
0.028	24.23	0.0	0.0	0.0
0.362	0.0	0.0	0.0	0.0
720.0	0.0	0.0	0.0	0.0

Pathway #8 Summary				
Pathway Name:	Ruptured SG Steam Release – RCS Activity			
From Compartment: 5		**To Compartment:** 3		
		Filter Efficiencies (%)		
Time (hours)	**Flow Rate (lbm/min)**	**Aerosol**	**Elemental**	**Organic**
0.0	1.43	0.0	0.0	0.0
0.028	4.85	0.0	0.0	0.0
0.362	0.0	0.0	0.0	0.0
720.0	0.0	0.0	0.0	0.0

Intact SG Steam Release

Section 6.3.2 of Reference [7.17] identifies the total steam release from the intact steam generators over the first 4000 seconds of the event as 341,600 lbm. This value is comparable to the post-trip steam release during this same period calculated from the steam releases listed in Item G.3.4 of Reference [7.6], which are obtained from Reference [7.18]:

$$Intact\ Steam\ Release_{4000\ sec} = 198{,}515\ lbm + \frac{314432\ lbm\ (4000 - 1800\ sec)}{(7200 - 1800\ sec)} = 326{,}617\ lbm$$

Since the integrated steam mass released from the intact steam generators are similar over the first 4000 seconds, and since values from Reference [7.18] are available out to 24 hours, no changes are made to the intact steam generator steam flow rates applied in Pathway 7 of the RADTRAD models.

Results

Dose consequences for the SGTR event using a consistent set of inputs derived from the LOFTTR2 methodology are presented in Tables H7 and H8. These results show significant margin to those obtained using inputs from the simplified 'hand calculation' method presented in Table 37 and Table 38.

Table H7 - SGTR Pre-Accident Iodine Spike TEDE Dose Results

Release	EAB (rem)	LPZ (rem)	Control Room (rem)
Noble Gas	2.6293E-02	4.9195E-03	1.4162E-02
Pre-Accident Iodine Spike	2.7289E+00	4.7848E-01	2.8038E+00
Initial SG Secondary Iodine	1.8365E-03	8.3065E-04	2.5985E-03
Control Room Shine			0.139
Total	**2.76**	**0.49**	**2.96**
Acceptance Limit	25	25	5

Table H8 - SGTR Concurrent Accident Iodine Spike TEDE Dose Results

Release	EAB (rem)	LPZ (rem)	Control Room (rem)
Noble Gas	2.6293E-02	4.9195E-03	1.4162E-02
Iodine Release	1.7254E-01	4.4076E-02	1.5118E-01
RCS Activity Release	1.3687E+00	2.3736E-01	1.3828E+00
Initial SG Secondary Iodine	1.8365E-03	8.3065E-04	2.5985E-03
Control Room Shine			0.139
Total	**1.57**	**0.29**	**1.69**
Acceptance Limit	2.5	2.5	5

Electronic Files

Table H9 - Electronic File Names and MD5 Checksums

Description	File Name	MD5 Checksum
Noble Gas Release RADTRAD 3.10 Input File	SGTR_NG_TH03.psf	31fda1b49ebf6282d66c2c2d9d224fc1
Noble Gas Release RADTRAD 3.10 Output File	SGTR_NG_TH03.o0	872dcf18e586103fbbb69bcf03b52c7f
Pre-Accident Spike RADTRAD 3.10 Input File	SGTR_Pre_I_TH03.psf	fa10312b55243d8f9ebd070dda9272d6
Pre-Accident Spike RADTRAD 3.10 Output File	SGTR_Pre_I_TH03.o0	29173a4c476d257b66c84978d4151d1d
Concurrent-Accident Spike (Iodine) RADTRAD 3.10 Input File	SGTR_Spike_I_TH03.psf	001c07be720457a8bf2be452a27c78cd
Concurrent-Accident Spike (Iodine) RADTRAD 3.10 Output File	SGTR_Spike_I_TH03.o0	412c56d7a4f2d4fccebd8c01968db94a
Concurrent-Accident Spike (RCS) RADTRAD 3.10 Input File	SGTR_Spike_RCS_TH03.psf	6b9dffdc6f2a62240254d381d120ab08
Concurrent-Accident Spike (RCS) RADTRAD 3.10 Output File	SGTR_Spike_RCS_TH03.o0	704b8813eff80d8ae4bb67480e4c57ad
Initial SG Iodine Release RADTRAD 3.10 Input File	SGTR_SG_I_TH03.psf	0dc1c58e962f612cb4e31e7fff863723
Initial SG Iodine Release RADTRAD 3.10 Output File	SGTR_SG_I_TH03.o0	292959641092d1bf860974ba4629ebde