REVISIONS		
REV.	ZONE	DESCRIPTION
4		REVISED PER ADMINISTRATIVE CHANGE-REDRAWN IN CADAM

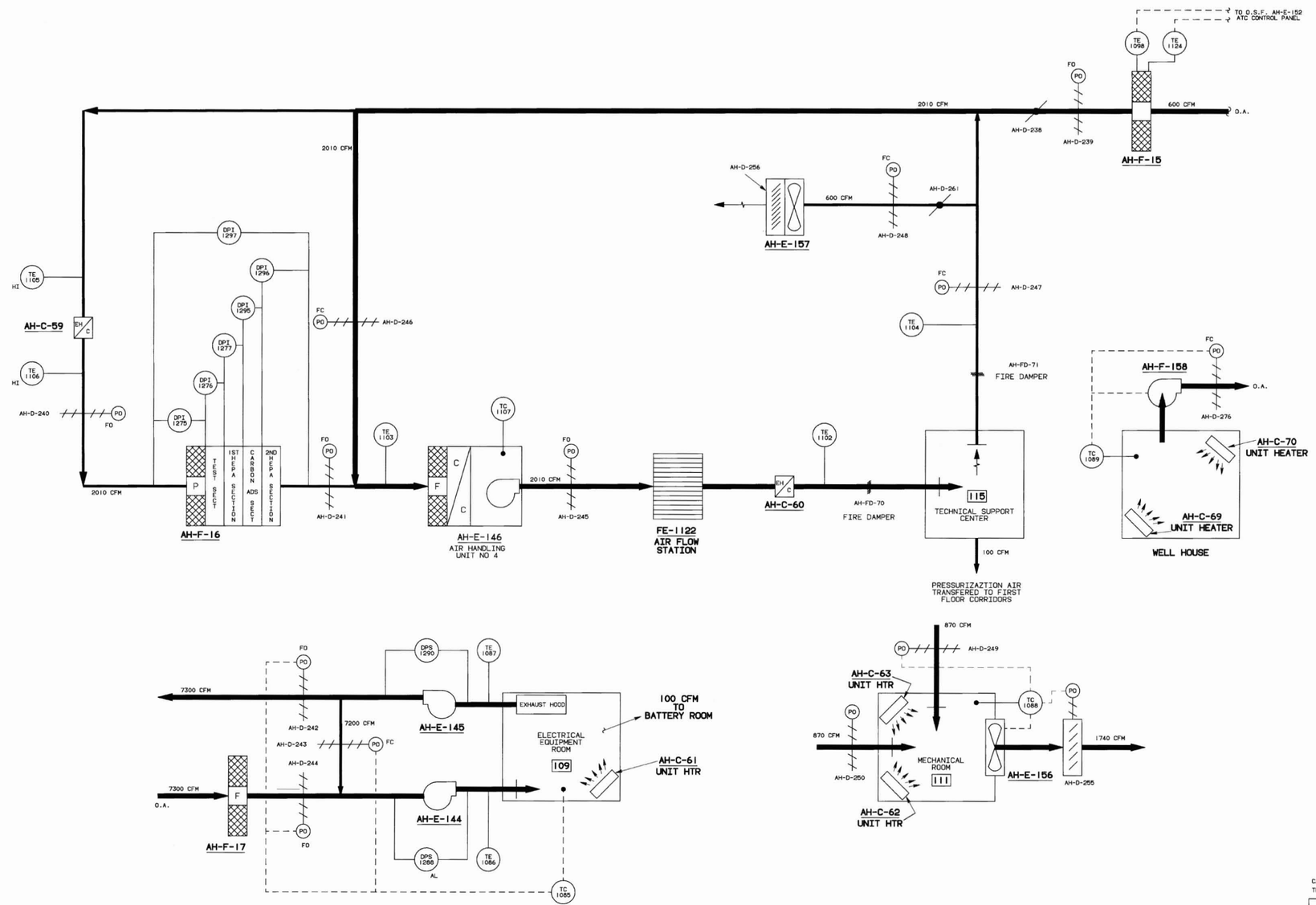

NOTES

1. VALVE POSITIONS SHOWN FOR REFERENCE ONLY. ACTUAL POSITIONS CONTROLLED BY PROCEDURES.
2. ALL INSTRUMENT TAG NUMBERS ARE PREFIXED BY SYSTEM DESIGNATOR UNLESS OTHERWISE NOTED.

CAD FILE: VIE,846,21,1002,001-,0401
THIS IS A COMPUTER GENERATED DWG. DO NOT REVISE IT MANUALLY

NO.	DWG. NO.	TITLE
3	302-003	COMPONENT & SYS ID INDEX
2	302-002	SYMBOLS INSTRUMENTATION
1	302-001	SYMBOLS FLOW DIAGRAM

REFERENCES

HRITZKO 02/16/93
DRAWN DATE
3-12-93
CHECKED DATE
DESIGN LEADER DATE
ENGINEER DATE
MANAGER APPROVAL DATE
ENG.MECH.

GPU Nuclear/ GAI

HTG VENT & AIR COND
FLOW DIAGRAM
OPERATIONS SUPPORT FACILITY

TMI UNIT 1 | DWG. NO. 302-852 | SH. . | REV. 4
SCALE: NONE
BA | TASK

DWG.NO. 302-852 SH. .