RADIATION DOSE ASSESSMENT FOR THE FIRE FIGHTER, MAINTENANCE WORKER, PARK RANGER AND MEMBER OF THE PUBLIC AT GREAT KILLS PARK

Appendix A

Laboratory Results

Gamma Spectroscopy Results

PAI 713 Rev 13

Sample Results

Lab Name: ALS Environmental -- FC
Work Order Number: 1405199
Client Name: Tidewater, Inc.
ClientProject ID: Great Kills Park

Field ID: GKP-Sa1-SS-03
Lab ID: 1405199-3
Library: RA226.LIB

Sample Matrix: SOIL
Prep SOP: PAI 739 Rev 11
Date Collected: 06-May-14
Date Prepared: 17-May-14
Date Analyzed: 09-Jun-14

Prep Batch: GS140516-2
QCBatchID: GS140516-2-1
Run ID: GS140516-2A
Count Time: 60 minutes
Report Basis: Dry Weight

Final Aliquot: 217 g
Prep Basis: Dry Weight
Moisture(%): NA
Result Units: pCi/g
File Name: 140603d01A

CASNO	Target Nuclide	Result +/- 2 s TPU	MDC	Requested MDC	Lab Qualifier
13982-63-3	Ra-226	10.4 +/- 1.3	0.4	0.5	G

Comments:

Qualifiers/Flags:

U - Result is less than the sample specific MDC or less than the associated TPU.

Y1 - Chemical Yield is in control at 100-110%. Quantitative Yield is assumed.

Y2 - Chemical Yield outside default limits.

LT - Result is less than Requested MDC, greater than sample specific MDC.

M3 - The requested MDC was not met, but the reported activity is greater than the reported MDC.

M - The requested MDC was not met.

SQ - Spectral quality prevents accurate quantitation.

SI - Nuclide identification and/or quantitation is tentative.

TI - Nuclide identification is tentative.

R - Nuclide has exceeded 8 halflives.

G - Sample density differs by more than 15% of LCS density.

Abbreviations:

TPU - Total Propagated Uncertainty

MDC - Minimum Detectable Concentration

BDL - Below Detection Limit

Data Package ID: *GSS1405199-1*

Gamma Spectroscopy Results

PAI 713 Rev 13

Sample Results

Lab Name: ALS Environmental -- FC
Work Order Number: 1405199
Client Name: Tidewater, Inc.
ClientProject ID: Great Kills Park

Field ID: GKP-Sa1-SS-03
Lab ID: 1405199-3
Library: HUNTERS_POIN

Sample Matrix: SOIL
Prep SOP: PAI 739 Rev 11
Date Collected: 06-May-14
Date Prepared: 17-May-14
Date Analyzed: 09-Jun-14

Prep Batch: GS140516-2
QCBatchID: GS140516-2-1
Run ID: GS140516-2A
Count Time: 60 minutes
Report Basis: Dry Weight

Final Aliquot: 217 g
Prep Basis: Dry Weight
Moisture(%): NA
Result Units: pCi/g
File Name: 140603d01

CASNO	Target Nuclide	Result +/- 2 s TPU	MDC	Requested MDC	Lab Qualifier
14331-83-0	Ac-228	1.52 +/- 0.40	0.70		G
14596-10-2	Am-241	-1.1 +/- 1.7	3.0		U,G
14913-49-6	Bi-212	2.1 +/- 1.5	2.3		U,G
14733-03-0	Bi-214	10.1 +/- 1.8	1.2	0.5	M3,G,J
10198-40-0	Co-60	-0.01 +/- 0.10	0.19		U,G
10045-97-3	Cs-137	0.06 +/- 0.11	0.18		U,G
14683-23-9	Eu-152	0.82 +/- 0.73	1.14		U,G
15585-10-1	Eu-154	0.43 +/- 0.60	0.98		U,G
13966-00-2	K-40	7.5 +/- 2.2	2.4	1	M3,G
15100-28-4	Pa-234m	7 +/- 17	29		U,G
15092-94-1	Pb-212	1.49 +/- 0.31	0.33		G
15067-28-4	Pb-214	10.4 +/- 1.3	0.4	0.5	G,J
15065-10-8	Th-234	1.3 +/- 2.1	3.5	5	U,G
14913-50-9	Tl-208	0.55 +/- 0.16	0.19		G
15117-96-1	U-235	0.22 +/- 0.66	1.11		U,G

Comments:

Qualifiers/Flags:

U - Result is less than the sample specific MDC or less than the associated TPU.

Y1 - Chemical Yield is in control at 100-110%. Quantitative Yield is assumed.

Y2 - Chemical Yield outside default limits.

LT - Result is less than Requested MDC, greater than sample specific MDC.

M3 - The requested MDC was not met, but the reported activity is greater than the reported MDC.

M - The requested MDC was not met.

SQ - Spectral quality prevents accurate quantitation.

SI - Nuclide identification and/or quantitation is tentative.

TI - Nuclide identification is tentative.

R - Nuclide has exceeded 8 halflives.

G - Sample density differs by more than 15% of LCS density.

Abbreviations:

TPU - Total Propagated Uncertainty

MDC - Minimum Detectable Concentration

BDL - Below Detection Limit

Data Package ID: *GSS1405199-1*

Gamma Spectroscopy Results

PAI 713 Rev 13

Sample Results

Lab Name: ALS Environmental -- FC
Work Order Number: 1405199
Client Name: Tidewater, Inc.
ClientProject ID: Great Kills Park

Field ID: GKP-Sa1-SS-03
Lab ID: 1405199-3
Library: HUNTERS_POIN

Sample Matrix: SOIL
Prep SOP: PAI 739 Rev 11
Date Collected: 06-May-14
Date Prepared: 17-May-14
Date Analyzed: 09-Jun-14

Prep Batch: GS140516-2
QCBatchID: GS140516-2-1
Run ID: GS140516-2A
Count Time: 60 minutes
Report Basis: Dry Weight

Final Aliquot: 217 g
Prep Basis: Dry Weight
Moisture(%): NA
Result Units: pCi/g
File Name: 140603d01

CASNO	Target Nuclide	Result +/- 2 s TPU	MDC	Requested MDC	Lab Qualifier
14255-04-0	Pb-210	90 +/- 110	180		U,G,J
7440-29-1	Th-232	1.52 +/- 0.40	0.70		G

Comments:

Qualifiers/Flags:

U - Result is less than the sample specific MDC or less than the associated TPU.

Y1 - Chemical Yield is in control at 100-110%. Quantitative Yield is assumed.

Y2 - Chemical Yield outside default limits.

LT - Result is less than Requested MDC, greater than sample specific MDC.

M3 - The requested MDC was not met, but the reported activity is greater than the reported MDC.

M - The requested MDC was not met.

SQ - Spectral quality prevents accurate quantitation.

SI - Nuclide identification and/or quantitation is tentative.

TI - Nuclide identification is tentative.

R - Nuclide has exceeded 8 halflives.

G - Sample density differs by more than 15% of LCS density.

Abbreviations:

TPU - Total Propagated Uncertainty

MDC - Minimum Detectable Concentration

BDL - Below Detection Limit

Data Package ID: *GSS1405199-1*

Gamma Spectroscopy Results

PAI 713 Rev 13

Sample Results

Lab Name: ALS Environmental -- FC
Work Order Number: 1405199
Client Name: Tidewater, Inc.
ClientProject ID: Great Kills Park

Field ID: GKP-Sa1-SS-04
Lab ID: 1405199-4
Library: RA226.LIB

Sample Matrix: SOIL
Prep SOP: PAI 739 Rev 11
Date Collected: 06-May-14
Date Prepared: 17-May-14
Date Analyzed: 09-Jun-14

Prep Batch: GS140516-2
QCBatchID: GS140516-2-1
Run ID: GS140516-2A
Count Time: 60 minutes
Report Basis: Dry Weight

Final Aliquot: 244 g
Prep Basis: Dry Weight
Moisture(%): NA
Result Units: pCi/g
File Name: 140638d02A

CASNO	Target Nuclide	Result +/- 2 s TPU	MDC	Requested MDC	Lab Qualifier
13982-63-3	Ra-226	1.27 +/- 0.19	0.21	0.5	G

Comments:

Qualifiers/Flags:

U - Result is less than the sample specific MDC or less than the associated TPU.

Y1 - Chemical Yield is in control at 100-110%. Quantitative Yield is assumed.

Y2 - Chemical Yield outside default limits.

LT - Result is less than Requested MDC, greater than sample specific MDC.

M3 - The requested MDC was not met, but the reported activity is greater than the reported MDC.

M - The requested MDC was not met.

SQ - Spectral quality prevents accurate quantitation.

SI - Nuclide identification and/or quantitation is tentative.

TI - Nuclide identification is tentative.

R - Nuclide has exceeded 8 halflives.

G - Sample density differs by more than 15% of LCS density.

Abbreviations:

TPU - Total Propagated Uncertainty

MDC - Minimum Detectable Concentration

BDL - Below Detection Limit

Data Package ID: *GSS1405199-1*

Gamma Spectroscopy Results

PAI 713 Rev 13

Sample Results

Lab Name: ALS Environmental -- FC
Work Order Number: 1405199
Client Name: Tidewater, Inc.
ClientProject ID: Great Kills Park

Field ID: GKP-Sa1-SS-04
Lab ID: 1405199-4
Library: HUNTERS_POIN

Sample Matrix: SOIL
Prep SOP: PAI 739 Rev 11
Date Collected: 06-May-14
Date Prepared: 17-May-14
Date Analyzed: 09-Jun-14

Prep Batch: GS140516-2
QCBatchID: GS140516-2-1
Run ID: GS140516-2A
Count Time: 60 minutes
Report Basis: Dry Weight

Final Aliquot: 244 g
Prep Basis: Dry Weight
Moisture(%): NA
Result Units: pCi/g
File Name: 140638d02

CASNO	Target Nuclide	Result +/- 2 s TPU	MDC	Requested MDC	Lab Qualifier
14331-83-0	Ac-228	1.19 +/- 0.29	0.33		G,TI
14596-10-2	Am-241	0.1 +/- 1.4	2.4		U,G
14913-49-6	Bi-212	0.66 +/- 0.93	1.54		U,G
14733-03-0	Bi-214	1.21 +/- 0.24	0.21	0.5	G,J
10198-40-0	Co-60	0 +/- 0.052	0.098		U,G
10045-97-3	Cs-137	0.079 +/- 0.071	0.111		U,G
14683-23-9	Eu-152	0.12 +/- 0.26	0.45		U,G
15585-10-1	Eu-154	-0.26 +/- 0.29	0.60		U,G
13966-00-2	K-40	9.3 +/- 1.9	1.3	1	M3,G
15100-28-4	Pa-234m	-1.4 +/- 9.3	17.5		U,G
15092-94-1	Pb-212	1.26 +/- 0.23	0.20		G
15067-28-4	Pb-214	1.32 +/- 0.23	0.21	0.5	G,J
15065-10-8	Th-234	0.3 +/- 1.2	2.0	5	U,G
14913-50-9	Tl-208	0.339 +/- 0.099	0.111		G
15117-96-1	U-235	-0.05 +/- 0.35	0.61		U,G

Comments:

Qualifiers/Flags:

U - Result is less than the sample specific MDC or less than the associated TPU.

Y1 - Chemical Yield is in control at 100-110%. Quantitative Yield is assumed.

Y2 - Chemical Yield outside default limits.

LT - Result is less than Requested MDC, greater than sample specific MDC.

M3 - The requested MDC was not met, but the reported activity is greater than the reported MDC.

M - The requested MDC was not met.

SQ - Spectral quality prevents accurate quantitation.

SI - Nuclide identification and/or quantitation is tentative.

TI - Nuclide identification is tentative.

R - Nuclide has exceeded 8 halflives.

G - Sample density differs by more than 15% of LCS density.

Abbreviations:

TPU - Total Propagated Uncertainty

MDC - Minimum Detectable Concentration

BDL - Below Detection Limit

Data Package ID: *GSS1405199-1*

Gamma Spectroscopy Results

PAI 713 Rev 13

Sample Results

Lab Name: ALS Environmental -- FC
Work Order Number: 1405199
Client Name: Tidewater, Inc.
ClientProject ID: Great Kills Park

Field ID: GKP-Sa1-SS-04
Lab ID: 1405199-4
Library: HUNTERS_POIN

Sample Matrix: SOIL
Prep SOP: PAI 739 Rev 11
Date Collected: 06-May-14
Date Prepared: 17-May-14
Date Analyzed: 09-Jun-14

Prep Batch: GS140516-2
QCBatchID: GS140516-2-1
Run ID: GS140516-2A
Count Time: 60 minutes
Report Basis: Dry Weight

Final Aliquot: 244 g
Prep Basis: Dry Weight
Moisture(%): NA
Result Units: pCi/g
File Name: 140638d02

CASNO	Target Nuclide	Result +/- 2 s TPU	MDC	Requested MDC	Lab Qualifier
14255-04-0	Pb-210	-40 +/- 130	230		U,G,J
7440-29-1	Th-232	1.19 +/- 0.29	0.33		G,TI

Comments:

Qualifiers/Flags:

U - Result is less than the sample specific MDC or less than the associated TPU.

Y1 - Chemical Yield is in control at 100-110%. Quantitative Yield is assumed.

Y2 - Chemical Yield outside default limits.

LT - Result is less than Requested MDC, greater than sample specific MDC.

M3 - The requested MDC was not met, but the reported activity is greater than the reported MDC.

M - The requested MDC was not met.

SQ - Spectral quality prevents accurate quantitation.

SI - Nuclide identification and/or quantitation is tentative.

TI - Nuclide identification is tentative.

R - Nuclide has exceeded 8 halflives.

G - Sample density differs by more than 15% of LCS density.

Abbreviations:

TPU - Total Propagated Uncertainty

MDC - Minimum Detectable Concentration

BDL - Below Detection Limit

Data Package ID: *GSS1405199-1*

Gamma Spectroscopy Results

PAI 713 Rev 13

Sample Results

Lab Name: ALS Environmental -- FC
Work Order Number: 1405199
Client Name: Tidewater, Inc.
ClientProject ID: Great Kills Park

Field ID: GKP-Sa2-SS-07
Lab ID: 1405199-7
Library: RA226.LIB

Sample Matrix: SOIL
Prep SOP: PAI 739 Rev 11
Date Collected: 06-May-14
Date Prepared: 17-May-14
Date Analyzed: 09-Jun-14

Prep Batch: GS140516-2
QCBatchID: GS140516-2-1
Run ID: GS140516-2A
Count Time: 90 minutes
Report Basis: Dry Weight

Final Aliquot: 194 g
Prep Basis: Dry Weight
Moisture(%): NA
Result Units: pCi/g
File Name: 140595d07A

CASNO	Target Nuclide	Result +/- 2 s TPU	MDC	Requested MDC	Lab Qualifier
13982-63-3	Ra-226	100 +/- 12	1	0.5	M3,G

Comments:

Qualifiers/Flags:

U - Result is less than the sample specific MDC or less than the associated TPU.

Y1 - Chemical Yield is in control at 100-110%. Quantitative Yield is assumed.

Y2 - Chemical Yield outside default limits.

LT - Result is less than Requested MDC, greater than sample specific MDC.

M3 - The requested MDC was not met, but the reported activity is greater than the reported MDC.

M - The requested MDC was not met.

SQ - Spectral quality prevents accurate quantitation.

SI - Nuclide identification and/or quantitation is tentative.

TI - Nuclide identification is tentative.

R - Nuclide has exceeded 8 halflives.

G - Sample density differs by more than 15% of LCS density.

Abbreviations:

TPU - Total Propagated Uncertainty

MDC - Minimum Detectable Concentration

BDL - Below Detection Limit

Data Package ID: *GSS1405199-1*

Gamma Spectroscopy Results

PAI 713 Rev 13

Sample Results

Lab Name: ALS Environmental -- FC
Work Order Number: 1405199
Client Name: Tidewater, Inc.
ClientProject ID: Great Kills Park

Field ID: GKP-Sa2-SS-07
Lab ID: 1405199-7
Library: HUNTERS_POIN

Sample Matrix: SOIL
Prep SOP: PAI 739 Rev 11
Date Collected: 06-May-14
Date Prepared: 17-May-14
Date Analyzed: 09-Jun-14

Prep Batch: GS140516-2
QCBatchID: GS140516-2-1
Run ID: GS140516-2A
Count Time: 90 minutes
Report Basis: Dry Weight

Final Aliquot: 194 g
Prep Basis: Dry Weight
Moisture(%): NA
Result Units: pCi/g
File Name: 140595d07

CASNO	Target Nuclide	Result +/- 2 s TPU	MDC	Requested MDC	Lab Qualifier
14331-83-0	Ac-228	0.67 +/- 0.57	0.92		U,G
14596-10-2	Am-241	-0.3 +/- 1.9	3.1		U,G
14913-49-6	Bi-212	1.3 +/- 2.5	4.2		U,G
14733-03-0	Bi-214	94 +/- 11	1	0.5	M3,G,J
10198-40-0	Co-60	0.15 +/- 0.21	0.35		U,G
10045-97-3	Cs-137	0.02 +/- 0.28	0.46		U,G
14683-23-9	Eu-152	8.3 +/- 2.7	3.7		G,NQ
15585-10-1	Eu-154	0.51 +/- 0.95	1.90		U,G
13966-00-2	K-40	6.6 +/- 2.7	3.9	1	M3,G
15100-28-4	Pa-234m	-1 +/- 34	57		U,G
15092-94-1	Pb-212	1.49 +/- 0.38	0.52		G
15067-28-4	Pb-214	105 +/- 12	1	0.5	M3,G,J
15065-10-8	Th-234	2.9 +/- 3.0	5.0	5	U,G
14913-50-9	Tl-208	0.21 +/- 0.16	0.26		U,G
15117-96-1	U-235	-0.7 +/- 1.2	2.0		U,G

Comments:

Qualifiers/Flags:

U - Result is less than the sample specific MDC or less than the associated TPU.

Y1 - Chemical Yield is in control at 100-110%. Quantitative Yield is assumed.

Y2 - Chemical Yield outside default limits.

LT - Result is less than Requested MDC, greater than sample specific MDC.

M3 - The requested MDC was not met, but the reported activity is greater than the reported MDC.

M - The requested MDC was not met.

SQ - Spectral quality prevents accurate quantitation.

SI - Nuclide identification and/or quantitation is tentative.

TI - Nuclide identification is tentative.

R - Nuclide has exceeded 8 halflives.

G - Sample density differs by more than 15% of LCS density.

Abbreviations:

TPU - Total Propagated Uncertainty

MDC - Minimum Detectable Concentration

BDL - Below Detection Limit

Data Package ID: *GSS1405199-1*

Gamma Spectroscopy Results

PAI 713 Rev 13

Sample Results

Lab Name: ALS Environmental -- FC
Work Order Number: 1405199
Client Name: Tidewater, Inc.
ClientProject ID: Great Kills Park

Field ID: GKP-Sa2-SS-07
Lab ID: 1405199-7
Library: HUNTERS_POIN

Sample Matrix: SOIL
Prep SOP: PAI 739 Rev 11
Date Collected: 06-May-14
Date Prepared: 17-May-14
Date Analyzed: 09-Jun-14

Prep Batch: GS140516-2
QCBatchID: GS140516-2-1
Run ID: GS140516-2A
Count Time: 90 minutes
Report Basis: Dry Weight

Final Aliquot: 194 g
Prep Basis: Dry Weight
Moisture(%): NA
Result Units: pCi/g
File Name: 140595d07

CASNO	Target Nuclide	Result +/- 2 s TPU	MDC	Requested MDC	Lab Qualifier
14255-04-0	Pb-210	5 +/- 42	70		U,G,J
7440-29-1	Th-232	0.67 +/- 0.57	0.92		U,G

Comments:

Qualifiers/Flags:

U - Result is less than the sample specific MDC or less than the associated TPU.

Y1 - Chemical Yield is in control at 100-110%. Quantitative Yield is assumed.

Y2 - Chemical Yield outside default limits.

LT - Result is less than Requested MDC, greater than sample specific MDC.

M3 - The requested MDC was not met, but the reported activity is greater than the reported MDC.

M - The requested MDC was not met.

SQ - Spectral quality prevents accurate quantitation.

SI - Nuclide identification and/or quantitation is tentative.

TI - Nuclide identification is tentative.

R - Nuclide has exceeded 8 halflives.

G - Sample density differs by more than 15% of LCS density.

Abbreviations:

TPU - Total Propagated Uncertainty

MDC - Minimum Detectable Concentration

BDL - Below Detection Limit

Data Package ID: *GSS1405199-1*

Gamma Spectroscopy Results

PAI 713 Rev 13

Sample Results

Lab Name: ALS Environmental -- FC
Work Order Number: 1405199
Client Name: Tidewater, Inc.
ClientProject ID: Great Kills Park

Field ID: GKP-Sa2-SS-08
Lab ID: 1405199-8
Library: RA226.LIB

Sample Matrix: SOIL
Prep SOP: PAI 739 Rev 11
Date Collected: 06-May-14
Date Prepared: 17-May-14
Date Analyzed: 09-Jun-14

Prep Batch: GS140516-2
QCBatchID: GS140516-2-1
Run ID: GS140516-2A
Count Time: 60 minutes
Report Basis: Dry Weight

Final Aliquot: 266 g
Prep Basis: Dry Weight
Moisture(%): NA
Result Units: pCi/g
File Name: 140592d03A

CASNO	Target Nuclide	Result +/- 2 s TPU	MDC	Requested MDC	Lab Qualifier
13982-63-3	Ra-226	1.84 +/- 0.26	0.20	0.5	G

Comments:

Qualifiers/Flags:

U - Result is less than the sample specific MDC or less than the associated TPU.

Y1 - Chemical Yield is in control at 100-110%. Quantitative Yield is assumed.

Y2 - Chemical Yield outside default limits.

LT - Result is less than Requested MDC, greater than sample specific MDC.

M3 - The requested MDC was not met, but the reported activity is greater than the reported MDC.

M - The requested MDC was not met.

SQ - Spectral quality prevents accurate quantitation.

SI - Nuclide identification and/or quantitation is tentative.

TI - Nuclide identification is tentative.

R - Nuclide has exceeded 8 halflives.

G - Sample density differs by more than 15% of LCS density.

Abbreviations:

TPU - Total Propagated Uncertainty

MDC - Minimum Detectable Concentration

BDL - Below Detection Limit

Data Package ID: *GSS1405199-1*

Gamma Spectroscopy Results

PAI 713 Rev 13

Sample Results

Lab Name: ALS Environmental -- FC
Work Order Number: 1405199
Client Name: Tidewater, Inc.
ClientProject ID: Great Kills Park

Field ID: GKP-Sa2-SS-08
Lab ID: 1405199-8
Library: HUNTERS_POIN

Sample Matrix: SOIL
Prep SOP: PAI 739 Rev 11
Date Collected: 06-May-14
Date Prepared: 17-May-14
Date Analyzed: 09-Jun-14

Prep Batch: GS140516-2
QCBatchID: GS140516-2-1
Run ID: GS140516-2A
Count Time: 60 minutes
Report Basis: Dry Weight

Final Aliquot: 266 g
Prep Basis: Dry Weight
Moisture(%): NA
Result Units: pCi/g
File Name: 140592d03

CASNO	Target Nuclide	Result +/- 2 s TPU	MDC	Requested MDC	Lab Qualifier
14331-83-0	Ac-228	0.68 +/- 0.24	0.50		G
14596-10-2	Am-241	-0.41 +/- 0.68	1.21		U,G
14913-49-6	Bi-212	1.15 +/- 0.98	1.51		U,G
14733-03-0	Bi-214	1.81 +/- 0.32	0.25	0.5	G,J
10198-40-0	Co-60	-0.043 +/- 0.062	0.129		U,G
10045-97-3	Cs-137	0.37 +/- 0.11	0.11		G
14683-23-9	Eu-152	0.46 +/- 0.38	0.57		U,G
15585-10-1	Eu-154	0.26 +/- 0.31	0.50		U,G
13966-00-2	K-40	6.9 +/- 1.8	1.7	1	M3,G
15100-28-4	Pa-234m	0 +/- 9.8	18.1		U,G
15092-94-1	Pb-212	0.89 +/- 0.19	0.18		G
15067-28-4	Pb-214	1.86 +/- 0.29	0.20	0.5	G,J
15065-10-8	Th-234	0.4 +/- 1.3	2.2	5	U,G
14913-50-9	Tl-208	0.222 +/- 0.091	0.120		G
15117-96-1	U-235	-0.04 +/- 0.35	0.60		U,G

Comments:

Qualifiers/Flags:

U - Result is less than the sample specific MDC or less than the associated TPU.

Y1 - Chemical Yield is in control at 100-110%. Quantitative Yield is assumed.

Y2 - Chemical Yield outside default limits.

LT - Result is less than Requested MDC, greater than sample specific MDC.

M3 - The requested MDC was not met, but the reported activity is greater than the reported MDC.

M - The requested MDC was not met.

SQ - Spectral quality prevents accurate quantitation.

SI - Nuclide identification and/or quantitation is tentative.

TI - Nuclide identification is tentative.

R - Nuclide has exceeded 8 halflives.

G - Sample density differs by more than 15% of LCS density.

Abbreviations:

TPU - Total Propagated Uncertainty

MDC - Minimum Detectable Concentration

BDL - Below Detection Limit

Data Package ID: *GSS1405199-1*

Gamma Spectroscopy Results

PAI 713 Rev 13

Sample Results

Lab Name: ALS Environmental -- FC
Work Order Number: 1405199
Client Name: Tidewater, Inc.
ClientProject ID: Great Kills Park

Field ID: GKP-Sa2-SS-08
Lab ID: 1405199-8
Library: HUNTERS_POIN

Sample Matrix: SOIL
Prep SOP: PAI 739 Rev 11
Date Collected: 06-May-14
Date Prepared: 17-May-14
Date Analyzed: 09-Jun-14

Prep Batch: GS140516-2
QCBatchID: GS140516-2-1
Run ID: GS140516-2A
Count Time: 60 minutes
Report Basis: Dry Weight

Final Aliquot: 266 g
Prep Basis: Dry Weight
Moisture(%): NA
Result Units: pCi/g
File Name: 140592d03

CASNO	Target Nuclide	Result +/- 2 s TPU	MDC	Requested MDC	Lab Qualifier
14255-04-0	Pb-210	-4 +/- 31	54		U,G,J
7440-29-1	Th-232	0.68 +/- 0.24	0.50		G

Comments:

Qualifiers/Flags:

U - Result is less than the sample specific MDC or less than the associated TPU.

Y1 - Chemical Yield is in control at 100-110%. Quantitative Yield is assumed.

Y2 - Chemical Yield outside default limits.

LT - Result is less than Requested MDC, greater than sample specific MDC.

M3 - The requested MDC was not met, but the reported activity is greater than the reported MDC.

M - The requested MDC was not met.

SQ - Spectral quality prevents accurate quantitation.

SI - Nuclide identification and/or quantitation is tentative.

TI - Nuclide identification is tentative.

R - Nuclide has exceeded 8 halflives.

G - Sample density differs by more than 15% of LCS density.

Abbreviations:

TPU - Total Propagated Uncertainty

MDC - Minimum Detectable Concentration

BDL - Below Detection Limit

Data Package ID: *GSS1405199-1*

Gamma Spectroscopy Results

PAI 713 Rev 13

Sample Results

Lab Name: ALS Environmental -- FC
Work Order Number: 1405199
Client Name: Tidewater, Inc.
ClientProject ID: Great Kills Park

Field ID: GKP-Sa3-SS-11
Lab ID: 1405199-11
Library: RA226.LIB

Sample Matrix: SOIL
Prep SOP: PAI 739 Rev 11
Date Collected: 06-May-14
Date Prepared: 17-May-14
Date Analyzed: 09-Jun-14

Prep Batch: GS140516-2
QCBatchID: GS140516-2-1
Run ID: GS140516-2A
Count Time: 60 minutes
Report Basis: Dry Weight

Final Aliquot: 173 g
Prep Basis: Dry Weight
Moisture(%): NA
Result Units: pCi/g
File Name: 140535d08A

CASNO	Target Nuclide	Result +/- 2 s TPU	MDC	Requested MDC	Lab Qualifier
13982-63-3	Ra-226	39.6 +/- 4.7	0.5	0.5	M3,G

Comments:

Qualifiers/Flags:

U - Result is less than the sample specific MDC or less than the associated TPU.

Y1 - Chemical Yield is in control at 100-110%. Quantitative Yield is assumed.

Y2 - Chemical Yield outside default limits.

LT - Result is less than Requested MDC, greater than sample specific MDC.

M3 - The requested MDC was not met, but the reported activity is greater than the reported MDC.

M - The requested MDC was not met.

SQ - Spectral quality prevents accurate quantitation.

SI - Nuclide identification and/or quantitation is tentative.

TI - Nuclide identification is tentative.

R - Nuclide has exceeded 8 halflives.

G - Sample density differs by more than 15% of LCS density.

Abbreviations:

TPU - Total Propagated Uncertainty

MDC - Minimum Detectable Concentration

BDL - Below Detection Limit

Data Package ID: *GSS1405199-1*

Gamma Spectroscopy Results

PAI 713 Rev 13

Sample Results

Lab Name: ALS Environmental -- FC
Work Order Number: 1405199
Client Name: Tidewater, Inc.
ClientProject ID: Great Kills Park

Field ID: GKP-Sa3-SS-11
Lab ID: 1405199-11
Library: HUNTERS_POIN

Sample Matrix: SOIL
Prep SOP: PAI 739 Rev 11
Date Collected: 06-May-14
Date Prepared: 17-May-14
Date Analyzed: 09-Jun-14

Prep Batch: GS140516-2
QCBatchID: GS140516-2-1
Run ID: GS140516-2A
Count Time: 60 minutes
Report Basis: Dry Weight

Final Aliquot: 173 g
Prep Basis: Dry Weight
Moisture(%): NA
Result Units: pCi/g
File Name: 140535d08

CASNO	Target Nuclide	Result +/- 2 s TPU	MDC	Requested MDC	Lab Qualifier
14331-83-0	Ac-228	2.77 +/- 0.64	1.02		G
14596-10-2	Am-241	0.10 +/- 0.32	0.54		U,G
14913-49-6	Bi-212	1.7 +/- 2.2	3.6		U,G
14733-03-0	Bi-214	36.7 +/- 4.4	0.5	0.5	M3,G,J
10198-40-0	Co-60	-0.12 +/- 0.16	0.31		U,G
10045-97-3	Cs-137	-0.01 +/- 0.14	0.25		U,G
14683-23-9	Eu-152	5.9 +/- 2.1	2.4		G,NQ
15585-10-1	Eu-154	-1.0 +/- 1.4	2.5		U,G
13966-00-2	K-40	7.9 +/- 2.7	3.4	1	M3,G
15100-28-4	Pa-234m	44 +/- 27	40		G
15092-94-1	Pb-212	3.05 +/- 0.52	0.47		G
15067-28-4	Pb-214	41.8 +/- 5.0	0.6	0.5	M3,G,J
15065-10-8	Th-234	26.7 +/- 3.8	3.3	5	G
14913-50-9	Tl-208	0.80 +/- 0.23	0.28		G
15117-96-1	U-235	2.5 +/- 1.0	1.6		G

Comments:

Qualifiers/Flags:

U - Result is less than the sample specific MDC or less than the associated TPU.

Y1 - Chemical Yield is in control at 100-110%. Quantitative Yield is assumed.

Y2 - Chemical Yield outside default limits.

LT - Result is less than Requested MDC, greater than sample specific MDC.

M3 - The requested MDC was not met, but the reported activity is greater than the reported MDC.

M - The requested MDC was not met.

SQ - Spectral quality prevents accurate quantitation.

SI - Nuclide identification and/or quantitation is tentative.

TI - Nuclide identification is tentative.

R - Nuclide has exceeded 8 halflives.

G - Sample density differs by more than 15% of LCS density.

Abbreviations:

TPU - Total Propagated Uncertainty

MDC - Minimum Detectable Concentration

BDL - Below Detection Limit

Data Package ID: *GSS1405199-1*

Gamma Spectroscopy Results

PAI 713 Rev 13

Sample Results

Lab Name: ALS Environmental -- FC
Work Order Number: 1405199
Client Name: Tidewater, Inc.
ClientProject ID: Great Kills Park

Field ID: GKP-Sa3-SS-11
Lab ID: 1405199-11
Library: HUNTERS_POIN

Sample Matrix: SOIL
Prep SOP: PAI 739 Rev 11
Date Collected: 06-May-14
Date Prepared: 17-May-14
Date Analyzed: 09-Jun-14

Prep Batch: GS140516-2
QCBatchID: GS140516-2-1
Run ID: GS140516-2A
Count Time: 60 minutes
Report Basis: Dry Weight

Final Aliquot: 173 g
Prep Basis: Dry Weight
Moisture(%): NA
Result Units: pCi/g
File Name: 140535d08

CASNO	Target Nuclide	Result +/- 2 s TPU	MDC	Requested MDC	Lab Qualifier
14255-04-0	Pb-210	36.2 +/- 6.0	5.2		G,J
7440-29-1	Th-232	2.77 +/- 0.64	1.02		G

Comments:

Qualifiers/Flags:

U - Result is less than the sample specific MDC or less than the associated TPU.

Y1 - Chemical Yield is in control at 100-110%. Quantitative Yield is assumed.

Y2 - Chemical Yield outside default limits.

LT - Result is less than Requested MDC, greater than sample specific MDC.

M3 - The requested MDC was not met, but the reported activity is greater than the reported MDC.

M - The requested MDC was not met.

SQ - Spectral quality prevents accurate quantitation.

SI - Nuclide identification and/or quantitation is tentative.

TI - Nuclide identification is tentative.

R - Nuclide has exceeded 8 halflives.

G - Sample density differs by more than 15% of LCS density.

Abbreviations:

TPU - Total Propagated Uncertainty

MDC - Minimum Detectable Concentration

BDL - Below Detection Limit

Data Package ID: *GSS1405199-1*

Gamma Spectroscopy Results

PAI 713 Rev 13

Sample Results

Lab Name: ALS Environmental -- FC
Work Order Number: 1405199
Client Name: Tidewater, Inc.
ClientProject ID: Great Kills Park

Field ID: GKP-Sa3-SS-12
Lab ID: 1405199-12
Library: RA226.LIB

Sample Matrix: SOIL
Prep SOP: PAI 739 Rev 11
Date Collected: 06-May-14
Date Prepared: 17-May-14
Date Analyzed: 09-Jun-14

Prep Batch: GS140516-2
QCBatchID: GS140516-2-1
Run ID: GS140516-2A
Count Time: 60 minutes
Report Basis: Dry Weight

Final Aliquot: 169 g
Prep Basis: Dry Weight
Moisture(%): NA
Result Units: pCi/g
File Name: 140570d10A

CASNO	Target Nuclide	Result +/- 2 s TPU	MDC	Requested MDC	Lab Qualifier
13982-63-3	Ra-226	21.2 +/- 2.6	0.5	0.5	G

Comments:

Qualifiers/Flags:

U - Result is less than the sample specific MDC or less than the associated TPU.

Y1 - Chemical Yield is in control at 100-110%. Quantitative Yield is assumed.

Y2 - Chemical Yield outside default limits.

LT - Result is less than Requested MDC, greater than sample specific MDC.

M3 - The requested MDC was not met, but the reported activity is greater than the reported MDC.

M - The requested MDC was not met.

SQ - Spectral quality prevents accurate quantitation.

SI - Nuclide identification and/or quantitation is tentative.

TI - Nuclide identification is tentative.

R - Nuclide has exceeded 8 halflives.

G - Sample density differs by more than 15% of LCS density.

Abbreviations:

TPU - Total Propagated Uncertainty

MDC - Minimum Detectable Concentration

BDL - Below Detection Limit

Data Package ID: *GSS1405199-1*

Gamma Spectroscopy Results

PAI 713 Rev 13

Sample Results

Lab Name: ALS Environmental -- FC
Work Order Number: 1405199
Client Name: Tidewater, Inc.
ClientProject ID: Great Kills Park

Field ID: GKP-Sa3-SS-12
Lab ID: 1405199-12
Library: HUNTERS_POIN

Sample Matrix: SOIL
Prep SOP: PAI 739 Rev 11
Date Collected: 06-May-14
Date Prepared: 17-May-14
Date Analyzed: 09-Jun-14

Prep Batch: GS140516-2
QCBatchID: GS140516-2-1
Run ID: GS140516-2A
Count Time: 60 minutes
Report Basis: Dry Weight

Final Aliquot: 169 g
Prep Basis: Dry Weight
Moisture(%): NA
Result Units: pCi/g
File Name: 140570d10

CASNO	Target Nuclide	Result +/- 2 s TPU	MDC	Requested MDC	Lab Qualifier
14331-83-0	Ac-228	2.05 +/- 0.52	0.92		G
14596-10-2	Am-241	0 +/- 1.0	1.8		U,G
14913-49-6	Bi-212	0.1 +/- 1.9	3.4		U,G
14733-03-0	Bi-214	18.5 +/- 2.9	1.6	0.5	M3,G,J
10198-40-0	Co-60	-0.01 +/- 0.13	0.24		U,G
10045-97-3	Cs-137	0.48 +/- 0.21	0.29		G
14683-23-9	Eu-152	2.29 +/- 0.96	1.27		G,SI
15585-10-1	Eu-154	-0.6 +/- 1.2	2.1		U,G
13966-00-2	K-40	8.3 +/- 2.4	2.6	1	M3,G
15100-28-4	Pa-234m	27 +/- 22	34		U,G
15092-94-1	Pb-212	2.49 +/- 0.42	0.36		G
15067-28-4	Pb-214	21.6 +/- 2.6	0.5	0.5	G,J
15065-10-8	Th-234	22.1 +/- 4.1	4.6	5	G
14913-50-9	Tl-208	0.60 +/- 0.19	0.23		G
15117-96-1	U-235	0.94 +/- 0.88	1.43		U,G

Comments:

Qualifiers/Flags:

U - Result is less than the sample specific MDC or less than the associated TPU.

Y1 - Chemical Yield is in control at 100-110%. Quantitative Yield is assumed.

Y2 - Chemical Yield outside default limits.

LT - Result is less than Requested MDC, greater than sample specific MDC.

M3 - The requested MDC was not met, but the reported activity is greater than the reported MDC.

M - The requested MDC was not met.

SQ - Spectral quality prevents accurate quantitation.

SI - Nuclide identification and/or quantitation is tentative.

TI - Nuclide identification is tentative.

R - Nuclide has exceeded 8 halflives.

G - Sample density differs by more than 15% of LCS density.

Abbreviations:

TPU - Total Propagated Uncertainty

MDC - Minimum Detectable Concentration

BDL - Below Detection Limit

Data Package ID: *GSS1405199-1*

Gamma Spectroscopy Results

PAI 713 Rev 13

Sample Results

Lab Name: ALS Environmental -- FC
Work Order Number: 1405199
Client Name: Tidewater, Inc.
ClientProject ID: Great Kills Park

Field ID: GKP-Sa3-SS-12
Lab ID: 1405199-12
Library: HUNTERS_POIN

Sample Matrix: SOIL
Prep SOP: PAI 739 Rev 11
Date Collected: 06-May-14
Date Prepared: 17-May-14
Date Analyzed: 09-Jun-14

Prep Batch: GS140516-2
QCBatchID: GS140516-2-1
Run ID: GS140516-2A
Count Time: 60 minutes
Report Basis: Dry Weight

Final Aliquot: 169 g
Prep Basis: Dry Weight
Moisture(%): NA
Result Units: pCi/g
File Name: 140570d10

CASNO	Target Nuclide	Result +/- 2 s TPU	MDC	Requested MDC	Lab Qualifier
14255-04-0	Pb-210	18 +/- 23	37		U,G,J
7440-29-1	Th-232	2.05 +/- 0.52	0.92		G

Comments:

Qualifiers/Flags:

U - Result is less than the sample specific MDC or less than the associated TPU.

Y1 - Chemical Yield is in control at 100-110%. Quantitative Yield is assumed.

Y2 - Chemical Yield outside default limits.

LT - Result is less than Requested MDC, greater than sample specific MDC.

M3 - The requested MDC was not met, but the reported activity is greater than the reported MDC.

M - The requested MDC was not met.

SQ - Spectral quality prevents accurate quantitation.

SI - Nuclide identification and/or quantitation is tentative.

TI - Nuclide identification is tentative.

R - Nuclide has exceeded 8 halflives.

G - Sample density differs by more than 15% of LCS density.

Abbreviations:

TPU - Total Propagated Uncertainty

MDC - Minimum Detectable Concentration

BDL - Below Detection Limit

Data Package ID: *GSS1405199-1*

Gamma Spectroscopy Results

PAI 713 Rev 13

Sample Results

Lab Name: ALS Environmental -- FC
Work Order Number: 1405199
Client Name: Tidewater, Inc.
ClientProject ID: Great Kills Park

Field ID: GKP-Sa4-SS-15
Lab ID: 1405199-15
Library: RA226.LIB

Sample Matrix: SOIL
Prep SOP: PAI 739 Rev 11
Date Collected: 06-May-14
Date Prepared: 17-May-14
Date Analyzed: 09-Jun-14

Prep Batch: GS140516-2
QCBatchID: GS140516-2-1
Run ID: GS140516-2A
Count Time: 60 minutes
Report Basis: Dry Weight

Final Aliquot: 236 g
Prep Basis: Dry Weight
Moisture(%): NA
Result Units: pCi/g
File Name: 140604d01A

CASNO	Target Nuclide	Result +/- 2 s TPU	MDC	Requested MDC	Lab Qualifier
13982-63-3	Ra-226	5.44 +/- 0.71	0.27	0.5	G

Comments:

Qualifiers/Flags:

U - Result is less than the sample specific MDC or less than the associated TPU.

Y1 - Chemical Yield is in control at 100-110%. Quantitative Yield is assumed.

Y2 - Chemical Yield outside default limits.

LT - Result is less than Requested MDC, greater than sample specific MDC.

M3 - The requested MDC was not met, but the reported activity is greater than the reported MDC.

M - The requested MDC was not met.

SQ - Spectral quality prevents accurate quantitation.

SI - Nuclide identification and/or quantitation is tentative.

TI - Nuclide identification is tentative.

R - Nuclide has exceeded 8 halflives.

G - Sample density differs by more than 15% of LCS density.

Abbreviations:

TPU - Total Propagated Uncertainty

MDC - Minimum Detectable Concentration

BDL - Below Detection Limit

Data Package ID: *GSS1405199-1*

Gamma Spectroscopy Results

PAI 713 Rev 13

Sample Results

Lab Name: ALS Environmental -- FC
Work Order Number: 1405199
Client Name: Tidewater, Inc.
ClientProject ID: Great Kills Park

Field ID: GKP-Sa4-SS-15
Lab ID: 1405199-15
Library: HUNTERS_POIN

Sample Matrix: SOIL
Prep SOP: PAI 739 Rev 11
Date Collected: 06-May-14
Date Prepared: 17-May-14
Date Analyzed: 09-Jun-14

Prep Batch: GS140516-2
QCBatchID: GS140516-2-1
Run ID: GS140516-2A
Count Time: 60 minutes
Report Basis: Dry Weight

Final Aliquot: 236 g
Prep Basis: Dry Weight
Moisture(%): NA
Result Units: pCi/g
File Name: 140604d01

CASNO	Target Nuclide	Result +/- 2 s TPU	MDC	Requested MDC	Lab Qualifier
14331-83-0	Ac-228	0.65 +/- 0.30	0.51		G,TI
14596-10-2	Am-241	0 +/- 1.3	2.2		U,G
14913-49-6	Bi-212	1.0 +/- 1.1	1.8		U,G
14733-03-0	Bi-214	4.7 +/- 1.1	1.1	0.5	M3,G,J
10198-40-0	Co-60	0.017 +/- 0.079	0.143		U,G
10045-97-3	Cs-137	0.55 +/- 0.15	0.16		G
14683-23-9	Eu-152	0.54 +/- 0.44	0.67		U,G
15585-10-1	Eu-154	0 +/- 0.44	0.81		U,G
13966-00-2	K-40	6.6 +/- 1.8	1.8	1	M3,G
15100-28-4	Pa-234m	-5 +/- 13	24		U,G
15092-94-1	Pb-212	1.27 +/- 0.25	0.23		G
15067-28-4	Pb-214	5.51 +/- 0.72	0.27	0.5	G,J
15065-10-8	Th-234	1.2 +/- 1.5	2.5	5	U,G
14913-50-9	Tl-208	0.31 +/- 0.12	0.15		G
15117-96-1	U-235	0 +/- 0.51	0.88		U,G

Comments:

Qualifiers/Flags:

U - Result is less than the sample specific MDC or less than the associated TPU.

Y1 - Chemical Yield is in control at 100-110%. Quantitative Yield is assumed.

Y2 - Chemical Yield outside default limits.

LT - Result is less than Requested MDC, greater than sample specific MDC.

M3 - The requested MDC was not met, but the reported activity is greater than the reported MDC.

M - The requested MDC was not met.

SQ - Spectral quality prevents accurate quantitation.

SI - Nuclide identification and/or quantitation is tentative.

TI - Nuclide identification is tentative.

R - Nuclide has exceeded 8 halflives.

G - Sample density differs by more than 15% of LCS density.

Abbreviations:

TPU - Total Propagated Uncertainty

MDC - Minimum Detectable Concentration

BDL - Below Detection Limit

Data Package ID: *GSS1405199-1*

Gamma Spectroscopy Results

PAI 713 Rev 13

Sample Results

Lab Name: ALS Environmental -- FC
Work Order Number: 1405199
Client Name: Tidewater, Inc.
ClientProject ID: Great Kills Park

Field ID: GKP-Sa4-SS-15
Lab ID: 1405199-15
Library: HUNTERS_POIN

Sample Matrix: SOIL
Prep SOP: PAI 739 Rev 11
Date Collected: 06-May-14
Date Prepared: 17-May-14
Date Analyzed: 09-Jun-14

Prep Batch: GS140516-2
QCBatchID: GS140516-2-1
Run ID: GS140516-2A
Count Time: 60 minutes
Report Basis: Dry Weight

Final Aliquot: 236 g
Prep Basis: Dry Weight
Moisture(%): NA
Result Units: pCi/g
File Name: 140604d01

CASNO	Target Nuclide	Result +/- 2 s TPU	MDC	Requested MDC	Lab Qualifier
14255-04-0	Pb-210	0 +/- 79	137		U,G,J
7440-29-1	Th-232	0.65 +/- 0.30	0.51		G,TI

Comments:

Qualifiers/Flags:

U - Result is less than the sample specific MDC or less than the associated TPU.

Y1 - Chemical Yield is in control at 100-110%. Quantitative Yield is assumed.

Y2 - Chemical Yield outside default limits.

LT - Result is less than Requested MDC, greater than sample specific MDC.

M3 - The requested MDC was not met, but the reported activity is greater than the reported MDC.

M - The requested MDC was not met.

SQ - Spectral quality prevents accurate quantitation.

SI - Nuclide identification and/or quantitation is tentative.

TI - Nuclide identification is tentative.

R - Nuclide has exceeded 8 halflives.

G - Sample density differs by more than 15% of LCS density.

Abbreviations:

TPU - Total Propagated Uncertainty

MDC - Minimum Detectable Concentration

BDL - Below Detection Limit

Data Package ID: *GSS1405199-1*

Gamma Spectroscopy Results

PAI 713 Rev 13

Sample Results

Lab Name: ALS Environmental -- FC
Work Order Number: 1405199
Client Name: Tidewater, Inc.
ClientProject ID: Great Kills Park

Field ID: GKP-Sa4-SS16
Lab ID: 1405199-16
Library: RA226.LIB

Sample Matrix: SOIL
Prep SOP: PAI 739 Rev 11
Date Collected: 06-May-14
Date Prepared: 17-May-14
Date Analyzed: 09-Jun-14

Prep Batch: GS140516-2
QCBatchID: GS140516-2-1
Run ID: GS140516-2A
Count Time: 60 minutes
Report Basis: Dry Weight

Final Aliquot: 170 g
Prep Basis: Dry Weight
Moisture(%): NA
Result Units: pCi/g
File Name: 140639d02A

CASNO	Target Nuclide	Result +/- 2 s TPU	MDC	Requested MDC	Lab Qualifier
13982-63-3	Ra-226	2.38 +/- 0.34	0.29	0.5	G

Comments:

Qualifiers/Flags:

U - Result is less than the sample specific MDC or less than the associated TPU.

Y1 - Chemical Yield is in control at 100-110%. Quantitative Yield is assumed.

Y2 - Chemical Yield outside default limits.

LT - Result is less than Requested MDC, greater than sample specific MDC.

M3 - The requested MDC was not met, but the reported activity is greater than the reported MDC.

M - The requested MDC was not met.

SQ - Spectral quality prevents accurate quantitation.

SI - Nuclide identification and/or quantitation is tentative.

TI - Nuclide identification is tentative.

R - Nuclide has exceeded 8 halflives.

G - Sample density differs by more than 15% of LCS density.

Abbreviations:

TPU - Total Propagated Uncertainty

MDC - Minimum Detectable Concentration

BDL - Below Detection Limit

Data Package ID: *GSS1405199-1*

Gamma Spectroscopy Results

PAI 713 Rev 13

Sample Results

Lab Name: ALS Environmental -- FC
Work Order Number: 1405199
Client Name: Tidewater, Inc.
ClientProject ID: Great Kills Park

Field ID: GKP-Sa4-SS16
Lab ID: 1405199-16
Library: HUNTERS_POIN

Sample Matrix: SOIL
Prep SOP: PAI 739 Rev 11
Date Collected: 06-May-14
Date Prepared: 17-May-14
Date Analyzed: 09-Jun-14

Prep Batch: GS140516-2
QCBatchID: GS140516-2-1
Run ID: GS140516-2A
Count Time: 60 minutes
Report Basis: Dry Weight

Final Aliquot: 170 g
Prep Basis: Dry.Weight
Moisture(%): NA
Result Units: pCi/g
File Name: 140639d02

CASNO	Target Nuclide	Result +/- 2 s TPU	MDC	Requested MDC	Lab Qualifier
14331-83-0	Ac-228	2.13 +/- 0.44	0.52		G
14596-10-2	Am-241	-1.1 +/- 2.0	3.6		U,G
14913-49-6	Bi-212	1.2 +/- 1.3	2.0		U,G
14733-03-0	Bi-214	2.27 +/- 0.41	0.31	0.5	G,J
10198-40-0	Co-60	0.051 +/- 0.073	0.120		U,G
10045-97-3	Cs-137	-0.038 +/- 0.090	0.168		U,G
14683-23-9	Eu-152	0.39 +/- 0.40	0.62		U,G
15585-10-1	Eu-154	0.09 +/- 0.47	0.85		U,G
13966-00-2	K-40	8.9 +/- 2.1	1.8	1	M3,G
15100-28-4	Pa-234m	-2 +/- 15	28		U,G
15092-94-1	Pb-212	2.89 +/- 0.45	0.28		G
15067-28-4	Pb-214	2.45 +/- 0.39	0.29	0.5	G,J
15065-10-8	Th-234	2.2 +/- 2.2	3.6	5	U,G
14913-50-9	Tl-208	0.86 +/- 0.18	0.16		G
15117-96-1	U-235	0 +/- 0.54	0.93		U,G

Comments:

Qualifiers/Flags:

U - Result is less than the sample specific MDC or less than the associated TPU.

Y1 - Chemical Yield is in control at 100-110%. Quantitative Yield is assumed.

Y2 - Chemical Yield outside default limits.

LT - Result is less than Requested MDC, greater than sample specific MDC.

M3 - The requested MDC was not met, but the reported activity is greater than the reported MDC.

M - The requested MDC was not met.

SQ - Spectral quality prevents accurate quantitation.

SI - Nuclide identification and/or quantitation is tentative.

TI - Nuclide identification is tentative.

R - Nuclide has exceeded 8 halflives.

G - Sample density differs by more than 15% of LCS density.

Abbreviations:

TPU - Total Propagated Uncertainty

MDC - Minimum Detectable Concentration

BDL - Below Detection Limit

Data Package ID: *GSS1405199-1*

Gamma Spectroscopy Results

PAI 713 Rev 13

Sample Results

Lab Name: ALS Environmental -- FC
Work Order Number: 1405199
Client Name: Tidewater, Inc.
ClientProject ID: Great Kills Park

Field ID: GKP-Sa4-SS16
Lab ID: 1405199-16
Library: HUNTERS_POIN

Sample Matrix: SOIL
Prep SOP: PAI 739 Rev 11
Date Collected: 06-May-14
Date Prepared: 17-May-14
Date Analyzed: 09-Jun-14

Prep Batch: GS140516-2
QCBatchID: GS140516-2-1
Run ID: GS140516-2A
Count Time: 60 minutes
Report Basis: Dry Weight

Final Aliquot: 170 g
Prep Basis: Dry Weight
Moisture(%): NA
Result Units: pCi/g
File Name: 140639d02

CASNO	Target Nuclide	Result +/- 2 s TPU	MDC	Requested MDC	Lab Qualifier
14255-04-0	Pb-210	-20 +/- 200	340		U,G,J
7440-29-1	Th-232	2.13 +/- 0.44	0.52		G

Comments:

Qualifiers/Flags:

U - Result is less than the sample specific MDC or less than the associated TPU.

Y1 - Chemical Yield is in control at 100-110%. Quantitative Yield is assumed.

Y2 - Chemical Yield outside default limits.

LT - Result is less than Requested MDC, greater than sample specific MDC.

M3 - The requested MDC was not met, but the reported activity is greater than the reported MDC.

M - The requested MDC was not met.

SQ - Spectral quality prevents accurate quantitation.

SI - Nuclide identification and/or quantitation is tentative.

TI - Nuclide identification is tentative.

R - Nuclide has exceeded 8 halflives.

G - Sample density differs by more than 15% of LCS density.

Abbreviations:

TPU - Total Propagated Uncertainty

MDC - Minimum Detectable Concentration

BDL - Below Detection Limit

Data Package ID: *GSS1405199-1*

Gamma Spectroscopy Results

PAI 713 Rev 13

Sample Results

Lab Name: ALS Environmental -- FC
Work Order Number: 1405199
Client Name: Tidewater, Inc.
ClientProject ID: Great Kills Park

Field ID: GKP-Sa5-SS-19
Lab ID: 1405199-19
Library: RA226.LIB

Sample Matrix: SOIL
Prep SOP: PAI 739 Rev 11
Date Collected: 06-May-14
Date Prepared: 17-May-14
Date Analyzed: 09-Jun-14

Prep Batch: GS140516-2
QCBatchID: GS140516-2-1
Run ID: GS140516-2A
Count Time: 60 minutes
Report Basis: Dry Weight

Final Aliquot: 247 g
Prep Basis: Dry Weight
Moisture(%): NA
Result Units: pCi/g
File Name: 140593d03A

CASNO	Target Nuclide	Result +/- 2 s TPU	MDC	Requested MDC	Lab Qualifier
13982-63-3	Ra-226	3.22 +/- 0.43	0.25	0.5	G

Comments:

Qualifiers/Flags:

U - Result is less than the sample specific MDC or less than the associated TPU.

Y1 - Chemical Yield is in control at 100-110%. Quantitative Yield is assumed.

Y2 - Chemical Yield outside default limits.

LT - Result is less than Requested MDC, greater than sample specific MDC.

M3 - The requested MDC was not met, but the reported activity is greater than the reported MDC.

M - The requested MDC was not met.

SQ - Spectral quality prevents accurate quantitation.

SI - Nuclide identification and/or quantitation is tentative.

TI - Nuclide identification is tentative.

R - Nuclide has exceeded 8 halflives.

G - Sample density differs by more than 15% of LCS density.

Abbreviations:

TPU - Total Propagated Uncertainty

MDC - Minimum Detectable Concentration

BDL - Below Detection Limit

Data Package ID: *GSS1405199-1*

Gamma Spectroscopy Results

PAI 713 Rev 13

Sample Duplicate Results

Lab Name: ALS Environmental -- FC
Work Order Number: 1405199
Client Name: Tidewater, Inc.
ClientProject ID: Great Kills Park

Field ID: GKP-Sa5-SS-19
Lab ID: 1405199-19DUP
Library: RA226.LIB

Sample Matrix: SOIL
Prep SOP: PAI 739 Rev 11
Date Collected: 06-May-14
Date Prepared: 17-May-14
Date Analyzed: 09-Jun-14

Prep Batch: GS140516-2
QCBatchID: GS140516-2-1
Run ID: GS140516-2A
Count Time: 60 minutes
Report Basis: Dry Weight

Final Aliquot: 258 g
Prep Basis: Dry Weight
Moisture(%): NA
Result Units: pCi/g
File Name: 140536d08A

CASNO	Target Nuclide	Result +/- 2 s TPU	MDC	Requested MDC	Lab Qualifier
13982-63-3	Ra-226	3.31 +/- 0.43	0.20	0.5	G

Comments:

Qualifiers/Flags:

U - Result is less than the sample specific MDC or less than the associated TPU.
Y1 - Chemical Yield is in control at 100-110%. Quantitative yield is assumed.
Y2 - Chemical Yield outside default limits.
LT - Result is less than Requested MDC, greater than sample specific MDC.
M - The requested MDC was not met.
M3 - The requested MDC was not met, but thereported activity is greater than the reported MDC.
W - DER is greater than Warning Limit of 1.42
D - DER is greater than Control Limit of 2.13
SQ - Spectral quality prevents accurate quantitation.
SI - Nuclide identification and/or quantitation is tentative.
TI - Nuclide identification is tentative.
R - Nuclide has exceeded 8 halflives.
G - Sample density differs by more than 15% of LCS density.

Abbreviations:
TPU - Total Propagated Uncertainty
MDC - Minimum Detectable Concentration
BDL - Below Detection Limit

Data Package ID: *GSS1405199-1*

Gamma Spectroscopy Results

PAI 713 Rev 13

Sample Results

Lab Name: ALS Environmental -- FC
Work Order Number: 1405199
Client Name: Tidewater, Inc.
ClientProject ID: Great Kills Park

Field ID: GKP-Sa5-SS-19
Lab ID: 1405199-19
Library: HUNTERS_POIN

Sample Matrix: SOIL
Prep SOP: PAI 739 Rev 11
Date Collected: 06-May-14
Date Prepared: 17-May-14
Date Analyzed: 09-Jun-14

Prep Batch: GS140516-2
QCBatchID: GS140516-2-1
Run ID: GS140516-2A
Count Time: 60 minutes
Report Basis: Dry Weight

Final Aliquot: 247 g
Prep Basis: Dry Weight
Moisture(%): NA
Result Units: pCi/g
File Name: 140593d03

CASNO	Target Nuclide	Result +/- 2 s TPU	MDC	Requested MDC	Lab Qualifier
14331-83-0	Ac-228	0.83 +/- 0.31	0.50		G,TI
14596-10-2	Am-241	-0.16 +/- 0.77	1.35		U,G
14913-49-6	Bi-212	0.48 +/- 0.97	1.65		U,G
14733-03-0	Bi-214	3.11 +/- 0.48	0.30	0.5	G,J
10198-40-0	Co-60	0.001 +/- 0.082	0.152		U,G
10045-97-3	Cs-137	0.45 +/- 0.13	0.16		G
14683-23-9	Eu-152	0.28 +/- 0.38	0.62		U,G
15585-10-1	Eu-154	0.19 +/- 0.40	0.69		U,G
13966-00-2	K-40	7.5 +/- 1.8	1.6	1	M3,G
15100-28-4	Pa-234m	-1 +/- 11	21		U,G
15092-94-1	Pb-212	0.97 +/- 0.21	0.22		G
15067-28-4	Pb-214	3.29 +/- 0.46	0.25	0.5	G,J
15065-10-8	Th-234	0.5 +/- 1.2	2.1	5	U,G
14913-50-9	Tl-208	0.26 +/- 0.11	0.15		G
15117-96-1	U-235	-0.15 +/- 0.41	0.73		U,G

Comments:

Qualifiers/Flags:

U - Result is less than the sample specific MDC or less than the associated TPU.

Y1 - Chemical Yield is in control at 100-110%. Quantitative Yield is assumed.

Y2 - Chemical Yield outside default limits.

LT - Result is less than Requested MDC, greater than sample specific MDC.

M3 - The requested MDC was not met, but the reported activity is greater than the reported MDC.

M - The requested MDC was not met.

SQ - Spectral quality prevents accurate quantitation.

SI - Nuclide identification and/or quantitation is tentative.

TI - Nuclide identification is tentative.

R - Nuclide has exceeded 8 halflives.

G - Sample density differs by more than 15% of LCS density.

Abbreviations:

TPU - Total Propagated Uncertainty

MDC - Minimum Detectable Concentration

BDL - Below Detection Limit

Data Package ID: *GSS1405199-1*

Gamma Spectroscopy Results

PAI 713 Rev 13

Sample Results

Lab Name: ALS Environmental -- FC
Work Order Number: 1405199
Client Name: Tidewater, Inc.
ClientProject ID: Great Kills Park

Field ID: GKP-Sa5-SS-19
Lab ID: 1405199-19
Library: HUNTERS_POIN

Sample Matrix: SOIL
Prep SOP: PAI 739 Rev 11
Date Collected: 06-May-14
Date Prepared: 17-May-14
Date Analyzed: 09-Jun-14

Prep Batch: GS140516-2
QCBatchID: GS140516-2-1
Run ID: GS140516-2A
Count Time: 60 minutes
Report Basis: Dry Weight

Final Aliquot: 247 g
Prep Basis: Dry Weight
Moisture(%): NA
Result Units: pCi/g
File Name: 140593d03

CASNO	Target Nuclide	Result +/- 2 s TPU	MDC	Requested MDC	Lab Qualifier
14255-04-0	Pb-210	-5 +/- 34	60		U,G,J
7440-29-1	Th-232	0.83 +/- 0.31	0.50		G,TI

Comments:

Qualifiers/Flags:

U - Result is less than the sample specific MDC or less than the associated TPU.

Y1 - Chemical Yield is in control at 100-110%. Quantitative Yield is assumed.

Y2 - Chemical Yield outside default limits.

LT - Result is less than Requested MDC, greater than sample specific MDC.

M3 - The requested MDC was not met, but the reported activity is greater than the reported MDC.

M - The requested MDC was not met.

SQ - Spectral quality prevents accurate quantitation.

SI - Nuclide identification and/or quantitation is tentative.

TI - Nuclide identification is tentative.

R - Nuclide has exceeded 8 halflives.

G - Sample density differs by more than 15% of LCS density.

Abbreviations:

TPU - Total Propagated Uncertainty

MDC - Minimum Detectable Concentration

BDL - Below Detection Limit

Data Package ID: *GSS1405199-1*

Gamma Spectroscopy Results

PAI 713 Rev 13

Sample Duplicate Results

Lab Name: ALS Environmental -- FC
Work Order Number: 1405199
Client Name: Tidewater, Inc.
ClientProject ID: Great Kills Park

Field ID: GKP-Sa5-SS-19
Lab ID: 1405199-19DUP
Library: HUNTERS_POIN

Sample Matrix: SOIL
Prep SOP: PAI 739 Rev 11
Date Collected: 06-May-14
Date Prepared: 17-May-14
Date Analyzed: 09-Jun-14

Prep Batch: GS140516-2
QCBatchID: GS140516-2-1
Run ID: GS140516-2A
Count Time: 60 minutes
Report Basis: Dry Weight

Final Aliquot: 258 g
Prep Basis: Dry Weight
Moisture(%): NA
Result Units: pCi/g
File Name: 140536d08

CASNO	Target Nuclide	Result +/- 2 s TPU	MDC	Requested MDC	Lab Qualifier
14331-83-0	Ac-228	0.93 +/- 0.27	0.44		G
14596-10-2	Am-241	0.03 +/- 0.10	0.17		U,G
14913-49-6	Bi-212	0.83 +/- 0.89	1.43		U,G
14733-03-0	Bi-214	3.17 +/- 0.47	0.22	0.5	G,J
10198-40-0	Co-60	0.007 +/- 0.060	0.113		U,G
10045-97-3	Cs-137	0.47 +/- 0.12	0.12		G
14683-23-9	Eu-152	0.39 +/- 0.35	0.53		U,G
15585-10-1	Eu-154	-0.08 +/- 0.36	0.68		U,G
13966-00-2	K-40	8.6 +/- 1.8	1.1	1	M3,G
15100-28-4	Pa-234m	2.3 +/- 9.8	17.6		U,G
15092-94-1	Pb-212	1.07 +/- 0.20	0.18		G
15067-28-4	Pb-214	3.40 +/- 0.46	0.20	0.5	G,J
15065-10-8	Th-234	0.86 +/- 0.90	1.46	5	U,G

Comments:

Qualifiers/Flags:

U - Result is less than the sample specific MDC or less than the associated TPU.
Y1 - Chemical Yield is in control at 100-110%. Quantitative yield is assumed.
Y2 - Chemical Yield outside default limits.
LT - Result is less than Requested MDC, greater than sample specific MDC.
M - The requested MDC was not met.
M3 - The requested MDC was not met, but thereported activity is greater than the reported MDC.
W - DER is greater than Warning Limit of 1.42
D - DER is greater than Control Limit of 2.13

SQ - Spectral quality prevents accurate quantitation.
SI - Nuclide identification and/or quantitation is tentative.
TI - Nuclide identification is tentative.
R - Nuclide has exceeded 8 halflives.
G - Sample density differs by more than 15% of LCS density.

Abbreviations:
TPU - Total Propagated Uncertainty
MDC - Minimum Detectable Concentration
BDL - Below Detection Limit

Data Package ID: *GSS1405199-1*

Gamma Spectroscopy Results

PAI 713 Rev 13

Sample Duplicate Results

Lab Name: ALS Environmental -- FC
Work Order Number: 1405199
Client Name: Tidewater, Inc.
ClientProject ID: Great Kills Park

Field ID: GKP-Sa5-SS-19
Lab ID: 1405199-19DUP
Library: HUNTERS_POIN

Sample Matrix: SOIL
Prep SOP: PAI 739 Rev 11
Date Collected: 06-May-14
Date Prepared: 17-May-14
Date Analyzed: 09-Jun-14

Prep Batch: GS140516-2
QCBatchID: GS140516-2-1
Run ID: GS140516-2A
Count Time: 60 minutes
Report Basis: Dry Weight

Final Aliquot: 258 g
Prep Basis: Dry Weight
Moisture(%): NA
Result Units: pCi/g
File Name: 140536d08

CASNO	Target Nuclide	Result +/- 2 s TPU	MDC	Requested MDC	Lab Qualifier
14913-50-9	Tl-208	0.294 +/- 0.096	0.112		G
15117-96-1	U-235	0.16 +/- 0.30	0.51		U,G
14255-04-0	Pb-210	4.7 +/- 1.5	2.0		G,J
7440-29-1	Th-232	0.93 +/- 0.27	0.44		G

Comments:

Qualifiers/Flags:

U - Result is less than the sample specific MDC or less than the associated TPU.
Y1 - Chemical Yield is in control at 100-110%. Quantitative yield is assumed.
Y2 - Chemical Yield outside default limits.
LT - Result is less than Requested MDC, greater than sample specific MDC.
M - The requested MDC was not met.
M3 - The requested MDC was not met, but thereported activity is greater than the reported MDC.
W - DER is greater than Warning Limit of 1.42
D - DER is greater than Control Limit of 2.13

SQ - Spectral quality prevents accurate quantitation.
SI - Nuclide identification and/or quantitation is tentative.
TI - Nuclide identification is tentative.
R - Nuclide has exceeded 8 halflives.
G - Sample density differs by more than 15% of LCS density.

Abbreviations:
TPU - Total Propagated Uncertainty
MDC - Minimum Detectable Concentration
BDL - Below Detection Limit

Data Package ID: *GSS1405199-1*

Gamma Spectroscopy Results

PAI 713 Rev 13

Sample Results

Lab Name: ALS Environmental -- FC
Work Order Number: 1405199
Client Name: Tidewater, Inc.
ClientProject ID: Great Kills Park

Field ID: GKP-Sa5-SS-20
Lab ID: 1405199-20
Library: RA226.LIB

Sample Matrix: SOIL
Prep SOP: PAI 739 Rev 11
Date Collected: 06-May-14
Date Prepared: 17-May-14
Date Analyzed: 09-Jun-14

Prep Batch: GS140516-2
QCBatchID: GS140516-2-1
Run ID: GS140516-2A
Count Time: 60 minutes
Report Basis: Dry Weight

Final Aliquot: 237 g
Prep Basis: Dry Weight
Moisture(%): NA
Result Units: pCi/g
File Name: 140571d10a

CASNO	Target Nuclide	Result +/- 2 s TPU	MDC	Requested MDC	Lab Qualifier
13982-63-3	Ra-226	6.62 +/- 0.82	0.27	0.5	G

Comments:

Qualifiers/Flags:

U - Result is less than the sample specific MDC or less than the associated TPU.

Y1 - Chemical Yield is in control at 100-110%. Quantitative Yield is assumed.

Y2 - Chemical Yield outside default limits.

LT - Result is less than Requested MDC, greater than sample specific MDC.

M3 - The requested MDC was not met, but the reported activity is greater than the reported MDC.

M - The requested MDC was not met.

SQ - Spectral quality prevents accurate quantitation.

SI - Nuclide identification and/or quantitation is tentative.

TI - Nuclide identification is tentative.

R - Nuclide has exceeded 8 halflives.

G - Sample density differs by more than 15% of LCS density.

Abbreviations:

TPU - Total Propagated Uncertainty

MDC - Minimum Detectable Concentration

BDL - Below Detection Limit

Data Package ID: *GSS1405199-1*

Gamma Spectroscopy Results

PAI 713 Rev 13

Sample Results

Lab Name: ALS Environmental -- FC
Work Order Number: 1405199
Client Name: Tidewater, Inc.
ClientProject ID: Great Kills Park

Field ID: GKP-Sa5-SS-20
Lab ID: 1405199-20
Library: HUNTERS_POIN

Sample Matrix: SOIL
Prep SOP: PAI 739 Rev 11
Date Collected: 06-May-14
Date Prepared: 17-May-14
Date Analyzed: 09-Jun-14

Prep Batch: GS140516-2
QCBatchID: GS140516-2-1
Run ID: GS140516-2A
Count Time: 60 minutes
Report Basis: Dry Weight

Final Aliquot: 237 g
Prep Basis: Dry Weight
Moisture(%): NA
Result Units: pCi/g
File Name: 140571d10

CASNO	Target Nuclide	Result +/- 2 s TPU	MDC	Requested MDC	Lab Qualifier
14331-83-0	Ac-228	0.78 +/- 0.26	0.47		G
14596-10-2	Am-241	-0.37 +/- 0.56	1.00		U,G
14913-49-6	Bi-212	1.4 +/- 1.1	1.8		U,G
14733-03-0	Bi-214	5.7 +/- 1.2	1.0	0.5	M3,G,J
10198-40-0	Co-60	-0.052 +/- 0.079	0.156		U,G
10045-97-3	Cs-137	0.222 +/- 0.099	0.135		G
14683-23-9	Eu-152	0.46 +/- 0.35	0.52		U,G
15585-10-1	Eu-154	0.05 +/- 0.44	0.78		U,G
13966-00-2	K-40	8.9 +/- 1.9	1.5	1	M3,G
15100-28-4	Pa-234m	-2 +/- 14	25		U,G
15092-94-1	Pb-212	0.91 +/- 0.20	0.21		G
15067-28-4	Pb-214	6.90 +/- 0.87	0.29	0.5	G,J
15065-10-8	Th-234	5.2 +/- 1.8	2.8	5	G
14913-50-9	Tl-208	0.29 +/- 0.11	0.14		G
15117-96-1	U-235	0.25 +/- 0.40	0.66		U,G

Comments:

Qualifiers/Flags:

U - Result is less than the sample specific MDC or less than the associated TPU.

Y1 - Chemical Yield is in control at 100-110%. Quantitative Yield is assumed.

Y2 - Chemical Yield outside default limits.

LT - Result is less than Requested MDC, greater than sample specific MDC.

M3 - The requested MDC was not met, but the reported activity is greater than the reported MDC.

M - The requested MDC was not met.

SQ - Spectral quality prevents accurate quantitation.

SI - Nuclide identification and/or quantitation is tentative.

TI - Nuclide identification is tentative.

R - Nuclide has exceeded 8 halflives.

G - Sample density differs by more than 15% of LCS density.

Abbreviations:

TPU - Total Propagated Uncertainty

MDC - Minimum Detectable Concentration

BDL - Below Detection Limit

Data Package ID: *GSS1405199-1*

Gamma Spectroscopy Results

PAI 713 Rev 13

Sample Results

Lab Name: ALS Environmental -- FC
Work Order Number: 1405199
Client Name: Tidewater, Inc.
ClientProject ID: Great Kills Park

Field ID: GKP-Sa5-SS-20
Lab ID: 1405199-20
Library: HUNTERS_POIN

Sample Matrix: SOIL
Prep SOP: PAI 739 Rev 11
Date Collected: 06-May-14
Date Prepared: 17-May-14
Date Analyzed: 09-Jun-14

Prep Batch: GS140516-2
QCBatchID: GS140516-2-1
Run ID: GS140516-2A
Count Time: 60 minutes
Report Basis: Dry Weight

Final Aliquot: 237 g
Prep Basis: Dry Weight
Moisture(%): NA
Result Units: pCi/g
File Name: 140571d10

CASNO	Target Nuclide	Result +/- 2 s TPU	MDC	Requested MDC	Lab Qualifier
14255-04-0	Pb-210	-1 +/- 12	21		U,G,J
7440-29-1	Th-232	0.78 +/- 0.26	0.47		G

Comments:

Qualifiers/Flags:

U - Result is less than the sample specific MDC or less than the associated TPU.

Y1 - Chemical Yield is in control at 100-110%. Quantitative Yield is assumed.

Y2 - Chemical Yield outside default limits.

LT - Result is less than Requested MDC, greater than sample specific MDC.

M3 - The requested MDC was not met, but the reported activity is greater than the reported MDC.

M - The requested MDC was not met.

SQ - Spectral quality prevents accurate quantitation.

SI - Nuclide identification and/or quantitation is tentative.

TI - Nuclide identification is tentative.

R - Nuclide has exceeded 8 halflives.

G - Sample density differs by more than 15% of LCS density.

Abbreviations:

TPU - Total Propagated Uncertainty

MDC - Minimum Detectable Concentration

BDL - Below Detection Limit

Data Package ID: *GSS1405199-1*

Gamma Spectroscopy Results

PAI 713 Rev 13

Sample Results

Lab Name: ALS Environmental -- FC
Work Order Number: 1405199
Client Name: Tidewater, Inc.
ClientProject ID: Great Kills Park

Field ID: GKP-Sa1-VS-01
Lab ID: 1405199-1
Library: RA226.LIB

Sample Matrix: VEGETATION
Prep SOP: PAI 739 Rev 11
Date Collected: 06-May-14
Date Prepared: 22-May-14
Date Analyzed: 12-Jun-14

Prep Batch: GS140522-1
QCBatchID: GS140522-1-1
Run ID: GS140522-1A
Count Time: 60 minutes
Report Basis: As Received

Final Aliquot: 198 g
Prep Basis: As Received
Moisture(%): NA
Result Units: pCi/g
File Name: 140550d08A

CASNO	Target Nuclide	Result +/- 2 s TPU	MDC	Requested MDC	Lab Qualifier
13982-63-3	Ra-226	0.07 +/- 0.12	0.19	0.5	U,G

Comments:

Qualifiers/Flags:

U - Result is less than the sample specific MDC or less than the associated TPU.

Y1 - Chemical Yield is in control at 100-110%. Quantitative Yield is assumed.

Y2 - Chemical Yield outside default limits.

LT - Result is less than Requested MDC, greater than sample specific MDC.

M3 - The requested MDC was not met, but the reported activity is greater than the reported MDC.

M - The requested MDC was not met.

SQ - Spectral quality prevents accurate quantitation.

SI - Nuclide identification and/or quantitation is tentative.

TI - Nuclide identification is tentative.

R - Nuclide has exceeded 8 halflives.

G - Sample density differs by more than 15% of LCS density.

Abbreviations:

TPU - Total Propagated Uncertainty

MDC - Minimum Detectable Concentration

BDL - Below Detection Limit

Data Package ID: *GSV1405199-1*

Gamma Spectroscopy Results

PAI 713 Rev 13

Sample Results

Lab Name: ALS Environmental -- FC
Work Order Number: 1405199
Client Name: Tidewater, Inc.
ClientProject ID: Great Kills Park

Field ID: GKP-Sa1-VS-01
Lab ID: 1405199-1
Library: HUNTERS_POIN

Sample Matrix: VEGETATION
Prep SOP: PAI 739 Rev 11
Date Collected: 06-May-14
Date Prepared: 22-May-14
Date Analyzed: 12-Jun-14

Prep Batch: GS140522-1
QCBatchID: GS140522-1-1
Run ID: GS140522-1A
Count Time: 60 minutes
Report Basis: As Received

Final Aliquot: 198 g
Prep Basis: As Received
Moisture(%): NA
Result Units: pCi/g
File Name: 140550d08

CASNO	Target Nuclide	Result +/- 2 s TPU	MDC	Requested MDC	Lab Qualifier
14331-83-0	Ac-228	0.02 +/- 0.23	0.43		U,G
14596-10-2	Am-241	-0.025 +/- 0.072	0.136		U,G
14913-49-6	Bi-212	-0.22 +/- 0.77	1.53		U,G
14733-03-0	Bi-214	-0.02 +/- 0.15	0.27	0.5	U,G,J
10198-40-0	Co-60	-0.007 +/- 0.067	0.133		U,G
10045-97-3	Cs-137	0 +/- 0.068	0.125		U,G
14683-23-9	Eu-152	-0.04 +/- 0.32	0.64		U,G
15585-10-1	Eu-154	-0.30 +/- 0.30	0.68		U,G
13966-00-2	K-40	7.5 +/- 1.9	1.7	1	M3,G
15100-28-4	Pa-234m	4.0 +/- 8.9	15.8		U,G
15092-94-1	Pb-212	-0.023 +/- 0.081	0.150		U,G
15067-28-4	Pb-214	0.03 +/- 0.12	0.22	0.5	U,G,J
15065-10-8	Th-234	0.20 +/- 0.76	1.30	5	U,G
14913-50-9	Tl-208	-0.040 +/- 0.074	0.141		U,G
15117-96-1	U-235	0.02 +/- 0.25	0.44		U,G

Comments:

Qualifiers/Flags:

U - Result is less than the sample specific MDC or less than the associated TPU.

Y1 - Chemical Yield is in control at 100-110%. Quantitative Yield is assumed.

Y2 - Chemical Yield outside default limits.

LT - Result is less than Requested MDC, greater than sample specific MDC.

M3 - The requested MDC was not met, but the reported activity is greater than the reported MDC.

M - The requested MDC was not met.

SQ - Spectral quality prevents accurate quantitation.

SI - Nuclide identification and/or quantitation is tentative.

TI - Nuclide identification is tentative.

R - Nuclide has exceeded 8 halflives.

G - Sample density differs by more than 15% of LCS density.

Abbreviations:

TPU - Total Propagated Uncertainty

MDC - Minimum Detectable Concentration

BDL - Below Detection Limit

Data Package ID: *GSV1405199-1*

Gamma Spectroscopy Results

PAI 713 Rev 13

Sample Results

Lab Name: ALS Environmental -- FC
Work Order Number: 1405199
Client Name: Tidewater, Inc.
ClientProject ID: Great Kills Park

Field ID: GKP-Sa1-VS-01
Lab ID: 1405199-1
Library: HUNTERS_POIN

Sample Matrix: VEGETATION
Prep SOP: PAI 739 Rev 11
Date Collected: 06-May-14
Date Prepared: 22-May-14
Date Analyzed: 12-Jun-14

Prep Batch: GS140522-1
QCBatchID: GS140522-1-1
Run ID: GS140522-1A
Count Time: 60 minutes
Report Basis: As Received

Final Aliquot: 198 g
Prep Basis: As Received
Moisture(%): NA
Result Units: pCi/g
File Name: 140550d08

CASNO	Target Nuclide	Result +/- 2 s TPU	MDC	Requested MDC	Lab Qualifier
14255-04-0	Pb-210	0.3 +/- 1.2	2.0		U,G,J
7440-29-1	Th-232	0.02 +/- 0.23	0.43		U,G

Comments:

Qualifiers/Flags:

U - Result is less than the sample specific MDC or less than the associated TPU.

Y1 - Chemical Yield is in control at 100-110%. Quantitative Yield is assumed.

Y2 - Chemical Yield outside default limits.

LT - Result is less than Requested MDC, greater than sample specific MDC.

M3 - The requested MDC was not met, but the reported activity is greater than the reported MDC.

M - The requested MDC was not met.

SQ - Spectral quality prevents accurate quantitation.

SI - Nuclide identification and/or quantitation is tentative.

TI - Nuclide identification is tentative.

R - Nuclide has exceeded 8 halflives.

G - Sample density differs by more than 15% of LCS density.

Abbreviations:

TPU - Total Propagated Uncertainty

MDC - Minimum Detectable Concentration

BDL - Below Detection Limit

Data Package ID: *GSV1405199-1*

Gamma Spectroscopy Results

PAI 713 Rev 13

Sample Results

Lab Name: ALS Environmental -- FC
Work Order Number: 1405199
Client Name: Tidewater, Inc.
ClientProject ID: Great Kills Park

Field ID: GKP-Sa1-RS-02
Lab ID: 1405199-2
Library: RA226.LIB

Sample Matrix: VEGETATION
Prep SOP: PAI 739 Rev 11
Date Collected: 06-May-14
Date Prepared: 22-May-14
Date Analyzed: 12-Jun-14

Prep Batch: GS140522-2
QCBatchID: GS140522-2-1
Run ID: GS140522-2A
Count Time: 60 minutes
Report Basis: As Received

Final Aliquot: 188 g
Prep Basis: As Received
Moisture(%): NA
Result Units: pCi/g
File Name: 140922d04A

CASNO	Target Nuclide	Result +/- 2 s TPU	MDC	Requested MDC	Lab Qualifier
13982-63-3	Ra-226	0.13 +/- 0.13	0.21	0.5	U,G

Comments:

Qualifiers/Flags:

U - Result is less than the sample specific MDC or less than the associated TPU.

Y1 - Chemical Yield is in control at 100-110%. Quantitative Yield is assumed.

Y2 - Chemical Yield outside default limits.

LT - Result is less than Requested MDC, greater than sample specific MDC.

M3 - The requested MDC was not met, but the reported activity is greater than the reported MDC.

M - The requested MDC was not met.

SQ - Spectral quality prevents accurate quantitation.

SI - Nuclide identification and/or quantitation is tentative.

TI - Nuclide identification is tentative.

R - Nuclide has exceeded 8 halflives.

G - Sample density differs by more than 15% of LCS density.

Abbreviations:

TPU - Total Propagated Uncertainty

MDC - Minimum Detectable Concentration

BDL - Below Detection Limit

Data Package ID: *GSV1405199-1*

Gamma Spectroscopy Results

PAI 713 Rev 13

Sample Results

Lab Name: ALS Environmental -- FC
Work Order Number: 1405199
Client Name: Tidewater, Inc.
ClientProject ID: Great Kills Park

Field ID: GKP-Sa1-RS-02
Lab ID: 1405199-2
Library: HUNTERS_POIN

Sample Matrix: VEGETATION
Prep SOP: PAI 739 Rev 11
Date Collected: 06-May-14
Date Prepared: 22-May-14
Date Analyzed: 12-Jun-14

Prep Batch: GS140522-2
QCBatchID: GS140522-2-1
Run ID: GS140522-2A
Count Time: 60 minutes
Report Basis: As Received

Final Aliquot: 188 g
Prep Basis: As Received
Moisture(%): NA
Result Units: pCi/g
File Name: 140922d04

CASNO	Target Nuclide	Result +/- 2 s TPU	MDC	Requested MDC	Lab Qualifier
14331-83-0	Ac-228	0.05 +/- 0.38	0.69		U,G
14596-10-2	Am-241	-0.18 +/- 0.39	0.74		U,G
14913-49-6	Bi-212	0.7 +/- 1.1	1.9		U,G
14733-03-0	Bi-214	0.11 +/- 0.21	0.36	0.5	U,G,J
10198-40-0	Co-60	0.01 +/- 0.11	0.21		U,G
10045-97-3	Cs-137	0.008 +/- 0.082	0.151		U,G
14683-23-9	Eu-152	-0.05 +/- 0.43	0.87		U,G
15585-10-1	Eu-154	0.04 +/- 0.47	0.89		U,G
13966-00-2	K-40	5.0 +/- 2.2	2.8	1	M3,G
15100-28-4	Pa-234m	4 +/- 16	29		U,G
15092-94-1	Pb-212	-0.06 +/- 0.12	0.22		U,G
15067-28-4	Pb-214	0.08 +/- 0.14	0.24	0.5	U,G,J
15065-10-8	Th-234	-0.25 +/- 0.98	1.77	5	U,G
14913-50-9	Tl-208	-0.04 +/- 0.10	0.19		U,G
15117-96-1	U-235	-0.01 +/- 0.33	0.59		U,G

Comments:

Qualifiers/Flags:

U - Result is less than the sample specific MDC or less than the associated TPU.

Y1 - Chemical Yield is in control at 100-110%. Quantitative Yield is assumed.

Y2 - Chemical Yield outside default limits.

LT - Result is less than Requested MDC, greater than sample specific MDC.

M3 - The requested MDC was not met, but the reported activity is greater than the reported MDC.

M - The requested MDC was not met.

SQ - Spectral quality prevents accurate quantitation.

SI - Nuclide identification and/or quantitation is tentative.

TI - Nuclide identification is tentative.

R - Nuclide has exceeded 8 halflives.

G - Sample density differs by more than 15% of LCS density.

Abbreviations:

TPU - Total Propagated Uncertainty

MDC - Minimum Detectable Concentration

BDL - Below Detection Limit

Data Package ID: *GSV1405199-1*

Gamma Spectroscopy Results

PAI 713 Rev 13

Sample Results

Lab Name: ALS Environmental -- FC
Work Order Number: 1405199
Client Name: Tidewater, Inc.
ClientProject ID: Great Kills Park

Field ID: GKP-Sa1-RS-02
Lab ID: 1405199-2
Library: HUNTERS_POIN

Sample Matrix: VEGETATION
Prep SOP: PAI 739 Rev 11
Date Collected: 06-May-14
Date Prepared: 22-May-14
Date Analyzed: 12-Jun-14

Prep Batch: GS140522-2
QCBatchID: GS140522-2-1
Run ID: GS140522-2A
Count Time: 60 minutes
Report Basis: As Received

Final Aliquot: 188 g
Prep Basis: As Received
Moisture(%): NA
Result Units: pCi/g
File Name: 140922d04

CASNO	Target Nuclide	Result +/- 2 s TPU	MDC	Requested MDC	Lab Qualifier
14255-04-0	Pb-210	9 +/- 21	35		U,G,J
7440-29-1	Th-232	0.05 +/- 0.38	0.69		U,G

Comments:

Qualifiers/Flags:

U - Result is less than the sample specific MDC or less than the associated TPU.

Y1 - Chemical Yield is in control at 100-110%. Quantitative Yield is assumed.

Y2 - Chemical Yield outside default limits.

LT - Result is less than Requested MDC, greater than sample specific MDC.

M3 - The requested MDC was not met, but the reported activity is greater than the reported MDC.

M - The requested MDC was not met.

SQ - Spectral quality prevents accurate quantitation.

SI - Nuclide identification and/or quantitation is tentative.

TI - Nuclide identification is tentative.

R - Nuclide has exceeded 8 halflives.

G - Sample density differs by more than 15% of LCS density.

Abbreviations:

TPU - Total Propagated Uncertainty

MDC - Minimum Detectable Concentration

BDL - Below Detection Limit

Data Package ID: *GSV1405199-1*

Gamma Spectroscopy Results

PAI 713 Rev 13

Sample Results

Lab Name: ALS Environmental -- FC
Work Order Number: 1405199
Client Name: Tidewater, Inc.
ClientProject ID: Great Kills Park

Field ID: GKP-Sa2-VS-05
Lab ID: 1405199-5
Library: RA226.LIB

Sample Matrix: VEGETATION
Prep SOP: PAI 739 Rev 11
Date Collected: 06-May-14
Date Prepared: 22-May-14
Date Analyzed: 12-Jun-14

Prep Batch: GS140522-1
QCBatchID: GS140522-1-1
Run ID: GS140522-1A
Count Time: 60 minutes
Report Basis: As Received

Final Aliquot: 207 g
Prep Basis: As Received
Moisture(%): NA
Result Units: pCi/g
File Name: 140584d10A

CASNO	Target Nuclide	Result +/- 2 s TPU	MDC	Requested MDC	Lab Qualifier
13982-63-3	Ra-226	0.034 +/- 0.095	0.165	0.5	U,G

Comments:

Qualifiers/Flags:

U - Result is less than the sample specific MDC or less than the associated TPU.

Y1 - Chemical Yield is in control at 100-110%. Quantitative Yield is assumed.

Y2 - Chemical Yield outside default limits.

LT - Result is less than Requested MDC, greater than sample specific MDC.

M3 - The requested MDC was not met, but the reported activity is greater than the reported MDC.

M - The requested MDC was not met.

SQ - Spectral quality prevents accurate quantitation.

SI - Nuclide identification and/or quantitation is tentative.

TI - Nuclide identification is tentative.

R - Nuclide has exceeded 8 halflives.

G - Sample density differs by more than 15% of LCS density.

Abbreviations:

TPU - Total Propagated Uncertainty

MDC - Minimum Detectable Concentration

BDL - Below Detection Limit

Data Package ID: *GSV1405199-1*

Gamma Spectroscopy Results

PAI 713 Rev 13

Sample Duplicate Results

Lab Name: ALS Environmental -- FC
Work Order Number: 1405199
Client Name: Tidewater, Inc.
ClientProject ID: Great Kills Park

Field ID: GKP-Sa2-VS-05
Lab ID: 1405199-5DUP
Library: RA226.LIB

Sample Matrix: VEGETATION
Prep SOP: PAI 739 Rev 11
Date Collected: 06-May-14
Date Prepared: 22-May-14
Date Analyzed: 12-Jun-14

Prep Batch: GS140522-1
QCBatchID: GS140522-1-1
Run ID: GS140522-1A
Count Time: 60 minutes
Report Basis: As Received

Final Aliquot: 207 g
Prep Basis: As Received
Moisture(%): NA
Result Units: pCi/g
File Name: 140613d07A

CASNO	Target Nuclide	Result +/- 2 s TPU	MDC	Requested MDC	Lab Qualifier
13982-63-3	Ra-226	0.01 +/- 0.10	0.19	0.5	U,G

Comments:

Qualifiers/Flags:

U - Result is less than the sample specific MDC or less than the associated TPU.
Y1 - Chemical Yield is in control at 100-110%. Quantitative yield is assumed.
Y2 - Chemical Yield outside default limits.
LT - Result is less than Requested MDC, greater than sample specific MDC.
M - The requested MDC was not met.
M3 - The requested MDC was not met, but thereported activity is greater than the reported MDC.
W - DER is greater than Warning Limit of 1.42
D - DER is greater than Control Limit of 2.13

SQ - Spectral quality prevents accurate quantitation.
SI - Nuclide identification and/or quantitation is tentative.
TI - Nuclide identification is tentative.
R - Nuclide has exceeded 8 halflives.
G - Sample density differs by more than 15% of LCS density.

Abbreviations:
TPU - Total Propagated Uncertainty
MDC - Minimum Detectable Concentration
BDL - Below Detection Limit

Data Package ID: *GSV1405199-1*

Gamma Spectroscopy Results

PAI 713 Rev 13

Sample Results

Lab Name: ALS Environmental -- FC
Work Order Number: 1405199
Client Name: Tidewater, Inc.
ClientProject ID: Great Kills Park

Field ID: GKP-Sa2-VS-05
Lab ID: 1405199-5
Library: HUNTERS_POIN

Sample Matrix: VEGETATION
Prep SOP: PAI 739 Rev 11
Date Collected: 06-May-14
Date Prepared: 22-May-14
Date Analyzed: 12-Jun-14

Prep Batch: GS140522-1
QCBatchID: GS140522-1-1
Run ID: GS140522-1A
Count Time: 60 minutes
Report Basis: As Received

Final Aliquot: 207 g
Prep Basis: As Received
Moisture(%): NA
Result Units: pCi/g
File Name: 140584d10

CASNO	Target Nuclide	Result +/- 2 s TPU	MDC	Requested MDC	Lab Qualifier
14331-83-0	Ac-228	-0.06 +/- 0.20	0.40		U,G
14596-10-2	Am-241	0.07 +/- 0.27	0.47		U,G
14913-49-6	Bi-212	-0.10 +/- 0.66	1.29		U,G
14733-03-0	Bi-214	0.03 +/- 0.11	0.20	0.5	U,G,J
10198-40-0	Co-60	-0.026 +/- 0.060	0.124		U,G
10045-97-3	Cs-137	0.040 +/- 0.045	0.071		U,G
14683-23-9	Eu-152	-0.23 +/- 0.30	0.66		U,G
15585-10-1	Eu-154	-0.23 +/- 0.37	0.74		U,G
13966-00-2	K-40	5.5 +/- 1.5	1.4	1	M3,G
15100-28-4	Pa-234m	2 +/- 10	19		U,G
15092-94-1	Pb-212	-0.018 +/- 0.084	0.153		U,G
15067-28-4	Pb-214	-0.03 +/- 0.10	0.19	0.5	U,G,J
15065-10-8	Th-234	1.20 +/- 0.76	1.12	5	G,NQ
14913-50-9	Tl-208	0.046 +/- 0.065	0.108		U,G
15117-96-1	U-235	-0.09 +/- 0.21	0.40		U,G

Comments:

Qualifiers/Flags:

U - Result is less than the sample specific MDC or less than the associated TPU.

Y1 - Chemical Yield is in control at 100-110%. Quantitative Yield is assumed.

Y2 - Chemical Yield outside default limits.

LT - Result is less than Requested MDC, greater than sample specific MDC.

M3 - The requested MDC was not met, but the reported activity is greater than the reported MDC.

M - The requested MDC was not met.

SQ - Spectral quality prevents accurate quantitation.

SI - Nuclide identification and/or quantitation is tentative.

TI - Nuclide identification is tentative.

R - Nuclide has exceeded 8 halflives.

G - Sample density differs by more than 15% of LCS density.

Abbreviations:

TPU - Total Propagated Uncertainty

MDC - Minimum Detectable Concentration

BDL - Below Detection Limit

Data Package ID: *GSV1405199-1*

Gamma Spectroscopy Results

PAI 713 Rev 13

Sample Results

Lab Name: ALS Environmental -- FC
Work Order Number: 1405199
Client Name: Tidewater, Inc.
ClientProject ID: Great Kills Park

Field ID: GKP-Sa2-VS-05
Lab ID: 1405199-5
Library: HUNTERS_POIN

Sample Matrix: VEGETATION
Prep SOP: PAI 739 Rev 11
Date Collected: 06-May-14
Date Prepared: 22-May-14
Date Analyzed: 12-Jun-14

Prep Batch: GS140522-1
QCBatchID: GS140522-1-1
Run ID: GS140522-1A
Count Time: 60 minutes
Report Basis: As Received

Final Aliquot: 207 g
Prep Basis: As Received
Moisture(%): NA
Result Units: pCi/g
File Name: 140584d10

CASNO	Target Nuclide	Result +/- 2 s TPU	MDC	Requested MDC	Lab Qualifier
14255-04-0	Pb-210	-7.5 +/- 6.3	12.9		U,G,J
7440-29-1	Th-232	-0.06 +/- 0.20	0.40		U,G

Comments:

Qualifiers/Flags:

U - Result is less than the sample specific MDC or less than the associated TPU.

Y1 - Chemical Yield is in control at 100-110%. Quantitative Yield is assumed.

Y2 - Chemical Yield outside default limits.

LT - Result is less than Requested MDC, greater than sample specific MDC.

M3 - The requested MDC was not met, but the reported activity is greater than the reported MDC.

M - The requested MDC was not met.

SQ - Spectral quality prevents accurate quantitation.

SI - Nuclide identification and/or quantitation is tentative.

TI - Nuclide identification is tentative.

R - Nuclide has exceeded 8 halflives.

G - Sample density differs by more than 15% of LCS density.

Abbreviations:

TPU - Total Propagated Uncertainty

MDC - Minimum Detectable Concentration

BDL - Below Detection Limit

Data Package ID: *GSV1405199-1*

Gamma Spectroscopy Results

PAI 713 Rev 13

Sample Duplicate Results

Lab Name: ALS Environmental -- FC
Work Order Number: 1405199
Client Name: Tidewater, Inc.
ClientProject ID: Great Kills Park

Field ID: GKP-Sa2-VS-05
Lab ID: 1405199-5DUP
Library: HUNTERS_POIN

Sample Matrix: VEGETATION
Prep SOP: PAI 739 Rev 11
Date Collected: 06-May-14
Date Prepared: 22-May-14
Date Analyzed: 12-Jun-14

Prep Batch: GS140522-1
QCBatchID: GS140522-1-1
Run ID: GS140522-1A
Count Time: 60 minutes
Report Basis: As Received

Final Aliquot: 207 g
Prep Basis: As Received
Moisture(%): NA
Result Units: pCi/g
File Name: 140613d07

CASNO	Target Nuclide	Result +/- 2 s TPU	MDC	Requested MDC	Lab Qualifier
14331-83-0	Ac-228	0.25 +/- 0.24	0.37		U,G
14596-10-2	Am-241	0.09 +/- 0.38	0.66		U,G
14913-49-6	Bi-212	0.96 +/- 0.81	1.21		U,G
14733-03-0	Bi-214	-0.05 +/- 0.13	0.25	0.5	U,G,J
10198-40-0	Co-60	-0.008 +/- 0.073	0.140		U,G
10045-97-3	Cs-137	0.012 +/- 0.050	0.091		U,G
14683-23-9	Eu-152	-0.06 +/- 0.29	0.58		U,G
15585-10-1	Eu-154	0.03 +/- 0.29	0.55		U,G
13966-00-2	K-40	5.8 +/- 1.5	1.3	1	M3,G
15100-28-4	Pa-234m	-6.1 +/- 9.4	19.6		U,G
15092-94-1	Pb-212	0.056 +/- 0.088	0.147		U,G
15067-28-4	Pb-214	-0.07 +/- 0.11	0.22	0.5	U,G,J
15065-10-8	Th-234	0.6 +/- 1.0	1.7	5	U,G

Comments:

Qualifiers/Flags:

U - Result is less than the sample specific MDC or less than the associated TPU.
Y1 - Chemical Yield is in control at 100-110%. Quantitative yield is assumed.
Y2 - Chemical Yield outside default limits.
LT - Result is less than Requested MDC, greater than sample specific MDC.
M - The requested MDC was not met.
M3 - The requested MDC was not met, but thereported activity is greater than the reported MDC.
W - DER is greater than Warning Limit of 1.42
D - DER is greater than Control Limit of 2.13

SQ - Spectral quality prevents accurate quantitation.
SI - Nuclide identification and/or quantitation is tentative.
TI - Nuclide identification is tentative.
R - Nuclide has exceeded 8 halflives.
G - Sample density differs by more than 15% of LCS density.

Abbreviations:
TPU - Total Propagated Uncertainty
MDC - Minimum Detectable Concentration
BDL - Below Detection Limit

Data Package ID: *GSV1405199-1*

Gamma Spectroscopy Results

PAI 713 Rev 13

Sample Duplicate Results

Lab Name: ALS Environmental -- FC
Work Order Number: 1405199
Client Name: Tidewater, Inc.
ClientProject ID: Great Kills Park

Field ID: GKP-Sa2-VS-05
Lab ID: 1405199-5DUP
Library: HUNTERS_POIN

Sample Matrix: VEGETATION
Prep SOP: PAI 739 Rev 11
Date Collected: 06-May-14
Date Prepared: 22-May-14
Date Analyzed: 12-Jun-14

Prep Batch: GS140522-1
QCBatchID: GS140522-1-1
Run ID: GS140522-1A
Count Time: 60 minutes
Report Basis: As Received

Final Aliquot: 207 g
Prep Basis: As Received
Moisture(%): NA
Result Units: pCi/g
File Name: 140613d07

CASNO	Target Nuclide	Result +/- 2 s TPU	MDC	Requested MDC	Lab Qualifier
14913-50-9	Tl-208	-0.016 +/- 0.063	0.119		U,G
15117-96-1	U-235	0.01 +/- 0.30	0.53		U,G
14255-04-0	Pb-210	5.9 +/- 9.4	15.6		U,G,J
7440-29-1	Th-232	0.25 +/- 0.24	0.37		U,G

Comments:

Qualifiers/Flags:

U - Result is less than the sample specific MDC or less than the associated TPU.
Y1 - Chemical Yield is in control at 100-110%. Quantitative yield is assumed.
Y2 - Chemical Yield outside default limits.
LT - Result is less than Requested MDC, greater than sample specific MDC.
M - The requested MDC was not met.
M3 - The requested MDC was not met, but thereported activity is greater than the reported MDC.
W - DER is greater than Warning Limit of 1.42
D - DER is greater than Control Limit of 2.13
SQ - Spectral quality prevents accurate quantitation.
SI - Nuclide identification and/or quantitation is tentative.
TI - Nuclide identification is tentative.
R - Nuclide has exceeded 8 halflives.
G - Sample density differs by more than 15% of LCS density.

Abbreviations:

TPU - Total Propagated Uncertainty
MDC - Minimum Detectable Concentration
BDL - Below Detection Limit

Data Package ID: *GSV1405199-1*

Gamma Spectroscopy Results

PAI 713 Rev 13

Sample Results

Lab Name: ALS Environmental -- FC
Work Order Number: 1405199
Client Name: Tidewater, Inc.
ClientProject ID: Great Kills Park

Field ID: GKP-Sa2-RS-06
Lab ID: 1405199-6
Library: RA226.LIB

Sample Matrix: VEGETATION
Prep SOP: PAI 739 Rev 11
Date Collected: 06-May-14
Date Prepared: 22-May-14
Date Analyzed: 12-Jun-14

Prep Batch: GS140522-2
QCBatchID: GS140522-2-1
Run ID: GS140522-2A
Count Time: 60 minutes
Report Basis: As Received

Final Aliquot: 252 g
Prep Basis: As Received
Moisture(%): NA
Result Units: pCi/g
File Name: 140574d05A

CASNO	Target Nuclide	Result +/- 2 s TPU	MDC	Requested MDC	Lab Qualifier
13982-63-3	Ra-226	0.85 +/- 0.14	0.17	0.5	G

Comments:

Qualifiers/Flags:

U - Result is less than the sample specific MDC or less than the associated TPU.

Y1 - Chemical Yield is in control at 100-110%. Quantitative Yield is assumed.

Y2 - Chemical Yield outside default limits.

LT - Result is less than Requested MDC, greater than sample specific MDC.

M3 - The requested MDC was not met, but the reported activity is greater than the reported MDC.

M - The requested MDC was not met.

SQ - Spectral quality prevents accurate quantitation.

SI - Nuclide identification and/or quantitation is tentative.

TI - Nuclide identification is tentative.

R - Nuclide has exceeded 8 halflives.

G - Sample density differs by more than 15% of LCS density.

Abbreviations:

TPU - Total Propagated Uncertainty

MDC - Minimum Detectable Concentration

BDL - Below Detection Limit

Data Package ID: *GSV1405199-1*

Gamma Spectroscopy Results

PAI 713 Rev 13

Sample Results

Lab Name: ALS Environmental -- FC
Work Order Number: 1405199
Client Name: Tidewater, Inc.
ClientProject ID: Great Kills Park

Field ID: GKP-Sa2-RS-06
Lab ID: 1405199-6
Library: HUNTERS_POIN

Sample Matrix: VEGETATION
Prep SOP: PAI 739 Rev 11
Date Collected: 06-May-14
Date Prepared: 22-May-14
Date Analyzed: 12-Jun-14

Prep Batch: GS140522-2
QCBatchID: GS140522-2-1
Run ID: GS140522-2A
Count Time: 60 minutes
Report Basis: As Received

Final Aliquot: 252 g
Prep Basis: As Received
Moisture(%): NA
Result Units: pCi/g
File Name: 140574d05

CASNO	Target Nuclide	Result +/- 2 s TPU	MDC	Requested MDC	Lab Qualifier
14331-83-0	Ac-228	0.31 +/- 0.21	0.31		U,G
14596-10-2	Am-241	-1.1 +/- 1.6	3.0		U,G
14913-49-6	Bi-212	-0.09 +/- 0.53	1.02		U,G
14733-03-0	Bi-214	0.75 +/- 0.17	0.17	0.5	G,J
10198-40-0	Co-60	-0.022 +/- 0.045	0.093		U,G
10045-97-3	Cs-137	-0.038 +/- 0.049	0.097		U,G
14683-23-9	Eu-152	0.02 +/- 0.24	0.44		U,G
15585-10-1	Eu-154	-0.39 +/- 0.26	0.57		U,G
13966-00-2	K-40	6.5 +/- 1.4	1.1	1	M3,G
15100-28-4	Pa-234m	5.6 +/- 7.4	12.1		U,G
15092-94-1	Pb-212	0.133 +/- 0.089	0.135		U,G
15067-28-4	Pb-214	0.94 +/- 0.18	0.18	0.5	G,J
15065-10-8	Th-234	-0.3 +/- 1.2	2.2	5	U,G
14913-50-9	Tl-208	0.018 +/- 0.055	0.095		U,G
15117-96-1	U-235	-0.05 +/- 0.31	0.55		U,G

Comments:

Qualifiers/Flags:

U - Result is less than the sample specific MDC or less than the associated TPU.
Y1 - Chemical Yield is in control at 100-110%. Quantitative Yield is assumed.
Y2 - Chemical Yield outside default limits.
LT - Result is less than Requested MDC, greater than sample specific MDC.
M3 - The requested MDC was not met, but the reported activity is greater than the reported MDC.
M - The requested MDC was not met.
SQ - Spectral quality prevents accurate quantitation.
SI - Nuclide identification and/or quantitation is tentative.
TI - Nuclide identification is tentative.
R - Nuclide has exceeded 8 halflives.
G - Sample density differs by more than 15% of LCS density.

Abbreviations:

TPU - Total Propagated Uncertainty
MDC - Minimum Detectable Concentration
BDL - Below Detection Limit

Data Package ID: *GSV1405199-1*

Gamma Spectroscopy Results

PAI 713 Rev 13

Sample Results

Lab Name: ALS Environmental -- FC
Work Order Number: 1405199
Client Name: Tidewater, Inc.
ClientProject ID: Great Kills Park

Field ID: GKP-Sa2-RS-06
Lab ID: 1405199-6
Library: HUNTERS_POIN

Sample Matrix: VEGETATION
Prep SOP: PAI 739 Rev 11
Date Collected: 06-May-14
Date Prepared: 22-May-14
Date Analyzed: 12-Jun-14

Prep Batch: GS140522-2
QCBatchID: GS140522-2-1
Run ID: GS140522-2A
Count Time: 60 minutes
Report Basis: As Received

Final Aliquot: 252 g
Prep Basis: As Received
Moisture(%): NA
Result Units: pCi/g
File Name: 140574d05

CASNO	Target Nuclide	Result +/- 2 s TPU	MDC	Requested MDC	Lab Qualifier
14255-04-0	Pb-210	70 +/- 170	280		U,G,J
7440-29-1	Th-232	0.31 +/- 0.21	0.31		U,G

Comments:

Qualifiers/Flags:

U - Result is less than the sample specific MDC or less than the associated TPU.

Y1 - Chemical Yield is in control at 100-110%. Quantitative Yield is assumed.

Y2 - Chemical Yield outside default limits.

LT - Result is less than Requested MDC, greater than sample specific MDC.

M3 - The requested MDC was not met, but the reported activity is greater than the reported MDC.

M - The requested MDC was not met.

SQ - Spectral quality prevents accurate quantitation.

SI - Nuclide identification and/or quantitation is tentative.

TI - Nuclide identification is tentative.

R - Nuclide has exceeded 8 halflives.

G - Sample density differs by more than 15% of LCS density.

Abbreviations:

TPU - Total Propagated Uncertainty

MDC - Minimum Detectable Concentration

BDL - Below Detection Limit

Data Package ID: *GSV1405199-1*

Gamma Spectroscopy Results

PAI 713 Rev 13

Sample Results

Lab Name: ALS Environmental -- FC
Work Order Number: 1405199
Client Name: Tidewater, Inc.
ClientProject ID: Great Kills Park

Field ID: GKP-Sa3-VS-09
Lab ID: 1405199-9
Library: RA226.LIB

Sample Matrix: VEGETATION
Prep SOP: PAI 739 Rev 11
Date Collected: 06-May-14
Date Prepared: 22-May-14
Date Analyzed: 12-Jun-14

Prep Batch: GS140522-1
QCBatchID: GS140522-1-1
Run ID: GS140522-1A
Count Time: 60 minutes
Report Basis: As Received

Final Aliquot: 240 g
Prep Basis: As Received
Moisture(%): NA
Result Units: pCi/g
File Name: 140612d07A

CASNO	Target Nuclide	Result +/- 2 s TPU	MDC	Requested MDC	Lab Qualifier
13982-63-3	Ra-226	0.13 +/- 0.10	0.16	0.5	U,G

Comments:

Qualifiers/Flags:

U - Result is less than the sample specific MDC or less than the associated TPU.

Y1 - Chemical Yield is in control at 100-110%. Quantitative Yield is assumed.

Y2 - Chemical Yield outside default limits.

LT - Result is less than Requested MDC, greater than sample specific MDC.

M3 - The requested MDC was not met, but the reported activity is greater than the reported MDC.

M - The requested MDC was not met.

SQ - Spectral quality prevents accurate quantitation.

SI - Nuclide identification and/or quantitation is tentative.

TI - Nuclide identification is tentative.

R - Nuclide has exceeded 8 halflives.

G - Sample density differs by more than 15% of LCS density.

Abbreviations:

TPU - Total Propagated Uncertainty

MDC - Minimum Detectable Concentration

BDL - Below Detection Limit

Data Package ID: *GSV1405199-1*

Gamma Spectroscopy Results

PAI 713 Rev 13

Sample Results

Lab Name: ALS Environmental -- FC
Work Order Number: 1405199
Client Name: Tidewater, Inc.
ClientProject ID: Great Kills Park

Field ID: GKP-Sa3-VS-09
Lab ID: 1405199-9
Library: HUNTERS_POIN

Sample Matrix: VEGETATION
Prep SOP: PAI 739 Rev 11
Date Collected: 06-May-14
Date Prepared: 22-May-14
Date Analyzed: 12-Jun-14

Prep Batch: GS140522-1
QCBatchID: GS140522-1-1
Run ID: GS140522-1A
Count Time: 60 minutes
Report Basis: As Received

Final Aliquot: 240 g
Prep Basis: As Received
Moisture(%): NA
Result Units: pCi/g
File Name: 140612d07

CASNO	Target Nuclide	Result +/- 2 s TPU	MDC	Requested MDC	Lab Qualifier
14331-83-0	Ac-228	-0.02 +/- 0.19	0.36		U,G
14596-10-2	Am-241	-0.31 +/- 0.32	0.63		U,G
14913-49-6	Bi-212	0.72 +/- 0.64	0.96		U,G
14733-03-0	Bi-214	0.08 +/- 0.12	0.19	0.5	U,G,J
10198-40-0	Co-60	0.013 +/- 0.059	0.108		U,G
10045-97-3	Cs-137	0.019 +/- 0.048	0.085		U,G
14683-23-9	Eu-152	0.09 +/- 0.26	0.48		U,G
15585-10-1	Eu-154	0.05 +/- 0.26	0.49		U,G
13966-00-2	K-40	5.9 +/- 1.6	1.5	1	M3,G
15100-28-4	Pa-234m	2.3 +/- 8.1	14.7		U,G
15092-94-1	Pb-212	0.051 +/- 0.084	0.140		U,G
15067-28-4	Pb-214	0.056 +/- 0.090	0.152	0.5	U,G,J
15065-10-8	Th-234	-0.17 +/- 0.83	1.48	5	U,G
14913-50-9	Tl-208	-0.012 +/- 0.066	0.121		U,G
15117-96-1	U-235	0.04 +/- 0.27	0.47		U,G

Comments:

Qualifiers/Flags:

U - Result is less than the sample specific MDC or less than the associated TPU.

Y1 - Chemical Yield is in control at 100-110%. Quantitative Yield is assumed.

Y2 - Chemical Yield outside default limits.

LT - Result is less than Requested MDC, greater than sample specific MDC.

M3 - The requested MDC was not met, but the reported activity is greater than the reported MDC.

M - The requested MDC was not met.

SQ - Spectral quality prevents accurate quantitation.

SI - Nuclide identification and/or quantitation is tentative.

TI - Nuclide identification is tentative.

R - Nuclide has exceeded 8 halflives.

G - Sample density differs by more than 15% of LCS density.

Abbreviations:

TPU - Total Propagated Uncertainty

MDC - Minimum Detectable Concentration

BDL - Below Detection Limit

Data Package ID: *GSV1405199-1*

Gamma Spectroscopy Results

PAI 713 Rev 13

Sample Results

Lab Name: ALS Environmental -- FC
Work Order Number: 1405199
Client Name: Tidewater, Inc.
ClientProject ID: Great Kills Park

Field ID: GKP-Sa3-VS-09
Lab ID: 1405199-9
Library: HUNTERS_POIN

Sample Matrix: VEGETATION
Prep SOP: PAI 739 Rev 11
Date Collected: 06-May-14
Date Prepared: 22-May-14
Date Analyzed: 12-Jun-14

Prep Batch: GS140522-1
QCBatchID: GS140522-1-1
Run ID: GS140522-1A
Count Time: 60 minutes
Report Basis: As Received

Final Aliquot: 240 g
Prep Basis: As Received
Moisture(%): NA
Result Units: pCi/g
File Name: 140612d07

CASNO	Target Nuclide	Result +/- 2 s TPU	MDC	Requested MDC	Lab Qualifier
14255-04-0	Pb-210	-0.5 +/- 8.2	14.8		U,G,J
7440-29-1	Th-232	-0.02 +/- 0.19	0.36		U,G

Comments:

Qualifiers/Flags:

U - Result is less than the sample specific MDC or less than the associated TPU.

Y1 - Chemical Yield is in control at 100-110%. Quantitative Yield is assumed.

Y2 - Chemical Yield outside default limits.

LT - Result is less than Requested MDC, greater than sample specific MDC.

M3 - The requested MDC was not met, but the reported activity is greater than the reported MDC.

M - The requested MDC was not met.

SQ - Spectral quality prevents accurate quantitation.

SI - Nuclide identification and/or quantitation is tentative.

TI - Nuclide identification is tentative.

R - Nuclide has exceeded 8 halflives.

G - Sample density differs by more than 15% of LCS density.

Abbreviations:

TPU - Total Propagated Uncertainty

MDC - Minimum Detectable Concentration

BDL - Below Detection Limit

Data Package ID: *GSV1405199-1*

Gamma Spectroscopy Results

PAI 713 Rev 13

Sample Results

Lab Name: ALS Environmental -- FC
Work Order Number: 1405199
Client Name: Tidewater, Inc.
ClientProject ID: Great Kills Park

Field ID: GKP-Sa3-RS-10
Lab ID: 1405199-10
Library: RA226.LIB

Sample Matrix: VEGETATION
Prep SOP: PAI 739 Rev 11
Date Collected: 06-May-14
Date Prepared: 22-May-14
Date Analyzed: 12-Jun-14

Prep Batch: GS140522-2
QCBatchID: GS140522-2-1
Run ID: GS140522-2A
Count Time: 60 minutes
Report Basis: As Received

Final Aliquot: 186 g
Prep Basis: As Received
Moisture(%): NA
Result Units: pCi/g
File Name: 140923d04A

CASNO	Target Nuclide	Result +/- 2 s TPU	MDC	Requested MDC	Lab Qualifier
13982-63-3	Ra-226	2.70 +/- 0.39	0.28	0.5	G

Comments:

Qualifiers/Flags:

U - Result is less than the sample specific MDC or less than the associated TPU.

Y1 - Chemical Yield is in control at 100-110%. Quantitative Yield is assumed.

Y2 - Chemical Yield outside default limits.

LT - Result is less than Requested MDC, greater than sample specific MDC.

M3 - The requested MDC was not met, but the reported activity is greater than the reported MDC.

M - The requested MDC was not met.

SQ - Spectral quality prevents accurate quantitation.

SI - Nuclide identification and/or quantitation is tentative.

TI - Nuclide identification is tentative.

R - Nuclide has exceeded 8 halflives.

G - Sample density differs by more than 15% of LCS density.

Abbreviations:

TPU - Total Propagated Uncertainty

MDC - Minimum Detectable Concentration

BDL - Below Detection Limit

Data Package ID: *GSV1405199-1*

Gamma Spectroscopy Results

PAI 713 Rev 13

Sample Results

Lab Name: ALS Environmental -- FC
Work Order Number: 1405199
Client Name: Tidewater, Inc.
ClientProject ID: Great Kills Park

Field ID: GKP-Sa3-RS-10
Lab ID: 1405199-10
Library: HUNTERS_POIN

Sample Matrix: VEGETATION
Prep SOP: PAI 739 Rev 11
Date Collected: 06-May-14
Date Prepared: 22-May-14
Date Analyzed: 12-Jun-14

Prep Batch: GS140522-2
QCBatchID: GS140522-2-1
Run ID: GS140522-2A
Count Time: 60 minutes
Report Basis: As Received

Final Aliquot: 186 g
Prep Basis: As Received
Moisture(%): NA
Result Units: pCi/g
File Name: 140923d04

CASNO	Target Nuclide	Result +/- 2 s TPU	MDC	Requested MDC	Lab Qualifier
14331-83-0	Ac-228	0.39 +/- 0.41	0.66		U,G
14596-10-2	Am-241	-0.60 +/- 0.57	1.08		U,G
14913-49-6	Bi-212	0.3 +/- 1.2	2.1		U,G
14733-03-0	Bi-214	2.48 +/- 0.47	0.39	0.5	G,J
10198-40-0	Co-60	-0.04 +/- 0.14	0.26		U,G
10045-97-3	Cs-137	-0.11 +/- 0.10	0.21		U,G
14683-23-9	Eu-152	0.48 +/- 0.61	0.99		U,G
15585-10-1	Eu-154	0.41 +/- 0.51	0.83		U,G
13966-00-2	K-40	2.9 +/- 1.8	2.7	1	M3,G
15100-28-4	Pa-234m	14 +/- 15	23		U,G
15092-94-1	Pb-212	0.12 +/- 0.15	0.25		U,G
15067-28-4	Pb-214	2.83 +/- 0.43	0.28	0.5	G,J
15065-10-8	Th-234	1.8 +/- 1.4	2.1	5	U,G
14913-50-9	Tl-208	0.064 +/- 0.098	0.164		U,G
15117-96-1	U-235	0.32 +/- 0.41	0.67		U,G

Comments:

Qualifiers/Flags:

U - Result is less than the sample specific MDC or less than the associated TPU.

Y1 - Chemical Yield is in control at 100-110%. Quantitative Yield is assumed.

Y2 - Chemical Yield outside default limits.

LT - Result is less than Requested MDC, greater than sample specific MDC.

M3 - The requested MDC was not met, but the reported activity is greater than the reported MDC.

M - The requested MDC was not met.

SQ - Spectral quality prevents accurate quantitation.

SI - Nuclide identification and/or quantitation is tentative.

TI - Nuclide identification is tentative.

R - Nuclide has exceeded 8 halflives.

G - Sample density differs by more than 15% of LCS density.

Abbreviations:

TPU - Total Propagated Uncertainty

MDC - Minimum Detectable Concentration

BDL - Below Detection Limit

Data Package ID: *GSV1405199-1*

Gamma Spectroscopy Results

PAI 713 Rev 13

Sample Results

Lab Name: ALS Environmental – FC
Work Order Number: 1405199
Client Name: Tidewater, Inc.
ClientProject ID: Great Kills Park

Field ID: GKP-Sa3-RS-10
Lab ID: 1405199-10
Library: HUNTERS_POIN

Sample Matrix: VEGETATION
Prep SOP: PAI 739 Rev 11
Date Collected: 06-May-14
Date Prepared: 22-May-14
Date Analyzed: 12-Jun-14

Prep Batch: GS140522-2
QCBatchID: GS140522-2-1
Run ID: GS140522-2A
Count Time: 60 minutes
Report Basis: As Received

Final Aliquot: 186 g
Prep Basis: As Received
Moisture(%): NA
Result Units: pCi/g
File Name: 140923d04

CASNO	Target Nuclide	Result +/- 2 s TPU	MDC	Requested MDC	Lab Qualifier
14255-04-0	Pb-210	6 +/- 24	42		U,G,J
7440-29-1	Th-232	0.39 +/- 0.41	0.66		U,G

Comments:

Qualifiers/Flags:

U - Result is less than the sample specific MDC or less than the associated TPU.

Y1 - Chemical Yield is in control at 100-110%. Quantitative Yield is assumed.

Y2 - Chemical Yield outside default limits.

LT - Result is less than Requested MDC, greater than sample specific MDC.

M3 - The requested MDC was not met, but the reported activity is greater than the reported MDC.

M - The requested MDC was not met.

SQ - Spectral quality prevents accurate quantitation.

SI - Nuclide identification and/or quantitation is tentative.

TI - Nuclide identification is tentative.

R - Nuclide has exceeded 8 halflives.

G - Sample density differs by more than 15% of LCS density.

Abbreviations:

TPU - Total Propagated Uncertainty

MDC - Minimum Detectable Concentration

BDL - Below Detection Limit

Data Package ID: *GSV1405199-1*

Gamma Spectroscopy Results

PAI 713 Rev 13

Sample Results

Lab Name: ALS Environmental -- FC
Work Order Number: 1405199
Client Name: Tidewater, Inc.
ClientProject ID: Great Kills Park

Field ID: GKP-Sa4-VS-13
Lab ID: 1405199-13
Library: RA226.LIB

Sample Matrix: VEGETATION
Prep SOP: PAI 739 Rev 11
Date Collected: 06-May-14
Date Prepared: 22-May-14
Date Analyzed: 12-Jun-14

Prep Batch: GS140522-1
QCBatchID: GS140522-1-1
Run ID: GS140522-1A
Count Time: 60 minutes
Report Basis: As Received

Final Aliquot: 135 g
Prep Basis: As Received
Moisture(%): NA
Result Units: pCi/g
File Name: 140585d10A

CASNO	Target Nuclide	Result +/- 2 s TPU	MDC	Requested MDC	Lab Qualifier
13982-63-3	Ra-226	0.03 +/- 0.15	0.26	0.5	U,G

Comments:

Qualifiers/Flags:

U - Result is less than the sample specific MDC or less than the associated TPU.

Y1 - Chemical Yield is in control at 100-110%. Quantitative Yield is assumed.

Y2 - Chemical Yield outside default limits.

LT - Result is less than Requested MDC, greater than sample specific MDC.

M3 - The requested MDC was not met, but the reported activity is greater than the reported MDC.

M - The requested MDC was not met.

SQ - Spectral quality prevents accurate quantitation.

SI - Nuclide identification and/or quantitation is tentative.

TI - Nuclide identification is tentative.

R - Nuclide has exceeded 8 halflives.

G - Sample density differs by more than 15% of LCS density.

Abbreviations:

TPU - Total Propagated Uncertainty

MDC - Minimum Detectable Concentration

BDL - Below Detection Limit

Data Package ID: *GSV1405199-1*

Gamma Spectroscopy Results

PAI 713 Rev 13

Sample Results

Lab Name: ALS Environmental -- FC
Work Order Number: 1405199
Client Name: Tidewater, Inc.
ClientProject ID: Great Kills Park

Field ID: GKP-Sa4-VS-13
Lab ID: 1405199-13
Library: HUNTERS_POIN

Sample Matrix: VEGETATION
Prep SOP: PAI 739 Rev 11
Date Collected: 06-May-14
Date Prepared: 22-May-14
Date Analyzed: 12-Jun-14

Prep Batch: GS140522-1
QCBatchID: GS140522-1-1
Run ID: GS140522-1A
Count Time: 60 minutes
Report Basis: As Received

Final Aliquot: 135 g
Prep Basis: As Received
Moisture(%): NA
Result Units: pCi/g
File Name: 140585d10

CASNO	Target Nuclide	Result +/- 2 s TPU	MDC	Requested MDC	Lab Qualifier
14331-83-0	Ac-228	-0.07 +/- 0.30	0.60		U,G
14596-10-2	Am-241	0.17 +/- 0.45	0.78		U,G
14913-49-6	Bi-212	0 +/- 1.2	2.2		U,G
14733-03-0	Bi-214	-0.01 +/- 0.16	0.30	0.5	U,G,J
10198-40-0	Co-60	-0.070 +/- 0.090	0.199		U,G
10045-97-3	Cs-137	0.052 +/- 0.079	0.133		U,G
14683-23-9	Eu-152	0.13 +/- 0.34	0.62		U,G
15585-10-1	Eu-154	-0.28 +/- 0.43	0.92		U,G
13966-00-2	K-40	8.2 +/- 2.3	2.2	1	M3,G
15100-28-4	Pa-234m	7 +/- 14	24		U,G
15092-94-1	Pb-212	0 +/- 0.12	0.22		U,G
15067-28-4	Pb-214	-0.07 +/- 0.16	0.31	0.5	U,G,J
15065-10-8	Th-234	0.6 +/- 1.2	1.9	5	U,G
14913-50-9	Tl-208	-0.013 +/- 0.082	0.156		U,G
15117-96-1	U-235	0.09 +/- 0.31	0.54		U,G

Comments:

Qualifiers/Flags:

U - Result is less than the sample specific MDC or less than the associated TPU.

Y1 - Chemical Yield is in control at 100-110%. Quantitative Yield is assumed.

Y2 - Chemical Yield outside default limits.

LT - Result is less than Requested MDC, greater than sample specific MDC.

M3 - The requested MDC was not met, but the reported activity is greater than the reported MDC.

M - The requested MDC was not met.

SQ - Spectral quality prevents accurate quantitation.

SI - Nuclide identification and/or quantitation is tentative.

TI - Nuclide identification is tentative.

R - Nuclide has exceeded 8 halflives.

G - Sample density differs by more than 15% of LCS density.

Abbreviations:

TPU - Total Propagated Uncertainty

MDC - Minimum Detectable Concentration

BDL - Below Detection Limit

Data Package ID: *GSV1405199-1*

Gamma Spectroscopy Results

PAI 713 Rev 13

Sample Results

Lab Name: ALS Environmental -- FC
Work Order Number: 1405199
Client Name: Tidewater, Inc.
ClientProject ID: Great Kills Park

Field ID: GKP-Sa4-VS-13
Lab ID: 1405199-13
Library: HUNTERS_POIN

Sample Matrix: VEGETATION
Prep SOP: PAI 739 Rev 11
Date Collected: 06-May-14
Date Prepared: 22-May-14
Date Analyzed: 12-Jun-14

Prep Batch: GS140522-1
QCBatchID: GS140522-1-1
Run ID: GS140522-1A
Count Time: 60 minutes
Report Basis: As Received

Final Aliquot: 135 g
Prep Basis: As Received
Moisture(%): NA
Result Units: pCi/g
File Name: 140585d10

CASNO	Target Nuclide	Result +/- 2 s TPU	MDC	Requested MDC	Lab Qualifier
14255-04-0	Pb-210	7 +/- 11	18		U,G,J
7440-29-1	Th-232	-0.07 +/- 0.30	0.60		U,G

Comments:

Qualifiers/Flags:

U - Result is less than the sample specific MDC or less than the associated TPU.

Y1 - Chemical Yield is in control at 100-110%. Quantitative Yield is assumed.

Y2 - Chemical Yield outside default limits.

LT - Result is less than Requested MDC, greater than sample specific MDC.

M3 - The requested MDC was not met, but the reported activity is greater than the reported MDC.

M - The requested MDC was not met.

SQ - Spectral quality prevents accurate quantitation.

SI - Nuclide identification and/or quantitation is tentative.

TI - Nuclide identification is tentative.

R - Nuclide has exceeded 8 halflives.

G - Sample density differs by more than 15% of LCS density.

Abbreviations:

TPU - Total Propagated Uncertainty

MDC - Minimum Detectable Concentration

BDL - Below Detection Limit

Data Package ID: *GSV1405199-1*

Gamma Spectroscopy Results

PAI 713 Rev 13

Sample Results

Lab Name: ALS Environmental -- FC
Work Order Number: 1405199
Client Name: Tidewater, Inc.
ClientProject ID: Great Kills Park

Field ID: GKP-Sa4-RS-14
Lab ID: 1405199-14
Library: RA226.LIB

Sample Matrix: VEGETATION
Prep SOP: PAI 739 Rev 11
Date Collected: 06-May-14
Date Prepared: 22-May-14
Date Analyzed: 12-Jun-14

Prep Batch: GS140522-2
QCBatchID: GS140522-2-1
Run ID: GS140522-2A
Count Time: 60 minutes
Report Basis: As Received

Final Aliquot: 301 g
Prep Basis: As Received
Moisture(%): NA
Result Units: pCi/g
File Name: 140614d03A

CASNO	Target Nuclide	Result +/- 2 s TPU	MDC	Requested MDC	Lab Qualifier
13982-63-3	Ra-226	0.101 +/- 0.075	0.112	0.5	U,G

Comments:

Qualifiers/Flags:

U - Result is less than the sample specific MDC or less than the associated TPU.

Y1 - Chemical Yield is in control at 100-110%. Quantitative Yield is assumed.

Y2 - Chemical Yield outside default limits.

LT - Result is less than Requested MDC, greater than sample specific MDC.

M3 - The requested MDC was not met, but the reported activity is greater than the reported MDC.

M - The requested MDC was not met.

SQ - Spectral quality prevents accurate quantitation.

SI - Nuclide identification and/or quantitation is tentative.

TI - Nuclide identification is tentative.

R - Nuclide has exceeded 8 halflives.

G - Sample density differs by more than 15% of LCS density.

Abbreviations:

TPU - Total Propagated Uncertainty

MDC - Minimum Detectable Concentration

BDL - Below Detection Limit

Data Package ID: *GSV1405199-1*

Gamma Spectroscopy Results

PAI 713 Rev 13

Sample Results

Lab Name: ALS Environmental -- FC
Work Order Number: 1405199
Client Name: Tidewater, Inc.
ClientProject ID: Great Kills Park

Field ID: GKP-Sa4-RS-14
Lab ID: 1405199-14
Library: HUNTERS_POIN

Sample Matrix: VEGETATION
Prep SOP: PAI 739 Rev 11
Date Collected: 06-May-14
Date Prepared: 22-May-14
Date Analyzed: 12-Jun-14

Prep Batch: GS140522-2
QCBatchID: GS140522-2-1
Run ID: GS140522-2A
Count Time: 60 minutes
Report Basis: As Received

Final Aliquot: 301 g
Prep Basis: As Received
Moisture(%): NA
Result Units: pCi/g
File Name: 140614d03

CASNO	Target Nuclide	Result +/- 2 s TPU	MDC	Requested MDC	Lab Qualifier
14331-83-0	Ac-228	0.22 +/- 0.21	0.32		U,G
14596-10-2	Am-241	-0.02 +/- 0.34	0.62		U,G
14913-49-6	Bi-212	-0.24 +/- 0.59	1.16		U,G
14733-03-0	Bi-214	0.01 +/- 0.11	0.19	0.5	U,G,J
10198-40-0	Co-60	0.010 +/- 0.041	0.076		U,G
10045-97-3	Cs-137	-0.030 +/- 0.048	0.094		U,G
14683-23-9	Eu-152	-0.01 +/- 0.23	0.45		U,G
15585-10-1	Eu-154	0 +/- 0.21	0.41		U,G
13966-00-2	K-40	2.95 +/- 0.95	0.91	1	G
15100-28-4	Pa-234m	-1.3 +/- 7.2	13.9		U,G
15092-94-1	Pb-212	0.043 +/- 0.057	0.094		U,G
15067-28-4	Pb-214	0.046 +/- 0.083	0.140	0.5	U,G,J
15065-10-8	Th-234	-0.08 +/- 0.69	1.22	5	U,G
14913-50-9	Tl-208	0.009 +/- 0.048	0.085		U,G
15117-96-1	U-235	-0.03 +/- 0.18	0.33		U,G

Comments:

Qualifiers/Flags:

U - Result is less than the sample specific MDC or less than the associated TPU.

Y1 - Chemical Yield is in control at 100-110%. Quantitative Yield is assumed.

Y2 - Chemical Yield outside default limits.

LT - Result is less than Requested MDC, greater than sample specific MDC.

M3 - The requested MDC was not met, but the reported activity is greater than the reported MDC.

M - The requested MDC was not met.

SQ - Spectral quality prevents accurate quantitation.

SI - Nuclide identification and/or quantitation is tentative.

TI - Nuclide identification is tentative.

R - Nuclide has exceeded 8 halflives.

G - Sample density differs by more than 15% of LCS density.

Abbreviations:

TPU - Total Propagated Uncertainty

MDC - Minimum Detectable Concentration

BDL - Below Detection Limit

Data Package ID: *GSV1405199-1*

Gamma Spectroscopy Results

PAI 713 Rev 13

Sample Results

Lab Name: ALS Environmental -- FC
Work Order Number: 1405199
Client Name: Tidewater, Inc.
ClientProject ID: Great Kills Park

Field ID: GKP-Sa4-RS-14
Lab ID: 1405199-14
Library: HUNTERS_POIN

Sample Matrix: VEGETATION
Prep SOP: PAI 739 Rev 11
Date Collected: 06-May-14
Date Prepared: 22-May-14
Date Analyzed: 12-Jun-14

Prep Batch: GS140522-2
QCBatchID: GS140522-2-1
Run ID: GS140522-2A
Count Time: 60 minutes
Report Basis: As Received

Final Aliquot: 301 g
Prep Basis: As Received
Moisture(%): NA
Result Units: pCi/g
File Name: 140614d03

CASNO	Target Nuclide	Result +/- 2 s TPU	MDC	Requested MDC	Lab Qualifier
14255-04-0	Pb-210	7.5 +/- 8.9	14.4		U,G,J
7440-29-1	Th-232	0.22 +/- 0.21	0.32		U,G

Comments:

Qualifiers/Flags:

U - Result is less than the sample specific MDC or less than the associated TPU.

Y1 - Chemical Yield is in control at 100-110%. Quantitative Yield is assumed.

Y2 - Chemical Yield outside default limits.

LT - Result is less than Requested MDC, greater than sample specific MDC.

M3 - The requested MDC was not met, but the reported activity is greater than the reported MDC.

M - The requested MDC was not met.

SQ - Spectral quality prevents accurate quantitation.

SI - Nuclide identification and/or quantitation is tentative.

TI - Nuclide identification is tentative.

R - Nuclide has exceeded 8 halflives.

G - Sample density differs by more than 15% of LCS density.

Abbreviations:

TPU - Total Propagated Uncertainty

MDC - Minimum Detectable Concentration

BDL - Below Detection Limit

Data Package ID: *GSV1405199-1*

Gamma Spectroscopy Results

PAI 713 Rev 13

Sample Results

Lab Name: ALS Environmental -- FC
Work Order Number: 1405199
Client Name: Tidewater, Inc.
ClientProject ID: Great Kills Park

Field ID: GKP-Sa5-VS-17
Lab ID: 1405199-17
Library: RA226.LIB

Sample Matrix: VEGETATION
Prep SOP: PAI 739 Rev 11
Date Collected: 06-May-14
Date Prepared: 22-May-14
Date Analyzed: 12-Jun-14

Prep Batch: GS140522-1
QCBatchID: GS140522-1-1
Run ID: GS140522-1A
Count Time: 60 minutes
Report Basis: As Received

Final Aliquot: 128 g
Prep Basis: As Received
Moisture(%): NA
Result Units: pCi/g
File Name: 140551d08A

CASNO	Target Nuclide	Result +/- 2 s TPU	MDC	Requested MDC	Lab Qualifier
13982-63-3	Ra-226	0.30 +/- 0.19	0.27	0.5	G,NQ

Comments:

Qualifiers/Flags:

U - Result is less than the sample specific MDC or less than the associated TPU.

Y1 - Chemical Yield is in control at 100-110%. Quantitative Yield is assumed.

Y2 - Chemical Yield outside default limits.

LT - Result is less than Requested MDC, greater than sample specific MDC.

M3 - The requested MDC was not met, but the reported activity is greater than the reported MDC.

M - The requested MDC was not met.

SQ - Spectral quality prevents accurate quantitation.

SI - Nuclide identification and/or quantitation is tentative.

TI - Nuclide identification is tentative.

R - Nuclide has exceeded 8 halflives.

G - Sample density differs by more than 15% of LCS density.

Abbreviations:

TPU - Total Propagated Uncertainty

MDC - Minimum Detectable Concentration

BDL - Below Detection Limit

Data Package ID: *GSV1405199-1*

Gamma Spectroscopy Results

PAI 713 Rev 13

Sample Results

Lab Name: ALS Environmental -- FC
Work Order Number: 1405199
Client Name: Tidewater, Inc.
ClientProject ID: Great Kills Park

Field ID: GKP-Sa5-VS-17
Lab ID: 1405199-17
Library: HUNTERS_POIN

Sample Matrix: VEGETATION
Prep SOP: PAI 739 Rev 11
Date Collected: 06-May-14
Date Prepared: 22-May-14
Date Analyzed: 12-Jun-14

Prep Batch: GS140522-1
QCBatchID: GS140522-1-1
Run ID: GS140522-1A
Count Time: 60 minutes
Report Basis: As Received

Final Aliquot: 128 g
Prep Basis: As Received
Moisture(%): NA
Result Units: pCi/g
File Name: 140551d08

CASNO	Target Nuclide	Result +/- 2 s TPU	MDC	Requested MDC	Lab Qualifier
14331-83-0	Ac-228	0 +/- 0.37	0.70		U,G
14596-10-2	Am-241	-0.095 +/- 0.096	0.197		U,G
14913-49-6	Bi-212	-0.2 +/- 1.3	2.4		U,G
14733-03-0	Bi-214	-0.01 +/- 0.22	0.40	0.5	U,G,J
10198-40-0	Co-60	-0.082 +/- 0.082	0.199		U,G
10045-97-3	Cs-137	0.008 +/- 0.092	0.169		U,G
14683-23-9	Eu-152	-0.46 +/- 0.43	1.04		U,G
15585-10-1	Eu-154	-0.46 +/- 0.57	1.21		U,G
13966-00-2	K-40	5.0 +/- 2.0	2.2	1	M3,G
15100-28-4	Pa-234m	9 +/- 18	31		U,G
15092-94-1	Pb-212	-0.07 +/- 0.13	0.25		U,G
15067-28-4	Pb-214	0.25 +/- 0.20	0.31	0.5	U,G,J
15065-10-8	Th-234	-0.33 +/- 0.96	1.72	5	U,G
14913-50-9	Tl-208	-0.02 +/- 0.11	0.20		U,G
15117-96-1	U-235	0.23 +/- 0.38	0.64		U,G

Comments:

Qualifiers/Flags:

U - Result is less than the sample specific MDC or less than the associated TPU.

Y1 - Chemical Yield is in control at 100-110%. Quantitative Yield is assumed.

Y2 - Chemical Yield outside default limits.

LT - Result is less than Requested MDC, greater than sample specific MDC.

M3 - The requested MDC was not met, but the reported activity is greater than the reported MDC.

M - The requested MDC was not met.

SQ - Spectral quality prevents accurate quantitation.

SI - Nuclide identification and/or quantitation is tentative.

TI - Nuclide identification is tentative.

R - Nuclide has exceeded 8 halflives.

G - Sample density differs by more than 15% of LCS density.

Abbreviations:

TPU - Total Propagated Uncertainty

MDC - Minimum Detectable Concentration

BDL - Below Detection Limit

Data Package ID: *GSV1405199-1*

Gamma Spectroscopy Results

PAI 713 Rev 13

Sample Results

Lab Name: ALS Environmental -- FC
Work Order Number: 1405199
Client Name: Tidewater, Inc.
ClientProject ID: Great Kills Park

Field ID: GKP-Sa5-VS-17
Lab ID: 1405199-17
Library: HUNTERS_POIN

Sample Matrix: VEGETATION
Prep SOP: PAI 739 Rev 11
Date Collected: 06-May-14
Date Prepared: 22-May-14
Date Analyzed: 12-Jun-14

Prep Batch: GS140522-1
QCBatchID: GS140522-1-1
Run ID: GS140522-1A
Count Time: 60 minutes
Report Basis: As Received

Final Aliquot: 128 g
Prep Basis: As Received
Moisture(%): NA
Result Units: pCi/g
File Name: 140551d08

CASNO	Target Nuclide	Result +/- 2 s TPU	MDC	Requested MDC	Lab Qualifier
14255-04-0	Pb-210	0.6 +/- 1.4	2.5		U,G,J
7440-29-1	Th-232	0 +/- 0.37	0.70		U,G

Comments:

Qualifiers/Flags:

U - Result is less than the sample specific MDC or less than the associated TPU.

Y1 - Chemical Yield is in control at 100-110%. Quantitative Yield is assumed.

Y2 - Chemical Yield outside default limits.

LT - Result is less than Requested MDC, greater than sample specific MDC.

M3 - The requested MDC was not met, but the reported activity is greater than the reported MDC.

M - The requested MDC was not met.

SQ - Spectral quality prevents accurate quantitation.

SI - Nuclide identification and/or quantitation is tentative.

TI - Nuclide identification is tentative.

R - Nuclide has exceeded 8 halflives.

G - Sample density differs by more than 15% of LCS density.

Abbreviations:

TPU - Total Propagated Uncertainty

MDC - Minimum Detectable Concentration

BDL - Below Detection Limit

Data Package ID: *GSV1405199-1*

Gamma Spectroscopy Results

PAI 713 Rev 13

Sample Results

Lab Name: ALS Environmental -- FC
Work Order Number: 1405199
Client Name: Tidewater, Inc.
ClientProject ID: Great Kills Park

Field ID: GKP-Sa5-RS-18
Lab ID: 1405199-18
Library: RA226.LIB

Sample Matrix: VEGETATION
Prep SOP: PAI 739 Rev 11
Date Collected: 06-May-14
Date Prepared: 22-May-14
Date Analyzed: 12-Jun-14

Prep Batch: GS140522-2
QCBatchID: GS140522-2-1
Run ID: GS140522-2A
Count Time: 60 minutes
Report Basis: As Received

Final Aliquot: 243 g
Prep Basis: As Received
Moisture(%): NA
Result Units: pCi/g
File Name: 140620d01A

CASNO	Target Nuclide	Result +/- 2 s TPU	MDC	Requested MDC	Lab Qualifier
13982-63-3	Ra-226	0.45 +/- 0.12	0.22	0.5	LT,G

Comments:

Qualifiers/Flags:

U - Result is less than the sample specific MDC or less than the associated TPU.

Y1 - Chemical Yield is in control at 100-110%. Quantitative Yield is assumed.

Y2 - Chemical Yield outside default limits.

LT - Result is less than Requested MDC, greater than sample specific MDC.

M3 - The requested MDC was not met, but the reported activity is greater than the reported MDC.

M - The requested MDC was not met.

SQ - Spectral quality prevents accurate quantitation.

SI - Nuclide identification and/or quantitation is tentative.

TI - Nuclide identification is tentative.

R - Nuclide has exceeded 8 halflives.

G - Sample density differs by more than 15% of LCS density.

Abbreviations:

TPU - Total Propagated Uncertainty

MDC - Minimum Detectable Concentration

BDL - Below Detection Limit

Data Package ID: *GSV1405199-1*

Gamma Spectroscopy Results

PAI 713 Rev 13

Sample Duplicate Results

Lab Name: ALS Environmental -- FC
Work Order Number: 1405199
Client Name: Tidewater, Inc.
ClientProject ID: Great Kills Park

Field ID: GKP-Sa5-RS-18
Lab ID: 1405199-18DUP
Library: RA226.LIB

Sample Matrix: VEGETATION
Prep SOP: PAI 739 Rev 11
Date Collected: 06-May-14
Date Prepared: 22-May-14
Date Analyzed: 12-Jun-14

Prep Batch: GS140522-2
QCBatchID: GS140522-2-1
Run ID: GS140522-2A
Count Time: 60 minutes
Report Basis: As Received

Final Aliquot: 243 g
Prep Basis: As Received
Moisture(%): NA
Result Units: pCi/g
File Name: 140615d03A

CASNO	Target Nuclide	Result +/- 2 s TPU	MDC	Requested MDC	Lab Qualifier
13982-63-3	Ra-226	0.40 +/- 0.10	0.20	0.5	LT,G

Comments:

Qualifiers/Flags:

U - Result is less than the sample specific MDC or less than the associated TPU.
Y1 - Chemical Yield is in control at 100-110%. Quantitative yield is assumed.
Y2 - Chemical Yield outside default limits.
LT - Result is less than Requested MDC, greater than sample specific MDC.
M - The requested MDC was not met.
M3 - The requested MDC was not met, but thereported activity is greater than the reported MDC.
W - DER is greater than Warning Limit of 1.42
D - DER is greater than Control Limit of 2.13
SQ - Spectral quality prevents accurate quantitation.
SI - Nuclide identification and/or quantitation is tentative.
TI - Nuclide identification is tentative.
R - Nuclide has exceeded 8 halflives.
G - Sample density differs by more than 15% of LCS density.

Abbreviations:
TPU - Total Propagated Uncertainty
MDC - Minimum Detectable Concentration
BDL - Below Detection Limit

Data Package ID: *GSV1405199-1*

Gamma Spectroscopy Results

PAI 713 Rev 13

Sample Results

Lab Name: ALS Environmental -- FC
Work Order Number: 1405199
Client Name: Tidewater, Inc.
ClientProject ID: Great Kills Park

Field ID: GKP-Sa5-RS-18
Lab ID: 1405199-18
Library: HUNTERS_POIN

Sample Matrix: VEGETATION
Prep SOP: PAI 739 Rev 11
Date Collected: 06-May-14
Date Prepared: 22-May-14
Date Analyzed: 12-Jun-14

Prep Batch: GS140522-2
QCBatchID: GS140522-2-1
Run ID: GS140522-2A
Count Time: 60 minutes
Report Basis: As Received

Final Aliquot: 243 g
Prep Basis: As Received
Moisture(%): NA
Result Units: pCi/g
File Name: 140620d01

CASNO	Target Nuclide	Result +/- 2 s TPU	MDC	Requested MDC	Lab Qualifier
14331-83-0	Ac-228	0.12 +/- 0.24	0.42		U,G
14596-10-2	Am-241	-0.04 +/- 0.62	1.11		U,G
14913-49-6	Bi-212	1.08 +/- 0.75	1.02		G,NQ
14733-03-0	Bi-214	0.43 +/- 0.18	0.23	0.5	LT,G,J
10198-40-0	Co-60	-0.009 +/- 0.044	0.095		U,G
10045-97-3	Cs-137	0.035 +/- 0.055	0.093		U,G
14683-23-9	Eu-152	0.07 +/- 0.25	0.46		U,G
15585-10-1	Eu-154	-0.18 +/- 0.25	0.55		U,G
13966-00-2	K-40	3.9 +/- 1.5	1.8	1	M3,G
15100-28-4	Pa-234m	0 +/- 8.3	16.0		U,G
15092-94-1	Pb-212	0.123 +/- 0.094	0.145		U,G
15067-28-4	Pb-214	0.46 +/- 0.14	0.22	0.5	LT,G,J
15065-10-8	Th-234	0.40 +/- 0.88	1.49	5	U,G
14913-50-9	Tl-208	0.018 +/- 0.061	0.107		U,G
15117-96-1	U-235	0.03 +/- 0.25	0.45		U,G

Comments:

Qualifiers/Flags:

U - Result is less than the sample specific MDC or less than the associated TPU.

Y1 - Chemical Yield is in control at 100-110%. Quantitative Yield is assumed.

Y2 - Chemical Yield outside default limits.

LT - Result is less than Requested MDC, greater than sample specific MDC.

M3 - The requested MDC was not met, but the reported activity is greater than the reported MDC.

M - The requested MDC was not met.

SQ - Spectral quality prevents accurate quantitation.

SI - Nuclide identification and/or quantitation is tentative.

TI - Nuclide identification is tentative.

R - Nuclide has exceeded 8 halflives.

G - Sample density differs by more than 15% of LCS density.

Abbreviations:

TPU - Total Propagated Uncertainty

MDC - Minimum Detectable Concentration

BDL - Below Detection Limit

Data Package ID: *GSV1405199-1*

Gamma Spectroscopy Results

PAI 713 Rev 13

Sample Results

Lab Name: ALS Environmental -- FC
Work Order Number: 1405199
Client Name: Tidewater, Inc.
ClientProject ID: Great Kills Park

Field ID: GKP-Sa5-RS-18
Lab ID: 1405199-18
Library: HUNTERS_POIN

Sample Matrix: VEGETATION
Prep SOP: PAI 739 Rev 11
Date Collected: 06-May-14
Date Prepared: 22-May-14
Date Analyzed: 12-Jun-14

Prep Batch: GS140522-2
QCBatchID: GS140522-2-1
Run ID: GS140522-2A
Count Time: 60 minutes
Report Basis: As Received

Final Aliquot: 243 g
Prep Basis: As Received
Moisture(%): NA
Result Units: pCi/g
File Name: 140620d01

CASNO	Target Nuclide	Result +/- 2 s TPU	MDC	Requested MDC	Lab Qualifier
14255-04-0	Pb-210	-3 +/- 40	71		U,G.J
7440-29-1	Th-232	0.12 +/- 0.24	0.42		U,G

Comments:

Qualifiers/Flags:

U - Result is less than the sample specific MDC or less than the associated TPU.

Y1 - Chemical Yield is in control at 100-110%. Quantitative Yield is assumed.

Y2 - Chemical Yield outside default limits.

LT - Result is less than Requested MDC, greater than sample specific MDC.

M3 - The requested MDC was not met, but the reported activity is greater than the reported MDC.

M - The requested MDC was not met.

SQ - Spectral quality prevents accurate quantitation.

SI - Nuclide identification and/or quantitation is tentative.

TI - Nuclide identification is tentative.

R - Nuclide has exceeded 8 halflives.

G - Sample density differs by more than 15% of LCS density.

Abbreviations:

TPU - Total Propagated Uncertainty

MDC - Minimum Detectable Concentration

BDL - Below Detection Limit

Data Package ID: *GSV1405199-1*

Gamma Spectroscopy Results

PAI 713 Rev 13

Sample Duplicate Results

Lab Name: ALS Environmental -- FC
Work Order Number: 1405199
Client Name: Tidewater, Inc.
ClientProject ID: Great Kills Park

Field ID: GKP-Sa5-RS-18
Lab ID: 1405199-18DUP
Library: HUNTERS_POIN

Sample Matrix: VEGETATION
Prep SOP: PAI 739 Rev 11
Date Collected: 06-May-14
Date Prepared: 22-May-14
Date Analyzed: 12-Jun-14

Prep Batch: GS140522-2
QCBatchID: GS140522-2-1
Run ID: GS140522-2A
Count Time: 60 minutes
Report Basis: As Received

Final Aliquot: 243 g
Prep Basis: As Received
Moisture(%): NA
Result Units: pCi/g
File Name: 140615d03

CASNO	Target Nuclide	Result +/- 2 s TPU	MDC	Requested MDC	Lab Qualifier
14331-83-0	Ac-228	0.04 +/- 0.22	0.40		U,G
14596-10-2	Am-241	0.18 +/- 0.46	0.79		U,G
14913-49-6	Bi-212	0.12 +/- 0.80	1.44		U,G
14733-03-0	Bi-214	0.53 +/- 0.18	0.20	0.5	G,J
10198-40-0	Co-60	-0.053 +/- 0.069	0.143		U,G
10045-97-3	Cs-137	0 +/- 0.063	0.115		U,G
14683-23-9	Eu-152	-0.10 +/- 0.26	0.55		U,G
15585-10-1	Eu-154	0.13 +/- 0.31	0.54		U,G
13966-00-2	K-40	3.5 +/- 1.2	1.2	1	M3,G
15100-28-4	Pa-234m	0.8 +/- 9.0	16.8		U,G
15092-94-1	Pb-212	0.044 +/- 0.093	0.157		U,G
15067-28-4	Pb-214	0.34 +/- 0.12	0.20	0.5	LT,G,J
15065-10-8	Th-234	0.47 +/- 0.89	1.50	5	U,G

Comments:

Qualifiers/Flags:

U - Result is less than the sample specific MDC or less than the associated TPU.
Y1 - Chemical Yield is in control at 100-110%. Quantitative yield is assumed.
Y2 - Chemical Yield outside default limits.
LT - Result is less than Requested MDC, greater than sample specific MDC.
M - The requested MDC was not met.
M3 - The requested MDC was not met, but thereported activity is greater than the reported MDC.
W - DER is greater than Warning Limit of 1.42
D - DER is greater than Control Limit of 2.13
SQ - Spectral quality prevents accurate quantitation.
SI - Nuclide identification and/or quantitation is tentative.
TI - Nuclide identification is tentative.
R - Nuclide has exceeded 8 halflives.
G - Sample density differs by more than 15% of LCS density.

Abbreviations:
TPU - Total Propagated Uncertainty
MDC - Minimum Detectable Concentration
BDL - Below Detection Limit

Data Package ID: *GSV1405199-1*

Gamma Spectroscopy Results

PAI 713 Rev 13

Sample Duplicate Results

Lab Name: ALS Environmental -- FC
Work Order Number: 1405199
Client Name: Tidewater, Inc.
ClientProject ID: Great Kills Park

Field ID: GKP-Sa5-RS-18
Lab ID: 1405199-18DUP
Library: HUNTERS_POIN

Sample Matrix: VEGETATION
Prep SOP: PAI 739 Rev 11
Date Collected: 06-May-14
Date Prepared: 22-May-14
Date Analyzed: 12-Jun-14

Prep Batch: GS140522-2
QCBatchID: GS140522-2-1
Run ID: GS140522-2A
Count Time: 60 minutes
Report Basis: As Received

Final Aliquot: 243 g
Prep Basis: As Received
Moisture(%): NA
Result Units: pCi/g
File Name: 140615d03

CASNO	Target Nuclide	Result +/- 2 s TPU	MDC	Requested MDC	Lab Qualifier
14913-50-9	Tl-208	0.017 +/- 0.055	0.097		U,G
15117-96-1	U-235	0.05 +/- 0.22	0.38		U,G
14255-04-0	Pb-210	0 +/- 12	21		U,G,J
7440-29-1	Th-232	0.04 +/- 0.22	0.40		U,G

Comments:

Qualifiers/Flags:

U - Result is less than the sample specific MDC or less than the associated TPU.
Y1 - Chemical Yield is in control at 100-110%. Quantitative yield is assumed.
Y2 - Chemical Yield outside default limits.
LT - Result is less than Requested MDC, greater than sample specific MDC.
M - The requested MDC was not met.
M3 - The requested MDC was not met, but thereported activity is greater than the reported MDC.
W - DER is greater than Warning Limit of 1.42
D - DER is greater than Control Limit of 2.13
SQ - Spectral quality prevents accurate quantitation.
SI - Nuclide identification and/or quantitation is tentative.
TI - Nuclide identification is tentative.
R - Nuclide has exceeded 8 halflives.
G - Sample density differs by more than 15% of LCS density.

Abbreviations:
TPU - Total Propagated Uncertainty
MDC - Minimum Detectable Concentration
BDL - Below Detection Limit

Data Package ID: *GSV1405199-1*

Isotopic Uranium By Alpha Spectroscopy

PAI 714 Rev 12

Sample Results

Lab Name: ALS Environmental -- FC
Work Order Number: 1405199
Client Name: Tidewater, Inc.
ClientProject ID: Great Kills Park

Field ID: GKP-Sa1-SS-03
Lab ID: 1405199-3

Sample Matrix: SOIL
Prep SOP: PAI 778 Rev 14
Date Collected: 06-May-14
Date Prepared: 21-May-14
Date Analyzed: 28-May-14

Prep Batch: AS140521-3
QCBatchID: AS140521-3-3
Run ID: AS140521-3UR
Count Time: 600 minutes
Report Basis: Dry Weight

Final Aliquot: 1.01 g
Prep Basis: Dry Weight
Moisture(%): NA
Result Units: pCi/g
File Name: Spectrum #1

CASNO	Target Nuclide	Result +/- 2 s TPU	MDC	Requested MDC	Lab Qualifier
13966-29-5	U-234	1.23 +/- 0.23	0.01	0.1	
15117-96-1	U-235	0.097 +/- 0.041	0.023	0.1	LT
7440-61-1	U-238	1.22 +/- 0.23	0.03	0.1	

Chemical Yield Summary

Carrier/Tracer	Amount Added	Result	Units	Yield	Control Limits	Flag
U-232	4.224	3.35	pCi/g	79.3	30 - 110 %	

Comments:

Qualifiers/Flags:

U - Result is less than the sample specific MDC.

Y1 - Chemical Yield is in control at 100-110%. Quantitative Yield is assumed.

Y2 - Chemical Yield outside default limits.

LT - Result is less than Requested MDC, greater than sample specific MDC.

M3 - The requested MDC was not met, but the reported activity is greater than the reported MDC.

M - The requested MDC was not met.

Abbreviations:

TPU - Total Propagated Uncertainty

MDC - Minimum Detectable Concentration

BDL - Below Detection Limit

Data Package ID: *UR1405199-1*

Isotopic Uranium By Alpha Spectroscopy

PAI 714 Rev 12

Sample Results

Lab Name: ALS Environmental -- FC
Work Order Number: 1405199
Client Name: Tidewater, Inc.
ClientProject ID: Great Kills Park

Field ID: GKP-Sa1-SS-04
Lab ID: 1405199-4

Sample Matrix: SOIL
Prep SOP: PAI 778 Rev 14
Date Collected: 06-May-14
Date Prepared: 21-May-14
Date Analyzed: 28-May-14

Prep Batch: AS140521-3
QCBatchID: AS140521-3-3
Run ID: AS140521-3UR
Count Time: 600 minutes
Report Basis: Dry Weight

Final Aliquot: 1.02 g
Prep Basis: Dry Weight
Moisture(%): NA
Result Units: pCi/g
File Name: Spectrum #1

CASNO	Target Nuclide	Result +/- 2 s TPU	MDC	Requested MDC	Lab Qualifier
13966-29-5	U-234	0.62 +/- 0.13	0.02	0.1	
15117-96-1	U-235	0.062 +/- 0.032	0.026	0.1	LT
7440-61-1	U-238	0.65 +/- 0.13	0.02	0.1	

Chemical Yield Summary

Carrier/Tracer	Amount Added	Result	Units	Yield	Control Limits	Flag
U-232	4.181	3.58	pCi/g	85.7	30 - 110 %	

Comments:

Qualifiers/Flags:

U - Result is less than the sample specific MDC.

Y1 - Chemical Yield is in control at 100-110%. Quantitative Yield is assumed.

Y2 - Chemical Yield outside default limits.

LT - Result is less than Requested MDC, greater than sample specific MDC.

M3 - The requested MDC was not met, but the reported activity is greater than the reported MDC.

M - The requested MDC was not met.

Abbreviations:

TPU - Total Propagated Uncertainty

MDC - Minimum Detectable Concentration

BDL - Below Detection Limit

Data Package ID: *UR1405199-1*

Isotopic Uranium By Alpha Spectroscopy

PAI 714 Rev 12

Sample Results

Lab Name: ALS Environmental -- FC
Work Order Number: 1405199
Client Name: Tidewater, Inc.
ClientProject ID: Great Kills Park

Field ID: GKP-Sa2-SS-07
Lab ID: 1405199-7

Sample Matrix: SOIL
Prep SOP: PAI 778 Rev 14
Date Collected: 06-May-14
Date Prepared: 21-May-14
Date Analyzed: 28-May-14

Prep Batch: AS140521-3
QCBatchID: AS140521-3-3
Run ID: AS140521-3UR
Count Time: 600 minutes
Report Basis: Dry Weight

Final Aliquot: 0.556 g
Prep Basis: Dry Weight
Moisture(%): NA
Result Units: pCi/g
File Name: Spectrum #1

CASNO	Target Nuclide	Result +/- 2 s TPU	MDC	Requested MDC	Lab Qualifier
13966-29-5	U-234	0.82 +/- 0.18	0.01	0.1	
15117-96-1	U-235	0.041 +/- 0.035	0.040	0.1	LT
7440-61-1	U-238	0.71 +/- 0.17	0.03	0.1	

Chemical Yield Summary

Carrier/Tracer	Amount Added	Result	Units	Yield	Control Limits	Flag
U-232	7.637	6.03	pCi/g	78.9	30 - 110 %	

Comments:

Qualifiers/Flags:

U - Result is less than the sample specific MDC.

Y1 - Chemical Yield is in control at 100-110%. Quantitative Yield is assumed.

Y2 - Chemical Yield outside default limits.

LT - Result is less than Requested MDC, greater than sample specific MDC.

M3 - The requested MDC was not met, but the reported activity is greater than the reported MDC.

M - The requested MDC was not met.

Abbreviations:

TPU - Total Propagated Uncertainty

MDC - Minimum Detectable Concentration

BDL - Below Detection Limit

Data Package ID: *UR1405199-1*

Isotopic Uranium By Alpha Spectroscopy

PAI 714 Rev 12

Sample Results

Lab Name: ALS Environmental -- FC
Work Order Number: 1405199
Client Name: Tidewater, Inc.
ClientProject ID: Great Kills Park

Field ID: GKP-Sa2-SS-08
Lab ID: 1405199-8

Sample Matrix: SOIL
Prep SOP: PAI 778 Rev 14
Date Collected: 06-May-14
Date Prepared: 21-May-14
Date Analyzed: 28-May-14

Prep Batch: AS140521-3
QCBatchID: AS140521-3-3
Run ID: AS140521-3UR
Count Time: 600 minutes
Report Basis: Dry Weight

Final Aliquot: 1.02 g
Prep Basis: Dry Weight
Moisture(%): NA
Result Units: pCi/g
File Name: Spectrum #1

CASNO	Target Nuclide	Result +/- 2 s TPU	MDC	Requested MDC	Lab Qualifier
13966-29-5	U-234	0.67 +/- 0.14	0.03	0.1	
15117-96-1	U-235	0.050 +/- 0.027	0.009	0.1	LT
7440-61-1	U-238	0.74 +/- 0.15	0.02	0.1	

Chemical Yield Summary

Carrier/Tracer	Amount Added	Result	Units	Yield	Control Limits	Flag
U-232	4.161	3.41	pCi/g	81.9	30 - 110 %	

Comments:

Qualifiers/Flags:

U - Result is less than the sample specific MDC.

Y1 - Chemical Yield is in control at 100-110%. Quantitative Yield is assumed.

Y2 - Chemical Yield outside default limits.

LT - Result is less than Requested MDC, greater than sample specific MDC.

M3 - The requested MDC was not met, but the reported activity is greater than the reported MDC.

M - The requested MDC was not met.

Abbreviations:

TPU - Total Propagated Uncertainty

MDC - Minimum Detectable Concentration

BDL - Below Detection Limit

Data Package ID: *UR1405199-1*

Isotopic Uranium By Alpha Spectroscopy

PAI 714 Rev 12

Sample Results

Lab Name: ALS Environmental -- FC
Work Order Number: 1405199
Client Name: Tidewater, Inc.
ClientProject ID: Great Kills Park

Field ID: GKP-Sa3-SS-11
Lab ID: 1405199-11

Sample Matrix: SOIL
Prep SOP: PAI 778 Rev 14
Date Collected: 06-May-14
Date Prepared: 21-May-14
Date Analyzed: 28-May-14

Prep Batch: AS140521-3
QCBatchID: AS140521-3-3
Run ID: AS140521-3UR
Count Time: 600 minutes
Report Basis: Dry Weight

Final Aliquot: 0.550 g
Prep Basis: Dry Weight
Moisture(%): NA
Result Units: pCi/g
File Name: Spectrum #1

CASNO	Target Nuclide	Result +/- 2 s TPU	MDC	Requested MDC	Lab Qualifier
13966-29-5	U-234	47.6 +/- 7.7	0	0.1	
15117-96-1	U-235	2.91 +/- 0.55	0.08	0.1	
7440-61-1	U-238	47.4 +/- 7.6	0.1	0.1	

Chemical Yield Summary

Carrier/Tracer	Amount Added	Result	Units	Yield	Control Limits	Flag
U-232	7.720	5.20	pCi/g	67.3	30 - 110 %	

Comments:

Qualifiers/Flags:

U - Result is less than the sample specific MDC.

Y1 - Chemical Yield is in control at 100-110%. Quantitative Yield is assumed.

Y2 - Chemical Yield outside default limits.

LT - Result is less than Requested MDC, greater than sample specific MDC.

M3 - The requested MDC was not met, but the reported activity is greater than the reported MDC.

M - The requested MDC was not met.

Abbreviations:

TPU - Total Propagated Uncertainty

MDC - Minimum Detectable Concentration

BDL - Below Detection Limit

Data Package ID: *UR1405199-1*

Isotopic Uranium By Alpha Spectroscopy

PAI 714 Rev 12

Sample Results

Lab Name: ALS Environmental -- FC
Work Order Number: 1405199
Client Name: Tidewater, Inc.
ClientProject ID: Great Kills Park

Field ID: GKP-Sa3-SS-12
Lab ID: 1405199-12

Sample Matrix: SOIL
Prep SOP: PAI 778 Rev 14
Date Collected: 06-May-14
Date Prepared: 21-May-14
Date Analyzed: 28-May-14

Prep Batch: AS140521-3
QCBatchID: AS140521-3-3
Run ID: AS140521-3UR
Count Time: 600 minutes
Report Basis: Dry Weight

Final Aliquot: 1.02 g
Prep Basis: Dry Weight
Moisture(%): NA
Result Units: pCi/g
File Name: Spectrum #1

CASNO	Target Nuclide	Result +/- 2 s TPU	MDC	Requested MDC	Lab Qualifier
13966-29-5	U-234	9.7 +/- 1.6	0	0.1	
15117-96-1	U-235	0.57 +/- 0.13	0.01	0.1	
7440-61-1	U-238	9.9 +/- 1.6	0	0.1	

Chemical Yield Summary

Carrier/Tracer	Amount Added	Result	Units	Yield	Control Limits	Flag
U-232	4.177	2.94	pCi/g	70.3	30 - 110 %	

Comments:

Qualifiers/Flags:

U - Result is less than the sample specific MDC.

Y1 - Chemical Yield is in control at 100-110%. Quantitative Yield is assumed.

Y2 - Chemical Yield outside default limits.

LT - Result is less than Requested MDC, greater than sample specific MDC.

M3 - The requested MDC was not met, but the reported activity is greater than the reported MDC.

M - The requested MDC was not met.

Abbreviations:

TPU - Total Propagated Uncertainty

MDC - Minimum Detectable Concentration

BDL - Below Detection Limit

Data Package ID: *UR1405199-1*

Isotopic Uranium By Alpha Spectroscopy

PAI 714 Rev 12

Sample Results

Lab Name: ALS Environmental -- FC
Work Order Number: 1405199
Client Name: Tidewater, Inc.
ClientProject ID: Great Kills Park

Field ID: GKP-Sa4-SS-15
Lab ID: 1405199-15

Sample Matrix: SOIL
Prep SOP: PAI 778 Rev 14
Date Collected: 06-May-14
Date Prepared: 21-May-14
Date Analyzed: 28-May-14

Prep Batch: AS140521-3
QCBatchID: AS140521-3-3
Run ID: AS140521-3UR
Count Time: 600 minutes
Report Basis: Dry Weight

Final Aliquot: 1.02 g
Prep Basis: Dry Weight
Moisture(%): NA
Result Units: pCi/g
File Name: Spectrum #1

CASNO	Target Nuclide	Result +/- 2 s TPU	MDC	Requested MDC	Lab Qualifier
13966-29-5	U-234	0.72 +/- 0.15	0.03	0.1	
15117-96-1	U-235	0.052 +/- 0.028	0.009	0.1	LT
7440-61-1	U-238	0.68 +/- 0.14	0.03	0.1	

Chemical Yield Summary

Carrier/Tracer	Amount Added	Result	Units	Yield	Control Limits	Flag
U-232	4.172	3.40	pCi/g	81.4	30 - 110 %	

Comments:

Qualifiers/Flags:

U - Result is less than the sample specific MDC.

Y1 - Chemical Yield is in control at 100-110%. Quantitative Yield is assumed.

Y2 - Chemical Yield outside default limits.

LT - Result is less than Requested MDC, greater than sample specific MDC.

M3 - The requested MDC was not met, but the reported activity is greater than the reported MDC.

M - The requested MDC was not met.

Abbreviations:

TPU - Total Propagated Uncertainty

MDC - Minimum Detectable Concentration

BDL - Below Detection Limit

Data Package ID: *UR1405199-1*

Isotopic Uranium By Alpha Spectroscopy

PAI 714 Rev 12

Sample Results

Lab Name: ALS Environmental -- FC
Work Order Number: 1405199
Client Name: Tidewater, Inc.
ClientProject ID: Great Kills Park

Field ID: GKP-Sa4-SS16
Lab ID: 1405199-16

Sample Matrix: SOIL
Prep SOP: PAI 778 Rev 14
Date Collected: 06-May-14
Date Prepared: 21-May-14
Date Analyzed: 28-May-14

Prep Batch: AS140521-3
QCBatchID: AS140521-3-3
Run ID: AS140521-3UR
Count Time: 600 minutes
Report Basis: Dry Weight

Final Aliquot: 1.01 g
Prep Basis: Dry Weight
Moisture(%): NA
Result Units: pCi/g
File Name: Spectrum #1

CASNO	Target Nuclide	Result +/- 2 s TPU	MDC	Requested MDC	Lab Qualifier
13966-29-5	U-234	1.55 +/- 0.28	0.05	0.1	
15117-96-1	U-235	0.085 +/- 0.041	0.038	0.1	LT
7440-61-1	U-238	1.68 +/- 0.30	0.03	0.1	

Chemical Yield Summary

Carrier/Tracer	Amount Added	Result	Units	Yield	Control Limits	Flag
U-232	4.194	3.17	pCi/g	75.6	30 - 110 %	

Comments:

Qualifiers/Flags:

U - Result is less than the sample specific MDC.

Y1 - Chemical Yield is in control at 100-110%. Quantitative Yield is assumed.

Y2 - Chemical Yield outside default limits.

LT - Result is less than Requested MDC, greater than sample specific MDC.

M3 - The requested MDC was not met, but the reported activity is greater than the reported MDC.

M - The requested MDC was not met.

Abbreviations:

TPU - Total Propagated Uncertainty

MDC - Minimum Detectable Concentration

BDL - Below Detection Limit

Data Package ID: *UR1405199-1*

Isotopic Uranium By Alpha Spectroscopy

PAI 714 Rev 12

Sample Results

Lab Name: ALS Environmental -- FC
Work Order Number: 1405199
Client Name: Tidewater, Inc.
ClientProject ID: Great Kills Park

Field ID: GKP-Sa5-SS-19
Lab ID: 1405199-19

Sample Matrix: SOIL
Prep SOP: PAI 778 Rev 14
Date Collected: 06-May-14
Date Prepared: 21-May-14
Date Analyzed: 29-May-14

Prep Batch: AS140521-3
QCBatchID: AS140521-3-3
Run ID: AS140521-3UR
Count Time: 300 minutes
Report Basis: Dry Weight

Final Aliquot: 1.03 g
Prep Basis: Dry Weight
Moisture(%): NA
Result Units: pCi/g
File Name: Spectrum #1

CASNO	Target Nuclide	Result +/- 2 s TPU	MDC	Requested MDC	Lab Qualifier
13966-29-5	U-234	0.61 +/- 0.16	0.03	0.1	
15117-96-1	U-235	0.043 +/- 0.036	0.020	0.1	LT
7440-61-1	U-238	0.61 +/- 0.16	0.04	0.1	

Chemical Yield Summary

Carrier/Tracer	Amount Added	Result	Units	Yield	Control Limits	Flag
U-232	4.129	3.19	pCi/g	77.1	30 - 110 %	

Comments:

Qualifiers/Flags:

U - Result is less than the sample specific MDC.

Y1 - Chemical Yield is in control at 100-110%. Quantitative Yield is assumed.

Y2 - Chemical Yield outside default limits.

LT - Result is less than Requested MDC, greater than sample specific MDC.

M3 - The requested MDC was not met, but the reported activity is greater than the reported MDC.

M - The requested MDC was not met.

Abbreviations:

TPU - Total Propagated Uncertainty

MDC - Minimum Detectable Concentration

BDL - Below Detection Limit

Data Package ID: *UR1405199-1*

Isotopic Uranium By Alpha Spectroscopy

PAI 714 Rev 12

Sample Results

Lab Name: ALS Environmental -- FC
Work Order Number: 1405199
Client Name: Tidewater, Inc.
ClientProject ID: Great Kills Park

Field ID: GKP-Sa5-SS-20
Lab ID: 1405199-20

Sample Matrix: SOIL
Prep SOP: PAI 778 Rev 14
Date Collected: 06-May-14
Date Prepared: 21-May-14
Date Analyzed: 28-May-14

Prep Batch: AS140521-3
QCBatchID: AS140521-3-3
Run ID: AS140521-3UR
Count Time: 600 minutes
Report Basis: Dry Weight

Final Aliquot: 1.05 g
Prep Basis: Dry Weight
Moisture(%): NA
Result Units: pCi/g
File Name: Spectrum #1

CASNO	Target Nuclide	Result +/- 2 s TPU	MDC	Requested MDC	Lab Qualifier
13966-29-5	U-234	8.9 +/- 1.5	0.1	0.1	
15117-96-1	U-235	0.50 +/- 0.12	0.03	0.1	
7440-61-1	U-238	9.3 +/- 1.5	0	0.1	

Chemical Yield Summary

Carrier/Tracer	Amount Added	Result	Units	Yield	Control Limits	Flag
U-232	4.064	2.88	pCi/g	70.8	30 - 110 %	

Comments:

Qualifiers/Flags:

U - Result is less than the sample specific MDC.

Y1 - Chemical Yield is in control at 100-110%. Quantitative Yield is assumed.

Y2 - Chemical Yield outside default limits.

LT - Result is less than Requested MDC, greater than sample specific MDC.

M3 - The requested MDC was not met, but the reported activity is greater than the reported MDC.

M - The requested MDC was not met.

Abbreviations:

TPU - Total Propagated Uncertainty

MDC - Minimum Detectable Concentration

BDL - Below Detection Limit

Data Package ID: *UR1405199-1*

ALS Environmental

Isotopic Thorium

Case Narrative

Tidewater, Inc.

Great Kills Park

Work Order Number: 1406252

1. This report consists of the analytical results and supporting documentation for four soil samples received by ALS on 05/09/14. This work order is a re-log of work order #1405199.

2. These samples were prepared according to the current revisions of SOP 773, SOP 777, and SOP 736.

3. The samples were analyzed for the presence of isotopic thorium according to the current revision of SOP 714. The analyses were completed on 06/21/14.

4. The isotopic analysis results for these samples are reported on a 'Dry Weight' basis in units of pCi/gram.

5. ALS uses the following convention for reporting significant digits in the TPU and MDC results. The TPU value is rounded to two significant digits. The MDC value is rounded to the same decimal place as the TPU value. In practice, this could result in an MDC reported value of zero for samples with significant activity, including the batch laboratory control sample.

6. The requested MDC for Th-230 was not met for sample 1406252-11. The reported activity exceeds the achieved MDC. The results are flagged with an "M3" qualifier on the final reports.

7. In typical Thorium analyses the ^{229}Th tracer, added to monitor chemical losses during the separation process, tails into the ^{230}Th region-of-interest. ALS has determined that, on average, 2.37% of the counts in the ^{230}Th region of interest are attributable to this ^{229}Th "tailing" effect. Consequently, 2.37% of the ^{229}Th counts are systematically subtracted from the ^{230}Th net counts and are attributed to the ^{230}Th background counts for that analysis. In this analysis, the method blank exhibited satisfactory peak resolution for the ^{229}Th peak, resulting in a less pronounced "tailing" effect that is routinely observed in an isotopic thorium determination. Because of the observed peak resolution in this analysis, the systematic

subtraction of 2.37% of the tracer counts from the ^{230}Th region of interest resulted in a negative net sample activity. The magnitude of this negative activity is greater than the associated 2-sigma total propagated uncertainty for the method blank analysis, suggesting a low bias in the reported net results. The analyst's review of the spectral data shows no activity in the ^{230}Th region of interest. The data quality is not believed to be significantly affected, and the results are submitted without further qualification. Please refer to the report detailing the ^{229}Th contribution to the ^{230}Th region-of-interest in Section 9 of this report.

8. No further anomalous situations were encountered during the preparation or analysis of these samples. All remaining quality control criteria were met.

The data contained in the following report have been reviewed and approved by the personnel listed below. In addition, ALS certifies that the analyses reported herein are true, complete and correct within the limits of the methods employed.

Linda Arend — 7/1/14
Radiochemistry Primary Data Reviewer — Date

Radiochemistry Final Data Reviewer — 7/1/14
Date

Section 1

CHAIN OF CUSTODY

ALS Environmental -- FC

Sample Number(s) Cross-Reference Table

OrderNum: 1406252
Client Name: Tidewater, Inc.
Client Project Name: Great Kills Park
Client Project Number:
Client PO Number:

Client Sample Number	Lab Sample Number	COC Number	Matrix	Date Collected	Time Collected
GKP-Sa3-VS-09	1406252-9		VEGETAT	06-May-14	11:40
GKP-Sa3-RS-10	1406252-10		VEGETAT	06-May-14	11:50
GKP-Sa3-SS-11	1406252-11		SOIL	06-May-14	12:10
GKP-Sa3-SS-12	1406252-12		SOIL	06-May-14	12:25
GKP-Sa5-VS-17	1406252-17		VEGETAT	06-May-14	13:50
GKP-Sa5-RS-18	1406252-18		VEGETAT	06-May-14	15:39
GKP-Sa5-SS-19	1406252-19		SOIL	06-May-14	16:00
GKP-Sa5-SS-20	1406252-20		SOIL	06-May-14	15:40

ALS Laboratory Group

225 Commerce Drive, Fort Collins, Colorado 80524
TF: (800) 443-1511 PH: (970) 490-1511 FX: (970) 490-1522

Chain-of-Custody

Form 302r8

WORKORDER # 1406252 / 1405199

PAGE 1 of 2

DISPOSAL By Lab or Return to Client

PROJECT NAME	Great Kills Park	SAMPLER	
PROJECT No.		SITE ID	
		EDD FORMAT	
		PURCHASE ORDER	
COMPANY NAME	Tide Water	BILL TO COMPANY	
SEND REPORT TO	Clif Gray	INVOICE ATTN TO	
ADDRESS	1920 tribute Rd St. L	ADDRESS	
CITY / STATE / ZIP	Sacramento / ca / 95815	CITY / STATE / ZIP	
PHONE	916-833-2945	PHONE	
FAX		FAX	
E-MAIL	Clif.Gray@tide h20.net	E-MAIL	

DATE 5-6-14

TURNAROUND: Gamma Spec Ra-226 / Ra-226 / Post Prep / per Shane B / 5/15/14 / Iso U / Iso Th

Lab ID	Field ID	Matrix	Sample Date	Sample Time	# Bottles	Pres.	QC	Gamma Spec Ra-226	Ra-226	Post Prep	per Shane B	5/15/14	Iso U	Iso Th
1	GKP-Sa1-VS-01	NS	5-6-14	1105	NA	NA		x						
2	GKP-Sa1-RS-02	NS		1128				x						
3	GKP-Sa1-SS-03	S		1119				x	X					
4	GKP-Sa1-SS-04	S		1120				x	X					
5	GKP-Sa2-VS-05	NS		1025				x						
6	GKP-Sa2-RS-06	NS		1015				x						
7	GKP-Sa2-SS-07	S		1020				x	X					
8	GKP-Sa2-SS-08	S		1040				x	X					
9	GKP-Sa3-VS-09	NS		1140				x					X	
10	GKP-Sa3-RS-10	NS		1150				x					X	

*Time Zone (Circle): EST CST MST PST Matrix: O = oil S = soil NS = non-soil solid W = water L = liquid E = extract F = filter

For metals or anions, please detail analytes below.

Comments:

* all vegitation and root samples are to be washed with deionized water prior to analysis.
* Contact Clif Gray for special instructions

QC PACKAGE (check below)	
	LEVEL II (Standard QC)
	LEVEL III (Std QC + forms)
	LEVEL IV (Std QC + forms + raw data)

Preservative Key: 1-HCl 2-HNO3 3-H2SO4 4-NaOH 5-NaHSO4 7-Other 8-4 degrees C 9-5035

	SIGNATURE	PRINTED NAME	DATE	TIME
RELINQUISHED BY				
RECEIVED BY	[signature]	Jacob Roddy	5/8/14	1010
RELINQUISHED BY				
RECEIVED BY				
RELINQUISHED BY				
RECEIVED BY				

1406252 5/6/14

ALS Laboratory Group

225 Commerce Drive, Fort Collins, Colorado 80524
TF: (800) 443-1511 PH: (970) 490-1511 FX: (970) 490-1522

Chain-of-Custody

Form 202r8

WORKORDER #	1405199
PAGE	2 of 2
DISPOSAL	By Lab or Return to Client

PROJECT NAME	Great Kills Park	SAMPLER		DATE	5-6-14
PROJECT No.		SITE ID		TURNAROUND	
		EDD FORMAT			
		PURCHASE ORDER			
COMPANY NAME	Tidewater	BILL TO COMPANY			
SEND REPORT TO	Clif Gray	INVOICE ATTN TO			
ADDRESS	1820 Tributa Rd Ste. L	ADDRESS			
CITY / STATE / ZIP	Sacramento / ca / 95816	CITY / STATE / ZIP			
PHONE	916-833-2945	PHONE			
FAX		FAX			
E-MAIL	Clif.Gray@tideh2o.net	E-MAIL			

Cadmium Spec Due-2pm; Add Iso U per Clif 5/15/14; 1406252 Iso U; Iso Th

Lab ID	Field ID	Matrix	Sample Date	Sample Time	# Bottles	Pres.	QC																				
11	GKP-Sa3-SS-11	S	5-6-14	1210	NA	NA		X	X					X													
12	GKP-Sa3-SS-12	S		1225				X	X					X													
13	GKP-Sa4-VS-13	NS		1535				X																			
14	GKP-Sa4-RS-14	NS		1440				X																			
15	GKP-Sa4-SS-15	S		1540				X	X					X													
16	GKP-Sa4-SS-16	S		1439				X	X																		
17	GKP-Sa5-VS-17	NS		1350				X					X														
18	GKP-Sa5-RS-18	NS		1539				X					X														
19	GKP-Sa5-SS-19	S		1600				X	X					X													
20	GKP-Sa5-SS-20	S		1540				X	X					X													

*Time Zone (Circle): EST CST MST PST Matrix: O = oil S = soil NS = non-soil solid W = water L = liquid E = extract F = filter

For metals or anions, please detail analytes below.

Comments:
* all vegitation and root samples are to be washed with deionized water prior to analysis.
· Contact Clif Gray for special instructions

QC PACKAGE (check below)	
	LEVEL II (Standard QC)
	LEVEL III (Std QC + forms)
	LEVEL IV (Std QC + forms + raw data)

Preservative Key: 1-HCl 2-HNO3 3-H2SO4 4-NaOH 5-NaHSO4 7-Other 8-4 degrees C 9-5035

	SIGNATURE	PRINTED NAME	DATE	TIME
RELINQUISHED BY				
RECEIVED BY	[signature]	Jacob Rodds	5/8/14	1010
RELINQUISHED BY				
RECEIVED BY				
RELINQUISHED BY				
RECEIVED BY				

ALS Environmental - Fort Collins
CONDITION OF SAMPLE UPON RECEIPT FORM

1406252/11 6/12/14

Client: Tidewater Workorder No: 1405199

Project Manager: LRS Initials: JLR Date: 5/9/14

1. Does this project require any special handling in addition to standard ALS procedures?		YES	(NO)
2. Are custody seals on shipping containers intact?	(NONE)	YES	NO
3. Are Custody seals on sample containers intact?	(NONE)	YES	NO
4. Is there a COC (Chain-of-Custody) present or other representative documents?		(YES)	NO
5. Are the COC and bottle labels complete and legible?		(YES)	NO
6. Is the COC in agreement with samples received? (IDs, dates, times, no. of samples, no. of containers, matrix, requested analyses, etc.)		(YES)	NO
7. Were airbills / shipping documents present and/or removable?	DROP OFF	(YES)	NO
8. Are all aqueous samples requiring preservation preserved correctly? (excluding volatiles)	(N/A)	YES	NO
9. Are all aqueous non-preserved samples pH 4-9?	(N/A)	YES	NO
10. Is there sufficient sample for the requested analyses?		(YES)	NO
11. Were all samples placed in the proper containers for the requested analyses?		(YES)	NO
12. Are all samples within holding times for the requested analyses?		(YES)	NO
13. Were all sample containers received intact? (not broken or leaking, etc.)		(YES)	NO
14. Are all samples requiring no headspace (VOC, GRO, RSK/MEE, Rx CN/S, radon) headspace free? Size of bubble: ____ < green pea ____ > green pea	(N/A)	YES	NO
15. Do any water samples contain sediment? Amount of sediment: ____ dusting ____ moderate ____ heavy	(N/A)	YES	NO
16. Were the samples shipped on ice?		YES	(NO)
17. Were cooler temperatures measured at 0.1-6.0°C? IR gun used*: #2 #4	(RAD ONLY)	YES	(NO)

Cooler #:	1							
Temperature (°C):	AMB							
No. of custody seals on cooler:	0							
DOT Survey/ Acceptance Information — External µR/hr reading:	14							
Background µR/hr reading:	11							

Were external µR/hr readings ≤ two times background and within DOT acceptance criteria? (YES) / NO / NA (If no, see Form 008.)

Additional Information: PROVIDE DETAILS BELOW FOR A NO RESPONSE TO ANY QUESTION ABOVE, EXCEPT #1 AND #16.

COC not signed to relinquish.

If applicable, was the client contacted? (YES) / NO / NA Contact: Cliff Gray Date/Time: 5/12/14

Project Manager Signature / Date: 5/10/14

*IR Gun #2: Oakton, SN 29922500201-0066
*IR Gun #4: Oakton, SN 2372220101-0002

Form 201r24.xls (06/04/2012)

1405199
1406252 6/14/14
14
O_

From: (410) 997-4458
Cathy Moore
Tidewater, Inc.
6625 Selnick Drive
Suite A
ELKRIDGE, MD 21075

Origin ID: ZFEA

FedEx Express

J1410140207032B

Ship Date: 07MAY14
ActWgt: 20.0 LB
CAD: 102242871/NET3490

Delivery Address Bar Code

Ref # M303
Invoice #
PO #
Dept #

SHIP TO: (410) 997-4458 BILL SENDER

Lance Steere
ALS Laboratories
225 Commerce Drive

FORT COLLINS, CO 80524

FRI - 09 MAY AA
** 2DAY **

TRK# 7987 8070 4168
0201

ST FTCA

80524
CO-US
DEN

522G1/62D3/F220

After printing this label:
1. Use the 'Print' button on this page to print your label to your laser or inkjet printer.
2. Fold the printed page along the horizontal line.
3. Place label in shipping pouch and affix it to your shipment so that the barcode portion of the label can be read and scanned.

Warning: Use only the printed original label for shipping. Using a photocopy of this label for shipping purposes is fraudulent and could result in additional billing charges, along with the cancellation of your FedEx account number.
Use of this system constitutes your agreement to the service conditions in the current FedEx Service Guide, available on fedex.com.FedEx will not be responsible for any claim in excess of $100 per package, whether the result of loss, damage, delay, non-delivery,misdelivery,or misinformation, unless you declare a higher value, pay an additional charge, document your actual loss and file a timely claim.Limitations found in the current FedEx Service Guide apply. Your right to recover from FedEx for any loss, including intrinsic value of the package, loss of sales, income interest, profit, attorney's fees, costs, and other forms of damage whether direct, incidental,consequential, or special is limited to the greater of $100 or the authorized declared value. Recovery cannot exceed actual documented loss.Maximum for items of extraordinary value is $1,000, e.g. jewelry, precious metals, negotiable instruments and other items listed in our ServiceGuide. Written claims must be filed within strict time limits, see current FedEx Service Guide.

Section 2

2

SAMPLE RESULTS SUMMARY

Isotopic Thorium By Alpha Spectroscopy Sample Results Summary

Client Name: Tidewater, Inc.
Client Project Name: Great Kills Park
Client Project Number:
Laboratory Name: ALS Environmental -- FC
PAI Work Order: 1406252

Reported on: Tuesday, July 01, 2014 10:35:03 AM

Lab Sample ID	Client Sample ID	Sample Type	Nuclide	Result +/- 2 s TPU	MDC	Units	Matrix	Prep Batch	Date Analyzed	Flags
1406252-11	GKP-Sa3-SS-11	Sample	Th-228	1.72 +/- 0.32	0.09	pCi/g	SOIL	AS140618-1	6/21/2014	
1406252-11	GKP-Sa3-SS-11	Sample	Th-230	30.3 +/- 4.7	0.2	pCi/g	SOIL	AS140618-1	6/21/2014	M3
1406252-11	GKP-Sa3-SS-11	Sample	Th-232	1.71 +/- 0.32	0.01	pCi/g	SOIL	AS140618-1	6/21/2014	
1406252-12	GKP-Sa3-SS-12	Sample	Th-228	2.05 +/- 0.34	0.04	pCi/g	SOIL	AS140618-1	6/21/2014	
1406252-12	GKP-Sa3-SS-12	Sample	Th-230	18.8 +/- 2.9	0.1	pCi/g	SOIL	AS140618-1	6/21/2014	
1406252-12	GKP-Sa3-SS-12	Sample	Th-232	2.05 +/- 0.34	0.02	pCi/g	SOIL	AS140618-1	6/21/2014	
1406252-19	GKP-Sa5-SS-19	Sample	Th-228	0.79 +/- 0.15	0.03	pCi/g	SOIL	AS140618-1	6/21/2014	
1406252-19	GKP-Sa5-SS-19	Sample	Th-230	0.98 +/- 0.18	0.08	pCi/g	SOIL	AS140618-1	6/21/2014	
1406252-19	GKP-Sa5-SS-19	Sample	Th-232	0.87 +/- 0.16	0.02	pCi/g	SOIL	AS140618-1	6/21/2014	

Comments:

Data Package ID: *TH1406252-1*

Qualifiers/Flags:

U - Result is less than the sample specific MDC.
LT - Result is less than Requested MDC, greater than sample specific MDC.
Y1 - Chemical Yield is in control at 100-110%. Quantitative Yield is assumed.
Y2 - Chemical Yield outside default limits.
M - The requested MDC was not met.
M3 - The requested MDC was not met, but the reported activity is greater than the reported MDC.

Abbreviations:

TPU - Total Propagated Uncertainty
MDC - Minimum Detectable Concentration
BDL - Below Detection Limit

Isotopic Thorium By Alpha Spectroscopy Sample Results Summary

Client Name: Tidewater, Inc.
Client Project Name: Great Kills Park
Client Project Number:
Laboratory Name: **ALS Environmental -- FC**
PAI Work Order: 1406252

Reported on: Tuesday, July 01, 2014
10:35:04 AM

Lab Sample ID	Client Sample ID	Sample Type	Nuclide	Result +/- 2 s TPU	MDC	Units	Matrix	Prep Batch	Date Analyzed	Flags
1406252-20	GKP-Sa5-SS-20	Sample	Th-228	0.81 +/- 0.15	0.03	pCi/g	SOIL	AS140618-1	6/21/2014	
1406252-20	GKP-Sa5-SS-20	Sample	Th-230	10.3 +/- 1.6	0.1	pCi/g	SOIL	AS140618-1	6/21/2014	
1406252-20	GKP-Sa5-SS-20	Sample	Th-232	0.93 +/- 0.16	0.01	pCi/g	SOIL	AS140618-1	6/21/2014	

Comments:

Data Package ID: *TH1406252-1*

Qualifiers/Flags:

U - Result is less than the sample specific MDC.

LT - Result is less than Requested MDC, greater than sample specific MDC.

Y1 - Chemical Yield is in control at 100-110%. Quantitative Yield is assumed.

Y2 - Chemical Yield outside default limits.

M - The requested MDC was not met.

M3 - The requested MDC was not met, but the reported activity is greater than the reported MDC.

Abbreviations:

TPU - Total Propagated Uncertainty

MDC - Minimum Detectable Concentration

BDL - Below Detection Limit

Section 3

QC RESULTS SUMMARY

3

Isotopic Thorium By Alpha Spectroscopy

PAI 714 Rev 12

Method Blank Results

Lab Name: ALS Environmental -- FC
Work Order Number: 1406252
Client Name: Tidewater, Inc.
ClientProject ID: Great Kills Park

Lab ID: AS140618-1MB

Sample Matrix: SOIL
Prep SOP: PAI 777 Rev 12
Date Collected: 18-Jun-14
Date Prepared: 18-Jun-14
Date Analyzed: 21-Jun-14

Prep Batch: AS140618-1
QCBatchID: AS140618-1-2
Run ID: AS140618-1TH
Count Time: 1000 minutes

Final Aliquot: 2.00 g
Result Units: pCi/g
File Name: Spectrum #1

CASNO	Target Nuclide	Result +/- 2 s TPU	MDC	Requested MDC	Lab Qualifier
14274-82-9	Th-228	0.0019 +/- 0.0076	0.0143	0.1	U
14269-63-7	Th-230	-0.029 +/- 0.020	0.039	0.1	U
7440-29-1	Th-232	0.0028 +/- 0.0047	0.0070	0.1	U

Chemical Yield Summary

Carrier/Tracer	Amount Added	Result	Units	Yield	Control Limits	Flag
Th-229	2.766	2.18	pCi/g	78.7	30 - 110 %	

Comments:

Qualifiers/Flags:

U - Result is less than the sample specific MDC.

Y1 - Chemical Yield is in control at 100-110%. Quantitative Yield is assumed.

Y2 - Chemical Yield outside default limits.

LT - Result is less than Requested MDC, greater than sample specific MDC.

Abbreviations:

TPU - Total Propagated Uncertainty

MDC - Minimum Detectable Concentration

BDL - Below Detection Limit

M - Requested MDC not met.

B - Analyte concentration greater than MDC.

B3 - Analyte concentration greater than MDC but less than Requested MDC.

Data Package ID: *TH1406252-1*

Isotopic Thorium By Alpha Spectroscopy

PAI 714 Rev 12

Laboratory Control Sample(s)

Lab Name: ALS Environmental -- FC
Work Order Number: 1406252
Client Name: Tidewater, Inc.
ClientProject ID: Great Kills Park

Lab ID: AS140618-1LCS

Sample Matrix: SOIL
Prep SOP: PAI 777 Rev 12
Date Collected: 18-Jun-14
Date Prepared: 18-Jun-14
Date Analyzed: 21-Jun-14

Prep Batch: AS140618-1
QCBatchID: AS140618-1-2
Run ID: AS140618-1TH
Count Time: 1000 minutes

Final Aliquot: 2.00 g
Result Units: pCi/g
File Name: Spectrum #1

CASNO	Target Nuclide	Results +/- 2s TPU	MDC	Spike Added	% Rec	Control Limits	Lab Qualifier
14269-63-7	Th-230	2.26 +/- 0.36	0.04	2.283	98.9	85 - 121	P

Chemical Yield Summary

Carrier/Tracer	Amount Added	Result	Units	Yield	Control Limits	Flag
Th-229	2.766	1.97	pCi/g	71.3	30 - 110 %	

Comments:

Qualifiers/Flags:

U - Result is less than the sample specific MDC.
LT - Result is less than Requested MDC, greater than sample specific MDC.
Y1 - Chemical Yield is in control at 100-110%. Quantitative Yield is assumed.
Y2 - Chemical Yield outside default limits.
L - LCS Recovery below lower control limit.
H - LCS Recovery above upper control limit.
P - LCS Recovery within control limits.
M - The requested MDC was not met.
M3 - The requested MDC was not met, but thereported activity is greater than the reported MDC.

Abbreviations:

TPU - Total Propagated Uncertainty
MDC - Minimum Detectable Concentration

Data Package ID: *TH1406252-1*

Section 4

INDIVIDUAL SAMPLE RESULTS

4

Isotopic Thorium By Alpha Spectroscopy

PAI 714 Rev 12

Sample Results

Lab Name: ALS Environmental -- FC
Work Order Number: 1406252
Client Name: Tidewater, Inc.
ClientProject ID: Great Kills Park

Field ID: GKP-Sa3-SS-11
Lab ID: 1406252-11

Sample Matrix: SOIL
Prep SOP: PAI 777 Rev 12
Date Collected: 06-May-14
Date Prepared: 18-Jun-14
Date Analyzed: 21-Jun-14

Prep Batch: AS140618-1
QCBatchID: AS140618-1-2
Run ID: AS140618-1TH
Count Time: 1000 minutes
Report Basis: Dry Weight

Final Aliquot: 0.435 g
Prep Basis: Dry Weight
Moisture(%): NA
Result Units: pCi/g
File Name: Spectrum #1

CASNO	Target Nuclide	Result +/- 2 s TPU	MDC	Requested MDC	Lab Qualifier
14274-82-9	Th-228	1.72 +/- 0.32	0.09	0.1	
14269-63-7	Th-230	30.3 +/- 4.7	0.2	0.1	M3
7440-29-1	Th-232	1.71 +/- 0.32	0.01	0.1	

Chemical Yield Summary

Carrier/Tracer	Amount Added	Result	Units	Yield	Control Limits	Flag
Th-229	12.72	9.5	pCi/g	74.7	30 - 110 %	

Comments:

Qualifiers/Flags:

U - Result is less than the sample specific MDC.

Y1 - Chemical Yield is in control at 100-110%. Quantitative Yield is assumed.

Y2 - Chemical Yield outside default limits.

LT - Result is less than Requested MDC, greater than sample specific MDC.

M3 - The requested MDC was not met, but the reported activity is greater than the reported MDC.

M - The requested MDC was not met.

Abbreviations:

TPU - Total Propagated Uncertainty

MDC - Minimum Detectable Concentration

BDL - Below Detection Limit

Data Package ID: *TH1406252-1*

Isotopic Thorium By Alpha Spectroscopy

PAI 714 Rev 12

Sample Results

Lab Name: ALS Environmental -- FC
Work Order Number: 1406252
Client Name: Tidewater, Inc.
ClientProject ID: Great Kills Park

Field ID: GKP-Sa3-SS-12
Lab ID: 1406252-12

Sample Matrix: SOIL
Prep SOP: PAI 777 Rev 12
Date Collected: 06-May-14
Date Prepared: 18-Jun-14
Date Analyzed: 21-Jun-14

Prep Batch: AS140618-1
QCBatchID: AS140618-1-2
Run ID: AS140618-1TH
Count Time: 1000 minutes
Report Basis: Dry Weight

Final Aliquot: 1.01 g
Prep Basis: Dry Weight
Moisture(%): NA
Result Units: pCi/g
File Name: Spectrum #1

CASNO	Target Nuclide	Result +/- 2 s TPU	MDC	Requested MDC	Lab Qualifier
14274-82-9	Th-228	2.05 +/- 0.34	0.04	0.1	
14269-63-7	Th-230	18.8 +/- 2.9	0.1	0.1	
7440-29-1	Th-232	2.05 +/- 0.34	0.02	0.1	

Chemical Yield Summary

Carrier/Tracer	Amount Added	Result	Units	Yield	Control Limits	Flag
Th-229	5.471	4.18	pCi/g	76.4	30 - 110 %	

Comments:

Qualifiers/Flags:

U - Result is less than the sample specific MDC.

Y1 - Chemical Yield is in control at 100-110%. Quantitative Yield is assumed.

Y2 - Chemical Yield outside default limits.

LT - Result is less than Requested MDC, greater than sample specific MDC.

M3 - The requested MDC was not met, but the reported activity is greater than the reported MDC.

M - The requested MDC was not met.

Abbreviations:

TPU - Total Propagated Uncertainty

MDC - Minimum Detectable Concentration

BDL - Below Detection Limit

Data Package ID: *TH1406252-1*

Isotopic Thorium By Alpha Spectroscopy

PAI 714 Rev 12

Sample Results

Lab Name: ALS Environmental – FC
Work Order Number: 1406252
Client Name: Tidewater, Inc.
ClientProject ID: Great Kills Park

Field ID: GKP-Sa5-SS-19
Lab ID: 1406252-19

Sample Matrix: SOIL
Prep SOP: PAI 777 Rev 12
Date Collected: 06-May-14
Date Prepared: 18-Jun-14
Date Analyzed: 21-Jun-14

Prep Batch: AS140618-1
QCBatchID: AS140618-1-2
Run ID: AS140618-1TH
Count Time: 1000 minutes
Report Basis: Dry Weight

Final Aliquot: 1.03 g
Prep Basis: Dry Weight
Moisture(%): NA
Result Units: pCi/g
File Name: Spectrum #1

CASNO	Target Nuclide	Result +/- 2 s TPU	MDC	Requested MDC	Lab Qualifier
14274-82-9	Th-228	0.79 +/- 0.15	0.03	0.1	
14269-63-7	Th-230	0.98 +/- 0.18	0.08	0.1	
7440-29-1	Th-232	0.87 +/- 0.16	0.02	0.1	

Chemical Yield Summary

Carrier/Tracer	Amount Added	Result	Units	Yield	Control Limits	Flag
Th-229	5.353	4.01	pCi/g	75.0	30 - 110 %	

Comments:

Qualifiers/Flags:

U - Result is less than the sample specific MDC.

Y1 - Chemical Yield is in control at 100-110%. Quantitative Yield is assumed.

Y2 - Chemical Yield outside default limits.

LT - Result is less than Requested MDC, greater than sample specific MDC.

M3 - The requested MDC was not met, but the reported activity is greater than the reported MDC.

M - The requested MDC was not met.

Abbreviations:

TPU - Total Propagated Uncertainty

MDC - Minimum Detectable Concentration

BDL - Below Detection Limit

Data Package ID: *TH1406252-1*

Isotopic Thorium By Alpha Spectroscopy

PAI 714 Rev 12

Sample Results

Lab Name: ALS Environmental -- FC
Work Order Number: 1406252
Client Name: Tidewater, Inc.
ClientProject ID: Great Kills Park

Field ID: GKP-Sa5-SS-20
Lab ID: 1406252-20

Sample Matrix: SOIL
Prep SOP: PAI 777 Rev 12
Date Collected: 06-May-14
Date Prepared: 18-Jun-14
Date Analyzed: 21-Jun-14

Prep Batch: AS140618-1
QCBatchID: AS140618-1-2
Run ID: AS140618-1TH
Count Time: 1000 minutes
Report Basis: Dry Weight

Final Aliquot: 1.06 g
Prep Basis: Dry Weight
Moisture(%): NA
Result Units: pCi/g
File Name: Spectrum #1

CASNO	Target Nuclide	Result +/- 2 s TPU	MDC	Requested MDC	Lab Qualifier
14274-82-9	Th-228	0.81 +/- 0.15	0.03	0.1	
14269-63-7	Th-230	10.3 +/- 1.6	0.1	0.1	
7440-29-1	Th-232	0.93 +/- 0.16	0.01	0.1	

Chemical Yield Summary

Carrier/Tracer	Amount Added	Result	Units	Yield	Control Limits	Flag
Th-229	5.227	4.36	pCi/g	83.4	30 - 110 %	

Comments:

Qualifiers/Flags:

U - Result is less than the sample specific MDC.

Y1 - Chemical Yield is in control at 100-110%. Quantitative Yield is assumed.

Y2 - Chemical Yield outside default limits.

LT - Result is less than Requested MDC, greater than sample specific MDC.

M3 - The requested MDC was not met, but the reported activity is greater than the reported MDC.

M - The requested MDC was not met.

Abbreviations:

TPU - Total Propagated Uncertainty

MDC - Minimum Detectable Concentration

BDL - Below Detection Limit

Data Package ID: *TH1406252-1*

ALS Environmental

Isotopic Uranium

Case Narrative

Tidewater, Inc.

Great Kills Park

Work Order Number: 1406252

1. This report consists of the analytical results and supporting documentation for four vegetation samples received by ALS on 05/09/14. This work order is a re-log of work order #1405199.

2. These samples were prepared according to the current revisions of SOP 773 and SOP 778.

3. The samples were analyzed for the presence of isotopic uranium according to the current revision of SOP 714. The analyses were completed on 07/02/14.

4. The isotopic analysis results for these samples are reported on an 'As Received' fresh weight basis in units of pCi/gram.

5. This analytical method quantifies U-235 alpha activity in a specific region of interest corresponding to emission energies between those of U-234 and U-238. A potential limitation of this method is that measurable amounts of U-234 in the sample may cause a small amount of characteristic activity in the U-235 region of interest due to poorly resolved alpha activity at the boundary between the two regions. To minimize the potential for a high bias in the U-235 analytical results, the U-235 region of interest has been narrowed and limited to a lower energy region. An 85.1% abundance correction has been made to the final U-235 results.

6. Uranium-234, U-235, and U-238 activity is reported in the associated method blank above the minimum detectable concentration value, as indicated with a "B3" qualifier on the final reports. The measured blank activity is below the requested MDC. Results are acceptable according to the current revision of SOP 715, and are submitted without further qualification.

7. ALS uses the following convention for reporting significant digits in the TPU and MDC results. The TPU value is rounded to two significant digits. The MDC value is rounded to the same decimal place as the TPU value. In practice, this could result in an MDC reported value of zero for samples with significant activity, including the batch laboratory control sample.

8. No further anomalous situations were encountered during the preparation or analysis of these samples. All remaining quality control criteria were met.

The data contained in the following report have been reviewed and approved by the personnel listed below. In addition, ALS certifies that the analyses reported herein are true, complete and correct within the limits of the methods employed.

Linda Arend — 7/3/14
Radiochemistry Primary Data Reviewer — Date

Radiochemistry Final Data Reviewer — 7/3/14
Date

Section 1

CHAIN OF CUSTODY

ALS Environmental -- FC

Sample Number(s) Cross-Reference Table

OrderNum: 1406252
Client Name: Tidewater, Inc.
Client Project Name: Great Kills Park
Client Project Number:
Client PO Number:

Client Sample Number	Lab Sample Number	COC Number	Matrix	Date Collected	Time Collected
GKP-Sa3-VS-09	1406252-9		VEGETAT	06-May-14	11:40
GKP-Sa3-RS-10	1406252-10		VEGETAT	06-May-14	11:50
GKP-Sa3-SS-11	1406252-11		SOIL	06-May-14	12:10
GKP-Sa3-SS-12	1406252-12		SOIL	06-May-14	12:25
GKP-Sa5-VS-17	1406252-17		VEGETAT	06-May-14	13:50
GKP-Sa5-RS-18	1406252-18		VEGETAT	06-May-14	15:39
GKP-Sa5-SS-19	1406252-19		SOIL	06-May-14	16:00
GKP-Sa5-SS-20	1406252-20		SOIL	06-May-14	15:40

ALS Laboratory Group

225 Commerce Drive, Fort Collins, Colorado 80524
TF: (800) 443-1511 PH: (970) 490-1511 FX: (970) 490-1522

Chain-of-Custody

Form 302r8

WORKORDER #: 1406252 / 1405199

PAGE: 1 of 2

DISPOSAL: By Lab or Return to Client

PROJECT NAME	Great Kills Park	SAMPLER	
PROJECT No.		SITE ID	
		EDD FORMAT	
		PURCHASE ORDER	
COMPANY NAME	Tide Water	BILL TO COMPANY	
SEND REPORT TO	Clif Gray	INVOICE ATTN TO	
ADDRESS	1920 tribute Rd St. L	ADDRESS	
CITY / STATE / ZIP	Sacramento / ca / 95815	CITY / STATE / ZIP	
PHONE	916-833-2945	PHONE	
FAX		FAX	
E-MAIL	Clif.Gray@tide h20.net	E-MAIL	

DATE: 5-6-14

TURNAROUND: Gamma Spec Ra-226 / Post Prep / per Shane / 8/15/14 / Iso U / Iso Th / 14-0625

Lab ID	Field ID	Matrix	Sample Date	Sample Time	# Bottles	Pres.	QC	Gamma Spec Ra-226	Post Prep	per Shane		8/15/14		Iso U	Iso Th										
1	GKP-Sa1-VS-01	NS	5-6-14	1105	NA	NA		x																	
2	GKP-Sa1-RS-02	NS		1128				x																	
3	GKP-Sa1-SS-03	S		1119				x	X																
4	GKP-Sa1-SS-04	S		1120				x	X																
5	GKP-Sa2-VS-05	NS		1025				x																	
6	GKP-Sa2-RS-06	NS		1015				x																	
7	GKP-Sa2-SS-07	S		1020				x	X																
8	GKP-Sa2-SS-08	S		1040				x	X																
9	GKP-Sa3-VS-09	NS		1140				x						X											
10	GKP-Sa3-RS-10	NS		1150				x						X											

*Time Zone (Circle): EST CST MST PST Matrix: O = oil S = soil NS = non-soil solid W = water L = liquid E = extract F = filter

For metals or anions, please detail analytes below.

Comments:

* all vegitation and root samples are to be washed with deionized water prior to analysis.
: Contact Clif Gray for special instructions

QC PACKAGE (check below)	
	LEVEL II (Standard QC)
	LEVEL III (Std QC + forms)
	LEVEL IV (Std QC + forms + raw data)

Preservative Key: 1-HCl 2-HNO3 3-H2SO4 4-NaOH 5-NaHSO4 7-Other 8-4 degrees C 9-5035

	SIGNATURE	PRINTED NAME	DATE	TIME
RELINQUISHED BY				
RECEIVED BY	[signature]	Jacob Roddy	5/8/14	1010
RELINQUISHED BY				
RECEIVED BY				
RELINQUISHED BY				
RECEIVED BY				

1406252 [illegible]

ALS Laboratory Group

225 Commerce Drive, Fort Collins, Colorado 80524
TF: (800) 443-1511 PH: (970) 490-1511 FX: (970) 490-1522

Chain-of-Custody

Form 202r8

WORKORDER # 1405199

PAGE 2 of 2

PROJECT NAME	Great Kills Park	SAMPLER	
PROJECT No.		SITE ID	
		EDD FORMAT	
		PURCHASE ORDER	
COMPANY NAME	Tide water	BILL TO COMPANY	
SEND REPORT TO	Clif Gray	INVOICE ATTN TO	
ADDRESS	1820 Tributo Rd Ste. L	ADDRESS	
CITY / STATE / ZIP	Sacramento / ca / 95816	CITY / STATE / ZIP	
PHONE	916-833-2945	PHONE	
FAX		FAX	
E-MAIL	Clif.Gray@tideh2o.net	E-MAIL	

DATE 5-6-14

TURNAROUND

DISPOSAL By Lab or Return to Client

Lab ID	Field ID	Matrix	Sample Date	Sample Time	# Bottles	Pres.	QC	Gamma Spec Rev-2/2	Add Iso U per Clif 5/15/14				1406252 Iso U	Iso Th													
11	GKP-Sa3-SS-11	S	5-6-14	1210	NA	NA		X	X					X													
12	GKP-Sa3-SS-12	S		1225				X	X					X													
13	GKP-Sa4-VS-13	NS		1535				X																			
14	GKP-Sa4-RS-14	NS		1440				X																			
15	GKP-Sa4-SS-15	S		1540				X	X																		
16	GKP-Sa4-SS-16	S		1439				X	X																		
17	GKP-Sa5-VS-17	NS		1350				X					X														
18	GKP-Sa5-RS-18	NS		1539				X					X														
19	GKP-Sa5-SS-19	S		1600				X	X					X													
20	GKP-Sa5-SS-20	S		1540				X	X					X													

*Time Zone (Circle): EST CST MST PST Matrix: O = oil S = soil NS = non-soil solid W = water L = liquid E = extract F = filter

For metals or anions, please detail analytes below.

Comments:

* all vegitation and root samples are to be washed with deionized water prior to analysis.
· Contact Clif Gray for special instructions

QC PACKAGE (check below)

- LEVEL II (Standard QC)
- LEVEL III (Std QC + forms)
- LEVEL IV (Std QC + forms + raw data)

Preservative Key: 1-HCl 2-HNO3 3-H2SO4 4-NaOH 5-NaHSO4 7-Other 8-4 degrees C 9-5035

	SIGNATURE	PRINTED NAME	DATE	TIME
RELINQUISHED BY				
RECEIVED BY	[signature]	Jacob Rodds	5/8/14	1010
RELINQUISHED BY				
RECEIVED BY				
RELINQUISHED BY				
RECEIVED BY				

ALS Environmental - Fort Collins
CONDITION OF SAMPLE UPON RECEIPT FORM

1406252 6/12/14

Client: Tidewater Workorder No: 1405199

Project Manager: LRS Initials: JCR Date: 5/9/14

1. Does this project require any special handling in addition to standard ALS procedures?		YES	(NO)
2. Are custody seals on shipping containers intact?	(NONE)	YES	NO
3. Are Custody seals on sample containers intact?	(NONE)	YES	NO
4. Is there a COC (Chain-of-Custody) present or other representative documents?		(YES)	NO
5. Are the COC and bottle labels complete and legible?		(YES)	NO
6. Is the COC in agreement with samples received? (IDs, dates, times, no. of samples, no. of containers, matrix, requested analyses, etc.)		(YES)	NO
7. Were airbills / shipping documents present and/or removable?	DROP OFF	(YES)	NO
8. Are all aqueous samples requiring preservation preserved correctly? (excluding volatiles)	(N/A)	YES	NO
9. Are all aqueous non-preserved samples pH 4-9?	(N/A)	YES	NO
10. Is there sufficient sample for the requested analyses?		(YES)	NO
11. Were all samples placed in the proper containers for the requested analyses?		(YES)	NO
12. Are all samples within holding times for the requested analyses?		(YES)	NO
13. Were all sample containers received intact? (not broken or leaking, etc.)		(YES)	NO
14. Are all samples requiring no headspace (VOC, GRO, RSK/MEE, Rx CN/S, radon) headspace free? Size of bubble: ____ < green pea ____ > green pea	(N/A)	YES	NO
15. Do any water samples contain sediment? Amount Amount of sediment: ____ dusting ____ moderate ____ heavy	(N/A)	YES	NO
16. Were the samples shipped on ice?		YES	(NO)
17. Were cooler temperatures measured at 0.1-6.0°C? IR gun used*: #2 #4	(RAD ONLY)	YES	(NO)

Cooler #:	1							
Temperature (°C):	AMB							
No. of custody seals on cooler:	0							
DOT Survey/ Acceptance Information — External µR/hr reading:	14							
Background µR/hr reading:	11							

Were external µR/hr readings ≤ two times background and within DOT acceptance criteria? (YES) / NO / NA (If no, see Form 008.)

Additional Information: PROVIDE DETAILS BELOW FOR A NO RESPONSE TO ANY QUESTION ABOVE, EXCEPT #1 AND #16.

COC not signed to relinquish.

If applicable, was the client contacted? (YES) / NO / NA Contact: Cliff Gray Date/Time: 5/12/14

Project Manager Signature / Date: 5/10/14

*IR Gun #2: Oakton, SN 29922500201-0066
*IR Gun #4: Oakton, SN 2372220101-0002

Form 201r24.xls (06/04/2012)

1405199
1406252 6/14/14
14
O_

From: (410) 997-4458
Cathy Moore
Tidewater, Inc.
6625 Selnick Drive
Suite A
ELKRIDGE, MD 21075

Origin ID: ZFEA

FedEx Express

J14101402070326

Ship Date: 07MAY14
ActWgt: 20.0 LB
CAD: 102242871/NET3490

Delivery Address Bar Code

Ref # M303
Invoice #
PO #
Dept #

SHIP TO: (410) 997-4458 BILL SENDER

Lance Steere
ALS Laboratories
225 Commerce Drive

FORT COLLINS, CO 80524

FRI - 09 MAY AA
** 2DAY **

TRK# 7987 8070 4168
0201

ST FTCA

80524
CO-US
DEN

522G1/62D3/F220

After printing this label:
1. Use the 'Print' button on this page to print your label to your laser or inkjet printer.
2. Fold the printed page along the horizontal line.
3. Place label in shipping pouch and affix it to your shipment so that the barcode portion of the label can be read and scanned.

Warning: Use only the printed original label for shipping. Using a photocopy of this label for shipping purposes is fraudulent and could result in additional billing charges, along with the cancellation of your FedEx account number.
Use of this system constitutes your agreement to the service conditions in the current FedEx Service Guide, available on fedex.com.FedEx will not be responsible for any claim in excess of $100 per package, whether the result of loss, damage, delay, non-delivery,misdelivery,or misinformation, unless you declare a higher value, pay an additional charge, document your actual loss and file a timely claim.Limitations found in the current FedEx Service Guide apply. Your right to recover from FedEx for any loss, including intrinsic value of the package, loss of sales, income interest, profit, attorney's fees, costs, and other forms of damage whether direct, incidental,consequential, or special is limited to the greater of $100 or the authorized declared value. Recovery cannot exceed actual documented loss.Maximum for items of extraordinary value is $1,000, e.g. jewelry, precious metals, negotiable instruments and other items listed in our ServiceGuide. Written claims must be filed within strict time limits, see current FedEx Service Guide.

Section 2

2

SAMPLE RESULTS SUMMARY

Isotopic Uranium By Alpha Spectroscopy Sample Results Summary

Client Name: Tidewater, Inc.
Client Project Name: Great Kills Park
Client Project Number:
Laboratory Name: ALS Environmental -- FC
PAI Work Order: 1406252

Reported on: Thursday, July 03, 2014 11:16:28 AM

Lab Sample ID	Client Sample ID	Sample Type	Nuclide	Result +/- 2 s TPU	MDC	Units	Matrix	Prep Batch	Date Analyzed	Flags
1406252-9	GKP-Sa3-VS-09	Sample	U-234	0.0064 +/- 0.0024	0.0016	pCi/g	VEGETATION	AS140627-1	7/2/2014	LT
1406252-9	GKP-Sa3-VS-09	Sample	U-235	0.00040 +/- 0.00099	0.00149	pCi/g	VEGETATION	AS140627-1	7/2/2014	U
1406252-9	GKP-Sa3-VS-09	Sample	U-238	0.0034 +/- 0.0018	0.0018	pCi/g	VEGETATION	AS140627-1	7/2/2014	LT
1406252-10	GKP-Sa3-RS-10	Sample	U-234	0.630 +/- 0.099	0	pCi/g	VEGETATION	AS140627-1	7/2/2014	
1406252-10	GKP-Sa3-RS-10	Sample	U-235	0.0330 +/- 0.0072	0.0005	pCi/g	VEGETATION	AS140627-1	7/2/2014	LT
1406252-10	GKP-Sa3-RS-10	Sample	U-238	0.65 +/- 0.10	0	pCi/g	VEGETATION	AS140627-1	7/2/2014	
1406252-17	GKP-Sa5-VS-17	Sample	U-234	0.0036 +/- 0.0017	0.0012	pCi/g	VEGETATION	AS140627-1	7/2/2014	LT
1406252-17	GKP-Sa5-VS-17	Sample	U-235	0 +/- 0.00091	0.00200	pCi/g	VEGETATION	AS140627-1	7/2/2014	U
1406252-17	GKP-Sa5-VS-17	Sample	U-238	0.0027 +/- 0.0014	0.0012	pCi/g	VEGETATION	AS140627-1	7/2/2014	LT

Comments:

Data Package ID: *UR1406252-1*

Qualifiers/Flags:

U - Result is less than the sample specific MDC.

LT - Result is less than Requested MDC, greater than sample specific MDC.

Y1 - Chemical Yield is in control at 100-110%. Quantitative Yield is assumed.

Y2 - Chemical Yield outside default limits.

M - The requested MDC was not met.

M3 - The requested MDC was not met, but the reported activity is greater than the reported MDC.

Abbreviations:

TPU - Total Propagated Uncertainty

MDC - Minimum Detectable Concentration

BDL - Below Detection Limit

Isotopic Uranium By Alpha Spectroscopy Sample Results Summary

Client Name: Tidewater, Inc.
Client Project Name: Great Kills Park
Client Project Number:
Laboratory Name: **ALS Environmental -- FC**
PAI Work Order: 1406252

Reported on: Thursday, July 03, 2014
11:16:28 AM

Lab Sample ID	Client Sample ID	Sample Type	Nuclide	Result +/- 2 s TPU	MDC	Units	Matrix	Prep Batch	Date Analyzed	Flags
1406252-18	GKP-Sa5-RS-18	Sample	U-234	0.112 +/- 0.020	0.002	pCi/g	VEGETATION	AS140627-1	7/2/2014	
1406252-18	GKP-Sa5-RS-18	Sample	U-235	0.0055 +/- 0.0024	0.0016	pCi/g	VEGETATION	AS140627-1	7/2/2014	LT
1406252-18	GKP-Sa5-RS-18	Sample	U-238	0.103 +/- 0.018	0.002	pCi/g	VEGETATION	AS140627-1	7/2/2014	

Comments:

Data Package ID: *UR1406252-1*

Qualifiers/Flags:

U - Result is less than the sample specific MDC.

LT - Result is less than Requested MDC, greater than sample specific MDC.

Y1 - Chemical Yield is in control at 100-110%. Quantitative Yield is assumed.

Y2 - Chemical Yield outside default limits.

M - The requested MDC was not met.

M3 - The requested MDC was not met, but the reported activity is greater than the reported MDC.

Abbreviations:

TPU - Total Propagated Uncertainty

MDC - Minimum Detectable Concentration

BDL - Below Detection Limit

Section 3

QC RESULTS SUMMARY

3

Isotopic Uranium By Alpha Spectroscopy

PAI 714 Rev 12

Method Blank Results

Lab Name: ALS Environmental -- FC
Work Order Number: 1406252
Client Name: Tidewater, Inc.
ClientProject ID: Great Kills Park

Lab ID: AS140627-1MB

Sample Matrix: VEGETATION
Prep SOP: PAI 778 Rev 14
Date Collected: 27-Jun-14
Date Prepared: 27-Jun-14
Date Analyzed: 02-Jul-14

Prep Batch: AS140627-1
QCBatchID: AS140627-1-2
Run ID: AS140627-1UR
Count Time: 1000 minutes

Final Aliquot: 10.0 g
Result Units: pCi/g
File Name: Spectrum #1

CASNO	Target Nuclide	Result +/- 2 s TPU	MDC	Requested MDC	Lab Qualifier
13966-29-5	U-234	0.0033 +/- 0.0021	0.0023	0.1	B3
15117-96-1	U-235	0.0009 +/- 0.0015	0.0008	0.1	B3
7440-61-1	U-238	0.0010 +/- 0.0012	0.0007	0.1	B3

Chemical Yield Summary

Carrier/Tracer	Amount Added	Result	Units	Yield	Control Limits	Flag
U-232	0.4244	0.247	pCi/g	58.1	30 - 110 %	

Comments:

Qualifiers/Flags:

U - Result is less than the sample specific MDC.

Y1 - Chemical Yield is in control at 100-110%. Quantitative Yield is assumed.

Y2 - Chemical Yield outside default limits.

LT - Result is less than Requested MDC, greater than sample specific MDC.

Abbreviations:

TPU - Total Propagated Uncertainty

MDC - Minimum Detectable Concentration

BDL - Below Detection Limit

M - Requested MDC not met.

B - Analyte concentration greater than MDC.

B3 - Analyte concentration greater than MDC but less than Requested MDC.

Data Package ID: *UR1406252-1*

Isotopic Uranium By Alpha Spectroscopy

PAI 714 Rev 12

Laboratory Control Sample(s)

Lab Name: ALS Environmental -- FC
Work Order Number: 1406252
Client Name: Tidewater, Inc.
ClientProject ID: Great Kills Park

Lab ID: AS140627-1LCS

Sample Matrix: VEGETATION
Prep SOP: PAI 778 Rev 14
Date Collected: 27-Jun-14
Date Prepared: 27-Jun-14
Date Analyzed: 02-Jul-14

Prep Batch: AS140627-1
QCBatchID: AS140627-1-2
Run ID: AS140627-1UR
Count Time: 1000 minutes

Final Aliquot: 10.0 g
Result Units: pCi/g
File Name: Spectrum #1

CASNO	Target Nuclide	Results +/- 2s TPU	MDC	Spike Added	% Rec	Control Limits	Lab Qualifier
13966-29-5	U-234	0.421 +/- 0.066	0.002	0.4416	95.4	82 - 122	P
7440-61-1	U-238	0.447 +/- 0.070	0.001	0.4585	97.4	82 - 122	P

Chemical Yield Summary

Carrier/Tracer	Amount Added	Result	Units	Yield	Control Limits	Flag
U-232	0.4244	0.411	pCi/g	96.8	30 - 110 %	

Comments:

Qualifiers/Flags:

U - Result is less than the sample specific MDC.
LT - Result is less than Requested MDC, greater than sample specific MDC.
Y1 - Chemical Yield is in control at 100-110%. Quantitative Yield is assumed.
Y2 - Chemical Yield outside default limits.
L - LCS Recovery below lower control limit.
H - LCS Recovery above upper control limit.
P - LCS Recovery within control limits.
M - The requested MDC was not met.
M3 - The requested MDC was not met, but thereported activity is greater than the reported MDC.

Abbreviations:

TPU - Total Propagated Uncertainty
MDC - Minimum Detectable Concentration

Data Package ID: *UR1406252-1*

Section 4

INDIVIDUAL SAMPLE RESULTS

4

Isotopic Uranium By Alpha Spectroscopy

PAI 714 Rev 12

Sample Results

Lab Name: ALS Environmental -- FC
Work Order Number: 1406252
Client Name: Tidewater, Inc.
ClientProject ID: Great Kills Park

Field ID: GKP-Sa3-VS-09
Lab ID: 1406252-9

Sample Matrix: VEGETATION
Prep SOP: PAI 778 Rev 14
Date Collected: 06-May-14
Date Prepared: 27-Jun-14
Date Analyzed: 02-Jul-14

Prep Batch: AS140627-1
QCBatchID: AS140627-1-2
Run ID: AS140627-1UR
Count Time: 1000 minutes
Report Basis: As Received

Final Aliquot: 10.2 g
Prep Basis: As Received
Moisture(%): NA
Result Units: pCi/g
File Name: Spectrum #1

CASNO	Target Nuclide	Result +/- 2 s TPU	MDC	Requested MDC	Lab Qualifier
13966-29-5	U-234	0.0064 +/- 0.0024	0.0016	0.1	LT
15117-96-1	U-235	0.00040 +/- 0.00099	0.00149	0.1	U
7440-61-1	U-238	0.0034 +/- 0.0018	0.0018	0.1	LT

Chemical Yield Summary

Carrier/Tracer	Amount Added	Result	Units	Yield	Control Limits	Flag
U-232	0.4165	0.347	pCi/g	83.2	30 - 110 %	

Comments:

Qualifiers/Flags:

U - Result is less than the sample specific MDC.

Y1 - Chemical Yield is in control at 100-110%. Quantitative Yield is assumed.

Y2 - Chemical Yield outside default limits.

LT - Result is less than Requested MDC, greater than sample specific MDC.

M3 - The requested MDC was not met, but the reported activity is greater than the reported MDC.

M - The requested MDC was not met.

Abbreviations:

TPU - Total Propagated Uncertainty

MDC - Minimum Detectable Concentration

BDL - Below Detection Limit

Data Package ID: *UR1406252-1*

Isotopic Uranium By Alpha Spectroscopy

PAI 714 Rev 12

Sample Results

Lab Name: ALS Environmental -- FC
Work Order Number: 1406252
Client Name: Tidewater, Inc.
ClientProject ID: Great Kills Park

Field ID: GKP-Sa3-RS-10
Lab ID: 1406252-10

Sample Matrix: VEGETATION
Prep SOP: PAI 778 Rev 14
Date Collected: 06-May-14
Date Prepared: 27-Jun-14
Date Analyzed: 02-Jul-14

Prep Batch: AS140627-1
QCBatchID: AS140627-1-2
Run ID: AS140627-1UR
Count Time: 1000 minutes
Report Basis: As Received

Final Aliquot: 10.0 g
Prep Basis: As Received
Moisture(%): NA
Result Units: pCi/g
File Name: Spectrum #1

CASNO	Target Nuclide	Result +/- 2 s TPU	MDC	Requested MDC	Lab Qualifier
13966-29-5	U-234	0.630 +/- 0.099	0	0.1	
15117-96-1	U-235	0.0330 +/- 0.0072	0.0005	0.1	LT
7440-61-1	U-238	0.65 +/- 0.10	0	0.1	

Chemical Yield Summary

Carrier/Tracer	Amount Added	Result	Units	Yield	Control Limits	Flag
U-232	0.4237	0.368	pCi/g	86.9	30 - 110 %	

Comments:

Qualifiers/Flags:

U - Result is less than the sample specific MDC.

Y1 - Chemical Yield is in control at 100-110%. Quantitative Yield is assumed.

Y2 - Chemical Yield outside default limits.

LT - Result is less than Requested MDC, greater than sample specific MDC.

M3 - The requested MDC was not met, but the reported activity is greater than the reported MDC.

M - The requested MDC was not met.

Abbreviations:

TPU - Total Propagated Uncertainty

MDC - Minimum Detectable Concentration

BDL - Below Detection Limit

Data Package ID: *UR1406252-1*

Isotopic Uranium By Alpha Spectroscopy

PAI 714 Rev 12

Sample Results

Lab Name: ALS Environmental -- FC
Work Order Number: 1406252
Client Name: Tidewater, Inc.
ClientProject ID: Great Kills Park

Field ID: GKP-Sa5-VS-17
Lab ID: 1406252-17

Sample Matrix: VEGETATION
Prep SOP: PAI 778 Rev 14
Date Collected: 06-May-14
Date Prepared: 27-Jun-14
Date Analyzed: 02-Jul-14

Prep Batch: AS140627-1
QCBatchID: AS140627-1-2
Run ID: AS140627-1UR
Count Time: 1000 minutes
Report Basis: As Received

Final Aliquot: 10.3 g
Prep Basis: As Received
Moisture(%): NA
Result Units: pCi/g
File Name: Spectrum #1

CASNO	Target Nuclide	Result +/- 2 s TPU	MDC	Requested MDC	Lab Qualifier
13966-29-5	U-234	0.0036 +/- 0.0017	0.0012	0.1	LT
15117-96-1	U-235	0 +/- 0.00091	0.00200	0.1	U
7440-61-1	U-238	0.0027 +/- 0.0014	0.0012	0.1	LT

Chemical Yield Summary

Carrier/Tracer	Amount Added	Result	Units	Yield	Control Limits	Flag
U-232	0.4112	0.366	pCi/g	89.0	30 - 110 %	

Comments:

Qualifiers/Flags:

U - Result is less than the sample specific MDC.

Y1 - Chemical Yield is in control at 100-110%. Quantitative Yield is assumed.

Y2 - Chemical Yield outside default limits.

LT - Result is less than Requested MDC, greater than sample specific MDC.

M3 - The requested MDC was not met, but the reported activity is greater than the reported MDC.

M - The requested MDC was not met.

Abbreviations:

TPU - Total Propagated Uncertainty

MDC - Minimum Detectable Concentration

BDL - Below Detection Limit

Data Package ID: *UR1406252-1*

Isotopic Uranium By Alpha Spectroscopy

PAI 714 Rev 12

Sample Results

Lab Name: ALS Environmental -- FC
Work Order Number: 1406252
Client Name: Tidewater, Inc.
ClientProject ID: Great Kills Park

Field ID: GKP-Sa5-RS-18
Lab ID: 1406252-18

Sample Matrix: VEGETATION
Prep SOP: PAI 778 Rev 14
Date Collected: 06-May-14
Date Prepared: 27-Jun-14
Date Analyzed: 02-Jul-14

Prep Batch: AS140627-1
QCBatchID: AS140627-1-2
Run ID: AS140627-1UR
Count Time: 1000 minutes
Report Basis: As Received

Final Aliquot: 10.2 g
Prep Basis: As Received
Moisture(%): NA
Result Units: pCi/g
File Name: Spectrum #1

CASNO	Target Nuclide	Result +/- 2 s TPU	MDC	Requested MDC	Lab Qualifier
13966-29-5	U-234	0.112 +/- 0.020	0.002	0.1	
15117-96-1	U-235	0.0055 +/- 0.0024	0.0016	0.1	LT
7440-61-1	U-238	0.103 +/- 0.018	0.002	0.1	

Chemical Yield Summary

Carrier/Tracer	Amount Added	Result	Units	Yield	Control Limits	Flag
U-232	0.4160	0.326	pCi/g	78.5	30 - 110 %	

Comments:

Qualifiers/Flags:

U - Result is less than the sample specific MDC.

Y1 - Chemical Yield is in control at 100-110%. Quantitative Yield is assumed.

Y2 - Chemical Yield outside default limits.

LT - Result is less than Requested MDC, greater than sample specific MDC.

M3 - The requested MDC was not met, but the reported activity is greater than the reported MDC.

M - The requested MDC was not met.

Abbreviations:

TPU - Total Propagated Uncertainty

MDC - Minimum Detectable Concentration

BDL - Below Detection Limit

Data Package ID: *UR1406252-1*

RADIATION DOSE ASSESSMENT FOR THE FIRE FIGHTER, MAINTENANCE WORKER, PARK RANGER AND MEMBER OF THE PUBLIC AT GREAT KILLS PARK

Appendix B

RESRAD Runs

Summary of Parameters Used in RESRAD Fire Fighter

Menu	Parameter	Parameter Name	Default	External Gamma User Input	Ingestion User Input	Inhalation User Input
R011	Area of contaminated zone (m**2)	Area	1.00E+04	2.00E+02	2.00E+02	2.00E+02
R011	Thickness of Contaminated Zone (m)	Thick0	2.00E+00	1.50E-01	1.50E-01	1.50E-01
R011	Basic Radiation Dose Limit (mrem/yr)	BRDL	3.00E+01	2.50E+01	2.50E+01	2.50E+01
R017	Inhalation rate (m**3/yr)	INHALR	8.40E+03	not used	not used	2.00E+04
R017	Mass Loading for inhalation (g/m**3)	MLINH	1.00E-04	not used	not used	default
R017	Shielding Factor, Inhalation	SHF3	4.00E-01	not used	not used	default
R017	Fraction of time spent indoors	FIND	5.00E-01	0.00E+00	0.00E+00	0.00E+00
R017	Fraction of time spent outdoors (onsite)	FOTD	2.50E-01	7.00E-03	7.00E-03	7.00E-03

Summary of Pathway Selections

1-- external Gamma	active	suppressed	suppressed
2-- inhalation (w/o radon)	suppressed	suppressed	active
3--plant ingestion	suppressed	suppressed	suppressed
4--meat ingestion	suppressed	suppressed	suppressed
5--milk ingestion	suppressed	suppressed	suppressed
6--aquatic foods	suppressed	suppressed	suppressed
7--drinking water	suppressed	suppressed	suppressed
8--soil ingestion	suppressed	active	suppressed
9--radon	active	active	active

Summary of Parameters Used in RESRAD Maintenance Worker

Menu	Parameter	Parameter Name	Default	External Gamma User Input	Ingestion User Input	Inhalation User Input
R011	Area of contaminated zone (m**2)	Area	1.00E+04	2.00E+02	2.00E+02	2.00E+02
R011	Thickness of Contaminated Zone (m)	Thick0	2.00E+00	1.50E-01	1.50E-01	1.50E-01
R011	Basic Radiation Dose Limit (mrem/yr)	BRDL	3.00E+01	2.50E+01	2.50E+01	2.50E+01
R017	Inhalation rate (m**3/yr)	INHALR	8.40E+03	not used	not used	6.84E+03
R017	Mass Loading for inhalation (g/m**3)	MLINH	1.00E-04	not used	not used	default
R017	Shielding Factor, Inhalation	SHF3	4.00E-01	not used	not used	default
R017	Fraction of time spent indoors	FIND	5.00E-01	0.00E+00	0.00E+00	0.00E+00
R017	Fraction of time spent outdoors (onsite)	FOTD	2.50E-01	2.28E-01	2.28E-01	2.28E-01

Summary of Pathway Selections

1-- external Gamma	active	suppressed	suppressed
2-- inhalation (w/o radon)	suppressed	suppressed	active
3--plant ingestion	suppressed	suppressed	suppressed
4--meat ingestion	suppressed	suppressed	suppressed
5--milk ingestion	suppressed	suppressed	suppressed
6--aquatic foods	suppressed	suppressed	suppressed
7--drinking water	suppressed	suppressed	suppressed
8--soil ingestion	suppressed	active	suppressed
9--radon	active	active	active

Summary of Parameters Used in RESRAD Park Ranger

Menu	Parameter	Parameter Name	Default	External Gamma User Input	Ingestion User Input	Inhalation User Input
R011	Area of contaminated zone (m**2)	Area	1.00E+04	2.00E+02	2.00E+02	2.00E+02
R011	Thickness of Contaminated Zone (m)	Thick0	2.00E+00	1.50E-01	1.50E-01	1.50E-01
R011	Basic Radiation Dose Limit (mrem/yr)	BRDL	3.00E+01	2.50E+01	2.50E+01	2.50E+01
R017	Inhalation rate (m**3/yr)	INHALR	8.40E+03	not used	not used	default
R017	Mass Loading for inhalation (g/m**3)	MLINH	1.00E-04	not used	not used	default
R017	Shielding Factor, Inhalation	SHF3	4.00E-01	not used	not used	default
R017	Fraction of time spent indoors	FIND	5.00E-01	0.00E+00	0.00E+00	0.00E+00
R017	Fraction of time spent outdoors (onsite)	FOTD	2.50E-01	2.28E-02	2.28E-01	2.28E-01

Summary of Pathway Selections

1-- external Gamma	active	suppressed	suppressed
2-- inhalation (w/o radon)	suppressed	suppressed	active
3--plant ingestion	suppressed	suppressed	suppressed
4--meat ingestion	suppressed	suppressed	suppressed
5--milk ingestion	suppressed	suppressed	suppressed
6--aquatic foods	suppressed	suppressed	suppressed
7--drinking water	suppressed	suppressed	suppressed
8--soil ingestion	suppressed	active	suppressed
9--radon	active	active	active

Summary of Parameters Used in RESRAD Recreational Visitor

Menu	Parameter	Parameter Name	Default	External Gamma User Input	Ingestion User Input	Inhalation User Input
R011	Area of contaminated zone (m**2)	Area	1.00E+04	2.00E+02	2.00E+02	2.00E+02
R011	Thickness of Contaminated Zone (m)	Thick0	2.00E+00	1.50E-01	1.50E-01	1.50E-01
R011	Basic Radiation Dose Limit (mrem/yr)	BRDL	3.00E+01	2.50E+01	2.50E+01	2.50E+01
R017	Inhalation rate (m**3/yr)	INHALR	8.40E+03	not used	not used	2.00E+04
R017	Mass Loading for inhalation (g/m**3)	MLINH	1.00E-04	not used	not used	default
R017	Shielding Factor, Inhalation	SHF3	4.00E-01	not used	not used	default
R017	Fraction of time spent indoors	FIND	5.00E-01	0.00E+00	0.00E+00	0.00E+00
R017	Fraction of time spent outdoors (onsite)	FOTD	2.50E-01	2.28E-02	2.28E-01	2.28E-01

Summary of Pathway Selections

1-- external Gamma	active	suppressed	suppressed
2-- inhalation (w/o radon)	suppressed	suppressed	active
3--plant ingestion	suppressed	suppressed	suppressed
4--meat ingestion	suppressed	suppressed	suppressed
5--milk ingestion	suppressed	suppressed	suppressed
6--aquatic foods	suppressed	suppressed	suppressed
7--drinking water	suppressed	suppressed	suppressed
8--soil ingestion	suppressed	active	suppressed
9--radon	active	active	active

ummary : GKP Fire Fighter - External
ile : C:\USERS\CLAUDE\DOCUMENTS\0 GKP DOSE\RESRAD CW\GKP FIRE FIGHTER- EXTERNAL.RAD

Table of Contents

Part I: Mixture Sums and Single Radionuclide Guidelines

ummary : GKP Fire Ighter - External
ile : C:\USERS\CLAUDE\DOCUMENTS\0 GKP DOSE\RESRAD CW\GKP FIRE FIGHTER- EXTERNAL.RAD

Dose Conversion Factor (and Related) Parameter Summary

Dose Library: FGR 11

enu	Parameter	Current Value#	Base Case*	Parameter Name
-1	DCF's for external ground radiation, (mrem/yr)/(pCi/g)			
-1	Ac-227 (Source: FGR 12)	4.951E-04	4.951E-04	DCF1(1)
-1	Ac-228 (Source: FGR 12)	5.978E+00	5.978E+00	DCF1(2)
-1	At-218 (Source: FGR 12)	5.847E-03	5.847E-03	DCF1(3)
-1	At-219 (Source: no data)	0.000E+00	-2.000E+00	DCF1(4)
-1	Bi-210 (Source: FGR 12)	3.606E-03	3.606E-03	DCF1(5)
-1	Bi-211 (Source: FGR 12)	2.559E-01	2.559E-01	DCF1(6)
-1	Bi-212 (Source: FGR 12)	1.171E+00	1.171E+00	DCF1(7)
-1	Bi-214 (Source: FGR 12)	9.808E+00	9.808E+00	DCF1(8)
-1	Bi-215 (Source: no data)	0.000E+00	-2.000E+00	DCF1(9)
-1	Fr-223 (Source: FGR 12)	1.980E-01	1.980E-01	DCF1(10)
-1	Hg-206 (Source: no data)	0.000E+00	-2.000E+00	DCF1(11)
-1	Pa-231 (Source: FGR 12)	1.906E-01	1.906E-01	DCF1(12)
-1	Pa-234 (Source: FGR 12)	1.155E+01	1.155E+01	DCF1(13)
-1	Pa-234m (Source: FGR 12)	8.967E-02	8.967E-02	DCF1(14)
-1	Pb-210 (Source: FGR 12)	2.447E-03	2.447E-03	DCF1(15)
-1	Pb-211 (Source: FGR 12)	3.064E-01	3.064E-01	DCF1(16)
-1	Pb-212 (Source: FGR 12)	7.043E-01	7.043E-01	DCF1(17)
-1	Pb-214 (Source: FGR 12)	1.341E+00	1.341E+00	DCF1(18)
-1	Po-210 (Source: FGR 12)	5.231E-05	5.231E-05	DCF1(19)
-1	Po-211 (Source: FGR 12)	4.764E-02	4.764E-02	DCF1(20)
-1	Po-212 (Source: FGR 12)	0.000E+00	0.000E+00	DCF1(21)
-1	Po-214 (Source: FGR 12)	5.138E-04	5.138E-04	DCF1(22)
-1	Po-215 (Source: FGR 12)	1.016E-03	1.016E-03	DCF1(23)
-1	Po-216 (Source: FGR 12)	1.042E-04	1.042E-04	DCF1(24)
-1	Po-218 (Source: FGR 12)	5.642E-05	5.642E-05	DCF1(25)
-1	Ra-223 (Source: FGR 12)	6.034E-01	6.034E-01	DCF1(26)
-1	Ra-224 (Source: FGR 12)	5.119E-02	5.119E-02	DCF1(27)
-1	Ra-226 (Source: FGR 12)	3.176E-02	3.176E-02	DCF1(28)
-1	Ra-228 (Source: FGR 12)	0.000E+00	0.000E+00	DCF1(29)
-1	Rn-218 (Source: FGR 12)	4.540E-03	4.540E-03	DCF1(30)
-1	Rn-219 (Source: FGR 12)	3.083E-01	3.083E-01	DCF1(31)
-1	Rn-220 (Source: FGR 12)	2.298E-03	2.298E-03	DCF1(32)
-1	Rn-222 (Source: FGR 12)	2.354E-03	2.354E-03	DCF1(33)
-1	Th-227 (Source: FGR 12)	5.212E-01	5.212E-01	DCF1(34)
-1	Th-228 (Source: FGR 12)	7.940E-03	7.940E-03	DCF1(35)
-1	Th-230 (Source: FGR 12)	1.209E-03	1.209E-03	DCF1(36)
-1	Th-231 (Source: FGR 12)	3.643E-02	3.643E-02	DCF1(37)
-1	Th-232 (Source: FGR 12)	5.212E-04	5.212E-04	DCF1(38)
-1	Th-234 (Source: FGR 12)	2.410E-02	2.410E-02	DCF1(39)
-1	Tl-206 (Source: FGR 12)	7.697E-03	7.697E-03	DCF1(40)
-1	Tl-207 (Source: FGR 12)	1.980E-02	1.980E-02	DCF1(41)
-1	Tl-208 (Source: FGR 12)	2.298E+01	2.298E+01	DCF1(42)
-1	Tl-210 (Source: no data)	0.000E+00	-2.000E+00	DCF1(43)
-1	U-234 (Source: FGR 12)	4.017E-04	4.017E-04	DCF1(44)
-1	U-235 (Source: FGR 12)	7.211E-01	7.211E-01	DCF1(45)
-1	U-238 (Source: FGR 12)	1.031E-04	1.031E-04	DCF1(46)
-1	Dose conversion factors for inhalation, mrem/pCi:			
-1	Ac-227+D	6.724E+00	6.700E+00	DCF2(1)

Dose Conversion Factor (and Related) Parameter Summary (continued)
Dose Library: FGR 11

enu	Parameter	Current Value#	Base Case*	Parameter Name
-1	Ac-227+D1	6.724E+00	6.700E+00	DCF2(2)
-1	Ac-227+D2	6.708E+00	6.700E+00	DCF2(3)
-1	Ac-227+D3	6.708E+00	6.700E+00	DCF2(4)
-1	Ac-227+D4	6.700E+00	6.700E+00	DCF2(5)
-1	Ac-227+D5	6.700E+00	6.700E+00	DCF2(6)
-1	Pa-231	1.280E+00	1.280E+00	DCF2(7)
-1	Pb-210+D	2.320E-02	1.360E-02	DCF2(13)
-1	Pb-210+D1	1.380E-02	1.360E-02	DCF2(14)
-1	Pb-210+D2	1.360E-02	1.360E-02	DCF2(15)
-1	Ra-226+D	8.594E-03	8.580E-03	DCF2(16)
-1	Ra-226+D1	8.594E-03	8.580E-03	DCF2(19)
-1	Ra-226+D2	8.587E-03	8.580E-03	DCF2(22)
-1	Ra-226+D3	8.587E-03	8.580E-03	DCF2(25)
-1	Ra-226+D4	8.580E-03	8.580E-03	DCF2(28)
-1	Ra-228+D	5.078E-03	4.770E-03	DCF2(31)
-1	Th-228+D	3.454E-01	3.420E-01	DCF2(32)
-1	Th-230	3.260E-01	3.260E-01	DCF2(33)
-1	Th-232	1.640E+00	1.640E+00	DCF2(48)
-1	U-234	1.320E-01	1.320E-01	DCF2(49)
-1	U-235+D	1.230E-01	1.230E-01	DCF2(64)
-1	U-238	1.180E-01	1.180E-01	DCF2(70)
-1	U-238+D	1.180E-01	1.180E-01	DCF2(71)
-1	U-238+D1	1.180E-01	1.180E-01	DCF2(86)
-1	Dose conversion factors for ingestion, mrem/pCi:			
-1	Ac-227+D	1.480E-02	1.410E-02	DCF3(1)
-1	Ac-227+D1	1.480E-02	1.410E-02	DCF3(2)
-1	Ac-227+D2	1.477E-02	1.410E-02	DCF3(3)
-1	Ac-227+D3	1.477E-02	1.410E-02	DCF3(4)
-1	Ac-227+D4	1.411E-02	1.410E-02	DCF3(5)
-1	Ac-227+D5	1.411E-02	1.410E-02	DCF3(6)
-1	Pa-231	1.060E-02	1.060E-02	DCF3(7)
-1	Pb-210+D	7.276E-03	5.370E-03	DCF3(13)
-1	Pb-210+D1	5.376E-03	5.370E-03	DCF3(14)
-1	Pb-210+D2	5.370E-03	5.370E-03	DCF3(15)
-1	Ra-226+D	1.321E-03	1.320E-03	DCF3(16)
-1	Ra-226+D1	1.321E-03	1.320E-03	DCF3(19)
-1	Ra-226+D2	1.320E-03	1.320E-03	DCF3(22)
-1	Ra-226+D3	1.320E-03	1.320E-03	DCF3(25)
-1	Ra-226+D4	1.320E-03	1.320E-03	DCF3(28)
-1	Ra-228+D	1.442E-03	1.440E-03	DCF3(31)
-1	Th-228+D	8.086E-04	3.960E-04	DCF3(32)
-1	Th-230	5.480E-04	5.480E-04	DCF3(33)
-1	Th-232	2.730E-03	2.730E-03	DCF3(48)
-1	U-234	2.830E-04	2.830E-04	DCF3(49)
-1	U-235+D	2.673E-04	2.660E-04	DCF3(64)
-1	U-238	2.550E-04	2.550E-04	DCF3(70)
-1	U-238+D	2.709E-04	2.550E-04	DCF3(71)
-1	U-238+D1	2.687E-04	2.550E-04	DCF3(86)

Dose Conversion Factor (and Related) Parameter Summary (continued)
Dose Library: FGR 11

enu	Parameter	Current Value#	Base Case*	Parameter Name
-34	Food transfer factors:			
-34	Ac-227+D , plant/soil concentration ratio, dimensionless	2.500E-03	2.500E-03	RTF(1,1)
-34	Ac-227+D , beef/livestock-intake ratio, (pCi/kg)/(pCi/d)	2.000E-05	2.000E-05	RTF(1,2)
-34	Ac-227+D , milk/livestock-intake ratio, (pCi/L)/(pCi/d)	2.000E-05	2.000E-05	RTF(1,3)
-34				
-34	Ac-227+D1 , plant/soil concentration ratio, dimensionless	2.500E-03	2.500E-03	RTF(2,1)
-34	Ac-227+D1 , beef/livestock-intake ratio, (pCi/kg)/(pCi/d)	2.000E-05	2.000E-05	RTF(2,2)
-34	Ac-227+D1 , milk/livestock-intake ratio, (pCi/L)/(pCi/d)	2.000E-05	2.000E-05	RTF(2,3)
-34				
-34	Ac-227+D2 , plant/soil concentration ratio, dimensionless	2.500E-03	2.500E-03	RTF(3,1)
-34	Ac-227+D2 , beef/livestock-intake ratio, (pCi/kg)/(pCi/d)	2.000E-05	2.000E-05	RTF(3,2)
-34	Ac-227+D2 , milk/livestock-intake ratio, (pCi/L)/(pCi/d)	2.000E-05	2.000E-05	RTF(3,3)
-34				
-34	Ac-227+D3 , plant/soil concentration ratio, dimensionless	2.500E-03	2.500E-03	RTF(4,1)
-34	Ac-227+D3 , beef/livestock-intake ratio, (pCi/kg)/(pCi/d)	2.000E-05	2.000E-05	RTF(4,2)
-34	Ac-227+D3 , milk/livestock-intake ratio, (pCi/L)/(pCi/d)	2.000E-05	2.000E-05	RTF(4,3)
-34				
-34	Ac-227+D4 , plant/soil concentration ratio, dimensionless	2.500E-03	2.500E-03	RTF(5,1)
-34	Ac-227+D4 , beef/livestock-intake ratio, (pCi/kg)/(pCi/d)	2.000E-05	2.000E-05	RTF(5,2)
-34	Ac-227+D4 , milk/livestock-intake ratio, (pCi/L)/(pCi/d)	2.000E-05	2.000E-05	RTF(5,3)
-34				
-34	Ac-227+D5 , plant/soil concentration ratio, dimensionless	2.500E-03	2.500E-03	RTF(6,1)
-34	Ac-227+D5 , beef/livestock-intake ratio, (pCi/kg)/(pCi/d)	2.000E-05	2.000E-05	RTF(6,2)
-34	Ac-227+D5 , milk/livestock-intake ratio, (pCi/L)/(pCi/d)	2.000E-05	2.000E-05	RTF(6,3)
-34				
-34	Pa-231 , plant/soil concentration ratio, dimensionless	1.000E-02	1.000E-02	RTF(7,1)
-34	Pa-231 , beef/livestock-intake ratio, (pCi/kg)/(pCi/d)	5.000E-03	5.000E-03	RTF(7,2)
-34	Pa-231 , milk/livestock-intake ratio, (pCi/L)/(pCi/d)	5.000E-06	5.000E-06	RTF(7,3)
-34				
-34	Pb-210+D , plant/soil concentration ratio, dimensionless	1.000E-02	1.000E-02	RTF(13,1)
-34	Pb-210+D , beef/livestock-intake ratio, (pCi/kg)/(pCi/d)	8.000E-04	8.000E-04	RTF(13,2)
-34	Pb-210+D , milk/livestock-intake ratio, (pCi/L)/(pCi/d)	3.000E-04	3.000E-04	RTF(13,3)
-34				
-34	Pb-210+D1 , plant/soil concentration ratio, dimensionless	1.000E-02	1.000E-02	RTF(14,1)
-34	Pb-210+D1 , beef/livestock-intake ratio, (pCi/kg)/(pCi/d)	8.000E-04	8.000E-04	RTF(14,2)
-34	Pb-210+D1 , milk/livestock-intake ratio, (pCi/L)/(pCi/d)	3.000E-04	3.000E-04	RTF(14,3)
-34				
-34	Pb-210+D2 , plant/soil concentration ratio, dimensionless	1.000E-02	1.000E-02	RTF(15,1)
-34	Pb-210+D2 , beef/livestock-intake ratio, (pCi/kg)/(pCi/d)	8.000E-04	8.000E-04	RTF(15,2)
-34	Pb-210+D2 , milk/livestock-intake ratio, (pCi/L)/(pCi/d)	3.000E-04	3.000E-04	RTF(15,3)
-34				
-34	Ra-226+D , plant/soil concentration ratio, dimensionless	4.000E-02	4.000E-02	RTF(16,1)
-34	Ra-226+D , beef/livestock-intake ratio, (pCi/kg)/(pCi/d)	1.000E-03	1.000E-03	RTF(16,2)
-34	Ra-226+D , milk/livestock-intake ratio, (pCi/L)/(pCi/d)	1.000E-03	1.000E-03	RTF(16,3)
-34				
-34	Ra-226+D1 , plant/soil concentration ratio, dimensionless	4.000E-02	4.000E-02	RTF(19,1)
-34	Ra-226+D1 , beef/livestock-intake ratio, (pCi/kg)/(pCi/d)	1.000E-03	1.000E-03	RTF(19,2)
-34	Ra-226+D1 , milk/livestock-intake ratio, (pCi/L)/(pCi/d)	1.000E-03	1.000E-03	RTF(19,3)
-34				

Dose Conversion Factor (and Related) Parameter Summary (continued)

Dose Library: FGR 11

enu	Parameter	Current Value#	Base Case*	Parameter Name
-34	Ra-226+D2 , plant/soil concentration ratio, dimensionless	4.000E-02	4.000E-02	RTF(22,1)
-34	Ra-226+D2 , beef/livestock-intake ratio, (pCi/kg)/(pCi/d)	1.000E-03	1.000E-03	RTF(22,2)
-34	Ra-226+D2 , milk/livestock-intake ratio, (pCi/L)/(pCi/d)	1.000E-03	1.000E-03	RTF(22,3)
-34				
-34	Ra-226+D3 , plant/soil concentration ratio, dimensionless	4.000E-02	4.000E-02	RTF(25,1)
-34	Ra-226+D3 , beef/livestock-intake ratio, (pCi/kg)/(pCi/d)	1.000E-03	1.000E-03	RTF(25,2)
-34	Ra-226+D3 , milk/livestock-intake ratio, (pCi/L)/(pCi/d)	1.000E-03	1.000E-03	RTF(25,3)
-34				
-34	Ra-226+D4 , plant/soil concentration ratio, dimensionless	4.000E-02	4.000E-02	RTF(28,1)
-34	Ra-226+D4 , beef/livestock-intake ratio, (pCi/kg)/(pCi/d)	1.000E-03	1.000E-03	RTF(28,2)
-34	Ra-226+D4 , milk/livestock-intake ratio, (pCi/L)/(pCi/d)	1.000E-03	1.000E-03	RTF(28,3)
-34				
-34	Ra-228+D , plant/soil concentration ratio, dimensionless	4.000E-02	4.000E-02	RTF(31,1)
-34	Ra-228+D , beef/livestock-intake ratio, (pCi/kg)/(pCi/d)	1.000E-03	1.000E-03	RTF(31,2)
-34	Ra-228+D , milk/livestock-intake ratio, (pCi/L)/(pCi/d)	1.000E-03	1.000E-03	RTF(31,3)
-34				
-34	Th-228+D , plant/soil concentration ratio, dimensionless	1.000E-03	1.000E-03	RTF(32,1)
-34	Th-228+D , beef/livestock-intake ratio, (pCi/kg)/(pCi/d)	1.000E-04	1.000E-04	RTF(32,2)
-34	Th-228+D , milk/livestock-intake ratio, (pCi/L)/(pCi/d)	5.000E-06	5.000E-06	RTF(32,3)
-34				
-34	Th-230 , plant/soil concentration ratio, dimensionless	1.000E-03	1.000E-03	RTF(33,1)
-34	Th-230 , beef/livestock-intake ratio, (pCi/kg)/(pCi/d)	1.000E-04	1.000E-04	RTF(33,2)
-34	Th-230 , milk/livestock-intake ratio, (pCi/L)/(pCi/d)	5.000E-06	5.000E-06	RTF(33,3)
-34				
-34	Th-232 , plant/soil concentration ratio, dimensionless	1.000E-03	1.000E-03	RTF(48,1)
-34	Th-232 , beef/livestock-intake ratio, (pCi/kg)/(pCi/d)	1.000E-04	1.000E-04	RTF(48,2)
-34	Th-232 , milk/livestock-intake ratio, (pCi/L)/(pCi/d)	5.000E-06	5.000E-06	RTF(48,3)
-34				
-34	U-234 , plant/soil concentration ratio, dimensionless	2.500E-03	2.500E-03	RTF(49,1)
-34	U-234 , beef/livestock-intake ratio, (pCi/kg)/(pCi/d)	3.400E-04	3.400E-04	RTF(49,2)
-34	U-234 , milk/livestock-intake ratio, (pCi/L)/(pCi/d)	6.000E-04	6.000E-04	RTF(49,3)
-34				
-34	U-235+D , plant/soil concentration ratio, dimensionless	2.500E-03	2.500E-03	RTF(64,1)
-34	U-235+D , beef/livestock-intake ratio, (pCi/kg)/(pCi/d)	3.400E-04	3.400E-04	RTF(64,2)
-34	U-235+D , milk/livestock-intake ratio, (pCi/L)/(pCi/d)	6.000E-04	6.000E-04	RTF(64,3)
-34				
-34	U-238 , plant/soil concentration ratio, dimensionless	2.500E-03	2.500E-03	RTF(70,1)
-34	U-238 , beef/livestock-intake ratio, (pCi/kg)/(pCi/d)	3.400E-04	3.400E-04	RTF(70,2)
-34	U-238 , milk/livestock-intake ratio, (pCi/L)/(pCi/d)	6.000E-04	6.000E-04	RTF(70,3)
-34				
-34	U-238+D , plant/soil concentration ratio, dimensionless	2.500E-03	2.500E-03	RTF(71,1)
-34	U-238+D , beef/livestock-intake ratio, (pCi/kg)/(pCi/d)	3.400E-04	3.400E-04	RTF(71,2)
-34	U-238+D , milk/livestock-intake ratio, (pCi/L)/(pCi/d)	6.000E-04	6.000E-04	RTF(71,3)
-34				
-34	U-238+D1 , plant/soil concentration ratio, dimensionless	2.500E-03	2.500E-03	RTF(86,1)
-34	U-238+D1 , beef/livestock-intake ratio, (pCi/kg)/(pCi/d)	3.400E-04	3.400E-04	RTF(86,2)
-34	U-238+D1 , milk/livestock-intake ratio, (pCi/L)/(pCi/d)	6.000E-04	6.000E-04	RTF(86,3)
-34				

Dose Conversion Factor (and Related) Parameter Summary (continued)
Dose Library: FGR 11

enu	Parameter	Current Value#	Base Case*	Parameter Name
-5	Bioaccumulation factors, fresh water, L/kg:			
-5	Ac-227+D , fish	1.500E+01	1.500E+01	BIOFAC(1,1)
-5	Ac-227+D , crustacea and mollusks	1.000E+03	1.000E+03	BIOFAC(1,2)
-5				
-5	Ac-227+D1 , fish	1.500E+01	1.500E+01	BIOFAC(2,1)
-5	Ac-227+D1 , crustacea and mollusks	1.000E+03	1.000E+03	BIOFAC(2,2)
-5				
-5	Ac-227+D2 , fish	1.500E+01	1.500E+01	BIOFAC(3,1)
-5	Ac-227+D2 , crustacea and mollusks	1.000E+03	1.000E+03	BIOFAC(3,2)
-5				
-5	Ac-227+D3 , fish	1.500E+01	1.500E+01	BIOFAC(4,1)
-5	Ac-227+D3 , crustacea and mollusks	1.000E+03	1.000E+03	BIOFAC(4,2)
-5				
-5	Ac-227+D4 , fish	1.500E+01	1.500E+01	BIOFAC(5,1)
-5	Ac-227+D4 , crustacea and mollusks	1.000E+03	1.000E+03	BIOFAC(5,2)
-5				
-5	Ac-227+D5 , fish	1.500E+01	1.500E+01	BIOFAC(6,1)
-5	Ac-227+D5 , crustacea and mollusks	1.000E+03	1.000E+03	BIOFAC(6,2)
-5				
-5	Pa-231 , fish	1.000E+01	1.000E+01	BIOFAC(7,1)
-5	Pa-231 , crustacea and mollusks	1.100E+02	1.100E+02	BIOFAC(7,2)
-5				
-5	Pb-210+D , fish	3.000E+02	3.000E+02	BIOFAC(13,1)
-5	Pb-210+D , crustacea and mollusks	1.000E+02	1.000E+02	BIOFAC(13,2)
-5				
-5	Pb-210+D1 , fish	3.000E+02	3.000E+02	BIOFAC(14,1)
-5	Pb-210+D1 , crustacea and mollusks	1.000E+02	1.000E+02	BIOFAC(14,2)
-5				
-5	Pb-210+D2 , fish	3.000E+02	3.000E+02	BIOFAC(15,1)
-5	Pb-210+D2 , crustacea and mollusks	1.000E+02	1.000E+02	BIOFAC(15,2)
-5				
-5	Ra-226+D , fish	5.000E+01	5.000E+01	BIOFAC(16,1)
-5	Ra-226+D , crustacea and mollusks	2.500E+02	2.500E+02	BIOFAC(16,2)
-5				
-5	Ra-226+D1 , fish	5.000E+01	5.000E+01	BIOFAC(19,1)
-5	Ra-226+D1 , crustacea and mollusks	2.500E+02	2.500E+02	BIOFAC(19,2)
-5				
-5	Ra-226+D2 , fish	5.000E+01	5.000E+01	BIOFAC(22,1)
-5	Ra-226+D2 , crustacea and mollusks	2.500E+02	2.500E+02	BIOFAC(22,2)
-5				
-5	Ra-226+D3 , fish	5.000E+01	5.000E+01	BIOFAC(25,1)
-5	Ra-226+D3 , crustacea and mollusks	2.500E+02	2.500E+02	BIOFAC(25,2)
-5				
-5	Ra-226+D4 , fish	5.000E+01	5.000E+01	BIOFAC(28,1)
-5	Ra-226+D4 , crustacea and mollusks	2.500E+02	2.500E+02	BIOFAC(28,2)
-5				
-5	Ra-228+D , fish	5.000E+01	5.000E+01	BIOFAC(31,1)
-5	Ra-228+D , crustacea and mollusks	2.500E+02	2.500E+02	BIOFAC(31,2)
-5				

ummary : GKP Fire Fighter - External
ile : C:\USERS\CLAUDE\DOCUMENTS\0 GKP DOSE\RESRAD CW\GKP FIRE FIGHTER- EXTERNAL.RAD

Dose Conversion Factor (and Related) Parameter Summary (continued)
Dose Library: FGR 11

enu	Parameter	Current Value#	Base Case*	Parameter Name
-5	Th-228+D , fish	1.000E+02	1.000E+02	BIOFAC(32,1)
-5	Th-228+D , crustacea and mollusks	5.000E+02	5.000E+02	BIOFAC(32,2)
-5				
-5	Th-230 , fish	1.000E+02	1.000E+02	BIOFAC(33,1)
-5	Th-230 , crustacea and mollusks	5.000E+02	5.000E+02	BIOFAC(33,2)
-5				
-5	Th-232 , fish	1.000E+02	1.000E+02	BIOFAC(48,1)
-5	Th-232 , crustacea and mollusks	5.000E+02	5.000E+02	BIOFAC(48,2)
-5				
-5	U-234 , fish	1.000E+01	1.000E+01	BIOFAC(49,1)
-5	U-234 , crustacea and mollusks	6.000E+01	6.000E+01	BIOFAC(49,2)
-5				
-5	U-235+D , fish	1.000E+01	1.000E+01	BIOFAC(64,1)
-5	U-235+D , crustacea and mollusks	6.000E+01	6.000E+01	BIOFAC(64,2)
-5				
-5	U-238 , fish	1.000E+01	1.000E+01	BIOFAC(70,1)
-5	U-238 , crustacea and mollusks	6.000E+01	6.000E+01	BIOFAC(70,2)
-5				
-5	U-238+D , fish	1.000E+01	1.000E+01	BIOFAC(71,1)
-5	U-238+D , crustacea and mollusks	6.000E+01	6.000E+01	BIOFAC(71,2)
-5				
-5	U-238+D1 , fish	1.000E+01	1.000E+01	BIOFAC(86,1)
-5	U-238+D1 , crustacea and mollusks	6.000E+01	6.000E+01	BIOFAC(86,2)
-5				

For DCF1(xxx) only, factors are for infinite depth & area. See ETFG table in Ground Pathway of Detailed Report.
Base Case means Default.Lib w/o Associate Nuclide contributions.

ummary : GKP Fire Fighter - External
ile : C:\USERS\CLAUDE\DOCUMENTS\0 GKP DOSE\RESRAD CW\GKP FIRE FIGHTER- EXTERNAL.RAD

Site-Specific Parameter Summary

enu	Parameter	User Input	Default	Used by RESRAD (If different from user input)	Parameter Name
011	Area of contaminated zone (m**2)	2.000E+02	1.000E+04	---	AREA
011	Thickness of contaminated zone (m)	1.500E-01	2.000E+00	---	THICK0
011	Fraction of contamination that is submerged	0.000E+00	0.000E+00	---	SUBMFRACT
011	Length parallel to aquifer flow (m)	1.000E+02	1.000E+02	---	LCZPAQ
011	Basic radiation dose limit (mrem/yr)	2.500E+01	3.000E+01	---	BRDL
011	Time since placement of material (yr)	0.000E+00	0.000E+00	---	TI
011	Times for calculations (yr)	1.000E+00	1.000E+00	---	T(2)
011	Times for calculations (yr)	3.000E+00	3.000E+00	---	T(3)
011	Times for calculations (yr)	1.000E+01	1.000E+01	---	T(4)
011	Times for calculations (yr)	3.000E+01	3.000E+01	---	T(5)
011	Times for calculations (yr)	1.000E+02	1.000E+02	---	T(6)
011	Times for calculations (yr)	3.000E+02	3.000E+02	---	T(7)
011	Times for calculations (yr)	1.000E+03	1.000E+03	---	T(8)
011	Times for calculations (yr)	not used	0.000E+00	---	T(9)
011	Times for calculations (yr)	not used	0.000E+00	---	T(10)
012	Initial principal radionuclide (pCi/g): Ra-226	3.650E+01	0.000E+00	---	S1(16)
012	Initial principal radionuclide (pCi/g): Th-232	2.400E+00	0.000E+00	---	S1(48)
012	Initial principal radionuclide (pCi/g): U-234	1.390E+01	0.000E+00	---	S1(49)
012	Initial principal radionuclide (pCi/g): U-235	8.400E-01	0.000E+00	---	S1(64)
012	Initial principal radionuclide (pCi/g): U-238	1.390E+01	0.000E+00	---	S1(70)
012	Concentration in groundwater (pCi/L): Ra-226	not used	0.000E+00	---	W1(16)
012	Concentration in groundwater (pCi/L): Th-232	not used	0.000E+00	---	W1(48)
012	Concentration in groundwater (pCi/L): U-234	not used	0.000E+00	---	W1(49)
012	Concentration in groundwater (pCi/L): U-235	not used	0.000E+00	---	W1(64)
012	Concentration in groundwater (pCi/L): U-238	not used	0.000E+00	---	W1(70)
013	Cover depth (m)	0.000E+00	0.000E+00	---	COVER0
013	Density of cover material (g/cm**3)	not used	1.500E+00	---	DENSCV
013	Cover depth erosion rate (m/yr)	not used	1.000E-03	---	VCV
013	Density of contaminated zone (g/cm**3)	1.500E+00	1.500E+00	---	DENSCZ
013	Contaminated zone erosion rate (m/yr)	1.000E-03	1.000E-03	---	VCZ
013	Contaminated zone total porosity	4.000E-01	4.000E-01	---	TPCZ
013	Contaminated zone field capacity	2.000E-01	2.000E-01	---	FCCZ
013	Contaminated zone hydraulic conductivity (m/yr)	1.000E+01	1.000E+01	---	HCCZ
013	Contaminated zone b parameter	5.300E+00	5.300E+00	---	BCZ
013	Average annual wind speed (m/sec)	2.000E+00	2.000E+00	---	WIND
013	Humidity in air (g/m**3)	not used	8.000E+00	---	HUMID
013	Evapotranspiration coefficient	5.000E-01	5.000E-01	---	EVAPTR
013	Precipitation (m/yr)	1.000E+00	1.000E+00	---	PRECIP
013	Irrigation (m/yr)	2.000E-01	2.000E-01	---	RI
013	Irrigation mode	overhead	overhead	---	IDITCH
013	Runoff coefficient	2.000E-01	2.000E-01	---	RUNOFF
013	Watershed area for nearby stream or pond (m**2)	1.000E+06	1.000E+06	---	WAREA
013	Accuracy for water/soil computations	1.000E-03	1.000E-03	---	EPS
014	Density of saturated zone (g/cm**3)	1.500E+00	1.500E+00	---	DENSAQ
014	Saturated zone total porosity	4.000E-01	4.000E-01	---	TPSZ
014	Saturated zone effective porosity	2.000E-01	2.000E-01	---	EPSZ
014	Saturated zone field capacity	2.000E-01	2.000E-01	---	FCSZ

Site-Specific Parameter Summary (continued)

enu	Parameter	User Input	Default	Used by RESRAD (If different from user input)	Parameter Name
014	Saturated zone hydraulic conductivity (m/yr)	1.000E+02	1.000E+02	---	HCSZ
014	Saturated zone hydraulic gradient	2.000E-02	2.000E-02	---	HGWT
014	Saturated zone b parameter	5.300E+00	5.300E+00	---	BSZ
014	Water table drop rate (m/yr)	1.000E-03	1.000E-03	---	VWT
014	Well pump intake depth (m below water table)	1.000E+01	1.000E+01	---	DWIBWT
014	Model: Nondispersion (ND) or Mass-Balance (MB)	ND	ND	---	MODEL
014	Well pumping rate (m**3/yr)	2.500E+02	2.500E+02	---	UW
015	Number of unsaturated zone strata	1	1	---	NS
015	Unsat. zone 1, thickness (m)	4.000E+00	4.000E+00	---	H(1)
015	Unsat. zone 1, soil density (g/cm**3)	1.500E+00	1.500E+00	---	DENSUZ(1)
015	Unsat. zone 1, total porosity	4.000E-01	4.000E-01	---	TPUZ(1)
015	Unsat. zone 1, effective porosity	2.000E-01	2.000E-01	---	EPUZ(1)
015	Unsat. zone 1, field capacity	2.000E-01	2.000E-01	---	FCUZ(1)
015	Unsat. zone 1, soil-specific b parameter	5.300E+00	5.300E+00	---	BUZ(1)
015	Unsat. zone 1, hydraulic conductivity (m/yr)	1.000E+01	1.000E+01	---	HCUZ(1)
016	Distribution coefficients for Ra-226				
016	Contaminated zone (cm**3/g)	7.000E+01	7.000E+01	---	DCNUCC(16)
016	Unsaturated zone 1 (cm**3/g)	7.000E+01	7.000E+01	---	DCNUCU(16,1)
016	Saturated zone (cm**3/g)	7.000E+01	7.000E+01	---	DCNUCS(16)
016	Leach rate (/yr)	0.000E+00	0.000E+00	3.165E-02	ALEACH(16)
016	Solubility constant	0.000E+00	0.000E+00	not used	SOLUBK(16)
016	Distribution coefficients for Th-232				
016	Contaminated zone (cm**3/g)	6.000E+04	6.000E+04	---	DCNUCC(48)
016	Unsaturated zone 1 (cm**3/g)	6.000E+04	6.000E+04	---	DCNUCU(48,1)
016	Saturated zone (cm**3/g)	6.000E+04	6.000E+04	---	DCNUCS(48)
016	Leach rate (/yr)	0.000E+00	0.000E+00	3.704E-05	ALEACH(48)
016	Solubility constant	0.000E+00	0.000E+00	not used	SOLUBK(48)
016	Distribution coefficients for U-234				
016	Contaminated zone (cm**3/g)	5.000E+01	5.000E+01	---	DCNUCC(49)
016	Unsaturated zone 1 (cm**3/g)	5.000E+01	5.000E+01	---	DCNUCU(49,1)
016	Saturated zone (cm**3/g)	5.000E+01	5.000E+01	---	DCNUCS(49)
016	Leach rate (/yr)	0.000E+00	0.000E+00	4.426E-02	ALEACH(49)
016	Solubility constant	0.000E+00	0.000E+00	not used	SOLUBK(49)
016	Distribution coefficients for U-235				
016	Contaminated zone (cm**3/g)	5.000E+01	5.000E+01	---	DCNUCC(64)
016	Unsaturated zone 1 (cm**3/g)	5.000E+01	5.000E+01	---	DCNUCU(64,1)
016	Saturated zone (cm**3/g)	5.000E+01	5.000E+01	---	DCNUCS(64)
016	Leach rate (/yr)	0.000E+00	0.000E+00	4.426E-02	ALEACH(64)
016	Solubility constant	0.000E+00	0.000E+00	not used	SOLUBK(64)
016	Distribution coefficients for U-238				
016	Contaminated zone (cm**3/g)	5.000E+01	5.000E+01	---	DCNUCC(70)
016	Unsaturated zone 1 (cm**3/g)	5.000E+01	5.000E+01	---	DCNUCU(70,1)
016	Saturated zone (cm**3/g)	5.000E+01	5.000E+01	---	DCNUCS(70)
016	Leach rate (/yr)	0.000E+00	0.000E+00	4.426E-02	ALEACH(70)
016	Solubility constant	0.000E+00	0.000E+00	not used	SOLUBK(70)

Site-Specific Parameter Summary (continued)

enu	Parameter	User Input	Default	Used by RESRAD (If different from user input)	Parameter Name
016	Distribution coefficients for daughter Ac-227				
016	Contaminated zone (cm**3/g)	2.000E+01	2.000E+01	---	DCNUCC(1)
016	Unsaturated zone 1 (cm**3/g)	2.000E+01	2.000E+01	---	DCNUCU(1,1)
016	Saturated zone (cm**3/g)	2.000E+01	2.000E+01	---	DCNUCS(1)
016	Leach rate (/yr)	0.000E+00	0.000E+00	1.099E-01	ALEACH(1)
016	Solubility constant	0.000E+00	0.000E+00	not used	SOLUBK(1)
016	Distribution coefficients for daughter Pa-231				
016	Contaminated zone (cm**3/g)	5.000E+01	5.000E+01	---	DCNUCC(7)
016	Unsaturated zone 1 (cm**3/g)	5.000E+01	5.000E+01	---	DCNUCU(7,1)
016	Saturated zone (cm**3/g)	5.000E+01	5.000E+01	---	DCNUCS(7)
016	Leach rate (/yr)	0.000E+00	0.000E+00	4.426E-02	ALEACH(7)
016	Solubility constant	0.000E+00	0.000E+00	not used	SOLUBK(7)
016	Distribution coefficients for daughter Pb-210				
016	Contaminated zone (cm**3/g)	1.000E+02	1.000E+02	---	DCNUCC(13)
016	Unsaturated zone 1 (cm**3/g)	1.000E+02	1.000E+02	---	DCNUCU(13,1)
016	Saturated zone (cm**3/g)	1.000E+02	1.000E+02	-	DCNUCS(13)
016	Leach rate (/yr)	0.000E+00	0.000E+00	2.217E-02	ALEACH(13)
016	Solubility constant	0.000E+00	0.000E+00	not used	SOLUBK(13)
016	Distribution coefficients for daughter Ra-228				
016	Contaminated zone (cm**3/g)	7.000E+01	7.000E+01	---	DCNUCC(31)
016	Unsaturated zone 1 (cm**3/g)	7.000E+01	7.000E+01	---	DCNUCU(31,1)
016	Saturated zone (cm**3/g)	7.000E+01	7.000E+01	---	DCNUCS(31)
016	Leach rate (/yr)	0.000E+00	0.000E+00	3.165E-02	ALEACH(31)
016	Solubility constant	0.000E+00	0.000E+00	not used	SOLUBK(31)
016	Distribution coefficients for daughter Th-228				
016	Contaminated zone (cm**3/g)	6.000E+04	6.000E+04	---	DCNUCC(32)
016	Unsaturated zone 1 (cm**3/g)	6.000E+04	6.000E+04	---	DCNUCU(32,1)
016	Saturated zone (cm**3/g)	6.000E+04	6.000E+04	---	DCNUCS(32)
016	Leach rate (/yr)	0.000E+00	0.000E+00	3.704E-05	ALEACH(32)
016	Solubility constant	0.000E+00	0.000E+00	not used	SOLUBK(32)
016	Distribution coefficients for daughter Th-230				
016	Contaminated zone (cm**3/g)	6.000E+04	6.000E+04	---	DCNUCC(33)
016	Unsaturated zone 1 (cm**3/g)	6.000E+04	6.000E+04	---	DCNUCU(33,1)
016	Saturated zone (cm**3/g)	6.000E+04	6.000E+04	---	DCNUCS(33)
016	Leach rate (/yr)	0.000E+00	0.000E+00	3.704E-05	ALEACH(33)
016	Solubility constant	0.000E+00	0.000E+00	not used	SOLUBK(33)
017	Inhalation rate (m**3/yr)	not used	8.400E+03	---	INHALR
017	Mass loading for inhalation (g/m**3)	not used	1.000E-04	---	MLINH
017	Exposure duration	3.000E+01	3.000E+01	---	ED
017	Shielding factor, inhalation	not used	4.000E-01	---	SHF3
017	Shielding factor, external gamma	7.000E-01	7.000E-01	---	SHF1
017	Fraction of time spent indoors	0.000E+00	5.000E-01	---	FIND
017	Fraction of time spent outdoors (on site)	7.000E-03	2.500E-01	---	FOTD
017	Shape factor flag, external gamma	1.000E+00	1.000E+00	>0 shows circular AREA.	FS

Site-Specific Parameter Summary (continued)

enu	Parameter	User Input	Default	Used by RESRAD (If different from user input)	Parameter Name
017	Radii of shape factor array (used if FS = -1):				
017	Outer annular radius (m), ring 1:	not used	5.000E+01	---	RAD_SHAPE(1)
017	Outer annular radius (m), ring 2:	not used	7.071E+01	---	RAD_SHAPE(2)
017	Outer annular radius (m), ring 3:	not used	0.000E+00	---	RAD_SHAPE(3)
017	Outer annular radius (m), ring 4:	not used	0.000E+00	---	RAD_SHAPE(4)
017	Outer annular radius (m), ring 5:	not used	0.000E+00	---	RAD_SHAPE(5)
017	Outer annular radius (m), ring 6:	not used	0.000E+00	---	RAD_SHAPE(6)
017	Outer annular radius (m), ring 7:	not used	0.000E+00	---	RAD_SHAPE(7)
017	Outer annular radius (m), ring 8:	not used	0.000E+00	---	RAD_SHAPE(8)
017	Outer annular radius (m), ring 9:	not used	0.000E+00	---	RAD_SHAPE(9)
017	Outer annular radius (m), ring 10:	not used	0.000E+00	---	RAD_SHAPE(10)
017	Outer annular radius (m), ring 11:	not used	0.000E+00	---	RAD_SHAPE(11)
017	Outer annular radius (m), ring 12:	not used	0.000E+00	---	RAD_SHAPE(12)
017	Fractions of annular areas within AREA:				
017	Ring 1	not used	1.000E+00	---	FRACA(1)
017	Ring 2	not used	2.732E-01	---	FRACA(2)
017	Ring 3	not used	0.000E+00	---	FRACA(3)
017	Ring 4	not used	0.000E+00	---	FRACA(4)
017	Ring 5	not used	0.000E+00	---	FRACA(5)
017	Ring 6	not used	0.000E+00	---	FRACA(6)
017	Ring 7	not used	0.000E+00	---	FRACA(7)
017	Ring 8	not used	0.000E+00	---	FRACA(8)
017	Ring 9	not used	0.000E+00	---	FRACA(9)
017	Ring 10	not used	0.000E+00	---	FRACA(10)
017	Ring 11	not used	0.000E+00	---	FRACA(11)
017	Ring 12	not used	0.000E+00	---	FRACA(12)
018	Fruits, vegetables and grain consumption (kg/yr)	not used	1.600E+02	---	DIET(1)
018	Leafy vegetable consumption (kg/yr)	not used	1.400E+01	---	DIET(2)
018	Milk consumption (L/yr)	not used	9.200E+01	---	DIET(3)
018	Meat and poultry consumption (kg/yr)	not used	6.300E+01	---	DIET(4)
018	Fish consumption (kg/yr)	not used	5.400E+00	---	DIET(5)
018	Other seafood consumption (kg/yr)	not used	9.000E-01	---	DIET(6)
018	Soil ingestion rate (g/yr)	not used	3.650E+01	---	SOIL
018	Drinking water intake (L/yr)	not used	5.100E+02	---	DWI
018	Contamination fraction of drinking water	not used	1.000E+00	---	FDW
018	Contamination fraction of household water	1.000E+00	1.000E+00	---	FHHW
018	Contamination fraction of livestock water	not used	1.000E+00	---	FLW
018	Contamination fraction of irrigation water	not used	1.000E+00	---	FIRW
018	Contamination fraction of aquatic food	not used	5.000E-01	---	FR9
018	Contamination fraction of plant food	not used	-1	---	FPLANT
018	Contamination fraction of meat	not used	-1	---	FMEAT
018	Contamination fraction of milk	not used	-1	---	FMILK
019	Livestock fodder intake for meat (kg/day)	not used	6.800E+01	---	LFI5
019	Livestock fodder intake for milk (kg/day)	not used	5.500E+01	---	LFI6
019	Livestock water intake for meat (L/day)	not used	5.000E+01	---	LWI5
019	Livestock water intake for milk (L/day)	not used	1.600E+02	---	LWI6
019	Livestock soil intake (kg/day)	not used	5.000E-01	---	LSI

Site-Specific Parameter Summary (continued)

enu	Parameter	User Input	Default	Used by RESRAD (If different from user input)	Parameter Name
019	Mass loading for foliar deposition (g/m**3)	not used	1.000E-04	---	MLFD
019	Depth of soil mixing layer (m)	not used	1.500E-01	---	DM
019	Depth of roots (m)	not used	9.000E-01	---	DROOT
019	Drinking water fraction from ground water	not used	1.000E+00	---	FGWDW
019	Household water fraction from ground water	1.000E+00	1.000E+00	---	FGWHH
019	Livestock water fraction from ground water	not used	1.000E+00	---	FGWLW
019	Irrigation fraction from ground water	not used	1.000E+00	---	FGWIR
19B	Wet weight crop yield for Non-Leafy (kg/m**2)	not used	7.000E-01	---	YV(1)
19B	Wet weight crop yield for Leafy (kg/m**2)	not used	1.500E+00	---	YV(2)
19B	Wet weight crop yield for Fodder (kg/m**2)	not used	1.100E+00	---	YV(3)
19B	Growing Season for Non-Leafy (years)	not used	1.700E-01	---	TE(1)
19B	Growing Season for Leafy (years)	not used	2.500E-01	---	TE(2)
19B	Growing Season for Fodder (years)	not used	8.000E-02	---	TE(3)
19B	Translocation Factor for Non-Leafy	not used	1.000E-01	---	TIV(1)
19B	Translocation Factor for Leafy	not used	1.000E+00	---	TIV(2)
19B	Translocation Factor for Fodder	not used	1.000E+00	---	TIV(3)
19B	Dry Foliar Interception Fraction for Non-Leafy	not used	2.500E-01	---	RDRY(1)
19B	Dry Foliar Interception Fraction for Leafy	not used	2.500E-01	---	RDRY(2)
19B	Dry Foliar Interception Fraction for Fodder	not used	2.500E-01	---	RDRY(3)
19B	Wet Foliar Interception Fraction for Non-Leafy	not used	2.500E-01	---	RWET(1)
19B	Wet Foliar Interception Fraction for Leafy	not used	2.500E-01	---	RWET(2)
19B	Wet Foliar Interception Fraction for Fodder	not used	2.500E-01	---	RWET(3)
19B	Weathering Removal Constant for Vegetation	not used	2.000E+01	---	WLAM
14	C-12 concentration in water (g/cm**3)	not used	2.000E-05	---	C12WTR
14	C-12 concentration in contaminated soil (g/g)	not used	3.000E-02	---	C12CZ
14	Fraction of vegetation carbon from soil	not used	2.000E-02	---	CSOIL
14	Fraction of vegetation carbon from air	not used	9.800E-01	---	CAIR
14	C-14 evasion layer thickness in soil (m)	not used	3.000E-01	---	DMC
14	C-14 evasion flux rate from soil (1/sec)	not used	7.000E-07	---	EVSN
14	C-12 evasion flux rate from soil (1/sec)	not used	1.000E-10	---	REVSN
14	Fraction of grain in beef cattle feed	not used	8.000E-01	---	AVFG4
14	Fraction of grain in milk cow feed	not used	2.000E-01	---	AVFG5
TOR	Storage times of contaminated foodstuffs (days):				
TOR	Fruits, non-leafy vegetables, and grain	1.400E+01	1.400E+01	---	STOR_T(1)
TOR	Leafy vegetables	1.000E+00	1.000E+00	---	STOR_T(2)
TOR	Milk	1.000E+00	1.000E+00	---	STOR_T(3)
TOR	Meat and poultry	2.000E+01	2.000E+01	---	STOR_T(4)
TOR	Fish	7.000E+00	7.000E+00	---	STOR_T(5)
TOR	Crustacea and mollusks	7.000E+00	7.000E+00	---	STOR_T(6)
TOR	Well water	1.000E+00	1.000E+00	---	STOR_T(7)
TOR	Surface water	1.000E+00	1.000E+00	---	STOR_T(8)
TOR	Livestock fodder	4.500E+01	4.500E+01	---	STOR_T(9)
021	Thickness of building foundation (m)	not used	1.500E-01	---	FLOOR1
021	Bulk density of building foundation (g/cm**3)	not used	2.400E+00	---	DENSFL
021	Total porosity of the cover material	not used	4.000E-01	---	TPCV
021	Total porosity of the building foundation	not used	1.000E-01	---	TPFL

Site-Specific Parameter Summary (continued)

enu	Parameter	User Input	Default	Used by RESRAD (If different from user input)	Parameter Name
021	Volumetric water content of the cover material	not used	5.000E-02	---	PH2OCV
021	Volumetric water content of the foundation	not used	3.000E-02	---	PH2OFL
021	Diffusion coefficient for radon gas (m/sec):				
021	in cover material	not used	2.000E-06	---	DIFCV
021	in foundation material	not used	3.000E-07	---	DIFFL
021	in contaminated zone soil	2.000E-06	2.000E-06	---	DIFCZ
021	Radon vertical dimension of mixing (m)	2.000E+00	2.000E+00	---	HMIX
021	Average building air exchange rate (1/hr)	not used	5.000E-01	---	REXG
021	Height of the building (room) (m)	not used	2.500E+00	---	HRM
021	Building interior area factor	not used	0.000E+00	code computed (time dependent)	FAI
021	Building depth below ground surface (m)	not used	-1.000E+00	code computed (time dependent)	DMFL
021	Emanating power of Rn-222 gas	2.500E-01	2.500E-01	---	EMANA(1)
021	Emanating power of Rn-220 gas	1.500E-01	1.500E-01	---	EMANA(2)
ITL	Number of graphical time points	32	---	---	NPTS
ITL	Maximum number of integration points for dose	17	---	---	LYMAX
ITL	Maximum number of integration points for risk	257	---	---	KYMAX

Summary of Pathway Selections

Pathway	User Selection
1 -- external gamma	active
2 -- inhalation (w/o radon)	suppressed
3 -- plant ingestion	suppressed
4 -- meat ingestion	suppressed
5 -- milk ingestion	suppressed
6 -- aquatic foods	suppressed
7 -- drinking water	suppressed
8 -- soil ingestion	suppressed
9 -- radon	active
Find peak pathway doses	suppressed

ummary : GKP Fire Fighter - External
ile : C:\USERS\CLAUDE\DOCUMENTS\0 GKP DOSE\RESRAD CW\GKP FIRE FIGHTER- EXTERNAL.RAD

Contaminated Zone Dimensions		Initial Soil Concentrations, pCi/g	
Area:	200.00 square meters	Ra-226	3.650E+01
Thickness:	0.15 meters	Th-232	2.400E+00
over Depth:	0.00 meters	U-234	1.390E+01
		U-235	8.400E-01
		U-238	1.390E+01

Total Dose TDOSE(t), mrem/yr
Basic Radiation Dose Limit = 2.500E+01 mrem/yr
Total Mixture Sum M(t) = Fraction of Basic Dose Limit Received at Time (t)

t (years):	0.000E+00	1.000E+00	3.000E+00	1.000E+01	3.000E+01	1.000E+02	3.000E+02	1.000E+03
TDOSE(t):	2.034E+00	1.975E+00	1.867E+00	1.529E+00	8.257E-01	1.217E-01	0.000E+00	0.000E+00
M(t):	8.137E-02	7.901E-02	7.467E-02	6.114E-02	3.303E-02	4.866E-03	0.000E+00	0.000E+00

aximum TDOSE(t): 2.034E+00 mrem/yr at t = 0.000E+00 years

ummary : GKP Fire Fighter - External
ile : C:\USERS\CLAUDE\DOCUMENTS\0 GKP DOSE\RESRAD CW\GKP FIRE FIGHTER- EXTERNAL.RAD

Total Dose Contributions TDOSE(i,p,t) for Individual Radionuclides (i) and Pathways (p)
As mrem/yr and Fraction of Total Dose At t = 0.000E+00 years

Water Independent Pathways (Inhalation excludes radon)

	Ground		Inhalation		Radon		Plant		Meat		Milk		Soil	
adio-	ÄÄÄÄÄÄÄÄÄÄÄÄÄÄÄÄ		ÄÄÄÄÄÄÄÄÄÄÄÄÄÄÄÄ		ÄÄÄÄÄÄÄÄÄÄÄÄÄÄÄÄ		ÄÄÄÄÄÄÄÄÄÄÄÄÄÄÄÄ		ÄÄÄÄÄÄÄÄÄÄÄÄÄÄÄÄ		ÄÄÄÄÄÄÄÄÄÄÄÄÄÄÄÄ		ÄÄÄÄÄÄÄÄÄÄÄÄÄÄÄÄ	
uclide	mrem/yr	fract.	mrem/yr	fract.	mrem/yr	fract.	mrem/yr	fract.	mrem/yr	fract.	mrem/yr	fract.	mrem/yr	fract.
ÄÄÄÄÄÄ	ÄÄÄÄÄÄÄÄÄ	ÄÄÄÄÄÄ	ÄÄÄÄÄÄÄÄÄ	ÄÄÄÄÄÄ	ÄÄÄÄÄÄÄÄÄ	ÄÄÄÄÄÄ	ÄÄÄÄÄÄÄÄÄ	ÄÄÄÄÄÄ	ÄÄÄÄÄÄÄÄÄ	ÄÄÄÄÄÄ	ÄÄÄÄÄÄÄÄÄ	ÄÄÄÄÄÄ	ÄÄÄÄÄÄÄÄÄ	ÄÄÄÄÄÄ
a-226	2.016E+00	0.9909	0.000E+00	0.0000	1.035E-05	0.0000	0.000E+00	0.0000	0.000E+00	0.0000	0.000E+00	0.0000	0.000E+00	0.0000
h-232	4.988E-03	0.0025	0.000E+00	0.0000	3.712E-07	0.0000	0.000E+00	0.0000	0.000E+00	0.0000	0.000E+00	0.0000	0.000E+00	0.0000
-234	3.380E-05	0.0000	0.000E+00	0.0000	2.606E-15	0.0000	0.000E+00	0.0000	0.000E+00	0.0000	0.000E+00	0.0000	0.000E+00	0.0000
-235	3.677E-03	0.0018	0.000E+00	0.0000	0.000E+00	0.0000	0.000E+00	0.0000	0.000E+00	0.0000	0.000E+00	0.0000	0.000E+00	0.0000
-238	9.774E-03	0.0048	0.000E+00	0.0000	1.829E-21	0.0000	0.000E+00	0.0000	0.000E+00	0.0000	0.000E+00	0.0000	0.000E+00	0.0000
íííííí	íííííííííí	íííííí	íííííííííí	íííííí	íííííííííí	íííííí	íííííííííí	íííííí	íííííííííí	íííííí	íííííííííí	íííííí	íííííííííí	íííííí
otal	2.034E+00	1.0000	0.000E+00	0.0000	1.072E-05	0.0000	0.000E+00	0.0000	0.000E+00	0.0000	0.000E+00	0.0000	0.000E+00	0.0000

Total Dose Contributions TDOSE(i,p,t) for Individual Radionuclides (i) and Pathways (p)
As mrem/yr and Fraction of Total Dose At t = 0.000E+00 years

Water Dependent Pathways

	Water		Fish		Radon		Plant		Meat		Milk		All Pathways*	
adio-	ÄÄÄÄÄÄÄÄÄÄÄÄÄÄÄÄ		ÄÄÄÄÄÄÄÄÄÄÄÄÄÄÄÄ		ÄÄÄÄÄÄÄÄÄÄÄÄÄÄÄÄ		ÄÄÄÄÄÄÄÄÄÄÄÄÄÄÄÄ		ÄÄÄÄÄÄÄÄÄÄÄÄÄÄÄÄ		ÄÄÄÄÄÄÄÄÄÄÄÄÄÄÄÄ		ÄÄÄÄÄÄÄÄÄÄÄÄÄÄÄÄ	
uclide	mrem/yr	fract.	mrem/yr	fract.	mrem/yr	fract.	mrem/yr	fract.	mrem/yr	fract.	mrem/yr	fract.	mrem/yr	fract.
ÄÄÄÄÄÄ	ÄÄÄÄÄÄÄÄÄ	ÄÄÄÄÄÄ	ÄÄÄÄÄÄÄÄÄ	ÄÄÄÄÄÄ	ÄÄÄÄÄÄÄÄÄ	ÄÄÄÄÄÄ	ÄÄÄÄÄÄÄÄÄ	ÄÄÄÄÄÄ	ÄÄÄÄÄÄÄÄÄ	ÄÄÄÄÄÄ	ÄÄÄÄÄÄÄÄÄ	ÄÄÄÄÄÄ	ÄÄÄÄÄÄÄÄÄ	ÄÄÄÄÄÄ
a-226	0.000E+00	0.0000	0.000E+00	0.0000	0.000E+00	0.0000	0.000E+00	0.0000	0.000E+00	0.0000	0.000E+00	0.0000	2.016E+00	0.9909
h-232	0.000E+00	0.0000	0.000E+00	0.0000	0.000E+00	0.0000	0.000E+00	0.0000	0.000E+00	0.0000	0.000E+00	0.0000	4.988E-03	0.0025
-234	0.000E+00	0.0000	0.000E+00	0.0000	0.000E+00	0.0000	0.000E+00	0.0000	0.000E+00	0.0000	0.000E+00	0.0000	3.380E-05	0.0000
-235	0.000E+00	0.0000	0.000E+00	0.0000	0.000E+00	0.0000	0.000E+00	0.0000	0.000E+00	0.0000	0.000E+00	0.0000	3.677E-03	0.0018
-238	0.000E+00	0.0000	0.000E+00	0.0000	0.000E+00	0.0000	0.000E+00	0.0000	0.000E+00	0.0000	0.000E+00	0.0000	9.774E-03	0.0048
íííííí	íííííííííí	íííííí	íííííííííí	íííííí	íííííííííí	íííííí	íííííííííí	íííííí	íííííííííí	íííííí	íííííííííí	íííííí	íííííííííí	íííííí
otal	0.000E+00	0.0000	0.000E+00	0.0000	0.000E+00	0.0000	0.000E+00	0.0000	0.000E+00	0.0000	0.000E+00	0.0000	2.034E+00	1.0000

Sum of all water independent and dependent pathways.

ummary : GKP Fire Fighter - External
ile : C:\USERS\CLAUDE\DOCUMENTS\0 GKP DOSE\RESRAD CW\GKP FIRE FIGHTER- EXTERNAL.RAD

Total Dose Contributions TDOSE(i,p,t) for Individual Radionuclides (i) and Pathways (p)
As mrem/yr and Fraction of Total Dose At t = 1.000E+00 years

Water Independent Pathways (Inhalation excludes radon)

	Ground		Inhalation		Radon		Plant		Meat		Milk		Soil	
adio-	ÄÄÄÄÄÄÄÄÄÄÄÄÄÄÄÄ		ÄÄÄÄÄÄÄÄÄÄÄÄÄÄÄÄ		ÄÄÄÄÄÄÄÄÄÄÄÄÄÄÄÄ		ÄÄÄÄÄÄÄÄÄÄÄÄÄÄÄÄ		ÄÄÄÄÄÄÄÄÄÄÄÄÄÄÄÄ		ÄÄÄÄÄÄÄÄÄÄÄÄÄÄÄÄ		ÄÄÄÄÄÄÄÄÄÄÄÄÄÄÄÄ	
uclide	mrem/yr	fract.	mrem/yr	fract.	mrem/yr	fract.	mrem/yr	fract.	mrem/yr	fract.	mrem/yr	fract.	mrem/yr	fract.
ÄÄÄÄÄÄ	ÄÄÄÄÄÄÄÄÄ	ÄÄÄÄÄÄ	ÄÄÄÄÄÄÄÄÄ	ÄÄÄÄÄÄ	ÄÄÄÄÄÄÄÄÄ	ÄÄÄÄÄÄ	ÄÄÄÄÄÄÄÄÄ	ÄÄÄÄÄÄ	ÄÄÄÄÄÄÄÄÄ	ÄÄÄÄÄÄ	ÄÄÄÄÄÄÄÄÄ	ÄÄÄÄÄÄ	ÄÄÄÄÄÄÄÄÄ	ÄÄÄÄÄÄ
a-226	1.946E+00	0.9852	0.000E+00	0.0000	9.961E-06	0.0000	0.000E+00	0.0000	0.000E+00	0.0000	0.000E+00	0.0000	0.000E+00	0.0000
n-232	1.640E-02	0.0083	0.000E+00	0.0000	2.256E-06	0.0000	0.000E+00	0.0000	0.000E+00	0.0000	0.000E+00	0.0000	0.000E+00	0.0000
-234	3.233E-05	0.0000	0.000E+00	0.0000	1.775E-14	0.0000	0.000E+00	0.0000	0.000E+00	0.0000	0.000E+00	0.0000	0.000E+00	0.0000
-235	3.513E-03	0.0018	0.000E+00	0.0000	0.000E+00	0.0000	0.000E+00	0.0000	0.000E+00	0.0000	0.000E+00	0.0000	0.000E+00	0.0000
-238	9.329E-03	0.0047	0.000E+00	0.0000	2.659E-20	0.0000	0.000E+00	0.0000	0.000E+00	0.0000	0.000E+00	0.0000	0.000E+00	0.0000
íííííí	íííííííííí	íííííí	íííííííííí	íííííí	íííííííííí	íííííí	íííííííííí	íííííí	íííííííííí	íííííí	íííííííííí	íííííí	íííííííííí	íííííí
otal	1.975E+00	1.0000	0.000E+00	0.0000	1.222E-05	0.0000	0.000E+00	0.0000	0.000E+00	0.0000	0.000E+00	0.0000	0.000E+00	0.0000

Total Dose Contributions TDOSE(i,p,t) for Individual Radionuclides (i) and Pathways (p)
As mrem/yr and Fraction of Total Dose At t = 1.000E+00 years

Water Dependent Pathways

	Water		Fish		Radon		Plant		Meat		Milk		All Pathways*	
adio-	ÄÄÄÄÄÄÄÄÄÄÄÄÄÄÄÄ		ÄÄÄÄÄÄÄÄÄÄÄÄÄÄÄÄ		ÄÄÄÄÄÄÄÄÄÄÄÄÄÄÄÄ		ÄÄÄÄÄÄÄÄÄÄÄÄÄÄÄÄ		ÄÄÄÄÄÄÄÄÄÄÄÄÄÄÄÄ		ÄÄÄÄÄÄÄÄÄÄÄÄÄÄÄÄ		ÄÄÄÄÄÄÄÄÄÄÄÄÄÄÄÄ	
uclide	mrem/yr	fract.	mrem/yr	fract.	mrem/yr	fract.	mrem/yr	fract.	mrem/yr	fract.	mrem/yr	fract.	mrem/yr	fract.
ÄÄÄÄÄÄ	ÄÄÄÄÄÄÄÄÄ	ÄÄÄÄÄÄ	ÄÄÄÄÄÄÄÄÄ	ÄÄÄÄÄÄ	ÄÄÄÄÄÄÄÄÄ	ÄÄÄÄÄÄ	ÄÄÄÄÄÄÄÄÄ	ÄÄÄÄÄÄ	ÄÄÄÄÄÄÄÄÄ	ÄÄÄÄÄÄ	ÄÄÄÄÄÄÄÄÄ	ÄÄÄÄÄÄ	ÄÄÄÄÄÄÄÄÄ	ÄÄÄÄÄÄ
a-226	0.000E+00	0.0000	0.000E+00	0.0000	0.000E+00	0.0000	0.000E+00	0.0000	0.000E+00	0.0000	0.000E+00	0.0000	1.946E+00	0.9852
n-232	0.000E+00	0.0000	0.000E+00	0.0000	0.000E+00	0.0000	0.000E+00	0.0000	0.000E+00	0.0000	0.000E+00	0.0000	1.641E-02	0.0083
-234	0.000E+00	0.0000	0.000E+00	0.0000	0.000E+00	0.0000	0.000E+00	0.0000	0.000E+00	0.0000	0.000E+00	0.0000	3.233E-05	0.0000
-235	0.000E+00	0.0000	0.000E+00	0.0000	0.000E+00	0.0000	0.000E+00	0.0000	0.000E+00	0.0000	0.000E+00	0.0000	3.513E-03	0.0018
-238	0.000E+00	0.0000	0.000E+00	0.0000	0.000E+00	0.0000	0.000E+00	0.0000	0.000E+00	0.0000	0.000E+00	0.0000	9.329E-03	0.0047
íííííí	íííííííííí	íííííí	íííííííííí	íííííí	íííííííííí	íííííí	íííííííííí	íííííí	íííííííííí	íííííí	íííííííííí	íííííí	íííííííííí	íííííí
otal	0.000E+00	0.0000	0.000E+00	0.0000	0.000E+00	0.0000	0.000E+00	0.0000	0.000E+00	0.0000	0.000E+00	0.0000	1.975E+00	1.0000

Sum of all water independent and dependent pathways.

ummary : GKP Fire Fighter - External
ile : C:\USERS\CLAUDE\DOCUMENTS\0 GKP DOSE\RESRAD CW\GKP FIRE FIGHTER- EXTERNAL.RAD

Total Dose Contributions TDOSE(i,p,t) for Individual Radionuclides (i) and Pathways (p)
As mrem/yr and Fraction of Total Dose At t = 3.000E+00 years

Water Independent Pathways (Inhalation excludes radon)

	Ground		Inhalation		Radon		Plant		Meat		Milk		Soil	
adio-														
uclide	mrem/yr	fract.	mrem/yr	fract.	mrem/yr	fract.	mrem/yr	fract.	mrem/yr	fract.	mrem/yr	fract.	mrem/yr	fract.
a-226	1.813E+00	0.9715	0.000E+00	0.0000	9.218E-06	0.0000	0.000E+00	0.0000	0.000E+00	0.0000	0.000E+00	0.0000	0.000E+00	0.0000
n-232	4.147E-02	0.0222	0.000E+00	0.0000	8.783E-06	0.0000	0.000E+00	0.0000	0.000E+00	0.0000	0.000E+00	0.0000	0.000E+00	0.0000
-234	2.957E-05	0.0000	0.000E+00	0.0000	8.817E-14	0.0000	0.000E+00	0.0000	0.000E+00	0.0000	0.000E+00	0.0000	0.000E+00	0.0000
-235	3.205E-03	0.0017	0.000E+00	0.0000	0.000E+00	0.0000	0.000E+00	0.0000	0.000E+00	0.0000	0.000E+00	0.0000	0.000E+00	0.0000
-238	8.499E-03	0.0046	0.000E+00	0.0000	2.892E-19	0.0000	0.000E+00	0.0000	0.000E+00	0.0000	0.000E+00	0.0000	0.000E+00	0.0000
otal	1.867E+00	1.0000	0.000E+00	0.0000	1.800E-05	0.0000	0.000E+00	0.0000	0.000E+00	0.0000	0.000E+00	0.0000	0.000E+00	0.0000

Total Dose Contributions TDOSE(i,p,t) for Individual Radionuclides (i) and Pathways (p)
As mrem/yr and Fraction of Total Dose At t = 3.000E+00 years

Water Dependent Pathways

	Water		Fish		Radon		Plant		Meat		Milk		All Pathways*	
adio-														
uclide	mrem/yr	fract.	mrem/yr	fract.	mrem/yr	fract.	mrem/yr	fract.	mrem/yr	fract.	mrem/yr	fract.	mrem/yr	fract.
a-226	0.000E+00	0.0000	0.000E+00	0.0000	0.000E+00	0.0000	0.000E+00	0.0000	0.000E+00	0.0000	0.000E+00	0.0000	1.814E+00	0.9715
n-232	0.000E+00	0.0000	0.000E+00	0.0000	0.000E+00	0.0000	0.000E+00	0.0000	0.000E+00	0.0000	0.000E+00	0.0000	4.148E-02	0.0222
-234	0.000E+00	0.0000	0.000E+00	0.0000	0.000E+00	0.0000	0.000E+00	0.0000	0.000E+00	0.0000	0.000E+00	0.0000	2.957E-05	0.0000
-235	0.000E+00	0.0000	0.000E+00	0.0000	0.000E+00	0.0000	0.000E+00	0.0000	0.000E+00	0.0000	0.000E+00	0.0000	3.205E-03	0.0017
-238	0.000E+00	0.0000	0.000E+00	0.0000	0.000E+00	0.0000	0.000E+00	0.0000	0.000E+00	0.0000	0.000E+00	0.0000	8.499E-03	0.0046
otal	0.000E+00	0.0000	0.000E+00	0.0000	0.000E+00	0.0000	0.000E+00	0.0000	0.000E+00	0.0000	0.000E+00	0.0000	1.867E+00	1.0000

Sum of all water independent and dependent pathways.

ummary : GKP Fire Fighter - External
ile : C:\USERS\CLAUDE\DOCUMENTS\0 GKP DOSE\RESRAD CW\GKP FIRE FIGHTER- EXTERNAL.RAD

Total Dose Contributions TDOSE(i,p,t) for Individual Radionuclides (i) and Pathways (p)
As mrem/yr and Fraction of Total Dose At t = 1.000E+01 years

Water Independent Pathways (Inhalation excludes radon)

	Ground		Inhalation		Radon		Plant		Meat		Milk		Soil	
adio-	ÄÄÄÄÄÄÄÄÄÄÄÄÄÄÄÄ		ÄÄÄÄÄÄÄÄÄÄÄÄÄÄÄÄ		ÄÄÄÄÄÄÄÄÄÄÄÄÄÄÄÄ		ÄÄÄÄÄÄÄÄÄÄÄÄÄÄÄÄ		ÄÄÄÄÄÄÄÄÄÄÄÄÄÄÄÄ		ÄÄÄÄÄÄÄÄÄÄÄÄÄÄÄÄ		ÄÄÄÄÄÄÄÄÄÄÄÄÄÄÄÄ	
uclide	mrem/yr	fract.	mrem/yr	fract.	mrem/yr	fract.	mrem/yr	fract.	mrem/yr	fract.	mrem/yr	fract.	mrem/yr	fract.
ÄÄÄÄÄÄ	ÄÄÄÄÄÄÄÄÄ	ÄÄÄÄÄÄ	ÄÄÄÄÄÄÄÄÄ	ÄÄÄÄÄÄ	ÄÄÄÄÄÄÄÄÄ	ÄÄÄÄÄÄ	ÄÄÄÄÄÄÄÄÄ	ÄÄÄÄÄÄ	ÄÄÄÄÄÄÄÄÄ	ÄÄÄÄÄÄ	ÄÄÄÄÄÄÄÄÄ	ÄÄÄÄÄÄ	ÄÄÄÄÄÄÄÄÄ	ÄÄÄÄÄÄ
a-226	1.415E+00	0.9259	0.000E+00	0.0000	7.017E-06	0.0000	0.000E+00	0.0000	0.000E+00	0.0000	0.000E+00	0.0000	0.000E+00	0.0000
n-232	1.047E-01	0.0685	0.000E+00	0.0000	3.055E-05	0.0000	0.000E+00	0.0000	0.000E+00	0.0000	0.000E+00	0.0000	0.000E+00	0.0000
-234	2.172E-05	0.0000	0.000E+00	0.0000	6.322E-13	0.0000	0.000E+00	0.0000	0.000E+00	0.0000	0.000E+00	0.0000	0.000E+00	0.0000
-235	2.324E-03	0.0015	0.000E+00	0.0000	0.000E+00	0.0000	0.000E+00	0.0000	0.000E+00	0.0000	0.000E+00	0.0000	0.000E+00	0.0000
-238	6.128E-03	0.0040	0.000E+00	0.0000	5.947E-18	0.0000	0.000E+00	0.0000	0.000E+00	0.0000	0.000E+00	0.0000	0.000E+00	0.0000
íííííí	íííííííííí	íííííí	íííííííííí	íííííí	íííííííííí	íííííí	íííííííííí	íííííí	íííííííííí	íííííí	íííííííííí	íííííí	íííííííííí	íííííí
otal	1.529E+00	1.0000	0.000E+00	0.0000	3.756E-05	0.0000	0.000E+00	0.0000	0.000E+00	0.0000	0.000E+00	0.0000	0.000E+00	0.0000

Total Dose Contributions TDOSE(i,p,t) for Individual Radionuclides (i) and Pathways (p)
As mrem/yr and Fraction of Total Dose At t = 1.000E+01 years

Water Dependent Pathways

	Water		Fish		Radon		Plant		Meat		Milk		All Pathways*	
adio-	ÄÄÄÄÄÄÄÄÄÄÄÄÄÄÄÄ		ÄÄÄÄÄÄÄÄÄÄÄÄÄÄÄÄ		ÄÄÄÄÄÄÄÄÄÄÄÄÄÄÄÄ		ÄÄÄÄÄÄÄÄÄÄÄÄÄÄÄÄ		ÄÄÄÄÄÄÄÄÄÄÄÄÄÄÄÄ		ÄÄÄÄÄÄÄÄÄÄÄÄÄÄÄÄ		ÄÄÄÄÄÄÄÄÄÄÄÄÄÄÄÄ	
uclide	mrem/yr	fract.	mrem/yr	fract.	mrem/yr	fract.	mrem/yr	fract.	mrem/yr	fract.	mrem/yr	fract.	mrem/yr	fract.
ÄÄÄÄÄÄ	ÄÄÄÄÄÄÄÄÄ	ÄÄÄÄÄÄ	ÄÄÄÄÄÄÄÄÄ	ÄÄÄÄÄÄ	ÄÄÄÄÄÄÄÄÄ	ÄÄÄÄÄÄ	ÄÄÄÄÄÄÄÄÄ	ÄÄÄÄÄÄ	ÄÄÄÄÄÄÄÄÄ	ÄÄÄÄÄÄ	ÄÄÄÄÄÄÄÄÄ	ÄÄÄÄÄÄ	ÄÄÄÄÄÄÄÄÄ	ÄÄÄÄÄÄ
a-226	0.000E+00	0.0000	0.000E+00	0.0000	0.000E+00	0.0000	0.000E+00	0.0000	0.000E+00	0.0000	0.000E+00	0.0000	1.415E+00	0.9259
n-232	0.000E+00	0.0000	0.000E+00	0.0000	0.000E+00	0.0000	0.000E+00	0.0000	0.000E+00	0.0000	0.000E+00	0.0000	1.048E-01	0.0685
-234	0.000E+00	0.0000	0.000E+00	0.0000	0.000E+00	0.0000	0.000E+00	0.0000	0.000E+00	0.0000	0.000E+00	0.0000	2.172E-05	0.0000
-235	0.000E+00	0.0000	0.000E+00	0.0000	0.000E+00	0.0000	0.000E+00	0.0000	0.000E+00	0.0000	0.000E+00	0.0000	2.324E-03	0.0015
-238	0.000E+00	0.0000	0.000E+00	0.0000	0.000E+00	0.0000	0.000E+00	0.0000	0.000E+00	0.0000	0.000E+00	0.0000	6.128E-03	0.0040
íííííí	íííííííííí	íííííí	íííííííííí	íííííí	íííííííííí	íííííí	íííííííííí	íííííí	íííííííííí	íííííí	íííííííííí	íííííí	íííííííííí	íííííí
otal	0.000E+00	0.0000	0.000E+00	0.0000	0.000E+00	0.0000	0.000E+00	0.0000	0.000E+00	0.0000	0.000E+00	0.0000	1.529E+00	1.0000

Sum of all water independent and dependent pathways.

ummary : GKP Fire Fighter - External
ile : C:\USERS\CLAUDE\DOCUMENTS\0 GKP DOSE\RESRAD CW\GKP FIRE FIGHTER- EXTERNAL.RAD

Total Dose Contributions TDOSE(i,p,t) for Individual Radionuclides (i) and Pathways (p)
As mrem/yr and Fraction of Total Dose At t = 3.000E+01 years

Water Independent Pathways (Inhalation excludes radon)

	Ground		Inhalation		Radon		Plant		Meat		Milk		Soil	
adio-	AAAAAAAAAAAAAAAA		ÄÄÄÄÄÄÄÄÄÄÄÄÄÄÄÄ		ÄÄÄÄÄÄÄÄÄÄÄÄÄÄÄÄ		ÄÄÄÄÄÄÄÄÄÄÄÄÄÄÄÄ		ÄÄÄÄÄÄÄÄÄÄÄÄÄÄÄÄ		ÄÄÄÄÄÄÄÄÄÄÄÄÄÄÄÄ		ÄÄÄÄÄÄÄÄÄÄÄÄÄÄÄÄ		ÄÄÄÄÄÄÄÄÄÄÄÄÄÄÄÄ	
uclide	mrem/yr	fract.	mrem/yr	fract.	mrem/yr	fract.	mrem/yr	fract.	mrem/yr	fract.	mrem/yr	fract.	mrem/yr	fract.
ÄÄÄÄÄÄ	ÄÄÄÄÄÄÄÄÄ	ÄÄÄÄÄÄ	ÄÄÄÄÄÄÄÄÄ	ÄÄÄÄÄÄ	ÄÄÄÄÄÄÄÄÄ	ÄÄÄÄÄÄ	ÄÄÄÄÄÄÄÄÄ	ÄÄÄÄÄÄ	ÄÄÄÄÄÄÄÄÄ	ÄÄÄÄÄÄ	ÄÄÄÄÄÄÄÄÄ	ÄÄÄÄÄÄ	ÄÄÄÄÄÄÄÄÄ	ÄÄÄÄÄÄ
a-226	6.897E-01	0.8353	0.000E+00	0.0000	3.170E-06	0.0000	0.000E+00	0.0000	0.000E+00	0.0000	0.000E+00	0.0000	0.000E+00	0.0000
n-232	1.326E-01	0.1606	0.000E+00	0.0000	4.499E-05	0.0001	0.000E+00	0.0000	0.000E+00	0.0000	0.000E+00	0.0000	0.000E+00	0.0000
-234	9.403E-06	0.0000	0.000E+00	0.0000	2.854E-12	0.0000	0.000E+00	0.0000	0.000E+00	0.0000	0.000E+00	0.0000	0.000E+00	0.0000
-235	9.213E-04	0.0011	0.000E+00	0.0000	0.000E+00	0.0000	0.000E+00	0.0000	0.000E+00	0.0000	0.000E+00	0.0000	0.000E+00	0.0000
-238	2.387E-03	0.0029	0.000E+00	0.0000	7.030E-17	0.0000	0.000E+00	0.0000	0.000E+00	0.0000	0.000E+00	0.0000	0.000E+00	0.0000
íííííí	íííííííííí	íííííí	íííííííííí	íííííí	íííííííííí	íííííí	íííííííííí	íííííí	íííííííííí	íííííí	íííííííííí	íííííí	íííííííííí	íííííí
otal	8.257E-01	0.9999	0.000E+00	0.0000	4.816E-05	0.0001	0.000E+00	0.0000	0.000E+00	0.0000	0.000E+00	0.0000	0.000E+00	0.0000

Total Dose Contributions TDOSE(i,p,t) for Individual Radionuclides (i) and Pathways (p)
As mrem/yr and Fraction of Total Dose At t = 3.000E+01 years

Water Dependent Pathways

	Water		Fish		Radon		Plant		Meat		Milk		All Pathways*	
adio-	ÄÄÄÄÄÄÄÄÄÄÄÄÄÄÄÄ		ÄÄÄÄÄÄÄÄÄÄÄÄÄÄÄÄ		ÄÄÄÄÄÄÄÄÄÄÄÄÄÄÄÄ		ÄÄÄÄÄÄÄÄÄÄÄÄÄÄÄÄ		ÄÄÄÄÄÄÄÄÄÄÄÄÄÄÄÄ		ÄÄÄÄÄÄÄÄÄÄÄÄÄÄÄÄ		ÄÄÄÄÄÄÄÄÄÄÄÄÄÄÄÄ	
uclide	mrem/yr	fract.	mrem/yr	fract.	mrem/yr	fract.	mrem/yr	fract.	mrem/yr	fract.	mrem/yr	fract.	mrem/yr	fract.
ÄÄÄÄÄÄ	ÄÄÄÄÄÄÄÄÄ	ÄÄÄÄÄÄ	ÄÄÄÄÄÄÄÄÄ	ÄÄÄÄÄÄ	ÄÄÄÄÄÄÄÄÄ	ÄÄÄÄÄÄ	ÄÄÄÄÄÄÄÄÄ	ÄÄÄÄÄÄ	ÄÄÄÄÄÄÄÄÄ	ÄÄÄÄÄÄ	ÄÄÄÄÄÄÄÄÄ	ÄÄÄÄÄÄ	ÄÄÄÄÄÄÄÄÄ	ÄÄÄÄÄÄ
a-226	0.000E+00	0.0000	0.000E+00	0.0000	0.000E+00	0.0000	0.000E+00	0.0000	0.000E+00	0.0000	0.000E+00	0.0000	6.897E-01	0.8353
n-232	0.000E+00	0.0000	0.000E+00	0.0000	0.000E+00	0.0000	0.000E+00	0.0000	0.000E+00	0.0000	0.000E+00	0.0000	1.327E-01	0.1607
-234	0.000E+00	0.0000	0.000E+00	0.0000	0.000E+00	0.0000	0.000E+00	0.0000	0.000E+00	0.0000	0.000E+00	0.0000	9.403E-06	0.0000
-235	0.000E+00	0.0000	0.000E+00	0.0000	0.000E+00	0.0000	0.000E+00	0.0000	0.000E+00	0.0000	0.000E+00	0.0000	9.213E-04	0.0011
-238	0.000E+00	0.0000	0.000E+00	0.0000	0.000E+00	0.0000	0.000E+00	0.0000	0.000E+00	0.0000	0.000E+00	0.0000	2.387E-03	0.0029
íííííí	íííííííííí	íííííí	íííííííííí	íííííí	íííííííííí	íííííí	íííííííííí	íííííí	íííííííííí	íííííí	íííííííííí	íííííí	íííííííííí	íííííí
otal	0.000E+00	0.0000	0.000E+00	0.0000	0.000E+00	0.0000	0.000E+00	0.0000	0.000E+00	0.0000	0.000E+00	0.0000	8.257E-01	1.0000

Sum of all water independent and dependent pathways.

ummary : GKP Fire Fighter - External
ile : C:\USERS\CLAUDE\DOCUMENTS\0 GKP DOSE\RESRAD CW\GKP FIRE FIGHTER- EXTERNAL.RAD

Total Dose Contributions TDOSE(i,p,t) for Individual Radionuclides (i) and Pathways (p)
As mrem/yr and Fraction of Total Dose At t = 1.000E+02 years

Water Independent Pathways (Inhalation excludes radon)

	Ground		Inhalation		Radon		Plant		Meat		Milk		Soil	
adio-	ÄÄÄÄÄÄÄÄÄÄÄÄÄÄÄÄ		ÄÄÄÄÄÄÄÄÄÄÄÄÄÄÄÄ		ÄÄÄÄÄÄÄÄÄÄÄÄÄÄÄÄ		ÄÄÄÄÄÄÄÄÄÄÄÄÄÄÄÄ		ÄÄÄÄÄÄÄÄÄÄÄÄÄÄÄÄ		ÄÄÄÄÄÄÄÄÄÄÄÄÄÄÄÄ		ÄÄÄÄÄÄÄÄÄÄÄÄÄÄÄÄ		ÄÄÄÄÄÄÄÄÄÄÄÄÄÄÄÄ	
uclide	mrem/yr	fract.	mrem/yr	fract.	mrem/yr	fract.	mrem/yr	fract.	mrem/yr	fract.	mrem/yr	fract.	mrem/yr	fract.
ÄÄÄÄÄÄ	ÄÄÄÄÄÄÄÄÄ	ÄÄÄÄÄÄ	ÄÄÄÄÄÄÄÄÄ	ÄÄÄÄÄÄ	ÄÄÄÄÄÄÄÄÄ	ÄÄÄÄÄÄ	ÄÄÄÄÄÄÄÄÄ	ÄÄÄÄÄÄ	ÄÄÄÄÄÄÄÄÄ	ÄÄÄÄÄÄ	ÄÄÄÄÄÄÄÄÄ	ÄÄÄÄÄÄ	ÄÄÄÄÄÄÄÄÄ	ÄÄÄÄÄÄ
a-226	4.304E-02	0.3538	0.000E+00	0.0000	1.396E-07	0.0000	0.000E+00	0.0000	0.000E+00	0.0000	0.000E+00	0.0000	0.000E+00	0.0000
h-232	7.846E-02	0.6450	0.000E+00	0.0000	4.554E-05	0.0004	0.000E+00	0.0000	0.000E+00	0.0000	0.000E+00	0.0000	0.000E+00	0.0000
-234	1.367E-06	0.0000	0.000E+00	0.0000	3.313E-12	0.0000	0.000E+00	0.0000	0.000E+00	0.0000	0.000E+00	0.0000	0.000E+00	0.0000
-235	2.881E-05	0.0002	0.000E+00	0.0000	0.000E+00	0.0000	0.000E+00	0.0000	0.000E+00	0.0000	0.000E+00	0.0000	0.000E+00	0.0000
-238	7.017E-05	0.0006	0.000E+00	0.0000	1.800E-16	0.0000	0.000E+00	0.0000	0.000E+00	0.0000	0.000E+00	0.0000	0.000E+00	0.0000
ÍÍÍÍÍÍ	ÍÍÍÍÍÍÍÍÍ	ÍÍÍÍÍÍ	ÍÍÍÍÍÍÍÍÍ	ÍÍÍÍÍÍ	ÍÍÍÍÍÍÍÍÍ	ÍÍÍÍÍÍ	ÍÍÍÍÍÍÍÍÍ	ÍÍÍÍÍÍ	ÍÍÍÍÍÍÍÍÍ	ÍÍÍÍÍÍ	ÍÍÍÍÍÍÍÍÍ	ÍÍÍÍÍÍ	ÍÍÍÍÍÍÍÍÍ	ÍÍÍÍÍÍ
otal	1.216E-01	0.9996	0.000E+00	0.0000	4.568E-05	0.0004	0.000E+00	0.0000	0.000E+00	0.0000	0.000E+00	0.0000	0.000E+00	0.0000

Total Dose Contributions TDOSE(i,p,t) for Individual Radionuclides (i) and Pathways (p)
As mrem/yr and Fraction of Total Dose At t = 1.000E+02 years

Water Dependent Pathways

	Water		Fish		Radon		Plant		Meat		Milk		All Pathways*	
adio-	ÄÄÄÄÄÄÄÄÄÄÄÄÄÄÄÄ		ÄÄÄÄÄÄÄÄÄÄÄÄÄÄÄÄ		ÄÄÄÄÄÄÄÄÄÄÄÄÄÄÄÄ		ÄÄÄÄÄÄÄÄÄÄÄÄÄÄÄÄ		ÄÄÄÄÄÄÄÄÄÄÄÄÄÄÄÄ		ÄÄÄÄÄÄÄÄÄÄÄÄÄÄÄÄ		ÄÄÄÄÄÄÄÄÄÄÄÄÄÄÄÄ	
uclide	mrem/yr	fract.	mrem/yr	fract.	mrem/yr	fract.	mrem/yr	fract.	mrem/yr	fract.	mrem/yr	fract.	mrem/yr	fract.
ÄÄÄÄÄÄ	ÄÄÄÄÄÄÄÄÄ	ÄÄÄÄÄÄ	ÄÄÄÄÄÄÄÄÄ	ÄÄÄÄÄÄ	ÄÄÄÄÄÄÄÄÄ	ÄÄÄÄÄÄ	ÄÄÄÄÄÄÄÄÄ	ÄÄÄÄÄÄ	ÄÄÄÄÄÄÄÄÄ	ÄÄÄÄÄÄ	ÄÄÄÄÄÄÄÄÄ	ÄÄÄÄÄÄ	ÄÄÄÄÄÄÄÄÄ	ÄÄÄÄÄÄ
a-226	0.000E+00	0.0000	0.000E+00	0.0000	0.000E+00	0.0000	0.000E+00	0.0000	0.000E+00	0.0000	0.000E+00	0.0000	4.304E-02	0.3538
h-232	0.000E+00	0.0000	0.000E+00	0.0000	0.000E+00	0.0000	0.000E+00	0.0000	0.000E+00	0.0000	0.000E+00	0.0000	7.851E-02	0.6454
-234	0.000E+00	0.0000	0.000E+00	0.0000	0.000E+00	0.0000	0.000E+00	0.0000	0.000E+00	0.0000	0.000E+00	0.0000	1.367E-06	0.0000
-235	0.000E+00	0.0000	0.000E+00	0.0000	0.000E+00	0.0000	0.000E+00	0.0000	0.000E+00	0.0000	0.000E+00	0.0000	2.881E-05	0.0002
-238	0.000E+00	0.0000	0.000E+00	0.0000	0.000E+00	0.0000	0.000E+00	0.0000	0.000E+00	0.0000	0.000E+00	0.0000	7.017E-05	0.0006
ÍÍÍÍÍÍ	ÍÍÍÍÍÍÍÍÍ	ÍÍÍÍÍÍ	ÍÍÍÍÍÍÍÍÍ	ÍÍÍÍÍÍ	ÍÍÍÍÍÍÍÍÍ	ÍÍÍÍÍÍ	ÍÍÍÍÍÍÍÍÍ	ÍÍÍÍÍÍ	ÍÍÍÍÍÍÍÍÍ	ÍÍÍÍÍÍ	ÍÍÍÍÍÍÍÍÍ	ÍÍÍÍÍÍ	ÍÍÍÍÍÍÍÍÍ	ÍÍÍÍÍÍ
otal	0.000E+00	0.0000	0.000E+00	0.0000	0.000E+00	0.0000	0.000E+00	0.0000	0.000E+00	0.0000	0.000E+00	0.0000	1.217E-01	1.0000

Sum of all water independent and dependent pathways.

ummary : GKP Fire Fighter - External
ile : C:\USERS\CLAUDE\DOCUMENTS\0 GKP DOSE\RESRAD CW\GKP FIRE FIGHTER- EXTERNAL.RAD

Total Dose Contributions TDOSE(i,p,t) for Individual Radionuclides (i) and Pathways (p)
As mrem/yr and Fraction of Total Dose At t = 3.000E+02 years

Water Independent Pathways (Inhalation excludes radon)

	Ground		Inhalation		Radon		Plant		Meat		Milk		Soil	
adio-	ÄÄÄÄÄÄÄÄÄÄÄÄÄÄÄÄ		ÄÄÄÄÄÄÄÄÄÄÄÄÄÄÄÄ		ÄÄÄÄÄÄÄÄÄÄÄÄÄÄÄÄ		ÄÄÄÄÄÄÄÄÄÄÄÄÄÄÄÄ		ÄÄÄÄÄÄÄÄÄÄÄÄÄÄÄÄ		ÄÄÄÄÄÄÄÄÄÄÄÄÄÄÄÄ		ÄÄÄÄÄÄÄÄÄÄÄÄÄÄÄÄ	
uclide	mrem/yr	fract.	mrem/yr	fract.	mrem/yr	fract.	mrem/yr	fract.	mrem/yr	fract.	mrem/yr	fract.	mrem/yr	fract.
ÄÄÄÄÄÄ	ÄÄÄÄÄÄÄÄÄ	ÄÄÄÄÄÄ	ÄÄÄÄÄÄÄÄÄ	ÄÄÄÄÄÄ	ÄÄÄÄÄÄÄÄÄ	ÄÄÄÄÄÄ	ÄÄÄÄÄÄÄÄÄ	ÄÄÄÄÄÄ	ÄÄÄÄÄÄÄÄÄ	ÄÄÄÄÄÄ	ÄÄÄÄÄÄÄÄÄ	ÄÄÄÄÄÄ	ÄÄÄÄÄÄÄÄÄ	ÄÄÄÄÄÄ
a-226	0.000E+00	0.0000	0.000E+00	0.0000	0.000E+00	0.0000	0.000E+00	0.0000	0.000E+00	0.0000	0.000E+00	0.0000	0.000E+00	0.0000
n-232	0.000E+00	0.0000	0.000E+00	0.0000	0.000E+00	0.0000	0.000E+00	0.0000	0.000E+00	0.0000	0.000E+00	0.0000	0.000E+00	0.0000
-234	0.000E+00	0.0000	0.000E+00	0.0000	0.000E+00	0.0000	0.000E+00	0.0000	0.000E+00	0.0000	0.000E+00	0.0000	0.000E+00	0.0000
-235	0.000E+00	0.0000	0.000E+00	0.0000	0.000E+00	0.0000	0.000E+00	0.0000	0.000E+00	0.0000	0.000E+00	0.0000	0.000E+00	0.0000
-238	0.000E+00	0.0000	0.000E+00	0.0000	0.000E+00	0.0000	0.000E+00	0.0000	0.000E+00	0.0000	0.000E+00	0.0000	0.000E+00	0.0000
íííííí	íííííííííí	íííííí	íííííííííí	íííííí	íííííííííí	íííííí	íííííííííí	íííííí	íííííííííí	íííííí	íííííííííí	íííííí	íííííííííí	íííííí
otal	0.000E+00	0.0000	0.000E+00	0.0000	0.000E+00	0.0000	0.000E+00	0.0000	0.000E+00	0.0000	0.000E+00	0.0000	0.000E+00	0.0000

Total Dose Contributions TDOSE(i,p,t) for Individual Radionuclides (i) and Pathways (p)
As mrem/yr and Fraction of Total Dose At t = 3.000E+02 years

Water Dependent Pathways

	Water		Fish		Radon		Plant		Meat		Milk		All Pathways*	
adio-	ÄÄÄÄÄÄÄÄÄÄÄÄÄÄÄÄ		ÄÄÄÄÄÄÄÄÄÄÄÄÄÄÄÄ		ÄÄÄÄÄÄÄÄÄÄÄÄÄÄÄÄ		ÄÄÄÄÄÄÄÄÄÄÄÄÄÄÄÄ		ÄÄÄÄÄÄÄÄÄÄÄÄÄÄÄÄ		ÄÄÄÄÄÄÄÄÄÄÄÄÄÄÄÄ		ÄÄÄÄÄÄÄÄÄÄÄÄÄÄÄÄ	
uclide	mrem/yr	fract.	mrem/yr	fract.	mrem/yr	fract.	mrem/yr	fract.	mrem/yr	fract.	mrem/yr	fract.	mrem/yr	fract.
ÄÄÄÄÄÄ	ÄÄÄÄÄÄÄÄÄ	ÄÄÄÄÄÄ	ÄÄÄÄÄÄÄÄÄ	ÄÄÄÄÄÄ	ÄÄÄÄÄÄÄÄÄ	ÄÄÄÄÄÄ	ÄÄÄÄÄÄÄÄÄ	ÄÄÄÄÄÄ	ÄÄÄÄÄÄÄÄÄ	ÄÄÄÄÄÄ	ÄÄÄÄÄÄÄÄÄ	ÄÄÄÄÄÄ	ÄÄÄÄÄÄÄÄÄ	ÄÄÄÄÄÄ
a-226	0.000E+00	0.0000	0.000E+00	0.0000	0.000E+00	0.0000	0.000E+00	0.0000	0.000E+00	0.0000	0.000E+00	0.0000	0.000E+00	0.0000
n-232	0.000E+00	0.0000	0.000E+00	0.0000	0.000E+00	0.0000	0.000E+00	0.0000	0.000E+00	0.0000	0.000E+00	0.0000	0.000E+00	0.0000
-234	0.000E+00	0.0000	0.000E+00	0.0000	0.000E+00	0.0000	0.000E+00	0.0000	0.000E+00	0.0000	0.000E+00	0.0000	0.000E+00	0.0000
-235	0.000E+00	0.0000	0.000E+00	0.0000	0.000E+00	0.0000	0.000E+00	0.0000	0.000E+00	0.0000	0.000E+00	0.0000	0.000E+00	0.0000
-238	0.000E+00	0.0000	0.000E+00	0.0000	0.000E+00	0.0000	0.000E+00	0.0000	0.000E+00	0.0000	0.000E+00	0.0000	0.000E+00	0.0000
íííííí	íííííííííí	íííííí	íííííííííí	íííííí	íííííííííí	íííííí	íííííííííí	íííííí	íííííííííí	íííííí	íííííííííí	íííííí	íííííííííí	íííííí
otal	0.000E+00	0.0000	0.000E+00	0.0000	0.000E+00	0.0000	0.000E+00	0.0000	0.000E+00	0.0000	0.000E+00	0.0000	0.000E+00	0.0000

Sum of all water independent and dependent pathways.

ummary : GKP Fire Fighter - External
ile : C:\USERS\CLAUDE\DOCUMENTS\0 GKP DOSE\RESRAD CW\GKP FIRE FIGHTER- EXTERNAL.RAD

Total Dose Contributions TDOSE(i,p,t) for Individual Radionuclides (i) and Pathways (p)
As mrem/yr and Fraction of Total Dose At t = 1.000E+03 years

Water Independent Pathways (Inhalation excludes radon)

	Ground		Inhalation		Radon		Plant		Meat		Milk		Soil	
adio-	ÄÄÄÄÄÄÄÄÄÄÄÄÄÄÄ		ÄÄÄÄÄÄÄÄÄÄÄÄÄÄÄ		ÄÄÄÄÄÄÄÄÄÄÄÄÄÄÄ		ÄÄÄÄÄÄÄÄÄÄÄÄÄÄÄ		ÄÄÄÄÄÄÄÄÄÄÄÄÄÄÄ		ÄÄÄÄÄÄÄÄÄÄÄÄÄÄÄ		ÄÄÄÄÄÄÄÄÄÄÄÄÄÄÄ	
uclide	mrem/yr	fract.	mrem/yr	fract.	mrem/yr	fract.	mrem/yr	fract.	mrem/yr	fract.	mrem/yr	fract.	mrem/yr	fract.
ÄÄÄÄÄÄ	ÄÄÄÄÄÄÄÄÄ	ÄÄÄÄÄÄ	ÄÄÄÄÄÄÄÄÄ	ÄÄÄÄÄÄ	ÄÄÄÄÄÄÄÄÄ	ÄÄÄÄÄÄ	ÄÄÄÄÄÄÄÄÄ	ÄÄÄÄÄÄ	ÄÄÄÄÄÄÄÄÄ	ÄÄÄÄÄÄ	ÄÄÄÄÄÄÄÄÄ	ÄÄÄÄÄÄ	ÄÄÄÄÄÄÄÄÄ	ÄÄÄÄÄÄ
a-226	0.000E+00	0.0000	0.000E+00	0.0000	0.000E+00	0.0000	0.000E+00	0.0000	0.000E+00	0.0000	0.000E+00	0.0000	0.000E+00	0.0000
h-232	0.000E+00	0.0000	0.000E+00	0.0000	0.000E+00	0.0000	0.000E+00	0.0000	0.000E+00	0.0000	0.000E+00	0.0000	0.000E+00	0.0000
-234	0.000E+00	0.0000	0.000E+00	0.0000	0.000E+00	0.0000	0.000E+00	0.0000	0.000E+00	0.0000	0.000E+00	0.0000	0.000E+00	0.0000
-235	0.000E+00	0.0000	0.000E+00	0.0000	0.000E+00	0.0000	0.000E+00	0.0000	0.000E+00	0.0000	0.000E+00	0.0000	0.000E+00	0.0000
-238	0.000E+00	0.0000	0.000E+00	0.0000	0.000E+00	0.0000	0.000E+00	0.0000	0.000E+00	0.0000	0.000E+00	0.0000	0.000E+00	0.0000
íííííí	íííííííííí	íííííí	íííííííííí	íííííí	íííííííííí	íííííí	íííííííííí	íííííí	íííííííííí	íííííí	íííííííííí	íííííí	íííííííííí	íííííí
otal	0.000E+00	0.0000	0.000E+00	0.0000	0.000E+00	0.0000	0.000E+00	0.0000	0.000E+00	0.0000	0.000E+00	0.0000	0.000E+00	0.0000

Total Dose Contributions TDOSE(i,p,t) for Individual Radionuclides (i) and Pathways (p)
As mrem/yr and Fraction of Total Dose At t = 1.000E+03 years

Water Dependent Pathways

	Water		Fish		Radon		Plant		Meat		Milk		All Pathways*	
adio-	ÄÄÄÄÄÄÄÄÄÄÄÄÄÄÄ		ÄÄÄÄÄÄÄÄÄÄÄÄÄÄÄ		ÄÄÄÄÄÄÄÄÄÄÄÄÄÄÄ		ÄÄÄÄÄÄÄÄÄÄÄÄÄÄÄ		ÄÄÄÄÄÄÄÄÄÄÄÄÄÄÄ		ÄÄÄÄÄÄÄÄÄÄÄÄÄÄÄ		ÄÄÄÄÄÄÄÄÄÄÄÄÄÄÄ	
uclide	mrem/yr	fract.	mrem/yr	fract.	mrem/yr	fract.	mrem/yr	fract.	mrem/yr	fract.	mrem/yr	fract.	mrem/yr	fract.
ÄÄÄÄÄÄ	ÄÄÄÄÄÄÄÄÄ	ÄÄÄÄÄÄ	ÄÄÄÄÄÄÄÄÄ	ÄÄÄÄÄÄ	ÄÄÄÄÄÄÄÄÄ	ÄÄÄÄÄÄ	ÄÄÄÄÄÄÄÄÄ	ÄÄÄÄÄÄ	ÄÄÄÄÄÄÄÄÄ	ÄÄÄÄÄÄ	ÄÄÄÄÄÄÄÄÄ	ÄÄÄÄÄÄ	ÄÄÄÄÄÄÄÄÄ	ÄÄÄÄÄÄ
a-226	0.000E+00	0.0000	0.000E+00	0.0000	0.000E+00	0.0000	0.000E+00	0.0000	0.000E+00	0.0000	0.000E+00	0.0000	0.000E+00	0.0000
h-232	0.000E+00	0.0000	0.000E+00	0.0000	0.000E+00	0.0000	0.000E+00	0.0000	0.000E+00	0.0000	0.000E+00	0.0000	0.000E+00	0.0000
-234	0.000E+00	0.0000	0.000E+00	0.0000	0.000E+00	0.0000	0.000E+00	0.0000	0.000E+00	0.0000	0.000E+00	0.0000	0.000E+00	0.0000
-235	0.000E+00	0.0000	0.000E+00	0.0000	0.000E+00	0.0000	0.000E+00	0.0000	0.000E+00	0.0000	0.000E+00	0.0000	0.000E+00	0.0000
-238	0.000E+00	0.0000	0.000E+00	0.0000	0.000E+00	0.0000	0.000E+00	0.0000	0.000E+00	0.0000	0.000E+00	0.0000	0.000E+00	0.0000
íííííí	íííííííííí	íííííí	íííííííííí	íííííí	íííííííííí	íííííí	íííííííííí	íííííí	íííííííííí	íííííí	íííííííííí	íííííí	íííííííííí	íííííí
otal	0.000E+00	0.0000	0.000E+00	0.0000	0.000E+00	0.0000	0.000E+00	0.0000	0.000E+00	0.0000	0.000E+00	0.0000	0.000E+00	0.0000

Sum of all water independent and dependent pathways.

ummary : GKP Fire Fighter - External
ile : C:\USERS\CLAUDE\DOCUMENTS\0 GKP DOSE\RESRAD CW\GKP FIRE FIGHTER- EXTERNAL.RAD

Dose/Source Ratios Summed Over All Pathways
Parent and Progeny Principal Radionuclide Contributions Indicated

Parent	Product	Thread	DSR(j,t) At Time in Years (mrem/yr)/(pCi/g)							
(i)	(j)	Fraction	0.000E+00	1.000E+00	3.000E+00	1.000E+01	3.000E+01	1.000E+02	3.000E+02	1.000E+03
ÄÄÄÄÄÄÄÄÄ	ÄÄÄÄÄÄÄÄÄÄ	ÄÄÄÄÄÄÄÄÄ	ÄÄÄÄÄÄÄÄÄ	ÄÄÄÄÄÄÄÄÄ	ÄÄÄÄÄÄÄÄÄ	ÄÄÄÄÄÄÄÄÄ	ÄÄÄÄÄÄÄÄÄ	ÄÄÄÄÄÄÄÄÄ	ÄÄÄÄÄÄÄÄÄ	ÄÄÄÄÄÄÄÄÄ
a-226+D	Ra-226+D	9.996E-01	5.520E-02	5.329E-02	4.966E-02	3.876E-02	1.888E-02	1.177E-03	0.000E+00	0.000E+00
a-226+D	Pb-210+D	9.996E-01	5.505E-07	1.589E-06	3.402E-06	7.535E-06	9.237E-06	1.484E-06	0.000E+00	0.000E+00
a-226+D	äDSR(j)		5.520E-02	5.329E-02	4.967E-02	3.876E-02	1.889E-02	1.179E-03	0.000E+00	0.000E+00
a-226+D	Ra-226+D	1.319E-06	7.287E-08	7.035E-08	6.555E-08	5.116E-08	2.492E-08	1.554E-09	0.000E+00	0.000E+00
a-226+D	Pb-210+D1	1.319E-06	1.610E-12	4.645E-12	9.937E-12	2.193E-11	2.655E-11	3.869E-12	0.000E+00	0.000E+00
a-226+D	äDSR(j)		7.287E-08	7.035E-08	6.556E-08	5.118E-08	2.495E-08	1.558E-09	0.000E+00	0.000E+00
a-226+D	Ra-226+D	1.899E-08	1.049E-09	1.013E-09	9.436E-10	7.364E-10	3.587E-10	2.237E-11	0.000E+00	0.000E+00
a-226+D	Pb-210+D2	1.899E-08	1.711E-14	4.938E-14	1.057E-13	2.334E-13	2.834E-13	4.232E-14	0.000E+00	0.000E+00
a-226+D	äDSR(j)		1.049E-09	1.013E-09	9.437E-10	7.366E-10	3.590E-10	2.241E-11	0.000E+00	0.000E+00
a-226+D1	Ra-226+D1	2.100E-04	1.159E-05	1.119E-05	1.043E-05	8.140E-06	3.965E-06	2.473E-07	0.000E+00	0.000E+00
a-226+D1	Pb-210+D	2.100E-04	1.156E-10	3.337E-10	7.147E-10	1.583E-09	1.940E-09	3.117E-10	0.000E+00	0.000E+00
a-226+D1	äDSR(j)		1.159E-05	1.119E-05	1.043E-05	8.142E-06	3.967E-06	2.476E-07	0.000E+00	0.000E+00
a-226+D1	Ra-226+D1	2.771E-10	1.530E-11	1.478E-11	1.377E-11	1.074E-11	5.234E-12	3.264E-13	0.000E+00	0.000E+00
a-226+D1	Pb-210+D1	2.771E-10	3.382E-16	9.756E-16	2.087E-15	4.606E-15	5.578E-15	8.127E-16	0.000E+00	0.000E+00
a-226+D1	äDSR(j)		1.531E-11	1.478E-11	1.377E-11	1.075E-11	5.240E-12	3.272E-13	0.000E+00	0.000E+00
a-226+D1	Ra-226+D1	3.989E-12	2.203E-13	2.127E-13	1.982E-13	1.547E-13	7.534E-14	4.698E-15	0.000E+00	0.000E+00
a-226+D1	Pb-210+D2	3.989E-12	3.595E-18	1.037E-17	2.219E-17	4.902E-17	5.953E-17	8.889E-18	0.000E+00	0.000E+00
a-226+D1	äDSR(j)		2.203E-13	2.127E-13	1.982E-13	1.547E-13	7.540E-14	4.707E-15	0.000E+00	0.000E+00
a-226+D2	Ra-226+D2	1.998E-04	9.554E-06	9.222E-06	8.591E-06	6.697E-06	3.251E-06	1.998E-07	0.000E+00	0.000E+00
a-226+D2	Pb-210+D	1.998E-04	1.100E-10	3.175E-10	6.799E-10	1.506E-09	1.846E-09	2.966E-10	0.000E+00	0.000E+00
a-226+D2	äDSR(j)		9.554E-06	9.222E-06	8.592E-06	6.698E-06	3.253E-06	2.001E-07	0.000E+00	0.000E+00
a-226+D2	Ra-226+D2	2.637E-10	1.261E-11	1.217E-11	1.134E-11	8.840E-12	4.292E-12	2.637E-13	0.000E+00	0.000E+00
a-226+D2	Pb-210+D1	2.637E-10	3.218E-16	9.282E-16	1.986E-15	4.382E-15	5.307E-15	7.732E-16	0.000E+00	0.000E+00
a-226+D2	äDSR(j)		1.261E-11	1.217E-11	1.134E-11	8.844E-12	4.297E-12	2.645E-13	0.000E+00	0.000E+00
a-226+D2	Ra-226+D2	3.795E-12	1.815E-13	1.752E-13	1.632E-13	1.272E-13	6.177E-14	3.795E-15	0.000E+00	0.000E+00
a-226+D2	Pb-210+D2	3.795E-12	3.420E-18	9.867E-18	2.112E-17	4.664E-17	5.664E-17	8.457E-18	0.000E+00	0.000E+00
a-226+D2	äDSR(j)		1.815E-13	1.752E-13	1.633E-13	1.273E-13	6.183E-14	3.804E-15	0.000E+00	0.000E+00
a-226+D3	Ra-226+D3	4.196E-08	2.007E-09	1.937E-09	1.804E-09	1.407E-09	6.828E-10	4.196E-11	0.000E+00	0.000E+00
a-226+D3	Pb-210+D	4.196E-08	2.311E-14	6.669E-14	1.428E-13	3.163E-13	3.877E-13	6.229E-14	0.000E+00	0.000E+00
a-226+D3	äDSR(j)		2.007E-09	1.937E-09	1.805E-09	1.407E-09	6.832E-10	4.202E-11	0.000E+00	0.000E+00
a-226+D3	Ra-226+D3	5.538E-14	2.649E-15	2.557E-15	2.382E-15	1.857E-15	9.014E-16	5.538E-17	0.000E+00	0.000E+00
a-226+D3	Pb-210+D1	5.538E-14	6.758E-20	1.950E-19	4.171E-19	9.205E-19	1.115E-18	1.624E-19	0.000E+00	0.000E+00
a-226+D3	äDSR(j)		2.649E-15	2.557E-15	2.382E-15	1.858E-15	9.025E-16	5.554E-17	0.000E+00	0.000E+00
a-226+D3	Ra-226+D3	7.972E-16	3.813E-17	3.680E-17	3.428E-17	2.672E-17	1.297E-17	7.972E-19	0.000E+00	0.000E+00
a-226+D3	Pb-210+D2	7.972E-16	7.184E-22	2.073E-21	4.435E-21	9.796E-21	1.190E-20	1.776E-21	0.000E+00	0.000E+00
a-226+D3	äDSR(j)		3.813E-17	3.680E-17	3.429E-17	2.673E-17	1.299E-17	7.989E-19	0.000E+00	0.000E+00

ummary : GKP Fire Fighter - External
ile : C:\USERS\CLAUDE\DOCUMENTS\0 GKP DOSE\RESRAD CW\GKP FIRE FIGHTER- EXTERNAL.RAD

Dose/Source Ratios Summed Over All Pathways
Parent and Progeny Principal Radionuclide Contributions Indicated

Parent (i)	Product (j)	Thread Fraction	DSR(j,t) At Time in Years (mrem/yr)/(pCi/g) 0.000E+00	1.000E+00	3.000E+00	1.000E+01	3.000E+01	1.000E+02	3.000E+02	1.000E+03
ÄÄÄÄÄÄÄÄÄ	ÄÄÄÄÄÄÄÄÄÄ	ÄÄÄÄÄÄÄÄÄ	ÄÄÄÄÄÄÄÄÄ	ÄÄÄÄÄÄÄÄÄ	ÄÄÄÄÄÄÄÄÄ	ÄÄÄÄÄÄÄÄÄ	ÄÄÄÄÄÄÄÄÄ	ÄÄÄÄÄÄÄÄÄ	ÄÄÄÄÄÄÄÄÄ	ÄÄÄÄÄÄÄÄÄ
a-226+D4	Ra-226+D4	2.000E-07	5.173E-11	5.002E-11	4.677E-11	3.693E-11	1.868E-11	1.408E-12	0.000E+00	0.000E+00
a-226+D4	Pb-210+D	2.000E-07	1.101E-13	3.179E-13	6.808E-13	1.508E-12	1.848E-12	2.969E-13	0.000E+00	0.000E+00
a-226+D4	äDSR(j)		5.184E-11	5.034E-11	4.745E-11	3.844E-11	2.053E-11	1.705E-12	0.000E+00	0.000E+00
a-226+D4	Ra-226+D4	2.640E-13	6.829E-17	6.603E-17	6.173E-17	4.875E-17	2.466E-17	1.859E-18	0.000E+00	0.000E+00
a-226+D4	Pb-210+D1	2.640E-13	3.221E-19	9.293E-19	1.988E-18	4.387E-18	5.313E-18	7.742E-19	0.000E+00	0.000E+00
a-226+D4	äDSR(j)		6.861E-17	6.696E-17	6.372E-17	5.314E-17	2.997E-17	2.633E-18	0.000E+00	0.000E+00
a-226+D4	Ra-226+D4	3.800E-15	9.829E-19	9.504E-19	8.886E-19	7.017E-19	3.550E-19	2.675E-20	0.000E+00	0.000E+00
a-226+D4	Pb-210+D2	3.800E-15	3.424E-21	9.879E-21	2.114E-20	4.669E-20	5.671E-20	8.467E-21	0.000E+00	0.000E+00
a-226+D4	äDSR(j)		9.863E-19	9.603E-19	9.097E-19	7.484E-19	4.117E-19	3.522E-20	0.000E+00	0.000E+00
n-232	Th-232	1.000E+00	3.205E-06	3.203E-06	3.200E-06	3.187E-06	3.141E-06	2.601E-06	0.000E+00	0.000E+00
n-232	Ra-228+D	1.000E+00	1.763E-03	4.938E-03	9.955E-03	1.882E-02	2.167E-02	1.299E-02	0.000E+00	0.000E+00
n-232	Th-228+D	1.000E+00	3.125E-04	1.894E-03	7.323E-03	2.482E-02	3.361E-02	1.972E-02	0.000E+00	0.000E+00
n-232	äDSR(j)		2.078E-03	6.836E-03	1.728E-02	4.365E-02	5.528E-02	3.271E-02	0.000E+00	0.000E+00
-234	U-234	9.996E-01	2.431E-06	2.324E 06	2.125E 06	1.552E-06	6.304E-07	2.371E-08	0.000E+00	0.000E+00
-234	Th-230	9.996E-01	3.329E-11	9.787E-11	2.185E-10	5.631E-10	1.100E-09	1.162E-09	0.000E+00	0.000E+00
-234	Ra-226+D	9.996E-01	3.651E-11	2.494E-10	1.248E-09	9.170E-09	4.463E-08	7.337E-08	0.000E+00	0.000E+00
-234	Pb-210+D	9.996E-01	1.832E-16	2.671E-15	2.924E-14	6.172E-13	7.984E-12	3.702E-11	0.000E+00	0.000E+00
-234	äDSR(j)		2.431E-06	2.325E-06	2.126E-06	1.562E-06	6.762E-07	9.828E-08	0.000E+00	0.000E+00
-234	U-234	1.319E-06	3.209E-12	3.068E-12	2.805E-12	2.049E-12	8.322E-13	3.130E-14	0.000E+00	0.000E+00
-234	Th-230	1.319E-06	4.394E-17	1.292E-16	2.884E-16	7.433E-16	1.452E-15	1.534E-15	0.000E+00	0.000E+00
-234	Ra-226+D	1.319E-06	4.819E-17	3.292E-16	1.647E-15	1.210E-14	5.891E-14	9.685E-14	0.000E+00	0.000E+00
-234	Pb-210+D1	1.319E-06	5.357E-22	7.808E-21	8.540E-20	1.796E-18	2.295E-17	9.652E-17	0.000E+00	0.000E+00
-234	äDSR(j)		3.209E-12	3.069E-12	2.807E-12	2.062E-12	8.926E-13	1.298E-13	0.000E+00	0.000E+00
-234	U-234	1.899E-08	4.619E-14	4.416E-14	4.037E-14	2.949E-14	1.198E-14	4.505E-16	0.000E+00	0.000E+00
-234	Th-230	1.899E-08	6.324E-19	1.860E-18	4.152E-18	1.070E-17	2.091E-17	2.208E-17	0.000E+00	0.000E+00
-234	Ra-226+D	1.899E-08	6.937E-19	4.739E-18	2.370E-17	1.742E-16	8.480E-16	1.394E-15	0.000E+00	0.000E+00
-234	Pb-210+D2	1.899E-08	5.695E-24	8.301E-23	9.081E-22	1.911E-20	2.450E-19	1.056E-18	0.000E+00	0.000E+00
-234	äDSR(j)		4.619E-14	4.417E-14	4.040E-14	2.967E-14	1.285E-14	1.868E-15	0.000E+00	0.000E+00
-234	U-234	2.100E-04	5.106E-10	4.882E-10	4.463E-10	3.260E-10	1.324E-10	4.980E-12	0.000E+00	0.000E+00
-234	Th-230	2.100E-04	6.992E-15	2.056E-14	4.589E-14	1.183E-13	2.311E-13	2.441E-13	0.000E+00	0.000E+00
-234	Ra-226+D1	2.100E-04	7.669E-15	5.238E-14	2.620E-13	1.926E-12	9.374E-12	1.541E-11	0.000E+00	0.000E+00
-234	Pb-210+D	2.100E-04	3.848E-20	5.610E-19	6.142E-18	1.296E-16	1.677E-15	7.776E-15	0.000E+00	0.000E+00
-234	äDSR(j)		5.106E-10	4.883E-10	4.466E-10	3.280E-10	1.420E-10	2.064E-11	0.000E+00	0.000E+00
-234	U-234	2.771E-10	6.740E-16	6.444E-16	5.892E-16	4.303E-16	1.748E-16	6.573E-18	0.000E+00	0.000E+00
-234	Th-230	2.771E-10	9.229E-21	2.714E-20	6.058E-20	1.561E-19	3.051E-19	3.222E-19	0.000E+00	0.000E+00
-234	Ra-226+D1	2.771E-10	1.012E-20	6.915E-20	3.459E-19	2.542E-18	1.237E-17	2.034E-17	0.000E+00	0.000E+00
-234	Pb-210+D1	2.771E-10	1.125E-25	1.640E-24	1.794E-23	3.772E-22	4.821E-21	2.027E-20	0.000E+00	0.000E+00
-234	äDSR(j)		6.740E-16	6.445E-16	5.896E-16	4.330E-16	1.875E-16	2.726E-17	0.000E+00	0.000E+00

ummary : GKP Fire Fighter - External
ile : C:\USERS\CLAUDE\DOCUMENTS\0 GKP DOSE\RESRAD CW\GKP FIRE FIGHTER- EXTERNAL.RAD

Dose/Source Ratios Summed Over All Pathways
Parent and Progeny Principal Radionuclide Contributions Indicated

Parent	Product	Thread	DSR(j,t) At Time in Years (mrem/yr)/(pCi/g)							
(i)	(j)	Fraction	0.000E+00	1.000E+00	3.000E+00	1.000E+01	3.000E+01	1.000E+02	3.000E+02	1.000E+03
ÄÄÄÄÄÄÄÄÄ	ÄÄÄÄÄÄÄÄÄÄ	ÄÄÄÄÄÄÄÄÄ	ÄÄÄÄÄÄÄÄÄ	ÄÄÄÄÄÄÄÄÄ	ÄÄÄÄÄÄÄÄÄ	ÄÄÄÄÄÄÄÄÄ	ÄÄÄÄÄÄÄÄÄ	ÄÄÄÄÄÄÄÄÄ	ÄÄÄÄÄÄÄÄÄ	ÄÄÄÄÄÄÄÄÄ
-234	U-234	3.989E-12	9.701E-18	9.276E-18	8.480E-18	6.194E-18	2.516E-18	9.462E-20	0.000E+00	0.000E+00
-234	Th-230	3.989E-12	1.328E-22	3.906E-22	8.720E-22	2.247E-21	4.391E-21	4.638E-21	0.000E+00	0.000E+00
-234	Ra-226+D1	3.989E-12	1.457E-22	9.953E-22	4.979E-21	3.660E-20	1.781E-19	2.928E-19	0.000E+00	0.000E+00
-234	Pb-210+D2	3.989E-12	1.196E-27	1.744E-26	1.907E-25	4.015E-24	5.146E-23	2.217E-22	0.000E+00	0.000E+00
-234	äDSR(j)		9.702E-18	9.277E-18	8.486E-18	6.233E-18	2.699E-18	3.923E-19	0.000E+00	0.000E+00
-234	U-234	1.998E-04	4.858E-10	4.645E-10	4.246E-10	3.102E-10	1.260E-10	4.738E-12	0.000E+00	0.000E+00
-234	Th-230	1.998E-04	6.652E-15	1.956E-14	4.367E-14	1.125E-13	2.199E-13	2.323E-13	0.000E+00	0.000E+00
-234	Ra-226+D2	1.998E-04	6.319E-15	4.316E-14	2.158E-13	1.585E-12	7.685E-12	1.245E-11	0.000E+00	0.000E+00
-234	Pb-210+D	1.998E-04	3.661E-20	5.338E-19	5.844E-18	1.233E-16	1.596E-15	7.398E-15	0.000E+00	0.000E+00
-234	äDSR(j)		4.858E-10	4.646E-10	4.249E-10	3.119E-10	1.339E-10	1.743E-11	0.000E+00	0.000E+00
-234	U-234	2.637E-10	6.412E-16	6.131E-16	5.605E-16	4.094E-16	1.663E-16	6.254E-18	0.000E+00	0.000E+00
-234	Th-230	2.637E-10	8.781E-21	2.582E-20	5.764E-20	1.485E-19	2.903E-19	3.066E-19	0.000E+00	0.000E+00
-234	Ra-226+D2	2.637E-10	8.341E-21	5.697E-20	2.849E-19	2.092E-18	1.014E-17	1.643E-17	0.000E+00	0.000E+00
-234	Pb-210+D1	2.637E-10	1.071E-25	1.560E-24	1.707E-23	3.589E-22	4.587E-21	1.929E-20	0.000E+00	0.000E+00
-234	äDSR(j)		6.413E-16	6.132E-16	5.609E-16	4.116E-16	1.767E-16	2.301E-17	0.000E+00	0.000E+00
-234	U-234	3.795E-12	9.230E-18	8.825E-18	8.068E-18	5.893E-18	2.394E-18	9.002E-20	0.000E+00	0.000E+00
-234	Th-230	3.795E-12	1.264E-22	3.716E-22	8.296E-22	2.138E-21	4.178E-21	4.413E-21	0.000E+00	0.000E+00
-234	Ra-226+D2	3.795E-12	1.201E-22	8.200E-22	4.100E-21	3.011E-20	1.460E-19	2.366E-19	0.000E+00	0.000E+00
-234	Pb-210+D2	3.795E-12	1.138E-27	1.659E-26	1.815E-25	3.820E-24	4.896E-23	2.110E-22	0.000E+00	0.000E+00
-234	äDSR(j)		9.230E-18	8.827E-18	8.073E-18	5.925E-18	2.544E-18	3.312E-19	0.000E+00	0.000E+00
-234	U-234	4.196E-08	1.020E-13	9.756E-14	8.919E-14	6.515E-14	2.646E-14	9.952E-16	0.000E+00	0.000E+00
-234	Th-230	4.196E-08	1.397E-18	4.108E-18	9.172E-18	2.364E-17	4.619E-17	4.879E-17	0.000E+00	0.000E+00
-234	Ra-226+D3	4.196E-08	1.327E-18	9.065E-18	4.533E-17	3.328E-16	1.614E-15	2.615E-15	0.000E+00	0.000E+00
-234	Pb-210+D	4.196E-08	7.689E-24	1.121E-22	1.227E-21	2.591E-20	3.351E-19	1.554E-18	0.000E+00	0.000E+00
-234	äDSR(j)		1.020E-13	9.758E-14	8.925E-14	6.550E-14	2.812E-14	3.660E-15	0.000E+00	0.000E+00
-234	U-234	5.538E-14	1.347E-19	1.288E-19	1.177E-19	8.599E-20	3.493E-20	1.314E-21	0.000E+00	0.000E+00
-234	Th-230	5.538E-14	1.844E-24	5.423E-24	1.211E-23	3.120E-23	6.097E-23	6.440E-23	0.000E+00	0.000E+00
-234	Ra-226+D3	5.538E-14	1.752E-24	1.197E-23	5.983E-23	4.393E-22	2.131E-21	3.452E-21	0.000E+00	0.000E+00
-234	Pb-210+D1	5.538E-14	2.249E-29	3.277E-28	3.585E-27	7.539E-26	9.635E-25	4.051E-24	0.000E+00	0.000E+00
-234	äDSR(j)		1.347E-19	1.288E-19	1.178E-19	8.646E-20	3.712E-20	4.834E-21	0.000E+00	0.000E+00
-234	U-234	7.972E-16	1.939E-21	1.854E-21	1.695E-21	1.238E-21	5.028E-22	1.891E-23	0.000E+00	0.000E+00
-234	Th-230	7.972E-16	2.655E-26	7.805E-26	1.743E-25	4.491E-25	8.775E-25	9.269E-25	0.000E+00	0.000E+00
-234	Ra-226+D3	7.972E-16	2.522E-26	1.722E-25	8.612E-25	6.323E-24	3.067E-23	4.968E-23	0.000E+00	0.000E+00
-234	Pb-210+D2	7.972E-16	2.390E-31	3.484E-30	3.812E-29	8.023E-28	1.028E-26	4.431E-26	0.000E+00	0.000E+00
-234	äDSR(j)		1.939E-21	1.854E-21	1.696E-21	1.245E-21	5.343E-22	6.956E-23	0.000E+00	0.000E+00
-234	U-234	2.000E-07	4.864E-13	4.651E-13	4.252E-13	3.105E-13	1.261E-13	4.744E-15	0.000E+00	0.000E+00
-234	Th-230	2.000E-07	6.660E-18	1.958E-17	4.372E-17	1.127E-16	2.202E-16	2.325E-16	0.000E+00	0.000E+00
-234	Ra-226+D4	2.000E-07	3.423E-20	2.341E-19	1.175E-18	8.739E-18	4.416E-17	8.775E-17	0.000E+00	0.000E+00
-234	Pb-210+D	2.000E-07	3.665E-23	5.344E-22	5.851E-21	1.235E-19	1.597E-18	7.407E-18	0.000E+00	0.000E+00
-234	äDSR(j)		4.864E-13	4.651E-13	4.252E-13	3.107E-13	1.264E-13	5.071E-15	0.000E+00	0.000E+00

ummary : GKP Fire Fighter - External
ile : C:\USERS\CLAUDE\DOCUMENTS\0 GKP DOSE\RESRAD CW\GKP FIRE FIGHTER- EXTERNAL.RAD

Dose/Source Ratios Summed Over All Pathways
Parent and Progeny Principal Radionuclide Contributions Indicated

Parent (i)	Product (j)	Thread Fraction	DSR(j,t) At Time in Years (mrem/yr)/(pCi/g) 0.000E+00	1.000E+00	3.000E+00	1.000E+01	3.000E+01	1.000E+02	3.000E+02	1.000E+03
ÄÄÄÄÄÄÄÄ	ÄÄÄÄÄÄÄÄÄÄ	ÄÄÄÄÄÄÄÄÄ	ÄÄÄÄÄÄÄÄÄ	ÄÄÄÄÄÄÄÄÄ	ÄÄÄÄÄÄÄÄÄ	ÄÄÄÄÄÄÄÄÄ	ÄÄÄÄÄÄÄÄÄ	ÄÄÄÄÄÄÄÄÄ	ÄÄÄÄÄÄÄÄÄ	ÄÄÄÄÄÄÄÄÄ
-234	U-234	2.640E-13	6.420E-19	6.139E-19	5.612E-19	4.099E-19	1.665E-19	6.262E-21	0.000E+00	0.000E+00
-234	Th-230	2.640E-13	8.791E-24	2.585E-23	5.771E-23	1.487E-22	2.906E-22	3.070E-22	0.000E+00	0.000E+00
-234	Ra-226+D4	2.640E-13	4.518E-26	3.091E-25	1.551E-24	1.154E-23	5.829E-23	1.158E-22	0.000E+00	0.000E+00
-234	Pb-210+D1	2.640E-13	1.072E-28	1.562E-27	1.709E-26	3.593E-25	4.593E-24	1.931E-23	0.000E+00	0.000E+00
-234	äDSR(j)		6.420E-19	6.139E-19	5.613E-19	4.101E-19	1.669E-19	6.704E-21	0.000E+00	0.000E+00
-234	U-234	3.800E-15	9.241E-21	8.836E-21	8.078E-21	5.900E-21	2.397E-21	9.013E-23	0.000E+00	0.000E+00
-234	Th-230	3.800E-15	1.265E-25	3.721E-25	8.306E-25	2.141E-24	4.183E-24	4.418E-24	0.000E+00	0.000E+00
-234	Ra-226+D4	3.800E-15	6.504E-28	4.449E-27	2.232E-26	1.660E-25	8.391E-25	1.667E-24	0.000E+00	0.000E+00
-234	Pb-210+D2	3.800E-15	1.139E-30	1.661E-29	1.817E-28	3.824E-27	4.902E-26	2.112E-25	0.000E+00	0.000E+00
-234	äDSR(j)		9.241E-21	8.836E-21	8.079E-21	5.902E-21	2.402E-21	9.643E-23	0.000E+00	0.000E+00
-235+D	U-235+D	9.835E-01	4.305E-03	4.113E-03	3.753E-03	2.721E-03	1.078E-03	3.366E-05	0.000E+00	0.000E+00
-235+D	Pa-231	9.835E-01	1.094E-08	3.150E-08	6.709E-08	1.455E-07	1.653E-07	1.593E-08	0.000E+00	0.000E+00
-235+D	Ac-227+D	9.835E-01	1.195E-09	7.824E-09	3.559E-08	1.882E-07	3.900E-07	5.031E-08	0.000E+00	0.000E+00
-235+D	äDSR(j)		4.305E-03	4.113E-03	3.753E-03	2.721E-03	1.079E-03	3.373E-05	0.000E+00	0.000E+00
-235+D	U-235+D	2.722E-03	1.192E-05	1.138E-05	1.039E-05	7.531E-06	2.984E-06	9.316E-08	0.000E+00	0.000E+00
-235+D	Pa-231	2.722E-03	3.028E-11	8.718E-11	1.857E-10	4.026E-10	4.575E-10	4.408E-11	0.000E+00	0.000E+00
-235+D	Ac-227+D1	2.722E-03	3.349E-12	2.192E-11	9.971E-11	5.274E-10	1.093E-09	1.407E-10	0.000E+00	0.000E+00
-235+D	äDSR(j)		1.192E-05	1.138E-05	1.039E-05	7.532E-06	2.985E-06	9.334E-08	0.000E+00	0.000E+00
-235+D	U-235+D	1.376E-02	6.024E-05	5.755E-05	5.251E-05	3.807E-05	1.508E-05	4.710E-07	0.000E+00	0.000E+00
-235+D	Pa-231	1.376E-02	1.531E-10	4.408E-10	9.388E-10	2.035E-09	2.313E-09	2.229E-10	0.000E+00	0.000E+00
-235+D	Ac-227+D2	1.376E-02	1.403E-11	9.183E-11	4.177E-10	2.210E-09	4.582E-09	5.949E-10	0.000E+00	0.000E+00
-235+D	äDSR(j)		6.024E-05	5.755E-05	5.251E-05	3.808E-05	1.509E-05	4.718E-07	0.000E+00	0.000E+00
-235+D	U-235+D	3.809E-05	1.667E-07	1.593E-07	1.453E-07	1.054E-07	4.175E-08	1.304E-09	0.000E+00	0.000E+00
-235+D	Pa-231	3.809E-05	4.237E-13	1.220E-12	2.598E-12	5.634E-12	6.402E-12	6.168E-13	0.000E+00	0.000E+00
-235+D	Ac-227+D3	3.809E-05	3.940E-14	2.579E-13	1.173E-12	6.207E-12	1.287E-11	1.668E-12	0.000E+00	0.000E+00
-235+D	äDSR(j)		1.667E-07	1.593E-07	1.453E-07	1.054E-07	4.177E-08	1.306E-09	0.000E+00	0.000E+00
-235+D	U-235+D	8.257E-07	3.615E-09	3.453E-09	3.151E-09	2.285E-09	9.051E-10	2.826E-11	0.000E+00	0.000E+00
-235+D	Pa-231	8.257E-07	9.187E-15	2.645E-14	5.633E-14	1.221E-13	1.388E-13	1.337E-14	0.000E+00	0.000E+00
-235+D	Ac-227+D4	8.257E-07	3.820E-16	2.500E-15	1.137E-14	6.007E-14	1.240E-13	1.578E-14	0.000E+00	0.000E+00
-235+D	äDSR(j)		3.615E-09	3.453E-09	3.151E-09	2.285E-09	9.054E-10	2.829E-11	0.000E+00	0.000E+00
-235+D	U-235+D	2.285E-09	1.000E-11	9.557E-12	8.720E-12	6.323E-12	2.505E-12	7.822E-14	0.000E+00	0.000E+00
-235+D	Pa-231	2.285E-09	2.542E-17	7.320E-17	1.559E-16	3.380E-16	3.841E-16	3.701E-17	0.000E+00	0.000E+00
-235+D	Ac-227+D5	2.285E-09	1.092E-18	7.147E-18	3.249E-17	1.717E-16	3.542E-16	4.495E-17	0.000E+00	0.000E+00
-235+D	äDSR(j)		1.000E-11	9.557E-12	8.720E-12	6.323E-12	2.506E-12	7.830E-14	0.000E+00	0.000E+00
-238	U-238	5.450E-07	3.579E-13	3.425E-13	3.135E-13	2.302E-13	9.517E-14	4.258E-15	0.000E+00	0.000E+00

Dose/Source Ratios Summed Over All Pathways

Parent and Progeny Principal Radionuclide Contributions Indicated

Parent (i)	Product (j)	Thread Fraction	DSR(j,t) At Time in Years (mrem/yr)/(pCi/g) 0.000E+00	1.000E+00	3.000E+00	1.000E+01	3.000E+01	1.000E+02	3.000E+02	1.000E+03
ÄÄÄÄÄÄÄÄ	ÄÄÄÄÄÄÄÄÄÄ	ÄÄÄÄÄÄÄÄ	ÄÄÄÄÄÄÄÄ	ÄÄÄÄÄÄÄÄ	ÄÄÄÄÄÄÄÄ	ÄÄÄÄÄÄÄÄ	ÄÄÄÄÄÄÄÄ	ÄÄÄÄÄÄÄÄ	ÄÄÄÄÄÄÄÄ	ÄÄÄÄÄÄÄÄ
-238+D	U-238+D	1.599E-03	9.574E-05	9.134E-05	8.312E-05	5.970E-05	2.296E-05	6.256E-07	0.000E+00	0.000E+00
-238+D	U-234	1.599E-03	5.450E-15	1.571E-14	3.356E-14	7.359E-14	8.686E-14	1.076E-14	0.000E+00	0.000E+00
-238+D	Th-230	1.599E-03	4.975E-20	3.394E-19	1.693E-18	1.233E-17	5.926E-17	1.125E-16	0.000E+00	0.000E+00
-238+D	Ra-226+D	1.599E-03	4.102E-20	5.981E-19	6.548E-18	1.380E-16	1.759E-15	6.379E-15	0.000E+00	0.000E+00
-238+D	Pb-210+D	1.599E-03	1.650E-25	4.961E-24	1.168E-22	7.144E-21	2.531E-19	2.951E-18	0.000E+00	0.000E+00
-238+D	äDSR(j)		9.574E-05	9.134E-05	8.312E-05	5.970E-05	2.296E-05	6.256E-07	0.000E+00	0.000E+00
-238+D	U-238+D	2.111E-09	1.264E-10	1.206E-10	1.097E-10	7.881E-11	3.030E-11	8.258E-13	0.000E+00	0.000E+00
-238+D	U-234	2.111E-09	7.194E-21	2.074E-20	4.430E-20	9.714E-20	1.146E-19	1.421E-20	0.000E+00	0.000E+00
-238+D	Th-230	2.111E-09	6.567E-26	4.480E-25	2.235E-24	1.628E-23	7.823E-23	1.485E-22	0.000E+00	0.000E+00
-238+D	Ra-226+D	2.111E-09	5.415E-26	7.895E-25	8.643E-24	1.822E-22	2.322E-21	8.421E-21	0.000E+00	0.000E+00
-238+D	Pb-210+D1	2.111E-09	4.826E-31	1.450E-29	3.411E-28	2.079E-26	7.277E-25	7.695E-24	0.000E+00	0.000E+00
-238+D	äDSR(j)		1.264E-10	1.206E-10	1.097E-10	7.881E-11	3.030E-11	8.258E-13	0.000E+00	0.000E+00
-238+D	U-238+D	3.039E-11	1.819E-12	1.735E-12	1.579E-12	1.134E-12	4.361E-13	1.189E-14	0.000E+00	0.000E+00
-238+D	U-234	3.039E-11	1.035E-22	2.985E-22	6.377E-22	1.398E-21	1.650E-21	2.045E-22	0.000E+00	0.000E+00
-238+D	Th-230	3.039E-11	9.453E-28	6.449E-27	3.216E-26	2.343E-25	1.126E-24	2.137E-24	0.000E+00	0.000E+00
-238+D	Ra-226+D	3.039E-11	7.794E-28	1.136E-26	1.244E-25	2.622E-24	3.343E-23	1.212E-22	0.000E+00	0.000E+00
-238+D	Pb-210+D2	3.039E-11	5.130E-33	1.542E-31	3.628E-30	2.212E-28	7.767E-27	8.416E-26	0.000E+00	0.000E+00
-238+D	äDSR(j)		1.819E-12	1.735E-12	1.579E-12	1.134E-12	4.361E-13	1.189E-14	0.000E+00	0.000E+00
-238+D	U-238+D	3.359E-07	2.011E-08	1.919E-08	1.746E-08	1.254E-08	4.822E-09	1.314E-10	0.000E+00	0.000E+00
-238+D	U-234	3.359E-07	1.145E-18	3.300E-18	7.049E-18	1.546E-17	1.824E-17	2.261E-18	0.000E+00	0.000E+00
-238+D	Th-230	3.359E-07	1.045E-23	7.129E-23	3.556E-22	2.590E-21	1.245E-20	2.363E-20	0.000E+00	0.000E+00
-238+D	Ra-226+D1	3.359E-07	8.616E-24	1.256E-22	1.375E-21	2.899E-20	3.695E-19	1.340E-18	0.000E+00	0.000E+00
-238+D	Pb-210+D	3.359E-07	3.466E-29	1.042E-27	2.454E-26	1.500E-24	5.317E-23	6.199E-22	0.000E+00	0.000E+00
-238+D	äDSR(j)		2.011E-08	1.919E-08	1.746E-08	1.254E-08	4.822E-09	1.314E-10	0.000E+00	0.000E+00
-238+D	U-238+D	4.434E-13	2.655E-14	2.532E-14	2.305E-14	1.655E-14	6.365E-15	1.734E-16	0.000E+00	0.000E+00
-238+D	U-234	4.434E-13	1.511E-24	4.356E-24	9.305E-24	2.040E-23	2.408E-23	2.985E-24	0.000E+00	0.000E+00
-238+D	Th-230	4.434E-13	1.379E-29	9.410E-29	4.693E-28	3.419E-27	1.643E-26	3.119E-26	0.000E+00	0.000E+00
-238+D	Ra-226+D1	4.434E-13	1.137E-29	1.658E-28	1.815E-27	3.826E-26	4.877E-25	1.769E-24	0.000E+00	0.000E+00
-238+D	Pb-210+D1	4.434E-13	1.014E-34	3.046E-33	7.166E-32	4.367E-30	1.528E-28	1.616E-27	0.000E+00	0.000E+00
-238+D	äDSR(j)		2.655E-14	2.532E-14	2.305E-14	1.655E-14	6.365E-15	1.734E-16	0.000E+00	0.000E+00
-238+D	U-238+D	6.383E-15	3.821E-16	3.645E-16	3.317E-16	2.383E-16	9.161E-17	2.497E-18	0.000E+00	0.000E+00
-238+D	U-234	6.383E-15	2.175E-26	6.270E-26	1.339E-25	2.937E-25	3.466E-25	4.296E-26	0.000E+00	0.000E+00
-238+D	Th-230	6.383E-15	1.986E-31	1.355E-30	6.756E-30	4.921E-29	2.365E-28	4.489E-28	0.000E+00	0.000E+00
-238+D	Ra-226+D1	6.383E-15	1.637E-31	2.387E-30	2.613E-29	5.508E-28	7.020E-27	2.546E-26	0.000E+00	0.000E+00
-238+D	Pb-210+D2	6.383E-15	1.078E-36	3.238E-35	7.619E-34	4.647E-32	1.631E-30	1.768E-29	0.000E+00	0.000E+00
-238+D	äDSR(j)		3.821E-16	3.645E-16	3.317E-16	2.383E-16	9.161E-17	2.497E-18	0.000E+00	0.000E+00

ummary : GKP Fire Fighter - External
ile : C:\USERS\CLAUDE\DOCUMENTS\0 GKP DOSE\RESRAD CW\GKP FIRE FIGHTER- EXTERNAL.RAD

Dose/Source Ratios Summed Over All Pathways
Parent and Progeny Principal Radionuclide Contributions Indicated

Parent (i)	Product (j)	Thread Fraction	DSR(j,t) At Time in Years (mrem/yr)/(pCi/g) 0.000E+00	1.000E+00	3.000E+00	1.000E+01	3.000E+01	1.000E+02	3.000E+02	1.000E+03
ÄÄÄÄÄÄÄÄÄ	ÄÄÄÄÄÄÄÄÄÄ	ÄÄÄÄÄÄÄÄÄ	ÄÄÄÄÄÄÄÄÄ	ÄÄÄÄÄÄÄÄÄ	ÄÄÄÄÄÄÄÄÄ	ÄÄÄÄÄÄÄÄÄ	ÄÄÄÄÄÄÄÄÄ	ÄÄÄÄÄÄÄÄÄ	ÄÄÄÄÄÄÄÄÄ	ÄÄÄÄÄÄÄÄÄ
-238+D	U-238+D	3.196E-07	1.913E-08	1.825E-08	1.661E-08	1.193E-08	4.587E-09	1.250E-10	0.000E+00	0.000E+00
-238+D	U-234	3.196E-07	1.089E-18	3.140E-18	6.707E-18	1.471E-17	1.736E-17	2.151E-18	0.000E+00	0.000E+00
-238+D	Th-230	3.196E-07	9.943E-24	6.783E-23	3.383E-22	2.464E-21	1.184E-20	2.248E-20	0.000E+00	0.000E+00
-238+D	Ra-226+D2	3.196E-07	7.099E-24	1.035E-22	1.133E-21	2.385E-20	3.029E-19	1.082E-18	0.000E+00	0.000E+00
-238+D	Pb-210+D	3.196E-07	3.298E-29	9.914E-28	2.334E-26	1.428E-24	5.058E-23	5.898E-22	0.000E+00	0.000E+00
-238+D	äDSR(j)		1.913E-08	1.825E-08	1.661E-08	1.193E-08	4.587E-09	1.250E-10	0.000E+00	0.000E+00
-238+D	U-238+D	4.219E-13	2.526E-14	2.409E-14	2.193E-14	1.575E-14	6.055E-15	1.650E-16	0.000E+00	0.000E+00
-238+D	U-234	4.219E-13	1.438E-24	4.144E-24	8.853E-24	1.941E-23	2.291E-23	2.840E-24	0.000E+00	0.000E+00
-238+D	Th-230	4.219E-13	1.312E-29	8.953E-29	4.465E-28	3.253E-27	1.563E-26	2.967E-26	0.000E+00	0.000E+00
-238+D	Ra-226+D2	4.219E-13	9.371E-30	1.366E-28	1.495E-27	3.148E-26	3.999E-25	1.429E-24	0.000E+00	0.000E+00
-238+D	Pb-210+D1	4.219E-13	9.644E-35	2.898E-33	6.817E-32	4.154E-30	1.454E-28	1.538E-27	0.000E+00	0.000E+00
-238+D	äDSR(j)		2.526E-14	2.409E-14	2.193E-14	1.575E-14	6.055E-15	1.650E-16	0.000E+00	0.000E+00
-238+D	U-238+D	6.073E-15	3.635E-16	3.468E-16	3.156E-16	2.267E-16	8.716E-17	2.375E-18	0.000E+00	0.000E+00
-238+D	U-234	6.073E-15	2.069E-26	5.965E-26	1.274E-25	2.794E-25	3.298E-25	4.087E-26	0.000E+00	0.000E+00
-238+D	Th-230	6.073E-15	1.889E-31	1.289E-30	6.428E-30	4.682E-29	2.250E-28	4.271E-28	0.000E+00	0.000E+00
-238+D	Ra-226+D2	6.073E-15	1.349E-31	1.966E-30	2.152E-29	4.531E-28	5.756E-27	2.057E-26	0.000E+00	0.000E+00
-238+D	Pb-210+D2	6.073E-15	1.025E-36	3.081E-35	7.249E-34	4.421E-32	1.552E-30	1.682E-29	0.000E+00	0.000E+00
-238+D	äDSR(j)		3.635E-16	3.468E-16	3.156E-16	2.267E-16	8.716E-17	2.375E-18	0.000E+00	0.000E+00
-238+D	U-238+D	6.713E-11	4.019E-12	3.834E-12	3.489E-12	2.506E-12	9.635E-13	2.626E-14	0.000E+00	0.000E+00
-238+D	U-234	6.713E-11	2.288E-22	6.595E-22	1.409E-21	3.089E-21	3.646E-21	4.519E-22	0.000E+00	0.000E+00
-238+D	Th-230	6.713E-11	2.088E-27	1.425E-26	7.106E-26	5.176E-25	2.488E-24	4.722E-24	0.000E+00	0.000E+00
-238+D	Ra-226+D3	6.713E-11	1.491E-27	2.174E-26	2.379E-25	5.009E-24	6.363E-23	2.274E-22	0.000E+00	0.000E+00
-238+D	Pb-210+D	6.713E-11	6.927E-33	2.082E-31	4.903E-30	2.999E-28	1.062E-26	1.239E-25	0.000E+00	0.000E+00
-238+D	äDSR(j)		4.019E-12	3.834E-12	3.489E-12	2.506E-12	9.635E-13	2.626E-14	0.000E+00	0.000E+00
-238+D	U-238+D	8.862E-17	5.305E-18	5.061E-18	4.606E-18	3.308E-18	1.272E-18	3.466E-20	0.000E+00	0.000E+00
-238+D	U-234	8.862E-17	3.020E-28	8.705E-28	1.860E-27	4.078E-27	4.812E-27	5.965E-28	0.000E+00	0.000E+00
-238+D	Th-230	8.862E-17	2.757E-33	1.881E-32	9.379E-32	6.832E-31	3.284E-30	6.233E-30	0.000E+00	0.000E+00
-238+D	Ra-226+D3	8.862E-17	1.968E-33	2.869E-32	3.140E-31	6.612E-30	8.399E-29	3.001E-28	0.000E+00	0.000E+00
-238+D	Pb-210+D1	8.862E-17	2.026E-38	6.087E-37	1.432E-35	8.726E-34	3.054E-32	3.230E-31	0.000E+00	0.000E+00
-238+D	äDSR(j)		5.305E-18	5.061E-18	4.606E-18	3.308E-18	1.272E-18	3.466E-20	0.000E+00	0.000E+00
-238+D	U-238+D	1.276E-18	7.636E-20	7.285E-20	6.629E-20	4.762E-20	1.831E-20	4.989E-22	0.000E+00	0.000E+00
-238+D	U-234	1.276E-18	4.346E-30	1.253E-29	2.677E-29	5.869E-29	6.927E-29	8.585E-30	0.000E+00	0.000E+00
-238+D	Th-230	1.276E-18	3.968E-35	2.707E-34	1.350E-33	9.834E-33	4.726E-32	8.971E-32	0.000E+00	0.000E+00
-238+D	Ra-226+D3	1.276E-18	2.833E-35	4.130E-34	4.520E-33	9.517E-32	1.209E-30	4.320E-30	0.000E+00	0.000E+00
-238+D	Pb-210+D2	1.276E-18	2.153E-40	6.471E-39	1.523E-37	9.287E-36	3.260E-34	3.533E-33	0.000E+00	0.000E+00
-238+D	äDSR(j)		7.636E-20	7.285E-20	6.629E-20	4.762E-20	1.831E-20	4.989E-22	0.000E+00	0.000E+00

ummary : GKP Fire Fighter - External
ile : C:\USERS\CLAUDE\DOCUMENTS\0 GKP DOSE\RESRAD CW\GKP FIRE FIGHTER- EXTERNAL.RAD

Dose/Source Ratios Summed Over All Pathways
Parent and Progeny Principal Radionuclide Contributions Indicated

Parent (i)	Product (j)	Thread Fraction	DSR(j,t) At Time in Years (mrem/yr)/(pCi/g) 0.000E+00	1.000E+00	3.000E+00	1.000E+01	3.000E+01	1.000E+02	3.000E+02	1.000E+03
ÄÄÄÄÄÄÄÄÄ	ÄÄÄÄÄÄÄÄÄÄ	ÄÄÄÄÄÄÄÄÄ	ÄÄÄÄÄÄÄÄÄ	ÄÄÄÄÄÄÄÄÄ	ÄÄÄÄÄÄÄÄÄ	ÄÄÄÄÄÄÄÄÄ	ÄÄÄÄÄÄÄÄÄ	ÄÄÄÄÄÄÄÄÄ	ÄÄÄÄÄÄÄÄÄ	ÄÄÄÄÄÄÄÄÄ
-238+D	U-238+D	3.200E-10	1.916E-11	1.828E-11	1.663E-11	1.195E-11	4.593E-12	1.252E-13	0.000E+00	0.000E+00
-238+D	U-234	3.200E-10	1.090E-21	3.143E-21	6.715E-21	1.472E-20	1.738E-20	2.154E-21	0.000E+00	0.000E+00
-238+D	Th-230	3.200E-10	9.955E-27	6.791E-26	3.387E-25	2.467E-24	1.186E-23	2.251E-23	0.000E+00	0.000E+00
-238+D	Ra-226+D4	3.200E-10	3.846E-29	5.616E-28	6.167E-27	1.315E-25	1.741E-24	7.630E-24	0.000E+00	0.000E+00
-238+D	Pb-210+D	3.200E-10	3.302E-32	9.926E-31	2.337E-29	1.429E-27	5.064E-26	5.905E-25	0.000E+00	0.000E+00
-238+D	äDSR(j)		1.916E-11	1.828E-11	1.663E-11	1.195E-11	4.593E-12	1.252E-13	0.000E+00	0.000E+00
-238+D	U-238+D	4.224E-16	2.529E-17	2.412E-17	2.195E-17	1.577E-17	6.063E-18	1.652E-19	0.000E+00	0.000E+00
-238+D	U-234	4.224E-16	1.439E-27	4.149E-27	8.864E-27	1.944E-26	2.294E-26	2.843E-27	0.000E+00	0.000E+00
-238+D	Th-230	4.224E-16	1.314E-32	8.964E-32	4.471E-31	3.257E-30	1.565E-29	2.971E-29	0.000E+00	0.000E+00
-238+D	Ra-226+D4	4.224E-16	5.077E-35	7.412E-34	8.140E-33	1.736E-31	2.298E-30	1.007E-29	0.000E+00	0.000E+00
-238+D	Pb-210+D1	4.224E-16	9.656E-38	2.902E-36	6.826E-35	4.159E-33	1.456E-31	1.540E-30	0.000E+00	0.000E+00
-238+D	äDSR(j)		2.529E-17	2.412E-17	2.195E-17	1.577E-17	6.063E-18	1.652E-19	0.000E+00	0.000E+00
-238+D	U-238+D	6.080E-18	3.640E-19	3.472E-19	3.160E-19	2.270E-19	8.727E-20	2.378E-21	0.000E+00	0.000E+00
-238+D	U-234	6.080E-18	2.072E-29	5.973E-29	1.276E-28	2.798E-28	3.302E-28	4.092E-29	0.000E+00	0.000E+00
-238+D	Th-230	6.080E-18	1.891E-34	1.290E-33	6.435E-33	4.688E-32	2.253E-31	4.276E-31	0.000E+00	0.000E+00
-238+D	Ra-226+D4	6.080E-18	7.307E-37	1.067E-35	1.172E-34	2.499E-33	3.307E-32	1.450E-31	0.000E+00	0.000E+00
-238+D	Pb-210+D2	6.080E-18	1.026E-39	3.085E-38	7.258E-37	4.427E-35	1.554E-33	1.684E-32	0.000E+00	0.000E+00
-238+D	äDSR(j)		3.640E-19	3.472E-19	3.160E-19	2.270E-19	8.727E-20	2.378E-21	0.000E+00	0.000E+00
-238+D1	U-238+D1	9.980E-01	6.071E-04	5.795E-04	5.280E-04	3.810E-04	1.487E-04	4.421E-06	0.000E+00	0.000E+00
-238+D1	U-234	9.980E-01	3.401E-12	9.804E-12	2.094E-11	4.592E-11	5.420E-11	6.717E-12	0.000E+00	0.000E+00
-238+D1	Th-230	9.980E-01	3.105E-17	2.118E-16	1.056E-15	7.695E-15	3.698E-14	7.019E-14	0.000E+00	0.000E+00
-238+D1	Ra-226+D	9.980E-01	2.560E-17	3.732E-16	4.086E-15	8.612E-14	1.098E-12	3.981E-12	0.000E+00	0.000E+00
-238+D1	Pb-210+D	9.980E-01	1.030E-22	3.096E-21	7.289E-20	4.458E-18	1.579E-16	1.842E-15	0.000E+00	0.000E+00
-238+D1	äDSR(j)		6.071E-04	5.795E-04	5.280E-04	3.810E-04	1.487E-04	4.421E-06	0.000E+00	0.000E+00
-238+D1	U-238+D1	1.317E-06	8.014E-10	7.650E-10	6.970E-10	5.029E-10	1.962E-10	5.835E-12	0.000E+00	0.000E+00
-238+D1	U-234	1.317E-06	4.489E-18	1.294E-17	2.764E-17	6.062E-17	7.154E-17	8.867E-18	0.000E+00	0.000E+00
-238+D1	Th-230	1.317E-06	4.098E-23	2.796E-22	1.394E-21	1.016E-20	4.881E-20	9.265E-20	0.000E+00	0.000E+00
-238+D1	Ra-226+D	1.317E-06	3.379E-23	4.927E-22	5.393E-21	1.137E-19	1.449E-18	5.254E-18	0.000E+00	0.000E+00
-238+D1	Pb-210+D1	1.317E-06	3.011E-28	9.049E-27	2.129E-25	1.297E-23	4.541E-22	4.802E-21	0.000E+00	0.000E+00
-238+D1	äDSR(j)		8.014E-10	7.650E-10	6.970E-10	5.029E-10	1.962E-10	5.835E-12	0.000E+00	0.000E+00
-238+D1	U-238+D1	1.896E-08	1.153E-11	1.101E-11	1.003E-11	7.238E-12	2.825E-12	8.399E-14	0.000E+00	0.000E+00
-238+D1	U-234	1.896E-08	6.461E-20	1.863E-19	3.979E-19	8.725E-19	1.030E-18	1.276E-19	0.000E+00	0.000E+00
-238+D1	Th-230	1.896E-08	5.899E-25	4.024E-24	2.007E-23	1.462E-22	7.026E-22	1.334E-21	0.000E+00	0.000E+00
-238+D1	Ra-226+D	1.896E-08	4.863E-25	7.091E-24	7.763E-23	1.636E-21	2.086E-20	7.563E-20	0.000E+00	0.000E+00
-238+D1	Pb-210+D2	1.896E-08	3.201E-30	9.620E-29	2.264E-27	1.381E-25	4.846E-24	5.252E-23	0.000E+00	0.000E+00
-238+D1	äDSR(j)		1.153E-11	1.101E-11	1.003E-11	7.238E-12	2.825E-12	8.399E-14	0.000E+00	0.000E+00

ummary : GKP Fire Fighter - External
ile : C:\USERS\CLAUDE\DOCUMENTS\0 GKP DOSE\RESRAD CW\GKP FIRE FIGHTER- EXTERNAL.RAD

Dose/Source Ratios Summed Over All Pathways
Parent and Progeny Principal Radionuclide Contributions Indicated

Parent (i)	Product (j)	Thread Fraction	DSR(j,t) At Time in Years (mrem/yr)/(pCi/g) 0.000E+00	1.000E+00	3.000E+00	1.000E+01	3.000E+01	1.000E+02	3.000E+02	1.000E+03
ÄÄÄÄÄÄÄÄ	ÄÄÄÄÄÄÄÄÄÄ	ÄÄÄÄÄÄÄÄÄ	ÄÄÄÄÄÄÄÄÄ	ÄÄÄÄÄÄÄÄÄ	ÄÄÄÄÄÄÄÄÄ	ÄÄÄÄÄÄÄÄÄ	ÄÄÄÄÄÄÄÄÄ	ÄÄÄÄÄÄÄÄÄ	ÄÄÄÄÄÄÄÄÄ	ÄÄÄÄÄÄÄÄÄ
-238+D1	U-238+D1	2.096E-04	1.275E-07	1.217E-07	1.109E-07	8.002E-08	3.123E-08	9.285E-10	0.000E+00	0.000E+00
-238+D1	U-234	2.096E-04	7.143E-16	2.059E-15	4.399E-15	9.646E-15	1.138E-14	1.411E-15	0.000E+00	0.000E+00
-238+D1	Th-230	2.096E-04	6.521E-21	4.449E-20	2.219E-19	1.616E-18	7.767E-18	1.474E-17	0.000E+00	0.000E+00
-238+D1	Ra-226+D1	2.096E-04	5.376E-21	7.839E-20	8.582E-19	1.809E-17	2.306E-16	8.361E-16	0.000E+00	0.000E+00
-238+D1	Pb-210+D	2.096E-04	2.163E-26	6.502E-25	1.531E-23	9.363E-22	3.318E-20	3.868E-19	0.000E+00	0.000E+00
-238+D1	äDSR(j)		1.275E-07	1.217E-07	1.109E-07	8.002E-08	3.123E-08	9.285E-10	0.000E+00	0.000E+00
-238+D1	U-238+D1	2.767E-10	1.683E-13	1.607E-13	1.464E-13	1.056E-13	4.122E-14	1.226E-15	0.000E+00	0.000E+00
-238+D1	U-234	2.767E-10	9.428E-22	2.718E-21	5.807E-21	1.273E-20	1.503E-20	1.862E-21	0.000E+00	0.000E+00
-238+D1	Th-230	2.767E-10	8.608E-27	5.872E-26	2.929E-25	2.133E-24	1.025E-23	1.946E-23	0.000E+00	0.000E+00
-238+D1	Ra-226+D1	2.767E-10	7.097E-27	1.035E-25	1.133E-24	2.388E-23	3.043E-22	1.104E-21	0.000E+00	0.000E+00
-238+D1	Pb-210+D1	2.767E-10	6.325E-32	1.901E-30	4.471E-29	2.725E-27	9.538E-26	1.009E-24	0.000E+00	0.000E+00
-238+D1	äDSR(j)		1.683E-13	1.607E-13	1.464E-13	1.056E-13	4.122E-14	1.226E-15	0.000E+00	0.000E+00
-238+D1	U-238+D1	3.983E-12	2.423E-15	2.313E-15	2.107E-15	1.520E-15	5.933E-16	1.764E-17	0.000E+00	0.000E+00
-238+D1	U-234	3.983E-12	1.357E-23	3.912E-23	8.358E-23	1.833E-22	2.163E-22	2.681E-23	0.000E+00	0.000E+00
-238+D1	Th-230	3.983E-12	1.239E-28	8.452E-28	4.216E-27	3.071E-26	1.476E-25	2.801E-25	0.000E+00	0.000E+00
-238+D1	Ra-226+D1	3.983E-12	1.021E-28	1.489E-27	1.631E-26	3.437E-25	4.381E-24	1.589E-23	0.000E+00	0.000E+00
-238+D1	Pb-210+D2	3.983E-12	6.724E-34	2.021E-32	4.755E-31	2.900E-29	1.018E-27	1.103E-26	0.000E+00	0.000E+00
-238+D1	äDSR(j)		2.423E-15	2.313E-15	2.107E-15	1.520E-15	5.933E-16	1.764E-17	0.000E+00	0.000E+00
-238+D1	U-238+D1	1.994E-04	1.213E-07	1.158E-07	1.055E-07	7.613E-08	2.971E-08	8.834E-10	0.000E+00	0.000E+00
-238+D1	U-234	1.994E-04	6.796E-16	1.959E-15	4.185E-15	9.177E-15	1.083E-14	1.342E-15	0.000E+00	0.000E+00
-238+D1	Th-230	1.994E-04	6.204E-21	4.232E-20	2.111E-19	1.538E-18	7.390E-18	1.403E-17	0.000E+00	0.000E+00
-238+D1	Ra-226+D2	1.994E-04	4.430E-21	6.458E-20	7.068E-19	1.488E-17	1.890E-16	6.755E-16	0.000E+00	0.000E+00
-238+D1	Pb-210+D	1.994E-04	2.058E-26	6.186E-25	1.457E-23	8.908E-22	3.156E-20	3.680E-19	0.000E+00	0.000E+00
-238+D1	äDSR(j)		1.213E-07	1.158E-07	1.055E-07	7.613E-08	2.971E-08	8.834E-10	0.000E+00	0.000E+00
-238+D1	U-238+D1	2.633E-10	1.601E-13	1.529E-13	1.393E-13	1.005E-13	3.922E-14	1.166E-15	0.000E+00	0.000E+00
-238+D1	U-234	2.633E-10	8.970E-22	2.586E-21	5.524E-21	1.211E-20	1.430E-20	1.772E-21	0.000E+00	0.000E+00
-238+D1	Th-230	2.633E-10	8.189E-27	5.587E-26	2.786E-25	2.030E-24	9.755E-24	1.852E-23	0.000E+00	0.000E+00
-238+D1	Ra-226+D2	2.633E-10	5.847E-27	8.525E-26	9.330E-25	1.964E-23	2.495E-22	8.916E-22	0.000E+00	0.000E+00
-238+D1	Pb-210+D1	2.633E-10	6.018E-32	1.808E-30	4.254E-29	2.592E-27	9.074E-26	9.595E-25	0.000E+00	0.000E+00
-238+D1	äDSR(j)		1.601E-13	1.529E-13	1.393E-13	1.005E-13	3.922E-14	1.166E-15	0.000E+00	0.000E+00
-238+D1	U-238+D1	3.789E-12	2.305E-15	2.200E-15	2.005E-15	1.447E-15	5.645E-16	1.679E-17	0.000E+00	0.000E+00
-238+D1	U-234	3.789E-12	1.291E-23	3.722E-23	7.952E-23	1.744E-22	2.058E-22	2.551E-23	0.000E+00	0.000E+00
-238+D1	Th-230	3.789E-12	1.179E-28	8.042E-28	4.011E-27	2.922E-26	1.404E-25	2.665E-25	0.000E+00	0.000E+00
-238+D1	Ra-226+D2	3.789E-12	8.417E-29	1.227E-27	1.343E-26	2.827E-25	3.592E-24	1.283E-23	0.000E+00	0.000E+00
-238+D1	Pb-210+D2	3.789E-12	6.397E-34	1.923E-32	4.524E-31	2.759E-29	9.685E-28	1.050E-26	0.000E+00	0.000E+00
-238+D1	äDSR(j)		2.305E-15	2.200E-15	2.005E-15	1.447E-15	5.645E-16	1.679E-17	0.000E+00	0.000E+00

ummary : GKP Fire Fighter - External
ile : C:\USERS\CLAUDE\DOCUMENTS\0 GKP DOSE\RESRAD CW\GKP FIRE FIGHTER- EXTERNAL.RAD

Dose/Source Ratios Summed Over All Pathways
Parent and Progeny Principal Radionuclide Contributions Indicated

Parent (i)	Product (j)	Thread Fraction	DSR(j,t) At Time in Years (mrem/yr)/(pCi/g) 0.000E+00	1.000E+00	3.000E+00	1.000E+01	3.000E+01	1.000E+02	3.000E+02	1.000E+03
ÄÄÄÄÄÄÄÄÄ	ÄÄÄÄÄÄÄÄÄÄ	ÄÄÄÄÄÄÄÄÄ	ÄÄÄÄÄÄÄÄÄ	ÄÄÄÄÄÄÄÄÄ	ÄÄÄÄÄÄÄÄÄ	ÄÄÄÄÄÄÄÄÄ	ÄÄÄÄÄÄÄÄÄ	ÄÄÄÄÄÄÄÄÄ	ÄÄÄÄÄÄÄÄÄ	ÄÄÄÄÄÄÄÄÄ
-238+D1	U-238+D1	4.189E-08	2.548E-11	2.433E-11	2.216E-11	1.599E-11	6.240E-12	1.856E-13	0.000E+00	0.000E+00
-238+D1	U-234	4.189E-08	1.427E-19	4.115E-19	8.791E-19	1.928E-18	2.275E-18	2.820E-19	0.000E+00	0.000E+00
-238+D1	Th-230	4.189E-08	1.303E-24	8.890E-24	4.434E-23	3.230E-22	1.552E-21	2.946E-21	0.000E+00	0.000E+00
-238+D1	Ra-226+D3	4.189E-08	9.304E-25	1.356E-23	1.485E-22	3.126E-21	3.970E-20	1.419E-19	0.000E+00	0.000E+00
-238+D1	Pb-210+D	4.189E-08	4.322E-30	1.299E-28	3.060E-27	1.871E-25	6.630E-24	7.730E-23	0.000E+00	0.000E+00
-238+D1	äDSR(j)		2.548E-11	2.433E-11	2.216E-11	1.599E-11	6.240E-12	1.856E-13	0.000E+00	0.000E+00
-238+D1	U-238+D1	5.530E-14	3.364E-17	3.211E-17	2.926E-17	2.111E-17	8.237E-18	2.449E-19	0.000E+00	0.000E+00
-238+D1	U-234	5.530E-14	1.884E-25	5.432E-25	1.160E-24	2.544E-24	3.003E-24	3.722E-25	0.000E+00	0.000E+00
-238+D1	Th-230	5.530E-14	1.720E-30	1.173E-29	5.853E-29	4.263E-28	2.049E-27	3.889E-27	0.000E+00	0.000E+00
-238+D1	Ra-226+D3	5.530E-14	1.228E-30	1.790E-29	1.960E-28	4.126E-27	5.241E-26	1.873E-25	0.000E+00	0.000E+00
-238+D1	Pb-210+D1	5.530E-14	1.264E-35	3.798E-34	8.935E-33	5.445E-31	1.906E-29	2.015E-28	0.000E+00	0.000E+00
-238+D1	äDSR(j)		3.364E-17	3.211E-17	2.926E-17	2.111E-17	8.237E-18	2.449E-19	0.000E+00	0.000E+00
-238+D1	U-238+D1	7.959E-16	4.842E-19	4.622E-19	4.211E-19	3.038E-19	1.186E-19	3.526E-21	0.000E+00	0.000E+00
-238+D1	U-234	7.959E-16	2.712E-27	7.819E-27	1.670E-26	3.662E-26	4.322E-26	5.357E-27	0.000E+00	0.000E+00
-238+D1	Th-230	7.959E-16	2.476E-32	1.689E-31	8.424E-31	6.137E-30	2.949E-29	5.598E-29	0.000E+00	0.000E+00
-238+D1	Ra-226+D3	7.959E 16	1.768E 32	2.577E 31	2.821E-30	5.939E-29	7.544E-28	2.695E-27	0.000E+00	0.000E+00
-238+D1	Pb-210+D2	7.959E-16	1.344E-37	4.038E-36	9.501E-35	5.795E-33	2.034E-31	2.204E-30	0.000E+00	0.000E+00
-238+D1	äDSR(j)		4.842E-19	4.622E-19	4.211E-19	3.038E-19	1.186E-19	3.526E-21	0.000E+00	0.000E+00
-238+D1	U-238+D1	1.997E-07	1.215E-10	1.160E-10	1.057E-10	7.622E-11	2.975E-11	8.845E-13	0.000E+00	0.000E+00
-238+D1	U-234	1.997E-07	6.804E-19	1.962E-18	4.190E-18	9.188E-18	1.084E-17	1.344E-18	0.000E+00	0.000E+00
-238+D1	Th-230	1.997E-07	6.212E-24	4.238E-23	2.114E-22	1.540E-21	7.399E-21	1.404E-20	0.000E+00	0.000E+00
-238+D1	Ra-226+D4	1.997E-07	2.400E-26	3.504E-25	3.848E-24	8.207E-23	1.086E-21	4.761E-21	0.000E+00	0.000E+00
-238+D1	Pb-210+D	1.997E-07	2.060E-29	6.194E-28	1.458E-26	8.919E-25	3.160E-23	3.685E-22	0.000E+00	0.000E+00
-238+D1	äDSR(j)		1.215E-10	1.160E-10	1.057E-10	7.622E-11	2.975E-11	8.845E-13	0.000E+00	0.000E+00
-238+D1	U-238+D1	2.636E-13	1.603E-16	1.531E-16	1.395E-16	1.006E-16	3.926E-17	1.168E-18	0.000E+00	0.000E+00
-238+D1	U-234	2.636E-13	8.981E-25	2.589E-24	5.531E-24	1.213E-23	1.431E-23	1.774E-24	0.000E+00	0.000E+00
-238+D1	Th-230	2.636E-13	8.199E-30	5.594E-29	2.790E-28	2.032E-27	9.767E-27	1.854E-26	0.000E+00	0.000E+00
-238+D1	Ra-226+D4	2.636E-13	3.168E-32	4.625E-31	5.080E-30	1.083E-28	1.434E-27	6.284E-27	0.000E+00	0.000E+00
-238+D1	Pb-210+D1	2.636E-13	6.025E-35	1.811E-33	4.259E-32	2.596E-30	9.085E-29	9.607E-28	0.000E+00	0.000E+00
-238+D1	äDSR(j)		1.603E-16	1.531E-16	1.395E-16	1.006E-16	3.926E-17	1.168E-18	0.000E+00	0.000E+00
-238+D1	U-238+D1	3.794E-15	2.308E-18	2.203E-18	2.007E-18	1.448E-18	5.652E-19	1.681E-20	0.000E+00	0.000E+00
-238+D1	U-234	3.794E-15	1.293E-26	3.727E-26	7.961E-26	1.746E-25	2.060E-25	2.554E-26	0.000E+00	0.000E+00
-238+D1	Th-230	3.794E-15	1.180E-31	8.051E-31	4.016E-30	2.925E-29	1.406E-28	2.668E-28	0.000E+00	0.000E+00
-238+D1	Ra-226+D4	3.794E-15	4.560E-34	6.658E-33	7.312E-32	1.559E-30	2.064E-29	9.046E-29	0.000E+00	0.000E+00
-238+D1	Pb-210+D2	3.794E-15	6.405E-37	1.925E-35	4.529E-34	2.762E-32	9.697E-31	1.051E-29	0.000E+00	0.000E+00
-238+D1	äDSR(j)		2.308E-18	2.203E-18	2.007E-18	1.448E-18	5.652E-19	1.681E-20	0.000E+00	0.000E+00
íííííííííí	íííííííííí	íííííííííí	íííííííííí	íííííííííí	íííííííííí	íííííííííí	íííííííííí	íííííííííí	íííííííííí	íííííííííí

ne DSR includes contributions from associated (half-life ó 180 days) daughters.

ummary : GKP Fire Fighter - External
ile : C:\USERS\CLAUDE\DOCUMENTS\0 GKP DOSE\RESRAD CW\GKP FIRE FIGHTER- EXTERNAL.RAD

Single Radionuclide Soil Guidelines G(i,t) in pCi/g
Basic Radiation Dose Limit = 2.500E+01 mrem/yr

uclide (i)	t= 0.000E+00	1.000E+00	3.000E+00	1.000E+01	3.000E+01	1.000E+02	3.000E+02	1.000E+03
ÄÄÄÄÄÄ	ÄÄÄÄÄÄÄÄÄÄ	ÄÄÄÄÄÄÄÄÄÄ	ÄÄÄÄÄÄÄÄÄÄ	ÄÄÄÄÄÄÄÄÄÄ	ÄÄÄÄÄÄÄÄÄÄ	ÄÄÄÄÄÄÄÄÄÄ	ÄÄÄÄÄÄÄÄÄÄ	ÄÄÄÄÄÄÄÄÄÄ
a-226	4.527E+02	4.689E+02	5.032E+02	6.447E+02	1.323E+03	2.120E+04	*9.885E+11	*9.885E+11
n-232	1.203E+04	3.657E+03	1.447E+03	5.728E+02	4.522E+02	7.642E+02	*1.097E+05	*1.097E+05
-234	1.028E+07	1.075E+07	1.175E+07	1.600E+07	3.696E+07	2.543E+08	*6.222E+09	*6.222E+09
-235	5.711E+03	5.978E+03	6.552E+03	9.035E+03	2.279E+04	7.290E+05	*2.160E+06	*2.160E+06
-238	3.556E+04	3.725E+04	4.089E+04	5.671E+04	1.456E+05	*3.361E+05	*3.361E+05	*3.361E+05
íííííí	íííííííííí	íííííííííí	íííííííííí	íííííííííí	íííííííííí	íííííííííí	íííííííííí	íííííííííí

At specific activity limit

Summed Dose/Source Ratios DSR(i,t) in (mrem/yr)/(pCi/g)
and Single Radionuclide Soil Guidelines G(i,t) in pCi/g
at tmin = time of minimum single radionuclide soil guideline
and at tmax = time of maximum total dose = 0.000E+00 years

uclide (i)	Initial (pCi/g)	tmin (years)	DSR(i,tmin)	G(i,tmin) (pCi/g)	DSR(i,tmax)	G(i,tmax) (pCi/g)
ÄÄÄÄÄÄ	ÄÄÄÄÄÄÄÄÄÄ	ÄÄÄÄÄÄÄÄÄÄÄÄÄÄÄÄ	ÄÄÄÄÄÄÄÄÄÄ	ÄÄÄÄÄÄÄÄÄÄ	ÄÄÄÄÄÄÄÄÄÄ	ÄÄÄÄÄÄÄÄÄÄ
a-226	3.650E+01	0.000E+00	5.523E-02	4.527E+02	5.523E-02	4.527E+02
n-232	2.400E+00	25.50 ñ 0.05	5.561E-02	4.495E+02	2.078E-03	1.203E+04
-234	1.390E+01	0.000E+00	2.432E-06	1.028E+07	2.432E-06	1.028E+07
-235	8.400E-01	0.000E+00	4.378E-03	5.711E+03	4.378E-03	5.711E+03
-238	1.390E+01	0.000E+00	7.031E-04	3.556E+04	7.031E-04	3.556E+04
íííííí	íííííííííí	íííííííííííííííí	íííííííííí	íííííííííí	íííííííííí	íííííííííí

ummary : GKP Fire Fighter - External
ile : C:\USERS\CLAUDE\DOCUMENTS\0 GKP DOSE\RESRAD CW\GKP FIRE FIGHTER- EXTERNAL.RAD

Individual Nuclide Dose Summed Over All Pathways
Parent Nuclide and Branch Fraction Indicated

uclide (j)	Parent (i)	THF(i)	DOSE(j,t), mrem/yr t= 0.000E+00	1.000E+00	3.000E+00	1.000E+01	3.000E+01	1.000E+02	3.000E+02	1.000E+03
ÄÄÄÄÄÄ	ÄÄÄÄÄÄÄ	ÄÄÄÄÄÄÄÄÄ	ÄÄÄÄÄÄÄÄÄ	ÄÄÄÄÄÄÄÄÄ	ÄÄÄÄÄÄÄÄÄ	ÄÄÄÄÄÄÄÄÄ	ÄÄÄÄÄÄÄÄÄ	ÄÄÄÄÄÄÄÄÄ	ÄÄÄÄÄÄÄÄÄ	ÄÄÄÄÄÄÄÄÄ
a-226	Ra-226	9.996E-01	2.015E+00	1.945E+00	1.813E+00	1.415E+00	6.891E-01	4.297E-02	0.000E+00	0.000E+00
a-226	Ra-226	1.319E-06	2.660E-06	2.568E-06	2.393E-06	1.867E-06	9.096E-07	5.672E-08	0.000E+00	0.000E+00
a-226	U-234	9.996E-01	5.075E-10	3.467E-09	1.734E-08	1.275E-07	6.204E-07	1.020E-06	0.000E+00	0.000E+00
a-226	U-234	1.319E-06	6.699E-16	4.576E-15	2.289E-14	1.683E-13	8.189E-13	1.346E-12	0.000E+00	0.000E+00
a-226	U-234	1.899E-08	9.643E-18	6.587E-17	3.295E-16	2.422E-15	1.179E-14	1.938E-14	0.000E+00	0.000E+00
a-226	U-238	1.599E-03	5.702E-19	8.314E-18	9.102E-17	1.918E-15	2.445E-14	8.867E-14	0.000E+00	0.000E+00
a-226	U-238	2.111E-09	7.526E-25	1.097E-23	1.201E-22	2.532E-21	3.228E-20	1.170E-19	0.000E+00	0.000E+00
a-226	U-238	3.039E-11	1.083E-26	1.580E-25	1.729E-24	3.645E-23	4.646E-22	1.685E-21	0.000E+00	0.000E+00
a-226	U-238	9.980E-01	3.558E-16	5.188E-15	5.679E-14	1.197E-12	1.526E-11	5.533E-11	0.000E+00	0.000E+00
a-226	U-238	1.317E-06	4.696E-22	6.848E-21	7.497E-20	1.580E-18	2.014E-17	7.304E-17	0.000E+00	0.000E+00
a-226	U-238	1.896E-08	6.760E-24	9.857E-23	1.079E-21	2.274E-20	2.899E-19	1.051E-18	0.000E+00	0.000E+00
a-226	äDOSE(j)		2.015E+00	1.945E+00	1.813E+00	1.415E+00	6.891E-01	4.297E-02	0.000E+00	0.000E+00
o-210	Ra-226	9.996E-01	2.009E-05	5.799E-05	1.242E-04	2.750E-04	3.371E-04	5.417E-05	0.000E+00	0.000E+00
o-210	Ra-226	2.100E-04	4.221E-09	1.218E-08	2.608E-08	5.777E-08	7.081E-08	1.138E-08	0.000E+00	0.000E+00
o-210	Ra-226	1.998E-04	4.015E-09	1.159E-08	2.482E-08	5.496E-08	6.737E-08	1.082E-08	0.000E+00	0.000E+00
o-210	Ra-226	4.196E-08	8.434E-13	2.434E-12	5.213E-12	1.154E-11	1.415E-11	2.274E-12	0.000E+00	0.000E+00
o-210	Ra-226	2.000E-07	4.020E-12	1.160E-11	2.485E-11	5.503E-11	6.746E-11	1.084E-11	0.000E+00	0.000E+00
o-210	U-234	9.996E-01	2.546E-15	3.713E-14	4.065E-13	8.578E-12	1.110E-10	5.146E-10	0.000E+00	0.000E+00
o-210	U-234	2.100E-04	5.348E-19	7.798E-18	8.538E-17	1.802E-15	2.331E-14	1.081E-13	0.000E+00	0.000E+00
o-210	U-234	1.998E-04	5.089E-19	7.419E-18	8.123E-17	1.714E-15	2.218E-14	1.028E-13	0.000E+00	0.000E+00
o-210	U-234	4.196E-08	1.069E-22	1.558E-21	1.706E-20	3.601E-19	4.658E-18	2.160E-17	0.000E+00	0.000E+00
o-210	U-234	2.000E-07	5.095E-22	7.428E-21	8.133E-20	1.716E-18	2.221E-17	1.030E-16	0.000E+00	0.000E+00
o-210	U-238	1.599E-03	2.294E-24	6.896E-23	1.624E-21	9.930E-20	3.518E-18	4.102E-17	0.000E+00	0.000E+00
o-210	U-238	3.359E-07	4.818E-28	1.448E-26	3.410E-25	2.086E-23	7.390E-22	8.617E-21	0.000E+00	0.000E+00
o-210	U-238	3.196E-07	4.584E-28	1.378E-26	3.245E-25	1.984E-23	7.031E-22	8.198E-21	0.000E+00	0.000E+00
o-210	U-238	6.713E-11	0.000E+00	0.000E+00	6.815E-29	4.168E-27	1.477E-25	1.722E-24	0.000E+00	0.000E+00
o-210	U-238	3.200E-10	0.000E+00	0.000E+00	3.249E-28	1.987E-26	7.040E-25	8.208E-24	0.000E+00	0.000E+00
o-210	U-238	9.980E-01	1.431E-21	4.303E-20	1.013E-18	6.196E-17	2.195E-15	2.560E-14	0.000E+00	0.000E+00
o-210	U-238	2.096E-04	3.006E-25	9.038E-24	2.128E-22	1.301E-20	4.611E-19	5.377E-18	0.000E+00	0.000E+00
o-210	U-238	1.994E-04	2.860E-25	8.599E-24	2.025E-22	1.238E-20	4.387E-19	5.116E-18	0.000E+00	0.000E+00
o-210	U-238	4.189E-08	6.008E-29	1.806E-27	4.253E-26	2.601E-24	9.215E-23	1.074E-21	0.000E+00	0.000E+00
o-210	U-238	1.997E-07	2.864E-28	8.609E-27	2.027E-25	1.240E-23	4.393E-22	5.122E-21	0.000E+00	0.000E+00
o-210	äDOSE(j)		2.010E-05	5.801E-05	1.242E-04	2.751E-04	3.373E-04	5.419E-05	0.000E+00	0.000E+00
o-210	Ra-226	1.319E-06	5.877E-11	1.695E-10	3.627E-10	8.004E-10	9.692E-10	1.412E-10	0.000E+00	0.000E+00
o-210	Ra-226	1.899E-08	6.247E-13	1.802E-12	3.857E-12	8.518E-12	1.034E-11	1.545E-12	0.000E+00	0.000E+00
o-210	Ra-226	2.771E-10	1.234E-14	3.561E-14	7.618E-14	1.681E-13	2.036E-13	2.966E-14	0.000E+00	0.000E+00
o-210	Ra-226	2.637E-10	1.174E-14	3.388E-14	7.248E-14	1.599E-13	1.937E-13	2.822E-14	0.000E+00	0.000E+00
o-210	Ra-226	5.538E-14	2.467E-18	7.116E-18	1.522E-17	3.360E-17	4.068E-17	5.928E-18	0.000E+00	0.000E+00
o-210	Ra-226	2.640E-13	1.176E-17	3.392E-17	7.257E-17	1.601E-16	1.939E-16	2.826E-17	0.000E+00	0.000E+00
o-210	U-234	1.319E-06	7.447E-21	1.085E-19	1.187E-18	2.496E-17	3.191E-16	1.342E-15	0.000E+00	0.000E+00
o-210	U-234	2.771E-10	1.564E-24	2.280E-23	2.493E-22	5.244E-21	6.702E-20	2.818E-19	0.000E+00	0.000E+00
o-210	U-234	2.637E-10	1.488E-24	2.169E-23	2.372E-22	4.989E-21	6.376E-20	2.681E-19	0.000E+00	0.000E+00
o-210	U-234	5.538E-14	3.126E-28	4.556E-27	4.983E-26	1.048E-24	1.339E-23	5.631E-23	0.000E+00	0.000E+00
o-210	U-234	2.640E-13	1.490E-27	2.172E-26	2.375E-25	4.995E-24	6.384E-23	2.684E-22	0.000E+00	0.000E+00
o-210	U-238	2.111E-09	0.000E+00	2.016E-28	4.742E-27	2.890E-25	1.011E-23	1.070E-22	0.000E+00	0.000E+00
o-210	U-238	4.434E-13	0.000E+00	0.000E+00	0.000E+00	6.070E-29	2.125E-27	2.247E-26	0.000E+00	0.000E+00
o-210	U-238	4.219E-13	0.000E+00	0.000E+00	0.000E+00	5.775E-29	2.021E-27	2.137E-26	0.000E+00	0.000E+00

ummary : GKP Fire Fighter - External
ile : C:\USERS\CLAUDE\DOCUMENTS\0 GKP DOSE\RESRAD CW\GKP FIRE FIGHTER- EXTERNAL.RAD

Individual Nuclide Dose Summed Over All Pathways
Parent Nuclide and Branch Fraction Indicated

uclide (j)	Parent (i)	THF(i)	DOSE(j,t), mrem/yr t= 0.000E+00	1.000E+00	3.000E+00	1.000E+01	3.000E+01	1.000E+02	3.000E+02	1.000E+03
ÄÄÄÄÄÄ	ÄÄÄÄÄÄÄ	ÄÄÄÄÄÄÄÄÄ	ÄÄÄÄÄÄÄÄÄ	ÄÄÄÄÄÄÄÄÄ	ÄÄÄÄÄÄÄÄÄ	ÄÄÄÄÄÄÄÄÄ	ÄÄÄÄÄÄÄÄÄ	ÄÄÄÄÄÄÄÄÄ	ÄÄÄÄÄÄÄÄÄ	ÄÄÄÄÄÄÄÄÄ
o-210	U-238	8.862E-17	0.000E+00	0.000E+00	0.000E+00	0.000E+00	0.000E+00	0.000E+00	0.000E+00	0.000E+00
o-210	U-238	4.224E-16	0.000E+00	0.000E+00	0.000E+00	0.000E+00	0.000E+00	2.140E-29	0.000E+00	0.000E+00
o-210	U-238	1.317E-06	4.186E-27	1.258E-25	2.959E-24	1.803E-22	6.312E-21	6.674E-20	0.000E+00	0.000E+00
o-210	U-238	2.767E-10	0.000E+00	2.642E-29	6.215E-28	3.787E-26	1.326E-24	1.402E-23	0.000E+00	0.000E+00
o-210	U-238	2.633E-10	0.000E+00	2.514E-29	5.913E-28	3.603E-26	1.261E-24	1.334E-23	0.000E+00	0.000E+00
o-210	U-238	5.530E-14	0.000E+00	0.000E+00	0.000E+00	0.000E+00	2.649E-28	2.801E-27	0.000E+00	0.000E+00
o-210	U-238	2.636E-13	0.000E+00	0.000E+00	0.000E+00	3.608E-29	1.263E-27	1.335E-26	0.000E+00	0.000E+00
o-210	äDOSE(j)		5.942E-11	1.714E-10	3.667E-10	8.092E-10	9.800E-10	1.428E-10	0.000E+00	0.000E+00
a-226	Ra-226	1.899E-08	3.828E-08	3.696E-08	3.444E-08	2.688E-08	1.309E-08	8.164E-10	0.000E+00	0.000E+00
a-226	Ra-226	2.100E-04	4.232E-04	4.086E-04	3.807E-04	2.971E-04	1.447E-04	9.025E-06	0.000E+00	0.000E+00
a-226	äDOSE(j)		4.232E-04	4.086E-04	3.808E-04	2.971E-04	1.448E-04	9.026E-06	0.000E+00	0.000E+00
a-226	Ra-226	2.771E-10	5.586E-10	5.393E-10	5.026E-10	3.922E-10	1.911E-10	1.191E-11	0.000E+00	0.000E+00
a-226	Ra-226	3.989E-12	8.041E-12	7.763E-12	7.234E-12	5.645E-12	2.750E-12	1.715E-13	0.000E+00	0.000E+00
a-226	äDOSE(j)		5.667E-10	5.471E-10	5.098E-10	3.978E-10	1.938E-10	1.208E-11	0.000E+00	0.000E+00
o-210	Ra-226	3.989E-12	1.312E-16	3.786E-16	8.101E-16	1.789E-15	2.173E-15	3.244E-16	0.000E+00	0.000E+00
o-210	Ra-226	3.795E-12	1.248E-16	3.602E-16	7.707E-16	1.702E-15	2.067E-15	3.087E-16	0.000E+00	0.000E+00
o-210	Ra-226	7.972E-16	2.622E-20	7.565E-20	1.619E-19	3.575E-19	4.342E-19	6.484E-20	0.000E+00	0.000E+00
o-210	Ra-226	3.800E-15	1.250E-19	3.606E-19	7.717E-19	1.704E-18	2.070E-18	3.091E-19	0.000E+00	0.000E+00
o-210	U-234	1.899E-08	7.916E-23	1.154E-21	1.262E-20	2.657E-19	3.405E-18	1.467E-17	0.000E+00	0.000E+00
o-210	U-234	3.989E-12	1.663E-26	2.423E-25	2.651E-24	5.580E-23	7.153E-22	3.082E-21	0.000E+00	0.000E+00
o-210	U-234	3.795E-12	1.582E-26	2.306E-25	2.523E-24	5.309E-23	6.805E-22	2.932E-21	0.000E+00	0.000E+00
o-210	U-234	7.972E-16	0.000E+00	4.843E-29	5.299E-28	1.115E-26	1.429E-25	6.159E-25	0.000E+00	0.000E+00
o-210	U-234	3.800E-15	1.584E-29	2.309E-28	2.526E-27	5.316E-26	6.813E-25	2.936E-24	0.000E+00	0.000E+00
o-210	U-238	3.039E-11	0.000E+00	0.000E+00	5.042E-29	3.075E-27	1.080E-25	1.170E-24	0.000E+00	0.000E+00
o-210	U-238	6.383E-15	0.000E+00	0.000E+00	0.000E+00	0.000E+00	2.268E-29	2.457E-28	0.000E+00	0.000E+00
o-210	U-238	6.073E-15	0.000E+00	0.000E+00	0.000E+00	0.000E+00	2.157E-29	2.338E-28	0.000E+00	0.000E+00
o-210	U-238	1.276E-18	0.000E+00	0.000E+00	0.000E+00	0.000E+00	0.000E+00	0.000E+00	0.000E+00	0.000E+00
o-210	U-238	6.080E-18	0.000E+00	0.000E+00	0.000E+00	0.000E+00	0.000E+00	0.000E+00	0.000E+00	0.000E+00
o-210	U-238	1.896E-08	4.450E-29	1.337E-27	3.146E-26	1.919E-24	6.736E-23	7.300E-22	0.000E+00	0.000E+00
o-210	U-238	3.983E-12	0.000E+00	0.000E+00	0.000E+00	4.031E-28	1.415E-26	1.533E-25	0.000E+00	0.000E+00
o-210	U-238	3.789E-12	0.000E+00	0.000E+00	0.000E+00	3.835E-28	1.346E-26	1.459E-25	0.000E+00	0.000E+00
o-210	U-238	7.959E-16	0.000E+00	0.000E+00	0.000E+00	0.000E+00	0.000E+00	3.064E-29	0.000E+00	0.000E+00
o-210	U-238	3.794E-15	0.000E+00	0.000E+00	0.000E+00	0.000E+00	0.000E+00	1.461E-28	0.000E+00	0.000E+00
o-210	äDOSE(j)		2.562E-16	7.391E-16	1.582E-15	3.494E-15	4.246E-15	6.482E-16	0.000E+00	0.000E+00
a-226	Ra-226	1.998E-04	3.487E-04	3.366E-04	3.136E-04	2.444E-04	1.187E-04	7.291E-06	0.000E+00	0.000E+00
a-226	Ra-226	2.637E-10	4.603E-10	4.443E-10	4.139E-10	3.227E-10	1.566E-10	9.625E-12	0.000E+00	0.000E+00
a-226	U-234	1.998E-04	8.783E-14	5.999E-13	3.000E-12	2.203E-11	1.068E-10	1.731E-10	0.000E+00	0.000E+00
a-226	U-234	2.637E-10	1.159E-19	7.919E-19	3.960E-18	2.907E-17	1.410E-16	2.284E-16	0.000E+00	0.000E+00
a-226	U-234	3.795E-12	1.669E-21	1.140E-20	5.700E-20	4.185E-19	2.030E-18	3.288E-18	0.000E+00	0.000E+00
a-226	U-238	3.196E-07	9.868E-23	1.439E-21	1.574E-20	3.315E-19	4.211E-18	1.505E-17	0.000E+00	0.000E+00
a-226	U-238	4.219E-13	1.303E-28	1.899E-27	2.078E-26	4.376E-25	5.558E-24	1.986E-23	0.000E+00	0.000E+00
a-226	U-238	6.073E-15	0.000E+00	2.733E-29	2.992E-28	6.298E-27	8.000E-26	2.859E-25	0.000E+00	0.000E+00
a-226	U-238	1.994E-04	6.157E-20	8.977E-19	9.825E-18	2.068E-16	2.628E-15	9.389E-15	0.000E+00	0.000E+00
a-226	U-238	2.633E-10	8.128E-26	1.185E-24	1.297E-23	2.730E-22	3.468E-21	1.239E-20	0.000E+00	0.000E+00
a-226	U-238	3.789E-12	1.170E-27	1.706E-26	1.867E-25	3.930E-24	4.992E-23	1.784E-22	0.000E+00	0.000E+00
a-226	äDOSE(j)		3.487E-04	3.366E-04	3.136E-04	2.444E-04	1.187E-04	7.291E-06	0.000E+00	0.000E+00

ummary : GKP Fire Fighter - External
ile : C:\USERS\CLAUDE\DOCUMENTS\0 GKP DOSE\RESRAD CW\GKP FIRE FIGHTER- EXTERNAL.RAD

Individual Nuclide Dose Summed Over All Pathways
Parent Nuclide and Branch Fraction Indicated

uclide (j)	Parent (i)	THF(i)	DOSE(j,t), mrem/yr t= 0.000E+00	1.000E+00	3.000E+00	1.000E+01	3.000E+01	1.000E+02	3.000E+02	1.000E+03
ÄÄÄÄÄ	ÄÄÄÄÄÄ	ÄÄÄÄÄÄÄÄÄ	ÄÄÄÄÄÄÄÄÄ	ÄÄÄÄÄÄÄÄÄ	ÄÄÄÄÄÄÄÄÄ	ÄÄÄÄÄÄÄÄÄ	ÄÄÄÄÄÄÄÄÄ	ÄÄÄÄÄÄÄÄÄ	ÄÄÄÄÄÄÄÄÄ	ÄÄÄÄÄÄÄÄÄ
a-226	Ra-226	3.795E-12	6.626E-12	6.395E-12	5.958E-12	4.644E-12	2.255E-12	1.385E-13	0.000E+00	0.000E+00
a-226	Ra-226	4.196E-08	7.324E-08	7.070E-08	6.586E-08	5.134E-08	2.492E-08	1.531E-09	0.000E+00	0.000E+00
a-226	äDOSE(j)		7.325E-08	7.070E-08	6.587E-08	5.134E-08	2.493E-08	1.532E-09	0.000E+00	0.000E+00
a-226	Ra-226	5.538E-14	9.668E-14	9.332E-14	8.694E-14	6.777E-14	3.290E-14	2.021E-15	0.000E+00	0.000E+00
a-226	Ra-226	7.972E-16	1.392E-15	1.343E-15	1.251E-15	9.754E-16	4.736E-16	2.910E-17	0.000E+00	0.000E+00
a-226	äDOSE(j)		9.807E-14	9.466E-14	8.819E-14	6.874E-14	3.337E-14	2.051E-15	0.000E+00	0.000E+00
a-226	Ra-226	2.000E-07	1.888E-09	1.826E-09	1.707E-09	1.348E-09	6.819E-10	5.139E-11	0.000E+00	0.000E+00
a-226	Ra-226	2.640E-13	2.492E-15	2.410E-15	2.253E-15	1.779E-15	9.001E-16	6.784E-17	0.000E+00	0.000E+00
a-226	U-234	2.000E-07	4.758E-19	3.255E-18	1.633E-17	1.215E-16	6.139E-16	1.220E-15	0.000E+00	0.000E+00
a-226	U-234	2.640E-13	6.280E-25	4.296E-24	2.156E-23	1.603E-22	8.103E-22	1.610E-21	0.000E+00	0.000E+00
a-226	U-234	3.800E-15	9.030E-27	6.184E-26	3.103E-25	2.308E-24	1.166E-23	2.318E-23	0.000E+00	0.000E+00
a-226	U-238	3.200E-10	5.340E-28	7.797E-27	8.572E-26	1.828E-24	2.420E-23	1.061E-22	0.000E+00	0.000E+00
a-226	U-238	4.224E-16	0.000E+00	0.000E+00	0.000E+00	0.000E+00	3.191E-29	1.399E-28	0.000E+00	0.000E+00
a-226	U-238	6.080E-18	0.000E+00	0.000E+00	0.000E+00	0.000E+00	0.000E+00	0.000E+00	0.000E+00	0.000E+00
a-226	U-238	1.997E-07	3.336E-25	4.871E-24	5.349E-23	1.141E-21	1.510E-20	6.618E-20	0.000E+00	0.000E+00
a-226	U-238	2.636E-13	0.000E+00	0.000E+00	7.053E-29	1.504E-27	1.993E-26	8.735E-26	0.000E+00	0.000E+00
a-226	U-238	3.794E-15	0.000E+00	0.000E+00	0.000E+00	2.165E-29	2.866E-28	1.257E-27	0.000E+00	0.000E+00
a-226	äDOSE(j)		1.888E-09	1.826E-09	1.707E-09	1.348E-09	6.819E-10	5.139E-11	0.000E+00	0.000E+00
a-226	Ra-226	3.800E-15	3.588E-17	3.469E-17	3.243E-17	2.561E-17	1.296E-17	9.765E-19	0.000E+00	0.000E+00
n-232	Th-232	1.000E+00	7.692E-06	7.688E-06	7.680E-06	7.650E-06	7.540E-06	6.243E-06	0.000E+00	0.000E+00
a-228	Th-232	1.000E+00	4.230E-03	1.185E-02	2.389E-02	4.517E-02	5.202E-02	3.118E-02	0.000E+00	0.000E+00
n-228	Th-232	1.000E+00	7.500E-04	4.546E-03	1.757E-02	5.957E-02	8.066E-02	4.732E-02	0.000E+00	0.000E+00
-234	U-234	9.996E-01	3.379E-05	3.231E-05	2.954E-05	2.157E-05	8.763E-06	3.296E-07	0.000E+00	0.000E+00
-234	U-234	1.319E-06	4.460E-11	4.265E-11	3.899E-11	2.848E-11	1.157E-11	4.350E-13	0.000E+00	0.000E+00
-234	U-238	1.599E-03	7.575E-14	2.184E-13	4.665E-13	1.023E-12	1.207E-12	1.496E-13	0.000E+00	0.000E+00
-234	U-238	2.111E-09	9.999E-20	2.883E-19	6.158E-19	1.350E-18	1.594E-18	1.975E-19	0.000E+00	0.000E+00
-234	U-238	3.039E-11	1.439E-21	4.149E-21	8.864E-21	1.944E-20	2.294E-20	2.843E-21	0.000E+00	0.000E+00
-234	U-238	3.359E-07	1.591E-17	4.587E-17	9.799E-17	2.149E-16	2.536E-16	3.143E-17	0.000E+00	0.000E+00
-234	U-238	4.434E-13	2.100E-23	6.055E-23	1.293E-22	2.836E-22	3.347E-22	4.149E-23	0.000E+00	0.000E+00
-234	U-238	6.383E-15	3.023E-25	8.715E-25	1.862E-24	4.082E-24	4.818E-24	5.972E-25	0.000E+00	0.000E+00
-234	U-238	3.196E-07	1.514E-17	4.364E-17	9.323E-17	2.044E-16	2.413E-16	2.990E-17	0.000E+00	0.000E+00
-234	U-238	4.219E-13	1.998E-23	5.761E-23	1.231E-22	2.698E-22	3.185E-22	3.947E-23	0.000E+00	0.000E+00
-234	U-238	6.073E-15	2.876E-25	8.292E-25	1.771E-24	3.884E-24	4.584E-24	5.681E-25	0.000E+00	0.000E+00
-234	U-238	6.713E-11	3.180E-21	9.167E-21	1.958E-20	4.294E-20	5.068E-20	6.281E-21	0.000E+00	0.000E+00
-234	U-238	8.862E-17	4.197E-27	1.210E-26	2.585E-26	5.668E-26	6.689E-26	8.291E-27	0.000E+00	0.000E+00
-234	U-238	1.276E-18	6.041E-29	1.742E-28	3.721E-28	8.158E-28	9.628E-28	1.193E-28	0.000E+00	0.000E+00
-234	U-238	3.200E-10	1.516E-20	4.369E-20	9.334E-20	2.047E-19	2.416E-19	2.994E-20	0.000E+00	0.000E+00
-234	U-238	4.224E-16	2.001E-26	5.768E-26	1.232E-25	2.702E-25	3.189E-25	3.952E-26	0.000E+00	0.000E+00
-234	U-238	6.080E-18	2.880E-28	8.302E-28	1.773E-27	3.889E-27	4.590E-27	5.688E-28	0.000E+00	0.000E+00
-234	U-238	9.980E-01	4.727E-11	1.363E-10	2.911E-10	6.383E-10	7.533E-10	9.337E-11	0.000E+00	0.000E+00
-234	U-238	1.317E-06	6.239E-17	1.799E-16	3.843E-16	8.426E-16	9.944E-16	1.232E-16	0.000E+00	0.000E+00
-234	U-238	1.896E-08	8.981E-19	2.589E-18	5.531E-18	1.213E-17	1.431E-17	1.774E-18	0.000E+00	0.000E+00

ummary : GKP Fire Fighter - External
ile : C:\USERS\CLAUDE\DOCUMENTS\0 GKP DOSE\RESRAD CW\GKP FIRE FIGHTER- EXTERNAL.RAD

Individual Nuclide Dose Summed Over All Pathways
Parent Nuclide and Branch Fraction Indicated

uclide (j)	Parent (i)	THF(i)	DOSE(j,t), mrem/yr t= 0.000E+00	1.000E+00	3.000E+00	1.000E+01	3.000E+01	1.000E+02	3.000E+02	1.000E+03
ÄÄÄÄÄÄ	ÄÄÄÄÄÄÄ	ÄÄÄÄÄÄÄÄÄÄ	ÄÄÄÄÄÄÄÄÄÄ	ÄÄÄÄÄÄÄÄÄÄ	ÄÄÄÄÄÄÄÄÄÄ	ÄÄÄÄÄÄÄÄÄÄ	ÄÄÄÄÄÄÄÄÄÄ	ÄÄÄÄÄÄÄÄÄÄ	ÄÄÄÄÄÄÄÄÄÄ	ÄÄÄÄÄÄÄÄÄÄ
-234	U-238	2.096E-04	9.928E-15	2.862E-14	6.114E-14	1.341E-13	1.582E-13	1.961E-14	0.000E+00	0.000E+00
-234	U-238	2.767E-10	1.311E-20	3.778E-20	8.071E-20	1.770E-19	2.089E-19	2.589E-20	0.000E+00	0.000E+00
-234	U-238	3.983E-12	1.886E-22	5.438E-22	1.162E-21	2.547E-21	3.006E-21	3.726E-22	0.000E+00	0.000E+00
-234	U-238	1.994E-04	9.446E-15	2.723E-14	5.817E-14	1.276E-13	1.505E-13	1.866E-14	0.000E+00	0.000E+00
-234	U-238	2.633E-10	1.247E-20	3.595E-20	7.679E-20	1.684E-19	1.987E-19	2.463E-20	0.000E+00	0.000E+00
-234	U-238	3.789E-12	1.795E-22	5.174E-22	1.105E-21	2.424E-21	2.860E-21	3.545E-22	0.000E+00	0.000E+00
-234	U-238	4.189E-08	1.984E-18	5.720E-18	1.222E-17	2.679E-17	3.162E-17	3.919E-18	0.000E+00	0.000E+00
-234	U-238	5.530E-14	2.619E-24	7.550E-24	1.613E-23	3.537E-23	4.174E-23	5.173E-24	0.000E+00	0.000E+00
-234	U-238	7.959E-16	3.770E-26	1.087E-25	2.322E-25	5.091E-25	6.008E-25	7.447E-26	0.000E+00	0.000E+00
-234	U-238	1.997E-07	9.458E-18	2.726E-17	5.824E-17	1.277E-16	1.507E-16	1.868E-17	0.000E+00	0.000E+00
-234	U-238	2.636E-13	1.248E-23	3.599E-23	7.688E-23	1.686E-22	1.990E-22	2.466E-23	0.000E+00	0.000E+00
-234	U-238	3.794E-15	1.797E-25	5.180E-25	1.107E-24	2.427E-24	2.864E-24	3.550E-25	0.000E+00	0.000E+00
-234	äDOSE(j)		3.379E-05	3.231E-05	2.954E-05	2.157E-05	8.764E-06	3.296E-07	0.000E+00	0.000E+00
a-230	U-234	9.996E-01	4.627E-10	1.360E-09	3.037E-09	7.827E-09	1.529E-08	1.616E-08	0.000E+00	0.000E+00
a-230	U-234	1.319E-06	6.107E-16	1.796E-15	4.009E-15	1.033E-14	2.019E-14	2.133E-14	0.000E+00	0.000E+00
a-230	U-234	1.899E-08	8.791E-18	2.585E-17	5.771E-17	1.487E-16	2.906E-16	3.070E-16	0.000E+00	0.000E+00
a-230	U-234	2.100E-04	9.718E-14	2.857E-13	6.379E-13	1.644E-12	3.212E-12	3.393E-12	0.000E+00	0.000E+00
a-230	U-234	2.771E-10	1.283E-19	3.772E-19	8.421E-19	2.170E-18	4.240E-18	4.479E-18	0.000E+00	0.000E+00
a-230	U-234	3.989E-12	1.847E-21	5.429E-21	1.212E-20	3.124E-20	6.104E-20	6.447E-20	0.000E+00	0.000E+00
a-230	U-234	1.998E-04	9.246E-14	2.719E-13	6.069E-13	1.564E-12	3.056E-12	3.229E-12	0.000E+00	0.000E+00
a-230	U-234	2.637E-10	1.221E-19	3.589E-19	8.012E-19	2.065E-18	4.034E-18	4.262E-18	0.000E+00	0.000E+00
a-230	U-234	3.795E-12	1.757E-21	5.165E-21	1.153E-20	2.972E-20	5.807E-20	6.134E-20	0.000E+00	0.000E+00
a-230	U-234	4.196E-08	1.942E-17	5.710E-17	1.275E-16	3.285E-16	6.420E-16	6.781E-16	0.000E+00	0.000E+00
a-230	U-234	5.538E-14	2.564E-23	7.538E-23	1.683E-22	4.337E-22	8.474E-22	8.951E-22	0.000E+00	0.000E+00
a-230	U-234	7.972E-16	3.690E-25	1.085E-24	2.422E-24	6.242E-24	1.220E-23	1.288E-23	0.000E+00	0.000E+00
a-230	U-234	2.000E-07	9.258E-17	2.722E-16	6.077E-16	1.566E-15	3.060E-15	3.232E-15	0.000E+00	0.000E+00
a-230	U-234	2.640E-13	1.222E-22	3.593E-22	8.021E-22	2.067E-21	4.039E-21	4.267E-21	0.000E+00	0.000E+00
a-230	U-234	3.800E-15	1.759E-24	5.172E-24	1.155E-23	2.975E-23	5.814E-23	6.142E-23	0.000E+00	0.000E+00
a-230	U-238	1.599E-03	6.916E-19	4.718E-18	2.353E-17	1.714E-16	8.238E-16	1.564E-15	0.000E+00	0.000E+00
a-230	U-238	2.111E-09	9.129E-25	6.228E-24	3.106E-23	2.262E-22	1.087E-21	2.064E-21	0.000E+00	0.000E+00
a-230	U-238	3.039E-11	1.314E-26	8.964E-26	4.471E-25	3.257E-24	1.565E-23	2.971E-23	0.000E+00	0.000E+00
a-230	U-238	3.359E-07	1.453E-22	9.910E-22	4.942E-21	3.600E-20	1.730E-19	3.284E-19	0.000E+00	0.000E+00
a-230	U-238	4.434E-13	1.917E-28	1.308E-27	6.524E-27	4.752E-26	2.284E-25	4.335E-25	0.000E+00	0.000E+00
a-230	U-238	6.383E-15	0.000E+00	1.883E-29	9.391E-29	6.840E-28	3.287E-27	6.240E-27	0.000E+00	0.000E+00
a-230	U-238	3.196E-07	1.382E-22	9.428E-22	4.702E-21	3.425E-20	1.646E-19	3.125E-19	0.000E+00	0.000E+00
a-230	U-238	4.219E-13	1.824E-28	1.245E-27	6.207E-27	4.521E-26	2.173E-25	4.124E-25	0.000E+00	0.000E+00
a-230	U-238	6.073E-15	0.000E+00	1.791E-29	8.934E-29	6.508E-28	3.128E-27	5.937E-27	0.000E+00	0.000E+00
a-230	U-238	6.713E-11	2.903E-26	1.980E-25	9.877E-25	7.195E-24	3.458E-23	6.563E-23	0.000E+00	0.000E+00
a-230	U-238	8.862E-17	0.000E+00	0.000E+00	0.000E+00	0.000E+00	4.564E-29	8.663E-29	0.000E+00	0.000E+00
a-230	U-238	1.276E-18	0.000E+00	0.000E+00	0.000E+00	0.000E+00	0.000E+00	0.000E+00	0.000E+00	0.000E+00
a-230	U-238	3.200E-10	1.384E-25	9.440E-25	4.708E-24	3.429E-23	1.648E-22	3.128E-22	0.000E+00	0.000E+00
a-230	U-238	4.224E-16	0.000E+00	0.000E+00	0.000E+00	4.527E-29	2.176E-28	4.129E-28	0.000E+00	0.000E+00
a-230	U-238	6.080E-18	0.000E+00	0.000E+00	0.000E+00	0.000E+00	0.000E+00	0.000E+00	0.000E+00	0.000E+00
a-230	U-238	9.980E-01	4.315E-16	2.944E-15	1.468E-14	1.070E-13	5.140E-13	9.757E-13	0.000E+00	0.000E+00
a-230	U-238	1.317E-06	5.696E-22	3.886E-21	1.938E-20	1.412E-19	6.785E-19	1.288E-18	0.000E+00	0.000E+00
a-230	U-238	1.896E-08	8.199E-24	5.593E-23	2.790E-22	2.032E-21	9.766E-21	1.854E-20	0.000E+00	0.000E+00
a-230	U-238	2.096E-04	9.064E-20	6.184E-19	3.084E-18	2.246E-17	1.080E-16	2.049E-16	0.000E+00	0.000E+00
a-230	U-238	2.767E-10	1.196E-25	8.162E-25	4.071E-24	2.965E-23	1.425E-22	2.705E-22	0.000E+00	0.000E+00

ummary : GKP Fire Fighter - External
ile : C:\USERS\CLAUDE\DOCUMENTS\0 GKP DOSE\RESRAD CW\GKP FIRE FIGHTER- EXTERNAL.RAD

Individual Nuclide Dose Summed Over All Pathways
Parent Nuclide and Branch Fraction Indicated

uclide (j)	Parent (i)	THF(i)	DOSE(j,t), mrem/yr t= 0.000E+00	1.000E+00	3.000E+00	1.000E+01	3.000E+01	1.000E+02	3.000E+02	1.000E+03
ÄÄÄÄÄ	ÄÄÄÄÄÄ	ÄÄÄÄÄÄÄÄÄ	ÄÄÄÄÄÄÄÄÄ	ÄÄÄÄÄÄÄÄÄ	ÄÄÄÄÄÄÄÄÄ	ÄÄÄÄÄÄÄÄÄ	ÄÄÄÄÄÄÄÄÄ	ÄÄÄÄÄÄÄÄÄ	ÄÄÄÄÄÄÄÄÄ	ÄÄÄÄÄÄÄÄÄ
n-230	U-238	3.983E-12	1.722E-27	1.175E-26	5.860E-26	4.268E-25	2.051E-24	3.894E-24	0.000E+00	0.000E+00
n-230	U-238	1.994E-04	8.624E-20	5.883E-19	2.934E-18	2.137E-17	1.027E-16	1.950E-16	0.000E+00	0.000E+00
n-230	U-238	2.633E-10	1.138E-25	7.766E-25	3.873E-24	2.821E-23	1.356E-22	2.574E-22	0.000E+00	0.000E+00
n-230	U-238	3.789E-12	1.639E-27	1.118E-26	5.575E-26	4.061E-25	1.952E-24	3.705E-24	0.000E+00	0.000E+00
n-230	U-238	4.189E-08	1.811E-23	1.236E-22	6.163E-22	4.489E-21	2.158E-20	4.095E-20	0.000E+00	0.000E+00
n-230	U-238	5.530E-14	2.391E-29	1.631E-28	8.135E-28	5.926E-27	2.848E-26	5.406E-26	0.000E+00	0.000E+00
n-230	U-238	7.959E-16	0.000E+00	0.000E+00	0.000E+00	8.530E-29	4.099E-28	7.781E-28	0.000E+00	0.000E+00
n-230	U-238	1.997E-07	8.634E-23	5.890E-22	2.938E-21	2.140E-20	1.028E-19	1.952E-19	0.000E+00	0.000E+00
n-230	U-238	2.636E-13	1.140E-28	7.775E-28	3.878E-27	2.825E-26	1.358E-25	2.577E-25	0.000E+00	0.000E+00
n-230	U-238	3.794E-15	0.000E+00	0.000E+00	5.582E-29	4.066E-28	1.954E-27	3.709E-27	0.000E+00	0.000E+00
n-230	äDOSE(j)		4.629E-10	1.361E-09	3.038E-09	7.830E-09	1.530E-08	1.616E-08	0.000E+00	0.000E+00
-234	U-234	1.899E-08	6.420E-13	6.139E-13	5.612E-13	4.099E-13	1.665E-13	6.261E-15	0.000E+00	0.000E+00
-234	U-234	2.100E-04	7.097E-09	6.786E-09	6.204E-09	4.531E-09	1.841E-09	6.922E-11	0.000E+00	0.000E+00
-234	äDOSE(j)		7.098E-09	6.787E-09	6.205E-09	4.532E-09	1.841E-09	6.923E-11	0.000E+00	0.000E+00
a-226	U-234	2.100E-04	1.066E-13	7.281E-13	3.642E-12	2.677E-11	1.303E-10	2.142E-10	0.000E+00	0.000E+00
a-226	U-234	3.989E-12	2.025E-21	1.383E-20	6.920E-20	5.087E-19	2.476E-18	4.070E-18	0.000E+00	0.000E+00
a-226	U-238	3.359E-07	1.198E-22	1.746E-21	1.912E-20	4.029E-19	5.136E-18	1.862E-17	0.000E+00	0.000E+00
a-226	U-238	4.434E-13	1.581E-28	2.305E-27	2.523E-26	5.319E-25	6.780E-24	2.458E-23	0.000E+00	0.000E+00
a-226	U-238	6.383E-15	0.000E+00	3.318E-29	3.632E-28	7.656E-27	9.758E-26	3.539E-25	0.000E+00	0.000E+00
a-226	U-238	2.096E-04	7.473E-20	1.090E-18	1.193E-17	2.514E-16	3.205E-15	1.162E-14	0.000E+00	0.000E+00
a-226	U-238	2.767E-10	9.864E-26	1.438E-24	1.575E-23	3.319E-22	4.230E-21	1.534E-20	0.000E+00	0.000E+00
a-226	U-238	3.983E-12	1.420E-27	2.070E-26	2.266E-25	4.777E-24	6.089E-23	2.208E-22	0.000E+00	0.000E+00
a-226	äDOSE(j)		1.066E-13	7.281E-13	3.642E-12	2.677E-11	1.303E-10	2.142E-10	0.000E+00	0.000E+00
-234	U-234	2.771E-10	9.368E-15	8.958E-15	8.189E-15	5.981E-15	2.430E-15	9.137E-17	0.000E+00	0.000E+00
-234	U-234	3.989E-12	1.348E-16	1.289E-16	1.179E-16	8.610E-17	3.497E-17	1.315E-18	0.000E+00	0.000E+00
-234	äDOSE(j)		9.503E-15	9.087E-15	8.307E-15	6.067E-15	2.465E-15	9.269E-17	0.000E+00	0.000E+00
a-226	U-234	2.771E-10	1.407E-19	9.612E-19	4.808E-18	3.534E-17	1.720E-16	2.827E-16	0.000E+00	0.000E+00
-234	U-234	1.998E-04	6.752E-09	6.456E-09	5.903E-09	4.311E-09	1.751E-09	6.586E-11	0.000E+00	0.000E+00
-234	U-234	2.637E-10	8.913E-15	8.522E-15	7.791E-15	5.691E-15	2.312E-15	8.693E-17	0.000E+00	0.000E+00
-234	äDOSE(j)		6.752E-09	6.456E-09	5.903E-09	4.311E-09	1.751E-09	6.586E-11	0.000E+00	0.000E+00
-234	U-234	3.795E-12	1.283E-16	1.227E-16	1.121E-16	8.191E-17	3.327E-17	1.251E-18	0.000E+00	0.000E+00
-234	U-234	4.196E-08	1.418E-12	1.356E-12	1.240E-12	9.055E-13	3.678E-13	1.383E-14	0.000E+00	0.000E+00
-234	äDOSE(j)		1.418E-12	1.356E-12	1.240E-12	9.056E-13	3.679E-13	1.383E-14	0.000E+00	0.000E+00
a-226	U-234	4.196E-08	1.845E-17	1.260E-16	6.301E-16	4.626E-15	2.244E-14	3.635E-14	0.000E+00	0.000E+00
a-226	U-234	7.972E-16	3.505E-25	2.394E-24	1.197E-23	8.790E-23	4.263E-22	6.906E-22	0.000E+00	0.000E+00
a-226	U-238	6.713E-11	2.073E-26	3.022E-25	3.307E-24	6.962E-23	8.844E-22	3.160E-21	0.000E+00	0.000E+00
a-226	U-238	8.862E-17	0.000E+00	0.000E+00	0.000E+00	9.190E-29	1.167E-27	4.171E-27	0.000E+00	0.000E+00
a-226	U-238	1.276E-18	0.000E+00	0.000E+00	0.000E+00	0.000E+00	1.680E-29	6.004E-29	0.000E+00	0.000E+00
a-226	U-238	4.189E-08	1.293E-23	1.885E-22	2.064E-21	4.345E-20	5.519E-19	1.972E-18	0.000E+00	0.000E+00
a-226	U-238	5.530E-14	1.707E-29	2.489E-28	2.724E-27	5.735E-26	7.285E-25	2.603E-24	0.000E+00	0.000E+00
a-226	U-238	7.959E-16	0.000E+00	0.000E+00	3.921E-29	8.255E-28	1.049E-26	3.747E-26	0.000E+00	0.000E+00
a-226	äDOSE(j)		1.845E-17	1.260E-16	6.301E-16	4.626E-15	2.244E-14	3.635E-14	0.000E+00	0.000E+00

ummary : GKP Fire Ighter - External
ile : C:\USERS\CLAUDE\DOCUMENTS\0 GKP DOSE\RESRAD CW\GKP FIRE FIGHTER- EXTERNAL.RAD

Individual Nuclide Dose Summed Over All Pathways
Parent Nuclide and Branch Fraction Indicated

uclide (j)	Parent (i)	THF(i)	DOSE(j,t), mrem/yr t= 0.000E+00	1.000E+00	3.000E+00	1.000E+01	3.000E+01	1.000E+02	3.000E+02	1.000E+03
ÄÄÄÄÄÄ	ÄÄÄÄÄÄÄ	ÄÄÄÄÄÄÄÄÄ	ÄÄÄÄÄÄÄÄÄ	ÄÄÄÄÄÄÄÄÄ	ÄÄÄÄÄÄÄÄÄ	ÄÄÄÄÄÄÄÄÄ	ÄÄÄÄÄÄÄÄÄ	ÄÄÄÄÄÄÄÄÄ	ÄÄÄÄÄÄÄÄÄ	ÄÄÄÄÄÄÄÄÄ
-234	U-234	5.538E-14	1.872E-18	1.790E-18	1.637E-18	1.195E-18	4.855E-19	1.826E-20	0.000E+00	0.000E+00
-234	U-234	7.972E-16	2.695E-20	2.577E-20	2.356E-20	1.721E-20	6.989E-21	2.628E-22	0.000E+00	0.000E+00
-234	äDOSE(j)		1.899E-18	1.816E-18	1.660E-18	1.213E-18	4.925E-19	1.852E-20	0.000E+00	0.000E+00
a-226	U-234	5.538E-14	2.435E-23	1.663E-22	8.317E-22	6.106E-21	2.962E-20	4.798E-20	0.000E+00	0.000E+00
-234	U-234	2.000E-07	6.761E-12	6.464E-12	5.910E-12	4.316E-12	1.753E-12	6.594E-14	0.000E+00	0.000E+00
-234	U-234	2.640E-13	8.924E-18	8.533E-18	7.801E-18	5.698E-18	2.314E-18	8.704E-20	0.000E+00	0.000E+00
-234	äDOSE(j)		6.761E-12	6.464E-12	5.910E-12	4.316E-12	1.753E-12	6.594E-14	0.000E+00	0.000E+00
-234	U-234	3.800E-15	1.285E-19	1.228E-19	1.123E-19	8.201E-20	3.331E-20	1.253E-21	0.000E+00	0.000E+00
-235	U-235	9.835E-01	3.617E-03	3.455E-03	3.152E-03	2.286E-03	9.056E-04	2.827E-05	0.000E+00	0.000E+00
-235	U-235	2.722E-03	1.001E-05	9.561E-06	8.724E-06	6.326E-06	2.506E-06	7.825E-08	0.000E+00	0.000E+00
-235	äDOSE(j)		3.627E-03	3.464E-03	3.161E-03	2.292E-03	9.081E-04	2.835E-05	0.000E+00	0.000E+00
a-231	U-235	9.835E-01	9.191E-09	2.646E-08	5.636E-08	1.222E-07	1.389E-07	1.338E-08	0.000E+00	0.000E+00
a-231	U-235	2.722E-03	2.544E-11	7.324E-11	1.560E-10	3.382E-10	3.843E-10	3.703E-11	0.000E+00	0.000E+00
a-231	U-235	1.376E-02	1.286E-10	3.703E-10	7.886E-10	1.710E-09	1.943E-09	1.872E-10	0.000E+00	0.000E+00
a-231	U-235	3.809E-05	3.559E-13	1.025E-12	2.182E-12	4.732E-12	5.378E-12	5.181E-13	0.000E+00	0.000E+00
a-231	U-235	8.257E-07	7.717E-15	2.222E-14	4.732E-14	1.026E-13	1.166E-13	1.123E-14	0.000E+00	0.000E+00
a-231	U-235	2.285E-09	2.136E-17	6.149E-17	1.310E-16	2.839E-16	3.227E-16	3.109E-17	0.000E+00	0.000E+00
a-231	äDOSE(j)		9.345E-09	2.691E-08	5.730E-08	1.242E-07	1.412E-07	1.360E-08	0.000E+00	0.000E+00
c-227	U-235	9.835E-01	1.004E-09	6.572E-09	2.989E-08	1.581E-07	3.276E-07	4.226E-08	0.000E+00	0.000E+00
c-227	U-235	2.722E-03	2.813E-12	1.842E-11	8.376E-11	4.430E-10	9.178E-10	1.182E-10	0.000E+00	0.000E+00
c-227	U-235	1.376E-02	1.178E-11	7.714E-11	3.509E-10	1.856E-09	3.849E-09	4.997E-10	0.000E+00	0.000E+00
c-227	äDOSE(j)		1.459E-11	9.555E-11	4.346E-10	2.299E-09	4.767E-09	6.179E-10	0.000E+00	0.000E+00
-235	U-235	1.376E-02	5.060E-05	4.834E-05	4.411E-05	3.198E-05	1.267E-05	3.956E-07	0.000E+00	0.000E+00
-235	U-235	3.809E-05	1.401E-07	1.338E-07	1.221E-07	8.851E-08	3.507E-08	1.095E-09	0.000E+00	0.000E+00
-235	äDOSE(j)		5.074E-05	4.847E-05	4.423E-05	3.207E-05	1.271E-05	3.967E-07	0.000E+00	0.000E+00
c-227	U-235	3.809E-05	3.309E-14	2.167E-13	9.855E-13	5.214E-12	1.081E-11	1.401E-12	0.000E+00	0.000E+00
c-227	U-235	8.257E-07	3.209E-16	2.100E-15	9.550E-15	5.046E-14	1.042E-13	1.326E-14	0.000E+00	0.000E+00
c-227	äDOSE(j)		3.341E-14	2.188E-13	9.950E-13	5.264E-12	1.091E-11	1.414E-12	0.000E+00	0.000E+00
-235	U-235	8.257E-07	3.036E-09	2.901E-09	2.647E-09	1.919E-09	7.603E-10	2.374E-11	0.000E+00	0.000E+00
-235	U-235	2.285E-09	8.404E-12	8.028E-12	7.325E-12	5.311E-12	2.104E-12	6.570E-14	0.000E+00	0.000E+00
-235	äDOSE(j)		3.045E-09	2.909E-09	2.654E-09	1.924E-09	7.624E-10	2.380E-11	0.000E+00	0.000E+00
c-227	U-235	2.285E-09	9.171E-19	6.003E-18	2.730E-17	1.442E-16	2.975E-16	3.776E-17	0.000E+00	0.000E+00
-238	U-238	5.450E-07	4.975E-12	4.760E-12	4.358E-12	3.199E-12	1.323E-12	5.918E-14	0.000E+00	0.000E+00
-238	U-238	1.599E-03	1.331E-03	1.270E-03	1.155E-03	8.299E-04	3.191E-04	8.696E-06	0.000E+00	0.000E+00
-238	äDOSE(j)		1.331E-03	1.270E-03	1.155E-03	8.299E-04	3.191E-04	8.696E-06	0.000E+00	0.000E+00
-238	U-238	2.111E-09	1.757E-09	1.676E-09	1.525E-09	1.095E-09	4.212E-10	1.148E-11	0.000E+00	0.000E+00

ummary : GKP Fire Fighter - External
ile : C:\USERS\CLAUDE\DOCUMENTS\0 GKP DOSE\RESRAD CW\GKP FIRE FIGHTER- EXTERNAL.RAD

Individual Nuclide Dose Summed Over All Pathways
Parent Nuclide and Branch Fraction Indicated

uclide (j)	Parent (i)	THF(i)	DOSE(j,t), mrem/yr t= 0.000E+00	1.000E+00	3.000E+00	1.000E+01	3.000E+01	1.000E+02	3.000E+02	1.000E+03
ÄÄÄÄÄÄ	ÄÄÄÄÄÄÄ	ÄÄÄÄÄÄÄÄÄ	ÄÄÄÄÄÄÄÄÄ	ÄÄÄÄÄÄÄÄÄ	ÄÄÄÄÄÄÄÄÄ	ÄÄÄÄÄÄÄÄÄ	ÄÄÄÄÄÄÄÄÄ	ÄÄÄÄÄÄÄÄÄ	ÄÄÄÄÄÄÄÄÄ	ÄÄÄÄÄÄÄÄÄ
-238	U-238	3.039E-11	2.529E-11	2.412E-11	2.195E-11	1.577E-11	6.062E-12	1.652E-13	0.000E+00	0.000E+00
-238	äDOSE(j)		1.782E-09	1.700E-09	1.547E-09	1.111E-09	4.272E-10	1.164E-11	0.000E+00	0.000E+00
-238	U-238	3.359E-07	2.795E-07	2.667E-07	2.427E-07	1.743E-07	6.702E-08	1.826E-09	0.000E+00	0.000E+00
-238	U-238	4.434E-13	3.690E-13	3.520E-13	3.203E-13	2.301E-13	8.847E-14	2.411E-15	0.000E+00	0.000E+00
-238	äDOSE(j)		2.795E-07	2.667E-07	2.427E-07	1.743E-07	6.702E-08	1.826E-09	0.000E+00	0.000E+00
-238	U-238	6.383E-15	5.311E-15	5.067E-15	4.611E-15	3.312E-15	1.273E-15	3.470E-17	0.000E+00	0.000E+00
-238	U-238	3.196E-07	2.660E-07	2.537E-07	2.309E-07	1.658E-07	6.376E-08	1.738E-09	0.000E+00	0.000E+00
-238	äDOSE(j)		2.660E-07	2.537E-07	2.309E-07	1.658E-07	6.376E-08	1.738E-09	0.000E+00	0.000E+00
-238	U-238	4.219E-13	3.511E-13	3.349E-13	3.048E-13	2.189E-13	8.417E-14	2.294E-15	0.000E+00	0.000E+00
-238	U-238	6.073E-15	5.053E-15	4.821E-15	4.387E-15	3.151E-15	1.212E-15	3.302E-17	0.000E+00	0.000E+00
-238	äDOSE(j)		3.561E-13	3.397E-13	3.092E-13	2.221E-13	8.538E-14	2.327E-15	0.000E+00	0.000E+00
-238	U-238	6.713E-11	5.586E-11	5.329E-11	4.850E-11	3.483E-11	1.339E-11	3.650E-13	0.000E+00	0.000E+00
-238	U-238	8.862E-17	7.374E-17	7.035E-17	6.402E-17	4.598E-17	1.768E-17	4.818E-19	0.000E+00	0.000E+00
-238	äDOSE(j)		5.586E-11	5.329E-11	4.850E-11	3.483E-11	1.339E-11	3.650E-13	0.000E+00	0.000E+00
-238	U-238	1.276E-18	1.061E-18	1.013E-18	9.215E-19	6.619E-19	2.545E-19	6.935E-21	0.000E+00	0.000E+00
-238	U-238	3.200E-10	2.663E-10	2.540E-10	2.312E-10	1.660E-10	6.384E-11	1.740E-12	0.000E+00	0.000E+00
-238	äDOSE(j)		2.663E-10	2.540E-10	2.312E-10	1.660E-10	6.384E-11	1.740E-12	0.000E+00	0.000E+00
-238	U-238	4.224E-16	3.515E-16	3.353E-16	3.052E-16	2.192E-16	8.427E-17	2.297E-18	0.000E+00	0.000E+00
-238	U-238	6.080E-18	5.059E-18	4.827E-18	4.392E-18	3.155E-18	1.213E-18	3.306E-20	0.000E+00	0.000E+00
-238	äDOSE(j)		3.565E-16	3.401E-16	3.095E-16	2.223E-16	8.548E-17	2.330E-18	0.000E+00	0.000E+00
-238	U-238	9.980E-01	8.439E-03	8.055E-03	7.340E-03	5.295E-03	2.066E-03	6.145E-05	0.000E+00	0.000E+00
-238	U-238	1.317E-06	1.114E-08	1.063E-08	9.688E-09	6.990E-09	2.728E-09	8.111E-11	0.000E+00	0.000E+00
-238	äDOSE(j)		8.439E-03	8.055E-03	7.340E-03	5.295E-03	2.066E-03	6.145E-05	0.000E+00	0.000E+00
-238	U-238	1.896E-08	1.603E-10	1.531E-10	1.395E-10	1.006E-10	3.926E-11	1.168E-12	0.000E+00	0.000E+00
-238	U-238	2.096E-04	1.773E-06	1.692E-06	1.542E-06	1.112E-06	4.340E-07	1.291E-08	0.000E+00	0.000E+00
-238	äDOSE(j)		1.773E-06	1.692E-06	1.542E-06	1.112E-06	4.341E-07	1.291E-08	0.000E+00	0.000E+00
-238	U-238	2.767E-10	2.340E-12	2.233E-12	2.035E-12	1.468E-12	5.729E-13	1.704E-14	0.000E+00	0.000E+00
-238	U-238	3.983E-12	3.368E-14	3.215E-14	2.929E-14	2.113E-14	8.247E-15	2.452E-16	0.000E+00	0.000E+00
-238	äDOSE(j)		2.373E-12	2.266E-12	2.064E-12	1.489E-12	5.812E-13	1.728E-14	0.000E+00	0.000E+00
-238	U-238	1.994E-04	1.686E-06	1.610E-06	1.467E-06	1.058E-06	4.130E-07	1.228E-08	0.000E+00	0.000E+00
-238	U-238	2.633E-10	2.226E-12	2.125E-12	1.936E-12	1.397E-12	5.451E-13	1.621E-14	0.000E+00	0.000E+00
-238	äDOSE(j)		1.686E-06	1.610E-06	1.467E-06	1.058E-06	4.130E-07	1.228E-08	0.000E+00	0.000E+00
-238	U-238	3.789E-12	3.204E-14	3.059E-14	2.787E-14	2.011E-14	7.846E-15	2.333E-16	0.000E+00	0.000E+00
-238	U-238	4.189E-08	3.542E-10	3.381E-10	3.081E-10	2.223E-10	8.674E-11	2.579E-12	0.000E+00	0.000E+00
-238	äDOSE(j)		3.542E-10	3.382E-10	3.081E-10	2.223E-10	8.675E-11	2.580E-12	0.000E+00	0.000E+00
-238	U-238	5.530E-14	4.676E-16	4.463E-16	4.067E-16	2.934E-16	1.145E-16	3.405E-18	0.000E+00	0.000E+00
-238	U-238	7.959E-16	6.730E-18	6.424E-18	5.854E-18	4.223E-18	1.648E-18	4.901E-20	0.000E+00	0.000E+00
-238	äDOSE(j)		4.743E-16	4.528E-16	4.125E-16	2.976E-16	1.161E-16	3.454E-18	0.000E+00	0.000E+00

ummary : GKP Fire Ighter - External
ile : C:\USERS\CLAUDE\DOCUMENTS\0 GKP DOSE\RESRAD CW\GKP FIRE FIGHTER- EXTERNAL.RAD

Individual Nuclide Dose Summed Over All Pathways
Parent Nuclide and Branch Fraction Indicated

uclide (j)	Parent (i)	THF(i)	DOSE(j,t), mrem/yr t= 0.000E+00	1.000E+00	3.000E+00	1.000E+01	3.000E+01	1.000E+02	3.000E+02	1.000E+03
ÄÄÄÄÄÄ	ÄÄÄÄÄÄÄ	ÄÄÄÄÄÄÄÄÄÄ	ÄÄÄÄÄÄÄÄÄÄ	ÄÄÄÄÄÄÄÄÄÄ	ÄÄÄÄÄÄÄÄÄÄ	ÄÄÄÄÄÄÄÄÄÄ	ÄÄÄÄÄÄÄÄÄÄ	ÄÄÄÄÄÄÄÄÄÄ	ÄÄÄÄÄÄÄÄÄÄ	ÄÄÄÄÄÄÄÄÄÄ
-238	U-238	1.997E-07	1.688E-09	1.612E-09	1.469E-09	1.060E-09	4.135E-10	1.229E-11	0.000E+00	0.000E+00
-238	U-238	2.636E-13	2.229E-15	2.128E-15	1.938E-15	1.399E-15	5.458E-16	1.623E-17	0.000E+00	0.000E+00
-238	äDOSE(j)		1.688E-09	1.612E-09	1.469E-09	1.060E-09	4.135E-10	1.229E-11	0.000E+00	0.000E+00
-238	U-238	3.794E-15	3.208E-17	3.062E-17	2.790E-17	2.013E-17	7.856E-18	2.336E-19	0.000E+00	0.000E+00
íííííí	ííííííí	ííííííííí	ííííííííí	ííííííííí	ííííííííí	ííííííííí	ííííííííí	ííííííííí	ííííííííí	ííííííííí

HF(i) is the thread fraction of the parent nuclide.

ummary : GKP Fire Fighter - External
ile : C:\USERS\CLAUDE\DOCUMENTS\0 GKP DOSE\RESRAD CW\GKP FIRE FIGHTER- EXTERNAL.RAD

Individual Nuclide Soil Concentration
Parent Nuclide and Branch Fraction Indicated

uclide (j)	Parent (i)	THF(i)	S(j,t), pCi/g t= 0.000E+00	1.000E+00	3.000E+00	1.000E+01	3.000E+01	1.000E+02	3.000E+02	1.000E+03
ÄÄÄÄÄÄ	ÄÄÄÄÄÄÄ	ÄÄÄÄÄÄÄÄÄÄ	ÄÄÄÄÄÄÄÄÄÄ	ÄÄÄÄÄÄÄÄÄÄ	ÄÄÄÄÄÄÄÄÄÄ	ÄÄÄÄÄÄÄÄÄÄ	ÄÄÄÄÄÄÄÄÄÄ	ÄÄÄÄÄÄÄÄÄÄ	ÄÄÄÄÄÄÄÄÄÄ	ÄÄÄÄÄÄÄÄÄÄ
a-226	Ra-226	9.996E-01	3.648E+01	3.533E+01	3.314E+01	2.647E+01	1.394E+01	1.475E+00	2.411E-03	4.255E-13
a-226	Ra-226	1.319E-06	4.816E-05	4.664E-05	4.374E-05	3.494E-05	1.839E-05	1.947E-06	3.182E-09	5.616E-19
a-226	U-234	9.996E-01	0.000E+00	2.698E-08	2.308E-07	2.155E-06	1.208E-05	3.439E-05	3.853E-05	3.731E-05
a-226	U-234	1.319E-06	0.000E+00	3.561E-14	3.047E-13	2.844E-12	1.595E-11	4.540E-11	5.086E-11	4.925E-11
a-226	U-234	1.899E-08	0.000E+00	5.126E-16	4.386E-15	4.094E-14	2.295E-13	6.534E-13	7.321E-13	7.089E-13
a-226	U-238	1.599E-03	0.000E+00	4.044E-17	1.028E-15	3.093E-14	4.696E-13	2.984E-12	3.935E-12	3.813E-12
a-226	U-238	2.111E-09	0.000E+00	5.338E-23	1.357E-21	4.082E-20	6.199E-19	3.939E-18	5.194E-18	5.033E-18
a-226	U-238	3.039E-11	0.000E+00	7.683E-25	1.953E-23	5.876E-22	8.923E-21	5.670E-20	7.477E-20	7.244E-20
a-226	U-238	9.980E-01	0.000E+00	2.523E-14	6.416E-13	1.930E-11	2.930E-10	1.862E-09	2.455E-09	2.379E-09
a-226	U-238	1.317E-06	0.000E+00	3.331E-20	8.469E-19	2.547E-17	3.868E-16	2.458E-15	3.241E-15	3.140E-15
a-226	U-238	1.896E-08	0.000E+00	4.794E-22	1.219E-20	3.667E-19	5.568E-18	3.538E-17	4.665E-17	4.520E-17
a-226	äS(j):		3.649E+01	3.533E+01	3.314E+01	2.647E+01	1.394E+01	1.475E+00	2.449E-03	3.731E-05
o-210	Ra-226	9.996E-01	0.000E+00	1.092E+00	3.007E+00	7.444E+00	9.643E+00	1.904E+00	3.525E-03	6.232E-13
o-210	Ra-226	2.100E-04	0.000E+00	2.293E-04	6.315E-04	1.564E-03	2.026E-03	4.000E-04	7.405E-07	1.309E-16
o-210	Ra-226	1.998E-04	0.000E+00	2.181E-04	6.009E-04	1.488E-03	1.927E-03	3.805E-04	7.045E-07	1.245E-16
o-210	Ra-226	4.196E-08	0.000E+00	4.582E-08	1.262E-07	3.125E-07	4.048E-07	7.993E-08	1.480E-10	2.616E-20
o-210	Ra-226	2.000E-07	0.000E+00	2.184E-07	6.016E-07	1.489E-06	1.929E-06	3.810E-07	7.053E-10	1.247E-19
o-210	U-234	9.996E-01	0.000E+00	2.788E-10	7.058E-09	2.091E-07	3.053E-06	1.777E-05	2.254E-05	2.184E-05
o-210	U-234	2.100E-04	0.000E+00	5.857E-14	1.482E-12	4.392E-11	6.412E-10	3.732E-09	4.735E-09	4.587E-09
o-210	U-234	1.998E-04	0.000E+00	5.572E-14	1.410E-12	4.178E-11	6.101E-10	3.550E-09	4.505E-09	4.364E-09
o-210	U-234	4.196E-08	0.000E+00	1.170E-17	2.963E-16	8.776E-15	1.281E-13	7.457E-13	9.462E-13	9.166E-13
o-210	U-234	2.000E-07	0.000E+00	5.579E-17	1.412E-15	4.183E-14	6.108E-13	3.555E-12	4.510E-12	4.369E-12
o-210	U-238	1.599E-03	0.000E+00	3.142E-19	2.374E-17	2.303E-15	9.533E-14	1.413E-12	2.300E-12	2.231E-12
o-210	U-238	3.359E-07	0.000E+00	6.599E-23	4.987E-21	4.838E-19	2.002E-17	2.967E-16	4.832E-16	4.687E-16
o-210	U-238	3.196E-07	0.000E+00	6.278E-23	4.745E-21	4.603E-19	1.905E-17	2.823E-16	4.597E-16	4.459E-16
o-210	U-238	6.713E-11	0.000E+00	1.319E-26	9.966E-25	9.669E-23	4.001E-21	5.929E-20	9.656E-20	9.366E-20
o-210	U-238	3.200E-10	0.000E+00	6.286E-26	4.750E-24	4.609E-22	1.907E-20	2.826E-19	4.603E-19	4.464E-19
o-210	U-238	9.980E-01	0.000E+00	1.960E-16	1.481E-14	1.437E-12	5.948E-11	8.814E-10	1.435E-09	1.392E-09
o-210	U-238	2.096E-04	0.000E+00	4.118E-20	3.112E-18	3.019E-16	1.249E-14	1.851E-13	3.015E-13	2.925E-13
o-210	U-238	1.994E-04	0.000E+00	3.918E-20	2.961E-18	2.872E-16	1.189E-14	1.761E-13	2.869E-13	2.782E-13
o-210	U-238	4.189E-08	0.000E+00	8.229E-24	6.219E-22	6.033E-20	2.497E-18	3.700E-17	6.025E-17	5.844E-17
o-210	U-238	1.997E-07	0.000E+00	3.922E-23	2.964E-21	2.876E-19	1.190E-17	1.764E-16	2.872E-16	2.786E-16
o-210	äS(j):		0.000E+00	1.092E+00	3.008E+00	7.447E+00	9.647E+00	1.905E+00	3.549E-03	2.185E-05
o-210	Ra-226	1.319E-06	0.000E+00	1.441E-06	3.969E-06	9.826E-06	1.273E-05	2.514E-06	4.653E-09	8.226E-19
o-210	Ra-226	1.899E-08	0.000E+00	2.074E-08	5.713E-08	1.414E-07	1.832E-07	3.618E-08	6.698E-11	1.184E-20
o-210	Ra-226	2.771E-10	0.000E+00	3.026E-10	8.336E-10	2.064E-09	2.674E-09	5.280E-10	9.774E-13	1.728E-22
o-210	Ra-226	2.637E-10	0.000E+00	2.879E-10	7.931E-10	1.964E-09	2.544E-09	5.023E-10	9.299E-13	1.644E-22
o-210	Ra-226	5.538E-14	0.000E+00	6.048E-14	1.666E-13	4.124E-13	5.343E-13	1.055E-13	1.953E-16	3.453E-26
o-210	Ra-226	2.640E-13	0.000E+00	2.883E-13	7.941E-13	1.966E-12	2.547E-12	5.029E-13	9.311E-16	1.646E-25
o-210	U-234	1.319E-06	0.000E+00	3.681E-16	9.317E-15	2.760E-13	4.030E-12	2.345E-11	2.975E-11	2.882E-11
o-210	U-234	2.771E-10	0.000E+00	7.731E-20	1.957E-18	5.797E-17	8.464E-16	4.926E-15	6.250E-15	6.054E-15
o-210	U-234	2.637E-10	0.000E+00	7.356E-20	1.862E-18	5.515E-17	8.053E-16	4.686E-15	5.946E-15	5.760E-15
o-210	U-234	5.538E-14	0.000E+00	1.545E-23	3.911E-22	1.158E-20	1.691E-19	9.844E-19	1.249E-18	1.210E-18
o-210	U-234	2.640E-13	0.000E+00	7.364E-23	1.864E-21	5.522E-20	8.063E-19	4.692E-18	5.953E-18	5.767E-18
o-210	U-238	2.111E-09	0.000E+00	4.147E-25	3.134E-23	3.041E-21	1.258E-19	1.865E-18	3.037E-18	2.945E-18
o-210	U-238	4.434E-13	0.000E+00	8.711E-29	6.583E-27	6.387E-25	2.643E-23	3.916E-22	6.378E-22	6.187E-22
o-210	U-238	4.219E-13	0.000E+00	8.287E-29	6.263E-27	6.076E-25	2.515E-23	3.726E-22	6.068E-22	5.886E-22

ummary : GKP Fire Fighter - External
ile : C:\USERS\CLAUDE\DOCUMENTS\0 GKP DOSE\RESRAD CW\GKP FIRE FIGHTER- EXTERNAL.RAD

Individual Nuclide Soil Concentration
Parent Nuclide and Branch Fraction Indicated

uclide (j)	Parent (i)	THF(i)	S(j,t), pCi/g t= 0.000E+00	1.000E+00	3.000E+00	1.000E+01	3.000E+01	1.000E+02	3.000E+02	1.000E+03
ÄÄÄÄÄÄ	ÄÄÄÄÄÄÄ	ÄÄÄÄÄÄÄÄÄ	ÄÄÄÄÄÄÄÄÄ	ÄÄÄÄÄÄÄÄÄ	ÄÄÄÄÄÄÄÄÄ	ÄÄÄÄÄÄÄÄÄ	ÄÄÄÄÄÄÄÄÄ	ÄÄÄÄÄÄÄÄÄ	ÄÄÄÄÄÄÄÄÄ	ÄÄÄÄÄÄÄÄÄ
o-210	U-238	8.862E-17	0.000E+00	1.741E-32	1.315E-30	1.276E-28	5.282E-27	7.826E-26	1.275E-25	1.236E-25
o-210	U-238	4.224E-16	0.000E+00	8.297E-32	6.270E-30	6.084E-28	2.518E-26	3.731E-25	6.076E-25	5.893E-25
o-210	U-238	1.317E-06	0.000E+00	2.588E-22	1.956E-20	1.897E-18	7.852E-17	1.163E-15	1.895E-15	1.838E-15
o-210	U-238	2.767E-10	0.000E+00	5.435E-26	4.108E-24	3.985E-22	1.649E-20	2.444E-19	3.980E-19	3.860E-19
o-210	U-238	2.633E-10	0.000E+00	5.171E-26	3.908E-24	3.792E-22	1.569E-20	2.325E-19	3.787E-19	3.673E-19
o-210	U-238	5.530E-14	0.000E+00	1.086E-29	8.209E-28	7.964E-26	3.296E-24	4.884E-23	7.954E-23	7.715E-23
o-210	U-238	2.636E-13	0.000E+00	5.178E-29	3.913E-27	3.796E-25	1.571E-23	2.328E-22	3.791E-22	3.677E-22
o-210	äS(j):		0.000E+00	1.462E-06	4.028E-06	9.971E-06	1.292E-05	2.551E-06	4.752E-09	2.884E-11
a-226	Ra-226	1.899E-08	6.932E-07	6.713E-07	6.296E-07	5.030E-07	2.648E-07	2.802E-08	4.580E-11	8.084E-21
a-226	Ra-226	2.100E-04	7.663E-03	7.421E-03	6.960E-03	5.560E-03	2.927E-03	3.098E-04	5.063E-07	8.936E-17
a-226	äS(j):		7.664E-03	7.422E-03	6.961E-03	5.561E-03	2.927E-03	3.098E-04	5.064E-07	8.937E-17
a-226	Ra-226	2.771E-10	1.012E-08	9.796E-09	9.188E-09	7.340E-09	3.864E-09	4.090E-10	6.684E-13	1.180E-22
a-226	Ra-226	3.989E-12	1.456E-10	1.410E-10	1.322E-10	1.056E-10	5.561E-11	5.886E-12	9.621E-15	1.698E-24
a-226	äS(j):		1.026E-08	9.937E-09	9.320E-09	7.445E-09	3.919E-09	4.148E-10	6.780E-13	1.197E-22
o-210	Ra-226	3.989E-12	0.000E+00	4.356E-12	1.200E-11	2.971E-11	3.849E-11	7.599E-12	1.407E-14	2.487E-24
o-210	Ra-226	3.795E-12	0.000E+00	4.144E-12	1.142E-11	2.826E-11	3.662E-11	7.230E-12	1.339E-14	2.366E-24
o-210	Ra-226	7.972E-16	0.000E+00	8.705E-16	2.398E-15	5.937E-15	7.691E-15	1.519E-15	2.812E-18	4.970E-28
o-210	Ra-226	3.800E-15	0.000E+00	4.149E-15	1.143E-14	2.830E-14	3.666E-14	7.239E-15	1.340E-17	2.369E-27
o-210	U-234	1.899E-08	0.000E+00	5.298E-18	1.341E-16	3.973E-15	5.800E-14	3.376E-13	4.283E-13	4.149E-13
o-210	U-234	3.989E-12	0.000E+00	1.113E-21	2.817E-20	8.344E-19	1.218E-17	7.090E-17	8.996E-17	8.715E-17
o-210	U-234	3.795E-12	0.000E+00	1.059E-21	2.680E-20	7.939E-19	1.159E-17	6.746E-17	8.559E-17	8.291E-17
o-210	U-234	7.972E-16	0.000E+00	2.224E-25	5.629E-24	1.667E-22	2.435E-21	1.417E-20	1.798E-20	1.742E-20
o-210	U-234	3.800E-15	0.000E+00	1.060E-24	2.683E-23	7.948E-22	1.161E-20	6.754E-20	8.569E-20	8.301E-20
o-210	U-238	3.039E-11	0.000E+00	5.969E-27	4.511E-25	4.377E-23	1.811E-21	2.684E-20	4.371E-20	4.240E-20
o-210	U-238	6.383E-15	0.000E+00	1.254E-30	9.475E-29	9.193E-27	3.804E-25	5.637E-24	9.181E-24	8.905E-24
o-210	U-238	6.073E-15	0.000E+00	1.193E-30	9.015E-29	8.746E-27	3.620E-25	5.363E-24	8.735E-24	8.472E-24
o-210	U-238	1.276E-18	0.000E+00	2.506E-34	1.893E-32	1.837E-30	7.603E-29	1.127E-27	1.835E-27	1.780E-27
o-210	U-238	6.080E-18	0.000E+00	1.194E-33	9.026E-32	8.757E-30	3.624E-28	5.370E-27	8.745E-27	8.483E-27
o-210	U-238	1.896E-08	0.000E+00	3.725E-24	2.815E-22	2.731E-20	1.130E-18	1.675E-17	2.727E-17	2.645E-17
o-210	U-238	3.983E-12	0.000E+00	7.824E-28	5.912E-26	5.736E-24	2.374E-22	3.518E-21	5.729E-21	5.557E-21
o-210	U-238	3.789E-12	0.000E+00	7.444E-28	5.625E-26	5.458E-24	2.259E-22	3.347E-21	5.450E-21	5.287E-21
o-210	U-238	7.959E-16	0.000E+00	1.563E-31	1.182E-29	1.146E-27	4.744E-26	7.029E-25	1.145E-24	1.110E-24
o-210	U-238	3.794E-15	0.000E+00	7.453E-31	5.632E-29	5.464E-27	2.261E-25	3.351E-24	5.457E-24	5.293E-24
o-210	äS(j):		0.000E+00	8.506E-12	2.343E-11	5.801E-11	7.520E-11	1.518E-11	4.560E-13	4.151E-13
a-226	Ra-226	1.998E-04	7.291E-03	7.061E-03	6.622E-03	5.290E-03	2.785E-03	2.948E-04	4.817E-07	8.502E-17
a-226	Ra-226	2.637E-10	9.624E-09	9.320E-09	8.741E-09	6.983E-09	3.676E-09	3.891E-10	6.359E-13	1.122E-22
a-226	U-234	1.998E-04	0.000E+00	5.392E-12	4.613E-11	4.306E-10	2.414E-09	6.873E-09	7.700E-09	7.457E-09
a-226	U-234	2.637E-10	0.000E+00	7.117E-18	6.089E-17	5.684E-16	3.187E-15	9.072E-15	1.016E-14	9.843E-15
a-226	U-234	3.795E-12	0.000E+00	1.024E-19	8.765E-19	8.182E-18	4.587E-17	1.306E-16	1.463E-16	1.417E-16
a-226	U-238	3.196E-07	0.000E+00	8.081E-21	2.055E-19	6.180E-18	9.385E-17	5.963E-16	7.864E-16	7.619E-16
a-226	U-238	4.219E-13	0.000E+00	1.067E-26	2.712E-25	8.158E-24	1.239E-22	7.872E-22	1.038E-21	1.006E-21
a-226	U-238	6.073E-15	0.000E+00	1.535E-28	3.904E-27	1.174E-25	1.783E-24	1.133E-23	1.494E-23	1.448E-23
a-226	U-238	1.994E-04	0.000E+00	5.042E-18	1.282E-16	3.856E-15	5.856E-14	3.721E-13	4.907E-13	4.755E-13
a-226	U-238	2.633E-10	0.000E+00	6.656E-24	1.692E-22	5.090E-21	7.730E-20	4.912E-19	6.477E-19	6.276E-19
a-226	U-238	3.789E-12	0.000E+00	9.581E-26	2.436E-24	7.327E-23	1.113E-21	7.070E-21	9.323E-21	9.034E-21
a-226	äS(j):		7.291E-03	7.061E-03	6.622E-03	5.290E-03	2.785E-03	2.948E-04	4.894E-07	7.457E-09

ummary : GKP Fire Fighter - External
ile : C:\USERS\CLAUDE\DOCUMENTS\0 GKP DOSE\RESRAD CW\GKP FIRE FIGHTER- EXTERNAL.RAD

Individual Nuclide Soil Concentration
Parent Nuclide and Branch Fraction Indicated

uclide (j)	Parent (i)	THF(i)	S(j,t), pCi/g t= 0.000E+00	1.000E+00	3.000E+00	1.000E+01	3.000E+01	1.000E+02	3.000E+02	1.000E+03
ÄÄÄÄÄÄ	ÄÄÄÄÄÄÄ	ÄÄÄÄÄÄÄÄÄ	ÄÄÄÄÄÄÄÄÄ	ÄÄÄÄÄÄÄÄÄ	ÄÄÄÄÄÄÄÄÄ	ÄÄÄÄÄÄÄÄÄ	ÄÄÄÄÄÄÄÄÄ	ÄÄÄÄÄÄÄÄÄ	ÄÄÄÄÄÄÄÄÄ	ÄÄÄÄÄÄÄÄÄ
a-226	Ra-226	3.795E-12	1.385E-10	1.342E-10	1.258E-10	1.005E-10	5.291E-11	5.600E-12	9.153E-15	1.615E-24
a-226	Ra-226	4.196E-08	1.531E-06	1.483E-06	1.391E-06	1.111E-06	5.849E-07	6.191E-08	1.012E-10	1.786E-20
a-226	äS(j):		1.532E-06	1.483E-06	1.391E-06	1.111E-06	5.850E-07	6.192E-08	1.012E-10	1.786E-20
a-226	Ra-226	5.538E-14	2.022E-12	1.958E-12	1.836E-12	1.467E-12	7.721E-13	8.173E-14	1.336E-16	2.357E-26
a-226	Ra-226	7.972E-16	2.910E-14	2.818E-14	2.643E-14	2.111E-14	1.111E-14	1.176E-15	1.923E-18	3.393E-28
a-226	äS(j):		2.051E-12	1.986E-12	1.862E-12	1.488E-12	7.832E-13	8.290E-14	1.355E-16	2.391E-26
a-226	Ra-226	2.000E-07	7.300E-06	7.070E-06	6.630E-06	5.297E-06	2.788E-06	2.951E-07	4.823E-10	8.513E-20
a-226	Ra-226	2.640E-13	9.636E-12	9.332E-12	8.752E-12	6.991E-12	3.680E-12	3.896E-13	6.367E-16	1.124E-25
a-226	U-234	2.000E-07	0.000E+00	5.398E-15	4.619E-14	4.311E-13	2.417E-12	6.881E-12	7.709E-12	7.466E-12
a-226	U-234	2.640E-13	0.000E+00	7.126E-21	6.097E-20	5.691E-19	3.191E-18	9.083E-18	1.018E-17	9.855E-18
a-226	U-234	3.800E-15	0.000E+00	1.026E-22	8.776E-22	8.192E-21	4.593E-20	1.307E-19	1.465E-19	1.418E-19
a-226	U-238	3.200E-10	0.000E+00	8.091E-24	2.057E-22	6.188E-21	9.396E-20	5.971E-19	7.873E-19	7.629E-19
a-226	U-238	4.224E-16	0.000E+00	1.068E-29	2.715E-28	8.168E-27	1.240E-25	7.881E-25	1.039E-24	1.007E-24
a-226	U-238	6.080E-18	0.000E+00	1.537E-31	3.909E-30	1.176E-28	1.785E-27	1.134E-26	1.496E-26	1.449E-26
a-226	U-238	1.997E-07	0.000E+00	5.048E-21	1.284E-19	3.861E-18	5.863E-17	3.726E-16	4.913E-16	4.760E-16
a-226	U-238	2.636E-13	0.000E+00	6.664E-27	1.694E-25	5.097E-24	7.739E-23	4.918E-22	6.485E-22	6.284E-22
a-226	U-238	3.794E-15	0.000E+00	9.592E-29	2.439E-27	7.336E-26	1.114E-24	7.079E-24	9.335E-24	9.045E-24
a-226	äS(j):		7.300E-06	7.070E-06	6.630E-06	5.297E-06	2.788E-06	2.951E-07	4.900E-10	7.466E-12
a-226	Ra-226	3.800E-15	1.387E-13	1.343E-13	1.260E-13	1.006E-13	5.298E-14	5.607E-15	9.164E-18	1.617E-27
n-232	Th-232	1.000E+00	2.400E+00	2.400E+00	2.400E+00	2.399E+00	2.397E+00	2.391E+00	2.373E+00	2.313E+00
a-228	Th-232	1.000E+00	0.000E+00	2.684E-01	6.968E-01	1.486E+00	1.879E+00	1.894E+00	1.880E+00	1.832E+00
n-228	Th-232	1.000E+00	0.000E+00	4.430E-02	2.891E-01	1.222E+00	1.865E+00	1.894E+00	1.880E+00	1.832E+00
-234	U-234	9.996E-01	1.389E+01	1.329E+01	1.217E+01	8.925E+00	3.683E+00	1.662E-01	2.380E-05	8.354E-19
-234	U-234	1.319E-06	1.834E-05	1.755E-05	1.606E-05	1.178E-05	4.862E-06	2.194E-07	3.141E-11	1.103E-24
-234	U-238	1.599E-03	0.000E+00	6.005E-08	1.649E-07	4.032E-07	4.992E-07	7.511E-08	3.227E-11	3.779E-24
-234	U-238	2.111E-09	0.000E+00	7.927E-14	2.177E-13	5.322E-13	6.589E-13	9.914E-14	4.259E-17	4.988E-30
-234	U-238	3.039E-11	0.000E+00	1.141E-15	3.133E-15	7.661E-15	9.484E-15	1.427E-15	6.131E-19	7.180E-32
-234	U-238	3.359E-07	0.000E+00	1.261E-11	3.463E-11	8.469E-11	1.048E-10	1.578E-11	6.777E-15	7.938E-28
-234	U-238	4.434E-13	0.000E+00	1.665E-17	4.572E-17	1.118E-16	1.384E-16	2.082E-17	8.946E-21	1.048E-33
-234	U-238	6.383E-15	0.000E+00	2.396E-19	6.580E-19	1.609E-18	1.992E-18	2.998E-19	1.288E-22	1.508E-35
-234	U-238	3.196E-07	0.000E+00	1.200E-11	3.295E-11	8.058E-11	9.975E-11	1.501E-11	6.448E-15	7.552E-28
-234	U-238	4.219E-13	0.000E+00	1.584E-17	4.350E-17	1.064E-16	1.317E-16	1.981E-17	8.511E-21	9.969E-34
-234	U-238	6.073E-15	0.000E+00	2.280E-19	6.261E-19	1.531E-18	1.895E-18	2.852E-19	1.225E-22	1.435E-35
-234	U-238	6.713E-11	0.000E+00	2.521E-15	6.921E-15	1.692E-14	2.095E-14	3.153E-15	1.354E-18	1.586E-31
-234	U-238	8.862E-17	0.000E+00	3.327E-21	9.136E-21	2.234E-20	2.766E-20	4.162E-21	1.788E-24	2.094E-37
-234	U-238	1.276E-18	0.000E+00	4.789E-23	1.315E-22	3.216E-22	3.981E-22	5.990E-23	2.573E-26	3.014E-39
-234	U-238	3.200E-10	0.000E+00	1.201E-14	3.299E-14	8.067E-14	9.987E-14	1.503E-14	6.456E-18	7.561E-31
-234	U-238	4.224E-16	0.000E+00	1.586E-20	4.355E-20	1.065E-19	1.318E-19	1.984E-20	8.522E-24	9.981E-37
-234	U-238	6.080E-18	0.000E+00	2.283E-22	6.268E-22	1.533E-21	1.898E-21	2.855E-22	1.227E-25	1.437E-38
-234	U-238	9.980E-01	0.000E+00	3.747E-05	1.029E-04	2.516E-04	3.115E-04	4.687E-05	2.013E-08	2.358E-21
-234	U-238	1.317E-06	0.000E+00	4.946E-11	1.358E-10	3.321E-10	4.111E-10	6.187E-11	2.658E-14	3.113E-27
-234	U-238	1.896E-08	0.000E+00	7.119E-13	1.955E-12	4.780E-12	5.918E-12	8.905E-13	3.825E-16	4.480E-29

ummary : GKP Fire Firefighter - External
ile : C:\USERS\CLAUDE\DOCUMENTS\0 GKP DOSE\RESRAD CW\GKP FIRE FIGHTER- EXTERNAL.RAD

Individual Nuclide Soil Concentration
Parent Nuclide and Branch Fraction Indicated

uclide (j)	Parent (i)	THF(i)	S(j,t), pCi/g t= 0.000E+00	1.000E+00	3.000E+00	1.000E+01	3.000E+01	1.000E+02	3.000E+02	1.000E+03
ÄÄÄÄÄÄ	ÄÄÄÄÄÄÄ	ÄÄÄÄÄÄÄÄÄ	ÄÄÄÄÄÄÄÄÄ	ÄÄÄÄÄÄÄÄÄ	ÄÄÄÄÄÄÄÄÄ	ÄÄÄÄÄÄÄÄÄ	ÄÄÄÄÄÄÄÄÄ	ÄÄÄÄÄÄÄÄÄ	ÄÄÄÄÄÄÄÄÄ	ÄÄÄÄÄÄÄÄÄ
-234	U-238	2.096E-04	0.000E+00	7.871E-09	2.161E-08	5.285E-08	6.542E-08	9.844E-09	4.229E 12	4.953E-25
-234	U-238	2.767E-10	0.000E+00	1.039E-14	2.853E-14	6.976E-14	8.636E-14	1.299E-14	5.582E-18	6.538E-31
-234	U-238	3.983E-12	0.000E+00	1.495E-16	4.106E-16	1.004E-15	1.243E-15	1.870E-16	8.035E-20	9.411E-33
-234	U-238	1.994E-04	0.000E+00	7.488E-09	2.056E-08	5.028E-08	6.225E-08	9.366E-09	4.024E-12	4.712E-25
-234	U-238	2.633E-10	0.000E+00	9.884E-15	2.714E-14	6.637E-14	8.216E-14	1.236E-14	5.311E-18	6.220E-31
-234	U-238	3.789E-12	0.000E+00	1.423E-16	3.907E-16	9.553E-16	1.183E-15	1.780E-16	7.645E-20	8.954E-33
-234	U-238	4.189E-08	0.000E+00	1.573E-12	4.319E-12	1.056E-11	1.307E-11	1.967E-12	8.451E-16	9.898E-29
-234	U-238	5.530E-14	0.000E+00	2.076E-18	5.701E-18	1.394E-17	1.726E-17	2.597E-18	1.116E-21	1.307E-34
-234	U-238	7.959E-16	0.000E+00	2.988E-20	8.206E-20	2.007E-19	2.484E-19	3.738E-20	1.606E-23	1.881E-36
-234	U-238	1.997E-07	0.000E+00	7.497E-12	2.059E-11	5.034E-11	6.232E-11	9.378E-12	4.028E-15	4.718E-28
-234	U-238	2.636E-13	0.000E+00	9.896E-18	2.717E-17	6.645E-17	8.226E-17	1.238E-17	5.318E-21	6.228E-34
-234	U-238	3.794E-15	0.000E+00	1.424E-19	3.911E-19	9.565E-19	1.184E-18	1.782E-19	7.654E-23	8.965E-36
-234	äS(j):		1.389E+01	1.329E+01	1.217E+01	8.926E+00	3.683E+00	1.663E-01	2.382E-05	8.377E-19
a-230	U-234	9.996E-01	0.000E+00	1.250E-04	3.589E-04	1.032E-03	2.120E-03	2.842E-03	2.850E-03	2.759E-03
a-230	U-234	1.319E-06	0.000E+00	1.650E-10	4.738E-10	1.362E-09	2.798E-09	3.751E-09	3.762E-09	3.642E-09
a-230	U-234	1.899E-08	0.000E+00	2.375E-12	6.819E-12	1.961E-11	4.028E-11	5.400E-11	5.415E-11	5.243E-11
a-230	U-234	2.100E-04	0.000E+00	2.625E-08	7.539E-08	2.168E-07	4.452E-07	5.969E-07	5.986E-07	5.796E-07
a-230	U-234	2.771E-10	0.000E+00	3.465E-14	9.951E-14	2.862E-13	5.877E-13	7.879E-13	7.902E-13	7.650E-13
a-230	U-234	3.989E-12	0.000E+00	4.988E-16	1.432E-15	4.119E-15	8.460E-15	1.134E-14	1.137E-14	1.101E-14
a-230	U-234	1.998E-04	0.000E+00	2.497E-08	7.172E-08	2.063E-07	4.236E-07	5.679E-07	5.695E-07	5.514E-07
a-230	U-234	2.637E-10	0.000E+00	3.297E-14	9.468E-14	2.723E-13	5.592E-13	7.497E-13	7.518E-13	7.279E-13
a-230	U-234	3.795E-12	0.000E+00	4.745E-16	1.363E-15	3.919E-15	8.049E-15	1.079E-14	1.082E-14	1.048E-14
a-230	U-234	4.196E-08	0.000E+00	5.246E-12	1.507E-11	4.332E-11	8.898E-11	1.193E-10	1.196E-10	1.158E-10
a-230	U-234	5.538E-14	0.000E+00	6.924E-18	1.989E-17	5.719E-17	1.175E-16	1.575E-16	1.579E-16	1.529E-16
a-230	U-234	7.972E-16	0.000E+00	9.967E-20	2.862E-19	8.231E-19	1.691E-18	2.267E-18	2.273E-18	2.201E-18
a-230	U-234	2.000E-07	0.000E+00	2.501E-11	7.181E-11	2.065E-10	4.241E-10	5.686E-10	5.702E-10	5.521E-10
a-230	U-234	2.640E-13	0.000E+00	3.301E-17	9.479E-17	2.726E-16	5.599E-16	7.506E-16	7.527E-16	7.287E-16
a-230	U-234	3.800E-15	0.000E+00	4.751E-19	1.364E-18	3.924E-18	8.058E-18	1.080E-17	1.083E-17	1.049E-17
a-230	U-238	1.599E-03	0.000E+00	2.802E-13	2.378E-12	2.160E-11	1.128E-10	2.748E-10	2.912E-10	2.820E-10
a-230	U-238	2.111E-09	0.000E+00	3.699E-19	3.139E-18	2.851E-17	1.489E-16	3.627E-16	3.844E-16	3.722E-16
a-230	U-238	3.039E-11	0.000E+00	5.324E-21	4.519E-20	4.104E-19	2.143E-18	5.221E-18	5.533E-18	5.357E-18
a-230	U-238	3.359E-07	0.000E+00	5.885E-17	4.995E-16	4.537E-15	2.369E-14	5.771E-14	6.117E-14	5.922E-14
a-230	U-238	4.434E-13	0.000E+00	7.769E-23	6.594E-22	5.989E-21	3.127E-20	7.618E-20	8.074E-20	7.817E-20
a-230	U-238	6.383E-15	0.000E+00	1.118E-24	9.491E-24	8.621E-23	4.501E-22	1.097E-21	1.162E-21	1.125E-21
a-230	U-238	3.196E-07	0.000E+00	5.600E-17	4.753E-16	4.317E-15	2.254E-14	5.491E-14	5.820E-14	5.635E-14
a-230	U-238	4.219E-13	0.000E+00	7.391E-23	6.274E-22	5.698E-21	2.975E-20	7.248E-20	7.682E-20	7.438E-20
a-230	U-238	6.073E-15	0.000E+00	1.064E-24	9.030E-24	8.202E-23	4.282E-22	1.043E-21	1.106E-21	1.071E-21
a-230	U-238	6.713E-11	0.000E+00	1.176E-20	9.983E-20	9.067E-19	4.734E-18	1.153E-17	1.222E-17	1.183E-17
a-230	U-238	8.862E-17	0.000E+00	1.553E-26	1.318E-25	1.197E-24	6.249E-24	1.522E-23	1.614E-23	1.562E-23
a-230	U-238	1.276E-18	0.000E+00	2.235E-28	1.897E-27	1.723E-26	8.995E-26	2.191E-25	2.323E-25	2.249E-25
a-230	U-238	3.200E-10	0.000E+00	5.606E-20	4.759E-19	4.322E-18	2.257E-17	5.498E-17	5.827E-17	5.641E-17
a-230	U-238	4.224E-16	0.000E+00	7.400E-26	6.281E-25	5.705E-24	2.979E-23	7.257E-23	7.691E-23	7.447E-23
a-230	U-238	6.080E-18	0.000E+00	1.065E-27	9.041E-27	8.212E-26	4.288E-25	1.045E-24	1.107E-24	1.072E-24
a-230	U-238	9.980E-01	0.000E+00	1.748E-10	1.484E-09	1.348E-08	7.038E-08	1.715E-07	1.817E-07	1.759E-07
a-230	U-238	1.317E-06	0.000E+00	2.308E-16	1.959E-15	1.779E-14	9.290E-14	2.263E-13	2.399E-13	2.322E-13
a-230	U-238	1.896E-08	0.000E+00	3.322E-18	2.820E-17	2.561E-16	1.337E-15	3.258E-15	3.453E-15	3.343E-15
a-230	U-238	2.096E-04	0.000E+00	3.673E-14	3.117E-13	2.831E-12	1.478E-11	3.601E-11	3.817E-11	3.695E-11
a-230	U-238	2.767E-10	0.000E+00	4.848E-20	4.115E-19	3.737E-18	1.951E-17	4.754E-17	5.038E-17	4.878E-17

ummary : GKP Fire Fighter - External
ile : C:\USERS\CLAUDE\DOCUMENTS\0 GKP DOSE\RESRAD CW\GKP FIRE FIGHTER- EXTERNAL.RAD

Individual Nuclide Soil Concentration
Parent Nuclide and Branch Fraction Indicated

uclide (j)	Parent (i)	THF(i)	S(j,t), pCi/g t= 0.000E+00	1.000E+00	3.000E+00	1.000E+01	3.000E+01	1.000E+02	3.000E+02	1.000E+03
ÄÄÄÄÄ	ÄÄÄÄÄÄÄ	ÄÄÄÄÄÄÄÄÄ	ÄÄÄÄÄÄÄÄÄ	ÄÄÄÄÄÄÄÄÄ	ÄÄÄÄÄÄÄÄÄ	ÄÄÄÄÄÄÄÄÄ	ÄÄÄÄÄÄÄÄÄ	ÄÄÄÄÄÄÄÄÄ	ÄÄÄÄÄÄÄÄÄ	ÄÄÄÄÄÄÄÄÄ
n-230	U-238	3.983E-12	0.000E+00	6.978E-22	5.923E-21	5.379E-20	2.809E-19	6.843E-19	7.252E-19	7.021E-19
n-230	U-238	1.994E-04	0.000E+00	3.494E-14	2.966E-13	2.694E-12	1.406E-11	3.426E-11	3.631E-11	3.516E-11
n-230	U-238	2.633E-10	0.000E+00	4.612E-20	3.915E-19	3.556E-18	1.856E-17	4.523E-17	4.794E-17	4.641E-17
n-230	U-238	3.789E-12	0.000E+00	6.639E-22	5.635E-21	5.118E-20	2.672E-19	6.510E-19	6.900E-19	6.680E-19
n-230	U-238	4.189E-08	0.000E+00	7.339E-18	6.229E-17	5.658E-16	2.954E-15	7.197E-15	7.628E-15	7.385E-15
n-230	U-238	5.530E-14	0.000E+00	9.688E-24	8.223E-23	7.468E-22	3.899E-21	9.500E-21	1.007E-20	9.748E-21
n-230	U-238	7.959E-16	0.000E+00	1.394E-25	1.184E-24	1.075E-23	5.613E-23	1.367E-22	1.449E-22	1.403E-22
n-230	U-238	1.997E-07	0.000E+00	3.498E-17	2.969E-16	2.697E-15	1.408E-14	3.431E-14	3.636E-14	3.520E-14
n-230	U-238	2.636E-13	0.000E+00	4.618E-23	3.920E-22	3.560E-21	1.859E-20	4.528E-20	4.799E-20	4.647E-20
n-230	U-238	3.794E-15	0.000E+00	6.647E-25	5.642E-24	5.124E-23	2.675E-22	6.518E-22	6.908E-22	6.688E-22
n-230	äS(j):		0.000E+00	1.250E-04	3.591E-04	1.033E-03	2.121E-03	2.843E-03	2.851E-03	2.761E-03
-234	U-234	1.899E-08	2.640E-07	2.526E-07	2.312E-07	1.696E-07	6.998E-08	3.159E-09	4.522E-13	1.587E-26
-234	U-234	2.100E-04	2.918E-03	2.792E-03	2.556E-03	1.875E-03	7.736E-04	3.492E-05	4.999E-09	1.755E-22
-234	äS(j):		2.919E-03	2.792E-03	2.556E-03	1.875E-03	7.737E-04	3.492E-05	4.999E-09	1.755E-22
a-226	U-234	2.100E-04	0.000E+00	5.667E-12	4.849E-11	4.526E-10	2.538E-09	7.224E-09	8.093E-09	7.837E-09
a-226	U-234	3.989E-12	0.000E+00	1.077E-19	9.213E-19	8.600E-18	4.821E-17	1.373E-16	1.538E-16	1.489E-16
a-226	U-238	3.359E-07	0.000E+00	8.493E-21	2.160E-19	6.496E-18	9.864E-17	6.268E-16	8.265E-16	8.008E-16
a-226	U-238	4.434E-13	0.000E+00	1.121E-26	2.851E-25	8.574E-24	1.302E-22	8.274E-22	1.091E-21	1.057E-21
a-226	U-238	6.383E-15	0.000E+00	1.614E-28	4.103E-27	1.234E-25	1.874E-24	1.191E-23	1.570E-23	1.522E-23
a-226	U-238	2.096E-04	0.000E+00	5.300E-18	1.348E-16	4.053E-15	6.155E-14	3.911E-13	5.158E-13	4.997E-13
a-226	U-238	2.767E-10	0.000E+00	6.996E-24	1.779E-22	5.350E-21	8.125E-20	5.163E-19	6.808E-19	6.596E-19
a-226	U-238	3.983E-12	0.000E+00	1.007E-25	2.560E-24	7.701E-23	1.169E-21	7.431E-21	9.799E-21	9.495E-21
a-226	äS(j):		0.000E+00	5.667E-12	4.849E-11	4.526E-10	2.538E-09	7.224E-09	8.094E-09	7.838E-09
-234	U-234	2.771E-10	3.852E-09	3.686E-09	3.373E-09	2.475E-09	1.021E-09	4.609E-11	6.598E-15	2.316E-28
-234	U-234	3.989E-12	5.545E-11	5.305E-11	4.856E-11	3.562E-11	1.470E-11	6.634E-13	9.498E-17	3.334E-30
-234	äS(j):		3.908E-09	3.739E-09	3.422E-09	2.510E-09	1.036E-09	4.676E-11	6.693E-15	2.349E-28
a-226	U-234	2.771E-10	0.000E+00	7.480E-18	6.400E-17	5.974E-16	3.350E-15	9.535E-15	1.068E-14	1.035E-14
-234	U-234	1.998E-04	2.777E-03	2.656E-03	2.431E-03	1.784E-03	7.360E-04	3.322E-05	4.756E-09	1.669E-22
-234	U-234	2.637E-10	3.665E-09	3.506E-09	3.209E-09	2.354E-09	9.715E-10	4.385E-11	6.278E-15	2.204E-28
-234	äS(j):		2.777E-03	2.656E-03	2.431E-03	1.784E-03	7.360E-04	3.322E-05	4.756E-09	1.669E-22
-234	U-234	3.795E-12	5.276E-11	5.047E-11	4.620E-11	3.389E-11	1.398E-11	6.312E-13	9.036E-17	3.172E-30
-234	U-234	4.196E-08	5.832E-07	5.580E-07	5.107E-07	3.746E-07	1.546E-07	6.978E-09	9.989E-13	3.506E-26
-234	äS(j):		5.833E-07	5.580E-07	5.107E-07	3.747E-07	1.546E-07	6.979E-09	9.990E-13	3.507E-26
a-226	U-234	4.196E-08	0.000E+00	1.132E-15	9.690E-15	9.045E-14	5.071E-13	1.444E-12	1.617E-12	1.566E-12
a-226	U-234	7.972E-16	0.000E+00	2.152E-23	1.841E-22	1.719E-21	9.635E-21	2.743E-20	3.073E-20	2.976E-20
a-226	U-238	6.713E-11	0.000E+00	1.697E-24	4.316E-23	1.298E-21	1.971E-20	1.253E-19	1.652E-19	1.600E-19
a-226	U-238	8.862E-17	0.000E+00	2.240E-30	5.697E-29	1.713E-27	2.602E-26	1.653E-25	2.180E-25	2.113E-25
a-226	U-238	1.276E-18	0.000E+00	3.225E-32	8.200E-31	2.466E-29	3.745E-28	2.380E-27	3.138E-27	3.041E-27
a-226	U-238	4.189E-08	0.000E+00	1.059E-21	2.693E-20	8.100E-19	1.230E-17	7.816E-17	1.031E-16	9.987E-17
a-226	U-238	5.530E-14	0.000E+00	1.398E-27	3.555E-26	1.069E-24	1.624E-23	1.032E-22	1.360E-22	1.318E-22
a-226	U-238	7.959E-16	0.000E+00	2.012E-29	5.117E-28	1.539E-26	2.337E-25	1.485E-24	1.958E-24	1.897E-24
a-226	äS(j):		0.000E+00	1.132E-15	9.690E-15	9.045E-14	5.071E-13	1.444E-12	1.617E-12	1.566E-12

ummary : GKP Fire Fighter - External
ile : C:\USERS\CLAUDE\DOCUMENTS\0 GKP DOSE\RESRAD CW\GKP FIRE FIGHTER- EXTERNAL.RAD

Individual Nuclide Soil Concentration
Parent Nuclide and Branch Fraction Indicated

uclide (j)	Parent (i)	THF(i)	S(j,t), pCi/g t= 0.000E+00	1.000E+00	3.000E+00	1.000E+01	3.000E+01	1.000E+02	3.000E+02	1.000E+03
ÄÄÄÄÄ	ÄÄÄÄÄÄ	ÄÄÄÄÄÄÄÄÄ	ÄÄÄÄÄÄÄÄÄ	ÄÄÄÄÄÄÄÄÄ	ÄÄÄÄÄÄÄÄÄ	ÄÄÄÄÄÄÄÄÄ	ÄÄÄÄÄÄÄÄÄ	ÄÄÄÄÄÄÄÄÄ	ÄÄÄÄÄÄÄÄÄ	ÄÄÄÄÄÄÄÄÄ
-234	U-234	5.530E-14	7.698E 13	7.365E-13	6.741E-13	4.945E-13	2.041E-13	9.211E-15	1.319E-18	4.629E-32
-234	U-234	7.972E-16	1.108E-14	1.060E-14	9.703E-15	7.118E-15	2.937E-15	1.326E-16	1.898E-20	6.662E-34
-234	äS(j):		7.809E-13	7.471E-13	6.838E-13	5.016E-13	2.070E-13	9.344E-15	1.338E-18	4.695E-32
a-226	U-234	5.538E-14	0.000E+00	1.495E-21	1.279E-20	1.194E-19	6.694E-19	1.906E-18	2.135E-18	2.067E-18
-234	U-234	2.000E-07	2.780E-06	2.660E-06	2.434E-06	1.786E-06	7.369E-07	3.326E-08	4.762E-12	1.671E-25
-234	U-234	2.640E-13	3.670E-12	3.511E-12	3.213E-12	2.357E-12	9.727E-13	4.391E-14	6.285E-18	2.206E-31
-234	äS(j):		2.780E-06	2.660E-06	2.434E-06	1.786E-06	7.369E-07	3.326E-08	4.762E-12	1.671E-25
-234	U-234	3.800E-15	5.282E-14	5.053E-14	4.625E-14	3.393E-14	1.400E-14	6.320E-16	9.047E-20	3.176E-33
-235	U-235	9.835E-01	8.261E-01	7.904E-01	7.234E-01	5.307E-01	2.190E-01	9.887E-03	1.416E-06	4.981E-20
-235	U-235	2.722E-03	2.286E-03	2.187E-03	2.002E-03	1.469E-03	6.061E-04	2.736E-05	3.920E-09	1.379E-22
-235	äS(j):		8.284E-01	7.925E-01	7.254E-01	5.322E-01	2.196E-01	9.914E-03	1.420E-06	4.995E-20
a-231	U-235	9.835E-01	0.000E+00	1.672E-05	4.592E-05	1.123E-04	1.390E-04	2.090E-05	8.961E-09	1.043E-21
a-231	U-235	2.722E-03	0.000E+00	4.628E-08	1.271E-07	3.107E-07	3.846E-07	5.784E-08	2.480E-11	2.886E-24
a-231	U-235	1.376E-02	0.000E+00	2.340E-07	6.425E-07	1.571E-06	1.944E-06	2.924E-07	1.254E-10	1.459E-23
a-231	U-235	3.809E-05	0.000E+00	6.476E-10	1.778E-09	4.348E-09	5.382E-09	8.093E-10	3.470E-13	4.038E-26
a-231	U-235	8.257E-07	0.000E+00	1.404E-11	3.855E-11	9.426E-11	1.167E-10	1.755E-11	7.523E-15	8.755E-28
a-231	U-235	2.285E-09	0.000E+00	3.886E-14	1.067E-13	2.609E-13	3.229E-13	4.856E-14	2.082E-17	2.423E-30
a-231	äS(j):		0.000E+00	1.700E-05	4.669E-05	1.142E-04	1.413E-04	2.125E-05	9.111E-09	1.060E-21
c-227	U-235	9.835E-01	0.000E+00	2.577E-07	1.994E-06	1.324E-05	3.070E-05	6.123E-06	2.826E-09	3.370E-22
c-227	U-235	2.722E-03	0.000E+00	7.134E-10	5.518E-09	3.665E-08	8.495E-08	1.695E-08	7.821E-12	9.327E-25
c-227	U-235	1.376E-02	0.000E+00	3.606E-09	2.790E-08	1.853E-07	4.295E-07	8.568E-08	3.954E-11	4.715E-24
c-227	äS(j):		0.000E+00	4.320E-09	3.341E-08	2.219E-07	5.144E-07	1.026E-07	4.736E-11	5.648E-24
-235	U-235	1.376E-02	1.156E-02	1.106E-02	1.012E-02	7.426E-03	3.064E-03	1.383E-04	1.982E-08	6.969E-22
-235	U-235	3.809E-05	3.199E-05	3.061E-05	2.801E-05	2.055E-05	8.481E-06	3.829E-07	5.484E-11	1.929E-24
-235	äS(j):		1.159E-02	1.109E-02	1.015E-02	7.446E-03	3.073E-03	1.387E-04	1.987E-08	6.989E-22
c-227	U-235	3.809E-05	0.000E+00	9.981E-12	7.721E-11	5.128E-10	1.189E-09	2.371E-10	1.094E-13	1.305E-26
c-227	U-235	8.257E-07	0.000E+00	2.164E-13	1.674E-12	1.112E-11	2.577E-11	5.141E-12	2.372E-15	2.829E-28
c-227	äS(j):		0.000E+00	1.020E-11	7.888E-11	5.239E-10	1.214E-09	2.423E-10	1.118E-13	1.333E-26
-235	U-235	8.257E-07	6.936E-07	6.636E-07	6.074E-07	4.456E-07	1.839E-07	8.301E-09	1.189E-12	4.182E-26
-235	U-235	2.285E-09	1.920E-09	1.837E-09	1.681E-09	1.233E-09	5.089E-10	2.297E-11	3.291E-15	1.157E-28
-235	äS(j):		6.955E-07	6.654E-07	6.090E-07	4.468E-07	1.844E-07	8.324E-09	1.192E-12	4.193E-26
c-227	U-235	2.285E-09	0.000E+00	5.989E-16	4.633E-15	3.077E-14	7.133E-14	1.423E-14	6.566E-18	7.831E-31
-238	U-238	5.450E-07	7.575E-06	7.248E-06	6.634E-06	4.866E-06	2.008E-06	9.066E-08	1.299E-11	4.567E-25
-238	U-238	1.599E-03	2.223E-02	2.127E-02	1.947E-02	1.428E-02	5.893E-03	2.661E-04	3.811E-08	1.340E-21
-238	äS(j):		2.224E-02	2.128E-02	1.947E-02	1.429E-02	5.895E-03	2.662E-04	3.812E-08	1.341E-21
-238	U-238	2.111E-09	2.934E-08	2.807E-08	2.570E-08	1.885E-08	7.779E-09	3.512E-10	5.030E-14	1.769E-27

ummary : GKP Fire Fighter - External
ile : C:\USERS\CLAUDE\DOCUMENTS\0 GKP DOSE\RESRAD CW\GKP FIRE FIGHTER- EXTERNAL.RAD

Individual Nuclide Soil Concentration
Parent Nuclide and Branch Fraction Indicated

uclide (j)	Parent (i)	THF(i)	S(j,t), pCi/g t= 0.000E+00	1.000E+00	3.000E+00	1.000E+01	3.000E+01	1.000E+02	3.000E+02	1.000E+03
ÄÄÄÄÄ	ÄÄÄÄÄÄÄ	ÄÄÄÄÄÄÄÄÄ	ÄÄÄÄÄÄÄÄÄ	ÄÄÄÄÄÄÄÄÄ	ÄÄÄÄÄÄÄÄÄ	ÄÄÄÄÄÄÄÄÄ	ÄÄÄÄÄÄÄÄÄ	ÄÄÄÄÄÄÄÄÄ	ÄÄÄÄÄÄÄÄÄ	ÄÄÄÄÄÄÄÄÄ
-238	U-238	3.039E-11	4.224E-10	4.041E-10	3.699E-10	2.713E-10	1.120E-10	5.055E-12	7.241E-16	2.547E-29
-238	äS(j):		2.977E-08	2.848E-08	2.607E-08	1.912E-08	7.891E-09	3.563E-10	5.103E-14	1.795E-27
-238	U-238	3.359E-07	4.669E-06	4.467E-06	4.089E-06	3.000E-06	1.238E-06	5.588E-08	8.005E-12	2.815E-25
-238	U-238	4.434E-13	6.164E-12	5.897E-12	5.397E-12	3.960E-12	1.634E-12	7.377E-14	1.057E-17	3.716E-31
-238	äS(j):		4.669E-06	4.467E-06	4.089E-06	3.000E-06	1.238E-06	5.588E-08	8.005E-12	2.815E-25
-238	U-238	6.383E-15	8.872E-14	8.488E-14	7.769E-14	5.699E-14	2.352E-14	1.062E-15	1.521E-19	5.349E-33
-238	U-238	3.196E-07	4.443E-06	4.250E-06	3.890E-06	2.854E-06	1.178E-06	5.317E-08	7.616E-12	2.679E-25
-238	äS(j):		4.443E-06	4.250E-06	3.890E-06	2.854E-06	1.178E-06	5.317E-08	7.616E-12	2.679E-25
-238	U-238	4.219E-13	5.864E-12	5.610E-12	5.135E-12	3.767E-12	1.555E-12	7.018E-14	1.005E-17	3.536E-31
-238	U-238	6.073E-15	8.441E-14	8.076E-14	7.392E-14	5.422E-14	2.238E-14	1.010E-15	1.447E-19	5.089E-33
-238	äS(j):		5.949E-12	5.691E-12	5.209E-12	3.821E-12	1.577E-12	7.119E-14	1.020E-17	3.587E-31
-238	U-238	6.713E-11	9.331E-10	8.927E-10	8.171E-10	5.994E-10	2.474E-10	1.117E-11	1.600E-15	5.626E-29
-238	U-238	8.862E-17	1.232E-15	1.178E-15	1.079E-15	7.913E-16	3.265E-16	1.474E-17	2.112E-21	7.427E-35
-238	äS(j):		9.331E-10	8.927E-10	8.171E-10	5.994E-10	2.474E-10	1.117E-11	1.600E-15	5.626E-29
-238	U-238	1.276E-18	1.773E-17	1.696E-17	1.553E-17	1.139E-17	4.700E-18	2.122E-19	3.039E-23	1.069E-36
-238	U-238	3.200E-10	4.448E-09	4.255E-09	3.895E-09	2.857E-09	1.179E-09	5.323E-11	7.625E-15	2.682E-28
-238	äS(j):		4.448E-09	4.255E-09	3.895E-09	2.857E-09	1.179E-09	5.323E-11	7.625E-15	2.682E-28
-238	U-238	4.224E-16	5.871E-15	5.617E-15	5.141E-15	3.772E-15	1.556E-15	7.027E-17	1.007E-20	3.540E-34
-238	U-238	6.080E-18	8.451E-17	8.085E-17	7.400E-17	5.429E-17	2.240E-17	1.011E-18	1.449E-22	5.095E-36
-238	äS(j):		5.956E-15	5.698E-15	5.215E-15	3.826E-15	1.579E-15	7.128E-17	1.021E-20	3.591E-34
-238	U-238	9.980E-01	1.387E+01	1.327E+01	1.215E+01	8.911E+00	3.677E+00	1.660E-01	2.378E-05	8.364E-19
-238	U-238	1.317E-06	1.831E-05	1.752E-05	1.603E-05	1.176E-05	4.854E-06	2.191E-07	3.139E-11	1.104E-24
-238	äS(j):		1.387E+01	1.327E+01	1.215E+01	8.911E+00	3.677E+00	1.660E-01	2.378E-05	8.364E-19
-238	U-238	1.896E-08	2.636E-07	2.522E-07	2.308E-07	1.693E-07	6.987E-08	3.154E-09	4.518E-13	1.589E-26
-238	U-238	2.096E-04	2.914E-03	2.788E-03	2.551E-03	1.872E-03	7.724E-04	3.487E-05	4.995E-09	1.757E-22
-238	äS(j):		2.914E-03	2.788E-03	2.552E-03	1.872E-03	7.725E-04	3.488E-05	4.995E-09	1.757E-22
-238	U-238	2.767E-10	3.846E-09	3.680E-09	3.368E-09	2.471E-09	1.020E-09	4.603E-11	6.593E-15	2.319E-28
-238	U-238	3.983E-12	5.536E-11	5.296E-11	4.848E-11	3.556E-11	1.468E-11	6.626E-13	9.490E-17	3.338E-30
-238	äS(j):		3.902E-09	3.733E-09	3.416E-09	2.506E-09	1.034E-09	4.669E-11	6.688E-15	2.352E-28
-238	U-238	1.994E-04	2.772E-03	2.652E-03	2.428E-03	1.781E-03	7.349E-04	3.318E-05	4.752E-09	1.671E-22
-238	U-238	2.633E-10	3.659E-09	3.501E-09	3.204E-09	2.351E-09	9.701E-10	4.379E-11	6.273E-15	2.206E-28
-238	äS(j):		2.772E-03	2.652E-03	2.428E-03	1.781E-03	7.349E-04	3.318E-05	4.752E-09	1.671E-22
-238	U-238	3.789E-12	5.267E-11	5.039E-11	4.612E-11	3.384E-11	1.396E-11	6.304E-13	9.029E-17	3.176E-30
-238	U-238	4.189E-08	5.823E-07	5.571E-07	5.099E-07	3.741E-07	1.544E-07	6.969E-09	9.982E-13	3.511E-26
-238	äS(j):		5.823E-07	5.571E-07	5.099E-07	3.741E-07	1.544E-07	6.969E-09	9.983E-13	3.511E-26
-238	U-238	5.530E-14	7.686E-13	7.353E-13	6.731E-13	4.938E-13	2.038E-13	9.199E-15	1.318E-18	4.634E-32
-238	U-238	7.959E-16	1.106E-14	1.058E-14	9.688E-15	7.107E-15	2.933E-15	1.324E-16	1.897E-20	6.670E-34
-238	äS(j):		7.797E-13	7.459E-13	6.827E-13	5.009E-13	2.067E-13	9.331E-15	1.337E-18	4.701E-32

ummary : GKP Fire Fighter - External
ile : C:\USERS\CLAUDE\DOCUMENTS\0 GKP DOSE\RESRAD CW\GKP FIRE FIGHTER- EXTERNAL.RAD

Individual Nuclide Soil Concentration
Parent Nuclide and Branch Fraction Indicated

uclide (j)	Parent (i)	THF(i)	S(j,t), pCi/g t= 0.000E+00	1.000E+00	3.000E+00	1.000E+01	3.000E+01	1.000E+02	3.000E+02	1.000E+03
ÄÄÄÄÄÄ	ÄÄÄÄÄÄÄ	ÄÄÄÄÄÄÄÄÄ	ÄÄÄÄÄÄÄÄÄ	ÄÄÄÄÄÄÄÄÄ	ÄÄÄÄÄÄÄÄÄ	ÄÄÄÄÄÄÄÄÄ	ÄÄÄÄÄÄÄÄÄ	ÄÄÄÄÄÄÄÄÄ	ÄÄÄÄÄÄÄÄÄ	ÄÄÄÄÄÄÄÄÄ
-238	U-238	1.997E-07	2.776E-06	2.655E-06	2.430E-06	1.783E-06	7.358E-07	3.322E-08	4.758E-12	1.673E-25
-238	U-238	2.636E-13	3.664E-12	3.505E-12	3.208E-12	2.354E-12	9.712E-13	4.385E-14	6.281E-18	2.209E-31
-238	äS(j):		2.776E-06	2.655E-06	2.430E-06	1.783E-06	7.358E-07	3.322E-08	4.758E-12	1.673E-25
-238	U-238	3.794E-15	5.274E-14	5.045E-14	4.618E-14	3.388E-14	1.398E-14	6.311E-16	9.040E-20	3.180E-33
íííííí	ííííííí	ííííííííí	ííííííííí	ííííííííí	ííííííííí	ííííííííí	ííííííííí	ííííííííí	ííííííííí	ííííííííí

HF(i) is the thread fraction of the parent nuclide.

ESCALC.EXE execution time = 44.68 seconds

ummary : GKP Fire Fighter- Ingestion
ile : C:\USERS\CLAUDE\DOCUMENTS\0 GKP DOSE\RESRAD CW\GKP FIRE FIGHTER -INGESTION.RAD

Table of Contents
ÄÄÄÄÄÄÄÄÄÄÄÄÄÄÄÄÄ

Part I: Mixture Sums and Single Radionuclide Guidelines
íí

ummary : GKP Fire Fighter- Ingestion
ile : C:\USERS\CLAUDE\DOCUMENTS\0 GKP DOSE\RESRAD CW\GKP FIRE FIGHTER -INGESTION.RAD

Dose Conversion Factor (and Related) Parameter Summary
Dose Library: FGR 11

enu	Parameter	Current Value#	Base Case*	Parameter Name
-1	DCF's for external ground radiation, (mrem/yr)/(pCi/g)			
-1	Ac-227 (Source: FGR 12)	4.951E-04	4.951E-04	DCF1(1)
-1	Ac-228 (Source: FGR 12)	5.978E+00	5.978E+00	DCF1(2)
-1	At-218 (Source: FGR 12)	5.847E-03	5.847E-03	DCF1(3)
-1	At-219 (Source: no data)	0.000E+00	-2.000E+00	DCF1(4)
-1	Bi-210 (Source: FGR 12)	3.606E-03	3.606E-03	DCF1(5)
-1	Bi-211 (Source: FGR 12)	2.559E-01	2.559E-01	DCF1(6)
-1	Bi-212 (Source: FGR 12)	1.171E+00	1.171E+00	DCF1(7)
-1	Bi-214 (Source: FGR 12)	9.808E+00	9.808E+00	DCF1(8)
-1	Bi-215 (Source: no data)	0.000E+00	-2.000E+00	DCF1(9)
-1	Fr-223 (Source: FGR 12)	1.980E-01	1.980E-01	DCF1(10)
-1	Hg-206 (Source: no data)	0.000E+00	-2.000E+00	DCF1(11)
-1	Pa-231 (Source: FGR 12)	1.906E-01	1.906E-01	DCF1(12)
-1	Pa-234 (Source: FGR 12)	1.155E+01	1.155E+01	DCF1(13)
-1	Pa-234m (Source: FGR 12)	8.967E-02	8.967E-02	DCF1(14)
-1	Pb-210 (Source: FGR 12)	2.447E-03	2.447E-03	DCF1(15)
-1	Pb-211 (Source: FGR 12)	3.064E-01	3.064E-01	DCF1(16)
-1	Pb-212 (Source: FGR 12)	7.043E-01	7.043E-01	DCF1(17)
-1	Pb-214 (Source: FGR 12)	1.341E+00	1.341E+00	DCF1(18)
-1	Po-210 (Source: FGR 12)	5.231E-05	5.231E-05	DCF1(19)
-1	Po-211 (Source: FGR 12)	4.764E-02	4.764E-02	DCF1(20)
-1	Po-212 (Source: FGR 12)	0.000E+00	0.000E+00	DCF1(21)
-1	Po-214 (Source: FGR 12)	5.138E-04	5.138E-04	DCF1(22)
-1	Po-215 (Source: FGR 12)	1.016E-03	1.016E-03	DCF1(23)
-1	Po-216 (Source: FGR 12)	1.042E-04	1.042E-04	DCF1(24)
-1	Po-218 (Source: FGR 12)	5.642E-05	5.642E-05	DCF1(25)
-1	Ra-223 (Source: FGR 12)	6.034E-01	6.034E-01	DCF1(26)
-1	Ra-224 (Source: FGR 12)	5.119E-02	5.119E-02	DCF1(27)
-1	Ra-226 (Source: FGR 12)	3.176E-02	3.176E-02	DCF1(28)
-1	Ra-228 (Source: FGR 12)	0.000E+00	0.000E+00	DCF1(29)
-1	Rn-218 (Source: FGR 12)	4.540E-03	4.540E-03	DCF1(30)
-1	Rn-219 (Source: FGR 12)	3.083E-01	3.083E-01	DCF1(31)
-1	Rn-220 (Source: FGR 12)	2.298E-03	2.298E-03	DCF1(32)
-1	Rn-222 (Source: FGR 12)	2.354E-03	2.354E-03	DCF1(33)
-1	Th-227 (Source: FGR 12)	5.212E-01	5.212E-01	DCF1(34)
-1	Th-228 (Source: FGR 12)	7.940E-03	7.940E-03	DCF1(35)
-1	Th-230 (Source: FGR 12)	1.209E-03	1.209E-03	DCF1(36)
-1	Th-231 (Source: FGR 12)	3.643E-02	3.643E-02	DCF1(37)
-1	Th-232 (Source: FGR 12)	5.212E-04	5.212E-04	DCF1(38)
-1	Th-234 (Source: FGR 12)	2.410E-02	2.410E-02	DCF1(39)
-1	Tl-206 (Source: FGR 12)	7.697E-03	7.697E-03	DCF1(40)
-1	Tl-207 (Source: FGR 12)	1.980E-02	1.980E-02	DCF1(41)
-1	Tl-208 (Source: FGR 12)	2.298E+01	2.298E+01	DCF1(42)
-1	Tl-210 (Source: no data)	0.000E+00	-2.000E+00	DCF1(43)
-1	U-234 (Source: FGR 12)	4.017E-04	4.017E-04	DCF1(44)
-1	U-235 (Source: FGR 12)	7.211E-01	7.211E-01	DCF1(45)
-1	U-238 (Source: FGR 12)	1.031E-04	1.031E-04	DCF1(46)
-1	Dose conversion factors for inhalation, mrem/pCi:			
-1	Ac-227+D	6.724E+00	6.700E+00	DCF2(1)

Dose Conversion Factor (and Related) Parameter Summary (continued)

Dose Library: FGR 11

enu	Parameter	Current Value#	Base Case*	Parameter Name
-1	Ac-227+D1	6.724E+00	6.700E+00	DCF2(2)
-1	Ac-227+D2	6.708E+00	6.700E+00	DCF2(3)
-1	Ac-227+D3	6.708E+00	6.700E+00	DCF2(4)
-1	Ac-227+D4	6.700E+00	6.700E+00	DCF2(5)
-1	Ac-227+D5	6.700E+00	6.700E+00	DCF2(6)
-1	Pa-231	1.280E+00	1.280E+00	DCF2(7)
-1	Pb-210+D	2.320E-02	1.360E-02	DCF2(13)
-1	Pb-210+D1	1.380E-02	1.360E-02	DCF2(14)
-1	Pb-210+D2	1.360E-02	1.360E-02	DCF2(15)
-1	Ra-226+D	8.594E-03	8.580E-03	DCF2(16)
-1	Ra-226+D1	8.594E-03	8.580E-03	DCF2(19)
-1	Ra-226+D2	8.587E-03	8.580E-03	DCF2(22)
-1	Ra-226+D3	8.587E-03	8.580E-03	DCF2(25)
-1	Ra-226+D4	8.580E-03	8.580E-03	DCF2(28)
-1	Ra-228+D	5.078E-03	4.770E-03	DCF2(31)
-1	Th-228+D	3.454E-01	3.420E-01	DCF2(32)
-1	Th-230	3.260E-01	3.260E-01	DCF2(33)
-1	Th-232	1.640E+00	1.640E+00	DCF2(48)
-1	U-234	1.320E-01	1.320E-01	DCF2(49)
-1	U-235+D	1.230E-01	1.230E-01	DCF2(64)
-1	U-238	1.180E-01	1.180E-01	DCF2(70)
-1	U-238+D	1.180E-01	1.180E-01	DCF2(71)
-1	U-238+D1	1.180E-01	1.180E-01	DCF2(86)
-1	Dose conversion factors for ingestion, mrem/pCi:			
-1	Ac-227+D	1.480E-02	1.410E-02	DCF3(1)
-1	Ac-227+D1	1.480E-02	1.410E-02	DCF3(2)
-1	Ac-227+D2	1.477E-02	1.410E-02	DCF3(3)
-1	Ac-227+D3	1.477E-02	1.410E-02	DCF3(4)
-1	Ac-227+D4	1.411E-02	1.410E-02	DCF3(5)
-1	Ac-227+D5	1.411E-02	1.410E-02	DCF3(6)
-1	Pa-231	1.060E-02	1.060E-02	DCF3(7)
-1	Pb-210+D	7.276E-03	5.370E-03	DCF3(13)
-1	Pb-210+D1	5.376E-03	5.370E-03	DCF3(14)
-1	Pb-210+D2	5.370E-03	5.370E-03	DCF3(15)
-1	Ra-226+D	1.321E-03	1.320E-03	DCF3(16)
-1	Ra-226+D1	1.321E-03	1.320E-03	DCF3(19)
-1	Ra-226+D2	1.320E-03	1.320E-03	DCF3(22)
-1	Ra-226+D3	1.320E-03	1.320E-03	DCF3(25)
-1	Ra-226+D4	1.320E-03	1.320E-03	DCF3(28)
-1	Ra-228+D	1.442E-03	1.440E-03	DCF3(31)
-1	Th-228+D	8.086E-04	3.960E-04	DCF3(32)
-1	Th-230	5.480E-04	5.480E-04	DCF3(33)
-1	Th-232	2.730E-03	2.730E-03	DCF3(48)
-1	U-234	2.830E-04	2.830E-04	DCF3(49)
-1	U-235+D	2.673E-04	2.660E-04	DCF3(64)
-1	U-238	2.550E-04	2.550E-04	DCF3(70)
-1	U-238+D	2.709E-04	2.550E-04	DCF3(71)
-1	U-238+D1	2.687E-04	2.550E-04	DCF3(86)

Dose Conversion Factor (and Related) Parameter Summary (continued)

Dose Library: FGR 11

enu	Parameter	Current Value#	Base Case*	Parameter Name
-34	Food transfer factors:			
-34	Ac-227+D , plant/soil concentration ratio, dimensionless	2.500E-03	2.500E-03	RTF(1,1)
-34	Ac-227+D , beef/livestock-intake ratio, (pCi/kg)/(pCi/d)	2.000E-05	2.000E-05	RTF(1,2)
-34	Ac-227+D , milk/livestock-intake ratio, (pCi/L)/(pCi/d)	2.000E-05	2.000E-05	RTF(1,3)
-34				
-34	Ac-227+D1 , plant/soil concentration ratio, dimensionless	2.500E-03	2.500E-03	RTF(2,1)
-34	Ac-227+D1 , beef/livestock-intake ratio, (pCi/kg)/(pCi/d)	2.000E-05	2.000E-05	RTF(2,2)
-34	Ac-227+D1 , milk/livestock-intake ratio, (pCi/L)/(pCi/d)	2.000E-05	2.000E-05	RTF(2,3)
-34				
-34	Ac-227+D2 , plant/soil concentration ratio, dimensionless	2.500E-03	2.500E-03	RTF(3,1)
-34	Ac-227+D2 , beef/livestock-intake ratio, (pCi/kg)/(pCi/d)	2.000E-05	2.000E-05	RTF(3,2)
-34	Ac-227+D2 , milk/livestock-intake ratio, (pCi/L)/(pCi/d)	2.000E-05	2.000E-05	RTF(3,3)
-34				
-34	Ac-227+D3 , plant/soil concentration ratio, dimensionless	2.500E-03	2.500E-03	RTF(4,1)
-34	Ac-227+D3 , beef/livestock-intake ratio, (pCi/kg)/(pCi/d)	2.000E-05	2.000E-05	RTF(4,2)
-34	Ac-227+D3 , milk/livestock-intake ratio, (pCi/L)/(pCi/d)	2.000E-05	2.000E-05	RTF(4,3)
-34				
-34	Ac-227+D4 , plant/soil concentration ratio, dimensionless	2.500E-03	2.500E-03	RTF(5,1)
-34	Ac-227+D4 , beef/livestock-intake ratio, (pCi/kg)/(pCi/d)	2.000E-05	2.000E-05	RTF(5,2)
-34	Ac-227+D4 , milk/livestock-intake ratio, (pCi/L)/(pCi/d)	2.000E-05	2.000E-05	RTF(5,3)
-34				
-34	Ac-227+D5 , plant/soil concentration ratio, dimensionless	2.500E-03	2.500E-03	RTF(6,1)
-34	Ac-227+D5 , beef/livestock-intake ratio, (pCi/kg)/(pCi/d)	2.000E-05	2.000E-05	RTF(6,2)
-34	Ac-227+D5 , milk/livestock-intake ratio, (pCi/L)/(pCi/d)	2.000E-05	2.000E-05	RTF(6,3)
-34				
-34	Pa-231 , plant/soil concentration ratio, dimensionless	1.000E-02	1.000E-02	RTF(7,1)
-34	Pa-231 , beef/livestock-intake ratio, (pCi/kg)/(pCi/d)	5.000E-03	5.000E-03	RTF(7,2)
-34	Pa-231 , milk/livestock-intake ratio, (pCi/L)/(pCi/d)	5.000E-06	5.000E-06	RTF(7,3)
-34				
-34	Pb-210+D , plant/soil concentration ratio, dimensionless	1.000E-02	1.000E-02	RTF(13,1)
-34	Pb-210+D , beef/livestock-intake ratio, (pCi/kg)/(pCi/d)	8.000E-04	8.000E-04	RTF(13,2)
-34	Pb-210+D , milk/livestock-intake ratio, (pCi/L)/(pCi/d)	3.000E-04	3.000E-04	RTF(13,3)
-34				
-34	Pb-210+D1 , plant/soil concentration ratio, dimensionless	1.000E-02	1.000E-02	RTF(14,1)
-34	Pb-210+D1 , beef/livestock-intake ratio, (pCi/kg)/(pCi/d)	8.000E-04	8.000E-04	RTF(14,2)
-34	Pb-210+D1 , milk/livestock-intake ratio, (pCi/L)/(pCi/d)	3.000E-04	3.000E-04	RTF(14,3)
-34				
-34	Pb-210+D2 , plant/soil concentration ratio, dimensionless	1.000E-02	1.000E-02	RTF(15,1)
-34	Pb-210+D2 , beef/livestock-intake ratio, (pCi/kg)/(pCi/d)	8.000E-04	8.000E-04	RTF(15,2)
-34	Pb-210+D2 , milk/livestock-intake ratio, (pCi/L)/(pCi/d)	3.000E-04	3.000E-04	RTF(15,3)
-34				
-34	Ra-226+D , plant/soil concentration ratio, dimensionless	4.000E-02	4.000E-02	RTF(16,1)
-34	Ra-226+D , beef/livestock-intake ratio, (pCi/kg)/(pCi/d)	1.000E-03	1.000E-03	RTF(16,2)
-34	Ra-226+D , milk/livestock-intake ratio, (pCi/L)/(pCi/d)	1.000E-03	1.000E-03	RTF(16,3)
-34				
-34	Ra-226+D1 , plant/soil concentration ratio, dimensionless	4.000E-02	4.000E-02	RTF(19,1)
-34	Ra-226+D1 , beef/livestock-intake ratio, (pCi/kg)/(pCi/d)	1.000E-03	1.000E-03	RTF(19,2)
-34	Ra-226+D1 , milk/livestock-intake ratio, (pCi/L)/(pCi/d)	1.000E-03	1.000E-03	RTF(19,3)
-34				

Dose Conversion Factor (and Related) Parameter Summary (continued)
Dose Library: FGR 11

enu	Parameter	Current Value#	Base Case*	Parameter Name
-34	Ra-226+D2 , plant/soil concentration ratio, dimensionless	4.000E-02	4.000E-02	RTF(22,1)
-34	Ra-226+D2 , beef/livestock-intake ratio, (pCi/kg)/(pCi/d)	1.000E-03	1.000E-03	RTF(22,2)
-34	Ra-226+D2 , milk/livestock-intake ratio, (pCi/L)/(pCi/d)	1.000E-03	1.000E-03	RTF(22,3)
-34				
-34	Ra-226+D3 , plant/soil concentration ratio, dimensionless	4.000E-02	4.000E-02	RTF(25,1)
-34	Ra-226+D3 , beef/livestock-intake ratio, (pCi/kg)/(pCi/d)	1.000E-03	1.000E-03	RTF(25,2)
-34	Ra-226+D3 , milk/livestock-intake ratio, (pCi/L)/(pCi/d)	1.000E-03	1.000E-03	RTF(25,3)
-34				
-34	Ra-226+D4 , plant/soil concentration ratio, dimensionless	4.000E-02	4.000E-02	RTF(28,1)
-34	Ra-226+D4 , beef/livestock-intake ratio, (pCi/kg)/(pCi/d)	1.000E-03	1.000E-03	RTF(28,2)
-34	Ra-226+D4 , milk/livestock-intake ratio, (pCi/L)/(pCi/d)	1.000E-03	1.000E-03	RTF(28,3)
-34				
-34	Ra-228+D , plant/soil concentration ratio, dimensionless	4.000E-02	4.000E-02	RTF(31,1)
-34	Ra-228+D , beef/livestock-intake ratio, (pCi/kg)/(pCi/d)	1.000E-03	1.000E-03	RTF(31,2)
-34	Ra-228+D , milk/livestock-intake ratio, (pCi/L)/(pCi/d)	1.000E-03	1.000E-03	RTF(31,3)
-34				
-34	Th-228+D , plant/soil concentration ratio, dimensionless	1.000E-03	1.000E-03	RTF(32,1)
-34	Th-228+D , beef/livestock-intake ratio, (pCi/kg)/(pCi/d)	1.000E-04	1.000E-04	RTF(32,2)
-34	Th-228+D , milk/livestock-intake ratio, (pCi/L)/(pCi/d)	5.000E-06	5.000E-06	RTF(32,3)
-34				
-34	Th-230 , plant/soil concentration ratio, dimensionless	1.000E-03	1.000E-03	RTF(33,1)
-34	Th-230 , beef/livestock-intake ratio, (pCi/kg)/(pCi/d)	1.000E-04	1.000E-04	RTF(33,2)
-34	Th-230 , milk/livestock-intake ratio, (pCi/L)/(pCi/d)	5.000E-06	5.000E-06	RTF(33,3)
-34				
-34	Th-232 , plant/soil concentration ratio, dimensionless	1.000E-03	1.000E-03	RTF(48,1)
-34	Th-232 , beef/livestock-intake ratio, (pCi/kg)/(pCi/d)	1.000E-04	1.000E-04	RTF(48,2)
-34	Th-232 , milk/livestock-intake ratio, (pCi/L)/(pCi/d)	5.000E-06	5.000E-06	RTF(48,3)
-34				
-34	U-234 , plant/soil concentration ratio, dimensionless	2.500E-03	2.500E-03	RTF(49,1)
-34	U-234 , beef/livestock-intake ratio, (pCi/kg)/(pCi/d)	3.400E-04	3.400E-04	RTF(49,2)
-34	U-234 , milk/livestock-intake ratio, (pCi/L)/(pCi/d)	6.000E-04	6.000E-04	RTF(49,3)
-34				
-34	U-235+D , plant/soil concentration ratio, dimensionless	2.500E-03	2.500E-03	RTF(64,1)
-34	U-235+D , beef/livestock-intake ratio, (pCi/kg)/(pCi/d)	3.400E-04	3.400E-04	RTF(64,2)
-34	U-235+D , milk/livestock-intake ratio, (pCi/L)/(pCi/d)	6.000E-04	6.000E-04	RTF(64,3)
-34				
-34	U-238 , plant/soil concentration ratio, dimensionless	2.500E-03	2.500E-03	RTF(70,1)
-34	U-238 , beef/livestock-intake ratio, (pCi/kg)/(pCi/d)	3.400E-04	3.400E-04	RTF(70,2)
-34	U-238 , milk/livestock-intake ratio, (pCi/L)/(pCi/d)	6.000E-04	6.000E-04	RTF(70,3)
-34				
-34	U-238+D , plant/soil concentration ratio, dimensionless	2.500E-03	2.500E-03	RTF(71,1)
-34	U-238+D , beef/livestock-intake ratio, (pCi/kg)/(pCi/d)	3.400E-04	3.400E-04	RTF(71,2)
-34	U-238+D , milk/livestock-intake ratio, (pCi/L)/(pCi/d)	6.000E-04	6.000E-04	RTF(71,3)
-34				
-34	U-238+D1 , plant/soil concentration ratio, dimensionless	2.500E-03	2.500E-03	RTF(86,1)
-34	U-238+D1 , beef/livestock-intake ratio, (pCi/kg)/(pCi/d)	3.400E-04	3.400E-04	RTF(86,2)
-34	U-238+D1 , milk/livestock-intake ratio, (pCi/L)/(pCi/d)	6.000E-04	6.000E-04	RTF(86,3)
-34				

Dose Conversion Factor (and Related) Parameter Summary (continued)
Dose Library: FGR 11

enu	Parameter	Current Value#	Base Case*	Parameter Name
-5	Bioaccumulation factors, fresh water, L/kg:			
-5	Ac-227+D , fish	1.500E+01	1.500E+01	BIOFAC(1,1)
-5	Ac-227+D , crustacea and mollusks	1.000E+03	1.000E+03	BIOFAC(1,2)
-5				
-5	Ac-227+D1 , fish	1.500E+01	1.500E+01	BIOFAC(2,1)
-5	Ac-227+D1 , crustacea and mollusks	1.000E+03	1.000E+03	BIOFAC(2,2)
-5				
-5	Ac-227+D2 , fish	1.500E+01	1.500E+01	BIOFAC(3,1)
-5	Ac-227+D2 , crustacea and mollusks	1.000E+03	1.000E+03	BIOFAC(3,2)
-5				
-5	Ac-227+D3 , fish	1.500E+01	1.500E+01	BIOFAC(4,1)
-5	Ac-227+D3 , crustacea and mollusks	1.000E+03	1.000E+03	BIOFAC(4,2)
-5				
-5	Ac-227+D4 , fish	1.500E+01	1.500E+01	BIOFAC(5,1)
-5	Ac-227+D4 , crustacea and mollusks	1.000E+03	1.000E+03	BIOFAC(5,2)
-5				
-5	Ac-227+D5 , fish	1.500E+01	1.500E+01	BIOFAC(6,1)
-5	Ac-227+D5 , crustacea and mollusks	1.000E+03	1.000E+03	BIOFAC(6,2)
-5				
-5	Pa-231 , fish	1.000E+01	1.000E+01	BIOFAC(7,1)
-5	Pa-231 , crustacea and mollusks	1.100E+02	1.100E+02	BIOFAC(7,2)
-5				
-5	Pb-210+D , fish	3.000E+02	3.000E+02	BIOFAC(13,1)
-5	Pb-210+D , crustacea and mollusks	1.000E+02	1.000E+02	BIOFAC(13,2)
-5				
-5	Pb-210+D1 , fish	3.000E+02	3.000E+02	BIOFAC(14,1)
-5	Pb-210+D1 , crustacea and mollusks	1.000E+02	1.000E+02	BIOFAC(14,2)
-5				
-5	Pb-210+D2 , fish	3.000E+02	3.000E+02	BIOFAC(15,1)
-5	Pb-210+D2 , crustacea and mollusks	1.000E+02	1.000E+02	BIOFAC(15,2)
-5				
-5	Ra-226+D , fish	5.000E+01	5.000E+01	BIOFAC(16,1)
-5	Ra-226+D , crustacea and mollusks	2.500E+02	2.500E+02	BIOFAC(16,2)
-5				
-5	Ra-226+D1 , fish	5.000E+01	5.000E+01	BIOFAC(19,1)
-5	Ra-226+D1 , crustacea and mollusks	2.500E+02	2.500E+02	BIOFAC(19,2)
-5				
-5	Ra-226+D2 , fish	5.000E+01	5.000E+01	BIOFAC(22,1)
-5	Ra-226+D2 , crustacea and mollusks	2.500E+02	2.500E+02	BIOFAC(22,2)
-5				
-5	Ra-226+D3 , fish	5.000E+01	5.000E+01	BIOFAC(25,1)
-5	Ra-226+D3 , crustacea and mollusks	2.500E+02	2.500E+02	BIOFAC(25,2)
-5				
-5	Ra-226+D4 , fish	5.000E+01	5.000E+01	BIOFAC(28,1)
-5	Ra-226+D4 , crustacea and mollusks	2.500E+02	2.500E+02	BIOFAC(28,2)
-5				
-5	Ra-228+D , fish	5.000E+01	5.000E+01	BIOFAC(31,1)
-5	Ra-228+D , crustacea and mollusks	2.500E+02	2.500E+02	BIOFAC(31,2)
-5				

Dose Conversion Factor (and Related) Parameter Summary (continued)

Dose Library: FGR 11

enu	Parameter	Current Value#	Base Case*	Parameter Name
-5	Th-228+D , fish	1.000E+02	1.000E+02	BIOFAC(32,1)
-5	Th-228+D , crustacea and mollusks	5.000E+02	5.000E+02	BIOFAC(32,2)
-5				
-5	Th-230 , fish	1.000E+02	1.000E+02	BIOFAC(33,1)
-5	Th-230 , crustacea and mollusks	5.000E+02	5.000E+02	BIOFAC(33,2)
-5				
-5	Th-232 , fish	1.000E+02	1.000E+02	BIOFAC(48,1)
-5	Th-232 , crustacea and mollusks	5.000E+02	5.000E+02	BIOFAC(48,2)
-5				
-5	U-234 , fish	1.000E+01	1.000E+01	BIOFAC(49,1)
-5	U-234 , crustacea and mollusks	6.000E+01	6.000E+01	BIOFAC(49,2)
-5				
-5	U-235+D , fish	1.000E+01	1.000E+01	BIOFAC(64,1)
-5	U-235+D , crustacea and mollusks	6.000E+01	6.000E+01	BIOFAC(64,2)
-5				
-5	U-238 , fish	1.000E+01	1.000E+01	BIOFAC(70,1)
-5	U-238 , crustacea and mollusks	6.000E+01	6.000E+01	BIOFAC(70,2)
-5				
-5	U-238+D , fish	1.000E+01	1.000E+01	BIOFAC(71,1)
-5	U-238+D , crustacea and mollusks	6.000E+01	6.000E+01	BIOFAC(71,2)
-5				
-5	U-238+D1 , fish	1.000E+01	1.000E+01	BIOFAC(86,1)
-5	U-238+D1 , crustacea and mollusks	6.000E+01	6.000E+01	BIOFAC(86,2)
-5				

For DCF1(xxx) only, factors are for infinite depth & area. See ETFG table in Ground Pathway of Detailed Report.
Base Case means Default.Lib w/o Associate Nuclide contributions.

ummary : GKP Fire Fighter- Ingestion
ile : C:\USERS\CLAUDE\DOCUMENTS\0 GKP DOSE\RESRAD CW\GKP FIRE FIGHTER -INGESTION.RAD

Site-Specific Parameter Summary

enu	Parameter	User Input	Default	Used by RESRAD (If different from user input)	Parameter Name
011	Area of contaminated zone (m**2)	2.000E+02	1.000E+04	---	AREA
011	Thickness of contaminated zone (m)	1.500E 01	2.000E+00	---	THICK0
011	Fraction of contamination that is submerged	0.000E+00	0.000E+00	---	SUBMFRACT
011	Length parallel to aquifer flow (m)	1.000E+02	1.000E+02	---	LCZPAQ
011	Basic radiation dose limit (mrem/yr)	2.500E+01	3.000E+01	---	BRDL
011	Time since placement of material (yr)	0.000E+00	0.000E+00	---	TI
011	Times for calculations (yr)	1.000E+00	1.000E+00	---	T(2)
011	Times for calculations (yr)	3.000E+00	3.000E+00	---	T(3)
011	Times for calculations (yr)	1.000E+01	1.000E+01	---	T(4)
011	Times for calculations (yr)	3.000E+01	3.000E+01	---	T(5)
011	Times for calculations (yr)	1.000E+02	1.000E+02	---	T(6)
011	Times for calculations (yr)	3.000E+02	3.000E+02	---	T(7)
011	Times for calculations (yr)	1.000E+03	1.000E+03	---	T(8)
011	Times for calculations (yr)	not used	0.000E+00	---	T(9)
011	Times for calculations (yr)	not used	0.000E+00	---	T(10)
012	Initial principal radionuclide (pCi/g): Ra-226	3.650E+01	0.000E+00	---	S1(16)
012	Initial principal radionuclide (pCi/g): Th-232	2.400E+00	0.000E+00	---	S1(48)
012	Initial principal radionuclide (pCi/g): U-234	1.390E+01	0.000E+00	---	S1(49)
012	Initial principal radionuclide (pCi/g): U-235	8.400E-01	0.000E+00	---	S1(64)
012	Initial principal radionuclide (pCi/g): U-238	1.390E+01	0.000E+00	---	S1(70)
012	Concentration in groundwater (pCi/L): Ra-226	not used	0.000E+00	---	W1(16)
012	Concentration in groundwater (pCi/L): Th-232	not used	0.000E+00	---	W1(48)
012	Concentration in groundwater (pCi/L): U-234	not used	0.000E+00	---	W1(49)
012	Concentration in groundwater (pCi/L): U-235	not used	0.000E+00	---	W1(64)
012	Concentration in groundwater (pCi/L): U-238	not used	0.000E+00	---	W1(70)
013	Cover depth (m)	0.000E+00	0.000E+00	---	COVER0
013	Density of cover material (g/cm**3)	not used	1.500E+00	---	DENSCV
013	Cover depth erosion rate (m/yr)	not used	1.000E-03	---	VCV
013	Density of contaminated zone (g/cm**3)	1.500E+00	1.500E+00	---	DENSCZ
013	Contaminated zone erosion rate (m/yr)	1.000E-03	1.000E-03	---	VCZ
013	Contaminated zone total porosity	4.000E-01	4.000E-01	---	TPCZ
013	Contaminated zone field capacity	2.000E-01	2.000E-01	---	FCCZ
013	Contaminated zone hydraulic conductivity (m/yr)	1.000E+01	1.000E+01	---	HCCZ
013	Contaminated zone b parameter	5.300E+00	5.300E+00	---	BCZ
013	Average annual wind speed (m/sec)	2.000E+00	2.000E+00	---	WIND
013	Humidity in air (g/m**3)	not used	8.000E+00	---	HUMID
013	Evapotranspiration coefficient	5.000E-01	5.000E-01	---	EVAPTR
013	Precipitation (m/yr)	1.000E+00	1.000E+00	---	PRECIP
013	Irrigation (m/yr)	2.000E-01	2.000E-01	---	RI
013	Irrigation mode	overhead	overhead	---	IDITCH
013	Runoff coefficient	2.000E-01	2.000E-01	---	RUNOFF
013	Watershed area for nearby stream or pond (m**2)	1.000E+06	1.000E+06	---	WAREA
013	Accuracy for water/soil computations	1.000E-03	1.000E-03	---	EPS
014	Density of saturated zone (g/cm**3)	1.500E+00	1.500E+00	---	DENSAQ
014	Saturated zone total porosity	4.000E-01	4.000E-01	---	TPSZ
014	Saturated zone effective porosity	2.000E-01	2.000E-01	---	EPSZ
014	Saturated zone field capacity	2.000E-01	2.000E-01	---	FCSZ

Site-Specific Parameter Summary (continued)

enu	Parameter	User Input	Default	Used by RESRAD (If different from user input)	Parameter Name
014	Saturated zone hydraulic conductivity (m/yr)	1.000E+02	1.000E+02	---	HCSZ
014	Saturated zone hydraulic gradient	2.000E-02	2.000E-02	---	HGWT
014	Saturated zone b parameter	5.300E+00	5.300E+00	---	BSZ
014	Water table drop rate (m/yr)	1.000E-03	1.000E-03	---	VWT
014	Well pump intake depth (m below water table)	1.000E+01	1.000E+01	---	DWIBWT
014	Model: Nondispersion (ND) or Mass-Balance (MB)	ND	ND	---	MODEL
014	Well pumping rate (m**3/yr)	2.500E+02	2.500E+02	---	UW
015	Number of unsaturated zone strata	1	1	---	NS
015	Unsat. zone 1, thickness (m)	4.000E+00	4.000E+00	---	H(1)
015	Unsat. zone 1, soil density (g/cm**3)	1.500E+00	1.500E+00	---	DENSUZ(1)
015	Unsat. zone 1, total porosity	4.000E-01	4.000E-01	---	TPUZ(1)
015	Unsat. zone 1, effective porosity	2.000E-01	2.000E-01	---	EPUZ(1)
015	Unsat. zone 1, field capacity	2.000E-01	2.000E-01	---	FCUZ(1)
015	Unsat. zone 1, soil-specific b parameter	5.300E+00	5.300E+00	---	BUZ(1)
015	Unsat. zone 1, hydraulic conductivity (m/yr)	1.000E+01	1.000E+01	---	HCUZ(1)
016	Distribution coefficients for Ra-226				
016	Contaminated zone (cm**3/g)	7.000E+01	7.000E+01	---	DCNUCC(16)
016	Unsaturated zone 1 (cm**3/g)	7.000E+01	7.000E+01	---	DCNUCU(16,1)
016	Saturated zone (cm**3/g)	7.000E+01	7.000E+01	---	DCNUCS(16)
016	Leach rate (/yr)	0.000E+00	0.000E+00	3.165E-02	ALEACH(16)
016	Solubility constant	0.000E+00	0.000E+00	not used	SOLUBK(16)
016	Distribution coefficients for Th-232				
016	Contaminated zone (cm**3/g)	6.000E+04	6.000E+04	---	DCNUCC(48)
016	Unsaturated zone 1 (cm**3/g)	6.000E+04	6.000E+04	---	DCNUCU(48,1)
016	Saturated zone (cm**3/g)	6.000E+04	6.000E+04	---	DCNUCS(48)
016	Leach rate (/yr)	0.000E+00	0.000E+00	3.704E-05	ALEACH(48)
016	Solubility constant	0.000E+00	0.000E+00	not used	SOLUBK(48)
016	Distribution coefficients for U-234				
016	Contaminated zone (cm**3/g)	5.000E+01	5.000E+01	---	DCNUCC(49)
016	Unsaturated zone 1 (cm**3/g)	5.000E+01	5.000E+01	---	DCNUCU(49,1)
016	Saturated zone (cm**3/g)	5.000E+01	5.000E+01	---	DCNUCS(49)
016	Leach rate (/yr)	0.000E+00	0.000E+00	4.426E-02	ALEACH(49)
016	Solubility constant	0.000E+00	0.000E+00	not used	SOLUBK(49)
016	Distribution coefficients for U-235				
016	Contaminated zone (cm**3/g)	5.000E+01	5.000E+01	---	DCNUCC(64)
016	Unsaturated zone 1 (cm**3/g)	5.000E+01	5.000E+01	---	DCNUCU(64,1)
016	Saturated zone (cm**3/g)	5.000E+01	5.000E+01	---	DCNUCS(64)
016	Leach rate (/yr)	0.000E+00	0.000E+00	4.426E-02	ALEACH(64)
016	Solubility constant	0.000E+00	0.000E+00	not used	SOLUBK(64)
016	Distribution coefficients for U-238				
016	Contaminated zone (cm**3/g)	5.000E+01	5.000E+01	---	DCNUCC(70)
016	Unsaturated zone 1 (cm**3/g)	5.000E+01	5.000E+01	---	DCNUCU(70,1)
016	Saturated zone (cm**3/g)	5.000E+01	5.000E+01	---	DCNUCS(70)
016	Leach rate (/yr)	0.000E+00	0.000E+00	4.426E-02	ALEACH(70)
016	Solubility constant	0.000E+00	0.000E+00	not used	SOLUBK(70)

Site-Specific Parameter Summary (continued)

enu	Parameter	User Input	Default	Used by RESRAD (If different from user input)	Parameter Name
016	Distribution coefficients for daughter Ac-227				
016	Contaminated zone (cm**3/g)	2.000E+01	2.000E+01	---	DCNUCC(1)
016	Unsaturated zone 1 (cm**3/g)	2.000E+01	2.000E+01	---	DCNUCU(1,1)
016	Saturated zone (cm**3/g)	2.000E+01	2.000E+01	---	DCNUCS(1)
016	Leach rate (/yr)	0.000E+00	0.000E+00	1.099E-01	ALEACH(1)
016	Solubility constant	0.000E+00	0.000E+00	not used	SOLUBK(1)
016	Distribution coefficients for daughter Pa-231				
016	Contaminated zone (cm**3/g)	5.000E+01	5.000E+01	---	DCNUCC(7)
016	Unsaturated zone 1 (cm**3/g)	5.000E+01	5.000E+01	---	DCNUCU(7,1)
016	Saturated zone (cm**3/g)	5.000E+01	5.000E+01	---	DCNUCS(7)
016	Leach rate (/yr)	0.000E+00	0.000E+00	4.426E-02	ALEACH(7)
016	Solubility constant	0.000E+00	0.000E+00	not used	SOLUBK(7)
016	Distribution coefficients for daughter Pb-210				
016	Contaminated zone (cm**3/g)	1.000E+02	1.000E+02	---	DCNUCC(13)
016	Unsaturated zone 1 (cm**3/g)	1.000E+02	1.000E+02	---	DCNUCU(13,1)
016	Saturated zone (cm**3/g)	1.000E+02	1.000E+02	---	DCNUCS(13)
016	Leach rate (/yr)	0.000E+00	0.000E+00	2.217E-02	ALEACH(13)
016	Solubility constant	0.000E+00	0.000E+00	not used	SOLUBK(13)
016	Distribution coefficients for daughter Ra-228				
016	Contaminated zone (cm**3/g)	7.000E+01	7.000E+01	---	DCNUCC(31)
016	Unsaturated zone 1 (cm**3/g)	7.000E+01	7.000E+01	---	DCNUCU(31,1)
016	Saturated zone (cm**3/g)	7.000E+01	7.000E+01	---	DCNUCS(31)
016	Leach rate (/yr)	0.000E+00	0.000E+00	3.165E-02	ALEACH(31)
016	Solubility constant	0.000E+00	0.000E+00	not used	SOLUBK(31)
016	Distribution coefficients for daughter Th-228				
016	Contaminated zone (cm**3/g)	6.000E+04	6.000E+04	---	DCNUCC(32)
016	Unsaturated zone 1 (cm**3/g)	6.000E+04	6.000E+04	---	DCNUCU(32,1)
016	Saturated zone (cm**3/g)	6.000E+04	6.000E+04	---	DCNUCS(32)
016	Leach rate (/yr)	0.000E+00	0.000E+00	3.704E-05	ALEACH(32)
016	Solubility constant	0.000E+00	0.000E+00	not used	SOLUBK(32)
016	Distribution coefficients for daughter Th-230				
016	Contaminated zone (cm**3/g)	6.000E+04	6.000E+04	---	DCNUCC(33)
016	Unsaturated zone 1 (cm**3/g)	6.000E+04	6.000E+04	---	DCNUCU(33,1)
016	Saturated zone (cm**3/g)	6.000E+04	6.000E+04	---	DCNUCS(33)
016	Leach rate (/yr)	0.000E+00	0.000E+00	3.704E-05	ALEACH(33)
016	Solubility constant	0.000E+00	0.000E+00	not used	SOLUBK(33)
017	Inhalation rate (m**3/yr)	not used	8.400E+03	---	INHALR
017	Mass loading for inhalation (g/m**3)	not used	1.000E-04	---	MLINH
017	Exposure duration	3.000E+01	3.000E+01	---	ED
017	Shielding factor, inhalation	not used	4.000E-01	---	SHF3
017	Shielding factor, external gamma	not used	7.000E-01	---	SHF1
017	Fraction of time spent indoors	0.000E+00	5.000E-01	---	FIND
017	Fraction of time spent outdoors (on site)	7.000E-03	2.500E-01	---	FOTD
017	Shape factor flag, external gamma	not used	1.000E+00	>0 shows circular AREA.	FS

Site-Specific Parameter Summary (continued)

enu	Parameter	User Input	Default	Used by RESRAD (If different from user input)	Parameter Name
017	Radii of shape factor array (used if FS = -1):				
017	Outer annular radius (m), ring 1:	not used	5.000E+01	---	RAD_SHAPE(1)
017	Outer annular radius (m), ring 2:	not used	7.071E+01	---	RAD_SHAPE(2)
017	Outer annular radius (m), ring 3:	not used	0.000E+00	---	RAD_SHAPE(3)
017	Outer annular radius (m), ring 4:	not used	0.000E+00	---	RAD_SHAPE(4)
017	Outer annular radius (m), ring 5:	not used	0.000E+00	---	RAD_SHAPE(5)
017	Outer annular radius (m), ring 6:	not used	0.000E+00	---	RAD_SHAPE(6)
017	Outer annular radius (m), ring 7:	not used	0.000E+00	---	RAD_SHAPE(7)
017	Outer annular radius (m), ring 8:	not used	0.000E+00	---	RAD_SHAPE(8)
017	Outer annular radius (m), ring 9:	not used	0.000E+00	---	RAD_SHAPE(9)
017	Outer annular radius (m), ring 10:	not used	0.000E+00	---	RAD_SHAPE(10)
017	Outer annular radius (m), ring 11:	not used	0.000E+00	---	RAD_SHAPE(11)
017	Outer annular radius (m), ring 12:	not used	0.000E+00	---	RAD_SHAPE(12)
017	Fractions of annular areas within AREA:				
017	Ring 1	not used	1.000E+00	---	FRACA(1)
017	Ring 2	not used	2.732E-01	---	FRACA(2)
017	Ring 3	not used	0.000E+00	---	FRACA(3)
017	Ring 4	not used	0.000E+00	---	FRACA(4)
017	Ring 5	not used	0.000E+00	---	FRACA(5)
017	Ring 6	not used	0.000E+00	---	FRACA(6)
017	Ring 7	not used	0.000E+00	---	FRACA(7)
017	Ring 8	not used	0.000E+00	---	FRACA(8)
017	Ring 9	not used	0.000E+00	---	FRACA(9)
017	Ring 10	not used	0.000E+00	---	FRACA(10)
017	Ring 11	not used	0.000E+00	---	FRACA(11)
017	Ring 12	not used	0.000E+00	---	FRACA(12)
018	Fruits, vegetables and grain consumption (kg/yr)	not used	1.600E+02	---	DIET(1)
018	Leafy vegetable consumption (kg/yr)	not used	1.400E+01	---	DIET(2)
018	Milk consumption (L/yr)	not used	9.200E+01	---	DIET(3)
018	Meat and poultry consumption (kg/yr)	not used	6.300E+01	---	DIET(4)
018	Fish consumption (kg/yr)	not used	5.400E+00	---	DIET(5)
018	Other seafood consumption (kg/yr)	not used	9.000E-01	---	DIET(6)
018	Soil ingestion rate (g/yr)	3.650E+01	3.650E+01	---	SOIL
018	Drinking water intake (L/yr)	not used	5.100E+02	---	DWI
018	Contamination fraction of drinking water	not used	1.000E+00	---	FDW
018	Contamination fraction of household water	1.000E+00	1.000E+00	---	FHHW
018	Contamination fraction of livestock water	not used	1.000E+00	---	FLW
018	Contamination fraction of irrigation water	not used	1.000E+00	---	FIRW
018	Contamination fraction of aquatic food	not used	5.000E-01	---	FR9
018	Contamination fraction of plant food	not used	-1	---	FPLANT
018	Contamination fraction of meat	not used	-1	---	FMEAT
018	Contamination fraction of milk	not used	-1	---	FMILK
019	Livestock fodder intake for meat (kg/day)	not used	6.800E+01	---	LFI5
019	Livestock fodder intake for milk (kg/day)	not used	5.500E+01	---	LFI6
019	Livestock water intake for meat (L/day)	not used	5.000E+01	---	LWI5
019	Livestock water intake for milk (L/day)	not used	1.600E+02	---	LWI6
019	Livestock soil intake (kg/day)	not used	5.000E-01	---	LSI

ummary : GKP Fire Fighter- Ingestion
ile : C:\USERS\CLAUDE\DOCUMENTS\0 GKP DOSE\RESRAD CW\GKP FIRE FIGHTER -INGESTION.RAD

Site-Specific Parameter Summary (continued)

enu	Parameter	User Input	Default	Used by RESRAD (If different from user input)	Parameter Name
019	Mass loading for foliar deposition (g/m**3)	not used	1.000E-04	---	MLFD
019	Depth of soil mixing layer (m)	1.500E-01	1.500E-01	---	DM
019	Depth of roots (m)	not used	9.000E-01	---	DROOT
019	Drinking water fraction from ground water	not used	1.000E+00	---	FGWDW
019	Household water fraction from ground water	1.000E+00	1.000E+00	---	FGWHH
019	Livestock water fraction from ground water	not used	1.000E+00	---	FGWLW
019	Irrigation fraction from ground water	not used	1.000E+00	---	FGWIR
19B	Wet weight crop yield for Non-Leafy (kg/m**2)	not used	7.000E-01	---	YV(1)
19B	Wet weight crop yield for Leafy (kg/m**2)	not used	1.500E+00	---	YV(2)
19B	Wet weight crop yield for Fodder (kg/m**2)	not used	1.100E+00	---	YV(3)
19B	Growing Season for Non-Leafy (years)	not used	1.700E-01	---	TE(1)
19B	Growing Season for Leafy (years)	not used	2.500E-01	---	TE(2)
19B	Growing Season for Fodder (years)	not used	8.000E-02	---	TE(3)
19B	Translocation Factor for Non-Leafy	not used	1.000E-01	---	TIV(1)
19B	Translocation Factor for Leafy	not used	1.000E+00	---	TIV(2)
19B	Translocation Factor for Fodder	not used	1.000E+00	---	TIV(3)
19B	Dry Foliar Interception Fraction for Non-Leafy	not used	2.500E-01	---	RDRY(1)
19B	Dry Foliar Interception Fraction for Leafy	not used	2.500E-01	---	RDRY(2)
19B	Dry Foliar Interception Fraction for Fodder	not used	2.500E-01	---	RDRY(3)
19B	Wet Foliar Interception Fraction for Non-Leafy	not used	2.500E-01	---	RWET(1)
19B	Wet Foliar Interception Fraction for Leafy	not used	2.500E-01	---	RWET(2)
19B	Wet Foliar Interception Fraction for Fodder	not used	2.500E-01	---	RWET(3)
19B	Weathering Removal Constant for Vegetation	not used	2.000E+01	---	WLAM
14	C-12 concentration in water (g/cm**3)	not used	2.000E-05	---	C12WTR
14	C-12 concentration in contaminated soil (g/g)	not used	3.000E-02	---	C12CZ
14	Fraction of vegetation carbon from soil	not used	2.000E-02	---	CSOIL
14	Fraction of vegetation carbon from air	not used	9.800E-01	---	CAIR
14	C-14 evasion layer thickness in soil (m)	not used	3.000E-01	---	DMC
14	C-14 evasion flux rate from soil (1/sec)	not used	7.000E-07	---	EVSN
14	C-12 evasion flux rate from soil (1/sec)	not used	1.000E-10	---	REVSN
14	Fraction of grain in beef cattle feed	not used	8.000E-01	---	AVFG4
14	Fraction of grain in milk cow feed	not used	2.000E-01	---	AVFG5
TOR	Storage times of contaminated foodstuffs (days):				
TOR	Fruits, non-leafy vegetables, and grain	1.400E+01	1.400E+01	---	STOR_T(1)
TOR	Leafy vegetables	1.000E+00	1.000E+00	---	STOR_T(2)
TOR	Milk	1.000E+00	1.000E+00	---	STOR_T(3)
TOR	Meat and poultry	2.000E+01	2.000E+01	---	STOR_T(4)
TOR	Fish	7.000E+00	7.000E+00	---	STOR_T(5)
TOR	Crustacea and mollusks	7.000E+00	7.000E+00	---	STOR_T(6)
TOR	Well water	1.000E+00	1.000E+00	---	STOR_T(7)
TOR	Surface water	1.000E+00	1.000E+00	---	STOR_T(8)
TOR	Livestock fodder	4.500E+01	4.500E+01	---	STOR_T(9)
021	Thickness of building foundation (m)	not used	1.500E-01	---	FLOOR1
021	Bulk density of building foundation (g/cm**3)	not used	2.400E+00	---	DENSFL
021	Total porosity of the cover material	not used	4.000E-01	---	TPCV
021	Total porosity of the building foundation	not used	1.000E-01	---	TPFL

ummary : GKP Fire Fighter- Ingestion
ile : C:\USERS\CLAUDE\DOCUMENTS\0 GKP DOSE\RESRAD CW\GKP FIRE FIGHTER -INGESTION.RAD

Site-Specific Parameter Summary (continued)

enu	Parameter	User Input	Default	Used by RESRAD (If different from user input)	Parameter Name
021	Volumetric water content of the cover material	not used	5.000E-02	---	PH2OCV
021	Volumetric water content of the foundation	not used	3.000E-02	---	PH2OFL
021	Diffusion coefficient for radon gas (m/sec):				
021	in cover material	not used	2.000E-06	---	DIFCV
021	in foundation material	not used	3.000E-07	---	DIFFL
021	in contaminated zone soil	2.000E-06	2.000E-06	---	DIFCZ
021	Radon vertical dimension of mixing (m)	2.000E+00	2.000E+00	---	HMIX
021	Average building air exchange rate (1/hr)	not used	5.000E-01	---	REXG
021	Height of the building (room) (m)	not used	2.500E+00	---	HRM
021	Building interior area factor	not used	0.000E+00	code computed (time dependent)	FAI
021	Building depth below ground surface (m)	not used	-1.000E+00	code computed (time dependent)	DMFL
021	Emanating power of Rn-222 gas	2.500E-01	2.500E-01	---	EMANA(1)
021	Emanating power of Rn-220 gas	1.500E-01	1.500E-01	---	EMANA(2)
ITL	Number of graphical time points	32	---	---	NPTS
ITL	Maximum number of integration points for dose	17	---	---	LYMAX
ITL	Maximum number of integration points for risk	257	---	---	KYMAX

Summary of Pathway Selections

Pathway	User Selection
1 -- external gamma	suppressed
2 -- inhalation (w/o radon)	suppressed
3 -- plant ingestion	suppressed
4 -- meat ingestion	suppressed
5 -- milk ingestion	suppressed
6 -- aquatic foods	suppressed
7 -- drinking water	suppressed
8 -- soil ingestion	active
9 -- radon	active
Find peak pathway doses	suppressed

ummary : GKP Fire Fighter- Ingestion
ile : C:\USERS\CLAUDE\DOCUMENTS\0 GKP DOSE\RESRAD CW\GKP FIRE FIGHTER -INGESTION.RAD

Contaminated Zone Dimensions		Initial Soil Concentrations, pCi/g	
Area:	200.00 square meters	Ra-226	3.650E+01
Thickness:	0.15 meters	Th-232	2.400E+00
over Depth:	0.00 meters	U-234	1.390E+01
		U-235	8.400E-01
		U-238	1.390E+01

Total Dose TDOSE(t), mrem/yr
Basic Radiation Dose Limit = 2.500E+01 mrem/yr
Total Mixture Sum M(t) = Fraction of Basic Dose Limit Received at Time (t)

t (years):	0.000E+00	1.000E+00	3.000E+00	1.000E+01	3.000E+01	1.000E+02	3.000E+02	1.000E+03
TDOSE(t):	3.370E-03	3.663E-03	4.151E-03	5.020E-03	4.153E-03	4.920E-04	0.000E+00	0.000E+00
M(t):	1.348E-04	1.465E-04	1.660E-04	2.008E-04	1.661E-04	1.968E-05	0.000E+00	0.000E+00

aximum TDOSE(t): 5.105E-03 mrem/yr at t = 13.55 ñ 0.03 years

Total Dose Contributions TDOSE(i,p,t) for Individual Radionuclides (i) and Pathways (p)
As mrem/yr and Fraction of Total Dose At t = 1.355E+01 years

Water Independent Pathways (Inhalation excludes radon)

adio-	Ground		Inhalation		Radon		Plant		Meat		Milk		Soil	
uclide	mrem/yr	fract.	mrem/yr	fract.	mrem/yr	fract.	mrem/yr	fract.	mrem/yr	fract.	mrem/yr	fract.	mrem/yr	fract.
uclide														
a-226	0.000E+00	0.0000	0.000E+00	0.0000	6.105E-06	0.0012	0.000E+00	0.0000	0.000E+00	0.0000	0.000E+00	0.0000	4.393E-03	0.8606
h-232	0.000E+00	0.0000	0.000E+00	0.0000	3.667E-05	0.0072	0.000E+00	0.0000	0.000E+00	0.0000	0.000E+00	0.0000	4.722E-04	0.0925
-234	0.000E+00	0.0000	0.000E+00	0.0000	1.011E-12	0.0000	0.000E+00	0.0000	0.000E+00	0.0000	0.000E+00	0.0000	9.790E-05	0.0192
-235	0.000E+00	0.0000	0.000E+00	0.0000	0.000E+00	0.0000	0.000E+00	0.0000	0.000E+00	0.0000	0.000E+00	0.0000	5.667E-06	0.0011
-238	0.000E+00	0.0000	0.000E+00	0.0000	1.250E-17	0.0000	0.000E+00	0.0000	0.000E+00	0.0000	0.000E+00	0.0000	9.292E-05	0.0182
otal	0.000E+00	0.0000	0.000E+00	0.0000	4.277E-05	0.0084	0.000E+00	0.0000	0.000E+00	0.0000	0.000E+00	0.0000	5.062E-03	0.9916

Total Dose Contributions TDOSE(i,p,t) for Individual Radionuclides (i) and Pathways (p)
As mrem/yr and Fraction of Total Dose At t = 1.355E+01 years

Water Dependent Pathways

adio-	Water		Fish		Radon		Plant		Meat		Milk		All Pathways*	
uclide	mrem/yr	fract.	mrem/yr	fract.	mrem/yr	fract.	mrem/yr	fract.	mrem/yr	fract.	mrem/yr	fract.	mrem/yr	fract.
uclide														
a-226	0.000E+00	0.0000	0.000E+00	0.0000	0.000E+00	0.0000	0.000E+00	0.0000	0.000E+00	0.0000	0.000E+00	0.0000	4.399E-03	0.8618
h-232	0.000E+00	0.0000	0.000E+00	0.0000	0.000E+00	0.0000	0.000E+00	0.0000	0.000E+00	0.0000	0.000E+00	0.0000	5.089E-04	0.0997
-234	0.000E+00	0.0000	0.000E+00	0.0000	0.000E+00	0.0000	0.000E+00	0.0000	0.000E+00	0.0000	0.000E+00	0.0000	9.790E-05	0.0192
-235	0.000E+00	0.0000	0.000E+00	0.0000	0.000E+00	0.0000	0.000E+00	0.0000	0.000E+00	0.0000	0.000E+00	0.0000	5.667E-06	0.0011
-238	0.000E+00	0.0000	0.000E+00	0.0000	0.000E+00	0.0000	0.000E+00	0.0000	0.000E+00	0.0000	0.000E+00	0.0000	9.292E-05	0.0182
otal	0.000E+00	0.0000	0.000E+00	0.0000	0.000E+00	0.0000	0.000E+00	0.0000	0.000E+00	0.0000	0.000E+00	0.0000	5.105E-03	1.0000

Sum of all water independent and dependent pathways.

ummary : GKP Fire Fighter- Ingestion
ile : C:\USERS\CLAUDE\DOCUMENTS\0 GKP DOSE\RESRAD CW\GKP FIRE FIGHTER -INGESTION.RAD

Total Dose Contributions TDOSE(i,p,t) for Individual Radionuclides (i) and Pathways (p)
As mrem/yr and Fraction of Total Dose At t = 0.000E+00 years

Water Independent Pathways (Inhalation excludes radon)

	Ground		Inhalation		Radon		Plant		Meat		Milk		Soil	
adio-	ÄÄÄÄÄÄÄÄÄÄÄÄÄÄÄÄ		ÄÄÄÄÄÄÄÄÄÄÄÄÄÄÄÄ		ÄÄÄÄÄÄÄÄÄÄÄÄÄÄÄÄ		ÄÄÄÄÄÄÄÄÄÄÄÄÄÄÄÄ		ÄÄÄÄÄÄÄÄÄÄÄÄÄÄÄÄ		ÄÄÄÄÄÄÄÄÄÄÄÄÄÄÄÄ		ÄÄÄÄÄÄÄÄÄÄÄÄÄÄÄÄ	
uclide	mrem/yr	fract.	mrem/yr	fract.	mrem/yr	fract.	mrem/yr	fract.	mrem/yr	fract.	mrem/yr	fract.	mrem/yr	fract.
ÄÄÄÄÄÄ	ÄÄÄÄÄÄÄÄÄ	ÄÄÄÄÄÄ	ÄÄÄÄÄÄÄÄÄ	ÄÄÄÄÄÄ	ÄÄÄÄÄÄÄÄÄ	ÄÄÄÄÄÄ	ÄÄÄÄÄÄÄÄÄ	ÄÄÄÄÄÄ	ÄÄÄÄÄÄÄÄÄ	ÄÄÄÄÄÄ	ÄÄÄÄÄÄÄÄÄ	ÄÄÄÄÄÄ	ÄÄÄÄÄÄÄÄÄ	ÄÄÄÄÄÄ
a-226	0.000E+00	0.0000	0.000E+00	0.0000	1.035E-05	0.0031	0.000E+00	0.0000	0.000E+00	0.0000	0.000E+00	0.0000	2.622E-03	0.7779
n-232	0.000E+00	0.0000	0.000E+00	0.0000	3.712E-07	0.0001	0.000E+00	0.0000	0.000E+00	0.0000	0.000E+00	0.0000	3.444E-04	0.1022
-234	0.000E+00	0.0000	0.000E+00	0.0000	2.606E-15	0.0000	0.000E+00	0.0000	0.000E+00	0.0000	0.000E+00	0.0000	1.960E-04	0.0582
-235	0.000E+00	0.0000	0.000E+00	0.0000	0.000E+00	0.0000	0.000E+00	0.0000	0.000E+00	0.0000	0.000E+00	0.0000	1.119E-05	0.0033
-238	0.000E+00	0.0000	0.000E+00	0.0000	1.829E-21	0.0000	0.000E+00	0.0000	0.000E+00	0.0000	0.000E+00	0.0000	1.861E-04	0.0552
íííííí	íííííííííí	íííííí	íííííííííí	íííííí	íííííííííí	íííííí	íííííííííí	íííííí	íííííííííí	íííííí	íííííííííí	íííííí	íííííííííí	íííííí
otal	0.000E+00	0.0000	0.000E+00	0.0000	1.072E-05	0.0032	0.000E+00	0.0000	0.000E+00	0.0000	0.000E+00	0.0000	3.359E-03	0.9968

Total Dose Contributions TDOSE(i,p,t) for Individual Radionuclides (i) and Pathways (p)
As mrem/yr and Fraction of Total Dose At t = 0.000E+00 years

Water Dependent Pathways

	Water		Fish		Radon		Plant		Meat		Milk		All Pathways*	
adio-	ÄÄÄÄÄÄÄÄÄÄÄÄÄÄÄÄ		ÄÄÄÄÄÄÄÄÄÄÄÄÄÄÄÄ		ÄÄÄÄÄÄÄÄÄÄÄÄÄÄÄÄ		ÄÄÄÄÄÄÄÄÄÄÄÄÄÄÄÄ		ÄÄÄÄÄÄÄÄÄÄÄÄÄÄÄÄ		ÄÄÄÄÄÄÄÄÄÄÄÄÄÄÄÄ		ÄÄÄÄÄÄÄÄÄÄÄÄÄÄÄÄ	
uclide	mrem/yr	fract.	mrem/yr	fract.	mrem/yr	fract.	mrem/yr	fract.	mrem/yr	fract.	mrem/yr	fract.	mrem/yr	fract.
ÄÄÄÄÄÄ	ÄÄÄÄÄÄÄÄÄ	ÄÄÄÄÄÄ	ÄÄÄÄÄÄÄÄÄ	ÄÄÄÄÄÄ	ÄÄÄÄÄÄÄÄÄ	ÄÄÄÄÄÄ	ÄÄÄÄÄÄÄÄÄ	ÄÄÄÄÄÄ	ÄÄÄÄÄÄÄÄÄ	ÄÄÄÄÄÄ	ÄÄÄÄÄÄÄÄÄ	ÄÄÄÄÄÄ	ÄÄÄÄÄÄÄÄÄ	ÄÄÄÄÄÄ
a-226	0.000E+00	0.0000	0.000E+00	0.0000	0.000E+00	0.0000	0.000E+00	0.0000	0.000E+00	0.0000	0.000E+00	0.0000	2.632E-03	0.7810
n-232	0.000E+00	0.0000	0.000E+00	0.0000	0.000E+00	0.0000	0.000E+00	0.0000	0.000E+00	0.0000	0.000E+00	0.0000	3.448E-04	0.1023
-234	0.000E+00	0.0000	0.000E+00	0.0000	0.000E+00	0.0000	0.000E+00	0.0000	0.000E+00	0.0000	0.000E+00	0.0000	1.960E-04	0.0582
-235	0.000E+00	0.0000	0.000E+00	0.0000	0.000E+00	0.0000	0.000E+00	0.0000	0.000E+00	0.0000	0.000E+00	0.0000	1.119E-05	0.0033
-238	0.000E+00	0.0000	0.000E+00	0.0000	0.000E+00	0.0000	0.000E+00	0.0000	0.000E+00	0.0000	0.000E+00	0.0000	1.861E-04	0.0552
íííííí	íííííííííí	íííííí	íííííííííí	íííííí	íííííííííí	íííííí	íííííííííí	íííííí	íííííííííí	íííííí	íííííííííí	íííííí	íííííííííí	íííííí
otal	0.000E+00	0.0000	0.000E+00	0.0000	0.000E+00	0.0000	0.000E+00	0.0000	0.000E+00	0.0000	0.000E+00	0.0000	3.370E-03	1.0000

Sum of all water independent and dependent pathways.

ummary : GKP Fire Fighter- Ingestion
ile : C:\USERS\CLAUDE\DOCUMENTS\0 GKP DOSE\RESRAD CW\GKP FIRE FIGHTER -INGESTION.RAD

Total Dose Contributions TDOSE(i,p,t) for Individual Radionuclides (i) and Pathways (p)
As mrem/yr and Fraction of Total Dose At t = 1.000E+00 years

Water Independent Pathways (Inhalation excludes radon)

	Ground		Inhalation		Radon		Plant		Meat		Milk		Soil	
adio-	ÄÄÄÄÄÄÄÄÄÄÄÄÄÄÄÄ		ÄÄÄÄÄÄÄÄÄÄÄÄÄÄÄÄ		ÄÄÄÄÄÄÄÄÄÄÄÄÄÄÄÄ		ÄÄÄÄÄÄÄÄÄÄÄÄÄÄÄÄ		ÄÄÄÄÄÄÄÄÄÄÄÄÄÄÄÄ		ÄÄÄÄÄÄÄÄÄÄÄÄÄÄÄÄ		ÄÄÄÄÄÄÄÄÄÄÄÄÄÄÄÄ	
uclide	mrem/yr	fract.	mrem/yr	fract.	mrem/yr	fract.	mrem/yr	fract.	mrem/yr	fract.	mrem/yr	fract.	mrem/yr	fract.
ÄÄÄÄÄÄ	ÄÄÄÄÄÄÄÄÄ	ÄÄÄÄÄÄ	ÄÄÄÄÄÄÄÄÄ	ÄÄÄÄÄÄ	ÄÄÄÄÄÄÄÄÄ	ÄÄÄÄÄÄ	ÄÄÄÄÄÄÄÄÄ	ÄÄÄÄÄÄ	ÄÄÄÄÄÄÄÄÄ	ÄÄÄÄÄÄ	ÄÄÄÄÄÄÄÄÄ	ÄÄÄÄÄÄ	ÄÄÄÄÄÄÄÄÄ	ÄÄÄÄÄÄ
a-226	0.000E+00	0.0000	0.000E+00	0.0000	9.961E-06	0.0027	0.000E+00	0.0000	0.000E+00	0.0000	0.000E+00	0.0000	2.913E-03	0.7954
n-232	0.000E+00	0.0000	0.000E+00	0.0000	2.256E-06	0.0006	0.000E+00	0.0000	0.000E+00	0.0000	0.000E+00	0.0000	3.635E-04	0.0992
-234	0.000E+00	0.0000	0.000E+00	0.0000	1.775E-14	0.0000	0.000E+00	0.0000	0.000E+00	0.0000	0.000E+00	0.0000	1.862E-04	0.0508
-235	0.000E+00	0.0000	0.000E+00	0.0000	0.000E+00	0.0000	0.000E+00	0.0000	0.000E+00	0.0000	0.000E+00	0.0000	1.065E-05	0.0029
-238	0.000E+00	0.0000	0.000E+00	0.0000	2.659E-20	0.0000	0.000E+00	0.0000	0.000E+00	0.0000	0.000E+00	0.0000	1.768E-04	0.0483
íííííí	íííííííííí	íííííí	íííííííííí	íííííí	íííííííííí	íííííí	íííííííííí	íííííí	íííííííííí	íííííí	íííííííííí	íííííí	íííííííííí	íííííí
otal	0.000E+00	0.0000	0.000E+00	0.0000	1.222E-05	0.0033	0.000E+00	0.0000	0.000E+00	0.0000	0.000E+00	0.0000	3.650E-03	0.9967

Total Dose Contributions TDOSE(i,p,t) for Individual Radionuclides (i) and Pathways (p)
As mrem/yr and Fraction of Total Dose At t = 1.000E+00 years

Water Dependent Pathways

	Water		Fish		Radon		Plant		Meat		Milk		All Pathways*	
adio-	ÄÄÄÄÄÄÄÄÄÄÄÄÄÄÄÄ		ÄÄÄÄÄÄÄÄÄÄÄÄÄÄÄÄ		ÄÄÄÄÄÄÄÄÄÄÄÄÄÄÄÄ		ÄÄÄÄÄÄÄÄÄÄÄÄÄÄÄÄ		ÄÄÄÄÄÄÄÄÄÄÄÄÄÄÄÄ		ÄÄÄÄÄÄÄÄÄÄÄÄÄÄÄÄ		ÄÄÄÄÄÄÄÄÄÄÄÄÄÄÄÄ	
uclide	mrem/yr	fract.	mrem/yr	fract.	mrem/yr	fract.	mrem/yr	fract.	mrem/yr	fract.	mrem/yr	fract.	mrem/yr	fract.
ÄÄÄÄÄÄ	ÄÄÄÄÄÄÄÄÄ	ÄÄÄÄÄÄ	ÄÄÄÄÄÄÄÄÄ	ÄÄÄÄÄÄ	ÄÄÄÄÄÄÄÄÄ	ÄÄÄÄÄÄ	ÄÄÄÄÄÄÄÄÄ	ÄÄÄÄÄÄ	ÄÄÄÄÄÄÄÄÄ	ÄÄÄÄÄÄ	ÄÄÄÄÄÄÄÄÄ	ÄÄÄÄÄÄ	ÄÄÄÄÄÄÄÄÄ	ÄÄÄÄÄÄ
a-226	0.000E+00	0.0000	0.000E+00	0.0000	0.000E+00	0.0000	0.000E+00	0.0000	0.000E+00	0.0000	0.000E+00	0.0000	2.923E-03	0.7981
n-232	0.000E+00	0.0000	0.000E+00	0.0000	0.000E+00	0.0000	0.000E+00	0.0000	0.000E+00	0.0000	0.000E+00	0.0000	3.657E-04	0.0999
-234	0.000E+00	0.0000	0.000E+00	0.0000	0.000E+00	0.0000	0.000E+00	0.0000	0.000E+00	0.0000	0.000E+00	0.0000	1.862E-04	0.0508
-235	0.000E+00	0.0000	0.000E+00	0.0000	0.000E+00	0.0000	0.000E+00	0.0000	0.000E+00	0.0000	0.000E+00	0.0000	1.065E-05	0.0029
-238	0.000E+00	0.0000	0.000E+00	0.0000	0.000E+00	0.0000	0.000E+00	0.0000	0.000E+00	0.0000	0.000E+00	0.0000	1.768E-04	0.0483
íííííí	íííííííííí	íííííí	íííííííííí	íííííí	íííííííííí	íííííí	íííííííííí	íííííí	íííííííííí	íííííí	íííííííííí	íííííí	íííííííííí	íííííí
otal	0.000E+00	0.0000	0.000E+00	0.0000	0.000E+00	0.0000	0.000E+00	0.0000	0.000E+00	0.0000	0.000E+00	0.0000	3.663E-03	1.0000

Sum of all water independent and dependent pathways.

ummary : GKP Fire Fighter- Ingestion
ile : C:\USERS\CLAUDE\DOCUMENTS\0 GKP DOSE\RESRAD CW\GKP FIRE FIGHTER -INGESTION.RAD

Total Dose Contributions TDOSE(i,p,t) for Individual Radionuclides (i) and Pathways (p)
As mrem/yr and Fraction of Total Dose At t = 3.000E+00 years

Water Independent Pathways (Inhalation excludes radon)

	Ground		Inhalation		Radon		Plant		Meat		Milk		Soil	
adio-	ÄÄÄÄÄÄÄÄÄÄÄÄÄÄÄÄ		ÄÄÄÄÄÄÄÄÄÄÄÄÄÄÄÄ		ÄÄÄÄÄÄÄÄÄÄÄÄÄÄÄÄ		ÄÄÄÄÄÄÄÄÄÄÄÄÄÄÄÄ		ÄÄÄÄÄÄÄÄÄÄÄÄÄÄÄÄ		ÄÄÄÄÄÄÄÄÄÄÄÄÄÄÄÄ		ÄÄÄÄÄÄÄÄÄÄÄÄÄÄÄÄ	
uclide	mrem/yr	fract.	mrem/yr	fract.	mrem/yr	fract.	mrem/yr	fract.	mrem/yr	fract.	mrem/yr	fract.	mrem/yr	fract.
ÄÄÄÄÄÄ	ÄÄÄÄÄÄÄÄÄ	ÄÄÄÄÄÄ	ÄÄÄÄÄÄÄÄÄ	ÄÄÄÄÄÄ	ÄÄÄÄÄÄÄÄÄ	ÄÄÄÄÄÄ	ÄÄÄÄÄÄÄÄÄ	ÄÄÄÄÄÄ	ÄÄÄÄÄÄÄÄÄ	ÄÄÄÄÄÄ	ÄÄÄÄÄÄÄÄÄ	ÄÄÄÄÄÄ	ÄÄÄÄÄÄÄÄÄ	ÄÄÄÄÄÄ
a-226	0.000E+00	0.0000	0.000E+00	0.0000	9.218E-06	0.0022	0.000E+00	0.0000	0.000E+00	0.0000	0.000E+00	0.0000	3.397E-03	0.8184
n-232	0.000E+00	0.0000	0.000E+00	0.0000	8.783E-06	0.0021	0.000E+00	0.0000	0.000E+00	0.0000	0.000E+00	0.0000	3.981E-04	0.0959
-234	0.000E+00	0.0000	0.000E+00	0.0000	8.817E-14	0.0000	0.000E+00	0.0000	0.000E+00	0.0000	0.000E+00	0.0000	1.682E-04	0.0405
-235	0.000E+00	0.0000	0.000E+00	0.0000	0.000E+00	0.0000	0.000E+00	0.0000	0.000E+00	0.0000	0.000E+00	0.0000	9.631E-06	0.0023
-238	0.000E+00	0.0000	0.000E+00	0.0000	2.892E-19	0.0000	0.000E+00	0.0000	0.000E+00	0.0000	0.000E+00	0.0000	1.597E-04	0.0385
íííííí	íííííííííí	íííííí	íííííííííí	íííííí	íííííííííí	íííííí	íííííííííí	íííííí	íííííííííí	íííííí	íííííííííí	íííííí	íííííííííí	íííííí
otal	0.000E+00	0.0000	0.000E+00	0.0000	1.800E-05	0.0043	0.000E+00	0.0000	0.000E+00	0.0000	0.000E+00	0.0000	4.133E-03	0.9957

Total Dose Contributions TDOSE(i,p,t) for Individual Radionuclides (i) and Pathways (p)
As mrem/yr and Fraction of Total Dose At t = 3.000E+00 years

Water Dependent Pathways

	Water		Fish		Radon		Plant		Meat		Milk		All Pathways*	
adio-	ÄÄÄÄÄÄÄÄÄÄÄÄÄÄÄÄ		ÄÄÄÄÄÄÄÄÄÄÄÄÄÄÄÄ		ÄÄÄÄÄÄÄÄÄÄÄÄÄÄÄÄ		ÄÄÄÄÄÄÄÄÄÄÄÄÄÄÄÄ		ÄÄÄÄÄÄÄÄÄÄÄÄÄÄÄÄ		ÄÄÄÄÄÄÄÄÄÄÄÄÄÄÄÄ		ÄÄÄÄÄÄÄÄÄÄÄÄÄÄÄÄ	
uclide	mrem/yr	fract.	mrem/yr	fract.	mrem/yr	fract.	mrem/yr	fract.	mrem/yr	fract.	mrem/yr	fract.	mrem/yr	fract.
ÄÄÄÄÄÄ	ÄÄÄÄÄÄÄÄÄ	ÄÄÄÄÄÄ	ÄÄÄÄÄÄÄÄÄ	ÄÄÄÄÄÄ	ÄÄÄÄÄÄÄÄÄ	ÄÄÄÄÄÄ	ÄÄÄÄÄÄÄÄÄ	ÄÄÄÄÄÄ	ÄÄÄÄÄÄÄÄÄ	ÄÄÄÄÄÄ	ÄÄÄÄÄÄÄÄÄ	ÄÄÄÄÄÄ	ÄÄÄÄÄÄÄÄÄ	ÄÄÄÄÄÄ
a-226	0.000E+00	0.0000	0.000E+00	0.0000	0.000E+00	0.0000	0.000E+00	0.0000	0.000E+00	0.0000	0.000E+00	0.0000	3.406E-03	0.8207
n-232	0.000E+00	0.0000	0.000E+00	0.0000	0.000E+00	0.0000	0.000E+00	0.0000	0.000E+00	0.0000	0.000E+00	0.0000	4.069E-04	0.0980
-234	0.000E+00	0.0000	0.000E+00	0.0000	0.000E+00	0.0000	0.000E+00	0.0000	0.000E+00	0.0000	0.000E+00	0.0000	1.682E-04	0.0405
-235	0.000E+00	0.0000	0.000E+00	0.0000	0.000E+00	0.0000	0.000E+00	0.0000	0.000E+00	0.0000	0.000E+00	0.0000	9.631E-06	0.0023
-238	0.000E+00	0.0000	0.000E+00	0.0000	0.000E+00	0.0000	0.000E+00	0.0000	0.000E+00	0.0000	0.000E+00	0.0000	1.597E-04	0.0385
íííííí	íííííííííí	íííííí	íííííííííí	íííííí	íííííííííí	íííííí	íííííííííí	íííííí	íííííííííí	íííííí	íííííííííí	íííííí	íííííííííí	íííííí
otal	0.000E+00	0.0000	0.000E+00	0.0000	0.000E+00	0.0000	0.000E+00	0.0000	0.000E+00	0.0000	0.000E+00	0.0000	4.151E-03	1.0000

Sum of all water independent and dependent pathways.

ummary : GKP Fire Fighter- Ingestion
ile : C:\USERS\CLAUDE\DOCUMENTS\0 GKP DOSE\RESRAD CW\GKP FIRE FIGHTER -INGESTION.RAD

Total Dose Contributions TDOSE(i,p,t) for Individual Radionuclides (i) and Pathways (p)
As mrem/yr and Fraction of Total Dose At t = 1.000E+01 years

Water Independent Pathways (Inhalation excludes radon)

	Ground		Inhalation		Radon		Plant		Meat		Milk		Soil	
adio-	ÄÄÄÄÄÄÄÄÄÄÄÄÄÄÄÄ		ÄÄÄÄÄÄÄÄÄÄÄÄÄÄÄÄ		ÄÄÄÄÄÄÄÄÄÄÄÄÄÄÄÄ		ÄÄÄÄÄÄÄÄÄÄÄÄÄÄÄÄ		ÄÄÄÄÄÄÄÄÄÄÄÄÄÄÄÄ		ÄÄÄÄÄÄÄÄÄÄÄÄÄÄÄÄ		ÄÄÄÄÄÄÄÄÄÄÄÄÄÄÄÄ		ÄÄÄÄÄÄÄÄÄÄÄÄÄÄÄÄ	
uclide	mrem/yr	fract.	mrem/yr	fract.	mrem/yr	fract.	mrem/yr	fract.	mrem/yr	fract.	mrem/yr	fract.	mrem/yr	fract.
ÄÄÄÄÄÄ	ÄÄÄÄÄÄÄÄÄ	ÄÄÄÄÄÄ	ÄÄÄÄÄÄÄÄÄ	ÄÄÄÄÄÄ	ÄÄÄÄÄÄÄÄÄ	ÄÄÄÄÄÄ	ÄÄÄÄÄÄÄÄÄ	ÄÄÄÄÄÄ	ÄÄÄÄÄÄÄÄÄ	ÄÄÄÄÄÄ	ÄÄÄÄÄÄÄÄÄ	ÄÄÄÄÄÄ	ÄÄÄÄÄÄÄÄÄ	ÄÄÄÄÄÄ
a-226	0.000E+00	0.0000	0.000E+00	0.0000	7.017E-06	0.0014	0.000E+00	0.0000	0.000E+00	0.0000	0.000E+00	0.0000	4.282E-03	0.8531
h-232	0.000E+00	0.0000	0.000E+00	0.0000	3.055E-05	0.0061	0.000E+00	0.0000	0.000E+00	0.0000	0.000E+00	0.0000	4.638E-04	0.0924
-234	0.000E+00	0.0000	0.000E+00	0.0000	6.322E-13	0.0000	0.000E+00	0.0000	0.000E+00	0.0000	0.000E+00	0.0000	1.175E-04	0.0234
-235	0.000E+00	0.0000	0.000E+00	0.0000	0.000E+00	0.0000	0.000E+00	0.0000	0.000E+00	0.0000	0.000E+00	0.0000	6.776E-06	0.0013
-238	0.000E+00	0.0000	0.000E+00	0.0000	5.947E-18	0.0000	0.000E+00	0.0000	0.000E+00	0.0000	0.000E+00	0.0000	1.115E-04	0.0222
íííííí	íííííííííí	íííííí	íííííííííí	íííííí	íííííííííí	íííííí	íííííííííí	íííííí	íííííííííí	íííííí	íííííííííí	íííííí	íííííííííí	íííííí
otal	0.000E+00	0.0000	0.000E+00	0.0000	3.756E-05	0.0075	0.000E+00	0.0000	0.000E+00	0.0000	0.000E+00	0.0000	4.982E-03	0.9925

Total Dose Contributions TDOSE(i,p,t) for Individual Radionuclides (i) and Pathways (p)
As mrem/yr and Fraction of Total Dose At t = 1.000E+01 years

Water Dependent Pathways

	Water		Fish		Radon		Plant		Meat		Milk		All Pathways*	
adio-	ÄÄÄÄÄÄÄÄÄÄÄÄÄÄÄÄ		ÄÄÄÄÄÄÄÄÄÄÄÄÄÄÄÄ		ÄÄÄÄÄÄÄÄÄÄÄÄÄÄÄÄ		ÄÄÄÄÄÄÄÄÄÄÄÄÄÄÄÄ		ÄÄÄÄÄÄÄÄÄÄÄÄÄÄÄÄ		ÄÄÄÄÄÄÄÄÄÄÄÄÄÄÄÄ		ÄÄÄÄÄÄÄÄÄÄÄÄÄÄÄÄ	
uclide	mrem/yr	fract.	mrem/yr	fract.	mrem/yr	fract.	mrem/yr	fract.	mrem/yr	fract.	mrem/yr	fract.	mrem/yr	fract.
ÄÄÄÄÄÄ	ÄÄÄÄÄÄÄÄÄ	ÄÄÄÄÄÄ	ÄÄÄÄÄÄÄÄÄ	ÄÄÄÄÄÄ	ÄÄÄÄÄÄÄÄÄ	ÄÄÄÄÄÄ	ÄÄÄÄÄÄÄÄÄ	ÄÄÄÄÄÄ	ÄÄÄÄÄÄÄÄÄ	ÄÄÄÄÄÄ	ÄÄÄÄÄÄÄÄÄ	ÄÄÄÄÄÄ	ÄÄÄÄÄÄÄÄÄ	ÄÄÄÄÄÄ
a-226	0.000E+00	0.0000	0.000E+00	0.0000	0.000E+00	0.0000	0.000E+00	0.0000	0.000E+00	0.0000	0.000E+00	0.0000	4.289E-03	0.8545
h-232	0.000E+00	0.0000	0.000E+00	0.0000	0.000E+00	0.0000	0.000E+00	0.0000	0.000E+00	0.0000	0.000E+00	0.0000	4.944E-04	0.0985
-234	0.000E+00	0.0000	0.000E+00	0.0000	0.000E+00	0.0000	0.000E+00	0.0000	0.000E+00	0.0000	0.000E+00	0.0000	1.175E-04	0.0234
-235	0.000E+00	0.0000	0.000E+00	0.0000	0.000E+00	0.0000	0.000E+00	0.0000	0.000E+00	0.0000	0.000E+00	0.0000	6.776E-06	0.0013
-238	0.000E+00	0.0000	0.000E+00	0.0000	0.000E+00	0.0000	0.000E+00	0.0000	0.000E+00	0.0000	0.000E+00	0.0000	1.115E-04	0.0222
íííííí	íííííííííí	íííííí	íííííííííí	íííííí	íííííííííí	íííííí	íííííííííí	íííííí	íííííííííí	íííííí	íííííííííí	íííííí	íííííííííí	íííííí
otal	0.000E+00	0.0000	0.000E+00	0.0000	0.000E+00	0.0000	0.000E+00	0.0000	0.000E+00	0.0000	0.000E+00	0.0000	5.020E-03	1.0000

Sum of all water independent and dependent pathways.

ummary : GKP Fire Fighter- Ingestion
ile : C:\USERS\CLAUDE\DOCUMENTS\0 GKP DOSE\RESRAD CW\GKP FIRE FIGHTER -INGESTION.RAD

Total Dose Contributions TDOSE(i,p,t) for Individual Radionuclides (i) and Pathways (p)
As mrem/yr and Fraction of Total Dose At t = 3.000E+01 years

Water Independent Pathways (Inhalation excludes radon)

	Ground		Inhalation		Radon		Plant		Meat		Milk		Soil	
adio-	ÄÄÄÄÄÄÄÄÄÄÄÄÄÄÄÄ		ÄÄÄÄÄÄÄÄÄÄÄÄÄÄÄÄ		ÄÄÄÄÄÄÄÄÄÄÄÄÄÄÄÄ		ÄÄÄÄÄÄÄÄÄÄÄÄÄÄÄÄ		ÄÄÄÄÄÄÄÄÄÄÄÄÄÄÄÄ		ÄÄÄÄÄÄÄÄÄÄÄÄÄÄÄÄ		ÄÄÄÄÄÄÄÄÄÄÄÄÄÄÄÄ	
uclide	mrem/yr	fract.	mrem/yr	fract.	mrem/yr	fract.	mrem/yr	fract.	mrem/yr	fract.	mrem/yr	fract.	mrem/yr	fract.
ÄÄÄÄÄÄ	ÄÄÄÄÄÄÄÄÄ	ÄÄÄÄÄÄ	ÄÄÄÄÄÄÄÄÄ	ÄÄÄÄÄÄ	ÄÄÄÄÄÄÄÄÄ	ÄÄÄÄÄÄ	ÄÄÄÄÄÄÄÄÄ	ÄÄÄÄÄÄ	ÄÄÄÄÄÄÄÄÄ	ÄÄÄÄÄÄ	ÄÄÄÄÄÄÄÄÄ	ÄÄÄÄÄÄ	ÄÄÄÄÄÄÄÄÄ	ÄÄÄÄÄÄ
a-226	0.000E+00	0.0000	0.000E+00	0.0000	3.170E-06	0.0008	0.000E+00	0.0000	0.000E+00	0.0000	0.000E+00	0.0000	3.583E-03	0.8628
h-232	0.000E+00	0.0000	0.000E+00	0.0000	4.499E-05	0.0108	0.000E+00	0.0000	0.000E+00	0.0000	0.000E+00	0.0000	4.383E-04	0.1055
-234	0.000E+00	0.0000	0.000E+00	0.0000	2.854E-12	0.0000	0.000E+00	0.0000	0.000E+00	0.0000	0.000E+00	0.0000	4.157E-05	0.0100
-235	0.000E+00	0.0000	0.000E+00	0.0000	0.000E+00	0.0000	0.000E+00	0.0000	0.000E+00	0.0000	0.000E+00	0.0000	2.450E-06	0.0006
-238	0.000E+00	0.0000	0.000E+00	0.0000	7.030E-17	0.0000	0.000E+00	0.0000	0.000E+00	0.0000	0.000E+00	0.0000	3.943E-05	0.0095
íííííí	íííííííííí	íííííí	íííííííííí	íííííí	íííííííííí	íííííí	íííííííííí	íííííí	íííííííííí	íííííí	íííííííííí	íííííí	íííííííííí	íííííí
otal	0.000E+00	0.0000	0.000E+00	0.0000	4.816E-05	0.0116	0.000E+00	0.0000	0.000E+00	0.0000	0.000E+00	0.0000	4.105E-03	0.9884

Total Dose Contributions TDOSE(i,p,t) for Individual Radionuclides (i) and Pathways (p)
As mrem/yr and Fraction of Total Dose At t = 3.000E+01 years

Water Dependent Pathways

	Water		Fish		Radon		Plant		Meat		Milk		All Pathways*	
adio-	ÄÄÄÄÄÄÄÄÄÄÄÄÄÄÄÄ		ÄÄÄÄÄÄÄÄÄÄÄÄÄÄÄÄ		ÄÄÄÄÄÄÄÄÄÄÄÄÄÄÄÄ		ÄÄÄÄÄÄÄÄÄÄÄÄÄÄÄÄ		ÄÄÄÄÄÄÄÄÄÄÄÄÄÄÄÄ		ÄÄÄÄÄÄÄÄÄÄÄÄÄÄÄÄ		ÄÄÄÄÄÄÄÄÄÄÄÄÄÄÄÄ	
uclide	mrem/yr	fract.	mrem/yr	fract.	mrem/yr	fract.	mrem/yr	fract.	mrem/yr	fract.	mrem/yr	fract.	mrem/yr	fract.
ÄÄÄÄÄÄ	ÄÄÄÄÄÄÄÄÄ	ÄÄÄÄÄÄ	ÄÄÄÄÄÄÄÄÄ	ÄÄÄÄÄÄ	ÄÄÄÄÄÄÄÄÄ	ÄÄÄÄÄÄ	ÄÄÄÄÄÄÄÄÄ	ÄÄÄÄÄÄ	ÄÄÄÄÄÄÄÄÄ	ÄÄÄÄÄÄ	ÄÄÄÄÄÄÄÄÄ	ÄÄÄÄÄÄ	ÄÄÄÄÄÄÄÄÄ	ÄÄÄÄÄÄ
a-226	0.000E+00	0.0000	0.000E+00	0.0000	0.000E+00	0.0000	0.000E+00	0.0000	0.000E+00	0.0000	0.000E+00	0.0000	3.586E-03	0.8635
h-232	0.000E+00	0.0000	0.000E+00	0.0000	0.000E+00	0.0000	0.000E+00	0.0000	0.000E+00	0.0000	0.000E+00	0.0000	4.833E-04	0.1164
-234	0.000E+00	0.0000	0.000E+00	0.0000	0.000E+00	0.0000	0.000E+00	0.0000	0.000E+00	0.0000	0.000E+00	0.0000	4.157E-05	0.0100
-235	0.000E+00	0.0000	0.000E+00	0.0000	0.000E+00	0.0000	0.000E+00	0.0000	0.000E+00	0.0000	0.000E+00	0.0000	2.450E-06	0.0006
-238	0.000E+00	0.0000	0.000E+00	0.0000	0.000E+00	0.0000	0.000E+00	0.0000	0.000E+00	0.0000	0.000E+00	0.0000	3.943E-05	0.0095
íííííí	íííííííííí	íííííí	íííííííííí	íííííí	íííííííííí	íííííí	íííííííííí	íííííí	íííííííííí	íííííí	íííííííííí	íííííí	íííííííííí	íííííí
otal	0.000E+00	0.0000	0.000E+00	0.0000	0.000E+00	0.0000	0.000E+00	0.0000	0.000E+00	0.0000	0.000E+00	0.0000	4.153E-03	1.0000

Sum of all water independent and dependent pathways.

ummary : GKP Fire Fighter- Ingestion
ile : C:\USERS\CLAUDE\DOCUMENTS\0 GKP DOSE\RESRAD CW\GKP FIRE FIGHTER -INGESTION.RAD

Total Dose Contributions TDOSE(i,p,t) for Individual Radionuclides (i) and Pathways (p)
As mrem/yr and Fraction of Total Dose At t = 1.000E+02 years

Water Independent Pathways (Inhalation excludes radon)

	Ground		Inhalation		Radon		Plant		Meat		Milk		Soil	
adio-														
uclide	mrem/yr	fract.	mrem/yr	fract.	mrem/yr	fract.	mrem/yr	fract.	mrem/yr	fract.	mrem/yr	fract.	mrem/yr	fract.
a-226	0.000E+00	0.0000	0.000E+00	0.0000	1.396E-07	0.0003	0.000E+00	0.0000	0.000E+00	0.0000	0.000E+00	0.0000	2.627E-04	0.5340
n-232	0.000E+00	0.0000	0.000E+00	0.0000	4.554E-05	0.0926	0.000E+00	0.0000	0.000E+00	0.0000	0.000E+00	0.0000	1.820E-04	0.3699
-234	0.000E+00	0.0000	0.000E+00	0.0000	3.313E-12	0.0000	0.000E+00	0.0000	0.000E+00	0.0000	0.000E+00	0.0000	8.057E-07	0.0016
-235	0.000E+00	0.0000	0.000E+00	0.0000	0.000E+00	0.0000	0.000E+00	0.0000	0.000E+00	0.0000	0.000E+00	0.0000	4.960E-08	0.0001
-238	0.000E+00	0.0000	0.000E+00	0.0000	1.800E-16	0.0000	0.000E+00	0.0000	0.000E+00	0.0000	0.000E+00	0.0000	7.376E-07	0.0015
otal	0.000E+00	0.0000	0.000E+00	0.0000	4.568E-05	0.0929	0.000E+00	0.0000	0.000E+00	0.0000	0.000E+00	0.0000	4.463E-04	0.9071

Total Dose Contributions TDOSE(i,p,t) for Individual Radionuclides (i) and Pathways (p)
As mrem/yr and Fraction of Total Dose At t = 1.000E+02 years

Water Dependent Pathways

	Water		Fish		Radon		Plant		Meat		Milk		All Pathways*	
adio-														
uclide	mrem/yr	fract.	mrem/yr	fract.	mrem/yr	fract.	mrem/yr	fract.	mrem/yr	fract.	mrem/yr	fract.	mrem/yr	fract.
a-226	0.000E+00	0.0000	0.000E+00	0.0000	0.000E+00	0.0000	0.000E+00	0.0000	0.000E+00	0.0000	0.000E+00	0.0000	2.629E-04	0.5343
n-232	0.000E+00	0.0000	0.000E+00	0.0000	0.000E+00	0.0000	0.000E+00	0.0000	0.000E+00	0.0000	0.000E+00	0.0000	2.275E-04	0.4625
-234	0.000E+00	0.0000	0.000E+00	0.0000	0.000E+00	0.0000	0.000E+00	0.0000	0.000E+00	0.0000	0.000E+00	0.0000	8.057E-07	0.0016
-235	0.000E+00	0.0000	0.000E+00	0.0000	0.000E+00	0.0000	0.000E+00	0.0000	0.000E+00	0.0000	0.000E+00	0.0000	4.960E-08	0.0001
-238	0.000E+00	0.0000	0.000E+00	0.0000	0.000E+00	0.0000	0.000E+00	0.0000	0.000E+00	0.0000	0.000E+00	0.0000	7.376E-07	0.0015
otal	0.000E+00	0.0000	0.000E+00	0.0000	0.000E+00	0.0000	0.000E+00	0.0000	0.000E+00	0.0000	0.000E+00	0.0000	4.920E-04	1.0000

Sum of all water independent and dependent pathways.

ummary : GKP Fire Fighter- Ingestion
ile : C:\USERS\CLAUDE\DOCUMENTS\0 GKP DOSE\RESRAD CW\GKP FIRE FIGHTER -INGESTION.RAD

Total Dose Contributions TDOSE(i,p,t) for Individual Radionuclides (i) and Pathways (p)
As mrem/yr and Fraction of Total Dose At t = 3.000E+02 years

Water Independent Pathways (Inhalation excludes radon)

	Ground		Inhalation		Radon		Plant		Meat		Milk		Soil	
adio-	ÄÄÄÄÄÄÄÄÄÄÄÄÄÄÄÄ		ÄÄÄÄÄÄÄÄÄÄÄÄÄÄÄÄ		ÄÄÄÄÄÄÄÄÄÄÄÄÄÄÄÄ		ÄÄÄÄÄÄÄÄÄÄÄÄÄÄÄÄ		ÄÄÄÄÄÄÄÄÄÄÄÄÄÄÄÄ		ÄÄÄÄÄÄÄÄÄÄÄÄÄÄÄÄ		ÄÄÄÄÄÄÄÄÄÄÄÄÄÄÄÄ	
uclide	mrem/yr	fract.	mrem/yr	fract.	mrem/yr	fract.	mrem/yr	fract.	mrem/yr	fract.	mrem/yr	fract.	mrem/yr	fract.
ÄÄÄÄÄÄ	ÄÄÄÄÄÄÄÄÄ	ÄÄÄÄÄÄ	ÄÄÄÄÄÄÄÄÄ	ÄÄÄÄÄÄ	ÄÄÄÄÄÄÄÄÄ	ÄÄÄÄÄÄ	ÄÄÄÄÄÄÄÄÄ	ÄÄÄÄÄÄ	ÄÄÄÄÄÄÄÄÄ	ÄÄÄÄÄÄ	ÄÄÄÄÄÄÄÄÄ	ÄÄÄÄÄÄ	ÄÄÄÄÄÄÄÄÄ	ÄÄÄÄÄÄ
a-226	0.000E+00	0.0000	0.000E+00	0.0000	0.000E+00	0.0000	0.000E+00	0.0000	0.000E+00	0.0000	0.000E+00	0.0000	0.000E+00	0.0000
h-232	0.000E+00	0.0000	0.000E+00	0.0000	0.000E+00	0.0000	0.000E+00	0.0000	0.000E+00	0.0000	0.000E+00	0.0000	0.000E+00	0.0000
-234	0.000E+00	0.0000	0.000E+00	0.0000	0.000E+00	0.0000	0.000E+00	0.0000	0.000E+00	0.0000	0.000E+00	0.0000	0.000E+00	0.0000
-235	0.000E+00	0.0000	0.000E+00	0.0000	0.000E+00	0.0000	0.000E+00	0.0000	0.000E+00	0.0000	0.000E+00	0.0000	0.000E+00	0.0000
-238	0.000E+00	0.0000	0.000E+00	0.0000	0.000E+00	0.0000	0.000E+00	0.0000	0.000E+00	0.0000	0.000E+00	0.0000	0.000E+00	0.0000
íííííí	íííííííííí	íííííí	íííííííííí	íííííí	íííííííííí	íííííí	íííííííííí	íííííí	íííííííííí	íííííí	íííííííííí	íííííí	íííííííííí	íííííí
otal	0.000E+00	0.0000	0.000E+00	0.0000	0.000E+00	0.0000	0.000E+00	0.0000	0.000E+00	0.0000	0.000E+00	0.0000	0.000E+00	0.0000

Total Dose Contributions TDOSE(i,p,t) for Individual Radionuclides (i) and Pathways (p)
As mrem/yr and Fraction of Total Dose At t = 3.000E+02 years

Water Dependent Pathways

	Water		Fish		Radon		Plant		Meat		Milk		All Pathways*	
adio-	ÄÄÄÄÄÄÄÄÄÄÄÄÄÄÄÄ		ÄÄÄÄÄÄÄÄÄÄÄÄÄÄÄÄ		ÄÄÄÄÄÄÄÄÄÄÄÄÄÄÄÄ		ÄÄÄÄÄÄÄÄÄÄÄÄÄÄÄÄ		ÄÄÄÄÄÄÄÄÄÄÄÄÄÄÄÄ		ÄÄÄÄÄÄÄÄÄÄÄÄÄÄÄÄ		ÄÄÄÄÄÄÄÄÄÄÄÄÄÄÄÄ	
uclide	mrem/yr	fract.	mrem/yr	fract.	mrem/yr	fract.	mrem/yr	fract.	mrem/yr	fract.	mrem/yr	fract.	mrem/yr	fract.
ÄÄÄÄÄÄ	ÄÄÄÄÄÄÄÄÄ	ÄÄÄÄÄÄ	ÄÄÄÄÄÄÄÄÄ	ÄÄÄÄÄÄ	ÄÄÄÄÄÄÄÄÄ	ÄÄÄÄÄÄ	ÄÄÄÄÄÄÄÄÄ	ÄÄÄÄÄÄ	ÄÄÄÄÄÄÄÄÄ	ÄÄÄÄÄÄ	ÄÄÄÄÄÄÄÄÄ	ÄÄÄÄÄÄ	ÄÄÄÄÄÄÄÄÄ	ÄÄÄÄÄÄ
a-226	0.000E+00	0.0000	0.000E+00	0.0000	0.000E+00	0.0000	0.000E+00	0.0000	0.000E+00	0.0000	0.000E+00	0.0000	0.000E+00	0.0000
h-232	0.000E+00	0.0000	0.000E+00	0.0000	0.000E+00	0.0000	0.000E+00	0.0000	0.000E+00	0.0000	0.000E+00	0.0000	0.000E+00	0.0000
-234	0.000E+00	0.0000	0.000E+00	0.0000	0.000E+00	0.0000	0.000E+00	0.0000	0.000E+00	0.0000	0.000E+00	0.0000	0.000E+00	0.0000
-235	0.000E+00	0.0000	0.000E+00	0.0000	0.000E+00	0.0000	0.000E+00	0.0000	0.000E+00	0.0000	0.000E+00	0.0000	0.000E+00	0.0000
-238	0.000E+00	0.0000	0.000E+00	0.0000	0.000E+00	0.0000	0.000E+00	0.0000	0.000E+00	0.0000	0.000E+00	0.0000	0.000E+00	0.0000
íííííí	íííííííííí	íííííí	íííííííííí	íííííí	íííííííííí	íííííí	íííííííííí	íííííí	íííííííííí	íííííí	íííííííííí	íííííí	íííííííííí	íííííí
otal	0.000E+00	0.0000	0.000E+00	0.0000	0.000E+00	0.0000	0.000E+00	0.0000	0.000E+00	0.0000	0.000E+00	0.0000	0.000E+00	0.0000

Sum of all water independent and dependent pathways.

ummary : GKP Fire Fighter- Ingestion
ile : C:\USERS\CLAUDE\DOCUMENTS\0 GKP DOSE\RESRAD CW\GKP FIRE FIGHTER -INGESTION.RAD

Total Dose Contributions TDOSE(i,p,t) for Individual Radionuclides (i) and Pathways (p)
As mrem/yr and Fraction of Total Dose At t = 1.000E+03 years

Water Independent Pathways (Inhalation excludes radon)

	Ground		Inhalation		Radon		Plant		Meat		Milk		Soil	
adio-	ÄÄÄÄÄÄÄÄÄÄÄÄÄÄÄ		ÄÄÄÄÄÄÄÄÄÄÄÄÄÄÄ		ÄÄÄÄÄÄÄÄÄÄÄÄÄÄÄ		ÄÄÄÄÄÄÄÄÄÄÄÄÄÄÄ		ÄÄÄÄÄÄÄÄÄÄÄÄÄÄÄ		ÄÄÄÄÄÄÄÄÄÄÄÄÄÄÄ		ÄÄÄÄÄÄÄÄÄÄÄÄÄÄÄ	
uclide	mrem/yr	fract.	mrem/yr	fract.	mrem/yr	fract.	mrem/yr	fract.	mrem/yr	fract.	mrem/yr	fract.	mrem/yr	fract.
ÄÄÄÄÄÄ	ÄÄÄÄÄÄÄÄÄ	ÄÄÄÄÄÄ	ÄÄÄÄÄÄÄÄÄ	ÄÄÄÄÄÄ	ÄÄÄÄÄÄÄÄÄ	ÄÄÄÄÄÄ	ÄÄÄÄÄÄÄÄÄ	ÄÄÄÄÄÄ	ÄÄÄÄÄÄÄÄÄ	ÄÄÄÄÄÄ	ÄÄÄÄÄÄÄÄÄ	ÄÄÄÄÄÄ	ÄÄÄÄÄÄÄÄÄ	ÄÄÄÄÄÄ
a-226	0.000E+00	0.0000	0.000E+00	0.0000	0.000E+00	0.0000	0.000E+00	0.0000	0.000E+00	0.0000	0.000E+00	0.0000	0.000E+00	0.0000
n-232	0.000E+00	0.0000	0.000E+00	0.0000	0.000E+00	0.0000	0.000E+00	0.0000	0.000E+00	0.0000	0.000E+00	0.0000	0.000E+00	0.0000
-234	0.000E+00	0.0000	0.000E+00	0.0000	0.000E+00	0.0000	0.000E+00	0.0000	0.000E+00	0.0000	0.000E+00	0.0000	0.000E+00	0.0000
-235	0.000E+00	0.0000	0.000E+00	0.0000	0.000E+00	0.0000	0.000E+00	0.0000	0.000E+00	0.0000	0.000E+00	0.0000	0.000E+00	0.0000
-238	0.000E+00	0.0000	0.000E+00	0.0000	0.000E+00	0.0000	0.000E+00	0.0000	0.000E+00	0.0000	0.000E+00	0.0000	0.000E+00	0.0000
íííííí	íííííííííí	íííííí	íííííííííí	íííííí	íííííííííí	íííííí	íííííííííí	íííííí	íííííííííí	íííííí	íííííííííí	íííííí	íííííííííí	íííííí
otal	0.000E+00	0.0000	0.000E+00	0.0000	0.000E+00	0.0000	0.000E+00	0.0000	0.000E+00	0.0000	0.000E+00	0.0000	0.000E+00	0.0000

Total Dose Contributions TDOSE(i,p,t) for Individual Radionuclides (i) and Pathways (p)
As mrem/yr and Fraction of Total Dose At t = 1.000E+03 years

Water Dependent Pathways

	Water		Fish		Radon		Plant		Meat		Milk		All Pathways*	
adio-	ÄÄÄÄÄÄÄÄÄÄÄÄÄÄÄ		ÄÄÄÄÄÄÄÄÄÄÄÄÄÄÄ		ÄÄÄÄÄÄÄÄÄÄÄÄÄÄÄ		ÄÄÄÄÄÄÄÄÄÄÄÄÄÄÄ		ÄÄÄÄÄÄÄÄÄÄÄÄÄÄÄ		ÄÄÄÄÄÄÄÄÄÄÄÄÄÄÄ		ÄÄÄÄÄÄÄÄÄÄÄÄÄÄÄ	
uclide	mrem/yr	fract.	mrem/yr	fract.	mrem/yr	fract.	mrem/yr	fract.	mrem/yr	fract.	mrem/yr	fract.	mrem/yr	fract.
ÄÄÄÄÄÄ	ÄÄÄÄÄÄÄÄÄ	ÄÄÄÄÄÄ	ÄÄÄÄÄÄÄÄÄ	ÄÄÄÄÄÄ	ÄÄÄÄÄÄÄÄÄ	ÄÄÄÄÄÄ	ÄÄÄÄÄÄÄÄÄ	ÄÄÄÄÄÄ	ÄÄÄÄÄÄÄÄÄ	ÄÄÄÄÄÄ	ÄÄÄÄÄÄÄÄÄ	ÄÄÄÄÄÄ	ÄÄÄÄÄÄÄÄÄ	ÄÄÄÄÄÄ
a-226	0.000E+00	0.0000	0.000E+00	0.0000	0.000E+00	0.0000	0.000E+00	0.0000	0.000E+00	0.0000	0.000E+00	0.0000	0.000E+00	0.0000
n-232	0.000E+00	0.0000	0.000E+00	0.0000	0.000E+00	0.0000	0.000E+00	0.0000	0.000E+00	0.0000	0.000E+00	0.0000	0.000E+00	0.0000
-234	0.000E+00	0.0000	0.000E+00	0.0000	0.000E+00	0.0000	0.000E+00	0.0000	0.000E+00	0.0000	0.000E+00	0.0000	0.000E+00	0.0000
-235	0.000E+00	0.0000	0.000E+00	0.0000	0.000E+00	0.0000	0.000E+00	0.0000	0.000E+00	0.0000	0.000E+00	0.0000	0.000E+00	0.0000
-238	0.000E+00	0.0000	0.000E+00	0.0000	0.000E+00	0.0000	0.000E+00	0.0000	0.000E+00	0.0000	0.000E+00	0.0000	0.000E+00	0.0000
íííííí	íííííííííí	íííííí	íííííííííí	íííííí	íííííííííí	íííííí	íííííííííí	íííííí	íííííííííí	íííííí	íííííííííí	íííííí	íííííííííí	íííííí
otal	0.000E+00	0.0000	0.000E+00	0.0000	0.000E+00	0.0000	0.000E+00	0.0000	0.000E+00	0.0000	0.000E+00	0.0000	0.000E+00	0.0000

Sum of all water independent and dependent pathways.

ummary : GKP Fire Fighter- Ingestion
ile : C:\USERS\CLAUDE\DOCUMENTS\0 GKP DOSE\RESRAD CW\GKP FIRE FIGHTER -INGESTION.RAD

Dose/Source Ratios Summed Over All Pathways
Parent and Progeny Principal Radionuclide Contributions Indicated

Parent	Product	Thread	DSR(j,t) At Time in Years (mrem/yr)/(pCi/g)							
(i)	(j)	Fraction	0.000E+00	1.000E+00	3.000E+00	1.000E+01	3.000E+01	1.000E+02	3.000E+02	1.000E+03
ÄÄÄÄÄÄÄÄÄ	ÄÄÄÄÄÄÄÄÄÄ	ÄÄÄÄÄÄÄÄÄ	ÄÄÄÄÄÄÄÄÄ	ÄÄÄÄÄÄÄÄÄ	ÄÄÄÄÄÄÄÄÄ	ÄÄÄÄÄÄÄÄÄ	ÄÄÄÄÄÄÄÄÄ	ÄÄÄÄÄÄÄÄÄ	ÄÄÄÄÄÄÄÄÄ	ÄÄÄÄÄÄÄÄÄ
a-226+D	Ra-226+D	9.996E-01	6.646E-05	6.393E-05	5.915E-05	4.500E-05	2.029E-05	8.897E-07	0.000E+00	0.000E+00
a-226+D	Pb-210+D	9.996E-01	5.615E-06	1.612E-05	3.413E-05	7.247E-05	7.793E-05	6.309E-06	0.000E+00	0.000E+00
a-226+D	äDSR(j)		7.208E-05	8.005E-05	9.328E-05	1.175E-04	9.822E-05	7.199E-06	0.000E+00	0.000E+00
a-226+D	Ra-226+D	1.319E-06	8.773E-11	8.439E-11	7.808E-11	5.940E-11	2.679E-11	1.174E-12	0.000E+00	0.000E+00
a-226+D	Pb-210+D1	1.319E-06	5.476E-12	1.572E-11	3.329E-11	7.069E-11	7.600E-11	6.153E-12	0.000E+00	0.000E+00
a-226+D	äDSR(j)		9.321E-11	1.001E-10	1.114E-10	1.301E-10	1.028E-10	7.328E-12	0.000E+00	0.000E+00
a-226+D	Ra-226+D	1.899E-08	1.263E-12	1.215E-12	1.124E-12	8.549E-13	3.855E-13	1.690E-14	0.000E+00	0.000E+00
a-226+D	Pb-210+D2	1.899E-08	7.873E-14	2.260E-13	4.785E-13	1.016E-12	1.093E-12	8.847E-14	0.000E+00	0.000E+00
a-226+D	äDSR(j)		1.342E-12	1.441E-12	1.602E-12	1.871E-12	1.478E-12	1.054E-13	0.000E+00	0.000E+00
a-226+D1	Ra-226+D1	2.100E-04	1.396E-08	1.343E-08	1.242E-08	9.451E-09	4.262E-09	1.869E-10	0.000E+00	0.000E+00
a-226+D1	Pb-210+D	2.100E-04	1.179E-09	3.386E-09	7.168E-09	1.522E-08	1.637E-08	1.325E-09	0.000E+00	0.000E+00
a-226+D1	äDSR(j)		1.514E-08	1.682E-08	1.959E-08	2.467E-08	2.063E-08	1.512E-09	0.000E+00	0.000E+00
a-226+D1	Ra-226+D1	2.771E-10	1.843E-14	1.773E-14	1.640E-14	1.248E-14	5.626E-15	2.467E-16	0.000E+00	0.000E+00
a-226+D1	Pb-210+D1	2.771E-10	1.150E-15	3.303E-15	6.992E-15	1.485E-14	1.596E-14	1.292E-15	0.000E+00	0.000E+00
a-226+D1	äDSR(j)		1.958E-14	2.103E-14	2.339E-14	2.732E-14	2.159E-14	1.539E-15	0.000E+00	0.000E+00
a-226+D1	Ra-226+D1	3.989E-12	2.652E-16	2.552E-16	2.361E-16	1.796E-16	8.098E-17	3.551E-18	0.000E+00	0.000E+00
a-226+D1	Pb-210+D2	3.989E-12	1.654E-17	4.748E-17	1.005E-16	2.135E-16	2.295E-16	1.858E-17	0.000E+00	0.000E+00
a-226+D1	äDSR(j)		2.818E-16	3.026E-16	3.366E-16	3.930E-16	3.105E-16	2.213E-17	0.000E+00	0.000E+00
a-226+D2	Ra-226+D2	1.998E-04	1.328E-08	1.277E-08	1.182E-08	8.988E-09	4.053E-09	1.777E-10	0.000E+00	0.000E+00
a-226+D2	Pb-210+D	1.998E-04	1.122E-09	3.222E-09	6.820E-09	1.448E-08	1.557E-08	1.261E-09	0.000E+00	0.000E+00
a-226+D2	äDSR(j)		1.440E-08	1.599E-08	1.864E-08	2.347E-08	1.963E-08	1.439E-09	0.000E+00	0.000E+00
a-226+D2	Ra-226+D2	2.637E-10	1.752E-14	1.686E-14	1.560E-14	1.186E-14	5.350E-15	2.346E-16	0.000E+00	0.000E+00
a-226+D2	Pb-210+D1	2.637E-10	1.094E-15	3.142E-15	6.652E-15	1.413E-14	1.519E-14	1.230E-15	0.000E+00	0.000E+00
a-226+D2	äDSR(j)		1.862E-14	2.000E-14	2.225E-14	2.599E-14	2.054E-14	1.464E-15	0.000E+00	0.000E+00
a-226+D2	Ra-226+D2	3.795E-12	2.522E-16	2.426E-16	2.245E-16	1.708E-16	7.701E-17	3.377E-18	0.000E+00	0.000E+00
a-226+D2	Pb-210+D2	3.795E-12	1.573E-17	4.517E-17	9.563E-17	2.031E-16	2.184E-16	1.768E-17	0.000E+00	0.000E+00
a-226+D2	äDSR(j)		2.680E-16	2.878E-16	3.201E-16	3.739E-16	2.954E-16	2.106E-17	0.000E+00	0.000E+00
a-226+D3	Ra-226+D3	4.196E-08	2.788E-12	2.682E-12	2.482E-12	1.888E-12	8.513E-13	3.733E-14	0.000E+00	0.000E+00
a-226+D3	Pb-210+D	4.196E-08	2.357E-13	6.767E-13	1.433E-12	3.042E-12	3.271E-12	2.648E-13	0.000E+00	0.000E+00
a-226+D3	äDSR(j)		3.024E-12	3.359E-12	3.914E-12	4.930E-12	4.122E-12	3.022E-13	0.000E+00	0.000E+00
a-226+D3	Ra-226+D3	5.538E-14	3.681E-18	3.541E-18	3.276E-18	2.492E-18	1.124E-18	4.927E-20	0.000E+00	0.000E+00
a-226+D3	Pb-210+D1	5.538E-14	2.299E-19	6.600E-19	1.397E-18	2.967E-18	3.190E-18	2.583E-19	0.000E+00	0.000E+00
a-226+D3	äDSR(j)		3.911E-18	4.201E-18	4.673E-18	5.459E-18	4.314E-18	3.076E-19	0.000E+00	0.000E+00
a-226+D3	Ra-226+D3	7.972E-16	5.298E-20	5.097E-20	4.715E-20	3.587E-20	1.618E-20	7.092E-22	0.000E+00	0.000E+00
a-226+D3	Pb-210+D2	7.972E-16	3.305E-21	9.488E-21	2.009E-20	4.266E-20	4.587E-20	3.713E-21	0.000E+00	0.000E+00
a-226+D3	äDSR(j)		5.629E-20	6.045E-20	6.724E-20	7.853E-20	6.204E-20	4.423E-21	0.000E+00	0.000E+00

ummary : GKP Fire Fighter- Ingestion
ile : C:\USERS\CLAUDE\DOCUMENTS\0 GKP DOSE\RESRAD CW\GKP FIRE FIGHTER -INGESTION.RAD

Dose/Source Ratios Summed Over All Pathways
Parent and Progeny Principal Radionuclide Contributions Indicated

Parent	Product	Thread	DSR(j,t) At Time in Years (mrem/yr)/(pCi/g)							
(i)	(j)	Fraction	0.000E+00	1.000E+00	3.000E+00	1.000E+01	3.000E+01	1.000E+02	3.000E+02	1.000E+03
ÄÄÄÄÄÄÄÄÄ	ÄÄÄÄÄÄÄÄÄÄ	ÄÄÄÄÄÄÄÄÄ	ÄÄÄÄÄÄÄÄÄ	ÄÄÄÄÄÄÄÄÄ	ÄÄÄÄÄÄÄÄÄ	ÄÄÄÄÄÄÄÄÄ	ÄÄÄÄÄÄÄÄÄ	ÄÄÄÄÄÄÄÄÄ	ÄÄÄÄÄÄÄÄÄ	ÄÄÄÄÄÄÄÄÄ
a-226+D4	Ra-226+D4	2.000E-07	1.329E-11	1.278E-11	1.183E-11	8.997E-12	4.057E-12	1.779E-13	0.000E+00	0.000E+00
a-226+D4	Pb-210+D	2.000E-07	1.123E-12	3.225E-12	6.828E-12	1.450E-11	1.559E-11	1.262E-12	0.000E+00	0.000E+00
a-226+D4	äDSR(j)		1.441E-11	1.601E-11	1.866E-11	2.350E-11	1.965E-11	1.440E-12	0.000E+00	0.000E+00
a-226+D4	Ra-226+D4	2.640E-13	1.754E-17	1.687E-17	1.561E-17	1.188E-17	5.356E-18	2.348E-19	0.000E+00	0.000E+00
a-226+D4	Pb-210+D1	2.640E-13	1.096E-18	3.146E-18	6.660E-18	1.414E-17	1.521E-17	1.231E-18	0.000E+00	0.000E+00
a-226+D4	äDSR(j)		1.864E-17	2.002E-17	2.227E-17	2.602E-17	2.056E-17	1.466E-18	0.000E+00	0.000E+00
a-226+D4	Ra-226+D4	3.800E-15	2.525E-19	2.429E-19	2.247E-19	1.709E-19	7.709E-20	3.380E-21	0.000E+00	0.000E+00
a-226+D4	Pb-210+D2	3.800E-15	1.575E-20	4.523E-20	9.575E-20	2.033E-19	2.186E-19	1.770E-20	0.000E+00	0.000E+00
a-226+D4	äDSR(j)		2.682E-19	2.881E-19	3.205E-19	3.743E-19	2.957E-19	2.108E-20	0.000E+00	0.000E+00
n-232	Th-232	1.000E+00	1.390E-04	1.381E-04	1.362E-04	1.297E-04	1.110E-04	4.586E-05	0.000E+00	0.000E+00
n-232	Ra-228+D	1.000E+00	4.206E-06	1.175E-05	2.351E-05	4.328E-05	4.601E-05	1.920E-05	0.000E+00	0.000E+00
n-232	Th-228+D	1.000E+00	4.186E-07	2.535E-06	9.788E-06	3.303E-05	4.436E-05	2.974E-05	0.000E+00	0.000E+00
n-232	äDSR(j)		1.437E-04	1.524E-04	1.695E-04	2.060E-04	2.014E-04	9.480E-05	0.000E+00	0.000E+00
-234	U-234	9.996E-01	1.409E-05	1.339E-05	1.209E-05	8.448E-06	2.986E-06	5.583E-08	0.000E+00	0.000E+00
-234	Th-230	9.996E-01	1.263E-10	3.692E-10	8.145E-10	2.009E-09	3.429E-09	1.890E-09	0.000E+00	0.000E+00
-234	Ra-226+D	9.996E-01	4.392E-14	2.991E-13	1.486E-12	1.065E-11	4.797E-11	5.545E-11	0.000E+00	0.000E+00
-234	Pb-210+D	9.996E-01	1.867E-15	2.709E-14	2.932E-13	5.935E-12	6.736E-11	1.574E-10	0.000E+00	0.000E+00
-234	äDSR(j)		1.409E-05	1.339E-05	1.209E-05	8.450E-06	2.990E-06	5.794E-08	0.000E+00	0.000E+00
-234	U-234	1.319E-06	1.860E-11	1.768E-11	1.596E-11	1.115E-11	3.942E-12	7.370E-14	0.000E+00	0.000E+00
-234	Th-230	1.319E-06	1.667E-16	4.874E-16	1.075E-15	2.652E-15	4.526E-15	2.495E-15	0.000E+00	0.000E+00
-234	Ra-226+D	1.319E-06	5.797E-20	3.948E-19	1.961E-18	1.405E-17	6.332E-17	7.320E-17	0.000E+00	0.000E+00
-234	Pb-210+D1	1.319E-06	1.821E-21	2.642E-20	2.860E-19	5.789E-18	6.569E-17	1.535E-16	0.000E+00	0.000E+00
-234	äDSR(j)		1.860E-11	1.768E-11	1.596E-11	1.115E-11	3.946E-12	7.642E-14	0.000E+00	0.000E+00
-234	U-234	1.899E-08	2.678E-13	2.545E-13	2.298E-13	1.605E-13	5.674E-14	1.061E-15	0.000E+00	0.000E+00
-234	Th-230	1.899E-08	2.399E-18	7.015E-18	1.548E-17	3.818E-17	6.515E-17	3.591E-17	0.000E+00	0.000E+00
-234	Ra-226+D	1.899E-08	8.344E-22	5.683E-21	2.823E-20	2.023E-19	9.114E-19	1.054E-18	0.000E+00	0.000E+00
-234	Pb-210+D2	1.899E-08	2.618E-23	3.798E-22	4.112E-21	8.322E-20	9.445E-19	2.207E-18	0.000E+00	0.000E+00
-234	äDSR(j)		2.678E-13	2.545E-13	2.298E-13	1.605E-13	5.680E-14	1.100E-15	0.000E+00	0.000E+00
-234	U-234	2.100E-04	2.960E-09	2.813E-09	2.540E-09	1.774E-09	6.272E-10	1.173E-11	0.000E+00	0.000E+00
-234	Th-230	2.100E-04	2.652E-14	7.755E-14	1.711E-13	4.221E-13	7.202E-13	3.969E-13	0.000E+00	0.000E+00
-234	Ra-226+D1	2.100E-04	9.225E-18	6.282E-17	3.121E-16	2.236E-15	1.008E-14	1.165E-14	0.000E+00	0.000E+00
-234	Pb-210+D	2.100E-04	3.921E-19	5.689E-18	6.159E-17	1.247E-15	1.415E-14	3.306E-14	0.000E+00	0.000E+00
-234	äDSR(j)		2.960E-09	2.813E-09	2.540E-09	1.775E-09	6.280E-10	1.217E-11	0.000E+00	0.000E+00
-234	U-234	2.771E-10	3.908E-15	3.713E-15	3.353E-15	2.342E-15	8.279E-16	1.548E-17	0.000E+00	0.000E+00
-234	Th-230	2.771E-10	3.500E-20	1.024E-19	2.258E-19	5.571E-19	9.507E-19	5.240E-19	0.000E+00	0.000E+00
-234	Ra-226+D1	2.771E-10	1.218E-23	8.293E-23	4.119E-22	2.952E-21	1.330E-20	1.537E-20	0.000E+00	0.000E+00
-234	Pb-210+D1	2.771E-10	3.825E-25	5.549E-24	6.007E-23	1.216E-21	1.380E-20	3.224E-20	0.000E+00	0.000E+00
-234	äDSR(j)		3.908E-15	3.713E-15	3.353E-15	2.343E-15	8.289E-16	1.605E-17	0.000E+00	0.000E+00

ummary : GKP Fire Fighter- Ingestion
ile : C:\USERS\CLAUDE\DOCUMENTS\0 GKP DOSE\RESRAD CW\GKP FIRE FIGHTER -INGESTION.RAD

Dose/Source Ratios Summed Over All Pathways
Parent and Progeny Principal Radionuclide Contributions Indicated

Parent (i)	Product (j)	Thread Fraction	DSR(j,t) At Time in Years (mrem/yr)/(pCi/g) 0.000E+00	1.000E+00	3.000E+00	1.000E+01	3.000E+01	1.000E+02	3.000E+02	1.000E+03
-234	U-234	3.989E-12	5.624E-17	5.345E-17	4.826E-17	3.371E-17	1.192E-17	2.228E-19	0.000E+00	0.000E+00
-234	Th-230	3.989E-12	5.039E-22	1.474E-21	3.251E-21	8.019E-21	1.368E-20	7.542E-21	0.000E+00	0.000E+00
-234	Ra-226+D1	3.989E-12	1.753E-25	1.194E-24	5.929E-24	4.249E-23	1.914E-22	2.213E-22	0.000E+00	0.000E+00
-234	Pb-210+D2	3.989E-12	5.498E-27	7.977E-26	8.636E-25	1.748E-23	1.984E-22	4.635E-22	0.000E+00	0.000E+00
-234	äDSR(j)		5.624E-17	5.345E-17	4.827E-17	3.372E-17	1.193E-17	2.311E-19	0.000E+00	0.000E+00
-234	U-234	1.998E-04	2.816E-09	2.676E-09	2.417E-09	1.688E-09	5.968E-10	1.116E-11	0.000E+00	0.000E+00
-234	Th-230	1.998E-04	2.523E-14	7.379E-14	1.628E-13	4.016E-13	6.852E-13	3.777E-13	0.000E+00	0.000E+00
-234	Ra-226+D2	1.998E-04	8.772E-18	5.974E-17	2.968E-16	2.127E-15	9.581E-15	1.108E-14	0.000E+00	0.000E+00
-234	Pb-210+D	1.998E-04	3.731E-19	5.413E-18	5.860E-17	1.186E-15	1.346E-14	3.145E-14	0.000E+00	0.000E+00
-234	äDSR(j)		2.816E-09	2.677E-09	2.417E-09	1.689E-09	5.975E-10	1.158E-11	0.000E+00	0.000E+00
-234	U-234	2.637E-10	3.718E-15	3.533E-15	3.190E-15	2.228E-15	7.877E-16	1.473E-17	0.000E+00	0.000E+00
-234	Th-230	2.637E-10	3.330E-20	9.740E-20	2.149E-19	5.301E-19	9.045E-19	4.985E-19	0.000E+00	0.000E+00
-234	Ra-226+D2	2.637E-10	1.158E-23	7.886E-23	3.917E-22	2.807E-21	1.265E-20	1.462E-20	0.000E+00	0.000E+00
-234	Pb-210+D1	2.637E-10	3.639E-25	5.279E-24	5.715E-23	1.157E-21	1.313E-20	3.067E-20	0.000E+00	0.000E+00
-234	äDSR(j)		3.718E-15	3.533E-15	3.190E-15	2.229E-15	7.886E-16	1.527E-17	0.000E+00	0.000E+00
-234	U-234	3.795E-12	5.351E-17	5.085E-17	4.592E-17	3.208E-17	1.134E-17	2.120E-19	0.000E+00	0.000E+00
-234	Th-230	3.795E-12	4.794E-22	1.402E-21	3.093E-21	7.630E-21	1.302E-20	7.175E-21	0.000E+00	0.000E+00
-234	Ra-226+D2	3.795E-12	1.667E-25	1.135E-24	5.639E-24	4.041E-23	1.820E-22	2.104E-22	0.000E+00	0.000E+00
-234	Pb-210+D2	3.795E-12	5.231E-27	7.590E-26	8.217E-25	1.663E-23	1.887E-22	4.410E-22	0.000E+00	0.000E+00
-234	äDSR(j)		5.351E-17	5.085E-17	4.592E-17	3.208E-17	1.135E-17	2.198E-19	0.000E+00	0.000E+00
-234	U-234	4.196E-08	5.916E-13	5.622E-13	5.076E-13	3.546E-13	1.253E-13	2.344E-15	0.000E+00	0.000E+00
-234	Th-230	4.196E-08	5.299E-18	1.550E-17	3.419E-17	8.434E-17	1.439E-16	7.932E-17	0.000E+00	0.000E+00
-234	Ra-226+D3	4.196E-08	1.843E-21	1.255E-20	6.233E-20	4.467E-19	2.012E-18	2.326E-18	0.000E+00	0.000E+00
-234	Pb-210+D	4.196E-08	7.836E-23	1.137E-21	1.231E-20	2.491E-19	2.827E-18	6.606E-18	0.000E+00	0.000E+00
-234	äDSR(j)		5.916E-13	5.622E-13	5.077E-13	3.547E-13	1.255E-13	2.432E-15	0.000E+00	0.000E+00
-234	U-234	5.538E-14	7.809E-19	7.421E-19	6.701E-19	4.681E-19	1.655E-19	3.094E-21	0.000E+00	0.000E+00
-234	Th-230	5.538E-14	6.995E-24	2.046E-23	4.513E-23	1.113E-22	1.900E-22	1.047E-22	0.000E+00	0.000E+00
-234	Ra-226+D3	5.538E-14	2.432E-27	1.656E-26	8.228E-26	5.896E-25	2.656E-24	3.071E-24	0.000E+00	0.000E+00
-234	Pb-210+D1	5.538E-14	7.643E-29	1.109E-27	1.200E-26	2.430E-25	2.757E-24	6.443E-24	0.000E+00	0.000E+00
-234	äDSR(j)		7.809E-19	7.421E-19	6.701E-19	4.682E-19	1.657E-19	3.208E-21	0.000E+00	0.000E+00
-234	U-234	7.972E-16	1.124E-20	1.068E-20	9.645E-21	6.737E-21	2.382E-21	4.453E-23	0.000E+00	0.000E+00
-234	Th-230	7.972E-16	1.007E-25	2.945E-25	6.496E-25	1.603E-24	2.735E-24	1.507E-24	0.000E+00	0.000E+00
-234	Ra-226+D3	7.972E-16	3.501E-29	2.384E-28	1.184E-27	8.487E-27	3.824E-26	4.420E-26	0.000E+00	0.000E+00
-234	Pb-210+D2	7.972E-16	1.099E-30	1.594E-29	1.726E-28	3.493E-27	3.964E-26	9.263E-26	0.000E+00	0.000E+00
-234	äDSR(j)		1.124E-20	1.068E-20	9.645E-21	6.739E-21	2.384E-21	4.617E-23	0.000E+00	0.000E+00
-234	U-234	2.000E-07	2.820E-12	2.680E-12	2.420E-12	1.690E-12	5.975E-13	1.117E-14	0.000E+00	0.000E+00
-234	Th-230	2.000E-07	2.526E-17	7.388E-17	1.630E-16	4.020E-16	6.860E-16	3.781E-16	0.000E+00	0.000E+00
-234	Ra-226+D4	2.000E-07	8.781E-21	5.980E-20	2.971E-19	2.129E-18	9.591E-18	1.109E-17	0.000E+00	0.000E+00
-234	Pb-210+D	2.000E-07	3.735E-22	5.419E-21	5.867E-20	1.188E-18	1.348E-17	3.149E-17	0.000E+00	0.000E+00
-234	äDSR(j)		2.820E-12	2.680E-12	2.420E-12	1.691E-12	5.982E-13	1.159E-14	0.000E+00	0.000E+00

ummary : GKP Fire Fighter- Ingestion
ile : C:\USERS\CLAUDE\DOCUMENTS\0 GKP DOSE\RESRAD CW\GKP FIRE FIGHTER -INGESTION.RAD

Dose/Source Ratios Summed Over All Pathways
Parent and Progeny Principal Radionuclide Contributions Indicated

Parent (i)	Product (j)	Thread Fraction	DSR(j,t) At Time in Years (mrem/yr)/(pCi/g) 0.000E+00	1.000E+00	3.000E+00	1.000E+01	3.000E+01	1.000E+02	3.000E+02	1.000E+03
ÄÄÄÄÄÄÄÄ	ÄÄÄÄÄÄÄÄÄÄ	ÄÄÄÄÄÄÄÄ	ÄÄÄÄÄÄÄÄ	ÄÄÄÄÄÄÄÄ	ÄÄÄÄÄÄÄÄ	ÄÄÄÄÄÄÄÄ	ÄÄÄÄÄÄÄÄ	ÄÄÄÄÄÄÄÄ	ÄÄÄÄÄÄÄÄ	ÄÄÄÄÄÄÄÄ
-234	U-234	2.640E 13	3.722E 18	3.537E-18	3.194E-18	2.231E-18	7.887E-19	1.475E 20	0.000E+00	0.000E+00
-234	Th-230	2.640E-13	3.334E-23	9.752E-23	2.151E-22	5.307E-22	9.056E-22	4.991E-22	0.000E+00	0.000E+00
-234	Ra-226+D4	2.640E-13	1.159E-26	7.894E-26	3.921E-25	2.810E-24	1.266E-23	1.463E-23	0.000E+00	0.000E+00
-234	Pb-210+D1	2.640E-13	3.643E-28	5.286E-27	5.722E-26	1.158E-24	1.314E-23	3.071E-23	0.000E+00	0.000E+00
-234	äDSR(j)		3.722E-18	3.537E-18	3.194E-18	2.232E-18	7.896E-19	1.529E-20	0.000E+00	0.000E+00
-234	U-234	3.800E-15	5.358E-20	5.091E-20	4.597E-20	3.211E-20	1.135E-20	2.123E-22	0.000E+00	0.000E+00
-234	Th-230	3.800E-15	4.800E-25	1.404E-24	3.096E-24	7.639E-24	1.303E-23	7.184E-24	0.000E+00	0.000E+00
-234	Ra-226+D4	3.800E-15	1.668E-28	1.136E-27	5.644E-27	4.045E-26	1.822E-25	2.107E-25	0.000E+00	0.000E+00
-234	Pb-210+D2	3.800E-15	5.238E-30	7.599E-29	8.227E-28	1.665E-26	1.890E-25	4.415E-25	0.000E+00	0.000E+00
-234	äDSR(j)		5.358E-20	5.092E-20	4.598E-20	3.212E-20	1.137E-20	2.201E-22	0.000E+00	0.000E+00
-235+D	U-235+D	9.835E-01	1.310E-05	1.245E-05	1.124E-05	7.852E-06	2.776E-06	5.191E-08	0.000E+00	0.000E+00
-235+D	Pa-231	9.835E-01	5.448E-09	1.562E-08	3.296E-08	6.913E-08	7.099E-08	4.372E-09	0.000E+00	0.000E+00
-235+D	Ac-227+D	9.835E-01	7.845E-11	5.115E-10	2.305E-09	1.179E-08	2.203E-08	1.789E-09	0.000E+00	0.000E+00
-235+D	äDSR(j)		1.310E-05	1.246E-05	1.128E-05	7.933E-06	2.869E-06	5.807E-08	0.000E+00	0.000E+00
-235+D	U-235+D	2.722E-03	3.625E-08	3.445E-08	3.111E-08	2.173E-08	7.682E-09	1.437E-10	0.000E+00	0.000E+00
-235+D	Pa-231	2.722E-03	1.508E-11	4.323E-11	9.123E-11	1.913E-10	1.965E-10	1.210E-11	0.000E+00	0.000E+00
-235+D	Ac-227+D1	2.722E-03	2.171E-13	1.416E-12	6.380E-12	3.263E-11	6.098E-11	4.952E-12	0.000E+00	0.000E+00
-235+D	äDSR(j)		3.627E-08	3.450E-08	3.121E-08	2.196E-08	7.940E-09	1.607E-10	0.000E+00	0.000E+00
-235+D	U-235+D	1.376E-02	1.833E-07	1.742E-07	1.573E-07	1.099E-07	3.884E-08	7.264E-10	0.000E+00	0.000E+00
-235+D	Pa-231	1.376E-02	7.623E-11	2.186E-10	4.612E-10	9.673E-10	9.933E-10	6.117E-11	0.000E+00	0.000E+00
-235+D	Ac-227+D2	1.376E-02	1.095E-12	7.143E-12	3.219E-11	1.646E-10	3.077E-10	2.499E-11	0.000E+00	0.000E+00
-235+D	äDSR(j)		1.834E-07	1.744E-07	1.578E-07	1.110E-07	4.014E-08	8.125E-10	0.000E+00	0.000E+00
-235+D	U-235+D	3.809E-05	5.073E-10	4.821E-10	4.353E-10	3.041E-10	1.075E-10	2.010E-12	0.000E+00	0.000E+00
-235+D	Pa-231	3.809E-05	2.110E-13	6.049E-13	1.276E-12	2.677E-12	2.749E-12	1.693E-13	0.000E+00	0.000E+00
-235+D	Ac-227+D3	3.809E-05	3.032E-15	1.977E-14	8.910E-14	4.556E-13	8.515E-13	6.915E-14	0.000E+00	0.000E+00
-235+D	äDSR(j)		5.075E-10	4.827E-10	4.367E-10	3.072E-10	1.111E-10	2.249E-12	0.000E+00	0.000E+00
-235+D	U-235+D	8.257E-07	1.100E-11	1.045E-11	9.437E-12	6.593E-12	2.331E-12	4.358E-14	0.000E+00	0.000E+00
-235+D	Pa-231	8.257E-07	4.574E-15	1.311E-14	2.767E-14	5.804E-14	5.960E-14	3.670E-15	0.000E+00	0.000E+00
-235+D	Ac-227+D4	8.257E-07	6.280E-17	4.095E-16	1.845E-15	9.438E-15	1.764E-14	1.432E-15	0.000E+00	0.000E+00
-235+D	äDSR(j)		1.100E-11	1.047E-11	9.467E-12	6.660E-12	2.408E-12	4.869E-14	0.000E+00	0.000E+00
-235+D	U-235+D	2.285E-09	3.044E-14	2.893E-14	2.612E-14	1.825E-14	6.450E-15	1.206E-16	0.000E+00	0.000E+00
-235+D	Pa-231	2.285E-09	1.266E-17	3.630E-17	7.659E-17	1.606E-16	1.650E-16	1.016E-17	0.000E+00	0.000E+00
-235+D	Ac-227+D5	2.285E-09	1.738E-19	1.133E-18	5.107E-18	2.612E-17	4.881E-17	3.964E-18	0.000E+00	0.000E+00
-235+D	äDSR(j)		3.045E-14	2.896E-14	2.620E-14	1.843E-14	6.664E-15	1.347E-16	0.000E+00	0.000E+00
-238	U-238	5.450E-07	6.924E-12	6.580E-12	5.941E-12	4.150E-12	1.467E-12	2.744E-14	0.000E+00	0.000E+00

ummary : GKP Fire Fighter- Ingestion
ile : C:\USERS\CLAUDE\DOCUMENTS\0 GKP DOSE\RESRAD CW\GKP FIRE FIGHTER -INGESTION.RAD

Dose/Source Ratios Summed Over All Pathways
Parent and Progeny Principal Radionuclide Contributions Indicated

Parent (i)	Product (j)	Thread Fraction	DSR(j,t) At Time in Years (mrem/yr)/(pCi/g) 0.000E+00	1.000E+00	3.000E+00	1.000E+01	3.000E+01	1.000E+02	3.000E+02	1.000E+03
ÄÄÄÄÄÄÄÄ	ÄÄÄÄÄÄÄÄÄÄ	ÄÄÄÄÄÄÄÄÄ	ÄÄÄÄÄÄÄÄÄ	ÄÄÄÄÄÄÄÄÄ	ÄÄÄÄÄÄÄÄÄ	ÄÄÄÄÄÄÄÄÄ	ÄÄÄÄÄÄÄÄÄ	ÄÄÄÄÄÄÄÄÄ	ÄÄÄÄÄÄÄÄÄ	ÄÄÄÄÄÄÄÄÄ
-238+D	U-238+D	1.599E-03	2.158E-08	2.051E-08	1.852E-08	1.294E-08	4.573E-09	8.553E-11	0.000E+00	0.000E+00
-238+D	U-234	1.599E-03	3.156E-14	9.050E-14	1.910E-13	4.005E-13	4.114E-13	2.535E-14	0.000E+00	0.000E+00
-238+D	Th-230	1.599E-03	1.886E-19	1.280E-18	6.309E-18	4.400E-17	1.847E-16	1.829E-16	0.000E+00	0.000E+00
-238+D	Ra-226+D	1.599E-03	4.933E-23	7.171E-22	7.797E-21	1.602E-19	1.891E-18	4.821E-18	0.000E+00	0.000E+00
-238+D	Pb-210+D	1.599E-03	1.681E-24	5.030E-23	1.171E-21	6.870E-20	2.135E-18	1.255E-17	0.000E+00	0.000E+00
-238+D	äDSR(j)		2.158E-08	2.051E-08	1.852E-08	1.294E-08	4.574E-09	8.555E-11	0.000E+00	0.000E+00
-238+D	U-238+D	2.111E-09	2.849E-14	2.707E-14	2.445E-14	1.708E-14	6.037E-15	1.129E-16	0.000E+00	0.000E+00
-238+D	U-234	2.111E-09	4.166E-20	1.195E-19	2.521E-19	5.287E-19	5.430E-19	3.346E-20	0.000E+00	0.000E+00
-238+D	Th-230	2.111E-09	2.490E-25	1.690E-24	8.328E-24	5.808E-23	2.438E-22	2.414E-22	0.000E+00	0.000E+00
-238+D	Ra-226+D	2.111E-09	6.512E-29	9.466E-28	1.029E-26	2.115E-25	2.496E-24	6.364E-24	0.000E+00	0.000E+00
-238+D	Pb-210+D1	2.111E-09	1.640E-30	4.906E-29	1.142E-27	6.700E-26	2.083E-24	1.224E-23	0.000E+00	0.000E+00
-238+D	äDSR(j)		2.849E-14	2.707E-14	2.445E-14	1.708E-14	6.037E-15	1.129E-16	0.000E+00	0.000E+00
-238+D	U-238+D	3.039E-11	4.101E-16	3.897E-16	3.519E-16	2.458E-16	8.689E-17	1.625E-18	0.000E+00	0.000E+00
-238+D	U-234	3.039E-11	5.997E-22	1.719E-21	3.629E-21	7.610E-21	7.817E-21	4.817E-22	0.000E+00	0.000E+00
-238+D	Th-230	3.039E-11	3.584E-27	2.432E-26	1.199E-25	8.360E-25	3.509E-24	3.475E-24	0.000E+00	0.000E+00
-238+D	Ra-226+D	3.039E-11	9.373E-31	1.363E-29	1.481E-28	3.044E-27	3.592E-26	9.160E-26	0.000E+00	0.000E+00
-238+D	Pb-210+D2	3.039E-11	2.358E-32	7.053E-31	1.642E-29	9.633E-28	2.994E-26	1.759E-25	0.000E+00	0.000E+00
-238+D	äDSR(j)		4.101E-16	3.897E-16	3.519E-16	2.458E-16	8.690E-17	1.626E-18	0.000E+00	0.000E+00
-238+D	U-238+D	3.359E-07	4.533E-12	4.308E-12	3.890E-12	2.717E-12	9.606E-13	1.796E-14	0.000E+00	0.000E+00
-238+D	U-234	3.359E-07	6.630E-18	1.901E-17	4.011E-17	8.413E-17	8.641E-17	5.325E-18	0.000E+00	0.000E+00
-238+D	Th-230	3.359E-07	3.962E-23	2.689E-22	1.325E-21	9.242E-21	3.879E-20	3.842E-20	0.000E+00	0.000E+00
-238+D	Ra-226+D1	3.359E-07	1.036E-26	1.506E-25	1.638E-24	3.365E-23	3.971E-22	1.013E-21	0.000E+00	0.000E+00
-238+D	Pb-210+D	3.359E-07	3.532E-28	1.056E-26	2.460E-25	1.443E-23	4.485E-22	2.635E-21	0.000E+00	0.000E+00
-238+D	äDSR(j)		4.533E-12	4.308E-12	3.890E-12	2.717E-12	9.607E-13	1.797E-14	0.000E+00	0.000E+00
-238+D	U-238+D	4.434E-13	5.984E-18	5.686E-18	5.135E-18	3.587E-18	1.268E-18	2.371E-20	0.000E+00	0.000E+00
-238+D	U-234	4.434E-13	8.751E-24	2.509E-23	5.295E-23	1.111E-22	1.141E-22	7.029E-24	0.000E+00	0.000E+00
-238+D	Th-230	4.434E-13	5.229E-29	3.549E-28	1.749E-27	1.220E-26	5.120E-26	5.071E-26	0.000E+00	0.000E+00
-238+D	Ra-226+D1	4.434E-13	1.368E-32	1.988E-31	2.162E-30	4.442E-29	5.242E-28	1.337E-27	0.000E+00	0.000E+00
-238+D	Pb-210+D1	4.434E-13	3.445E-34	1.030E-32	2.399E-31	1.407E-29	4.374E-28	2.570E-27	0.000E+00	0.000E+00
-238+D	äDSR(j)		5.984E-18	5.687E-18	5.135E-18	3.587E-18	1.268E-18	2.372E-20	0.000E+00	0.000E+00
-238+D	U-238+D	6.383E-15	8.613E-20	8.185E-20	7.391E-20	5.163E-20	1.825E-20	3.413E-22	0.000E+00	0.000E+00
-238+D	U-234	6.383E-15	1.260E-25	3.612E-25	7.622E-25	1.599E-24	1.642E-24	1.012E-25	0.000E+00	0.000E+00
-238+D	Th-230	6.383E-15	7.527E-31	5.109E-30	2.518E-29	1.756E-28	7.370E-28	7.299E-28	0.000E+00	0.000E+00
-238+D	Ra-226+D1	6.383E-15	1.969E-34	2.862E-33	3.112E-32	6.394E-31	7.545E-30	1.924E-29	0.000E+00	0.000E+00
-238+D	Pb-210+D2	6.383E-15	4.952E-36	1.481E-34	3.449E-33	2.023E-31	6.289E-30	3.695E-29	0.000E+00	0.000E+00
-238+D	äDSR(j)		8.613E-20	8.185E-20	7.391E-20	5.163E-20	1.825E-20	3.414E-22	0.000E+00	0.000E+00

ummary : GKP Fire Fighter- Ingestion
ile : C:\USERS\CLAUDE\DOCUMENTS\0 GKP DOSE\RESRAD CW\GKP FIRE FIGHTER -INGESTION.RAD

Dose/Source Ratios Summed Over All Pathways
Parent and Progeny Principal Radionuclide Contributions Indicated

Parent (i)	Product (j)	Thread Fraction	DSR(j,t) At Time in Years (mrem/yr)/(pCi/g) 0.000E+00	1.000E+00	3.000E+00	1.000E+01	3.000E+01	1.000E+02	3.000E+02	1.000E+03
ÄÄÄÄÄÄÄÄ	ÄÄÄÄÄÄÄÄÄÄ	ÄÄÄÄÄÄÄÄÄ	ÄÄÄÄÄÄÄÄÄ	ÄÄÄÄÄÄÄÄÄ	ÄÄÄÄÄÄÄÄÄ	ÄÄÄÄÄÄÄÄÄ	ÄÄÄÄÄÄÄÄÄ	ÄÄÄÄÄÄÄÄÄ	ÄÄÄÄÄÄÄÄÄ	ÄÄÄÄÄÄÄÄÄ
-238+D	U-238+D	3.196E-07	4.313E-12	4.099E-12	3.701E-12	2.585E-12	9.139E-13	1.709E-14	0.000E+00	0.000E+00
-238+D	U-234	3.196E-07	6.308E-18	1.808E-17	3.817E-17	8.004E-17	8.221E-17	5.066E-18	0.000E+00	0.000E+00
-238+D	Th-230	3.196E-07	3.769E-23	2.558E-22	1.261E-21	8.793E-21	3.691E-20	3.655E-20	0.000E+00	0.000E+00
-238+D	Ra-226+D2	3.196E-07	9.854E-27	1.432E-25	1.557E-24	3.200E-23	3.777E-22	9.630E-22	0.000E+00	0.000E+00
-238+D	Pb-210+D	3.196E-07	3.360E-28	1.005E-26	2.340E-25	1.373E-23	4.267E-22	2.507E-21	0.000E+00	0.000E+00
-238+D	äDSR(j)		4.313E-12	4.099E-12	3.701E-12	2.585E-12	9.140E-13	1.710E-14	0.000E+00	0.000E+00
-238+D	U-238+D	4.219E-13	5.693E-18	5.410E-18	4.885E-18	3.413E-18	1.206E-18	2.256E-20	0.000E+00	0.000E+00
-238+D	U-234	4.219E-13	8.326E-24	2.387E-23	5.038E-23	1.057E-22	1.085E-22	6.687E-24	0.000E+00	0.000E+00
-238+D	Th-230	4.219E-13	4.975E-29	3.377E-28	1.664E-27	1.161E-26	4.871E-26	4.825E-26	0.000E+00	0.000E+00
-238+D	Ra-226+D2	4.219E-13	1.301E-32	1.891E-31	2.056E-30	4.225E-29	4.985E-28	1.271E-27	0.000E+00	0.000E+00
-238+D	Pb-210+D1	4.219E-13	3.277E-34	9.803E-33	2.283E-31	1.339E-29	4.162E-28	2.445E-27	0.000E+00	0.000E+00
-238+D	äDSR(j)		5.693E-18	5.410E-18	4.885E-18	3.413E-18	1.206E-18	2.257E-20	0.000E+00	0.000E+00
-238+D	U-238+D	6.073E-15	8.195E-20	7.787E-20	7.032E-20	4.912E-20	1.736E-20	3.247E-22	0.000E+00	0.000E+00
-238+D	U-234	6.073E-15	1.198E-25	3.436E-25	7.251E-25	1.521E-24	1.562E-24	9.626E-26	0.000E+00	0.000E+00
-238+D	Th-230	6.073E-15	7.161E-31	4.860E-30	2.396E-29	1.671E-28	7.012E-28	6.945E-28	0.000E+00	0.000E+00
-238+D	Ra-226+D2	6.073E-15	1.872E-34	2.722E-33	2.959E-32	6.081E-31	7.175E-30	1.830E-29	0.000E+00	0.000E+00
-238+D	Pb-210+D2	6.073E-15	4.712E-36	1.409E-34	3.282E-33	1.925E-31	5.983E-30	3.516E-29	0.000E+00	0.000E+00
-238+D	äDSR(j)		8.195E-20	7.787E-20	7.032E-20	4.912E-20	1.737E-20	3.248E-22	0.000E+00	0.000E+00
-238+D	U-238+D	6.713E-11	9.059E-16	8.609E-16	7.774E-16	5.430E-16	1.920E-16	3.590E-18	0.000E+00	0.000E+00
-238+D	U-234	6.713E-11	1.325E-21	3.799E-21	8.016E-21	1.681E-20	1.727E-20	1.064E-21	0.000E+00	0.000E+00
-238+D	Th-230	6.713E-11	7.917E-27	5.373E-26	2.648E-25	1.847E-24	7.752E-24	7.677E-24	0.000E+00	0.000E+00
-238+D	Ra-226+D3	6.713E-11	2.070E-30	3.009E-29	3.271E-28	6.722E-27	7.932E-26	2.023E-25	0.000E+00	0.000E+00
-238+D	Pb-210+D	6.713E-11	7.058E-32	2.111E-30	4.916E-29	2.884E-27	8.963E-26	5.266E-25	0.000E+00	0.000E+00
-238+D	äDSR(j)		9.059E-16	8.609E-16	7.774E-16	5.430E-16	1.920E-16	3.591E-18	0.000E+00	0.000E+00
-238+D	U-238+D	8.862E-17	1.196E-21	1.136E-21	1.026E-21	7.168E-22	2.534E-22	4.739E-24	0.000E+00	0.000E+00
-238+D	U-234	8.862E-17	1.749E-27	5.014E-27	1.058E-26	2.219E-26	2.279E-26	1.405E-27	0.000E+00	0.000E+00
-238+D	Th-230	8.862E-17	1.045E-32	7.093E-32	3.496E-31	2.438E-30	1.023E-29	1.013E-29	0.000E+00	0.000E+00
-238+D	Ra-226+D3	8.862E-17	2.732E-36	3.972E-35	4.318E-34	8.874E-33	1.047E-31	2.670E-31	0.000E+00	0.000E+00
-238+D	Pb-210+D1	8.862E-17	6.884E-38	2.059E-36	4.795E-35	2.812E-33	8.742E-32	5.137E-31	0.000E+00	0.000E+00
-238+D	äDSR(j)		1.196E-21	1.136E-21	1.026E-21	7.168E-22	2.534E-22	4.740E-24	0.000E+00	0.000E+00
-238+D	U-238+D	1.276E-18	1.721E-23	1.636E-23	1.477E-23	1.032E-23	3.647E-24	6.821E-26	0.000E+00	0.000E+00
-238+D	U-234	1.276E-18	2.517E-29	7.217E-29	1.523E-28	3.194E-28	3.281E-28	2.022E-29	0.000E+00	0.000E+00
-238+D	Th-230	1.276E-18	1.504E-34	1.021E-33	5.032E-33	3.509E-32	1.473E-31	1.459E-31	0.000E+00	0.000E+00
-238+D	Ra-226+D3	1.276E-18	3.933E-38	5.717E-37	6.216E-36	1.277E-34	1.507E-33	3.843E-33	0.000E+00	0.000E+00
-238+D	Pb-210+D2	1.276E-18	9.897E-40	2.960E-38	6.893E-37	4.043E-35	1.257E-33	7.385E-33	0.000E+00	0.000E+00
-238+D	äDSR(j)		1.721E-23	1.636E-23	1.477E-23	1.032E-23	3.648E-24	6.823E-26	0.000E+00	0.000E+00

ummary : GKP Fire Fighter- Ingestion
ile : C:\USERS\CLAUDE\DOCUMENTS\0 GKP DOSE\RESRAD CW\GKP FIRE FIGHTER -INGESTION.RAD

Dose/Source Ratios Summed Over All Pathways
Parent and Progeny Principal Radionuclide Contributions Indicated

Parent	Product	Thread	DSR(j,t) At Time in Years (mrem/yr)/(pCi/g)							
(i)	(j)	Fraction	0.000E+00	1.000E+00	3.000E+00	1.000E+01	3.000E+01	1.000E+02	3.000E+02	1.000E+03
ÄÄÄÄÄÄÄÄ	ÄÄÄÄÄÄÄÄÄÄ	ÄÄÄÄÄÄÄÄ	ÄÄÄÄÄÄÄÄ	ÄÄÄÄÄÄÄÄ	ÄÄÄÄÄÄÄÄ	ÄÄÄÄÄÄÄÄ	ÄÄÄÄÄÄÄÄ	ÄÄÄÄÄÄÄÄ	ÄÄÄÄÄÄÄÄ	ÄÄÄÄÄÄÄÄ
-238+D	U-238+D	3.200E-10	4.318E-15	4.104E-15	3.705E-15	2.588E-15	9.150E-16	1.711E-17	0.000E+00	0.000E+00
-238+D	U-234	3.200E-10	6.315E-21	1.811E-20	3.821E-20	8.014E-20	8.231E-20	5.072E-21	0.000E+00	0.000E+00
-238+D	Th-230	3.200E-10	3.774E-26	2.561E-25	1.262E-24	8.804E-24	3.695E-23	3.659E-23	0.000E+00	0.000E+00
-238+D	Ra-226+D4	3.200E-10	9.864E-30	1.434E-28	1.559E-27	3.204E-26	3.780E-25	9.640E-25	0.000E+00	0.000E+00
-238+D	Pb-210+D	3.200E-10	3.364E-31	1.006E-29	2.343E-28	1.375E-26	4.272E-25	2.510E-24	0.000E+00	0.000E+00
-238+D	äDSR(j)		4.318E-15	4.104E-15	3.705E-15	2.589E-15	9.151E-16	1.712E-17	0.000E+00	0.000E+00
-238+D	U-238+D	4.224E-16	5.700E-21	5.417E-21	4.891E-21	3.417E-21	1.208E-21	2.259E-23	0.000E+00	0.000E+00
-238+D	U-234	4.224E-16	8.336E-27	2.390E-26	5.044E-26	1.058E-25	1.087E-25	6.696E-27	0.000E+00	0.000E+00
-238+D	Th-230	4.224E-16	4.981E-32	3.381E-31	1.666E-30	1.162E-29	4.877E-29	4.830E-29	0.000E+00	0.000E+00
-238+D	Ra-226+D4	4.224E-16	1.302E-35	1.893E-34	2.058E-33	4.229E-32	4.990E-31	1.272E-30	0.000E+00	0.000E+00
-238+D	Pb-210+D1	4.224E-16	3.281E-37	9.815E-36	2.286E-34	1.341E-32	4.167E-31	2.448E-30	0.000E+00	0.000E+00
-238+D	äDSR(j)		5.700E-21	5.417E-21	4.891E-21	3.417E-21	1.208E-21	2.260E-23	0.000E+00	0.000E+00
-238+D	U-238+D	6.080E-18	8.205E-23	7.797E-23	7.040E-23	4.918E-23	1.739E-23	3.251E-25	0.000E+00	0.000E+00
-238+D	U-234	6.080E-18	1.200E-28	3.440E-28	7.260E-28	1.523E-27	1.564E-27	9.637E-29	0.000E+00	0.000E+00
-238+D	Th-230	6.080E-18	7.170E-34	4.866E-33	2.399E-32	1.673E-31	7.020E-31	6.953E-31	0.000E+00	0.000E+00
-238+D	Ra-226+D4	6.080E-18	1.874E-37	2.724E-36	2.962E-35	6.087E-34	7.183E-33	1.832E-32	0.000E+00	0.000E+00
-238+D	Pb-210+D2	6.080E-18	4.717E-39	1.411E-37	3.286E-36	1.927E-34	5.991E-33	3.520E-32	0.000E+00	0.000E+00
-238+D	äDSR(j)		8.205E-23	7.797E-23	7.040E-23	4.918E-23	1.739E-23	3.252E-25	0.000E+00	0.000E+00
-238+D1	U-238+D1	9.980E-01	1.336E-05	1.270E-05	1.146E-05	8.008E-06	2.831E-06	5.294E-08	0.000E+00	0.000E+00
-238+D1	U-234	9.980E-01	1.970E-11	5.647E-11	1.192E-10	2.499E-10	2.567E-10	1.582E-11	0.000E+00	0.000E+00
-238+D1	Th-230	9.980E-01	1.177E-16	7.988E-16	3.937E-15	2.746E-14	1.152E-13	1.141E-13	0.000E+00	0.000E+00
-238+D1	Ra-226+D	9.980E-01	3.078E-20	4.475E-19	4.866E-18	9.998E-17	1.180E-15	3.008E-15	0.000E+00	0.000E+00
-238+D1	Pb-210+D	9.980E-01	1.049E-21	3.138E-20	7.308E-19	4.287E-17	1.332E-15	7.829E-15	0.000E+00	0.000E+00
-238+D1	äDSR(j)		1.336E-05	1.270E-05	1.146E-05	8.008E-06	2.831E-06	5.296E-08	0.000E+00	0.000E+00
-238+D1	U-238+D1	1.317E-06	1.763E-11	1.676E-11	1.513E-11	1.057E-11	3.737E-12	6.989E-14	0.000E+00	0.000E+00
-238+D1	U-234	1.317E-06	2.600E-17	7.454E-17	1.573E-16	3.299E-16	3.389E-16	2.088E-17	0.000E+00	0.000E+00
-238+D1	Th-230	1.317E-06	1.554E-22	1.054E-21	5.197E-21	3.624E-20	1.521E-19	1.506E-19	0.000E+00	0.000E+00
-238+D1	Ra-226+D	1.317E-06	4.064E-26	5.907E-25	6.423E-24	1.320E-22	1.557E-21	3.971E-21	0.000E+00	0.000E+00
-238+D1	Pb-210+D1	1.317E-06	1.023E-27	3.061E-26	7.128E-25	4.181E-23	1.300E-21	7.636E-21	0.000E+00	0.000E+00
-238+D1	äDSR(j)		1.764E-11	1.676E-11	1.513E-11	1.057E-11	3.737E-12	6.991E-14	0.000E+00	0.000E+00
-238+D1	U-238+D1	1.896E-08	2.538E-13	2.412E-13	2.178E-13	1.522E-13	5.379E-14	1.006E-15	0.000E+00	0.000E+00
-238+D1	U-234	1.896E-08	3.742E-19	1.073E-18	2.264E-18	4.749E-18	4.878E-18	3.006E-19	0.000E+00	0.000E+00
-238+D1	Th-230	1.896E-08	2.236E-24	1.518E-23	7.480E-23	5.217E-22	2.189E-21	2.168E-21	0.000E+00	0.000E+00
-238+D1	Ra-226+D	1.896E-08	5.849E-28	8.502E-27	9.245E-26	1.900E-24	2.242E-23	5.716E-23	0.000E+00	0.000E+00
-238+D1	Pb-210+D2	1.896E-08	1.471E-29	4.401E-28	1.025E-26	6.011E-25	1.868E-23	1.098E-22	0.000E+00	0.000E+00
-238+D1	äDSR(j)		2.538E-13	2.412E-13	2.178E-13	1.522E-13	5.379E-14	1.006E-15	0.000E+00	0.000E+00

ummary : GKP Fire Fighter- Ingestion
ile : C:\USERS\CLAUDE\DOCUMENTS\0 GKP DOSE\RESRAD CW\GKP FIRE FIGHTER -INGESTION.RAD

Dose/Source Ratios Summed Over All Pathways
Parent and Progeny Principal Radionuclide Contributions Indicated

Parent	Product	Thread	DSR(j,t) At Time in Years (mrem/yr)/(pCi/g)							
(i)	(j)	Fraction	0.000E+00	1.000E+00	3.000E+00	1.000E+01	3.000E+01	1.000E+02	3.000E+02	1.000E+03
ÄÄÄÄÄÄÄÄ	ÄÄÄÄÄÄÄÄÄÄ	ÄÄÄÄÄÄÄÄ	ÄÄÄÄÄÄÄÄ	ÄÄÄÄÄÄÄÄ	ÄÄÄÄÄÄÄÄ	ÄÄÄÄÄÄÄÄ	ÄÄÄÄÄÄÄÄ	ÄÄÄÄÄÄÄÄ	ÄÄÄÄÄÄÄÄ	ÄÄÄÄÄÄÄÄ
-238+D1	U-238+D1	2.096E-04	2.806E-09	2.667E-09	2.408E-09	1.682E-09	5.946E-10	1.112E-11	0.000E+00	0.000E+00
-238+D1	U-234	2.096E-04	4.137E-15	1.186E-14	2.503E-14	5.250E-14	5.392E-14	3.323E-15	0.000E+00	0.000E+00
-238+D1	Th-230	2.096E-04	2.472E-20	1.678E-19	8.270E-19	5.767E-18	2.420E-17	2.397E-17	0.000E+00	0.000E+00
-238+D1	Ra-226+D1	2.096E-04	6.466E-24	9.399E-23	1.022E-21	2.100E-20	2.478E-19	6.319E-19	0.000E+00	0.000E+00
-238+D1	Pb-210+D	2.096E-04	2.204E-25	6.592E-24	1.535E-22	9.004E-21	2.799E-19	1.644E-18	0.000E+00	0.000E+00
-238+D1	äDSR(j)		2.806E-09	2.667E-09	2.408E-09	1.682E-09	5.947E-10	1.112E-11	0.000E+00	0.000E+00
-238+D1	U-238+D1	2.767E-10	3.704E-15	3.520E-15	3.179E-15	2.220E-15	7.849E-16	1.468E-17	0.000E+00	0.000E+00
-238+D1	U-234	2.767E-10	5.461E-21	1.566E-20	3.304E-20	6.930E-20	7.118E-20	4.386E-21	0.000E+00	0.000E+00
-238+D1	Th-230	2.767E-10	3.263E-26	2.215E-25	1.092E-24	7.613E-24	3.195E-23	3.164E-23	0.000E+00	0.000E+00
-238+D1	Ra-226+D1	2.767E-10	8.535E-30	1.241E-28	1.349E-27	2.772E-26	3.271E-25	8.341E-25	0.000E+00	0.000E+00
-238+D1	Pb-210+D1	2.767E-10	2.149E-31	6.430E-30	1.497E-28	8.782E-27	2.730E-25	1.604E-24	0.000E+00	0.000E+00
-238+D1	äDSR(j)		3.704E-15	3.520E-15	3.179E-15	2.220E-15	7.850E-16	1.468E-17	0.000E+00	0.000E+00
-238+D1	U-238+D1	3.983E-12	5.332E-17	5.067E-17	4.575E-17	3.196E-17	1.130E-17	2.113E-19	0.000E+00	0.000E+00
-238+D1	U-234	3.983E-12	7.860E-23	2.254E-22	4.756E-22	9.975E-22	1.025E-21	6.313E-23	0.000E+00	0.000E+00
-238+D1	Th-230	3.983E-12	4.697E-28	3.188E-27	1.571E-26	1.096E-25	4.599E-25	4.555E-25	0.000E+00	0.000E+00
-238+D1	Ra-226+D1	3.983E-12	1.229E-31	1.786E-30	1.942E-29	3.990E-28	4.708E-27	1.201E-26	0.000E+00	0.000E+00
-238+D1	Pb-210+D2	3.983E-12	3.090E-33	9.244E-32	2.152E-30	1.263E-28	3.924E-27	2.306E-26	0.000E+00	0.000E+00
-238+D1	äDSR(j)		5.332E-17	5.067E-17	4.575E-17	3.196E-17	1.130E-17	2.114E-19	0.000E+00	0.000E+00
-238+D1	U-238+D1	1.994E-04	2.670E-09	2.537E-09	2.291E-09	1.600E-09	5.657E-10	1.058E-11	0.000E+00	0.000E+00
-238+D1	U-234	1.994E-04	3.936E-15	1.128E-14	2.381E-14	4.995E-14	5.130E-14	3.161E-15	0.000E+00	0.000E+00
-238+D1	Th-230	1.994E-04	2.352E-20	1.596E-19	7.868E-19	5.487E-18	2.303E-17	2.281E-17	0.000E+00	0.000E+00
-238+D1	Ra-226+D2	1.994E-04	6.149E-24	8.939E-23	9.719E-22	1.997E-20	2.357E-19	6.009E-19	0.000E+00	0.000E+00
-238+D1	Pb-210+D	1.994E-04	2.097E-25	6.272E-24	1.460E-22	8.567E-21	2.663E-19	1.565E-18	0.000E+00	0.000E+00
-238+D1	äDSR(j)		2.670E-09	2.537E-09	2.291E-09	1.600E-09	5.658E-10	1.058E-11	0.000E+00	0.000E+00
-238+D1	U-238+D1	2.633E-10	3.524E-15	3.349E-15	3.024E-15	2.112E-15	7.468E-16	1.397E-17	0.000E+00	0.000E+00
-238+D1	U-234	2.633E-10	5.195E-21	1.490E-20	3.144E-20	6.593E-20	6.772E-20	4.173E-21	0.000E+00	0.000E+00
-238+D1	Th-230	2.633E-10	3.105E-26	2.107E-25	1.039E-24	7.243E-24	3.040E-23	3.011E-23	0.000E+00	0.000E+00
-238+D1	Ra-226+D2	2.633E-10	8.117E-30	1.180E-28	1.283E-27	2.636E-26	3.111E-25	7.932E-25	0.000E+00	0.000E+00
-238+D1	Pb-210+D1	2.633E-10	2.045E-31	6.117E-30	1.424E-28	8.355E-27	2.597E-25	1.526E-24	0.000E+00	0.000E+00
-238+D1	äDSR(j)		3.524E-15	3.349E-15	3.024E-15	2.113E-15	7.469E-16	1.397E-17	0.000E+00	0.000E+00
-238+D1	U-238+D1	3.789E-12	5.073E-17	4.821E-17	4.353E-17	3.041E-17	1.075E-17	2.010E-19	0.000E+00	0.000E+00
-238+D1	U-234	3.789E-12	7.478E-23	2.144E-22	4.525E-22	9.490E-22	9.747E-22	6.007E-23	0.000E+00	0.000E+00
-238+D1	Th-230	3.789E-12	4.469E-28	3.033E-27	1.495E-26	1.043E-25	4.375E-25	4.333E-25	0.000E+00	0.000E+00
-238+D1	Ra-226+D2	3.789E-12	1.168E-31	1.698E-30	1.847E-29	3.794E-28	4.477E-27	1.142E-26	0.000E+00	0.000E+00
-238+D1	Pb-210+D2	3.789E-12	2.940E-33	8.795E-32	2.048E-30	1.201E-28	3.734E-27	2.194E-26	0.000E+00	0.000E+00
-238+D1	äDSR(j)		5.073E-17	4.821E-17	4.353E-17	3.041E-17	1.075E-17	2.011E-19	0.000E+00	0.000E+00

ummary : GKP Fire Fighter- Ingestion
ile : C:\USERS\CLAUDE\DOCUMENTS\0 GKP DOSE\RESRAD CW\GKP FIRE FIGHTER -INGESTION.RAD

Dose/Source Ratios Summed Over All Pathways
Parent and Progeny Principal Radionuclide Contributions Indicated

Parent (i)	Product (j)	Thread Fraction	DSR(j,t) At Time in Years (mrem/yr)/(pCi/g) 0.000E+00	1.000E+00	3.000E+00	1.000E+01	3.000E+01	1.000E+02	3.000E+02	1.000E+03
ÄÄÄÄÄÄÄÄÄ	ÄÄÄÄÄÄÄÄÄÄ	ÄÄÄÄÄÄÄÄÄ	ÄÄÄÄÄÄÄÄÄ	ÄÄÄÄÄÄÄÄÄ	ÄÄÄÄÄÄÄÄÄ	ÄÄÄÄÄÄÄÄÄ	ÄÄÄÄÄÄÄÄÄ	ÄÄÄÄÄÄÄÄÄ	ÄÄÄÄÄÄÄÄÄ	ÄÄÄÄÄÄÄÄÄ
238+D1	U 238+D1	4.189E-08	5.608E 13	5.329E 13	4.812E 13	3.361E 13	1.188E 13	2.222E 15	0.000E+00	0.000E+00
-238+D1	U-234	4.189E-08	8.267E-19	2.370E-18	5.002E-18	1.049E-17	1.078E-17	6.640E-19	0.000E+00	0.000E+00
-238+D1	Th-230	4.189E-08	4.940E-24	3.353E-23	1.653E-22	1.153E-21	4.837E-21	4.791E-21	0.000E+00	0.000E+00
-238+D1	Ra-226+D3	4.189E-08	1.292E-27	1.878E-26	2.041E-25	4.195E-24	4.950E-23	1.262E-22	0.000E+00	0.000E+00
-238+D1	Pb-210+D	4.189E-08	4.404E-29	1.317E-27	3.068E-26	1.799E-24	5.593E-23	3.286E-22	0.000E+00	0.000E+00
-238+D1	äDSR(j)		5.608E-13	5.329E-13	4.812E-13	3.362E-13	1.188E-13	2.223E-15	0.000E+00	0.000E+00
-238+D1	U-238+D1	5.530E-14	7.402E-19	7.035E-19	6.352E-19	4.437E-19	1.569E-19	2.933E-21	0.000E+00	0.000E+00
-238+D1	U-234	5.530E-14	1.091E-24	3.129E-24	6.603E-24	1.385E-23	1.422E-23	8.765E-25	0.000E+00	0.000E+00
-238+D1	Th-230	5.530E-14	6.521E-30	4.426E-29	2.181E-28	1.521E-27	6.385E-27	6.323E-27	0.000E+00	0.000E+00
-238+D1	Ra-226+D3	5.530E-14	1.705E-33	2.478E-32	2.695E-31	5.537E-30	6.534E-29	1.666E-28	0.000E+00	0.000E+00
-238+D1	Pb-210+D1	5.530E-14	4.295E-35	1.285E-33	2.992E-32	1.755E-30	5.455E-29	3.205E-28	0.000E+00	0.000E+00
-238+D1	äDSR(j)		7.402E-19	7.035E-19	6.352E-19	4.437E-19	1.569E-19	2.934E-21	0.000E+00	0.000E+00
-238+D1	U-238+D1	7.959E-16	1.065E-20	1.013E-20	9.143E-21	6.387E-21	2.258E-21	4.222E-23	0.000E+00	0.000E+00
-238+D1	U-234	7.959E-16	1.571E-26	4.504E-26	9.504E-26	1.993E-25	2.047E-25	1.262E-26	0.000E+00	0.000E+00
-238+D1	Th-230	7.959E-16	9.386E-32	6.370E-31	3.140E-30	2.190E-29	9.190E-29	9.102E-29	0.000E+00	0.000E+00
-238+D1	Ra-226+D3	7.959E-16	2.454E-35	3.567E-34	3.879E-33	7.970E-32	9.405E-31	2.398E-30	0.000E+00	0.000E+00
-238+D1	Pb-210+D2	7.959E-16	6.176E-37	1.847E-35	4.301E-34	2.523E-32	7.842E-31	4.608E-30	0.000E+00	0.000E+00
-238+D1	äDSR(j)		1.065E-20	1.013E-20	9.143E-21	6.387E-21	2.258E-21	4.224E-23	0.000E+00	0.000E+00
-238+D1	U-238+D1	1.997E-07	2.673E-12	2.540E-12	2.294E-12	1.602E-12	5.664E-13	1.059E-14	0.000E+00	0.000E+00
-238+D1	U-234	1.997E-07	3.941E-18	1.130E-17	2.384E-17	5.001E-17	5.136E-17	3.165E-18	0.000E+00	0.000E+00
-238+D1	Th-230	1.997E-07	2.355E-23	1.598E-22	7.877E-22	5.494E-21	2.306E-20	2.283E-20	0.000E+00	0.000E+00
-238+D1	Ra-226+D4	1.997E-07	6.155E-27	8.948E-26	9.728E-25	1.999E-23	2.359E-22	6.015E-22	0.000E+00	0.000E+00
-238+D1	Pb-210+D	1.997E-07	2.099E-28	6.280E-27	1.462E-25	8.577E-24	2.666E-22	1.566E-21	0.000E+00	0.000E+00
-238+D1	äDSR(j)		2.673E-12	2.540E-12	2.294E-12	1.602E-12	5.665E-13	1.060E-14	0.000E+00	0.000E+00
-238+D1	U-238+D1	2.636E-13	3.528E-18	3.353E-18	3.028E-18	2.115E-18	7.477E-19	1.398E-20	0.000E+00	0.000E+00
-238+D1	U-234	2.636E-13	5.202E-24	1.491E-23	3.147E-23	6.601E-23	6.780E-23	4.178E-24	0.000E+00	0.000E+00
-238+D1	Th-230	2.636E-13	3.108E-29	2.110E-28	1.040E-27	7.252E-27	3.043E-26	3.014E-26	0.000E+00	0.000E+00
-238+D1	Ra-226+D4	2.636E-13	8.125E-33	1.181E-31	1.284E-30	2.639E-29	3.114E-28	7.940E-28	0.000E+00	0.000E+00
-238+D1	Pb-210+D1	2.636E-13	2.048E-34	6.125E-33	1.426E-31	8.365E-30	2.600E-28	1.528E-27	0.000E+00	0.000E+00
-238+D1	äDSR(j)		3.528E-18	3.353E-18	3.028E-18	2.115E-18	7.478E-19	1.399E-20	0.000E+00	0.000E+00
-238+D1	U-238+D1	3.794E-15	5.079E-20	4.826E-20	4.358E-20	3.044E-20	1.076E-20	2.013E-22	0.000E+00	0.000E+00
-238+D1	U-234	3.794E-15	7.487E-26	2.147E-25	4.530E-25	9.502E-25	9.759E-25	6.014E-26	0.000E+00	0.000E+00
-238+D1	Th-230	3.794E-15	4.474E-31	3.037E-30	1.497E-29	1.044E-28	4.381E-28	4.339E-28	0.000E+00	0.000E+00
-238+D1	Ra-226+D4	3.794E-15	1.169E-34	1.700E-33	1.848E-32	3.798E-31	4.482E-30	1.143E-29	0.000E+00	0.000E+00
-238+D1	Pb-210+D2	3.794E-15	2.944E-36	8.805E-35	2.050E-33	1.203E-31	3.738E-30	2.196E-29	0.000E+00	0.000E+00
-238+D1	äDSR(j)		5.079E-20	4.826E-20	4.358E-20	3.044E-20	1.076E-20	2.013E-22	0.000E+00	0.000E+00
ÍÍÍÍÍÍÍÍÍ	ÍÍÍÍÍÍÍÍÍÍ	ÍÍÍÍÍÍÍÍÍ	ÍÍÍÍÍÍÍÍÍ	ÍÍÍÍÍÍÍÍÍ	ÍÍÍÍÍÍÍÍÍ	ÍÍÍÍÍÍÍÍÍ	ÍÍÍÍÍÍÍÍÍ	ÍÍÍÍÍÍÍÍÍ	ÍÍÍÍÍÍÍÍÍ	ÍÍÍÍÍÍÍÍÍ

ne DSR includes contributions from associated (half-life ó 180 days) daughters.

ummary : GKP FireIghter- Ingestion
ile : C:\USERS\CLAUDE\DOCUMENTS\0 GKP DOSE\RESRAD CW\GKP FIRE FIGHTER -INGESTION.RAD

Single Radionuclide Soil Guidelines G(i,t) in pCi/g
Basic Radiation Dose Limit = 2.500E+01 mrem/yr

uclide (i)	t= 0.000E+00	1.000E+00	3.000E+00	1.000E+01	3.000E+01	1.000E+02	3.000E+02	1.000E+03
ÄÄÄÄÄÄ	ÄÄÄÄÄÄÄÄÄÄ	ÄÄÄÄÄÄÄÄÄÄ	ÄÄÄÄÄÄÄÄÄÄ	ÄÄÄÄÄÄÄÄÄÄ	ÄÄÄÄÄÄÄÄÄÄ	ÄÄÄÄÄÄÄÄÄÄ	ÄÄÄÄÄÄÄÄÄÄ	ÄÄÄÄÄÄÄÄÄÄ
a-226	3.467E+05	3.122E+05	2.679E+05	2.127E+05	2.544E+05	3.471E+06	*9.885E+11	*9.885E+11
n-232	*1.097E+05	*1.097E+05	*1.097E+05	*1.097E+05	*1.097E+05	*1.097E+05	*1.097E+05	*1.097E+05
-234	1.773E+06	1.866E+06	2.066E+06	2.957E+06	8.359E+06	4.313E+08	*6.222E+09	*6.222E+09
-235	1.876E+06	1.973E+06	*2.160E+06	*2.160E+06	*2.160E+06	*2.160E+06	*2.160E+06	*2.160E+06
-238	*3.361E+05	*3.361E+05	*3.361E+05	*3.361E+05	*3.361E+05	*3.361E+05	*3.361E+05	*3.361E+05
íííííí	íííííííííí	íííííííííí	íííííííííí	íííííííííí	íííííííííí	íííííííííí	íííííííííí	íííííííííí

At specific activity limit

Summed Dose/Source Ratios DSR(i,t) in (mrem/yr)/(pCi/g)
and Single Radionuclide Soil Guidelines G(i,t) in pCi/g
at tmin = time of minimum single radionuclide soil guideline
and at tmax = time of maximum total dose = 13.55 ñ 0.03 years

uclide (i)	Initial (pCi/g)	tmin (years)	DSR(i,tmin)	G(i,tmin) (pCi/g)	DSR(i,tmax)	G(i,tmax) (pCi/g)
ÄÄÄÄÄÄ	ÄÄÄÄÄÄÄÄÄÄ	ÄÄÄÄÄÄÄÄÄÄÄÄÄÄÄÄ	ÄÄÄÄÄÄÄÄÄÄ	ÄÄÄÄÄÄÄÄÄÄ	ÄÄÄÄÄÄÄÄÄÄ	ÄÄÄÄÄÄÄÄÄÄ
a-226	3.650E+01	14.25 ñ 0.03	1.206E-04	2.073E+05	1.205E-04	2.074E+05
n-232	2.400E+00	16.62 ñ 0.03	2.134E-04	*1.097E+05	2.120E-04	*1.097E+05
-234	1.390E+01	0.000E+00	1.410E-05	1.773E+06	7.043E-06	3.550E+06
-235	8.400E-01	0.000E+00	1.333E-05	1.876E+06	6.746E-06	*2.160E+06
-238	1.390E+01	0.000E+00	1.339E-05	*3.361E+05	6.685E-06	*3.361E+05
íííííí	íííííííííí	íííííííííííííííííí	íííííííííí	íííííííííí	íííííííííí	íííííííííí

At specific activity limit

ummary : GKP Fire Fighter- Ingestion
ile : C:\USERS\CLAUDE\DOCUMENTS\0 GKP DOSE\RESRAD CW\GKP FIRE FIGHTER -INGESTION.RAD

Individual Nuclide Dose Summed Over All Pathways
Parent Nuclide and Branch Fraction Indicated

uclide (j)	Parent (i)	THF(i)	DOSE(j,t), mrem/yr t= 0.000E+00	1.000E+00	3.000E+00	1.000E+01	3.000E+01	1.000E+02	3.000E+02	1.000E+03
ÄÄÄÄÄÄ	ÄÄÄÄÄÄÄ	ÄÄÄÄÄÄÄÄÄ	ÄÄÄÄÄÄÄÄÄ	ÄÄÄÄÄÄÄÄÄ	ÄÄÄÄÄÄÄÄÄ	ÄÄÄÄÄÄÄÄÄ	ÄÄÄÄÄÄÄÄÄ	ÄÄÄÄÄÄÄÄÄ	ÄÄÄÄÄÄÄÄÄ	ÄÄÄÄÄÄÄÄÄ
a-226	Ra-226	9.996E-01	2.426E-03	2.334E-03	2.159E-03	1.642E-03	7.406E-04	3.247E-05	0.000E+00	0.000E+00
a-226	Ra-226	1.319E-06	3.202E-09	3.080E-09	2.850E-09	2.168E-09	9.777E-10	4.287E-11	0.000E+00	0.000E+00
a-226	U-234	9.996E-01	6.105E-13	4.157E-12	2.065E-11	1.480E-10	6.667E-10	7.708E-10	0.000E+00	0.000E+00
a-226	U-234	1.319E-06	8.058E-19	5.488E-18	2.726E-17	1.953E-16	8.801E-16	1.017E-15	0.000E+00	0.000E+00
a-226	U-234	1.899E-08	1.160E-20	7.899E-20	3.924E-19	2.812E-18	1.267E-17	1.464E-17	0.000E+00	0.000E+00
a-226	U-238	1.599E-03	6.857E-22	9.968E-21	1.084E-19	2.227E-18	2.628E-17	6.701E-17	0.000E+00	0.000E+00
a-226	U-238	2.111E-09	9.013E-28	1.316E-26	1.431E-25	2.940E-24	3.469E-23	8.846E-23	0.000E+00	0.000E+00
a-226	U-238	3.039E-11	0.000E+00	1.886E-28	2.050E-27	4.232E-26	4.993E-25	1.273E-24	0.000E+00	0.000E+00
a-226	U-238	9.980E-01	4.279E-19	6.220E-18	6.763E-17	1.390E-15	1.640E-14	4.182E-14	0.000E+00	0.000E+00
a-226	U-238	1.317E-06	5.648E-25	8.211E-24	8.927E-23	1.834E-21	2.165E-20	5.520E-20	0.000E+00	0.000E+00
a-226	U-238	1.896E-08	8.130E-27	1.182E-25	1.285E-24	2.641E-23	3.116E-22	7.945E-22	0.000E+00	0.000E+00
a-226	ädose(j)		2.426E-03	2.334E-03	2.159E-03	1.642E-03	7.406E-04	3.248E-05	0.000E+00	0.000E+00
o-210	Ra-226	9.996E-01	2.049E-04	5.884E-04	1.246E-03	2.645E-03	2.844E-03	2.303E-04	0.000E+00	0.000E+00
o-210	Ra-226	2.100E-04	4.305E-08	1.236E-07	2.616E-07	5.556E-07	5.974E-07	4.837E-08	0.000E+00	0.000E+00
o-210	Ra-226	1.998E-04	4.095E-08	1.176E-07	2.489E-07	5.286E-07	5.684E-07	4.602E-08	0.000E+00	0.000E+00
o-210	Ra-226	4.196E-08	8.602E-12	2.470E-11	5.229E-11	1.110E-10	1.194E-10	9.666E-12	0.000E+00	0.000E+00
o-210	Ra-226	2.000E-07	4.100E-11	1.177E-10	2.492E-10	5.293E-10	5.691E-10	4.608E-11	0.000E+00	0.000E+00
o-210	U-234	9.996E-01	2.595E-14	3.765E-13	4.076E-12	8.250E-11	9.362E-10	2.188E-09	0.000E+00	0.000E+00
o-210	U-234	2.100E-04	5.451E-18	7.908E-17	8.561E-16	1.733E-14	1.967E-13	4.595E-13	0.000E+00	0.000E+00
o-210	U-234	1.998E-04	5.186E-18	7.524E-17	8.145E-16	1.649E-14	1.871E-13	4.372E-13	0.000E+00	0.000E+00
o-210	U-234	4.196E-08	1.089E-21	1.580E-20	1.711E-19	3.463E-18	3.930E-17	9.182E-17	0.000E+00	0.000E+00
o-210	U-234	2.000E-07	5.192E-21	7.533E-20	8.155E-19	1.651E-17	1.873E-16	4.377E-16	0.000E+00	0.000E+00
o-210	U-238	1.599E-03	2.337E-23	6.991E-22	1.628E-20	9.549E-19	2.968E-17	1.744E-16	0.000E+00	0.000E+00
o-210	U-238	3.359E-07	4.909E-27	1.468E-25	3.419E-24	2.006E-22	6.234E-21	3.663E-20	0.000E+00	0.000E+00
o-210	U-238	3.196E-07	4.671E-27	1.397E-25	3.253E-24	1.908E-22	5.931E-21	3.485E-20	0.000E+00	0.000E+00
o-210	U-238	6.713E-11	0.000E+00	2.935E-29	6.833E-28	4.008E-26	1.246E-24	7.320E-24	0.000E+00	0.000E+00
o-210	U-238	3.200E-10	0.000E+00	1.399E-28	3.257E-27	1.911E-25	5.939E-24	3.489E-23	0.000E+00	0.000E+00
o-210	U-238	9.980E-01	1.458E-20	4.362E-19	1.016E-17	5.959E-16	1.852E-14	1.088E-13	0.000E+00	0.000E+00
o-210	U-238	2.096E-04	3.063E-24	9.163E-23	2.134E-21	1.252E-19	3.890E-18	2.286E-17	0.000E+00	0.000E+00
o-210	U-238	1.994E-04	2.915E-24	8.718E-23	2.030E-21	1.191E-19	3.701E-18	2.175E-17	0.000E+00	0.000E+00
o-210	U-238	4.189E-08	6.122E-28	1.831E-26	4.264E-25	2.501E-23	7.774E-22	4.568E-21	0.000E+00	0.000E+00
o-210	U-238	1.997E-07	2.918E-27	8.729E-26	2.033E-24	1.192E-22	3.706E-21	2.177E-20	0.000E+00	0.000E+00
o-210	ädose(j)		2.050E-04	5.886E-04	1.246E-03	2.646E-03	2.845E-03	2.304E-04	0.000E+00	0.000E+00
o-210	Ra-226	1.319E-06	1.999E-10	5.739E-10	1.215E-09	2.580E-09	2.774E-09	2.246E-10	0.000E+00	0.000E+00
o-210	Ra-226	1.899E-08	2.874E-12	8.251E-12	1.747E-11	3.709E-11	3.988E-11	3.229E-12	0.000E+00	0.000E+00
o-210	Ra-226	2.771E-10	4.198E-14	1.205E-13	2.552E-13	5.419E-13	5.827E-13	4.718E-14	0.000E+00	0.000E+00
o-210	Ra-226	2.637E-10	3.994E-14	1.147E-13	2.428E-13	5.156E-13	5.544E-13	4.488E-14	0.000E+00	0.000E+00
o-210	Ra-226	5.538E-14	8.390E-18	2.409E-17	5.100E-17	1.083E-16	1.164E-16	9.428E-18	0.000E+00	0.000E+00
o-210	Ra-226	2.640E-13	3.999E-17	1.148E-16	2.431E-16	5.162E-16	5.550E-16	4.494E-17	0.000E+00	0.000E+00
o-210	U-234	1.319E-06	2.531E-20	3.672E-19	3.975E-18	8.046E-17	9.131E-16	2.134E-15	0.000E+00	0.000E+00
o-210	U-234	2.771E-10	5.316E-24	7.713E-23	8.350E-22	1.690E-20	1.918E-19	4.481E-19	0.000E+00	0.000E+00
o-210	U-234	2.637E-10	5.058E-24	7.338E-23	7.944E-22	1.608E-20	1.825E-19	4.264E-19	0.000E+00	0.000E+00
o-210	U-234	5.538E-14	1.062E-27	1.541E-26	1.669E-25	3.378E-24	3.833E-23	8.956E-23	0.000E+00	0.000E+00
o-210	U-234	2.640E-13	5.064E-27	7.347E-26	7.954E-25	1.610E-23	1.827E-22	4.269E-22	0.000E+00	0.000E+00
o-210	U-238	2.111E-09	2.280E-29	6.819E-28	1.588E-26	9.313E-25	2.895E-23	1.701E-22	0.000E+00	0.000E+00
o-210	U-238	4.434E-13	0.000E+00	0.000E+00	0.000E+00	1.956E-28	6.080E-27	3.573E-26	0.000E+00	0.000E+00
o-210	U-238	4.219E-13	0.000E+00	0.000E+00	0.000E+00	1.861E-28	5.785E-27	3.399E-26	0.000E+00	0.000E+00

ummary : GKP Fire Fighter- Ingestion
ile : C:\USERS\CLAUDE\DOCUMENTS\0 GKP DOSE\RESRAD CW\GKP FIRE FIGHTER -INGESTION.RAD

Individual Nuclide Dose Summed Over All Pathways
Parent Nuclide and Branch Fraction Indicated

uclide (j)	Parent (i)	THF(i)	DOSE(j,t), mrem/yr t= 0.000E+00	1.000E+00	3.000E+00	1.000E+01	3.000E+01	1.000E+02	3.000E+02	1.000E+03
ÄÄÄÄÄÄ	ÄÄÄÄÄÄÄ	ÄÄÄÄÄÄÄÄÄ	ÄÄÄÄÄÄÄÄÄ	ÄÄÄÄÄÄÄÄÄ	ÄÄÄÄÄÄÄÄÄ	ÄÄÄÄÄÄÄÄÄ	ÄÄÄÄÄÄÄÄÄ	ÄÄÄÄÄÄÄÄÄ	ÄÄÄÄÄÄÄÄÄ	ÄÄÄÄÄÄÄÄÄ
o-210	U-238	8.862E-17	0.000E+00	0.000E+00	0.000E+00	0.000E+00	0.000E+00	0.000E+00	0.000E+00	0.000E+00
o-210	U-238	4.224E-16	0.000E+00	0.000E+00	0.000E+00	0.000E+00	0.000E+00	3.403E-29	0.000E+00	0.000E+00
o-210	U-238	1.317E-06	1.422E-26	4.255E-25	9.908E-24	5.812E-22	1.806E-20	1.061E-19	0.000E+00	0.000E+00
o-210	U-238	2.767E-10	0.000E+00	8.937E-29	2.081E-27	1.221E-25	3.794E-24	2.229E-23	0.000E+00	0.000E+00
o-210	U-238	2.633E-10	0.000E+00	8.503E-29	1.980E-27	1.161E-25	3.610E-24	2.121E-23	0.000E+00	0.000E+00
o-210	U-238	5.530E-14	0.000E+00	0.000E+00	0.000E+00	2.439E-29	7.582E-28	4.455E-27	0.000E+00	0.000E+00
o-210	U-238	2.636E-13	0.000E+00	0.000E+00	0.000E+00	1.163E-28	3.614E-27	2.124E-26	0.000E+00	0.000E+00
o-210	äDOSE(j)		2.028E-10	5.824E-10	1.233E-09	2.618E-09	2.815E-09	2.279E-10	0.000E+00	0.000E+00
a-226	Ra-226	1.899E-08	4.609E-11	4.434E-11	4.102E-11	3.121E-11	1.407E-11	6.170E-13	0.000E+00	0.000E+00
a-226	Ra-226	2.100E-04	5.095E-07	4.902E-07	4.535E-07	3.450E-07	1.556E-07	6.821E-09	0.000E+00	0.000E+00
a-226	äDOSE(j)		5.096E-07	4.902E-07	4.535E-07	3.450E-07	1.556E-07	6.822E-09	0.000E+00	0.000E+00
a-226	Ra-226	2.771E-10	6.726E-13	6.470E-13	5.986E-13	4.554E-13	2.054E-13	9.004E-15	0.000E+00	0.000E+00
a-226	Ra-226	3.989E-12	9.681E-15	9.313E-15	8.617E-15	6.555E-15	2.956E-15	1.296E-16	0.000E+00	0.000E+00
a-226	äDOSE(j)		6.823E-13	6.563E-13	6.072E-13	4.619E-13	2.083E-13	9.133E-15	0.000E+00	0.000E+00
o-210	Ra-226	3.989E-12	6.036E-16	1.733E-15	3.669E-15	7.791E-15	8.377E-15	6.782E-16	0.000E+00	0.000E+00
o-210	Ra-226	3.795E-12	5.743E-16	1.649E-15	3.491E-15	7.413E-15	7.970E-15	6.453E-16	0.000E+00	0.000E+00
o-210	Ra-226	7.972E-16	1.206E-19	3.463E-19	7.332E-19	1.557E-18	1.674E-18	1.355E-19	0.000E+00	0.000E+00
o-210	Ra-226	3.800E-15	5.750E-19	1.651E-18	3.495E-18	7.422E-18	7.980E-18	6.461E-19	0.000E+00	0.000E+00
o-210	U-234	1.899E-08	3.639E-22	5.279E-21	5.715E-20	1.157E-18	1.313E-17	3.067E-17	0.000E+00	0.000E+00
o-210	U-234	3.989E-12	7.643E-26	1.109E-24	1.200E-23	2.430E-22	2.757E-21	6.443E-21	0.000E+00	0.000E+00
o-210	U-234	3.795E-12	7.272E-26	1.055E-24	1.142E-23	2.312E-22	2.624E-21	6.130E-21	0.000E+00	0.000E+00
o-210	U-234	7.972E-16	1.527E-29	2.216E-28	2.399E-27	4.856E-26	5.511E-25	1.288E-24	0.000E+00	0.000E+00
o-210	U-234	3.800E-15	7.280E-29	1.056E-27	1.144E-26	2.315E-25	2.627E-24	6.137E-24	0.000E+00	0.000E+00
o-210	U-238	3.039E-11	0.000E+00	0.000E+00	2.283E-28	1.339E-26	4.162E-25	2.445E-24	0.000E+00	0.000E+00
o-210	U-238	6.383E-15	0.000E+00	0.000E+00	0.000E+00	0.000E+00	8.742E-29	5.136E-28	0.000E+00	0.000E+00
o-210	U-238	6.073E-15	0.000E+00	0.000E+00	0.000E+00	0.000E+00	8.317E-29	4.887E-28	0.000E+00	0.000E+00
o-210	U-238	1.276E-18	0.000E+00	0.000E+00	0.000E+00	0.000E+00	0.000E+00	0.000E+00	0.000E+00	0.000E+00
o-210	U-238	6.080E-18	0.000E+00	0.000E+00	0.000E+00	0.000E+00	0.000E+00	0.000E+00	0.000E+00	0.000E+00
o-210	U-238	1.896E-08	2.045E-28	6.117E-27	1.424E-25	8.355E-24	2.597E-22	1.526E-21	0.000E+00	0.000E+00
o-210	U-238	3.983E-12	0.000E+00	0.000E+00	2.992E-29	1.755E-27	5.455E-26	3.205E-25	0.000E+00	0.000E+00
o-210	U-238	3.789E-12	0.000E+00	0.000E+00	2.847E-29	1.670E-27	5.190E-26	3.049E-25	0.000E+00	0.000E+00
o-210	U-238	7.959E-16	0.000E+00	0.000E+00	0.000E+00	0.000E+00	0.000E+00	6.405E-29	0.000E+00	0.000E+00
o-210	U-238	3.794E-15	0.000E+00	0.000E+00	0.000E+00	0.000E+00	5.196E-29	3.053E-28	0.000E+00	0.000E+00
o-210	äDOSE(j)		1.179E-15	3.384E-15	7.164E-15	1.521E-14	1.637E-14	1.355E-15	0.000E+00	0.000E+00
a-226	Ra-226	1.998E-04	4.846E-07	4.661E-07	4.313E-07	3.281E-07	1.479E-07	6.487E-09	0.000E+00	0.000E+00
a-226	Ra-226	2.637E-10	6.396E-13	6.153E-13	5.693E-13	4.330E-13	1.953E-13	8.562E-15	0.000E+00	0.000E+00
a-226	U-234	1.998E-04	1.219E-16	8.304E-16	4.125E-15	2.956E-14	1.332E-13	1.540E-13	0.000E+00	0.000E+00
a-226	U-234	2.637E-10	1.610E-22	1.096E-21	5.445E-21	3.902E-20	1.758E-19	2.032E-19	0.000E+00	0.000E+00
a-226	U-234	3.795E-12	2.317E-24	1.578E-23	7.838E-23	5.616E-22	2.530E-21	2.925E-21	0.000E+00	0.000E+00
a-226	U-238	3.196E-07	1.370E-25	1.991E-24	2.165E-23	4.449E-22	5.249E-21	1.339E-20	0.000E+00	0.000E+00
a-226	U-238	4.219E-13	0.000E+00	0.000E+00	2.845E-29	5.847E-28	6.929E-27	1.767E-26	0.000E+00	0.000E+00
a-226	U-238	6.073E-15	0.000E+00	0.000E+00	0.000E+00	0.000E+00	9.931E-29	2.532E-28	0.000E+00	0.000E+00
a-226	U-238	1.994E-04	8.547E-23	1.242E-21	1.351E-20	2.776E-19	3.276E-18	8.353E-18	0.000E+00	0.000E+00
a-226	U-238	2.633E-10	1.123E-28	1.633E-27	1.783E-26	3.664E-25	4.324E-24	1.103E-23	0.000E+00	0.000E+00
a-226	U-238	3.789E-12	0.000E+00	2.351E-29	2.556E-28	5.274E-27	6.224E-26	1.587E-25	0.000E+00	0.000E+00
a-226	äDOSE(j)		4.846E-07	4.661E-07	4.313E-07	3.281E-07	1.479E-07	6.487E-09	0.000E+00	0.000E+00

ummary : GKP Fire Fighter- Ingestion
ile : C:\USERS\CLAUDE\DOCUMENTS\0 GKP DOSE\RESRAD CW\GKP FIRE FIGHTER -INGESTION.RAD

Individual Nuclide Dose Summed Over All Pathways
Parent Nuclide and Branch Fraction Indicated

uclide (j)	Parent (i)	THF(i)	DOSE(j,t), mrem/yr t= 0.000E+00	1.000E+00	3.000E+00	1.000E+01	3.000E+01	1.000E+02	3.000E+02	1.000E+03
ÄÄÄÄÄÄ	ÄÄÄÄÄÄÄ	ÄÄÄÄÄÄÄÄÄ	ÄÄÄÄÄÄÄÄÄ	ÄÄÄÄÄÄÄÄÄ	ÄÄÄÄÄÄÄÄÄ	ÄÄÄÄÄÄÄÄÄ	ÄÄÄÄÄÄÄÄÄ	ÄÄÄÄÄÄÄÄÄ	ÄÄÄÄÄÄÄÄÄ	ÄÄÄÄÄÄÄÄÄ
a-226	Ra-226	3.795E-12	9.207E-15	8.856E-15	8.194E-15	6.233E-15	2.811E-15	1.232E-16	0.000E+00	0.000E+00
a-226	Ra-226	4.196E-08	1.018E-10	9.791E-11	9.059E-11	6.891E-11	3.107E-11	1.362E-12	0.000E+00	0.000E+00
a-226	äDOSE(j)		1.018E-10	9.792E-11	9.059E-11	6.891E-11	3.108E-11	1.363E-12	0.000E+00	0.000E+00
a-226	Ra-226	5.538E-14	1.343E-16	1.292E-16	1.196E-16	9.096E-17	4.102E-17	1.798E-18	0.000E+00	0.000E+00
a-226	Ra-226	7.972E-16	1.934E-18	1.860E-18	1.721E-18	1.309E-18	5.904E-19	2.589E-20	0.000E+00	0.000E+00
a-226	äDOSE(j)		1.363E-16	1.311E-16	1.213E-16	9.227E-17	4.161E-17	1.824E-18	0.000E+00	0.000E+00
a-226	Ra-226	2.000E-07	4.850E-10	4.666E-10	4.317E-10	3.284E-10	1.481E-10	6.493E-12	0.000E+00	0.000E+00
a-226	Ra-226	2.640E-13	6.403E-16	6.159E-16	5.698E-16	4.335E-16	1.955E-16	8.571E-18	0.000E+00	0.000E+00
a-226	U-234	2.000E-07	1.221E-19	8.313E-19	4.129E-18	2.959E-17	1.333E-16	1.541E-16	0.000E+00	0.000E+00
a-226	U-234	2.640E-13	1.611E-25	1.097E-24	5.450E-24	3.906E-23	1.760E-22	2.034E-22	0.000E+00	0.000E+00
a-226	U-234	3.800E-15	2.309E-27	1.579E-26	7.845E-26	5.622E-25	2.533E-24	2.928E-24	0.000E+00	0.000E+00
a-226	U-238	3.200E-10	1.365E-28	1.985E-27	2.167E-26	4.453E-25	5.255E-24	1.340E-23	0.000E+00	0.000E+00
a-226	U-238	4.224E-16	0.000E+00	0.000E+00	0.000E+00	0.000E+00	0.000E+00	1.761E-29	0.000E+00	0.000E+00
a-226	U-238	6.080E-18	0.000E+00	0.000E+00	0.000E+00	0.000E+00	0.000E+00	0.000E+00	0.000E+00	0.000E+00
a-226	U-238	1.997E-07	8.556E-26	1.244E-24	1.352E-23	2.779E-22	3.279E-21	8.361E-21	0.000E+00	0.000E+00
a-226	U-238	2.636E-13	0.000E+00	0.000E+00	1.777E-29	3.652E-28	4.328E-27	1.104E-26	0.000E+00	0.000E+00
a-226	U-238	3.794E-15	0.000E+00	0.000E+00	0.000E+00	0.000E+00	6.203E-29	1.582E-28	0.000E+00	0.000E+00
a-226	äDOSE(j)		4.850E-10	4.666E-10	4.317E-10	3.284E-10	1.481E-10	6.493E-12	0.000E+00	0.000E+00
a-226	Ra-226	3.800E-15	9.216E-18	8.865E-18	8.202E-18	6.239E-18	2.814E-18	1.234E-19	0.000E+00	0.000E+00
n-232	Th-232	1.000E+00	3.337E-04	3.314E-04	3.270E-04	3.112E-04	2.664E-04	1.101E-04	0.000E+00	0.000E+00
a-228	Th-232	1.000E+00	1.009E-05	2.819E-05	5.641E-05	1.039E-04	1.104E-04	4.607E-05	0.000E+00	0.000E+00
n-228	Th-232	1.000E+00	1.005E-06	6.085E-06	2.349E-05	7.927E-05	1.065E-04	7.137E-05	0.000E+00	0.000E+00
-234	U-234	9.996E-01	1.959E-04	1.862E-04	1.681E-04	1.174E-04	4.151E-05	7.761E-07	0.000E+00	0.000E+00
-234	U-234	1.319E-06	2.586E-10	2.457E-10	2.219E-10	1.550E-10	5.479E-11	1.024E-12	0.000E+00	0.000E+00
-234	U-238	1.599E-03	4.387E-13	1.258E-12	2.655E-12	5.568E-12	5.718E-12	3.524E-13	0.000E+00	0.000E+00
-234	U-238	2.111E-09	5.791E-19	1.660E-18	3.504E-18	7.349E-18	7.548E-18	4.651E-19	0.000E+00	0.000E+00
-234	U-238	3.039E-11	8.336E-21	2.390E-20	5.044E-20	1.058E-19	1.087E-19	6.695E-21	0.000E+00	0.000E+00
-234	U-238	3.359E-07	9.215E-17	2.642E-16	5.576E-16	1.169E-15	1.201E-15	7.402E-17	0.000E+00	0.000E+00
-234	U-238	4.434E-13	1.216E-22	3.488E-22	7.360E-22	1.544E-21	1.585E-21	9.770E-23	0.000E+00	0.000E+00
-234	U-238	6.383E-15	1.751E-24	5.020E-24	1.059E-23	2.222E-23	2.282E-23	1.406E-24	0.000E+00	0.000E+00
-234	U-238	3.196E-07	8.767E-17	2.514E-16	5.305E-16	1.113E-15	1.143E-15	7.042E-17	0.000E+00	0.000E+00
-234	U-238	4.219E-13	1.157E-22	3.318E-22	7.003E-22	1.469E-21	1.508E-21	9.296E-23	0.000E+00	0.000E+00
-234	U-238	6.073E-15	1.666E-24	4.776E-24	1.008E-23	2.114E-23	2.171E-23	1.338E-24	0.000E+00	0.000E+00
-234	U-238	6.713E-11	1.842E-20	5.280E-20	1.114E-19	2.337E-19	2.400E-19	1.479E-20	0.000E+00	0.000E+00
-234	U-238	8.862E-17	2.431E-26	6.970E-26	1.471E-25	3.085E-25	3.168E-25	1.952E-26	0.000E+00	0.000E+00
-234	U-238	1.276E-18	3.499E-28	1.003E-27	2.117E-27	4.440E-27	4.561E-27	2.810E-28	0.000E+00	0.000E+00
-234	U-238	3.200E-10	8.778E-20	2.517E-19	5.311E-19	1.114E-18	1.144E-18	7.051E-20	0.000E+00	0.000E+00
-234	U-238	4.224E-16	1.159E-25	3.322E-25	7.011E-25	1.470E-24	1.510E-24	9.307E-26	0.000E+00	0.000E+00
-234	U-238	6.080E-18	1.668E-27	4.782E-27	1.009E-26	2.117E-26	2.174E-26	1.340E-27	0.000E+00	0.000E+00
-234	U-238	9.980E-01	2.738E-10	7.849E-10	1.656E-09	3.474E-09	3.568E-09	2.199E-10	0.000E+00	0.000E+00
-234	U-238	1.317E-06	3.614E-16	1.036E-15	2.187E-15	4.586E-15	4.710E-15	2.903E-16	0.000E+00	0.000E+00
-234	U-238	1.896E-08	5.202E-18	1.491E-17	3.147E-17	6.601E-17	6.780E-17	4.178E-18	0.000E+00	0.000E+00

ummary : GKP Fire Fighter- Ingestion
ile : C:\USERS\CLAUDE\DOCUMENTS\0 GKP DOSE\RESRAD CW\GKP FIRE FIGHTER ~INGESTION.RAD

Individual Nuclide Dose Summed Over All Pathways
Parent Nuclide and Branch Fraction Indicated

uclide (j)	Parent (i)	THF(i)	DOSE(j,t), mrem/yr t= 0.000E+00	1.000E+00	3.000E+00	1.000E+01	3.000E+01	1.000E+02	3.000E+02	1.000E+03
ÄÄÄÄÄ	ÄÄÄÄÄÄÄ	ÄÄÄÄÄÄÄÄÄ	ÄÄÄÄÄÄÄÄÄ	ÄÄÄÄÄÄÄÄÄ	ÄÄÄÄÄÄÄÄÄ	ÄÄÄÄÄÄÄÄÄ	ÄÄÄÄÄÄÄÄÄ	ÄÄÄÄÄÄÄÄÄ	ÄÄÄÄÄÄÄÄÄ	ÄÄÄÄÄÄÄÄÄ
-234	U-238	2.096E-04	5.750E-14	1.649E-13	3.479E-13	7.297E-13	7.495E-13	4.619E-14	0.000E+00	0.000E+00
-234	U-238	2.767E-10	7.590E-20	2.176E-19	4.593E-19	9.632E-19	9.893E-19	6.097E-20	0.000E+00	0.000E+00
-234	U-238	3.983E-12	1.093E-21	3.133E-21	6.611E-21	1.386E-20	1.424E-20	8.775E-22	0.000E+00	0.000E+00
-234	U-238	1.994E-04	5.471E-14	1.569E-13	3.310E-13	6.943E-13	7.131E-13	4.394E-14	0.000E+00	0.000E+00
-234	U-238	2.633E-10	7.222E-20	2.071E-19	4.370E-19	9.164E-19	9.413E-19	5.800E-20	0.000E+00	0.000E+00
-234	U-238	3.789E-12	1.039E-21	2.980E-21	6.290E-21	1.319E-20	1.355E-20	8.349E-22	0.000E+00	0.000E+00
-234	U-238	4.189E-08	1.149E-17	3.295E-17	6.953E-17	1.458E-16	1.498E-16	9.230E-18	0.000E+00	0.000E+00
-234	U-238	5.530E-14	1.517E-23	4.349E-23	9.178E-23	1.925E-22	1.977E-22	1.218E-23	0.000E+00	0.000E+00
-234	U-238	7.959E-16	2.183E-25	6.260E-25	1.321E-24	2.771E-24	2.846E-24	1.754E-25	0.000E+00	0.000E+00
-234	U-238	1.997E-07	5.478E-17	1.571E-16	3.314E-16	6.951E-16	7.140E-16	4.400E-17	0.000E+00	0.000E+00
-234	U-238	2.636E-13	7.230E-23	2.073E-22	4.375E-22	9.176E-22	9.424E-22	5.807E-23	0.000E+00	0.000E+00
-234	U-238	3.794E-15	1.041E-24	2.984E-24	6.297E-24	1.321E-23	1.357E-23	8.359E-25	0.000E+00	0.000E+00
-234	äDOSE(j)		1.959E-04	1.862E-04	1.681E-04	1.174E-04	4.151E-05	7.763E-07	0.000E+00	0.000E+00
n-230	U-234	9.996E-01	1.755E-09	5.132E-09	1.132E-08	2.793E-08	4.766E-08	2.627E-08	0.000E+00	0.000E+00
n-230	U-234	1.319E-06	2.316E-15	6.775E-15	1.494E-14	3.687E-14	6.291E-14	3.467E-14	0.000E+00	0.000E+00
n-230	U-234	1.899E-08	3.334E-17	9.751E-17	2.151E-16	5.307E-16	9.056E-16	4.991E-16	0.000E+00	0.000E+00
n-230	U-234	2.100E-04	3.686E-13	1.078E-12	2.378E-12	5.867E-12	1.001E-11	5.517E-12	0.000E+00	0.000E+00
n-230	U-234	2.771E-10	4.866E-19	1.423E-18	3.139E-18	7.744E-18	1.321E-17	7.283E-18	0.000E+00	0.000E+00
n-230	U-234	3.989E-12	7.004E-21	2.048E-20	4.518E-20	1.115E-19	1.902E-19	1.048E-19	0.000E+00	0.000E+00
n-230	U-234	1.998E-04	3.507E-13	1.026E-12	2.262E-12	5.582E-12	9.524E-12	5.249E-12	0.000E+00	0.000E+00
n-230	U-234	2.637E-10	4.629E-19	1.354E-18	2.986E-18	7.368E-18	1.257E-17	6.929E-18	0.000E+00	0.000E+00
n-230	U-234	3.795E-12	6.663E-21	1.949E-20	4.299E-20	1.061E-19	1.810E-19	9.974E-20	0.000E+00	0.000E+00
n-230	U-234	4.196E-08	7.366E-17	2.154E-16	4.752E-16	1.172E-15	2.001E-15	1.103E-15	0.000E+00	0.000E+00
n-230	U-234	5.538E-14	9.724E-23	2.844E-22	6.273E-22	1.548E-21	2.641E-21	1.455E-21	0.000E+00	0.000E+00
n-230	U-234	7.972E-16	1.400E-24	4.093E-24	9.029E-24	2.228E-23	3.801E-23	2.095E-23	0.000E+00	0.000E+00
n-230	U-234	2.000E-07	3.511E-16	1.027E-15	2.265E-15	5.588E-15	9.536E-15	5.256E-15	0.000E+00	0.000E+00
n-230	U-234	2.640E-13	4.635E-22	1.355E-21	2.990E-21	7.377E-21	1.259E-20	6.938E-21	0.000E+00	0.000E+00
n-230	U-234	3.800E-15	6.671E-24	1.951E-23	4.304E-23	1.062E-22	1.812E-22	9.986E-23	0.000E+00	0.000E+00
n-230	U-238	1.599E-03	2.622E-18	1.779E-17	8.770E-17	6.116E-16	2.567E-15	2.542E-15	0.000E+00	0.000E+00
n-230	U-238	2.111E-09	3.461E-24	2.349E-23	1.158E-22	8.073E-22	3.388E-21	3.356E-21	0.000E+00	0.000E+00
n-230	U-238	3.039E-11	4.981E-26	3.381E-25	1.666E-24	1.162E-23	4.877E-23	4.830E-23	0.000E+00	0.000E+00
n-230	U-238	3.359E-07	5.507E-22	3.737E-21	1.842E-20	1.285E-19	5.392E-19	5.340E-19	0.000E+00	0.000E+00
n-230	U-238	4.434E-13	7.269E-28	4.933E-27	2.432E-26	1.696E-25	7.117E-25	7.049E-25	0.000E+00	0.000E+00
n-230	U-238	6.383E-15	0.000E+00	7.101E-29	3.500E-28	2.441E-27	1.024E-26	1.015E-26	0.000E+00	0.000E+00
n-230	U-238	3.196E-07	5.239E-22	3.556E-21	1.753E-20	1.222E-19	5.130E-19	5.080E-19	0.000E+00	0.000E+00
n-230	U-238	4.219E-13	6.916E-28	4.694E-27	2.313E-26	1.613E-25	6.771E-25	6.706E-25	0.000E+00	0.000E+00
n-230	U-238	6.073E-15	0.000E+00	6.756E-29	3.330E-28	2.322E-27	9.747E-27	9.653E-27	0.000E+00	0.000E+00
n-230	U-238	6.713E-11	1.100E-25	7.469E-25	3.681E-24	2.567E-23	1.077E-22	1.067E-22	0.000E+00	0.000E+00
n-230	U-238	8.862E-17	0.000E+00	0.000E+00	0.000E+00	3.389E-29	1.422E-28	1.409E-28	0.000E+00	0.000E+00
n-230	U-238	1.276E-18	0.000E+00	0.000E+00	0.000E+00	0.000E+00	0.000E+00	0.000E+00	0.000E+00	0.000E+00
n-230	U-238	3.200E-10	5.246E-25	3.560E-24	1.755E-23	1.224E-22	5.136E-22	5.087E-22	0.000E+00	0.000E+00
n-230	U-238	4.224E-16	0.000E+00	0.000E+00	2.316E-29	1.615E-28	6.780E-28	6.714E-28	0.000E+00	0.000E+00
n-230	U-238	6.080E-18	0.000E+00	0.000E+00	0.000E+00	0.000E+00	0.000E+00	0.000E+00	0.000E+00	0.000E+00
n-230	U-238	9.980E-01	1.636E-15	1.110E-14	5.473E-14	3.816E-13	1.602E-12	1.586E-12	0.000E+00	0.000E+00
n-230	U-238	1.317E-06	2.159E-21	1.466E-20	7.224E-20	5.038E-19	2.114E-18	2.094E-18	0.000E+00	0.000E+00
n-230	U-238	1.896E-08	3.108E-23	2.110E-22	1.040E-21	7.251E-21	3.043E-20	3.014E-20	0.000E+00	0.000E+00
n-230	U-238	2.096E-04	3.436E-19	2.332E-18	1.149E-17	8.016E-17	3.364E-16	3.332E-16	0.000E+00	0.000E+00
n-230	U-238	2.767E-10	4.536E-25	3.078E-24	1.517E-23	1.058E-22	4.441E-22	4.398E-22	0.000E+00	0.000E+00

ummary : GKP Fire Fighter- Ingestion
ile : C:\USERS\CLAUDE\DOCUMENTS\0 GKP DOSE\RESRAD CW\GKP FIRE FIGHTER -INGESTION.RAD

Individual Nuclide Dose Summed Over All Pathways
Parent Nuclide and Branch Fraction Indicated

uclide (j)	Parent (i)	THF(i)	DOSE(j,t), mrem/yr t= 0.000E+00	1.000E+00	3.000E+00	1.000E+01	3.000E+01	1.000E+02	3.000E+02	1.000E+03
ÄÄÄÄÄ	ÄÄÄÄÄÄ	ÄÄÄÄÄÄÄÄÄ	ÄÄÄÄÄÄÄÄÄ	ÄÄÄÄÄÄÄÄÄ	ÄÄÄÄÄÄÄÄÄ	ÄÄÄÄÄÄÄÄÄ	ÄÄÄÄÄÄÄÄÄ	ÄÄÄÄÄÄÄÄÄ	ÄÄÄÄÄÄÄÄÄ	ÄÄÄÄÄÄÄÄÄ
n-230	U-238	3.983E-12	6.529E-27	4.431E-26	2.184E-25	1.523E-24	6.392E-24	6.331E-24	0.000E+00	0.000E+00
n-230	U-238	1.994E-04	3.269E-19	2.219E-18	1.094E-17	7.627E-17	3.201E-16	3.170E-16	0.000E+00	0.000E+00
n-230	U-238	2.633E-10	4.315E-25	2.929E-24	1.444E-23	1.007E-22	4.225E-22	4.185E-22	0.000E+00	0.000E+00
n-230	U-238	3.789E-12	6.212E-27	4.216E-26	2.078E-25	1.449E-24	6.082E-24	6.023E-24	0.000E+00	0.000E+00
n-230	U-238	4.189E-08	6.867E-23	4.660E-22	2.297E-21	1.602E-20	6.724E-20	6.659E-20	0.000E+00	0.000E+00
n-230	U-238	5.530E-14	9.064E-29	6.152E-28	3.032E-27	2.115E-26	8.875E-26	8.790E-26	0.000E+00	0.000E+00
n-230	U-238	7.959E-16	0.000E+00	0.000E+00	4.364E-29	3.044E-28	1.277E-27	1.265E-27	0.000E+00	0.000E+00
n-230	U-238	1.997E-07	3.273E-22	2.221E-21	1.095E-20	7.636E-20	3.205E-19	3.174E-19	0.000E+00	0.000E+00
n-230	U-238	2.636E-13	4.321E-28	2.932E-27	1.445E-26	1.008E-25	4.230E-25	4.190E-25	0.000E+00	0.000E+00
n-230	U-238	3.794E-15	0.000E+00	4.221E-29	2.080E-28	1.451E-27	6.089E-27	6.031E-27	0.000E+00	0.000E+00
n-230	äDOSE(j)		1.756E-09	5.134E-09	1.133E-08	2.794E-08	4.768E-08	2.628E-08	0.000E+00	0.000E+00
-234	U-234	1.899E-08	3.722E-12	3.537E-12	3.194E-12	2.231E-12	7.886E-13	1.475E-14	0.000E+00	0.000E+00
-234	U-234	2.100E-04	4.115E-08	3.910E-08	3.531E-08	2.466E-08	8.718E-09	1.630E-10	0.000E+00	0.000E+00
-234	äDOSE(j)		4.115E-08	3.911E-08	3.531E-08	2.467E-08	8.719E-09	1.630E-10	0.000E+00	0.000E+00
a-226	U-234	2.100E-04	1.282E-16	8.732E-16	4.338E-15	3.108E-14	1.400E-13	1.619E-13	0.000E+00	0.000E+00
a-226	U-234	3.989E-12	2.436E-24	1.659E-23	8.242E-23	5.906E-22	2.661E-21	3.076E-21	0.000E+00	0.000E+00
a-226	U-238	3.359E-07	1.440E-25	2.094E-24	2.277E-23	4.678E-22	5.520E-21	1.408E-20	0.000E+00	0.000E+00
a-226	U-238	4.434E-13	0.000E+00	0.000E+00	2.992E-29	6.149E-28	7.286E-27	1.858E-26	0.000E+00	0.000E+00
a-226	U-238	6.383E-15	0.000E+00	0.000E+00	0.000E+00	0.000E+00	1.044E-28	2.663E-28	0.000E+00	0.000E+00
a-226	U-238	2.096E-04	8.988E-23	1.307E-21	1.421E-20	2.919E-19	3.445E-18	8.783E-18	0.000E+00	0.000E+00
a-226	U-238	2.767E-10	1.181E-28	1.717E-27	1.875E-26	3.853E-25	4.547E-24	1.159E-23	0.000E+00	0.000E+00
a-226	U-238	3.983E-12	0.000E+00	2.472E-29	2.688E-28	5.546E-27	6.545E-26	1.669E-25	0.000E+00	0.000E+00
a-226	äDOSE(j)		1.282E-16	8.732E-16	4.338E-15	3.108E-14	1.400E-13	1.619E-13	0.000E+00	0.000E+00
-234	U-234	2.771E-10	5.431E-14	5.162E-14	4.661E-14	3.256E-14	1.151E-14	2.152E-16	0.000E+00	0.000E+00
-234	U-234	3.989E-12	7.818E-16	7.429E-16	6.709E-16	4.686E-16	1.657E-16	3.097E-18	0.000E+00	0.000E+00
-234	äDOSE(j)		5.510E-14	5.236E-14	4.728E-14	3.303E-14	1.167E-14	2.183E-16	0.000E+00	0.000E+00
a-226	U-234	2.771E-10	1.693E-22	1.153E-21	5.726E-21	4.103E-20	1.849E-19	2.137E-19	0.000E+00	0.000E+00
-234	U-234	1.998E-04	3.915E-08	3.720E-08	3.359E-08	2.347E-08	8.295E-09	1.551E-10	0.000E+00	0.000E+00
-234	U-234	2.637E-10	5.168E-14	4.911E-14	4.434E-14	3.097E-14	1.095E-14	2.047E-16	0.000E+00	0.000E+00
-234	äDOSE(j)		3.915E-08	3.720E-08	3.359E-08	2.347E-08	8.295E-09	1.551E-10	0.000E+00	0.000E+00
-234	U-234	3.795E-12	7.438E-16	7.069E-16	6.383E-16	4.459E-16	1.576E-16	2.947E-18	0.000E+00	0.000E+00
-234	U-234	4.196E-08	8.223E-12	7.814E-12	7.056E-12	4.929E-12	1.742E-12	3.258E-14	0.000E+00	0.000E+00
-234	äDOSE(j)		8.224E-12	7.815E-12	7.057E-12	4.929E-12	1.742E-12	3.258E-14	0.000E+00	0.000E+00
a-226	U-234	4.196E-08	2.561E-20	1.744E-19	8.664E-19	6.209E-18	2.797E-17	3.234E-17	0.000E+00	0.000E+00
a-226	U-234	7.972E-16	4.846E-28	3.314E-27	1.646E-26	1.180E-25	5.315E-25	6.144E-25	0.000E+00	0.000E+00
a-226	U-238	6.713E-11	2.865E-29	4.164E-28	4.547E-27	9.344E-26	1.103E-24	2.812E-24	0.000E+00	0.000E+00
a-226	U-238	8.862E-17	0.000E+00	0.000E+00	0.000E+00	0.000E+00	0.000E+00	0.000E+00	0.000E+00	0.000E+00
a-226	U-238	1.276E-18	0.000E+00	0.000E+00	0.000E+00	0.000E+00	0.000E+00	0.000E+00	0.000E+00	0.000E+00
a-226	U-238	4.189E-08	1.795E-26	2.610E-25	2.837E-24	5.831E-23	6.880E-22	1.754E-21	0.000E+00	0.000E+00
a-226	U-238	5.530E-14	0.000E+00	0.000E+00	0.000E+00	7.664E-29	9.043E-28	2.306E-27	0.000E+00	0.000E+00
a-226	U-238	7.959E-16	0.000E+00	0.000E+00	0.000E+00	0.000E+00	0.000E+00	3.319E-29	0.000E+00	0.000E+00
a-226	äDOSE(j)		2.561E-20	1.744E-19	8.664E-19	6.209E-18	2.797E-17	3.234E-17	0.000E+00	0.000E+00

ummary : GKP Fire Fighter- Ingestion
ile : C:\USERS\CLAUDE\DOCUMENTS\0 GKP DOSE\RESRAD CW\GKP FIRE FIGHTER -INGESTION.RAD

Individual Nuclide Dose Summed Over All Pathways
Parent Nuclide and Branch Fraction Indicated

uclide (j)	Parent (i)	THF(i)	DOSE(j,t), mrem/yr t= 0.000E+00	1.000E+00	3.000E+00	1.000E+01	3.000E+01	1.000E+02	3.000E+02	1.000E+03
ÄÄÄÄÄ	ÄÄÄÄÄÄ	ÄÄÄÄÄÄÄÄÄ	ÄÄÄÄÄÄÄÄÄ	ÄÄÄÄÄÄÄÄÄ	ÄÄÄÄÄÄÄÄÄ	ÄÄÄÄÄÄÄÄÄ	ÄÄÄÄÄÄÄÄÄ	ÄÄÄÄÄÄÄÄÄ	ÄÄÄÄÄÄÄÄÄ	ÄÄÄÄÄÄÄÄÄ
-234	U-234	5.538E-14	1.085E-17	1.031E-17	9.314E-18	6.506E-18	2.300E-18	4.300E-20	0.000E+00	0.000E+00
-234	U-234	7.972E-16	1.562E-19	1.485E-19	1.341E-19	9.365E-20	3.310E-20	6.190E-22	0.000E+00	0.000E+00
-234	äDOSE(j)		1.101E-17	1.046E-17	9.448E-18	6.600E-18	2.333E-18	4.362E-20	0.000E+00	0.000E+00
a-226	U-234	5.538E-14	3.381E-26	2.302E-25	1.144E-24	8.196E-24	3.692E-23	4.269E-23	0.000E+00	0.000E+00
-234	U-234	2.000E-07	3.920E-11	3.725E-11	3.363E-11	2.349E-11	8.305E-12	1.553E-13	0.000E+00	0.000E+00
-234	U-234	2.640E-13	5.174E-17	4.917E-17	4.440E-17	3.101E-17	1.096E-17	2.050E-19	0.000E+00	0.000E+00
-234	äDOSE(j)		3.920E-11	3.725E-11	3.363E-11	2.349E-11	8.305E-12	1.553E-13	0.000E+00	0.000E+00
-234	U-234	3.800E-15	7.447E-19	7.077E-19	6.390E-19	4.464E-19	1.578E-19	2.950E-21	0.000E+00	0.000E+00
-235	U-235	9.835E-01	1.100E-05	1.046E-05	9.442E-06	6.596E-06	2.332E-06	4.361E-08	0.000E+00	0.000E+00
-235	U-235	2.722E-03	3.045E-08	2.894E-08	2.613E-08	1.825E-08	6.453E-09	1.207E-10	0.000E+00	0.000E+00
-235	äDOSE(j)		1.103E-05	1.049E-05	9.468E-06	6.614E-06	2.338E-06	4.373E-08	0.000E+00	0.000E+00
a-231	U-235	9.835E-01	4.576E-09	1.312E-08	2.769E-08	5.807E-08	5.963E-08	3.672E-09	0.000E+00	0.000E+00
a-231	U-235	2.722E-03	1.267E-11	3.631E-11	7.663E-11	1.607E-10	1.650E-10	1.016E-11	0.000E+00	0.000E+00
a-231	U-235	1.376E-02	6.403E-11	1.836E-10	3.874E-10	8.125E-10	8.344E-10	5.138E-11	0.000E+00	0.000E+00
a-231	U-235	3.809E-05	1.772E-13	5.081E-13	1.072E-12	2.249E-12	2.309E-12	1.422E-13	0.000E+00	0.000E+00
a-231	U-235	8.257E-07	3.842E-15	1.102E-14	2.325E-14	4.875E-14	5.007E-14	3.083E-15	0.000E+00	0.000E+00
a-231	U-235	2.285E-09	1.063E-17	3.049E-17	6.434E-17	1.349E-16	1.386E-16	8.533E-18	0.000E+00	0.000E+00
a-231	äDOSE(j)		4.653E-09	1.334E-08	2.815E-08	5.904E-08	6.063E-08	3.734E-09	0.000E+00	0.000E+00
c-227	U-235	9.835E-01	6.590E-11	4.297E-10	1.936E-09	9.903E-09	1.851E-08	1.503E-09	0.000E+00	0.000E+00
c-227	U-235	2.722E-03	1.824E-13	1.189E-12	5.359E-12	2.741E-11	5.122E-11	4.160E-12	0.000E+00	0.000E+00
c-227	U-235	1.376E-02	9.202E-13	6.000E-12	2.704E-11	1.383E-10	2.584E-10	2.099E-11	0.000E+00	0.000E+00
c-227	äDOSE(j)		1.103E-12	7.190E-12	3.240E-11	1.657E-10	3.097E-10	2.515E-11	0.000E+00	0.000E+00
-235	U-235	1.376E-02	1.540E-07	1.463E-07	1.321E-07	9.229E-08	3.263E-08	6.101E-10	0.000E+00	0.000E+00
-235	U-235	3.809E-05	4.261E-10	4.049E-10	3.657E-10	2.554E-10	9.030E-11	1.689E-12	0.000E+00	0.000E+00
-235	äDOSE(j)		1.544E-07	1.467E-07	1.325E-07	9.255E-08	3.272E-08	6.118E-10	0.000E+00	0.000E+00
c-227	U-235	3.809E-05	2.547E-15	1.661E-14	7.484E-14	3.827E-13	7.153E-13	5.809E-14	0.000E+00	0.000E+00
c-227	U-235	8.257E-07	5.275E-17	3.440E-16	1.550E-15	7.928E-15	1.482E-14	1.203E-15	0.000E+00	0.000E+00
c-227	äDOSE(j)		2.600E-15	1.695E-14	7.639E-14	3.907E-13	7.301E-13	5.929E-14	0.000E+00	0.000E+00
-235	U-235	8.257E-07	9.238E-12	8.779E-12	7.927E-12	5.538E-12	1.958E-12	3.661E-14	0.000E+00	0.000E+00
-235	U-235	2.285E-09	2.557E-14	2.430E-14	2.194E-14	1.533E-14	5.418E-15	1.013E-16	0.000E+00	0.000E+00
-235	äDOSE(j)		9.264E-12	8.804E-12	7.949E-12	5.553E-12	1.963E-12	3.671E-14	0.000E+00	0.000E+00
c-227	U-235	2.285E-09	1.460E-19	9.520E-19	4.290E-18	2.194E-17	4.100E-17	3.330E-18	0.000E+00	0.000E+00
-238	U-238	5.450E-07	9.624E-11	9.146E-11	8.258E-11	5.769E-11	2.039E-11	3.814E-13	0.000E+00	0.000E+00
-238	U-238	1.599E-03	3.000E-07	2.851E-07	2.574E-07	1.798E-07	6.357E-08	1.189E-09	0.000E+00	0.000E+00
-238	äDOSE(j)		3.001E-07	2.852E-07	2.575E-07	1.799E-07	6.359E-08	1.189E-09	0.000E+00	0.000E+00
-238	U-238	2.111E-09	3.960E-13	3.763E-13	3.398E-13	2.374E-13	8.391E-14	1.569E-15	0.000E+00	0.000E+00

ummary : GKP Fire Fighter- Ingestion
ile : C:\USERS\CLAUDE\DOCUMENTS\0 GKP DOSE\RESRAD CW\GKP FIRE FIGHTER -INGESTION.RAD

Individual Nuclide Dose Summed Over All Pathways
Parent Nuclide and Branch Fraction Indicated

uclide (j)	Parent (i)	THF(i)	DOSE(j,t), mrem/yr t= 0.000E+00	1.000E+00	3.000E+00	1.000E+01	3.000E+01	1.000E+02	3.000E+02	1.000E+03
ÄÄÄÄÄ	ÄÄÄÄÄÄ	ÄÄÄÄÄÄÄÄ	ÄÄÄÄÄÄÄÄÄ	ÄÄÄÄÄÄÄÄÄ	ÄÄÄÄÄÄÄÄÄ	ÄÄÄÄÄÄÄÄÄ	ÄÄÄÄÄÄÄÄÄ	ÄÄÄÄÄÄÄÄÄ	ÄÄÄÄÄÄÄÄÄ	ÄÄÄÄÄÄÄÄÄ
-238	U-238	3.039E-11	5.700E-15	5.417E-15	4.891E-15	3.417E-15	1.208E-15	2.259E 17	0.000E+00	0.000E+00
-238	äDOSE(j)		4.017E-13	3.817E-13	3.447E-13	2.408E-13	8.512E-14	1.592E-15	0.000E+00	0.000E+00
-238	U-238	3.359E-07	6.301E-11	5.988E-11	5.407E-11	3.777E-11	1.335E-11	2.497E-13	0.000E+00	0.000E+00
-238	U-238	4.434E-13	8.318E-17	7.904E-17	7.137E-17	4.986E-17	1.763E-17	3.296E-19	0.000E+00	0.000E+00
-238	äDOSE(j)		6.301E-11	5.988E-11	5.407E-11	3.777E-11	1.335E-11	2.497E-13	0.000E+00	0.000E+00
-238	U-238	6.383E-15	1.197E-18	1.138E-18	1.027E-18	7.176E-19	2.537E-19	4.744E-21	0.000E+00	0.000E+00
-238	U-238	3.196E-07	5.995E-11	5.697E-11	5.144E-11	3.594E-11	1.270E-11	2.376E-13	0.000E+00	0.000E+00
-238	äDOSE(j)		5.995E-11	5.697E-11	5.144E-11	3.594E-11	1.270E-11	2.376E-13	0.000E+00	0.000E+00
-238	U-238	4.219E-13	7.913E-17	7.520E-17	6.791E-17	4.744E-17	1.677E-17	3.136E-19	0.000E+00	0.000E+00
-238	U-238	6.073E-15	1.139E-18	1.082E-18	9.774E-19	6.828E-19	2.414E-19	4.514E-21	0.000E+00	0.000E+00
-238	äDOSE(j)		8.027E-17	7.628E-17	6.888E-17	4.812E-17	1.701E-17	3.181E-19	0.000E+00	0.000E+00
-238	U-238	6.713E-11	1.259E-14	1.197E-14	1.081E-14	7.548E-15	2.668E-15	4.990E-17	0.000E+00	0.000E+00
-238	U-238	8.862E-17	1.662E-20	1.580E-20	1.426E-20	9.963E-21	3.522E-21	6.587E-23	0.000E+00	0.000E+00
-238	äDOSE(j)		1.259E-14	1.197E-14	1.081E-14	7.548E-15	2.668E-15	4.990E-17	0.000E+00	0.000E+00
-238	U-238	1.276E-18	2.393E-22	2.274E-22	2.053E-22	1.434E-22	5.070E-23	9.481E-25	0.000E+00	0.000E+00
-238	U-238	3.200E-10	6.002E-14	5.704E-14	5.151E-14	3.598E-14	1.272E-14	2.379E-16	0.000E+00	0.000E+00
-238	äDOSE(j)		6.002E-14	5.704E-14	5.151E-14	3.598E-14	1.272E-14	2.379E-16	0.000E+00	0.000E+00
-238	U-238	4.224E-16	7.923E-20	7.529E-20	6.799E-20	4.749E-20	1.679E-20	3.140E-22	0.000E+00	0.000E+00
-238	U-238	6.080E-18	1.140E-21	1.084E-21	9.786E-22	6.836E-22	2.417E-22	4.519E-24	0.000E+00	0.000E+00
-238	äDOSE(j)		8.037E-20	7.638E-20	6.897E-20	4.818E-20	1.703E-20	3.185E-22	0.000E+00	0.000E+00
-238	U-238	9.980E-01	1.857E-04	1.765E-04	1.594E-04	1.113E-04	3.935E-05	7.359E-07	0.000E+00	0.000E+00
-238	U-238	1.317E-06	2.451E-10	2.329E-10	2.103E-10	1.469E-10	5.194E-11	9.714E-13	0.000E+00	0.000E+00
-238	äDOSE(j)		1.857E-04	1.765E-04	1.594E-04	1.113E-04	3.935E-05	7.359E-07	0.000E+00	0.000E+00
-238	U-238	1.896E-08	3.528E-12	3.353E-12	3.028E-12	2.115E-12	7.477E-13	1.398E-14	0.000E+00	0.000E+00
-238	U-238	2.096E-04	3.901E-08	3.707E-08	3.347E-08	2.338E-08	8.265E-09	1.546E-10	0.000E+00	0.000E+00
-238	äDOSE(j)		3.901E-08	3.707E-08	3.347E-08	2.338E-08	8.266E-09	1.546E-10	0.000E+00	0.000E+00
-238	U-238	2.767E-10	5.149E-14	4.893E-14	4.418E-14	3.086E-14	1.091E-14	2.040E-16	0.000E+00	0.000E+00
-238	U-238	3.983E-12	7.411E-16	7.043E-16	6.359E-16	4.442E-16	1.570E-16	2.937E-18	0.000E+00	0.000E+00
-238	äDOSE(j)		5.223E-14	4.963E-14	4.482E-14	3.131E-14	1.107E-14	2.070E-16	0.000E+00	0.000E+00
-238	U-238	1.994E-04	3.711E-08	3.527E-08	3.184E-08	2.225E-08	7.864E-09	1.471E-10	0.000E+00	0.000E+00
-238	U-238	2.633E-10	4.899E-14	4.655E-14	4.203E-14	2.936E-14	1.038E-14	1.941E-16	0.000E+00	0.000E+00
-238	äDOSE(j)		3.711E-08	3.527E-08	3.184E-08	2.225E-08	7.864E-09	1.471E-10	0.000E+00	0.000E+00
-238	U-238	3.789E-12	7.051E-16	6.701E-16	6.050E-16	4.227E-16	1.494E-16	2.794E-18	0.000E+00	0.000E+00
-238	U-238	4.189E-08	7.795E-12	7.408E-12	6.689E-12	4.672E-12	1.652E-12	3.089E-14	0.000E+00	0.000E+00
-238	äDOSE(j)		7.796E-12	7.408E-12	6.689E-12	4.673E-12	1.652E-12	3.089E-14	0.000E+00	0.000E+00
-238	U-238	5.530E-14	1.029E-17	9.778E-18	8.829E-18	6.168E-18	2.180E-18	4.078E-20	0.000E+00	0.000E+00
-238	U-238	7.959E-16	1.481E-19	1.407E-19	1.271E-19	8.878E-20	3.138E-20	5.869E-22	0.000E+00	0.000E+00
-238	äDOSE(j)		1.044E-17	9.919E-18	8.956E-18	6.256E-18	2.212E-18	4.136E-20	0.000E+00	0.000E+00

ummary : GKP Fire Fighter- Ingestion
ile : C:\USERS\CLAUDE\DOCUMENTS\0 GKP DOSE\RESRAD CW\GKP FIRE FIGHTER -INGESTION.RAD

Individual Nuclide Dose Summed Over All Pathways
Parent Nuclide and Branch Fraction Indicated

uclide (j)	Parent (i)	THF(i)	t= 0.000E+00	1.000E+00	3.000E+00	DOSE(j,t), mrem/yr 1.000E+01	3.000E+01	1.000E+02	3.000E+02	1.000E+03
ÄÄÄÄÄÄ	ÄÄÄÄÄÄÄ	ÄÄÄÄÄÄÄÄÄ	ÄÄÄÄÄÄÄÄÄ	ÄÄÄÄÄÄÄÄÄ	ÄÄÄÄÄÄÄÄÄ	ÄÄÄÄÄÄÄÄÄ	ÄÄÄÄÄÄÄÄÄ	ÄÄÄÄÄÄÄÄÄ	ÄÄÄÄÄÄÄÄÄ	ÄÄÄÄÄÄÄÄÄ
-238	U-238	1.997E-07	3.716E-11	3.531E-11	3.188E-11	2.227E-11	7.873E-12	1.472E-13	0.000E+00	0.000E+00
-238	U-238	2.636E-13	4.905E-17	4.661E-17	4.209E-17	2.940E-17	1.039E-17	1.944E-19	0.000E+00	0.000E+00
-238	äDOSE(j)		3.716E-11	3.531E-11	3.188E-11	2.227E-11	7.873E-12	1.472E-13	0.000E+00	0.000E+00
-238	U-238	3.794E-15	7.060E-19	6.709E-19	6.058E-19	4.232E-19	1.496E-19	2.798E-21	0.000E+00	0.000E+00
íííííí	ííííííí	ííííííííí	ííííííííí	ííííííííí	ííííííííí	ííííííííí	ííííííííí	ííííííííí	ííííííííí	ííííííííí

HF(i) is the thread fraction of the parent nuclide.

ummary : GKP Fire Fighter- Ingestion
ile : C:\USERS\CLAUDE\DOCUMENTS\0 GKP DOSE\RESRAD CW\GKP FIRE FIGHTER -INGESTION.RAD

Individual Nuclide Soil Concentration
Parent Nuclide and Branch Fraction Indicated

uclide (j)	Parent (i)	THF(i)	S(j,t), pCi/g t= 0.000E+00	1.000E+00	3.000E+00	1.000E+01	3.000E+01	1.000E+02	3.000E+02	1.000E+03
ÄÄÄÄÄ	ÄÄÄÄÄÄ	ÄÄÄÄÄÄÄÄ	ÄÄÄÄÄÄÄÄ	ÄÄÄÄÄÄÄÄ	ÄÄÄÄÄÄÄÄ	ÄÄÄÄÄÄÄÄ	ÄÄÄÄÄÄÄÄ	ÄÄÄÄÄÄÄÄ	ÄÄÄÄÄÄÄÄ	ÄÄÄÄÄÄÄÄ
a-226	Ra-226	9.996E-01	3.648E+01	3.533E+01	3.314E+01	2.647E+01	1.394E+01	1.475E+00	2.411E-03	4.255E-13
a-226	Ra-226	1.319E-06	4.816E-05	4.664E-05	4.374E-05	3.494E-05	1.839E-05	1.947E-06	3.182E-09	5.616E-19
a-226	U-234	9.996E-01	0.000E+00	2.698E-08	2.308E-07	2.155E-06	1.208E-05	3.439E-05	3.853E-05	3.731E-05
a-226	U-234	1.319E-06	0.000E+00	3.561E-14	3.047E-13	2.844E-12	1.595E-11	4.540E-11	5.086E-11	4.925E-11
a-226	U-234	1.899E-08	0.000E+00	5.126E-16	4.386E-15	4.094E-14	2.295E-13	6.534E-13	7.321E-13	7.089E-13
a-226	U-238	1.599E-03	0.000E+00	4.044E-17	1.028E-15	3.093E-14	4.696E-13	2.984E-12	3.935E-12	3.813E-12
a-226	U-238	2.111E-09	0.000E+00	5.338E-23	1.357E-21	4.082E-20	6.199E-19	3.939E-18	5.194E-18	5.033E-18
a-226	U-238	3.039E-11	0.000E+00	7.683E-25	1.953E-23	5.876E-22	8.923E-21	5.670E-20	7.477E-20	7.244E-20
a-226	U-238	9.980E-01	0.000E+00	2.523E-14	6.416E-13	1.930E-11	2.930E-10	1.862E-09	2.455E-09	2.379E-09
a-226	U-238	1.317E-06	0.000E+00	3.331E-20	8.469E-19	2.547E-17	3.868E-16	2.458E-15	3.241E-15	3.140E-15
a-226	U-238	1.896E-08	0.000E+00	4.794E-22	1.219E-20	3.667E-19	5.568E-18	3.538E-17	4.665E-17	4.520E-17
a-226	äS(j):		3.649E+01	3.533E+01	3.314E+01	2.647E+01	1.394E+01	1.475E+00	2.449E-03	3.731E-05
o-210	Ra-226	9.996E-01	0.000E+00	1.092E+00	3.007E+00	7.444E+00	9.643E+00	1.904E+00	3.525E-03	6.232E-13
o-210	Ra-226	2.100E-04	0.000E+00	2.293E-04	6.315E-04	1.564E-03	2.026E-03	4.000E-04	7.405E-07	1.309E-16
o-210	Ra-226	1.998E-04	0.000E+00	2.181E-04	6.009E-04	1.488E-03	1.927E-03	3.805E-04	7.045E-07	1.245E-16
o-210	Ra-226	4.196E-08	0.000E+00	4.582E-08	1.262E-07	3.125E-07	4.048E-07	7.993E-08	1.480E-10	2.616E-20
o-210	Ra-226	2.000E-07	0.000E+00	2.184E-07	6.016E-07	1.489E-06	1.929E-06	3.810E-07	7.053E-10	1.247E-19
o-210	U-234	9.996E-01	0.000E+00	2.788E-10	7.058E-09	2.091E-07	3.053E-06	1.777E-05	2.254E-05	2.184E-05
o-210	U-234	2.100E-04	0.000E+00	5.857E-14	1.482E-12	4.392E-11	6.412E-10	3.732E-09	4.735E-09	4.587E-09
o-210	U-234	1.998E-04	0.000E+00	5.572E-14	1.410E-12	4.178E-11	6.101E-10	3.550E-09	4.505E-09	4.364E-09
o-210	U-234	4.196E-08	0.000E+00	1.170E-17	2.963E-16	8.776E-15	1.281E-13	7.457E-13	9.462E-13	9.166E-13
o-210	U-234	2.000E-07	0.000E+00	5.579E-17	1.412E-15	4.183E-14	6.108E-13	3.555E-12	4.510E-12	4.369E-12
o-210	U-238	1.599E-03	0.000E+00	3.142E-19	2.374E-17	2.303E-15	9.533E-14	1.413E-12	2.300E-12	2.231E-12
o-210	U-238	3.359E-07	0.000E+00	6.599E-23	4.987E-21	4.838E-19	2.002E-17	2.967E-16	4.832E-16	4.687E-16
o-210	U-238	3.196E-07	0.000E+00	6.278E-23	4.745E-21	4.603E-19	1.905E-17	2.823E-16	4.597E-16	4.459E-16
o-210	U-238	6.713E-11	0.000E+00	1.319E-26	9.966E-25	9.669E-23	4.001E-21	5.929E-20	9.656E-20	9.366E-20
o-210	U-238	3.200E-10	0.000E+00	6.286E-26	4.750E-24	4.609E-22	1.907E-20	2.826E-19	4.603E-19	4.464E-19
o-210	U-238	9.980E-01	0.000E+00	1.960E-16	1.481E-14	1.437E-12	5.948E-11	8.814E-10	1.435E-09	1.392E-09
o-210	U-238	2.096E-04	0.000E+00	4.118E-20	3.112E-18	3.019E-16	1.249E-14	1.851E-13	3.015E-13	2.925E-13
o-210	U-238	1.994E-04	0.000E+00	3.918E-20	2.961E-18	2.872E-16	1.189E-14	1.761E-13	2.869E-13	2.782E-13
o-210	U-238	4.189E-08	0.000E+00	8.229E-24	6.219E-22	6.033E-20	2.497E-18	3.700E-17	6.025E-17	5.844E-17
o-210	U-238	1.997E-07	0.000E+00	3.922E-23	2.964E-21	2.876E-19	1.190E-17	1.764E-16	2.872E-16	2.786E-16
o-210	äS(j):		0.000E+00	1.092E+00	3.008E+00	7.447E+00	9.647E+00	1.905E+00	3.549E-03	2.185E-05
o-210	Ra-226	1.319E-06	0.000E+00	1.441E-06	3.969E-06	9.826E-06	1.273E-05	2.514E-06	4.653E-09	8.226E-19
o-210	Ra-226	1.899E-08	0.000E+00	2.074E-08	5.713E-08	1.414E-07	1.832E-07	3.618E-08	6.698E-11	1.184E-20
o-210	Ra-226	2.771E-10	0.000E+00	3.026E-10	8.336E-10	2.064E-09	2.674E-09	5.280E-10	9.774E-13	1.728E-22
o-210	Ra-226	2.637E-10	0.000E+00	2.879E-10	7.931E-10	1.964E-09	2.544E-09	5.023E-10	9.299E-13	1.644E-22
o-210	Ra-226	5.538E-14	0.000E+00	6.048E-14	1.666E-13	4.124E-13	5.343E-13	1.055E-13	1.953E-16	3.453E-26
o-210	Ra-226	2.640E-13	0.000E+00	2.883E-13	7.941E-13	1.966E-12	2.547E-12	5.029E-13	9.311E-16	1.646E-25
o-210	U-234	1.319E-06	0.000E+00	3.681E-16	9.317E-15	2.760E-13	4.030E-12	2.345E-11	2.975E-11	2.882E-11
o-210	U-234	2.771E-10	0.000E+00	7.731E-20	1.957E-18	5.797E-17	8.464E-16	4.926E-15	6.250E-15	6.054E-15
o-210	U-234	2.637E-10	0.000E+00	7.356E-20	1.862E-18	5.515E-17	8.053E-16	4.686E-15	5.946E-15	5.760E-15
o-210	U-234	5.538E-14	0.000E+00	1.545E-23	3.911E-22	1.158E-20	1.691E-19	9.844E-19	1.249E-18	1.210E-18
o-210	U-234	2.640E-13	0.000E+00	7.364E-23	1.864E-21	5.522E-20	8.063E-19	4.692E-18	5.953E-18	5.767E-18
o-210	U-238	2.111E-09	0.000E+00	4.147E-25	3.134E-23	3.041E-21	1.258E-19	1.865E-18	3.037E-18	2.945E-18
o-210	U-238	4.434E-13	0.000E+00	8.711E-29	6.583E-27	6.387E-25	2.643E-23	3.916E-22	6.378E-22	6.187E-22
o-210	U-238	4.219E-13	0.000E+00	8.287E-29	6.263E-27	6.076E-25	2.515E-23	3.726E-22	6.068E-22	5.886E-22

ummary : GKP Fire Fighter- Ingestion
ile : C:\USERS\CLAUDE\DOCUMENTS\0 GKP DOSE\RESRAD CW\GKP FIRE FIGHTER -INGESTION.RAD

Individual Nuclide Soil Concentration
Parent Nuclide and Branch Fraction Indicated

uclide (j)	Parent (i)	THF(i)	S(j,t), pCi/g t= 0.000E+00	1.000E+00	3.000E+00	1.000E+01	3.000E+01	1.000E+02	3.000E+02	1.000E+03
ÄÄÄÄÄ	ÄÄÄÄÄÄ	ÄÄÄÄÄÄÄÄ	ÄÄÄÄÄÄÄÄ	ÄÄÄÄÄÄÄÄ	ÄÄÄÄÄÄÄÄ	ÄÄÄÄÄÄÄÄ	ÄÄÄÄÄÄÄÄ	ÄÄÄÄÄÄÄÄ	ÄÄÄÄÄÄÄÄ	ÄÄÄÄÄÄÄÄ
o-210	U-238	8.862E-17	0.000E+00	1.741E-32	1.315E-30	1.276E-28	5.282E-27	7.026E-26	1.275E 25	1.236E-25
o-210	U-238	4.224E-16	0.000E+00	8.297E-32	6.270E-30	6.084E-28	2.518E-26	3.731E-25	6.076E-25	5.893E-25
o-210	U-238	1.317E-06	0.000E+00	2.588E-22	1.956E-20	1.897E-18	7.852E-17	1.163E-15	1.895E-15	1.838E-15
o-210	U-238	2.767E-10	0.000E+00	5.435E-26	4.108E-24	3.985E-22	1.649E-20	2.444E-19	3.980E-19	3.860E-19
o-210	U-238	2.633E-10	0.000E+00	5.171E-26	3.908E-24	3.792E-22	1.569E-20	2.325E-19	3.787E-19	3.673E-19
o-210	U-238	5.530E-14	0.000E+00	1.086E-29	8.209E-28	7.964E-26	3.296E-24	4.884E-23	7.954E-23	7.715E-23
o-210	U-238	2.636E-13	0.000E+00	5.178E-29	3.913E-27	3.796E-25	1.571E-23	2.328E-22	3.791E-22	3.677E-22
o-210	äS(j):		0.000E+00	1.462E-06	4.028E-06	9.971E-06	1.292E-05	2.551E-06	4.752E-09	2.884E-11
a-226	Ra-226	1.899E-08	6.932E-07	6.713E-07	6.296E-07	5.030E-07	2.648E-07	2.802E-08	4.580E-11	8.084E-21
a-226	Ra-226	2.100E-04	7.663E-03	7.421E-03	6.960E-03	5.560E-03	2.927E-03	3.098E-04	5.063E-07	8.936E-17
a-226	äS(j):		7.664E-03	7.422E-03	6.961E-03	5.561E-03	2.927E-03	3.098E-04	5.064E-07	8.937E-17
a-226	Ra-226	2.771E-10	1.012E-08	9.796E-09	9.188E-09	7.340E-09	3.864E-09	4.090E-10	6.684E-13	1.180E-22
a-226	Ra-226	3.989E-12	1.456E-10	1.410E-10	1.322E-10	1.056E-10	5.561E-11	5.886E-12	9.621E-15	1.698E-24
a-226	äS(j):		1.026E-08	9.937E-09	9.320E-09	7.445E-09	3.919E-09	4.148E-10	6.780E-13	1.197E-22
o-210	Ra-226	3.989E-12	0.000E+00	4.356E-12	1.200E-11	2.971E-11	3.849E-11	7.599E-12	1.407E-14	2.487E-24
o-210	Ra-226	3.795E-12	0.000E+00	4.144E-12	1.142E-11	2.826E-11	3.662E-11	7.230E-12	1.339E-14	2.366E-24
o-210	Ra-226	7.972E-16	0.000E+00	8.705E-16	2.398E-15	5.937E-15	7.691E-15	1.519E-15	2.812E-18	4.970E-28
o-210	Ra-226	3.800E-15	0.000E+00	4.149E-15	1.143E-14	2.830E-14	3.666E-14	7.239E-15	1.340E-17	2.369E-27
o-210	U-234	1.899E-08	0.000E+00	5.298E-18	1.341E-16	3.973E-15	5.800E-14	3.376E-13	4.283E-13	4.149E-13
o-210	U-234	3.989E-12	0.000E+00	1.113E-21	2.817E-20	8.344E-19	1.218E-17	7.090E-17	8.996E-17	8.715E-17
o-210	U-234	3.795E-12	0.000E+00	1.059E-21	2.680E-20	7.939E-19	1.159E-17	6.746E-17	8.559E-17	8.291E-17
o-210	U-234	7.972E-16	0.000E+00	2.224E-25	5.629E-24	1.667E-22	2.435E-21	1.417E-20	1.798E-20	1.742E-20
o-210	U-234	3.800E-15	0.000E+00	1.060E-24	2.683E-23	7.948E-22	1.161E-20	6.754E-20	8.569E-20	8.301E-20
o-210	U-238	3.039E-11	0.000E+00	5.969E-27	4.511E-25	4.377E-23	1.811E-21	2.684E-20	4.371E-20	4.240E-20
o-210	U-238	6.383E-15	0.000E+00	1.254E-30	9.475E-29	9.193E-27	3.804E-25	5.637E-24	9.181E-24	8.905E-24
o-210	U-238	6.073E-15	0.000E+00	1.193E-30	9.015E-29	8.746E-27	3.620E-25	5.363E-24	8.735E-24	8.472E-24
o-210	U-238	1.276E-18	0.000E+00	2.506E-34	1.893E-32	1.837E-30	7.603E-29	1.127E-27	1.835E-27	1.780E-27
o-210	U-238	6.080E-18	0.000E+00	1.194E-33	9.026E-32	8.757E-30	3.624E-28	5.370E-27	8.745E-27	8.483E-27
o-210	U-238	1.896E-08	0.000E+00	3.725E-24	2.815E-22	2.731E-20	1.130E-18	1.675E-17	2.727E-17	2.645E-17
o-210	U-238	3.983E-12	0.000E+00	7.824E-28	5.912E-26	5.736E-24	2.374E-22	3.518E-21	5.729E-21	5.557E-21
o-210	U-238	3.789E-12	0.000E+00	7.444E-28	5.625E-26	5.458E-24	2.259E-22	3.347E-21	5.450E-21	5.287E-21
o-210	U-238	7.959E-16	0.000E+00	1.563E-31	1.182E-29	1.146E-27	4.744E-26	7.029E-25	1.145E-24	1.110E-24
o-210	U-238	3.794E-15	0.000E+00	7.453E-31	5.632E-29	5.464E-27	2.261E-25	3.351E-24	5.457E-24	5.293E-24
o-210	äS(j):		0.000E+00	8.506E-12	2.343E-11	5.801E-11	7.520E-11	1.518E-11	4.560E-13	4.151E-13
a-226	Ra-226	1.998E-04	7.291E-03	7.061E-03	6.622E-03	5.290E-03	2.785E-03	2.948E-04	4.817E-07	8.502E-17
a-226	Ra-226	2.637E-10	9.624E-09	9.320E-09	8.741E-09	6.983E-09	3.676E-09	3.891E-10	6.359E-13	1.122E-22
a-226	U-234	1.998E-04	0.000E+00	5.392E-12	4.613E-11	4.306E-10	2.414E-09	6.873E-09	7.700E-09	7.457E-09
a-226	U-234	2.637E-10	0.000E+00	7.117E-18	6.089E-17	5.684E-16	3.187E-15	9.072E-15	1.016E-14	9.843E-15
a-226	U-234	3.795E-12	0.000E+00	1.024E-19	8.765E-19	8.182E-18	4.587E-17	1.306E-16	1.463E-16	1.417E-16
a-226	U-238	3.196E-07	0.000E+00	8.081E-21	2.055E-19	6.180E-18	9.385E-17	5.963E-16	7.864E-16	7.619E-16
a-226	U-238	4.219E-13	0.000E+00	1.067E-26	2.712E-25	8.158E-24	1.239E-22	7.872E-22	1.038E-21	1.006E-21
a-226	U-238	6.073E-15	0.000E+00	1.535E-28	3.904E-27	1.174E-25	1.783E-24	1.133E-23	1.494E-23	1.448E-23
a-226	U-238	1.994E-04	0.000E+00	5.042E-18	1.282E-16	3.856E-15	5.856E-14	3.721E-13	4.907E-13	4.755E-13
a-226	U-238	2.633E-10	0.000E+00	6.656E-24	1.692E-22	5.090E-21	7.730E-20	4.912E-19	6.477E-19	6.276E-19
a-226	U-238	3.789E-12	0.000E+00	9.581E-26	2.436E-24	7.327E-23	1.113E-21	7.070E-21	9.323E-21	9.034E-21
a-226	äS(j):		7.291E-03	7.061E-03	6.622E-03	5.290E-03	2.785E-03	2.948E-04	4.894E-07	7.457E-09

ummary : GKP Fire Fighter- Ingestion
ile : C:\USERS\CLAUDE\DOCUMENTS\0 GKP DOSE\RESRAD CW\GKP FIRE FIGHTER -INGESTION.RAD

Individual Nuclide Soil Concentration
Parent Nuclide and Branch Fraction Indicated

uclide (j)	Parent (i)	THF(i)	S(j,t), pCi/g t= 0.000E+00	1.000E+00	3.000E+00	1.000E+01	3.000E+01	1.000E+02	3.000E+02	1.000E+03
ÄÄÄÄÄÄ	ÄÄÄÄÄÄÄ	ÄÄÄÄÄÄÄÄÄ	ÄÄÄÄÄÄÄÄÄ	ÄÄÄÄÄÄÄÄÄ	ÄÄÄÄÄÄÄÄÄ	ÄÄÄÄÄÄÄÄÄ	ÄÄÄÄÄÄÄÄÄ	ÄÄÄÄÄÄÄÄÄ	ÄÄÄÄÄÄÄÄÄ	ÄÄÄÄÄÄÄÄÄ
a-226	Ra-226	3.795E-12	1.385E-10	1.342E-10	1.258E-10	1.005E-10	5.291E-11	5.600E-12	9.153E-15	1.615E-24
a-226	Ra-226	4.196E-08	1.531E-06	1.483E-06	1.391E-06	1.111E-06	5.849E-07	6.191E-08	1.012E-10	1.786E-20
a-226	äS(j):		1.532E-06	1.483E-06	1.391E-06	1.111E-06	5.850E-07	6.192E-08	1.012E-10	1.786E-20
a-226	Ra-226	5.538E-14	2.022E-12	1.958E-12	1.836E-12	1.467E-12	7.721E-13	8.173E-14	1.336E-16	2.357E-26
a-226	Ra-226	7.972E-16	2.910E-14	2.818E-14	2.643E-14	2.111E-14	1.111E-14	1.176E-15	1.923E-18	3.393E-28
a-226	äS(j):		2.051E-12	1.986E-12	1.862E-12	1.488E-12	7.832E-13	8.290E-14	1.355E-16	2.391E-26
a-226	Ra-226	2.000E-07	7.300E-06	7.070E-06	6.630E-06	5.297E-06	2.788E-06	2.951E-07	4.823E-10	8.513E-20
a-226	Ra-226	2.640E-13	9.636E-12	9.332E-12	8.752E-12	6.991E-12	3.680E-12	3.896E-13	6.367E-16	1.124E-25
a-226	U-234	2.000E-07	0.000E+00	5.398E-15	4.619E-14	4.311E-13	2.417E-12	6.881E-12	7.709E-12	7.466E-12
a-226	U-234	2.640E-13	0.000E+00	7.126E-21	6.097E-20	5.691E-19	3.191E-18	9.083E-18	1.018E-17	9.855E-18
a-226	U-234	3.800E-15	0.000E+00	1.026E-22	8.776E-22	8.192E-21	4.593E-20	1.307E-19	1.465E-19	1.418E-19
a-226	U-238	3.200E-10	0.000E+00	8.091E-24	2.057E-22	6.188E-21	9.396E-20	5.971E-19	7.873E-19	7.629E-19
a-226	U-238	4.224E-16	0.000E+00	1.068E-29	2.715E-28	8.168E-27	1.240E-25	7.881E-25	1.039E-24	1.007E-24
a-226	U-238	6.080E-18	0.000E+00	1.537E-31	3.909E-30	1.176E-28	1.785E-27	1.134E-26	1.496E-26	1.449E-26
a-226	U-238	1.997E-07	0.000E+00	5.048E-21	1.284E-19	3.861E-18	5.863E-17	3.726E-16	4.913E-16	4.760E-16
a-226	U-238	2.636E-13	0.000E+00	6.664E-27	1.694E-25	5.097E-24	7.739E-23	4.918E-22	6.485E-22	6.284E-22
a-226	U-238	3.794E-15	0.000E+00	9.592E-29	2.439E-27	7.336E-26	1.114E-24	7.079E-24	9.335E-24	9.045E-24
a-226	äS(j):		7.300E-06	7.070E-06	6.630E-06	5.297E-06	2.788E-06	2.951E-07	4.900E-10	7.466E-12
a-226	Ra-226	3.800E-15	1.387E-13	1.343E-13	1.260E-13	1.006E-13	5.298E-14	5.607E-15	9.164E-18	1.617E-27
n-232	Th-232	1.000E+00	2.400E+00	2.400E+00	2.400E+00	2.399E+00	2.397E+00	2.391E+00	2.373E+00	2.313E+00
a-228	Th-232	1.000E+00	0.000E+00	2.684E-01	6.968E-01	1.486E+00	1.879E+00	1.894E+00	1.880E+00	1.832E+00
n-228	Th-232	1.000E+00	0.000E+00	4.430E-02	2.891E-01	1.222E+00	1.865E+00	1.894E+00	1.880E+00	1.832E+00
-234	U-234	9.996E-01	1.389E+01	1.329E+01	1.217E+01	8.925E+00	3.683E+00	1.662E-01	2.380E-05	8.354E-19
-234	U-234	1.319E-06	1.834E-05	1.755E-05	1.606E-05	1.178E-05	4.862E-06	2.194E-07	3.141E-11	1.103E-24
-234	U-238	1.599E-03	0.000E+00	6.005E-08	1.649E-07	4.032E-07	4.992E-07	7.511E-08	3.227E-11	3.779E-24
-234	U-238	2.111E-09	0.000E+00	7.927E-14	2.177E-13	5.322E-13	6.589E-13	9.914E-14	4.259E-17	4.988E-30
-234	U-238	3.039E-11	0.000E+00	1.141E-15	3.133E-15	7.661E-15	9.484E-15	1.427E-15	6.131E-19	7.180E-32
-234	U-238	3.359E-07	0.000E+00	1.261E-11	3.463E-11	8.469E-11	1.048E-10	1.578E-11	6.777E-15	7.938E-28
-234	U-238	4.434E-13	0.000E+00	1.665E-17	4.572E-17	1.118E-16	1.384E-16	2.082E-17	8.946E-21	1.048E-33
-234	U-238	6.383E-15	0.000E+00	2.396E-19	6.580E-19	1.609E-18	1.992E-18	2.998E-19	1.288E-22	1.508E-35
-234	U-238	3.196E-07	0.000E+00	1.200E-11	3.295E-11	8.058E-11	9.975E-11	1.501E-11	6.448E-15	7.552E-28
-234	U-238	4.219E-13	0.000E+00	1.584E-17	4.350E-17	1.064E-16	1.317E-16	1.981E-17	8.511E-21	9.969E-34
-234	U-238	6.073E-15	0.000E+00	2.280E-19	6.261E-19	1.531E-18	1.895E-18	2.852E-19	1.225E-22	1.435E-35
-234	U-238	6.713E-11	0.000E+00	2.521E-15	6.921E-15	1.692E-14	2.095E-14	3.153E-15	1.354E-18	1.586E-31
-234	U-238	8.862E-17	0.000E+00	3.327E-21	9.136E-21	2.234E-20	2.766E-20	4.162E-21	1.788E-24	2.094E-37
-234	U-238	1.276E-18	0.000E+00	4.789E-23	1.315E-22	3.216E-22	3.981E-22	5.990E-23	2.573E-26	3.014E-39
-234	U-238	3.200E-10	0.000E+00	1.201E-14	3.299E-14	8.067E-14	9.987E-14	1.503E-14	6.456E-18	7.561E-31
-234	U-238	4.224E-16	0.000E+00	1.586E-20	4.355E-20	1.065E-19	1.318E-19	1.984E-20	8.522E-24	9.981E-37
-234	U-238	6.080E-18	0.000E+00	2.283E-22	6.268E-22	1.533E-21	1.898E-21	2.855E-22	1.227E-25	1.437E-38
-234	U-238	9.980E-01	0.000E+00	3.747E-05	1.029E-04	2.516E-04	3.115E-04	4.687E-05	2.013E-08	2.358E-21
-234	U-238	1.317E-06	0.000E+00	4.946E-11	1.358E-10	3.321E-10	4.111E-10	6.187E-11	2.658E-14	3.113E-27
-234	U-238	1.896E-08	0.000E+00	7.119E-13	1.955E-12	4.780E-12	5.918E-12	8.905E-13	3.825E-16	4.480E-29

ummary : GKP Fire Ighter- Ingestion
ile : C:\USERS\CLAUDE\DOCUMENTS\0 GKP DOSE\RESRAD CW\GKP FIRE FIGHTER -INGESTION.RAD

Individual Nuclide Soil Concentration
Parent Nuclide and Branch Fraction Indicated

uclide (j)	Parent (i)	THF(i)	S(j,t), pCi/g t= 0.000E+00	1.000E+00	3.000E+00	1.000E+01	3.000E+01	1.000E+02	3.000E+02	1.000E+03
ÄÄÄÄÄ	ÄÄÄÄÄÄ	ÄÄÄÄÄÄÄÄÄ	ÄÄÄÄÄÄÄÄÄ	ÄÄÄÄÄÄÄÄÄ	ÄÄÄÄÄÄÄÄÄ	ÄÄÄÄÄÄÄÄÄ	ÄÄÄÄÄÄÄÄÄ	ÄÄÄÄÄÄÄÄÄ	ÄÄÄÄÄÄÄÄÄ	ÄÄÄÄÄÄÄÄÄ
234	U 238	2.096E 04	0.000E+00	7.871E 09	2.161E 08	5.285E 08	6.542E 08	9.844E-09	4.229E 12	4.953E 25
-234	U-238	2.767E-10	0.000E+00	1.039E-14	2.853E-14	6.976E-14	8.636E-14	1.299E-14	5.582E-18	6.538E-31
-234	U-238	3.983E-12	0.000E+00	1.495E-16	4.106E-16	1.004E-15	1.243E-15	1.870E-16	8.035E-20	9.411E-33
-234	U-238	1.994E-04	0.000E+00	7.488E-09	2.056E-08	5.028E-08	6.225E-08	9.366E-09	4.024E-12	4.712E-25
-234	U-238	2.633E-10	0.000E+00	9.884E-15	2.714E-14	6.637E-14	8.216E-14	1.236E-14	5.311E-18	6.220E-31
-234	U-238	3.789E-12	0.000E+00	1.423E-16	3.907E-16	9.553E-16	1.183E-15	1.780E-16	7.645E-20	8.954E-33
-234	U-238	4.189E-08	0.000E+00	1.573E-12	4.319E-12	1.056E-11	1.307E-11	1.967E-12	8.451E-16	9.898E-29
-234	U-238	5.530E-14	0.000E+00	2.076E-18	5.701E-18	1.394E-17	1.726E-17	2.597E-18	1.116E-21	1.307E-34
-234	U-238	7.959E-16	0.000E+00	2.988E-20	8.206E-20	2.007E-19	2.484E-19	3.738E-20	1.606E-23	1.881E-36
-234	U-238	1.997E-07	0.000E+00	7.497E-12	2.059E-11	5.034E-11	6.232E-11	9.378E-12	4.028E-15	4.718E-28
-234	U-238	2.636E-13	0.000E+00	9.896E-18	2.717E-17	6.645E-17	8.226E-17	1.238E-17	5.318E-21	6.228E-34
-234	U-238	3.794E-15	0.000E+00	1.424E-19	3.911E-19	9.565E-19	1.184E-18	1.782E-19	7.654E-23	8.965E-36
-234	äS(j):		1.389E+01	1.329E+01	1.217E+01	8.926E+00	3.683E+00	1.663E-01	2.382E-05	8.377E-19
a-230	U-234	9.996E-01	0.000E+00	1.250E-04	3.589E-04	1.032E-03	2.120E-03	2.842E-03	2.850E-03	2.759E-03
a-230	U-234	1.319E-06	0.000E+00	1.650E-10	4.738E-10	1.362E-09	2.798E-09	3.751E-09	3.762E-09	3.642E-09
a-230	U-234	1.899E-08	0.000E+00	2.375E-12	6.819E-12	1.961E-11	4.028E-11	5.400E-11	5.415E-11	5.243E-11
a-230	U-234	2.100E-04	0.000E+00	2.625E-08	7.539E-08	2.168E-07	4.452E-07	5.969E-07	5.986E-07	5.796E-07
a-230	U-234	2.771E-10	0.000E+00	3.465E-14	9.951E-14	2.862E-13	5.877E-13	7.879E-13	7.902E-13	7.650E-13
a-230	U-234	3.989E-12	0.000E+00	4.988E-16	1.432E-15	4.119E-15	8.460E-15	1.134E-14	1.137E-14	1.101E-14
a-230	U-234	1.998E-04	0.000E+00	2.497E-08	7.172E-08	2.063E-07	4.236E-07	5.679E-07	5.695E-07	5.514E-07
a-230	U-234	2.637E-10	0.000E+00	3.297E-14	9.468E-14	2.723E-13	5.592E-13	7.497E-13	7.518E-13	7.279E-13
a-230	U-234	3.795E-12	0.000E+00	4.745E-16	1.363E-15	3.919E-15	8.049E-15	1.079E-14	1.082E-14	1.048E-14
a-230	U-234	4.196E-08	0.000E+00	5.246E-12	1.507E-11	4.332E-11	8.898E-11	1.193E-10	1.196E-10	1.158E-10
a-230	U-234	5.538E-14	0.000E+00	6.924E-18	1.989E-17	5.719E-17	1.175E-16	1.575E-16	1.579E-16	1.529E-16
a-230	U-234	7.972E-16	0.000E+00	9.967E-20	2.862E-19	8.231E-19	1.691E-18	2.267E-18	2.273E-18	2.201E-18
a-230	U-234	2.000E-07	0.000E+00	2.501E-11	7.181E-11	2.065E-10	4.241E-10	5.686E-10	5.702E-10	5.521E-10
a-230	U-234	2.640E-13	0.000E+00	3.301E-17	9.479E-17	2.726E-16	5.599E-16	7.506E-16	7.527E-16	7.287E-16
a-230	U-234	3.800E-15	0.000E+00	4.751E-19	1.364E-18	3.924E-18	8.058E-18	1.080E-17	1.083E-17	1.049E-17
a-230	U-238	1.599E-03	0.000E+00	2.802E-13	2.378E-12	2.160E-11	1.128E-10	2.748E-10	2.912E-10	2.820E-10
a-230	U-238	2.111E-09	0.000E+00	3.699E-19	3.139E-18	2.851E-17	1.489E-16	3.627E-16	3.844E-16	3.722E-16
a-230	U-238	3.039E-11	0.000E+00	5.324E-21	4.519E-20	4.104E-19	2.143E-18	5.221E-18	5.533E-18	5.357E-18
a-230	U-238	3.359E-07	0.000E+00	5.885E-17	4.995E-16	4.537E-15	2.369E-14	5.771E-14	6.117E-14	5.922E-14
a-230	U-238	4.434E-13	0.000E+00	7.769E-23	6.594E-22	5.989E-21	3.127E-20	7.618E-20	8.074E-20	7.817E-20
a-230	U-238	6.383E-15	0.000E+00	1.118E-24	9.491E-24	8.621E-23	4.501E-22	1.097E-21	1.162E-21	1.125E-21
a-230	U-238	3.196E-07	0.000E+00	5.600E-17	4.753E-16	4.317E-15	2.254E-14	5.491E-14	5.820E-14	5.635E-14
a-230	U-238	4.219E-13	0.000E+00	7.391E-23	6.274E-22	5.698E-21	2.975E-20	7.248E-20	7.682E-20	7.438E-20
a-230	U-238	6.073E-15	0.000E+00	1.064E-24	9.030E-24	8.202E-23	4.282E-22	1.043E-21	1.106E-21	1.071E-21
a-230	U-238	6.713E-11	0.000E+00	1.176E-20	9.983E-20	9.067E-19	4.734E-18	1.153E-17	1.222E-17	1.183E-17
a-230	U-238	8.862E-17	0.000E+00	1.553E-26	1.318E-25	1.197E-24	6.249E-24	1.522E-23	1.614E-23	1.562E-23
a-230	U-238	1.276E-18	0.000E+00	2.235E-28	1.897E-27	1.723E-26	8.995E-26	2.191E-25	2.323E-25	2.249E-25
a-230	U-238	3.200E-10	0.000E+00	5.606E-20	4.759E-19	4.322E-18	2.257E-17	5.498E-17	5.827E-17	5.641E-17
a-230	U-238	4.224E-16	0.000E+00	7.400E-26	6.281E-25	5.705E-24	2.979E-23	7.257E-23	7.691E-23	7.447E-23
a-230	U-238	6.080E-18	0.000E+00	1.065E-27	9.041E-27	8.212E-26	4.288E-25	1.045E-24	1.107E-24	1.072E-24
a-230	U-238	9.980E-01	0.000E+00	1.748E-10	1.484E-09	1.348E-08	7.038E-08	1.715E-07	1.817E-07	1.759E-07
a-230	U-238	1.317E-06	0.000E+00	2.308E-16	1.959E-15	1.779E-14	9.290E-14	2.263E-13	2.399E-13	2.322E-13
a-230	U-238	1.896E-08	0.000E+00	3.322E-18	2.820E-17	2.561E-16	1.337E-15	3.258E-15	3.453E-15	3.343E-15
a-230	U-238	2.096E-04	0.000E+00	3.673E-14	3.117E-13	2.831E-12	1.478E-11	3.601E-11	3.817E-11	3.695E-11
a-230	U-238	2.767E-10	0.000E+00	4.848E-20	4.115E-19	3.737E-18	1.951E-17	4.754E-17	5.038E-17	4.878E-17

ummary : GKP Fire Fighter- Ingestion
ile : C:\USERS\CLAUDE\DOCUMENTS\0 GKP DOSE\RESRAD CW\GKP FIRE FIGHTER -INGESTION.RAD

Individual Nuclide Soil Concentration
Parent Nuclide and Branch Fraction Indicated

uclide (j)	Parent (i)	THF(i)	S(j,t), pCi/g t= 0.000E+00	1.000E+00	3.000E+00	1.000E+01	3.000E+01	1.000E+02	3.000E+02	1.000E+03
ÄÄÄÄÄ	ÄÄÄÄÄÄÄ	ÄÄÄÄÄÄÄÄÄ	ÄÄÄÄÄÄÄÄÄ	ÄÄÄÄÄÄÄÄÄ	ÄÄÄÄÄÄÄÄÄ	ÄÄÄÄÄÄÄÄÄ	ÄÄÄÄÄÄÄÄÄ	ÄÄÄÄÄÄÄÄÄ	ÄÄÄÄÄÄÄÄÄ	ÄÄÄÄÄÄÄÄÄ
n-230	U-238	3.983E-12	0.000E+00	6.978E-22	5.923E-21	5.379E-20	2.809E-19	6.843E-19	7.252E-19	7.021E-19
n-230	U-238	1.994E-04	0.000E+00	3.494E-14	2.966E-13	2.694E-12	1.406E-11	3.426E-11	3.631E-11	3.516E-11
n-230	U-238	2.633E-10	0.000E+00	4.612E-20	3.915E-19	3.556E-18	1.856E-17	4.523E-17	4.794E-17	4.641E-17
n-230	U-238	3.789E-12	0.000E+00	6.639E-22	5.635E-21	5.118E-20	2.672E-19	6.510E-19	6.900E-19	6.680E-19
n-230	U-238	4.189E-08	0.000E+00	7.339E-18	6.229E-17	5.658E-16	2.954E-15	7.197E-15	7.628E-15	7.385E-15
n-230	U-238	5.530E-14	0.000E+00	9.688E-24	8.223E-23	7.468E-22	3.899E-21	9.500E-21	1.007E-20	9.748E-21
n-230	U-238	7.959E-16	0.000E+00	1.394E-25	1.184E-24	1.075E-23	5.613E-23	1.367E-22	1.449E-22	1.403E-22
n-230	U-238	1.997E-07	0.000E+00	3.498E-17	2.969E-16	2.697E-15	1.408E-14	3.431E-14	3.636E-14	3.520E-14
n-230	U-238	2.636E-13	0.000E+00	4.618E-23	3.920E-22	3.560E-21	1.859E-20	4.528E-20	4.799E-20	4.647E-20
n-230	U-238	3.794E-15	0.000E+00	6.647E-25	5.642E-24	5.124E-23	2.675E-22	6.518E-22	6.908E-22	6.688E-22
n-230	äS(j):		0.000E+00	1.250E-04	3.591E-04	1.033E-03	2.121E-03	2.843E-03	2.851E-03	2.761E-03
-234	U-234	1.899E-08	2.640E-07	2.526E-07	2.312E-07	1.696E-07	6.998E-08	3.159E-09	4.522E-13	1.587E-26
-234	U-234	2.100E-04	2.918E-03	2.792E-03	2.556E-03	1.875E-03	7.736E-04	3.492E-05	4.999E-09	1.755E-22
-234	äS(j):		2.919E-03	2.792E-03	2.556E-03	1.875E-03	7.737E-04	3.492E-05	4.999E-09	1.755E-22
a-226	U-234	2.100E-04	0.000E+00	5.667E-12	4.849E-11	4.526E-10	2.538E-09	7.224E-09	8.093E-09	7.837E-09
a-226	U-234	3.989E-12	0.000E+00	1.077E-19	9.213E-19	8.600E-18	4.821E-17	1.373E-16	1.538E-16	1.489E-16
a-226	U-238	3.359E-07	0.000E+00	8.493E-21	2.160E-19	6.496E-18	9.864E-17	6.268E-16	8.265E-16	8.008E-16
a-226	U-238	4.434E-13	0.000E+00	1.121E-26	2.851E-25	8.574E-24	1.302E-22	8.274E-22	1.091E-21	1.057E-21
a-226	U-238	6.383E-15	0.000E+00	1.614E-28	4.103E-27	1.234E-25	1.874E-24	1.191E-23	1.570E-23	1.522E-23
a-226	U-238	2.096E-04	0.000E+00	5.300E-18	1.348E-16	4.053E-15	6.155E-14	3.911E-13	5.158E-13	4.997E-13
a-226	U-238	2.767E-10	0.000E+00	6.996E-24	1.779E-22	5.350E-21	8.125E-20	5.163E-19	6.808E-19	6.596E-19
a-226	U-238	3.983E-12	0.000E+00	1.007E-25	2.560E-24	7.701E-23	1.169E-21	7.431E-21	9.799E-21	9.495E-21
a-226	äS(j):		0.000E+00	5.667E-12	4.849E-11	4.526E-10	2.538E-09	7.224E-09	8.094E-09	7.838E-09
-234	U-234	2.771E-10	3.852E-09	3.686E-09	3.373E-09	2.475E-09	1.021E-09	4.609E-11	6.598E-15	2.316E-28
-234	U-234	3.989E-12	5.545E-11	5.305E-11	4.856E-11	3.562E-11	1.470E-11	6.634E-13	9.498E-17	3.334E-30
-234	äS(j):		3.908E-09	3.739E-09	3.422E-09	2.510E-09	1.036E-09	4.676E-11	6.693E-15	2.349E-28
a-226	U-234	2.771E-10	0.000E+00	7.480E-18	6.400E-17	5.974E-16	3.350E-15	9.535E-15	1.068E-14	1.035E-14
-234	U-234	1.998E-04	2.777E-03	2.656E-03	2.431E-03	1.784E-03	7.360E-04	3.322E-05	4.756E-09	1.669E-22
-234	U-234	2.637E-10	3.665E-09	3.506E-09	3.209E-09	2.354E-09	9.715E-10	4.385E-11	6.278E-15	2.204E-28
-234	äS(j):		2.777E-03	2.656E-03	2.431E-03	1.784E-03	7.360E-04	3.322E-05	4.756E-09	1.669E-22
-234	U-234	3.795E-12	5.276E-11	5.047E-11	4.620E-11	3.389E-11	1.398E-11	6.312E-13	9.036E-17	3.172E-30
-234	U-234	4.196E-08	5.832E-07	5.580E-07	5.107E-07	3.746E-07	1.546E-07	6.978E-09	9.989E-13	3.506E-26
-234	äS(j):		5.833E-07	5.580E-07	5.107E-07	3.747E-07	1.546E-07	6.979E-09	9.990E-13	3.507E-26
a-226	U-234	4.196E-08	0.000E+00	1.132E-15	9.690E-15	9.045E-14	5.071E-13	1.444E-12	1.617E-12	1.566E-12
a-226	U-234	7.972E-16	0.000E+00	2.152E-23	1.841E-22	1.719E-21	9.635E-21	2.743E-20	3.073E-20	2.976E-20
a-226	U-238	6.713E-11	0.000E+00	1.697E-24	4.316E-23	1.298E-21	1.971E-20	1.253E-19	1.652E-19	1.600E-19
a-226	U-238	8.862E-17	0.000E+00	2.240E-30	5.697E-29	1.713E-27	2.602E-26	1.653E-25	2.180E-25	2.113E-25
a-226	U-238	1.276E-18	0.000E+00	3.225E-32	8.200E-31	2.466E-29	3.745E-28	2.380E-27	3.138E-27	3.041E-27
a-226	U-238	4.189E-08	0.000E+00	1.059E-21	2.693E-20	8.100E-19	1.230E-17	7.816E-17	1.031E-16	9.987E-17
a-226	U-238	5.530E-14	0.000E+00	1.398E-27	3.555E-26	1.069E-24	1.624E-23	1.032E-22	1.360E-22	1.318E-22
a-226	U-238	7.959E-16	0.000E+00	2.012E-29	5.117E-28	1.539E-26	2.337E-25	1.485E-24	1.958E-24	1.897E-24
a-226	äS(j):		0.000E+00	1.132E-15	9.690E-15	9.045E-14	5.071E-13	1.444E-12	1.617E-12	1.566E-12

ummary : GKP Fire Fighter- Ingestion
ile : C:\USERS\CLAUDE\DOCUMENTS\0 GKP DOSE\RESRAD CW\GKP FIRE FIGHTER -INGESTION.RAD

Individual Nuclide Soil Concentration
Parent Nuclide and Branch Fraction Indicated

uclide (j)	Parent (i)	THF(i)	S(j,t), pCi/g t= 0.000E+00	1.000E+00	3.000E+00	1.000E+01	3.000E+01	1.000E+02	3.000E+02	1.000E+03
ÄÄÄÄÄÄ	ÄÄÄÄÄÄÄ	ÄÄÄÄÄÄÄÄÄ	ÄÄÄÄÄÄÄÄÄ	ÄÄÄÄÄÄÄÄÄ	ÄÄÄÄÄÄÄÄÄ	ÄÄÄÄÄÄÄÄÄ	ÄÄÄÄÄÄÄÄÄ	ÄÄÄÄÄÄÄÄÄ	ÄÄÄÄÄÄÄÄÄ	ÄÄÄÄÄÄÄÄÄ
-234	U-234	5.538E-14	7.698E-13	7.365E-13	6.741E-13	4.945E-13	2.041E-13	9.211E-15	1.319E-18	4.629E-32
-234	U-234	7.972E-16	1.108E-14	1.060E-14	9.703E-15	7.118E-15	2.937E-15	1.326E-16	1.898E-20	6.662E-34
-234	äS(j):		7.809E-13	7.471E-13	6.838E-13	5.016E-13	2.070E-13	9.344E-15	1.338E-18	4.695E-32
a-226	U-234	5.538E-14	0.000E+00	1.495E-21	1.279E-20	1.194E-19	6.694E-19	1.906E-18	2.135E-18	2.067E-18
-234	U-234	2.000E-07	2.780E-06	2.660E-06	2.434E-06	1.786E-06	7.369E-07	3.326E-08	4.762E-12	1.671E-25
-234	U-234	2.640E-13	3.670E-12	3.511E-12	3.213E-12	2.357E-12	9.727E-13	4.391E-14	6.285E-18	2.206E-31
-234	äS(j):		2.780E-06	2.660E-06	2.434E-06	1.786E-06	7.369E-07	3.326E-08	4.762E-12	1.671E-25
-234	U-234	3.800E-15	5.282E-14	5.053E-14	4.625E-14	3.393E-14	1.400E-14	6.320E-16	9.047E-20	3.176E-33
-235	U-235	9.835E-01	8.261E-01	7.904E-01	7.234E-01	5.307E-01	2.190E-01	9.887E-03	1.416E-06	4.981E-20
-235	U-235	2.722E-03	2.286E-03	2.187E-03	2.002E-03	1.469E-03	6.061E-04	2.736E-05	3.920E-09	1.379E-22
-235	äS(j):		8.284E-01	7.925E-01	7.254E-01	5.322E-01	2.196E-01	9.914E-03	1.420E-06	4.995E-20
a-231	U-235	9.835E-01	0.000E+00	1.672E-05	4.592E-05	1.123E-04	1.390E-04	2.090E-05	8.961E-09	1.043E-21
a-231	U-235	2.722E-03	0.000E+00	4.628E-08	1.271E-07	3.107E-07	3.846E-07	5.784E-08	2.480E-11	2.886E-24
a-231	U-235	1.376E-02	0.000E+00	2.340E-07	6.425E-07	1.571E-06	1.944E-06	2.924E-07	1.254E-10	1.459E-23
a-231	U-235	3.809E-05	0.000E+00	6.476E-10	1.778E-09	4.348E-09	5.382E-09	8.093E-10	3.470E-13	4.038E-26
a-231	U-235	8.257E-07	0.000E+00	1.404E-11	3.855E-11	9.426E-11	1.167E-10	1.755E-11	7.523E-15	8.755E-28
a-231	U-235	2.285E-09	0.000E+00	3.886E-14	1.067E-13	2.609E-13	3.229E-13	4.856E-14	2.082E-17	2.423E-30
a-231	äS(j):		0.000E+00	1.700E-05	4.669E-05	1.142E-04	1.413E-04	2.125E-05	9.111E-09	1.060E-21
c-227	U-235	9.835E-01	0.000E+00	2.577E-07	1.994E-06	1.324E-05	3.070E-05	6.123E-06	2.826E-09	3.370E-22
c-227	U-235	2.722E-03	0.000E+00	7.134E-10	5.518E-09	3.665E-08	8.495E-08	1.695E-08	7.821E-12	9.327E-25
c-227	U-235	1.376E-02	0.000E+00	3.606E-09	2.790E-08	1.853E-07	4.295E-07	8.568E-08	3.954E-11	4.715E-24
c-227	äS(j):		0.000E+00	4.320E-09	3.341E-08	2.219E-07	5.144E-07	1.026E-07	4.736E-11	5.648E-24
-235	U-235	1.376E-02	1.156E-02	1.106E-02	1.012E-02	7.426E-03	3.064E-03	1.383E-04	1.982E-08	6.969E-22
-235	U-235	3.809E-05	3.199E-05	3.061E-05	2.801E-05	2.055E-05	8.481E-06	3.829E-07	5.484E-11	1.929E-24
-235	äS(j):		1.159E-02	1.109E-02	1.015E-02	7.446E-03	3.073E-03	1.387E-04	1.987E-08	6.989E-22
c-227	U-235	3.809E-05	0.000E+00	9.981E-12	7.721E-11	5.128E-10	1.189E-09	2.371E-10	1.094E-13	1.305E-26
c-227	U-235	8.257E-07	0.000E+00	2.164E-13	1.674E-12	1.112E-11	2.577E-11	5.141E-12	2.372E-15	2.829E-28
c-227	äS(j):		0.000E+00	1.020E-11	7.888E-11	5.239E-10	1.214E-09	2.423E-10	1.118E-13	1.333E-26
-235	U-235	8.257E-07	6.936E-07	6.636E-07	6.074E-07	4.456E-07	1.839E-07	8.301E-09	1.189E-12	4.182E-26
-235	U-235	2.285E-09	1.920E-09	1.837E-09	1.681E-09	1.233E-09	5.089E-10	2.297E-11	3.291E-15	1.157E-28
-235	äS(j):		6.955E-07	6.654E-07	6.090E-07	4.468E-07	1.844E-07	8.324E-09	1.192E-12	4.193E-26
c-227	U-235	2.285E-09	0.000E+00	5.989E-16	4.633E-15	3.077E-14	7.133E-14	1.423E-14	6.566E-18	7.831E-31
-238	U-238	5.450E-07	7.575E-06	7.248E-06	6.634E-06	4.866E-06	2.008E-06	9.066E-08	1.299E-11	4.567E-25
-238	U-238	1.599E-03	2.223E-02	2.127E-02	1.947E-02	1.428E-02	5.893E-03	2.661E-04	3.811E-08	1.340E-21
-238	äS(j):		2.224E-02	2.128E-02	1.947E-02	1.429E-02	5.895E-03	2.662E-04	3.812E-08	1.341E-21
-238	U-238	2.111E-09	2.934E-08	2.807E-08	2.570E-08	1.885E-08	7.779E-09	3.512E-10	5.030E-14	1.769E-27

ummary : GKP Fire Fighter- Ingestion
ile : C:\USERS\CLAUDE\DOCUMENTS\0 GKP DOSE\RESRAD CW\GKP FIRE FIGHTER -INGESTION.RAD

Individual Nuclide Soil Concentration
Parent Nuclide and Branch Fraction Indicated

uclide (j)	Parent (i)	THF(i)	S(j,t), pCi/g t= 0.000E+00	1.000E+00	3.000E+00	1.000E+01	3.000E+01	1.000E+02	3.000E+02	1.000E+03
ÄÄÄÄÄÄ	ÄÄÄÄÄÄÄ	ÄÄÄÄÄÄÄÄÄ	ÄÄÄÄÄÄÄÄÄ	ÄÄÄÄÄÄÄÄÄ	ÄÄÄÄÄÄÄÄÄ	ÄÄÄÄÄÄÄÄÄ	ÄÄÄÄÄÄÄÄÄ	ÄÄÄÄÄÄÄÄÄ	ÄÄÄÄÄÄÄÄÄ	ÄÄÄÄÄÄÄÄÄ
-238	U-238	3.039E-11	4.224E-10	4.041E-10	3.699E-10	2.713E-10	1.120E-10	5.055E-12	7.241E-16	2.547E-29
-238	äS(j):		2.977E-08	2.848E-08	2.607E-08	1.912E-08	7.891E-09	3.563E-10	5.103E-14	1.795E-27
-238	U-238	3.359E-07	4.669E-06	4.467E-06	4.089E-06	3.000E-06	1.238E-06	5.588E-08	8.005E-12	2.815E-25
-238	U-238	4.434E-13	6.164E-12	5.897E-12	5.397E-12	3.960E-12	1.634E-12	7.377E-14	1.057E-17	3.716E-31
-238	äS(j):		4.669E-06	4.467E-06	4.089E-06	3.000E-06	1.238E-06	5.588E-08	8.005E-12	2.815E-25
-238	U-238	6.383E-15	8.872E-14	8.488E-14	7.769E-14	5.699E-14	2.352E-14	1.062E-15	1.521E-19	5.349E-33
-238	U-238	3.196E-07	4.443E-06	4.250E-06	3.890E-06	2.854E-06	1.178E-06	5.317E-08	7.616E-12	2.679E-25
-238	äS(j):		4.443E-06	4.250E-06	3.890E-06	2.854E-06	1.178E-06	5.317E-08	7.616E-12	2.679E-25
-238	U-238	4.219E-13	5.864E-12	5.610E-12	5.135E-12	3.767E-12	1.555E-12	7.018E-14	1.005E-17	3.536E-31
-238	U-238	6.073E-15	8.441E-14	8.076E-14	7.392E-14	5.422E-14	2.238E-14	1.010E-15	1.447E-19	5.089E-33
-238	äS(j):		5.949E-12	5.691E-12	5.209E-12	3.821E-12	1.577E-12	7.119E-14	1.020E-17	3.587E-31
-238	U-238	6.713E-11	9.331E-10	8.927E-10	8.171E-10	5.994E-10	2.474E-10	1.117E-11	1.600E-15	5.626E-29
-238	U-238	8.862E-17	1.232E-15	1.178E-15	1.079E-15	7.913E-16	3.265E-16	1.474E-17	2.112E-21	7.427E-35
-238	äS(j):		9.331E-10	8.927E-10	8.171E-10	5.994E-10	2.474E-10	1.117E-11	1.600E-15	5.626E-29
-238	U-238	1.276E-18	1.773E-17	1.696E-17	1.553E-17	1.139E-17	4.700E-18	2.122E-19	3.039E-23	1.069E-36
-238	U-238	3.200E-10	4.448E-09	4.255E-09	3.895E-09	2.857E-09	1.179E-09	5.323E-11	7.625E-15	2.682E-28
-238	äS(j):		4.448E-09	4.255E-09	3.895E-09	2.857E-09	1.179E-09	5.323E-11	7.625E-15	2.682E-28
-238	U-238	4.224E-16	5.871E-15	5.617E-15	5.141E-15	3.772E-15	1.556E-15	7.027E-17	1.007E-20	3.540E-34
-238	U-238	6.080E-18	8.451E-17	8.085E-17	7.400E-17	5.429E-17	2.240E-17	1.011E-18	1.449E-22	5.095E-36
-238	äS(j):		5.956E-15	5.698E-15	5.215E-15	3.826E-15	1.579E-15	7.128E-17	1.021E-20	3.591E-34
-238	U-238	9.980E-01	1.387E+01	1.327E+01	1.215E+01	8.911E+00	3.677E+00	1.660E-01	2.378E-05	8.364E-19
-238	U-238	1.317E-06	1.831E-05	1.752E-05	1.603E-05	1.176E-05	4.854E-06	2.191E-07	3.139E-11	1.104E-24
-238	äS(j):		1.387E+01	1.327E+01	1.215E+01	8.911E+00	3.677E+00	1.660E-01	2.378E-05	8.364E-19
-238	U-238	1.896E-08	2.636E-07	2.522E-07	2.308E-07	1.693E-07	6.987E-08	3.154E-09	4.518E-13	1.589E-26
-238	U-238	2.096E-04	2.914E-03	2.788E-03	2.551E-03	1.872E-03	7.724E-04	3.487E-05	4.995E-09	1.757E-22
-238	äS(j):		2.914E-03	2.788E-03	2.552E-03	1.872E-03	7.725E-04	3.488E-05	4.995E-09	1.757E-22
-238	U-238	2.767E-10	3.846E-09	3.680E-09	3.368E-09	2.471E-09	1.020E-09	4.603E-11	6.593E-15	2.319E-28
-238	U-238	3.983E-12	5.536E-11	5.296E-11	4.848E-11	3.556E-11	1.468E-11	6.626E-13	9.490E-17	3.338E-30
-238	äS(j):		3.902E-09	3.733E-09	3.416E-09	2.506E-09	1.034E-09	4.669E-11	6.688E-15	2.352E-28
-238	U-238	1.994E-04	2.772E-03	2.652E-03	2.428E-03	1.781E-03	7.349E-04	3.318E-05	4.752E-09	1.671E-22
-238	U-238	2.633E-10	3.659E-09	3.501E-09	3.204E-09	2.351E-09	9.701E-10	4.379E-11	6.273E-15	2.206E-28
-238	äS(j):		2.772E-03	2.652E-03	2.428E-03	1.781E-03	7.349E-04	3.318E-05	4.752E-09	1.671E-22
-238	U-238	3.789E-12	5.267E-11	5.039E-11	4.612E-11	3.384E-11	1.396E-11	6.304E-13	9.029E-17	3.176E-30
-238	U-238	4.189E-08	5.823E-07	5.571E-07	5.099E-07	3.741E-07	1.544E-07	6.969E-09	9.982E-13	3.511E-26
-238	äS(j):		5.823E-07	5.571E-07	5.099E-07	3.741E-07	1.544E-07	6.969E-09	9.983E-13	3.511E-26
-238	U-238	5.530E-14	7.686E-13	7.353E-13	6.731E-13	4.938E-13	2.038E-13	9.199E-15	1.318E-18	4.634E-32
-238	U-238	7.959E-16	1.106E-14	1.058E-14	9.688E-15	7.107E-15	2.933E-15	1.324E-16	1.897E-20	6.670E-34
-238	äS(j):		7.797E-13	7.459E-13	6.827E-13	5.009E-13	2.067E-13	9.331E-15	1.337E-18	4.701E-32

ummary : GKP Fire Fighter- Ingestion

ile : C:\USERS\CLAUDE\DOCUMENTS\0 GKP DOSE\RESRAD CW\GKP FIRE FIGHTER -INGESTION.RAD

Individual Nuclide Soil Concentration

Parent Nuclide and Branch Fraction Indicated

uclide (j)	Parent (i)	THF(i)	S(j,t), pCi/g t= 0.000E+00	1.000E+00	3.000E+00	1.000E+01	3.000E+01	1.000E+02	3.000E+02	1.000E+03
ÄÄÄÄÄÄ	ÄÄÄÄÄÄÄ	ÄÄÄÄÄÄÄÄÄ	ÄÄÄÄÄÄÄÄÄ	ÄÄÄÄÄÄÄÄÄ	ÄÄÄÄÄÄÄÄÄ	ÄÄÄÄÄÄÄÄÄ	ÄÄÄÄÄÄÄÄÄ	ÄÄÄÄÄÄÄÄÄ	ÄÄÄÄÄÄÄÄÄ	ÄÄÄÄÄÄÄÄÄ
-238	U-238	1.997E-07	2.776E-06	2.655E-06	2.430E-06	1.783E-06	7.358E-07	3.322E-08	4.758E-12	1.673E-25
-238	U-238	2.636E-13	3.664E-12	3.505E-12	3.208E-12	2.354E-12	9.712E-13	4.385E-14	6.281E-18	2.209E-31
-238	äS(j):		2.776E-06	2.655E-06	2.430E-06	1.783E-06	7.358E-07	3.322E-08	4.758E-12	1.673E-25
-238	U-238	3.794E-15	5.274E-14	5.045E-14	4.618E-14	3.388E-14	1.398E-14	6.311E-16	9.040E-20	3.180E-33
íííííí	íííííííí	ííííííííí	ííííííííí	ííííííííí	ííííííííí	ííííííííí	ííííííííí	ííííííííí	ííííííííí	ííííííííí

HF(i) is the thread fraction of the parent nuclide.

ESCALC.EXE execution time = 43.64 seconds

ummary : GKP Fire Fighter - Inhalation
ile : C:\USERS\CLAUDE\DOCUMENTS\0 GKP DOSE\RESRAD CW\GKP FIRE FIGHTER - INHALATION.RAD

Table of Contents
ÄÄÄÄÄÄÄÄÄÄÄÄÄÄÄÄ

Part I: Mixture Sums and Single Radionuclide Guidelines
íí

ummary : GKP Fire Ighter - Inhalation
ile : C:\USERS\CLAUDE\DOCUMENTS\0 GKP DOSE\RESRAD CW\GKP FIRE FIGHTER - INHALATION.RAD

Dose Conversion Factor (and Related) Parameter Summary
Dose Library: FGR 11

enu	Parameter	Current Value#	Base Case*	Parameter Name
-1	DCF's for external ground radiation, (mrem/yr)/(pCi/g)			
-1	Ac-227 (Source: FGR 12)	4.951E-04	4.951E-04	DCF1(1)
-1	Ac-228 (Source: FGR 12)	5.978E+00	5.978E+00	DCF1(2)
-1	At-218 (Source: FGR 12)	5.847E-03	5.847E-03	DCF1(3)
-1	At-219 (Source: no data)	0.000E+00	-2.000E+00	DCF1(4)
-1	Bi-210 (Source: FGR 12)	3.606E-03	3.606E-03	DCF1(5)
-1	Bi-211 (Source: FGR 12)	2.559E-01	2.559E-01	DCF1(6)
-1	Bi-212 (Source: FGR 12)	1.171E+00	1.171E+00	DCF1(7)
-1	Bi-214 (Source: FGR 12)	9.808E+00	9.808E+00	DCF1(8)
-1	Bi-215 (Source: no data)	0.000E+00	-2.000E+00	DCF1(9)
-1	Fr-223 (Source: FGR 12)	1.980E-01	1.980E-01	DCF1(10)
-1	Hg-206 (Source: no data)	0.000E+00	-2.000E+00	DCF1(11)
-1	Pa-231 (Source: FGR 12)	1.906E-01	1.906E-01	DCF1(12)
-1	Pa-234 (Source: FGR 12)	1.155E+01	1.155E+01	DCF1(13)
-1	Pa-234m (Source: FGR 12)	8.967E-02	8.967E-02	DCF1(14)
-1	Pb-210 (Source: FGR 12)	2.447E-03	2.447E-03	DCF1(15)
-1	Pb-211 (Source: FGR 12)	3.064E-01	3.064E-01	DCF1(16)
-1	Pb-212 (Source: FGR 12)	7.043E-01	7.043E-01	DCF1(17)
-1	Pb-214 (Source: FGR 12)	1.341E+00	1.341E+00	DCF1(18)
-1	Po-210 (Source: FGR 12)	5.231E-05	5.231E-05	DCF1(19)
-1	Po-211 (Source: FGR 12)	4.764E-02	4.764E-02	DCF1(20)
-1	Po-212 (Source: FGR 12)	0.000E+00	0.000E+00	DCF1(21)
-1	Po-214 (Source: FGR 12)	5.138E-04	5.138E-04	DCF1(22)
-1	Po-215 (Source: FGR 12)	1.016E-03	1.016E-03	DCF1(23)
-1	Po-216 (Source: FGR 12)	1.042E-04	1.042E-04	DCF1(24)
-1	Po-218 (Source: FGR 12)	5.642E-05	5.642E-05	DCF1(25)
-1	Ra-223 (Source: FGR 12)	6.034E-01	6.034E-01	DCF1(26)
-1	Ra-224 (Source: FGR 12)	5.119E-02	5.119E-02	DCF1(27)
-1	Ra-226 (Source: FGR 12)	3.176E-02	3.176E-02	DCF1(28)
-1	Ra-228 (Source: FGR 12)	0.000E+00	0.000E+00	DCF1(29)
-1	Rn-218 (Source: FGR 12)	4.540E-03	4.540E-03	DCF1(30)
-1	Rn-219 (Source: FGR 12)	3.083E-01	3.083E-01	DCF1(31)
-1	Rn-220 (Source: FGR 12)	2.298E-03	2.298E-03	DCF1(32)
-1	Rn-222 (Source: FGR 12)	2.354E-03	2.354E-03	DCF1(33)
-1	Th-227 (Source: FGR 12)	5.212E-01	5.212E-01	DCF1(34)
-1	Th-228 (Source: FGR 12)	7.940E-03	7.940E-03	DCF1(35)
-1	Th-230 (Source: FGR 12)	1.209E-03	1.209E-03	DCF1(36)
-1	Th-231 (Source: FGR 12)	3.643E-02	3.643E-02	DCF1(37)
-1	Th-232 (Source: FGR 12)	5.212E-04	5.212E-04	DCF1(38)
-1	Th-234 (Source: FGR 12)	2.410E-02	2.410E-02	DCF1(39)
-1	Tl-206 (Source: FGR 12)	7.697E-03	7.697E-03	DCF1(40)
-1	Tl-207 (Source: FGR 12)	1.980E-02	1.980E-02	DCF1(41)
-1	Tl-208 (Source: FGR 12)	2.298E+01	2.298E+01	DCF1(42)
-1	Tl-210 (Source: no data)	0.000E+00	-2.000E+00	DCF1(43)
-1	U-234 (Source: FGR 12)	4.017E-04	4.017E-04	DCF1(44)
-1	U-235 (Source: FGR 12)	7.211E-01	7.211E-01	DCF1(45)
-1	U-238 (Source: FGR 12)	1.031E-04	1.031E-04	DCF1(46)
-1	Dose conversion factors for inhalation, mrem/pCi:			
-1	Ac-227+D	6.724E+00	6.700E+00	DCF2(1)

ummary : GKP Fire Fighter - Inhalation
ile : C:\USERS\CLAUDE\DOCUMENTS\0 GKP DOSE\RESRAD CW\GKP FIRE FIGHTER - INHALATION.RAD

Dose Conversion Factor (and Related) Parameter Summary (continued)
Dose Library: FGR 11

enu	Parameter	Current Value#	Base Case*	Parameter Name
-1	Ac-227+D1	6.724E+00	6.700E+00	DCF2(2)
-1	Ac-227+D2	6.708E+00	6.700E+00	DCF2(3)
-1	Ac-227+D3	6.708E+00	6.700E+00	DCF2(4)
-1	Ac-227+D4	6.700E+00	6.700E+00	DCF2(5)
-1	Ac-227+D5	6.700E+00	6.700E+00	DCF2(6)
-1	Pa-231	1.280E+00	1.280E+00	DCF2(7)
-1	Pb-210+D	2.320E-02	1.360E-02	DCF2(13)
-1	Pb-210+D1	1.380E-02	1.360E-02	DCF2(14)
-1	Pb-210+D2	1.360E-02	1.360E-02	DCF2(15)
-1	Ra-226+D	8.594E-03	8.580E-03	DCF2(16)
-1	Ra-226+D1	8.594E-03	8.580E-03	DCF2(19)
-1	Ra-226+D2	8.587E-03	8.580E-03	DCF2(22)
-1	Ra-226+D3	8.587E-03	8.580E-03	DCF2(25)
-1	Ra-226+D4	8.580E-03	8.580E-03	DCF2(28)
-1	Ra-228+D	5.078E-03	4.770E-03	DCF2(31)
-1	Th-228+D	3.454E-01	3.420E-01	DCF2(32)
-1	Th-230	3.260E-01	3.260E-01	DCF2(33)
-1	Th-232	1.640E+00	1.640E+00	DCF2(48)
-1	U-234	1.320E-01	1.320E-01	DCF2(49)
-1	U-235+D	1.230E-01	1.230E-01	DCF2(64)
-1	U-238	1.180E-01	1.180E-01	DCF2(70)
-1	U-238+D	1.180E-01	1.180E-01	DCF2(71)
-1	U-238+D1	1.180E-01	1.180E-01	DCF2(86)
-1	Dose conversion factors for ingestion, mrem/pCi:			
-1	Ac-227+D	1.480E-02	1.410E-02	DCF3(1)
-1	Ac-227+D1	1.480E-02	1.410E-02	DCF3(2)
-1	Ac-227+D2	1.477E-02	1.410E-02	DCF3(3)
-1	Ac-227+D3	1.477E-02	1.410E-02	DCF3(4)
-1	Ac-227+D4	1.411E-02	1.410E-02	DCF3(5)
-1	Ac-227+D5	1.411E-02	1.410E-02	DCF3(6)
-1	Pa-231	1.060E-02	1.060E-02	DCF3(7)
-1	Pb-210+D	7.276E-03	5.370E-03	DCF3(13)
-1	Pb-210+D1	5.376E-03	5.370E-03	DCF3(14)
-1	Pb-210+D2	5.370E-03	5.370E-03	DCF3(15)
-1	Ra-226+D	1.321E-03	1.320E-03	DCF3(16)
-1	Ra-226+D1	1.321E-03	1.320E-03	DCF3(19)
-1	Ra-226+D2	1.320E-03	1.320E-03	DCF3(22)
-1	Ra-226+D3	1.320E-03	1.320E-03	DCF3(25)
-1	Ra-226+D4	1.320E-03	1.320E-03	DCF3(28)
-1	Ra-228+D	1.442E-03	1.440E-03	DCF3(31)
-1	Th-228+D	8.086E-04	3.960E-04	DCF3(32)
-1	Th-230	5.480E-04	5.480E-04	DCF3(33)
-1	Th-232	2.730E-03	2.730E-03	DCF3(48)
-1	U-234	2.830E-04	2.830E-04	DCF3(49)
-1	U-235+D	2.673E-04	2.660E-04	DCF3(64)
-1	U-238	2.550E-04	2.550E-04	DCF3(70)
-1	U-238+D	2.709E-04	2.550E-04	DCF3(71)
-1	U-238+D1	2.687E-04	2.550E-04	DCF3(86)

Dose Conversion Factor (and Related) Parameter Summary (continued)
Dose Library: FGR 11

enu	Parameter	Current Value#	Base Case*	Parameter Name
-34	Food transfer factors:			
-34	Ac-227+D , plant/soil concentration ratio, dimensionless	2.500E-03	2.500E-03	RTF(1,1)
-34	Ac-227+D , beef/livestock-intake ratio, (pCi/kg)/(pCi/d)	2.000E-05	2.000E-05	RTF(1,2)
-34	Ac-227+D , milk/livestock-intake ratio, (pCi/L)/(pCi/d)	2.000E-05	2.000E-05	RTF(1,3)
-34				
-34	Ac-227+D1 , plant/soil concentration ratio, dimensionless	2.500E-03	2.500E-03	RTF(2,1)
-34	Ac-227+D1 , beef/livestock-intake ratio, (pCi/kg)/(pCi/d)	2.000E-05	2.000E-05	RTF(2,2)
-34	Ac-227+D1 , milk/livestock-intake ratio, (pCi/L)/(pCi/d)	2.000E-05	2.000E-05	RTF(2,3)
-34				
-34	Ac-227+D2 , plant/soil concentration ratio, dimensionless	2.500E-03	2.500E-03	RTF(3,1)
-34	Ac-227+D2 , beef/livestock-intake ratio, (pCi/kg)/(pCi/d)	2.000E-05	2.000E-05	RTF(3,2)
-34	Ac-227+D2 , milk/livestock-intake ratio, (pCi/L)/(pCi/d)	2.000E-05	2.000E-05	RTF(3,3)
-34				
-34	Ac-227+D3 , plant/soil concentration ratio, dimensionless	2.500E-03	2.500E-03	RTF(4,1)
-34	Ac-227+D3 , beef/livestock-intake ratio, (pCi/kg)/(pCi/d)	2.000E-05	2.000E-05	RTF(4,2)
-34	Ac-227+D3 , milk/livestock-intake ratio, (pCi/L)/(pCi/d)	2.000E-05	2.000E-05	RTF(4,3)
-34				
-34	Ac-227+D4 , plant/soil concentration ratio, dimensionless	2.500E-03	2.500E-03	RTF(5,1)
-34	Ac-227+D4 , beef/livestock-intake ratio, (pCi/kg)/(pCi/d)	2.000E-05	2.000E-05	RTF(5,2)
-34	Ac-227+D4 , milk/livestock-intake ratio, (pCi/L)/(pCi/d)	2.000E-05	2.000E-05	RTF(5,3)
-34				
-34	Ac-227+D5 , plant/soil concentration ratio, dimensionless	2.500E-03	2.500E-03	RTF(6,1)
-34	Ac-227+D5 , beef/livestock-intake ratio, (pCi/kg)/(pCi/d)	2.000E-05	2.000E-05	RTF(6,2)
-34	Ac-227+D5 , milk/livestock-intake ratio, (pCi/L)/(pCi/d)	2.000E-05	2.000E-05	RTF(6,3)
-34				
-34	Pa-231 , plant/soil concentration ratio, dimensionless	1.000E-02	1.000E-02	RTF(7,1)
-34	Pa-231 , beef/livestock-intake ratio, (pCi/kg)/(pCi/d)	5.000E-03	5.000E-03	RTF(7,2)
-34	Pa-231 , milk/livestock-intake ratio, (pCi/L)/(pCi/d)	5.000E-06	5.000E-06	RTF(7,3)
-34				
-34	Pb-210+D , plant/soil concentration ratio, dimensionless	1.000E-02	1.000E-02	RTF(13,1)
-34	Pb-210+D , beef/livestock-intake ratio, (pCi/kg)/(pCi/d)	8.000E-04	8.000E-04	RTF(13,2)
-34	Pb-210+D , milk/livestock-intake ratio, (pCi/L)/(pCi/d)	3.000E-04	3.000E-04	RTF(13,3)
-34				
-34	Pb-210+D1 , plant/soil concentration ratio, dimensionless	1.000E-02	1.000E-02	RTF(14,1)
-34	Pb-210+D1 , beef/livestock-intake ratio, (pCi/kg)/(pCi/d)	8.000E-04	8.000E-04	RTF(14,2)
-34	Pb-210+D1 , milk/livestock-intake ratio, (pCi/L)/(pCi/d)	3.000E-04	3.000E-04	RTF(14,3)
-34				
-34	Pb-210+D2 , plant/soil concentration ratio, dimensionless	1.000E-02	1.000E-02	RTF(15,1)
-34	Pb-210+D2 , beef/livestock-intake ratio, (pCi/kg)/(pCi/d)	8.000E-04	8.000E-04	RTF(15,2)
-34	Pb-210+D2 , milk/livestock-intake ratio, (pCi/L)/(pCi/d)	3.000E-04	3.000E-04	RTF(15,3)
-34				
-34	Ra-226+D , plant/soil concentration ratio, dimensionless	4.000E-02	4.000E-02	RTF(16,1)
-34	Ra-226+D , beef/livestock-intake ratio, (pCi/kg)/(pCi/d)	1.000E-03	1.000E-03	RTF(16,2)
-34	Ra-226+D , milk/livestock-intake ratio, (pCi/L)/(pCi/d)	1.000E-03	1.000E-03	RTF(16,3)
-34				
-34	Ra-226+D1 , plant/soil concentration ratio, dimensionless	4.000E-02	4.000E-02	RTF(19,1)
-34	Ra-226+D1 , beef/livestock-intake ratio, (pCi/kg)/(pCi/d)	1.000E-03	1.000E-03	RTF(19,2)
-34	Ra-226+D1 , milk/livestock-intake ratio, (pCi/L)/(pCi/d)	1.000E-03	1.000E-03	RTF(19,3)
-34				

Dose Conversion Factor (and Related) Parameter Summary (continued)
Dose Library: FGR 11

enu	Parameter	Current Value#	Base Case*	Parameter Name
-34	Ra-226+D2 , plant/soil concentration ratio, dimensionless	4.000E-02	4.000E 02	RTF(22,1)
-34	Ra-226+D2 , beef/livestock-intake ratio, (pCi/kg)/(pCi/d)	1.000E-03	1.000E-03	RTF(22,2)
-34	Ra-226+D2 , milk/livestock-intake ratio, (pCi/L)/(pCi/d)	1.000E-03	1.000E-03	RTF(22,3)
-34				
-34	Ra-226+D3 , plant/soil concentration ratio, dimensionless	4.000E-02	4.000E-02	RTF(25,1)
-34	Ra-226+D3 , beef/livestock-intake ratio, (pCi/kg)/(pCi/d)	1.000E-03	1.000E-03	RTF(25,2)
-34	Ra-226+D3 , milk/livestock-intake ratio, (pCi/L)/(pCi/d)	1.000E-03	1.000E-03	RTF(25,3)
-34				
-34	Ra-226+D4 , plant/soil concentration ratio, dimensionless	4.000E-02	4.000E-02	RTF(28,1)
-34	Ra-226+D4 , beef/livestock-intake ratio, (pCi/kg)/(pCi/d)	1.000E-03	1.000E-03	RTF(28,2)
-34	Ra-226+D4 , milk/livestock-intake ratio, (pCi/L)/(pCi/d)	1.000E-03	1.000E-03	RTF(28,3)
-34				
-34	Ra-228+D , plant/soil concentration ratio, dimensionless	4.000E-02	4.000E-02	RTF(31,1)
-34	Ra-228+D , beef/livestock-intake ratio, (pCi/kg)/(pCi/d)	1.000E-03	1.000E-03	RTF(31,2)
-34	Ra-228+D , milk/livestock-intake ratio, (pCi/L)/(pCi/d)	1.000E-03	1.000E-03	RTF(31,3)
-34				
-34	Th-228+D , plant/soil concentration ratio, dimensionless	1.000E-03	1.000E-03	RTF(32,1)
-34	Th-228+D , beef/livestock-intake ratio, (pCi/kg)/(pCi/d)	1.000E-04	1.000E-04	RTF(32,2)
-34	Th-228+D , milk/livestock-intake ratio, (pCi/L)/(pCi/d)	5.000E-06	5.000E-06	RTF(32,3)
-34				
-34	Th-230 , plant/soil concentration ratio, dimensionless	1.000E-03	1.000E-03	RTF(33,1)
-34	Th-230 , beef/livestock-intake ratio, (pCi/kg)/(pCi/d)	1.000E-04	1.000E-04	RTF(33,2)
-34	Th-230 , milk/livestock-intake ratio, (pCi/L)/(pCi/d)	5.000E-06	5.000E-06	RTF(33,3)
-34				
-34	Th-232 , plant/soil concentration ratio, dimensionless	1.000E-03	1.000E-03	RTF(48,1)
-34	Th-232 , beef/livestock-intake ratio, (pCi/kg)/(pCi/d)	1.000E-04	1.000E-04	RTF(48,2)
-34	Th-232 , milk/livestock-intake ratio, (pCi/L)/(pCi/d)	5.000E-06	5.000E-06	RTF(48,3)
-34				
-34	U-234 , plant/soil concentration ratio, dimensionless	2.500E-03	2.500E-03	RTF(49,1)
-34	U-234 , beef/livestock-intake ratio, (pCi/kg)/(pCi/d)	3.400E-04	3.400E-04	RTF(49,2)
-34	U-234 , milk/livestock-intake ratio, (pCi/L)/(pCi/d)	6.000E-04	6.000E-04	RTF(49,3)
-34				
-34	U-235+D , plant/soil concentration ratio, dimensionless	2.500E-03	2.500E-03	RTF(64,1)
-34	U-235+D , beef/livestock-intake ratio, (pCi/kg)/(pCi/d)	3.400E-04	3.400E-04	RTF(64,2)
-34	U-235+D , milk/livestock-intake ratio, (pCi/L)/(pCi/d)	6.000E-04	6.000E-04	RTF(64,3)
-34				
-34	U-238 , plant/soil concentration ratio, dimensionless	2.500E-03	2.500E-03	RTF(70,1)
-34	U-238 , beef/livestock-intake ratio, (pCi/kg)/(pCi/d)	3.400E-04	3.400E-04	RTF(70,2)
-34	U-238 , milk/livestock-intake ratio, (pCi/L)/(pCi/d)	6.000E-04	6.000E-04	RTF(70,3)
-34				
-34	U-238+D , plant/soil concentration ratio, dimensionless	2.500E-03	2.500E-03	RTF(71,1)
-34	U-238+D , beef/livestock-intake ratio, (pCi/kg)/(pCi/d)	3.400E-04	3.400E-04	RTF(71,2)
-34	U-238+D , milk/livestock-intake ratio, (pCi/L)/(pCi/d)	6.000E-04	6.000E-04	RTF(71,3)
-34				
-34	U-238+D1 , plant/soil concentration ratio, dimensionless	2.500E-03	2.500E-03	RTF(86,1)
-34	U-238+D1 , beef/livestock-intake ratio, (pCi/kg)/(pCi/d)	3.400E-04	3.400E-04	RTF(86,2)
-34	U-238+D1 , milk/livestock-intake ratio, (pCi/L)/(pCi/d)	6.000E-04	6.000E-04	RTF(86,3)
-34				

Dose Conversion Factor (and Related) Parameter Summary (continued)
Dose Library: FGR 11

enu	Parameter	Current Value#	Base Case*	Parameter Name
-5	Bioaccumulation factors, fresh water, L/kg:			
-5	Ac-227+D , fish	1.500E+01	1.500E+01	BIOFAC(1,1)
-5	Ac-227+D , crustacea and mollusks	1.000E+03	1.000E+03	BIOFAC(1,2)
-5				
-5	Ac-227+D1 , fish	1.500E+01	1.500E+01	BIOFAC(2,1)
-5	Ac-227+D1 , crustacea and mollusks	1.000E+03	1.000E+03	BIOFAC(2,2)
-5				
-5	Ac-227+D2 , fish	1.500E+01	1.500E+01	BIOFAC(3,1)
-5	Ac-227+D2 , crustacea and mollusks	1.000E+03	1.000E+03	BIOFAC(3,2)
-5				
-5	Ac-227+D3 , fish	1.500E+01	1.500E+01	BIOFAC(4,1)
-5	Ac-227+D3 , crustacea and mollusks	1.000E+03	1.000E+03	BIOFAC(4,2)
-5				
-5	Ac-227+D4 , fish	1.500E+01	1.500E+01	BIOFAC(5,1)
-5	Ac-227+D4 , crustacea and mollusks	1.000E+03	1.000E+03	BIOFAC(5,2)
-5				
-5	Ac-227+D5 , fish	1.500E+01	1.500E+01	BIOFAC(6,1)
-5	Ac-227+D5 , crustacea and mollusks	1.000E+03	1.000E+03	BIOFAC(6,2)
-5				
-5	Pa-231 , fish	1.000E+01	1.000E+01	BIOFAC(7,1)
-5	Pa-231 , crustacea and mollusks	1.100E+02	1.100E+02	BIOFAC(7,2)
-5				
-5	Pb-210+D , fish	3.000E+02	3.000E+02	BIOFAC(13,1)
-5	Pb-210+D , crustacea and mollusks	1.000E+02	1.000E+02	BIOFAC(13,2)
-5				
-5	Pb-210+D1 , fish	3.000E+02	3.000E+02	BIOFAC(14,1)
-5	Pb-210+D1 , crustacea and mollusks	1.000E+02	1.000E+02	BIOFAC(14,2)
-5				
-5	Pb-210+D2 , fish	3.000E+02	3.000E+02	BIOFAC(15,1)
-5	Pb-210+D2 , crustacea and mollusks	1.000E+02	1.000E+02	BIOFAC(15,2)
-5				
-5	Ra-226+D , fish	5.000E+01	5.000E+01	BIOFAC(16,1)
-5	Ra-226+D , crustacea and mollusks	2.500E+02	2.500E+02	BIOFAC(16,2)
-5				
-5	Ra-226+D1 , fish	5.000E+01	5.000E+01	BIOFAC(19,1)
-5	Ra-226+D1 , crustacea and mollusks	2.500E+02	2.500E+02	BIOFAC(19,2)
-5				
-5	Ra-226+D2 , fish	5.000E+01	5.000E+01	BIOFAC(22,1)
-5	Ra-226+D2 , crustacea and mollusks	2.500E+02	2.500E+02	BIOFAC(22,2)
-5				
-5	Ra-226+D3 , fish	5.000E+01	5.000E+01	BIOFAC(25,1)
-5	Ra-226+D3 , crustacea and mollusks	2.500E+02	2.500E+02	BIOFAC(25,2)
-5				
-5	Ra-226+D4 , fish	5.000E+01	5.000E+01	BIOFAC(28,1)
-5	Ra-226+D4 , crustacea and mollusks	2.500E+02	2.500E+02	BIOFAC(28,2)
-5				
-5	Ra-228+D , fish	5.000E+01	5.000E+01	BIOFAC(31,1)
-5	Ra-228+D , crustacea and mollusks	2.500E+02	2.500E+02	BIOFAC(31,2)
-5				

ummary : GKP Fire Fighter - Inhalation
ile : C:\USERS\CLAUDE\DOCUMENTS\0 GKP DOSE\RESRAD CW\GKP FIRE FIGHTER - INHALATION.RAD

Dose Conversion Factor (and Related) Parameter Summary (continued)
Dose Library: FGR 11

enu	Parameter	Current Value#	Base Case*	Parameter Name
-5	Th-228+D , fish	1.000E+02	1.000E+02	BIOFAC(32,1)
-5	Th-228+D , crustacea and mollusks	5.000E+02	5.000E+02	BIOFAC(32,2)
-5				
-5	Th-230 , fish	1.000E+02	1.000E+02	BIOFAC(33,1)
-5	Th-230 , crustacea and mollusks	5.000E+02	5.000E+02	BIOFAC(33,2)
-5				
-5	Th-232 , fish	1.000E+02	1.000E+02	BIOFAC(48,1)
-5	Th-232 , crustacea and mollusks	5.000E+02	5.000E+02	BIOFAC(48,2)
-5				
-5	U-234 , fish	1.000E+01	1.000E+01	BIOFAC(49,1)
-5	U-234 , crustacea and mollusks	6.000E+01	6.000E+01	BIOFAC(49,2)
-5				
-5	U-235+D , fish	1.000E+01	1.000E+01	BIOFAC(64,1)
-5	U-235+D , crustacea and mollusks	6.000E+01	6.000E+01	BIOFAC(64,2)
-5				
-5	U-238 , fish	1.000E+01	1.000E+01	BIOFAC(70,1)
-5	U-238 , crustacea and mollusks	6.000E+01	6.000E+01	BIOFAC(70,2)
-5				
-5	U-238+D , fish	1.000E+01	1.000E+01	BIOFAC(71,1)
-5	U-238+D , crustacea and mollusks	6.000E+01	6.000E+01	BIOFAC(71,2)
-5				
-5	U-238+D1 , fish	1.000E+01	1.000E+01	BIOFAC(86,1)
-5	U-238+D1 , crustacea and mollusks	6.000E+01	6.000E+01	BIOFAC(86,2)
-5				

For DCF1(xxx) only, factors are for infinite depth & area. See ETFG table in Ground Pathway of Detailed Report.
Base Case means Default.Lib w/o Associate Nuclide contributions.

ummary : GKP Fire Fighter - Inhalation
ile : C:\USERS\CLAUDE\DOCUMENTS\0 GKP DOSE\RESRAD CW\GKP FIRE FIGHTER - INHALATION.RAD

Site-Specific Parameter Summary

enu	Parameter	User Input	Default	Used by RESRAD (If different from user input)	Parameter Name
011	Area of contaminated zone (m**2)	2.000E+02	1.000E+04	---	AREA
011	Thickness of contaminated zone (m)	1.500E-01	2.000E+00	---	THICK0
011	Fraction of contamination that is submerged	0.000E+00	0.000E+00	---	SUBMFRACT
011	Length parallel to aquifer flow (m)	1.000E+02	1.000E+02	---	LCZPAQ
011	Basic radiation dose limit (mrem/yr)	2.500E+01	3.000E+01	---	BRDL
011	Time since placement of material (yr)	0.000E+00	0.000E+00	---	TI
011	Times for calculations (yr)	1.000E+00	1.000E+00	---	T(2)
011	Times for calculations (yr)	3.000E+00	3.000E+00	---	T(3)
011	Times for calculations (yr)	1.000E+01	1.000E+01	---	T(4)
011	Times for calculations (yr)	3.000E+01	3.000E+01	---	T(5)
011	Times for calculations (yr)	1.000E+02	1.000E+02	---	T(6)
011	Times for calculations (yr)	3.000E+02	3.000E+02	---	T(7)
011	Times for calculations (yr)	1.000E+03	1.000E+03	---	T(8)
011	Times for calculations (yr)	not used	0.000E+00	---	T(9)
011	Times for calculations (yr)	not used	0.000E+00	---	T(10)
012	Initial principal radionuclide (pCi/g): Ra-226	3.650E+01	0.000E+00	---	S1(16)
012	Initial principal radionuclide (pCi/g): Th-232	2.400E+00	0.000E+00	---	S1(48)
012	Initial principal radionuclide (pCi/g): U-234	1.390E+01	0.000E+00	---	S1(49)
012	Initial principal radionuclide (pCi/g): U-235	8.400E-01	0.000E+00	---	S1(64)
012	Initial principal radionuclide (pCi/g): U-238	1.390E+01	0.000E+00	---	S1(70)
012	Concentration in groundwater (pCi/L): Ra-226	not used	0.000E+00	---	W1(16)
012	Concentration in groundwater (pCi/L): Th-232	not used	0.000E+00	---	W1(48)
012	Concentration in groundwater (pCi/L): U-234	not used	0.000E+00	---	W1(49)
012	Concentration in groundwater (pCi/L): U-235	not used	0.000E+00	---	W1(64)
012	Concentration in groundwater (pCi/L): U-238	not used	0.000E+00	---	W1(70)
013	Cover depth (m)	0.000E+00	0.000E+00	---	COVER0
013	Density of cover material (g/cm**3)	not used	1.500E+00	---	DENSCV
013	Cover depth erosion rate (m/yr)	not used	1.000E-03	---	VCV
013	Density of contaminated zone (g/cm**3)	1.500E+00	1.500E+00	---	DENSCZ
013	Contaminated zone erosion rate (m/yr)	1.000E-03	1.000E-03	---	VCZ
013	Contaminated zone total porosity	4.000E-01	4.000E-01	---	TPCZ
013	Contaminated zone field capacity	2.000E-01	2.000E-01	---	FCCZ
013	Contaminated zone hydraulic conductivity (m/yr)	1.000E+01	1.000E+01	---	HCCZ
013	Contaminated zone b parameter	5.300E+00	5.300E+00	---	BCZ
013	Average annual wind speed (m/sec)	2.000E+00	2.000E+00	---	WIND
013	Humidity in air (g/m**3)	not used	8.000E+00	---	HUMID
013	Evapotranspiration coefficient	5.000E-01	5.000E-01	---	EVAPTR
013	Precipitation (m/yr)	1.000E+00	1.000E+00	---	PRECIP
013	Irrigation (m/yr)	2.000E-01	2.000E-01	---	RI
013	Irrigation mode	overhead	overhead	---	IDITCH
013	Runoff coefficient	2.000E-01	2.000E-01	---	RUNOFF
013	Watershed area for nearby stream or pond (m**2)	1.000E+06	1.000E+06	---	WAREA
013	Accuracy for water/soil computations	1.000E-03	1.000E-03	---	EPS
014	Density of saturated zone (g/cm**3)	1.500E+00	1.500E+00	---	DENSAQ
014	Saturated zone total porosity	4.000E-01	4.000E-01	---	TPSZ
014	Saturated zone effective porosity	2.000E-01	2.000E-01	---	EPSZ
014	Saturated zone field capacity	2.000E-01	2.000E-01	---	FCSZ

Site-Specific Parameter Summary (continued)

enu	Parameter	User Input	Default	Used by RESRAD (If different from user input)	Parameter Name
014	Saturated zone hydraulic conductivity (m/yr)	1.000E+02	1.000E+02	---	HCSZ
014	Saturated zone hydraulic gradient	2.000E-02	2.000E-02	---	HGWT
014	Saturated zone b parameter	5.300E+00	5.300E+00	---	BSZ
014	Water table drop rate (m/yr)	1.000E-03	1.000E-03	---	VWT
014	Well pump intake depth (m below water table)	1.000E+01	1.000E+01	---	DWIBWT
014	Model: Nondispersion (ND) or Mass-Balance (MB)	ND	ND	---	MODEL
014	Well pumping rate (m**3/yr)	2.500E+02	2.500E+02	---	UW
015	Number of unsaturated zone strata	1	1	---	NS
015	Unsat. zone 1, thickness (m)	4.000E+00	4.000E+00	---	H(1)
015	Unsat. zone 1, soil density (g/cm**3)	1.500E+00	1.500E+00	---	DENSUZ(1)
015	Unsat. zone 1, total porosity	4.000E-01	4.000E-01	---	TPUZ(1)
015	Unsat. zone 1, effective porosity	2.000E-01	2.000E-01	---	EPUZ(1)
015	Unsat. zone 1, field capacity	2.000E-01	2.000E-01	---	FCUZ(1)
015	Unsat. zone 1, soil-specific b parameter	5.300E+00	5.300E+00	---	BUZ(1)
015	Unsat. zone 1, hydraulic conductivity (m/yr)	1.000E+01	1.000E+01	---	HCUZ(1)
016	Distribution coefficients for Ra-226				
016	Contaminated zone (cm**3/g)	7.000E+01	7.000E+01	---	DCNUCC(16)
016	Unsaturated zone 1 (cm**3/g)	7.000E+01	7.000E+01	---	DCNUCU(16,1)
016	Saturated zone (cm**3/g)	7.000E+01	7.000E+01	---	DCNUCS(16)
016	Leach rate (/yr)	0.000E+00	0.000E+00	3.165E-02	ALEACH(16)
016	Solubility constant	0.000E+00	0.000E+00	not used	SOLUBK(16)
016	Distribution coefficients for Th-232				
016	Contaminated zone (cm**3/g)	6.000E+04	6.000E+04	---	DCNUCC(48)
016	Unsaturated zone 1 (cm**3/g)	6.000E+04	6.000E+04	---	DCNUCU(48,1)
016	Saturated zone (cm**3/g)	6.000E+04	6.000E+04	---	DCNUCS(48)
016	Leach rate (/yr)	0.000E+00	0.000E+00	3.704E-05	ALEACH(48)
016	Solubility constant	0.000E+00	0.000E+00	not used	SOLUBK(48)
016	Distribution coefficients for U-234				
016	Contaminated zone (cm**3/g)	5.000E+01	5.000E+01	---	DCNUCC(49)
016	Unsaturated zone 1 (cm**3/g)	5.000E+01	5.000E+01	---	DCNUCU(49,1)
016	Saturated zone (cm**3/g)	5.000E+01	5.000E+01	---	DCNUCS(49)
016	Leach rate (/yr)	0.000E+00	0.000E+00	4.426E-02	ALEACH(49)
016	Solubility constant	0.000E+00	0.000E+00	not used	SOLUBK(49)
016	Distribution coefficients for U-235				
016	Contaminated zone (cm**3/g)	5.000E+01	5.000E+01	---	DCNUCC(64)
016	Unsaturated zone 1 (cm**3/g)	5.000E+01	5.000E+01	---	DCNUCU(64,1)
016	Saturated zone (cm**3/g)	5.000E+01	5.000E+01	---	DCNUCS(64)
016	Leach rate (/yr)	0.000E+00	0.000E+00	4.426E-02	ALEACH(64)
016	Solubility constant	0.000E+00	0.000E+00	not used	SOLUBK(64)
016	Distribution coefficients for U-238				
016	Contaminated zone (cm**3/g)	5.000E+01	5.000E+01	---	DCNUCC(70)
016	Unsaturated zone 1 (cm**3/g)	5.000E+01	5.000E+01	---	DCNUCU(70,1)
016	Saturated zone (cm**3/g)	5.000E+01	5.000E+01	---	DCNUCS(70)
016	Leach rate (/yr)	0.000E+00	0.000E+00	4.426E-02	ALEACH(70)
016	Solubility constant	0.000E+00	0.000E+00	not used	SOLUBK(70)

Site-Specific Parameter Summary (continued)

enu	Parameter	User Input	Default	Used by RESRAD (If different from user input)	Parameter Name
016	Distribution coefficients for daughter Ac-227				
016	Contaminated zone (cm**3/g)	2.000E+01	2.000E+01	---	DCNUCC(1)
016	Unsaturated zone 1 (cm**3/g)	2.000E+01	2.000E+01	---	DCNUCU(1,1)
016	Saturated zone (cm**3/g)	2.000E+01	2.000E+01	---	DCNUCS(1)
016	Leach rate (/yr)	0.000E+00	0.000E+00	1.099E-01	ALEACH(1)
016	Solubility constant	0.000E+00	0.000E+00	not used	SOLUBK(1)
016	Distribution coefficients for daughter Pa-231				
016	Contaminated zone (cm**3/g)	5.000E+01	5.000E+01	---	DCNUCC(7)
016	Unsaturated zone 1 (cm**3/g)	5.000E+01	5.000E+01	---	DCNUCU(7,1)
016	Saturated zone (cm**3/g)	5.000E+01	5.000E+01	---	DCNUCS(7)
016	Leach rate (/yr)	0.000E+00	0.000E+00	4.426E-02	ALEACH(7)
016	Solubility constant	0.000E+00	0.000E+00	not used	SOLUBK(7)
016	Distribution coefficients for daughter Pb-210				
016	Contaminated zone (cm**3/g)	1.000E+02	1.000E+02	---	DCNUCC(13)
016	Unsaturated zone 1 (cm**3/g)	1.000E+02	1.000E+02	---	DCNUCU(13,1)
016	Saturated zone (cm**3/g)	1.000E+02	1.000E+02	---	DCNUCS(13)
016	Leach rate (/yr)	0.000E+00	0.000E+00	2.217E-02	ALEACH(13)
016	Solubility constant	0.000E+00	0.000E+00	not used	SOLUBK(13)
016	Distribution coefficients for daughter Ra-228				
016	Contaminated zone (cm**3/g)	7.000E+01	7.000E+01	---	DCNUCC(31)
016	Unsaturated zone 1 (cm**3/g)	7.000E+01	7.000E+01	---	DCNUCU(31,1)
016	Saturated zone (cm**3/g)	7.000E+01	7.000E+01	---	DCNUCS(31)
016	Leach rate (/yr)	0.000E+00	0.000E+00	3.165E-02	ALEACH(31)
016	Solubility constant	0.000E+00	0.000E+00	not used	SOLUBK(31)
016	Distribution coefficients for daughter Th-228				
016	Contaminated zone (cm**3/g)	6.000E+04	6.000E+04	---	DCNUCC(32)
016	Unsaturated zone 1 (cm**3/g)	6.000E+04	6.000E+04	---	DCNUCU(32,1)
016	Saturated zone (cm**3/g)	6.000E+04	6.000E+04	---	DCNUCS(32)
016	Leach rate (/yr)	0.000E+00	0.000E+00	3.704E-05	ALEACH(32)
016	Solubility constant	0.000E+00	0.000E+00	not used	SOLUBK(32)
016	Distribution coefficients for daughter Th-230				
016	Contaminated zone (cm**3/g)	6.000E+04	6.000E+04	---	DCNUCC(33)
016	Unsaturated zone 1 (cm**3/g)	6.000E+04	6.000E+04	---	DCNUCU(33,1)
016	Saturated zone (cm**3/g)	6.000E+04	6.000E+04	---	DCNUCS(33)
016	Leach rate (/yr)	0.000E+00	0.000E+00	3.704E-05	ALEACH(33)
016	Solubility constant	0.000E+00	0.000E+00	not used	SOLUBK(33)
017	Inhalation rate (m**3/yr)	2.000E+04	8.400E+03	---	INHALR
017	Mass loading for inhalation (g/m**3)	1.000E-04	1.000E-04	---	MLINH
017	Exposure duration	3.000E+01	3.000E+01	---	ED
017	Shielding factor, inhalation	4.000E-01	4.000E-01	---	SHF3
017	Shielding factor, external gamma	not used	7.000E-01	---	SHF1
017	Fraction of time spent indoors	0.000E+00	5.000E-01	---	FIND
017	Fraction of time spent outdoors (on site)	7.000E-03	2.500E-01	---	FOTD
017	Shape factor flag, external gamma	not used	1.000E+00	>0 shows circular AREA.	FS

Site-Specific Parameter Summary (continued)

enu	Parameter	User Input	Default	Used by RESRAD (If different from user input)	Parameter Name
017	Radii of shape factor array (used if FS = -1):				
017	Outer annular radius (m), ring 1:	not used	5.000E+01	---	RAD_SHAPE(1)
017	Outer annular radius (m), ring 2:	not used	7.071E+01	---	RAD_SHAPE(2)
017	Outer annular radius (m), ring 3:	not used	0.000E+00	---	RAD_SHAPE(3)
017	Outer annular radius (m), ring 4:	not used	0.000E+00	---	RAD_SHAPE(4)
017	Outer annular radius (m), ring 5:	not used	0.000E+00	---	RAD_SHAPE(5)
017	Outer annular radius (m), ring 6:	not used	0.000E+00	---	RAD_SHAPE(6)
017	Outer annular radius (m), ring 7:	not used	0.000E+00	---	RAD_SHAPE(7)
017	Outer annular radius (m), ring 8:	not used	0.000E+00	---	RAD_SHAPE(8)
017	Outer annular radius (m), ring 9:	not used	0.000E+00	---	RAD_SHAPE(9)
017	Outer annular radius (m), ring 10:	not used	0.000E+00	---	RAD_SHAPE(10)
017	Outer annular radius (m), ring 11:	not used	0.000E+00	---	RAD_SHAPE(11)
017	Outer annular radius (m), ring 12:	not used	0.000E+00	---	RAD_SHAPE(12)
017	Fractions of annular areas within AREA:				
017	Ring 1	not used	1.000E+00	---	FRACA(1)
017	Ring 2	not used	2.732E-01	---	FRACA(2)
017	Ring 3	not used	0.000E+00	---	FRACA(3)
017	Ring 4	not used	0.000E+00	---	FRACA(4)
017	Ring 5	not used	0.000E+00	---	FRACA(5)
017	Ring 6	not used	0.000E+00	---	FRACA(6)
017	Ring 7	not used	0.000E+00	---	FRACA(7)
017	Ring 8	not used	0.000E+00	---	FRACA(8)
017	Ring 9	not used	0.000E+00	---	FRACA(9)
017	Ring 10	not used	0.000E+00	---	FRACA(10)
017	Ring 11	not used	0.000E+00	---	FRACA(11)
017	Ring 12	not used	0.000E+00	---	FRACA(12)
018	Fruits, vegetables and grain consumption (kg/yr)	not used	1.600E+02	---	DIET(1)
018	Leafy vegetable consumption (kg/yr)	not used	1.400E+01	---	DIET(2)
018	Milk consumption (L/yr)	not used	9.200E+01	---	DIET(3)
018	Meat and poultry consumption (kg/yr)	not used	6.300E+01	---	DIET(4)
018	Fish consumption (kg/yr)	not used	5.400E+00	---	DIET(5)
018	Other seafood consumption (kg/yr)	not used	9.000E-01	---	DIET(6)
018	Soil ingestion rate (g/yr)	not used	3.650E+01	---	SOIL
018	Drinking water intake (L/yr)	not used	5.100E+02	---	DWI
018	Contamination fraction of drinking water	not used	1.000E+00	---	FDW
018	Contamination fraction of household water	1.000E+00	1.000E+00	---	FHHW
018	Contamination fraction of livestock water	not used	1.000E+00	---	FLW
018	Contamination fraction of irrigation water	not used	1.000E+00	---	FIRW
018	Contamination fraction of aquatic food	not used	5.000E-01	---	FR9
018	Contamination fraction of plant food	not used	-1	---	FPLANT
018	Contamination fraction of meat	not used	-1	---	FMEAT
018	Contamination fraction of milk	not used	-1	---	FMILK
019	Livestock fodder intake for meat (kg/day)	not used	6.800E+01	---	LFI5
019	Livestock fodder intake for milk (kg/day)	not used	5.500E+01	---	LFI6
019	Livestock water intake for meat (L/day)	not used	5.000E+01	---	LWI5
019	Livestock water intake for milk (L/day)	not used	1.600E+02	---	LWI6
019	Livestock soil intake (kg/day)	not used	5.000E-01	---	LSI

Site-Specific Parameter Summary (continued)

enu	Parameter	User Input	Default	Used by RESRAD (If different from user input)	Parameter Name
019	Mass loading for foliar deposition (g/m**3)	not used	1.000E-04	---	MLFD
019	Depth of soil mixing layer (m)	1.500E-01	1.500E-01	---	DM
019	Depth of roots (m)	not used	9.000E-01	---	DROOT
019	Drinking water fraction from ground water	not used	1.000E+00	---	FGWDW
019	Household water fraction from ground water	1.000E+00	1.000E+00	---	FGWHH
019	Livestock water fraction from ground water	not used	1.000E+00	---	FGWLW
019	Irrigation fraction from ground water	not used	1.000E+00	---	FGWIR
19B	Wet weight crop yield for Non-Leafy (kg/m**2)	not used	7.000E-01	---	YV(1)
19B	Wet weight crop yield for Leafy (kg/m**2)	not used	1.500E+00	---	YV(2)
19B	Wet weight crop yield for Fodder (kg/m**2)	not used	1.100E+00	---	YV(3)
19B	Growing Season for Non-Leafy (years)	not used	1.700E-01	---	TE(1)
19B	Growing Season for Leafy (years)	not used	2.500E-01	---	TE(2)
19B	Growing Season for Fodder (years)	not used	8.000E-02	---	TE(3)
19B	Translocation Factor for Non-Leafy	not used	1.000E-01	---	TIV(1)
19B	Translocation Factor for Leafy	not used	1.000E+00	---	TIV(2)
19B	Translocation Factor for Fodder	not used	1.000E+00	---	TIV(3)
19B	Dry Foliar Interception Fraction for Non-Leafy	not used	2.500E-01	---	RDRY(1)
19B	Dry Foliar Interception Fraction for Leafy	not used	2.500E-01	---	RDRY(2)
19B	Dry Foliar Interception Fraction for Fodder	not used	2.500E-01	---	RDRY(3)
19B	Wet Foliar Interception Fraction for Non-Leafy	not used	2.500E-01	---	RWET(1)
19B	Wet Foliar Interception Fraction for Leafy	not used	2.500E-01	---	RWET(2)
19B	Wet Foliar Interception Fraction for Fodder	not used	2.500E-01	---	RWET(3)
19B	Weathering Removal Constant for Vegetation	not used	2.000E+01	---	WLAM
14	C-12 concentration in water (g/cm**3)	not used	2.000E-05	---	C12WTR
14	C-12 concentration in contaminated soil (g/g)	not used	3.000E-02	---	C12CZ
14	Fraction of vegetation carbon from soil	not used	2.000E-02	---	CSOIL
14	Fraction of vegetation carbon from air	not used	9.800E-01	---	CAIR
14	C-14 evasion layer thickness in soil (m)	not used	3.000E-01	---	DMC
14	C-14 evasion flux rate from soil (1/sec)	not used	7.000E-07	---	EVSN
14	C-12 evasion flux rate from soil (1/sec)	not used	1.000E-10	---	REVSN
14	Fraction of grain in beef cattle feed	not used	8.000E-01	---	AVFG4
14	Fraction of grain in milk cow feed	not used	2.000E-01	---	AVFG5
TOR	Storage times of contaminated foodstuffs (days):				
TOR	Fruits, non-leafy vegetables, and grain	1.400E+01	1.400E+01	---	STOR_T(1)
TOR	Leafy vegetables	1.000E+00	1.000E+00	---	STOR_T(2)
TOR	Milk	1.000E+00	1.000E+00	---	STOR_T(3)
TOR	Meat and poultry	2.000E+01	2.000E+01	---	STOR_T(4)
TOR	Fish	7.000E+00	7.000E+00	---	STOR_T(5)
TOR	Crustacea and mollusks	7.000E+00	7.000E+00	---	STOR_T(6)
TOR	Well water	1.000E+00	1.000E+00	---	STOR_T(7)
TOR	Surface water	1.000E+00	1.000E+00	---	STOR_T(8)
TOR	Livestock fodder	4.500E+01	4.500E+01	---	STOR_T(9)
021	Thickness of building foundation (m)	not used	1.500E-01	---	FLOOR1
021	Bulk density of building foundation (g/cm**3)	not used	2.400E+00	---	DENSFL
021	Total porosity of the cover material	not used	4.000E-01	---	TPCV
021	Total porosity of the building foundation	not used	1.000E-01	---	TPFL

Site-Specific Parameter Summary (continued)

enu	Parameter	User Input	Default	Used by RESRAD (If different from user input)	Parameter Name
021	Volumetric water content of the cover material	not used	5.000E-02	---	PH2OCV
021	Volumetric water content of the foundation	not used	3.000E-02	---	PH2OFL
021	Diffusion coefficient for radon gas (m/sec):				
021	in cover material	not used	2.000E-06	---	DIFCV
021	in foundation material	not used	3.000E-07	---	DIFFL
021	in contaminated zone soil	2.000E-06	2.000E-06	---	DIFCZ
021	Radon vertical dimension of mixing (m)	2.000E+00	2.000E+00	---	HMIX
021	Average building air exchange rate (1/hr)	not used	5.000E-01	---	REXG
021	Height of the building (room) (m)	not used	2.500E+00	---	HRM
021	Building interior area factor	not used	0.000E+00	code computed (time dependent)	FAI
021	Building depth below ground surface (m)	not used	-1.000E+00	code computed (time dependent)	DMFL
021	Emanating power of Rn-222 gas	2.500E-01	2.500E-01	---	EMANA(1)
021	Emanating power of Rn-220 gas	1.500E-01	1.500E-01	---	EMANA(2)
ITL	Number of graphical time points	32	---	---	NPTS
ITL	Maximum number of integration points for dose	17	---	---	LYMAX
ITL	Maximum number of integration points for risk	257	---	---	KYMAX

Summary of Pathway Selections

Pathway	User Selection
1 -- external gamma	suppressed
2 -- inhalation (w/o radon)	active
3 -- plant ingestion	suppressed
4 -- meat ingestion	suppressed
5 -- milk ingestion	suppressed
6 -- aquatic foods	suppressed
7 -- drinking water	suppressed
8 -- soil ingestion	suppressed
9 -- radon	active
Find peak pathway doses	suppressed

ummary : GKP Fire Firefighter - Inhalation
ile : C:\USERS\CLAUDE\DOCUMENTS\0 GKP DOSE\RESRAD CW\GKP FIRE FIGHTER - INHALATION.RAD

Contaminated Zone Dimensions		Initial Soil Concentrations, pCi/g	
Area:	200.00 square meters	Ra-226	3.650E+01
Thickness:	0.15 meters	Th-232	2.400E+00
over Depth:	0.00 meters	U-234	1.390E+01
		U-235	8.400E-01
		U-238	1.390E+01

Total Dose TDOSE(t), mrem/yr

Basic Radiation Dose Limit = 2.500E+01 mrem/yr

Total Mixture Sum M(t) = Fraction of Basic Dose Limit Received at Time (t)

t (years):	0.000E+00	1.000E+00	3.000E+00	1.000E+01	3.000E+01	1.000E+02	3.000E+02	1.000E+03
TDOSE(t):	1.220E-02	1.195E-02	1.154E-02	1.034E-02	7.396E-03	2.480E-03	0.000E+00	0.000E+00
M(t):	4.880E-04	4.780E-04	4.617E-04	4.135E-04	2.958E-04	9.921E-05	0.000E+00	0.000E+00

aximum TDOSE(t): 1.220E-02 mrem/yr at t = 0.000E+00 years

ummary : GKP Fire Fighter - Inhalation
ile : C:\USERS\CLAUDE\DOCUMENTS\0 GKP DOSE\RESRAD CW\GKP FIRE FIGHTER - INHALATION.RAD

Total Dose Contributions TDOSE(i,p,t) for Individual Radionuclides (i) and Pathways (p)
As mrem/yr and Fraction of Total Dose At t = 0.000E+00 years

Water Independent Pathways (Inhalation excludes radon)

	Ground		Inhalation		Radon		Plant		Meat		Milk		Soil	
adio-	ÄÄÄÄÄÄÄÄÄÄÄÄÄÄÄÄ		ÄÄÄÄÄÄÄÄÄÄÄÄÄÄÄÄ		ÄÄÄÄÄÄÄÄÄÄÄÄÄÄÄÄ		ÄÄÄÄÄÄÄÄÄÄÄÄÄÄÄÄ		ÄÄÄÄÄÄÄÄÄÄÄÄÄÄÄÄ		ÄÄÄÄÄÄÄÄÄÄÄÄÄÄÄÄ		ÄÄÄÄÄÄÄÄÄÄÄÄÄÄÄÄ	
uclide	mrem/yr	fract.	mrem/yr	fract.	mrem/yr	fract.	mrem/yr	fract.	mrem/yr	fract.	mrem/yr	fract.	mrem/yr	fract.
ÄÄÄÄÄÄ	ÄÄÄÄÄÄÄÄÄ	ÄÄÄÄÄÄ	ÄÄÄÄÄÄÄÄÄ	ÄÄÄÄÄÄ	ÄÄÄÄÄÄÄÄÄ	ÄÄÄÄÄÄ	ÄÄÄÄÄÄÄÄÄ	ÄÄÄÄÄÄ	ÄÄÄÄÄÄÄÄÄ	ÄÄÄÄÄÄ	ÄÄÄÄÄÄÄÄÄ	ÄÄÄÄÄÄ	ÄÄÄÄÄÄÄÄÄ	ÄÄÄÄÄÄ
a-226	0.000E+00	0.0000	5.048E-04	0.0414	1.035E-05	0.0008	0.000E+00	0.0000	0.000E+00	0.0000	0.000E+00	0.0000	0.000E+00	0.0000
n-232	0.000E+00	0.0000	6.188E-03	0.5072	3.712E-07	0.0000	0.000E+00	0.0000	0.000E+00	0.0000	0.000E+00	0.0000	0.000E+00	0.0000
-234	0.000E+00	0.0000	2.817E-03	0.2310	2.606E-15	0.0000	0.000E+00	0.0000	0.000E+00	0.0000	0.000E+00	0.0000	0.000E+00	0.0000
-235	0.000E+00	0.0000	1.587E-04	0.0130	0.000E+00	0.0000	0.000E+00	0.0000	0.000E+00	0.0000	0.000E+00	0.0000	0.000E+00	0.0000
-238	0.000E+00	0.0000	2.519E-03	0.2065	1.829E-21	0.0000	0.000E+00	0.0000	0.000E+00	0.0000	0.000E+00	0.0000	0.000E+00	0.0000
íííííí	íííííííííí	íííííí	íííííííííí	íííííí	íííííííííí	íííííí	íííííííííí	íííííí	íííííííííí	íííííí	íííííííííí	íííííí	íííííííííí	íííííí
otal	0.000E+00	0.0000	1.219E-02	0.9991	1.072E-05	0.0009	0.000E+00	0.0000	0.000E+00	0.0000	0.000E+00	0.0000	0.000E+00	0.0000

Total Dose Contributions TDOSE(i,p,t) for Individual Radionuclides (i) and Pathways (p)
As mrem/yr and Fraction of Total Dose At t = 0.000E+00 years

Water Dependent Pathways

	Water		Fish		Radon		Plant		Meat		Milk		All Pathways*	
adio-	ÄÄÄÄÄÄÄÄÄÄÄÄÄÄÄÄ		ÄÄÄÄÄÄÄÄÄÄÄÄÄÄÄÄ		ÄÄÄÄÄÄÄÄÄÄÄÄÄÄÄÄ		ÄÄÄÄÄÄÄÄÄÄÄÄÄÄÄÄ		ÄÄÄÄÄÄÄÄÄÄÄÄÄÄÄÄ		ÄÄÄÄÄÄÄÄÄÄÄÄÄÄÄÄ		ÄÄÄÄÄÄÄÄÄÄÄÄÄÄÄÄ	
uclide	mrem/yr	fract.	mrem/yr	fract.	mrem/yr	fract.	mrem/yr	fract.	mrem/yr	fract.	mrem/yr	fract.	mrem/yr	fract.
ÄÄÄÄÄÄ	ÄÄÄÄÄÄÄÄÄ	ÄÄÄÄÄÄ	ÄÄÄÄÄÄÄÄÄ	ÄÄÄÄÄÄ	ÄÄÄÄÄÄÄÄÄ	ÄÄÄÄÄÄ	ÄÄÄÄÄÄÄÄÄ	ÄÄÄÄÄÄ	ÄÄÄÄÄÄÄÄÄ	ÄÄÄÄÄÄ	ÄÄÄÄÄÄÄÄÄ	ÄÄÄÄÄÄ	ÄÄÄÄÄÄÄÄÄ	ÄÄÄÄÄÄ
a-226	0.000E+00	0.0000	0.000E+00	0.0000	0.000E+00	0.0000	0.000E+00	0.0000	0.000E+00	0.0000	0.000E+00	0.0000	5.151E-04	0.0422
n-232	0.000E+00	0.0000	0.000E+00	0.0000	0.000E+00	0.0000	0.000E+00	0.0000	0.000E+00	0.0000	0.000E+00	0.0000	6.188E-03	0.5073
-234	0.000E+00	0.0000	0.000E+00	0.0000	0.000E+00	0.0000	0.000E+00	0.0000	0.000E+00	0.0000	0.000E+00	0.0000	2.817E-03	0.2310
-235	0.000E+00	0.0000	0.000E+00	0.0000	0.000E+00	0.0000	0.000E+00	0.0000	0.000E+00	0.0000	0.000E+00	0.0000	1.587E-04	0.0130
-238	0.000E+00	0.0000	0.000E+00	0.0000	0.000E+00	0.0000	0.000E+00	0.0000	0.000E+00	0.0000	0.000E+00	0.0000	2.519E-03	0.2065
íííííí	íííííííííí	íííííí	íííííííííí	íííííí	íííííííííí	íííííí	íííííííííí	íííííí	íííííííííí	íííííí	íííííííííí	íííííí	íííííííííí	íííííí
otal	0.000E+00	0.0000	0.000E+00	0.0000	0.000E+00	0.0000	0.000E+00	0.0000	0.000E+00	0.0000	0.000E+00	0.0000	1.220E-02	1.0000

Sum of all water independent and dependent pathways.

ummary : GKP Fire Fighter - Inhalation
ile : C:\USERS\CLAUDE\DOCUMENTS\0 GKP DOSE\RESRAD CW\GKP FIRE FIGHTER - INHALATION.RAD

Total Dose Contributions TDOSE(i,p,t) for Individual Radionuclides (i) and Pathways (p)
As mrem/yr and Fraction of Total Dose At t = 1.000E+00 years

Water Independent Pathways (Inhalation excludes radon)

	Ground		Inhalation		Radon		Plant		Meat		Milk		Soil	
adio-	ÄÄÄÄÄÄÄÄÄÄÄÄÄÄÄÄ		ÄÄÄÄÄÄÄÄÄÄÄÄÄÄÄÄ		ÄÄÄÄÄÄÄÄÄÄÄÄÄÄÄÄ		ÄÄÄÄÄÄÄÄÄÄÄÄÄÄÄÄ		ÄÄÄÄÄÄÄÄÄÄÄÄÄÄÄÄ		ÄÄÄÄÄÄÄÄÄÄÄÄÄÄÄÄ		ÄÄÄÄÄÄÄÄÄÄÄÄÄÄÄÄ	
uclide	mrem/yr	fract.	mrem/yr	fract.	mrem/yr	fract.	mrem/yr	fract.	mrem/yr	fract.	mrem/yr	fract.	mrem/yr	fract.
ÄÄÄÄÄÄ	ÄÄÄÄÄÄÄÄÄ	ÄÄÄÄÄÄ	ÄÄÄÄÄÄÄÄÄ	ÄÄÄÄÄÄ	ÄÄÄÄÄÄÄÄÄ	ÄÄÄÄÄÄ	ÄÄÄÄÄÄÄÄÄ	ÄÄÄÄÄÄ	ÄÄÄÄÄÄÄÄÄ	ÄÄÄÄÄÄ	ÄÄÄÄÄÄÄÄÄ	ÄÄÄÄÄÄ	ÄÄÄÄÄÄÄÄÄ	ÄÄÄÄÄÄ
a-226	0.000E+00	0.0000	5.240E-04	0.0439	9.961E-06	0.0008	0.000E+00	0.0000	0.000E+00	0.0000	0.000E+00	0.0000	0.000E+00	0.0000
h-232	0.000E+00	0.0000	6.190E-03	0.5181	2.256E-06	0.0002	0.000E+00	0.0000	0.000E+00	0.0000	0.000E+00	0.0000	0.000E+00	0.0000
-234	0.000E+00	0.0000	2.678E-03	0.2241	1.775E-14	0.0000	0.000E+00	0.0000	0.000E+00	0.0000	0.000E+00	0.0000	0.000E+00	0.0000
-235	0.000E+00	0.0000	1.508E-04	0.0126	0.000E+00	0.0000	0.000E+00	0.0000	0.000E+00	0.0000	0.000E+00	0.0000	0.000E+00	0.0000
-238	0.000E+00	0.0000	2.394E-03	0.2004	2.659E-20	0.0000	0.000E+00	0.0000	0.000E+00	0.0000	0.000E+00	0.0000	0.000E+00	0.0000
íííííí	íííííííííí	íííííí	íííííííííí	íííííí	íííííííííí	íííííí	íííííííííí	íííííí	íííííííííí	íííííí	íííííííííí	íííííí	íííííííííí	íííííí
otal	0.000E+00	0.0000	1.194E-02	0.9990	1.222E-05	0.0010	0.000E+00	0.0000	0.000E+00	0.0000	0.000E+00	0.0000	0.000E+00	0.0000

Total Dose Contributions TDOSE(i,p,t) for Individual Radionuclides (i) and Pathways (p)
As mrem/yr and Fraction of Total Dose At t = 1.000E+00 years

Water Dependent Pathways

	Water		Fish		Radon		Plant		Meat		Milk		All Pathways*	
adio-	ÄÄÄÄÄÄÄÄÄÄÄÄÄÄÄÄ		ÄÄÄÄÄÄÄÄÄÄÄÄÄÄÄÄ		ÄÄÄÄÄÄÄÄÄÄÄÄÄÄÄÄ		ÄÄÄÄÄÄÄÄÄÄÄÄÄÄÄÄ		ÄÄÄÄÄÄÄÄÄÄÄÄÄÄÄÄ		ÄÄÄÄÄÄÄÄÄÄÄÄÄÄÄÄ		ÄÄÄÄÄÄÄÄÄÄÄÄÄÄÄÄ	
uclide	mrem/yr	fract.	mrem/yr	fract.	mrem/yr	fract.	mrem/yr	fract.	mrem/yr	fract.	mrem/yr	fract.	mrem/yr	fract.
ÄÄÄÄÄÄ	ÄÄÄÄÄÄÄÄÄ	ÄÄÄÄÄÄ	ÄÄÄÄÄÄÄÄÄ	ÄÄÄÄÄÄ	ÄÄÄÄÄÄÄÄÄ	ÄÄÄÄÄÄ	ÄÄÄÄÄÄÄÄÄ	ÄÄÄÄÄÄ	ÄÄÄÄÄÄÄÄÄ	ÄÄÄÄÄÄ	ÄÄÄÄÄÄÄÄÄ	ÄÄÄÄÄÄ	ÄÄÄÄÄÄÄÄÄ	ÄÄÄÄÄÄ
a-226	0.000E+00	0.0000	0.000E+00	0.0000	0.000E+00	0.0000	0.000E+00	0.0000	0.000E+00	0.0000	0.000E+00	0.0000	5.340E-04	0.0447
h-232	0.000E+00	0.0000	0.000E+00	0.0000	0.000E+00	0.0000	0.000E+00	0.0000	0.000E+00	0.0000	0.000E+00	0.0000	6.193E-03	0.5182
-234	0.000E+00	0.0000	0.000E+00	0.0000	0.000E+00	0.0000	0.000E+00	0.0000	0.000E+00	0.0000	0.000E+00	0.0000	2.678E-03	0.2241
-235	0.000E+00	0.0000	0.000E+00	0.0000	0.000E+00	0.0000	0.000E+00	0.0000	0.000E+00	0.0000	0.000E+00	0.0000	1.508E-04	0.0126
-238	0.000E+00	0.0000	0.000E+00	0.0000	0.000E+00	0.0000	0.000E+00	0.0000	0.000E+00	0.0000	0.000E+00	0.0000	2.394E-03	0.2004
íííííí	íííííííííí	íííííí	íííííííííí	íííííí	íííííííííí	íííííí	íííííííííí	íííííí	íííííííííí	íííííí	íííííííííí	íííííí	íííííííííí	íííííí
otal	0.000E+00	0.0000	0.000E+00	0.0000	0.000E+00	0.0000	0.000E+00	0.0000	0.000E+00	0.0000	0.000E+00	0.0000	1.195E-02	1.0000

Sum of all water independent and dependent pathways.

ummary : GKP Fire Fighter - Inhalation
ile : C:\USERS\CLAUDE\DOCUMENTS\0 GKP DOSE\RESRAD CW\GKP FIRE FIGHTER - INHALATION.RAD

Total Dose Contributions TDOSE(i,p,t) for Individual Radionuclides (i) and Pathways (p)
As mrem/yr and Fraction of Total Dose At t = 3.000E+00 years

Water Independent Pathways (Inhalation excludes radon)

	Ground		Inhalation		Radon		Plant		Meat		Milk		Soil	
adio-	ÄÄÄÄÄÄÄÄÄÄÄÄÄÄÄÄ		ÄÄÄÄÄÄÄÄÄÄÄÄÄÄÄÄ		ÄÄÄÄÄÄÄÄÄÄÄÄÄÄÄÄ		ÄÄÄÄÄÄÄÄÄÄÄÄÄÄÄÄ		ÄÄÄÄÄÄÄÄÄÄÄÄÄÄÄÄ		ÄÄÄÄÄÄÄÄÄÄÄÄÄÄÄÄ		ÄÄÄÄÄÄÄÄÄÄÄÄÄÄÄÄ	
uclide	mrem/yr	fract.	mrem/yr	fract.	mrem/yr	fract.	mrem/yr	fract.	mrem/yr	fract.	mrem/yr	fract.	mrem/yr	fract.
ÄÄÄÄÄÄ	ÄÄÄÄÄÄÄÄÄ	ÄÄÄÄÄÄ	ÄÄÄÄÄÄÄÄÄ	ÄÄÄÄÄÄ	ÄÄÄÄÄÄÄÄÄ	ÄÄÄÄÄÄ	ÄÄÄÄÄÄÄÄÄ	ÄÄÄÄÄÄ	ÄÄÄÄÄÄÄÄÄ	ÄÄÄÄÄÄ	ÄÄÄÄÄÄÄÄÄ	ÄÄÄÄÄÄ	ÄÄÄÄÄÄÄÄÄ	ÄÄÄÄÄÄ
a-226	0.000E+00	0.0000	5.538E-04	0.0480	9.218E-06	0.0008	0.000E+00	0.0000	0.000E+00	0.0000	0.000E+00	0.0000	0.000E+00	0.0000
n-232	0.000E+00	0.0000	6.254E-03	0.5418	8.783E-06	0.0008	0.000E+00	0.0000	0.000E+00	0.0000	0.000E+00	0.0000	0.000E+00	0.0000
-234	0.000E+00	0.0000	2.418E-03	0.2095	8.817E-14	0.0000	0.000E+00	0.0000	0.000E+00	0.0000	0.000E+00	0.0000	0.000E+00	0.0000
-235	0.000E+00	0.0000	1.363E-04	0.0118	0.000E+00	0.0000	0.000E+00	0.0000	0.000E+00	0.0000	0.000E+00	0.0000	0.000E+00	0.0000
-238	0.000E+00	0.0000	2.162E-03	0.1873	2.892E-19	0.0000	0.000E+00	0.0000	0.000E+00	0.0000	0.000E+00	0.0000	0.000E+00	0.0000
íííííí	íííííííííí	íííííí	íííííííííí	íííííí	íííííííííí	íííííí	íííííííííí	íííííí	íííííííííí	íííííí	íííííííííí	íííííí	íííííííííí	íííííí
otal	0.000E+00	0.0000	1.152E-02	0.9984	1.800E-05	0.0016	0.000E+00	0.0000	0.000E+00	0.0000	0.000E+00	0.0000	0.000E+00	0.0000

Total Dose Contributions TDOSE(i,p,t) for Individual Radionuclides (i) and Pathways (p)
As mrem/yr and Fraction of Total Dose At t = 3.000E+00 years

Water Dependent Pathways

	Water		Fish		Radon		Plant		Meat		Milk		All Pathways*	
adio-	ÄÄÄÄÄÄÄÄÄÄÄÄÄÄÄÄ		ÄÄÄÄÄÄÄÄÄÄÄÄÄÄÄÄ		ÄÄÄÄÄÄÄÄÄÄÄÄÄÄÄÄ		ÄÄÄÄÄÄÄÄÄÄÄÄÄÄÄÄ		ÄÄÄÄÄÄÄÄÄÄÄÄÄÄÄÄ		ÄÄÄÄÄÄÄÄÄÄÄÄÄÄÄÄ		ÄÄÄÄÄÄÄÄÄÄÄÄÄÄÄÄ	
uclide	mrem/yr	fract.	mrem/yr	fract.	mrem/yr	fract.	mrem/yr	fract.	mrem/yr	fract.	mrem/yr	fract.	mrem/yr	fract.
ÄÄÄÄÄÄ	ÄÄÄÄÄÄÄÄÄ	ÄÄÄÄÄÄ	ÄÄÄÄÄÄÄÄÄ	ÄÄÄÄÄÄ	ÄÄÄÄÄÄÄÄÄ	ÄÄÄÄÄÄ	ÄÄÄÄÄÄÄÄÄ	ÄÄÄÄÄÄ	ÄÄÄÄÄÄÄÄÄ	ÄÄÄÄÄÄ	ÄÄÄÄÄÄÄÄÄ	ÄÄÄÄÄÄ	ÄÄÄÄÄÄÄÄÄ	ÄÄÄÄÄÄ
a-226	0.000E+00	0.0000	0.000E+00	0.0000	0.000E+00	0.0000	0.000E+00	0.0000	0.000E+00	0.0000	0.000E+00	0.0000	5.630E-04	0.0488
n-232	0.000E+00	0.0000	0.000E+00	0.0000	0.000E+00	0.0000	0.000E+00	0.0000	0.000E+00	0.0000	0.000E+00	0.0000	6.262E-03	0.5426
-234	0.000E+00	0.0000	0.000E+00	0.0000	0.000E+00	0.0000	0.000E+00	0.0000	0.000E+00	0.0000	0.000E+00	0.0000	2.418E-03	0.2095
-235	0.000E+00	0.0000	0.000E+00	0.0000	0.000E+00	0.0000	0.000E+00	0.0000	0.000E+00	0.0000	0.000E+00	0.0000	1.363E-04	0.0118
-238	0.000E+00	0.0000	0.000E+00	0.0000	0.000E+00	0.0000	0.000E+00	0.0000	0.000E+00	0.0000	0.000E+00	0.0000	2.162E-03	0.1873
íííííí	íííííííííí	íííííí	íííííííííí	íííííí	íííííííííí	íííííí	íííííííííí	íííííí	íííííííííí	íííííí	íííííííííí	íííííí	íííííííííí	íííííí
otal	0.000E+00	0.0000	0.000E+00	0.0000	0.000E+00	0.0000	0.000E+00	0.0000	0.000E+00	0.0000	0.000E+00	0.0000	1.154E-02	1.0000

Sum of all water independent and dependent pathways.

ummary : GKP Fire Fighter - Inhalation
ile : C:\USERS\CLAUDE\DOCUMENTS\0 GKP DOSE\RESRAD CW\GKP FIRE FIGHTER - INHALATION.RAD

Total Dose Contributions TDOSE(i,p,t) for Individual Radionuclides (i) and Pathways (p)
As mrem/yr and Fraction of Total Dose At t = 1.000E+01 years

Water Independent Pathways (Inhalation excludes radon)

	Ground		Inhalation		Radon		Plant		Meat		Milk		Soil	
adio-	ÄÄÄÄÄÄÄÄÄÄÄÄÄÄÄÄ		ÄÄÄÄÄÄÄÄÄÄÄÄÄÄÄÄ		ÄÄÄÄÄÄÄÄÄÄÄÄÄÄÄÄ		ÄÄÄÄÄÄÄÄÄÄÄÄÄÄÄÄ		ÄÄÄÄÄÄÄÄÄÄÄÄÄÄÄÄ		ÄÄÄÄÄÄÄÄÄÄÄÄÄÄÄÄ		ÄÄÄÄÄÄÄÄÄÄÄÄÄÄÄÄ		ÄÄÄÄÄÄÄÄÄÄÄÄÄÄÄÄ	
uclide	mrem/yr	fract.	mrem/yr	fract.	mrem/yr	fract.	mrem/yr	fract.	mrem/yr	fract.	mrem/yr	fract.	mrem/yr	fract.
ÄÄÄÄÄÄ	ÄÄÄÄÄÄÄÄÄ	ÄÄÄÄÄÄ	ÄÄÄÄÄÄÄÄÄ	ÄÄÄÄÄÄ	ÄÄÄÄÄÄÄÄÄ	ÄÄÄÄÄÄ	ÄÄÄÄÄÄÄÄÄ	ÄÄÄÄÄÄ	ÄÄÄÄÄÄÄÄÄ	ÄÄÄÄÄÄ	ÄÄÄÄÄÄÄÄÄ	ÄÄÄÄÄÄ	ÄÄÄÄÄÄÄÄÄ	ÄÄÄÄÄÄ
a-226	0.000E+00	0.0000	5.881E-04	0.0569	7.017E-06	0.0007	0.000E+00	0.0000	0.000E+00	0.0000	0.000E+00	0.0000	0.000E+00	0.0000
h-232	0.000E+00	0.0000	6.416E-03	0.6207	3.055E-05	0.0030	0.000E+00	0.0000	0.000E+00	0.0000	0.000E+00	0.0000	0.000E+00	0.0000
-234	0.000E+00	0.0000	1.689E-03	0.1634	6.322E-13	0.0000	0.000E+00	0.0000	0.000E+00	0.0000	0.000E+00	0.0000	0.000E+00	0.0000
-235	0.000E+00	0.0000	9.546E-05	0.0092	0.000E+00	0.0000	0.000E+00	0.0000	0.000E+00	0.0000	0.000E+00	0.0000	0.000E+00	0.0000
-238	0.000E+00	0.0000	1.510E-03	0.1461	5.947E-18	0.0000	0.000E+00	0.0000	0.000E+00	0.0000	0.000E+00	0.0000	0.000E+00	0.0000
íííííí	íííííííííí	íííííí	íííííííííí	íííííí	íííííííííí	íííííí	íííííííííí	íííííí	íííííííííí	íííííí	íííííííííí	íííííí	íííííííííí	íííííí
otal	0.000E+00	0.0000	1.030E-02	0.9964	3.756E-05	0.0036	0.000E+00	0.0000	0.000E+00	0.0000	0.000E+00	0.0000	0.000E+00	0.0000

Total Dose Contributions TDOSE(i,p,t) for Individual Radionuclides (i) and Pathways (p)
As mrem/yr and Fraction of Total Dose At t = 1.000E+01 years

Water Dependent Pathways

	Water		Fish		Radon		Plant		Meat		Milk		All Pathways*	
adio-	ÄÄÄÄÄÄÄÄÄÄÄÄÄÄÄÄ		ÄÄÄÄÄÄÄÄÄÄÄÄÄÄÄÄ		ÄÄÄÄÄÄÄÄÄÄÄÄÄÄÄÄ		ÄÄÄÄÄÄÄÄÄÄÄÄÄÄÄÄ		ÄÄÄÄÄÄÄÄÄÄÄÄÄÄÄÄ		ÄÄÄÄÄÄÄÄÄÄÄÄÄÄÄÄ		ÄÄÄÄÄÄÄÄÄÄÄÄÄÄÄÄ	
uclide	mrem/yr	fract.	mrem/yr	fract.	mrem/yr	fract.	mrem/yr	fract.	mrem/yr	fract.	mrem/yr	fract.	mrem/yr	fract.
ÄÄÄÄÄÄ	ÄÄÄÄÄÄÄÄÄ	ÄÄÄÄÄÄ	ÄÄÄÄÄÄÄÄÄ	ÄÄÄÄÄÄ	ÄÄÄÄÄÄÄÄÄ	ÄÄÄÄÄÄ	ÄÄÄÄÄÄÄÄÄ	ÄÄÄÄÄÄ	ÄÄÄÄÄÄÄÄÄ	ÄÄÄÄÄÄ	ÄÄÄÄÄÄÄÄÄ	ÄÄÄÄÄÄ	ÄÄÄÄÄÄÄÄÄ	ÄÄÄÄÄÄ
a-226	0.000E+00	0.0000	0.000E+00	0.0000	0.000E+00	0.0000	0.000E+00	0.0000	0.000E+00	0.0000	0.000E+00	0.0000	5.951E-04	0.0576
h-232	0.000E+00	0.0000	0.000E+00	0.0000	0.000E+00	0.0000	0.000E+00	0.0000	0.000E+00	0.0000	0.000E+00	0.0000	6.446E-03	0.6236
-234	0.000E+00	0.0000	0.000E+00	0.0000	0.000E+00	0.0000	0.000E+00	0.0000	0.000E+00	0.0000	0.000E+00	0.0000	1.689E-03	0.1634
-235	0.000E+00	0.0000	0.000E+00	0.0000	0.000E+00	0.0000	0.000E+00	0.0000	0.000E+00	0.0000	0.000E+00	0.0000	9.546E-05	0.0092
-238	0.000E+00	0.0000	0.000E+00	0.0000	0.000E+00	0.0000	0.000E+00	0.0000	0.000E+00	0.0000	0.000E+00	0.0000	1.510E-03	0.1461
íííííí	íííííííííí	íííííí	íííííííííí	íííííí	íííííííííí	íííííí	íííííííííí	íííííí	íííííííííí	íííííí	íííííííííí	íííííí	íííííííííí	íííííí
otal	0.000E+00	0.0000	0.000E+00	0.0000	0.000E+00	0.0000	0.000E+00	0.0000	0.000E+00	0.0000	0.000E+00	0.0000	1.034E-02	1.0000

Sum of all water independent and dependent pathways.

ummary : GKP Fire Ighter - Inhalation
ile : C:\USERS\CLAUDE\DOCUMENTS\0 GKP DOSE\RESRAD CW\GKP FIRE FIGHTER - INHALATION.RAD

Total Dose Contributions TDOSE(i,p,t) for Individual Radionuclides (i) and Pathways (p)
As mrem/yr and Fraction of Total Dose At t = 3.000E+01 years

Water Independent Pathways (Inhalation excludes radon)

	Ground		Inhalation		Radon		Plant		Meat		Milk		Soil	
adio-	ÄÄÄÄÄÄÄÄÄÄÄÄÄÄÄÄ		ÄÄÄÄÄÄÄÄÄÄÄÄÄÄÄÄ		ÄÄÄÄÄÄÄÄÄÄÄÄÄÄÄÄ		ÄÄÄÄÄÄÄÄÄÄÄÄÄÄÄÄ		ÄÄÄÄÄÄÄÄÄÄÄÄÄÄÄÄ		ÄÄÄÄÄÄÄÄÄÄÄÄÄÄÄÄ		ÄÄÄÄÄÄÄÄÄÄÄÄÄÄÄÄ		ÄÄÄÄÄÄÄÄÄÄÄÄÄÄÄÄ	
uclide	mrem/yr	fract.	mrem/yr	fract.	mrem/yr	fract.	mrem/yr	fract.	mrem/yr	fract.	mrem/yr	fract.	mrem/yr	fract.
ÄÄÄÄÄÄ	ÄÄÄÄÄÄÄÄÄ	ÄÄÄÄÄÄ	ÄÄÄÄÄÄÄÄÄ	ÄÄÄÄÄÄ	ÄÄÄÄÄÄÄÄÄ	ÄÄÄÄÄÄ	ÄÄÄÄÄÄÄÄÄ	ÄÄÄÄÄÄ	ÄÄÄÄÄÄÄÄÄ	ÄÄÄÄÄÄ	ÄÄÄÄÄÄÄÄÄ	ÄÄÄÄÄÄ	ÄÄÄÄÄÄÄÄÄ	ÄÄÄÄÄÄ
a-226	0.000E+00	0.0000	4.275E-04	0.0578	3.170E-06	0.0004	0.000E+00	0.0000	0.000E+00	0.0000	0.000E+00	0.0000	0.000E+00	0.0000
n-232	0.000E+00	0.0000	5.754E-03	0.7780	4.499E-05	0.0061	0.000E+00	0.0000	0.000E+00	0.0000	0.000E+00	0.0000	0.000E+00	0.0000
-234	0.000E+00	0.0000	5.978E-04	0.0808	2.854E-12	0.0000	0.000E+00	0.0000	0.000E+00	0.0000	0.000E+00	0.0000	0.000E+00	0.0000
-235	0.000E+00	0.0000	3.411E-05	0.0046	0.000E+00	0.0000	0.000E+00	0.0000	0.000E+00	0.0000	0.000E+00	0.0000	0.000E+00	0.0000
-238	0.000E+00	0.0000	5.339E-04	0.0722	7.030E-17	0.0000	0.000E+00	0.0000	0.000E+00	0.0000	0.000E+00	0.0000	0.000E+00	0.0000
íííííí	íííííííííí	íííííí	íííííííííí	íííííí	íííííííííí	íííííí	íííííííííí	íííííí	íííííííííí	íííííí	íííííííííí	íííííí	íííííííííí	íííííí
otal	0.000E+00	0.0000	7.348E-03	0.9935	4.816E-05	0.0065	0.000E+00	0.0000	0.000E+00	0.0000	0.000E+00	0.0000	0.000E+00	0.0000

Total Dose Contributions TDOSE(i,p,t) for Individual Radionuclides (i) and Pathways (p)
As mrem/yr and Fraction of Total Dose At t = 3.000E+01 years

Water Dependent Pathways

	Water		Fish		Radon		Plant		Meat		Milk		All Pathways*	
adio-	ÄÄÄÄÄÄÄÄÄÄÄÄÄÄÄÄ		ÄÄÄÄÄÄÄÄÄÄÄÄÄÄÄÄ		ÄÄÄÄÄÄÄÄÄÄÄÄÄÄÄÄ		ÄÄÄÄÄÄÄÄÄÄÄÄÄÄÄÄ		ÄÄÄÄÄÄÄÄÄÄÄÄÄÄÄÄ		ÄÄÄÄÄÄÄÄÄÄÄÄÄÄÄÄ		ÄÄÄÄÄÄÄÄÄÄÄÄÄÄÄÄ	
uclide	mrem/yr	fract.	mrem/yr	fract.	mrem/yr	fract.	mrem/yr	fract.	mrem/yr	fract.	mrem/yr	fract.	mrem/yr	fract.
ÄÄÄÄÄÄ	ÄÄÄÄÄÄÄÄÄ	ÄÄÄÄÄÄ	ÄÄÄÄÄÄÄÄÄ	ÄÄÄÄÄÄ	ÄÄÄÄÄÄÄÄÄ	ÄÄÄÄÄÄ	ÄÄÄÄÄÄÄÄÄ	ÄÄÄÄÄÄ	ÄÄÄÄÄÄÄÄÄ	ÄÄÄÄÄÄ	ÄÄÄÄÄÄÄÄÄ	ÄÄÄÄÄÄ	ÄÄÄÄÄÄÄÄÄ	ÄÄÄÄÄÄ
a-226	0.000E+00	0.0000	0.000E+00	0.0000	0.000E+00	0.0000	0.000E+00	0.0000	0.000E+00	0.0000	0.000E+00	0.0000	4.307E-04	0.0582
n-232	0.000E+00	0.0000	0.000E+00	0.0000	0.000E+00	0.0000	0.000E+00	0.0000	0.000E+00	0.0000	0.000E+00	0.0000	5.799E-03	0.7841
-234	0.000E+00	0.0000	0.000E+00	0.0000	0.000E+00	0.0000	0.000E+00	0.0000	0.000E+00	0.0000	0.000E+00	0.0000	5.978E-04	0.0808
-235	0.000E+00	0.0000	0.000E+00	0.0000	0.000E+00	0.0000	0.000E+00	0.0000	0.000E+00	0.0000	0.000E+00	0.0000	3.411E-05	0.0046
-238	0.000E+00	0.0000	0.000E+00	0.0000	0.000E+00	0.0000	0.000E+00	0.0000	0.000E+00	0.0000	0.000E+00	0.0000	5.339E-04	0.0722
íííííí	íííííííííí	íííííí	íííííííííí	íííííí	íííííííííí	íííííí	íííííííííí	íííííí	íííííííííí	íííííí	íííííííííí	íííííí	íííííííííí	íííííí
otal	0.000E+00	0.0000	0.000E+00	0.0000	0.000E+00	0.0000	0.000E+00	0.0000	0.000E+00	0.0000	0.000E+00	0.0000	7.396E-03	1.0000

Sum of all water independent and dependent pathways.

ummary : GKP Fire Fighter - Inhalation
ile : C:\USERS\CLAUDE\DOCUMENTS\0 GKP DOSE\RESRAD CW\GKP FIRE FIGHTER - INHALATION.RAD

Total Dose Contributions TDOSE(i,p,t) for Individual Radionuclides (i) and Pathways (p)
As mrem/yr and Fraction of Total Dose At t = 1.000E+02 years

Water Independent Pathways (Inhalation excludes radon)

	Ground		Inhalation		Radon		Plant		Meat		Milk		Soil	
adio-	ÄÄÄÄÄÄÄÄÄÄÄÄÄÄÄÄ		ÄÄÄÄÄÄÄÄÄÄÄÄÄÄÄÄ		ÄÄÄÄÄÄÄÄÄÄÄÄÄÄÄÄ		ÄÄÄÄÄÄÄÄÄÄÄÄÄÄÄÄ		ÄÄÄÄÄÄÄÄÄÄÄÄÄÄÄÄ		ÄÄÄÄÄÄÄÄÄÄÄÄÄÄÄÄ		ÄÄÄÄÄÄÄÄÄÄÄÄÄÄÄÄ	
uclide	mrem/yr	fract.	mrem/yr	fract.	mrem/yr	fract.	mrem/yr	fract.	mrem/yr	fract.	mrem/yr	fract.	mrem/yr	fract.
ÄÄÄÄÄÄ	ÄÄÄÄÄÄÄÄÄ	ÄÄÄÄÄÄ	ÄÄÄÄÄÄÄÄÄ	ÄÄÄÄÄÄ	ÄÄÄÄÄÄÄÄÄ	ÄÄÄÄÄÄ	ÄÄÄÄÄÄÄÄÄ	ÄÄÄÄÄÄ	ÄÄÄÄÄÄÄÄÄ	ÄÄÄÄÄÄ	ÄÄÄÄÄÄÄÄÄ	ÄÄÄÄÄÄ	ÄÄÄÄÄÄÄÄÄ	ÄÄÄÄÄÄ
a-226	0.000E+00	0.0000	2.912E-05	0.0117	1.396E-07	0.0001	0.000E+00	0.0000	0.000E+00	0.0000	0.000E+00	0.0000	0.000E+00	0.0000
h-232	0.000E+00	0.0000	2.383E-03	0.9609	4.554E-05	0.0184	0.000E+00	0.0000	0.000E+00	0.0000	0.000E+00	0.0000	0.000E+00	0.0000
-234	0.000E+00	0.0000	1.164E-05	0.0047	3.313E-12	0.0000	0.000E+00	0.0000	0.000E+00	0.0000	0.000E+00	0.0000	0.000E+00	0.0000
-235	0.000E+00	0.0000	6.640E-07	0.0003	0.000E+00	0.0000	0.000E+00	0.0000	0.000E+00	0.0000	0.000E+00	0.0000	0.000E+00	0.0000
-238	0.000E+00	0.0000	9.987E-06	0.0040	1.800E-16	0.0000	0.000E+00	0.0000	0.000E+00	0.0000	0.000E+00	0.0000	0.000E+00	0.0000
íííííí	íííííííííí	íííííí	íííííííííí	íííííí	íííííííííí	íííííí	íííííííííí	íííííí	íííííííííí	íííííí	íííííííííí	íííííí	íííííííííí	íííííí
otal	0.000E+00	0.0000	2.435E-03	0.9816	4.568E-05	0.0184	0.000E+00	0.0000	0.000E+00	0.0000	0.000E+00	0.0000	0.000E+00	0.0000

Total Dose Contributions TDOSE(i,p,t) for Individual Radionuclides (i) and Pathways (p)
As mrem/yr and Fraction of Total Dose At t = 1.000E+02 years

Water Dependent Pathways

	Water		Fish		Radon		Plant		Meat		Milk		All Pathways*	
adio-	ÄÄÄÄÄÄÄÄÄÄÄÄÄÄÄÄ		ÄÄÄÄÄÄÄÄÄÄÄÄÄÄÄÄ		ÄÄÄÄÄÄÄÄÄÄÄÄÄÄÄÄ		ÄÄÄÄÄÄÄÄÄÄÄÄÄÄÄÄ		ÄÄÄÄÄÄÄÄÄÄÄÄÄÄÄÄ		ÄÄÄÄÄÄÄÄÄÄÄÄÄÄÄÄ		ÄÄÄÄÄÄÄÄÄÄÄÄÄÄÄÄ	
uclide	mrem/yr	fract.	mrem/yr	fract.	mrem/yr	fract.	mrem/yr	fract.	mrem/yr	fract.	mrem/yr	fract.	mrem/yr	fract.
ÄÄÄÄÄÄ	ÄÄÄÄÄÄÄÄÄ	ÄÄÄÄÄÄ	ÄÄÄÄÄÄÄÄÄ	ÄÄÄÄÄÄ	ÄÄÄÄÄÄÄÄÄ	ÄÄÄÄÄÄ	ÄÄÄÄÄÄÄÄÄ	ÄÄÄÄÄÄ	ÄÄÄÄÄÄÄÄÄ	ÄÄÄÄÄÄ	ÄÄÄÄÄÄÄÄÄ	ÄÄÄÄÄÄ	ÄÄÄÄÄÄÄÄÄ	ÄÄÄÄÄÄ
a-226	0.000E+00	0.0000	0.000E+00	0.0000	0.000E+00	0.0000	0.000E+00	0.0000	0.000E+00	0.0000	0.000E+00	0.0000	2.926E-05	0.0118
h-232	0.000E+00	0.0000	0.000E+00	0.0000	0.000E+00	0.0000	0.000E+00	0.0000	0.000E+00	0.0000	0.000E+00	0.0000	2.429E-03	0.9792
-234	0.000E+00	0.0000	0.000E+00	0.0000	0.000E+00	0.0000	0.000E+00	0.0000	0.000E+00	0.0000	0.000E+00	0.0000	1.164E-05	0.0047
-235	0.000E+00	0.0000	0.000E+00	0.0000	0.000E+00	0.0000	0.000E+00	0.0000	0.000E+00	0.0000	0.000E+00	0.0000	6.640E-07	0.0003
-238	0.000E+00	0.0000	0.000E+00	0.0000	0.000E+00	0.0000	0.000E+00	0.0000	0.000E+00	0.0000	0.000E+00	0.0000	9.987E-06	0.0040
íííííí	íííííííííí	íííííí	íííííííííí	íííííí	íííííííííí	íííííí	íííííííííí	íííííí	íííííííííí	íííííí	íííííííííí	íííííí	íííííííííí	íííííí
otal	0.000E+00	0.0000	0.000E+00	0.0000	0.000E+00	0.0000	0.000E+00	0.0000	0.000E+00	0.0000	0.000E+00	0.0000	2.480E-03	1.0000

Sum of all water independent and dependent pathways.

ummary : GKP Fire Fighter - Inhalation
ile : C:\USERS\CLAUDE\DOCUMENTS\0 GKP DOSE\RESRAD CW\GKP FIRE FIGHTER - INHALATION.RAD

Total Dose Contributions TDOSE(i,p,t) for Individual Radionuclides (i) and Pathways (p)
As mrem/yr and Fraction of Total Dose At t = 3.000E+02 years

Water Independent Pathways (Inhalation excludes radon)

	Ground		Inhalation		Radon		Plant		Meat		Milk		Soil	
adio-	ÄÄÄÄÄÄÄÄÄÄÄÄÄÄÄÄ		ÄÄÄÄÄÄÄÄÄÄÄÄÄÄÄÄ		ÄÄÄÄÄÄÄÄÄÄÄÄÄÄÄÄ		ÄÄÄÄÄÄÄÄÄÄÄÄÄÄÄÄ		ÄÄÄÄÄÄÄÄÄÄÄÄÄÄÄÄ		ÄÄÄÄÄÄÄÄÄÄÄÄÄÄÄÄ		ÄÄÄÄÄÄÄÄÄÄÄÄÄÄÄÄ	
uclide	mrem/yr	fract.	mrem/yr	fract.	mrem/yr	fract.	mrem/yr	fract.	mrem/yr	fract.	mrem/yr	fract.	mrem/yr	fract.
ÄÄÄÄÄÄ	ÄÄÄÄÄÄÄÄÄ	ÄÄÄÄÄÄ	ÄÄÄÄÄÄÄÄÄ	ÄÄÄÄÄÄ	ÄÄÄÄÄÄÄÄÄ	ÄÄÄÄÄÄ	ÄÄÄÄÄÄÄÄÄ	ÄÄÄÄÄÄ	ÄÄÄÄÄÄÄÄÄ	ÄÄÄÄÄÄ	ÄÄÄÄÄÄÄÄÄ	ÄÄÄÄÄÄ	ÄÄÄÄÄÄÄÄÄ	ÄÄÄÄÄÄ
a-226	0.000E+00	0.0000	0.000E+00	0.0000	0.000E+00	0.0000	0.000E+00	0.0000	0.000E+00	0.0000	0.000E+00	0.0000	0.000E+00	0.0000
n-232	0.000E+00	0.0000	0.000E+00	0.0000	0.000E+00	0.0000	0.000E+00	0.0000	0.000E+00	0.0000	0.000E+00	0.0000	0.000E+00	0.0000
-234	0.000E+00	0.0000	0.000E+00	0.0000	0.000E+00	0.0000	0.000E+00	0.0000	0.000E+00	0.0000	0.000E+00	0.0000	0.000E+00	0.0000
-235	0.000E+00	0.0000	0.000E+00	0.0000	0.000E+00	0.0000	0.000E+00	0.0000	0.000E+00	0.0000	0.000E+00	0.0000	0.000E+00	0.0000
-238	0.000E+00	0.0000	0.000E+00	0.0000	0.000E+00	0.0000	0.000E+00	0.0000	0.000E+00	0.0000	0.000E+00	0.0000	0.000E+00	0.0000
íííííí	íííííííííí	íííííí	íííííííííí	íííííí	íííííííííí	íííííí	íííííííííí	íííííí	íííííííííí	íííííí	íííííííííí	íííííí	íííííííííí	íííííí
otal	0.000E+00	0.0000	0.000E+00	0.0000	0.000E+00	0.0000	0.000E+00	0.0000	0.000E+00	0.0000	0.000E+00	0.0000	0.000E+00	0.0000

Total Dose Contributions TDOSE(i,p,t) for Individual Radionuclides (i) and Pathways (p)
As mrem/yr and Fraction of Total Dose At t = 3.000E+02 years

Water Dependent Pathways

	Water		Fish		Radon		Plant		Meat		Milk		All Pathways*	
adio-	ÄÄÄÄÄÄÄÄÄÄÄÄÄÄÄÄ		ÄÄÄÄÄÄÄÄÄÄÄÄÄÄÄÄ		ÄÄÄÄÄÄÄÄÄÄÄÄÄÄÄÄ		ÄÄÄÄÄÄÄÄÄÄÄÄÄÄÄÄ		ÄÄÄÄÄÄÄÄÄÄÄÄÄÄÄÄ		ÄÄÄÄÄÄÄÄÄÄÄÄÄÄÄÄ		ÄÄÄÄÄÄÄÄÄÄÄÄÄÄÄÄ	
uclide	mrem/yr	fract.	mrem/yr	fract.	mrem/yr	fract.	mrem/yr	fract.	mrem/yr	fract.	mrem/yr	fract.	mrem/yr	fract.
ÄÄÄÄÄÄ	ÄÄÄÄÄÄÄÄÄ	ÄÄÄÄÄÄ	ÄÄÄÄÄÄÄÄÄ	ÄÄÄÄÄÄ	ÄÄÄÄÄÄÄÄÄ	ÄÄÄÄÄÄ	ÄÄÄÄÄÄÄÄÄ	ÄÄÄÄÄÄ	ÄÄÄÄÄÄÄÄÄ	ÄÄÄÄÄÄ	ÄÄÄÄÄÄÄÄÄ	ÄÄÄÄÄÄ	ÄÄÄÄÄÄÄÄÄ	ÄÄÄÄÄÄ
a-226	0.000E+00	0.0000	0.000E+00	0.0000	0.000E+00	0.0000	0.000E+00	0.0000	0.000E+00	0.0000	0.000E+00	0.0000	0.000E+00	0.0000
n-232	0.000E+00	0.0000	0.000E+00	0.0000	0.000E+00	0.0000	0.000E+00	0.0000	0.000E+00	0.0000	0.000E+00	0.0000	0.000E+00	0.0000
-234	0.000E+00	0.0000	0.000E+00	0.0000	0.000E+00	0.0000	0.000E+00	0.0000	0.000E+00	0.0000	0.000E+00	0.0000	0.000E+00	0.0000
-235	0.000E+00	0.0000	0.000E+00	0.0000	0.000E+00	0.0000	0.000E+00	0.0000	0.000E+00	0.0000	0.000E+00	0.0000	0.000E+00	0.0000
-238	0.000E+00	0.0000	0.000E+00	0.0000	0.000E+00	0.0000	0.000E+00	0.0000	0.000E+00	0.0000	0.000E+00	0.0000	0.000E+00	0.0000
íííííí	íííííííííí	íííííí	íííííííííí	íííííí	íííííííííí	íííííí	íííííííííí	íííííí	íííííííííí	íííííí	íííííííííí	íííííí	íííííííííí	íííííí
otal	0.000E+00	0.0000	0.000E+00	0.0000	0.000E+00	0.0000	0.000E+00	0.0000	0.000E+00	0.0000	0.000E+00	0.0000	0.000E+00	0.0000

Sum of all water independent and dependent pathways.

ummary : GKP Fire Ighter - Inhalation
ile : C:\USERS\CLAUDE\DOCUMENTS\0 GKP DOSE\RESRAD CW\GKP FIRE FIGHTER - INHALATION.RAD

Total Dose Contributions TDOSE(i,p,t) for Individual Radionuclides (i) and Pathways (p)
As mrem/yr and Fraction of Total Dose At t = 1.000E+03 years

Water Independent Pathways (Inhalation excludes radon)

	Ground		Inhalation		Radon		Plant		Meat		Milk		Soil	
adio-	ÄÄÄÄÄÄÄÄÄÄÄÄÄÄÄÄ		ÄÄÄÄÄÄÄÄÄÄÄÄÄÄÄÄ		ÄÄÄÄÄÄÄÄÄÄÄÄÄÄÄÄ		ÄÄÄÄÄÄÄÄÄÄÄÄÄÄÄÄ		ÄÄÄÄÄÄÄÄÄÄÄÄÄÄÄÄ		ÄÄÄÄÄÄÄÄÄÄÄÄÄÄÄÄ		ÄÄÄÄÄÄÄÄÄÄÄÄÄÄÄÄ	
uclide	mrem/yr	fract.	mrem/yr	fract.	mrem/yr	fract.	mrem/yr	fract.	mrem/yr	fract.	mrem/yr	fract.	mrem/yr	fract.
ÄÄÄÄÄÄ	ÄÄÄÄÄÄÄÄÄ	ÄÄÄÄÄÄ	ÄÄÄÄÄÄÄÄÄ	ÄÄÄÄÄÄ	ÄÄÄÄÄÄÄÄÄ	ÄÄÄÄÄÄ	ÄÄÄÄÄÄÄÄÄ	ÄÄÄÄÄÄ	ÄÄÄÄÄÄÄÄÄ	ÄÄÄÄÄÄ	ÄÄÄÄÄÄÄÄÄ	ÄÄÄÄÄÄ	ÄÄÄÄÄÄÄÄÄ	ÄÄÄÄÄÄ
a-226	0.000E+00	0.0000	0.000E+00	0.0000	0.000E+00	0.0000	0.000E+00	0.0000	0.000E+00	0.0000	0.000E+00	0.0000	0.000E+00	0.0000
n-232	0.000E+00	0.0000	0.000E+00	0.0000	0.000E+00	0.0000	0.000E+00	0.0000	0.000E+00	0.0000	0.000E+00	0.0000	0.000E+00	0.0000
-234	0.000E+00	0.0000	0.000E+00	0.0000	0.000E+00	0.0000	0.000E+00	0.0000	0.000E+00	0.0000	0.000E+00	0.0000	0.000E+00	0.0000
-235	0.000E+00	0.0000	0.000E+00	0.0000	0.000E+00	0.0000	0.000E+00	0.0000	0.000E+00	0.0000	0.000E+00	0.0000	0.000E+00	0.0000
-238	0.000E+00	0.0000	0.000E+00	0.0000	0.000E+00	0.0000	0.000E+00	0.0000	0.000E+00	0.0000	0.000E+00	0.0000	0.000E+00	0.0000
íííííí	íííííííííí	íííííí	íííííííííí	íííííí	íííííííííí	íííííí	íííííííííí	íííííí	íííííííííí	íííííí	íííííííííí	íííííí	íííííííííí	íííííí
otal	0.000E+00	0.0000	0.000E+00	0.0000	0.000E+00	0.0000	0.000E+00	0.0000	0.000E+00	0.0000	0.000E+00	0.0000	0.000E+00	0.0000

Total Dose Contributions TDOSE(i,p,t) for Individual Radionuclides (i) and Pathways (p)
As mrem/yr and Fraction of Total Dose At t = 1.000E+03 years

Water Dependent Pathways

	Water		Fish		Radon		Plant		Meat		Milk		All Pathways*	
adio-	ÄÄÄÄÄÄÄÄÄÄÄÄÄÄÄÄ		ÄÄÄÄÄÄÄÄÄÄÄÄÄÄÄÄ		ÄÄÄÄÄÄÄÄÄÄÄÄÄÄÄÄ		ÄÄÄÄÄÄÄÄÄÄÄÄÄÄÄÄ		ÄÄÄÄÄÄÄÄÄÄÄÄÄÄÄÄ		ÄÄÄÄÄÄÄÄÄÄÄÄÄÄÄÄ		ÄÄÄÄÄÄÄÄÄÄÄÄÄÄÄÄ	
uclide	mrem/yr	fract.	mrem/yr	fract.	mrem/yr	fract.	mrem/yr	fract.	mrem/yr	fract.	mrem/yr	fract.	mrem/yr	fract.
ÄÄÄÄÄÄ	ÄÄÄÄÄÄÄÄÄ	ÄÄÄÄÄÄ	ÄÄÄÄÄÄÄÄÄ	ÄÄÄÄÄÄ	ÄÄÄÄÄÄÄÄÄ	ÄÄÄÄÄÄ	ÄÄÄÄÄÄÄÄÄ	ÄÄÄÄÄÄ	ÄÄÄÄÄÄÄÄÄ	ÄÄÄÄÄÄ	ÄÄÄÄÄÄÄÄÄ	ÄÄÄÄÄÄ	ÄÄÄÄÄÄÄÄÄ	ÄÄÄÄÄÄ
a-226	0.000E+00	0.0000	0.000E+00	0.0000	0.000E+00	0.0000	0.000E+00	0.0000	0.000E+00	0.0000	0.000E+00	0.0000	0.000E+00	0.0000
n-232	0.000E+00	0.0000	0.000E+00	0.0000	0.000E+00	0.0000	0.000E+00	0.0000	0.000E+00	0.0000	0.000E+00	0.0000	0.000E+00	0.0000
-234	0.000E+00	0.0000	0.000E+00	0.0000	0.000E+00	0.0000	0.000E+00	0.0000	0.000E+00	0.0000	0.000E+00	0.0000	0.000E+00	0.0000
-235	0.000E+00	0.0000	0.000E+00	0.0000	0.000E+00	0.0000	0.000E+00	0.0000	0.000E+00	0.0000	0.000E+00	0.0000	0.000E+00	0.0000
-238	0.000E+00	0.0000	0.000E+00	0.0000	0.000E+00	0.0000	0.000E+00	0.0000	0.000E+00	0.0000	0.000E+00	0.0000	0.000E+00	0.0000
íííííí	íííííííííí	íííííí	íííííííííí	íííííí	íííííííííí	íííííí	íííííííííí	íííííí	íííííííííí	íííííí	íííííííííí	íííííí	íííííííííí	íííííí
otal	0.000E+00	0.0000	0.000E+00	0.0000	0.000E+00	0.0000	0.000E+00	0.0000	0.000E+00	0.0000	0.000E+00	0.0000	0.000E+00	0.0000

Sum of all water independent and dependent pathways.

ummary : GKP Fire Fighter - Inhalation
ile : C:\USERS\CLAUDE\DOCUMENTS\0 GKP DOSE\RESRAD CW\GKP FIRE FIGHTER - INHALATION.RAD

Dose/Source Ratios Summed Over All Pathways
Parent and Progeny Principal Radionuclide Contributions Indicated

Parent (i)	Product (j)	Thread Fraction	DSR(j,t) At Time in Years (mrem/yr)/(pCi/g) 0.000E+00	1.000E+00	3.000E+00	1.000E+01	3.000E+01	1.000E+02	3.000E+02	1.000E+03
ÄÄÄÄÄÄÄÄÄ	ÄÄÄÄÄÄÄÄÄÄ	ÄÄÄÄÄÄÄÄÄ	ÄÄÄÄÄÄÄÄÄ	ÄÄÄÄÄÄÄÄÄ	ÄÄÄÄÄÄÄÄÄ	ÄÄÄÄÄÄÄÄÄ	ÄÄÄÄÄÄÄÄÄ	ÄÄÄÄÄÄÄÄÄ	ÄÄÄÄÄÄÄÄÄ	ÄÄÄÄÄÄÄÄÄ
a-226+D	Ra-226+D	9.996E-01	1.356E-05	1.304E-05	1.206E-05	9.177E-06	4.139E-06	1.815E-07	0.000E+00	0.000E+00
a-226+D	Pb-210+D	9.996E-01	5.517E-07	1.584E-06	3.353E-06	7.121E-06	7.657E-06	6.199E-07	0.000E+00	0.000E+00
a-226+D	äDSR(j)		1.411E-05	1.462E-05	1.542E-05	1.630E-05	1.180E-05	8.014E-07	0.000E+00	0.000E+00
a-226+D	Ra-226+D	1.319E-06	1.789E-11	1.721E-11	1.593E-11	1.211E-11	5.463E-12	2.396E-13	0.000E+00	0.000E+00
a-226+D	Pb-210+D1	1.319E-06	4.331E-13	1.244E-12	2.633E-12	5.591E-12	6.011E-12	4.867E-13	0.000E+00	0.000E+00
a-226+D	äDSR(j)		1.833E-11	1.846E-11	1.856E-11	1.770E-11	1.147E-11	7.262E-13	0.000E+00	0.000E+00
a-226+D	Ra-226+D	1.899E-08	2.575E-13	2.478E-13	2.292E-13	1.744E-13	7.864E-14	3.448E-15	0.000E+00	0.000E+00
a-226+D	Pb-210+D2	1.899E-08	6.146E-15	1.764E-14	3.735E-14	7.933E-14	8.529E-14	6.906E-15	0.000E+00	0.000E+00
a-226+D	äDSR(j)		2.637E-13	2.654E-13	2.666E-13	2.537E-13	1.639E-13	1.035E-14	0.000E+00	0.000E+00
a-226+D1	Ra-226+D1	2.100E-04	2.847E-09	2.739E-09	2.534E-09	1.928E-09	8.693E-10	3.812E-11	0.000E+00	0.000E+00
a-226+D1	Pb-210+D	2.100E-04	1.159E-10	3.327E-10	7.043E-10	1.496E-09	1.608E-09	1.302E-10	0.000E+00	0.000E+00
a-226+D1	äDSR(j)		2.963E-09	3.072E-09	3.238E-09	3.423E-09	2.478E-09	1.683E-10	0.000E+00	0.000E+00
a-226+D1	Ra-226+D1	2.771E-10	3.758E-15	3.615E-15	3.345E-15	2.544E-15	1.147E-15	5.032E-17	0.000E+00	0.000E+00
a-226+D1	Pb-210+D1	2.771E-10	9.097E-17	2.612E-16	5.530E-16	1.174E-15	1.263E-15	1.022E-16	0.000E+00	0.000E+00
a-226+D1	äDSR(j)		3.849E-15	3.877E-15	3.898E-15	3.719E-15	2.410E-15	1.525E-16	0.000E+00	0.000E+00
a-226+D1	Ra-226+D1	3.989E-12	5.410E-17	5.204E-17	4.815E-17	3.663E-17	1.652E-17	7.243E-19	0.000E+00	0.000E+00
a-226+D1	Pb-210+D2	3.989E-12	1.291E-18	3.706E-18	7.846E-18	1.666E-17	1.792E-17	1.450E-18	0.000E+00	0.000E+00
a-226+D1	äDSR(j)		5.539E-17	5.574E-17	5.599E-17	5.329E-17	3.443E-17	2.175E-18	0.000E+00	0.000E+00
a-226+D2	Ra-226+D2	1.998E-04	2.706E-09	2.603E-09	2.409E-09	1.832E-09	8.263E-10	3.623E-11	0.000E+00	0.000E+00
a-226+D2	Pb-210+D	1.998E-04	1.102E-10	3.165E-10	6.701E-10	1.423E-09	1.530E-09	1.239E-10	0.000E+00	0.000E+00
a-226+D2	äDSR(j)		2.817E-09	2.920E-09	3.079E-09	3.255E-09	2.356E-09	1.601E-10	0.000E+00	0.000E+00
a-226+D2	Ra-226+D2	2.637E-10	3.573E-15	3.437E-15	3.180E-15	2.419E-15	1.091E-15	4.783E-17	0.000E+00	0.000E+00
a-226+D2	Pb-210+D1	2.637E-10	8.655E-17	2.485E-16	5.261E-16	1.117E-15	1.201E-15	9.726E-17	0.000E+00	0.000E+00
a-226+D2	äDSR(j)		3.659E-15	3.685E-15	3.706E-15	3.536E-15	2.292E-15	1.451E-16	0.000E+00	0.000E+00
a-226+D2	Ra-226+D2	3.795E-12	5.142E-17	4.947E-17	4.577E-17	3.482E-17	1.570E-17	6.885E-19	0.000E+00	0.000E+00
a-226+D2	Pb-210+D2	3.795E-12	1.228E-18	3.526E-18	7.465E-18	1.585E-17	1.705E-17	1.380E-18	0.000E+00	0.000E+00
a-226+D2	äDSR(j)		5.265E-17	5.299E-17	5.323E-17	5.067E-17	3.275E-17	2.068E-18	0.000E+00	0.000E+00
a-226+D3	Ra-226+D3	4.196E-08	5.685E-13	5.468E-13	5.060E-13	3.849E-13	1.736E-13	7.611E-15	0.000E+00	0.000E+00
a-226+D3	Pb-210+D	4.196E-08	2.316E-14	6.649E-14	1.408E-13	2.989E-13	3.214E-13	2.602E-14	0.000E+00	0.000E+00
a-226+D3	äDSR(j)		5.916E-13	6.133E-13	6.467E-13	6.838E-13	4.950E-13	3.363E-14	0.000E+00	0.000E+00
a-226+D3	Ra-226+D3	5.538E-14	7.504E-19	7.218E-19	6.679E-19	5.080E-19	2.291E-19	1.005E-20	0.000E+00	0.000E+00
a-226+D3	Pb-210+D1	5.538E-14	1.818E-20	5.220E-20	1.105E-19	2.347E-19	2.523E-19	2.043E-20	0.000E+00	0.000E+00
a-226+D3	äDSR(j)		7.686E-19	7.740E-19	7.784E-19	7.427E-19	4.814E-19	3.047E-20	0.000E+00	0.000E+00
a-226+D3	Ra-226+D3	7.972E-16	1.080E-20	1.039E-20	9.613E-21	7.313E-21	3.298E-21	1.446E-22	0.000E+00	0.000E+00
a-226+D3	Pb-210+D2	7.972E-16	2.580E-22	7.406E-22	1.568E-21	3.330E-21	3.580E-21	2.899E-22	0.000E+00	0.000E+00
a-226+D3	äDSR(j)		1.106E-20	1.113E-20	1.118E-20	1.064E-20	6.878E-21	4.345E-22	0.000E+00	0.000E+00

ummary : GKP Fire Fighter - Inhalation
ile : C:\USERS\CLAUDE\DOCUMENTS\0 GKP DOSE\RESRAD CW\GKP FIRE FIGHTER - INHALATION.RAD

Dose/Source Ratios Summed Over All Pathways
Parent and Progeny Principal Radionuclide Contributions Indicated

Parent (i)	Product (j)	Thread Fraction	DSR(j,t) At Time in Years (mrem/yr)/(pCi/g) 0.000E+00	1.000E+00	3.000E+00	1.000E+01	3.000E+01	1.000E+02	3.000E+02	1.000E+03
ÄÄÄÄÄÄÄÄÄ	ÄÄÄÄÄÄÄÄÄÄ	ÄÄÄÄÄÄÄÄÄ	ÄÄÄÄÄÄÄÄÄ	ÄÄÄÄÄÄÄÄÄ	ÄÄÄÄÄÄÄÄÄ	ÄÄÄÄÄÄÄÄÄ	ÄÄÄÄÄÄÄÄÄ	ÄÄÄÄÄÄÄÄÄ	ÄÄÄÄÄÄÄÄÄ	ÄÄÄÄÄÄÄÄÄ
a-226+D4	Ra-226+D4	2.000E-07	2.708E-12	2.605E-12	2.410E-12	1.833E-12	8.267E-13	3.625E-14	0.000E+00	0.000E+00
a-226+D4	Pb-210+D	2.000E-07	1.104E-13	3.169E-13	6.709E-13	1.425E-12	1.532E-12	1.240E-13	0.000E+00	0.000E+00
a-226+D4	äDSR(j)		2.818E-12	2.922E-12	3.081E-12	3.258E-12	2.359E-12	1.603E-13	0.000E+00	0.000E+00
a-226+D4	Ra-226+D4	2.640E-13	3.574E-18	3.438E-18	3.181E-18	2.420E-18	1.091E-18	4.785E-20	0.000E+00	0.000E+00
a-226+D4	Pb-210+D1	2.640E-13	8.666E-20	2.488E-19	5.267E-19	1.119E-18	1.203E-18	9.737E-20	0.000E+00	0.000E+00
a-226+D4	äDSR(j)		3.661E-18	3.687E-18	3.708E-18	3.538E-18	2.294E-18	1.452E-19	0.000E+00	0.000E+00
a-226+D4	Ra-226+D4	3.800E-15	5.145E-20	4.949E-20	4.579E-20	3.483E-20	1.571E-20	6.888E-22	0.000E+00	0.000E+00
a-226+D4	Pb-210+D2	3.800E-15	1.230E-21	3.530E-21	7.474E-21	1.587E-20	1.707E-20	1.382E-21	0.000E+00	0.000E+00
a-226+D4	äDSR(j)		5.268E-20	5.302E-20	5.326E-20	5.070E-20	3.277E-20	2.070E-21	0.000E+00	0.000E+00
n-232	Th-232	1.000E+00	2.574E-03	2.557E-03	2.522E-03	2.401E-03	2.055E-03	8.492E-04	0.000E+00	0.000E+00
n-232	Ra-228+D	1.000E+00	4.565E-07	1.275E-06	2.551E-06	4.697E-06	4.993E-06	2.083E-06	0.000E+00	0.000E+00
n-232	Th-228+D	1.000E+00	3.629E-06	2.194E-05	8.434E-05	2.800E-04	3.560E-04	1.607E-04	0.000E+00	0.000E+00
n-232	äDSR(j)		2.578E-03	2.580E-03	2.609E-03	2.686E-03	2.416E-03	1.012E-03	0.000E+00	0.000E+00
-234	U-234	9.996E-01	2.026E-04	1.925E-04	1.739E-04	1.214E-04	4.293E-05	8.027E-07	0.000E+00	0.000E+00
-234	Th-230	9.996E-01	2.315E-09	6.770E-09	1.493E-08	3.684E-08	6.287E-08	3.465E-08	0.000E+00	0.000E+00
-234	Ra-226+D	9.996E-01	8.957E-15	6.100E-14	3.030E-13	2.171E-12	9.783E-12	1.131E-11	0.000E+00	0.000E+00
-234	Pb-210+D	9.996E-01	1.834E-16	2.661E-15	2.881E-14	5.832E-13	6.618E-12	1.546E-11	0.000E+00	0.000E+00
-234	äDSR(j)		2.026E-04	1.925E-04	1.739E-04	1.215E-04	4.299E-05	8.374E-07	0.000E+00	0.000E+00
-234	U-234	1.319E-06	2.674E-10	2.542E-10	2.295E-10	1.603E-10	5.667E-11	1.060E-12	0.000E+00	0.000E+00
-234	Th-230	1.319E-06	3.056E-15	8.936E-15	1.971E-14	4.863E-14	8.299E-14	4.574E-14	0.000E+00	0.000E+00
-234	Ra-226+D	1.319E-06	1.182E-20	8.052E-20	4.000E-19	2.866E-18	1.291E-17	1.493E-17	0.000E+00	0.000E+00
-234	Pb-210+D1	1.319E-06	1.440E-22	2.089E-21	2.262E-20	4.578E-19	5.196E-18	1.214E-17	0.000E+00	0.000E+00
-234	äDSR(j)		2.674E-10	2.542E-10	2.295E-10	1.604E-10	5.675E-11	1.105E-12	0.000E+00	0.000E+00
-234	U-234	1.899E-08	3.850E-12	3.658E-12	3.303E-12	2.307E-12	8.157E-13	1.525E-14	0.000E+00	0.000E+00
-234	Th-230	1.899E-08	4.398E-17	1.286E-16	2.838E-16	7.000E-16	1.195E-15	6.584E-16	0.000E+00	0.000E+00
-234	Ra-226+D	1.899E-08	1.702E-22	1.159E-21	5.757E-21	4.126E-20	1.859E-19	2.149E-19	0.000E+00	0.000E+00
-234	Pb-210+D2	1.899E-08	2.043E-24	2.965E-23	3.210E-22	6.496E-21	7.372E-20	1.723E-19	0.000E+00	0.000E+00
-234	äDSR(j)		3.850E-12	3.658E-12	3.304E-12	2.308E-12	8.169E-13	1.591E-14	0.000E+00	0.000E+00
-234	U-234	2.100E-04	4.256E-08	4.044E-08	3.652E-08	2.551E-08	9.017E-09	1.686E-10	0.000E+00	0.000E+00
-234	Th-230	2.100E-04	4.862E-13	1.422E-12	3.137E-12	7.739E-12	1.321E-11	7.278E-12	0.000E+00	0.000E+00
-234	Ra-226+D1	2.100E-04	1.881E-18	1.281E-17	6.365E-17	4.561E-16	2.055E-15	2.376E-15	0.000E+00	0.000E+00
-234	Pb-210+D	2.100E-04	3.853E-20	5.590E-19	6.052E-18	1.225E-16	1.390E-15	3.248E-15	0.000E+00	0.000E+00
-234	äDSR(j)		4.256E-08	4.044E-08	3.652E-08	2.552E-08	9.030E-09	1.759E-10	0.000E+00	0.000E+00
-234	U-234	2.771E-10	5.618E-14	5.338E-14	4.820E-14	3.367E-14	1.190E-14	2.226E-16	0.000E+00	0.000E+00
-234	Th-230	2.771E-10	6.418E-19	1.877E-18	4.141E-18	1.022E-17	1.743E-17	9.607E-18	0.000E+00	0.000E+00
-234	Ra-226+D1	2.771E-10	2.483E-24	1.691E-23	8.401E-23	6.020E-22	2.712E-21	3.136E-21	0.000E+00	0.000E+00
-234	Pb-210+D1	2.771E-10	3.025E-26	4.389E-25	4.751E-24	9.617E-23	1.091E-21	2.550E-21	0.000E+00	0.000E+00
-234	äDSR(j)		5.618E-14	5.339E-14	4.821E-14	3.368E-14	1.192E-14	2.322E-16	0.000E+00	0.000E+00

ummary : GKP Fire Fighter - Inhalation
ile : C:\USERS\CLAUDE\DOCUMENTS\0 GKP DOSE\RESRAD CW\GKP FIRE FIGHTER - INHALATION.RAD

Dose/Source Ratios Summed Over All Pathways
Parent and Progeny Principal Radionuclide Contributions Indicated

Parent (i)	Product (j)	Thread Fraction	DSR(j,t) At Time in Years (mrem/yr)/(pCi/g) 0.000E+00	1.000E+00	3.000E+00	1.000E+01	3.000E+01	1.000E+02	3.000E+02	1.000E+03
ÄÄÄÄÄÄÄÄÄ	ÄÄÄÄÄÄÄÄÄÄ	ÄÄÄÄÄÄÄÄÄ	ÄÄÄÄÄÄÄÄÄ	ÄÄÄÄÄÄÄÄÄ	ÄÄÄÄÄÄÄÄÄ	ÄÄÄÄÄÄÄÄÄ	ÄÄÄÄÄÄÄÄÄ	ÄÄÄÄÄÄÄÄÄ	ÄÄÄÄÄÄÄÄÄ	ÄÄÄÄÄÄÄÄÄ
-234	U-234	3.989E-12	8.086E 16	7.684E 16	6.938E-16	4.847E-16	1.713E-16	3.203E-18	0.000E+00	0.000E+00
-234	Th-230	3.989E-12	9.238E-21	2.702E-20	5.960E-20	1.470E-19	2.509E-19	1.383E-19	0.000E+00	0.000E+00
-234	Ra-226+D1	3.989E-12	3.575E-26	2.434E-25	1.209E-24	8.666E-24	3.904E-23	4.514E-23	0.000E+00	0.000E+00
-234	Pb-210+D2	3.989E-12	4.292E-28	6.227E-27	6.742E-26	1.365E-24	1.549E-23	3.618E-23	0.000E+00	0.000E+00
-234	äDSR(j)		8.086E-16	7.684E-16	6.939E-16	4.848E-16	1.716E-16	3.342E-18	0.000E+00	0.000E+00
-234	U-234	1.998E-04	4.049E-08	3.848E-08	3.474E-08	2.427E-08	8.579E-09	1.604E-10	0.000E+00	0.000E+00
-234	Th-230	1.998E-04	4.626E-13	1.353E-12	2.984E-12	7.363E-12	1.256E-11	6.925E-12	0.000E+00	0.000E+00
-234	Ra-226+D2	1.998E-04	1.788E-18	1.218E-17	6.050E-17	4.335E-16	1.953E-15	2.258E-15	0.000E+00	0.000E+00
-234	Pb-210+D	1.998E-04	3.666E-20	5.318E-19	5.758E-18	1.165E-16	1.323E-15	3.090E-15	0.000E+00	0.000E+00
-234	äDSR(j)		4.049E-08	3.848E-08	3.475E-08	2.428E-08	8.592E-09	1.673E-10	0.000E+00	0.000E+00
-234	U-234	2.637E-10	5.345E-14	5.079E-14	4.586E-14	3.204E-14	1.132E-14	2.117E-16	0.000E+00	0.000E+00
-234	Th-230	2.637E-10	6.107E-19	1.786E-18	3.940E-18	9.719E-18	1.658E-17	9.140E-18	0.000E+00	0.000E+00
-234	Ra-226+D2	2.637E-10	2.361E-24	1.608E-23	7.986E-23	5.723E-22	2.578E-21	2.981E-21	0.000E+00	0.000E+00
-234	Pb-210+D1	2.637E-10	2.878E-26	4.175E-25	4.520E-24	9.149E-23	1.038E-21	2.426E-21	0.000E+00	0.000E+00
-234	äDSR(j)		5.345E-14	5.079E-14	4.587E-14	3.205E-14	1.134E-14	2.209E-16	0.000E+00	0.000E+00
-234	U-234	3.795E-12	7.693E-16	7.311E-16	6.601E-16	4.611E-16	1.630E-16	3.048E-18	0.000E+00	0.000E+00
-234	Th-230	3.795E-12	8.790E-21	2.571E-20	5.671E-20	1.399E-19	2.387E-19	1.316E-19	0.000E+00	0.000E+00
-234	Ra-226+D2	3.795E-12	3.398E-26	2.314E-25	1.150E-24	8.237E-24	3.711E-23	4.291E-23	0.000E+00	0.000E+00
-234	Pb-210+D2	3.795E-12	4.084E-28	5.925E-27	6.414E-26	1.298E-24	1.473E-23	3.442E-23	0.000E+00	0.000E+00
-234	äDSR(j)		7.693E-16	7.311E-16	6.602E-16	4.613E-16	1.632E-16	3.179E-18	0.000E+00	0.000E+00
-234	U-234	4.196E-08	8.505E-12	8.082E-12	7.298E-12	5.098E-12	1.802E-12	3.369E-14	0.000E+00	0.000E+00
-234	Th-230	4.196E-08	9.717E-17	2.842E-16	6.269E-16	1.547E-15	2.639E-15	1.454E-15	0.000E+00	0.000E+00
-234	Ra-226+D3	4.196E-08	3.756E-22	2.558E-21	1.271E-20	9.106E-20	4.103E-19	4.743E-19	0.000E+00	0.000E+00
-234	Pb-210+D	4.196E-08	7.700E-24	1.117E-22	1.209E-21	2.448E-20	2.778E-19	6.491E-19	0.000E+00	0.000E+00
-234	äDSR(j)		8.505E-12	8.082E-12	7.298E-12	5.099E-12	1.805E-12	3.515E-14	0.000E+00	0.000E+00
-234	U-234	5.538E-14	1.123E-17	1.067E-17	9.633E-18	6.729E-18	2.379E-18	4.448E-20	0.000E+00	0.000E+00
-234	Th-230	5.538E-14	1.283E-22	3.751E-22	8.275E-22	2.041E-21	3.483E-21	1.920E-21	0.000E+00	0.000E+00
-234	Ra-226+D3	5.538E-14	4.959E-28	3.377E-27	1.677E-26	1.202E-25	5.416E-25	6.261E-25	0.000E+00	0.000E+00
-234	Pb-210+D1	5.538E-14	6.045E-30	8.770E-29	9.495E-28	1.922E-26	2.181E-25	5.096E-25	0.000E+00	0.000E+00
-234	äDSR(j)		1.123E-17	1.067E-17	9.634E-18	6.731E-18	2.382E-18	4.640E-20	0.000E+00	0.000E+00
-234	U-234	7.972E-16	1.616E-19	1.536E-19	1.387E-19	9.686E-20	3.424E-20	6.402E-22	0.000E+00	0.000E+00
-234	Th-230	7.972E-16	1.846E-24	5.399E-24	1.191E-23	2.938E-23	5.014E-23	2.763E-23	0.000E+00	0.000E+00
-234	Ra-226+D3	7.972E-16	7.137E-30	4.861E-29	2.414E-28	1.730E-27	7.795E-27	9.012E-27	0.000E+00	0.000E+00
-234	Pb-210+D2	7.972E-16	8.577E-32	1.244E-30	1.347E-29	2.727E-28	3.095E-27	7.230E-27	0.000E+00	0.000E+00
-234	äDSR(j)		1.616E-19	1.536E-19	1.387E-19	9.689E-20	3.429E-20	6.678E-22	0.000E+00	0.000E+00
-234	U-234	2.000E-07	4.054E-11	3.852E-11	3.479E-11	2.430E-11	8.590E-12	1.606E-13	0.000E+00	0.000E+00
-234	Th-230	2.000E-07	4.632E-16	1.355E-15	2.988E-15	7.372E-15	1.258E-14	6.933E-15	0.000E+00	0.000E+00
-234	Ra-226+D4	2.000E-07	1.789E-21	1.219E-20	6.053E-20	4.337E-19	1.954E-18	2.259E-18	0.000E+00	0.000E+00
-234	Pb-210+D	2.000E-07	3.670E-23	5.325E-22	5.765E-21	1.167E-19	1.324E-18	3.094E-18	0.000E+00	0.000E+00
-234	äDSR(j)		4.054E-11	3.853E-11	3.479E-11	2.431E-11	8.602E-12	1.675E-13	0.000E+00	0.000E+00

ummary : GKP Fire Fighter - Inhalation
ile : C:\USERS\CLAUDE\DOCUMENTS\0 GKP DOSE\RESRAD CW\GKP FIRE FIGHTER - INHALATION.RAD

Dose/Source Ratios Summed Over All Pathways
Parent and Progeny Principal Radionuclide Contributions Indicated

Parent (i)	Product (j)	Thread Fraction	DSR(j,t) At Time in Years (mrem/yr)/(pCi/g) 0.000E+00	1.000E+00	3.000E+00	1.000E+01	3.000E+01	1.000E+02	3.000E+02	1.000E+03
ÄÄÄÄÄÄÄÄ	ÄÄÄÄÄÄÄÄÄÄ	ÄÄÄÄÄÄÄÄ	ÄÄÄÄÄÄÄÄ	ÄÄÄÄÄÄÄÄ	ÄÄÄÄÄÄÄÄ	ÄÄÄÄÄÄÄÄ	ÄÄÄÄÄÄÄÄ	ÄÄÄÄÄÄÄÄ	ÄÄÄÄÄÄÄÄ	ÄÄÄÄÄÄÄÄ
-234	U-234	2.640E-13	5.351E-17	5.085E-17	4.592E-17	3.208E-17	1.134E-17	2.120E-19	0.000E+00	0.000E+00
-234	Th-230	2.640E-13	6.114E-22	1.788E-21	3.944E-21	9.731E-21	1.660E-20	9.152E-21	0.000E+00	0.000E+00
-234	Ra-226+D4	2.640E-13	2.362E-27	1.608E-26	7.990E-26	5.725E-25	2.580E-24	2.982E-24	0.000E+00	0.000E+00
-234	Pb-210+D1	2.640E-13	2.881E-29	4.180E-28	4.526E-27	9.160E-26	1.040E-24	2.429E-24	0.000E+00	0.000E+00
-234	äDSR(j)		5.351E-17	5.085E-17	4.592E-17	3.208E-17	1.135E-17	2.212E-19	0.000E+00	0.000E+00
-234	U-234	3.800E-15	7.702E-19	7.320E-19	6.609E-19	4.617E-19	1.632E-19	3.051E-21	0.000E+00	0.000E+00
-234	Th-230	3.800E-15	8.800E-24	2.574E-23	5.677E-23	1.401E-22	2.390E-22	1.317E-22	0.000E+00	0.000E+00
-234	Ra-226+D4	3.800E-15	3.400E-29	2.315E-28	1.150E-27	8.241E-27	3.713E-26	4.293E-26	0.000E+00	0.000E+00
-234	Pb-210+D2	3.800E-15	4.088E-31	5.932E-30	6.422E-29	1.300E-27	1.475E-26	3.447E-26	0.000E+00	0.000E+00
-234	äDSR(j)		7.702E-19	7.320E-19	6.610E-19	4.618E-19	1.634E-19	3.183E-21	0.000E+00	0.000E+00
-235+D	U-235+D	9.835E-01	1.858E-04	1.765E-04	1.594E-04	1.113E-04	3.936E-05	7.361E-07	0.000E+00	0.000E+00
-235+D	Pa-231	9.835E-01	2.028E-08	5.814E-08	1.227E-07	2.573E-07	2.642E-07	1.627E-08	0.000E+00	0.000E+00
-235+D	Ac-227+D	9.835E-01	1.099E-09	7.164E-09	3.229E-08	1.651E-07	3.086E-07	2.506E-08	0.000E+00	0.000E+00
-235+D	äDSR(j)		1.858E-04	1.766E-04	1.596E-04	1.118E-04	3.993E-05	7.775E-07	0.000E+00	0.000E+00
-235+D	U-235+D	2.722E-03	5.141E-07	4.886E-07	4.411E-07	3.082E-07	1.089E-07	2.037E-09	0.000E+00	0.000E+00
-235+D	Pa-231	2.722E-03	5.612E-11	1.609E-10	3.395E-10	7.121E-10	7.313E-10	4.503E-11	0.000E+00	0.000E+00
-235+D	Ac-227+D1	2.722E-03	3.041E-12	1.983E-11	8.936E-11	4.570E-10	8.540E-10	6.936E-11	0.000E+00	0.000E+00
-235+D	äDSR(j)		5.142E-07	4.887E-07	4.416E-07	3.093E-07	1.105E-07	2.152E-09	0.000E+00	0.000E+00
-235+D	U-235+D	1.376E-02	2.599E-06	2.470E-06	2.230E-06	1.558E-06	5.508E-07	1.030E-08	0.000E+00	0.000E+00
-235+D	Pa-231	1.376E-02	2.837E-10	8.134E-10	1.717E-09	3.600E-09	3.697E-09	2.277E-10	0.000E+00	0.000E+00
-235+D	Ac-227+D2	1.376E-02	1.534E-11	1.000E-10	4.507E-10	2.305E-09	4.307E-09	3.498E-10	0.000E+00	0.000E+00
-235+D	äDSR(j)		2.599E-06	2.471E-06	2.232E-06	1.564E-06	5.588E-07	1.088E-08	0.000E+00	0.000E+00
-235+D	U-235+D	3.809E-05	7.193E-09	6.836E-09	6.173E-09	4.312E-09	1.524E-09	2.851E-11	0.000E+00	0.000E+00
-235+D	Pa-231	3.809E-05	7.852E-13	2.251E-12	4.751E-12	9.964E-12	1.023E-11	6.301E-13	0.000E+00	0.000E+00
-235+D	Ac-227+D3	3.809E-05	4.244E-14	2.768E-13	1.247E-12	6.379E-12	1.192E-11	9.681E-13	0.000E+00	0.000E+00
-235+D	äDSR(j)		7.194E-09	6.839E-09	6.179E-09	4.328E-09	1.546E-09	3.011E-11	0.000E+00	0.000E+00
-235+D	U-235+D	8.257E-07	1.560E-10	1.482E-10	1.338E-10	9.348E-11	3.305E-11	6.180E-13	0.000E+00	0.000E+00
-235+D	Pa-231	8.257E-07	1.702E-14	4.881E-14	1.030E-13	2.160E-13	2.218E-13	1.366E-14	0.000E+00	0.000E+00
-235+D	Ac-227+D4	8.257E-07	9.191E-16	5.994E-15	2.701E-14	1.381E-13	2.581E-13	2.097E-14	0.000E+00	0.000E+00
-235+D	äDSR(j)		1.560E-10	1.483E-10	1.340E-10	9.384E-11	3.353E-11	6.527E-13	0.000E+00	0.000E+00
-235+D	U-235+D	2.285E-09	4.316E-13	4.102E-13	3.704E-13	2.587E-13	9.146E-14	1.711E-15	0.000E+00	0.000E+00
-235+D	Pa-231	2.285E-09	4.712E-17	1.351E-16	2.851E-16	5.979E-16	6.139E-16	3.781E-17	0.000E+00	0.000E+00
-235+D	Ac-227+D5	2.285E-09	2.544E-18	1.659E-17	7.476E-17	3.823E-16	7.145E-16	5.802E-17	0.000E+00	0.000E+00
-235+D	äDSR(j)		4.317E-13	4.103E-13	3.707E-13	2.597E-13	9.279E-14	1.806E-15	0.000E+00	0.000E+00
-238	U-238	5.450E-07	9.875E-11	9.384E-11	8.474E-11	5.919E-11	2.093E-11	3.913E-13	0.000E+00	0.000E+00

ummary : GKP Fire Fighter - Inhalation
ile : C:\USERS\CLAUDE\DOCUMENTS\0 GKP DOSE\RESRAD CW\GKP FIRE FIGHTER - INHALATION.RAD

Dose/Source Ratios Summed Over All Pathways
Parent and Progeny Principal Radionuclide Contributions Indicated

Parent	Product	Thread	DSR(j,t) At Time in Years (mrem/yr)/(pCi/g)							
(i)	(j)	Fraction	0.000E+00	1.000E+00	3.000E+00	1.000E+01	3.000E+01	1.000E+02	3.000E+02	1.000E+03
ÄÄÄÄÄÄÄÄÄ	ÄÄÄÄÄÄÄÄÄÄ	ÄÄÄÄÄÄÄÄÄ	ÄÄÄÄÄÄÄÄÄ	ÄÄÄÄÄÄÄÄÄ	ÄÄÄÄÄÄÄÄÄ	ÄÄÄÄÄÄÄÄÄ	ÄÄÄÄÄÄÄÄÄ	ÄÄÄÄÄÄÄÄÄ	ÄÄÄÄÄÄÄÄÄ	ÄÄÄÄÄÄÄÄÄ
-238+D	U-238+D	1.599E-03	2.899E-07	2.755E-07	2.487E 07	1.730E-07	6.143E-08	1.149E-09	0.000E+00	0.000E+00
-238+D	U-234	1.599E-03	4.538E-13	1.301E-12	2.746E-12	5.758E-12	5.914E-12	3.645E-13	0.000E+00	0.000E+00
-238+D	Th-230	1.599E-03	3.458E-18	2.347E-17	1.157E-16	8.068E-16	3.386E-15	3.354E-15	0.000E+00	0.000E+00
-238+D	Ra-226+D	1.599E-03	1.006E-23	1.463E-22	1.590E-21	3.268E-20	3.856E-19	9.834E-19	0.000E+00	0.000E+00
-238+D	Pb-210+D	1.599E-03	1.652E-25	4.942E-24	1.151E-22	6.750E-21	2.098E-19	1.233E-18	0.000E+00	0.000E+00
-238+D	äDSR(j)		2.899E-07	2.755E-07	2.487E-07	1.738E-07	6.143E-08	1.149E-09	0.000E+00	0.000E+00
-238+D	U-238+D	2.111E-09	3.826E-13	3.636E-13	3.283E-13	2.294E-13	8.108E-14	1.516E-15	0.000E+00	0.000E+00
-238+D	U-234	2.111E-09	5.990E-19	1.717E-18	3.624E-18	7.601E-18	7.807E-18	4.811E-19	0.000E+00	0.000E+00
-238+D	Th-230	2.111E-09	4.565E-24	3.098E-23	1.527E-22	1.065E-21	4.470E-21	4.427E-21	0.000E+00	0.000E+00
-238+D	Ra-226+D	2.111E-09	1.328E-29	1.931E-28	2.099E-27	4.314E-26	5.090E-25	1.298E-24	0.000E+00	0.000E+00
-238+D	Pb-210+D1	2.111E-09	1.297E-31	3.880E-30	9.034E-29	5.299E-27	1.647E-25	9.678E-25	0.000E+00	0.000E+00
-238+D	äDSR(j)		3.826E-13	3.636E-13	3.284E-13	2.294E-13	8.109E-14	1.517E-15	0.000E+00	0.000E+00
-238+D	U-238+D	3.039E-11	5.508E-15	5.234E-15	4.726E-15	3.301E-15	1.167E-15	2.183E-17	0.000E+00	0.000E+00
-238+D	U-234	3.039E-11	8.621E-21	2.472E-20	5.217E-20	1.094E-19	1.124E-19	6.925E-21	0.000E+00	0.000E+00
-238+D	Th-230	3.039E-11	6.571E-26	4.459E-25	2.198E-24	1.533E-23	6.434E-23	6.372E-23	0.000E+00	0.000E+00
-238+D	Ra-226+D	3.039E-11	1.912E-31	2.779E-30	3.022E-29	6.209E-28	7.327E-27	1.868E-26	0.000E+00	0.000E+00
-238+D	Pb-210+D2	3.039E-11	1.840E-33	5.505E-32	1.282E-30	7.519E-29	2.337E-27	1.373E-26	0.000E+00	0.000E+00
-238+D	äDSR(j)		5.508E-15	5.234E-15	4.726E-15	3.302E-15	1.167E-15	2.183E-17	0.000E+00	0.000E+00
-238+D	U-238+D	3.359E-07	6.089E-11	5.786E-11	5.225E-11	3.650E-11	1.290E-11	2.413E-13	0.000E+00	0.000E+00
-238+D	U-234	3.359E-07	9.531E-17	2.733E-16	5.767E-16	1.210E-15	1.242E-15	7.655E-17	0.000E+00	0.000E+00
-238+D	Th-230	3.359E-07	7.264E-22	4.930E-21	2.430E-20	1.695E-19	7.112E-19	7.044E-19	0.000E+00	0.000E+00
-238+D	Ra-226+D1	3.359E-07	2.113E-27	3.072E-26	3.340E-25	6.864E-24	8.100E-23	2.066E-22	0.000E+00	0.000E+00
-238+D	Pb-210+D	3.359E-07	3.470E-29	1.038E-27	2.417E-26	1.418E-24	4.407E-23	2.589E-22	0.000E+00	0.000E+00
-238+D	äDSR(j)		6.089E-11	5.786E-11	5.225E-11	3.650E-11	1.290E-11	2.414E-13	0.000E+00	0.000E+00
-238+D	U-238+D	4.434E-13	8.037E-17	7.638E-17	6.897E-17	4.818E-17	1.703E-17	3.185E-19	0.000E+00	0.000E+00
-238+D	U-234	4.434E-13	1.258E-22	3.607E-22	7.612E-22	1.597E-21	1.640E-21	1.010E-22	0.000E+00	0.000E+00
-238+D	Th-230	4.434E-13	9.588E-28	6.508E-27	3.208E-26	2.237E-25	9.388E-25	9.298E-25	0.000E+00	0.000E+00
-238+D	Ra-226+D1	4.434E-13	2.790E-33	4.055E-32	4.409E-31	9.060E-30	1.069E-28	2.727E-28	0.000E+00	0.000E+00
-238+D	Pb-210+D1	4.434E-13	2.724E-35	8.149E-34	1.898E-32	1.113E-30	3.460E-29	2.033E-28	0.000E+00	0.000E+00
-238+D	äDSR(j)		8.037E-17	7.638E-17	6.897E-17	4.818E-17	1.703E-17	3.186E-19	0.000E+00	0.000E+00
-238+D	U-238+D	6.383E-15	1.157E-18	1.099E-18	9.927E-19	6.935E-19	2.451E-19	4.585E-21	0.000E+00	0.000E+00
-238+D	U-234	6.383E-15	1.811E-24	5.192E-24	1.096E-23	2.298E-23	2.360E-23	1.454E-24	0.000E+00	0.000E+00
-238+D	Th-230	6.383E-15	1.380E-29	9.367E-29	4.617E-28	3.220E-27	1.351E-26	1.338E-26	0.000E+00	0.000E+00
-238+D	Ra-226+D1	6.383E-15	4.015E-35	5.837E-34	6.347E-33	1.304E-31	1.539E-30	3.925E-30	0.000E+00	0.000E+00
-238+D	Pb-210+D2	6.383E-15	3.866E-37	1.156E-35	2.693E-34	1.579E-32	4.909E-31	2.885E-30	0.000E+00	0.000E+00
-238+D	äDSR(j)		1.157E-18	1.099E-18	9.927E-19	6.935E-19	2.452E-19	4.586E-21	0.000E+00	0.000E+00

ummary : GKP Fire Fighter - Inhalation
ile : C:\USERS\CLAUDE\DOCUMENTS\0 GKP DOSE\RESRAD CW\GKP FIRE FIGHTER - INHALATION.RAD

Dose/Source Ratios Summed Over All Pathways
Parent and Progeny Principal Radionuclide Contributions Indicated

Parent (i)	Product (j)	Thread Fraction	DSR(j,t) At Time in Years (mrem/yr)/(pCi/g) 0.000E+00	1.000E+00	3.000E+00	1.000E+01	3.000E+01	1.000E+02	3.000E+02	1.000E+03
-238+D	U-238+D	3.196E-07	5.793E-11	5.505E-11	4.971E-11	3.472E-11	1.228E-11	2.296E-13	0.000E+00	0.000E+00
-238+D	U-234	3.196E-07	9.068E-17	2.600E-16	5.487E-16	1.151E-15	1.182E-15	7.283E-17	0.000E+00	0.000E+00
-238+D	Th-230	3.196E-07	6.911E-22	4.690E-21	2.312E-20	1.612E-19	6.767E-19	6.702E-19	0.000E+00	0.000E+00
-238+D	Ra-226+D2	3.196E-07	2.009E-27	2.920E-26	3.175E-25	6.525E-24	7.699E-23	1.963E-22	0.000E+00	0.000E+00
-238+D	Pb-210+D	3.196E-07	3.302E-29	9.876E-28	2.300E-26	1.349E-24	4.193E-23	2.464E-22	0.000E+00	0.000E+00
-238+D	äDSR(j)		5.793E-11	5.505E-11	4.971E-11	3.473E-11	1.228E-11	2.296E-13	0.000E+00	0.000E+00
-238+D	U-238+D	4.219E-13	7.647E-17	7.267E-17	6.562E-17	4.584E-17	1.620E-17	3.030E-19	0.000E+00	0.000E+00
-238+D	U-234	4.219E-13	1.197E-22	3.432E-22	7.242E-22	1.519E-21	1.560E-21	9.614E-23	0.000E+00	0.000E+00
-238+D	Th-230	4.219E-13	9.123E-28	6.191E-27	3.052E-26	2.128E-25	8.932E-25	8.846E-25	0.000E+00	0.000E+00
-238+D	Ra-226+D2	4.219E-13	2.652E-33	3.855E-32	4.191E-31	8.613E-30	1.016E-28	2.592E-28	0.000E+00	0.000E+00
-238+D	Pb-210+D1	4.219E-13	2.592E-35	7.753E-34	1.805E-32	1.059E-30	3.292E-29	1.934E-28	0.000E+00	0.000E+00
-238+D	äDSR(j)		7.647E-17	7.267E-17	6.562E-17	4.584E-17	1.621E-17	3.031E-19	0.000E+00	0.000E+00
-238+D	U-238+D	6.073E-15	1.101E-18	1.046E-18	9.445E-19	6.598E-19	2.332E-19	4.362E-21	0.000E+00	0.000E+00
-238+D	U-234	6.073E-15	1.723E-24	4.940E-24	1.042E-23	2.186E-23	2.246E-23	1.384E-24	0.000E+00	0.000E+00
-238+D	Th-230	6.073E-15	1.313E-29	8.912E-29	4.393E-28	3.063E-27	1.286E-26	1.273E-26	0.000E+00	0.000E+00
-238+D	Ra-226+D2	6.073E-15	3.817E-35	5.549E-34	6.033E-33	1.240E-31	1.463E-30	3.731E-30	0.000E+00	0.000E+00
-238+D	Pb-210+D2	6.073E-15	3.678E-37	1.100E-35	2.562E-34	1.503E-32	4.671E-31	2.744E-30	0.000E+00	0.000E+00
-238+D	äDSR(j)		1.101E-18	1.046E-18	9.445E-19	6.598E-19	2.333E-19	4.363E-21	0.000E+00	0.000E+00
-238+D	U-238+D	6.713E-11	1.217E-14	1.156E-14	1.044E-14	7.294E-15	2.578E-15	4.822E-17	0.000E+00	0.000E+00
-238+D	U-234	6.713E-11	1.905E-20	5.461E-20	1.152E-19	2.417E-19	2.483E-19	1.530E-20	0.000E+00	0.000E+00
-238+D	Th-230	6.713E-11	1.452E-25	9.852E-25	4.856E-24	3.387E-23	1.421E-22	1.408E-22	0.000E+00	0.000E+00
-238+D	Ra-226+D3	6.713E-11	4.220E-31	6.134E-30	6.669E-29	1.370E-27	1.617E-26	4.124E-26	0.000E+00	0.000E+00
-238+D	Pb-210+D	6.713E-11	6.935E-33	2.074E-31	4.830E-30	2.833E-28	8.807E-27	5.175E-26	0.000E+00	0.000E+00
-238+D	äDSR(j)		1.217E-14	1.156E-14	1.044E-14	7.294E-15	2.579E-15	4.824E-17	0.000E+00	0.000E+00
-238+D	U-238+D	8.862E-17	1.606E-20	1.526E-20	1.378E-20	9.628E-21	3.403E-21	6.365E-23	0.000E+00	0.000E+00
-238+D	U-234	8.862E-17	2.514E-26	7.209E-26	1.521E-25	3.191E-25	3.277E-25	2.019E-26	0.000E+00	0.000E+00
-238+D	Th-230	8.862E-17	1.916E-31	1.300E-30	6.410E-30	4.470E-29	1.876E-28	1.858E-28	0.000E+00	0.000E+00
-238+D	Ra-226+D3	8.862E-17	5.570E-37	8.097E-36	8.803E-35	1.809E-33	2.135E-32	5.444E-32	0.000E+00	0.000E+00
-238+D	Pb-210+D1	8.862E-17	5.444E-39	1.629E-37	3.792E-36	2.224E-34	6.914E-33	4.062E-32	0.000E+00	0.000E+00
-238+D	äDSR(j)		1.606E-20	1.526E-20	1.378E-20	9.628E-21	3.404E-21	6.367E-23	0.000E+00	0.000E+00
-238+D	U-238+D	1.276E-18	2.312E-22	2.197E-22	1.984E-22	1.386E-22	4.899E-23	9.162E-25	0.000E+00	0.000E+00
-238+D	U-234	1.276E-18	3.619E-28	1.038E-27	2.190E-27	4.592E-27	4.717E-27	2.907E-28	0.000E+00	0.000E+00
-238+D	Th-230	1.276E-18	2.758E-33	1.872E-32	9.226E-32	6.434E-31	2.701E-30	2.675E-30	0.000E+00	0.000E+00
-238+D	Ra-226+D3	1.276E-18	8.017E-39	1.165E-37	1.267E-36	2.604E-35	3.073E-34	7.836E-34	0.000E+00	0.000E+00
-238+D	Pb-210+D2	1.276E-18	7.725E-41	2.311E-39	5.381E-38	3.156E-36	9.810E-35	5.764E-34	0.000E+00	0.000E+00
-238+D	äDSR(j)		2.312E-22	2.197E-22	1.984E-22	1.386E-22	4.899E-23	9.165E-25	0.000E+00	0.000E+00

ummary : GKP Fire Fighter - Inhalation
ile : C:\USERS\CLAUDE\DOCUMENTS\0 GKP DOSE\RESRAD CW\GKP FIRE FIGHTER - INHALATION.RAD

Dose/Source Ratios Summed Over All Pathways
Parent and Progeny Principal Radionuclide Contributions Indicated

Parent (i)	Product (j)	Thread Fraction	DSR(j,t) At Time in Years (mrem/yr)/(pCi/g) 0.000E+00	1.000E+00	3.000E+00	1.000E+01	3.000E+01	1.000E+02	3.000E+02	1.000E+03
-238+D	U-238+D	3.200E-10	5.800E-14	5.512E-14	4.977E-14	3.477E-14	1.229E-14	2.298E-16	0.000E+00	0.000E+00
-238+D	U-234	3.200E-10	9.079E-20	2.603E-19	5.493E-19	1.152E-18	1.183E-18	7.292E-20	0.000E+00	0.000E+00
-238+D	Th-230	3.200E-10	6.919E-25	4.696E-24	2.315E-23	1.614E-22	6.775E-22	6.710E-22	0.000E+00	0.000E+00
-238+D	Ra-226+D4	3.200E-10	2.010E-30	2.922E-29	3.177E-28	6.528E-27	7.703E-26	1.964E-25	0.000E+00	0.000E+00
-238+D	Pb-210+D	3.200E-10	3.306E-32	9.888E-31	2.302E-29	1.351E-27	4.198E-26	2.467E-25	0.000E+00	0.000E+00
-238+D	äDSR(j)		5.800E-14	5.512E-14	4.977E-14	3.477E-14	1.229E-14	2.299E-16	0.000E+00	0.000E+00
-238+D	U-238+D	4.224E-16	7.656E-20	7.276E-20	6.570E-20	4.589E-20	1.622E-20	3.034E-22	0.000E+00	0.000E+00
-238+D	U-234	4.224E-16	1.198E-25	3.436E-25	7.251E-25	1.521E-24	1.562E-24	9.626E-26	0.000E+00	0.000E+00
-238+D	Th-230	4.224E-16	9.134E-31	6.199E-30	3.055E-29	2.131E-28	8.943E-28	8.857E-28	0.000E+00	0.000E+00
-238+D	Ra-226+D4	4.224E-16	2.653E-36	3.857E-35	4.193E-34	8.617E-33	1.017E-31	2.593E-31	0.000E+00	0.000E+00
-238+D	Pb-210+D1	4.224E-16	2.595E-38	7.763E-37	1.808E-35	1.060E-33	3.296E-32	1.936E-31	0.000E+00	0.000E+00
-238+D	äDSR(j)		7.656E-20	7.276E-20	6.570E-20	4.589E-20	1.622E-20	3.035E-22	0.000E+00	0.000E+00
-238+D	U-238+D	6.080E-18	1.102E-21	1.047E-21	9.456E-22	6.606E-22	2.335E-22	4.367E-24	0.000E+00	0.000E+00
-238+D	U-234	6.080E-18	1.725E-27	4.946E-27	1.044E-26	2.189E-26	2.248E-26	1.386E-27	0.000E+00	0.000E+00
-238+D	Th-230	6.080E-18	1.315E-32	8.923E-32	4.398E-31	3.067E-30	1.287E-29	1.275E-29	0.000E+00	0.000E+00
-238+D	Ra-226+D4	6.080E-18	3.819E-38	5.551E-37	6.036E-36	1.240E-34	1.464E-33	3.732E-33	0.000E+00	0.000E+00
-238+D	Pb-210+D2	6.080E-18	3.682E-40	1.101E-38	2.565E-37	1.504E-35	4.676E-34	2.748E-33	0.000E+00	0.000E+00
-238+D	äDSR(j)		1.102E-21	1.047E-21	9.456E-22	6.606E-22	2.335E-22	4.369E-24	0.000E+00	0.000E+00
-238+D1	U-238+D1	9.980E-01	1.809E-04	1.719E-04	1.552E-04	1.084E-04	3.833E-05	7.168E-07	0.000E+00	0.000E+00
-238+D1	U-234	9.980E-01	2.831E-10	8.118E-10	1.713E-09	3.593E-09	3.691E-09	2.274E-10	0.000E+00	0.000E+00
-238+D1	Th-230	9.980E-01	2.158E-15	1.465E-14	7.219E-14	5.034E-13	2.113E-12	2.093E-12	0.000E+00	0.000E+00
-238+D1	Ra-226+D	9.980E-01	6.278E-21	9.127E-20	9.923E-19	2.039E-17	2.406E-16	6.136E-16	0.000E+00	0.000E+00
-238+D1	Pb-210+D	9.980E-01	1.031E-22	3.084E-21	7.181E-20	4.212E-18	1.309E-16	7.692E-16	0.000E+00	0.000E+00
-238+D1	äDSR(j)		1.809E-04	1.719E-04	1.552E-04	1.084E-04	3.833E-05	7.171E-07	0.000E+00	0.000E+00
-238+D1	U-238+D1	1.317E-06	2.388E-10	2.269E-10	2.049E-10	1.431E-10	5.060E-11	9.462E-13	0.000E+00	0.000E+00
-238+D1	U-234	1.317E-06	3.737E-16	1.072E-15	2.261E-15	4.743E-15	4.872E-15	3.002E-16	0.000E+00	0.000E+00
-238+D1	Th-230	1.317E-06	2.849E-21	1.933E-20	9.529E-20	6.645E-19	2.789E-18	2.762E-18	0.000E+00	0.000E+00
-238+D1	Ra-226+D	1.317E-06	8.288E-27	1.205E-25	1.310E-24	2.692E-23	3.176E-22	8.100E-22	0.000E+00	0.000E+00
-238+D1	Pb-210+D1	1.317E-06	8.094E-29	2.421E-27	5.637E-26	3.307E-24	1.028E-22	6.039E-22	0.000E+00	0.000E+00
-238+D1	äDSR(j)		2.388E-10	2.269E-10	2.049E-10	1.431E-10	5.060E-11	9.465E-13	0.000E+00	0.000E+00
-238+D1	U-238+D1	1.896E-08	3.437E-12	3.266E-12	2.949E-12	2.060E-12	7.283E-13	1.362E-14	0.000E+00	0.000E+00
-238+D1	U-234	1.896E-08	5.380E-18	1.542E-17	3.255E-17	6.827E-17	7.012E-17	4.321E-18	0.000E+00	0.000E+00
-238+D1	Th-230	1.896E-08	4.100E-23	2.783E-22	1.372E-21	9.565E-21	4.015E-20	3.976E-20	0.000E+00	0.000E+00
-238+D1	Ra-226+D	1.896E-08	1.193E-28	1.734E-27	1.885E-26	3.874E-25	4.572E-24	1.166E-23	0.000E+00	0.000E+00
-238+D1	Pb-210+D2	1.896E-08	1.148E-30	3.435E-29	7.999E-28	4.692E-26	1.458E-24	8.569E-24	0.000E+00	0.000E+00
-238+D1	äDSR(j)		3.437E-12	3.266E-12	2.949E-12	2.060E-12	7.283E-13	1.362E-14	0.000E+00	0.000E+00

ummary : GKP Fire Fighter - Inhalation
ile : C:\USERS\CLAUDE\DOCUMENTS\0 GKP DOSE\RESRAD CW\GKP FIRE FIGHTER - INHALATION.RAD

Dose/Source Ratios Summed Over All Pathways
Parent and Progeny Principal Radionuclide Contributions Indicated

Parent	Product	Thread	DSR(j,t) At Time in Years (mrem/yr)/(pCi/g)							
(i)	(j)	Fraction	0.000E+00	1.000E+00	3.000E+00	1.000E+01	3.000E+01	1.000E+02	3.000E+02	1.000E+03
ÄÄÄÄÄÄÄÄ	ÄÄÄÄÄÄÄÄÄÄ	ÄÄÄÄÄÄÄÄ	ÄÄÄÄÄÄÄÄ	ÄÄÄÄÄÄÄÄ	ÄÄÄÄÄÄÄÄ	ÄÄÄÄÄÄÄÄ	ÄÄÄÄÄÄÄÄ	ÄÄÄÄÄÄÄÄ	ÄÄÄÄÄÄÄÄ	ÄÄÄÄÄÄÄÄ
-238+D1	U-238+D1	2.096E-04	3.799E-08	3.611E-08	3.260E-08	2.277E-08	8.051E-09	1.506E-10	0.000E+00	0.000E+00
-238+D1	U-234	2.096E-04	5.947E-14	1.705E-13	3.599E-13	7.547E-13	7.752E-13	4.777E-14	0.000E+00	0.000E+00
-238+D1	Th-230	2.096E-04	4.533E-19	3.076E-18	1.516E-17	1.057E-16	4.438E-16	4.395E-16	0.000E+00	0.000E+00
-238+D1	Ra-226+D1	2.096E-04	1.319E-24	1.917E-23	2.084E-22	4.283E-21	5.054E-20	1.289E-19	0.000E+00	0.000E+00
-238+D1	Pb-210+D	2.096E-04	2.165E-26	6.477E-25	1.508E-23	8.847E-22	2.750E-20	1.616E-19	0.000E+00	0.000E+00
-238+D1	äDSR(j)		3.799E-08	3.611E-08	3.260E-08	2.278E-08	8.052E-09	1.506E-10	0.000E+00	0.000E+00
-238+D1	U-238+D1	2.767E-10	5.015E-14	4.766E-14	4.304E-14	3.006E-14	1.063E-14	1.987E-16	0.000E+00	0.000E+00
-238+D1	U-234	2.767E-10	7.850E-20	2.251E-19	4.750E-19	9.962E-19	1.023E-18	6.305E-20	0.000E+00	0.000E+00
-238+D1	Th-230	2.767E-10	5.983E-25	4.061E-24	2.001E-23	1.396E-22	5.858E-22	5.802E-22	0.000E+00	0.000E+00
-238+D1	Ra-226+D1	2.767E-10	1.741E-30	2.530E-29	2.751E-28	5.654E-27	6.672E-26	1.701E-25	0.000E+00	0.000E+00
-238+D1	Pb-210+D1	2.767E-10	1.700E-32	5.085E-31	1.184E-29	6.946E-28	2.159E-26	1.269E-25	0.000E+00	0.000E+00
-238+D1	äDSR(j)		5.015E-14	4.766E-14	4.304E-14	3.006E-14	1.063E-14	1.988E-16	0.000E+00	0.000E+00
-238+D1	U-238+D1	3.983E-12	7.219E-16	6.860E-16	6.194E-16	4.327E-16	1.530E-16	2.861E-18	0.000E+00	0.000E+00
-238+D1	U-234	3.983E-12	1.130E-21	3.240E-21	6.837E-21	1.434E-20	1.473E-20	9.076E-22	0.000E+00	0.000E+00
-238+D1	Th-230	3.983E-12	8.612E-27	5.845E-26	2.881E-25	2.009E-24	8.432E-24	8.351E-24	0.000E+00	0.000E+00
-238+D1	Ra-226+D1	3.983E-12	2.506E-32	3.642E-31	3.960E-30	8.138E-29	9.603E-28	2.449E-27	0.000E+00	0.000E+00
-238+D1	Pb-210+D2	3.983E-12	2.412E-34	7.215E-33	1.680E-31	9.855E-30	3.063E-28	1.800E-27	0.000E+00	0.000E+00
-238+D1	äDSR(j)		7.219E-16	6.860E-16	6.195E-16	4.327E-16	1.530E-16	2.862E-18	0.000E+00	0.000E+00
-238+D1	U-238+D1	1.994E-04	3.615E-08	3.435E-08	3.102E-08	2.167E-08	7.660E-09	1.433E-10	0.000E+00	0.000E+00
-238+D1	U-234	1.994E-04	5.658E-14	1.622E-13	3.424E-13	7.181E-13	7.375E-13	4.545E-14	0.000E+00	0.000E+00
-238+D1	Th-230	1.994E-04	4.313E-19	2.927E-18	1.443E-17	1.006E-16	4.222E-16	4.182E-16	0.000E+00	0.000E+00
-238+D1	Ra-226+D2	1.994E-04	1.254E-24	1.822E-23	1.981E-22	4.071E-21	4.804E-20	1.225E-19	0.000E+00	0.000E+00
-238+D1	Pb-210+D	1.994E-04	2.060E-26	6.162E-25	1.435E-23	8.417E-22	2.616E-20	1.537E-19	0.000E+00	0.000E+00
-238+D1	äDSR(j)		3.615E-08	3.435E-08	3.102E-08	2.167E-08	7.661E-09	1.433E-10	0.000E+00	0.000E+00
-238+D1	U-238+D1	2.633E-10	4.772E-14	4.534E-14	4.094E-14	2.860E-14	1.011E-14	1.891E-16	0.000E+00	0.000E+00
-238+D1	U-234	2.633E-10	7.469E-20	2.142E-19	4.519E-19	9.478E-19	9.735E-19	5.999E-20	0.000E+00	0.000E+00
-238+D1	Th-230	2.633E-10	5.693E-25	3.863E-24	1.904E-23	1.328E-22	5.574E-22	5.520E-22	0.000E+00	0.000E+00
-238+D1	Ra-226+D2	2.633E-10	1.655E-30	2.405E-29	2.615E-28	5.374E-27	6.342E-26	1.617E-25	0.000E+00	0.000E+00
-238+D1	Pb-210+D1	2.633E-10	1.617E-32	4.838E-31	1.127E-29	6.608E-28	2.054E-26	1.207E-25	0.000E+00	0.000E+00
-238+D1	äDSR(j)		4.772E-14	4.534E-14	4.095E-14	2.860E-14	1.011E-14	1.892E-16	0.000E+00	0.000E+00
-238+D1	U-238+D1	3.789E-12	6.868E-16	6.527E-16	5.894E-16	4.117E-16	1.455E-16	2.722E-18	0.000E+00	0.000E+00
-238+D1	U-234	3.789E-12	1.075E-21	3.082E-21	6.505E-21	1.364E-20	1.401E-20	8.635E-22	0.000E+00	0.000E+00
-238+D1	Th-230	3.789E-12	8.194E-27	5.561E-26	2.741E-25	1.912E-24	8.023E-24	7.946E-24	0.000E+00	0.000E+00
-238+D1	Ra-226+D2	3.789E-12	2.382E-32	3.462E-31	3.765E-30	7.736E-29	9.129E-28	2.328E-27	0.000E+00	0.000E+00
-238+D1	Pb-210+D2	3.789E-12	2.295E-34	6.865E-33	1.599E-31	9.377E-30	2.914E-28	1.712E-27	0.000E+00	0.000E+00
-238+D1	äDSR(j)		6.868E-16	6.527E-16	5.894E-16	4.117E-16	1.456E-16	2.723E-18	0.000E+00	0.000E+00

ummary : GKP Fire Fighter - Inhalation
ile : C:\USERS\CLAUDE\DOCUMENTS\0 GKP DOSE\RESRAD CW\GKP FIRE FIGHTER - INHALATION.RAD

Dose/Source Ratios Summed Over All Pathways
Parent and Progeny Principal Radionuclide Contributions Indicated

Parent (i)	Product (j)	Thread Fraction	DSR(j,t) At Time in Years (mrem/yr)/(pCi/g) 0.000E+00	1.000E+00	3.000E+00	1.000E+01	3.000E+01	1.000E+02	3.000E+02	1.000E+03
ÄÄÄÄÄÄÄÄ	ÄÄÄÄÄÄÄÄÄÄ	ÄÄÄÄÄÄÄÄ	ÄÄÄÄÄÄÄÄ	ÄÄÄÄÄÄÄÄ	ÄÄÄÄÄÄÄÄ	ÄÄÄÄÄÄÄÄ	ÄÄÄÄÄÄÄÄ	ÄÄÄÄÄÄÄÄ	ÄÄÄÄÄÄÄÄ	ÄÄÄÄÄÄÄÄ
-238+D1	U-238+D1	4.189E-08	7.593E-12	7.215E-12	6.515E-12	4.551E-12	1.609E-12	3.009E-14	0.000E+00	0.000E+00
-238+D1	U-234	4.189E-08	1.188E-17	3.408E-17	7.191E-17	1.508E-16	1.549E-16	9.546E-18	0.000E+00	0.000E+00
-238+D1	Th-230	4.189E-08	9.058E-23	6.148E-22	3.030E-21	2.113E-20	8.869E-20	8.784E-20	0.000E+00	0.000E+00
-238+D1	Ra-226+D3	4.189E-08	2.633E-28	3.828E-27	4.162E-26	8.552E-25	1.009E-23	2.573E-23	0.000E+00	0.000E+00
-238+D1	Pb-210+D	4.189E-08	4.327E-30	1.294E-28	3.014E-27	1.768E-25	5.495E-24	3.229E-23	0.000E+00	0.000E+00
-238+D1	äDSR(j)		7.593E-12	7.215E-12	6.515E-12	4.551E-12	1.609E-12	3.010E-14	0.000E+00	0.000E+00
-238+D1	U-238+D1	5.530E-14	1.002E-17	9.524E-18	8.600E-18	6.008E-18	2.124E-18	3.972E-20	0.000E+00	0.000E+00
-238+D1	U-234	5.530E-14	1.569E-23	4.498E-23	9.493E-23	1.991E-22	2.045E-22	1.260E-23	0.000E+00	0.000E+00
-238+D1	Th-230	5.530E-14	1.196E-28	8.115E-28	4.000E-27	2.789E-26	1.171E-25	1.159E-25	0.000E+00	0.000E+00
-238+D1	Ra-226+D3	5.530E-14	3.476E-34	5.052E-33	5.493E-32	1.129E-30	1.332E-29	3.397E-29	0.000E+00	0.000E+00
-238+D1	Pb-210+D1	5.530E-14	3.397E-36	1.016E-34	2.366E-33	1.388E-31	4.314E-30	2.535E-29	0.000E+00	0.000E+00
-238+D1	äDSR(j)		1.002E-17	9.524E-18	8.600E-18	6.008E-18	2.124E-18	3.973E-20	0.000E+00	0.000E+00
-238+D1	U-238+D1	7.959E-16	1.443E-19	1.371E-19	1.238E-19	8.647E-20	3.057E-20	5.717E-22	0.000E+00	0.000E+00
-238+D1	U-234	7.959E-16	2.258E-25	6.475E-25	1.366E-24	2.866E-24	2.943E-24	1.814E-25	0.000E+00	0.000E+00
-238+D1	Th-230	7.959E-16	1.721E-30	1.168E-29	5.757E-29	4.015E-28	1.685E-27	1.669E-27	0.000E+00	0.000E+00
-238+D1	Ra-226+D3	7.959E-16	5.003E-36	7.272E-35	7.907E-34	1.625E-32	1.917E-31	4.890E-31	0.000E+00	0.000E+00
-238+D1	Pb-210+D2	7.959E-16	4.821E-38	1.442E-36	3.358E-35	1.970E-33	6.122E-32	3.597E-31	0.000E+00	0.000E+00
-238+D1	äDSR(j)		1.443E-19	1.371E-19	1.238E-19	8.648E-20	3.057E-20	5.719E-22	0.000E+00	0.000E+00
-238+D1	U-238+D1	1.997E-07	3.619E-11	3.439E-11	3.106E-11	2.169E-11	7.669E-12	1.434E-13	0.000E+00	0.000E+00
-238+D1	U-234	1.997E-07	5.665E-17	1.624E-16	3.428E-16	7.189E-16	7.384E-16	4.550E-17	0.000E+00	0.000E+00
-238+D1	Th-230	1.997E-07	4.318E-22	2.930E-21	1.444E-20	1.007E-19	4.228E-19	4.187E-19	0.000E+00	0.000E+00
-238+D1	Ra-226+D4	1.997E-07	1.254E-27	1.823E-26	1.982E-25	4.073E-24	4.807E-23	1.226E-22	0.000E+00	0.000E+00
-238+D1	Pb-210+D	1.997E-07	2.063E-29	6.170E-28	1.437E-26	8.427E-25	2.619E-23	1.539E-22	0.000E+00	0.000E+00
-238+D1	äDSR(j)		3.619E-11	3.439E-11	3.106E-11	2.170E-11	7.670E-12	1.435E-13	0.000E+00	0.000E+00
-238+D1	U-238+D1	2.636E-13	4.777E-17	4.540E-17	4.099E-17	2.864E-17	1.012E-17	1.893E-19	0.000E+00	0.000E+00
-238+D1	U-234	2.636E-13	7.478E-23	2.144E-22	4.525E-22	9.490E-22	9.747E-22	6.006E-23	0.000E+00	0.000E+00
-238+D1	Th-230	2.636E-13	5.699E-28	3.868E-27	1.907E-26	1.330E-25	5.580E-25	5.527E-25	0.000E+00	0.000E+00
-238+D1	Ra-226+D4	2.636E-13	1.655E-33	2.407E-32	2.617E-31	5.377E-30	6.345E-29	1.618E-28	0.000E+00	0.000E+00
-238+D1	Pb-210+D1	2.636E-13	1.619E-35	4.844E-34	1.128E-32	6.616E-31	2.056E-29	1.208E-28	0.000E+00	0.000E+00
-238+D1	äDSR(j)		4.777E-17	4.540E-17	4.099E-17	2.864E-17	1.012E-17	1.894E-19	0.000E+00	0.000E+00
-238+D1	U-238+D1	3.794E-15	6.876E-19	6.535E-19	5.901E-19	4.122E-19	1.457E-19	2.725E-21	0.000E+00	0.000E+00
-238+D1	U-234	3.794E-15	1.076E-24	3.086E-24	6.513E-24	1.366E-23	1.403E-23	8.646E-25	0.000E+00	0.000E+00
-238+D1	Th-230	3.794E-15	8.204E-30	5.568E-29	2.744E-28	1.914E-27	8.032E-27	7.955E-27	0.000E+00	0.000E+00
-238+D1	Ra-226+D4	3.794E-15	2.383E-35	3.464E-34	3.766E-33	7.739E-32	9.133E-31	2.329E-30	0.000E+00	0.000E+00
-238+D1	Pb-210+D2	3.794E-15	2.298E-37	6.873E-36	1.600E-34	9.388E-33	2.918E-31	1.715E-30	0.000E+00	0.000E+00
-238+D1	äDSR(j)		6.876E-19	6.535E-19	5.901E-19	4.122E-19	1.457E-19	2.726E-21	0.000E+00	0.000E+00
ÍÍÍÍÍÍÍÍÍ	ÍÍÍÍÍÍÍÍÍÍ	ÍÍÍÍÍÍÍÍÍ	ÍÍÍÍÍÍÍÍÍ	ÍÍÍÍÍÍÍÍÍ	ÍÍÍÍÍÍÍÍÍ	ÍÍÍÍÍÍÍÍÍ	ÍÍÍÍÍÍÍÍÍ	ÍÍÍÍÍÍÍÍÍ	ÍÍÍÍÍÍÍÍÍ	ÍÍÍÍÍÍÍÍÍ

ne DSR includes contributions from associated (half-life ó 180 days) daughters.

ummary : GKP Fire Ighter - Inhalation
ile : C:\USERS\CLAUDE\DOCUMENTS\0 GKP DOSE\RESRAD CW\GKP FIRE FIGHTER - INHALATION.RAD

Single Radionuclide Soil Guidelines G(i,t) in pCi/g
Basic Radiation Dose Limit = 2.500E+01 mrem/yr

uclide (i)	t= 0.000E+00	1.000E+00	3.000E+00	1.000E+01	3.000E+01	1.000E+02	3.000E+02	1.000E+03
ÄÄÄÄÄÄ	ÄÄÄÄÄÄÄÄÄÄ	ÄÄÄÄÄÄÄÄÄÄ	ÄÄÄÄÄÄÄÄÄÄ	ÄÄÄÄÄÄÄÄÄÄ	ÄÄÄÄÄÄÄÄÄÄ	ÄÄÄÄÄÄÄÄÄÄ	ÄÄÄÄÄÄÄÄÄÄ	ÄÄÄÄÄÄÄÄÄÄ
a 226	1.771E+06	1.709E+06	1.621E+06	1.533E+06	2.119E+06	3.118E+07	*9.885E+11	*9.885E+11
h-232	9.696E+03	9.689E+03	9.581E+03	9.308E+03	1.035E+04	2.470E+04	*1.097E+05	*1.097E+05
-234	1.233E+05	1.298E+05	1.437E+05	2.057E+05	5.813E+05	2.984E+07	*6.222E+09	*6.222E+09
-235	1.323E+05	1.392E+05	1.541E+05	2.200E+05	6.157E+05	*2.160E+06	*2.160E+06	*2.160E+06
-238	1.379E+05	1.451E+05	1.607E+05	2.301E+05	*3.361E+05	*3.361E+05	*3.361E+05	*3.361E+05
íííííí	íííííííííí	íííííííííí	íííííííííí	íííííííííí	íííííííííí	íííííííííí	íííííííííí	íííííííííí

At specific activity limit

Summed Dose/Source Ratios DSR(i,t) in (mrem/yr)/(pCi/g)
and Single Radionuclide Soil Guidelines G(i,t) in pCi/g
at tmin = time of minimum single radionuclide soil guideline
and at tmax = time of maximum total dose = 0.000E+00 years

uclide (i)	Initial (pCi/g)	tmin (years)	DSR(i,tmin)	G(i,tmin) (pCi/g)	DSR(i,tmax)	G(i,tmax) (pCi/g)
ÄÄÄÄÄÄ	ÄÄÄÄÄÄÄÄÄÄ	ÄÄÄÄÄÄÄÄÄÄÄÄÄÄÄÄ	ÄÄÄÄÄÄÄÄÄÄ	ÄÄÄÄÄÄÄÄÄÄ	ÄÄÄÄÄÄÄÄÄÄ	ÄÄÄÄÄÄÄÄÄÄ
a-226	3.650E+01	9.09 ñ 0.02	1.632E-05	1.532E+06	1.411E-05	1.771E+06
h-232	2.400E+00	10.26 ñ 0.02	2.686E-03	9.307E+03	2.578E-03	9.696E+03
-234	1.390E+01	0.000E+00	2.027E-04	1.233E+05	2.027E-04	1.233E+05
-235	8.400E-01	0.000E+00	1.889E-04	1.323E+05	1.889E-04	1.323E+05
-238	1.390E+01	0.000E+00	1.812E-04	1.379E+05	1.812E-04	1.379E+05
íííííí	íííííííííí	íííííííííííííííííí	íííííííííí	íííííííííí	íííííííííí	íííííííííí

ummary : GKP Fire Fighter - Inhalation

ile : C:\USERS\CLAUDE\DOCUMENTS\0 GKP DOSE\RESRAD CW\GKP FIRE FIGHTER - INHALATION.RAD

Individual Nuclide Dose Summed Over All Pathways

Parent Nuclide and Branch Fraction Indicated

uclide (j)	Parent (i)	THF(i)	DOSE(j,t), mrem/yr t= 0.000E+00	1.000E+00	3.000E+00	1.000E+01	3.000E+01	1.000E+02	3.000E+02	1.000E+03
ÄÄÄÄÄÄ	ÄÄÄÄÄÄÄ	ÄÄÄÄÄÄÄÄÄ	ÄÄÄÄÄÄÄÄÄ	ÄÄÄÄÄÄÄÄÄ	ÄÄÄÄÄÄÄÄÄ	ÄÄÄÄÄÄÄÄÄ	ÄÄÄÄÄÄÄÄÄ	ÄÄÄÄÄÄÄÄÄ	ÄÄÄÄÄÄÄÄÄ	ÄÄÄÄÄÄÄÄÄ
a 226	Ra 226	9.996E 01	4.948E 04	4.759E-04	4.404E-04	3.350E-04	1.511E-04	6.624E-06	0.000E+00	0.000E+00
a-226	Ra-226	1.319E-06	6.531E-10	6.282E-10	5.813E-10	4.422E-10	1.994E-10	8.744E-12	0.000E+00	0.000E+00
a-226	U-234	9.996E-01	1.245E-13	8.479E-13	4.212E-12	3.018E-11	1.360E-10	1.572E-10	0.000E+00	0.000E+00
a-226	U-234	1.319E-06	1.643E-19	1.119E-18	5.560E-18	3.984E-17	1.795E-16	2.075E-16	0.000E+00	0.000E+00
a-226	U-234	1.899E-08	2.366E-21	1.611E-20	8.003E-20	5.735E-19	2.584E-18	2.987E-18	0.000E+00	0.000E+00
a-226	U-238	1.599E-03	1.399E-22	2.033E-21	2.210E-20	4.542E-19	5.360E-18	1.367E-17	0.000E+00	0.000E+00
a-226	U-238	2.111E-09	1.807E-28	2.684E-27	2.918E-26	5.996E-25	7.075E-24	1.804E-23	0.000E+00	0.000E+00
a-226	U-238	3.039E-11	0.000E+00	3.782E-29	4.112E-28	8.630E-27	1.018E-25	2.597E-25	0.000E+00	0.000E+00
a-226	U-238	9.980E-01	8.727E-20	1.269E-18	1.379E-17	2.834E-16	3.345E-15	8.529E-15	0.000E+00	0.000E+00
a-226	U-238	1.317E-06	1.152E-25	1.675E-24	1.821E-23	3.741E-22	4.415E-21	1.126E-20	0.000E+00	0.000E+00
a-226	U-238	1.896E-08	1.658E-27	2.410E-26	2.621E-25	5.385E-24	6.355E-23	1.621E-22	0.000E+00	0.000E+00
a-226	äDOSE(j)		4.948E-04	4.759E-04	4.404E-04	3.350E-04	1.511E-04	6.624E-06	0.000E+00	0.000E+00
o-210	Ra-226	9.996E-01	2.014E-05	5.781E-05	1.224E-04	2.599E-04	2.795E-04	2.263E-05	0.000E+00	0.000E+00
o-210	Ra-226	2.100E-04	4.229E-09	1.214E-08	2.571E-08	5.459E-08	5.870E-08	4.753E-09	0.000E+00	0.000E+00
o-210	Ra-226	1.998E-04	4.024E-09	1.155E-08	2.446E-08	5.194E-08	5.585E-08	4.522E-09	0.000E+00	0.000E+00
o-210	Ra-226	4.196E-08	8.452E-13	2.427E-12	5.138E-12	1.091E-11	1.173E-11	9.497E-13	0.000E+00	0.000E+00
o-210	Ra-226	2.000E-07	4.029E-12	1.157E-11	2.449E-11	5.200E-11	5.592E-11	4.527E-12	0.000E+00	0.000E+00
o-210	U-234	9.996E-01	2.550E-15	3.699E-14	4.005E-13	8.106E-12	9.199E-11	2.149E-10	0.000E+00	0.000E+00
o-210	U-234	2.100E-04	5.355E-19	7.770E-18	8.412E-17	1.703E-15	1.932E-14	4.515E-14	0.000E+00	0.000E+00
o-210	U-234	1.998E-04	5.095E-19	7.393E-18	8.003E-17	1.620E-15	1.838E-14	4.295E-14	0.000E+00	0.000E+00
o-210	U-234	4.196E-08	1.070E-22	1.553E-21	1.681E-20	3.403E-19	3.861E-18	9.022E-18	0.000E+00	0.000E+00
o-210	U-234	2.000E-07	5.101E-22	7.402E-21	8.013E-20	1.622E-18	1.841E-17	4.300E-17	0.000E+00	0.000E+00
o-210	U-238	1.599E-03	2.296E-24	6.869E-23	1.600E-21	9.382E-20	2.916E-18	1.714E-17	0.000E+00	0.000E+00
o-210	U-238	3.359E-07	4.824E-28	1.443E-26	3.360E-25	1.971E-23	6.125E-22	3.599E-21	0.000E+00	0.000E+00
o-210	U-238	3.196E-07	4.589E-28	1.373E-26	3.197E-25	1.875E-23	5.828E-22	3.424E-21	0.000E+00	0.000E+00
o-210	U-238	6.713E-11	0.000E+00	0.000E+00	6.714E-29	3.938E-27	1.224E-25	7.193E-25	0.000E+00	0.000E+00
o-210	U-238	3.200E-10	0.000E+00	0.000E+00	3.200E-28	1.877E-26	5.835E-25	3.429E-24	0.000E+00	0.000E+00
o-210	U-238	9.980E-01	1.433E-21	4.286E-20	9.981E-19	5.855E-17	1.820E-15	1.069E-14	0.000E+00	0.000E+00
o-210	U-238	2.096E-04	3.010E-25	9.003E-24	2.096E-22	1.230E-20	3.822E-19	2.246E-18	0.000E+00	0.000E+00
o-210	U-238	1.994E-04	2.864E-25	8.566E-24	1.995E-22	1.170E-20	3.637E-19	2.137E-18	0.000E+00	0.000E+00
o-210	U-238	4.189E-08	6.015E-29	1.799E-27	4.190E-26	2.457E-24	7.638E-23	4.488E-22	0.000E+00	0.000E+00
o-210	U-238	1.997E-07	2.867E-28	8.576E-27	1.997E-25	1.171E-23	3.641E-22	2.139E-21	0.000E+00	0.000E+00
o-210	äDOSE(j)		2.014E-05	5.784E-05	1.224E-04	2.600E-04	2.796E-04	2.264E-05	0.000E+00	0.000E+00
o-210	Ra-226	1.319E-06	1.581E-11	4.539E-11	9.609E-11	2.041E-10	2.194E-10	1.776E-11	0.000E+00	0.000E+00
o-210	Ra-226	1.899E-08	2.243E-13	6.440E-13	1.363E-12	2.895E-12	3.113E-12	2.521E-13	0.000E+00	0.000E+00
o-210	Ra-226	2.771E-10	3.320E-15	9.534E-15	2.018E-14	4.286E-14	4.608E-14	3.731E-15	0.000E+00	0.000E+00
o-210	Ra-226	2.637E-10	3.159E-15	9.070E-15	1.920E-14	4.078E-14	4.385E-14	3.550E-15	0.000E+00	0.000E+00
o-210	Ra-226	5.538E-14	6.636E-19	1.905E-18	4.033E-18	8.565E-18	9.209E-18	7.456E-19	0.000E+00	0.000E+00
o-210	Ra-226	2.640E-13	3.163E-18	9.081E-18	1.923E-17	4.083E-17	4.390E-17	3.554E-18	0.000E+00	0.000E+00
o-210	U-234	1.319E-06	2.002E-21	2.904E-20	3.144E-19	6.364E-18	7.222E-17	1.687E-16	0.000E+00	0.000E+00
o-210	U-234	2.771E-10	4.204E-25	6.100E-24	6.604E-23	1.337E-21	1.517E-20	3.544E-20	0.000E+00	0.000E+00
o-210	U-234	2.637E-10	4.000E-25	5.804E-24	6.283E-23	1.272E-21	1.443E-20	3.372E-20	0.000E+00	0.000E+00
o-210	U-234	5.538E-14	8.402E-29	1.219E-27	1.320E-26	2.671E-25	3.031E-24	7.083E-24	0.000E+00	0.000E+00
o-210	U-234	2.640E-13	4.005E-28	5.811E-27	6.291E-26	1.273E-24	1.445E-23	3.376E-23	0.000E+00	0.000E+00
o-210	U-238	2.111E-09	0.000E+00	5.393E-29	1.256E-27	7.366E-26	2.290E-24	1.345E-23	0.000E+00	0.000E+00
o-210	U-238	4.434E-13	0.000E+00	0.000E+00	0.000E+00	1.547E-29	4.809E-28	2.826E-27	0.000E+00	0.000E+00
o-210	U-238	4.219E-13	0.000E+00	0.000E+00	0.000E+00	1.472E-29	4.575E-28	2.688E-27	0.000E+00	0.000E+00

ummary : GKP Fire Fighter - Inhalation
ile : C:\USERS\CLAUDE\DOCUMENTS\0 GKP DOSE\RESRAD CW\GKP FIRE FIGHTER - INHALATION.RAD

Individual Nuclide Dose Summed Over All Pathways
Parent Nuclide and Branch Fraction Indicated

uclide (j)	Parent (i)	THF(i)	DOSE(j,t), mrem/yr t= 0.000E+00	1.000E+00	3.000E+00	1.000E+01	3.000E+01	1.000E+02	3.000E+02	1.000E+03
ÄÄÄÄÄÄ	ÄÄÄÄÄÄÄ	ÄÄÄÄÄÄÄÄÄ	ÄÄÄÄÄÄÄÄÄ	ÄÄÄÄÄÄÄÄÄ	ÄÄÄÄÄÄÄÄÄ	ÄÄÄÄÄÄÄÄÄ	ÄÄÄÄÄÄÄÄÄ	ÄÄÄÄÄÄÄÄÄ	ÄÄÄÄÄÄÄÄÄ	ÄÄÄÄÄÄÄÄÄ
o-210	U-238	8.862E-17	0.000E+00	0.000E+00	0.000E+00	0.000E+00	0.000E+00	0.000E+00	0.000E+00	0.000E+00
o-210	U-238	4.224E-16	0.000E+00	0.000E+00	0.000E+00	0.000E+00	0.000E+00	0.000E+00	0.000E+00	0.000E+00
o-210	U-238	1.317E-06	1.125E-27	3.365E-26	7.836E-25	4.596E-23	1.429E-21	8.395E-21	0.000E+00	0.000E+00
o-210	U-238	2.767E-10	0.000E+00	0.000E+00	1.646E-28	9.654E-27	3.001E-25	1.763E-24	0.000E+00	0.000E+00
o-210	U-238	2.633E-10	0.000E+00	0.000E+00	1.566E-28	9.185E-27	2.855E-25	1.678E-24	0.000E+00	0.000E+00
o-210	U-238	5.530E-14	0.000E+00	0.000E+00	0.000E+00	0.000E+00	5.997E-29	3.524E-28	0.000E+00	0.000E+00
o-210	U-238	2.636E-13	0.000E+00	0.000E+00	0.000E+00	0.000E+00	2.858E-28	1.680E-27	0.000E+00	0.000E+00
o-210	äDOSE(j)		1.604E-11	4.605E-11	9.749E-11	2.070E-10	2.226E-10	1.802E-11	0.000E+00	0.000E+00
a-226	Ra-226	1.899E-08	9.401E-12	9.043E-12	8.367E-12	6.364E-12	2.870E-12	1.259E-13	0.000E+00	0.000E+00
a-226	Ra-226	2.100E-04	1.039E-07	9.997E-08	9.249E-08	7.036E-08	3.173E-08	1.391E-09	0.000E+00	0.000E+00
a-226	äDOSE(j)		1.039E-07	9.998E-08	9.250E-08	7.037E-08	3.173E-08	1.391E-09	0.000E+00	0.000E+00
a-226	Ra-226	2.771E-10	1.372E-13	1.320E-13	1.221E-13	9.287E-14	4.188E-14	1.837E-15	0.000E+00	0.000E+00
a-226	Ra-226	3.989E-12	1.975E-15	1.899E-15	1.757E-15	1.337E-15	6.029E-16	2.644E-17	0.000E+00	0.000E+00
a-226	äDOSE(j)		1.392E-13	1.339E-13	1.238E-13	9.421E-14	4.249E-14	1.863E-15	0.000E+00	0.000E+00
o-210	Ra-226	3.989E-12	4.712E-17	1.353E-16	2.864E-16	6.082E-16	6.539E-16	5.294E-17	0.000E+00	0.000E+00
o-210	Ra-226	3.795E-12	4.483E-17	1.287E-16	2.725E-16	5.786E-16	6.221E-16	5.037E-17	0.000E+00	0.000E+00
o-210	Ra-226	7.972E-16	9.416E-21	2.703E-20	5.723E-20	1.215E-19	1.307E-19	1.058E-20	0.000E+00	0.000E+00
o-210	Ra-226	3.800E-15	4.488E-20	1.289E-19	2.728E-19	5.793E-19	6.229E-19	5.043E-20	0.000E+00	0.000E+00
o-210	U-234	1.899E-08	2.840E-23	4.121E-22	4.461E-21	9.030E-20	1.025E-18	2.394E-18	0.000E+00	0.000E+00
o-210	U-234	3.989E-12	5.966E-27	8.656E-26	9.371E-25	1.897E-23	2.152E-22	5.029E-22	0.000E+00	0.000E+00
o-210	U-234	3.795E-12	5.676E-27	8.235E-26	8.916E-25	1.805E-23	2.048E-22	4.785E-22	0.000E+00	0.000E+00
o-210	U-234	7.972E-16	0.000E+00	1.730E-29	1.873E-28	3.790E-27	4.301E-26	1.005E-25	0.000E+00	0.000E+00
o-210	U-234	3.800E-15	0.000E+00	8.245E-29	8.926E-28	1.807E-26	2.050E-25	4.791E-25	0.000E+00	0.000E+00
o-210	U-238	3.039E-11	0.000E+00	0.000E+00	1.782E-29	1.045E-27	3.249E-26	1.909E-25	0.000E+00	0.000E+00
o-210	U-238	6.383E-15	0.000E+00	0.000E+00	0.000E+00	0.000E+00	0.000E+00	4.009E-29	0.000E+00	0.000E+00
o-210	U-238	6.073E-15	0.000E+00	0.000E+00	0.000E+00	0.000E+00	0.000E+00	3.815E-29	0.000E+00	0.000E+00
o-210	U-238	1.276E-18	0.000E+00	0.000E+00	0.000E+00	0.000E+00	0.000E+00	0.000E+00	0.000E+00	0.000E+00
o-210	U-238	6.080E-18	0.000E+00	0.000E+00	0.000E+00	0.000E+00	0.000E+00	0.000E+00	0.000E+00	0.000E+00
o-210	U-238	1.896E-08	1.596E-29	4.775E-28	1.112E-26	6.522E-25	2.027E-23	1.191E-22	0.000E+00	0.000E+00
o-210	U-238	3.983E-12	0.000E+00	0.000E+00	0.000E+00	1.370E-28	4.258E-27	2.502E-26	0.000E+00	0.000E+00
o-210	U-238	3.789E-12	0.000E+00	0.000E+00	0.000E+00	1.303E-28	4.051E-27	2.380E-26	0.000E+00	0.000E+00
o-210	U-238	7.959E-16	0.000E+00	0.000E+00	0.000E+00	0.000E+00	0.000E+00	0.000E+00	0.000E+00	0.000E+00
o-210	U-238	3.794E-15	0.000E+00	0.000E+00	0.000E+00	0.000E+00	0.000E+00	2.383E-29	0.000E+00	0.000E+00
o-210	äDOSE(j)		9.200E-17	2.641E-16	5.592E-16	1.188E-15	1.278E-15	1.058E-16	0.000E+00	0.000E+00
a-226	Ra-226	1.998E-04	9.879E-08	9.503E-08	8.792E-08	6.688E-08	3.016E-08	1.323E-09	0.000E+00	0.000E+00
a-226	Ra-226	2.637E-10	1.304E-13	1.254E-13	1.161E-13	8.828E-14	3.981E-14	1.746E-15	0.000E+00	0.000E+00
a-226	U-234	1.998E-04	2.486E-17	1.693E-16	8.410E-16	6.026E-15	2.715E-14	3.139E-14	0.000E+00	0.000E+00
a-226	U-234	2.637E-10	3.281E-23	2.235E-22	1.110E-21	7.955E-21	3.584E-20	4.144E-20	0.000E+00	0.000E+00
a-226	U-234	3.795E-12	4.723E-25	3.217E-24	1.598E-23	1.145E-22	5.159E-22	5.964E-22	0.000E+00	0.000E+00
a-226	U-238	3.196E-07	2.792E-26	4.059E-25	4.414E-24	9.069E-23	1.070E-21	2.729E-21	0.000E+00	0.000E+00
a-226	U-238	4.219E-13	0.000E+00	0.000E+00	0.000E+00	1.172E-28	1.413E-27	3.603E-27	0.000E+00	0.000E+00
a-226	U-238	6.073E-15	0.000E+00	0.000E+00	0.000E+00	0.000E+00	1.991E-29	5.076E-29	0.000E+00	0.000E+00
a-226	U-238	1.994E-04	1.742E-23	2.533E-22	2.754E-21	5.659E-20	6.678E-19	1.703E-18	0.000E+00	0.000E+00
a-226	U-238	2.633E-10	2.252E-29	3.274E-28	3.635E-27	7.470E-26	8.815E-25	2.248E-24	0.000E+00	0.000E+00
a-226	U-238	3.789E-12	0.000E+00	0.000E+00	5.123E-29	1.075E-27	1.269E-26	3.236E-26	0.000E+00	0.000E+00
a-226	äDOSE(j)		9.879E-08	9.503E-08	8.792E-08	6.688E-08	3.016E-08	1.323E-09	0.000E+00	0.000E+00

ummary : GKP Fire Fighter - Inhalation
ile : C:\USERS\CLAUDE\DOCUMENTS\0 GKP DOSE\RESRAD CW\GKP FIRE FIGHTER - INHALATION.RAD

Individual Nuclide Dose Summed Over All Pathways
Parent Nuclide and Branch Fraction Indicated

uclide (j)	Parent (i)	THF(i)	DOSE(j,t), mrem/yr t= 0.000E+00	1.000E+00	3.000E+00	1.000E+01	3.000E+01	1.000E+02	3.000E+02	1.000E+03
ÄÄÄÄÄÄ	ÄÄÄÄÄÄÄ	ÄÄÄÄÄÄÄÄÄ	ÄÄÄÄÄÄÄÄÄ	ÄÄÄÄÄÄÄÄÄ	ÄÄÄÄÄÄÄÄÄ	ÄÄÄÄÄÄÄÄÄ	ÄÄÄÄÄÄÄÄÄ	ÄÄÄÄÄÄÄÄÄ	ÄÄÄÄÄÄÄÄÄ	ÄÄÄÄÄÄÄÄÄ
a-226	Ra-226	3.795E-12	1.877E-15	1.806E-15	1.671E-15	1.271E-15	5.731E-16	2.513E-17	0.000E+00	0.000E+00
a-226	Ra-226	4.196E-08	2.075E-11	1.996E-11	1.847E-11	1.405E-11	6.335E-12	2.778E-13	0.000E+00	0.000E+00
a-226	äDOSE(j)		2.075E-11	1.996E-11	1.847E-11	1.405E-11	6.336E-12	2.778E-13	0.000E+00	0.000E+00
a-226	Ra-226	5.538E-14	2.739E-17	2.635E-17	2.438E-17	1.854E-17	8.363E-18	3.667E-19	0.000E+00	0.000E+00
a-226	Ra-226	7.972E-16	3.942E-19	3.792E-19	3.509E-19	2.669E-19	1.204E-19	5.278E-21	0.000E+00	0.000E+00
a-226	äDOSE(j)		2.778E-17	2.673E-17	2.473E-17	1.881E-17	8.483E-18	3.720E-19	0.000E+00	0.000E+00
a-226	Ra-226	2.000E-07	9.883E-11	9.507E-11	8.796E-11	6.691E-11	3.018E-11	1.323E-12	0.000E+00	0.000E+00
a-226	Ra-226	2.640E-13	1.305E-16	1.255E-16	1.161E-16	8.832E-17	3.983E-17	1.747E-18	0.000E+00	0.000E+00
a-226	U-234	2.000E-07	2.487E-20	1.694E-19	8.413E-19	6.029E-18	2.716E-17	3.140E-17	0.000E+00	0.000E+00
a-226	U-234	2.640E-13	3.283E-26	2.236E-25	1.111E-24	7.958E-24	3.586E-23	4.145E-23	0.000E+00	0.000E+00
a-226	U-234	3.800E-15	4.626E-28	3.218E-27	1.599E-26	1.146E-25	5.161E-25	5.967E-25	0.000E+00	0.000E+00
a-226	U-238	3.200E-10	2.735E-29	3.976E-28	4.416E-27	9.074E-26	1.071E-24	2.730E-24	0.000E+00	0.000E+00
a-226	U-238	4.224E-16	0.000E+00	0.000E+00	0.000E+00	0.000E+00	0.000E+00	0.000E+00	0.000E+00	0.000E+00
a-226	U-238	6.080E-18	0.000E+00	0.000E+00	0.000E+00	0.000E+00	0.000E+00	0.000E+00	0.000E+00	0.000E+00
a-226	U-238	1.997E-07	1.743E-26	2.534E-25	2.755E-24	5.662E-23	6.681E-22	1.704E-21	0.000E+00	0.000E+00
a-226	U-238	2.636E-13	0.000E+00	0.000E+00	0.000E+00	7.317E-29	8.819E-28	2.249E-27	0.000E+00	0.000E+00
a-226	U-238	3.794E-15	0.000E+00	0.000E+00	0.000E+00	0.000E+00	0.000E+00	3.169E-29	0.000E+00	0.000E+00
a-226	äDOSE(j)		9.883E-11	9.507E-11	8.796E-11	6.691E-11	3.018E-11	1.323E-12	0.000E+00	0.000E+00
a-226	Ra-226	3.800E-15	1.878E-18	1.806E-18	1.671E-18	1.271E-18	5.733E-19	2.514E-20	0.000E+00	0.000E+00
n-232	Th-232	1.000E+00	6.178E-03	6.137E-03	6.054E-03	5.763E-03	4.933E-03	2.038E-03	0.000E+00	0.000E+00
a-228	Th-232	1.000E+00	1.096E-06	3.059E-06	6.122E-06	1.127E-05	1.198E-05	5.000E-06	0.000E+00	0.000E+00
n-228	Th-232	1.000E+00	8.709E-06	5.266E-05	2.024E-04	6.719E-04	8.543E-04	3.856E-04	0.000E+00	0.000E+00
-234	U-234	9.996E-01	2.816E-03	2.676E-03	2.417E-03	1.688E-03	5.967E-04	1.116E-05	0.000E+00	0.000E+00
-234	U-234	1.319E-06	3.717E-09	3.533E-09	3.190E-09	2.228E-09	7.877E-10	1.473E-11	0.000E+00	0.000E+00
-234	U-238	1.599E-03	6.307E-12	1.808E-11	3.816E-11	8.004E-11	8.221E-11	5.066E-12	0.000E+00	0.000E+00
-234	U-238	2.111E-09	8.326E-18	2.387E-17	5.038E-17	1.057E-16	1.085E-16	6.687E-18	0.000E+00	0.000E+00
-234	U-238	3.039E-11	1.198E-19	3.436E-19	7.251E-19	1.521E-18	1.562E-18	9.625E-20	0.000E+00	0.000E+00
-234	U-238	3.359E-07	1.325E-15	3.798E-15	8.016E-15	1.681E-14	1.727E-14	1.064E-15	0.000E+00	0.000E+00
-234	U-238	4.434E-13	1.749E-21	5.014E-21	1.058E-20	2.219E-20	2.279E-20	1.405E-21	0.000E+00	0.000E+00
-234	U-238	6.383E-15	2.517E-23	7.217E-23	1.523E-22	3.194E-22	3.281E-22	2.022E-23	0.000E+00	0.000E+00
-234	U-238	3.196E-07	1.260E-15	3.614E-15	7.627E-15	1.600E-14	1.643E-14	1.012E-15	0.000E+00	0.000E+00
-234	U-238	4.219E-13	1.664E-21	4.770E-21	1.007E-20	2.111E-20	2.169E-20	1.336E-21	0.000E+00	0.000E+00
-234	U-238	6.073E-15	2.395E-23	6.866E-23	1.449E-22	3.039E-22	3.121E-22	1.924E-23	0.000E+00	0.000E+00
-234	U-238	6.713E-11	2.647E-19	7.591E-19	1.602E-18	3.360E-18	3.451E-18	2.126E-19	0.000E+00	0.000E+00
-234	U-238	8.862E-17	3.495E-25	1.002E-24	2.115E-24	4.435E-24	4.555E-24	2.807E-25	0.000E+00	0.000E+00
-234	U-238	1.276E-18	5.030E-27	1.442E-26	3.044E-26	6.383E-26	6.557E-26	4.040E-27	0.000E+00	0.000E+00
-234	U-238	3.200E-10	1.262E-18	3.618E-18	7.636E-18	1.601E-17	1.645E-17	1.014E-18	0.000E+00	0.000E+00
-234	U-238	4.224E-16	1.666E-24	4.776E-24	1.008E-23	2.114E-23	2.171E-23	1.338E-24	0.000E+00	0.000E+00
-234	U-238	6.080E-18	2.398E-26	6.875E-26	1.451E-25	3.043E-25	3.125E-25	1.926E-26	0.000E+00	0.000E+00
-234	U-238	9.980E-01	3.936E-09	1.128E-08	2.381E-08	4.995E-08	5.130E-08	3.161E-09	0.000E+00	0.000E+00
-234	U-238	1.317E-06	5.195E-15	1.490E-14	3.143E-14	6.593E-14	6.771E-14	4.173E-15	0.000E+00	0.000E+00
-234	U-238	1.896E-08	7.478E-17	2.144E-16	4.525E-16	9.490E-16	9.747E-16	6.006E-17	0.000E+00	0.000E+00

ummary : GKP Fire Fighter - Inhalation
ile : C:\USERS\CLAUDE\DOCUMENTS\0 GKP DOSE\RESRAD CW\GKP FIRE FIGHTER - INHALATION.RAD

Individual Nuclide Dose Summed Over All Pathways
Parent Nuclide and Branch Fraction Indicated

uclide (j)	Parent (i)	THF(i)	DOSE(j,t), mrem/yr t= 0.000E+00	1.000E+00	3.000E+00	1.000E+01	3.000E+01	1.000E+02	3.000E+02	1.000E+03
ÄÄÄÄÄÄ	ÄÄÄÄÄÄÄ	ÄÄÄÄÄÄÄÄÄ	ÄÄÄÄÄÄÄÄÄ	ÄÄÄÄÄÄÄÄÄ	ÄÄÄÄÄÄÄÄÄ	ÄÄÄÄÄÄÄÄÄ	ÄÄÄÄÄÄÄÄÄ	ÄÄÄÄÄÄÄÄÄ	ÄÄÄÄÄÄÄÄÄ	ÄÄÄÄÄÄÄÄÄ
-234	U-238	2.096E-04	8.267E-13	2.370E-12	5.002E-12	1.049E-11	1.078E-11	6.640E-13	0.000E+00	0.000E+00
-234	U-238	2.767E-10	1.091E-18	3.129E-18	6.603E-18	1.385E-17	1.422E-17	8.765E-19	0.000E+00	0.000E+00
-234	U-238	3.983E-12	1.571E-20	4.503E-20	9.504E-20	1.993E-19	2.047E-19	1.262E-20	0.000E+00	0.000E+00
-234	U-238	1.994E-04	7.865E-13	2.255E-12	4.759E-12	9.981E-12	1.025E-11	6.317E-13	0.000E+00	0.000E+00
-234	U-238	2.633E-10	1.038E-18	2.977E-18	6.282E-18	1.318E-17	1.353E-17	8.339E-19	0.000E+00	0.000E+00
-234	U-238	3.789E-12	1.494E-20	4.285E-20	9.042E-20	1.896E-19	1.948E-19	1.200E-20	0.000E+00	0.000E+00
-234	U-238	4.189E-08	1.652E-16	4.737E-16	9.996E-16	2.096E-15	2.153E-15	1.327E-16	0.000E+00	0.000E+00
-234	U-238	5.530E-14	2.181E-22	6.252E-22	1.319E-21	2.767E-21	2.842E-21	1.752E-22	0.000E+00	0.000E+00
-234	U-238	7.959E-16	3.139E-24	9.000E-24	1.899E-23	3.983E-23	4.091E-23	2.521E-24	0.000E+00	0.000E+00
-234	U-238	1.997E-07	7.875E-16	2.258E-15	4.765E-15	9.993E-15	1.026E-14	6.325E-16	0.000E+00	0.000E+00
-234	U-238	2.636E-13	1.039E-21	2.980E-21	6.289E-21	1.319E-20	1.355E-20	8.349E-22	0.000E+00	0.000E+00
-234	U-238	3.794E-15	1.496E-23	4.290E-23	9.053E-23	1.899E-22	1.950E-22	1.202E-23	0.000E+00	0.000E+00
-234	äDOSE(j)		2.816E-03	2.676E-03	2.417E-03	1.688E-03	5.968E-04	1.116E-05	0.000E+00	0.000E+00
a-230	U-234	9.996E-01	3.218E-08	9.410E-08	2.076E-07	5.121E-07	8.739E-07	4.816E-07	0.000E+00	0.000E+00
a-230	U-234	1.319E-06	4.247E-14	1.242E-13	2.740E-13	6.760E-13	1.154E-12	6.358E-13	0.000E+00	0.000E+00
a-230	U-234	1.899E-08	6.114E-16	1.788E-15	3.944E-15	9.730E-15	1.660E-14	9.151E-15	0.000E+00	0.000E+00
a-230	U-234	2.100E-04	6.759E-12	1.977E-11	4.360E-11	1.076E-10	1.836E-10	1.012E-10	0.000E+00	0.000E+00
a-230	U-234	2.771E-10	8.921E-18	2.609E-17	5.756E-17	1.420E-16	2.423E-16	1.335E-16	0.000E+00	0.000E+00
a-230	U-234	3.989E-12	1.284E-19	3.756E-19	8.284E-19	2.044E-18	3.488E-18	1.922E-18	0.000E+00	0.000E+00
a-230	U-234	1.998E-04	6.430E-12	1.881E-11	4.148E-11	1.023E-10	1.746E-10	9.625E-11	0.000E+00	0.000E+00
a-230	U-234	2.637E-10	8.488E-18	2.482E-17	5.476E-17	1.351E-16	2.305E-16	1.271E-16	0.000E+00	0.000E+00
a-230	U-234	3.795E-12	1.222E-19	3.573E-19	7.882E-19	1.945E-18	3.318E-18	1.829E-18	0.000E+00	0.000E+00
a-230	U-234	4.196E-08	1.351E-15	3.950E-15	8.714E-15	2.150E-14	3.668E-14	2.022E-14	0.000E+00	0.000E+00
a-230	U-234	5.538E-14	1.783E-21	5.214E-21	1.150E-20	2.838E-20	4.842E-20	2.669E-20	0.000E+00	0.000E+00
a-230	U-234	7.972E-16	2.566E-23	7.505E-23	1.656E-22	4.084E-22	6.970E-22	3.841E-22	0.000E+00	0.000E+00
a-230	U-234	2.000E-07	6.438E-15	1.883E-14	4.153E-14	1.025E-13	1.748E-13	9.637E-14	0.000E+00	0.000E+00
a-230	U-234	2.640E-13	8.498E-21	2.485E-20	5.483E-20	1.353E-19	2.308E-19	1.272E-19	0.000E+00	0.000E+00
a-230	U-234	3.800E-15	1.223E-22	3.577E-22	7.892E-22	1.947E-21	3.322E-21	1.831E-21	0.000E+00	0.000E+00
a-230	U-238	1.599E-03	4.807E-17	3.262E-16	1.608E-15	1.121E-14	4.707E-14	4.661E-14	0.000E+00	0.000E+00
a-230	U-238	2.111E-09	6.345E-23	4.306E-22	2.123E-21	1.480E-20	6.213E-20	6.153E-20	0.000E+00	0.000E+00
a-230	U-238	3.039E-11	9.133E-25	6.199E-24	3.055E-23	2.131E-22	8.943E-22	8.857E-22	0.000E+00	0.000E+00
a-230	U-238	3.359E-07	1.010E-20	6.853E-20	3.378E-19	2.356E-18	9.886E-18	9.791E-18	0.000E+00	0.000E+00
a-230	U-238	4.434E-13	1.333E-26	9.045E-26	4.458E-25	3.109E-24	1.305E-23	1.292E-23	0.000E+00	0.000E+00
a-230	U-238	6.383E-15	1.918E-28	1.302E-27	6.417E-27	4.475E-26	1.878E-25	1.860E-25	0.000E+00	0.000E+00
a-230	U-238	3.196E-07	9.606E-21	6.520E-20	3.214E-19	2.241E-18	9.406E-18	9.315E-18	0.000E+00	0.000E+00
a-230	U-238	4.219E-13	1.268E-26	8.606E-26	4.242E-25	2.958E-24	1.242E-23	1.230E-23	0.000E+00	0.000E+00
a-230	U-238	6.073E-15	1.825E-28	1.239E-27	6.106E-27	4.258E-26	1.787E-25	1.770E-25	0.000E+00	0.000E+00
a-230	U-238	6.713E-11	2.018E-24	1.369E-23	6.750E-23	4.707E-22	1.976E-21	1.957E-21	0.000E+00	0.000E+00
a-230	U-238	8.862E-17	0.000E+00	1.808E-29	8.910E-29	6.214E-28	2.608E-27	2.583E-27	0.000E+00	0.000E+00
a-230	U-238	1.276E-18	0.000E+00	0.000E+00	0.000E+00	0.000E+00	3.754E-29	3.718E-29	0.000E+00	0.000E+00
a-230	U-238	3.200E-10	9.618E-24	6.528E-23	3.217E-22	2.244E-21	9.417E-21	9.327E-21	0.000E+00	0.000E+00
a-230	U-238	4.224E-16	0.000E+00	8.616E-29	4.247E-28	2.962E-27	1.243E-26	1.231E-26	0.000E+00	0.000E+00
a-230	U-238	6.080E-18	0.000E+00	0.000E+00	0.000E+00	4.263E-29	1.789E-28	1.772E-28	0.000E+00	0.000E+00
a-230	U-238	9.980E-01	3.000E-14	2.036E-13	1.003E-12	6.998E-12	2.937E-11	2.909E-11	0.000E+00	0.000E+00
a-230	U-238	1.317E-06	3.959E-20	2.687E-19	1.325E-18	9.237E-18	3.877E-17	3.840E-17	0.000E+00	0.000E+00
a-230	U-238	1.896E-08	5.699E-22	3.868E-21	1.907E-20	1.330E-19	5.580E-19	5.527E-19	0.000E+00	0.000E+00
a-230	U-238	2.096E-04	6.300E-18	4.276E-17	2.108E-16	1.470E-15	6.169E-15	6.110E-15	0.000E+00	0.000E+00
a-230	U-238	2.767E-10	8.317E-24	5.644E-23	2.782E-22	1.940E-21	8.143E-21	8.065E-21	0.000E+00	0.000E+00

ummary : GKP Fire Ighter - Inhalation
ile : C:\USERS\CLAUDE\DOCUMENTS\0 GKP DOSE\RESRAD CW\GKP FIRE FIGHTER - INHALATION.RAD

Individual Nuclide Dose Summed Over All Pathways
Parent Nuclide and Branch Fraction Indicated

uclide (j)	Parent (i)	THF(i)	DOSE(j,t), mrem/yr t= 0.000E+00	1.000E+00	3.000E+00	1.000E+01	3.000E+01	1.000E+02	3.000E+02	1.000E+03
ÄÄÄÄÄÄ	ÄÄÄÄÄÄÄ	ÄÄÄÄÄÄÄÄÄ	ÄÄÄÄÄÄÄÄÄ	ÄÄÄÄÄÄÄÄÄ	ÄÄÄÄÄÄÄÄÄ	ÄÄÄÄÄÄÄÄÄ	ÄÄÄÄÄÄÄÄÄ	ÄÄÄÄÄÄÄÄÄ	ÄÄÄÄÄÄÄÄÄ	ÄÄÄÄÄÄÄÄÄ
n 230	U 238	3.903E-12	1.197E-25	8.124E-25	4.004E-24	2.793E-23	1.172E-22	1.161E-22	0.000E+00	0.000E+00
n-230	U-238	1.994E-04	5.994E-18	4.068E-17	2.005E-16	1.398E-15	5.869E-15	5.813E-15	0.000E+00	0.000E+00
n-230	U-238	2.633E-10	7.913E-24	5.370E-23	2.647E-22	1.846E-21	7.747E-21	7.673E-21	0.000E+00	0.000E+00
n-230	U-238	3.789E-12	1.139E-25	7.730E-25	3.810E-24	2.657E-23	1.115E-22	1.104E-22	0.000E+00	0.000E+00
n-230	U-238	4.189E-08	1.259E-21	8.545E-21	4.212E-20	2.937E-19	1.233E-18	1.221E-18	0.000E+00	0.000E+00
n-230	U-238	5.530E-14	1.662E-27	1.128E-26	5.560E-26	3.877E-25	1.627E-24	1.612E-24	0.000E+00	0.000E+00
n-230	U-238	7.959E-16	2.392E-29	1.624E-28	8.003E-28	5.581E-27	2.342E-26	2.320E-26	0.000E+00	0.000E+00
n-230	U-238	1.997E-07	6.002E-21	4.073E-20	2.008E-19	1.400E-18	5.876E-18	5.820E-18	0.000E+00	0.000E+00
n-230	U-238	2.636E-13	7.922E-27	5.377E-26	2.650E-25	1.848E-24	7.757E-24	7.682E-24	0.000E+00	0.000E+00
n-230	U-238	3.794E-15	1.140E-28	7.739E-28	3.815E-27	2.660E-26	1.117E-25	1.106E-25	0.000E+00	0.000E+00
n-230	äDOSE(j)		3.219E-08	9.414E-08	2.077E-07	5.123E-07	8.743E-07	4.819E-07	0.000E+00	0.000E+00
-234	U-234	1.899E-08	5.351E-11	5.085E-11	4.592E-11	3.207E-11	1.134E-11	2.120E-13	0.000E+00	0.000E+00
-234	U-234	2.100E-04	5.915E-07	5.621E-07	5.076E-07	3.546E-07	1.253E-07	2.344E-09	0.000E+00	0.000E+00
-234	äDOSE(j)		5.916E-07	5.622E-07	5.076E-07	3.546E-07	1.254E-07	2.344E-09	0.000E+00	0.000E+00
a-226	U-234	2.100E-04	2.615E-17	1.781E-16	8.847E-16	6.340E-15	2.856E-14	3.302E-14	0.000E+00	0.000E+00
a-226	U-234	3.989E-12	4.969E-25	3.384E-24	1.681E-23	1.205E-22	5.427E-22	6.274E-22	0.000E+00	0.000E+00
a-226	U-238	3.359E-07	2.938E-26	4.270E-25	4.643E-24	9.541E-23	1.126E-21	2.871E-21	0.000E+00	0.000E+00
a-226	U-238	4.434E-13	0.000E+00	0.000E+00	0.000E+00	1.233E-28	1.486E-27	3.790E-27	0.000E+00	0.000E+00
a-226	U-238	6.383E-15	0.000E+00	0.000E+00	0.000E+00	0.000E+00	2.094E-29	5.340E-29	0.000E+00	0.000E+00
a-226	U-238	2.096E-04	1.833E-23	2.665E-22	2.897E-21	5.954E-20	7.025E-19	1.792E-18	0.000E+00	0.000E+00
a-226	U-238	2.767E-10	2.369E-29	3.444E-28	3.824E-27	7.859E-26	9.274E-25	2.365E-24	0.000E+00	0.000E+00
a-226	U-238	3.983E-12	0.000E+00	0.000E+00	5.390E-29	1.131E-27	1.335E-26	3.404E-26	0.000E+00	0.000E+00
a-226	äDOSE(j)		2.615E-17	1.781E-16	8.847E-16	6.340E-15	2.856E-14	3.302E-14	0.000E+00	0.000E+00
-234	U-234	2.771E-10	7.808E-13	7.420E-13	6.700E-13	4.680E-13	1.654E-13	3.093E-15	0.000E+00	0.000E+00
-234	U-234	3.989E-12	1.124E-14	1.068E-14	9.644E-15	6.737E-15	2.381E-15	4.453E-17	0.000E+00	0.000E+00
-234	äDOSE(j)		7.921E-13	7.527E-13	6.797E-13	4.748E-13	1.678E-13	3.138E-15	0.000E+00	0.000E+00
a-226	U-234	2.771E-10	3.452E-23	2.351E-22	1.168E-21	8.368E-21	3.770E-20	4.359E-20	0.000E+00	0.000E+00
-234	U-234	1.998E-04	5.628E-07	5.348E-07	4.829E-07	3.374E-07	1.192E-07	2.230E-09	0.000E+00	0.000E+00
-234	U-234	2.637E-10	7.429E-13	7.060E-13	6.375E-13	4.453E-13	1.574E-13	2.943E-15	0.000E+00	0.000E+00
-234	äDOSE(j)		5.628E-07	5.348E-07	4.829E-07	3.374E-07	1.193E-07	2.230E-09	0.000E+00	0.000E+00
-234	U-234	3.795E-12	1.069E-14	1.016E-14	9.176E-15	6.410E-15	2.266E-15	4.236E-17	0.000E+00	0.000E+00
-234	U-234	4.196E-08	1.182E-10	1.123E-10	1.014E-10	7.086E-11	2.505E-11	4.683E-13	0.000E+00	0.000E+00
-234	äDOSE(j)		1.182E-10	1.123E-10	1.014E-10	7.086E-11	2.505E-11	4.684E-13	0.000E+00	0.000E+00
a-226	U-234	4.196E-08	5.221E-21	3.556E-20	1.766E-19	1.266E-18	5.703E-18	6.593E-18	0.000E+00	0.000E+00
a-226	U-234	7.972E-16	9.713E-29	6.756E-28	3.356E-27	2.405E-26	1.084E-25	1.253E-25	0.000E+00	0.000E+00
a-226	U-238	6.713E-11	0.000E+00	8.348E-29	9.270E-28	1.905E-26	2.248E-25	5.733E-25	0.000E+00	0.000E+00
a-226	U-238	8.862E-17	0.000E+00	0.000E+00	0.000E+00	0.000E+00	0.000E+00	0.000E+00	0.000E+00	0.000E+00
a-226	U-238	1.276E-18	0.000E+00	0.000E+00	0.000E+00	0.000E+00	0.000E+00	0.000E+00	0.000E+00	0.000E+00
a-226	U-238	4.189E-08	3.660E-27	5.320E-26	5.785E-25	1.189E-23	1.403E-22	3.577E-22	0.000E+00	0.000E+00
a-226	U-238	5.530E-14	0.000E+00	0.000E+00	0.000E+00	1.536E-29	1.813E-28	4.622E-28	0.000E+00	0.000E+00
a-226	U-238	7.959E-16	0.000E+00	0.000E+00	0.000E+00	0.000E+00	0.000E+00	0.000E+00	0.000E+00	0.000E+00
a-226	äDOSE(j)		5.221E-21	3.556E-20	1.766E-19	1.266E-18	5.703E-18	6.594E-18	0.000E+00	0.000E+00

ummary : GKP Fire Fighter - Inhalation
ile : C:\USERS\CLAUDE\DOCUMENTS\0 GKP DOSE\RESRAD CW\GKP FIRE FIGHTER - INHALATION.RAD

Individual Nuclide Dose Summed Over All Pathways
Parent Nuclide and Branch Fraction Indicated

uclide	Parent	THF(i)	DOSE(j,t), mrem/yr							
(j)	(i)	t=	0.000E+00	1.000E+00	3.000E+00	1.000E+01	3.000E+01	1.000E+02	3.000E+02	1.000E+03
ÄÄÄÄÄÄ	ÄÄÄÄÄÄÄ	ÄÄÄÄÄÄÄÄÄ	ÄÄÄÄÄÄÄÄÄ	ÄÄÄÄÄÄÄÄÄ	ÄÄÄÄÄÄÄÄÄ	ÄÄÄÄÄÄÄÄÄ	ÄÄÄÄÄÄÄÄÄ	ÄÄÄÄÄÄÄÄÄ	ÄÄÄÄÄÄÄÄÄ	ÄÄÄÄÄÄÄÄÄ
-234	U-234	5.538E-14	1.560E-16	1.483E-16	1.339E-16	9.353E-17	3.306E-17	6.182E-19	0.000E+00	0.000E+00
-234	U-234	7.972E-16	2.246E-18	2.134E-18	1.927E-18	1.346E-18	4.759E-19	8.898E-21	0.000E+00	0.000E+00
-234	äDOSE(j)		1.583E-16	1.504E-16	1.358E-16	9.488E-17	3.354E-17	6.271E-19	0.000E+00	0.000E+00
a-226	U-234	5.538E-14	6.892E-27	4.694E-26	2.332E-25	1.671E-24	7.528E-24	8.703E-24	0.000E+00	0.000E+00
-234	U-234	2.000E-07	5.635E-10	5.355E-10	4.835E-10	3.378E-10	1.194E-10	2.232E-12	0.000E+00	0.000E+00
-234	U-234	2.640E-13	7.438E-16	7.068E-16	6.383E-16	4.458E-16	1.576E-16	2.947E-18	0.000E+00	0.000E+00
-234	äDOSE(j)		5.635E-10	5.355E-10	4.835E-10	3.378E-10	1.194E-10	2.232E-12	0.000E+00	0.000E+00
-234	U-234	3.800E-15	1.071E-17	1.017E-17	9.187E-18	6.417E-18	2.268E-18	4.242E-20	0.000E+00	0.000E+00
-235	U-235	9.835E-01	1.560E-04	1.483E-04	1.339E-04	9.353E-05	3.306E-05	6.183E-07	0.000E+00	0.000E+00
-235	U-235	2.722E-03	4.318E-07	4.104E-07	3.706E-07	2.589E-07	9.151E-08	1.711E-09	0.000E+00	0.000E+00
-235	äDOSE(j)		1.565E-04	1.487E-04	1.343E-04	9.379E-05	3.316E-05	6.201E-07	0.000E+00	0.000E+00
a-231	U-235	9.835E-01	1.703E-08	4.883E-08	1.031E-07	2.161E-07	2.219E-07	1.367E-08	0.000E+00	0.000E+00
a-231	U-235	2.722E-03	4.714E-11	1.352E-10	2.852E-10	5.982E-10	6.143E-10	3.783E-11	0.000E+00	0.000E+00
a-231	U-235	1.376E-02	2.383E-10	6.833E-10	1.442E-09	3.024E-09	3.105E-09	1.912E-10	0.000E+00	0.000E+00
a-231	U-235	3.809E-05	6.596E-13	1.891E-12	3.991E-12	8.369E-12	8.595E-12	5.293E-13	0.000E+00	0.000E+00
a-231	U-235	8.257E-07	1.430E-14	4.100E-14	8.652E-14	1.815E-13	1.863E-13	1.148E-14	0.000E+00	0.000E+00
a-231	U-235	2.285E-09	3.958E-17	1.135E-16	2.395E-16	5.022E-16	5.157E-16	3.176E-17	0.000E+00	0.000E+00
a-231	äDOSE(j)		1.732E-08	4.965E-08	1.048E-07	2.198E-07	2.257E-07	1.390E-08	0.000E+00	0.000E+00
c-227	U-235	9.835E-01	9.229E-10	6.018E-09	2.712E-08	1.387E-07	2.592E-07	2.105E-08	0.000E+00	0.000E+00
c-227	U-235	2.722E-03	2.554E-12	1.666E-11	7.506E-11	3.839E-10	7.174E-10	5.826E-11	0.000E+00	0.000E+00
c-227	U-235	1.376E-02	1.288E-11	8.400E-11	3.786E-10	1.936E-09	3.618E-09	2.938E-10	0.000E+00	0.000E+00
c-227	äDOSE(j)		1.544E-11	1.007E-10	4.536E-10	2.320E-09	4.335E-09	3.521E-10	0.000E+00	0.000E+00
-235	U-235	1.376E-02	2.183E-06	2.075E-06	1.873E-06	1.309E-06	4.626E-07	8.652E-09	0.000E+00	0.000E+00
-235	U-235	3.809E-05	6.042E-09	5.742E-09	5.185E-09	3.622E-09	1.280E-09	2.395E-11	0.000E+00	0.000E+00
-235	äDOSE(j)		2.189E-06	2.081E-06	1.879E-06	1.312E-06	4.639E-07	8.676E-09	0.000E+00	0.000E+00
c-227	U-235	3.809E-05	3.565E-14	2.325E-13	1.048E-12	5.358E-12	1.001E-11	8.132E-13	0.000E+00	0.000E+00
c-227	U-235	8.257E-07	7.721E-16	5.035E-15	2.269E-14	1.160E-13	2.168E-13	1.761E-14	0.000E+00	0.000E+00
c-227	äDOSE(j)		3.643E-14	2.375E-13	1.070E-12	5.474E-12	1.023E-11	8.308E-13	0.000E+00	0.000E+00
-235	U-235	8.257E-07	1.310E-10	1.245E-10	1.124E-10	7.853E-11	2.776E-11	5.192E-13	0.000E+00	0.000E+00
-235	U-235	2.285E-09	3.626E-13	3.446E-13	3.111E-13	2.173E-13	7.683E-14	1.437E-15	0.000E+00	0.000E+00
-235	äDOSE(j)		1.314E-10	1.248E-10	1.127E-10	7.874E-11	2.784E-11	5.206E-13	0.000E+00	0.000E+00
c-227	U-235	2.285E-09	2.137E-18	1.393E-17	6.279E-17	3.211E-16	6.001E-16	4.874E-17	0.000E+00	0.000E+00
-238	U-238	5.450E-07	1.373E-09	1.304E-09	1.178E-09	8.228E-10	2.909E-10	5.440E-12	0.000E+00	0.000E+00
-238	U-238	1.599E-03	4.029E-06	3.829E-06	3.458E-06	2.415E-06	8.538E-07	1.597E-08	0.000E+00	0.000E+00
-238	äDOSE(j)		4.031E-06	3.830E-06	3.459E-06	2.416E-06	8.541E-07	1.597E-08	0.000E+00	0.000E+00
-238	U-238	2.111E-09	5.319E-12	5.054E-12	4.564E-12	3.188E-12	1.127E-12	2.108E-14	0.000E+00	0.000E+00

ummary : GKP Fire Fighter - Inhalation
ile : C:\USERS\CLAUDE\DOCUMENTS\0 GKP DOSE\RESRAD CW\GKP FIRE FIGHTER - INHALATION.RAD

Individual Nuclide Dose Summed Over All Pathways
Parent Nuclide and Branch Fraction Indicated

uclide (j)	Parent (i)	THF(i)	DOSE(j,t), mrem/yr t= 0.000E+00	1.000E+00	3.000E+00	1.000E+01	3.000E+01	1.000E+02	3.000E+02	1.000E+03
ÄÄÄÄÄ	ÄÄÄÄÄÄÄ	ÄÄÄÄÄÄÄÄÄ	ÄÄÄÄÄÄÄÄÄ	ÄÄÄÄÄÄÄÄÄ	ÄÄÄÄÄÄÄÄÄ	ÄÄÄÄÄÄÄÄÄ	ÄÄÄÄÄÄÄÄÄ	ÄÄÄÄÄÄÄÄÄ	ÄÄÄÄÄÄÄÄÄ	ÄÄÄÄÄÄÄÄÄ
-238	U-238	3.039E-11	7.656E-14	7.275E-14	6.569E-14	4.589E-14	1.622E-14	3.034E-16	0.000E+00	0.000E+00
-238	äDOSE(j)		5.395E-12	5.127E-12	4.630E-12	3.234E-12	1.143E-12	2.138E-14	0.000E+00	0.000E+00
-238	U-238	3.359E-07	8.463E-10	8.043E-10	7.262E-10	5.073E-10	1.793E-10	3.354E-12	0.000E+00	0.000E+00
-238	U-238	4.434E-13	1.117E-15	1.062E-15	9.586E-16	6.697E-16	2.367E-16	4.427E-18	0.000E+00	0.000E+00
-238	äDOSE(j)		8.463E-10	8.043E-10	7.262E-10	5.073E-10	1.793E-10	3.354E-12	0.000E+00	0.000E+00
-238	U-238	6.383E-15	1.608E-17	1.528E-17	1.380E-17	9.639E-18	3.408E-18	6.373E-20	0.000E+00	0.000E+00
-238	U-238	3.196E-07	8.052E-10	7.652E-10	6.910E-10	4.827E-10	1.706E-10	3.191E-12	0.000E+00	0.000E+00
-238	äDOSE(j)		8.052E-10	7.652E-10	6.910E-10	4.827E-10	1.706E-10	3.191E-12	0.000E+00	0.000E+00
-238	U-238	4.219E-13	1.063E-15	1.010E-15	9.121E-16	6.371E-16	2.252E-16	4.212E-18	0.000E+00	0.000E+00
-238	U-238	6.073E-15	1.530E-17	1.454E-17	1.313E-17	9.171E-18	3.242E-18	6.063E-20	0.000E+00	0.000E+00
-238	äDOSE(j)		1.078E-15	1.025E-15	9.252E-16	6.463E-16	2.285E-16	4.273E-18	0.000E+00	0.000E+00
-238	U-238	6.713E-11	1.691E-13	1.607E-13	1.451E-13	1.014E-13	3.584E-14	6.703E-16	0.000E+00	0.000E+00
-238	U-238	8.862E-17	2.233E-19	2.122E-19	1.916E-19	1.338E-19	4.731E-20	8.847E-22	0.000E+00	0.000E+00
-238	äDOSE(j)		1.691E-13	1.607E-13	1.451E-13	1.014E-13	3.584E-14	6.703E-16	0.000E+00	0.000E+00
-238	U-238	1.276E-18	3.214E-21	3.054E-21	2.758E-21	1.926E-21	6.810E-22	1.273E-23	0.000E+00	0.000E+00
-238	U-238	3.200E-10	8.062E-13	7.661E-13	6.918E-13	4.833E-13	1.708E-13	3.195E-15	0.000E+00	0.000E+00
-238	äDOSE(j)		8.062E-13	7.661E-13	6.918E-13	4.833E-13	1.708E-13	3.195E-15	0.000E+00	0.000E+00
-238	U-238	4.224E-16	1.064E-18	1.011E-18	9.132E-19	6.379E-19	2.255E-19	4.217E-21	0.000E+00	0.000E+00
-238	U-238	6.080E-18	1.532E-20	1.456E-20	1.314E-20	9.182E-21	3.246E-21	6.070E-23	0.000E+00	0.000E+00
-238	äDOSE(j)		1.080E-18	1.026E-18	9.263E-19	6.471E-19	2.288E-19	4.278E-21	0.000E+00	0.000E+00
-238	U-238	9.980E-01	2.514E-03	2.389E-03	2.158E-03	1.507E-03	5.328E-04	9.964E-06	0.000E+00	0.000E+00
-238	U-238	1.317E-06	3.319E-09	3.154E-09	2.848E-09	1.989E-09	7.033E-10	1.315E-11	0.000E+00	0.000E+00
-238	äDOSE(j)		2.514E-03	2.389E-03	2.158E-03	1.507E-03	5.328E-04	9.964E-06	0.000E+00	0.000E+00
-238	U-238	1.896E-08	4.777E-11	4.540E-11	4.099E-11	2.864E-11	1.012E-11	1.893E-13	0.000E+00	0.000E+00
-238	U-238	2.096E-04	5.281E-07	5.019E-07	4.532E-07	3.166E-07	1.119E-07	2.093E-09	0.000E+00	0.000E+00
-238	äDOSE(j)		5.282E-07	5.019E-07	4.532E-07	3.166E-07	1.119E-07	2.093E-09	0.000E+00	0.000E+00
-238	U-238	2.767E-10	6.971E-13	6.625E-13	5.982E-13	4.179E-13	1.477E-13	2.763E-15	0.000E+00	0.000E+00
-238	U-238	3.983E-12	1.003E-14	9.536E-15	8.610E-15	6.015E-15	2.126E-15	3.976E-17	0.000E+00	0.000E+00
-238	äDOSE(j)		7.071E-13	6.720E-13	6.068E-13	4.239E-13	1.498E-13	2.802E-15	0.000E+00	0.000E+00
-238	U-238	1.994E-04	5.025E-07	4.775E-07	4.312E-07	3.012E-07	1.065E-07	1.991E-09	0.000E+00	0.000E+00
-238	U-238	2.633E-10	6.632E-13	6.303E-13	5.691E-13	3.976E-13	1.405E-13	2.628E-15	0.000E+00	0.000E+00
-238	äDOSE(j)		5.025E-07	4.775E-07	4.312E-07	3.012E-07	1.065E-07	1.991E-09	0.000E+00	0.000E+00
-238	U-238	3.789E-12	9.547E-15	9.072E-15	8.192E-15	5.723E-15	2.023E-15	3.783E-17	0.000E+00	0.000E+00
-238	U-238	4.189E-08	1.055E-10	1.003E-10	9.056E-11	6.326E-11	2.236E-11	4.182E-13	0.000E+00	0.000E+00
-238	äDOSE(j)		1.055E-10	1.003E-10	9.057E-11	6.327E-11	2.237E-11	4.183E-13	0.000E+00	0.000E+00
-238	U-238	5.530E-14	1.393E-16	1.324E-16	1.195E-16	8.351E-17	2.952E-17	5.521E-19	0.000E+00	0.000E+00
-238	U-238	7.959E-16	2.005E-18	1.906E-18	1.721E-18	1.202E-18	4.249E-19	7.947E-21	0.000E+00	0.000E+00
-238	äDOSE(j)		1.413E-16	1.343E-16	1.213E-16	8.471E-17	2.995E-17	5.600E-19	0.000E+00	0.000E+00

ummary : GKP Fire Ighter - Inhalation
ile : C:\USERS\CLAUDE\DOCUMENTS\0 GKP DOSE\RESRAD CW\GKP FIRE FIGHTER - INHALATION.RAD

Individual Nuclide Dose Summed Over All Pathways
Parent Nuclide and Branch Fraction Indicated

uclide (j)	Parent (i)	THF(i)	t= 0.000E+00	1.000E+00	3.000E+00	DOSE(j,t), mrem/yr 1.000E+01	3.000E+01	1.000E+02	3.000E+02	1.000E+03
ÄÄÄÄÄÄ	ÄÄÄÄÄÄÄ	ÄÄÄÄÄÄÄÄÄ	ÄÄÄÄÄÄÄÄÄ	ÄÄÄÄÄÄÄÄÄ	ÄÄÄÄÄÄÄÄÄ	ÄÄÄÄÄÄÄÄÄ	ÄÄÄÄÄÄÄÄÄ	ÄÄÄÄÄÄÄÄÄ	ÄÄÄÄÄÄÄÄÄ	ÄÄÄÄÄÄÄÄÄ
-238	U-238	1.997E-07	5.031E-10	4.781E-10	4.317E-10	3.016E-10	1.066E-10	1.994E-12	0.000E+00	0.000E+00
-238	U-238	2.636E-13	6.640E-16	6.311E-16	5.698E-16	3.980E-16	1.407E-16	2.632E-18	0.000E+00	0.000E+00
-238	äDOSE(j)		5.031E-10	4.781E-10	4.317E-10	3.016E-10	1.066E-10	1.994E-12	0.000E+00	0.000E+00
-238	U-238	3.794E-15	9.558E-18	9.083E-18	8.202E-18	5.729E-18	2.025E-18	3.788E-20	0.000E+00	0.000E+00
íííííí	íííííííí	ííííííííí	ííííííííí	ííííííííí	ííííííííí	ííííííííí	ííííííííí	ííííííííí	ííííííííí	ííííííííí

HF(i) is the thread fraction of the parent nuclide.

ummary : GKP Fire Ighter - Inhalation

ile : C:\USERS\CLAUDE\DOCUMENTS\0 GKP DOSE\RESRAD CW\GKP FIRE FIGHTER - INHALATION.RAD

Individual Nuclide Soil Concentration

Parent Nuclide and Branch Fraction Indicated

uclide (j)	Parent (i)	THF(i)	S(j,t), pCi/g t= 0.000E+00	1.000E+00	3.000E+00	1.000E+01	3.000E+01	1.000E+02	3.000E+02	1.000E+03
ÄÄÄÄÄÄ	ÄÄÄÄÄÄÄ	ÄÄÄÄÄÄÄÄÄ	ÄÄÄÄÄÄÄÄÄ	ÄÄÄÄÄÄÄÄÄ	ÄÄÄÄÄÄÄÄÄ	ÄÄÄÄÄÄÄÄÄ	ÄÄÄÄÄÄÄÄÄ	ÄÄÄÄÄÄÄÄÄ	ÄÄÄÄÄÄÄÄÄ	ÄÄÄÄÄÄÄÄÄ
a-226	Ra-226	9.996E-01	3.648E+01	3.533E+01	3.314E+01	2.647E+01	1.394E+01	1.475E+00	2.411E-03	4.255E-13
a-226	Ra-226	1.319E-06	4.816E-05	4.664E-05	4.374E-05	3.494E-05	1.839E-05	1.947E-06	3.182E-09	5.616E-19
a-226	U-234	9.996E-01	0.000E+00	2.698E-08	2.308E-07	2.155E-06	1.208E-05	3.439E-05	3.853E-05	3.731E-05
a-226	U-234	1.319E-06	0.000E+00	3.561E-14	3.047E-13	2.844E-12	1.595E-11	4.540E-11	5.086E-11	4.925E-11
a-226	U-234	1.899E-08	0.000E+00	5.126E-16	4.386E-15	4.094E-14	2.295E-13	6.534E-13	7.321E-13	7.089E-13
a-226	U-238	1.599E-03	0.000E+00	4.044E-17	1.028E-15	3.093E-14	4.696E-13	2.984E-12	3.935E-12	3.813E-12
a-226	U-238	2.111E-09	0.000E+00	5.338E-23	1.357E-21	4.082E-20	6.199E-19	3.939E-18	5.194E-18	5.033E-18
a-226	U-238	3.039E-11	0.000E+00	7.683E-25	1.953E-23	5.876E-22	8.923E-21	5.670E-20	7.477E-20	7.244E-20
a-226	U-238	9.980E-01	0.000E+00	2.523E-14	6.416E-13	1.930E-11	2.930E-10	1.862E-09	2.455E-09	2.379E-09
a-226	U-238	1.317E-06	0.000E+00	3.331E-20	8.469E-19	2.547E-17	3.868E-16	2.458E-15	3.241E-15	3.140E-15
a-226	U-238	1.896E-08	0.000E+00	4.794E-22	1.219E-20	3.667E-19	5.568E-18	3.538E-17	4.665E-17	4.520E-17
a-226	äS(j):		3.649E+01	3.533E+01	3.314E+01	2.647E+01	1.394E+01	1.475E+00	2.449E-03	3.731E-05
o-210	Ra-226	9.996E-01	0.000E+00	1.092E+00	3.007E+00	7.444E+00	9.643E+00	1.904E+00	3.525E-03	6.232E-13
o-210	Ra-226	2.100E-04	0.000E+00	2.293E-04	6.315E-04	1.564E-03	2.026E-03	4.000E-04	7.405E-07	1.309E-16
o-210	Ra-226	1.998E-04	0.000E+00	2.181E-04	6.009E-04	1.488E-03	1.927E-03	3.805E-04	7.045E-07	1.245E-16
o-210	Ra-226	4.196E-08	0.000E+00	4.582E-08	1.262E-07	3.125E-07	4.048E-07	7.993E-08	1.480E-10	2.616E-20
o-210	Ra-226	2.000E-07	0.000E+00	2.184E-07	6.016E-07	1.489E-06	1.929E-06	3.810E-07	7.053E-10	1.247E-19
o-210	U-234	9.996E-01	0.000E+00	2.788E-10	7.058E-09	2.091E-07	3.053E-06	1.777E-05	2.254E-05	2.184E-05
o-210	U-234	2.100E-04	0.000E+00	5.857E-14	1.482E-12	4.392E-11	6.412E-10	3.732E-09	4.735E-09	4.587E-09
o-210	U-234	1.998E-04	0.000E+00	5.572E-14	1.410E-12	4.178E-11	6.101E-10	3.550E-09	4.505E-09	4.364E-09
o-210	U-234	4.196E-08	0.000E+00	1.170E-17	2.963E-16	8.776E-15	1.281E-13	7.457E-13	9.462E-13	9.166E-13
o-210	U-234	2.000E-07	0.000E+00	5.579E-17	1.412E-15	4.183E-14	6.108E-13	3.555E-12	4.510E-12	4.369E-12
o-210	U-238	1.599E-03	0.000E+00	3.142E-19	2.374E-17	2.303E-15	9.533E-14	1.413E-12	2.300E-12	2.231E-12
o-210	U-238	3.359E-07	0.000E+00	6.599E-23	4.987E-21	4.838E-19	2.002E-17	2.967E-16	4.832E-16	4.687E-16
o-210	U-238	3.196E-07	0.000E+00	6.278E-23	4.745E-21	4.603E-19	1.905E-17	2.823E-16	4.597E-16	4.459E-16
o-210	U-238	6.713E-11	0.000E+00	1.319E-26	9.966E-25	9.669E-23	4.001E-21	5.929E-20	9.656E-20	9.366E-20
o-210	U-238	3.200E-10	0.000E+00	6.286E-26	4.750E-24	4.609E-22	1.907E-20	2.826E-19	4.603E-19	4.464E-19
o-210	U-238	9.980E-01	0.000E+00	1.960E-16	1.481E-14	1.437E-12	5.948E-11	8.814E-10	1.435E-09	1.392E-09
o-210	U-238	2.096E-04	0.000E+00	4.118E-20	3.112E-18	3.019E-16	1.249E-14	1.851E-13	3.015E-13	2.925E-13
o-210	U-238	1.994E-04	0.000E+00	3.918E-20	2.961E-18	2.872E-16	1.189E-14	1.761E-13	2.869E-13	2.782E-13
o-210	U-238	4.189E-08	0.000E+00	8.229E-24	6.219E-22	6.033E-20	2.497E-18	3.700E-17	6.025E-17	5.844E-17
o-210	U-238	1.997E-07	0.000E+00	3.922E-23	2.964E-21	2.876E-19	1.190E-17	1.764E-16	2.872E-16	2.786E-16
o-210	äS(j):		0.000E+00	1.092E+00	3.008E+00	7.447E+00	9.647E+00	1.905E+00	3.549E-03	2.185E-05
o-210	Ra-226	1.319E-06	0.000E+00	1.441E-06	3.969E-06	9.826E-06	1.273E-05	2.514E-06	4.653E-09	8.226E-19
o-210	Ra-226	1.899E-08	0.000E+00	2.074E-08	5.713E-08	1.414E-07	1.832E-07	3.618E-08	6.698E-11	1.184E-20
o-210	Ra-226	2.771E-10	0.000E+00	3.026E-10	8.336E-10	2.064E-09	2.674E-09	5.280E-10	9.774E-13	1.728E-22
o-210	Ra-226	2.637E-10	0.000E+00	2.879E-10	7.931E-10	1.964E-09	2.544E-09	5.023E-10	9.299E-13	1.644E-22
o-210	Ra-226	5.538E-14	0.000E+00	6.048E-14	1.666E-13	4.124E-13	5.343E-13	1.055E-13	1.953E-16	3.453E-26
o-210	Ra-226	2.640E-13	0.000E+00	2.883E-13	7.941E-13	1.966E-12	2.547E-12	5.029E-13	9.311E-16	1.646E-25
o-210	U-234	1.319E-06	0.000E+00	3.681E-16	9.317E-15	2.760E-13	4.030E-12	2.345E-11	2.975E-11	2.882E-11
o-210	U-234	2.771E-10	0.000E+00	7.731E-20	1.957E-18	5.797E-17	8.464E-16	4.926E-15	6.250E-15	6.054E-15
o-210	U-234	2.637E-10	0.000E+00	7.356E-20	1.862E-18	5.515E-17	8.053E-16	4.686E-15	5.946E-15	5.760E-15
o-210	U-234	5.538E-14	0.000E+00	1.545E-23	3.911E-22	1.158E-20	1.691E-19	9.844E-19	1.249E-18	1.210E-18
o-210	U-234	2.640E-13	0.000E+00	7.364E-23	1.864E-21	5.522E-20	8.063E-19	4.692E-18	5.953E-18	5.767E-18
o-210	U-238	2.111E-09	0.000E+00	4.147E-25	3.134E-23	3.041E-21	1.258E-19	1.865E-18	3.037E-18	2.945E-18
o-210	U-238	4.434E-13	0.000E+00	8.711E-29	6.583E-27	6.387E-25	2.643E-23	3.916E-22	6.378E-22	6.187E-22
o-210	U-238	4.219E-13	0.000E+00	8.287E-29	6.263E-27	6.076E-25	2.515E-23	3.726E-22	6.068E-22	5.886E-22

ummary : GKP Fire Ighter - Inhalation
ile : C:\USERS\CLAUDE\DOCUMENTS\0 GKP DOSE\RESRAD CW\GKP FIRE FIGHTER - INHALATION.RAD

Individual Nuclide Soil Concentration
Parent Nuclide and Branch Fraction Indicated

uclide (j)	Parent (i)	THF(i)	S(j,t), pCi/g t= 0.000E+00	1.000E+00	3.000E+00	1.000E+01	3.000E+01	1.000E+02	3.000E+02	1.000E+03
ÄÄÄÄÄ	ÄÄÄÄÄÄÄ	ÄÄÄÄÄÄÄÄÄ	ÄÄÄÄÄÄÄÄÄ	ÄÄÄÄÄÄÄÄÄ	ÄÄÄÄÄÄÄÄÄ	ÄÄÄÄÄÄÄÄÄ	ÄÄÄÄÄÄÄÄÄ	ÄÄÄÄÄÄÄÄÄ	ÄÄÄÄÄÄÄÄÄ	ÄÄÄÄÄÄÄÄÄ
o-210	U-238	8.862E-17	0.000E+00	1.741E-32	1.315E-30	1.276E-28	5.282E-27	7.826E-26	1.275E-25	1.236E-25
o-210	U-238	4.224E-16	0.000E+00	8.297E-32	6.270E-30	6.084E-28	2.518E-26	3.731E-25	6.076E-25	5.893E-25
o-210	U-238	1.317E-06	0.000E+00	2.588E-22	1.956E-20	1.897E-18	7.852E-17	1.163E-15	1.895E-15	1.838E-15
o-210	U-238	2.767E-10	0.000E+00	5.435E-26	4.108E-24	3.985E-22	1.649E-20	2.444E-19	3.980E-19	3.860E-19
o-210	U-238	2.633E-10	0.000E+00	5.171E-26	3.908E-24	3.792E-22	1.569E-20	2.325E-19	3.787E-19	3.673E-19
o-210	U-238	5.530E-14	0.000E+00	1.086E-29	8.209E-28	7.964E-26	3.296E-24	4.884E-23	7.954E-23	7.715E-23
o-210	U-238	2.636E-13	0.000E+00	5.178E-29	3.913E-27	3.796E-25	1.571E-23	2.328E-22	3.791E-22	3.677E-22
o-210	äS(j):		0.000E+00	1.462E-06	4.028E-06	9.971E-06	1.292E-05	2.551E-06	4.752E-09	2.884E-11
a-226	Ra-226	1.899E-08	6.932E-07	6.713E-07	6.296E-07	5.030E-07	2.648E-07	2.802E-08	4.580E-11	8.084E-21
a-226	Ra-226	2.100E-04	7.663E-03	7.421E-03	6.960E-03	5.560E-03	2.927E-03	3.098E-04	5.063E-07	8.936E-17
a-226	äS(j):		7.664E-03	7.422E-03	6.961E-03	5.561E-03	2.927E-03	3.098E-04	5.064E-07	8.937E-17
a-226	Ra-226	2.771E-10	1.012E-08	9.796E-09	9.188E-09	7.340E-09	3.864E-09	4.090E-10	6.684E-13	1.180E-22
a-226	Ra-226	3.989E-12	1.456E-10	1.410E-10	1.322E-10	1.056E-10	5.561E-11	5.886E-12	9.621E-15	1.698E-24
a-226	äS(j):		1.026E-08	9.937E-09	9.320E-09	7.445E-09	3.919E-09	4.148E-10	6.780E-13	1.197E-22
o-210	Ra-226	3.989E-12	0.000E+00	4.356E-12	1.200E-11	2.971E-11	3.849E-11	7.599E-12	1.407E-14	2.487E-24
o-210	Ra-226	3.795E-12	0.000E+00	4.144E-12	1.142E-11	2.826E-11	3.662E-11	7.230E-12	1.339E-14	2.366E-24
o-210	Ra-226	7.972E-16	0.000E+00	8.705E-16	2.398E-15	5.937E-15	7.691E-15	1.519E-15	2.812E-18	4.970E-28
o-210	Ra-226	3.800E-15	0.000E+00	4.149E-15	1.143E-14	2.830E-14	3.666E-14	7.239E-15	1.340E-17	2.369E-27
o-210	U-234	1.899E-08	0.000E+00	5.298E-18	1.341E-16	3.973E-15	5.800E-14	3.376E-13	4.283E-13	4.149E-13
o-210	U-234	3.989E-12	0.000E+00	1.113E-21	2.817E-20	8.344E-19	1.218E-17	7.090E-17	8.996E-17	8.715E-17
o-210	U-234	3.795E-12	0.000E+00	1.059E-21	2.680E-20	7.939E-19	1.159E-17	6.746E-17	8.559E-17	8.291E-17
o-210	U-234	7.972E-16	0.000E+00	2.224E-25	5.629E-24	1.667E-22	2.435E-21	1.417E-20	1.798E-20	1.742E-20
o-210	U-234	3.800E-15	0.000E+00	1.060E-24	2.683E-23	7.948E-22	1.161E-20	6.754E-20	8.569E-20	8.301E-20
o-210	U-238	3.039E-11	0.000E+00	5.969E-27	4.511E-25	4.377E-23	1.811E-21	2.684E-20	4.371E-20	4.240E-20
o-210	U-238	6.383E-15	0.000E+00	1.254E-30	9.475E-29	9.193E-27	3.804E-25	5.637E-24	9.181E-24	8.905E-24
o-210	U-238	6.073E-15	0.000E+00	1.193E-30	9.015E-29	8.746E-27	3.620E-25	5.363E-24	8.735E-24	8.472E-24
o-210	U-238	1.276E-18	0.000E+00	2.506E-34	1.893E-32	1.837E-30	7.603E-29	1.127E-27	1.835E-27	1.780E-27
o-210	U-238	6.080E-18	0.000E+00	1.194E-33	9.026E-32	8.757E-30	3.624E-28	5.370E-27	8.745E-27	8.483E-27
o-210	U-238	1.896E-08	0.000E+00	3.725E-24	2.815E-22	2.731E-20	1.130E-18	1.675E-17	2.727E-17	2.645E-17
o-210	U-238	3.983E-12	0.000E+00	7.824E-28	5.912E-26	5.736E-24	2.374E-22	3.518E-21	5.729E-21	5.557E-21
o-210	U-238	3.789E-12	0.000E+00	7.444E-28	5.625E-26	5.458E-24	2.259E-22	3.347E-21	5.450E-21	5.287E-21
o-210	U-238	7.959E-16	0.000E+00	1.563E-31	1.182E-29	1.146E-27	4.744E-26	7.029E-25	1.145E-24	1.110E-24
o-210	U-238	3.794E-15	0.000E+00	7.453E-31	5.632E-29	5.464E-27	2.261E-25	3.351E-24	5.457E-24	5.293E-24
o-210	äS(j):		0.000E+00	8.506E-12	2.343E-11	5.801E-11	7.520E-11	1.518E-11	4.560E-13	4.151E-13
a-226	Ra-226	1.998E-04	7.291E-03	7.061E-03	6.622E-03	5.290E-03	2.785E-03	2.948E-04	4.817E-07	8.502E-17
a-226	Ra-226	2.637E-10	9.624E-09	9.320E-09	8.741E-09	6.983E-09	3.676E-09	3.891E-10	6.359E-13	1.122E-22
a-226	U-234	1.998E-04	0.000E+00	5.392E-12	4.613E-11	4.306E-10	2.414E-09	6.873E-09	7.700E-09	7.457E-09
a-226	U-234	2.637E-10	0.000E+00	7.117E-18	6.089E-17	5.684E-16	3.187E-15	9.072E-15	1.016E-14	9.843E-15
a-226	U-234	3.795E-12	0.000E+00	1.024E-19	8.765E-19	8.182E-18	4.587E-17	1.306E-16	1.463E-16	1.417E-16
a-226	U-238	3.196E-07	0.000E+00	8.081E-21	2.055E-19	6.180E-18	9.385E-17	5.963E-16	7.864E-16	7.619E-16
a-226	U-238	4.219E-13	0.000E+00	1.067E-26	2.712E-25	8.158E-24	1.239E-22	7.872E-22	1.038E-21	1.006E-21
a-226	U-238	6.073E-15	0.000E+00	1.535E-28	3.904E-27	1.174E-25	1.783E-24	1.133E-23	1.494E-23	1.448E-23
a-226	U-238	1.994E-04	0.000E+00	5.042E-18	1.282E-16	3.856E-15	5.856E-14	3.721E-13	4.907E-13	4.755E-13
a-226	U-238	2.633E-10	0.000E+00	6.656E-24	1.692E-22	5.090E-21	7.730E-20	4.912E-19	6.477E-19	6.276E-19
a-226	U-238	3.789E-12	0.000E+00	9.581E-26	2.436E-24	7.327E-23	1.113E-21	7.070E-21	9.323E-21	9.034E-21
a-226	äS(j):		7.291E-03	7.061E-03	6.622E-03	5.290E-03	2.785E-03	2.948E-04	4.894E-07	7.457E-09

ummary : GKP Fire Ighter - Inhalation
ile : C:\USERS\CLAUDE\DOCUMENTS\0 GKP DOSE\RESRAD CW\GKP FIRE FIGHTER - INHALATION.RAD

Individual Nuclide Soil Concentration
Parent Nuclide and Branch Fraction Indicated

uclide (j)	Parent (i)	THF(i)	S(j,t), pCi/g t= 0.000E+00	1.000E+00	3.000E+00	1.000E+01	3.000E+01	1.000E+02	3.000E+02	1.000E+03
ÄÄÄÄÄÄ	ÄÄÄÄÄÄÄ	ÄÄÄÄÄÄÄÄÄ	ÄÄÄÄÄÄÄÄÄ	ÄÄÄÄÄÄÄÄÄ	ÄÄÄÄÄÄÄÄÄ	ÄÄÄÄÄÄÄÄÄ	ÄÄÄÄÄÄÄÄÄ	ÄÄÄÄÄÄÄÄÄ	ÄÄÄÄÄÄÄÄÄ	ÄÄÄÄÄÄÄÄÄ
a-226	Ra-226	3.795E-12	1.385E-10	1.342E-10	1.258E-10	1.005E-10	5.291E-11	5.600E-12	9.153E-15	1.615E-24
a-226	Ra-226	4.196E-08	1.531E-06	1.483E-06	1.391E-06	1.111E-06	5.849E-07	6.191E-08	1.012E-10	1.786E-20
a-226	äS(j):		1.532E-06	1.483E-06	1.391E-06	1.111E-06	5.850E-07	6.192E-08	1.012E-10	1.786E-20
a-226	Ra-226	5.538E-14	2.022E-12	1.958E-12	1.836E-12	1.467E-12	7.721E-13	8.173E-14	1.336E-16	2.357E-26
a-226	Ra-226	7.972E-16	2.910E-14	2.818E-14	2.643E-14	2.111E-14	1.111E-14	1.176E-15	1.923E-18	3.393E-28
a-226	äS(j):		2.051E-12	1.986E-12	1.862E-12	1.488E-12	7.832E-13	8.290E-14	1.355E-16	2.391E-26
a-226	Ra-226	2.000E-07	7.300E-06	7.070E-06	6.630E-06	5.297E-06	2.788E-06	2.951E-07	4.823E-10	8.513E-20
a-226	Ra-226	2.640E-13	9.636E-12	9.332E-12	8.752E-12	6.991E-12	3.680E-12	3.896E-13	6.367E-16	1.124E-25
a-226	U-234	2.000E-07	0.000E+00	5.398E-15	4.619E-14	4.311E-13	2.417E-12	6.881E-12	7.709E-12	7.466E-12
a-226	U-234	2.640E-13	0.000E+00	7.126E-21	6.097E-20	5.691E-19	3.191E-18	9.083E-18	1.018E-17	9.855E-18
a-226	U-234	3.800E-15	0.000E+00	1.026E-22	8.776E-22	8.192E-21	4.593E-20	1.307E-19	1.465E-19	1.418E-19
a-226	U-238	3.200E-10	0.000E+00	8.091E-24	2.057E-22	6.188E-21	9.396E-20	5.971E-19	7.873E-19	7.629E-19
a-226	U-238	4.224E-16	0.000E+00	1.068E-29	2.715E-28	8.168E-27	1.240E-25	7.881E-25	1.039E-24	1.007E-24
a-226	U-238	6.080E-18	0.000E+00	1.537E-31	3.909E-30	1.176E-28	1.785E-27	1.134E-26	1.496E-26	1.449E-26
a-226	U-238	1.997E-07	0.000E+00	5.048E-21	1.284E-19	3.861E-18	5.863E-17	3.726E-16	4.913E-16	4.760E-16
a-226	U-238	2.636E-13	0.000E+00	6.664E-27	1.694E-25	5.097E-24	7.739E-23	4.918E-22	6.485E-22	6.284E-22
a-226	U-238	3.794E-15	0.000E+00	9.592E-29	2.439E-27	7.336E-26	1.114E-24	7.079E-24	9.335E-24	9.045E-24
a-226	äS(j):		7.300E-06	7.070E-06	6.630E-06	5.297E-06	2.788E-06	2.951E-07	4.900E-10	7.466E-12
a-226	Ra-226	3.800E-15	1.387E-13	1.343E-13	1.260E-13	1.006E-13	5.298E-14	5.607E-15	9.164E-18	1.617E-27
n-232	Th-232	1.000E+00	2.400E+00	2.400E+00	2.400E+00	2.399E+00	2.397E+00	2.391E+00	2.373E+00	2.313E+00
a-228	Th-232	1.000E+00	0.000E+00	2.684E-01	6.968E-01	1.486E+00	1.879E+00	1.894E+00	1.880E+00	1.832E+00
n-228	Th-232	1.000E+00	0.000E+00	4.430E-02	2.891E-01	1.222E+00	1.865E+00	1.894E+00	1.880E+00	1.832E+00
-234	U-234	9.996E-01	1.389E+01	1.329E+01	1.217E+01	8.925E+00	3.683E+00	1.662E 01	2.380E 05	8.354E-19
-234	U-234	1.319E-06	1.834E-05	1.755E-05	1.606E-05	1.178E-05	4.862E-06	2.194E-07	3.141E-11	1.103E-24
-234	U-238	1.599E-03	0.000E+00	6.005E-08	1.649E-07	4.032E-07	4.992E-07	7.511E-08	3.227E-11	3.779E-24
-234	U-238	2.111E-09	0.000E+00	7.927E-14	2.177E-13	5.322E-13	6.589E-13	9.914E-14	4.259E-17	4.988E-30
-234	U-238	3.039E-11	0.000E+00	1.141E-15	3.133E-15	7.661E-15	9.484E-15	1.427E-15	6.131E-19	7.180E-32
-234	U-238	3.359E-07	0.000E+00	1.261E-11	3.463E-11	8.469E-11	1.048E-10	1.578E-11	6.777E-15	7.938E-28
-234	U-238	4.434E-13	0.000E+00	1.665E-17	4.572E-17	1.118E-16	1.384E-16	2.082E-17	8.946E-21	1.048E-33
-234	U-238	6.383E-15	0.000E+00	2.396E-19	6.580E-19	1.609E-18	1.992E-18	2.998E-19	1.288E-22	1.508E-35
-234	U-238	3.196E-07	0.000E+00	1.200E-11	3.295E-11	8.058E-11	9.975E-11	1.501E-11	6.448E-15	7.552E-28
-234	U-238	4.219E-13	0.000E+00	1.584E-17	4.350E-17	1.064E-16	1.317E-16	1.981E-17	8.511E-21	9.969E-34
-234	U-238	6.073E-15	0.000E+00	2.280E-19	6.261E-19	1.531E-18	1.895E-18	2.852E-19	1.225E-22	1.435E-35
-234	U-238	6.713E-11	0.000E+00	2.521E-15	6.921E-15	1.692E-14	2.095E-14	3.153E-15	1.354E-18	1.586E-31
-234	U-238	8.862E-17	0.000E+00	3.327E-21	9.136E-21	2.234E-20	2.766E-20	4.162E-21	1.788E-24	2.094E-37
-234	U-238	1.276E-18	0.000E+00	4.789E-23	1.315E-22	3.216E-22	3.981E-22	5.990E-23	2.573E-26	3.014E-39
-234	U-238	3.200E-10	0.000E+00	1.201E-14	3.299E-14	8.067E-14	9.987E-14	1.503E-14	6.456E-18	7.561E-31
-234	U-238	4.224E-16	0.000E+00	1.586E-20	4.355E-20	1.065E-19	1.318E-19	1.984E-20	8.522E-24	9.981E-37
-234	U-238	6.080E-18	0.000E+00	2.283E-22	6.268E-22	1.533E-21	1.898E-21	2.855E-22	1.227E-25	1.437E-38
-234	U-238	9.980E-01	0.000E+00	3.747E-05	1.029E-04	2.516E-04	3.115E-04	4.687E-05	2.013E-08	2.358E-21
-234	U-238	1.317E-06	0.000E+00	4.946E-11	1.358E-10	3.321E-10	4.111E-10	6.187E-11	2.658E-14	3.113E-27
-234	U-238	1.896E-08	0.000E+00	7.119E-13	1.955E-12	4.780E-12	5.918E-12	8.905E-13	3.825E-16	4.480E-29

ummary : GKP Fire Fighter - Inhalation
ile : C:\USERS\CLAUDE\DOCUMENTS\0 GKP DOSE\RESRAD CW\GKP FIRE FIGHTER - INHALATION.RAD

Individual Nuclide Soil Concentration
Parent Nuclide and Branch Fraction Indicated

uclide (j)	Parent (i)	THF(i)	S(j,t), pCi/g t= 0.000E+00	1.000E+00	3.000E+00	1.000E+01	3.000E+01	1.000E+02	3.000E+02	1.000E+03
ÄÄÄÄÄ	ÄÄÄÄÄÄ	ÄÄÄÄÄÄÄÄ	ÄÄÄÄÄÄÄÄ	ÄÄÄÄÄÄÄÄ	ÄÄÄÄÄÄÄÄ	ÄÄÄÄÄÄÄÄ	ÄÄÄÄÄÄÄÄ	ÄÄÄÄÄÄÄÄ	ÄÄÄÄÄÄÄÄ	ÄÄÄÄÄÄÄÄ
-234	U-238	2.096E-04	0.000E+00	7.871E-09	2.161E-08	5.285E-08	6.542E-08	9.844E-09	4.229E-12	4.953E-25
-234	U-238	2.767E-10	0.000E+00	1.039E-14	2.853E-14	6.976E-14	8.636E-14	1.299E-14	5.582E-18	6.538E-31
-234	U-238	3.983E-12	0.000E+00	1.495E-16	4.106E-16	1.004E-15	1.243E-15	1.870E-16	8.035E-20	9.411E-33
-234	U-238	1.994E-04	0.000E+00	7.488E-09	2.056E-08	5.028E-08	6.225E-08	9.366E-09	4.024E-12	4.712E-25
-234	U-238	2.633E-10	0.000E+00	9.884E-15	2.714E-14	6.637E-14	8.216E-14	1.236E-14	5.311E-18	6.220E-31
-234	U-238	3.789E-12	0.000E+00	1.423E-16	3.907E-16	9.553E-16	1.183E-15	1.780E-16	7.645E-20	8.954E-33
-234	U-238	4.189E-08	0.000E+00	1.573E-12	4.319E-12	1.056E-11	1.307E-11	1.967E-12	8.451E-16	9.898E-29
-234	U-238	5.530E-14	0.000E+00	2.076E-18	5.701E-18	1.394E-17	1.726E-17	2.597E-18	1.116E-21	1.307E-34
-234	U-238	7.959E-16	0.000E+00	2.988E-20	8.206E-20	2.007E-19	2.484E-19	3.738E-20	1.606E-23	1.881E-36
-234	U-238	1.997E-07	0.000E+00	7.497E-12	2.059E-11	5.034E-11	6.232E-11	9.378E-12	4.028E-15	4.718E-28
-234	U-238	2.636E-13	0.000E+00	9.896E-18	2.717E-17	6.645E-17	8.226E-17	1.238E-17	5.318E-21	6.228E-34
-234	U-238	3.794E-15	0.000E+00	1.424E-19	3.911E-19	9.565E-19	1.184E-18	1.782E-19	7.654E-23	8.965E-36
-234	äS(j):		1.389E+01	1.329E+01	1.217E+01	8.926E+00	3.683E+00	1.663E-01	2.382E-05	8.377E-19
n-230	U-234	9.996E-01	0.000E+00	1.250E-04	3.589E-04	1.032E-03	2.120E-03	2.842E-03	2.850E-03	2.759E-03
n-230	U-234	1.319E-06	0.000E+00	1.650E-10	4.738E-10	1.362E-09	2.798E-09	3.751E-09	3.762E-09	3.642E-09
n-230	U-234	1.899E-08	0.000E+00	2.375E-12	6.819E-12	1.961E-11	4.028E-11	5.400E-11	5.415E-11	5.243E-11
n-230	U-234	2.100E-04	0.000E+00	2.625E-08	7.539E-08	2.168E-07	4.452E-07	5.969E-07	5.986E-07	5.796E-07
n-230	U-234	2.771E-10	0.000E+00	3.465E-14	9.951E-14	2.862E-13	5.877E-13	7.879E-13	7.902E-13	7.650E-13
n-230	U-234	3.989E-12	0.000E+00	4.988E-16	1.432E-15	4.119E-15	8.460E-15	1.134E-14	1.137E-14	1.101E-14
n-230	U-234	1.998E-04	0.000E+00	2.497E-08	7.172E-08	2.063E-07	4.236E-07	5.679E-07	5.695E-07	5.514E-07
n-230	U-234	2.637E-10	0.000E+00	3.297E-14	9.468E-14	2.723E-13	5.592E-13	7.497E-13	7.518E-13	7.279E-13
n-230	U-234	3.795E-12	0.000E+00	4.745E-16	1.363E-15	3.919E-15	8.049E-15	1.079E-14	1.082E-14	1.048E-14
n-230	U-234	4.196E-08	0.000E+00	5.246E-12	1.507E-11	4.332E-11	8.898E-11	1.193E-10	1.196E-10	1.158E-10
n-230	U-234	5.538E-14	0.000E+00	6.924E-18	1.989E-17	5.719E-17	1.175E-16	1.575E-16	1.579E-16	1.529E-16
n-230	U-234	7.972E-16	0.000E+00	9.967E-20	2.862E-19	8.231E-19	1.691E-18	2.267E-18	2.273E-18	2.201E-18
n-230	U-234	2.000E-07	0.000E+00	2.501E-11	7.181E-11	2.065E-10	4.241E-10	5.686E-10	5.702E-10	5.521E-10
n-230	U-234	2.640E-13	0.000E+00	3.301E-17	9.479E-17	2.726E-16	5.599E-16	7.506E-16	7.527E-16	7.287E-16
n-230	U-234	3.800E-15	0.000E+00	4.751E-19	1.364E-18	3.924E-18	8.058E-18	1.080E-17	1.083E-17	1.049E-17
n-230	U-238	1.599E-03	0.000E+00	2.802E-13	2.378E-12	2.160E-11	1.128E-10	2.748E-10	2.912E-10	2.820E-10
n-230	U-238	2.111E-09	0.000E+00	3.699E-19	3.139E-18	2.851E-17	1.489E-16	3.627E-16	3.844E-16	3.722E-16
n-230	U-238	3.039E-11	0.000E+00	5.324E-21	4.519E-20	4.104E-19	2.143E-18	5.221E-18	5.533E-18	5.357E-18
n-230	U-238	3.359E-07	0.000E+00	5.885E-17	4.995E-16	4.537E-15	2.369E-14	5.771E-14	6.117E-14	5.922E-14
n-230	U-238	4.434E-13	0.000E+00	7.769E-23	6.594E-22	5.989E-21	3.127E-20	7.618E-20	8.074E-20	7.817E-20
n-230	U-238	6.383E-15	0.000E+00	1.118E-24	9.491E-24	8.621E-23	4.501E-22	1.097E-21	1.162E-21	1.125E-21
n-230	U-238	3.196E-07	0.000E+00	5.600E-17	4.753E-16	4.317E-15	2.254E-14	5.491E-14	5.820E-14	5.635E-14
n-230	U-238	4.219E-13	0.000E+00	7.391E-23	6.274E-22	5.698E-21	2.975E-20	7.248E-20	7.682E-20	7.438E-20
n-230	U-238	6.073E-15	0.000E+00	1.064E-24	9.030E-24	8.202E-23	4.282E-22	1.043E-21	1.106E-21	1.071E-21
n-230	U-238	6.713E-11	0.000E+00	1.176E-20	9.983E-20	9.067E-19	4.734E-18	1.153E-17	1.222E-17	1.183E-17
n-230	U-238	8.862E-17	0.000E+00	1.553E-26	1.318E-25	1.197E-24	6.249E-24	1.522E-23	1.614E-23	1.562E-23
n-230	U-238	1.276E-18	0.000E+00	2.235E-28	1.897E-27	1.723E-26	8.995E-26	2.191E-25	2.323E-25	2.249E-25
n-230	U-238	3.200E-10	0.000E+00	5.606E-20	4.759E-19	4.322E-18	2.257E-17	5.498E-17	5.827E-17	5.641E-17
n-230	U-238	4.224E-16	0.000E+00	7.400E-26	6.281E-25	5.705E-24	2.979E-23	7.257E-23	7.691E-23	7.447E-23
n-230	U-238	6.080E-18	0.000E+00	1.065E-27	9.041E-27	8.212E-26	4.288E-25	1.045E-24	1.107E-24	1.072E-24
n-230	U-238	9.980E-01	0.000E+00	1.748E-10	1.484E-09	1.348E-08	7.038E-08	1.715E-07	1.817E-07	1.759E-07
n-230	U-238	1.317E-06	0.000E+00	2.308E-16	1.959E-15	1.779E-14	9.290E-14	2.263E-13	2.399E-13	2.322E-13
n-230	U-238	1.896E-08	0.000E+00	3.322E-18	2.820E-17	2.561E-16	1.337E-15	3.258E-15	3.453E-15	3.343E-15
n-230	U-238	2.096E-04	0.000E+00	3.673E-14	3.117E-13	2.831E-12	1.478E-11	3.601E-11	3.817E-11	3.695E-11
n-230	U-238	2.767E-10	0.000E+00	4.848E-20	4.115E-19	3.737E-18	1.951E-17	4.754E-17	5.038E-17	4.878E-17

ummary : GKP Fire Fighter - Inhalation
ile : C:\USERS\CLAUDE\DOCUMENTS\0 GKP DOSE\RESRAD CW\GKP FIRE FIGHTER - INHALATION.RAD

Individual Nuclide Soil Concentration
Parent Nuclide and Branch Fraction Indicated

uclide (j)	Parent (i)	THF(i)	S(j,t), pCi/g t= 0.000E+00	1.000E+00	3.000E+00	1.000E+01	3.000E+01	1.000E+02	3.000E+02	1.000E+03
ÄÄÄÄÄÄ	ÄÄÄÄÄÄÄ	ÄÄÄÄÄÄÄÄÄ	ÄÄÄÄÄÄÄÄÄ	ÄÄÄÄÄÄÄÄÄ	ÄÄÄÄÄÄÄÄÄ	ÄÄÄÄÄÄÄÄÄ	ÄÄÄÄÄÄÄÄÄ	ÄÄÄÄÄÄÄÄÄ	ÄÄÄÄÄÄÄÄÄ	ÄÄÄÄÄÄÄÄÄ
n-230	U-238	3.983E-12	0.000E+00	6.978E-22	5.923E-21	5.379E-20	2.809E-19	6.843E-19	7.252E-19	7.021E-19
n-230	U-238	1.994E-04	0.000E+00	3.494E-14	2.966E-13	2.694E-12	1.406E-11	3.426E-11	3.631E-11	3.516E-11
n-230	U-238	2.633E-10	0.000E+00	4.612E-20	3.915E-19	3.556E-18	1.856E-17	4.523E-17	4.794E-17	4.641E-17
n-230	U-238	3.789E-12	0.000E+00	6.639E-22	5.635E-21	5.118E-20	2.672E-19	6.510E-19	6.900E-19	6.680E-19
n-230	U-238	4.189E-08	0.000E+00	7.339E-18	6.229E-17	5.658E-16	2.954E-15	7.197E-15	7.628E-15	7.385E-15
n-230	U-238	5.530E-14	0.000E+00	9.688E-24	8.223E-23	7.468E-22	3.899E-21	9.500E-21	1.007E-20	9.748E-21
n-230	U-238	7.959E-16	0.000E+00	1.394E-25	1.184E-24	1.075E-23	5.613E-23	1.367E-22	1.449E-22	1.403E-22
n-230	U-238	1.997E-07	0.000E+00	3.498E-17	2.969E-16	2.697E-15	1.408E-14	3.431E-14	3.636E-14	3.520E-14
n-230	U-238	2.636E-13	0.000E+00	4.618E-23	3.920E-22	3.560E-21	1.859E-20	4.528E-20	4.799E-20	4.647E-20
n-230	U-238	3.794E-15	0.000E+00	6.647E-25	5.642E-24	5.124E-23	2.675E-22	6.518E-22	6.908E-22	6.688E-22
n-230	äS(j):		0.000E+00	1.250E-04	3.591E-04	1.033E-03	2.121E-03	2.843E-03	2.851E-03	2.761E-03
-234	U-234	1.899E-08	2.640E-07	2.526E-07	2.312E-07	1.696E-07	6.998E-08	3.159E-09	4.522E-13	1.587E-26
-234	U-234	2.100E-04	2.918E-03	2.792E-03	2.556E-03	1.875E-03	7.736E-04	3.492E-05	4.999E-09	1.755E-22
-234	äS(j):		2.919E-03	2.792E-03	2.556E-03	1.875E-03	7.737E-04	3.492E-05	4.999E-09	1.755E-22
a-226	U-234	2.100E-04	0.000E+00	5.667E-12	4.849E-11	4.526E-10	2.538E-09	7.224E-09	8.093E-09	7.837E-09
a-226	U-234	3.989E-12	0.000E+00	1.077E-19	9.213E-19	8.600E-18	4.821E-17	1.373E-16	1.538E-16	1.489E-16
a-226	U-238	3.359E-07	0.000E+00	8.493E-21	2.160E-19	6.496E-18	9.864E-17	6.268E-16	8.265E-16	8.008E-16
a-226	U-238	4.434E-13	0.000E+00	1.121E-26	2.851E-25	8.574E-24	1.302E-22	8.274E-22	1.091E-21	1.057E-21
a-226	U-238	6.383E-15	0.000E+00	1.614E-28	4.103E-27	1.234E-25	1.874E-24	1.191E-23	1.570E-23	1.522E-23
a-226	U-238	2.096E-04	0.000E+00	5.300E-18	1.348E-16	4.053E-15	6.155E-14	3.911E-13	5.158E-13	4.997E-13
a-226	U-238	2.767E-10	0.000E+00	6.996E-24	1.779E-22	5.350E-21	8.125E-20	5.163E-19	6.808E-19	6.596E-19
a-226	U-238	3.983E-12	0.000E+00	1.007E-25	2.560E-24	7.701E-23	1.169E-21	7.431E-21	9.799E-21	9.495E-21
a-226	äS(j):		0.000E+00	5.667E-12	4.849E-11	4.526E-10	2.538E-09	7.224E-09	8.094E-09	7.838E-09
-234	U-234	2.771E-10	3.852E-09	3.686E-09	3.373E-09	2.475E-09	1.021E-09	4.609E-11	6.598E-15	2.316E-28
-234	U-234	3.989E-12	5.545E-11	5.305E-11	4.856E-11	3.562E-11	1.470E-11	6.634E-13	9.498E-17	3.334E-30
-234	äS(j):		3.908E-09	3.739E-09	3.422E-09	2.510E-09	1.036E-09	4.676E-11	6.693E-15	2.349E-28
a-226	U-234	2.771E-10	0.000E+00	7.480E-18	6.400E-17	5.974E-16	3.350E-15	9.535E-15	1.068E-14	1.035E-14
-234	U-234	1.998E-04	2.777E-03	2.656E-03	2.431E-03	1.784E-03	7.360E-04	3.322E-05	4.756E-09	1.669E-22
-234	U-234	2.637E-10	3.665E-09	3.506E-09	3.209E-09	2.354E-09	9.715E-10	4.385E-11	6.278E-15	2.204E-28
-234	äS(j):		2.777E-03	2.656E-03	2.431E-03	1.784E-03	7.360E-04	3.322E-05	4.756E-09	1.669E-22
-234	U-234	3.795E-12	5.276E-11	5.047E-11	4.620E-11	3.389E-11	1.398E-11	6.312E-13	9.036E-17	3.172E-30
-234	U-234	4.196E-08	5.832E-07	5.580E-07	5.107E-07	3.746E-07	1.546E-07	6.978E-09	9.989E-13	3.506E-26
-234	äS(j):		5.833E-07	5.580E-07	5.107E-07	3.747E-07	1.546E-07	6.979E-09	9.990E-13	3.507E-26
a-226	U-234	4.196E-08	0.000E+00	1.132E-15	9.690E-15	9.045E-14	5.071E-13	1.444E-12	1.617E-12	1.566E-12
a-226	U-234	7.972E-16	0.000E+00	2.152E-23	1.841E-22	1.719E-21	9.635E-21	2.743E-20	3.073E-20	2.976E-20
a-226	U-238	6.713E-11	0.000E+00	1.697E-24	4.316E-23	1.298E-21	1.971E-20	1.253E-19	1.652E-19	1.600E-19
a-226	U-238	8.862E-17	0.000E+00	2.240E-30	5.697E-29	1.713E-27	2.602E-26	1.653E-25	2.180E-25	2.113E-25
a-226	U-238	1.276E-18	0.000E+00	3.225E-32	8.200E-31	2.466E-29	3.745E-28	2.380E-27	3.138E-27	3.041E-27
a-226	U-238	4.189E-08	0.000E+00	1.059E-21	2.693E-20	8.100E-19	1.230E-17	7.816E-17	1.031E-16	9.987E-17
a-226	U-238	5.530E-14	0.000E+00	1.398E-27	3.555E-26	1.069E-24	1.624E-23	1.032E-22	1.360E-22	1.318E-22
a-226	U-238	7.959E-16	0.000E+00	2.012E-29	5.117E-28	1.539E-26	2.337E-25	1.485E-24	1.958E-24	1.897E-24
a-226	äS(j):		0.000E+00	1.132E-15	9.690E-15	9.045E-14	5.071E-13	1.444E-12	1.617E-12	1.566E-12

ummary : GKP Fire Fighter - Inhalation
ile : C:\USERS\CLAUDE\DOCUMENTS\0 GKP DOSE\RESRAD CW\GKP FIRE FIGHTER - INHALATION.RAD

Individual Nuclide Soil Concentration
Parent Nuclide and Branch Fraction Indicated

uclide (j)	Parent (i)	THF(i)	S(j,t), pCi/g t= 0.000E+00	1.000E+00	3.000E+00	1.000E+01	3.000E+01	1.000E+02	3.000E+02	1.000E+03
ÄÄÄÄÄ	ÄÄÄÄÄÄ	ÄÄÄÄÄÄÄÄ	ÄÄÄÄÄÄÄÄÄ	ÄÄÄÄÄÄÄÄÄ	ÄÄÄÄÄÄÄÄÄ	ÄÄÄÄÄÄÄÄÄ	ÄÄÄÄÄÄÄÄÄ	ÄÄÄÄÄÄÄÄÄ	ÄÄÄÄÄÄÄÄÄ	ÄÄÄÄÄÄÄÄÄ
-234	U-234	5.538E-14	7.698E-13	7.365E-13	6.741E-13	4.945E-13	2.041E-13	9.211E-15	1.319E-18	4.629E-32
-234	U-234	7.972E-16	1.108E-14	1.060E-14	9.703E-15	7.118E-15	2.937E-15	1.326E-16	1.898E-20	6.662E-34
-234	äS(j):		7.809E-13	7.471E-13	6.838E-13	5.016E-13	2.070E-13	9.344E-15	1.338E-18	4.695E-32
a-226	U-234	5.538E-14	0.000E+00	1.495E-21	1.279E-20	1.194E-19	6.694E-19	1.906E-18	2.135E-18	2.067E-18
-234	U-234	2.000E-07	2.780E-06	2.660E-06	2.434E-06	1.786E-06	7.369E-07	3.326E-08	4.762E-12	1.671E-25
-234	U-234	2.640E-13	3.670E-12	3.511E-12	3.213E-12	2.357E-12	9.727E-13	4.391E-14	6.285E-18	2.206E-31
-234	äS(j):		2.780E-06	2.660E-06	2.434E-06	1.786E-06	7.369E-07	3.326E-08	4.762E-12	1.671E-25
-234	U-234	3.800E-15	5.282E-14	5.053E-14	4.625E-14	3.393E-14	1.400E-14	6.320E-16	9.047E-20	3.176E-33
-235	U-235	9.835E-01	8.261E-01	7.904E-01	7.234E-01	5.307E-01	2.190E-01	9.887E-03	1.416E-06	4.981E-20
-235	U-235	2.722E-03	2.286E-03	2.187E-03	2.002E-03	1.469E-03	6.061E-04	2.736E-05	3.920E-09	1.379E-22
-235	äS(j):		8.284E-01	7.925E-01	7.254E-01	5.322E-01	2.196E-01	9.914E-03	1.420E-06	4.995E-20
a-231	U-235	9.835E-01	0.000E+00	1.672E-05	4.592E-05	1.123E-04	1.390E-04	2.090E-05	8.961E-09	1.043E-21
a-231	U-235	2.722E-03	0.000E+00	4.628E-08	1.271E-07	3.107E-07	3.846E-07	5.784E-08	2.480E-11	2.886E-24
a-231	U-235	1.376E-02	0.000E+00	2.340E-07	6.425E-07	1.571E-06	1.944E-06	2.924E-07	1.254E-10	1.459E-23
a-231	U-235	3.809E-05	0.000E+00	6.476E-10	1.778E-09	4.348E-09	5.382E-09	8.093E-10	3.470E-13	4.038E-26
a-231	U-235	8.257E-07	0.000E+00	1.404E-11	3.855E-11	9.426E-11	1.167E-10	1.755E-11	7.523E-15	8.755E-28
a-231	U-235	2.285E-09	0.000E+00	3.886E-14	1.067E-13	2.609E-13	3.229E-13	4.856E-14	2.082E-17	2.423E-30
a-231	äS(j):		0.000E+00	1.700E-05	4.669E-05	1.142E-04	1.413E-04	2.125E-05	9.111E-09	1.060E-21
c-227	U-235	9.835E-01	0.000E+00	2.577E-07	1.994E-06	1.324E-05	3.070E-05	6.123E-06	2.826E-09	3.370E-22
c-227	U-235	2.722E-03	0.000E+00	7.134E-10	5.518E-09	3.665E-08	8.495E-08	1.695E-08	7.821E-12	9.327E-25
c-227	U-235	1.376E-02	0.000E+00	3.606E-09	2.790E-08	1.853E-07	4.295E-07	8.568E-08	3.954E-11	4.715E-24
c-227	äS(j):		0.000E+00	4.320E-09	3.341E-08	2.219E-07	5.144E-07	1.026E-07	4.736E-11	5.648E-24
-235	U-235	1.376E-02	1.156E-02	1.106E-02	1.012E-02	7.426E-03	3.064E-03	1.383E-04	1.982E-08	6.969E-22
-235	U-235	3.809E-05	3.199E-05	3.061E-05	2.801E-05	2.055E-05	8.481E-06	3.829E-07	5.484E-11	1.929E-24
-235	äS(j):		1.159E-02	1.109E-02	1.015E-02	7.446E-03	3.073E-03	1.387E-04	1.987E-08	6.989E-22
c-227	U-235	3.809E-05	0.000E+00	9.981E-12	7.721E-11	5.128E-10	1.189E-09	2.371E-10	1.094E-13	1.305E-26
c-227	U-235	8.257E-07	0.000E+00	2.164E-13	1.674E-12	1.112E-11	2.577E-11	5.141E-12	2.372E-15	2.829E-28
c-227	äS(j):		0.000E+00	1.020E-11	7.888E-11	5.239E-10	1.214E-09	2.423E-10	1.118E-13	1.333E-26
-235	U-235	8.257E-07	6.936E-07	6.636E-07	6.074E-07	4.456E-07	1.839E-07	8.301E-09	1.189E-12	4.182E-26
-235	U-235	2.285E-09	1.920E-09	1.837E-09	1.681E-09	1.233E-09	5.089E-10	2.297E-11	3.291E-15	1.157E-28
-235	äS(j):		6.955E-07	6.654E-07	6.090E-07	4.468E-07	1.844E-07	8.324E-09	1.192E-12	4.193E-26
c-227	U-235	2.285E-09	0.000E+00	5.989E-16	4.633E-15	3.077E-14	7.133E-14	1.423E-14	6.566E-18	7.831E-31
-238	U-238	5.450E-07	7.575E-06	7.248E-06	6.634E-06	4.866E-06	2.008E-06	9.066E-08	1.299E-11	4.567E-25
-238	U-238	1.599E-03	2.223E-02	2.127E-02	1.947E-02	1.428E-02	5.893E-03	2.661E-04	3.811E-08	1.340E-21
-238	äS(j):		2.224E-02	2.128E-02	1.947E-02	1.429E-02	5.895E-03	2.662E-04	3.812E-08	1.341E-21
-238	U-238	2.111E-09	2.934E-08	2.807E-08	2.570E-08	1.885E-08	7.779E-09	3.512E-10	5.030E-14	1.769E-27

ummary : GKP Fire Fighter - Inhalation
ile : C:\USERS\CLAUDE\DOCUMENTS\0 GKP DOSE\RESRAD CW\GKP FIRE FIGHTER - INHALATION.RAD

Individual Nuclide Soil Concentration
Parent Nuclide and Branch Fraction Indicated

uclide (j)	Parent (i)	THF(i)	S(j,t), pCi/g t= 0.000E+00	1.000E+00	3.000E+00	1.000E+01	3.000E+01	1.000E+02	3.000E+02	1.000E+03
ÄÄÄÄÄÄ	ÄÄÄÄÄÄÄ	ÄÄÄÄÄÄÄÄÄÄ	ÄÄÄÄÄÄÄÄÄÄ	ÄÄÄÄÄÄÄÄÄÄ	ÄÄÄÄÄÄÄÄÄÄ	ÄÄÄÄÄÄÄÄÄÄ	ÄÄÄÄÄÄÄÄÄÄ	ÄÄÄÄÄÄÄÄÄÄ	ÄÄÄÄÄÄÄÄÄÄ	ÄÄÄÄÄÄÄÄÄÄ
-238	U-238	3.039E-11	4.224E-10	4.041E-10	3.699E-10	2.713E-10	1.120E-10	5.055E-12	7.241E-16	2.547E-29
-238	äS(j):		2.977E-08	2.848E-08	2.607E-08	1.912E-08	7.891E-09	3.563E-10	5.103E-14	1.795E-27
-238	U-238	3.359E-07	4.669E-06	4.467E-06	4.089E-06	3.000E-06	1.238E-06	5.588E-08	8.005E-12	2.815E-25
-238	U-238	4.434E-13	6.164E-12	5.897E-12	5.397E-12	3.960E-12	1.634E-12	7.377E-14	1.057E-17	3.716E-31
-238	äS(j):		4.669E-06	4.467E-06	4.089E-06	3.000E-06	1.238E-06	5.588E-08	8.005E-12	2.815E-25
-238	U-238	6.383E-15	8.872E-14	8.488E-14	7.769E-14	5.699E-14	2.352E-14	1.062E-15	1.521E-19	5.349E-33
-238	U-238	3.196E-07	4.443E-06	4.250E-06	3.890E-06	2.854E-06	1.178E-06	5.317E-08	7.616E-12	2.679E-25
-238	äS(j):		4.443E-06	4.250E-06	3.890E-06	2.854E-06	1.178E-06	5.317E-08	7.616E-12	2.679E-25
-238	U-238	4.219E-13	5.864E-12	5.610E-12	5.135E-12	3.767E-12	1.555E-12	7.018E-14	1.005E-17	3.536E-31
-238	U-238	6.073E-15	8.441E-14	8.076E-14	7.392E-14	5.422E-14	2.238E-14	1.010E-15	1.447E-19	5.089E-33
-238	äS(j):		5.949E-12	5.691E-12	5.209E-12	3.821E-12	1.577E-12	7.119E-14	1.020E-17	3.587E-31
-238	U-238	6.713E-11	9.331E-10	8.927E-10	8.171E-10	5.994E-10	2.474E-10	1.117E-11	1.600E-15	5.626E-29
-238	U-238	8.862E-17	1.232E-15	1.178E-15	1.079E-15	7.913E-16	3.265E-16	1.474E-17	2.112E-21	7.427E-35
-238	äS(j):		9.331E-10	8.927E-10	8.171E-10	5.994E-10	2.474E-10	1.117E-11	1.600E-15	5.626E-29
-238	U-238	1.276E-18	1.773E-17	1.696E-17	1.553E-17	1.139E-17	4.700E-18	2.122E-19	3.039E-23	1.069E-36
-238	U-238	3.200E-10	4.448E-09	4.255E-09	3.895E-09	2.857E-09	1.179E-09	5.323E-11	7.625E-15	2.682E-28
-238	äS(j):		4.448E-09	4.255E-09	3.895E-09	2.857E-09	1.179E-09	5.323E-11	7.625E-15	2.682E-28
-238	U-238	4.224E-16	5.871E-15	5.617E-15	5.141E-15	3.772E-15	1.556E-15	7.027E-17	1.007E-20	3.540E-34
-238	U-238	6.080E-18	8.451E-17	8.085E-17	7.400E-17	5.429E-17	2.240E-17	1.011E-18	1.449E-22	5.095E-36
-238	äS(j):		5.956E-15	5.698E-15	5.215E-15	3.826E-15	1.579E-15	7.128E-17	1.021E-20	3.591E-34
-238	U-238	9.980E-01	1.387E+01	1.327E+01	1.215E+01	8.911E+00	3.677E+00	1.660E-01	2.378E-05	8.364E-19
-238	U-238	1.317E-06	1.831E-05	1.752E-05	1.603E-05	1.176E-05	4.854E-06	2.191E-07	3.139E-11	1.104E-24
-238	äS(j):		1.387E+01	1.327E+01	1.215E+01	8.911E+00	3.677E+00	1.660E-01	2.378E-05	8.364E-19
-238	U-238	1.896E-08	2.636E-07	2.522E-07	2.308E-07	1.693E-07	6.987E-08	3.154E-09	4.518E-13	1.589E-26
-238	U-238	2.096E-04	2.914E-03	2.788E-03	2.551E-03	1.872E-03	7.724E-04	3.487E-05	4.995E-09	1.757E-22
-238	äS(j):		2.914E-03	2.788E-03	2.552E-03	1.872E-03	7.725E-04	3.488E-05	4.995E-09	1.757E-22
-238	U-238	2.767E-10	3.846E-09	3.680E-09	3.368E-09	2.471E-09	1.020E-09	4.603E-11	6.593E-15	2.319E-28
-238	U-238	3.983E-12	5.536E-11	5.296E-11	4.848E-11	3.556E-11	1.468E-11	6.626E-13	9.490E-17	3.338E-30
-238	äS(j):		3.902E-09	3.733E-09	3.416E-09	2.506E-09	1.034E-09	4.669E-11	6.688E-15	2.352E-28
-238	U-238	1.994E-04	2.772E-03	2.652E-03	2.428E-03	1.781E-03	7.349E-04	3.318E-05	4.752E-09	1.671E-22
-238	U-238	2.633E-10	3.659E-09	3.501E-09	3.204E-09	2.351E-09	9.701E-10	4.379E-11	6.273E-15	2.206E-28
-238	äS(j):		2.772E-03	2.652E-03	2.428E-03	1.781E-03	7.349E-04	3.318E-05	4.752E-09	1.671E-22
-238	U-238	3.789E-12	5.267E-11	5.039E-11	4.612E-11	3.384E-11	1.396E-11	6.304E-13	9.029E-17	3.176E-30
-238	U-238	4.189E-08	5.823E-07	5.571E-07	5.099E-07	3.741E-07	1.544E-07	6.969E-09	9.982E-13	3.511E-26
-238	äS(j):		5.823E-07	5.571E-07	5.099E-07	3.741E-07	1.544E-07	6.969E-09	9.983E-13	3.511E-26
-238	U-238	5.530E-14	7.686E-13	7.353E-13	6.731E-13	4.938E-13	2.038E-13	9.199E-15	1.318E-18	4.634E-32
-238	U-238	7.959E-16	1.106E-14	1.058E-14	9.688E-15	7.107E-15	2.933E-15	1.324E-16	1.897E-20	6.670E-34
-238	äS(j):		7.797E-13	7.459E-13	6.827E-13	5.009E-13	2.067E-13	9.331E-15	1.337E-18	4.701E-32

ummary : GKP Fire Fighter - Inhalation
ile : C:\USERS\CLAUDE\DOCUMENTS\0 GKP DOSE\RESRAD CW\GKP FIRE FIGHTER - INHALATION.RAD

Individual Nuclide Soil Concentration
Parent Nuclide and Branch Fraction Indicated

uclide (j)	Parent (i)	THF(i)	S(j,t), pCi/g t= 0.000E+00	1.000E+00	3.000E+00	1.000E+01	3.000E+01	1.000E+02	3.000E+02	1.000E+03
ÄÄÄÄÄÄ	ÄÄÄÄÄÄÄ	ÄÄÄÄÄÄÄÄÄ	ÄÄÄÄÄÄÄÄÄ	ÄÄÄÄÄÄÄÄÄ	ÄÄÄÄÄÄÄÄÄ	ÄÄÄÄÄÄÄÄÄ	ÄÄÄÄÄÄÄÄÄ	ÄÄÄÄÄÄÄÄÄ	ÄÄÄÄÄÄÄÄÄ	ÄÄÄÄÄÄÄÄÄ
230	U-230	1.997E-07	2.776E-06	2.655E-06	2.430E-06	1.783E-06	7.358E-07	3.322E-08	4.758E-12	1.673E-25
-238	U-238	2.636E-13	3.664E-12	3.505E-12	3.208E-12	2.354E-12	9.712E-13	4.385E-14	6.281E-18	2.209E-31
-238	äS(j):		2.776E-06	2.655E-06	2.430E-06	1.783E-06	7.358E-07	3.322E-08	4.758E-12	1.673E-25
-238	U-238	3.794E-15	5.274E-14	5.045E-14	4.618E-14	3.388E-14	1.398E-14	6.311E-16	9.040E-20	3.180E-33
íííííí	ííííííí	ííííííííí	ííííííííí	ííííííííí	ííííííííí	ííííííííí	ííííííííí	ííííííííí	ííííííííí	ííííííííí

HF(i) is the thread fraction of the parent nuclide.

ESCALC.EXE execution time = 45.29 seconds

ummary : GKP Fire Fighter Unit Concentration
ile : C:\RESRAD_FAMILY\RESRAD\6.5\USERFILES\GKP FIRE FIGHTER.RAD

Table of Contents

Part I: Mixture Sums and Single Radionuclide Guidelines

ummary : GKP Fire Fighter Unit Concentration
ile : C:\RESRAD_FAMILY\RESRAD\6.5\USERFILES\GKP FIRE FIGHTER.RAD

Dose Conversion Factor (and Related) Parameter Summary
Dose Library: FGR 12 & FGR 11

enu	Parameter	Current Value#	Base Case*	Parameter Name
-1	DCF's for external ground radiation, (mrem/yr)/(pCi/g)			
-1	At-218 (Source: FGR 12)	5.847E-03	5.847E-03	DCF1(1)
-1	Bi-210 (Source: FGR 12)	3.606E-03	3.606E-03	DCF1(2)
-1	Bi-214 (Source: FGR 12)	9.808E+00	9.808E+00	DCF1(3)
-1	Pb-210 (Source: FGR 12)	2.447E-03	2.447E-03	DCF1(4)
-1	Pb-214 (Source: FGR 12)	1.341E+00	1.341E+00	DCF1(5)
-1	Po-210 (Source: FGR 12)	5.231E-05	5.231E-05	DCF1(6)
-1	Po-214 (Source: FGR 12)	5.138E-04	5.138E-04	DCF1(7)
-1	Po-218 (Source: FGR 12)	5.642E-05	5.642E-05	DCF1(8)
-1	Ra-226 (Source: FGR 12)	3.176E-02	3.176E-02	DCF1(9)
-1	Rn-222 (Source: FGR 12)	2.354E-03	2.354E-03	DCF1(10)
-1	Tl-210 (Source: no data)	0.000E+00	-2.000E+00	DCF1(11)
-1	Dose conversion factors for inhalation, mrem/pCi:			
-1	Pb-210+D	2.320E-02	1.360E-02	DCF2(1)
-1	Ra-226+D	8.594E-03	8.580E-03	DCF2(2)
-1	Dose conversion factors for ingestion, mrem/pCi:			
-1	Pb-210+D	7.276E-03	5.370E-03	DCF3(1)
-1	Ra-226+D	1.321E-03	1.320E-03	DCF3(2)
-34	Food transfer factors:			
-34	Pb-210+D , plant/soil concentration ratio, dimensionless	1.000E-02	1.000E-02	RTF(1,1)
-34	Pb-210+D , beef/livestock-intake ratio, (pCi/kg)/(pCi/d)	8.000E-04	8.000E-04	RTF(1,2)
-34	Pb-210+D , milk/livestock-intake ratio, (pCi/L)/(pCi/d)	3.000E-04	3.000E-04	RTF(1,3)
-34				
-34	Ra-226+D , plant/soil concentration ratio, dimensionless	4.000E-02	4.000E-02	RTF(2,1)
-34	Ra-226+D , beef/livestock-intake ratio, (pCi/kg)/(pCi/d)	1.000E-03	1.000E-03	RTF(2,2)
-34	Ra-226+D , milk/livestock-intake ratio, (pCi/L)/(pCi/d)	1.000E-03	1.000E-03	RTF(2,3)
-5	Bioaccumulation factors, fresh water, L/kg:			
-5	Pb-210+D , fish	3.000E+02	3.000E+02	BIOFAC(1,1)
-5	Pb-210+D , crustacea and mollusks	1.000E+02	1.000E+02	BIOFAC(1,2)
-5				
-5	Ra-226+D , fish	5.000E+01	5.000E+01	BIOFAC(2,1)
-5	Ra-226+D , crustacea and mollusks	2.500E+02	2.500E+02	BIOFAC(2,2)

For DCF1(xxx) only, factors are for infinite depth & area. See ETFG table in Ground Pathway of Detailed Report.
Base Case means Default.Lib w/o Associate Nuclide contributions.

ummary : GKP Fire Ighter Unit Concentration
ile : C:\RESRAD_FAMILY\RESRAD\6.5\USERFILES\GKP FIRE FIGHTER.RAD

Site-Specific Parameter Summary

enu	Parameter	User Input	Default	Used by RESRAD (If different from user input)	Parameter Name
011	Area of contaminated zone (m**2)	1.000E+00	1.000E+04	---	AREA
011	Thickness of contaminated zone (m)	1.500E-02	2.000E+00	---	THICK0
011	Fraction of contamination that is submerged	0.000E+00	0.000E+00	---	SUBMFRACT
011	Length parallel to aquifer flow (m)	not used	1.000E+02	---	LCZPAQ
011	Basic radiation dose limit (mrem/yr)	2.500E+01	3.000E+01	---	BRDL
011	Time since placement of material (yr)	0.000E+00	0.000E+00	---	TI
011	Times for calculations (yr)	1.000E+00	1.000E+00	---	T(2)
011	Times for calculations (yr)	3.000E+00	3.000E+00	---	T(3)
011	Times for calculations (yr)	1.000E+01	1.000E+01	---	T(4)
011	Times for calculations (yr)	3.000E+01	3.000E+01	---	T(5)
011	Times for calculations (yr)	1.000E+02	1.000E+02	---	T(6)
011	Times for calculations (yr)	3.000E+02	3.000E+02	---	T(7)
011	Times for calculations (yr)	1.000E+03	1.000E+03	---	T(8)
011	Times for calculations (yr)	not used	0.000E+00	---	T(9)
011	Times for calculations (yr)	not used	0.000E+00	---	T(10)
012	Initial principal radionuclide (pCi/g): Ra-226	1.000E+00	0.000E+00	---	S1(2)
012	Concentration in groundwater (pCi/L): Ra-226	not used	0.000E+00	---	W1(2)
013	Cover depth (m)	0.000E+00	0.000E+00	---	COVER0
013	Density of cover material (g/cm**3)	not used	1.500E+00	---	DENSCV
013	Cover depth erosion rate (m/yr)	not used	1.000E-03	---	VCV
013	Density of contaminated zone (g/cm**3)	1.500E+00	1.500E+00	---	DENSCZ
013	Contaminated zone erosion rate (m/yr)	1.000E-03	1.000E-03	---	VCZ
013	Contaminated zone total porosity	4.000E-01	4.000E-01	---	TPCZ
013	Contaminated zone field capacity	2.000E-01	2.000E-01	---	FCCZ
013	Contaminated zone hydraulic conductivity (m/yr)	1.000E+01	1.000E+01	---	HCCZ
013	Contaminated zone b parameter	5.300E+00	5.300E+00	---	BCZ
013	Average annual wind speed (m/sec)	2.000E+00	2.000E+00	---	WIND
013	Humidity in air (g/m**3)	not used	8.000E+00	---	HUMID
013	Evapotranspiration coefficient	5.000E-01	5.000E-01	---	EVAPTR
013	Precipitation (m/yr)	1.000E+00	1.000E+00	---	PRECIP
013	Irrigation (m/yr)	2.000E-01	2.000E-01	---	RI
013	Irrigation mode	overhead	overhead	---	IDITCH
013	Runoff coefficient	2.000E-01	2.000E-01	---	RUNOFF
013	Watershed area for nearby stream or pond (m**2)	not used	1.000E+06	---	WAREA
013	Accuracy for water/soil computations	not used	1.000E-03	---	EPS
014	Density of saturated zone (g/cm**3)	not used	1.500E+00	---	DENSAQ
014	Saturated zone total porosity	not used	4.000E-01	---	TPSZ
014	Saturated zone effective porosity	not used	2.000E-01	---	EPSZ
014	Saturated zone field capacity	not used	2.000E-01	---	FCSZ
014	Saturated zone hydraulic conductivity (m/yr)	not used	1.000E+02	---	HCSZ
014	Saturated zone hydraulic gradient	not used	2.000E-02	---	HGWT
014	Saturated zone b parameter	not used	5.300E+00	---	BSZ
014	Water table drop rate (m/yr)	not used	1.000E-03	---	VWT
014	Well pump intake depth (m below water table)	not used	1.000E+01	---	DWIBWT
014	Model: Nondispersion (ND) or Mass-Balance (MB)	not used	ND	---	MODEL
014	Well pumping rate (m**3/yr)	not used	2.500E+02	---	UW

Site-Specific Parameter Summary (continued)

enu	Parameter	User Input	Default	Used by RESRAD (If different from user input)	Parameter Name
015	Number of unsaturated zone strata	not used	1	---	NS
015	Unsat. zone 1, thickness (m)	not used	4.000E+00	---	H(1)
015	Unsat. zone 1, soil density (g/cm**3)	not used	1.500E+00	---	DENSUZ(1)
015	Unsat. zone 1, total porosity	not used	4.000E-01	---	TPUZ(1)
015	Unsat. zone 1, effective porosity	not used	2.000E-01	---	EPUZ(1)
015	Unsat. zone 1, field capacity	not used	2.000E-01	---	FCUZ(1)
015	Unsat. zone 1, soil-specific b parameter	not used	5.300E+00	---	BUZ(1)
015	Unsat. zone 1, hydraulic conductivity (m/yr)	not used	1.000E+01	---	HCUZ(1)
016	Distribution coefficients for Ra-226				
016	Contaminated zone (cm**3/g)	7.000E+01	7.000E+01	---	DCNUCC(2)
016	Unsaturated zone 1 (cm**3/g)	not used	7.000E+01	---	DCNUCU(2,1)
016	Saturated zone (cm**3/g)	not used	7.000E+01	---	DCNUCS(2)
016	Leach rate (/yr)	0.000E+00	0.000E+00	3.165E-01	ALEACH(2)
016	Solubility constant	0.000E+00	0.000E+00	not used	SOLUBK(2)
016	Distribution coefficients for daughter Pb-210				
016	Contaminated zone (cm**3/g)	1.000E+02	1.000E+02	---	DCNUCC(1)
016	Unsaturated zone 1 (cm**3/g)	not used	1.000E+02	---	DCNUCU(1,1)
016	Saturated zone (cm**3/g)	not used	1.000E+02	---	DCNUCS(1)
016	Leach rate (/yr)	0.000E+00	0.000E+00	2.217E-01	ALEACH(1)
016	Solubility constant	0.000E+00	0.000E+00	not used	SOLUBK(1)
017	Inhalation rate (m**3/yr)	not used	8.400E+03	---	INHALR
017	Mass loading for inhalation (g/m**3)	not used	1.000E-04	---	MLINH
017	Exposure duration	3.000E+01	3.000E+01	---	ED
017	Shielding factor, inhalation	not used	4.000E-01	---	SHF3
017	Shielding factor, external gamma	7.000E-01	7.000E-01	---	SHF1
017	Fraction of time spent indoors	9.980E-01	5.000E-01	---	FIND
017	Fraction of time spent outdoors (on site)	2.000E-03	2.500E-01	---	FOTD
017	Shape factor flag, external gamma	1.000E+00	1.000E+00	>0 shows circular AREA.	FS
017	Radii of shape factor array (used if FS = -1):				
017	Outer annular radius (m), ring 1:	not used	5.000E+01	---	RAD_SHAPE(1)
017	Outer annular radius (m), ring 2:	not used	7.071E+01	---	RAD_SHAPE(2)
017	Outer annular radius (m), ring 3:	not used	0.000E+00	---	RAD_SHAPE(3)
017	Outer annular radius (m), ring 4:	not used	0.000E+00	---	RAD_SHAPE(4)
017	Outer annular radius (m), ring 5:	not used	0.000E+00	---	RAD_SHAPE(5)
017	Outer annular radius (m), ring 6:	not used	0.000E+00	---	RAD_SHAPE(6)
017	Outer annular radius (m), ring 7:	not used	0.000E+00	---	RAD_SHAPE(7)
017	Outer annular radius (m), ring 8:	not used	0.000E+00	---	RAD_SHAPE(8)
017	Outer annular radius (m), ring 9:	not used	0.000E+00	---	RAD_SHAPE(9)
017	Outer annular radius (m), ring 10:	not used	0.000E+00	---	RAD_SHAPE(10)
017	Outer annular radius (m), ring 11:	not used	0.000E+00	---	RAD_SHAPE(11)
017	Outer annular radius (m), ring 12:	not used	0.000E+00	---	RAD_SHAPE(12)

Site-Specific Parameter Summary (continued)

enu	Parameter	User Input	Default	Used by RESRAD (If different from user input)	Parameter Name
017	Fractions of annular areas within AREA:				
017	Ring 1	not used	1.000E+00	---	FRACA(1)
017	Ring 2	not used	2.732E-01	---	FRACA(2)
017	Ring 3	not used	0.000E+00	---	FRACA(3)
017	Ring 4	not used	0.000E+00	---	FRACA(4)
017	Ring 5	not used	0.000E+00	---	FRACA(5)
017	Ring 6	not used	0.000E+00	---	FRACA(6)
017	Ring 7	not used	0.000E+00	---	FRACA(7)
017	Ring 8	not used	0.000E+00	---	FRACA(8)
017	Ring 9	not used	0.000E+00	---	FRACA(9)
017	Ring 10	not used	0.000E+00	---	FRACA(10)
017	Ring 11	not used	0.000E+00	---	FRACA(11)
017	Ring 12	not used	0.000E+00	---	FRACA(12)
018	Fruits, vegetables and grain consumption (kg/yr)	not used	1.600E+02	---	DIET(1)
018	Leafy vegetable consumption (kg/yr)	not used	1.400E+01	---	DIET(2)
018	Milk consumption (L/yr)	not used	9.200E+01	---	DIET(3)
018	Meat and poultry consumption (kg/yr)	not used	6.300E+01	---	DIET(4)
018	Fish consumption (kg/yr)	not used	5.400E+00	---	DIET(5)
018	Other seafood consumption (kg/yr)	not used	9.000E-01	---	DIET(6)
018	Soil ingestion rate (g/yr)	not used	3.650E+01	---	SOIL
018	Drinking water intake (L/yr)	not used	5.100E+02	---	DWI
018	Contamination fraction of drinking water	not used	1.000E+00	---	FDW
018	Contamination fraction of household water	not used	1.000E+00	---	FHHW
018	Contamination fraction of livestock water	not used	1.000E+00	---	FLW
018	Contamination fraction of irrigation water	not used	1.000E+00	---	FIRW
018	Contamination fraction of aquatic food	not used	5.000E-01	---	FR9
018	Contamination fraction of plant food	not used	-1	---	FPLANT
018	Contamination fraction of meat	not used	-1	---	FMEAT
018	Contamination fraction of milk	not used	-1	---	FMILK
019	Livestock fodder intake for meat (kg/day)	not used	6.800E+01	---	LFI5
019	Livestock fodder intake for milk (kg/day)	not used	5.500E+01	---	LFI6
019	Livestock water intake for meat (L/day)	not used	5.000E+01	---	LWI5
019	Livestock water intake for milk (L/day)	not used	1.600E+02	---	LWI6
019	Livestock soil intake (kg/day)	not used	5.000E-01	---	LSI
019	Mass loading for foliar deposition (g/m**3)	not used	1.000E-04	---	MLFD
019	Depth of soil mixing layer (m)	not used	1.500E-01	---	DM
019	Depth of roots (m)	not used	9.000E-01	---	DROOT
019	Drinking water fraction from ground water	not used	1.000E+00	---	FGWDW
019	Household water fraction from ground water	not used	1.000E+00	---	FGWHH
019	Livestock water fraction from ground water	not used	1.000E+00	---	FGWLW
019	Irrigation fraction from ground water	not used	1.000E+00	---	FGWIR
19B	Wet weight crop yield for Non-Leafy (kg/m**2)	not used	7.000E-01	---	YV(1)
19B	Wet weight crop yield for Leafy (kg/m**2)	not used	1.500E+00	---	YV(2)
19B	Wet weight crop yield for Fodder (kg/m**2)	not used	1.100E+00	---	YV(3)
19B	Growing Season for Non-Leafy (years)	not used	1.700E-01	---	TE(1)
19B	Growing Season for Leafy (years)	not used	2.500E-01	---	TE(2)
19B	Growing Season for Fodder (years)	not used	8.000E-02	---	TE(3)

Site-Specific Parameter Summary (continued)

enu	Parameter	User Input	Default	Used by RESRAD (If different from user input)	Parameter Name
19B	Translocation Factor for Non-Leafy	not used	1.000E-01	---	TIV(1)
19B	Translocation Factor for Leafy	not used	1.000E+00	---	TIV(2)
19B	Translocation Factor for Fodder	not used	1.000E+00	---	TIV(3)
19B	Dry Foliar Interception Fraction for Non-Leafy	not used	2.500E-01	---	RDRY(1)
19B	Dry Foliar Interception Fraction for Leafy	not used	2.500E-01	---	RDRY(2)
19B	Dry Foliar Interception Fraction for Fodder	not used	2.500E-01	---	RDRY(3)
19B	Wet Foliar Interception Fraction for Non-Leafy	not used	2.500E-01	---	RWET(1)
19B	Wet Foliar Interception Fraction for Leafy	not used	2.500E-01	---	RWET(2)
19B	Wet Foliar Interception Fraction for Fodder	not used	2.500E-01	---	RWET(3)
19B	Weathering Removal Constant for Vegetation	not used	2.000E+01	---	WLAM
14	C-12 concentration in water (g/cm**3)	not used	2.000E-05	---	C12WTR
14	C-12 concentration in contaminated soil (g/g)	not used	3.000E-02	---	C12CZ
14	Fraction of vegetation carbon from soil	not used	2.000E-02	---	CSOIL
14	Fraction of vegetation carbon from air	not used	9.800E-01	---	CAIR
14	C-14 evasion layer thickness in soil (m)	not used	3.000E-01	---	DMC
14	C-14 evasion flux rate from soil (1/sec)	not used	7.000E-07	---	EVSN
14	C-12 evasion flux rate from soil (1/sec)	not used	1.000E-10	---	REVSN
14	Fraction of grain in beef cattle feed	not used	8.000E-01	---	AVFG4
14	Fraction of grain in milk cow feed	not used	2.000E-01	---	AVFG5
TOR	Storage times of contaminated foodstuffs (days):				
TOR	Fruits, non-leafy vegetables, and grain	1.400E+01	1.400E+01	---	STOR_T(1)
TOR	Leafy vegetables	1.000E+00	1.000E+00	---	STOR_T(2)
TOR	Milk	1.000E+00	1.000E+00	---	STOR_T(3)
TOR	Meat and poultry	2.000E+01	2.000E+01	---	STOR_T(4)
TOR	Fish	7.000E+00	7.000E+00	---	STOR_T(5)
TOR	Crustacea and mollusks	7.000E+00	7.000E+00	---	STOR_T(6)
TOR	Well water	1.000E+00	1.000E+00	---	STOR_T(7)
TOR	Surface water	1.000E+00	1.000E+00	---	STOR_T(8)
TOR	Livestock fodder	4.500E+01	4.500E+01	---	STOR_T(9)
021	Thickness of building foundation (m)	not used	1.500E-01	---	FLOOR1
021	Bulk density of building foundation (g/cm**3)	not used	2.400E+00	---	DENSFL
021	Total porosity of the cover material	not used	4.000E-01	---	TPCV
021	Total porosity of the building foundation	not used	1.000E-01	---	TPFL
021	Volumetric water content of the cover material	not used	5.000E-02	---	PH2OCV
021	Volumetric water content of the foundation	not used	3.000E-02	---	PH2OFL
021	Diffusion coefficient for radon gas (m/sec):				
021	in cover material	not used	2.000E-06	---	DIFCV
021	in foundation material	not used	3.000E-07	---	DIFFL
021	in contaminated zone soil	not used	2.000E-06	---	DIFCZ
021	Radon vertical dimension of mixing (m)	not used	2.000E+00	---	HMIX
021	Average building air exchange rate (1/hr)	not used	5.000E-01	---	REXG
021	Height of the building (room) (m)	not used	2.500E+00	---	HRM
021	Building interior area factor	not used	0.000E+00	---	FAI
021	Building depth below ground surface (m)	not used	-1.000E+00	---	DMFL
021	Emanating power of Rn-222 gas	not used	2.500E-01	---	EMANA(1)
021	Emanating power of Rn-220 gas	not used	1.500E-01	---	EMANA(2)
ITL	Number of graphical time points	32	---	---	NPTS

ummary : GKP Fire Ighter Unit Concentration
ile : C:\RESRAD_FAMILY\RESRAD\6.5\USERFILES\GKP FIRE FIGHTER.RAD

Site-Specific Parameter Summary (continued)

enu	Parameter	User Input	Default	Used by RESRAD (If different from user input)	Parameter Name
ITL	Maximum number of integration points for dose	17	---	---	LYMAX
ITL	Maximum number of integration points for risk	257	---	---	KYMAX

Summary of Pathway Selections

Pathway	User Selection
1 -- external gamma	active
2 -- inhalation (w/o radon)	suppressed
3 -- plant ingestion	suppressed
4 -- meat ingestion	suppressed
5 -- milk ingestion	suppressed
6 -- aquatic foods	suppressed
7 -- drinking water	suppressed
8 -- soil ingestion	suppressed
9 -- radon	suppressed
Find peak pathway doses	suppressed

ummary : GKP Fire Fighter Unit Concentration
ile : C:\RESRAD_FAMILY\RESRAD\6.5\USERFILES\GKP FIRE FIGHTER.RAD

Contaminated Zone Dimensions		Initial Soil Concentrations, pCi/g	
Area:	1.00 square meters	Ra-226	1.000E+00
Thickness:	0.02 meters		
over Depth:	0.00 meters		

Total Dose TDOSE(t), mrem/yr
Basic Radiation Dose Limit = 2.500E+01 mrem/yr
Total Mixture Sum M(t) = Fraction of Basic Dose Limit Received at Time (t)

t (years):	0.000E+00	1.000E+00	3.000E+00	1.000E+01	3.000E+01	1.000E+02	3.000E+02	1.000E+03
TDOSE(t):	6.165E-02	4.197E-02	1.917E-02	8.772E-04	0.000E+00	0.000E+00	0.000E+00	0.000E+00
M(t):	2.466E-03	1.679E-03	7.667E-04	3.509E-05	0.000E+00	0.000E+00	0.000E+00	0.000E+00

aximum TDOSE(t): 6.165E-02 mrem/yr at t = 0.000E+00 years

ummary : GKP Fire Fighter Unit Concentration
ile : C:\RESRAD_FAMILY\RESRAD\6.5\USERFILES\GKP FIRE FIGHTER.RAD

Total Dose Contributions TDOSE(i,p,t) for Individual Radionuclides (i) and Pathways (p)
As mrem/yr and Fraction of Total Dose At t = 0.000E+00 years

Water Independent Pathways (Inhalation excludes radon)

adio-	Ground		Inhalation		Radon		Plant		Meat		Milk		Soil	
uclide	mrem/yr	fract.	mrem/yr	fract.	mrem/yr	fract.	mrem/yr	fract.	mrem/yr	fract.	mrem/yr	fract.	mrem/yr	fract.
a-226	6.165E-02	1.0000	0.000E+00	0.0000	0.000E+00	0.0000	0.000E+00	0.0000	0.000E+00	0.0000	0.000E+00	0.0000	0.000E+00	0.0000
otal	6.165E-02	1.0000	0.000E+00	0.0000	0.000E+00	0.0000	0.000E+00	0.0000	0.000E+00	0.0000	0.000E+00	0.0000	0.000E+00	0.0000

Total Dose Contributions TDOSE(i,p,t) for Individual Radionuclides (i) and Pathways (p)
As mrem/yr and Fraction of Total Dose At t = 0.000E+00 years

Water Dependent Pathways

adio-	Water		Fish		Radon		Plant		Meat		Milk		All Pathways*	
uclide	mrem/yr	fract.	mrem/yr	fract.	mrem/yr	fract.	mrem/yr	fract.	mrem/yr	fract.	mrem/yr	fract.	mrem/yr	fract.
a-226	0.000E+00	0.0000	0.000E+00	0.0000	0.000E+00	0.0000	0.000E+00	0.0000	0.000E+00	0.0000	0.000E+00	0.0000	6.165E-02	1.0000
otal	0.000E+00	0.0000	0.000E+00	0.0000	0.000E+00	0.0000	0.000E+00	0.0000	0.000E+00	0.0000	0.000E+00	0.0000	6.165E-02	1.0000

Sum of all water independent and dependent pathways.

ummary : GKP Fire Fighter Unit Concentration
ile : C:\RESRAD_FAMILY\RESRAD\6.5\USERFILES\GKP FIRE FIGHTER.RAD

Total Dose Contributions TDOSE(i,p,t) for Individual Radionuclides (i) and Pathways (p)
As mrem/yr and Fraction of Total Dose At t = 1.000E+00 years

Water Independent Pathways (Inhalation excludes radon)

adio-	Ground		Inhalation		Radon		Plant		Meat		Milk		Soil	
uclide	mrem/yr	fract.	mrem/yr	fract.	mrem/yr	fract.	mrem/yr	fract.	mrem/yr	fract.	mrem/yr	fract.	mrem/yr	fract.
a-226	4.197E-02	1.0000	0.000E+00	0.0000	0.000E+00	0.0000	0.000E+00	0.0000	0.000E+00	0.0000	0.000E+00	0.0000	0.000E+00	0.0000
otal	4.197E-02	1.0000	0.000E+00	0.0000	0.000E+00	0.0000	0.000E+00	0.0000	0.000E+00	0.0000	0.000E+00	0.0000	0.000E+00	0.0000

Total Dose Contributions TDOSE(i,p,t) for Individual Radionuclides (i) and Pathways (p)
As mrem/yr and Fraction of Total Dose At t = 1.000E+00 years

Water Dependent Pathways

adio-	Water		Fish		Radon		Plant		Meat		Milk		All Pathways*	
uclide	mrem/yr	fract.	mrem/yr	fract.	mrem/yr	fract.	mrem/yr	fract.	mrem/yr	fract.	mrem/yr	fract.	mrem/yr	fract.
a-226	0.000E+00	0.0000	0.000E+00	0.0000	0.000E+00	0.0000	0.000E+00	0.0000	0.000E+00	0.0000	0.000E+00	0.0000	4.197E-02	1.0000
otal	0.000E+00	0.0000	0.000E+00	0.0000	0.000E+00	0.0000	0.000E+00	0.0000	0.000E+00	0.0000	0.000E+00	0.0000	4.197E-02	1.0000

Sum of all water independent and dependent pathways.

ummary : GKP Fire Fighter Unit Concentration
ile : C:\RESRAD_FAMILY\RESRAD\6.5\USERFILES\GKP FIRE FIGHTER.RAD

Total Dose Contributions TDOSE(i,p,t) for Individual Radionuclides (i) and Pathways (p)
As mrem/yr and Fraction of Total Dose At t = 3.000E+00 years

Water Independent Pathways (Inhalation excludes radon)

adio-	Ground		Inhalation		Radon		Plant		Meat		Milk		Soil	
uclide	mrem/yr	fract.	mrem/yr	fract.	mrem/yr	fract.	mrem/yr	fract.	mrem/yr	fract.	mrem/yr	fract.	mrem/yr	fract.
a-226	1.917E-02	1.0000	0.000E+00	0.0000	0.000E+00	0.0000	0.000E+00	0.0000	0.000E+00	0.0000	0.000E+00	0.0000	0.000E+00	0.0000
otal	1.917E-02	1.0000	0.000E+00	0.0000	0.000E+00	0.0000	0.000E+00	0.0000	0.000E+00	0.0000	0.000E+00	0.0000	0.000E+00	0.0000

Total Dose Contributions TDOSE(i,p,t) for Individual Radionuclides (i) and Pathways (p)
As mrem/yr and Fraction of Total Dose At t = 3.000E+00 years

Water Dependent Pathways

adio-	Water		Fish		Radon		Plant		Meat		Milk		All Pathways*	
uclide	mrem/yr	fract.	mrem/yr	fract.	mrem/yr	fract.	mrem/yr	fract.	mrem/yr	fract.	mrem/yr	fract.	mrem/yr	fract.
a-226	0.000E+00	0.0000	0.000E+00	0.0000	0.000E+00	0.0000	0.000E+00	0.0000	0.000E+00	0.0000	0.000E+00	0.0000	1.917E-02	1.0000
otal	0.000E+00	0.0000	0.000E+00	0.0000	0.000E+00	0.0000	0.000E+00	0.0000	0.000E+00	0.0000	0.000E+00	0.0000	1.917E-02	1.0000

Sum of all water independent and dependent pathways.

ummary : GKP Fire Fighter Unit Concentration
ile : C:\RESRAD_FAMILY\RESRAD\6.5\USERFILES\GKP FIRE FIGHTER.RAD

Total Dose Contributions TDOSE(i,p,t) for Individual Radionuclides (i) and Pathways (p)
As mrem/yr and Fraction of Total Dose At t = 1.000E+01 years

Water Independent Pathways (Inhalation excludes radon)

adio-	Ground		Inhalation		Radon		Plant		Meat		Milk		Soil	
uclide	mrem/yr	fract.	mrem/yr	fract.	mrem/yr	fract.	mrem/yr	fract.	mrem/yr	fract.	mrem/yr	fract.	mrem/yr	fract.
a-226	8.772E-04	1.0000	0.000E+00	0.0000	0.000E+00	0.0000	0.000E+00	0.0000	0.000E+00	0.0000	0.000E+00	0.0000	0.000E+00	0.0000
otal	8.772E-04	1.0000	0.000E+00	0.0000	0.000E+00	0.0000	0.000E+00	0.0000	0.000E+00	0.0000	0.000E+00	0.0000	0.000E+00	0.0000

Total Dose Contributions TDOSE(i,p,t) for Individual Radionuclides (i) and Pathways (p)
As mrem/yr and Fraction of Total Dose At t = 1.000E+01 years

Water Dependent Pathways

adio-	Water		Fish		Radon		Plant		Meat		Milk		All Pathways*	
uclide	mrem/yr	fract.	mrem/yr	fract.	mrem/yr	fract.	mrem/yr	fract.	mrem/yr	fract.	mrem/yr	fract.	mrem/yr	fract.
a-226	0.000E+00	0.0000	0.000E+00	0.0000	0.000E+00	0.0000	0.000E+00	0.0000	0.000E+00	0.0000	0.000E+00	0.0000	8.772E-04	1.0000
otal	0.000E+00	0.0000	0.000E+00	0.0000	0.000E+00	0.0000	0.000E+00	0.0000	0.000E+00	0.0000	0.000E+00	0.0000	8.772E-04	1.0000

Sum of all water independent and dependent pathways.

ummary : GKP Fire Fighter Unit Concentration
ile : C:\RESRAD_FAMILY\RESRAD\6.5\USERFILES\GKP FIRE FIGHTER.RAD

Total Dose Contributions TDOSE(i,p,t) for Individual Radionuclides (i) and Pathways (p)
As mrem/yr and Fraction of Total Dose At t = 3.000E+01 years

Water Independent Pathways (Inhalation excludes radon)

adio-	Ground		Inhalation		Radon		Plant		Meat		Milk		Soil	
uclide	mrem/yr	fract.	mrem/yr	fract.	mrem/yr	fract.	mrem/yr	fract.	mrem/yr	fract.	mrem/yr	fract.	mrem/yr	fract.
a-226	0.000E+00	0.0000	0.000E+00	0.0000	0.000E+00	0.0000	0.000E+00	0.0000	0.000E+00	0.0000	0.000E+00	0.0000	0.000E+00	0.0000
otal	0.000E+00	0.0000	0.000E+00	0.0000	0.000E+00	0.0000	0.000E+00	0.0000	0.000E+00	0.0000	0.000E+00	0.0000	0.000E+00	0.0000

Total Dose Contributions TDOSE(i,p,t) for Individual Radionuclides (i) and Pathways (p)
As mrem/yr and Fraction of Total Dose At t = 3.000E+01 years

Water Dependent Pathways

adio-	Water		Fish		Radon		Plant		Meat		Milk		All Pathways*	
uclide	mrem/yr	fract.	mrem/yr	fract.	mrem/yr	fract.	mrem/yr	fract.	mrem/yr	fract.	mrem/yr	fract.	mrem/yr	fract.
a-226	0.000E+00	0.0000	0.000E+00	0.0000	0.000E+00	0.0000	0.000E+00	0.0000	0.000E+00	0.0000	0.000E+00	0.0000	0.000E+00	0.0000
otal	0.000E+00	0.0000	0.000E+00	0.0000	0.000E+00	0.0000	0.000E+00	0.0000	0.000E+00	0.0000	0.000E+00	0.0000	0.000E+00	0.0000

Sum of all water independent and dependent pathways.

ummary : GKP Fire Fighter Unit Concentration
ile : C:\RESRAD_FAMILY\RESRAD\6.5\USERFILES\GKP FIRE FIGHTER.RAD

Total Dose Contributions TDOSE(i,p,t) for Individual Radionuclides (i) and Pathways (p)
As mrem/yr and Fraction of Total Dose At t = 1.000E+02 years

Water Independent Pathways (Inhalation excludes radon)

adio-	Ground		Inhalation		Radon		Plant		Meat		Milk		Soil	
uclide	mrem/yr	fract.	mrem/yr	fract.	mrem/yr	fract.	mrem/yr	fract.	mrem/yr	fract.	mrem/yr	fract.	mrem/yr	fract.
a-226	0.000E+00	0.0000	0.000E+00	0.0000	0.000E+00	0.0000	0.000E+00	0.0000	0.000E+00	0.0000	0.000E+00	0.0000	0.000E+00	0.0000
otal	0.000E+00	0.0000	0.000E+00	0.0000	0.000E+00	0.0000	0.000E+00	0.0000	0.000E+00	0.0000	0.000E+00	0.0000	0.000E+00	0.0000

Total Dose Contributions TDOSE(i,p,t) for Individual Radionuclides (i) and Pathways (p)
As mrem/yr and Fraction of Total Dose At t = 1.000E+02 years

Water Dependent Pathways

adio-	Water		Fish		Radon		Plant		Meat		Milk		All Pathways*	
uclide	mrem/yr	fract.	mrem/yr	fract.	mrem/yr	fract.	mrem/yr	fract.	mrem/yr	fract.	mrem/yr	fract.	mrem/yr	fract.
a-226	0.000E+00	0.0000	0.000E+00	0.0000	0.000E+00	0.0000	0.000E+00	0.0000	0.000E+00	0.0000	0.000E+00	0.0000	0.000E+00	0.0000
otal	0.000E+00	0.0000	0.000E+00	0.0000	0.000E+00	0.0000	0.000E+00	0.0000	0.000E+00	0.0000	0.000E+00	0.0000	0.000E+00	0.0000

Sum of all water independent and dependent pathways.

ummary : GKP Fire Fighter Unit Concentration
ile : C:\RESRAD_FAMILY\RESRAD\6.5\USERFILES\GKP FIRE FIGHTER.RAD

Total Dose Contributions TDOSE(i,p,t) for Individual Radionuclides (i) and Pathways (p)
As mrem/yr and Fraction of Total Dose At t = 3.000E+02 years

Water Independent Pathways (Inhalation excludes radon)

adio-	Ground		Inhalation		Radon		Plant		Meat		Milk		Soil	
uclide	mrem/yr	fract.	mrem/yr	fract.	mrem/yr	fract.	mrem/yr	fract.	mrem/yr	fract.	mrem/yr	fract.	mrem/yr	fract.
a-226	0.000E+00	0.0000	0.000E+00	0.0000	0.000E+00	0.0000	0.000E+00	0.0000	0.000E+00	0.0000	0.000E+00	0.0000	0.000E+00	0.0000
otal	0.000E+00	0.0000	0.000E+00	0.0000	0.000E+00	0.0000	0.000E+00	0.0000	0.000E+00	0.0000	0.000E+00	0.0000	0.000E+00	0.0000

Total Dose Contributions TDOSE(i,p,t) for Individual Radionuclides (i) and Pathways (p)
As mrem/yr and Fraction of Total Dose At t = 3.000E+02 years

Water Dependent Pathways

adio-	Water		Fish		Radon		Plant		Meat		Milk		All Pathways*	
uclide	mrem/yr	fract.	mrem/yr	fract.	mrem/yr	fract.	mrem/yr	fract.	mrem/yr	fract.	mrem/yr	fract.	mrem/yr	fract.
a-226	0.000E+00	0.0000	0.000E+00	0.0000	0.000E+00	0.0000	0.000E+00	0.0000	0.000E+00	0.0000	0.000E+00	0.0000	0.000E+00	0.0000
otal	0.000E+00	0.0000	0.000E+00	0.0000	0.000E+00	0.0000	0.000E+00	0.0000	0.000E+00	0.0000	0.000E+00	0.0000	0.000E+00	0.0000

Sum of all water independent and dependent pathways.

ummary : GKP Fire Fighter Unit Concentration
ile : C:\RESRAD_FAMILY\RESRAD\6.5\USERFILES\GKP FIRE FIGHTER.RAD

Total Dose Contributions TDOSE(i,p,t) for Individual Radionuclides (i) and Pathways (p)
As mrem/yr and Fraction of Total Dose At t = 1.000E+03 years

Water Independent Pathways (Inhalation excludes radon)

adio-	Ground		Inhalation		Radon		Plant		Meat		Milk		Soil	
uclide	mrem/yr	fract.	mrem/yr	fract.	mrem/yr	fract.	mrem/yr	fract.	mrem/yr	fract.	mrem/yr	fract.	mrem/yr	fract.
a-226	0.000E+00	0.0000	0.000E+00	0.0000	0.000E+00	0.0000	0.000E+00	0.0000	0.000E+00	0.0000	0.000E+00	0.0000	0.000E+00	0.0000
otal	0.000E+00	0.0000	0.000E+00	0.0000	0.000E+00	0.0000	0.000E+00	0.0000	0.000E+00	0.0000	0.000E+00	0.0000	0.000E+00	0.0000

Total Dose Contributions TDOSE(i,p,t) for Individual Radionuclides (i) and Pathways (p)
As mrem/yr and Fraction of Total Dose At t = 1.000E+03 years

Water Dependent Pathways

adio-	Water		Fish		Radon		Plant		Meat		Milk		All Pathways*	
uclide	mrem/yr	fract.	mrem/yr	fract.	mrem/yr	fract.	mrem/yr	fract.	mrem/yr	fract.	mrem/yr	fract.	mrem/yr	fract.
a-226	0.000E+00	0.0000	0.000E+00	0.0000	0.000E+00	0.0000	0.000E+00	0.0000	0.000E+00	0.0000	0.000E+00	0.0000	0.000E+00	0.0000
otal	0.000E+00	0.0000	0.000E+00	0.0000	0.000E+00	0.0000	0.000E+00	0.0000	0.000E+00	0.0000	0.000E+00	0.0000	0.000E+00	0.0000

Sum of all water independent and dependent pathways.

ummary : GKP Fire Fighter Unit Concentration
ile : C:\RESRAD_FAMILY\RESRAD\6.5\USERFILES\GKP FIRE FIGHTER.RAD

Dose/Source Ratios Summed Over All Pathways
Parent and Progeny Principal Radionuclide Contributions Indicated

Parent (i)	Product (j)	Thread Fraction	DSR(j,t) At Time in Years (mrem/yr)/(pCi/g) 0.000E+00	1.000E+00	3.000E+00	1.000E+01	3.000E+01	1.000E+02	3.000E+02	1.000E+03
a-226+D	Ra-226+D	1.000E+00	6.165E-02	4.196E-02	1.916E-02	8.764E-04	0.000E+00	0.000E+00	0.000E+00	0.000E+00
a-226+D	Pb-210+D	1.000E+00	1.926E-06	4.234E-06	4.883E-06	8.916E-07	0.000E+00	0.000E+00	0.000E+00	0.000E+00
a-226+D	∑DSR(j)		6.165E-02	4.197E-02	1.917E-02	8.772E-04	0.000E+00	0.000E+00	0.000E+00	0.000E+00

ne DSR includes contributions from associated (half-life ≤ 180 days) daughters.

Single Radionuclide Soil Guidelines G(i,t) in pCi/g
Basic Radiation Dose Limit = 2.500E+01 mrem/yr

uclide (i)	t= 0.000E+00	1.000E+00	3.000E+00	1.000E+01	3.000E+01	1.000E+02	3.000E+02	1.000E+03
a-226	4.055E+02	5.957E+02	1.304E+03	2.850E+04	*9.885E+11	*9.885E+11	*9.885E+11	*9.885E+11

At specific activity limit

Summed Dose/Source Ratios DSR(i,t) in (mrem/yr)/(pCi/g)
and Single Radionuclide Soil Guidelines G(i,t) in pCi/g
at tmin = time of minimum single radionuclide soil guideline
and at tmax = time of maximum total dose = 0.000E+00 years

uclide (i)	Initial (pCi/g)	tmin (years)	DSR(i,tmin)	G(i,tmin) (pCi/g)	DSR(i,tmax)	G(i,tmax) (pCi/g)
a-226	1.000E+00	0.000E+00	6.165E-02	4.055E+02	6.165E-02	4.055E+02

ummary : GKP Fire Fighter Unit Concentration
ile : C:\RESRAD_FAMILY\RESRAD\6.5\USERFILES\GKP FIRE FIGHTER.RAD

Individual Nuclide Dose Summed Over All Pathways
Parent Nuclide and Branch Fraction Indicated

uclide (j)	Parent (i)	THF(i)	DOSE(j,t), mrem/yr t= 0.000E+00	1.000E+00	3.000E+00	1.000E+01	3.000E+01	1.000E+02	3.000E+02	1.000E+03
a-226	Ra-226	1.000E+00	6.165E-02	4.196E-02	1.916E-02	8.764E-04	0.000E+00	0.000E+00	0.000E+00	0.000E+00
o-210	Ra-226	1.000E+00	1.926E-06	4.234E-06	4.883E-06	8.916E-07	0.000E+00	0.000E+00	0.000E+00	0.000E+00

HF(i) is the thread fraction of the parent nuclide.

Individual Nuclide Soil Concentration
Parent Nuclide and Branch Fraction Indicated

uclide (j)	Parent (i)	THF(i)	S(j,t), pCi/g t= 0.000E+00	1.000E+00	3.000E+00	1.000E+01	3.000E+01	1.000E+02	3.000E+02	1.000E+03
a-226	Ra-226	1.000E+00	1.000E+00	7.284E-01	3.864E-01	4.203E-02	7.427E-05	1.722E-14	5.108E-42	0.000E+00
o-210	Ra-226	1.000E+00	0.000E+00	2.338E-02	3.973E-02	1.831E-02	2.104E-04	5.066E-12	5.557E-34	0.000E+00

HF(i) is the thread fraction of the parent nuclide.

ESCALC.EXE execution time = 0.47 seconds

ummary : GKP Maintenance Worker -External
ile : C:\USERS\CLAUDE\DOCUMENTS\0 GKP DOSE\RESRAD CW\GKP MAINTENANCE WORKER - EXTERNAL.RAD

Table of Contents
ÄÄÄÄÄÄÄÄÄÄÄÄÄÄÄÄÄ

Part I: Mixture Sums and Single Radionuclide Guidelines
íí

ummary : GKP Maintenance Worker -External
ile : C:\USERS\CLAUDE\DOCUMENTS\0 GKP DOSE\RESRAD CW\GKP MAINTENANCE WORKER - EXTERNAL.RAD

Dose Conversion Factor (and Related) Parameter Summary
Dose Library: FGR 11

enu	Parameter	Current Value#	Base Case*	Parameter Name
-1	DCF's for external ground radiation, (mrem/yr)/(pCi/g)			
-1	Ac-227 (Source: FGR 12)	4.951E-04	4.951E-04	DCF1(1)
-1	Ac-228 (Source: FGR 12)	5.978E+00	5.978E+00	DCF1(2)
-1	At-218 (Source: FGR 12)	5.847E-03	5.847E-03	DCF1(3)
-1	At-219 (Source: no data)	0.000E+00	-2.000E+00	DCF1(4)
-1	Bi-210 (Source: FGR 12)	3.606E-03	3.606E-03	DCF1(5)
-1	Bi-211 (Source: FGR 12)	2.559E-01	2.559E-01	DCF1(6)
-1	Bi-212 (Source: FGR 12)	1.171E+00	1.171E+00	DCF1(7)
-1	Bi-214 (Source: FGR 12)	9.808E+00	9.808E+00	DCF1(8)
-1	Bi-215 (Source: no data)	0.000E+00	-2.000E+00	DCF1(9)
-1	Fr-223 (Source: FGR 12)	1.980E-01	1.980E-01	DCF1(10)
-1	Hg-206 (Source: no data)	0.000E+00	-2.000E+00	DCF1(11)
-1	Pa-231 (Source: FGR 12)	1.906E-01	1.906E-01	DCF1(12)
-1	Pa-234 (Source: FGR 12)	1.155E+01	1.155E+01	DCF1(13)
-1	Pa-234m (Source: FGR 12)	8.967E-02	8.967E-02	DCF1(14)
-1	Pb-210 (Source: FGR 12)	2.447E-03	2.447E-03	DCF1(15)
-1	Pb-211 (Source: FGR 12)	3.064E-01	3.064E-01	DCF1(16)
-1	Pb-212 (Source: FGR 12)	7.043E-01	7.043E-01	DCF1(17)
-1	Pb-214 (Source: FGR 12)	1.341E+00	1.341E+00	DCF1(18)
-1	Po-210 (Source: FGR 12)	5.231E-05	5.231E-05	DCF1(19)
-1	Po-211 (Source: FGR 12)	4.764E-02	4.764E-02	DCF1(20)
-1	Po-212 (Source: FGR 12)	0.000E+00	0.000E+00	DCF1(21)
-1	Po-214 (Source: FGR 12)	5.138E-04	5.138E-04	DCF1(22)
-1	Po-215 (Source: FGR 12)	1.016E-03	1.016E-03	DCF1(23)
-1	Po-216 (Source: FGR 12)	1.042E-04	1.042E-04	DCF1(24)
-1	Po-218 (Source: FGR 12)	5.642E-05	5.642E-05	DCF1(25)
-1	Ra-223 (Source: FGR 12)	6.034E-01	6.034E-01	DCF1(26)
-1	Ra-224 (Source: FGR 12)	5.119E-02	5.119E-02	DCF1(27)
-1	Ra-226 (Source: FGR 12)	3.176E-02	3.176E-02	DCF1(28)
-1	Ra-228 (Source: FGR 12)	0.000E+00	0.000E+00	DCF1(29)
-1	Rn-218 (Source: FGR 12)	4.540E-03	4.540E-03	DCF1(30)
-1	Rn-219 (Source: FGR 12)	3.083E-01	3.083E-01	DCF1(31)
-1	Rn-220 (Source: FGR 12)	2.298E-03	2.298E-03	DCF1(32)
-1	Rn-222 (Source: FGR 12)	2.354E-03	2.354E-03	DCF1(33)
-1	Th-227 (Source: FGR 12)	5.212E-01	5.212E-01	DCF1(34)
-1	Th-228 (Source: FGR 12)	7.940E-03	7.940E-03	DCF1(35)
-1	Th-230 (Source: FGR 12)	1.209E-03	1.209E-03	DCF1(36)
-1	Th-231 (Source: FGR 12)	3.643E-02	3.643E-02	DCF1(37)
-1	Th-232 (Source: FGR 12)	5.212E-04	5.212E-04	DCF1(38)
-1	Th-234 (Source: FGR 12)	2.410E-02	2.410E-02	DCF1(39)
-1	Tl-206 (Source: FGR 12)	7.697E-03	7.697E-03	DCF1(40)
-1	Tl-207 (Source: FGR 12)	1.980E-02	1.980E-02	DCF1(41)
-1	Tl-208 (Source: FGR 12)	2.298E+01	2.298E+01	DCF1(42)
-1	Tl-210 (Source: no data)	0.000E+00	-2.000E+00	DCF1(43)
-1	U-234 (Source: FGR 12)	4.017E-04	4.017E-04	DCF1(44)
-1	U-235 (Source: FGR 12)	7.211E-01	7.211E-01	DCF1(45)
-1	U-238 (Source: FGR 12)	1.031E-04	1.031E-04	DCF1(46)
-1	Dose conversion factors for inhalation, mrem/pCi:			
-1	Ac-227+D	6.724E+00	6.700E+00	DCF2(1)

Dose Conversion Factor (and Related) Parameter Summary (continued)
Dose Library: FGR 11

enu	Parameter	Current Value#	Base Case*	Parameter Name
-1	Ac-227+D1	6.724E+00	6.700E+00	DCF2(2)
-1	Ac-227+D2	6.708E+00	6.700E+00	DCF2(3)
-1	Ac-227+D3	6.708E+00	6.700E+00	DCF2(4)
-1	Ac-227+D4	6.700E+00	6.700E+00	DCF2(5)
-1	Ac-227+D5	6.700E+00	6.700E+00	DCF2(6)
-1	Pa-231	1.280E+00	1.280E+00	DCF2(7)
-1	Pb-210+D	2.320E-02	1.360E-02	DCF2(13)
-1	Pb-210+D1	1.380E-02	1.360E-02	DCF2(14)
-1	Pb-210+D2	1.360E-02	1.360E-02	DCF2(15)
-1	Ra-226+D	8.594E-03	8.580E-03	DCF2(16)
-1	Ra-226+D1	8.594E-03	8.580E-03	DCF2(19)
-1	Ra-226+D2	8.587E-03	8.580E-03	DCF2(22)
-1	Ra-226+D3	8.587E-03	8.580E-03	DCF2(25)
-1	Ra-226+D4	8.580E-03	8.580E-03	DCF2(28)
-1	Ra-228+D	5.078E-03	4.770E-03	DCF2(31)
-1	Th-228+D	3.454E-01	3.420E-01	DCF2(32)
-1	Th-230	3.260E-01	3.260E-01	DCF2(33)
-1	Th-232	1.640E+00	1.640E+00	DCF2(48)
-1	U-234	1.320E-01	1.320E-01	DCF2(49)
-1	U-235+D	1.230E-01	1.230E-01	DCF2(64)
-1	U-238	1.180E-01	1.180E-01	DCF2(70)
-1	U-238+D	1.180E-01	1.180E-01	DCF2(71)
-1	U-238+D1	1.180E-01	1.180E-01	DCF2(86)
-1	Dose conversion factors for ingestion, mrem/pCi:			
-1	Ac-227+D	1.480E-02	1.410E-02	DCF3(1)
-1	Ac-227+D1	1.480E-02	1.410E-02	DCF3(2)
-1	Ac-227+D2	1.477E-02	1.410E-02	DCF3(3)
-1	Ac-227+D3	1.477E-02	1.410E-02	DCF3(4)
-1	Ac-227+D4	1.411E-02	1.410E-02	DCF3(5)
-1	Ac-227+D5	1.411E-02	1.410E-02	DCF3(6)
-1	Pa-231	1.060E-02	1.060E-02	DCF3(7)
-1	Pb-210+D	7.276E-03	5.370E-03	DCF3(13)
-1	Pb-210+D1	5.376E-03	5.370E-03	DCF3(14)
-1	Pb-210+D2	5.370E-03	5.370E-03	DCF3(15)
-1	Ra-226+D	1.321E-03	1.320E-03	DCF3(16)
-1	Ra-226+D1	1.321E-03	1.320E-03	DCF3(19)
-1	Ra-226+D2	1.320E-03	1.320E-03	DCF3(22)
-1	Ra-226+D3	1.320E-03	1.320E-03	DCF3(25)
-1	Ra-226+D4	1.320E-03	1.320E-03	DCF3(28)
-1	Ra-228+D	1.442E-03	1.440E-03	DCF3(31)
-1	Th-228+D	8.086E-04	3.960E-04	DCF3(32)
-1	Th-230	5.480E-04	5.480E-04	DCF3(33)
-1	Th-232	2.730E-03	2.730E-03	DCF3(48)
-1	U-234	2.830E-04	2.830E-04	DCF3(49)
-1	U-235+D	2.673E-04	2.660E-04	DCF3(64)
-1	U-238	2.550E-04	2.550E-04	DCF3(70)
-1	U-238+D	2.709E-04	2.550E-04	DCF3(71)
-1	U-238+D1	2.687E-04	2.550E-04	DCF3(86)

Dose Conversion Factor (and Related) Parameter Summary (continued)

Dose Library: FGR 11

enu	Parameter	Current Value#	Base Case*	Parameter Name
-34	Food transfer factors:			
-34	Ac-227+D , plant/soil concentration ratio, dimensionless	2.500E-03	2.500E-03	RTF(1,1)
-34	Ac-227+D , beef/livestock-intake ratio, (pCi/kg)/(pCi/d)	2.000E-05	2.000E-05	RTF(1,2)
-34	Ac-227+D , milk/livestock-intake ratio, (pCi/L)/(pCi/d)	2.000E-05	2.000E-05	RTF(1,3)
-34				
-34	Ac-227+D1 , plant/soil concentration ratio, dimensionless	2.500E-03	2.500E-03	RTF(2,1)
-34	Ac-227+D1 , beef/livestock-intake ratio, (pCi/kg)/(pCi/d)	2.000E-05	2.000E-05	RTF(2,2)
-34	Ac-227+D1 , milk/livestock-intake ratio, (pCi/L)/(pCi/d)	2.000E-05	2.000E-05	RTF(2,3)
-34				
-34	Ac-227+D2 , plant/soil concentration ratio, dimensionless	2.500E-03	2.500E-03	RTF(3,1)
-34	Ac-227+D2 , beef/livestock-intake ratio, (pCi/kg)/(pCi/d)	2.000E-05	2.000E-05	RTF(3,2)
-34	Ac-227+D2 , milk/livestock-intake ratio, (pCi/L)/(pCi/d)	2.000E-05	2.000E-05	RTF(3,3)
-34				
-34	Ac-227+D3 , plant/soil concentration ratio, dimensionless	2.500E-03	2.500E-03	RTF(4,1)
-34	Ac-227+D3 , beef/livestock-intake ratio, (pCi/kg)/(pCi/d)	2.000E-05	2.000E-05	RTF(4,2)
-34	Ac-227+D3 , milk/livestock-intake ratio, (pCi/L)/(pCi/d)	2.000E-05	2.000E-05	RTF(4,3)
-34				
-34	Ac-227+D4 , plant/soil concentration ratio, dimensionless	2.500E-03	2.500E-03	RTF(5,1)
-34	Ac-227+D4 , beef/livestock-intake ratio, (pCi/kg)/(pCi/d)	2.000E-05	2.000E-05	RTF(5,2)
-34	Ac-227+D4 , milk/livestock-intake ratio, (pCi/L)/(pCi/d)	2.000E-05	2.000E-05	RTF(5,3)
-34				
-34	Ac-227+D5 , plant/soil concentration ratio, dimensionless	2.500E-03	2.500E-03	RTF(6,1)
-34	Ac-227+D5 , beef/livestock-intake ratio, (pCi/kg)/(pCi/d)	2.000E-05	2.000E-05	RTF(6,2)
-34	Ac-227+D5 , milk/livestock-intake ratio, (pCi/L)/(pCi/d)	2.000E-05	2.000E-05	RTF(6,3)
-34				
-34	Pa-231 , plant/soil concentration ratio, dimensionless	1.000E-02	1.000E-02	RTF(7,1)
-34	Pa-231 , beef/livestock-intake ratio, (pCi/kg)/(pCi/d)	5.000E-03	5.000E-03	RTF(7,2)
-34	Pa-231 , milk/livestock-intake ratio, (pCi/L)/(pCi/d)	5.000E-06	5.000E-06	RTF(7,3)
-34				
-34	Pb-210+D , plant/soil concentration ratio, dimensionless	1.000E-02	1.000E-02	RTF(13,1)
-34	Pb-210+D , beef/livestock-intake ratio, (pCi/kg)/(pCi/d)	8.000E-04	8.000E-04	RTF(13,2)
-34	Pb-210+D , milk/livestock-intake ratio, (pCi/L)/(pCi/d)	3.000E-04	3.000E-04	RTF(13,3)
-34				
-34	Pb-210+D1 , plant/soil concentration ratio, dimensionless	1.000E-02	1.000E-02	RTF(14,1)
-34	Pb-210+D1 , beef/livestock-intake ratio, (pCi/kg)/(pCi/d)	8.000E-04	8.000E-04	RTF(14,2)
-34	Pb-210+D1 , milk/livestock-intake ratio, (pCi/L)/(pCi/d)	3.000E-04	3.000E-04	RTF(14,3)
-34				
-34	Pb-210+D2 , plant/soil concentration ratio, dimensionless	1.000E-02	1.000E-02	RTF(15,1)
-34	Pb-210+D2 , beef/livestock-intake ratio, (pCi/kg)/(pCi/d)	8.000E-04	8.000E-04	RTF(15,2)
-34	Pb-210+D2 , milk/livestock-intake ratio, (pCi/L)/(pCi/d)	3.000E-04	3.000E-04	RTF(15,3)
-34				
-34	Ra-226+D , plant/soil concentration ratio, dimensionless	4.000E-02	4.000E-02	RTF(16,1)
-34	Ra-226+D , beef/livestock-intake ratio, (pCi/kg)/(pCi/d)	1.000E-03	1.000E-03	RTF(16,2)
-34	Ra-226+D , milk/livestock-intake ratio, (pCi/L)/(pCi/d)	1.000E-03	1.000E-03	RTF(16,3)
-34				
-34	Ra-226+D1 , plant/soil concentration ratio, dimensionless	4.000E-02	4.000E-02	RTF(19,1)
-34	Ra-226+D1 , beef/livestock-intake ratio, (pCi/kg)/(pCi/d)	1.000E-03	1.000E-03	RTF(19,2)
-34	Ra-226+D1 , milk/livestock-intake ratio, (pCi/L)/(pCi/d)	1.000E-03	1.000E-03	RTF(19,3)
-34				

Dose Conversion Factor (and Related) Parameter Summary (continued)
Dose Library: FGR 11

enu	Parameter	Current Value#	Base Case*	Parameter Name
-34	Ra-226+D2 , plant/soil concentration ratio, dimensionless	4.000E-02	4.000E-02	RTF(22,1)
-34	Ra-226+D2 , beef/livestock-intake ratio, (pCi/kg)/(pCi/d)	1.000E-03	1.000E-03	RTF(22,2)
-34	Ra-226+D2 , milk/livestock-intake ratio, (pCi/L)/(pCi/d)	1.000E-03	1.000E-03	RTF(22,3)
-34				
-34	Ra-226+D3 , plant/soil concentration ratio, dimensionless	4.000E-02	4.000E-02	RTF(25,1)
-34	Ra-226+D3 , beef/livestock-intake ratio, (pCi/kg)/(pCi/d)	1.000E-03	1.000E-03	RTF(25,2)
-34	Ra-226+D3 , milk/livestock-intake ratio, (pCi/L)/(pCi/d)	1.000E-03	1.000E-03	RTF(25,3)
-34				
-34	Ra-226+D4 , plant/soil concentration ratio, dimensionless	4.000E-02	4.000E-02	RTF(28,1)
-34	Ra-226+D4 , beef/livestock-intake ratio, (pCi/kg)/(pCi/d)	1.000E-03	1.000E-03	RTF(28,2)
-34	Ra-226+D4 , milk/livestock-intake ratio, (pCi/L)/(pCi/d)	1.000E-03	1.000E-03	RTF(28,3)
-34				
-34	Ra-228+D , plant/soil concentration ratio, dimensionless	4.000E-02	4.000E-02	RTF(31,1)
-34	Ra-228+D , beef/livestock-intake ratio, (pCi/kg)/(pCi/d)	1.000E-03	1.000E-03	RTF(31,2)
-34	Ra-228+D , milk/livestock-intake ratio, (pCi/L)/(pCi/d)	1.000E-03	1.000E-03	RTF(31,3)
-34				
-34	Th-228+D , plant/soil concentration ratio, dimensionless	1.000E-03	1.000E-03	RTF(32,1)
-34	Th-228+D , beef/livestock-intake ratio, (pCi/kg)/(pCi/d)	1.000E-04	1.000E-04	RTF(32,2)
-34	Th-228+D , milk/livestock-intake ratio, (pCi/L)/(pCi/d)	5.000E-06	5.000E-06	RTF(32,3)
-34				
-34	Th-230 , plant/soil concentration ratio, dimensionless	1.000E-03	1.000E-03	RTF(33,1)
-34	Th-230 , beef/livestock-intake ratio, (pCi/kg)/(pCi/d)	1.000E-04	1.000E-04	RTF(33,2)
-34	Th-230 , milk/livestock-intake ratio, (pCi/L)/(pCi/d)	5.000E-06	5.000E-06	RTF(33,3)
-34				
-34	Th-232 , plant/soil concentration ratio, dimensionless	1.000E-03	1.000E-03	RTF(48,1)
-34	Th-232 , beef/livestock-intake ratio, (pCi/kg)/(pCi/d)	1.000E-04	1.000E-04	RTF(48,2)
-34	Th-232 , milk/livestock-intake ratio, (pCi/L)/(pCi/d)	5.000E-06	5.000E-06	RTF(48,3)
-34				
-34	U-234 , plant/soil concentration ratio, dimensionless	2.500E-03	2.500E-03	RTF(49,1)
-34	U-234 , beef/livestock-intake ratio, (pCi/kg)/(pCi/d)	3.400E-04	3.400E-04	RTF(49,2)
-34	U-234 , milk/livestock-intake ratio, (pCi/L)/(pCi/d)	6.000E-04	6.000E-04	RTF(49,3)
-34				
-34	U-235+D , plant/soil concentration ratio, dimensionless	2.500E-03	2.500E-03	RTF(64,1)
-34	U-235+D , beef/livestock-intake ratio, (pCi/kg)/(pCi/d)	3.400E-04	3.400E-04	RTF(64,2)
-34	U-235+D , milk/livestock-intake ratio, (pCi/L)/(pCi/d)	6.000E-04	6.000E-04	RTF(64,3)
-34				
-34	U-238 , plant/soil concentration ratio, dimensionless	2.500E-03	2.500E-03	RTF(70,1)
-34	U-238 , beef/livestock-intake ratio, (pCi/kg)/(pCi/d)	3.400E-04	3.400E-04	RTF(70,2)
-34	U-238 , milk/livestock-intake ratio, (pCi/L)/(pCi/d)	6.000E-04	6.000E-04	RTF(70,3)
-34				
-34	U-238+D , plant/soil concentration ratio, dimensionless	2.500E-03	2.500E-03	RTF(71,1)
-34	U-238+D , beef/livestock-intake ratio, (pCi/kg)/(pCi/d)	3.400E-04	3.400E-04	RTF(71,2)
-34	U-238+D , milk/livestock-intake ratio, (pCi/L)/(pCi/d)	6.000E-04	6.000E-04	RTF(71,3)
-34				
-34	U-238+D1 , plant/soil concentration ratio, dimensionless	2.500E-03	2.500E-03	RTF(86,1)
-34	U-238+D1 , beef/livestock-intake ratio, (pCi/kg)/(pCi/d)	3.400E-04	3.400E-04	RTF(86,2)
-34	U-238+D1 , milk/livestock-intake ratio, (pCi/L)/(pCi/d)	6.000E-04	6.000E-04	RTF(86,3)
-34				

Dose Conversion Factor (and Related) Parameter Summary (continued)
Dose Library: FGR 11

enu	Parameter	Current Value#	Base Case*	Parameter Name
-5	Bioaccumulation factors, fresh water, L/kg:			
-5	Ac-227+D , fish	1.500E+01	1.500E+01	BIOFAC(1,1)
-5	Ac-227+D , crustacea and mollusks	1.000E+03	1.000E+03	BIOFAC(1,2)
-5				
-5	Ac-227+D1 , fish	1.500E+01	1.500E+01	BIOFAC(2,1)
-5	Ac-227+D1 , crustacea and mollusks	1.000E+03	1.000E+03	BIOFAC(2,2)
-5				
-5	Ac-227+D2 , fish	1.500E+01	1.500E+01	BIOFAC(3,1)
-5	Ac-227+D2 , crustacea and mollusks	1.000E+03	1.000E+03	BIOFAC(3,2)
-5				
-5	Ac-227+D3 , fish	1.500E+01	1.500E+01	BIOFAC(4,1)
-5	Ac-227+D3 , crustacea and mollusks	1.000E+03	1.000E+03	BIOFAC(4,2)
-5				
-5	Ac-227+D4 , fish	1.500E+01	1.500E+01	BIOFAC(5,1)
-5	Ac-227+D4 , crustacea and mollusks	1.000E+03	1.000E+03	BIOFAC(5,2)
-5				
-5	Ac-227+D5 , fish	1.500E+01	1.500E+01	BIOFAC(6,1)
-5	Ac-227+D5 , crustacea and mollusks	1.000E+03	1.000E+03	BIOFAC(6,2)
-5				
-5	Pa-231 , fish	1.000E+01	1.000E+01	BIOFAC(7,1)
-5	Pa-231 , crustacea and mollusks	1.100E+02	1.100E+02	BIOFAC(7,2)
-5				
-5	Pb-210+D , fish	3.000E+02	3.000E+02	BIOFAC(13,1)
-5	Pb-210+D , crustacea and mollusks	1.000E+02	1.000E+02	BIOFAC(13,2)
-5				
-5	Pb-210+D1 , fish	3.000E+02	3.000E+02	BIOFAC(14,1)
-5	Pb-210+D1 , crustacea and mollusks	1.000E+02	1.000E+02	BIOFAC(14,2)
-5				
-5	Pb-210+D2 , fish	3.000E+02	3.000E+02	BIOFAC(15,1)
-5	Pb-210+D2 , crustacea and mollusks	1.000E+02	1.000E+02	BIOFAC(15,2)
-5				
-5	Ra-226+D , fish	5.000E+01	5.000E+01	BIOFAC(16,1)
-5	Ra-226+D , crustacea and mollusks	2.500E+02	2.500E+02	BIOFAC(16,2)
-5				
-5	Ra-226+D1 , fish	5.000E+01	5.000E+01	BIOFAC(19,1)
-5	Ra-226+D1 , crustacea and mollusks	2.500E+02	2.500E+02	BIOFAC(19,2)
-5				
-5	Ra-226+D2 , fish	5.000E+01	5.000E+01	BIOFAC(22,1)
-5	Ra-226+D2 , crustacea and mollusks	2.500E+02	2.500E+02	BIOFAC(22,2)
-5				
-5	Ra-226+D3 , fish	5.000E+01	5.000E+01	BIOFAC(25,1)
-5	Ra-226+D3 , crustacea and mollusks	2.500E+02	2.500E+02	BIOFAC(25,2)
-5				
-5	Ra-226+D4 , fish	5.000E+01	5.000E+01	BIOFAC(28,1)
-5	Ra-226+D4 , crustacea and mollusks	2.500E+02	2.500E+02	BIOFAC(28,2)
-5				
-5	Ra-228+D , fish	5.000E+01	5.000E+01	BIOFAC(31,1)
-5	Ra-228+D , crustacea and mollusks	2.500E+02	2.500E+02	BIOFAC(31,2)
-5				

Dose Conversion Factor (and Related) Parameter Summary (continued)
Dose Library: FGR 11

enu	Parameter	Current Value#	Base Case*	Parameter Name
-5	Th-228+D , fish	1.000E+02	1.000E+02	BIOFAC(32,1)
-5	Th-228+D , crustacea and mollusks	5.000E+02	5.000E+02	BIOFAC(32,2)
-5				
-5	Th-230 , fish	1.000E+02	1.000E+02	BIOFAC(33,1)
-5	Th-230 , crustacea and mollusks	5.000E+02	5.000E+02	BIOFAC(33,2)
-5				
-5	Th-232 , fish	1.000E+02	1.000E+02	BIOFAC(48,1)
-5	Th-232 , crustacea and mollusks	5.000E+02	5.000E+02	BIOFAC(48,2)
-5				
-5	U-234 , fish	1.000E+01	1.000E+01	BIOFAC(49,1)
-5	U-234 , crustacea and mollusks	6.000E+01	6.000E+01	BIOFAC(49,2)
-5				
-5	U-235+D , fish	1.000E+01	1.000E+01	BIOFAC(64,1)
-5	U-235+D , crustacea and mollusks	6.000E+01	6.000E+01	BIOFAC(64,2)
-5				
-5	U-238 , fish	1.000E+01	1.000E+01	BIOFAC(70,1)
-5	U-238 , crustacea and mollusks	6.000E+01	6.000E+01	BIOFAC(70,2)
-5				
-5	U-238+D , fish	1.000E+01	1.000E+01	BIOFAC(71,1)
-5	U-238+D , crustacea and mollusks	6.000E+01	6.000E+01	BIOFAC(71,2)
-5				
-5	U-238+D1 , fish	1.000E+01	1.000E+01	BIOFAC(86,1)
-5	U-238+D1 , crustacea and mollusks	6.000E+01	6.000E+01	BIOFAC(86,2)
-5				

For DCF1(xxx) only, factors are for infinite depth & area. See ETFG table in Ground Pathway of Detailed Report.
Base Case means Default.Lib w/o Associate Nuclide contributions.

ummary : GKP Maintenance Worker -External

ile : C:\USERS\CLAUDE\DOCUMENTS\0 GKP DOSE\RESRAD CW\GKP MAINTENANCE WORKER - EXTERNAL.RAD

Site-Specific Parameter Summary

enu	Parameter	User Input	Default	Used by RESRAD (If different from user input)	Parameter Name
011	Area of contaminated zone (m**2)	2.000E+02	1.000E+04	---	AREA
011	Thickness of contaminated zone (m)	1.500E-01	2.000E+00	---	THICK0
011	Fraction of contamination that is submerged	0.000E+00	0.000E+00	---	SUBMFRACT
011	Length parallel to aquifer flow (m)	1.000E+02	1.000E+02	---	LCZPAQ
011	Basic radiation dose limit (mrem/yr)	2.500E+01	3.000E+01	---	BRDL
011	Time since placement of material (yr)	0.000E+00	0.000E+00	---	TI
011	Times for calculations (yr)	1.000E+00	1.000E+00	---	T(2)
011	Times for calculations (yr)	3.000E+00	3.000E+00	---	T(3)
011	Times for calculations (yr)	1.000E+01	1.000E+01	---	T(4)
011	Times for calculations (yr)	3.000E+01	3.000E+01	---	T(5)
011	Times for calculations (yr)	1.000E+02	1.000E+02	---	T(6)
011	Times for calculations (yr)	3.000E+02	3.000E+02	---	T(7)
011	Times for calculations (yr)	1.000E+03	1.000E+03	---	T(8)
011	Times for calculations (yr)	not used	0.000E+00	---	T(9)
011	Times for calculations (yr)	not used	0.000E+00	---	T(10)
012	Initial principal radionuclide (pCi/g): Ra-226	3.650E+01	0.000E+00	---	S1(16)
012	Initial principal radionuclide (pCi/g): Th-232	2.400E+00	0.000E+00	---	S1(48)
012	Initial principal radionuclide (pCi/g): U-234	1.390E+01	0.000E+00	---	S1(49)
012	Initial principal radionuclide (pCi/g): U-235	8.400E-01	0.000E+00	---	S1(64)
012	Initial principal radionuclide (pCi/g): U-238	1.390E+01	0.000E+00	---	S1(70)
012	Concentration in groundwater (pCi/L): Ra-226	not used	0.000E+00	---	W1(16)
012	Concentration in groundwater (pCi/L): Th-232	not used	0.000E+00	---	W1(48)
012	Concentration in groundwater (pCi/L): U-234	not used	0.000E+00	---	W1(49)
012	Concentration in groundwater (pCi/L): U-235	not used	0.000E+00	---	W1(64)
012	Concentration in groundwater (pCi/L): U-238	not used	0.000E+00	---	W1(70)
013	Cover depth (m)	0.000E+00	0.000E+00	---	COVER0
013	Density of cover material (g/cm**3)	not used	1.500E+00	---	DENSCV
013	Cover depth erosion rate (m/yr)	not used	1.000E-03	---	VCV
013	Density of contaminated zone (g/cm**3)	1.500E+00	1.500E+00	---	DENSCZ
013	Contaminated zone erosion rate (m/yr)	1.000E-03	1.000E-03	---	VCZ
013	Contaminated zone total porosity	4.000E-01	4.000E-01	---	TPCZ
013	Contaminated zone field capacity	2.000E-01	2.000E-01	---	FCCZ
013	Contaminated zone hydraulic conductivity (m/yr)	1.000E+01	1.000E+01	---	HCCZ
013	Contaminated zone b parameter	5.300E+00	5.300E+00	---	BCZ
013	Average annual wind speed (m/sec)	2.000E+00	2.000E+00	---	WIND
013	Humidity in air (g/m**3)	not used	8.000E+00	---	HUMID
013	Evapotranspiration coefficient	5.000E-01	5.000E-01	---	EVAPTR
013	Precipitation (m/yr)	1.000E+00	1.000E+00	---	PRECIP
013	Irrigation (m/yr)	2.000E-01	2.000E-01	---	RI
013	Irrigation mode	overhead	overhead	---	IDITCH
013	Runoff coefficient	2.000E-01	2.000E-01	---	RUNOFF
013	Watershed area for nearby stream or pond (m**2)	1.000E+06	1.000E+06	---	WAREA
013	Accuracy for water/soil computations	1.000E-03	1.000E-03	---	EPS
014	Density of saturated zone (g/cm**3)	1.500E+00	1.500E+00	---	DENSAQ
014	Saturated zone total porosity	4.000E-01	4.000E-01	---	TPSZ
014	Saturated zone effective porosity	2.000E-01	2.000E-01	---	EPSZ
014	Saturated zone field capacity	2.000E-01	2.000E-01	---	FCSZ

Site-Specific Parameter Summary (continued)

enu	Parameter	User Input	Default	Used by RESRAD (If different from user input)	Parameter Name
014	Saturated zone hydraulic conductivity (m/yr)	1.000E+02	1.000E+02	---	HCSZ
014	Saturated zone hydraulic gradient	2.000E-02	2.000E-02	---	HGWT
014	Saturated zone b parameter	5.300E+00	5.300E+00	---	BSZ
014	Water table drop rate (m/yr)	1.000E-03	1.000E-03	---	VWT
014	Well pump intake depth (m below water table)	1.000E+01	1.000E+01	---	DWIBWT
014	Model: Nondispersion (ND) or Mass-Balance (MB)	ND	ND	---	MODEL
014	Well pumping rate (m**3/yr)	2.500E+02	2.500E+02	---	UW
015	Number of unsaturated zone strata	1	1	---	NS
015	Unsat. zone 1, thickness (m)	4.000E+00	4.000E+00	---	H(1)
015	Unsat. zone 1, soil density (g/cm**3)	1.500E+00	1.500E+00	---	DENSUZ(1)
015	Unsat. zone 1, total porosity	4.000E-01	4.000E-01	---	TPUZ(1)
015	Unsat. zone 1, effective porosity	2.000E-01	2.000E-01	---	EPUZ(1)
015	Unsat. zone 1, field capacity	2.000E-01	2.000E-01	---	FCUZ(1)
015	Unsat. zone 1, soil-specific b parameter	5.300E+00	5.300E+00	---	BUZ(1)
015	Unsat. zone 1, hydraulic conductivity (m/yr)	1.000E+01	1.000E+01	---	HCUZ(1)
016	Distribution coefficients for Ra-226				
016	Contaminated zone (cm**3/g)	7.000E+01	7.000E+01	---	DCNUCC(16)
016	Unsaturated zone 1 (cm**3/g)	7.000E+01	7.000E+01	---	DCNUCU(16,1)
016	Saturated zone (cm**3/g)	7.000E+01	7.000E+01	---	DCNUCS(16)
016	Leach rate (/yr)	0.000E+00	0.000E+00	3.165E-02	ALEACH(16)
016	Solubility constant	0.000E+00	0.000E+00	not used	SOLUBK(16)
016	Distribution coefficients for Th-232				
016	Contaminated zone (cm**3/g)	6.000E+04	6.000E+04	---	DCNUCC(48)
016	Unsaturated zone 1 (cm**3/g)	6.000E+04	6.000E+04	---	DCNUCU(48,1)
016	Saturated zone (cm**3/g)	6.000E+04	6.000E+04	---	DCNUCS(48)
016	Leach rate (/yr)	0.000E+00	0.000E+00	3.704E-05	ALEACH(48)
016	Solubility constant	0.000E+00	0.000E+00	not used	SOLUBK(48)
016	Distribution coefficients for U-234				
016	Contaminated zone (cm**3/g)	5.000E+01	5.000E+01	---	DCNUCC(49)
016	Unsaturated zone 1 (cm**3/g)	5.000E+01	5.000E+01	---	DCNUCU(49,1)
016	Saturated zone (cm**3/g)	5.000E+01	5.000E+01	---	DCNUCS(49)
016	Leach rate (/yr)	0.000E+00	0.000E+00	4.426E-02	ALEACH(49)
016	Solubility constant	0.000E+00	0.000E+00	not used	SOLUBK(49)
016	Distribution coefficients for U-235				
016	Contaminated zone (cm**3/g)	5.000E+01	5.000E+01	---	DCNUCC(64)
016	Unsaturated zone 1 (cm**3/g)	5.000E+01	5.000E+01	---	DCNUCU(64,1)
016	Saturated zone (cm**3/g)	5.000E+01	5.000E+01	---	DCNUCS(64)
016	Leach rate (/yr)	0.000E+00	0.000E+00	4.426E-02	ALEACH(64)
016	Solubility constant	0.000E+00	0.000E+00	not used	SOLUBK(64)
016	Distribution coefficients for U-238				
016	Contaminated zone (cm**3/g)	5.000E+01	5.000E+01	---	DCNUCC(70)
016	Unsaturated zone 1 (cm**3/g)	5.000E+01	5.000E+01	---	DCNUCU(70,1)
016	Saturated zone (cm**3/g)	5.000E+01	5.000E+01	---	DCNUCS(70)
016	Leach rate (/yr)	0.000E+00	0.000E+00	4.426E-02	ALEACH(70)
016	Solubility constant	0.000E+00	0.000E+00	not used	SOLUBK(70)

Site-Specific Parameter Summary (continued)

enu	Parameter	User Input	Default	Used by RESRAD (If different from user input)	Parameter Name
016	Distribution coefficients for daughter Ac-227				
016	Contaminated zone (cm**3/g)	2.000E+01	2.000E+01	---	DCNUCC(1)
016	Unsaturated zone 1 (cm**3/g)	2.000E+01	2.000E+01	---	DCNUCU(1,1)
016	Saturated zone (cm**3/g)	2.000E+01	2.000E+01	---	DCNUCS(1)
016	Leach rate (/yr)	0.000E+00	0.000E+00	1.099E-01	ALEACH(1)
016	Solubility constant	0.000E+00	0.000E+00	not used	SOLUBK(1)
016	Distribution coefficients for daughter Pa-231				
016	Contaminated zone (cm**3/g)	5.000E+01	5.000E+01	---	DCNUCC(7)
016	Unsaturated zone 1 (cm**3/g)	5.000E+01	5.000E+01	---	DCNUCU(7,1)
016	Saturated zone (cm**3/g)	5.000E+01	5.000E+01	---	DCNUCS(7)
016	Leach rate (/yr)	0.000E+00	0.000E+00	4.426E-02	ALEACH(7)
016	Solubility constant	0.000E+00	0.000E+00	not used	SOLUBK(7)
016	Distribution coefficients for daughter Pb-210				
016	Contaminated zone (cm**3/g)	1.000E+02	1.000E+02	---	DCNUCC(13)
016	Unsaturated zone 1 (cm**3/g)	1.000E+02	1.000E+02	---	DCNUCU(13,1)
016	Saturated zone (cm**3/g)	1.000E+02	1.000E+02	---	DCNUCS(13)
016	Leach rate (/yr)	0.000E+00	0.000E+00	2.217E-02	ALEACH(13)
016	Solubility constant	0.000E+00	0.000E+00	not used	SOLUBK(13)
016	Distribution coefficients for daughter Ra-228				
016	Contaminated zone (cm**3/g)	7.000E+01	7.000E+01	---	DCNUCC(31)
016	Unsaturated zone 1 (cm**3/g)	7.000E+01	7.000E+01	---	DCNUCU(31,1)
016	Saturated zone (cm**3/g)	7.000E+01	7.000E+01	---	DCNUCS(31)
016	Leach rate (/yr)	0.000E+00	0.000E+00	3.165E-02	ALEACH(31)
016	Solubility constant	0.000E+00	0.000E+00	not used	SOLUBK(31)
016	Distribution coefficients for daughter Th-228				
016	Contaminated zone (cm**3/g)	6.000E+04	6.000E+04	---	DCNUCC(32)
016	Unsaturated zone 1 (cm**3/g)	6.000E+04	6.000E+04	---	DCNUCU(32,1)
016	Saturated zone (cm**3/g)	6.000E+04	6.000E+04	---	DCNUCS(32)
016	Leach rate (/yr)	0.000E+00	0.000E+00	3.704E-05	ALEACH(32)
016	Solubility constant	0.000E+00	0.000E+00	not used	SOLUBK(32)
016	Distribution coefficients for daughter Th-230				
016	Contaminated zone (cm**3/g)	6.000E+04	6.000E+04	---	DCNUCC(33)
016	Unsaturated zone 1 (cm**3/g)	6.000E+04	6.000E+04	---	DCNUCU(33,1)
016	Saturated zone (cm**3/g)	6.000E+04	6.000E+04	---	DCNUCS(33)
016	Leach rate (/yr)	0.000E+00	0.000E+00	3.704E-05	ALEACH(33)
016	Solubility constant	0.000E+00	0.000E+00	not used	SOLUBK(33)
017	Inhalation rate (m**3/yr)	not used	8.400E+03	---	INHALR
017	Mass loading for inhalation (g/m**3)	not used	1.000E-04	---	MLINH
017	Exposure duration	3.000E+01	3.000E+01	---	ED
017	Shielding factor, inhalation	not used	4.000E-01	---	SHF3
017	Shielding factor, external gamma	7.000E-01	7.000E-01	---	SHF1
017	Fraction of time spent indoors	0.000E+00	5.000E-01	---	FIND
017	Fraction of time spent outdoors (on site)	2.280E-02	2.500E-01	---	FOTD
017	Shape factor flag, external gamma	1.000E+00	1.000E+00	>0 shows circular AREA.	FS

Site-Specific Parameter Summary (continued)

enu	Parameter	User Input	Default	Used by RESRAD (If different from user input)	Parameter Name
017	Radii of shape factor array (used if FS = -1):				
017	Outer annular radius (m), ring 1:	not used	5.000E+01	---	RAD_SHAPE(1)
017	Outer annular radius (m), ring 2:	not used	7.071E+01	---	RAD_SHAPE(2)
017	Outer annular radius (m), ring 3:	not used	0.000E+00	---	RAD_SHAPE(3)
017	Outer annular radius (m), ring 4:	not used	0.000E+00	---	RAD_SHAPE(4)
017	Outer annular radius (m), ring 5:	not used	0.000E+00	---	RAD_SHAPE(5)
017	Outer annular radius (m), ring 6:	not used	0.000E+00	---	RAD_SHAPE(6)
017	Outer annular radius (m), ring 7:	not used	0.000E+00	---	RAD_SHAPE(7)
017	Outer annular radius (m), ring 8:	not used	0.000E+00	---	RAD_SHAPE(8)
017	Outer annular radius (m), ring 9:	not used	0.000E+00	---	RAD_SHAPE(9)
017	Outer annular radius (m), ring 10:	not used	0.000E+00	---	RAD_SHAPE(10)
017	Outer annular radius (m), ring 11:	not used	0.000E+00	---	RAD_SHAPE(11)
017	Outer annular radius (m), ring 12:	not used	0.000E+00	---	RAD_SHAPE(12)
017	Fractions of annular areas within AREA:				
017	Ring 1	not used	1.000E+00	---	FRACA(1)
017	Ring 2	not used	2.732E-01	---	FRACA(2)
017	Ring 3	not used	0.000E+00	---	FRACA(3)
017	Ring 4	not used	0.000E+00	---	FRACA(4)
017	Ring 5	not used	0.000E+00	---	FRACA(5)
017	Ring 6	not used	0.000E+00	---	FRACA(6)
017	Ring 7	not used	0.000E+00	---	FRACA(7)
017	Ring 8	not used	0.000E+00	---	FRACA(8)
017	Ring 9	not used	0.000E+00	---	FRACA(9)
017	Ring 10	not used	0.000E+00	---	FRACA(10)
017	Ring 11	not used	0.000E+00	---	FRACA(11)
017	Ring 12	not used	0.000E+00	---	FRACA(12)
018	Fruits, vegetables and grain consumption (kg/yr)	not used	1.600E+02	---	DIET(1)
018	Leafy vegetable consumption (kg/yr)	not used	1.400E+01	---	DIET(2)
018	Milk consumption (L/yr)	not used	9.200E+01	---	DIET(3)
018	Meat and poultry consumption (kg/yr)	not used	6.300E+01	---	DIET(4)
018	Fish consumption (kg/yr)	not used	5.400E+00	---	DIET(5)
018	Other seafood consumption (kg/yr)	not used	9.000E-01	---	DIET(6)
018	Soil ingestion rate (g/yr)	not used	3.650E+01	---	SOIL
018	Drinking water intake (L/yr)	not used	5.100E+02	---	DWI
018	Contamination fraction of drinking water	not used	1.000E+00	---	FDW
018	Contamination fraction of household water	1.000E+00	1.000E+00	---	FHHW
018	Contamination fraction of livestock water	not used	1.000E+00	---	FLW
018	Contamination fraction of irrigation water	not used	1.000E+00	---	FIRW
018	Contamination fraction of aquatic food	not used	5.000E-01	---	FR9
018	Contamination fraction of plant food	not used	-1	---	FPLANT
018	Contamination fraction of meat	not used	-1	---	FMEAT
018	Contamination fraction of milk	not used	-1	---	FMILK
019	Livestock fodder intake for meat (kg/day)	not used	6.800E+01	---	LFI5
019	Livestock fodder intake for milk (kg/day)	not used	5.500E+01	---	LFI6
019	Livestock water intake for meat (L/day)	not used	5.000E+01	---	LWI5
019	Livestock water intake for milk (L/day)	not used	1.600E+02	---	LWI6
019	Livestock soil intake (kg/day)	not used	5.000E-01	---	LSI

Site-Specific Parameter Summary (continued)

enu	Parameter	User Input	Default	Used by RESRAD (If different from user input)	Parameter Name
019	Mass loading for foliar deposition (g/m**3)	not used	1.000E-04	---	MLFD
019	Depth of soil mixing layer (m)	not used	1.500E-01	---	DM
019	Depth of roots (m)	not used	9.000E-01	---	DROOT
019	Drinking water fraction from ground water	not used	1.000E+00	---	FGWDW
019	Household water fraction from ground water	1.000E+00	1.000E+00	---	FGWHH
019	Livestock water fraction from ground water	not used	1.000E+00	---	FGWLW
019	Irrigation fraction from ground water	not used	1.000E+00	---	FGWIR
19B	Wet weight crop yield for Non-Leafy (kg/m**2)	not used	7.000E-01	---	YV(1)
19B	Wet weight crop yield for Leafy (kg/m**2)	not used	1.500E+00	---	YV(2)
19B	Wet weight crop yield for Fodder (kg/m**2)	not used	1.100E+00	---	YV(3)
19B	Growing Season for Non-Leafy (years)	not used	1.700E-01	---	TE(1)
19B	Growing Season for Leafy (years)	not used	2.500E-01	---	TE(2)
19B	Growing Season for Fodder (years)	not used	8.000E-02	---	TE(3)
19B	Translocation Factor for Non-Leafy	not used	1.000E-01	---	TIV(1)
19B	Translocation Factor for Leafy	not used	1.000E+00	---	TIV(2)
19B	Translocation Factor for Fodder	not used	1.000E+00	---	TIV(3)
19B	Dry Foliar Interception Fraction for Non-Leafy	not used	2.500E-01	---	RDRY(1)
19B	Dry Foliar Interception Fraction for Leafy	not used	2.500E-01	---	RDRY(2)
19B	Dry Foliar Interception Fraction for Fodder	not used	2.500E-01	---	RDRY(3)
19B	Wet Foliar Interception Fraction for Non-Leafy	not used	2.500E-01	---	RWET(1)
19B	Wet Foliar Interception Fraction for Leafy	not used	2.500E-01	---	RWET(2)
19B	Wet Foliar Interception Fraction for Fodder	not used	2.500E-01	---	RWET(3)
19B	Weathering Removal Constant for Vegetation	not used	2.000E+01	---	WLAM
14	C-12 concentration in water (g/cm**3)	not used	2.000E-05	---	C12WTR
14	C-12 concentration in contaminated soil (g/g)	not used	3.000E-02	---	C12CZ
14	Fraction of vegetation carbon from soil	not used	2.000E-02	---	CSOIL
14	Fraction of vegetation carbon from air	not used	9.800E-01	---	CAIR
14	C-14 evasion layer thickness in soil (m)	not used	3.000E-01	---	DMC
14	C-14 evasion flux rate from soil (1/sec)	not used	7.000E-07	---	EVSN
14	C-12 evasion flux rate from soil (1/sec)	not used	1.000E-10	---	REVSN
14	Fraction of grain in beef cattle feed	not used	8.000E-01	---	AVFG4
14	Fraction of grain in milk cow feed	not used	2.000E-01	---	AVFG5
TOR	Storage times of contaminated foodstuffs (days):				
TOR	Fruits, non-leafy vegetables, and grain	1.400E+01	1.400E+01	---	STOR_T(1)
TOR	Leafy vegetables	1.000E+00	1.000E+00	---	STOR_T(2)
TOR	Milk	1.000E+00	1.000E+00	---	STOR_T(3)
TOR	Meat and poultry	2.000E+01	2.000E+01	---	STOR_T(4)
TOR	Fish	7.000E+00	7.000E+00	---	STOR_T(5)
TOR	Crustacea and mollusks	7.000E+00	7.000E+00	---	STOR_T(6)
TOR	Well water	1.000E+00	1.000E+00	---	STOR_T(7)
TOR	Surface water	1.000E+00	1.000E+00	---	STOR_T(8)
TOR	Livestock fodder	4.500E+01	4.500E+01	---	STOR_T(9)
021	Thickness of building foundation (m)	not used	1.500E-01	---	FLOOR1
021	Bulk density of building foundation (g/cm**3)	not used	2.400E+00	---	DENSFL
021	Total porosity of the cover material	not used	4.000E-01	---	TPCV
021	Total porosity of the building foundation	not used	1.000E-01	---	TPFL

Site-Specific Parameter Summary (continued)

enu	Parameter	User Input	Default	Used by RESRAD (If different from user input)	Parameter Name
021	Volumetric water content of the cover material	not used	5.000E-02	---	PH2OCV
021	Volumetric water content of the foundation	not used	3.000E-02	---	PH2OFL
021	Diffusion coefficient for radon gas (m/sec):				
021	in cover material	not used	2.000E-06	---	DIFCV
021	in foundation material	not used	3.000E-07	---	DIFFL
021	in contaminated zone soil	2.000E-06	2.000E-06	---	DIFCZ
021	Radon vertical dimension of mixing (m)	2.000E+00	2.000E+00	---	HMIX
021	Average building air exchange rate (1/hr)	not used	5.000E-01	---	REXG
021	Height of the building (room) (m)	not used	2.500E+00	---	HRM
021	Building interior area factor	not used	0.000E+00	code computed (time dependent)	FAI
021	Building depth below ground surface (m)	not used	-1.000E+00	code computed (time dependent)	DMFL
021	Emanating power of Rn-222 gas	2.500E-01	2.500E-01	---	EMANA(1)
021	Emanating power of Rn-220 gas	1.500E-01	1.500E-01	---	EMANA(2)
ITL	Number of graphical time points	32	---	---	NPTS
ITL	Maximum number of integration points for dose	17	---	---	LYMAX
ITL	Maximum number of integration points for risk	257	---	---	KYMAX

Summary of Pathway Selections

Pathway	User Selection
1 -- external gamma	active
2 -- inhalation (w/o radon)	suppressed
3 -- plant ingestion	suppressed
4 -- meat ingestion	suppressed
5 -- milk ingestion	suppressed
6 -- aquatic foods	suppressed
7 -- drinking water	suppressed
8 -- soil ingestion	suppressed
9 -- radon	active
Find peak pathway doses	suppressed

ummary : GKP Maintenance Worker -External
ile : C:\USERS\CLAUDE\DOCUMENTS\0 GKP DOSE\RESRAD CW\GKP MAINTENANCE WORKER - EXTERNAL.RAD

Contaminated Zone Dimensions		Initial Soil Concentrations, pCi/g	
Area:	200.00 square meters	Ra-226	3.650E+01
Thickness:	0.15 meters	Th-232	2.400E+00
over Depth:	0.00 meters	U-234	1.390E+01
		U-235	8.400E-01
		U-238	1.390E+01

Total Dose TDOSE(t), mrem/yr
Basic Radiation Dose Limit = 2.500E+01 mrem/yr
Total Mixture Sum M(t) = Fraction of Basic Dose Limit Received at Time (t)

t (years):	0.000E+00	1.000E+00	3.000E+00	1.000E+01	3.000E+01	1.000E+02	3.000E+02	1.000E+03
TDOSE(t):	6.626E+00	6.434E+00	6.080E+00	4.979E+00	2.690E+00	3.962E-01	0.000E+00	0.000E+00
M(t):	2.650E-01	2.574E-01	2.432E-01	1.992E-01	1.076E-01	1.585E-02	0.000E+00	0.000E+00

aximum TDOSE(t): 6.626E+00 mrem/yr at t = 0.000E+00 years

ummary : GKP Maintenance Worker -External
ile : C:\USERS\CLAUDE\DOCUMENTS\0 GKP DOSE\RESRAD CW\GKP MAINTENANCE WORKER - EXTERNAL.RAD

Total Dose Contributions TDOSE(i,p,t) for Individual Radionuclides (i) and Pathways (p)
As mrem/yr and Fraction of Total Dose At t = 0.000E+00 years

Water Independent Pathways (Inhalation excludes radon)

	Ground		Inhalation		Radon		Plant		Meat		Milk		Soil	
adio-	ÄÄÄÄÄÄÄÄÄÄÄÄÄÄÄÄ		ÄÄÄÄÄÄÄÄÄÄÄÄÄÄÄÄ		ÄÄÄÄÄÄÄÄÄÄÄÄÄÄÄÄ		ÄÄÄÄÄÄÄÄÄÄÄÄÄÄÄÄ		ÄÄÄÄÄÄÄÄÄÄÄÄÄÄÄÄ		ÄÄÄÄÄÄÄÄÄÄÄÄÄÄÄÄ		ÄÄÄÄÄÄÄÄÄÄÄÄÄÄÄÄ	
uclide	mrem/yr	fract.	mrem/yr	fract.	mrem/yr	fract.	mrem/yr	fract.	mrem/yr	fract.	mrem/yr	fract.	mrem/yr	fract.
ÄÄÄÄÄÄ	ÄÄÄÄÄÄÄÄÄ	ÄÄÄÄÄÄ	ÄÄÄÄÄÄÄÄÄ	ÄÄÄÄÄÄ	ÄÄÄÄÄÄÄÄÄ	ÄÄÄÄÄÄ	ÄÄÄÄÄÄÄÄÄ	ÄÄÄÄÄÄ	ÄÄÄÄÄÄÄÄÄ	ÄÄÄÄÄÄ	ÄÄÄÄÄÄÄÄÄ	ÄÄÄÄÄÄ	ÄÄÄÄÄÄÄÄÄ	ÄÄÄÄÄÄ
a-226	6.565E+00	0.9909	0.000E+00	0.0000	3.372E-05	0.0000	0.000E+00	0.0000	0.000E+00	0.0000	0.000E+00	0.0000	0.000E+00	0.0000
n-232	1.625E-02	0.0025	0.000E+00	0.0000	1.209E-06	0.0000	0.000E+00	0.0000	0.000E+00	0.0000	0.000E+00	0.0000	0.000E+00	0.0000
-234	1.101E-04	0.0000	0.000E+00	0.0000	8.487E-15	0.0000	0.000E+00	0.0000	0.000E+00	0.0000	0.000E+00	0.0000	0.000E+00	0.0000
-235	1.198E-02	0.0018	0.000E+00	0.0000	0.000E+00	0.0000	0.000E+00	0.0000	0.000E+00	0.0000	0.000E+00	0.0000	0.000E+00	0.0000
-238	3.183E-02	0.0048	0.000E+00	0.0000	5.958E-21	0.0000	0.000E+00	0.0000	0.000E+00	0.0000	0.000E+00	0.0000	0.000E+00	0.0000
íííííí	íííííííííí	íííííí	íííííííííí	íííííí	íííííííííí	íííííí	íííííííííí	íííííí	íííííííííí	íííííí	íííííííííí	íííííí	íííííííííí	íííííí
otal	6.626E+00	1.0000	0.000E+00	0.0000	3.493E-05	0.0000	0.000E+00	0.0000	0.000E+00	0.0000	0.000E+00	0.0000	0.000E+00	0.0000

Total Dose Contributions TDOSE(i,p,t) for Individual Radionuclides (i) and Pathways (p)
As mrem/yr and Fraction of Total Dose At t = 0.000E+00 years

Water Dependent Pathways

	Water		Fish		Radon		Plant		Meat		Milk		All Pathways*	
adio-	ÄÄÄÄÄÄÄÄÄÄÄÄÄÄÄÄ		ÄÄÄÄÄÄÄÄÄÄÄÄÄÄÄÄ		ÄÄÄÄÄÄÄÄÄÄÄÄÄÄÄÄ		ÄÄÄÄÄÄÄÄÄÄÄÄÄÄÄÄ		ÄÄÄÄÄÄÄÄÄÄÄÄÄÄÄÄ		ÄÄÄÄÄÄÄÄÄÄÄÄÄÄÄÄ		ÄÄÄÄÄÄÄÄÄÄÄÄÄÄÄÄ	
uclide	mrem/yr	fract.	mrem/yr	fract.	mrem/yr	fract.	mrem/yr	fract.	mrem/yr	fract.	mrem/yr	fract.	mrem/yr	fract.
ÄÄÄÄÄÄ	ÄÄÄÄÄÄÄÄÄ	ÄÄÄÄÄÄ	ÄÄÄÄÄÄÄÄÄ	ÄÄÄÄÄÄ	ÄÄÄÄÄÄÄÄÄ	ÄÄÄÄÄÄ	ÄÄÄÄÄÄÄÄÄ	ÄÄÄÄÄÄ	ÄÄÄÄÄÄÄÄÄ	ÄÄÄÄÄÄ	ÄÄÄÄÄÄÄÄÄ	ÄÄÄÄÄÄ	ÄÄÄÄÄÄÄÄÄ	ÄÄÄÄÄÄ
a-226	0.000E+00	0.0000	0.000E+00	0.0000	0.000E+00	0.0000	0.000E+00	0.0000	0.000E+00	0.0000	0.000E+00	0.0000	6.566E+00	0.9909
n-232	0.000E+00	0.0000	0.000E+00	0.0000	0.000E+00	0.0000	0.000E+00	0.0000	0.000E+00	0.0000	0.000E+00	0.0000	1.625E-02	0.0025
-234	0.000E+00	0.0000	0.000E+00	0.0000	0.000E+00	0.0000	0.000E+00	0.0000	0.000E+00	0.0000	0.000E+00	0.0000	1.101E-04	0.0000
-235	0.000E+00	0.0000	0.000E+00	0.0000	0.000E+00	0.0000	0.000E+00	0.0000	0.000E+00	0.0000	0.000E+00	0.0000	1.198E-02	0.0018
-238	0.000E+00	0.0000	0.000E+00	0.0000	0.000E+00	0.0000	0.000E+00	0.0000	0.000E+00	0.0000	0.000E+00	0.0000	3.183E-02	0.0048
íííííí	íííííííííí	íííííí	íííííííííí	íííííí	íííííííííí	íííííí	íííííííííí	íííííí	íííííííííí	íííííí	íííííííííí	íííííí	íííííííííí	íííííí
otal	0.000E+00	0.0000	0.000E+00	0.0000	0.000E+00	0.0000	0.000E+00	0.0000	0.000E+00	0.0000	0.000E+00	0.0000	6.626E+00	1.0000

Sum of all water independent and dependent pathways.

ummary : GKP Maintenance Worker -External
ile : C:\USERS\CLAUDE\DOCUMENTS\0 GKP DOSE\RESRAD CW\GKP MAINTENANCE WORKER - EXTERNAL.RAD

Total Dose Contributions TDOSE(i,p,t) for Individual Radionuclides (i) and Pathways (p)
As mrem/yr and Fraction of Total Dose At t = 1.000E+00 years

Water Independent Pathways (Inhalation excludes radon)

	Ground		Inhalation		Radon		Plant		Meat		Milk		Soil	
adio-	ÄÄÄÄÄÄÄÄÄÄÄÄÄÄÄÄ		ÄÄÄÄÄÄÄÄÄÄÄÄÄÄÄÄ		ÄÄÄÄÄÄÄÄÄÄÄÄÄÄÄÄ		ÄÄÄÄÄÄÄÄÄÄÄÄÄÄÄÄ		ÄÄÄÄÄÄÄÄÄÄÄÄÄÄÄÄ		ÄÄÄÄÄÄÄÄÄÄÄÄÄÄÄÄ		ÄÄÄÄÄÄÄÄÄÄÄÄÄÄÄÄ	
uclide	mrem/yr	fract.	mrem/yr	fract.	mrem/yr	fract.	mrem/yr	fract.	mrem/yr	fract.	mrem/yr	fract.	mrem/yr	fract.
ÄÄÄÄÄÄ	ÄÄÄÄÄÄÄÄÄÄ	ÄÄÄÄÄÄ	ÄÄÄÄÄÄÄÄÄÄ	ÄÄÄÄÄÄ	ÄÄÄÄÄÄÄÄÄÄ	ÄÄÄÄÄÄ	ÄÄÄÄÄÄÄÄÄÄ	ÄÄÄÄÄÄ	ÄÄÄÄÄÄÄÄÄÄ	ÄÄÄÄÄÄ	ÄÄÄÄÄÄÄÄÄÄ	ÄÄÄÄÄÄ	ÄÄÄÄÄÄÄÄÄÄ	ÄÄÄÄÄÄ
a-226	6.338E+00	0.9852	0.000E+00	0.0000	3.244E-05	0.0000	0.000E+00	0.0000	0.000E+00	0.0000	0.000E+00	0.0000	0.000E+00	0.0000
n-232	5.343E-02	0.0083	0.000E+00	0.0000	7.349E-06	0.0000	0.000E+00	0.0000	0.000E+00	0.0000	0.000E+00	0.0000	0.000E+00	0.0000
-234	1.053E-04	0.0000	0.000E+00	0.0000	5.780E-14	0.0000	0.000E+00	0.0000	0.000E+00	0.0000	0.000E+00	0.0000	0.000E+00	0.0000
-235	1.144E-02	0.0018	0.000E+00	0.0000	0.000E+00	0.0000	0.000E+00	0.0000	0.000E+00	0.0000	0.000E+00	0.0000	0.000E+00	0.0000
-238	3.039E-02	0.0047	0.000E+00	0.0000	8.662E-20	0.0000	0.000E+00	0.0000	0.000E+00	0.0000	0.000E+00	0.0000	0.000E+00	0.0000
íííííí	íííííííííí	íííííí	íííííííííí	íííííí	íííííííííí	íííííí	íííííííííí	íííííí	íííííííííí	íííííí	íííííííííí	íííííí	íííííííííí	íííííí
otal	6.434E+00	1.0000	0.000E+00	0.0000	3.979E-05	0.0000	0.000E+00	0.0000	0.000E+00	0.0000	0.000E+00	0.0000	0.000E+00	0.0000

Total Dose Contributions TDOSE(i,p,t) for Individual Radionuclides (i) and Pathways (p)
As mrem/yr and Fraction of Total Dose At t = 1.000E+00 years

Water Dependent Pathways

	Water		Fish		Radon		Plant		Meat		Milk		All Pathways*	
adio-	ÄÄÄÄÄÄÄÄÄÄÄÄÄÄÄÄ		ÄÄÄÄÄÄÄÄÄÄÄÄÄÄÄÄ		ÄÄÄÄÄÄÄÄÄÄÄÄÄÄÄÄ		ÄÄÄÄÄÄÄÄÄÄÄÄÄÄÄÄ		ÄÄÄÄÄÄÄÄÄÄÄÄÄÄÄÄ		ÄÄÄÄÄÄÄÄÄÄÄÄÄÄÄÄ		ÄÄÄÄÄÄÄÄÄÄÄÄÄÄÄÄ	
uclide	mrem/yr	fract.	mrem/yr	fract.	mrem/yr	fract.	mrem/yr	fract.	mrem/yr	fract.	mrem/yr	fract.	mrem/yr	fract.
ÄÄÄÄÄÄ	ÄÄÄÄÄÄÄÄÄÄ	ÄÄÄÄÄÄ	ÄÄÄÄÄÄÄÄÄÄ	ÄÄÄÄÄÄ	ÄÄÄÄÄÄÄÄÄÄ	ÄÄÄÄÄÄ	ÄÄÄÄÄÄÄÄÄÄ	ÄÄÄÄÄÄ	ÄÄÄÄÄÄÄÄÄÄ	ÄÄÄÄÄÄ	ÄÄÄÄÄÄÄÄÄÄ	ÄÄÄÄÄÄ	ÄÄÄÄÄÄÄÄÄÄ	ÄÄÄÄÄÄ
a-226	0.000E+00	0.0000	0.000E+00	0.0000	0.000E+00	0.0000	0.000E+00	0.0000	0.000E+00	0.0000	0.000E+00	0.0000	6.338E+00	0.9852
n-232	0.000E+00	0.0000	0.000E+00	0.0000	0.000E+00	0.0000	0.000E+00	0.0000	0.000E+00	0.0000	0.000E+00	0.0000	5.344E-02	0.0083
-234	0.000E+00	0.0000	0.000E+00	0.0000	0.000E+00	0.0000	0.000E+00	0.0000	0.000E+00	0.0000	0.000E+00	0.0000	1.053E-04	0.0000
-235	0.000E+00	0.0000	0.000E+00	0.0000	0.000E+00	0.0000	0.000E+00	0.0000	0.000E+00	0.0000	0.000E+00	0.0000	1.144E-02	0.0018
-238	0.000E+00	0.0000	0.000E+00	0.0000	0.000E+00	0.0000	0.000E+00	0.0000	0.000E+00	0.0000	0.000E+00	0.0000	3.039E-02	0.0047
íííííí	íííííííííí	íííííí	íííííííííí	íííííí	íííííííííí	íííííí	íííííííííí	íííííí	íííííííííí	íííííí	íííííííííí	íííííí	íííííííííí	íííííí
otal	0.000E+00	0.0000	0.000E+00	0.0000	0.000E+00	0.0000	0.000E+00	0.0000	0.000E+00	0.0000	0.000E+00	0.0000	6.434E+00	1.0000

Sum of all water independent and dependent pathways.

ummary : GKP Maintenance Worker -External
ile : C:\USERS\CLAUDE\DOCUMENTS\0 GKP DOSE\RESRAD CW\GKP MAINTENANCE WORKER - EXTERNAL.RAD

Total Dose Contributions TDOSE(i,p,t) for Individual Radionuclides (i) and Pathways (p)
As mrem/yr and Fraction of Total Dose At t = 3.000E+00 years

Water Independent Pathways (Inhalation excludes radon)

	Ground		Inhalation		Radon		Plant		Meat		Milk		Soil	
adio-	ÄÄÄÄÄÄÄÄÄÄÄÄÄÄÄÄ		ÄÄÄÄÄÄÄÄÄÄÄÄÄÄÄÄ		ÄÄÄÄÄÄÄÄÄÄÄÄÄÄÄÄ		ÄÄÄÄÄÄÄÄÄÄÄÄÄÄÄÄ		ÄÄÄÄÄÄÄÄÄÄÄÄÄÄÄÄ		ÄÄÄÄÄÄÄÄÄÄÄÄÄÄÄÄ		ÄÄÄÄÄÄÄÄÄÄÄÄÄÄÄÄ		ÄÄÄÄÄÄÄÄÄÄÄÄÄÄÄÄ	
uclide	mrem/yr	fract.	mrem/yr	fract.	mrem/yr	fract.	mrem/yr	fract.	mrem/yr	fract.	mrem/yr	fract.	mrem/yr	fract.
ÄÄÄÄÄÄ	ÄÄÄÄÄÄÄÄÄ	ÄÄÄÄÄÄ	ÄÄÄÄÄÄÄÄÄ	ÄÄÄÄÄÄ	ÄÄÄÄÄÄÄÄÄ	ÄÄÄÄÄÄ	ÄÄÄÄÄÄÄÄÄ	ÄÄÄÄÄÄ	ÄÄÄÄÄÄÄÄÄ	ÄÄÄÄÄÄ	ÄÄÄÄÄÄÄÄÄ	ÄÄÄÄÄÄ	ÄÄÄÄÄÄÄÄÄ	ÄÄÄÄÄÄ
a-226	5.907E+00	0.9715	0.000E+00	0.0000	3.002E-05	0.0000	0.000E+00	0.0000	0.000E+00	0.0000	0.000E+00	0.0000	0.000E+00	0.0000
n-232	1.351E-01	0.0222	0.000E+00	0.0000	2.861E-05	0.0000	0.000E+00	0.0000	0.000E+00	0.0000	0.000E+00	0.0000	0.000E+00	0.0000
-234	9.631E-05	0.0000	0.000E+00	0.0000	2.872E-13	0.0000	0.000E+00	0.0000	0.000E+00	0.0000	0.000E+00	0.0000	0.000E+00	0.0000
-235	1.044E-02	0.0017	0.000E+00	0.0000	0.000E+00	0.0000	0.000E+00	0.0000	0.000E+00	0.0000	0.000E+00	0.0000	0.000E+00	0.0000
-238	2.768E-02	0.0046	0.000E+00	0.0000	9.420E-19	0.0000	0.000E+00	0.0000	0.000E+00	0.0000	0.000E+00	0.0000	0.000E+00	0.0000
íííííí	íííííííííí	íííííí	íííííííííí	íííííí	íííííííííí	íííííí	íííííííííí	íííííí	íííííííííí	íííííí	íííííííííí	íííííí	íííííííííí	íííííí
otal	6.080E+00	1.0000	0.000E+00	0.0000	5.863E-05	0.0000	0.000E+00	0.0000	0.000E+00	0.0000	0.000E+00	0.0000	0.000E+00	0.0000

Total Dose Contributions TDOSE(i,p,t) for Individual Radionuclides (i) and Pathways (p)
As mrem/yr and Fraction of Total Dose At t = 3.000E+00 years

Water Dependent Pathways

	Water		Fish		Radon		Plant		Meat		Milk		All Pathways*	
adio-	ÄÄÄÄÄÄÄÄÄÄÄÄÄÄÄÄ		ÄÄÄÄÄÄÄÄÄÄÄÄÄÄÄÄ		ÄÄÄÄÄÄÄÄÄÄÄÄÄÄÄÄ		ÄÄÄÄÄÄÄÄÄÄÄÄÄÄÄÄ		ÄÄÄÄÄÄÄÄÄÄÄÄÄÄÄÄ		ÄÄÄÄÄÄÄÄÄÄÄÄÄÄÄÄ		ÄÄÄÄÄÄÄÄÄÄÄÄÄÄÄÄ	
uclide	mrem/yr	fract.	mrem/yr	fract.	mrem/yr	fract.	mrem/yr	fract.	mrem/yr	fract.	mrem/yr	fract.	mrem/yr	fract.
ÄÄÄÄÄÄ	ÄÄÄÄÄÄÄÄÄ	ÄÄÄÄÄÄ	ÄÄÄÄÄÄÄÄÄ	ÄÄÄÄÄÄ	ÄÄÄÄÄÄÄÄÄ	ÄÄÄÄÄÄ	ÄÄÄÄÄÄÄÄÄ	ÄÄÄÄÄÄ	ÄÄÄÄÄÄÄÄÄ	ÄÄÄÄÄÄ	ÄÄÄÄÄÄÄÄÄ	ÄÄÄÄÄÄ	ÄÄÄÄÄÄÄÄÄ	ÄÄÄÄÄÄ
a-226	0.000E+00	0.0000	0.000E+00	0.0000	0.000E+00	0.0000	0.000E+00	0.0000	0.000E+00	0.0000	0.000E+00	0.0000	5.907E+00	0.9715
n-232	0.000E+00	0.0000	0.000E+00	0.0000	0.000E+00	0.0000	0.000E+00	0.0000	0.000E+00	0.0000	0.000E+00	0.0000	1.351E-01	0.0222
-234	0.000E+00	0.0000	0.000E+00	0.0000	0.000E+00	0.0000	0.000E+00	0.0000	0.000E+00	0.0000	0.000E+00	0.0000	9.631E-05	0.0000
-235	0.000E+00	0.0000	0.000E+00	0.0000	0.000E+00	0.0000	0.000E+00	0.0000	0.000E+00	0.0000	0.000E+00	0.0000	1.044E-02	0.0017
-238	0.000E+00	0.0000	0.000E+00	0.0000	0.000E+00	0.0000	0.000E+00	0.0000	0.000E+00	0.0000	0.000E+00	0.0000	2.768E-02	0.0046
íííííí	íííííííííí	íííííí	íííííííííí	íííííí	íííííííííí	íííííí	íííííííííí	íííííí	íííííííííí	íííííí	íííííííííí	íííííí	íííííííííí	íííííí
otal	0.000E+00	0.0000	0.000E+00	0.0000	0.000E+00	0.0000	0.000E+00	0.0000	0.000E+00	0.0000	0.000E+00	0.0000	6.080E+00	1.0000

Sum of all water independent and dependent pathways.

ummary : GKP Maintenance Worker -External
ile : C:\USERS\CLAUDE\DOCUMENTS\0 GKP DOSE\RESRAD CW\GKP MAINTENANCE WORKER - EXTERNAL.RAD

Total Dose Contributions TDOSE(i,p,t) for Individual Radionuclides (i) and Pathways (p)
As mrem/yr and Fraction of Total Dose At t = 1.000E+01 years

Water Independent Pathways (Inhalation excludes radon)

	Ground		Inhalation		Radon		Plant		Meat		Milk		Soil	
adio-	ÄÄÄÄÄÄÄÄÄÄÄÄÄÄÄ		ÄÄÄÄÄÄÄÄÄÄÄÄÄÄÄ		ÄÄÄÄÄÄÄÄÄÄÄÄÄÄÄ		ÄÄÄÄÄÄÄÄÄÄÄÄÄÄÄ		ÄÄÄÄÄÄÄÄÄÄÄÄÄÄÄ		ÄÄÄÄÄÄÄÄÄÄÄÄÄÄÄ		ÄÄÄÄÄÄÄÄÄÄÄÄÄÄÄ	
uclide	mrem/yr	fract.	mrem/yr	fract.	mrem/yr	fract.	mrem/yr	fract.	mrem/yr	fract.	mrem/yr	fract.	mrem/yr	fract.
ÄÄÄÄÄÄ	ÄÄÄÄÄÄÄÄÄ	ÄÄÄÄÄÄ	ÄÄÄÄÄÄÄÄÄ	ÄÄÄÄÄÄ	ÄÄÄÄÄÄÄÄÄ	ÄÄÄÄÄÄ	ÄÄÄÄÄÄÄÄÄ	ÄÄÄÄÄÄ	ÄÄÄÄÄÄÄÄÄ	ÄÄÄÄÄÄ	ÄÄÄÄÄÄÄÄÄ	ÄÄÄÄÄÄ	ÄÄÄÄÄÄÄÄÄ	ÄÄÄÄÄÄ
a-226	4.610E+00	0.9259	0.000E+00	0.0000	2.285E-05	0.0000	0.000E+00	0.0000	0.000E+00	0.0000	0.000E+00	0.0000	0.000E+00	0.0000
n-232	3.411E-01	0.0685	0.000E+00	0.0000	9.950E-05	0.0000	0.000E+00	0.0000	0.000E+00	0.0000	0.000E+00	0.0000	0.000E+00	0.0000
-234	7.074E-05	0.0000	0.000E+00	0.0000	2.059E-12	0.0000	0.000E+00	0.0000	0.000E+00	0.0000	0.000E+00	0.0000	0.000E+00	0.0000
-235	7.571E-03	0.0015	0.000E+00	0.0000	0.000E+00	0.0000	0.000E+00	0.0000	0.000E+00	0.0000	0.000E+00	0.0000	0.000E+00	0.0000
-238	1.996E-02	0.0040	0.000E+00	0.0000	1.937E-17	0.0000	0.000E+00	0.0000	0.000E+00	0.0000	0.000E+00	0.0000	0.000E+00	0.0000
íííííí	íííííííííí	íííííí	íííííííííí	íííííí	íííííííííí	íííííí	íííííííííí	íííííí	íííííííííí	íííííí	íííííííííí	íííííí	íííííííííí	íííííí
otal	4.979E+00	1.0000	0.000E+00	0.0000	1.224E-04	0.0000	0.000E+00	0.0000	0.000E+00	0.0000	0.000E+00	0.0000	0.000E+00	0.0000

Total Dose Contributions TDOSE(i,p,t) for Individual Radionuclides (i) and Pathways (p)
As mrem/yr and Fraction of Total Dose At t = 1.000E+01 years

Water Dependent Pathways

	Water		Fish		Radon		Plant		Meat		Milk		All Pathways*	
adio-	ÄÄÄÄÄÄÄÄÄÄÄÄÄÄÄ		ÄÄÄÄÄÄÄÄÄÄÄÄÄÄÄ		ÄÄÄÄÄÄÄÄÄÄÄÄÄÄÄ		ÄÄÄÄÄÄÄÄÄÄÄÄÄÄÄ		ÄÄÄÄÄÄÄÄÄÄÄÄÄÄÄ		ÄÄÄÄÄÄÄÄÄÄÄÄÄÄÄ		ÄÄÄÄÄÄÄÄÄÄÄÄÄÄÄ	
uclide	mrem/yr	fract.	mrem/yr	fract.	mrem/yr	fract.	mrem/yr	fract.	mrem/yr	fract.	mrem/yr	fract.	mrem/yr	fract.
ÄÄÄÄÄÄ	ÄÄÄÄÄÄÄÄÄ	ÄÄÄÄÄÄ	ÄÄÄÄÄÄÄÄÄ	ÄÄÄÄÄÄ	ÄÄÄÄÄÄÄÄÄ	ÄÄÄÄÄÄ	ÄÄÄÄÄÄÄÄÄ	ÄÄÄÄÄÄ	ÄÄÄÄÄÄÄÄÄ	ÄÄÄÄÄÄ	ÄÄÄÄÄÄÄÄÄ	ÄÄÄÄÄÄ	ÄÄÄÄÄÄÄÄÄ	ÄÄÄÄÄÄ
a-226	0.000E+00	0.0000	0.000E+00	0.0000	0.000E+00	0.0000	0.000E+00	0.0000	0.000E+00	0.0000	0.000E+00	0.0000	4.610E+00	0.9259
n-232	0.000E+00	0.0000	0.000E+00	0.0000	0.000E+00	0.0000	0.000E+00	0.0000	0.000E+00	0.0000	0.000E+00	0.0000	3.412E-01	0.0685
-234	0.000E+00	0.0000	0.000E+00	0.0000	0.000E+00	0.0000	0.000E+00	0.0000	0.000E+00	0.0000	0.000E+00	0.0000	7.074E-05	0.0000
-235	0.000E+00	0.0000	0.000E+00	0.0000	0.000E+00	0.0000	0.000E+00	0.0000	0.000E+00	0.0000	0.000E+00	0.0000	7.571E-03	0.0015
-238	0.000E+00	0.0000	0.000E+00	0.0000	0.000E+00	0.0000	0.000E+00	0.0000	0.000E+00	0.0000	0.000E+00	0.0000	1.996E-02	0.0040
íííííí	íííííííííí	íííííí	íííííííííí	íííííí	íííííííííí	íííííí	íííííííííí	íííííí	íííííííííí	íííííí	íííííííííí	íííííí	íííííííííí	íííííí
otal	0.000E+00	0.0000	0.000E+00	0.0000	0.000E+00	0.0000	0.000E+00	0.0000	0.000E+00	0.0000	0.000E+00	0.0000	4.979E+00	1.0000

Sum of all water independent and dependent pathways.

ummary : GKP Maintenance Worker -External
ile : C:\USERS\CLAUDE\DOCUMENTS\0 GKP DOSE\RESRAD CW\GKP MAINTENANCE WORKER - EXTERNAL.RAD

Total Dose Contributions TDOSE(i,p,t) for Individual Radionuclides (i) and Pathways (p)
As mrem/yr and Fraction of Total Dose At t = 3.000E+01 years

Water Independent Pathways (Inhalation excludes radon)

	Ground		Inhalation		Radon		Plant		Meat		Milk		Soil	
adio-	ÄÄÄÄÄÄÄÄÄÄÄÄÄÄÄÄ		ÄÄÄÄÄÄÄÄÄÄÄÄÄÄÄÄ		ÄÄÄÄÄÄÄÄÄÄÄÄÄÄÄÄ		ÄÄÄÄÄÄÄÄÄÄÄÄÄÄÄÄ		ÄÄÄÄÄÄÄÄÄÄÄÄÄÄÄÄ		ÄÄÄÄÄÄÄÄÄÄÄÄÄÄÄÄ		ÄÄÄÄÄÄÄÄÄÄÄÄÄÄÄÄ		ÄÄÄÄÄÄÄÄÄÄÄÄÄÄÄÄ	
uclide	mrem/yr	fract.	mrem/yr	fract.	mrem/yr	fract.	mrem/yr	fract.	mrem/yr	fract.	mrem/yr	fract.	mrem/yr	fract.
ÄÄÄÄÄÄ	ÄÄÄÄÄÄÄÄÄ	ÄÄÄÄÄÄ	ÄÄÄÄÄÄÄÄÄ	ÄÄÄÄÄÄ	ÄÄÄÄÄÄÄÄÄ	ÄÄÄÄÄÄ	ÄÄÄÄÄÄÄÄÄ	ÄÄÄÄÄÄ	ÄÄÄÄÄÄÄÄÄ	ÄÄÄÄÄÄ	ÄÄÄÄÄÄÄÄÄ	ÄÄÄÄÄÄ	ÄÄÄÄÄÄÄÄÄ	ÄÄÄÄÄÄ
a-226	2.247E+00	0.8353	0.000E+00	0.0000	1.033E-05	0.0000	0.000E+00	0.0000	0.000E+00	0.0000	0.000E+00	0.0000	0.000E+00	0.0000
n-232	4.320E-01	0.1606	0.000E+00	0.0000	1.465E-04	0.0001	0.000E+00	0.0000	0.000E+00	0.0000	0.000E+00	0.0000	0.000E+00	0.0000
-234	3.063E-05	0.0000	0.000E+00	0.0000	9.295E-12	0.0000	0.000E+00	0.0000	0.000E+00	0.0000	0.000E+00	0.0000	0.000E+00	0.0000
-235	3.001E-03	0.0011	0.000E+00	0.0000	0.000E+00	0.0000	0.000E+00	0.0000	0.000E+00	0.0000	0.000E+00	0.0000	0.000E+00	0.0000
-238	7.773E-03	0.0029	0.000E+00	0.0000	2.290E-16	0.0000	0.000E+00	0.0000	0.000E+00	0.0000	0.000E+00	0.0000	0.000E+00	0.0000
íííííí	íííííííííí	íííííí	íííííííííí	íííííí	íííííííííí	íííííí	íííííííííí	íííííí	íííííííííí	íííííí	íííííííííí	íííííí	íííííííííí	íííííí
otal	2.689E+00	0.9999	0.000E+00	0.0000	1.569E-04	0.0001	0.000E+00	0.0000	0.000E+00	0.0000	0.000E+00	0.0000	0.000E+00	0.0000

Total Dose Contributions TDOSE(i,p,t) for Individual Radionuclides (i) and Pathways (p)
As mrem/yr and Fraction of Total Dose At t = 3.000E+01 years

Water Dependent Pathways

	Water		Fish		Radon		Plant		Meat		Milk		All Pathways*	
adio-	ÄÄÄÄÄÄÄÄÄÄÄÄÄÄÄÄ		ÄÄÄÄÄÄÄÄÄÄÄÄÄÄÄÄ		ÄÄÄÄÄÄÄÄÄÄÄÄÄÄÄÄ		ÄÄÄÄÄÄÄÄÄÄÄÄÄÄÄÄ		ÄÄÄÄÄÄÄÄÄÄÄÄÄÄÄÄ		ÄÄÄÄÄÄÄÄÄÄÄÄÄÄÄÄ		ÄÄÄÄÄÄÄÄÄÄÄÄÄÄÄÄ	
uclide	mrem/yr	fract.	mrem/yr	fract.	mrem/yr	fract.	mrem/yr	fract.	mrem/yr	fract.	mrem/yr	fract.	mrem/yr	fract.
ÄÄÄÄÄÄ	ÄÄÄÄÄÄÄÄÄ	ÄÄÄÄÄÄ	ÄÄÄÄÄÄÄÄÄ	ÄÄÄÄÄÄ	ÄÄÄÄÄÄÄÄÄ	ÄÄÄÄÄÄ	ÄÄÄÄÄÄÄÄÄ	ÄÄÄÄÄÄ	ÄÄÄÄÄÄÄÄÄ	ÄÄÄÄÄÄ	ÄÄÄÄÄÄÄÄÄ	ÄÄÄÄÄÄ	ÄÄÄÄÄÄÄÄÄ	ÄÄÄÄÄÄ
a-226	0.000E+00	0.0000	0.000E+00	0.0000	0.000E+00	0.0000	0.000E+00	0.0000	0.000E+00	0.0000	0.000E+00	0.0000	2.247E+00	0.8353
n-232	0.000E+00	0.0000	0.000E+00	0.0000	0.000E+00	0.0000	0.000E+00	0.0000	0.000E+00	0.0000	0.000E+00	0.0000	4.322E-01	0.1607
-234	0.000E+00	0.0000	0.000E+00	0.0000	0.000E+00	0.0000	0.000E+00	0.0000	0.000E+00	0.0000	0.000E+00	0.0000	3.063E-05	0.0000
-235	0.000E+00	0.0000	0.000E+00	0.0000	0.000E+00	0.0000	0.000E+00	0.0000	0.000E+00	0.0000	0.000E+00	0.0000	3.001E-03	0.0011
-238	0.000E+00	0.0000	0.000E+00	0.0000	0.000E+00	0.0000	0.000E+00	0.0000	0.000E+00	0.0000	0.000E+00	0.0000	7.773E-03	0.0029
íííííí	íííííííííí	íííííí	íííííííííí	íííííí	íííííííííí	íííííí	íííííííííí	íííííí	íííííííííí	íííííí	íííííííííí	íííííí	íííííííííí	íííííí
otal	0.000E+00	0.0000	0.000E+00	0.0000	0.000E+00	0.0000	0.000E+00	0.0000	0.000E+00	0.0000	0.000E+00	0.0000	2.690E+00	1.0000

Sum of all water independent and dependent pathways.

ummary : GKP Maintenance Worker -External
ile : C:\USERS\CLAUDE\DOCUMENTS\0 GKP DOSE\RESRAD CW\GKP MAINTENANCE WORKER - EXTERNAL.RAD

Total Dose Contributions TDOSE(i,p,t) for Individual Radionuclides (i) and Pathways (p)
As mrem/yr and Fraction of Total Dose At t = 1.000E+02 years

Water Independent Pathways (Inhalation excludes radon)

	Ground		Inhalation		Radon		Plant		Meat		Milk		Soil	
adio-	ÄÄÄÄÄÄÄÄÄÄÄÄÄÄÄÄ		ÄÄÄÄÄÄÄÄÄÄÄÄÄÄÄÄ		ÄÄÄÄÄÄÄÄÄÄÄÄÄÄÄÄ		ÄÄÄÄÄÄÄÄÄÄÄÄÄÄÄÄ		ÄÄÄÄÄÄÄÄÄÄÄÄÄÄÄÄ		ÄÄÄÄÄÄÄÄÄÄÄÄÄÄÄÄ		ÄÄÄÄÄÄÄÄÄÄÄÄÄÄÄÄ	
uclide	mrem/yr	fract.	mrem/yr	fract.	mrem/yr	fract.	mrem/yr	fract.	mrem/yr	fract.	mrem/yr	fract.	mrem/yr	fract.
ÄÄÄÄÄÄ	ÄÄÄÄÄÄÄÄÄ	ÄÄÄÄÄÄ	ÄÄÄÄÄÄÄÄÄ	ÄÄÄÄÄÄ	ÄÄÄÄÄÄÄÄÄ	ÄÄÄÄÄÄ	ÄÄÄÄÄÄÄÄÄ	ÄÄÄÄÄÄ	ÄÄÄÄÄÄÄÄÄ	ÄÄÄÄÄÄ	ÄÄÄÄÄÄÄÄÄ	ÄÄÄÄÄÄ	ÄÄÄÄÄÄÄÄÄ	ÄÄÄÄÄÄ
a-226	1.402E-01	0.3538	0.000E+00	0.0000	4.546E-07	0.0000	0.000E+00	0.0000	0.000E+00	0.0000	0.000E+00	0.0000	0.000E+00	0.0000
h-232	2.556E-01	0.6450	0.000E+00	0.0000	1.483E-04	0.0004	0.000E+00	0.0000	0.000E+00	0.0000	0.000E+00	0.0000	0.000E+00	0.0000
-234	4.451E-06	0.0000	0.000E+00	0.0000	1.079E-11	0.0000	0.000E+00	0.0000	0.000E+00	0.0000	0.000E+00	0.0000	0.000E+00	0.0000
-235	9.383E-05	0.0002	0.000E+00	0.0000	0.000E+00	0.0000	0.000E+00	0.0000	0.000E+00	0.0000	0.000E+00	0.0000	0.000E+00	0.0000
-238	2.286E-04	0.0006	0.000E+00	0.0000	5.863E-16	0.0000	0.000E+00	0.0000	0.000E+00	0.0000	0.000E+00	0.0000	0.000E+00	0.0000
íííííí	íííííííííí	íííííí	íííííííííí	íííííí	íííííííííí	íííííí	íííííííííí	íííííí	íííííííííí	íííííí	íííííííííí	íííííí	íííííííííí	íííííí
otal	3.961E-01	0.9996	0.000E+00	0.0000	1.488E-04	0.0004	0.000E+00	0.0000	0.000E+00	0.0000	0.000E+00	0.0000	0.000E+00	0.0000

Total Dose Contributions TDOSE(i,p,t) for Individual Radionuclides (i) and Pathways (p)
As mrem/yr and Fraction of Total Dose At t = 1.000E+02 years

Water Dependent Pathways

	Water		Fish		Radon		Plant		Meat		Milk		All Pathways*	
adio-	ÄÄÄÄÄÄÄÄÄÄÄÄÄÄÄÄ		ÄÄÄÄÄÄÄÄÄÄÄÄÄÄÄÄ		ÄÄÄÄÄÄÄÄÄÄÄÄÄÄÄÄ		ÄÄÄÄÄÄÄÄÄÄÄÄÄÄÄÄ		ÄÄÄÄÄÄÄÄÄÄÄÄÄÄÄÄ		ÄÄÄÄÄÄÄÄÄÄÄÄÄÄÄÄ		ÄÄÄÄÄÄÄÄÄÄÄÄÄÄÄÄ	
uclide	mrem/yr	fract.	mrem/yr	fract.	mrem/yr	fract.	mrem/yr	fract.	mrem/yr	fract.	mrem/yr	fract.	mrem/yr	fract.
ÄÄÄÄÄÄ	ÄÄÄÄÄÄÄÄÄ	ÄÄÄÄÄÄ	ÄÄÄÄÄÄÄÄÄ	ÄÄÄÄÄÄ	ÄÄÄÄÄÄÄÄÄ	ÄÄÄÄÄÄ	ÄÄÄÄÄÄÄÄÄ	ÄÄÄÄÄÄ	ÄÄÄÄÄÄÄÄÄ	ÄÄÄÄÄÄ	ÄÄÄÄÄÄÄÄÄ	ÄÄÄÄÄÄ	ÄÄÄÄÄÄÄÄÄ	ÄÄÄÄÄÄ
a-226	0.000E+00	0.0000	0.000E+00	0.0000	0.000E+00	0.0000	0.000E+00	0.0000	0.000E+00	0.0000	0.000E+00	0.0000	1.402E-01	0.3538
h-232	0.000E+00	0.0000	0.000E+00	0.0000	0.000E+00	0.0000	0.000E+00	0.0000	0.000E+00	0.0000	0.000E+00	0.0000	2.557E-01	0.6454
-234	0.000E+00	0.0000	0.000E+00	0.0000	0.000E+00	0.0000	0.000E+00	0.0000	0.000E+00	0.0000	0.000E+00	0.0000	4.451E-06	0.0000
-235	0.000E+00	0.0000	0.000E+00	0.0000	0.000E+00	0.0000	0.000E+00	0.0000	0.000E+00	0.0000	0.000E+00	0.0000	9.383E-05	0.0002
-238	0.000E+00	0.0000	0.000E+00	0.0000	0.000E+00	0.0000	0.000E+00	0.0000	0.000E+00	0.0000	0.000E+00	0.0000	2.286E-04	0.0006
íííííí	íííííííííí	íííííí	íííííííííí	íííííí	íííííííííí	íííííí	íííííííííí	íííííí	íííííííííí	íííííí	íííííííííí	íííííí	íííííííííí	íííííí
otal	0.000E+00	0.0000	0.000E+00	0.0000	0.000E+00	0.0000	0.000E+00	0.0000	0.000E+00	0.0000	0.000E+00	0.0000	3.962E-01	1.0000

Sum of all water independent and dependent pathways.

ummary : GKP Maintenance Worker -External
ile : C:\USERS\CLAUDE\DOCUMENTS\0 GKP DOSE\RESRAD CW\GKP MAINTENANCE WORKER - EXTERNAL.RAD

Total Dose Contributions TDOSE(i,p,t) for Individual Radionuclides (i) and Pathways (p)
As mrem/yr and Fraction of Total Dose At t = 3.000E+02 years

Water Independent Pathways (Inhalation excludes radon)

	Ground		Inhalation		Radon		Plant		Meat		Milk		Soil	
adio-	ÄÄÄÄÄÄÄÄÄÄÄÄÄÄÄÄ		ÄÄÄÄÄÄÄÄÄÄÄÄÄÄÄÄ		ÄÄÄÄÄÄÄÄÄÄÄÄÄÄÄÄ		ÄÄÄÄÄÄÄÄÄÄÄÄÄÄÄÄ		ÄÄÄÄÄÄÄÄÄÄÄÄÄÄÄÄ		ÄÄÄÄÄÄÄÄÄÄÄÄÄÄÄÄ		ÄÄÄÄÄÄÄÄÄÄÄÄÄÄÄÄ	
uclide	mrem/yr	fract.	mrem/yr	fract.	mrem/yr	fract.	mrem/yr	fract.	mrem/yr	fract.	mrem/yr	fract.	mrem/yr	fract.
ÄÄÄÄÄÄ	ÄÄÄÄÄÄÄÄÄ	ÄÄÄÄÄÄ	ÄÄÄÄÄÄÄÄÄ	ÄÄÄÄÄÄ	ÄÄÄÄÄÄÄÄÄ	ÄÄÄÄÄÄ	ÄÄÄÄÄÄÄÄÄ	ÄÄÄÄÄÄ	ÄÄÄÄÄÄÄÄÄ	ÄÄÄÄÄÄ	ÄÄÄÄÄÄÄÄÄ	ÄÄÄÄÄÄ	ÄÄÄÄÄÄÄÄÄ	ÄÄÄÄÄÄ
a-226	0.000E+00	0.0000	0.000E+00	0.0000	0.000E+00	0.0000	0.000E+00	0.0000	0.000E+00	0.0000	0.000E+00	0.0000	0.000E+00	0.0000
n-232	0.000E+00	0.0000	0.000E+00	0.0000	0.000E+00	0.0000	0.000E+00	0.0000	0.000E+00	0.0000	0.000E+00	0.0000	0.000E+00	0.0000
-234	0.000E+00	0.0000	0.000E+00	0.0000	0.000E+00	0.0000	0.000E+00	0.0000	0.000E+00	0.0000	0.000E+00	0.0000	0.000E+00	0.0000
-235	0.000E+00	0.0000	0.000E+00	0.0000	0.000E+00	0.0000	0.000E+00	0.0000	0.000E+00	0.0000	0.000E+00	0.0000	0.000E+00	0.0000
-238	0.000E+00	0.0000	0.000E+00	0.0000	0.000E+00	0.0000	0.000E+00	0.0000	0.000E+00	0.0000	0.000E+00	0.0000	0.000E+00	0.0000
íííííí	íííííííííí	íííííí	íííííííííí	íííííí	íííííííííí	íííííí	íííííííííí	íííííí	íííííííííí	íííííí	íííííííííí	íííííí	íííííííííí	íííííí
otal	0.000E+00	0.0000	0.000E+00	0.0000	0.000E+00	0.0000	0.000E+00	0.0000	0.000E+00	0.0000	0.000E+00	0.0000	0.000E+00	0.0000

Total Dose Contributions TDOSE(i,p,t) for Individual Radionuclides (i) and Pathways (p)
As mrem/yr and Fraction of Total Dose At t = 3.000E+02 years

Water Dependent Pathways

	Water		Fish		Radon		Plant		Meat		Milk		All Pathways*	
adio-	ÄÄÄÄÄÄÄÄÄÄÄÄÄÄÄÄ		ÄÄÄÄÄÄÄÄÄÄÄÄÄÄÄÄ		ÄÄÄÄÄÄÄÄÄÄÄÄÄÄÄÄ		ÄÄÄÄÄÄÄÄÄÄÄÄÄÄÄÄ		ÄÄÄÄÄÄÄÄÄÄÄÄÄÄÄÄ		ÄÄÄÄÄÄÄÄÄÄÄÄÄÄÄÄ		ÄÄÄÄÄÄÄÄÄÄÄÄÄÄÄÄ	
uclide	mrem/yr	fract.	mrem/yr	fract.	mrem/yr	fract.	mrem/yr	fract.	mrem/yr	fract.	mrem/yr	fract.	mrem/yr	fract.
ÄÄÄÄÄÄ	ÄÄÄÄÄÄÄÄÄ	ÄÄÄÄÄÄ	ÄÄÄÄÄÄÄÄÄ	ÄÄÄÄÄÄ	ÄÄÄÄÄÄÄÄÄ	ÄÄÄÄÄÄ	ÄÄÄÄÄÄÄÄÄ	ÄÄÄÄÄÄ	ÄÄÄÄÄÄÄÄÄ	ÄÄÄÄÄÄ	ÄÄÄÄÄÄÄÄÄ	ÄÄÄÄÄÄ	ÄÄÄÄÄÄÄÄÄ	ÄÄÄÄÄÄ
a-226	0.000E+00	0.0000	0.000E+00	0.0000	0.000E+00	0.0000	0.000E+00	0.0000	0.000E+00	0.0000	0.000E+00	0.0000	0.000E+00	0.0000
n-232	0.000E+00	0.0000	0.000E+00	0.0000	0.000E+00	0.0000	0.000E+00	0.0000	0.000E+00	0.0000	0.000E+00	0.0000	0.000E+00	0.0000
-234	0.000E+00	0.0000	0.000E+00	0.0000	0.000E+00	0.0000	0.000E+00	0.0000	0.000E+00	0.0000	0.000E+00	0.0000	0.000E+00	0.0000
-235	0.000E+00	0.0000	0.000E+00	0.0000	0.000E+00	0.0000	0.000E+00	0.0000	0.000E+00	0.0000	0.000E+00	0.0000	0.000E+00	0.0000
-238	0.000E+00	0.0000	0.000E+00	0.0000	0.000E+00	0.0000	0.000E+00	0.0000	0.000E+00	0.0000	0.000E+00	0.0000	0.000E+00	0.0000
íííííí	íííííííííí	íííííí	íííííííííí	íííííí	íííííííííí	íííííí	íííííííííí	íííííí	íííííííííí	íííííí	íííííííííí	íííííí	íííííííííí	íííííí
otal	0.000E+00	0.0000	0.000E+00	0.0000	0.000E+00	0.0000	0.000E+00	0.0000	0.000E+00	0.0000	0.000E+00	0.0000	0.000E+00	0.0000

Sum of all water independent and dependent pathways.

ummary : GKP Maintenance Worker -External
ile : C:\USERS\CLAUDE\DOCUMENTS\0 GKP DOSE\RESRAD CW\GKP MAINTENANCE WORKER - EXTERNAL.RAD

Total Dose Contributions TDOSE(i,p,t) for Individual Radionuclides (i) and Pathways (p)
As mrem/yr and Fraction of Total Dose At t = 1.000E+03 years

Water Independent Pathways (Inhalation excludes radon)

	Ground		Inhalation		Radon		Plant		Meat		Milk		Soil	
adio-	ÄÄÄÄÄÄÄÄÄÄÄÄÄÄÄÄ		ÄÄÄÄÄÄÄÄÄÄÄÄÄÄÄÄ		ÄÄÄÄÄÄÄÄÄÄÄÄÄÄÄÄ		ÄÄÄÄÄÄÄÄÄÄÄÄÄÄÄÄ		ÄÄÄÄÄÄÄÄÄÄÄÄÄÄÄÄ		ÄÄÄÄÄÄÄÄÄÄÄÄÄÄÄÄ		ÄÄÄÄÄÄÄÄÄÄÄÄÄÄÄÄ	
uclide	mrem/yr	fract.	mrem/yr	fract.	mrem/yr	fract.	mrem/yr	fract.	mrem/yr	fract.	mrem/yr	fract.	mrem/yr	fract.
ÄÄÄÄÄÄ	ÄÄÄÄÄÄÄÄÄ	ÄÄÄÄÄÄ	ÄÄÄÄÄÄÄÄÄ	ÄÄÄÄÄÄ	ÄÄÄÄÄÄÄÄÄ	ÄÄÄÄÄÄ	ÄÄÄÄÄÄÄÄÄ	ÄÄÄÄÄÄ	ÄÄÄÄÄÄÄÄÄ	ÄÄÄÄÄÄ	ÄÄÄÄÄÄÄÄÄ	ÄÄÄÄÄÄ	ÄÄÄÄÄÄÄÄÄ	ÄÄÄÄÄÄ
a-226	0.000E+00	0.0000	0.000E+00	0.0000	0.000E+00	0.0000	0.000E+00	0.0000	0.000E+00	0.0000	0.000E+00	0.0000	0.000E+00	0.0000
h-232	0.000E+00	0.0000	0.000E+00	0.0000	0.000E+00	0.0000	0.000E+00	0.0000	0.000E+00	0.0000	0.000E+00	0.0000	0.000E+00	0.0000
-234	0.000E+00	0.0000	0.000E+00	0.0000	0.000E+00	0.0000	0.000E+00	0.0000	0.000E+00	0.0000	0.000E+00	0.0000	0.000E+00	0.0000
-235	0.000E+00	0.0000	0.000E+00	0.0000	0.000E+00	0.0000	0.000E+00	0.0000	0.000E+00	0.0000	0.000E+00	0.0000	0.000E+00	0.0000
-238	0.000E+00	0.0000	0.000E+00	0.0000	0.000E+00	0.0000	0.000E+00	0.0000	0.000E+00	0.0000	0.000E+00	0.0000	0.000E+00	0.0000
íííííí	íííííííííí	íííííí	íííííííííí	íííííí	íííííííííí	íííííí	íííííííííí	íííííí	íííííííííí	íííííí	íííííííííí	íííííí	íííííííííí	íííííí
otal	0.000E+00	0.0000	0.000E+00	0.0000	0.000E+00	0.0000	0.000E+00	0.0000	0.000E+00	0.0000	0.000E+00	0.0000	0.000E+00	0.0000

Total Dose Contributions TDOSE(i,p,t) for Individual Radionuclides (i) and Pathways (p)
As mrem/yr and Fraction of Total Dose At t = 1.000E+03 years

Water Dependent Pathways

	Water		Fish		Radon		Plant		Meat		Milk		All Pathways*	
adio-	ÄÄÄÄÄÄÄÄÄÄÄÄÄÄÄÄ		ÄÄÄÄÄÄÄÄÄÄÄÄÄÄÄÄ		ÄÄÄÄÄÄÄÄÄÄÄÄÄÄÄÄ		ÄÄÄÄÄÄÄÄÄÄÄÄÄÄÄÄ		ÄÄÄÄÄÄÄÄÄÄÄÄÄÄÄÄ		ÄÄÄÄÄÄÄÄÄÄÄÄÄÄÄÄ		ÄÄÄÄÄÄÄÄÄÄÄÄÄÄÄÄ	
uclide	mrem/yr	fract.	mrem/yr	fract.	mrem/yr	fract.	mrem/yr	fract.	mrem/yr	fract.	mrem/yr	fract.	mrem/yr	fract.
ÄÄÄÄÄÄ	ÄÄÄÄÄÄÄÄÄ	ÄÄÄÄÄÄ	ÄÄÄÄÄÄÄÄÄ	ÄÄÄÄÄÄ	ÄÄÄÄÄÄÄÄÄ	ÄÄÄÄÄÄ	ÄÄÄÄÄÄÄÄÄ	ÄÄÄÄÄÄ	ÄÄÄÄÄÄÄÄÄ	ÄÄÄÄÄÄ	ÄÄÄÄÄÄÄÄÄ	ÄÄÄÄÄÄ	ÄÄÄÄÄÄÄÄÄ	ÄÄÄÄÄÄ
a-226	0.000E+00	0.0000	0.000E+00	0.0000	0.000E+00	0.0000	0.000E+00	0.0000	0.000E+00	0.0000	0.000E+00	0.0000	0.000E+00	0.0000
h-232	0.000E+00	0.0000	0.000E+00	0.0000	0.000E+00	0.0000	0.000E+00	0.0000	0.000E+00	0.0000	0.000E+00	0.0000	0.000E+00	0.0000
-234	0.000E+00	0.0000	0.000E+00	0.0000	0.000E+00	0.0000	0.000E+00	0.0000	0.000E+00	0.0000	0.000E+00	0.0000	0.000E+00	0.0000
-235	0.000E+00	0.0000	0.000E+00	0.0000	0.000E+00	0.0000	0.000E+00	0.0000	0.000E+00	0.0000	0.000E+00	0.0000	0.000E+00	0.0000
-238	0.000E+00	0.0000	0.000E+00	0.0000	0.000E+00	0.0000	0.000E+00	0.0000	0.000E+00	0.0000	0.000E+00	0.0000	0.000E+00	0.0000
íííííí	íííííííííí	íííííí	íííííííííí	íííííí	íííííííííí	íííííí	íííííííííí	íííííí	íííííííííí	íííííí	íííííííííí	íííííí	íííííííííí	íííííí
otal	0.000E+00	0.0000	0.000E+00	0.0000	0.000E+00	0.0000	0.000E+00	0.0000	0.000E+00	0.0000	0.000E+00	0.0000	0.000E+00	0.0000

Sum of all water independent and dependent pathways.

ummary : GKP Maintenance Worker -External
ile : C:\USERS\CLAUDE\DOCUMENTS\0 GKP DOSE\RESRAD CW\GKP MAINTENANCE WORKER - EXTERNAL.RAD

Dose/Source Ratios Summed Over All Pathways
Parent and Progeny Principal Radionuclide Contributions Indicated

Parent	Product	Thread	DSR(j,t) At Time in Years (mrem/yr)/(pCi/g)							
(i)	(j)	Fraction	0.000E+00	1.000E+00	3.000E+00	1.000E+01	3.000E+01	1.000E+02	3.000E+02	1.000E+03
ÄÄÄÄÄÄÄÄ	ÄÄÄÄÄÄÄÄÄ	ÄÄÄÄÄÄÄÄ	ÄÄÄÄÄÄÄÄ	ÄÄÄÄÄÄÄÄ	ÄÄÄÄÄÄÄÄ	ÄÄÄÄÄÄÄÄ	ÄÄÄÄÄÄÄÄ	ÄÄÄÄÄÄÄÄ	ÄÄÄÄÄÄÄÄ	ÄÄÄÄÄÄÄÄ
a-226+D	Ra-226+D	9.996E-01	1.798E-01	1.736E-01	1.618E-01	1.262E-01	6.150E-02	3.834E-03	0.000E+00	0.000E+00
a-226+D	Pb-210+D	9.996E-01	1.793E-06	5.175E-06	1.108E-05	2.454E-05	3.009E-05	4.834E-06	0.000E+00	0.000E+00
a-226+D	äDSR(j)		1.798E-01	1.736E-01	1.618E-01	1.263E-01	6.153E-02	3.839E-03	0.000E+00	0.000E+00
a-226+D	Ra-226+D	1.319E-06	2.373E-07	2.291E-07	2.135E-07	1.666E-07	8.117E-08	5.061E-09	0.000E+00	0.000E+00
a-226+D	Pb-210+D1	1.319E-06	5.244E-12	1.513E-11	3.237E-11	7.142E-11	8.649E-11	1.260E-11	0.000E+00	0.000E+00
a-226+D	äDSR(j)		2.374E-07	2.291E-07	2.136E-07	1.667E-07	8.126E-08	5.074E-09	0.000E+00	0.000E+00
a-226+D	Ra-226+D	1.899E-08	3.416E-09	3.298E-09	3.073E-09	2.398E-09	1.168E-09	7.285E-11	0.000E+00	0.000E+00
a-226+D	Pb-210+D2	1.899E-08	5.574E-14	1.608E-13	3.442E-13	7.601E-13	9.231E-13	1.378E-13	0.000E+00	0.000E+00
a-226+D	äDSR(j)		3.416E-09	3.298E-09	3.074E-09	2.399E-09	1.169E-09	7.299E-11	0.000E+00	0.000E+00
a-226+D1	Ra-226+D1	2.100E-04	3.777E-05	3.646E-05	3.397E-05	2.651E-05	1.292E-05	8.054E-07	0.000E+00	0.000E+00
a-226+D1	Pb-210+D	2.100E-04	3.766E-10	1.087E-09	2.328E-09	5.155E-09	6.319E-09	1.015E-09	0.000E+00	0.000E+00
a-226+D1	äDSR(j)		3.777E-05	3.646E-05	3.398E-05	2.652E-05	1.292E-05	8.064E-07	0.000E+00	0.000E+00
a-226+D1	Ra-226+D1	2.771E-10	4.985E-11	4.812E-11	4.485E-11	3.500E-11	1.705E-11	1.063E-12	0.000E+00	0.000E+00
a-226+D1	Pb-210+D1	2.771E-10	1.101E-15	3.178E-15	6.798E-15	1.500E-14	1.817E-14	2.647E-15	0.000E+00	0.000E+00
a-226+D1	äDSR(j)		4.985E-11	4.813E-11	4.485E-11	3.501E-11	1.707E-11	1.066E-12	0.000E+00	0.000E+00
a-226+D1	Ra-226+D1	3.989E-12	7.175E-13	6.927E-13	6.455E-13	5.037E-13	2.454E-13	1.530E-14	0.000E+00	0.000E+00
a-226+D1	Pb-210+D2	3.989E-12	1.171E-17	3.378E-17	7.229E-17	1.597E-16	1.939E-16	2.895E-17	0.000E+00	0.000E+00
a-226+D1	äDSR(j)		7.176E-13	6.927E-13	6.456E-13	5.039E-13	2.456E-13	1.533E-14	0.000E+00	0.000E+00
a-226+D2	Ra-226+D2	1.998E-04	3.112E-05	3.004E-05	2.798E-05	2.181E-05	1.059E-05	6.507E-07	0.000E+00	0.000E+00
a-226+D2	Pb-210+D	1.998E-04	3.583E-10	1.034E-09	2.215E-09	4.905E-09	6.012E-09	9.659E-10	0.000E+00	0.000E+00
a-226+D2	äDSR(j)		3.112E-05	3.004E-05	2.798E-05	2.182E-05	1.060E-05	6.516E-07	0.000E+00	0.000E+00
a-226+D2	Ra-226+D2	2.637E-10	4.108E-11	3.965E-11	3.694E-11	2.879E-11	1.398E-11	8.589E-13	0.000E+00	0.000E+00
a-226+D2	Pb-210+D1	2.637E-10	1.048E-15	3.023E-15	6.468E-15	1.427E-14	1.728E-14	2.519E-15	0.000E+00	0.000E+00
a-226+D2	äDSR(j)		4.108E-11	3.965E-11	3.694E-11	2.881E-11	1.400E-11	8.614E-13	0.000E+00	0.000E+00
a-226+D2	Ra-226+D2	3.795E-12	5.913E-13	5.707E-13	5.317E-13	4.144E-13	2.012E-13	1.236E-14	0.000E+00	0.000E+00
a-226+D2	Pb-210+D2	3.795E-12	1.114E-17	3.214E-17	6.878E-17	1.519E-16	1.845E-16	2.755E-17	0.000E+00	0.000E+00
a-226+D2	äDSR(j)		5.913E-13	5.707E-13	5.317E-13	4.146E-13	2.014E-13	1.239E-14	0.000E+00	0.000E+00
a-226+D3	Ra-226+D3	4.196E-08	6.536E-09	6.309E-09	5.877E-09	4.581E-09	2.224E-09	1.367E-10	0.000E+00	0.000E+00
a-226+D3	Pb-210+D	4.196E-08	7.526E-14	2.172E-13	4.652E-13	1.030E-12	1.263E-12	2.029E-13	0.000E+00	0.000E+00
a-226+D3	äDSR(j)		6.536E-09	6.309E-09	5.878E-09	4.582E-09	2.225E-09	1.369E-10	0.000E+00	0.000E+00
a-226+D3	Ra-226+D3	5.538E-14	8.628E-15	8.328E-15	7.758E-15	6.047E-15	2.936E-15	1.804E-16	0.000E+00	0.000E+00
a-226+D3	Pb-210+D1	5.538E-14	2.201E-19	6.350E-19	1.359E-18	2.998E-18	3.631E-18	5.290E-19	0.000E+00	0.000E+00
a-226+D3	äDSR(j)		8.628E-15	8.328E-15	7.759E-15	6.050E-15	2.939E-15	1.809E-16	0.000E+00	0.000E+00
a-226+D3	Ra-226+D3	7.972E-16	1.242E-16	1.199E-16	1.117E-16	8.705E-17	4.226E-17	2.597E-18	0.000E+00	0.000E+00
a-226+D3	Pb-210+D2	7.972E-16	2.340E-21	6.751E-21	1.445E-20	3.191E-20	3.875E-20	5.786E-21	0.000E+00	0.000E+00
a-226+D3	äDSR(j)		1.242E-16	1.199E-16	1.117E-16	8.708E-17	4.230E-17	2.602E-18	0.000E+00	0.000E+00

ummary : GKP Maintenance Worker -External
ile : C:\USERS\CLAUDE\DOCUMENTS\0 GKP DOSE\RESRAD CW\GKP MAINTENANCE WORKER - EXTERNAL.RAD

Dose/Source Ratios Summed Over All Pathways
Parent and Progeny Principal Radionuclide Contributions Indicated

Parent (i)	Product (j)	Thread Fraction	DSR(j,t) At Time in Years (mrem/yr)/(pCi/g) 0.000E+00	1.000E+00	3.000E+00	1.000E+01	3.000E+01	1.000E+02	3.000E+02	1.000E+03
ÄÄÄÄÄÄÄÄÄ	ÄÄÄÄÄÄÄÄÄÄ	ÄÄÄÄÄÄÄÄÄ	ÄÄÄÄÄÄÄÄÄ	ÄÄÄÄÄÄÄÄÄ	ÄÄÄÄÄÄÄÄÄ	ÄÄÄÄÄÄÄÄÄ	ÄÄÄÄÄÄÄÄÄ	ÄÄÄÄÄÄÄÄÄ	ÄÄÄÄÄÄÄÄÄ	ÄÄÄÄÄÄÄÄÄ
a-226+D4	Ra-226+D4	2.000E-07	1.685E-10	1.629E-10	1.523E-10	1.203E-10	6.085E-11	4.586E-12	0.000E+00	0.000E+00
a-226+D4	Pb-210+D	2.000E-07	3.588E-13	1.035E-12	2.217E-12	4.911E-12	6.020E-12	9.671E-13	0.000E+00	0.000E+00
a-226+D4	äDSR(j)		1.689E-10	1.640E-10	1.545E-10	1.252E-10	6.687E-11	5.553E-12	0.000E+00	0.000E+00
a-226+D4	Ra-226+D4	2.640E-13	2.224E-16	2.151E-16	2.011E-16	1.588E-16	8.032E-17	6.054E-18	0.000E+00	0.000E+00
a-226+D4	Pb-210+D1	2.640E-13	1.049E-18	3.027E-18	6.476E-18	1.429E-17	1.731E-17	2.522E-18	0.000E+00	0.000E+00
a-226+D4	äDSR(j)		2.235E-16	2.181E-16	2.076E-16	1.731E-16	9.763E-17	8.575E-18	0.000E+00	0.000E+00
a-226+D4	Ra-226+D4	3.800E-15	3.202E-18	3.096E-18	2.894E-18	2.286E-18	1.156E-18	8.714E-20	0.000E+00	0.000E+00
a-226+D4	Pb-210+D2	3.800E-15	1.115E-20	3.218E-20	6.886E-20	1.521E-19	1.847E-19	2.758E-20	0.000E+00	0.000E+00
a-226+D4	äDSR(j)		3.213E-18	3.128E-18	2.963E-18	2.438E-18	1.341E-18	1.147E-19	0.000E+00	0.000E+00
n-232	Th-232	1.000E+00	1.044E-05	1.043E-05	1.042E-05	1.038E-05	1.023E-05	8.473E-06	0.000E+00	0.000E+00
n-232	Ra-228+D	1.000E+00	5.741E-03	1.609E-02	3.243E-02	6.130E-02	7.059E-02	4.232E-02	0.000E+00	0.000E+00
n-232	Th-228+D	1.000E+00	1.018E-03	6.169E-03	2.385E-02	8.085E-02	1.095E-01	6.422E-02	0.000E+00	0.000E+00
n-232	äDSR(j)		6.769E-03	2.227E-02	5.629E-02	1.422E-01	1.801E-01	1.065E-01	0.000E+00	0.000E+00
-234	U-234	9.996E-01	7.918E-06	7.571E-06	6.921E-06	5.055E-06	2.053E-06	7.722E-08	0.000E+00	0.000E+00
-234	Th-230	9.996E-01	1.084E-10	3.188E-10	7.117E-10	1.834E-09	3.584E-09	3.786E-09	0.000E+00	0.000E+00
-234	Ra-226+D	9.996E-01	1.189E-10	8.124E-10	4.063E-09	2.987E-08	1.454E-07	2.390E-07	0.000E+00	0.000E+00
-234	Pb-210+D	9.996E-01	5.967E-16	8.700E-15	9.525E-14	2.010E-12	2.601E-11	1.206E-10	0.000E+00	0.000E+00
-234	äDSR(j)		7.918E-06	7.572E-06	6.926E-06	5.087E-06	2.202E-06	3.201E-07	0.000E+00	0.000E+00
-234	U-234	1.319E-06	1.045E-11	9.993E-12	9.136E-12	6.673E-12	2.711E-12	1.019E-13	0.000E+00	0.000E+00
-234	Th-230	1.319E-06	1.431E-16	4.208E-16	9.394E-16	2.421E-15	4.731E-15	4.997E-15	0.000E+00	0.000E+00
-234	Ra-226+D	1.319E-06	1.570E-16	1.072E-15	5.364E-15	3.943E-14	1.919E-13	3.155E-13	0.000E+00	0.000E+00
-234	Pb-210+D1	1.319E-06	1.745E-21	2.543E-20	2.782E-19	5.850E-18	7.476E-17	3.144E-16	0.000E+00	0.000E+00
-234	äDSR(j)		1.045E-11	9.995E-12	9.142E-12	6.715E-12	2.907E-12	4.227E-13	0.000E+00	0.000E+00
-234	U-234	1.899E-08	1.504E-13	1.438E-13	1.315E-13	9.605E-14	3.901E-14	1.467E-15	0.000E+00	0.000E+00
-234	Th-230	1.899E-08	2.060E-18	6.057E-18	1.352E-17	3.485E-17	6.809E-17	7.193E-17	0.000E+00	0.000E+00
-234	Ra-226+D	1.899E-08	2.259E-18	1.543E-17	7.721E-17	5.675E-16	2.762E-15	4.541E-15	0.000E+00	0.000E+00
-234	Pb-210+D2	1.899E-08	1.855E-23	2.704E-22	2.958E-21	6.226E-20	7.979E-19	3.438E-18	0.000E+00	0.000E+00
-234	äDSR(j)		1.504E-13	1.439E-13	1.316E-13	9.665E-14	4.185E-14	6.083E-15	0.000E+00	0.000E+00
-234	U-234	2.100E-04	1.663E-09	1.590E-09	1.454E-09	1.062E-09	4.313E-10	1.622E-11	0.000E+00	0.000E+00
-234	Th-230	2.100E-04	2.277E-14	6.696E-14	1.495E-13	3.852E-13	7.528E-13	7.952E-13	0.000E+00	0.000E+00
-234	Ra-226+D1	2.100E-04	2.498E-14	1.706E-13	8.535E-13	6.273E-12	3.053E-11	5.019E-11	0.000E+00	0.000E+00
-234	Pb-210+D	2.100E-04	1.253E-19	1.827E-18	2.001E-17	4.222E-16	5.462E-15	2.533E-14	0.000E+00	0.000E+00
-234	äDSR(j)		1.663E-09	1.590E-09	1.455E-09	1.068E-09	4.626E-10	6.723E-11	0.000E+00	0.000E+00
-234	U-234	2.771E-10	2.195E-15	2.099E-15	1.919E-15	1.402E-15	5.693E-16	2.141E-17	0.000E+00	0.000E+00
-234	Th-230	2.771E-10	3.006E-20	8.838E-20	1.973E-19	5.085E-19	9.937E-19	1.050E-18	0.000E+00	0.000E+00
-234	Ra-226+D1	2.771E-10	3.297E-20	2.252E-19	1.127E-18	8.281E-18	4.030E-17	6.626E-17	0.000E+00	0.000E+00
-234	Pb-210+D1	2.771E-10	3.665E-25	5.342E-24	5.843E-23	1.229E-21	1.570E-20	6.603E-20	0.000E+00	0.000E+00
-234	äDSR(j)		2.195E-15	2.099E-15	1.920E-15	1.410E-15	6.106E-16	8.878E-17	0.000E+00	0.000E+00

ummary : GKP Maintenance Worker -External
ile : C:\USERS\CLAUDE\DOCUMENTS\0 GKP DOSE\RESRAD CW\GKP MAINTENANCE WORKER - EXTERNAL.RAD

Dose/Source Ratios Summed Over All Pathways
Parent and Progeny Principal Radionuclide Contributions Indicated

Parent (i)	Product (j)	Thread Fraction	DSR(j,t) At Time in Years (mrem/yr)/(pCi/g) 0.000E+00	1.000E+00	3.000E+00	1.000E+01	3.000E+01	1.000E+02	3.000E+02	1.000E+03
ÄÄÄÄÄÄÄÄ	ÄÄÄÄÄÄÄÄÄÄ	ÄÄÄÄÄÄÄÄ	ÄÄÄÄÄÄÄÄ	ÄÄÄÄÄÄÄÄ	ÄÄÄÄÄÄÄÄ	ÄÄÄÄÄÄÄÄ	ÄÄÄÄÄÄÄÄ	ÄÄÄÄÄÄÄÄ	ÄÄÄÄÄÄÄÄ	ÄÄÄÄÄÄÄÄ
-234	U-234	3.989E-12	3.160E-17	3.021E-17	2.762E-17	2.017E-17	8.195E-18	3.082E-19	0.000E+00	0.000E+00
-234	Th-230	3.989E-12	4.327E-22	1.272E-21	2.840E-21	7.319E-21	1.430E-20	1.511E-20	0.000E+00	0.000E+00
-234	Ra-226+D1	3.989E-12	4.746E-22	3.242E-21	1.622E-20	1.192E-19	5.801E-19	9.537E-19	0.000E+00	0.000E+00
-234	Pb-210+D2	3.989E-12	3.896E-27	5.679E-26	6.213E-25	1.308E-23	1.676E-22	7.222E-22	0.000E+00	0.000E+00
-234	äDSR(j)		3.160E-17	3.022E-17	2.764E-17	2.030E-17	8.789E-18	1.278E-18	0.000E+00	0.000E+00
-234	U-234	1.998E-04	1.582E-09	1.513E-09	1.383E-09	1.010E-09	4.104E-10	1.543E-11	0.000E+00	0.000E+00
-234	Th-230	1.998E-04	2.167E-14	6.370E-14	1.422E-13	3.665E-13	7.162E-13	7.565E-13	0.000E+00	0.000E+00
-234	Ra-226+D2	1.998E-04	2.058E-14	1.406E-13	7.029E-13	5.161E-12	2.503E-11	4.055E-11	0.000E+00	0.000E+00
-234	Pb-210+D	1.998E-04	1.192E-19	1.739E-18	1.903E-17	4.017E-16	5.197E-15	2.410E-14	0.000E+00	0.000E+00
-234	äDSR(j)		1.582E-09	1.513E-09	1.384E-09	1.016E-09	4.361E-10	5.676E-11	0.000E+00	0.000E+00
-234	U-234	2.637E-10	2.089E-15	1.997E-15	1.826E-15	1.334E-15	5.417E-16	2.037E-17	0.000E+00	0.000E+00
-234	Th-230	2.637E-10	2.860E-20	8.409E-20	1.877E-19	4.838E-19	9.454E-19	9.986E-19	0.000E+00	0.000E+00
-234	Ra-226+D2	2.637E-10	2.717E-20	1.856E-19	9.279E-19	6.813E-18	3.304E-17	5.353E-17	0.000E+00	0.000E+00
-234	Pb-210+D1	2.637E-10	3.487E-25	5.082E-24	5.559E-23	1.169E-21	1.494E-20	6.282E-20	0.000E+00	0.000E+00
-234	äDSR(j)		2.089E-15	1.997E-15	1.827E-15	1.341E-15	5.757E-16	7.496E-17	0.000E+00	0.000E+00
-234	U-234	3.795E-12	3.006E-17	2.875E-17	2.628E-17	1.919E-17	7.797E-18	2.932E-19	0.000E+00	0.000E+00
-234	Th-230	3.795E-12	4.117E-22	1.210E-21	2.702E-21	6.964E-21	1.361E-20	1.437E-20	0.000E+00	0.000E+00
-234	Ra-226+D2	3.795E-12	3.910E-22	2.671E-21	1.336E-20	9.806E-20	4.756E-19	7.705E-19	0.000E+00	0.000E+00
-234	Pb-210+D2	3.795E-12	3.707E-27	5.403E-26	5.911E-25	1.244E-23	1.595E-22	6.871E-22	0.000E+00	0.000E+00
-234	äDSR(j)		3.006E-17	2.875E-17	2.630E-17	1.930E-17	8.286E-18	1.079E-18	0.000E+00	0.000E+00
-234	U-234	4.196E-08	3.323E-13	3.178E-13	2.905E-13	2.122E-13	8.619E-14	3.241E-15	0.000E+00	0.000E+00
-234	Th-230	4.196E-08	4.551E-18	1.338E-17	2.987E-17	7.698E-17	1.504E-16	1.589E-16	0.000E+00	0.000E+00
-234	Ra-226+D3	4.196E-08	4.323E-18	2.952E-17	1.476E-16	1.084E-15	5.258E-15	8.517E-15	0.000E+00	0.000E+00
-234	Pb-210+D	4.196E-08	2.505E-23	3.652E-22	3.998E-21	8.438E-20	1.092E-18	5.061E-18	0.000E+00	0.000E+00
-234	äDSR(j)		3.324E-13	3.178E-13	2.907E-13	2.134E-13	9.160E-14	1.192E-14	0.000E+00	0.000E+00
-234	U-234	5.538E-14	4.387E-19	4.195E-19	3.835E-19	2.801E-19	1.138E-19	4.279E-21	0.000E+00	0.000E+00
-234	Th-230	5.538E-14	6.007E-24	1.766E-23	3.943E-23	1.016E-22	1.986E-22	2.098E-22	0.000E+00	0.000E+00
-234	Ra-226+D3	5.538E-14	5.706E-24	3.897E-23	1.949E-22	1.431E-21	6.940E-21	1.124E-20	0.000E+00	0.000E+00
-234	Pb-210+D1	5.538E-14	7.324E-29	1.067E-27	1.168E-26	2.455E-25	3.138E-24	1.320E-23	0.000E+00	0.000E+00
-234	äDSR(j)		4.387E-19	4.195E-19	3.837E-19	2.816E-19	1.209E-19	1.574E-20	0.000E+00	0.000E+00
-234	U-234	7.972E-16	6.315E-21	6.038E-21	5.520E-21	4.032E-21	1.638E-21	6.159E-23	0.000E+00	0.000E+00
-234	Th-230	7.972E-16	8.647E-26	2.542E-25	5.676E-25	1.463E-24	2.858E-24	3.019E-24	0.000E+00	0.000E+00
-234	Ra-226+D3	7.972E-16	8.213E-26	5.610E-25	2.805E-24	2.060E-23	9.989E-23	1.618E-22	0.000E+00	0.000E+00
-234	Pb-210+D2	7.972E-16	7.786E-31	1.135E-29	1.242E-28	2.613E-27	3.349E-26	1.443E-25	0.000E+00	0.000E+00
-234	äDSR(j)		6.315E-21	6.039E-21	5.523E-21	4.054E-21	1.740E-21	2.266E-22	0.000E+00	0.000E+00
-234	U-234	2.000E-07	1.584E-12	1.515E-12	1.385E-12	1.011E-12	4.108E-13	1.545E-14	0.000E+00	0.000E+00
-234	Th-230	2.000E-07	2.169E-17	6.378E-17	1.424E-16	3.670E-16	7.171E-16	7.574E-16	0.000E+00	0.000E+00
-234	Ra-226+D4	2.000E-07	1.115E-19	7.626E-19	3.827E-18	2.846E-17	1.438E-16	2.858E-16	0.000E+00	0.000E+00
-234	Pb-210+D	2.000E-07	1.194E-22	1.741E-21	1.906E-20	4.022E-19	5.203E-18	2.412E-17	0.000E+00	0.000E+00
-234	äDSR(j)		1.584E-12	1.515E-12	1.385E-12	1.012E-12	4.117E-13	1.652E-14	0.000E+00	0.000E+00

ummary : GKP Maintenance Worker -External
ile : C:\USERS\CLAUDE\DOCUMENTS\0 GKP DOSE\RESRAD CW\GKP MAINTENANCE WORKER - EXTERNAL.RAD

Dose/Source Ratios Summed Over All Pathways
Parent and Progeny Principal Radionuclide Contributions Indicated

Parent	Product	Thread	DSR(j,t) At Time in Years (mrem/yr)/(pCi/g)							
(i)	(j)	Fraction	0.000E+00	1.000E+00	3.000E+00	1.000E+01	3.000E+01	1.000E+02	3.000E+02	1.000E+03
ÄÄÄÄÄÄÄÄ	ÄÄÄÄÄÄÄÄÄÄ	ÄÄÄÄÄÄÄÄ	ÄÄÄÄÄÄÄÄ	ÄÄÄÄÄÄÄÄ	ÄÄÄÄÄÄÄÄ	ÄÄÄÄÄÄÄÄ	ÄÄÄÄÄÄÄÄ	ÄÄÄÄÄÄÄÄ	ÄÄÄÄÄÄÄÄ	ÄÄÄÄÄÄÄÄ
-234	U-234	2.640E-13	2.091E-18	1.999E-18	1.828E-18	1.335E-18	5.423E-19	2.040E-20	0.000E+00	0.000E+00
-234	Th-230	2.640E-13	2.863E-23	8.419E-23	1.880E-22	4.844E-22	9.465E-22	9.998E-22	0.000E+00	0.000E+00
-234	Ra-226+D4	2.640E-13	1.472E-25	1.007E-24	5.052E-24	3.757E-23	1.899E-22	3.773E-22	0.000E+00	0.000E+00
-234	Pb-210+D1	2.640E-13	3.491E-28	5.088E-27	5.566E-26	1.170E-24	1.496E-23	6.290E-23	0.000E+00	0.000E+00
-234	äDSR(j)		2.091E-18	2.000E-18	1.828E-18	1.336E-18	5.435E-19	2.184E-20	0.000E+00	0.000E+00
-234	U-234	3.800E-15	3.010E-20	2.878E-20	2.631E-20	1.922E-20	7.806E-21	2.936E-22	0.000E+00	0.000E+00
-234	Th-230	3.800E-15	4.122E-25	1.212E-24	2.706E-24	6.972E-24	1.362E-23	1.439E-23	0.000E+00	0.000E+00
-234	Ra-226+D4	3.800E-15	2.118E-27	1.449E-26	7.271E-26	5.408E-25	2.733E-24	5.431E-24	0.000E+00	0.000E+00
-234	Pb-210+D2	3.800E-15	3.711E-30	5.410E-29	5.918E-28	1.246E-26	1.597E-25	6.880E-25	0.000E+00	0.000E+00
-234	äDSR(j)		3.010E-20	2.878E-20	2.631E-20	1.923E-20	7.823E-21	3.141E-22	0.000E+00	0.000E+00
-235+D	U-235+D	9.835E-01	1.402E-02	1.340E-02	1.222E-02	8.863E-03	3.511E-03	1.096E-04	0.000E+00	0.000E+00
-235+D	Pa-231	9.835E-01	3.564E-08	1.026E-07	2.185E-07	4.738E-07	5.385E-07	5.188E-08	0.000E+00	0.000E+00
-235+D	Ac-227+D	9.835E-01	3.892E-09	2.548E-08	1.159E-07	6.131E-07	1.270E-06	1.639E-07	0.000E+00	0.000E+00
-235+D	äDSR(j)		1.402E-02	1.340E-02	1.222E-02	8.864E-03	3.513E-03	1.099E-04	0.000E+00	0.000E+00
-235+D	U-235+D	2.722E-03	3.881E-05	3.707E-05	3.383E-05	2.453E-05	9.719E-06	3.034E-07	0.000E+00	0.000E+00
-235+D	Pa-231	2.722E-03	9.864E-11	2.840E-10	6.048E-10	1.311E-09	1.490E-09	1.436E-10	0.000E+00	0.000E+00
-235+D	Ac-227+D1	2.722E-03	1.091E-11	7.141E-11	3.248E-10	1.718E-09	3.559E-09	4.584E-10	0.000E+00	0.000E+00
-235+D	äDSR(j)		3.881E-05	3.708E-05	3.383E-05	2.453E-05	9.724E-06	3.040E-07	0.000E+00	0.000E+00
-235+D	U-235+D	1.376E-02	1.962E-04	1.874E-04	1.710E-04	1.240E-04	4.913E-05	1.534E-06	0.000E+00	0.000E+00
-235+D	Pa-231	1.376E-02	4.987E-10	1.436E-09	3.058E-09	6.630E-09	7.534E-09	7.259E-10	0.000E+00	0.000E+00
-235+D	Ac-227+D2	1.376E-02	4.568E-11	2.991E-10	1.360E-09	7.198E-09	1.493E-08	1.938E-09	0.000E+00	0.000E+00
-235+D	äDSR(j)		1.962E-04	1.874E-04	1.710E-04	1.240E-04	4.916E-05	1.537E-06	0.000E+00	0.000E+00
-235+D	U-235+D	3.809E-05	5.431E-07	5.188E-07	4.733E-07	3.432E-07	1.360E-07	4.246E-09	0.000E+00	0.000E+00
-235+D	Pa-231	3.809E-05	1.380E-12	3.973E-12	8.463E-12	1.835E-11	2.085E-11	2.009E-12	0.000E+00	0.000E+00
-235+D	Ac-227+D3	3.809E-05	1.283E-13	8.401E-13	3.821E-12	2.022E-11	4.190E-11	5.432E-12	0.000E+00	0.000E+00
-235+D	äDSR(j)		5.431E-07	5.188E-07	4.733E-07	3.433E-07	1.360E-07	4.253E-09	0.000E+00	0.000E+00
-235+D	U-235+D	8.257E-07	1.177E-08	1.125E-08	1.026E-08	7.441E-09	2.948E-09	9.205E-11	0.000E+00	0.000E+00
-235+D	Pa-231	8.257E-07	2.992E-14	8.615E-14	1.835E-13	3.978E-13	4.521E-13	4.356E-14	0.000E+00	0.000E+00
-235+D	Ac-227+D4	8.257E-07	1.244E-15	8.144E-15	3.703E-14	1.957E-13	4.040E-13	5.140E-14	0.000E+00	0.000E+00
-235+D	äDSR(j)		1.177E-08	1.125E-08	1.026E-08	7.442E-09	2.949E-09	9.214E-11	0.000E+00	0.000E+00
-235+D	U-235+D	2.285E-09	3.259E-11	3.113E-11	2.840E-11	2.059E-11	8.160E-12	2.548E-13	0.000E+00	0.000E+00
-235+D	Pa-231	2.285E-09	8.281E-17	2.384E-16	5.078E-16	1.101E-15	1.251E-15	1.205E-16	0.000E+00	0.000E+00
-235+D	Ac-227+D5	2.285E-09	3.556E-18	2.328E-17	1.058E-16	5.591E-16	1.154E-15	1.464E-16	0.000E+00	0.000E+00
-235+D	äDSR(j)		3.259E-11	3.113E-11	2.840E-11	2.060E-11	8.162E-12	2.550E-13	0.000E+00	0.000E+00
-238	U-238	5.450E-07	1.166E-12	1.115E-12	1.021E-12	7.497E-13	3.100E-13	1.387E-14	0.000E+00	0.000E+00

ummary : GKP Maintenance Worker -External
ile : C:\USERS\CLAUDE\DOCUMENTS\0 GKP DOSE\RESRAD CW\GKP MAINTENANCE WORKER - EXTERNAL.RAD

Dose/Source Ratios Summed Over All Pathways
Parent and Progeny Principal Radionuclide Contributions Indicated

Parent (i)	Product (j)	Thread Fraction	DSR(j,t) At Time in Years (mrem/yr)/(pCi/g) 0.000E+00	1.000E+00	3.000E+00	1.000E+01	3.000E+01	1.000E+02	3.000E+02	1.000E+03
ÄÄÄÄÄÄÄÄ	ÄÄÄÄÄÄÄÄÄÄ	ÄÄÄÄÄÄÄÄ	ÄÄÄÄÄÄÄÄ	ÄÄÄÄÄÄÄÄ	ÄÄÄÄÄÄÄÄ	ÄÄÄÄÄÄÄÄ	ÄÄÄÄÄÄÄÄ	ÄÄÄÄÄÄÄÄ	ÄÄÄÄÄÄÄÄ	ÄÄÄÄÄÄÄÄ
-238+D	U-238+D	1.599E-03	3.118E-04	2.975E-04	2.707E-04	1.945E-04	7.477E-05	2.038E-06	0.000E+00	0.000E+00
-238+D	U-234	1.599E-03	1.775E-14	5.117E-14	1.093E-13	2.397E-13	2.829E-13	3.506E-14	0.000E+00	0.000E+00
-238+D	Th-230	1.599E-03	1.621E-19	1.106E-18	5.514E-18	4.016E-17	1.930E-16	3.664E-16	0.000E+00	0.000E+00
-238+D	Ra-226+D	1.599E-03	1.336E-19	1.948E-18	2.133E-17	4.495E-16	5.730E-15	2.078E-14	0.000E+00	0.000E+00
-238+D	Pb-210+D	1.599E-03	5.375E-25	1.616E-23	3.805E-22	2.327E-20	8.244E-19	9.613E-18	0.000E+00	0.000E+00
-238+D	äDSR(j)		3.118E-04	2.975E-04	2.707E-04	1.945E-04	7.477E-05	2.038E-06	0.000E+00	0.000E+00
-238+D	U-238+D	2.111E-09	4.116E-10	3.927E-10	3.574E-10	2.567E-10	9.869E-11	2.690E-12	0.000E+00	0.000E+00
-238+D	U-234	2.111E-09	2.343E-20	6.755E-20	1.443E-19	3.164E-19	3.734E-19	4.628E-20	0.000E+00	0.000E+00
-238+D	Th-230	2.111E-09	2.139E-25	1.459E-24	7.278E-24	5.302E-23	2.548E-22	4.836E-22	0.000E+00	0.000E+00
-238+D	Ra-226+D	2.111E-09	1.764E-25	2.572E-24	2.815E-23	5.934E-22	7.564E-21	2.743E-20	0.000E+00	0.000E+00
-238+D	Pb-210+D1	2.111E-09	1.572E-30	4.723E-29	1.111E-27	6.771E-26	2.370E-24	2.506E-23	0.000E+00	0.000E+00
-238+D	äDSR(j)		4.116E-10	3.927E-10	3.574E-10	2.567E-10	9.869E-11	2.690E-12	0.000E+00	0.000E+00
-238+D	U-238+D	3.039E-11	5.925E-12	5.653E-12	5.144E-12	3.695E-12	1.421E-12	3.871E-14	0.000E+00	0.000E+00
-238+D	U-234	3.039E-11	3.373E-22	9.723E-22	2.077E-21	4.554E-21	5.375E-21	6.662E-22	0.000E+00	0.000E+00
-238+D	Th-230	3.039E-11	3.079E-27	2.100E-26	1.048E-25	7.631E-25	3.668E-24	6.961E-24	0.000E+00	0.000E+00
-238+D	Ra-226+D	3.039E-11	2.539E-27	3.701E-26	4.052E-25	8.541E-24	1.089E-22	3.948E-22	0.000E+00	0.000E+00
-238+D	Pb-210+D2	3.039E-11	1.671E-32	5.022E-31	1.182E-29	7.206E-28	2.530E-26	2.741E-25	0.000E+00	0.000E+00
-238+D	äDSR(j)		5.925E-12	5.653E-12	5.144E-12	3.695E-12	1.421E-12	3.871E-14	0.000E+00	0.000E+00
-238+D	U-238+D	3.359E-07	6.550E-08	6.249E-08	5.687E-08	4.085E-08	1.570E-08	4.280E-10	0.000E+00	0.000E+00
-238+D	U-234	3.359E-07	3.728E-18	1.075E-17	2.296E-17	5.035E-17	5.942E-17	7.365E-18	0.000E+00	0.000E+00
-238+D	Th-230	3.359E-07	3.404E-23	2.322E-22	1.158E-21	8.436E-21	4.054E-20	7.696E-20	0.000E+00	0.000E+00
-238+D	Ra-226+D1	3.359E-07	2.806E-23	4.092E-22	4.480E-21	9.442E-20	1.204E-18	4.364E-18	0.000E+00	0.000E+00
-238+D	Pb-210+D	3.359E-07	1.129E-28	3.394E-27	7.991E-26	4.887E-24	1.732E-22	2.019E-21	0.000E+00	0.000E+00
-238+D	äDSR(j)		6.550E-08	6.249E-08	5.687E-08	4.085E-08	1.570E-08	4.280E-10	0.000E+00	0.000E+00
-238+D	U-238+D	4.434E-13	8.646E-14	8.249E-14	7.507E-14	5.392E-14	2.073E-14	5.649E-16	0.000E+00	0.000E+00
-238+D	U-234	4.434E-13	4.921E-24	1.419E-23	3.031E-23	6.646E-23	7.844E-23	9.721E-24	0.000E+00	0.000E+00
-238+D	Th-230	4.434E-13	4.493E-29	3.065E-28	1.529E-27	1.114E-26	5.352E-26	1.016E-25	0.000E+00	0.000E+00
-238+D	Ra-226+D1	4.434E-13	3.704E-29	5.401E-28	5.913E-27	1.246E-25	1.589E-24	5.761E-24	0.000E+00	0.000E+00
-238+D	Pb-210+D1	4.434E-13	3.302E-34	9.921E-33	2.334E-31	1.422E-29	4.978E-28	5.264E-27	0.000E+00	0.000E+00
-238+D	äDSR(j)		8.646E-14	8.249E-14	7.507E-14	5.392E-14	2.073E-14	5.649E-16	0.000E+00	0.000E+00
-238+D	U-238+D	6.383E-15	1.245E-15	1.187E-15	1.080E-15	7.761E-16	2.984E-16	8.132E-18	0.000E+00	0.000E+00
-238+D	U-234	6.383E-15	7.084E-26	2.042E-25	4.363E-25	9.566E-25	1.129E-24	1.399E-25	0.000E+00	0.000E+00
-238+D	Th-230	6.383E-15	6.467E-31	4.412E-30	2.200E-29	1.603E-28	7.703E-28	1.462E-27	0.000E+00	0.000E+00
-238+D	Ra-226+D1	6.383E-15	5.332E-31	7.774E-30	8.511E-29	1.794E-27	2.287E-26	8.292E-26	0.000E+00	0.000E+00
-238+D	Pb-210+D2	6.383E-15	3.510E-36	1.055E-34	2.482E-33	1.514E-31	5.313E-30	5.758E-29	0.000E+00	0.000E+00
-238+D	äDSR(j)		1.245E-15	1.187E-15	1.080E-15	7.761E-16	2.984E-16	8.132E-18	0.000E+00	0.000E+00

ummary : GKP Maintenance Worker -External
ile : C:\USERS\CLAUDE\DOCUMENTS\0 GKP DOSE\RESRAD CW\GKP MAINTENANCE WORKER - EXTERNAL.RAD

Dose/Source Ratios Summed Over All Pathways
Parent and Progeny Principal Radionuclide Contributions Indicated

Parent (i)	Product (j)	Thread Fraction	DSR(j,t) At Time in Years (mrem/yr)/(pCi/g) 0.000E+00	1.000E+00	3.000E+00	1.000E+01	3.000E+01	1.000E+02	3.000E+02	1.000E+03
ÄÄÄÄÄÄÄÄ	ÄÄÄÄÄÄÄÄÄÄ	ÄÄÄÄÄÄÄÄÄ	ÄÄÄÄÄÄÄÄÄ	ÄÄÄÄÄÄÄÄÄ	ÄÄÄÄÄÄÄÄÄ	ÄÄÄÄÄÄÄÄÄ	ÄÄÄÄÄÄÄÄÄ	ÄÄÄÄÄÄÄÄÄ	ÄÄÄÄÄÄÄÄÄ	ÄÄÄÄÄÄÄÄÄ
-238+D	U-238+D	3.196E-07	6.232E-08	5.945E-08	5.411E-08	3.886E-08	1.494E-08	4.072E-10	0.000E+00	0.000E+00
-238+D	U-234	3.196E-07	3.547E-18	1.023E-17	2.185E-17	4.790E-17	5.653E-17	7.007E-18	0.000E+00	0.000E+00
-238+D	Th-230	3.196E-07	3.238E-23	2.209E-22	1.102E-21	8.026E-21	3.857E-20	7.322E-20	0.000E+00	0.000E+00
-238+D	Ra-226+D2	3.196E-07	2.312E-23	3.371E-22	3.689E-21	7.768E-20	9.867E-19	3.526E-18	0.000E+00	0.000E+00
-238+D	Pb-210+D	3.196E-07	1.074E-28	3.229E-27	7.603E-26	4.650E-24	1.648E-22	1.921E-21	0.000E+00	0.000E+00
-238+D	äDSR(j)		6.232E-08	5.945E-08	5.411E-08	3.886E-08	1.494E-08	4.072E-10	0.000E+00	0.000E+00
-238+D	U-238+D	4.219E-13	8.226E-14	7.848E-14	7.142E-14	5.130E-14	1.972E-14	5.375E-16	0.000E+00	0.000E+00
-238+D	U-234	4.219E-13	4.682E-24	1.350E-23	2.884E-23	6.323E-23	7.463E-23	9.249E-24	0.000E+00	0.000E+00
-238+D	Th-230	4.219E-13	4.275E-29	2.916E-28	1.454E-27	1.059E-26	5.092E-26	9.665E-26	0.000E+00	0.000E+00
-238+D	Ra-226+D2	4.219E-13	3.052E-29	4.450E-28	4.870E-27	1.025E-25	1.302E-24	4.654E-24	0.000E+00	0.000E+00
-238+D	Pb-210+D1	4.219E-13	3.141E-34	9.439E-33	2.221E-31	1.353E-29	4.737E-28	5.009E-27	0.000E+00	0.000E+00
-238+D	äDSR(j)		8.226E-14	7.848E-14	7.142E-14	5.130E-14	1.972E-14	5.375E-16	0.000E+00	0.000E+00
-238+D	U-238+D	6.073E-15	1.184E-15	1.130E-15	1.028E-15	7.384E-16	2.839E-16	7.737E-18	0.000E+00	0.000E+00
-238+D	U-234	6.073E-15	6.740E-26	1.943E-25	4.151E-25	9.101E-25	1.074E-24	1.331E-25	0.000E+00	0.000E+00
-238+D	Th-230	6.073E-15	6.153E-31	4.198E-30	2.094E-29	1.525E-28	7.329E-28	1.391E-27	0.000E+00	0.000E+00
-238+D	Ra-226+D2	6.073E-15	4.393E-31	6.405E-30	7.010E-29	1.476E-27	1.875E-26	6.699E-26	0.000E+00	0.000E+00
-238+D	Pb-210+D2	6.073E-15	3.339E-36	1.004E-34	2.361E-33	1.440E-31	5.055E-30	5.478E-29	0.000E+00	0.000E+00
-238+D	äDSR(j)		1.184E-15	1.130E-15	1.028E-15	7.384E-16	2.839E-16	7.737E-18	0.000E+00	0.000E+00
-238+D	U-238+D	6.713E-11	1.309E-11	1.249E-11	1.136E-11	8.163E-12	3.138E-12	8.553E-14	0.000E+00	0.000E+00
-238+D	U-234	6.713E-11	7.451E-22	2.148E-21	4.589E-21	1.006E-20	1.187E-20	1.472E-21	0.000E+00	0.000E+00
-238+D	Th-230	6.713E-11	6.802E-27	4.640E-26	2.314E-25	1.686E-24	8.102E-24	1.538E-23	0.000E+00	0.000E+00
-238+D	Ra-226+D3	6.713E-11	4.856E-27	7.080E-26	7.749E-25	1.631E-23	2.072E-22	7.405E-22	0.000E+00	0.000E+00
-238+D	Pb-210+D	6.713E-11	2.256E-32	6.783E-31	1.597E-29	9.767E-28	3.461E-26	4.035E-25	0.000E+00	0.000E+00
-238+D	äDSR(j)		1.309E-11	1.249E-11	1.136E-11	8.163E-12	3.138E-12	8.553E-14	0.000E+00	0.000E+00
-238+D	U-238+D	8.862E-17	1.728E-17	1.648E-17	1.500E-17	1.077E-17	4.143E-18	1.129E-19	0.000E+00	0.000E+00
-238+D	U-234	8.862E-17	9.835E-28	2.835E-27	6.057E-27	1.328E-26	1.567E-26	1.943E-27	0.000E+00	0.000E+00
-238+D	Th-230	8.862E-17	8.979E-33	6.125E-32	3.055E-31	2.225E-30	1.070E-29	2.030E-29	0.000E+00	0.000E+00
-238+D	Ra-226+D3	8.862E-17	6.411E-33	9.346E-32	1.023E-30	2.154E-29	2.736E-28	9.775E-28	0.000E+00	0.000E+00
-238+D	Pb-210+D1	8.862E-17	6.598E-38	1.983E-36	4.664E-35	2.842E-33	9.949E-32	1.052E-30	0.000E+00	0.000E+00
-238+D	äDSR(j)		1.728E-17	1.648E-17	1.500E-17	1.077E-17	4.143E-18	1.129E-19	0.000E+00	0.000E+00
-238+D	U-238+D	1.276E-18	2.487E-19	2.373E-19	2.159E-19	1.551E-19	5.963E-20	1.625E-21	0.000E+00	0.000E+00
-238+D	U-234	1.276E-18	1.416E-29	4.081E-29	8.718E-29	1.912E-28	2.256E-28	2.796E-29	0.000E+00	0.000E+00
-238+D	Th-230	1.276E-18	1.292E-34	8.817E-34	4.397E-33	3.203E-32	1.539E-31	2.922E-31	0.000E+00	0.000E+00
-238+D	Ra-226+D3	1.276E-18	9.227E-35	1.345E-33	1.472E-32	3.100E-31	3.938E-30	1.407E-29	0.000E+00	0.000E+00
-238+D	Pb-210+D2	1.276E-18	7.014E-40	2.108E-38	4.960E-37	3.025E-35	1.062E-33	1.151E-32	0.000E+00	0.000E+00
-238+D	äDSR(j)		2.487E-19	2.373E-19	2.159E-19	1.551E-19	5.963E-20	1.625E-21	0.000E+00	0.000E+00

ummary : GKP Maintenance Worker -External
ile : C:\USERS\CLAUDE\DOCUMENTS\0 GKP DOSE\RESRAD CW\GKP MAINTENANCE WORKER - EXTERNAL.RAD

Dose/Source Ratios Summed Over All Pathways
Parent and Progeny Principal Radionuclide Contributions Indicated

Parent (i)	Product (j)	Thread Fraction	DSR(j,t) At Time in Years (mrem/yr)/(pCi/g) 0.000E+00	1.000E+00	3.000E+00	1.000E+01	3.000E+01	1.000E+02	3.000E+02	1.000E+03
ÄÄÄÄÄÄÄÄÄ	ÄÄÄÄÄÄÄÄÄÄ	ÄÄÄÄÄÄÄÄÄ	ÄÄÄÄÄÄÄÄÄ	ÄÄÄÄÄÄÄÄÄ	ÄÄÄÄÄÄÄÄÄ	ÄÄÄÄÄÄÄÄÄ	ÄÄÄÄÄÄÄÄÄ	ÄÄÄÄÄÄÄÄÄ	ÄÄÄÄÄÄÄÄÄ	ÄÄÄÄÄÄÄÄÄ
-238+D	U-238+D	3.200E-10	6.240E-11	5.953E-11	5.417E-11	3.891E-11	1.496E-11	4.077E-13	0.000E+00	0.000E+00
-238+D	U-234	3.200E-10	3.552E-21	1.024E-20	2.187E-20	4.796E-20	5.660E-20	7.015E-21	0.000E+00	0.000E+00
-238+D	Th-230	3.200E-10	3.242E-26	2.212E-25	1.103E-24	8.036E-24	3.862E-23	7.331E-23	0.000E+00	0.000E+00
-238+D	Ra-226+D4	3.200E-10	1.253E-28	1.829E-27	2.009E-26	4.284E-25	5.670E-24	2.485E-23	0.000E+00	0.000E+00
-238+D	Pb-210+D	3.200E-10	1.075E-31	3.233E-30	7.612E-29	4.655E-27	1.650E-25	1.923E-24	0.000E+00	0.000E+00
-238+D	äDSR(j)		6.240E-11	5.953E-11	5.417E-11	3.891E-11	1.496E-11	4.077E-13	0.000E+00	0.000E+00
-238+D	U-238+D	4.224E-16	8.236E-17	7.857E-17	7.151E-17	5.136E-17	1.975E-17	5.382E-19	0.000E+00	0.000E+00
-238+D	U-234	4.224E-16	4.688E-27	1.352E-26	2.887E-26	6.331E-26	7.472E-26	9.260E-27	0.000E+00	0.000E+00
-238+D	Th-230	4.224E-16	4.280E-32	2.920E-31	1.456E-30	1.061E-29	5.098E-29	9.676E-29	0.000E+00	0.000E+00
-238+D	Ra-226+D4	4.224E-16	1.654E-34	2.414E-33	2.651E-32	5.655E-31	7.484E-30	3.280E-29	0.000E+00	0.000E+00
-238+D	Pb-210+D1	4.224E-16	3.145E-37	9.451E-36	2.223E-34	1.355E-32	4.742E-31	5.015E-30	0.000E+00	0.000E+00
-238+D	äDSR(j)		8.236E-17	7.857E-17	7.151E-17	5.136E-17	1.975E-17	5.382E-19	0.000E+00	0.000E+00
-238+D	U-238+D	6.080E-18	1.186E-18	1.131E-18	1.029E-18	7.393E-19	2.842E-19	7.746E-21	0.000E+00	0.000E+00
-238+D	U-234	6.080E-18	6.748E-29	1.945E-28	4.156E-28	9.112E-28	1.075E-27	1.333E-28	0.000E+00	0.000E+00
-238+D	Th-230	6.080E-18	6.160E-34	4.203E-33	2.096E-32	1.527E-31	7.338E-31	1.393E-30	0.000E+00	0.000E+00
-238+D	Ra-226+D4	6.080E-18	2.380E-36	3.475E-35	3.817E-34	8.139E-33	1.077E-31	4.722E-31	0.000E+00	0.000E+00
-238+D	Pb-210+D2	6.080E-18	3.343E-39	1.005E-37	2.364E-36	1.442E-34	5.061E-33	5.485E-32	0.000E+00	0.000E+00
-238+D	äDSR(j)		1.186E-18	1.131E-18	1.029E-18	7.393E-19	2.842E-19	7.746E-21	0.000E+00	0.000E+00
-238+D1	U-238+D1	9.980E-01	1.977E-03	1.888E-03	1.720E-03	1.241E-03	4.842E-04	1.440E-05	0.000E+00	0.000E+00
-238+D1	U-234	9.980E-01	1.108E-11	3.193E-11	6.821E-11	1.496E-10	1.765E-10	2.188E-11	0.000E+00	0.000E+00
-238+D1	Th-230	9.980E-01	1.011E-16	6.898E-16	3.441E-15	2.506E-14	1.204E-13	2.286E-13	0.000E+00	0.000E+00
-238+D1	Ra-226+D	9.980E-01	8.337E-17	1.216E-15	1.331E-14	2.805E-13	3.576E-12	1.297E-11	0.000E+00	0.000E+00
-238+D1	Pb-210+D	9.980E-01	3.354E-22	1.008E-20	2.374E-19	1.452E-17	5.145E-16	5.998E-15	0.000E+00	0.000E+00
-238+D1	äDSR(j)		1.977E-03	1.888E-03	1.720E-03	1.241E-03	4.842E-04	1.440E-05	0.000E+00	0.000E+00
-238+D1	U-238+D1	1.317E-06	2.610E-09	2.492E-09	2.270E-09	1.638E-09	6.392E-10	1.901E-11	0.000E+00	0.000E+00
-238+D1	U-234	1.317E-06	1.462E-17	4.215E-17	9.004E-17	1.974E-16	2.330E-16	2.888E-17	0.000E+00	0.000E+00
-238+D1	Th-230	1.317E-06	1.335E-22	9.106E-22	4.542E-21	3.308E-20	1.590E-19	3.018E-19	0.000E+00	0.000E+00
-238+D1	Ra-226+D	1.317E-06	1.101E-22	1.605E-21	1.757E-20	3.703E-19	4.720E-18	1.711E-17	0.000E+00	0.000E+00
-238+D1	Pb-210+D1	1.317E-06	9.809E-28	2.947E-26	6.934E-25	4.225E-23	1.479E-21	1.564E-20	0.000E+00	0.000E+00
-238+D1	äDSR(j)		2.610E-09	2.492E-09	2.270E-09	1.638E-09	6.392E-10	1.901E-11	0.000E+00	0.000E+00
-238+D1	U-238+D1	1.896E-08	3.757E-11	3.586E-11	3.268E-11	2.358E-11	9.200E-12	2.736E-13	0.000E+00	0.000E+00
-238+D1	U-234	1.896E-08	2.104E-19	6.067E-19	1.296E-18	2.842E-18	3.354E-18	4.157E-19	0.000E+00	0.000E+00
-238+D1	Th-230	1.896E-08	1.921E-24	1.311E-23	6.537E-23	4.762E-22	2.289E-21	4.344E-21	0.000E+00	0.000E+00
-238+D1	Ra-226+D	1.896E-08	1.584E-24	2.310E-23	2.529E-22	5.330E-21	6.794E-20	2.463E-19	0.000E+00	0.000E+00
-238+D1	Pb-210+D2	1.896E-08	1.043E-29	3.133E-28	7.373E-27	4.497E-25	1.579E-23	1.711E-22	0.000E+00	0.000E+00
-238+D1	äDSR(j)		3.757E-11	3.586E-11	3.268E-11	2.358E-11	9.200E-12	2.736E-13	0.000E+00	0.000E+00

ummary : GKP Maintenance Worker -External
ile : C:\USERS\CLAUDE\DOCUMENTS\0 GKP DOSE\RESRAD CW\GKP MAINTENANCE WORKER - EXTERNAL.RAD

Dose/Source Ratios Summed Over All Pathways
Parent and Progeny Principal Radionuclide Contributions Indicated

Parent	Product	Thread	DSR(j,t) At Time in Years (mrem/yr)/(pCi/g)							
(i)	(j)	Fraction	0.000E+00	1.000E+00	3.000E+00	1.000E+01	3.000E+01	1.000E+02	3.000E+02	1.000E+03
ÄÄÄÄÄÄÄÄ	ÄÄÄÄÄÄÄÄÄ	ÄÄÄÄÄÄÄÄ	ÄÄÄÄÄÄÄÄ	ÄÄÄÄÄÄÄÄ	ÄÄÄÄÄÄÄÄ	ÄÄÄÄÄÄÄÄ	ÄÄÄÄÄÄÄÄ	ÄÄÄÄÄÄÄÄ	ÄÄÄÄÄÄÄÄ	ÄÄÄÄÄÄÄÄ
-238+D1	U-238+D1	2.096E-04	4.153E-07	3.965E-07	3.613E-07	2.606E-07	1.017E-07	3.024E-09	0.000E+00	0.000E+00
-238+D1	U-234	2.096E-04	2.327E-15	6.707E-15	1.433E-14	3.142E-14	3.708E-14	4.596E-15	0.000E+00	0.000E+00
-238+D1	Th-230	2.096E-04	2.124E-20	1.449E-19	7.227E-19	5.264E-18	2.530E-17	4.802E-17	0.000E+00	0.000E+00
-238+D1	Ra-226+D1	2.096E-04	1.751E-20	2.553E-19	2.795E-18	5.892E-17	7.510E-16	2.723E-15	0.000E+00	0.000E+00
-238+D1	Pb-210+D	2.096E-04	7.045E-26	2.118E-24	4.987E-23	3.050E-21	1.081E-19	1.260E-18	0.000E+00	0.000E+00
-238+D1	äDSR(j)		4.153E-07	3.965E-07	3.613E-07	2.606E-07	1.017E-07	3.024E-09	0.000E+00	0.000E+00
-238+D1	U-238+D1	2.767E-10	5.483E-13	5.234E-13	4.769E-13	3.440E-13	1.343E-13	3.992E-15	0.000E+00	0.000E+00
-238+D1	U-234	2.767E-10	3.071E-21	8.853E-21	1.891E-20	4.147E-20	4.894E-20	6.066E-21	0.000E+00	0.000E+00
-238+D1	Th-230	2.767E-10	2.804E-26	1.913E-25	9.539E-25	6.949E-24	3.340E-23	6.339E-23	0.000E+00	0.000E+00
-238+D1	Ra-226+D1	2.767E-10	2.311E-26	3.370E-25	3.690E-24	7.777E-23	9.913E-22	3.595E-21	0.000E+00	0.000E+00
-238+D1	Pb-210+D1	2.767E-10	2.060E-31	6.191E-30	1.456E-28	8.875E-27	3.107E-25	3.285E-24	0.000E+00	0.000E+00
-238+D1	äDSR(j)		5.483E-13	5.234E-13	4.769E-13	3.440E-13	1.343E-13	3.992E-15	0.000E+00	0.000E+00
-238+D1	U-238+D1	3.983E-12	7.892E-15	7.533E-15	6.864E-15	4.952E-15	1.932E-15	5.746E-17	0.000E+00	0.000E+00
-238+D1	U-234	3.983E-12	4.420E-23	1.274E-22	2.722E-22	5.969E-22	7.045E-22	8.732E-23	0.000E+00	0.000E+00
-238+D1	Th-230	3.983E-12	4.036E-28	2.753E-27	1.373E-26	1.000E-25	4.807E-25	9.124E-25	0.000E+00	0.000E+00
-238+D1	Ra-226+D1	3.983E-12	3.327E-28	4.851E-27	5.311E-26	1.119E-24	1.427E-23	5.174E-23	0.000E+00	0.000E+00
-238+D1	Pb-210+D2	3.983E-12	2.190E-33	6.582E-32	1.549E-30	9.445E-29	3.316E-27	3.593E-26	0.000E+00	0.000E+00
-238+D1	äDSR(j)		7.892E-15	7.533E-15	6.864E-15	4.952E-15	1.932E-15	5.746E-17	0.000E+00	0.000E+00
-238+D1	U-238+D1	1.994E-04	3.952E-07	3.772E-07	3.437E-07	2.480E-07	9.677E-08	2.877E-09	0.000E+00	0.000E+00
-238+D1	U-234	1.994E-04	2.213E-15	6.381E-15	1.363E-14	2.989E-14	3.528E-14	4.372E-15	0.000E+00	0.000E+00
-238+D1	Th-230	1.994E-04	2.021E-20	1.379E-19	6.876E-19	5.008E-18	2.407E-17	4.569E-17	0.000E+00	0.000E+00
-238+D1	Ra-226+D2	1.994E-04	1.443E-20	2.104E-19	2.302E-18	4.847E-17	6.157E-16	2.200E-15	0.000E+00	0.000E+00
-238+D1	Pb-210+D	1.994E-04	6.703E-26	2.015E-24	4.744E-23	2.901E-21	1.028E-19	1.199E-18	0.000E+00	0.000E+00
-238+D1	äDSR(j)		3.952E-07	3.772E-07	3.437E-07	2.480E-07	9.677E-08	2.877E-09	0.000E+00	0.000E+00
-238+D1	U-238+D1	2.633E-10	5.216E-13	4.979E-13	4.537E-13	3.273E-13	1.277E-13	3.798E-15	0.000E+00	0.000E+00
-238+D1	U-234	2.633E-10	2.922E-21	8.423E-21	1.799E-20	3.946E-20	4.657E-20	5.771E-21	0.000E+00	0.000E+00
-238+D1	Th-230	2.633E-10	2.667E-26	1.820E-25	9.076E-25	6.611E-24	3.177E-23	6.031E-23	0.000E+00	0.000E+00
-238+D1	Ra-226+D2	2.633E-10	1.905E-26	2.777E-25	3.039E-24	6.398E-23	8.127E-22	2.904E-21	0.000E+00	0.000E+00
-238+D1	Pb-210+D1	2.633E-10	1.960E-31	5.890E-30	1.386E-28	8.444E-27	2.956E-25	3.125E-24	0.000E+00	0.000E+00
-238+D1	äDSR(j)		5.216E-13	4.979E-13	4.537E-13	3.273E-13	1.277E-13	3.798E-15	0.000E+00	0.000E+00
-238+D1	U-238+D1	3.789E-12	7.508E-15	7.167E-15	6.530E-15	4.712E-15	1.839E-15	5.467E-17	0.000E+00	0.000E+00
-238+D1	U-234	3.789E-12	4.206E-23	1.212E-22	2.590E-22	5.679E-22	6.703E-22	8.307E-23	0.000E+00	0.000E+00
-238+D1	Th-230	3.789E-12	3.839E-28	2.619E-27	1.306E-26	9.516E-26	4.573E-25	8.681E-25	0.000E+00	0.000E+00
-238+D1	Ra-226+D2	3.789E-12	2.741E-28	3.997E-27	4.374E-26	9.209E-25	1.170E-23	4.180E-23	0.000E+00	0.000E+00
-238+D1	Pb-210+D2	3.789E-12	2.084E-33	6.262E-32	1.473E-30	8.986E-29	3.155E-27	3.418E-26	0.000E+00	0.000E+00
-238+D1	äDSR(j)		7.508E-15	7.167E-15	6.530E-15	4.712E-15	1.839E-15	5.467E-17	0.000E+00	0.000E+00

ummary : GKP Maintenance Worker -External
ile : C:\USERS\CLAUDE\DOCUMENTS\0 GKP DOSE\RESRAD CW\GKP MAINTENANCE WORKER - EXTERNAL.RAD

Dose/Source Ratios Summed Over All Pathways
Parent and Progeny Principal Radionuclide Contributions Indicated

Parent	Product	Thread	DSR(j,t) At Time in Years (mrem/yr)/(pCi/g)							
(i)	(j)	Fraction	0.000E+00	1.000E+00	3.000E+00	1.000E+01	3.000E+01	1.000E+02	3.000E+02	1.000E+03
ÄÄÄÄÄÄÄÄÄ	ÄÄÄÄÄÄÄÄÄÄ	ÄÄÄÄÄÄÄÄÄ	ÄÄÄÄÄÄÄÄÄ	ÄÄÄÄÄÄÄÄÄ	ÄÄÄÄÄÄÄÄÄ	ÄÄÄÄÄÄÄÄÄ	ÄÄÄÄÄÄÄÄÄ	ÄÄÄÄÄÄÄÄÄ	ÄÄÄÄÄÄÄÄÄ	ÄÄÄÄÄÄÄÄÄ
-238+D1	U-238+D1	4.189E-08	8.300E-11	7.923E-11	7.219E-11	5.209E-11	2.033E-11	6.044E-13	0.000E+00	0.000E+00
-238+D1	U-234	4.189E-08	4.649E-19	1.340E-18	2.863E-18	6.278E-18	7.410E-18	9.184E-19	0.000E+00	0.000E+00
-238+D1	Th-230	4.189E-08	4.245E-24	2.896E-23	1.444E-22	1.052E-21	5.056E-21	9.596E-21	0.000E+00	0.000E+00
-238+D1	Ra-226+D3	4.189E-08	3.030E-24	4.418E-23	4.835E-22	1.018E-20	1.293E-19	4.621E-19	0.000E+00	0.000E+00
-238+D1	Pb-210+D	4.189E-08	1.408E-29	4.232E-28	9.965E-27	6.094E-25	2.159E-23	2.518E-22	0.000E+00	0.000E+00
-238+D1	äDSR(j)		8.300E-11	7.923E-11	7.219E-11	5.209E-11	2.033E-11	6.044E-13	0.000E+00	0.000E+00
-238+D1	U-238+D1	5.530E-14	1.096E-16	1.046E-16	9.529E-17	6.875E-17	2.683E-17	7.978E-19	0.000E+00	0.000E+00
-238+D1	U-234	5.530E-14	6.137E-25	1.769E-24	3.780E-24	8.288E-24	9.781E-24	1.212E-24	0.000E+00	0.000E+00
-238+D1	Th-230	5.530E-14	5.603E-30	3.822E-29	1.906E-28	1.389E-27	6.674E-27	1.267E-26	0.000E+00	0.000E+00
-238+D1	Ra-226+D3	5.530E-14	4.000E-30	5.832E-29	6.383E-28	1.344E-26	1.707E-25	6.100E-25	0.000E+00	0.000E+00
-238+D1	Pb-210+D1	5.530E-14	4.117E-35	1.237E-33	2.910E-32	1.774E-30	6.208E-29	6.565E-28	0.000E+00	0.000E+00
-238+D1	äDSR(j)		1.096E-16	1.046E-16	9.529E-17	6.875E-17	2.683E-17	7.978E-19	0.000E+00	0.000E+00
-238+D1	U-238+D1	7.959E-16	1.577E-18	1.505E-18	1.372E-18	9.896E-19	3.862E-19	1.148E-20	0.000E+00	0.000E+00
-238+D1	U-234	7.959E-16	8.834E-27	2.547E-26	5.440E-26	1.193E-25	1.408E-25	1.745E-26	0.000E+00	0.000E+00
-238+D1	Th-230	7.959E-16	8.065E-32	5.502E-31	2.744E-30	1.999E-29	9.606E-29	1.823E-28	0.000E+00	0.000E+00
-238+D1	Ra-226+D3	7.959E-16	5.758E-32	8.394E-31	9.187E-30	1.934E-28	2.457E-27	8.780E-27	0.000E+00	0.000E+00
-238+D1	Pb-210+D2	7.959E-16	4.377E-37	1.315E-35	3.095E-34	1.887E-32	6.626E-31	7.180E-30	0.000E+00	0.000E+00
-238+D1	äDSR(j)		1.577E-18	1.505E-18	1.372E-18	9.896E-19	3.862E-19	1.148E-20	0.000E+00	0.000E+00
-238+D1	U-238+D1	1.997E-07	3.956E-10	3.777E-10	3.441E-10	2.483E-10	9.688E-11	2.881E-12	0.000E+00	0.000E+00
-238+D1	U-234	1.997E-07	2.216E-18	6.389E-18	1.365E-17	2.993E-17	3.532E-17	4.378E-18	0.000E+00	0.000E+00
-238+D1	Th-230	1.997E-07	2.023E-23	1.380E-22	6.884E-22	5.014E-21	2.410E-20	4.574E-20	0.000E+00	0.000E+00
-238+D1	Ra-226+D4	1.997E-07	7.817E-26	1.141E-24	1.253E-23	2.673E-22	3.538E-21	1.551E-20	0.000E+00	0.000E+00
-238+D1	Pb-210+D	1.997E-07	6.711E-29	2.017E-27	4.750E-26	2.905E-24	1.029E-22	1.200E-21	0.000E+00	0.000E+00
-238+D1	äDSR(j)		3.956E-10	3.777E-10	3.441E-10	2.483E-10	9.688E-11	2.881E-12	0.000E+00	0.000E+00
-238+D1	U-238+D1	2.636E-13	5.223E-16	4.985E-16	4.542E-16	3.277E-16	1.279E-16	3.803E-18	0.000E+00	0.000E+00
-238+D1	U-234	2.636E-13	2.925E-24	8.433E-24	1.802E-23	3.950E-23	4.662E-23	5.778E-24	0.000E+00	0.000E+00
-238+D1	Th-230	2.636E-13	2.671E-29	1.822E-28	9.087E-28	6.619E-27	3.181E-26	6.038E-26	0.000E+00	0.000E+00
-238+D1	Ra-226+D4	2.636E-13	1.032E-31	1.507E-30	1.655E-29	3.529E-28	4.670E-27	2.047E-26	0.000E+00	0.000E+00
-238+D1	Pb-210+D1	2.636E-13	1.963E-34	5.897E-33	1.387E-31	8.454E-30	2.959E-28	3.129E-27	0.000E+00	0.000E+00
-238+D1	äDSR(j)		5.223E-16	4.985E-16	4.542E-16	3.277E-16	1.279E-16	3.803E-18	0.000E+00	0.000E+00
-238+D1	U-238+D1	3.794E-15	7.517E-18	7.176E-18	6.538E-18	4.717E-18	1.841E-18	5.474E-20	0.000E+00	0.000E+00
-238+D1	U-234	3.794E-15	4.211E-26	1.214E-25	2.593E-25	5.686E-25	6.711E-25	8.318E-26	0.000E+00	0.000E+00
-238+D1	Th-230	3.794E-15	3.844E-31	2.622E-30	1.308E-29	9.528E-29	4.579E-28	8.691E-28	0.000E+00	0.000E+00
-238+D1	Ra-226+D4	3.794E-15	1.485E-33	2.169E-32	2.382E-31	5.079E-30	6.722E-29	2.946E-28	0.000E+00	0.000E+00
-238+D1	Pb-210+D2	3.794E-15	2.086E-36	6.269E-35	1.475E-33	8.997E-32	3.158E-30	3.423E-29	0.000E+00	0.000E+00
-238+D1	äDSR(j)		7.517E-18	7.176E-18	6.538E-18	4.717E-18	1.841E-18	5.474E-20	0.000E+00	0.000E+00
íííííííííí	íííííííííííí	íííííííííí	íííííííííí	íííííííííí	íííííííííí	íííííííííí	íííííííííí	íííííííííí	íííííííííí	íííííííííí

ne DSR includes contributions from associated (half-life ó 180 days) daughters.

ummary : GKP Maintenance Worker -External
ile : C:\USERS\CLAUDE\DOCUMENTS\0 GKP DOSE\RESRAD CW\GKP MAINTENANCE WORKER - EXTERNAL.RAD

Single Radionuclide Soil Guidelines G(i,t) in pCi/g
Basic Radiation Dose Limit = 2.500E+01 mrem/yr

uclide (i)	t= 0.000E+00	1.000E+00	3.000E+00	1.000E+01	3.000E+01	1.000E+02	3.000E+02	1.000E+03
ÄÄÄÄÄÄ	ÄÄÄÄÄÄÄÄÄ	ÄÄÄÄÄÄÄÄÄ	ÄÄÄÄÄÄÄÄÄ	ÄÄÄÄÄÄÄÄÄ	ÄÄÄÄÄÄÄÄÄ	ÄÄÄÄÄÄÄÄÄ	ÄÄÄÄÄÄÄÄÄ	ÄÄÄÄÄÄÄÄÄ
a-226	1.390E+02	1.440E+02	1.545E+02	1.979E+02	4.062E+02	6.509E+03	*9.885E+11	*9.885E+11
n-232	3.693E+03	1.123E+03	4.441E+02	1.759E+02	1.388E+02	2.346E+02	*1.097E+05	*1.097E+05
-234	3.156E+06	3.300E+06	3.608E+06	4.913E+06	1.135E+07	7.807E+07	*6.222E+09	*6.222E+09
-235	1.753E+03	1.835E+03	2.012E+03	2.774E+03	6.998E+03	2.238E+05	*2.160E+06	*2.160E+06
-238	1.092E+04	1.144E+04	1.255E+04	1.741E+04	4.470E+04	*3.361E+05	*3.361E+05	*3.361E+05
íííííí	íííííííííí	íííííííííí	íííííííííí	íííííííííí	íííííííííí	íííííííííí	íííííííííí	íííííííííí

At specific activity limit

Summed Dose/Source Ratios DSR(i,t) in (mrem/yr)/(pCi/g)
and Single Radionuclide Soil Guidelines G(i,t) in pCi/g
at tmin = time of minimum single radionuclide soil guideline
and at tmax = time of maximum total dose = 0.000E+00 years

uclide (i)	Initial (pCi/g)	tmin (years)	DSR(i,tmin)	G(i,tmin) (pCi/g)	DSR(i,tmax)	G(i,tmax) (pCi/g)
ÄÄÄÄÄÄ	ÄÄÄÄÄÄÄÄÄ	ÄÄÄÄÄÄÄÄÄÄÄÄÄÄÄÄ	ÄÄÄÄÄÄÄÄÄ	ÄÄÄÄÄÄÄÄÄ	ÄÄÄÄÄÄÄÄÄ	ÄÄÄÄÄÄÄÄÄ
a-226	3.650E+01	0.000E+00	1.799E-01	1.390E+02	1.799E-01	1.390E+02
n-232	2.400E+00	25.50 ñ 0.05	1.811E-01	1.380E+02	6.769E-03	3.693E+03
-234	1.390E+01	0.000E+00	7.921E-06	3.156E+06	7.921E-06	3.156E+06
-235	8.400E-01	0.000E+00	1.426E-02	1.753E+03	1.426E-02	1.753E+03
-238	1.390E+01	0.000E+00	2.290E-03	1.092E+04	2.290E-03	1.092E+04
íííííí	íííííííííí	íííííííííííííííííí	íííííííííí	íííííííííí	íííííííííí	íííííííííí

ummary : GKP Maintenance Worker -External
ile : C:\USERS\CLAUDE\DOCUMENTS\0 GKP DOSE\RESRAD CW\GKP MAINTENANCE WORKER - EXTERNAL.RAD

Individual Nuclide Dose Summed Over All Pathways
Parent Nuclide and Branch Fraction Indicated

uclide	Parent	THF(i)	DOSE(j,t), mrem/yr							
(j)	(i)	t=	0.000E+00	1.000E+00	3.000E+00	1.000E+01	3.000E+01	1.000E+02	3.000E+02	1.000E+03
ÄÄÄÄÄÄ	ÄÄÄÄÄÄÄ	ÄÄÄÄÄÄÄÄÄ	ÄÄÄÄÄÄÄÄÄ	ÄÄÄÄÄÄÄÄÄ	ÄÄÄÄÄÄÄÄÄ	ÄÄÄÄÄÄÄÄÄ	ÄÄÄÄÄÄÄÄÄ	ÄÄÄÄÄÄÄÄÄ	ÄÄÄÄÄÄÄÄÄ	ÄÄÄÄÄÄÄÄÄ
a-226	Ra-226	9.996E-01	6.563E+00	6.336E+00	5.904E+00	4.607E+00	2.245E+00	1.400E-01	0.000E+00	0.000E+00
a-226	Ra-226	1.319E-06	8.663E-06	8.363E-06	7.794E-06	6.082E-06	2.963E-06	1.847E-07	0.000E+00	0.000E+00
a-226	U-234	9.996E-01	1.653E-09	1.129E-08	5.648E-08	4.152E-07	2.021E-06	3.322E-06	0.000E+00	0.000E+00
a-226	U-234	1.319E-06	2.182E-15	1.491E-14	7.456E-14	5.480E-13	2.667E-12	4.385E-12	0.000E+00	0.000E+00
a-226	U-234	1.899E-08	3.141E-17	2.145E-16	1.073E-15	7.888E-15	3.839E-14	6.311E-14	0.000E+00	0.000E+00
a-226	U-238	1.599E-03	1.857E-18	2.708E-17	2.965E-16	6.248E-15	7.965E-14	2.888E-13	0.000E+00	0.000E+00
a-226	U-238	2.111E-09	2.451E-24	3.574E-23	3.913E-22	8.248E-21	1.051E-19	3.812E-19	0.000E+00	0.000E+00
a-226	U-238	3.039E-11	3.529E-26	5.145E-25	5.633E-24	1.187E-22	1.513E-21	5.487E-21	0.000E+00	0.000E+00
a-226	U-238	9.980E-01	1.159E-15	1.690E-14	1.850E-13	3.899E-12	4.970E-11	1.802E-10	0.000E+00	0.000E+00
a-226	U-238	1.317E-06	1.530E-21	2.230E-20	2.442E-19	5.147E-18	6.560E-17	2.379E-16	0.000E+00	0.000E+00
a-226	U-238	1.896E-08	2.202E-23	3.211E-22	3.515E-21	7.408E-20	9.443E-19	3.424E-18	0.000E+00	0.000E+00
a-226	äDOSE(j)		6.563E+00	6.336E+00	5.904E+00	4.607E+00	2.245E+00	1.400E-01	0.000E+00	0.000E+00
o-210	Ra-226	9.996E-01	6.545E-05	1.889E-04	4.045E-04	8.958E-04	1.098E-03	1.764E-04	0.000E+00	0.000E+00
o-210	Ra-226	2.100E-04	1.375E-08	3.967E-08	8.496E-08	1.882E-07	2.307E-07	3.706E-08	0.000E+00	0.000E+00
o-210	Ra-226	1.998E-04	1.308E-08	3.775E-08	8.083E-08	1.790E-07	2.194E-07	3.526E-08	0.000E+00	0.000E+00
o-210	Ra-226	4.196E-08	2.747E-12	7.928E-12	1.698E-11	3.760E-11	4.609E-11	7.405E-12	0.000E+00	0.000E+00
o-210	Ra-226	2.000E-07	1.309E-11	3.779E-11	8.093E-11	1.792E-10	2.197E-10	3.530E-11	0.000E+00	0.000E+00
o-210	U-234	9.996E-01	8.294E-15	1.209E-13	1.324E-12	2.794E-11	3.615E-10	1.676E-09	0.000E+00	0.000E+00
o-210	U-234	2.100E-04	1.742E-18	2.540E-17	2.781E-16	5.869E-15	7.593E-14	3.520E-13	0.000E+00	0.000E+00
o-210	U-234	1.998E-04	1.657E-18	2.417E-17	2.646E-16	5.584E-15	7.224E-14	3.349E-13	0.000E+00	0.000E+00
o-210	U-234	4.196E-08	3.481E-22	5.076E-21	5.557E-20	1.173E-18	1.517E-17	7.035E-17	0.000E+00	0.000E+00
o-210	U-234	2.000E-07	1.659E-21	2.420E-20	2.649E-19	5.591E-18	7.233E-17	3.353E-16	0.000E+00	0.000E+00
o-210	U-238	1.599E-03	7.471E-24	2.246E-22	5.288E-21	3.234E-19	1.146E-17	1.336E-16	0.000E+00	0.000E+00
o-210	U-238	3.359E-07	1.569E-27	4.718E-26	1.111E-24	6.793E-23	2.407E-21	2.807E-20	0.000E+00	0.000E+00
o-210	U-238	3.196E-07	1.493E-27	4.488E-26	1.057E-24	6.463E-23	2.290E-21	2.670E-20	0.000E+00	0.000E+00
o-210	U-238	6.713E-11	0.000E+00	0.000E+00	2.220E-28	1.358E-26	4.810E-25	5.609E-24	0.000E+00	0.000E+00
o-210	U-238	3.200E-10	0.000E+00	4.494E-29	1.058E-27	6.471E-26	2.293E-24	2.673E-23	0.000E+00	0.000E+00
o-210	U-238	9.980E-01	4.662E-21	1.402E-19	3.300E-18	2.018E-16	7.151E-15	8.338E-14	0.000E+00	0.000E+00
o-210	U-238	2.096E-04	9.792E-25	2.944E-23	6.931E-22	4.239E-20	1.502E-18	1.751E-17	0.000E+00	0.000E+00
o-210	U-238	1.994E-04	9.317E-25	2.801E-23	6.595E-22	4.033E-20	1.429E-18	1.666E-17	0.000E+00	0.000E+00
o-210	U-238	4.189E-08	1.957E-28	5.883E-27	1.385E-25	8.471E-24	3.002E-22	3.500E-21	0.000E+00	0.000E+00
o-210	U-238	1.997E-07	9.328E-28	2.804E-26	6.603E-25	4.038E-23	1.431E-21	1.668E-20	0.000E+00	0.000E+00
o-210	äDOSE(j)		6.547E-05	1.890E-04	4.047E-04	8.962E-04	1.099E-03	1.765E-04	0.000E+00	0.000E+00
o-210	Ra-226	1.319E-06	1.914E-10	5.522E-10	1.181E-09	2.607E-09	3.157E-09	4.600E-10	0.000E+00	0.000E+00
o-210	Ra-226	1.899E-08	2.035E-12	5.870E-12	1.256E-11	2.774E-11	3.369E-11	5.031E-12	0.000E+00	0.000E+00
o-210	Ra-226	2.771E-10	4.020E-14	1.160E-13	2.481E-13	5.476E-13	6.631E-13	9.662E-14	0.000E+00	0.000E+00
o-210	Ra-226	2.637E-10	3.825E-14	1.103E-13	2.361E-13	5.210E-13	6.309E-13	9.193E-14	0.000E+00	0.000E+00
o-210	Ra-226	5.538E-14	8.035E-18	2.318E-17	4.959E-17	1.094E-16	1.325E-16	1.931E-17	0.000E+00	0.000E+00
o-210	Ra-226	2.640E-13	3.830E-17	1.105E-16	2.364E-16	5.216E-16	6.317E-16	9.204E-17	0.000E+00	0.000E+00
o-210	U-234	1.319E-06	2.425E-20	3.535E-19	3.867E-18	8.131E-17	1.039E-15	4.370E-15	0.000E+00	0.000E+00
o-210	U-234	2.771E-10	5.095E-24	7.425E-23	8.121E-22	1.708E-20	2.183E-19	9.178E-19	0.000E+00	0.000E+00
o-210	U-234	2.637E-10	4.847E-24	7.064E-23	7.727E-22	1.625E-20	2.077E-19	8.733E-19	0.000E+00	0.000E+00
o-210	U-234	5.538E-14	1.018E-27	1.484E-26	1.623E-25	3.413E-24	4.362E-23	1.834E-22	0.000E+00	0.000E+00
o-210	U-234	2.640E-13	4.853E-27	7.073E-26	7.736E-25	1.627E-23	2.079E-22	8.743E-22	0.000E+00	0.000E+00
o-210	U-238	2.111E-09	2.185E-29	6.566E-28	1.545E-26	9.412E-25	3.295E-23	3.484E-22	0.000E+00	0.000E+00
o-210	U-238	4.434E-13	0.000E+00	0.000E+00	0.000E+00	1.977E-28	6.920E-27	7.317E-26	0.000E+00	0.000E+00
o-210	U-238	4.219E-13	0.000E+00	0.000E+00	0.000E+00	1.881E-28	6.584E-27	6.962E-26	0.000E+00	0.000E+00

ummary : GKP Maintenance Worker -External
ile : C:\USERS\CLAUDE\DOCUMENTS\0 GKP DOSE\RESRAD CW\GKP MAINTENANCE WORKER - EXTERNAL.RAD

Individual Nuclide Dose Summed Over All Pathways
Parent Nuclide and Branch Fraction Indicated

uclide (j)	Parent (i)	THF(i)	DOSE(j,t), mrem/yr t= 0.000E+00	1.000E+00	3.000E+00	1.000E+01	3.000E+01	1.000E+02	3.000E+02	1.000E+03
ÄÄÄÄÄ	ÄÄÄÄÄÄ	ÄÄÄÄÄÄÄÄÄ	ÄÄÄÄÄÄÄÄÄ	ÄÄÄÄÄÄÄÄÄ	ÄÄÄÄÄÄÄÄÄ	ÄÄÄÄÄÄÄÄÄ	ÄÄÄÄÄÄÄÄÄ	ÄÄÄÄÄÄÄÄÄ	ÄÄÄÄÄÄÄÄÄ	ÄÄÄÄÄÄÄÄÄ
o-210	U-238	8.862E-17	0.000E+00	0.000E+00	0.000E+00	0.000E+00	0.000E+00	1.462E-29	0.000E+00	0.000E+00
o-210	U-238	4.224E-16	0.000E+00	0.000E+00	0.000E+00	0.000E+00	0.000E+00	6.970E-29	0.000E+00	0.000E+00
o-210	U-238	1.317E-06	1.363E-26	4.097E-25	9.638E-24	5.873E-22	2.056E-20	2.174E-19	0.000E+00	0.000E+00
o-210	U-238	2.767E-10	0.000E+00	8.605E-29	2.024E-27	1.234E-25	4.318E-24	4.566E-23	0.000E+00	0.000E+00
o-210	U-238	2.633E-10	0.000E+00	8.187E-29	1.926E-27	1.174E-25	4.108E-24	4.344E-23	0.000E+00	0.000E+00
o-210	U-238	5.530E-14	0.000E+00	0.000E+00	0.000E+00	2.465E-29	8.629E-28	9.125E-27	0.000E+00	0.000E+00
o-210	U-238	2.636E-13	0.000E+00	0.000E+00	0.000E+00	1.175E-28	4.113E-27	4.350E-26	0.000E+00	0.000E+00
o-210	äDOSE(j)		1.935E-10	5.583E-10	1.194E-09	2.636E-09	3.192E-09	4.652E-10	0.000E+00	0.000E+00
a-226	Ra-226	1.899E-08	1.247E-07	1.204E-07	1.122E-07	8.754E-08	4.265E-08	2.659E-09	0.000E+00	0.000E+00
a-226	Ra-226	2.100E-04	1.378E-03	1.331E-03	1.240E-03	9.677E-04	4.714E-04	2.940E-05	0.000E+00	0.000E+00
a-226	äDOSE(j)		1.379E-03	1.331E-03	1.240E-03	9.678E-04	4.715E-04	2.940E-05	0.000E+00	0.000E+00
a-226	Ra-226	2.771E-10	1.820E-09	1.757E-09	1.637E-09	1.277E-09	6.223E-10	3.880E-11	0.000E+00	0.000E+00
a-226	Ra-226	3.989E-12	2.619E-11	2.528E-11	2.356E-11	1.839E-11	8.957E-12	5.585E-13	0.000E+00	0.000E+00
a-226	äDOSE(j)		1.846E-09	1.782E-09	1.660E-09	1.296E-09	6.313E-10	3.936E-11	0.000E+00	0.000E+00
o-210	Ra-226	3.989E-12	4.274E-16	1.233E-15	2.639E-15	5.828E-15	7.077E-15	1.057E-15	0.000E+00	0.000E+00
o-210	Ra-226	3.795E-12	4.066E-16	1.173E-15	2.510E-15	5.544E-15	6.733E-15	1.005E-15	0.000E+00	0.000E+00
o-210	Ra-226	7.972E-16	8.541E-20	2.464E-19	5.273E-19	1.165E-18	1.414E-18	2.112E-19	0.000E+00	0.000E+00
o-210	Ra-226	3.800E-15	4.071E-19	1.175E-18	2.513E-18	5.551E-18	6.742E-18	1.007E-18	0.000E+00	0.000E+00
o-210	U-234	1.899E-08	2.578E-22	3.758E-21	4.111E-20	8.654E-19	1.109E-17	4.779E-17	0.000E+00	0.000E+00
o-210	U-234	3.989E-12	5.416E-26	7.894E-25	8.636E-24	1.818E-22	2.330E-21	1.004E-20	0.000E+00	0.000E+00
o-210	U-234	3.795E-12	5.152E-26	7.510E-25	8.216E-24	1.729E-22	2.217E-21	9.551E-21	0.000E+00	0.000E+00
o-210	U-234	7.972E-16	0.000E+00	1.577E-28	1.726E-27	3.632E-26	4.656E-25	2.006E-24	0.000E+00	0.000E+00
o-210	U-234	3.800E-15	5.159E-29	7.519E-28	8.226E-27	1.731E-25	2.219E-24	9.563E-24	0.000E+00	0.000E+00
o-210	U-238	3.039E-11	0.000E+00	0.000E+00	1.642E-28	1.002E-26	3.516E-25	3.810E-24	0.000E+00	0.000E+00
o-210	U-238	6.383E-15	0.000E+00	0.000E+00	0.000E+00	0.000E+00	7.386E-29	8.003E-28	0.000E+00	0.000E+00
o-210	U-238	6.073E-15	0.000E+00	0.000E+00	0.000E+00	0.000E+00	7.027E-29	7.615E-28	0.000E+00	0.000E+00
o-210	U-238	1.276E-18	0.000E+00	0.000E+00	0.000E+00	0.000E+00	0.000E+00	0.000E+00	0.000E+00	0.000E+00
o-210	U-238	6.080E-18	0.000E+00	0.000E+00	0.000E+00	0.000E+00	0.000E+00	0.000E+00	0.000E+00	0.000E+00
o-210	U-238	1.896E-08	1.449E-28	4.356E-27	1.025E-25	6.250E-24	2.194E-22	2.378E-21	0.000E+00	0.000E+00
o-210	U-238	3.983E-12	0.000E+00	0.000E+00	2.153E-29	1.313E-27	4.609E-26	4.994E-25	0.000E+00	0.000E+00
o-210	U-238	3.789E-12	0.000E+00	0.000E+00	2.048E-29	1.249E-27	4.385E-26	4.752E-25	0.000E+00	0.000E+00
o-210	U-238	7.959E-16	0.000E+00	0.000E+00	0.000E+00	0.000E+00	0.000E+00	9.980E-29	0.000E+00	0.000E+00
o-210	U-238	3.794E-15	0.000E+00	0.000E+00	0.000E+00	0.000E+00	4.390E-29	4.757E-28	0.000E+00	0.000E+00
o-210	äDOSE(j)		8.345E-16	2.408E-15	5.152E-15	1.138E-14	1.383E-14	2.111E-15	0.000E+00	0.000E+00
a-226	Ra-226	1.998E-04	1.136E-03	1.096E-03	1.021E-03	7.962E-04	3.865E-04	2.375E-05	0.000E+00	0.000E+00
a-226	Ra-226	2.637E-10	1.499E-09	1.447E-09	1.348E-09	1.051E-09	5.102E-10	3.135E-11	0.000E+00	0.000E+00
a-226	U-234	1.998E-04	2.861E-13	1.954E-12	9.771E-12	7.174E-11	3.479E-10	5.637E-10	0.000E+00	0.000E+00
a-226	U-234	2.637E-10	3.776E-19	2.579E-18	1.290E-17	9.470E-17	4.593E-16	7.440E-16	0.000E+00	0.000E+00
a-226	U-234	3.795E-12	5.435E-21	3.713E-20	1.856E-19	1.363E-18	6.611E-18	1.071E-17	0.000E+00	0.000E+00
a-226	U-238	3.196E-07	3.214E-22	4.686E-21	5.128E-20	1.080E-18	1.372E-17	4.901E-17	0.000E+00	0.000E+00
a-226	U-238	4.219E-13	4.243E-28	6.185E-27	6.769E-26	1.425E-24	1.810E-23	6.469E-23	0.000E+00	0.000E+00
a-226	U-238	6.073E-15	0.000E+00	8.903E-29	9.744E-28	2.051E-26	2.606E-25	9.311E-25	0.000E+00	0.000E+00
a-226	U-238	1.994E-04	2.006E-19	2.924E-18	3.200E-17	6.737E-16	8.558E-15	3.058E-14	0.000E+00	0.000E+00
a-226	U-238	2.633E-10	2.647E-25	3.860E-24	4.224E-23	8.893E-22	1.130E-20	4.037E-20	0.000E+00	0.000E+00
a-226	U-238	3.789E-12	3.811E-27	5.555E-26	6.080E-25	1.280E-23	1.626E-22	5.810E-22	0.000E+00	0.000E+00
a-226	äDOSE(j)		1.136E-03	1.096E-03	1.021E-03	7.962E-04	3.865E-04	2.375E-05	0.000E+00	0.000E+00

ummary : GKP Maintenance Worker -External
ile : C:\USERS\CLAUDE\DOCUMENTS\0 GKP DOSE\RESRAD CW\GKP MAINTENANCE WORKER - EXTERNAL.RAD

Individual Nuclide Dose Summed Over All Pathways
Parent Nuclide and Branch Fraction Indicated

uclide (j)	Parent (i)	THF(i)	DOSE(j,t), mrem/yr t= 0.000E+00	1.000E+00	3.000E+00	1.000E+01	3.000E+01	1.000E+02	3.000E+02	1.000E+03
ÄÄÄÄÄÄ	ÄÄÄÄÄÄÄ	ÄÄÄÄÄÄÄÄÄ	ÄÄÄÄÄÄÄÄÄ	ÄÄÄÄÄÄÄÄÄ	ÄÄÄÄÄÄÄÄÄ	ÄÄÄÄÄÄÄÄÄ	ÄÄÄÄÄÄÄÄÄ	ÄÄÄÄÄÄÄÄÄ	ÄÄÄÄÄÄÄÄÄ	ÄÄÄÄÄÄÄÄÄ
a-226	Ra-226	3.795E-12	2.158E-11	2.083E-11	1.941E-11	1.513E-11	7.344E-12	4.512E-13	0.000E+00	0.000E+00
a-226	Ra-226	4.196E-08	2.386E-07	2.303E-07	2.145E-07	1.672E-07	8.118E-08	4.988E-09	0.000E+00	0.000E+00
a-226	äDOSE(j)		2.386E-07	2.303E-07	2.145E-07	1.672E-07	8.119E-08	4.988E-09	0.000E+00	0.000E+00
a-226	Ra-226	5.538E-14	3.149E-13	3.040E-13	2.832E-13	2.207E-13	1.072E-13	6.584E-15	0.000E+00	0.000E+00
a-226	Ra-226	7.972E-16	4.533E-15	4.375E-15	4.076E-15	3.177E-15	1.542E-15	9.477E-17	0.000E+00	0.000E+00
a-226	äDOSE(j)		3.194E-13	3.083E-13	2.872E-13	2.239E-13	1.087E-13	6.679E-15	0.000E+00	0.000E+00
a-226	Ra-226	2.000E-07	6.150E-09	5.947E-09	5.560E-09	4.391E-09	2.221E-09	1.674E-10	0.000E+00	0.000E+00
a-226	Ra-226	2.640E-13	8.118E-15	7.850E-15	7.339E-15	5.796E-15	2.932E-15	2.210E-16	0.000E+00	0.000E+00
a-226	U-234	2.000E-07	1.550E-18	1.060E-17	5.319E-17	3.956E-16	1.999E-15	3.973E-15	0.000E+00	0.000E+00
a-226	U-234	2.640E-13	2.046E-24	1.399E-23	7.022E-23	5.223E-22	2.639E-21	5.244E-21	0.000E+00	0.000E+00
a-226	U-234	3.800E-15	2.944E-26	2.014E-25	1.011E-24	7.517E-24	3.799E-23	7.549E-23	0.000E+00	0.000E+00
a-226	U-238	3.200E-10	1.739E-27	2.542E-26	2.792E-25	5.955E-24	7.881E-23	3.454E-22	0.000E+00	0.000E+00
a-226	U-238	4.224E-16	0.000E+00	0.000E+00	0.000E+00	0.000E+00	1.039E-28	4.557E-28	0.000E+00	0.000E+00
a-226	U-238	6.080E-18	0.000E+00	0.000E+00	0.000E+00	0.000E+00	0.000E+00	0.000E+00	0.000E+00	0.000E+00
a-226	U-238	1.997E-07	1.087E-24	1.586E-23	1.742E-22	3.716E-21	4.918E-20	2.155E-19	0.000E+00	0.000E+00
a-226	U-238	2.636E-13	0.000E+00	2.092E-29	2.297E-28	4.900E-27	6.492E-26	2.845E-25	0.000E+00	0.000E+00
a-226	U-238	3.794E-15	0.000E+00	0.000E+00	0.000E+00	7.052E-29	9.335E-28	4.093E-27	0.000E+00	0.000E+00
a-226	äDOSE(j)		6.150E-09	5.947E-09	5.560E-09	4.391E-09	2.221E-09	1.674E-10	0.000E+00	0.000E+00
a-226	Ra-226	3.800E-15	1.169E-16	1.130E-16	1.056E-16	8.342E-17	4.220E-17	3.180E-18	0.000E+00	0.000E+00
n-232	Th-232	1.000E+00	2.505E-05	2.504E-05	2.501E-05	2.492E-05	2.456E-05	2.033E-05	0.000E+00	0.000E+00
a-228	Th-232	1.000E+00	1.378E-02	3.860E-02	7.782E-02	1.471E-01	1.694E-01	1.016E-01	0.000E+00	0.000E+00
n-228	Th-232	1.000E+00	2.443E-03	1.481E-02	5.724E-02	1.940E-01	2.627E-01	1.541E-01	0.000E+00	0.000E+00
-234	U-234	9.996E-01	1.101E-04	1.052E-04	9.620E-05	7.027E-05	2.854E-05	1.073E-06	0.000E+00	0.000E+00
-234	U-234	1.319E-06	1.453E-10	1.389E-10	1.270E-10	9.275E-11	3.768E-11	1.417E-12	0.000E+00	0.000E+00
-234	U-238	1.599E-03	2.467E-13	7.113E-13	1.519E-12	3.332E-12	3.932E-12	4.874E-13	0.000E+00	0.000E+00
-234	U-238	2.111E-09	3.257E-19	9.389E-19	2.006E-18	4.398E-18	5.191E-18	6.433E-19	0.000E+00	0.000E+00
-234	U-238	3.039E-11	4.688E-21	1.351E-20	2.887E-20	6.331E-20	7.471E-20	9.260E-21	0.000E+00	0.000E+00
-234	U-238	3.359E-07	5.182E-17	1.494E-16	3.192E-16	6.998E-16	8.260E-16	1.024E-16	0.000E+00	0.000E+00
-234	U-238	4.434E-13	6.841E-23	1.972E-22	4.213E-22	9.238E-22	1.090E-21	1.351E-22	0.000E+00	0.000E+00
-234	U-238	6.383E-15	9.847E-25	2.839E-24	6.064E-24	1.330E-23	1.569E-23	1.945E-24	0.000E+00	0.000E+00
-234	U-238	3.196E-07	4.931E-17	1.421E-16	3.037E-16	6.658E-16	7.858E-16	9.740E-17	0.000E+00	0.000E+00
-234	U-238	4.219E-13	6.508E-23	1.876E-22	4.008E-22	8.789E-22	1.037E-21	1.286E-22	0.000E+00	0.000E+00
-234	U-238	6.073E-15	9.368E-25	2.701E-24	5.769E-24	1.265E-23	1.493E-23	1.851E-24	0.000E+00	0.000E+00
-234	U-238	6.713E-11	1.036E-20	2.986E-20	6.378E-20	1.399E-19	1.651E-19	2.046E-20	0.000E+00	0.000E+00
-234	U-238	8.862E-17	1.367E-26	3.941E-26	8.419E-26	1.846E-25	2.179E-25	2.700E-26	0.000E+00	0.000E+00
-234	U-238	1.276E-18	1.968E-28	5.673E-28	1.212E-27	2.657E-27	3.136E-27	3.887E-28	0.000E+00	0.000E+00
-234	U-238	3.200E-10	4.937E-20	1.423E-19	3.040E-19	6.666E-19	7.868E-19	9.751E-20	0.000E+00	0.000E+00
-234	U-238	4.224E-16	6.516E-26	1.879E-25	4.013E-25	8.800E-25	1.039E-24	1.287E-25	0.000E+00	0.000E+00
-234	U-238	6.080E-18	9.380E-28	2.704E-27	5.776E-27	1.267E-26	1.495E-26	1.853E-27	0.000E+00	0.000E+00
-234	U-238	9.980E-01	1.540E-10	4.438E-10	9.482E-10	2.079E-09	2.454E-09	3.041E-10	0.000E+00	0.000E+00
-234	U-238	1.317E-06	2.032E-16	5.859E-16	1.252E-15	2.744E-15	3.239E-15	4.014E-16	0.000E+00	0.000E+00
-234	U-238	1.896E-08	2.925E-18	8.433E-18	1.802E-17	3.950E-17	4.662E-17	5.778E-18	0.000E+00	0.000E+00

ummary : GKP Maintenance Worker -External
ile : C:\USERS\CLAUDE\DOCUMENTS\0 GKP DOSE\RESRAD CW\GKP MAINTENANCE WORKER - EXTERNAL.RAD

Individual Nuclide Dose Summed Over All Pathways
Parent Nuclide and Branch Fraction Indicated

uclide (j)	Parent (i)	THF(i)	DOSE(j,t), mrem/yr t= 0.000E+00	1.000E+00	3.000E+00	1.000E+01	3.000E+01	1.000E+02	3.000E+02	1.000E+03
ÄÄÄÄÄ	ÄÄÄÄÄÄÄ	ÄÄÄÄÄÄÄÄÄ	ÄÄÄÄÄÄÄÄÄ	ÄÄÄÄÄÄÄÄÄ	ÄÄÄÄÄÄÄÄÄ	ÄÄÄÄÄÄÄÄÄ	ÄÄÄÄÄÄÄÄÄ	ÄÄÄÄÄÄÄÄÄ	ÄÄÄÄÄÄÄÄÄ	ÄÄÄÄÄÄÄÄÄ
-234	U-238	2.096E-04	3.234E-14	9.323E-14	1.992E-13	4.367E-13	5.154E-13	6.388E-14	0.000E+00	0.000E+00
-234	U-238	2.767E-10	4.269E-20	1.231E-19	2.629E-19	5.764E-19	6.803E-19	8.432E-20	0.000E+00	0.000E+00
-234	U-238	3.983E-12	6.144E-22	1.771E-21	3.784E-21	8.297E-21	9.793E-21	1.214E-21	0.000E+00	0.000E+00
-234	U-238	1.994E-04	3.077E-14	8.870E-14	1.895E-13	4.155E-13	4.904E-13	6.078E-14	0.000E+00	0.000E+00
-234	U-238	2.633E-10	4.061E-20	1.171E-19	2.501E-19	5.484E-19	6.473E-19	8.022E-20	0.000E+00	0.000E+00
-234	U-238	3.789E-12	5.846E-22	1.685E-21	3.600E-21	7.894E-21	9.317E-21	1.155E-21	0.000E+00	0.000E+00
-234	U-238	4.189E-08	6.463E-18	1.863E-17	3.980E-17	8.727E-17	1.030E-16	1.277E-17	0.000E+00	0.000E+00
-234	U-238	5.530E-14	8.531E-24	2.459E-23	5.254E-23	1.152E-22	1.360E-22	1.685E-23	0.000E+00	0.000E+00
-234	U-238	7.959E-16	1.228E-25	3.540E-25	7.562E-25	1.658E-24	1.957E-24	2.425E-25	0.000E+00	0.000E+00
-234	U-238	1.997E-07	3.080E-17	8.881E-17	1.897E-16	4.160E-16	4.910E-16	6.085E-17	0.000E+00	0.000E+00
-234	U-238	2.636E-13	4.066E-23	1.172E-22	2.504E-22	5.491E-22	6.481E-22	8.032E-23	0.000E+00	0.000E+00
-234	U-238	3.794E-15	5.853E-25	1.687E-24	3.604E-24	7.904E-24	9.328E-24	1.156E-24	0.000E+00	0.000E+00
-234	äDOSE(j)		1.101E-04	1.052E-04	9.621E-05	7.027E-05	2.854E-05	1.074E-06	0.000E+00	0.000E+00
a-230	U-234	9.996E-01	1.507E-09	4.431E-09	9.892E-09	2.549E-08	4.982E-08	5.262E-08	0.000E+00	0.000E+00
a-230	U-234	1.319E-06	1.989E-15	5.849E-15	1.306E-14	3.365E-14	6.576E-14	6.946E-14	0.000E+00	0.000E+00
a-230	U-234	1.899E-08	2.863E-17	8.419E-17	1.880E-16	4.844E-16	9.465E-16	9.998E-16	0.000E+00	0.000E+00
a-230	U-234	2.100E-04	3.165E-13	9.307E-13	2.078E-12	5.355E-12	1.046E-11	1.105E-11	0.000E+00	0.000E+00
a-230	U-234	2.771E-10	4.178E-19	1.229E-18	2.743E-18	7.068E-18	1.381E-17	1.459E-17	0.000E+00	0.000E+00
a-230	U-234	3.989E-12	6.014E-21	1.768E-20	3.948E-20	1.017E-19	1.988E-19	2.100E-19	0.000E+00	0.000E+00
a-230	U-234	1.998E-04	3.012E-13	8.855E-13	1.977E-12	5.095E-12	9.955E-12	1.052E-11	0.000E+00	0.000E+00
a-230	U-234	2.637E-10	3.975E-19	1.169E-18	2.610E-18	6.725E-18	1.314E-17	1.388E-17	0.000E+00	0.000E+00
a-230	U-234	3.795E-12	5.722E-21	1.682E-20	3.756E-20	9.680E-20	1.891E-19	1.998E-19	0.000E+00	0.000E+00
a-230	U-234	4.196E-08	6.326E-17	1.860E-16	4.152E-16	1.070E-15	2.091E-15	2.209E-15	0.000E+00	0.000E+00
a-230	U-234	5.538E-14	8.350E-23	2.455E-22	5.481E-22	1.413E-21	2.760E-21	2.916E-21	0.000E+00	0.000E+00
a-230	U-234	7.972E-16	1.202E-24	3.534E-24	7.890E-24	2.033E-23	3.973E-23	4.197E-23	0.000E+00	0.000E+00
a-230	U-234	2.000E-07	3.015E-16	8.866E-16	1.979E-15	5.101E-15	9.967E-15	1.053E-14	0.000E+00	0.000E+00
a-230	U-234	2.640E-13	3.980E-22	1.170E-21	2.613E-21	6.733E-21	1.316E-20	1.390E-20	0.000E+00	0.000E+00
a-230	U-234	3.800E-15	5.729E-24	1.684E-23	3.761E-23	9.691E-23	1.894E-22	2.000E-22	0.000E+00	0.000E+00
a-230	U-238	1.599E-03	2.253E-18	1.537E-17	7.664E-17	5.583E-16	2.683E-15	5.093E-15	0.000E+00	0.000E+00
a-230	U-238	2.111E-09	2.973E-24	2.028E-23	1.012E-22	7.369E-22	3.542E-21	6.722E-21	0.000E+00	0.000E+00
a-230	U-238	3.039E-11	4.280E-26	2.920E-25	1.456E-24	1.061E-23	5.098E-23	9.676E-23	0.000E+00	0.000E+00
a-230	U-238	3.359E-07	4.731E-22	3.228E-21	1.610E-20	1.173E-19	5.636E-19	1.070E-18	0.000E+00	0.000E+00
a-230	U-238	4.434E-13	6.245E-28	4.261E-27	2.125E-26	1.548E-25	7.439E-25	1.412E-24	0.000E+00	0.000E+00
a-230	U-238	6.383E-15	0.000E+00	6.133E-29	3.059E-28	2.228E-27	1.071E-26	2.032E-26	0.000E+00	0.000E+00
a-230	U-238	3.196E-07	4.501E-22	3.071E-21	1.532E-20	1.116E-19	5.362E-19	1.018E-18	0.000E+00	0.000E+00
a-230	U-238	4.219E-13	5.942E-28	4.054E-27	2.022E-26	1.473E-25	7.078E-25	1.343E-24	0.000E+00	0.000E+00
a-230	U-238	6.073E-15	0.000E+00	5.835E-29	2.910E-28	2.120E-27	1.019E-26	1.934E-26	0.000E+00	0.000E+00
a-230	U-238	6.713E-11	9.455E-26	6.450E-25	3.217E-24	2.343E-23	1.126E-22	2.138E-22	0.000E+00	0.000E+00
a-230	U-238	8.862E-17	0.000E+00	0.000E+00	0.000E+00	3.093E-29	1.487E-28	2.822E-28	0.000E+00	0.000E+00
a-230	U-238	1.276E-18	0.000E+00	0.000E+00	0.000E+00	0.000E+00	0.000E+00	0.000E+00	0.000E+00	0.000E+00
a-230	U-238	3.200E-10	4.507E-25	3.075E-24	1.533E-23	1.117E-22	5.368E-22	1.019E-21	0.000E+00	0.000E+00
a-230	U-238	4.224E-16	0.000E+00	0.000E+00	2.024E-29	1.474E-28	7.086E-28	1.345E-27	0.000E+00	0.000E+00
a-230	U-238	6.080E-18	0.000E+00	0.000E+00	0.000E+00	0.000E+00	0.000E+00	1.936E-29	0.000E+00	0.000E+00
a-230	U-238	9.980E-01	1.406E-15	9.589E-15	4.782E-14	3.484E-13	1.674E-12	3.178E-12	0.000E+00	0.000E+00
a-230	U-238	1.317E-06	1.855E-21	1.266E-20	6.313E-20	4.598E-19	2.210E-18	4.195E-18	0.000E+00	0.000E+00
a-230	U-238	1.896E-08	2.671E-23	1.822E-22	9.087E-22	6.619E-21	3.181E-20	6.038E-20	0.000E+00	0.000E+00
a-230	U-238	2.096E-04	2.952E-19	2.014E-18	1.005E-17	7.317E-17	3.517E-16	6.675E-16	0.000E+00	0.000E+00
a-230	U-238	2.767E-10	3.897E-25	2.659E-24	1.326E-23	9.659E-23	4.642E-22	8.811E-22	0.000E+00	0.000E+00

ummary : GKP Maintenance Worker -External
ile : C:\USERS\CLAUDE\DOCUMENTS\0 GKP DOSE\RESRAD CW\GKP MAINTENANCE WORKER - EXTERNAL.RAD

Individual Nuclide Dose Summed Over All Pathways
Parent Nuclide and Branch Fraction Indicated

uclide (j)	Parent (i)	THF(i)	DOSE(j,t), mrem/yr t= 0.000E+00	1.000E+00	3.000E+00	1.000E+01	3.000E+01	1.000E+02	3.000E+02	1.000E+03
ÄÄÄÄÄ	ÄÄÄÄÄÄ	ÄÄÄÄÄÄÄÄÄ	ÄÄÄÄÄÄÄÄÄ	ÄÄÄÄÄÄÄÄÄ	ÄÄÄÄÄÄÄÄÄ	ÄÄÄÄÄÄÄÄÄ	ÄÄÄÄÄÄÄÄÄ	ÄÄÄÄÄÄÄÄÄ	ÄÄÄÄÄÄÄÄÄ	ÄÄÄÄÄÄÄÄÄ
n-230	U-238	3.983E-12	5.609E-27	3.827E-26	1.909E-25	1.390E-24	6.682E-24	1.268E-23	0.000E+00	0.000E+00
n-230	U-238	1.994E-04	2.809E-19	1.916E-18	9.557E-18	6.962E-17	3.346E-16	6.351E-16	0.000E+00	0.000E+00
n-230	U-238	2.633E-10	3.708E-25	2.529E-24	1.262E-23	9.189E-23	4.416E-22	8.383E-22	0.000E+00	0.000E+00
n-230	U-238	3.789E-12	5.337E-27	3.641E-26	1.816E-25	1.323E-24	6.357E-24	1.207E-23	0.000E+00	0.000E+00
n-230	U-238	4.189E-08	5.900E-23	4.025E-22	2.007E-21	1.462E-20	7.028E-20	1.334E-19	0.000E+00	0.000E+00
n-230	U-238	5.530E-14	7.788E-29	5.313E-28	2.650E-27	1.930E-26	9.277E-26	1.761E-25	0.000E+00	0.000E+00
n-230	U-238	7.959E-16	0.000E+00	0.000E+00	3.814E-29	2.778E-28	1.335E-27	2.534E-27	0.000E+00	0.000E+00
n-230	U-238	1.997E-07	2.812E-22	1.919E-21	9.569E-21	6.970E-20	3.350E-19	6.358E-19	0.000E+00	0.000E+00
n-230	U-238	2.636E-13	3.712E-28	2.532E-27	1.263E-26	9.201E-26	4.422E-25	8.393E-25	0.000E+00	0.000E+00
n-230	U-238	3.794E-15	0.000E+00	3.645E-29	1.818E-28	1.324E-27	6.365E-27	1.208E-26	0.000E+00	0.000E+00
n-230	äDOSE(j)		1.508E-09	4.433E-09	9.897E-09	2.550E-08	4.984E-08	5.265E-08	0.000E+00	0.000E+00
-234	U-234	1.899E-08	2.091E-12	1.999E-12	1.828E-12	1.335E-12	5.423E-13	2.039E-14	0.000E+00	0.000E+00
-234	U-234	2.100E-04	2.312E-08	2.210E-08	2.021E-08	1.476E-08	5.995E-09	2.255E-10	0.000E+00	0.000E+00
-234	äDOSE(j)		2.312E-08	2.211E-08	2.021E-08	1.476E-08	5.996E-09	2.255E-10	0.000E+00	0.000E+00
a-226	U-234	2.100E-04	3.472E-13	2.372E-12	1.186E-11	8.720E-11	4.244E-10	6.977E-10	0.000E+00	0.000E+00
a-226	U-234	3.989E-12	6.597E-21	4.506E-20	2.254E-19	1.657E-18	8.064E-18	1.326E-17	0.000E+00	0.000E+00
a-226	U-238	3.359E-07	3.901E-22	5.688E-21	6.227E-20	1.312E-18	1.673E-17	6.066E-17	0.000E+00	0.000E+00
a-226	U-238	4.434E-13	5.149E-28	7.508E-27	8.219E-26	1.732E-24	2.208E-23	8.007E-23	0.000E+00	0.000E+00
a-226	U-238	6.383E-15	0.000E+00	1.081E-28	1.183E-27	2.494E-26	3.178E-25	1.153E-24	0.000E+00	0.000E+00
a-226	U-238	2.096E-04	2.434E-19	3.549E-18	3.885E-17	8.189E-16	1.044E-14	3.785E-14	0.000E+00	0.000E+00
a-226	U-238	2.767E-10	3.213E-25	4.685E-24	5.129E-23	1.081E-21	1.378E-20	4.996E-20	0.000E+00	0.000E+00
a-226	U-238	3.983E-12	4.625E-27	6.743E-26	7.382E-25	1.556E-23	1.983E-22	7.192E-22	0.000E+00	0.000E+00
a-226	äDOSE(j)		3.472E-13	2.372E-12	1.186E-11	8.720E-11	4.244E-10	6.977E-10	0.000E+00	0.000E+00
-234	U-234	2.771E-10	3.051E-14	2.918E-14	2.667E-14	1.948E-14	7.914E-15	2.976E-16	0.000E+00	0.000E+00
-234	U-234	3.989E-12	4.392E-16	4.200E-16	3.839E-16	2.804E-16	1.139E-16	4.284E-18	0.000E+00	0.000E+00
-234	äDOSE(j)		3.095E-14	2.960E-14	2.706E-14	1.976E-14	8.028E-15	3.019E-16	0.000E+00	0.000E+00
a-226	U-234	2.771E-10	4.583E-19	3.131E-18	1.566E-17	1.151E-16	5.602E-16	9.210E-16	0.000E+00	0.000E+00
-234	U-234	1.998E-04	2.199E-08	2.103E-08	1.923E-08	1.404E-08	5.704E-09	2.145E-10	0.000E+00	0.000E+00
-234	U-234	2.637E-10	2.903E-14	2.776E-14	2.538E-14	1.854E-14	7.529E-15	2.831E-16	0.000E+00	0.000E+00
-234	äDOSE(j)		2.199E-08	2.103E-08	1.923E-08	1.404E-08	5.704E-09	2.145E-10	0.000E+00	0.000E+00
-234	U-234	3.795E-12	4.179E-16	3.996E-16	3.653E-16	2.668E-16	1.084E-16	4.076E-18	0.000E+00	0.000E+00
-234	U-234	4.196E-08	4.620E-12	4.417E-12	4.038E-12	2.949E-12	1.198E-12	4.506E-14	0.000E+00	0.000E+00
-234	äDOSE(j)		4.620E-12	4.418E-12	4.039E-12	2.950E-12	1.198E-12	4.506E-14	0.000E+00	0.000E+00
a-226	U-234	4.196E-08	6.008E-17	4.104E-16	2.052E-15	1.507E-14	7.308E-14	1.184E-13	0.000E+00	0.000E+00
a-226	U-234	7.972E-16	1.142E-24	7.797E-24	3.899E-23	2.863E-22	1.389E-21	2.249E-21	0.000E+00	0.000E+00
a-226	U-238	6.713E-11	6.750E-26	9.842E-25	1.077E-23	2.268E-22	2.881E-21	1.029E-20	0.000E+00	0.000E+00
a-226	U-238	8.862E-17	0.000E+00	0.000E+00	1.422E-29	2.993E-28	3.802E-27	1.359E-26	0.000E+00	0.000E+00
a-226	U-238	1.276E-18	0.000E+00	0.000E+00	0.000E+00	0.000E+00	5.473E-29	1.956E-28	0.000E+00	0.000E+00
a-226	U-238	4.189E-08	4.212E-23	6.141E-22	6.721E-21	1.415E-19	1.798E-18	6.423E-18	0.000E+00	0.000E+00
a-226	U-238	5.530E-14	5.560E-29	8.106E-28	8.872E-27	1.868E-25	2.373E-24	8.478E-24	0.000E+00	0.000E+00
a-226	U-238	7.959E-16	0.000E+00	0.000E+00	1.277E-28	2.689E-27	3.415E-26	1.220E-25	0.000E+00	0.000E+00
a-226	äDOSE(j)		6.008E-17	4.104E-16	2.052E-15	1.507E-14	7.308E-14	1.184E-13	0.000E+00	0.000E+00

ummary : GKP Maintenance Worker -External
ile : C:\USERS\CLAUDE\DOCUMENTS\0 GKP DOSE\RESRAD CW\GKP MAINTENANCE WORKER - EXTERNAL.RAD

Individual Nuclide Dose Summed Over All Pathways
Parent Nuclide and Branch Fraction Indicated

uclide (j)	Parent (i)	THF(i)	DOSE(j,t), mrem/yr t= 0.000E+00	1.000E+00	3.000E+00	1.000E+01	3.000E+01	1.000E+02	3.000E+02	1.000E+03
ÄÄÄÄÄÄ	ÄÄÄÄÄÄÄ	ÄÄÄÄÄÄÄÄÄ	ÄÄÄÄÄÄÄÄÄ	ÄÄÄÄÄÄÄÄÄ	ÄÄÄÄÄÄÄÄÄ	ÄÄÄÄÄÄÄÄÄ	ÄÄÄÄÄÄÄÄÄ	ÄÄÄÄÄÄÄÄÄ	ÄÄÄÄÄÄÄÄÄ	ÄÄÄÄÄÄÄÄÄ
-234	U-234	5.538E-14	6.098E-18	5.831E-18	5.330E-18	3.893E-18	1.581E-18	5.947E-20	0.000E+00	0.000E+00
-234	U-234	7.972E-16	8.777E-20	8.393E-20	7.673E-20	5.604E-20	2.276E-20	8.561E-22	0.000E+00	0.000E+00
-234	äDOSE(j)		6.186E-18	5.915E-18	5.407E-18	3.949E-18	1.604E-18	6.033E-20	0.000E+00	0.000E+00
a-226	U-234	5.538E-14	7.931E-23	5.417E-22	2.709E-21	1.989E-20	9.647E-20	1.563E-19	0.000E+00	0.000E+00
-234	U-234	2.000E-07	2.202E-11	2.105E-11	1.925E-11	1.406E-11	5.711E-12	2.148E-13	0.000E+00	0.000E+00
-234	U-234	2.640E-13	2.907E-17	2.779E-17	2.541E-17	1.856E-17	7.538E-18	2.835E-19	0.000E+00	0.000E+00
-234	äDOSE(j)		2.202E-11	2.105E-11	1.925E-11	1.406E-11	5.711E-12	2.148E-13	0.000E+00	0.000E+00
-234	U-234	3.800E-15	4.184E-19	4.000E-19	3.657E-19	2.671E-19	1.085E-19	4.081E-21	0.000E+00	0.000E+00
-235	U-235	9.835E-01	1.178E-02	1.125E-02	1.027E-02	7.445E-03	2.950E-03	9.209E-05	0.000E+00	0.000E+00
-235	U-235	2.722E-03	3.260E-05	3.114E-05	2.842E-05	2.060E-05	8.164E-06	2.549E-07	0.000E+00	0.000E+00
-235	äDOSE(j)		1.181E-02	1.128E-02	1.030E-02	7.465E-03	2.958E-03	9.235E-05	0.000E+00	0.000E+00
a-231	U-235	9.835E-01	2.994E-08	8.619E-08	1.836E-07	3.980E-07	4.523E-07	4.358E-08	0.000E+00	0.000E+00
a-231	U-235	2.722E-03	8.285E-11	2.385E-10	5.080E-10	1.102E-09	1.252E-09	1.206E-10	0.000E+00	0.000E+00
a-231	U-235	1.376E-02	4.189E-10	1.206E-09	2.568E-09	5.569E-09	6.329E-09	6.097E-10	0.000E+00	0.000E+00
a-231	U-235	3.809E-05	1.159E-12	3.338E-12	7.109E-12	1.541E-11	1.752E-11	1.688E-12	0.000E+00	0.000E+00
a-231	U-235	8.257E-07	2.513E-14	7.236E-14	1.541E-13	3.342E-13	3.798E-13	3.659E-14	0.000E+00	0.000E+00
a-231	U-235	2.285E-09	6.956E-17	2.003E-16	4.265E-16	9.249E-16	1.051E-15	1.013E-16	0.000E+00	0.000E+00
a-231	äDOSE(j)		3.044E-08	8.764E-08	1.866E-07	4.047E-07	4.599E-07	4.431E-08	0.000E+00	0.000E+00
c-227	U-235	9.835E-01	3.270E-09	2.141E-08	9.736E-08	5.150E-07	1.067E-06	1.376E-07	0.000E+00	0.000E+00
c-227	U-235	2.722E-03	9.162E-12	5.998E-11	2.728E-10	1.443E-09	2.989E-09	3.851E-10	0.000E+00	0.000E+00
c-227	U-235	1.376E-02	3.837E-11	2.513E-10	1.143E-09	6.047E-09	1.254E-08	1.628E-09	0.000E+00	0.000E+00
c-227	äDOSE(j)		4.754E-11	3.112E-10	1.416E-09	7.490E-09	1.553E-08	2.013E-09	0.000E+00	0.000E+00
-235	U-235	1.376E-02	1.648E-04	1.574E-04	1.437E-04	1.042E-04	4.127E-05	1.289E-06	0.000E+00	0.000E+00
-235	U-235	3.809E-05	4.562E-07	4.358E-07	3.976E-07	2.883E-07	1.142E-07	3.566E-09	0.000E+00	0.000E+00
-235	äDOSE(j)		1.653E-04	1.579E-04	1.441E-04	1.045E-04	4.139E-05	1.292E-06	0.000E+00	0.000E+00
c-227	U-235	3.809E-05	1.078E-13	7.057E-13	3.210E-12	1.698E-11	3.520E-11	4.563E-12	0.000E+00	0.000E+00
c-227	U-235	8.257E-07	1.045E-15	6.841E-15	3.111E-14	1.644E-13	3.393E-13	4.318E-14	0.000E+00	0.000E+00
c-227	äDOSE(j)		1.088E-13	7.125E-13	3.241E-12	1.715E-11	3.554E-11	4.606E-12	0.000E+00	0.000E+00
-235	U-235	8.257E-07	9.890E-09	9.447E-09	8.620E-09	6.250E-09	2.476E-09	7.732E-11	0.000E+00	0.000E+00
-235	U-235	2.285E-09	2.737E-11	2.615E-11	2.386E-11	1.730E-11	6.854E-12	2.140E-13	0.000E+00	0.000E+00
-235	äDOSE(j)		9.917E-09	9.474E-09	8.644E-09	6.268E-09	2.483E-09	7.754E-11	0.000E+00	0.000E+00
c-227	U-235	2.285E-09	2.987E-18	1.955E-17	8.890E-17	4.697E-16	9.691E-16	1.230E-16	0.000E+00	0.000E+00
-238	U-238	5.450E-07	1.621E-11	1.551E-11	1.419E-11	1.042E-11	4.309E-12	1.928E-13	0.000E+00	0.000E+00
-238	U-238	1.599E-03	4.335E-03	4.135E-03	3.763E-03	2.703E-03	1.039E-03	2.832E-05	0.000E+00	0.000E+00
-238	äDOSE(j)		4.335E-03	4.135E-03	3.763E-03	2.703E-03	1.039E-03	2.832E-05	0.000E+00	0.000E+00
-238	U-238	2.111E-09	5.722E-09	5.459E-09	4.968E-09	3.568E-09	1.372E-09	3.739E-11	0.000E+00	0.000E+00

ummary : GKP Maintenance Worker -External
ile : C:\USERS\CLAUDE\DOCUMENTS\0 GKP DOSE\RESRAD CW\GKP MAINTENANCE WORKER - EXTERNAL.RAD

Individual Nuclide Dose Summed Over All Pathways
Parent Nuclide and Branch Fraction Indicated

uclide (j)	Parent (i)	THF(i)	DOSE(j,t), mrem/yr t= 0.000E+00	1.000E+00	3.000E+00	1.000E+01	3.000E+01	1.000E+02	3.000E+02	1.000E+03
ÄÄÄÄÄ	ÄÄÄÄÄÄ	ÄÄÄÄÄÄÄÄ	ÄÄÄÄÄÄÄÄÄ	ÄÄÄÄÄÄÄÄÄ	ÄÄÄÄÄÄÄÄÄ	ÄÄÄÄÄÄÄÄÄ	ÄÄÄÄÄÄÄÄÄ	ÄÄÄÄÄÄÄÄÄ	ÄÄÄÄÄÄÄÄÄ	ÄÄÄÄÄÄÄÄÄ
-238	U-238	3.039E-11	8.236E-11	7.857E-11	7.150E-11	5.136E-11	1.975E-11	5.381E-13	0.000E+00	0.000E+00
-238	äDOSE(j)		5.804E 09	5.537E-09	5.039E-09	3.619E-09	1.392E-09	3.792E-11	0.000E+00	0.000E+00
-238	U-238	3.359E-07	9.105E-07	8.686E-07	7.905E-07	5.678E-07	2.183E-07	5.949E-09	0.000E+00	0.000E+00
-238	U-238	4.434E-13	1.202E-12	1.147E-12	1.043E-12	7.494E-13	2.881E-13	7.853E-15	0.000E+00	0.000E+00
-238	äDOSE(j)		9.105E-07	8.686E-07	7.905E-07	5.678E-07	2.183E-07	5.949E-09	0.000E+00	0.000E+00
-238	U-238	6.383E-15	1.730E-14	1.650E-14	1.502E-14	1.079E-14	4.148E-15	1.130E-16	0.000E+00	0.000E+00
-238	U-238	3.196E-07	8.662E-07	8.264E-07	7.521E-07	5.402E-07	2.077E-07	5.660E-09	0.000E+00	0.000E+00
-238	äDOSE(j)		8.662E-07	8.264E-07	7.521E-07	5.402E-07	2.077E-07	5.660E-09	0.000E+00	0.000E+00
-238	U-238	4.219E-13	1.143E-12	1.091E-12	9.927E-13	7.130E-13	2.742E-13	7.471E-15	0.000E+00	0.000E+00
-238	U-238	6.073E-15	1.646E-14	1.570E-14	1.429E-14	1.026E-14	3.946E-15	1.075E-16	0.000E+00	0.000E+00
-238	äDOSE(j)		1.160E-12	1.107E-12	1.007E-12	7.233E-13	2.781E-13	7.579E-15	0.000E+00	0.000E+00
-238	U-238	6.713E-11	1.819E-10	1.736E-10	1.580E-10	1.135E-10	4.362E-11	1.189E-12	0.000E+00	0.000E+00
-238	U-238	8.862E-17	2.402E-16	2.291E-16	2.085E-16	1.498E-16	5.758E-17	1.569E-18	0.000E+00	0.000E+00
-238	äDOSE(j)		1.819E-10	1.736E-10	1.580E-10	1.135E-10	4.362E-11	1.189E-12	0.000E+00	0.000E+00
-238	U-238	1.276E-18	3.457E-18	3.298E-18	3.001E-18	2.156E-18	8.289E-19	2.259E-20	0.000E+00	0.000E+00
-238	U-238	3.200E-10	8.673E-10	8.274E-10	7.530E-10	5.408E-10	2.079E-10	5.667E-12	0.000E+00	0.000E+00
-238	äDOSE(j)		8.673E-10	8.274E-10	7.530E-10	5.408E-10	2.079E-10	5.667E-12	0.000E+00	0.000E+00
-238	U-238	4.224E-16	1.145E-15	1.092E-15	9.939E-16	7.139E-16	2.745E-16	7.480E-18	0.000E+00	0.000E+00
-238	U-238	6.080E-18	1.648E-17	1.572E-17	1.431E-17	1.028E-17	3.951E-18	1.077E-19	0.000E+00	0.000E+00
-238	äDOSE(j)		1.161E-15	1.108E-15	1.008E-15	7.242E-16	2.784E-16	7.588E-18	0.000E+00	0.000E+00
-238	U-238	9.980E-01	2.749E-02	2.624E-02	2.391E-02	1.725E-02	6.731E-03	2.001E-04	0.000E+00	0.000E+00
-238	U-238	1.317E-06	3.628E-08	3.463E-08	3.156E-08	2.277E-08	8.885E-09	2.642E-10	0.000E+00	0.000E+00
-238	äDOSE(j)		2.749E-02	2.624E-02	2.391E-02	1.725E-02	6.731E-03	2.001E-04	0.000E+00	0.000E+00
-238	U-238	1.896E-08	5.222E-10	4.985E-10	4.542E-10	3.277E-10	1.279E-10	3.803E-12	0.000E+00	0.000E+00
-238	U-238	2.096E-04	5.773E-06	5.511E-06	5.021E-06	3.623E-06	1.414E-06	4.204E-08	0.000E+00	0.000E+00
-238	äDOSE(j)		5.774E-06	5.512E-06	5.022E-06	3.623E-06	1.414E-06	4.204E-08	0.000E+00	0.000E+00
-238	U-238	2.767E-10	7.621E-12	7.275E-12	6.628E-12	4.782E-12	1.866E-12	5.549E-14	0.000E+00	0.000E+00
-238	U-238	3.983E-12	1.097E-13	1.047E-13	9.541E-14	6.883E-14	2.686E-14	7.987E-16	0.000E+00	0.000E+00
-238	äDOSE(j)		7.730E-12	7.379E-12	6.724E-12	4.851E-12	1.893E-12	5.629E-14	0.000E+00	0.000E+00
-238	U-238	1.994E-04	5.493E-06	5.243E-06	4.777E-06	3.447E-06	1.345E-06	4.000E-08	0.000E+00	0.000E+00
-238	U-238	2.633E-10	7.251E-12	6.921E-12	6.306E-12	4.550E-12	1.775E-12	5.280E-14	0.000E+00	0.000E+00
-238	äDOSE(j)		5.493E-06	5.243E-06	4.777E-06	3.447E-06	1.345E-06	4.000E-08	0.000E+00	0.000E+00
-238	U-238	3.789E-12	1.044E-13	9.962E-14	9.077E-14	6.549E-14	2.556E-14	7.599E-16	0.000E+00	0.000E+00
-238	U-238	4.189E-08	1.154E-09	1.101E-09	1.003E-09	7.240E-10	2.825E-10	8.401E-12	0.000E+00	0.000E+00
-238	äDOSE(j)		1.154E-09	1.101E-09	1.004E-09	7.241E-10	2.825E-10	8.402E-12	0.000E+00	0.000E+00
-238	U-238	5.530E-14	1.523E-15	1.454E-15	1.325E-15	9.557E-16	3.729E-16	1.109E-17	0.000E+00	0.000E+00
-238	U-238	7.959E-16	2.192E-17	2.093E-17	1.907E-17	1.376E-17	5.368E-18	1.596E-19	0.000E+00	0.000E+00
-238	äDOSE(j)		1.545E-15	1.475E-15	1.344E-15	9.694E-16	3.783E-16	1.125E-17	0.000E+00	0.000E+00

ummary : GKP Maintenance Worker -External
ile : C:\USERS\CLAUDE\DOCUMENTS\0 GKP DOSE\RESRAD CW\GKP MAINTENANCE WORKER - EXTERNAL.RAD

Individual Nuclide Dose Summed Over All Pathways
Parent Nuclide and Branch Fraction Indicated

uclide (j)	Parent (i)	THF(i)	DOSE(j,t), mrem/yr t= 0.000E+00	1.000E+00	3.000E+00	1.000E+01	3.000E+01	1.000E+02	3.000E+02	1.000E+03
ÄÄÄÄÄÄ	ÄÄÄÄÄÄÄ	ÄÄÄÄÄÄÄÄÄ	ÄÄÄÄÄÄÄÄÄ	ÄÄÄÄÄÄÄÄÄ	ÄÄÄÄÄÄÄÄÄ	ÄÄÄÄÄÄÄÄÄ	ÄÄÄÄÄÄÄÄÄ	ÄÄÄÄÄÄÄÄÄ	ÄÄÄÄÄÄÄÄÄ	ÄÄÄÄÄÄÄÄÄ
-238	U-238	1.997E-07	5.499E-09	5.250E-09	4.783E-09	3.451E-09	1.347E-09	4.005E-11	0.000E+00	0.000E+00
-238	U-238	2.636E-13	7.259E-15	6.930E-15	6.314E-15	4.555E-15	1.778E-15	5.286E-17	0.000E+00	0.000E+00
-238	ÄDOSE(j)		5.499E-09	5.250E-09	4.783E-09	3.451E-09	1.347E-09	4.005E-11	0.000E+00	0.000E+00
-238	U-238	3.794E-15	1.045E-16	9.974E-17	9.088E-17	6.557E-17	2.559E-17	7.609E-19	0.000E+00	0.000E+00
íííííí	íííííííí	ííííííííí	ííííííííí	ííííííííí	ííííííííí	ííííííííí	ííííííííí	ííííííííí	ííííííííí	ííííííííí

HF(i) is the thread fraction of the parent nuclide.

ummary : GKP Maintenance Worker -External
ile : C:\USERS\CLAUDE\DOCUMENTS\0 GKP DOSE\RESRAD CW\GKP MAINTENANCE WORKER - EXTERNAL.RAD

Individual Nuclide Soil Concentration
Parent Nuclide and Branch Fraction Indicated

uclide (j)	Parent (i)	THF(i)	S(j,t), pCi/g t= 0.000E+00	1.000E+00	3.000E+00	1.000E+01	3.000E+01	1.000E+02	3.000E+02	1.000E+03
ÄÄÄÄÄÄ	ÄÄÄÄÄÄÄ	ÄÄÄÄÄÄÄÄÄ	ÄÄÄÄÄÄÄÄÄ	ÄÄÄÄÄÄÄÄÄ	ÄÄÄÄÄÄÄÄÄ	ÄÄÄÄÄÄÄÄÄ	ÄÄÄÄÄÄÄÄÄ	ÄÄÄÄÄÄÄÄÄ	ÄÄÄÄÄÄÄÄÄ	ÄÄÄÄÄÄÄÄÄ
a-226	Ra-226	9.996E-01	3.648E+01	3.533E+01	3.314E+01	2.647E+01	1.394E+01	1.475E+00	2.411E-03	4.255E-13
a-226	Ra-226	1.319E-06	4.816E-05	4.664E-05	4.374E-05	3.494E-05	1.839E-05	1.947E-06	3.182E-09	5.616E-19
a-226	U-234	9.996E-01	0.000E+00	2.698E-08	2.308E-07	2.155E-06	1.208E-05	3.439E-05	3.853E-05	3.731E-05
a-226	U-234	1.319E-06	0.000E+00	3.561E-14	3.047E-13	2.844E-12	1.595E-11	4.540E-11	5.086E-11	4.925E-11
a-226	U-234	1.899E-08	0.000E+00	5.126E-16	4.386E-15	4.094E-14	2.295E-13	6.534E-13	7.321E-13	7.089E-13
a-226	U-238	1.599E-03	0.000E+00	4.044E-17	1.028E-15	3.093E-14	4.696E-13	2.984E-12	3.935E-12	3.813E-12
a-226	U-238	2.111E-09	0.000E+00	5.338E-23	1.357E-21	4.082E-20	6.199E-19	3.939E-18	5.194E-18	5.033E-18
a-226	U-238	3.039E-11	0.000E+00	7.683E-25	1.953E-23	5.876E-22	8.923E-21	5.670E-20	7.477E-20	7.244E-20
a-226	U-238	9.980E-01	0.000E+00	2.523E-14	6.416E-13	1.930E-11	2.930E-10	1.862E-09	2.455E-09	2.379E-09
a-226	U-238	1.317E-06	0.000E+00	3.331E-20	8.469E-19	2.547E-17	3.868E-16	2.458E-15	3.241E-15	3.140E-15
a-226	U-238	1.896E-08	0.000E+00	4.794E-22	1.219E-20	3.667E-19	5.568E-18	3.538E-17	4.665E-17	4.520E-17
a-226	äS(j):		3.649E+01	3.533E+01	3.314E+01	2.647E+01	1.394E+01	1.475E+00	2.449E-03	3.731E-05
o-210	Ra-226	9.996E-01	0.000E+00	1.092E+00	3.007E+00	7.444E+00	9.643E+00	1.904E+00	3.525E-03	6.232E-13
o-210	Ra-226	2.100E-04	0.000E+00	2.293E-04	6.315E-04	1.564E-03	2.026E-03	4.000E-04	7.405E-07	1.309E-16
o-210	Ra-226	1.998E-04	0.000E+00	2.181E-04	6.009E-04	1.488E-03	1.927E-03	3.805E-04	7.045E-07	1.245E-16
o-210	Ra-226	4.196E-08	0.000E+00	4.582E-08	1.262E-07	3.125E-07	4.048E-07	7.993E-08	1.480E-10	2.616E-20
o-210	Ra-226	2.000E-07	0.000E+00	2.184E-07	6.016E-07	1.489E-06	1.929E-06	3.810E-07	7.053E-10	1.247E-19
o-210	U-234	9.996E-01	0.000E+00	2.788E-10	7.058E-09	2.091E-07	3.053E-06	1.777E-05	2.254E-05	2.184E-05
o-210	U-234	2.100E-04	0.000E+00	5.857E-14	1.482E-12	4.392E-11	6.412E-10	3.732E-09	4.735E-09	4.587E-09
o-210	U-234	1.998E-04	0.000E+00	5.572E-14	1.410E-12	4.178E-11	6.101E-10	3.550E-09	4.505E-09	4.364E-09
o-210	U-234	4.196E-08	0.000E+00	1.170E-17	2.963E-16	8.776E-15	1.281E-13	7.457E-13	9.462E-13	9.166E-13
o-210	U-234	2.000E-07	0.000E+00	5.579E-17	1.412E-15	4.183E-14	6.108E-13	3.555E-12	4.510E-12	4.369E-12
o-210	U-238	1.599E-03	0.000E+00	3.142E-19	2.374E-17	2.303E-15	9.533E-14	1.413E-12	2.300E-12	2.231E-12
o-210	U-238	3.359E-07	0.000E+00	6.599E-23	4.987E-21	4.838E-19	2.002E-17	2.967E-16	4.832E-16	4.687E-16
o-210	U-238	3.196E-07	0.000E+00	6.278E-23	4.745E-21	4.603E-19	1.905E-17	2.823E-16	4.597E-16	4.459E-16
o-210	U-238	6.713E-11	0.000E+00	1.319E-26	9.966E-25	9.669E-23	4.001E-21	5.929E-20	9.656E-20	9.366E-20
o-210	U-238	3.200E-10	0.000E+00	6.286E-26	4.750E-24	4.609E-22	1.907E-20	2.826E-19	4.603E-19	4.464E-19
o-210	U-238	9.980E-01	0.000E+00	1.960E-16	1.481E-14	1.437E-12	5.948E-11	8.814E-10	1.435E-09	1.392E-09
o-210	U-238	2.096E-04	0.000E+00	4.118E-20	3.112E-18	3.019E-16	1.249E-14	1.851E-13	3.015E-13	2.925E-13
o-210	U-238	1.994E-04	0.000E+00	3.918E-20	2.961E-18	2.872E-16	1.189E-14	1.761E-13	2.869E-13	2.782E-13
o-210	U-238	4.189E-08	0.000E+00	8.229E-24	6.219E-22	6.033E-20	2.497E-18	3.700E-17	6.025E-17	5.844E-17
o-210	U-238	1.997E-07	0.000E+00	3.922E-23	2.964E-21	2.876E-19	1.190E-17	1.764E-16	2.872E-16	2.786E-16
o-210	äS(j):		0.000E+00	1.092E+00	3.008E+00	7.447E+00	9.647E+00	1.905E+00	3.549E-03	2.185E-05
o-210	Ra-226	1.319E-06	0.000E+00	1.441E-06	3.969E-06	9.826E-06	1.273E-05	2.514E-06	4.653E-09	8.226E-19
o-210	Ra-226	1.899E-08	0.000E+00	2.074E-08	5.713E-08	1.414E-07	1.832E-07	3.618E-08	6.698E-11	1.184E-20
o-210	Ra-226	2.771E-10	0.000E+00	3.026E-10	8.336E-10	2.064E-09	2.674E-09	5.280E-10	9.774E-13	1.728E-22
o-210	Ra-226	2.637E-10	0.000E+00	2.879E-10	7.931E-10	1.964E-09	2.544E-09	5.023E-10	9.299E-13	1.644E-22
o-210	Ra-226	5.538E-14	0.000E+00	6.048E-14	1.666E-13	4.124E-13	5.343E-13	1.055E-13	1.953E-16	3.453E-26
o-210	Ra-226	2.640E-13	0.000E+00	2.883E-13	7.941E-13	1.966E-12	2.547E-12	5.029E-13	9.311E-16	1.646E-25
o-210	U-234	1.319E-06	0.000E+00	3.681E-16	9.317E-15	2.760E-13	4.030E-12	2.345E-11	2.975E-11	2.882E-11
o-210	U-234	2.771E-10	0.000E+00	7.731E-20	1.957E-18	5.797E-17	8.464E-16	4.926E-15	6.250E-15	6.054E-15
o-210	U-234	2.637E-10	0.000E+00	7.356E-20	1.862E-18	5.515E-17	8.053E-16	4.686E-15	5.946E-15	5.760E-15
o-210	U-234	5.538E-14	0.000E+00	1.545E-23	3.911E-22	1.158E-20	1.691E-19	9.844E-19	1.249E-18	1.210E-18
o-210	U-234	2.640E-13	0.000E+00	7.364E-23	1.864E-21	5.522E-20	8.063E-19	4.692E-18	5.953E-18	5.767E-18
o-210	U-238	2.111E-09	0.000E+00	4.147E-25	3.134E-23	3.041E-21	1.258E-19	1.865E-18	3.037E-18	2.945E-18
o-210	U-238	4.434E-13	0.000E+00	8.711E-29	6.583E-27	6.387E-25	2.643E-23	3.916E-22	6.378E-22	6.187E-22
o-210	U-238	4.219E-13	0.000E+00	8.287E-29	6.263E-27	6.076E-25	2.515E-23	3.726E-22	6.068E-22	5.886E-22

ummary : GKP Maintenance Worker -External
ile : C:\USERS\CLAUDE\DOCUMENTS\0 GKP DOSE\RESRAD CW\GKP MAINTENANCE WORKER - EXTERNAL.RAD

Individual Nuclide Soil Concentration
Parent Nuclide and Branch Fraction Indicated

uclide (j)	Parent (i)	THF(i)	S(j,t), pCi/g t= 0.000E+00	1.000E+00	3.000E+00	1.000E+01	3.000E+01	1.000E+02	3.000E+02	1.000E+03
ÄÄÄÄÄ	ÄÄÄÄÄÄÄ	ÄÄÄÄÄÄÄÄÄ	ÄÄÄÄÄÄÄÄÄ	ÄÄÄÄÄÄÄÄÄ	ÄÄÄÄÄÄÄÄÄ	ÄÄÄÄÄÄÄÄÄ	ÄÄÄÄÄÄÄÄÄ	ÄÄÄÄÄÄÄÄÄ	ÄÄÄÄÄÄÄÄÄ	ÄÄÄÄÄÄÄÄÄ
o-210	U-238	8.862E-17	0.000E+00	1.741E-32	1.315E-30	1.276E-28	5.282E-27	7.826E-26	1.275E-25	1.236E-25
o-210	U-238	4.224E-16	0.000E+00	8.297E-32	6.270E-30	6.084E-28	2.518E-26	3.731E-25	6.076E-25	5.893E-25
o-210	U-238	1.317E-06	0.000E+00	2.588E-22	1.956E-20	1.897E-18	7.852E-17	1.163E-15	1.895E-15	1.838E-15
o-210	U-238	2.767E-10	0.000E+00	5.435E-26	4.108E-24	3.985E-22	1.649E-20	2.444E-19	3.980E-19	3.860E-19
o-210	U-238	2.633E-10	0.000E+00	5.171E-26	3.908E-24	3.792E-22	1.569E-20	2.325E-19	3.787E-19	3.673E-19
o-210	U-238	5.530E-14	0.000E+00	1.086E-29	8.209E-28	7.964E-26	3.296E-24	4.884E-23	7.954E-23	7.715E-23
o-210	U-238	2.636E-13	0.000E+00	5.178E-29	3.913E-27	3.796E-25	1.571E-23	2.328E-22	3.791E-22	3.677E-22
o-210	äS(j):		0.000E+00	1.462E-06	4.028E-06	9.971E-06	1.292E-05	2.551E-06	4.752E-09	2.884E-11
a-226	Ra-226	1.899E-08	6.932E-07	6.713E-07	6.296E-07	5.030E-07	2.648E-07	2.802E-08	4.580E-11	8.084E-21
a-226	Ra-226	2.100E-04	7.663E-03	7.421E-03	6.960E-03	5.560E-03	2.927E-03	3.098E-04	5.063E-07	8.936E-17
a-226	äS(j):		7.664E-03	7.422E-03	6.961E-03	5.561E-03	2.927E-03	3.098E-04	5.064E-07	8.937E-17
a-226	Ra-226	2.771E-10	1.012E-08	9.796E-09	9.188E-09	7.340E-09	3.864E-09	4.090E-10	6.684E-13	1.180E-22
a-226	Ra-226	3.989E-12	1.456E-10	1.410E-10	1.322E-10	1.056E-10	5.561E-11	5.886E-12	9.621E-15	1.698E-24
a-226	äS(j):		1.026E-08	9.937E-09	9.320E-09	7.445E-09	3.919E-09	4.148E-10	6.780E-13	1.197E-22
o-210	Ra-226	3.989E-12	0.000E+00	4.356E-12	1.200E-11	2.971E-11	3.849E-11	7.599E-12	1.407E-14	2.487E-24
o-210	Ra-226	3.795E-12	0.000E+00	4.144E-12	1.142E-11	2.826E-11	3.662E-11	7.230E-12	1.339E-14	2.366E-24
o-210	Ra-226	7.972E-16	0.000E+00	8.705E-16	2.398E-15	5.937E-15	7.691E-15	1.519E-15	2.812E-18	4.970E-28
o-210	Ra-226	3.800E-15	0.000E+00	4.149E-15	1.143E-14	2.830E-14	3.666E-14	7.239E-15	1.340E-17	2.369E-27
o-210	U-234	1.899E-08	0.000E+00	5.298E-18	1.341E-16	3.973E-15	5.800E-14	3.376E-13	4.283E-13	4.149E-13
o-210	U-234	3.989E-12	0.000E+00	1.113E-21	2.817E-20	8.344E-19	1.218E-17	7.090E-17	8.996E-17	8.715E-17
o-210	U-234	3.795E-12	0.000E+00	1.059E-21	2.680E-20	7.939E-19	1.159E-17	6.746E-17	8.559E-17	8.291E-17
o-210	U-234	7.972E-16	0.000E+00	2.224E-25	5.629E-24	1.667E-22	2.435E-21	1.417E-20	1.798E-20	1.742E-20
o-210	U-234	3.800E-15	0.000E+00	1.060E-24	2.683E-23	7.948E-22	1.161E-20	6.754E-20	8.569E-20	8.301E-20
o-210	U-238	3.039E-11	0.000E+00	5.969E-27	4.511E-25	4.377E-23	1.811E-21	2.684E-20	4.371E-20	4.240E-20
o-210	U-238	6.383E-15	0.000E+00	1.254E-30	9.475E-29	9.193E-27	3.804E-25	5.637E-24	9.181E-24	8.905E-24
o-210	U-238	6.073E-15	0.000E+00	1.193E-30	9.015E-29	8.746E-27	3.620E-25	5.363E-24	8.735E-24	8.472E-24
o-210	U-238	1.276E-18	0.000E+00	2.506E-34	1.893E-32	1.837E-30	7.603E-29	1.127E-27	1.835E-27	1.780E-27
o-210	U-238	6.080E-18	0.000E+00	1.194E-33	9.026E-32	8.757E-30	3.624E-28	5.370E-27	8.745E-27	8.483E-27
o-210	U-238	1.896E-08	0.000E+00	3.725E-24	2.815E-22	2.731E-20	1.130E-18	1.675E-17	2.727E-17	2.645E-17
o-210	U-238	3.983E-12	0.000E+00	7.824E-28	5.912E-26	5.736E-24	2.374E-22	3.518E-21	5.729E-21	5.557E-21
o-210	U-238	3.789E-12	0.000E+00	7.444E-28	5.625E-26	5.458E-24	2.259E-22	3.347E-21	5.450E-21	5.287E-21
o-210	U-238	7.959E-16	0.000E+00	1.563E-31	1.182E-29	1.146E-27	4.744E-26	7.029E-25	1.145E-24	1.110E-24
o-210	U-238	3.794E-15	0.000E+00	7.453E-31	5.632E-29	5.464E-27	2.261E-25	3.351E-24	5.457E-24	5.293E-24
o-210	äS(j):		0.000E+00	8.506E-12	2.343E-11	5.801E-11	7.520E-11	1.518E-11	4.560E-13	4.151E-13
a-226	Ra-226	1.998E-04	7.291E-03	7.061E-03	6.622E-03	5.290E-03	2.785E-03	2.948E-04	4.817E-07	8.502E-17
a-226	Ra-226	2.637E-10	9.624E-09	9.320E-09	8.741E-09	6.983E-09	3.676E-09	3.891E-10	6.359E-13	1.122E-22
a-226	U-234	1.998E-04	0.000E+00	5.392E-12	4.613E-11	4.306E-10	2.414E-09	6.873E-09	7.700E-09	7.457E-09
a-226	U-234	2.637E-10	0.000E+00	7.117E-18	6.089E-17	5.684E-16	3.187E-15	9.072E-15	1.016E-14	9.843E-15
a-226	U-234	3.795E-12	0.000E+00	1.024E-19	8.765E-19	8.182E-18	4.587E-17	1.306E-16	1.463E-16	1.417E-16
a-226	U-238	3.196E-07	0.000E+00	8.081E-21	2.055E-19	6.180E-18	9.385E-17	5.963E-16	7.864E-16	7.619E-16
a-226	U-238	4.219E-13	0.000E+00	1.067E-26	2.712E-25	8.158E-24	1.239E-22	7.872E-22	1.038E-21	1.006E-21
a-226	U-238	6.073E-15	0.000E+00	1.535E-28	3.904E-27	1.174E-25	1.783E-24	1.133E-23	1.494E-23	1.448E-23
a-226	U-238	1.994E-04	0.000E+00	5.042E-18	1.282E-16	3.856E-15	5.856E-14	3.721E-13	4.907E-13	4.755E-13
a-226	U-238	2.633E-10	0.000E+00	6.656E-24	1.692E-22	5.090E-21	7.730E-20	4.912E-19	6.477E-19	6.276E-19
a-226	U-238	3.789E-12	0.000E+00	9.581E-26	2.436E-24	7.327E-23	1.113E-21	7.070E-21	9.323E-21	9.034E-21
a-226	äS(j):		7.291E-03	7.061E-03	6.622E-03	5.290E-03	2.785E-03	2.948E-04	4.894E-07	7.457E-09

ummary : GKP Maintenance Worker -External
ile : C:\USERS\CLAUDE\DOCUMENTS\0 GKP DOSE\RESRAD CW\GKP MAINTENANCE WORKER - EXTERNAL.RAD

Individual Nuclide Soil Concentration
Parent Nuclide and Branch Fraction Indicated

uclide (j)	Parent (i)	THF(i)	S(j,t), pCi/g t= 0.000E+00	1.000E+00	3.000E+00	1.000E+01	3.000E+01	1.000E+02	3.000E+02	1.000E+03
ÄÄÄÄÄ	ÄÄÄÄÄÄ	ÄÄÄÄÄÄÄÄ	ÄÄÄÄÄÄÄÄ	ÄÄÄÄÄÄÄÄ	ÄÄÄÄÄÄÄÄ	ÄÄÄÄÄÄÄÄ	ÄÄÄÄÄÄÄÄ	ÄÄÄÄÄÄÄÄ	ÄÄÄÄÄÄÄÄ	ÄÄÄÄÄÄÄÄ
a-226	Ra-226	3.795E-12	1.385E-10	1.342E-10	1.258E-10	1.005E-10	5.291E-11	5.600E-12	9.153E-15	1.615E-24
a-226	Ra-226	4.196E-08	1.531E-06	1.483E-06	1.391E-06	1.111E-06	5.849E-07	6.191E-08	1.012E-10	1.786E-20
a-226	äS(j):		1.532E-06	1.483E-06	1.391E-06	1.111E-06	5.850E-07	6.192E-08	1.012E-10	1.786E-20
a-226	Ra-226	5.538E-14	2.022E-12	1.958E-12	1.836E-12	1.467E-12	7.721E-13	8.173E-14	1.336E-16	2.357E-26
a-226	Ra-226	7.972E-16	2.910E-14	2.818E-14	2.643E-14	2.111E-14	1.111E-14	1.176E-15	1.923E-18	3.393E-28
a-226	äS(j):		2.051E-12	1.986E-12	1.862E-12	1.488E-12	7.832E-13	8.290E-14	1.355E-16	2.391E-26
a-226	Ra-226	2.000E-07	7.300E-06	7.070E-06	6.630E-06	5.297E-06	2.788E-06	2.951E-07	4.823E-10	8.513E-20
a-226	Ra-226	2.640E-13	9.636E-12	9.332E-12	8.752E-12	6.991E-12	3.680E-12	3.896E-13	6.367E-16	1.124E-25
a-226	U-234	2.000E-07	0.000E+00	5.398E-15	4.619E-14	4.311E-13	2.417E-12	6.881E-12	7.709E-12	7.466E-12
a-226	U-234	2.640E-13	0.000E+00	7.126E-21	6.097E-20	5.691E-19	3.191E-18	9.083E-18	1.018E-17	9.855E-18
a-226	U-234	3.800E-15	0.000E+00	1.026E-22	8.776E-22	8.192E-21	4.593E-20	1.307E-19	1.465E-19	1.418E-19
a-226	U-238	3.200E-10	0.000E+00	8.091E-24	2.057E-22	6.188E-21	9.396E-20	5.971E-19	7.873E-19	7.629E-19
a-226	U-238	4.224E-16	0.000E+00	1.068E-29	2.715E-28	8.168E-27	1.240E-25	7.881E-25	1.039E-24	1.007E-24
a-226	U-238	6.080E-18	0.000E+00	1.537E-31	3.909E-30	1.176E-28	1.785E-27	1.134E-26	1.496E-26	1.449E-26
a-226	U-238	1.997E-07	0.000E+00	5.048E-21	1.284E-19	3.861E-18	5.863E-17	3.726E-16	4.913E-16	4.760E-16
a-226	U-238	2.636E-13	0.000E+00	6.664E-27	1.694E-25	5.097E-24	7.739E-23	4.918E-22	6.485E-22	6.284E-22
a-226	U-238	3.794E-15	0.000E+00	9.592E-29	2.439E-27	7.336E-26	1.114E-24	7.079E-24	9.335E-24	9.045E-24
a-226	äS(j):		7.300E-06	7.070E-06	6.630E-06	5.297E-06	2.788E-06	2.951E-07	4.900E-10	7.466E-12
a-226	Ra-226	3.800E-15	1.387E-13	1.343E-13	1.260E-13	1.006E-13	5.298E-14	5.607E-15	9.164E-18	1.617E-27
n-232	Th-232	1.000E+00	2.400E+00	2.400E+00	2.400E+00	2.399E+00	2.397E+00	2.391E+00	2.373E+00	2.313E+00
a-228	Th-232	1.000E+00	0.000E+00	2.684E-01	6.968E-01	1.486E+00	1.879E+00	1.894E+00	1.880E+00	1.832E+00
n-228	Th-232	1.000E+00	0.000E+00	4.430E-02	2.891E-01	1.222E+00	1.865E+00	1.894E+00	1.880E+00	1.832E+00
-234	U-234	9.996E-01	1.389E+01	1.329E+01	1.217E+01	8.925E+00	3.683E+00	1.662E-01	2.380E-05	8.354E-19
-234	U-234	1.319E-06	1.834E-05	1.755E-05	1.606E-05	1.178E-05	4.862E-06	2.194E-07	3.141E-11	1.103E-24
-234	U-238	1.599E-03	0.000E+00	6.005E-08	1.649E-07	4.032E-07	4.992E-07	7.511E-08	3.227E-11	3.779E-24
-234	U-238	2.111E-09	0.000E+00	7.927E-14	2.177E-13	5.322E-13	6.589E-13	9.914E-14	4.259E-17	4.988E-30
-234	U-238	3.039E-11	0.000E+00	1.141E-15	3.133E-15	7.661E-15	9.484E-15	1.427E-15	6.131E-19	7.180E-32
-234	U-238	3.359E-07	0.000E+00	1.261E-11	3.463E-11	8.469E-11	1.048E-10	1.578E-11	6.777E-15	7.938E-28
-234	U-238	4.434E-13	0.000E+00	1.665E-17	4.572E-17	1.118E-16	1.384E-16	2.082E-17	8.946E-21	1.048E-33
-234	U-238	6.383E-15	0.000E+00	2.396E-19	6.580E-19	1.609E-18	1.992E-18	2.998E-19	1.288E-22	1.508E-35
-234	U-238	3.196E-07	0.000E+00	1.200E-11	3.295E-11	8.058E-11	9.975E-11	1.501E-11	6.448E-15	7.552E-28
-234	U-238	4.219E-13	0.000E+00	1.584E-17	4.350E-17	1.064E-16	1.317E-16	1.981E-17	8.511E-21	9.969E-34
-234	U-238	6.073E-15	0.000E+00	2.280E-19	6.261E-19	1.531E-18	1.895E-18	2.852E-19	1.225E-22	1.435E-35
-234	U-238	6.713E-11	0.000E+00	2.521E-15	6.921E-15	1.692E-14	2.095E-14	3.153E-15	1.354E-18	1.586E-31
-234	U-238	8.862E-17	0.000E+00	3.327E-21	9.136E-21	2.234E-20	2.766E-20	4.162E-21	1.788E-24	2.094E-37
-234	U-238	1.276E-18	0.000E+00	4.789E-23	1.315E-22	3.216E-22	3.981E-22	5.990E-23	2.573E-26	3.014E-39
-234	U-238	3.200E-10	0.000E+00	1.201E-14	3.299E-14	8.067E-14	9.987E-14	1.503E-14	6.456E-18	7.561E-31
-234	U-238	4.224E-16	0.000E+00	1.586E-20	4.355E-20	1.065E-19	1.318E-19	1.984E-20	8.522E-24	9.981E-37
-234	U-238	6.080E-18	0.000E+00	2.283E-22	6.268E-22	1.533E-21	1.898E-21	2.855E-22	1.227E-25	1.437E-38
-234	U-238	9.980E-01	0.000E+00	3.747E-05	1.029E-04	2.516E-04	3.115E-04	4.687E-05	2.013E-08	2.358E-21
-234	U-238	1.317E-06	0.000E+00	4.946E-11	1.358E-10	3.321E-10	4.111E-10	6.187E-11	2.658E-14	3.113E-27
-234	U-238	1.896E-08	0.000E+00	7.119E-13	1.955E-12	4.780E-12	5.918E-12	8.905E-13	3.825E-16	4.480E-29

ummary : GKP Maintenance Worker -External

ile : C:\USERS\CLAUDE\DOCUMENTS\0 GKP DOSE\RESRAD CW\GKP MAINTENANCE WORKER - EXTERNAL.RAD

Individual Nuclide Soil Concentration

Parent Nuclide and Branch Fraction Indicated

uclide (j)	Parent (i)	THF(i)	S(j,t), pCi/g t= 0.000E+00	1.000E+00	3.000E+00	1.000E+01	3.000E+01	1.000E+02	3.000E+02	1.000E+03
ÄÄÄÄÄ	ÄÄÄÄÄÄ	ÄÄÄÄÄÄÄÄÄ	ÄÄÄÄÄÄÄÄÄ	ÄÄÄÄÄÄÄÄÄ	ÄÄÄÄÄÄÄÄÄ	ÄÄÄÄÄÄÄÄÄ	ÄÄÄÄÄÄÄÄÄ	ÄÄÄÄÄÄÄÄÄ	ÄÄÄÄÄÄÄÄÄ	ÄÄÄÄÄÄÄÄÄ
-234	U-238	2.096E-04	0.000E+00	7.871E-09	2.161E-08	5.285E-08	6.542E-08	9.844E-09	4.229E-12	4.953E-25
-234	U-238	2.767E-10	0.000E+00	1.039E-14	2.853E-14	6.976E-14	8.636E-14	1.299E-14	5.582E-18	6.538E-31
-234	U-238	3.983E-12	0.000E+00	1.495E-16	4.106E-16	1.004E-15	1.243E-15	1.870E-16	8.035E-20	9.411E-33
-234	U-238	1.994E-04	0.000E+00	7.488E-09	2.056E-08	5.028E-08	6.225E-08	9.366E-09	4.024E-12	4.712E-25
-234	U-238	2.633E-10	0.000E+00	9.884E-15	2.714E-14	6.637E-14	8.216E-14	1.236E-14	5.311E-18	6.220E-31
-234	U-238	3.789E-12	0.000E+00	1.423E-16	3.907E-16	9.553E-16	1.183E-15	1.780E-16	7.645E-20	8.954E-33
-234	U-238	4.189E-08	0.000E+00	1.573E-12	4.319E-12	1.056E-11	1.307E-11	1.967E-12	8.451E-16	9.898E-29
-234	U-238	5.530E-14	0.000E+00	2.076E-18	5.701E-18	1.394E-17	1.726E-17	2.597E-18	1.116E-21	1.307E-34
-234	U-238	7.959E-16	0.000E+00	2.988E-20	8.206E-20	2.007E-19	2.484E-19	3.738E-20	1.606E-23	1.881E-36
-234	U-238	1.997E-07	0.000E+00	7.497E-12	2.059E-11	5.034E-11	6.232E-11	9.378E-12	4.028E-15	4.718E-28
-234	U-238	2.636E-13	0.000E+00	9.896E-18	2.717E-17	6.645E-17	8.226E-17	1.238E-17	5.318E-21	6.228E-34
-234	U-238	3.794E-15	0.000E+00	1.424E-19	3.911E-19	9.565E-19	1.184E-18	1.782E-19	7.654E-23	8.965E-36
-234	äS(j):		1.389E+01	1.329E+01	1.217E+01	8.926E+00	3.683E+00	1.663E-01	2.382E-05	8.377E-19
n-230	U-234	9.996E-01	0.000E+00	1.250E-04	3.589E-04	1.032E-03	2.120E-03	2.842E-03	2.850E-03	2.759E-03
n-230	U-234	1.319E-06	0.000E+00	1.650E-10	4.738E-10	1.362E-09	2.798E-09	3.751E-09	3.762E-09	3.642E-09
n-230	U-234	1.899E-08	0.000E+00	2.375E-12	6.819E-12	1.961E-11	4.028E-11	5.400E-11	5.415E-11	5.243E-11
n-230	U-234	2.100E-04	0.000E+00	2.625E-08	7.539E-08	2.168E-07	4.452E-07	5.969E-07	5.986E-07	5.796E-07
n-230	U-234	2.771E-10	0.000E+00	3.465E-14	9.951E-14	2.862E-13	5.877E-13	7.879E-13	7.902E-13	7.650E-13
n-230	U-234	3.989E-12	0.000E+00	4.988E-16	1.432E-15	4.119E-15	8.460E-15	1.134E-14	1.137E-14	1.101E-14
n-230	U-234	1.998E-04	0.000E+00	2.497E-08	7.172E-08	2.063E-07	4.236E-07	5.679E-07	5.695E-07	5.514E-07
n-230	U-234	2.637E-10	0.000E+00	3.297E-14	9.468E-14	2.723E-13	5.592E-13	7.497E-13	7.518E-13	7.279E-13
n-230	U-234	3.795E-12	0.000E+00	4.745E-16	1.363E-15	3.919E-15	8.049E-15	1.079E-14	1.082E-14	1.048E-14
n-230	U-234	4.196E-08	0.000E+00	5.246E-12	1.507E-11	4.332E-11	8.898E-11	1.193E-10	1.196E-10	1.158E-10
n-230	U-234	5.538E-14	0.000E+00	6.924E-18	1.989E-17	5.719E-17	1.175E-16	1.575E-16	1.579E-16	1.529E-16
n-230	U-234	7.972E-16	0.000E+00	9.967E-20	2.862E-19	8.231E-19	1.691E-18	2.267E-18	2.273E-18	2.201E-18
n-230	U-234	2.000E-07	0.000E+00	2.501E-11	7.181E-11	2.065E-10	4.241E-10	5.686E-10	5.702E-10	5.521E-10
n-230	U-234	2.640E-13	0.000E+00	3.301E-17	9.479E-17	2.726E-16	5.599E-16	7.506E-16	7.527E-16	7.287E-16
n-230	U-234	3.800E-15	0.000E+00	4.751E-19	1.364E-18	3.924E-18	8.058E-18	1.080E-17	1.083E-17	1.049E-17
n-230	U-238	1.599E-03	0.000E+00	2.802E-13	2.378E-12	2.160E-11	1.128E-10	2.748E-10	2.912E-10	2.820E-10
n-230	U-238	2.111E-09	0.000E+00	3.699E-19	3.139E-18	2.851E-17	1.489E-16	3.627E-16	3.844E-16	3.722E-16
n-230	U-238	3.039E-11	0.000E+00	5.324E-21	4.519E-20	4.104E-19	2.143E-18	5.221E-18	5.533E-18	5.357E-18
n-230	U-238	3.359E-07	0.000E+00	5.885E-17	4.995E-16	4.537E-15	2.369E-14	5.771E-14	6.117E-14	5.922E-14
n-230	U-238	4.434E-13	0.000E+00	7.769E-23	6.594E-22	5.989E-21	3.127E-20	7.618E-20	8.074E-20	7.817E-20
n-230	U-238	6.383E-15	0.000E+00	1.118E-24	9.491E-24	8.621E-23	4.501E-22	1.097E-21	1.162E-21	1.125E-21
n-230	U-238	3.196E-07	0.000E+00	5.600E-17	4.753E-16	4.317E-15	2.254E-14	5.491E-14	5.820E-14	5.635E-14
n-230	U-238	4.219E-13	0.000E+00	7.391E-23	6.274E-22	5.698E-21	2.975E-20	7.248E-20	7.682E-20	7.438E-20
n-230	U-238	6.073E-15	0.000E+00	1.064E-24	9.030E-24	8.202E-23	4.282E-22	1.043E-21	1.106E-21	1.071E-21
n-230	U-238	6.713E-11	0.000E+00	1.176E-20	9.983E-20	9.067E-19	4.734E-18	1.153E-17	1.222E-17	1.183E-17
n-230	U-238	8.862E-17	0.000E+00	1.553E-26	1.318E-25	1.197E-24	6.249E-24	1.522E-23	1.614E-23	1.562E-23
n-230	U-238	1.276E-18	0.000E+00	2.235E-28	1.897E-27	1.723E-26	8.995E-26	2.191E-25	2.323E-25	2.249E-25
n-230	U-238	3.200E-10	0.000E+00	5.606E-20	4.759E-19	4.322E-18	2.257E-17	5.498E-17	5.827E-17	5.641E-17
n-230	U-238	4.224E-16	0.000E+00	7.400E-26	6.281E-25	5.705E-24	2.979E-23	7.257E-23	7.691E-23	7.447E-23
n-230	U-238	6.080E-18	0.000E+00	1.065E-27	9.041E-27	8.212E-26	4.288E-25	1.045E-24	1.107E-24	1.072E-24
n-230	U-238	9.980E-01	0.000E+00	1.748E-10	1.484E-09	1.348E-08	7.038E-08	1.715E-07	1.817E-07	1.759E-07
n-230	U-238	1.317E-06	0.000E+00	2.308E-16	1.959E-15	1.779E-14	9.290E-14	2.263E-13	2.399E-13	2.322E-13
n-230	U-238	1.896E-08	0.000E+00	3.322E-18	2.820E-17	2.561E-16	1.337E-15	3.258E-15	3.453E-15	3.343E-15
n-230	U-238	2.096E-04	0.000E+00	3.673E-14	3.117E-13	2.831E-12	1.478E-11	3.601E-11	3.817E-11	3.695E-11
n-230	U-238	2.767E-10	0.000E+00	4.848E-20	4.115E-19	3.737E-18	1.951E-17	4.754E-17	5.038E-17	4.878E-17

ummary : GKP Maintenance Worker -External
ile : C:\USERS\CLAUDE\DOCUMENTS\0 GKP DOSE\RESRAD CW\GKP MAINTENANCE WORKER - EXTERNAL.RAD

Individual Nuclide Soil Concentration
Parent Nuclide and Branch Fraction Indicated

uclide (j)	Parent (i)	THF(i)	S(j,t), pCi/g t= 0.000E+00	1.000E+00	3.000E+00	1.000E+01	3.000E+01	1.000E+02	3.000E+02	1.000E+03
ÄÄÄÄÄ	ÄÄÄÄÄÄ	ÄÄÄÄÄÄÄÄ	ÄÄÄÄÄÄÄÄ	ÄÄÄÄÄÄÄÄ	ÄÄÄÄÄÄÄÄ	ÄÄÄÄÄÄÄÄ	ÄÄÄÄÄÄÄÄ	ÄÄÄÄÄÄÄÄ	ÄÄÄÄÄÄÄÄ	ÄÄÄÄÄÄÄÄ
n-230	U-238	3.983E-12	0.000E+00	6.978E-22	5.923E-21	5.379E-20	2.809E-19	6.843E-19	7.252E-19	7.021E-19
n-230	U-238	1.994E-04	0.000E+00	3.494E-14	2.966E 13	2.694E-12	1.406E-11	3.426E-11	3.631E-11	3.516E-11
n-230	U-238	2.633E-10	0.000E+00	4.612E-20	3.915E-19	3.556E-18	1.856E-17	4.523E-17	4.794E-17	4.641E-17
n-230	U-238	3.789E-12	0.000E+00	6.639E-22	5.635E-21	5.118E-20	2.672E-19	6.510E-19	6.900E-19	6.680E-19
n-230	U-238	4.189E-08	0.000E+00	7.339E-18	6.229E-17	5.658E-16	2.954E-15	7.197E-15	7.628E-15	7.385E-15
n-230	U-238	5.530E-14	0.000E+00	9.688E-24	8.223E-23	7.468E-22	3.899E-21	9.500E-21	1.007E-20	9.748E-21
n-230	U-238	7.959E-16	0.000E+00	1.394E-25	1.184E-24	1.075E-23	5.613E-23	1.367E-22	1.449E-22	1.403E-22
n-230	U-238	1.997E-07	0.000E+00	3.498E-17	2.969E-16	2.697E-15	1.408E-14	3.431E-14	3.636E-14	3.520E-14
n-230	U-238	2.636E-13	0.000E+00	4.618E-23	3.920E-22	3.560E-21	1.859E-20	4.528E-20	4.799E-20	4.647E-20
n-230	U-238	3.794E-15	0.000E+00	6.647E-25	5.642E-24	5.124E-23	2.675E-22	6.518E-22	6.908E-22	6.688E-22
n-230	äS(j):		0.000E+00	1.250E-04	3.591E-04	1.033E-03	2.121E-03	2.843E-03	2.851E-03	2.761E-03
-234	U 234	1.899E-08	2.640E-07	2.526E-07	2.312E-07	1.696E-07	6.998E-08	3.159E-09	4.522E-13	1.587E-26
-234	U-234	2.100E-04	2.918E-03	2.792E-03	2.556E-03	1.875E-03	7.736E-04	3.492E-05	4.999E-09	1.755E-22
-234	äS(j):		2.919E-03	2.792E-03	2.556E-03	1.875E-03	7.737E-04	3.492E-05	4.999E-09	1.755E-22
a-226	U-234	2.100E-04	0.000E+00	5.667E-12	4.849E-11	4.526E-10	2.538E-09	7.224E-09	8.093E-09	7.837E-09
a-226	U-234	3.989E-12	0.000E+00	1.077E-19	9.213E-19	8.600E-18	4.821E-17	1.373E-16	1.538E-16	1.489E-16
a-226	U-238	3.359E-07	0.000E+00	8.493E-21	2.160E-19	6.496E-18	9.864E-17	6.268E-16	8.265E-16	8.008E-16
a-226	U-238	4.434E-13	0.000E+00	1.121E-26	2.851E-25	8.574E-24	1.302E-22	8.274E-22	1.091E-21	1.057E-21
a-226	U-238	6.383E-15	0.000E+00	1.614E-28	4.103E-27	1.234E-25	1.874E-24	1.191E-23	1.570E-23	1.522E-23
a-226	U-238	2.096E-04	0.000E+00	5.300E-18	1.348E-16	4.053E-15	6.155E-14	3.911E-13	5.158E-13	4.997E-13
a-226	U-238	2.767E-10	0.000E+00	6.996E-24	1.779E-22	5.350E-21	8.125E-20	5.163E-19	6.808E-19	6.596E-19
a-226	U-238	3.983E-12	0.000E+00	1.007E-25	2.560E-24	7.701E-23	1.169E-21	7.431E-21	9.799E-21	9.495E-21
a-226	äS(j):		0.000E+00	5.667E-12	4.849E-11	4.526E-10	2.538E-09	7.224E-09	8.094E-09	7.838E-09
-234	U-234	2.771E-10	3.852E-09	3.686E-09	3.373E-09	2.475E-09	1.021E-09	4.609E-11	6.598E-15	2.316E-28
-234	U-234	3.989E-12	5.545E-11	5.305E-11	4.856E-11	3.562E-11	1.470E-11	6.634E-13	9.498E-17	3.334E-30
-234	äS(j):		3.908E-09	3.739E-09	3.422E-09	2.510E-09	1.036E-09	4.676E-11	6.693E-15	2.349E-28
a-226	U-234	2.771E-10	0.000E+00	7.480E-18	6.400E-17	5.974E-16	3.350E-15	9.535E-15	1.068E-14	1.035E-14
-234	U-234	1.998E-04	2.777E-03	2.656E-03	2.431E-03	1.784E-03	7.360E-04	3.322E-05	4.756E-09	1.669E-22
-234	U-234	2.637E-10	3.665E-09	3.506E-09	3.209E-09	2.354E-09	9.715E-10	4.385E-11	6.278E-15	2.204E-28
-234	äS(j):		2.777E-03	2.656E-03	2.431E-03	1.784E-03	7.360E-04	3.322E-05	4.756E-09	1.669E-22
-234	U-234	3.795E-12	5.276E-11	5.047E-11	4.620E-11	3.389E-11	1.398E-11	6.312E-13	9.036E-17	3.172E-30
-234	U-234	4.196E-08	5.832E-07	5.580E-07	5.107E-07	3.746E-07	1.546E-07	6.978E-09	9.989E-13	3.506E-26
-234	äS(j):		5.833E-07	5.580E-07	5.107E-07	3.747E-07	1.546E-07	6.979E-09	9.990E-13	3.507E-26
a-226	U-234	4.196E-08	0.000E+00	1.132E-15	9.690E-15	9.045E-14	5.071E-13	1.444E-12	1.617E-12	1.566E-12
a-226	U-234	7.972E-16	0.000E+00	2.152E-23	1.841E-22	1.719E-21	9.635E-21	2.743E-20	3.073E-20	2.976E-20
a-226	U-238	6.713E-11	0.000E+00	1.697E-24	4.316E-23	1.298E-21	1.971E-20	1.253E-19	1.652E-19	1.600E-19
a-226	U-238	8.862E-17	0.000E+00	2.240E-30	5.697E-29	1.713E-27	2.602E-26	1.653E-25	2.180E-25	2.113E-25
a-226	U-238	1.276E-18	0.000E+00	3.225E-32	8.200E-31	2.466E-29	3.745E-28	2.380E-27	3.138E-27	3.041E-27
a-226	U-238	4.189E-08	0.000E+00	1.059E-21	2.693E-20	8.100E-19	1.230E-17	7.816E-17	1.031E-16	9.987E-17
a-226	U-238	5.530E-14	0.000E+00	1.398E-27	3.555E-26	1.069E-24	1.624E-23	1.032E-22	1.360E-22	1.318E-22
a-226	U-238	7.959E-16	0.000E+00	2.012E-29	5.117E-28	1.539E-26	2.337E-25	1.485E-24	1.958E-24	1.897E-24
a-226	äS(j):		0.000E+00	1.132E-15	9.690E-15	9.045E-14	5.071E-13	1.444E-12	1.617E-12	1.566E-12

ummary : GKP Maintenance Worker -External
ile : C:\USERS\CLAUDE\DOCUMENTS\0 GKP DOSE\RESRAD CW\GKP MAINTENANCE WORKER - EXTERNAL.RAD

Individual Nuclide Soil Concentration
Parent Nuclide and Branch Fraction Indicated

uclide (j)	Parent (i)	THF(i)	S(j,t), pCi/g t= 0.000E+00	1.000E+00	3.000E+00	1.000E+01	3.000E+01	1.000E+02	3.000E+02	1.000E+03
ÄÄÄÄÄ	ÄÄÄÄÄÄ	ÄÄÄÄÄÄÄÄ	ÄÄÄÄÄÄÄÄ	ÄÄÄÄÄÄÄÄ	ÄÄÄÄÄÄÄÄ	ÄÄÄÄÄÄÄÄ	ÄÄÄÄÄÄÄÄ	ÄÄÄÄÄÄÄÄ	ÄÄÄÄÄÄÄÄ	ÄÄÄÄÄÄÄÄ
-234	U-234	5.538E-14	7.698E-13	7.365E-13	6.741E-13	4.945E-13	2.041E-13	9.211E-15	1.319E-18	4.629E-32
-234	U-234	7.972E-16	1.108E-14	1.060E-14	9.703E-15	7.118E-15	2.937E-15	1.326E-16	1.898E-20	6.662E-34
-234	äS(j):		7.809E-13	7.471E-13	6.838E-13	5.016E-13	2.070E-13	9.344E-15	1.338E-18	4.695E-32
a-226	U-234	5.538E-14	0.000E+00	1.495E-21	1.279E-20	1.194E-19	6.694E-19	1.906E-18	2.135E-18	2.067E-18
-234	U-234	2.000E-07	2.780E-06	2.660E-06	2.434E-06	1.786E-06	7.369E-07	3.326E-08	4.762E-12	1.671E-25
-234	U-234	2.640E-13	3.670E-12	3.511E-12	3.213E-12	2.357E-12	9.727E-13	4.391E-14	6.285E-18	2.206E-31
-234	äS(j):		2.780E-06	2.660E-06	2.434E-06	1.786E-06	7.369E-07	3.326E-08	4.762E-12	1.671E-25
-234	U-234	3.800E-15	5.282E-14	5.053E-14	4.625E-14	3.393E-14	1.400E-14	6.320E-16	9.047E-20	3.176E-33
-235	U-235	9.835E-01	8.261E-01	7.904E-01	7.234E-01	5.307E-01	2.190E-01	9.887E-03	1.416E-06	4.981E-20
-235	U-235	2.722E-03	2.286E-03	2.187E-03	2.002E-03	1.469E-03	6.061E-04	2.736E-05	3.920E-09	1.379E-22
-235	äS(j):		8.284E-01	7.925E-01	7.254E-01	5.322E-01	2.196E-01	9.914E-03	1.420E-06	4.995E-20
a-231	U-235	9.835E-01	0.000E+00	1.672E-05	4.592E-05	1.123E-04	1.390E-04	2.090E-05	8.961E-09	1.043E-21
a-231	U-235	2.722E-03	0.000E+00	4.628E-08	1.271E-07	3.107E-07	3.846E-07	5.784E-08	2.480E-11	2.886E-24
a-231	U-235	1.376E-02	0.000E+00	2.340E-07	6.425E-07	1.571E-06	1.944E-06	2.924E-07	1.254E-10	1.459E-23
a-231	U-235	3.809E-05	0.000E+00	6.476E-10	1.778E-09	4.348E-09	5.382E-09	8.093E-10	3.470E-13	4.038E-26
a-231	U-235	8.257E-07	0.000E+00	1.404E-11	3.855E-11	9.426E-11	1.167E-10	1.755E-11	7.523E-15	8.755E-28
a-231	U-235	2.285E-09	0.000E+00	3.886E-14	1.067E-13	2.609E-13	3.229E-13	4.856E-14	2.082E-17	2.423E-30
a-231	äS(j):		0.000E+00	1.700E-05	4.669E-05	1.142E-04	1.413E-04	2.125E-05	9.111E-09	1.060E-21
c-227	U-235	9.835E-01	0.000E+00	2.577E-07	1.994E-06	1.324E-05	3.070E-05	6.123E-06	2.826E-09	3.370E-22
c-227	U-235	2.722E-03	0.000E+00	7.134E-10	5.518E-09	3.665E-08	8.495E-08	1.695E-08	7.821E-12	9.327E-25
c-227	U-235	1.376E-02	0.000E+00	3.606E-09	2.790E-08	1.853E-07	4.295E-07	8.568E-08	3.954E-11	4.715E-24
c-227	äS(j):		0.000E+00	4.320E-09	3.341E-08	2.219E-07	5.144E-07	1.026E-07	4.736E-11	5.648E-24
-235	U-235	1.376E-02	1.156E-02	1.106E-02	1.012E-02	7.426E-03	3.064E-03	1.383E-04	1.982E-08	6.969E-22
-235	U-235	3.809E-05	3.199E-05	3.061E-05	2.801E-05	2.055E-05	8.481E-06	3.829E-07	5.484E-11	1.929E-24
-235	äS(j):		1.159E-02	1.109E-02	1.015E-02	7.446E-03	3.073E-03	1.387E-04	1.987E-08	6.989E-22
c-227	U-235	3.809E-05	0.000E+00	9.981E-12	7.721E-11	5.128E-10	1.189E-09	2.371E-10	1.094E-13	1.305E-26
c-227	U-235	8.257E-07	0.000E+00	2.164E-13	1.674E-12	1.112E-11	2.577E-11	5.141E-12	2.372E-15	2.829E-28
c-227	äS(j):		0.000E+00	1.020E-11	7.888E-11	5.239E-10	1.214E-09	2.423E-10	1.118E-13	1.333E-26
-235	U-235	8.257E-07	6.936E-07	6.636E-07	6.074E-07	4.456E-07	1.839E-07	8.301E-09	1.189E-12	4.182E-26
-235	U-235	2.285E-09	1.920E-09	1.837E-09	1.681E-09	1.233E-09	5.089E-10	2.297E-11	3.291E-15	1.157E-28
-235	äS(j):		6.955E-07	6.654E-07	6.090E-07	4.468E-07	1.844E-07	8.324E-09	1.192E-12	4.193E-26
c-227	U-235	2.285E-09	0.000E+00	5.989E-16	4.633E-15	3.077E-14	7.133E-14	1.423E-14	6.566E-18	7.831E-31
-238	U-238	5.450E-07	7.575E-06	7.248E-06	6.634E-06	4.866E-06	2.008E-06	9.066E-08	1.299E-11	4.567E-25
-238	U-238	1.599E-03	2.223E-02	2.127E-02	1.947E-02	1.428E-02	5.893E-03	2.661E-04	3.811E-08	1.340E-21
-238	äS(j):		2.224E-02	2.128E-02	1.947E-02	1.429E-02	5.895E-03	2.662E-04	3.812E-08	1.341E-21
-238	U-238	2.111E-09	2.934E-08	2.807E-08	2.570E-08	1.885E-08	7.779E-09	3.512E-10	5.030E-14	1.769E-27

ummary : GKP Maintenance Worker -External
ile : C:\USERS\CLAUDE\DOCUMENTS\0 GKP DOSE\RESRAD CW\GKP MAINTENANCE WORKER - EXTERNAL.RAD

Individual Nuclide Soil Concentration
Parent Nuclide and Branch Fraction Indicated

uclide (j)	Parent (i)	THF(i)	S(j,t), pCi/g t= 0.000E+00	1.000E+00	3.000E+00	1.000E+01	3.000E+01	1.000E+02	3.000E+02	1.000E+03
ÄÄÄÄÄ	ÄÄÄÄÄÄ	ÄÄÄÄÄÄÄÄ	ÄÄÄÄÄÄÄÄÄ	ÄÄÄÄÄÄÄÄÄ	ÄÄÄÄÄÄÄÄÄ	ÄÄÄÄÄÄÄÄÄ	ÄÄÄÄÄÄÄÄÄ	ÄÄÄÄÄÄÄÄÄ	ÄÄÄÄÄÄÄÄÄ	ÄÄÄÄÄÄÄÄÄ
-238	U-238	3.039E-11	4.224E-10	4.041E-10	3.699E-10	2.713E-10	1.120E-10	5.055E-12	7.241E-16	2.547E-29
-238	äS(j):		2.977E-08	2.848E-08	2.607E-08	1.912E-08	7.891E-09	3.563E-10	5.103E-14	1.795E-27
-238	U-238	3.359E-07	4.669E-06	4.467E-06	4.089E-06	3.000E-06	1.238E-06	5.588E-08	8.005E-12	2.815E-25
-238	U-238	4.434E-13	6.164E-12	5.897E-12	5.397E-12	3.960E-12	1.634E-12	7.377E-14	1.057E-17	3.716E-31
-238	äS(j):		4.669E-06	4.467E-06	4.089E-06	3.000E-06	1.238E-06	5.588E-08	8.005E-12	2.815E-25
-238	U-238	6.383E-15	8.872E-14	8.488E-14	7.769E-14	5.699E-14	2.352E-14	1.062E-15	1.521E-19	5.349E-33
-238	U-238	3.196E-07	4.443E-06	4.250E-06	3.890E-06	2.854E-06	1.178E-06	5.317E-08	7.616E-12	2.679E-25
-238	äS(j):		4.443E-06	4.250E-06	3.890E-06	2.854E-06	1.178E-06	5.317E-08	7.616E-12	2.679E-25
-238	U-238	4.219E-13	5.864E-12	5.610E-12	5.135E-12	3.767E-12	1.555E-12	7.018E-14	1.005E-17	3.536E-31
-238	U-238	6.073E-15	8.441E-14	8.076E-14	7.392E-14	5.422E-14	2.238E-14	1.010E-15	1.447E-19	5.089E-33
-238	äS(j):		5.949E-12	5.691E-12	5.209E-12	3.821E-12	1.577E-12	7.119E-14	1.020E-17	3.587E-31
-238	U-238	6.713E-11	9.331E-10	8.927E-10	8.171E-10	5.994E-10	2.474E-10	1.117E-11	1.600E-15	5.626E-29
-238	U-238	8.862E-17	1.232E-15	1.178E-15	1.079E-15	7.913E-16	3.265E-16	1.474E-17	2.112E-21	7.427E-35
-238	äS(j):		9.331E-10	8.927E-10	8.171E-10	5.994E-10	2.474E-10	1.117E-11	1.600E-15	5.626E-29
-238	U-238	1.276E-18	1.773E-17	1.696E-17	1.553E-17	1.139E-17	4.700E-18	2.122E-19	3.039E-23	1.069E-36
-238	U-238	3.200E-10	4.448E-09	4.255E-09	3.895E-09	2.857E-09	1.179E-09	5.323E-11	7.625E-15	2.682E-28
-238	äS(j):		4.448E-09	4.255E-09	3.895E-09	2.857E-09	1.179E-09	5.323E-11	7.625E-15	2.682E-28
-238	U-238	4.224E-16	5.871E-15	5.617E-15	5.141E-15	3.772E-15	1.556E-15	7.027E-17	1.007E-20	3.540E-34
-238	U-238	6.080E-18	8.451E-17	8.085E-17	7.400E-17	5.429E-17	2.240E-17	1.011E-18	1.449E-22	5.095E-36
-238	äS(j):		5.956E-15	5.698E-15	5.215E-15	3.826E-15	1.579E-15	7.128E-17	1.021E-20	3.591E-34
-238	U-238	9.980E-01	1.387E+01	1.327E+01	1.215E+01	8.911E+00	3.677E+00	1.660E-01	2.378E-05	8.364E-19
-238	U-238	1.317E-06	1.831E-05	1.752E-05	1.603E-05	1.176E-05	4.854E-06	2.191E-07	3.139E-11	1.104E-24
-238	äS(j):		1.387E+01	1.327E+01	1.215E+01	8.911E+00	3.677E+00	1.660E-01	2.378E-05	8.364E-19
-238	U-238	1.896E-08	2.636E-07	2.522E-07	2.308E-07	1.693E-07	6.987E-08	3.154E-09	4.518E-13	1.589E-26
-238	U-238	2.096E-04	2.914E-03	2.788E-03	2.551E-03	1.872E-03	7.724E-04	3.487E-05	4.995E-09	1.757E-22
-238	äS(j):		2.914E-03	2.788E-03	2.552E-03	1.872E-03	7.725E-04	3.488E-05	4.995E-09	1.757E-22
-238	U-238	2.767E-10	3.846E-09	3.680E-09	3.368E-09	2.471E-09	1.020E-09	4.603E-11	6.593E-15	2.319E-28
-238	U-238	3.983E-12	5.536E-11	5.296E-11	4.848E-11	3.556E-11	1.468E-11	6.626E-13	9.490E-17	3.338E-30
-238	äS(j):		3.902E-09	3.733E-09	3.416E-09	2.506E-09	1.034E-09	4.669E-11	6.688E-15	2.352E-28
-238	U-238	1.994E-04	2.772E-03	2.652E-03	2.428E-03	1.781E-03	7.349E-04	3.318E-05	4.752E-09	1.671E-22
-238	U-238	2.633E-10	3.659E-09	3.501E-09	3.204E-09	2.351E-09	9.701E-10	4.379E-11	6.273E-15	2.206E-28
-238	äS(j):		2.772E-03	2.652E-03	2.428E-03	1.781E-03	7.349E-04	3.318E-05	4.752E-09	1.671E-22
-238	U-238	3.789E-12	5.267E-11	5.039E-11	4.612E-11	3.384E-11	1.396E-11	6.304E-13	9.029E-17	3.176E-30
-238	U-238	4.189E-08	5.823E-07	5.571E-07	5.099E-07	3.741E-07	1.544E-07	6.969E-09	9.982E-13	3.511E-26
-238	äS(j):		5.823E-07	5.571E-07	5.099E-07	3.741E-07	1.544E-07	6.969E-09	9.983E-13	3.511E-26
-238	U-238	5.530E-14	7.686E-13	7.353E-13	6.731E-13	4.938E-13	2.038E-13	9.199E-15	1.318E-18	4.634E-32
-238	U-238	7.959E-16	1.106E-14	1.058E-14	9.688E-15	7.107E-15	2.933E-15	1.324E-16	1.897E-20	6.670E-34
-238	äS(j):		7.797E-13	7.459E-13	6.827E-13	5.009E-13	2.067E-13	9.331E-15	1.337E-18	4.701E-32

ummary : GKP Maintenance Worker -External
ile : C:\USERS\CLAUDE\DOCUMENTS\0 GKP DOSE\RESRAD CW\GKP MAINTENANCE WORKER - EXTERNAL.RAD

Individual Nuclide Soil Concentration
Parent Nuclide and Branch Fraction Indicated

uclide (j)	Parent (i)	THF(i)	S(j,t), pCi/g t= 0.000E+00	1.000E+00	3.000E+00	1.000E+01	3.000E+01	1.000E+02	3.000E+02	1.000E+03
ÄÄÄÄÄÄ	ÄÄÄÄÄÄÄ	ÄÄÄÄÄÄÄÄÄ	ÄÄÄÄÄÄÄÄÄ	ÄÄÄÄÄÄÄÄÄ	ÄÄÄÄÄÄÄÄÄ	ÄÄÄÄÄÄÄÄÄ	ÄÄÄÄÄÄÄÄÄ	ÄÄÄÄÄÄÄÄÄ	ÄÄÄÄÄÄÄÄÄ	ÄÄÄÄÄÄÄÄÄ
-238	U-238	1.997E-07	2.776E-06	2.655E-06	2.430E-06	1.783E-06	7.358E-07	3.322E-08	4.758E-12	1.673E-25
-238	U-238	2.636E-13	3.664E-12	3.505E-12	3.208E-12	2.354E-12	9.712E-13	4.385E-14	6.281E-18	2.209E-31
-238	äS(j):		2.776E-06	2.655E-06	2.430E-06	1.783E-06	7.358E-07	3.322E-08	4.758E-12	1.673E-25
-238	U-238	3.794E-15	5.274E-14	5.045E-14	4.618E-14	3.388E-14	1.398E-14	6.311E-16	9.040E-20	3.180E-33
íííííí	ííííííí	ííííííííí	ííííííííí	ííííííííí	ííííííííí	ííííííííí	ííííííííí	ííííííííí	ííííííííí	ííííííííí

HF(i) is the thread fraction of the parent nuclide.

ESCALC.EXE execution time = 43.27 seconds

ummary : GKP Maintenance Worker Ingestion
ile : C:\USERS\CLAUDE\DOCUMENTS\0 GKP DOSE\RESRAD CW\GKP MAINTENANCE WORKER -INGESTION.RAD

Table of Contents
ÄÄÄÄÄÄÄÄÄÄÄÄÄÄÄÄÄ

Part I: Mixture Sums and Single Radionuclide Guidelines
ÍÍ

ummary : GKP Maintenance Worker Ingestion
ile : C:\USERS\CLAUDE\DOCUMENTS\0 GKP DOSE\RESRAD CW\GKP MAINTENANCE WORKER -INGESTION.RAD

Dose Conversion Factor (and Related) Parameter Summary

Dose Library: FGR 11

enu	Parameter	Current Value#	Base Case*	Parameter Name
-1	DCF's for external ground radiation, (mrem/yr)/(pCi/g)			
-1	Ac-227 (Source: FGR 12)	4.951E-04	4.951E-04	DCF1(1)
-1	Ac-228 (Source: FGR 12)	5.978E+00	5.978E+00	DCF1(2)
-1	At-218 (Source: FGR 12)	5.847E-03	5.847E-03	DCF1(3)
-1	At-219 (Source: no data)	0.000E+00	-2.000E+00	DCF1(4)
-1	Bi-210 (Source: FGR 12)	3.606E-03	3.606E-03	DCF1(5)
-1	Bi-211 (Source: FGR 12)	2.559E-01	2.559E-01	DCF1(6)
-1	Bi-212 (Source: FGR 12)	1.171E+00	1.171E+00	DCF1(7)
-1	Bi-214 (Source: FGR 12)	9.808E+00	9.808E+00	DCF1(8)
-1	Bi-215 (Source: no data)	0.000E+00	-2.000E+00	DCF1(9)
-1	Fr-223 (Source: FGR 12)	1.980E-01	1.980E-01	DCF1(10)
-1	Hg-206 (Source: no data)	0.000E+00	-2.000E+00	DCF1(11)
-1	Pa-231 (Source: FGR 12)	1.906E-01	1.906E-01	DCF1(12)
-1	Pa-234 (Source: FGR 12)	1.155E+01	1.155E+01	DCF1(13)
-1	Pa-234m (Source: FGR 12)	8.967E-02	8.967E-02	DCF1(14)
-1	Pb-210 (Source: FGR 12)	2.447E-03	2.447E-03	DCF1(15)
-1	Pb-211 (Source: FGR 12)	3.064E-01	3.064E-01	DCF1(16)
-1	Pb-212 (Source: FGR 12)	7.043E-01	7.043E-01	DCF1(17)
-1	Pb-214 (Source: FGR 12)	1.341E+00	1.341E+00	DCF1(18)
-1	Po-210 (Source: FGR 12)	5.231E-05	5.231E-05	DCF1(19)
-1	Po-211 (Source: FGR 12)	4.764E-02	4.764E-02	DCF1(20)
-1	Po-212 (Source: FGR 12)	0.000E+00	0.000E+00	DCF1(21)
-1	Po-214 (Source: FGR 12)	5.138E-04	5.138E-04	DCF1(22)
-1	Po-215 (Source: FGR 12)	1.016E-03	1.016E-03	DCF1(23)
-1	Po-216 (Source: FGR 12)	1.042E-04	1.042E-04	DCF1(24)
-1	Po-218 (Source: FGR 12)	5.642E-05	5.642E-05	DCF1(25)
-1	Ra-223 (Source: FGR 12)	6.034E-01	6.034E-01	DCF1(26)
-1	Ra-224 (Source: FGR 12)	5.119E-02	5.119E-02	DCF1(27)
-1	Ra-226 (Source: FGR 12)	3.176E-02	3.176E-02	DCF1(28)
-1	Ra-228 (Source: FGR 12)	0.000E+00	0.000E+00	DCF1(29)
-1	Rn-218 (Source: FGR 12)	4.540E-03	4.540E-03	DCF1(30)
-1	Rn-219 (Source: FGR 12)	3.083E-01	3.083E-01	DCF1(31)
-1	Rn-220 (Source: FGR 12)	2.298E-03	2.298E-03	DCF1(32)
-1	Rn-222 (Source: FGR 12)	2.354E-03	2.354E-03	DCF1(33)
-1	Th-227 (Source: FGR 12)	5.212E-01	5.212E-01	DCF1(34)
-1	Th-228 (Source: FGR 12)	7.940E-03	7.940E-03	DCF1(35)
-1	Th-230 (Source: FGR 12)	1.209E-03	1.209E-03	DCF1(36)
-1	Th-231 (Source: FGR 12)	3.643E-02	3.643E-02	DCF1(37)
-1	Th-232 (Source: FGR 12)	5.212E-04	5.212E-04	DCF1(38)
-1	Th-234 (Source: FGR 12)	2.410E-02	2.410E-02	DCF1(39)
-1	Tl-206 (Source: FGR 12)	7.697E-03	7.697E-03	DCF1(40)
-1	Tl-207 (Source: FGR 12)	1.980E-02	1.980E-02	DCF1(41)
-1	Tl-208 (Source: FGR 12)	2.298E+01	2.298E+01	DCF1(42)
-1	Tl-210 (Source: no data)	0.000E+00	-2.000E+00	DCF1(43)
-1	U-234 (Source: FGR 12)	4.017E-04	4.017E-04	DCF1(44)
-1	U-235 (Source: FGR 12)	7.211E-01	7.211E-01	DCF1(45)
-1	U-238 (Source: FGR 12)	1.031E-04	1.031E-04	DCF1(46)
-1	Dose conversion factors for inhalation, mrem/pCi:			
-1	Ac-227+D	6.724E+00	6.700E+00	DCF2(1)

Dose Conversion Factor (and Related) Parameter Summary (continued)
Dose Library: FGR 11

enu	Parameter	Current Value#	Base Case*	Parameter Name
-1	Ac-227+D1	6.724E+00	6.700E+00	DCF2(2)
-1	Ac-227+D2	6.708E+00	6.700E+00	DCF2(3)
-1	Ac-227+D3	6.708E+00	6.700E+00	DCF2(4)
-1	Ac-227+D4	6.700E+00	6.700E+00	DCF2(5)
-1	Ac-227+D5	6.700E+00	6.700E+00	DCF2(6)
-1	Pa-231	1.280E+00	1.280E+00	DCF2(7)
-1	Pb-210+D	2.320E-02	1.360E-02	DCF2(13)
-1	Pb-210+D1	1.380E-02	1.360E-02	DCF2(14)
-1	Pb-210+D2	1.360E-02	1.360E-02	DCF2(15)
-1	Ra-226+D	8.594E-03	8.580E-03	DCF2(16)
-1	Ra-226+D1	8.594E-03	8.580E-03	DCF2(19)
-1	Ra-226+D2	8.587E-03	8.580E-03	DCF2(22)
-1	Ra-226+D3	8.587E-03	8.580E-03	DCF2(25)
-1	Ra-226+D4	8.580E-03	8.580E-03	DCF2(28)
-1	Ra-228+D	5.078E-03	4.770E-03	DCF2(31)
-1	Th-228+D	3.454E-01	3.420E-01	DCF2(32)
-1	Th-230	3.260E-01	3.260E-01	DCF2(33)
-1	Th-232	1.640E+00	1.640E+00	DCF2(48)
-1	U-234	1.320E-01	1.320E-01	DCF2(49)
-1	U-235+D	1.230E-01	1.230E-01	DCF2(64)
-1	U-238	1.180E-01	1.180E-01	DCF2(70)
-1	U-238+D	1.180E-01	1.180E-01	DCF2(71)
-1	U-238+D1	1.180E-01	1.180E-01	DCF2(86)
-1	Dose conversion factors for ingestion, mrem/pCi:			
-1	Ac-227+D	1.480E-02	1.410E-02	DCF3(1)
-1	Ac-227+D1	1.480E-02	1.410E-02	DCF3(2)
-1	Ac-227+D2	1.477E-02	1.410E-02	DCF3(3)
-1	Ac-227+D3	1.477E-02	1.410E-02	DCF3(4)
-1	Ac-227+D4	1.411E-02	1.410E-02	DCF3(5)
-1	Ac-227+D5	1.411E-02	1.410E-02	DCF3(6)
-1	Pa-231	1.060E-02	1.060E-02	DCF3(7)
-1	Pb-210+D	7.276E-03	5.370E-03	DCF3(13)
-1	Pb-210+D1	5.376E-03	5.370E-03	DCF3(14)
-1	Pb-210+D2	5.370E-03	5.370E-03	DCF3(15)
-1	Ra-226+D	1.321E-03	1.320E-03	DCF3(16)
-1	Ra-226+D1	1.321E-03	1.320E-03	DCF3(19)
-1	Ra-226+D2	1.320E-03	1.320E-03	DCF3(22)
-1	Ra-226+D3	1.320E-03	1.320E-03	DCF3(25)
-1	Ra-226+D4	1.320E-03	1.320E-03	DCF3(28)
-1	Ra-228+D	1.442E-03	1.440E-03	DCF3(31)
-1	Th-228+D	8.086E-04	3.960E-04	DCF3(32)
-1	Th-230	5.480E-04	5.480E-04	DCF3(33)
-1	Th-232	2.730E-03	2.730E-03	DCF3(48)
-1	U-234	2.830E-04	2.830E-04	DCF3(49)
-1	U-235+D	2.673E-04	2.660E-04	DCF3(64)
-1	U-238	2.550E-04	2.550E-04	DCF3(70)
-1	U-238+D	2.709E-04	2.550E-04	DCF3(71)
-1	U-238+D1	2.687E-04	2.550E-04	DCF3(86)

Dose Conversion Factor (and Related) Parameter Summary (continued)

Dose Library: FGR 11

enu	Parameter	Current Value#	Base Case*	Parameter Name
-34	Food transfer factors:			
-34	Ac-227+D , plant/soil concentration ratio, dimensionless	2.500E-03	2.500E-03	RTF(1,1)
-34	Ac-227+D , beef/livestock-intake ratio, (pCi/kg)/(pCi/d)	2.000E-05	2.000E-05	RTF(1,2)
-34	Ac-227+D , milk/livestock-intake ratio, (pCi/L)/(pCi/d)	2.000E-05	2.000E-05	RTF(1,3)
-34				
-34	Ac-227+D1 , plant/soil concentration ratio, dimensionless	2.500E-03	2.500E-03	RTF(2,1)
-34	Ac-227+D1 , beef/livestock-intake ratio, (pCi/kg)/(pCi/d)	2.000E-05	2.000E-05	RTF(2,2)
-34	Ac-227+D1 , milk/livestock-intake ratio, (pCi/L)/(pCi/d)	2.000E-05	2.000E-05	RTF(2,3)
-34				
-34	Ac-227+D2 , plant/soil concentration ratio, dimensionless	2.500E-03	2.500E-03	RTF(3,1)
-34	Ac-227+D2 , beef/livestock-intake ratio, (pCi/kg)/(pCi/d)	2.000E-05	2.000E-05	RTF(3,2)
-34	Ac-227+D2 , milk/livestock-intake ratio, (pCi/L)/(pCi/d)	2.000E-05	2.000E-05	RTF(3,3)
-34				
-34	Ac-227+D3 , plant/soil concentration ratio, dimensionless	2.500E-03	2.500E-03	RTF(4,1)
-34	Ac-227+D3 , beef/livestock-intake ratio, (pCi/kg)/(pCi/d)	2.000E-05	2.000E-05	RTF(4,2)
-34	Ac-227+D3 , milk/livestock-intake ratio, (pCi/L)/(pCi/d)	2.000E-05	2.000E-05	RTF(4,3)
-34				
-34	Ac-227+D4 , plant/soil concentration ratio, dimensionless	2.500E-03	2.500E-03	RTF(5,1)
-34	Ac-227+D4 , beef/livestock-intake ratio, (pCi/kg)/(pCi/d)	2.000E-05	2.000E-05	RTF(5,2)
-34	Ac-227+D4 , milk/livestock-intake ratio, (pCi/L)/(pCi/d)	2.000E-05	2.000E-05	RTF(5,3)
-34				
-34	Ac-227+D5 , plant/soil concentration ratio, dimensionless	2.500E-03	2.500E-03	RTF(6,1)
-34	Ac-227+D5 , beef/livestock-intake ratio, (pCi/kg)/(pCi/d)	2.000E-05	2.000E-05	RTF(6,2)
-34	Ac-227+D5 , milk/livestock-intake ratio, (pCi/L)/(pCi/d)	2.000E-05	2.000E-05	RTF(6,3)
-34				
-34	Pa-231 , plant/soil concentration ratio, dimensionless	1.000E-02	1.000E-02	RTF(7,1)
-34	Pa-231 , beef/livestock-intake ratio, (pCi/kg)/(pCi/d)	5.000E-03	5.000E-03	RTF(7,2)
-34	Pa-231 , milk/livestock-intake ratio, (pCi/L)/(pCi/d)	5.000E-06	5.000E-06	RTF(7,3)
-34				
-34	Pb-210+D , plant/soil concentration ratio, dimensionless	1.000E-02	1.000E-02	RTF(13,1)
-34	Pb-210+D , beef/livestock-intake ratio, (pCi/kg)/(pCi/d)	8.000E-04	8.000E-04	RTF(13,2)
-34	Pb-210+D , milk/livestock-intake ratio, (pCi/L)/(pCi/d)	3.000E-04	3.000E-04	RTF(13,3)
-34				
-34	Pb-210+D1 , plant/soil concentration ratio, dimensionless	1.000E-02	1.000E-02	RTF(14,1)
-34	Pb-210+D1 , beef/livestock-intake ratio, (pCi/kg)/(pCi/d)	8.000E-04	8.000E-04	RTF(14,2)
-34	Pb-210+D1 , milk/livestock-intake ratio, (pCi/L)/(pCi/d)	3.000E-04	3.000E-04	RTF(14,3)
-34				
-34	Pb-210+D2 , plant/soil concentration ratio, dimensionless	1.000E-02	1.000E-02	RTF(15,1)
-34	Pb-210+D2 , beef/livestock-intake ratio, (pCi/kg)/(pCi/d)	8.000E-04	8.000E-04	RTF(15,2)
-34	Pb-210+D2 , milk/livestock-intake ratio, (pCi/L)/(pCi/d)	3.000E-04	3.000E-04	RTF(15,3)
-34				
-34	Ra-226+D , plant/soil concentration ratio, dimensionless	4.000E-02	4.000E-02	RTF(16,1)
-34	Ra-226+D , beef/livestock-intake ratio, (pCi/kg)/(pCi/d)	1.000E-03	1.000E-03	RTF(16,2)
-34	Ra-226+D , milk/livestock-intake ratio, (pCi/L)/(pCi/d)	1.000E-03	1.000E-03	RTF(16,3)
-34				
-34	Ra-226+D1 , plant/soil concentration ratio, dimensionless	4.000E-02	4.000E-02	RTF(19,1)
-34	Ra-226+D1 , beef/livestock-intake ratio, (pCi/kg)/(pCi/d)	1.000E-03	1.000E-03	RTF(19,2)
-34	Ra-226+D1 , milk/livestock-intake ratio, (pCi/L)/(pCi/d)	1.000E-03	1.000E-03	RTF(19,3)
-34				

Dose Conversion Factor (and Related) Parameter Summary (continued)
Dose Library: FGR 11

enu	Parameter	Current Value#	Base Case*	Parameter Name
-34	Ra-226+D2 , plant/soil concentration ratio, dimensionless	4.000E-02	4.000E-02	RTF(22,1)
-34	Ra-226+D2 , beef/livestock-intake ratio, (pCi/kg)/(pCi/d)	1.000E-03	1.000E-03	RTF(22,2)
-34	Ra-226+D2 , milk/livestock-intake ratio, (pCi/L)/(pCi/d)	1.000E-03	1.000E-03	RTF(22,3)
-34				
-34	Ra-226+D3 , plant/soil concentration ratio, dimensionless	4.000E-02	4.000E-02	RTF(25,1)
-34	Ra-226+D3 , beef/livestock-intake ratio, (pCi/kg)/(pCi/d)	1.000E-03	1.000E-03	RTF(25,2)
-34	Ra-226+D3 , milk/livestock-intake ratio, (pCi/L)/(pCi/d)	1.000E-03	1.000E-03	RTF(25,3)
-34				
-34	Ra-226+D4 , plant/soil concentration ratio, dimensionless	4.000E-02	4.000E-02	RTF(28,1)
-34	Ra-226+D4 , beef/livestock-intake ratio, (pCi/kg)/(pCi/d)	1.000E-03	1.000E-03	RTF(28,2)
-34	Ra-226+D4 , milk/livestock-intake ratio, (pCi/L)/(pCi/d)	1.000E-03	1.000E-03	RTF(28,3)
-34				
-34	Ra-228+D , plant/soil concentration ratio, dimensionless	4.000E-02	4.000E-02	RTF(31,1)
-34	Ra-228+D , beef/livestock-intake ratio, (pCi/kg)/(pCi/d)	1.000E-03	1.000E-03	RTF(31,2)
-34	Ra-228+D , milk/livestock-intake ratio, (pCi/L)/(pCi/d)	1.000E-03	1.000E-03	RTF(31,3)
-34				
-34	Th-228+D , plant/soil concentration ratio, dimensionless	1.000E-03	1.000E-03	RTF(32,1)
-34	Th-228+D , beef/livestock-intake ratio, (pCi/kg)/(pCi/d)	1.000E-04	1.000E-04	RTF(32,2)
-34	Th-228+D , milk/livestock-intake ratio, (pCi/L)/(pCi/d)	5.000E-06	5.000E-06	RTF(32,3)
-34				
-34	Th-230 , plant/soil concentration ratio, dimensionless	1.000E-03	1.000E-03	RTF(33,1)
-34	Th-230 , beef/livestock-intake ratio, (pCi/kg)/(pCi/d)	1.000E-04	1.000E-04	RTF(33,2)
-34	Th-230 , milk/livestock-intake ratio, (pCi/L)/(pCi/d)	5.000E-06	5.000E-06	RTF(33,3)
-34				
-34	Th-232 , plant/soil concentration ratio, dimensionless	1.000E-03	1.000E-03	RTF(48,1)
-34	Th-232 , beef/livestock-intake ratio, (pCi/kg)/(pCi/d)	1.000E-04	1.000E-04	RTF(48,2)
-34	Th-232 , milk/livestock-intake ratio, (pCi/L)/(pCi/d)	5.000E-06	5.000E-06	RTF(48,3)
-34				
-34	U-234 , plant/soil concentration ratio, dimensionless	2.500E-03	2.500E-03	RTF(49,1)
-34	U-234 , beef/livestock-intake ratio, (pCi/kg)/(pCi/d)	3.400E-04	3.400E-04	RTF(49,2)
-34	U-234 , milk/livestock-intake ratio, (pCi/L)/(pCi/d)	6.000E-04	6.000E-04	RTF(49,3)
-34				
-34	U-235+D , plant/soil concentration ratio, dimensionless	2.500E-03	2.500E-03	RTF(64,1)
-34	U-235+D , beef/livestock-intake ratio, (pCi/kg)/(pCi/d)	3.400E-04	3.400E-04	RTF(64,2)
-34	U-235+D , milk/livestock-intake ratio, (pCi/L)/(pCi/d)	6.000E-04	6.000E-04	RTF(64,3)
-34				
-34	U-238 , plant/soil concentration ratio, dimensionless	2.500E-03	2.500E-03	RTF(70,1)
-34	U-238 , beef/livestock-intake ratio, (pCi/kg)/(pCi/d)	3.400E-04	3.400E-04	RTF(70,2)
-34	U-238 , milk/livestock-intake ratio, (pCi/L)/(pCi/d)	6.000E-04	6.000E-04	RTF(70,3)
-34				
-34	U-238+D , plant/soil concentration ratio, dimensionless	2.500E-03	2.500E-03	RTF(71,1)
-34	U-238+D , beef/livestock-intake ratio, (pCi/kg)/(pCi/d)	3.400E-04	3.400E-04	RTF(71,2)
-34	U-238+D , milk/livestock-intake ratio, (pCi/L)/(pCi/d)	6.000E-04	6.000E-04	RTF(71,3)
-34				
-34	U-238+D1 , plant/soil concentration ratio, dimensionless	2.500E-03	2.500E-03	RTF(86,1)
-34	U-238+D1 , beef/livestock-intake ratio, (pCi/kg)/(pCi/d)	3.400E-04	3.400E-04	RTF(86,2)
-34	U-238+D1 , milk/livestock-intake ratio, (pCi/L)/(pCi/d)	6.000E-04	6.000E-04	RTF(86,3)
-34				

Dose Conversion Factor (and Related) Parameter Summary (continued)

Dose Library: FGR 11

enu	Parameter	Current Value#	Base Case*	Parameter Name
-5	Bioaccumulation factors, fresh water, L/kg:			
-5	Ac-227+D , fish	1.500E+01	1.500E+01	BIOFAC(1,1)
-5	Ac-227+D , crustacea and mollusks	1.000E+03	1.000E+03	BIOFAC(1,2)
-5				
-5	Ac-227+D1 , fish	1.500E+01	1.500E+01	BIOFAC(2,1)
-5	Ac-227+D1 , crustacea and mollusks	1.000E+03	1.000E+03	BIOFAC(2,2)
-5				
-5	Ac-227+D2 , fish	1.500E+01	1.500E+01	BIOFAC(3,1)
-5	Ac-227+D2 , crustacea and mollusks	1.000E+03	1.000E+03	BIOFAC(3,2)
-5				
-5	Ac-227+D3 , fish	1.500E+01	1.500E+01	BIOFAC(4,1)
-5	Ac-227+D3 , crustacea and mollusks	1.000E+03	1.000E+03	BIOFAC(4,2)
-5				
-5	Ac-227+D4 , fish	1.500E+01	1.500E+01	BIOFAC(5,1)
-5	Ac-227+D4 , crustacea and mollusks	1.000E+03	1.000E+03	BIOFAC(5,2)
-5				
-5	Ac-227+D5 , fish	1.500E+01	1.500E+01	BIOFAC(6,1)
-5	Ac-227+D5 , crustacea and mollusks	1.000E+03	1.000E+03	BIOFAC(6,2)
-5				
-5	Pa-231 , fish	1.000E+01	1.000E+01	BIOFAC(7,1)
-5	Pa-231 , crustacea and mollusks	1.100E+02	1.100E+02	BIOFAC(7,2)
-5				
-5	Pb-210+D , fish	3.000E+02	3.000E+02	BIOFAC(13,1)
-5	Pb-210+D , crustacea and mollusks	1.000E+02	1.000E+02	BIOFAC(13,2)
-5				
-5	Pb-210+D1 , fish	3.000E+02	3.000E+02	BIOFAC(14,1)
-5	Pb-210+D1 , crustacea and mollusks	1.000E+02	1.000E+02	BIOFAC(14,2)
-5				
-5	Pb-210+D2 , fish	3.000E+02	3.000E+02	BIOFAC(15,1)
-5	Pb-210+D2 , crustacea and mollusks	1.000E+02	1.000E+02	BIOFAC(15,2)
-5				
-5	Ra-226+D , fish	5.000E+01	5.000E+01	BIOFAC(16,1)
-5	Ra-226+D , crustacea and mollusks	2.500E+02	2.500E+02	BIOFAC(16,2)
-5				
-5	Ra-226+D1 , fish	5.000E+01	5.000E+01	BIOFAC(19,1)
-5	Ra-226+D1 , crustacea and mollusks	2.500E+02	2.500E+02	BIOFAC(19,2)
-5				
-5	Ra-226+D2 , fish	5.000E+01	5.000E+01	BIOFAC(22,1)
-5	Ra-226+D2 , crustacea and mollusks	2.500E+02	2.500E+02	BIOFAC(22,2)
-5				
-5	Ra-226+D3 , fish	5.000E+01	5.000E+01	BIOFAC(25,1)
-5	Ra-226+D3 , crustacea and mollusks	2.500E+02	2.500E+02	BIOFAC(25,2)
-5				
-5	Ra-226+D4 , fish	5.000E+01	5.000E+01	BIOFAC(28,1)
-5	Ra-226+D4 , crustacea and mollusks	2.500E+02	2.500E+02	BIOFAC(28,2)
-5				
-5	Ra-228+D , fish	5.000E+01	5.000E+01	BIOFAC(31,1)
-5	Ra-228+D , crustacea and mollusks	2.500E+02	2.500E+02	BIOFAC(31,2)
-5				

Dose Conversion Factor (and Related) Parameter Summary (continued)
Dose Library: FGR 11

enu	Parameter	Current Value#	Base Case*	Parameter Name
-5	Th-228+D , fish	1.000E+02	1.000E+02	BIOFAC(32,1)
-5	Th-228+D , crustacea and mollusks	5.000E+02	5.000E+02	BIOFAC(32,2)
-5				
-5	Th-230 , fish	1.000E+02	1.000E+02	BIOFAC(33,1)
-5	Th-230 , crustacea and mollusks	5.000E+02	5.000E+02	BIOFAC(33,2)
-5				
-5	Th-232 , fish	1.000E+02	1.000E+02	BIOFAC(48,1)
-5	Th-232 , crustacea and mollusks	5.000E+02	5.000E+02	BIOFAC(48,2)
-5				
-5	U-234 , fish	1.000E+01	1.000E+01	BIOFAC(49,1)
-5	U-234 , crustacea and mollusks	6.000E+01	6.000E+01	BIOFAC(49,2)
-5				
-5	U-235+D , fish	1.000E+01	1.000E+01	BIOFAC(64,1)
-5	U-235+D , crustacea and mollusks	6.000E+01	6.000E+01	BIOFAC(64,2)
-5				
-5	U-238 , fish	1.000E+01	1.000E+01	BIOFAC(70,1)
-5	U-238 , crustacea and mollusks	6.000E+01	6.000E+01	BIOFAC(70,2)
-5				
-5	U-238+D , fish	1.000E+01	1.000E+01	BIOFAC(71,1)
-5	U-238+D , crustacea and mollusks	6.000E+01	6.000E+01	BIOFAC(71,2)
-5				
-5	U-238+D1 , fish	1.000E+01	1.000E+01	BIOFAC(86,1)
-5	U-238+D1 , crustacea and mollusks	6.000E+01	6.000E+01	BIOFAC(86,2)
-5				

For DCF1(xxx) only, factors are for infinite depth & area. See ETFG table in Ground Pathway of Detailed Report.
Base Case means Default.Lib w/o Associate Nuclide contributions.

ummary : GKP Maintenance Worker Ingestion
ile : C:\USERS\CLAUDE\DOCUMENTS\0 GKP DOSE\RESRAD CW\GKP MAINTENANCE WORKER -INGESTION.RAD

Site-Specific Parameter Summary

enu	Parameter	User Input	Default	Used by RESRAD (If different from user input)	Parameter Name
011	Area of contaminated zone (m**2)	2.000E+02	1.000E+04	---	AREA
011	Thickness of contaminated zone (m)	1.500E-01	2.000E+00	---	THICK0
011	Fraction of contamination that is submerged	0.000E+00	0.000E+00	---	SUBMFRACT
011	Length parallel to aquifer flow (m)	1.000E+02	1.000E+02	---	LCZPAQ
011	Basic radiation dose limit (mrem/yr)	2.500E+01	3.000E+01	---	BRDL
011	Time since placement of material (yr)	0.000E+00	0.000E+00	---	TI
011	Times for calculations (yr)	1.000E+00	1.000E+00	---	T(2)
011	Times for calculations (yr)	3.000E+00	3.000E+00	---	T(3)
011	Times for calculations (yr)	1.000E+01	1.000E+01	---	T(4)
011	Times for calculations (yr)	3.000E+01	3.000E+01	---	T(5)
011	Times for calculations (yr)	1.000E+02	1.000E+02	---	T(6)
011	Times for calculations (yr)	3.000E+02	3.000E+02	---	T(7)
011	Times for calculations (yr)	1.000E+03	1.000E+03	---	T(8)
011	Times for calculations (yr)	not used	0.000E+00	---	T(9)
011	Times for calculations (yr)	not used	0.000E+00	---	T(10)
012	Initial principal radionuclide (pCi/g): Ra-226	3.650E+01	0.000E+00	---	S1(16)
012	Initial principal radionuclide (pCi/g): Th-232	2.400E+00	0.000E+00	---	S1(48)
012	Initial principal radionuclide (pCi/g): U-234	1.390E+01	0.000E+00	---	S1(49)
012	Initial principal radionuclide (pCi/g): U-235	8.400E-01	0.000E+00	---	S1(64)
012	Initial principal radionuclide (pCi/g): U-238	1.390E+01	0.000E+00	---	S1(70)
012	Concentration in groundwater (pCi/L): Ra-226	not used	0.000E+00	---	W1(16)
012	Concentration in groundwater (pCi/L): Th-232	not used	0.000E+00	---	W1(48)
012	Concentration in groundwater (pCi/L): U-234	not used	0.000E+00	---	W1(49)
012	Concentration in groundwater (pCi/L): U-235	not used	0.000E+00	---	W1(64)
012	Concentration in groundwater (pCi/L): U-238	not used	0.000E+00	---	W1(70)
013	Cover depth (m)	0.000E+00	0.000E+00	---	COVER0
013	Density of cover material (g/cm**3)	not used	1.500E+00	---	DENSCV
013	Cover depth erosion rate (m/yr)	not used	1.000E-03	---	VCV
013	Density of contaminated zone (g/cm**3)	1.500E+00	1.500E+00	---	DENSCZ
013	Contaminated zone erosion rate (m/yr)	1.000E-03	1.000E-03	---	VCZ
013	Contaminated zone total porosity	4.000E-01	4.000E-01	---	TPCZ
013	Contaminated zone field capacity	2.000E-01	2.000E-01	---	FCCZ
013	Contaminated zone hydraulic conductivity (m/yr)	1.000E+01	1.000E+01	---	HCCZ
013	Contaminated zone b parameter	5.300E+00	5.300E+00	---	BCZ
013	Average annual wind speed (m/sec)	2.000E+00	2.000E+00	---	WIND
013	Humidity in air (g/m**3)	not used	8.000E+00	---	HUMID
013	Evapotranspiration coefficient	5.000E-01	5.000E-01	---	EVAPTR
013	Precipitation (m/yr)	1.000E+00	1.000E+00	---	PRECIP
013	Irrigation (m/yr)	2.000E-01	2.000E-01	---	RI
013	Irrigation mode	overhead	overhead	---	IDITCH
013	Runoff coefficient	2.000E-01	2.000E-01	---	RUNOFF
013	Watershed area for nearby stream or pond (m**2)	1.000E+06	1.000E+06	---	WAREA
013	Accuracy for water/soil computations	1.000E-03	1.000E-03	---	EPS
014	Density of saturated zone (g/cm**3)	1.500E+00	1.500E+00	---	DENSAQ
014	Saturated zone total porosity	4.000E-01	4.000E-01	---	TPSZ
014	Saturated zone effective porosity	2.000E-01	2.000E-01	---	EPSZ
014	Saturated zone field capacity	2.000E-01	2.000E-01	---	FCSZ

Site-Specific Parameter Summary (continued)

enu	Parameter	User Input	Default	Used by RESRAD (If different from user input)	Parameter Name
014	Saturated zone hydraulic conductivity (m/yr)	1.000E+02	1.000E+02	---	HCSZ
014	Saturated zone hydraulic gradient	2.000E-02	2.000E-02	---	HGWT
014	Saturated zone b parameter	5.300E+00	5.300E+00	---	BSZ
014	Water table drop rate (m/yr)	1.000E-03	1.000E-03	---	VWT
014	Well pump intake depth (m below water table)	1.000E+01	1.000E+01	---	DWIBWT
014	Model: Nondispersion (ND) or Mass-Balance (MB)	ND	ND	---	MODEL
014	Well pumping rate (m**3/yr)	2.500E+02	2.500E+02	---	UW
015	Number of unsaturated zone strata	1	1	---	NS
015	Unsat. zone 1, thickness (m)	4.000E+00	4.000E+00	---	H(1)
015	Unsat. zone 1, soil density (g/cm**3)	1.500E+00	1.500E+00	---	DENSUZ(1)
015	Unsat. zone 1, total porosity	4.000E-01	4.000E-01	---	TPUZ(1)
015	Unsat. zone 1, effective porosity	2.000E-01	2.000E-01	---	EPUZ(1)
015	Unsat. zone 1, field capacity	2.000E-01	2.000E-01	---	FCUZ(1)
015	Unsat. zone 1, soil-specific b parameter	5.300E+00	5.300E+00	---	BUZ(1)
015	Unsat. zone 1, hydraulic conductivity (m/yr)	1.000E+01	1.000E+01	---	HCUZ(1)
016	Distribution coefficients for Ra-226				
016	Contaminated zone (cm**3/g)	7.000E+01	7.000E+01	---	DCNUCC(16)
016	Unsaturated zone 1 (cm**3/g)	7.000E+01	7.000E+01	---	DCNUCU(16,1)
016	Saturated zone (cm**3/g)	7.000E+01	7.000E+01	---	DCNUCS(16)
016	Leach rate (/yr)	0.000E+00	0.000E+00	3.165E-02	ALEACH(16)
016	Solubility constant	0.000E+00	0.000E+00	not used	SOLUBK(16)
016	Distribution coefficients for Th-232				
016	Contaminated zone (cm**3/g)	6.000E+04	6.000E+04	---	DCNUCC(48)
016	Unsaturated zone 1 (cm**3/g)	6.000E+04	6.000E+04	---	DCNUCU(48,1)
016	Saturated zone (cm**3/g)	6.000E+04	6.000E+04	---	DCNUCS(48)
016	Leach rate (/yr)	0.000E+00	0.000E+00	3.704E-05	ALEACH(48)
016	Solubility constant	0.000E+00	0.000E+00	not used	SOLUBK(48)
016	Distribution coefficients for U-234				
016	Contaminated zone (cm**3/g)	5.000E+01	5.000E+01	---	DCNUCC(49)
016	Unsaturated zone 1 (cm**3/g)	5.000E+01	5.000E+01	---	DCNUCU(49,1)
016	Saturated zone (cm**3/g)	5.000E+01	5.000E+01	---	DCNUCS(49)
016	Leach rate (/yr)	0.000E+00	0.000E+00	4.426E-02	ALEACH(49)
016	Solubility constant	0.000E+00	0.000E+00	not used	SOLUBK(49)
016	Distribution coefficients for U-235				
016	Contaminated zone (cm**3/g)	5.000E+01	5.000E+01	---	DCNUCC(64)
016	Unsaturated zone 1 (cm**3/g)	5.000E+01	5.000E+01	---	DCNUCU(64,1)
016	Saturated zone (cm**3/g)	5.000E+01	5.000E+01	---	DCNUCS(64)
016	Leach rate (/yr)	0.000E+00	0.000E+00	4.426E-02	ALEACH(64)
016	Solubility constant	0.000E+00	0.000E+00	not used	SOLUBK(64)
016	Distribution coefficients for U-238				
016	Contaminated zone (cm**3/g)	5.000E+01	5.000E+01	---	DCNUCC(70)
016	Unsaturated zone 1 (cm**3/g)	5.000E+01	5.000E+01	---	DCNUCU(70,1)
016	Saturated zone (cm**3/g)	5.000E+01	5.000E+01	---	DCNUCS(70)
016	Leach rate (/yr)	0.000E+00	0.000E+00	4.426E-02	ALEACH(70)
016	Solubility constant	0.000E+00	0.000E+00	not used	SOLUBK(70)

Site-Specific Parameter Summary (continued)

enu	Parameter	User Input	Default	Used by RESRAD (If different from user input)	Parameter Name
016	Distribution coefficients for daughter Ac-227				
016	Contaminated zone (cm**3/g)	2.000E+01	2.000E+01	---	DCNUCC(1)
016	Unsaturated zone 1 (cm**3/g)	2.000E+01	2.000E+01	---	DCNUCU(1,1)
016	Saturated zone (cm**3/g)	2.000E+01	2.000E+01	---	DCNUCS(1)
016	Leach rate (/yr)	0.000E+00	0.000E+00	1.099E-01	ALEACH(1)
016	Solubility constant	0.000E+00	0.000E+00	not used	SOLUBK(1)
016	Distribution coefficients for daughter Pa-231				
016	Contaminated zone (cm**3/g)	5.000E+01	5.000E+01	---	DCNUCC(7)
016	Unsaturated zone 1 (cm**3/g)	5.000E+01	5.000E+01	---	DCNUCU(7,1)
016	Saturated zone (cm**3/g)	5.000E+01	5.000E+01	---	DCNUCS(7)
016	Leach rate (/yr)	0.000E+00	0.000E+00	4.426E-02	ALEACH(7)
016	Solubility constant	0.000E+00	0.000E+00	not used	SOLUBK(7)
016	Distribution coefficients for daughter Pb-210				
016	Contaminated zone (cm**3/g)	1.000E+02	1.000E+02	---	DCNUCC(13)
016	Unsaturated zone 1 (cm**3/g)	1.000E+02	1.000E+02	---	DCNUCU(13,1)
016	Saturated zone (cm**3/g)	1.000E+02	1.000E+02	---	DCNUCS(13)
016	Leach rate (/yr)	0.000E+00	0.000E+00	2.217E-02	ALEACH(13)
016	Solubility constant	0.000E+00	0.000E+00	not used	SOLUBK(13)
016	Distribution coefficients for daughter Ra-228				
016	Contaminated zone (cm**3/g)	7.000E+01	7.000E+01	---	DCNUCC(31)
016	Unsaturated zone 1 (cm**3/g)	7.000E+01	7.000E+01	---	DCNUCU(31,1)
016	Saturated zone (cm**3/g)	7.000E+01	7.000E+01	---	DCNUCS(31)
016	Leach rate (/yr)	0.000E+00	0.000E+00	3.165E-02	ALEACH(31)
016	Solubility constant	0.000E+00	0.000E+00	not used	SOLUBK(31)
016	Distribution coefficients for daughter Th-228				
016	Contaminated zone (cm**3/g)	6.000E+04	6.000E+04	---	DCNUCC(32)
016	Unsaturated zone 1 (cm**3/g)	6.000E+04	6.000E+04	---	DCNUCU(32,1)
016	Saturated zone (cm**3/g)	6.000E+04	6.000E+04	---	DCNUCS(32)
016	Leach rate (/yr)	0.000E+00	0.000E+00	3.704E-05	ALEACH(32)
016	Solubility constant	0.000E+00	0.000E+00	not used	SOLUBK(32)
016	Distribution coefficients for daughter Th-230				
016	Contaminated zone (cm**3/g)	6.000E+04	6.000E+04	---	DCNUCC(33)
016	Unsaturated zone 1 (cm**3/g)	6.000E+04	6.000E+04	---	DCNUCU(33,1)
016	Saturated zone (cm**3/g)	6.000E+04	6.000E+04	---	DCNUCS(33)
016	Leach rate (/yr)	0.000E+00	0.000E+00	3.704E-05	ALEACH(33)
016	Solubility constant	0.000E+00	0.000E+00	not used	SOLUBK(33)
017	Inhalation rate (m**3/yr)	not used	8.400E+03	---	INHALR
017	Mass loading for inhalation (g/m**3)	not used	1.000E-04	---	MLINH
017	Exposure duration	3.000E+01	3.000E+01	---	ED
017	Shielding factor, inhalation	not used	4.000E-01	---	SHF3
017	Shielding factor, external gamma	not used	7.000E-01	---	SHF1
017	Fraction of time spent indoors	0.000E+00	5.000E-01	---	FIND
017	Fraction of time spent outdoors (on site)	2.280E-01	2.500E-01	---	FOTD
017	Shape factor flag, external gamma	not used	1.000E+00	>0 shows circular AREA.	FS

Site-Specific Parameter Summary (continued)

enu	Parameter	User Input	Default	Used by RESRAD (If different from user input)	Parameter Name
017	Radii of shape factor array (used if FS = -1):				
017	Outer annular radius (m), ring 1:	not used	5.000E+01	---	RAD_SHAPE(1)
017	Outer annular radius (m), ring 2:	not used	7.071E+01	---	RAD_SHAPE(2)
017	Outer annular radius (m), ring 3:	not used	0.000E+00	---	RAD_SHAPE(3)
017	Outer annular radius (m), ring 4:	not used	0.000E+00	---	RAD_SHAPE(4)
017	Outer annular radius (m), ring 5:	not used	0.000E+00	---	RAD_SHAPE(5)
017	Outer annular radius (m), ring 6:	not used	0.000E+00	---	RAD_SHAPE(6)
017	Outer annular radius (m), ring 7:	not used	0.000E+00	---	RAD_SHAPE(7)
017	Outer annular radius (m), ring 8:	not used	0.000E+00	---	RAD_SHAPE(8)
017	Outer annular radius (m), ring 9:	not used	0.000E+00	---	RAD_SHAPE(9)
017	Outer annular radius (m), ring 10:	not used	0.000E+00	---	RAD_SHAPE(10)
017	Outer annular radius (m), ring 11:	not used	0.000E+00	---	RAD_SHAPE(11)
017	Outer annular radius (m), ring 12:	not used	0.000E+00	---	RAD_SHAPE(12)
017	Fractions of annular areas within AREA:				
017	Ring 1	not used	1.000E+00	---	FRACA(1)
017	Ring 2	not used	2.732E-01	---	FRACA(2)
017	Ring 3	not used	0.000E+00	---	FRACA(3)
017	Ring 4	not used	0.000E+00	---	FRACA(4)
017	Ring 5	not used	0.000E+00	---	FRACA(5)
017	Ring 6	not used	0.000E+00	---	FRACA(6)
017	Ring 7	not used	0.000E+00	---	FRACA(7)
017	Ring 8	not used	0.000E+00	---	FRACA(8)
017	Ring 9	not used	0.000E+00	---	FRACA(9)
017	Ring 10	not used	0.000E+00	---	FRACA(10)
017	Ring 11	not used	0.000E+00	---	FRACA(11)
017	Ring 12	not used	0.000E+00	---	FRACA(12)
018	Fruits, vegetables and grain consumption (kg/yr)	not used	1.600E+02	---	DIET(1)
018	Leafy vegetable consumption (kg/yr)	not used	1.400E+01	---	DIET(2)
018	Milk consumption (L/yr)	not used	9.200E+01	---	DIET(3)
018	Meat and poultry consumption (kg/yr)	not used	6.300E+01	---	DIET(4)
018	Fish consumption (kg/yr)	not used	5.400E+00	---	DIET(5)
018	Other seafood consumption (kg/yr)	not used	9.000E-01	---	DIET(6)
018	Soil ingestion rate (g/yr)	3.650E+01	3.650E+01	---	SOIL
018	Drinking water intake (L/yr)	not used	5.100E+02	---	DWI
018	Contamination fraction of drinking water	not used	1.000E+00	---	FDW
018	Contamination fraction of household water	1.000E+00	1.000E+00	---	FHHW
018	Contamination fraction of livestock water	not used	1.000E+00	---	FLW
018	Contamination fraction of irrigation water	not used	1.000E+00	---	FIRW
018	Contamination fraction of aquatic food	not used	5.000E-01	---	FR9
018	Contamination fraction of plant food	not used	-1	---	FPLANT
018	Contamination fraction of meat	not used	-1	---	FMEAT
018	Contamination fraction of milk	not used	-1	---	FMILK
019	Livestock fodder intake for meat (kg/day)	not used	6.800E+01	---	LFI5
019	Livestock fodder intake for milk (kg/day)	not used	5.500E+01	---	LFI6
019	Livestock water intake for meat (L/day)	not used	5.000E+01	---	LWI5
019	Livestock water intake for milk (L/day)	not used	1.600E+02	---	LWI6
019	Livestock soil intake (kg/day)	not used	5.000E-01	---	LSI

Site-Specific Parameter Summary (continued)

enu	Parameter	User Input	Default	Used by RESRAD (If different from user input)	Parameter Name
019	Mass loading for foliar deposition (g/m**3)	not used	1.000E-04	---	MLFD
019	Depth of soil mixing layer (m)	1.500E-01	1.500E-01	---	DM
019	Depth of roots (m)	not used	9.000E-01	---	DROOT
019	Drinking water fraction from ground water	not used	1.000E+00	---	FGWDW
019	Household water fraction from ground water	1.000E+00	1.000E+00	---	FGWHH
019	Livestock water fraction from ground water	not used	1.000E+00	---	FGWLW
019	Irrigation fraction from ground water	not used	1.000E+00	---	FGWIR
19B	Wet weight crop yield for Non-Leafy (kg/m**2)	not used	7.000E-01	---	YV(1)
19B	Wet weight crop yield for Leafy (kg/m**2)	not used	1.500E+00	---	YV(2)
19B	Wet weight crop yield for Fodder (kg/m**2)	not used	1.100E+00	---	YV(3)
19B	Growing Season for Non-Leafy (years)	not used	1.700E-01	---	TE(1)
19B	Growing Season for Leafy (years)	not used	2.500E-01	---	TE(2)
19B	Growing Season for Fodder (years)	not used	8.000E-02	---	TE(3)
19B	Translocation Factor for Non-Leafy	not used	1.000E-01	---	TIV(1)
19B	Translocation Factor for Leafy	not used	1.000E+00	---	TIV(2)
19B	Translocation Factor for Fodder	not used	1.000E+00	---	TIV(3)
19B	Dry Foliar Interception Fraction for Non-Leafy	not used	2.500E-01	---	RDRY(1)
19B	Dry Foliar Interception Fraction for Leafy	not used	2.500E-01	---	RDRY(2)
19B	Dry Foliar Interception Fraction for Fodder	not used	2.500E-01	---	RDRY(3)
19B	Wet Foliar Interception Fraction for Non-Leafy	not used	2.500E-01	---	RWET(1)
19B	Wet Foliar Interception Fraction for Leafy	not used	2.500E-01	---	RWET(2)
19B	Wet Foliar Interception Fraction for Fodder	not used	2.500E-01	---	RWET(3)
19B	Weathering Removal Constant for Vegetation	not used	2.000E+01	---	WLAM
14	C-12 concentration in water (g/cm**3)	not used	2.000E-05	---	C12WTR
14	C-12 concentration in contaminated soil (g/g)	not used	3.000E-02	---	C12CZ
14	Fraction of vegetation carbon from soil	not used	2.000E-02	---	CSOIL
14	Fraction of vegetation carbon from air	not used	9.800E-01	---	CAIR
14	C-14 evasion layer thickness in soil (m)	not used	3.000E-01	---	DMC
14	C-14 evasion flux rate from soil (1/sec)	not used	7.000E-07	---	EVSN
14	C-12 evasion flux rate from soil (1/sec)	not used	1.000E-10	---	REVSN
14	Fraction of grain in beef cattle feed	not used	8.000E-01	---	AVFG4
14	Fraction of grain in milk cow feed	not used	2.000E-01	---	AVFG5
TOR	Storage times of contaminated foodstuffs (days):				
TOR	Fruits, non-leafy vegetables, and grain	1.400E+01	1.400E+01	---	STOR_T(1)
TOR	Leafy vegetables	1.000E+00	1.000E+00	---	STOR_T(2)
TOR	Milk	1.000E+00	1.000E+00	---	STOR_T(3)
TOR	Meat and poultry	2.000E+01	2.000E+01	---	STOR_T(4)
TOR	Fish	7.000E+00	7.000E+00	---	STOR_T(5)
TOR	Crustacea and mollusks	7.000E+00	7.000E+00	---	STOR_T(6)
TOR	Well water	1.000E+00	1.000E+00	---	STOR_T(7)
TOR	Surface water	1.000E+00	1.000E+00	---	STOR_T(8)
TOR	Livestock fodder	4.500E+01	4.500E+01	---	STOR_T(9)
021	Thickness of building foundation (m)	not used	1.500E-01	---	FLOOR1
021	Bulk density of building foundation (g/cm**3)	not used	2.400E+00	---	DENSFL
021	Total porosity of the cover material	not used	4.000E-01	---	TPCV
021	Total porosity of the building foundation	not used	1.000E-01	---	TPFL

Site-Specific Parameter Summary (continued)

enu	Parameter	User Input	Default	Used by RESRAD (If different from user input)	Parameter Name
021	Volumetric water content of the cover material	not used	5.000E-02	---	PH2OCV
021	Volumetric water content of the foundation	not used	3.000E-02	---	PH2OFL
021	Diffusion coefficient for radon gas (m/sec):				
021	in cover material	not used	2.000E-06	---	DIFCV
021	in foundation material	not used	3.000E-07	---	DIFFL
021	in contaminated zone soil	2.000E-06	2.000E-06	---	DIFCZ
021	Radon vertical dimension of mixing (m)	2.000E+00	2.000E+00	---	HMIX
021	Average building air exchange rate (1/hr)	not used	5.000E-01	---	REXG
021	Height of the building (room) (m)	not used	2.500E+00	---	HRM
021	Building interior area factor	not used	0.000E+00	code computed (time dependent)	FAI
021	Building depth below ground surface (m)	not used	-1.000E+00	code computed (time dependent)	DMFL
021	Emanating power of Rn-222 gas	2.500E-01	2.500E-01	---	EMANA(1)
021	Emanating power of Rn-220 gas	1.500E-01	1.500E-01	---	EMANA(2)
ITL	Number of graphical time points	32	---	---	NPTS
ITL	Maximum number of integration points for dose	17	---	---	LYMAX
ITL	Maximum number of integration points for risk	257	---	---	KYMAX

Summary of Pathway Selections

Pathway	User Selection
1 -- external gamma	suppressed
2 -- inhalation (w/o radon)	suppressed
3 -- plant ingestion	suppressed
4 -- meat ingestion	suppressed
5 -- milk ingestion	suppressed
6 -- aquatic foods	suppressed
7 -- drinking water	suppressed
8 -- soil ingestion	active
9 -- radon	active
Find peak pathway doses	suppressed

ummary : GKP Maintenance Worker Ingestion
ile : C:\USERS\CLAUDE\DOCUMENTS\0 GKP DOSE\RESRAD CW\GKP MAINTENANCE WORKER -INGESTION.RAD

Contaminated Zone Dimensions		Initial Soil Concentrations, pCi/g	
Area:	200.00 square meters	Ra-226	3.650E+01
Thickness:	0.15 meters	Th-232	2.400E+00
over Depth:	0.00 meters	U-234	1.390E+01
		U-235	8.400E-01
		U-238	1.390E+01

Total Dose TDOSE(t), mrem/yr
Basic Radiation Dose Limit = 2.500E+01 mrem/yr
Total Mixture Sum M(t) = Fraction of Basic Dose Limit Received at Time (t)

t (years):	0.000E+00	1.000E+00	3.000E+00	1.000E+01	3.000E+01	1.000E+02	3.000E+02	1.000E+03
TDOSE(t):	1.098E-01	1.193E-01	1.352E-01	1.635E-01	1.353E-01	1.602E-02	0.000E+00	0.000E+00
M(t):	4.391E-03	4.772E-03	5.408E-03	6.540E-03	5.411E-03	6.410E-04	0.000E+00	0.000E+00

aximum TDOSE(t): 1.663E-01 mrem/yr at t = 13.55 ñ 0.03 years

Total Dose Contributions TDOSE(i,p,t) for Individual Radionuclides (i) and Pathways (p)
As mrem/yr and Fraction of Total Dose At t = 1.355E+01 years

Water Independent Pathways (Inhalation excludes radon)

adio-	Ground		Inhalation		Radon		Plant		Meat		Milk		Soil	
uclide	mrem/yr	fract.	mrem/yr	fract.	mrem/yr	fract.	mrem/yr	fract.	mrem/yr	fract.	mrem/yr	fract.	mrem/yr	fract.
uclide														
a-226	0.000E+00	0.0000	0.000E+00	0.0000	1.989E-04	0.0012	0.000E+00	0.0000	0.000E+00	0.0000	0.000E+00	0.0000	1.431E-01	0.8606
h-232	0.000E+00	0.0000	0.000E+00	0.0000	1.194E-03	0.0072	0.000E+00	0.0000	0.000E+00	0.0000	0.000E+00	0.0000	1.538E-02	0.0925
-234	0.000E+00	0.0000	0.000E+00	0.0000	3.294E-11	0.0000	0.000E+00	0.0000	0.000E+00	0.0000	0.000E+00	0.0000	3.188E-03	0.0192
-235	0.000E+00	0.0000	0.000E+00	0.0000	0.000E+00	0.0000	0.000E+00	0.0000	0.000E+00	0.0000	0.000E+00	0.0000	1.846E-04	0.0011
-238	0.000E+00	0.0000	0.000E+00	0.0000	4.071E-16	0.0000	0.000E+00	0.0000	0.000E+00	0.0000	0.000E+00	0.0000	3.027E-03	0.0182
otal	0.000E+00	0.0000	0.000E+00	0.0000	1.393E-03	0.0084	0.000E+00	0.0000	0.000E+00	0.0000	0.000E+00	0.0000	1.649E-01	0.9916

Total Dose Contributions TDOSE(i,p,t) for Individual Radionuclides (i) and Pathways (p)
As mrem/yr and Fraction of Total Dose At t = 1.355E+01 years

Water Dependent Pathways

adio-	Water		Fish		Radon		Plant		Meat		Milk		All Pathways*	
uclide	mrem/yr	fract.	mrem/yr	fract.	mrem/yr	fract.	mrem/yr	fract.	mrem/yr	fract.	mrem/yr	fract.	mrem/yr	fract.
uclide														
a-226	0.000E+00	0.0000	0.000E+00	0.0000	0.000E+00	0.0000	0.000E+00	0.0000	0.000E+00	0.0000	0.000E+00	0.0000	1.433E-01	0.8618
h-232	0.000E+00	0.0000	0.000E+00	0.0000	0.000E+00	0.0000	0.000E+00	0.0000	0.000E+00	0.0000	0.000E+00	0.0000	1.658E-02	0.0997
-234	0.000E+00	0.0000	0.000E+00	0.0000	0.000E+00	0.0000	0.000E+00	0.0000	0.000E+00	0.0000	0.000E+00	0.0000	3.188E-03	0.0192
-235	0.000E+00	0.0000	0.000E+00	0.0000	0.000E+00	0.0000	0.000E+00	0.0000	0.000E+00	0.0000	0.000E+00	0.0000	1.846E-04	0.0011
-238	0.000E+00	0.0000	0.000E+00	0.0000	0.000E+00	0.0000	0.000E+00	0.0000	0.000E+00	0.0000	0.000E+00	0.0000	3.027E-03	0.0182
otal	0.000E+00	0.0000	0.000E+00	0.0000	0.000E+00	0.0000	0.000E+00	0.0000	0.000E+00	0.0000	0.000E+00	0.0000	1.663E-01	1.0000

Sum of all water independent and dependent pathways.

ummary : GKP Maintenance Worker Ingestion
ile : C:\USERS\CLAUDE\DOCUMENTS\0 GKP DOSE\RESRAD CW\GKP MAINTENANCE WORKER -INGESTION.RAD

Total Dose Contributions TDOSE(i,p,t) for Individual Radionuclides (i) and Pathways (p)
As mrem/yr and Fraction of Total Dose At t = 0.000E+00 years

Water Independent Pathways (Inhalation excludes radon)

	Ground		Inhalation		Radon		Plant		Meat		Milk		Soil	
adio-														
uclide	mrem/yr	fract.	mrem/yr	fract.	mrem/yr	fract.	mrem/yr	fract.	mrem/yr	fract.	mrem/yr	fract.	mrem/yr	fract.
a-226	0.000E+00	0.0000	0.000E+00	0.0000	3.372E-04	0.0031	0.000E+00	0.0000	0.000E+00	0.0000	0.000E+00	0.0000	8.539E-02	0.7779
h-232	0.000E+00	0.0000	0.000E+00	0.0000	1.209E-05	0.0001	0.000E+00	0.0000	0.000E+00	0.0000	0.000E+00	0.0000	1.122E-02	0.1022
-234	0.000E+00	0.0000	0.000E+00	0.0000	8.487E-14	0.0000	0.000E+00	0.0000	0.000E+00	0.0000	0.000E+00	0.0000	6.383E-03	0.0582
-235	0.000E+00	0.0000	0.000E+00	0.0000	0.000E+00	0.0000	0.000E+00	0.0000	0.000E+00	0.0000	0.000E+00	0.0000	3.646E-04	0.0033
-238	0.000E+00	0.0000	0.000E+00	0.0000	5.958E-20	0.0000	0.000E+00	0.0000	0.000E+00	0.0000	0.000E+00	0.0000	6.061E-03	0.0552
otal	0.000E+00	0.0000	0.000E+00	0.0000	3.493E-04	0.0032	0.000E+00	0.0000	0.000E+00	0.0000	0.000E+00	0.0000	1.094E-01	0.9968

Total Dose Contributions TDOSE(i,p,t) for Individual Radionuclides (i) and Pathways (p)
As mrem/yr and Fraction of Total Dose At t = 0.000E+00 years

Water Dependent Pathways

	Water		Fish		Radon		Plant		Meat		Milk		All Pathways*	
adio-														
uclide	mrem/yr	fract.	mrem/yr	fract.	mrem/yr	fract.	mrem/yr	fract.	mrem/yr	fract.	mrem/yr	fract.	mrem/yr	fract.
a-226	0.000E+00	0.0000	0.000E+00	0.0000	0.000E+00	0.0000	0.000E+00	0.0000	0.000E+00	0.0000	0.000E+00	0.0000	8.573E-02	0.7810
h-232	0.000E+00	0.0000	0.000E+00	0.0000	0.000E+00	0.0000	0.000E+00	0.0000	0.000E+00	0.0000	0.000E+00	0.0000	1.123E-02	0.1023
-234	0.000E+00	0.0000	0.000E+00	0.0000	0.000E+00	0.0000	0.000E+00	0.0000	0.000E+00	0.0000	0.000E+00	0.0000	6.383E-03	0.0582
-235	0.000E+00	0.0000	0.000E+00	0.0000	0.000E+00	0.0000	0.000E+00	0.0000	0.000E+00	0.0000	0.000E+00	0.0000	3.646E-04	0.0033
-238	0.000E+00	0.0000	0.000E+00	0.0000	0.000E+00	0.0000	0.000E+00	0.0000	0.000E+00	0.0000	0.000E+00	0.0000	6.061E-03	0.0552
otal	0.000E+00	0.0000	0.000E+00	0.0000	0.000E+00	0.0000	0.000E+00	0.0000	0.000E+00	0.0000	0.000E+00	0.0000	1.098E-01	1.0000

Sum of all water independent and dependent pathways.

ummary : GKP Maintenance Worker Ingestion
ile : C:\USERS\CLAUDE\DOCUMENTS\0 GKP DOSE\RESRAD CW\GKP MAINTENANCE WORKER -INGESTION.RAD

Total Dose Contributions TDOSE(i,p,t) for Individual Radionuclides (i) and Pathways (p)
As mrem/yr and Fraction of Total Dose At t = 1.000E+00 years

Water Independent Pathways (Inhalation excludes radon)

	Ground		Inhalation		Radon		Plant		Meat		Milk		Soil	
adio-	ÄÄÄÄÄÄÄÄÄÄÄÄÄÄÄÄ		ÄÄÄÄÄÄÄÄÄÄÄÄÄÄÄÄ		ÄÄÄÄÄÄÄÄÄÄÄÄÄÄÄÄ		ÄÄÄÄÄÄÄÄÄÄÄÄÄÄÄÄ		ÄÄÄÄÄÄÄÄÄÄÄÄÄÄÄÄ		ÄÄÄÄÄÄÄÄÄÄÄÄÄÄÄÄ		ÄÄÄÄÄÄÄÄÄÄÄÄÄÄÄÄ		ÄÄÄÄÄÄÄÄÄÄÄÄÄÄÄÄ	
uclide	mrem/yr	fract.	mrem/yr	fract.	mrem/yr	fract.	mrem/yr	fract.	mrem/yr	fract.	mrem/yr	fract.	mrem/yr	fract.
ÄÄÄÄÄÄ	ÄÄÄÄÄÄÄÄÄ	ÄÄÄÄÄÄ	ÄÄÄÄÄÄÄÄÄ	ÄÄÄÄÄÄ	ÄÄÄÄÄÄÄÄÄ	ÄÄÄÄÄÄ	ÄÄÄÄÄÄÄÄÄ	ÄÄÄÄÄÄ	ÄÄÄÄÄÄÄÄÄ	ÄÄÄÄÄÄ	ÄÄÄÄÄÄÄÄÄ	ÄÄÄÄÄÄ	ÄÄÄÄÄÄÄÄÄ	ÄÄÄÄÄÄ
a-226	0.000E+00	0.0000	0.000E+00	0.0000	3.244E-04	0.0027	0.000E+00	0.0000	0.000E+00	0.0000	0.000E+00	0.0000	9.489E-02	0.7954
n-232	0.000E+00	0.0000	0.000E+00	0.0000	7.349E-05	0.0006	0.000E+00	0.0000	0.000E+00	0.0000	0.000E+00	0.0000	1.184E-02	0.0992
-234	0.000E+00	0.0000	0.000E+00	0.0000	5.780E-13	0.0000	0.000E+00	0.0000	0.000E+00	0.0000	0.000E+00	0.0000	6.066E-03	0.0508
-235	0.000E+00	0.0000	0.000E+00	0.0000	0.000E+00	0.0000	0.000E+00	0.0000	0.000E+00	0.0000	0.000E+00	0.0000	3.468E-04	0.0029
-238	0.000E+00	0.0000	0.000E+00	0.0000	8.662E-19	0.0000	0.000E+00	0.0000	0.000E+00	0.0000	0.000E+00	0.0000	5.760E-03	0.0483
íííííí	íííííííííí	íííííí	íííííííííí	íííííí	íííííííííí	íííííí	íííííííííí	íííííí	íííííííííí	íííííí	íííííííííí	íííííí	íííííííííí	íííííí
otal	0.000E+00	0.0000	0.000E+00	0.0000	3.979E-04	0.0033	0.000E+00	0.0000	0.000E+00	0.0000	0.000E+00	0.0000	1.189E-01	0.9967

Total Dose Contributions TDOSE(i,p,t) for Individual Radionuclides (i) and Pathways (p)
As mrem/yr and Fraction of Total Dose At t = 1.000E+00 years

Water Dependent Pathways

	Water		Fish		Radon		Plant		Meat		Milk		All Pathways*	
adio-	ÄÄÄÄÄÄÄÄÄÄÄÄÄÄÄÄ		ÄÄÄÄÄÄÄÄÄÄÄÄÄÄÄÄ		ÄÄÄÄÄÄÄÄÄÄÄÄÄÄÄÄ		ÄÄÄÄÄÄÄÄÄÄÄÄÄÄÄÄ		ÄÄÄÄÄÄÄÄÄÄÄÄÄÄÄÄ		ÄÄÄÄÄÄÄÄÄÄÄÄÄÄÄÄ		ÄÄÄÄÄÄÄÄÄÄÄÄÄÄÄÄ	
uclide	mrem/yr	fract.	mrem/yr	fract.	mrem/yr	fract.	mrem/yr	fract.	mrem/yr	fract.	mrem/yr	fract.	mrem/yr	fract.
ÄÄÄÄÄÄ	ÄÄÄÄÄÄÄÄÄ	ÄÄÄÄÄÄ	ÄÄÄÄÄÄÄÄÄ	ÄÄÄÄÄÄ	ÄÄÄÄÄÄÄÄÄ	ÄÄÄÄÄÄ	ÄÄÄÄÄÄÄÄÄ	ÄÄÄÄÄÄ	ÄÄÄÄÄÄÄÄÄ	ÄÄÄÄÄÄ	ÄÄÄÄÄÄÄÄÄ	ÄÄÄÄÄÄ	ÄÄÄÄÄÄÄÄÄ	ÄÄÄÄÄÄ
a-226	0.000E+00	0.0000	0.000E+00	0.0000	0.000E+00	0.0000	0.000E+00	0.0000	0.000E+00	0.0000	0.000E+00	0.0000	9.521E-02	0.7981
n-232	0.000E+00	0.0000	0.000E+00	0.0000	0.000E+00	0.0000	0.000E+00	0.0000	0.000E+00	0.0000	0.000E+00	0.0000	1.191E-02	0.0999
-234	0.000E+00	0.0000	0.000E+00	0.0000	0.000E+00	0.0000	0.000E+00	0.0000	0.000E+00	0.0000	0.000E+00	0.0000	6.066E-03	0.0508
-235	0.000E+00	0.0000	0.000E+00	0.0000	0.000E+00	0.0000	0.000E+00	0.0000	0.000E+00	0.0000	0.000E+00	0.0000	3.468E-04	0.0029
-238	0.000E+00	0.0000	0.000E+00	0.0000	0.000E+00	0.0000	0.000E+00	0.0000	0.000E+00	0.0000	0.000E+00	0.0000	5.760E-03	0.0483
íííííí	íííííííííí	íííííí	íííííííííí	íííííí	íííííííííí	íííííí	íííííííííí	íííííí	íííííííííí	íííííí	íííííííííí	íííííí	íííííííííí	íííííí
otal	0.000E+00	0.0000	0.000E+00	0.0000	0.000E+00	0.0000	0.000E+00	0.0000	0.000E+00	0.0000	0.000E+00	0.0000	1.193E-01	1.0000

Sum of all water independent and dependent pathways.

ummary : GKP Maintenance Worker Ingestion
ile : C:\USERS\CLAUDE\DOCUMENTS\0 GKP DOSE\RESRAD CW\GKP MAINTENANCE WORKER -INGESTION.RAD

Total Dose Contributions TDOSE(i,p,t) for Individual Radionuclides (i) and Pathways (p)
As mrem/yr and Fraction of Total Dose At t = 3.000E+00 years

Water Independent Pathways (Inhalation excludes radon)

	Ground		Inhalation		Radon		Plant		Meat		Milk		Soil	
adio-	ÄÄÄÄÄÄÄÄÄÄÄÄÄÄÄÄ		ÄÄÄÄÄÄÄÄÄÄÄÄÄÄÄÄ		ÄÄÄÄÄÄÄÄÄÄÄÄÄÄÄÄ		ÄÄÄÄÄÄÄÄÄÄÄÄÄÄÄÄ		ÄÄÄÄÄÄÄÄÄÄÄÄÄÄÄÄ		ÄÄÄÄÄÄÄÄÄÄÄÄÄÄÄÄ		ÄÄÄÄÄÄÄÄÄÄÄÄÄÄÄÄ	
uclide	mrem/yr	fract.	mrem/yr	fract.	mrem/yr	fract.	mrem/yr	fract.	mrem/yr	fract.	mrem/yr	fract.	mrem/yr	fract.
ÄÄÄÄÄÄ	ÄÄÄÄÄÄÄÄÄ	ÄÄÄÄÄÄ	ÄÄÄÄÄÄÄÄÄ	ÄÄÄÄÄÄ	ÄÄÄÄÄÄÄÄÄ	ÄÄÄÄÄÄ	ÄÄÄÄÄÄÄÄÄ	ÄÄÄÄÄÄ	ÄÄÄÄÄÄÄÄÄ	ÄÄÄÄÄÄ	ÄÄÄÄÄÄÄÄÄ	ÄÄÄÄÄÄ	ÄÄÄÄÄÄÄÄÄ	ÄÄÄÄÄÄ
a-226	0.000E+00	0.0000	0.000E+00	0.0000	3.002E-04	0.0022	0.000E+00	0.0000	0.000E+00	0.0000	0.000E+00	0.0000	1.106E-01	0.8184
n-232	0.000E+00	0.0000	0.000E+00	0.0000	2.861E-04	0.0021	0.000E+00	0.0000	0.000E+00	0.0000	0.000E+00	0.0000	1.297E-02	0.0959
-234	0.000E+00	0.0000	0.000E+00	0.0000	2.872E-12	0.0000	0.000E+00	0.0000	0.000E+00	0.0000	0.000E+00	0.0000	5.478E-03	0.0405
-235	0.000E+00	0.0000	0.000E+00	0.0000	0.000E+00	0.0000	0.000E+00	0.0000	0.000E+00	0.0000	0.000E+00	0.0000	3.137E-04	0.0023
-238	0.000E+00	0.0000	0.000E+00	0.0000	9.420E-18	0.0000	0.000E+00	0.0000	0.000E+00	0.0000	0.000E+00	0.0000	5.201E-03	0.0385
íííííí	íííííííííí	íííííí	íííííííííí	íííííí	íííííííííí	íííííí	íííííííííí	íííííí	íííííííííí	íííííí	íííííííííí	íííííí	íííííííííí	íííííí
otal	0.000E+00	0.0000	0.000E+00	0.0000	5.863E-04	0.0043	0.000E+00	0.0000	0.000E+00	0.0000	0.000E+00	0.0000	1.346E-01	0.9957

Total Dose Contributions TDOSE(i,p,t) for Individual Radionuclides (i) and Pathways (p)
As mrem/yr and Fraction of Total Dose At t = 3.000E+00 years

Water Dependent Pathways

	Water		Fish		Radon		Plant		Meat		Milk		All Pathways*	
adio-	ÄÄÄÄÄÄÄÄÄÄÄÄÄÄÄÄ		ÄÄÄÄÄÄÄÄÄÄÄÄÄÄÄÄ		ÄÄÄÄÄÄÄÄÄÄÄÄÄÄÄÄ		ÄÄÄÄÄÄÄÄÄÄÄÄÄÄÄÄ		ÄÄÄÄÄÄÄÄÄÄÄÄÄÄÄÄ		ÄÄÄÄÄÄÄÄÄÄÄÄÄÄÄÄ		ÄÄÄÄÄÄÄÄÄÄÄÄÄÄÄÄ	
uclide	mrem/yr	fract.	mrem/yr	fract.	mrem/yr	fract.	mrem/yr	fract.	mrem/yr	fract.	mrem/yr	fract.	mrem/yr	fract.
ÄÄÄÄÄÄ	ÄÄÄÄÄÄÄÄÄ	ÄÄÄÄÄÄ	ÄÄÄÄÄÄÄÄÄ	ÄÄÄÄÄÄ	ÄÄÄÄÄÄÄÄÄ	ÄÄÄÄÄÄ	ÄÄÄÄÄÄÄÄÄ	ÄÄÄÄÄÄ	ÄÄÄÄÄÄÄÄÄ	ÄÄÄÄÄÄ	ÄÄÄÄÄÄÄÄÄ	ÄÄÄÄÄÄ	ÄÄÄÄÄÄÄÄÄ	ÄÄÄÄÄÄ
a-226	0.000E+00	0.0000	0.000E+00	0.0000	0.000E+00	0.0000	0.000E+00	0.0000	0.000E+00	0.0000	0.000E+00	0.0000	1.109E-01	0.8207
n-232	0.000E+00	0.0000	0.000E+00	0.0000	0.000E+00	0.0000	0.000E+00	0.0000	0.000E+00	0.0000	0.000E+00	0.0000	1.325E-02	0.0980
-234	0.000E+00	0.0000	0.000E+00	0.0000	0.000E+00	0.0000	0.000E+00	0.0000	0.000E+00	0.0000	0.000E+00	0.0000	5.478E-03	0.0405
-235	0.000E+00	0.0000	0.000E+00	0.0000	0.000E+00	0.0000	0.000E+00	0.0000	0.000E+00	0.0000	0.000E+00	0.0000	3.137E-04	0.0023
-238	0.000E+00	0.0000	0.000E+00	0.0000	0.000E+00	0.0000	0.000E+00	0.0000	0.000E+00	0.0000	0.000E+00	0.0000	5.201E-03	0.0385
íííííí	íííííííííí	íííííí	íííííííííí	íííííí	íííííííííí	íííííí	íííííííííí	íííííí	íííííííííí	íííííí	íííííííííí	íííííí	íííííííííí	íííííí
otal	0.000E+00	0.0000	0.000E+00	0.0000	0.000E+00	0.0000	0.000E+00	0.0000	0.000E+00	0.0000	0.000E+00	0.0000	1.352E-01	1.0000

Sum of all water independent and dependent pathways.

Total Dose Contributions TDOSE(i,p,t) for Individual Radionuclides (i) and Pathways (p)
As mrem/yr and Fraction of Total Dose At t = 1.000E+01 years

Water Independent Pathways (Inhalation excludes radon)

	Ground		Inhalation		Radon		Plant		Meat		Milk		Soil	
adio-	ÄÄÄÄÄÄÄÄÄÄÄÄÄÄÄÄ		ÄÄÄÄÄÄÄÄÄÄÄÄÄÄÄÄ		ÄÄÄÄÄÄÄÄÄÄÄÄÄÄÄÄ		ÄÄÄÄÄÄÄÄÄÄÄÄÄÄÄÄ		ÄÄÄÄÄÄÄÄÄÄÄÄÄÄÄÄ		ÄÄÄÄÄÄÄÄÄÄÄÄÄÄÄÄ		ÄÄÄÄÄÄÄÄÄÄÄÄÄÄÄÄ	
uclide	mrem/yr	fract.	mrem/yr	fract.	mrem/yr	fract.	mrem/yr	fract.	mrem/yr	fract.	mrem/yr	fract.	mrem/yr	fract.
ÄÄÄÄÄÄ	ÄÄÄÄÄÄÄÄÄÄ	ÄÄÄÄÄÄ	ÄÄÄÄÄÄÄÄÄÄ	ÄÄÄÄÄÄ	ÄÄÄÄÄÄÄÄÄÄ	ÄÄÄÄÄÄ	ÄÄÄÄÄÄÄÄÄÄ	ÄÄÄÄÄÄ	ÄÄÄÄÄÄÄÄÄÄ	ÄÄÄÄÄÄ	ÄÄÄÄÄÄÄÄÄÄ	ÄÄÄÄÄÄ	ÄÄÄÄÄÄÄÄÄÄ	ÄÄÄÄÄÄ
a-226	0.000E+00	0.0000	0.000E+00	0.0000	2.285E-04	0.0014	0.000E+00	0.0000	0.000E+00	0.0000	0.000E+00	0.0000	1.395E-01	0.8531
h-232	0.000E+00	0.0000	0.000E+00	0.0000	9.950E-04	0.0061	0.000E+00	0.0000	0.000E+00	0.0000	0.000E+00	0.0000	1.511E-02	0.0924
-234	0.000E+00	0.0000	0.000E+00	0.0000	2.059E-11	0.0000	0.000E+00	0.0000	0.000E+00	0.0000	0.000E+00	0.0000	3.827E-03	0.0234
-235	0.000E+00	0.0000	0.000E+00	0.0000	0.000E+00	0.0000	0.000E+00	0.0000	0.000E+00	0.0000	0.000E+00	0.0000	2.207E-04	0.0013
-238	0.000E+00	0.0000	0.000E+00	0.0000	1.937E-16	0.0000	0.000E+00	0.0000	0.000E+00	0.0000	0.000E+00	0.0000	3.633E-03	0.0222
íííííí	íííííííííí	íííííí	íííííííííí	íííííí	íííííííííí	íííííí	íííííííííí	íííííí	íííííííííí	íííííí	íííííííííí	íííííí	íííííííííí	íííííí
otal	0.000E+00	0.0000	0.000E+00	0.0000	1.224E-03	0.0075	0.000E+00	0.0000	0.000E+00	0.0000	0.000E+00	0.0000	1.623E-01	0.9925

Total Dose Contributions TDOSE(i,p,t) for Individual Radionuclides (i) and Pathways (p)
As mrem/yr and Fraction of Total Dose At t = 1.000E+01 years

Water Dependent Pathways

	Water		Fish		Radon		Plant		Meat		Milk		All Pathways*	
adio-	ÄÄÄÄÄÄÄÄÄÄÄÄÄÄÄÄ		ÄÄÄÄÄÄÄÄÄÄÄÄÄÄÄÄ		ÄÄÄÄÄÄÄÄÄÄÄÄÄÄÄÄ		ÄÄÄÄÄÄÄÄÄÄÄÄÄÄÄÄ		ÄÄÄÄÄÄÄÄÄÄÄÄÄÄÄÄ		ÄÄÄÄÄÄÄÄÄÄÄÄÄÄÄÄ		ÄÄÄÄÄÄÄÄÄÄÄÄÄÄÄÄ	
uclide	mrem/yr	fract.	mrem/yr	fract.	mrem/yr	fract.	mrem/yr	fract.	mrem/yr	fract.	mrem/yr	fract.	mrem/yr	fract.
ÄÄÄÄÄÄ	ÄÄÄÄÄÄÄÄÄÄ	ÄÄÄÄÄÄ	ÄÄÄÄÄÄÄÄÄÄ	ÄÄÄÄÄÄ	ÄÄÄÄÄÄÄÄÄÄ	ÄÄÄÄÄÄ	ÄÄÄÄÄÄÄÄÄÄ	ÄÄÄÄÄÄ	ÄÄÄÄÄÄÄÄÄÄ	ÄÄÄÄÄÄ	ÄÄÄÄÄÄÄÄÄÄ	ÄÄÄÄÄÄ	ÄÄÄÄÄÄÄÄÄÄ	ÄÄÄÄÄÄ
a-226	0.000E+00	0.0000	0.000E+00	0.0000	0.000E+00	0.0000	0.000E+00	0.0000	0.000E+00	0.0000	0.000E+00	0.0000	1.397E-01	0.8545
h-232	0.000E+00	0.0000	0.000E+00	0.0000	0.000E+00	0.0000	0.000E+00	0.0000	0.000E+00	0.0000	0.000E+00	0.0000	1.610E-02	0.0985
-234	0.000E+00	0.0000	0.000E+00	0.0000	0.000E+00	0.0000	0.000E+00	0.0000	0.000E+00	0.0000	0.000E+00	0.0000	3.827E-03	0.0234
-235	0.000E+00	0.0000	0.000E+00	0.0000	0.000E+00	0.0000	0.000E+00	0.0000	0.000E+00	0.0000	0.000E+00	0.0000	2.207E-04	0.0013
-238	0.000E+00	0.0000	0.000E+00	0.0000	0.000E+00	0.0000	0.000E+00	0.0000	0.000E+00	0.0000	0.000E+00	0.0000	3.633E-03	0.0222
íííííí	íííííííííí	íííííí	íííííííííí	íííííí	íííííííííí	íííííí	íííííííííí	íííííí	íííííííííí	íííííí	íííííííííí	íííííí	íííííííííí	íííííí
otal	0.000E+00	0.0000	0.000E+00	0.0000	0.000E+00	0.0000	0.000E+00	0.0000	0.000E+00	0.0000	0.000E+00	0.0000	1.635E-01	1.0000

Sum of all water independent and dependent pathways.

ummary : GKP Maintenance Worker Ingestion
ile : C:\USERS\CLAUDE\DOCUMENTS\0 GKP DOSE\RESRAD CW\GKP MAINTENANCE WORKER -INGESTION.RAD

Total Dose Contributions TDOSE(i,p,t) for Individual Radionuclides (i) and Pathways (p)
As mrem/yr and Fraction of Total Dose At t = 3.000E+01 years

Water Independent Pathways (Inhalation excludes radon)

	Ground		Inhalation		Radon		Plant		Meat		Milk		Soil	
adio-	ÄÄÄÄÄÄÄÄÄÄÄÄÄÄÄÄ		ÄÄÄÄÄÄÄÄÄÄÄÄÄÄÄÄ		ÄÄÄÄÄÄÄÄÄÄÄÄÄÄÄÄ		ÄÄÄÄÄÄÄÄÄÄÄÄÄÄÄÄ		ÄÄÄÄÄÄÄÄÄÄÄÄÄÄÄÄ		ÄÄÄÄÄÄÄÄÄÄÄÄÄÄÄÄ		ÄÄÄÄÄÄÄÄÄÄÄÄÄÄÄÄ		ÄÄÄÄÄÄÄÄÄÄÄÄÄÄÄÄ	
uclide	mrem/yr	fract.	mrem/yr	fract.	mrem/yr	fract.	mrem/yr	fract.	mrem/yr	fract.	mrem/yr	fract.	mrem/yr	fract.
ÄÄÄÄÄÄ	ÄÄÄÄÄÄÄÄÄ	ÄÄÄÄÄÄ	ÄÄÄÄÄÄÄÄÄ	ÄÄÄÄÄÄ	ÄÄÄÄÄÄÄÄÄ	ÄÄÄÄÄÄ	ÄÄÄÄÄÄÄÄÄ	ÄÄÄÄÄÄ	ÄÄÄÄÄÄÄÄÄ	ÄÄÄÄÄÄ	ÄÄÄÄÄÄÄÄÄ	ÄÄÄÄÄÄ	ÄÄÄÄÄÄÄÄÄ	ÄÄÄÄÄÄ
a-226	0.000E+00	0.0000	0.000E+00	0.0000	1.033E-04	0.0008	0.000E+00	0.0000	0.000E+00	0.0000	0.000E+00	0.0000	1.167E-01	0.8628
n-232	0.000E+00	0.0000	0.000E+00	0.0000	1.465E-03	0.0108	0.000E+00	0.0000	0.000E+00	0.0000	0.000E+00	0.0000	1.428E-02	0.1055
-234	0.000E+00	0.0000	0.000E+00	0.0000	9.295E-11	0.0000	0.000E+00	0.0000	0.000E+00	0.0000	0.000E+00	0.0000	1.354E-03	0.0100
-235	0.000E+00	0.0000	0.000E+00	0.0000	0.000E+00	0.0000	0.000E+00	0.0000	0.000E+00	0.0000	0.000E+00	0.0000	7.981E-05	0.0006
-238	0.000E+00	0.0000	0.000E+00	0.0000	2.290E-15	0.0000	0.000E+00	0.0000	0.000E+00	0.0000	0.000E+00	0.0000	1.284E-03	0.0095
íííííí	íííííííííí	íííííí	íííííííííí	íííííí	íííííííííí	íííííí	íííííííííí	íííííí	íííííííííí	íííííí	íííííííííí	íííííí	íííííííííí	íííííí
otal	0.000E+00	0.0000	0.000E+00	0.0000	1.569E-03	0.0116	0.000E+00	0.0000	0.000E+00	0.0000	0.000E+00	0.0000	1.337E-01	0.9884

Total Dose Contributions TDOSE(i,p,t) for Individual Radionuclides (i) and Pathways (p)
As mrem/yr and Fraction of Total Dose At t = 3.000E+01 years

Water Dependent Pathways

	Water		Fish		Radon		Plant		Meat		Milk		All Pathways*	
adio-	ÄÄÄÄÄÄÄÄÄÄÄÄÄÄÄÄ		ÄÄÄÄÄÄÄÄÄÄÄÄÄÄÄÄ		ÄÄÄÄÄÄÄÄÄÄÄÄÄÄÄÄ		ÄÄÄÄÄÄÄÄÄÄÄÄÄÄÄÄ		ÄÄÄÄÄÄÄÄÄÄÄÄÄÄÄÄ		ÄÄÄÄÄÄÄÄÄÄÄÄÄÄÄÄ		ÄÄÄÄÄÄÄÄÄÄÄÄÄÄÄÄ	
uclide	mrem/yr	fract.	mrem/yr	fract.	mrem/yr	fract.	mrem/yr	fract.	mrem/yr	fract.	mrem/yr	fract.	mrem/yr	fract.
ÄÄÄÄÄÄ	ÄÄÄÄÄÄÄÄÄ	ÄÄÄÄÄÄ	ÄÄÄÄÄÄÄÄÄ	ÄÄÄÄÄÄ	ÄÄÄÄÄÄÄÄÄ	ÄÄÄÄÄÄ	ÄÄÄÄÄÄÄÄÄ	ÄÄÄÄÄÄ	ÄÄÄÄÄÄÄÄÄ	ÄÄÄÄÄÄ	ÄÄÄÄÄÄÄÄÄ	ÄÄÄÄÄÄ	ÄÄÄÄÄÄÄÄÄ	ÄÄÄÄÄÄ
a-226	0.000E+00	0.0000	0.000E+00	0.0000	0.000E+00	0.0000	0.000E+00	0.0000	0.000E+00	0.0000	0.000E+00	0.0000	1.168E-01	0.8635
n-232	0.000E+00	0.0000	0.000E+00	0.0000	0.000E+00	0.0000	0.000E+00	0.0000	0.000E+00	0.0000	0.000E+00	0.0000	1.574E-02	0.1164
-234	0.000E+00	0.0000	0.000E+00	0.0000	0.000E+00	0.0000	0.000E+00	0.0000	0.000E+00	0.0000	0.000E+00	0.0000	1.354E-03	0.0100
-235	0.000E+00	0.0000	0.000E+00	0.0000	0.000E+00	0.0000	0.000E+00	0.0000	0.000E+00	0.0000	0.000E+00	0.0000	7.981E-05	0.0006
-238	0.000E+00	0.0000	0.000E+00	0.0000	0.000E+00	0.0000	0.000E+00	0.0000	0.000E+00	0.0000	0.000E+00	0.0000	1.284E-03	0.0095
íííííí	íííííííííí	íííííí	íííííííííí	íííííí	íííííííííí	íííííí	íííííííííí	íííííí	íííííííííí	íííííí	íííííííííí	íííííí	íííííííííí	íííííí
otal	0.000E+00	0.0000	0.000E+00	0.0000	0.000E+00	0.0000	0.000E+00	0.0000	0.000E+00	0.0000	0.000E+00	0.0000	1.353E-01	1.0000

Sum of all water independent and dependent pathways.

ummary : GKP Maintenance Worker Ingestion
ile : C:\USERS\CLAUDE\DOCUMENTS\0 GKP DOSE\RESRAD CW\GKP MAINTENANCE WORKER -INGESTION.RAD

Total Dose Contributions TDOSE(i,p,t) for Individual Radionuclides (i) and Pathways (p)
As mrem/yr and Fraction of Total Dose At t = 1.000E+02 years

Water Independent Pathways (Inhalation excludes radon)

	Ground		Inhalation		Radon		Plant		Meat		Milk		Soil	
adio-	ÄÄÄÄÄÄÄÄÄÄÄÄÄÄÄÄ		ÄÄÄÄÄÄÄÄÄÄÄÄÄÄÄÄ		ÄÄÄÄÄÄÄÄÄÄÄÄÄÄÄÄ		ÄÄÄÄÄÄÄÄÄÄÄÄÄÄÄÄ		ÄÄÄÄÄÄÄÄÄÄÄÄÄÄÄÄ		ÄÄÄÄÄÄÄÄÄÄÄÄÄÄÄÄ		ÄÄÄÄÄÄÄÄÄÄÄÄÄÄÄÄ	
uclide	mrem/yr	fract.	mrem/yr	fract.	mrem/yr	fract.	mrem/yr	fract.	mrem/yr	fract.	mrem/yr	fract.	mrem/yr	fract.
ÄÄÄÄÄÄ	ÄÄÄÄÄÄÄÄÄ	ÄÄÄÄÄÄ	ÄÄÄÄÄÄÄÄÄ	ÄÄÄÄÄÄ	ÄÄÄÄÄÄÄÄÄ	ÄÄÄÄÄÄ	ÄÄÄÄÄÄÄÄÄ	ÄÄÄÄÄÄ	ÄÄÄÄÄÄÄÄÄ	ÄÄÄÄÄÄ	ÄÄÄÄÄÄÄÄÄ	ÄÄÄÄÄÄ	ÄÄÄÄÄÄÄÄÄ	ÄÄÄÄÄÄ
a-226	0.000E+00	0.0000	0.000E+00	0.0000	4.546E-06	0.0003	0.000E+00	0.0000	0.000E+00	0.0000	0.000E+00	0.0000	8.557E-03	0.5340
h-232	0.000E+00	0.0000	0.000E+00	0.0000	1.483E-03	0.0926	0.000E+00	0.0000	0.000E+00	0.0000	0.000E+00	0.0000	5.927E-03	0.3699
-234	0.000E+00	0.0000	0.000E+00	0.0000	1.079E-10	0.0000	0.000E+00	0.0000	0.000E+00	0.0000	0.000E+00	0.0000	2.624E-05	0.0016
-235	0.000E+00	0.0000	0.000E+00	0.0000	0.000E+00	0.0000	0.000E+00	0.0000	0.000E+00	0.0000	0.000E+00	0.0000	1.616E-06	0.0001
-238	0.000E+00	0.0000	0.000E+00	0.0000	5.863E-15	0.0000	0.000E+00	0.0000	0.000E+00	0.0000	0.000E+00	0.0000	2.403E-05	0.0015
íííííí	íííííííííí	íííííí	íííííííííí	íííííí	íííííííííí	íííííí	íííííííííí	íííííí	íííííííííí	íííííí	íííííííííí	íííííí	íííííííííí	íííííí
otal	0.000E+00	0.0000	0.000E+00	0.0000	1.488E-03	0.0929	0.000E+00	0.0000	0.000E+00	0.0000	0.000E+00	0.0000	1.454E-02	0.9071

Total Dose Contributions TDOSE(i,p,t) for Individual Radionuclides (i) and Pathways (p)
As mrem/yr and Fraction of Total Dose At t = 1.000E+02 years

Water Dependent Pathways

	Water		Fish		Radon		Plant		Meat		Milk		All Pathways*	
adio-	ÄÄÄÄÄÄÄÄÄÄÄÄÄÄÄÄ		ÄÄÄÄÄÄÄÄÄÄÄÄÄÄÄÄ		ÄÄÄÄÄÄÄÄÄÄÄÄÄÄÄÄ		ÄÄÄÄÄÄÄÄÄÄÄÄÄÄÄÄ		ÄÄÄÄÄÄÄÄÄÄÄÄÄÄÄÄ		ÄÄÄÄÄÄÄÄÄÄÄÄÄÄÄÄ		ÄÄÄÄÄÄÄÄÄÄÄÄÄÄÄÄ	
uclide	mrem/yr	fract.	mrem/yr	fract.	mrem/yr	fract.	mrem/yr	fract.	mrem/yr	fract.	mrem/yr	fract.	mrem/yr	fract.
ÄÄÄÄÄÄ	ÄÄÄÄÄÄÄÄÄ	ÄÄÄÄÄÄ	ÄÄÄÄÄÄÄÄÄ	ÄÄÄÄÄÄ	ÄÄÄÄÄÄÄÄÄ	ÄÄÄÄÄÄ	ÄÄÄÄÄÄÄÄÄ	ÄÄÄÄÄÄ	ÄÄÄÄÄÄÄÄÄ	ÄÄÄÄÄÄ	ÄÄÄÄÄÄÄÄÄ	ÄÄÄÄÄÄ	ÄÄÄÄÄÄÄÄÄ	ÄÄÄÄÄÄ
a-226	0.000E+00	0.0000	0.000E+00	0.0000	0.000E+00	0.0000	0.000E+00	0.0000	0.000E+00	0.0000	0.000E+00	0.0000	8.562E-03	0.5343
h-232	0.000E+00	0.0000	0.000E+00	0.0000	0.000E+00	0.0000	0.000E+00	0.0000	0.000E+00	0.0000	0.000E+00	0.0000	7.410E-03	0.4625
-234	0.000E+00	0.0000	0.000E+00	0.0000	0.000E+00	0.0000	0.000E+00	0.0000	0.000E+00	0.0000	0.000E+00	0.0000	2.624E-05	0.0016
-235	0.000E+00	0.0000	0.000E+00	0.0000	0.000E+00	0.0000	0.000E+00	0.0000	0.000E+00	0.0000	0.000E+00	0.0000	1.616E-06	0.0001
-238	0.000E+00	0.0000	0.000E+00	0.0000	0.000E+00	0.0000	0.000E+00	0.0000	0.000E+00	0.0000	0.000E+00	0.0000	2.403E-05	0.0015
íííííí	íííííííííí	íííííí	íííííííííí	íííííí	íííííííííí	íííííí	íííííííííí	íííííí	íííííííííí	íííííí	íííííííííí	íííííí	íííííííííí	íííííí
otal	0.000E+00	0.0000	0.000E+00	0.0000	0.000E+00	0.0000	0.000E+00	0.0000	0.000E+00	0.0000	0.000E+00	0.0000	1.602E-02	1.0000

Sum of all water independent and dependent pathways.

ummary : GKP Maintenance Worker Ingestion
ile : C:\USERS\CLAUDE\DOCUMENTS\0 GKP DOSE\RESRAD CW\GKP MAINTENANCE WORKER -INGESTION.RAD

Total Dose Contributions TDOSE(i,p,t) for Individual Radionuclides (i) and Pathways (p)
As mrem/yr and Fraction of Total Dose At t = 3.000E+02 years

Water Independent Pathways (Inhalation excludes radon)

	Ground		Inhalation		Radon		Plant		Meat		Milk		Soil	
adio-	ÄÄÄÄÄÄÄÄÄÄÄÄÄÄÄÄ		ÄÄÄÄÄÄÄÄÄÄÄÄÄÄÄÄ		ÄÄÄÄÄÄÄÄÄÄÄÄÄÄÄÄ		ÄÄÄÄÄÄÄÄÄÄÄÄÄÄÄÄ		ÄÄÄÄÄÄÄÄÄÄÄÄÄÄÄÄ		ÄÄÄÄÄÄÄÄÄÄÄÄÄÄÄÄ		ÄÄÄÄÄÄÄÄÄÄÄÄÄÄÄÄ	
uclide	mrem/yr	fract.	mrem/yr	fract.	mrem/yr	fract.	mrem/yr	fract.	mrem/yr	fract.	mrem/yr	fract.	mrem/yr	fract.
ÄÄÄÄÄÄ	ÄÄÄÄÄÄÄÄÄ	ÄÄÄÄÄÄ	ÄÄÄÄÄÄÄÄÄ	ÄÄÄÄÄÄ	ÄÄÄÄÄÄÄÄÄ	ÄÄÄÄÄÄ	ÄÄÄÄÄÄÄÄÄ	ÄÄÄÄÄÄ	ÄÄÄÄÄÄÄÄÄ	ÄÄÄÄÄÄ	ÄÄÄÄÄÄÄÄÄ	ÄÄÄÄÄÄ	ÄÄÄÄÄÄÄÄÄ	ÄÄÄÄÄÄ
a-226	0.000E+00	0.0000	0.000E+00	0.0000	0.000E+00	0.0000	0.000E+00	0.0000	0.000E+00	0.0000	0.000E+00	0.0000	0.000E+00	0.0000
h-232	0.000E+00	0.0000	0.000E+00	0.0000	0.000E+00	0.0000	0.000E+00	0.0000	0.000E+00	0.0000	0.000E+00	0.0000	0.000E+00	0.0000
-234	0.000E+00	0.0000	0.000E+00	0.0000	0.000E+00	0.0000	0.000E+00	0.0000	0.000E+00	0.0000	0.000E+00	0.0000	0.000E+00	0.0000
-235	0.000E+00	0.0000	0.000E+00	0.0000	0.000E+00	0.0000	0.000E+00	0.0000	0.000E+00	0.0000	0.000E+00	0.0000	0.000E+00	0.0000
-238	0.000E+00	0.0000	0.000E+00	0.0000	0.000E+00	0.0000	0.000E+00	0.0000	0.000E+00	0.0000	0.000E+00	0.0000	0.000E+00	0.0000
íííííí	íííííííííí	íííííí	íííííííííí	íííííí	íííííííííí	íííííí	íííííííííí	íííííí	íííííííííí	íííííí	íííííííííí	íííííí	íííííííííí	íííííí
otal	0.000E+00	0.0000	0.000E+00	0.0000	0.000E+00	0.0000	0.000E+00	0.0000	0.000E+00	0.0000	0.000E+00	0.0000	0.000E+00	0.0000

Total Dose Contributions TDOSE(i,p,t) for Individual Radionuclides (i) and Pathways (p)
As mrem/yr and Fraction of Total Dose At t = 3.000E+02 years

Water Dependent Pathways

	Water		Fish		Radon		Plant		Meat		Milk		All Pathways*	
adio-	ÄÄÄÄÄÄÄÄÄÄÄÄÄÄÄÄ		ÄÄÄÄÄÄÄÄÄÄÄÄÄÄÄÄ		ÄÄÄÄÄÄÄÄÄÄÄÄÄÄÄÄ		ÄÄÄÄÄÄÄÄÄÄÄÄÄÄÄÄ		ÄÄÄÄÄÄÄÄÄÄÄÄÄÄÄÄ		ÄÄÄÄÄÄÄÄÄÄÄÄÄÄÄÄ		ÄÄÄÄÄÄÄÄÄÄÄÄÄÄÄÄ	
uclide	mrem/yr	fract.	mrem/yr	fract.	mrem/yr	fract.	mrem/yr	fract.	mrem/yr	fract.	mrem/yr	fract.	mrem/yr	fract.
ÄÄÄÄÄÄ	ÄÄÄÄÄÄÄÄÄ	ÄÄÄÄÄÄ	ÄÄÄÄÄÄÄÄÄ	ÄÄÄÄÄÄ	ÄÄÄÄÄÄÄÄÄ	ÄÄÄÄÄÄ	ÄÄÄÄÄÄÄÄÄ	ÄÄÄÄÄÄ	ÄÄÄÄÄÄÄÄÄ	ÄÄÄÄÄÄ	ÄÄÄÄÄÄÄÄÄ	ÄÄÄÄÄÄ	ÄÄÄÄÄÄÄÄÄ	ÄÄÄÄÄÄ
a-226	0.000E+00	0.0000	0.000E+00	0.0000	0.000E+00	0.0000	0.000E+00	0.0000	0.000E+00	0.0000	0.000E+00	0.0000	0.000E+00	0.0000
h-232	0.000E+00	0.0000	0.000E+00	0.0000	0.000E+00	0.0000	0.000E+00	0.0000	0.000E+00	0.0000	0.000E+00	0.0000	0.000E+00	0.0000
-234	0.000E+00	0.0000	0.000E+00	0.0000	0.000E+00	0.0000	0.000E+00	0.0000	0.000E+00	0.0000	0.000E+00	0.0000	0.000E+00	0.0000
-235	0.000E+00	0.0000	0.000E+00	0.0000	0.000E+00	0.0000	0.000E+00	0.0000	0.000E+00	0.0000	0.000E+00	0.0000	0.000E+00	0.0000
-238	0.000E+00	0.0000	0.000E+00	0.0000	0.000E+00	0.0000	0.000E+00	0.0000	0.000E+00	0.0000	0.000E+00	0.0000	0.000E+00	0.0000
íííííí	íííííííííí	íííííí	íííííííííí	íííííí	íííííííííí	íííííí	íííííííííí	íííííí	íííííííííí	íííííí	íííííííííí	íííííí	íííííííííí	íííííí
otal	0.000E+00	0.0000	0.000E+00	0.0000	0.000E+00	0.0000	0.000E+00	0.0000	0.000E+00	0.0000	0.000E+00	0.0000	0.000E+00	0.0000

Sum of all water independent and dependent pathways.

ummary : GKP Maintenance Worker Ingestion
ile : C:\USERS\CLAUDE\DOCUMENTS\0 GKP DOSE\RESRAD CW\GKP MAINTENANCE WORKER -INGESTION.RAD

Total Dose Contributions TDOSE(i,p,t) for Individual Radionuclides (i) and Pathways (p)
As mrem/yr and Fraction of Total Dose At t = 1.000E+03 years

Water Independent Pathways (Inhalation excludes radon)

	Ground		Inhalation		Radon		Plant		Meat		Milk		Soil	
adio-	ÄÄÄÄÄÄÄÄÄÄÄÄÄÄÄÄ		ÄÄÄÄÄÄÄÄÄÄÄÄÄÄÄÄ		ÄÄÄÄÄÄÄÄÄÄÄÄÄÄÄÄ		ÄÄÄÄÄÄÄÄÄÄÄÄÄÄÄÄ		ÄÄÄÄÄÄÄÄÄÄÄÄÄÄÄÄ		ÄÄÄÄÄÄÄÄÄÄÄÄÄÄÄÄ		ÄÄÄÄÄÄÄÄÄÄÄÄÄÄÄÄ	
uclide	mrem/yr	fract.	mrem/yr	fract.	mrem/yr	fract.	mrem/yr	fract.	mrem/yr	fract.	mrem/yr	fract.	mrem/yr	fract.
ÄÄÄÄÄÄ	ÄÄÄÄÄÄÄÄÄ	ÄÄÄÄÄÄ	ÄÄÄÄÄÄÄÄÄ	ÄÄÄÄÄÄ	ÄÄÄÄÄÄÄÄÄ	ÄÄÄÄÄÄ	ÄÄÄÄÄÄÄÄÄ	ÄÄÄÄÄÄ	ÄÄÄÄÄÄÄÄÄ	ÄÄÄÄÄÄ	ÄÄÄÄÄÄÄÄÄ	ÄÄÄÄÄÄ	ÄÄÄÄÄÄÄÄÄ	ÄÄÄÄÄÄ
a-226	0.000E+00	0.0000	0.000E+00	0.0000	0.000E+00	0.0000	0.000E+00	0.0000	0.000E+00	0.0000	0.000E+00	0.0000	0.000E+00	0.0000
h-232	0.000E+00	0.0000	0.000E+00	0.0000	0.000E+00	0.0000	0.000E+00	0.0000	0.000E+00	0.0000	0.000E+00	0.0000	0.000E+00	0.0000
-234	0.000E+00	0.0000	0.000E+00	0.0000	0.000E+00	0.0000	0.000E+00	0.0000	0.000E+00	0.0000	0.000E+00	0.0000	0.000E+00	0.0000
-235	0.000E+00	0.0000	0.000E+00	0.0000	0.000E+00	0.0000	0.000E+00	0.0000	0.000E+00	0.0000	0.000E+00	0.0000	0.000E+00	0.0000
-238	0.000E+00	0.0000	0.000E+00	0.0000	0.000E+00	0.0000	0.000E+00	0.0000	0.000E+00	0.0000	0.000E+00	0.0000	0.000E+00	0.0000
íííííí	íííííííííí	íííííí	íííííííííí	íííííí	íííííííííí	íííííí	íííííííííí	íííííí	íííííííííí	íííííí	íííííííííí	íííííí	íííííííííí	íííííí
otal	0.000E+00	0.0000	0.000E+00	0.0000	0.000E+00	0.0000	0.000E+00	0.0000	0.000E+00	0.0000	0.000E+00	0.0000	0.000E+00	0.0000

Total Dose Contributions TDOSE(i,p,t) for Individual Radionuclides (i) and Pathways (p)
As mrem/yr and Fraction of Total Dose At t = 1.000E+03 years

Water Dependent Pathways

	Water		Fish		Radon		Plant		Meat		Milk		All Pathways*	
adio-	ÄÄÄÄÄÄÄÄÄÄÄÄÄÄÄÄ		ÄÄÄÄÄÄÄÄÄÄÄÄÄÄÄÄ		ÄÄÄÄÄÄÄÄÄÄÄÄÄÄÄÄ		ÄÄÄÄÄÄÄÄÄÄÄÄÄÄÄÄ		ÄÄÄÄÄÄÄÄÄÄÄÄÄÄÄÄ		ÄÄÄÄÄÄÄÄÄÄÄÄÄÄÄÄ		ÄÄÄÄÄÄÄÄÄÄÄÄÄÄÄÄ	
uclide	mrem/yr	fract.	mrem/yr	fract.	mrem/yr	fract.	mrem/yr	fract.	mrem/yr	fract.	mrem/yr	fract.	mrem/yr	fract.
ÄÄÄÄÄÄ	ÄÄÄÄÄÄÄÄÄ	ÄÄÄÄÄÄ	ÄÄÄÄÄÄÄÄÄ	ÄÄÄÄÄÄ	ÄÄÄÄÄÄÄÄÄ	ÄÄÄÄÄÄ	ÄÄÄÄÄÄÄÄÄ	ÄÄÄÄÄÄ	ÄÄÄÄÄÄÄÄÄ	ÄÄÄÄÄÄ	ÄÄÄÄÄÄÄÄÄ	ÄÄÄÄÄÄ	ÄÄÄÄÄÄÄÄÄ	ÄÄÄÄÄÄ
a-226	0.000E+00	0.0000	0.000E+00	0.0000	0.000E+00	0.0000	0.000E+00	0.0000	0.000E+00	0.0000	0.000E+00	0.0000	0.000E+00	0.0000
h-232	0.000E+00	0.0000	0.000E+00	0.0000	0.000E+00	0.0000	0.000E+00	0.0000	0.000E+00	0.0000	0.000E+00	0.0000	0.000E+00	0.0000
-234	0.000E+00	0.0000	0.000E+00	0.0000	0.000E+00	0.0000	0.000E+00	0.0000	0.000E+00	0.0000	0.000E+00	0.0000	0.000E+00	0.0000
-235	0.000E+00	0.0000	0.000E+00	0.0000	0.000E+00	0.0000	0.000E+00	0.0000	0.000E+00	0.0000	0.000E+00	0.0000	0.000E+00	0.0000
-238	0.000E+00	0.0000	0.000E+00	0.0000	0.000E+00	0.0000	0.000E+00	0.0000	0.000E+00	0.0000	0.000E+00	0.0000	0.000E+00	0.0000
íííííí	íííííííííí	íííííí	íííííííííí	íííííí	íííííííííí	íííííí	íííííííííí	íííííí	íííííííííí	íííííí	íííííííííí	íííííí	íííííííííí	íííííí
otal	0.000E+00	0.0000	0.000E+00	0.0000	0.000E+00	0.0000	0.000E+00	0.0000	0.000E+00	0.0000	0.000E+00	0.0000	0.000E+00	0.0000

Sum of all water independent and dependent pathways.

ummary : GKP Maintenance Worker Ingestion
ile : C:\USERS\CLAUDE\DOCUMENTS\0 GKP DOSE\RESRAD CW\GKP MAINTENANCE WORKER -INGESTION.RAD

Dose/Source Ratios Summed Over All Pathways
Parent and Progeny Principal Radionuclide Contributions Indicated

Parent (i)	Product (j)	Thread Fraction	DSR(j,t) At Time in Years (mrem/yr)/(pCi/g) 0.000E+00	1.000E+00	3.000E+00	1.000E+01	3.000E+01	1.000E+02	3.000E+02	1.000E+03
ÄÄÄÄÄÄÄÄ	ÄÄÄÄÄÄÄÄÄÄ	ÄÄÄÄÄÄÄÄÄ	ÄÄÄÄÄÄÄÄÄ	ÄÄÄÄÄÄÄÄÄ	ÄÄÄÄÄÄÄÄÄ	ÄÄÄÄÄÄÄÄÄ	ÄÄÄÄÄÄÄÄÄ	ÄÄÄÄÄÄÄÄÄ	ÄÄÄÄÄÄÄÄÄ	ÄÄÄÄÄÄÄÄÄ
a-226+D	Ra-226+D	9.996E-01	2.165E-03	2.082E-03	1.927E-03	1.466E-03	6.609E-04	2.898E-05	0.000E+00	0.000E+00
a-226+D	Pb-210+D	9.996E-01	1.829E-04	5.251E-04	1.112E-03	2.361E-03	2.538E-03	2.055E-04	0.000E+00	0.000E+00
a-226+D	äDSR(j)		2.348E-03	2.608E-03	3.038E-03	3.826E-03	3.199E-03	2.345E-04	0.000E+00	0.000E+00
a-226+D	Ra-226+D	1.319E-06	2.858E-09	2.749E-09	2.543E-09	1.935E-09	8.724E-10	3.825E-11	0.000E+00	0.000E+00
a-226+D	Pb-210+D1	1.319E-06	1.784E-10	5.121E-10	1.084E-09	2.302E-09	2.476E-09	2.004E-10	0.000E+00	0.000E+00
a-226+D	äDSR(j)		3.036E-09	3.261E-09	3.627E-09	4.237E-09	3.348E-09	2.387E-10	0.000E+00	0.000E+00
a-226+D	Ra-226+D	1.899E-08	4.113E-11	3.957E-11	3.661E-11	2.785E-11	1.256E-11	5.506E-13	0.000E+00	0.000E+00
a-226+D	Pb-210+D2	1.899E-08	2.564E-12	7.363E-12	1.559E-11	3.310E-11	3.559E-11	2.881E-12	0.000E+00	0.000E+00
a-226+D	äDSR(j)		4.370E-11	4.693E-11	5.219E-11	6.095E-11	4.815E-11	3.432E-12	0.000E+00	0.000E+00
a-226+D1	Ra-226+D1	2.100E-04	4.547E-07	4.374E-07	4.047E-07	3.078E-07	1.388E-07	6.087E-09	0.000E+00	0.000E+00
a-226+D1	Pb-210+D	2.100E-04	3.841E-08	1.103E-07	2.335E-07	4.958E-07	5.331E-07	4.316E-08	0.000E+00	0.000E+00
a-226+D1	äDSR(j)		4.931E-07	5.477E-07	6.382E-07	8.037E-07	6.719E-07	4.925E-08	0.000E+00	0.000E+00
a-226+D1	Ra-226+D1	2.771E-10	6.002E-13	5.774E-13	5.342E-13	4.064E-13	1.832E-13	8.035E-15	0.000E+00	0.000E+00
a-226+D1	Pb-210+D1	2.771E-10	3.746E-14	1.076E-13	2.277E-13	4.836E-13	5.200E-13	4.210E-14	0.000E+00	0.000E+00
a-226+D1	äDSR(j)		6.377E-13	6.849E-13	7.619E-13	8.899E-13	7.032E-13	5.013E-14	0.000E+00	0.000E+00
a-226+D1	Ra-226+D1	3.989E-12	8.639E-15	8.311E-15	7.689E-15	5.849E-15	2.638E-15	1.157E-16	0.000E+00	0.000E+00
a-226+D1	Pb-210+D2	3.989E-12	5.386E-16	1.546E-15	3.274E-15	6.953E-15	7.475E-15	6.052E-16	0.000E+00	0.000E+00
a-226+D1	äDSR(j)		9.178E-15	9.857E-15	1.096E-14	1.280E-14	1.011E-14	7.209E-16	0.000E+00	0.000E+00
a-226+D2	Ra-226+D2	1.998E-04	4.324E-07	4.160E-07	3.849E-07	2.928E-07	1.320E-07	5.788E-09	0.000E+00	0.000E+00
a-226+D2	Pb-210+D	1.998E-04	3.655E-08	1.049E-07	2.221E-07	4.717E-07	5.072E-07	4.107E-08	0.000E+00	0.000E+00
a-226+D2	äDSR(j)		4.690E-07	5.209E-07	6.070E-07	7.645E-07	6.392E-07	4.685E-08	0.000E+00	0.000E+00
a-226+D2	Ra-226+D2	2.637E-10	5.708E-13	5.491E-13	5.080E-13	3.864E-13	1.743E-13	7.641E-15	0.000E+00	0.000E+00
a-226+D2	Pb-210+D1	2.637E-10	3.564E-14	1.023E-13	2.167E-13	4.601E-13	4.947E-13	4.005E-14	0.000E+00	0.000E+00
a-226+D2	äDSR(j)		6.064E-13	6.514E-13	7.247E-13	8.465E-13	6.690E-13	4.769E-14	0.000E+00	0.000E+00
a-226+D2	Ra-226+D2	3.795E-12	8.216E-15	7.903E-15	7.312E-15	5.562E-15	2.508E-15	1.100E-16	0.000E+00	0.000E+00
a-226+D2	Pb-210+D2	3.795E-12	5.125E-16	1.471E-15	3.115E-15	6.615E-15	7.112E-15	5.758E-16	0.000E+00	0.000E+00
a-226+D2	äDSR(j)		8.728E-15	9.375E-15	1.043E-14	1.218E-14	9.621E-15	6.858E-16	0.000E+00	0.000E+00
a-226+D3	Ra-226+D3	4.196E-08	9.083E-11	8.737E-11	8.084E-11	6.149E-11	2.773E-11	1.216E-12	0.000E+00	0.000E+00
a-226+D3	Pb-210+D	4.196E-08	7.676E-12	2.204E-11	4.666E-11	9.909E-11	1.065E-10	8.626E-12	0.000E+00	0.000E+00
a-226+D3	äDSR(j)		9.850E-11	1.094E-10	1.275E-10	1.606E-10	1.343E-10	9.842E-12	0.000E+00	0.000E+00
a-226+D3	Ra-226+D3	5.538E-14	1.199E-16	1.153E-16	1.067E-16	8.117E-17	3.660E-17	1.605E-18	0.000E+00	0.000E+00
a-226+D3	Pb-210+D1	5.538E-14	7.487E-18	2.150E-17	4.551E-17	9.664E-17	1.039E-16	8.413E-18	0.000E+00	0.000E+00
a-226+D3	äDSR(j)		1.274E-16	1.368E-16	1.522E-16	1.778E-16	1.405E-16	1.002E-17	0.000E+00	0.000E+00
a-226+D3	Ra-226+D3	7.972E-16	1.726E-18	1.660E-18	1.536E-18	1.168E-18	5.269E-19	2.310E-20	0.000E+00	0.000E+00
a-226+D3	Pb-210+D2	7.972E-16	1.076E-19	3.090E-19	6.543E-19	1.389E-18	1.494E-18	1.210E-19	0.000E+00	0.000E+00
a-226+D3	äDSR(j)		1.833E-18	1.969E-18	2.190E-18	2.558E-18	2.021E-18	1.441E-19	0.000E+00	0.000E+00

ummary : GKP Maintenance Worker Ingestion
ile : C:\USERS\CLAUDE\DOCUMENTS\0 GKP DOSE\RESRAD CW\GKP MAINTENANCE WORKER -INGESTION.RAD

Dose/Source Ratios Summed Over All Pathways
Parent and Progeny Principal Radionuclide Contributions Indicated

Parent	Product	Thread	DSR(j,t) At Time in Years (mrem/yr)/(pCi/g)							
(i)	(j)	Fraction	0.000E+00	1.000E+00	3.000E+00	1.000E+01	3.000E+01	1.000E+02	3.000E+02	1.000E+03
ÄÄÄÄÄÄÄÄ	ÄÄÄÄÄÄÄÄÄÄ	ÄÄÄÄÄÄÄÄ	ÄÄÄÄÄÄÄÄÄ	ÄÄÄÄÄÄÄÄÄ	ÄÄÄÄÄÄÄÄÄ	ÄÄÄÄÄÄÄÄÄ	ÄÄÄÄÄÄÄÄÄ	ÄÄÄÄÄÄÄÄÄ	ÄÄÄÄÄÄÄÄÄ	ÄÄÄÄÄÄÄÄÄ
a-226+D4	Ra-226+D4	2.000E-07	4.328E-10	4.164E-10	3.852E-10	2.930E-10	1.321E-10	5.794E-12	0.000E+00	0.000E+00
a-226+D4	Pb-210+D	2.000E-07	3.659E-11	1.051E-10	2.224E-10	4.723E-10	5.078E-10	4.112E-11	0.000E+00	0.000E+00
a-226+D4	äDSR(j)		4.694E-10	5.214E-10	6.076E-10	7.654E-10	6.400E-10	4.691E-11	0.000E+00	0.000E+00
a-226+D4	Ra-226+D4	2.640E-13	5.714E-16	5.496E-16	5.085E-16	3.868E-16	1.744E-16	7.648E-18	0.000E+00	0.000E+00
a-226+D4	Pb-210+D1	2.640E-13	3.569E-17	1.025E-16	2.169E-16	4.607E-16	4.953E-16	4.010E-17	0.000E+00	0.000E+00
a-226+D4	äDSR(j)		6.070E-16	6.521E-16	7.254E-16	8.475E-16	6.697E-16	4.775E-17	0.000E+00	0.000E+00
a-226+D4	Ra-226+D4	3.800E-15	8.224E-18	7.911E-18	7.319E-18	5.568E-18	2.511E-18	1.101E-19	0.000E+00	0.000E+00
a-226+D4	Pb-210+D2	3.800E-15	5.131E-19	1.473E-18	3.119E-18	6.623E-18	7.121E-18	5.765E-19	0.000E+00	0.000E+00
a-226+D4	äDSR(j)		8.737E-18	9.384E-18	1.044E-17	1.219E-17	9.632E-18	6.866E-19	0.000E+00	0.000E+00
n-232	Th-232	1.000E+00	4.529E-03	4.498E-03	4.437E-03	4.224E-03	3.616E-03	1.494E-03	0.000E+00	0.000E+00
n-232	Ra-228+D	1.000E+00	1.370E-04	3.826E-04	7.656E-04	1.410E-03	1.499E-03	6.252E-04	0.000E+00	0.000E+00
n-232	Th-228+D	1.000E+00	1.363E-05	8.258E-05	3.188E-04	1.076E-03	1.445E-03	9.686E-04	0.000E+00	0.000E+00
n-232	äDSR(j)		4.679E-03	4.963E-03	5.522E-03	6.710E-03	6.559E-03	3.088E-03	0.000E+00	0.000E+00
-234	U-234	9.996E-01	4.590E-04	4.362E-04	3.939E-04	2.752E-04	9.726E-05	1.819E-06	0.000E+00	0.000E+00
-234	Th-230	9.996E-01	4.112E-09	1.203E-08	2.653E-08	6.545E-08	1.117E-07	6.155E-08	0.000E+00	0.000E+00
-234	Ra-226+D	9.996E-01	1.430E-12	9.742E-12	4.839E-11	3.468E-10	1.562E-09	1.806E-09	0.000E+00	0.000E+00
-234	Pb-210+D	9.996E-01	6.081E-14	8.822E-13	9.551E-12	1.933E-10	2.194E-09	5.126E-09	0.000E+00	0.000E+00
-234	äDSR(j)		4.590E-04	4.362E-04	3.939E-04	2.752E-04	9.738E-05	1.887E-06	0.000E+00	0.000E+00
-234	U-234	1.319E-06	6.059E-10	5.758E-10	5.199E-10	3.632E-10	1.284E-10	2.401E-12	0.000E+00	0.000E+00
-234	Th-230	1.319E-06	5.428E-15	1.587E-14	3.502E-14	8.639E-14	1.474E-13	8.125E-14	0.000E+00	0.000E+00
-234	Ra-226+D	1.319E-06	1.888E-18	1.286E-17	6.388E-17	4.577E-16	2.062E-15	2.384E-15	0.000E+00	0.000E+00
-234	Pb-210+D1	1.319E-06	5.931E-20	8.605E-19	9.315E-18	1.886E-16	2.140E-15	4.999E-15	0.000E+00	0.000E+00
-234	äDSR(j)		6.059E-10	5.758E-10	5.200E-10	3.633E-10	1.285E-10	2.489E-12	0.000E+00	0.000E+00
-234	U-234	1.899E-08	8.722E-12	8.288E-12	7.484E-12	5.228E-12	1.848E-12	3.455E-14	0.000E+00	0.000E+00
-234	Th-230	1.899E-08	7.813E-17	2.285E-16	5.041E-16	1.244E-15	2.122E-15	1.170E-15	0.000E+00	0.000E+00
-234	Ra-226+D	1.899E-08	2.718E-20	1.851E-19	9.194E-19	6.589E-18	2.968E-17	3.432E-17	0.000E+00	0.000E+00
-234	Pb-210+D2	1.899E-08	8.526E-22	1.237E-20	1.339E-19	2.711E-18	3.076E-17	7.188E-17	0.000E+00	0.000E+00
-234	äDSR(j)		8.722E-12	8.289E-12	7.485E-12	5.229E-12	1.850E-12	3.583E-14	0.000E+00	0.000E+00
-234	U-234	2.100E-04	9.642E-08	9.163E-08	8.274E-08	5.779E-08	2.043E-08	3.820E-10	0.000E+00	0.000E+00
-234	Th-230	2.100E-04	8.638E-13	2.526E-12	5.572E-12	1.375E-11	2.346E-11	1.293E-11	0.000E+00	0.000E+00
-234	Ra-226+D1	2.100E-04	3.005E-16	2.046E-15	1.016E-14	7.284E-14	3.282E-13	3.794E-13	0.000E+00	0.000E+00
-234	Pb-210+D	2.100E-04	1.277E-17	1.853E-16	2.006E-15	4.061E-14	4.608E-13	1.077E-12	0.000E+00	0.000E+00
-234	äDSR(j)		9.642E-08	9.163E-08	8.274E-08	5.781E-08	2.045E-08	3.964E-10	0.000E+00	0.000E+00
-234	U-234	2.771E-10	1.273E-13	1.209E-13	1.092E-13	7.629E-14	2.697E-14	5.042E-16	0.000E+00	0.000E+00
-234	Th-230	2.771E-10	1.140E-18	3.334E-18	7.356E-18	1.815E-17	3.096E-17	1.707E-17	0.000E+00	0.000E+00
-234	Ra-226+D1	2.771E-10	3.966E-22	2.701E-21	1.342E-20	9.615E-20	4.332E-19	5.008E-19	0.000E+00	0.000E+00
-234	Pb-210+D1	2.771E-10	1.246E-23	1.807E-22	1.957E-21	3.960E-20	4.494E-19	1.050E-18	0.000E+00	0.000E+00
-234	äDSR(j)		1.273E-13	1.210E-13	1.092E-13	7.631E-14	2.700E-14	5.228E-16	0.000E+00	0.000E+00

ummary : GKP Maintenance Worker Ingestion
ile : C:\USERS\CLAUDE\DOCUMENTS\0 GKP DOSE\RESRAD CW\GKP MAINTENANCE WORKER -INGESTION.RAD

Dose/Source Ratios Summed Over All Pathways
Parent and Progeny Principal Radionuclide Contributions Indicated

Parent (i)	Product (j)	Thread Fraction	DSR(j,t) At Time in Years (mrem/yr)/(pCi/g) 0.000E+00	1.000E+00	3.000E+00	1.000E+01	3.000E+01	1.000E+02	3.000E+02	1.000E+03
ÄÄÄÄÄÄÄÄÄ	ÄÄÄÄÄÄÄÄÄÄ	ÄÄÄÄÄÄÄÄÄ	ÄÄÄÄÄÄÄÄÄ	ÄÄÄÄÄÄÄÄÄ	ÄÄÄÄÄÄÄÄÄ	ÄÄÄÄÄÄÄÄÄ	ÄÄÄÄÄÄÄÄÄ	ÄÄÄÄÄÄÄÄÄ	ÄÄÄÄÄÄÄÄÄ	ÄÄÄÄÄÄÄÄÄ
-234	U-234	3.989E-12	1.832E-15	1.741E-15	1.572E-15	1.098E-15	3.882E-16	7.258E-18	0.000E+00	0.000E+00
-234	Th-230	3.989E-12	1.641E-20	4.799E-20	1.059E-19	2.612E-19	4.457E-19	2.456E-19	0.000E+00	0.000E+00
-234	Ra-226+D1	3.989E-12	5.709E-24	3.888E-23	1.931E-22	1.384E-21	6.235E-21	7.208E-21	0.000E+00	0.000E+00
-234	Pb-210+D2	3.989E-12	1.791E-25	2.598E-24	2.813E-23	5.694E-22	6.461E-21	1.510E-20	0.000E+00	0.000E+00
-234	äDSR(j)		1.832E-15	1.741E-15	1.572E-15	1.098E-15	3.886E-16	7.526E-18	0.000E+00	0.000E+00
-234	U-234	1.998E-04	9.173E-08	8.718E-08	7.872E-08	5.499E-08	1.944E-08	3.634E-10	0.000E+00	0.000E+00
-234	Th-230	1.998E-04	8.218E-13	2.403E-12	5.302E-12	1.308E-11	2.232E-11	1.230E-11	0.000E+00	0.000E+00
-234	Ra-226+D2	1.998E-04	2.857E-16	1.946E-15	9.666E-15	6.927E-14	3.121E-13	3.608E-13	0.000E+00	0.000E+00
-234	Pb-210+D	1.998E-04	1.215E-17	1.763E-16	1.909E-15	3.863E-14	4.384E-13	1.024E-12	0.000E+00	0.000E+00
-234	äDSR(j)		9.174E-08	8.718E-08	7.872E-08	5.500E-08	1.946E-08	3.771E-10	0.000E+00	0.000E+00
-234	U-234	2.637E-10	1.211E-13	1.151E-13	1.039E-13	7.258E-14	2.566E-14	4.797E-16	0.000E+00	0.000E+00
-234	Th-230	2.637E-10	1.085E-18	3.172E-18	6.998E-18	1.726E-17	2.946E-17	1.624E-17	0.000E+00	0.000E+00
-234	Ra-226+D2	2.637E-10	3.772E-22	2.569E-21	1.276E-20	9.143E-20	4.119E-19	4.762E-19	0.000E+00	0.000E+00
-234	Pb-210+D1	2.637E-10	1.185E-23	1.720E-22	1.862E-21	3.768E-20	4.276E-19	9.991E-19	0.000E+00	0.000E+00
-234	äDSR(j)		1.211E-13	1.151E-13	1.039E-13	7.260E-14	2.569E-14	4.974E-16	0.000E+00	0.000E+00
-234	U-234	3.795E-12	1.743E-15	1.656E-15	1.496E-15	1.045E-15	3.693E-16	6.905E-18	0.000E+00	0.000E+00
-234	Th-230	3.795E-12	1.561E-20	4.566E-20	1.007E-19	2.485E-19	4.241E-19	2.337E-19	0.000E+00	0.000E+00
-234	Ra-226+D2	3.795E-12	5.429E-24	3.697E-23	1.837E-22	1.316E-21	5.929E-21	6.855E-21	0.000E+00	0.000E+00
-234	Pb-210+D2	3.795E-12	1.704E-25	2.472E-24	2.676E-23	5.417E-22	6.148E-21	1.436E-20	0.000E+00	0.000E+00
-234	äDSR(j)		1.743E-15	1.656E-15	1.496E-15	1.045E-15	3.697E-16	7.160E-18	0.000E+00	0.000E+00
-234	U-234	4.196E-08	1.927E-11	1.831E-11	1.653E-11	1.155E-11	4.083E-12	7.634E-14	0.000E+00	0.000E+00
-234	Th-230	4.196E-08	1.726E-16	5.048E-16	1.114E-15	2.747E-15	4.688E-15	2.584E-15	0.000E+00	0.000E+00
-234	Ra-226+D3	4.196E-08	6.002E-20	4.087E-19	2.030E-18	1.455E-17	6.555E-17	7.578E-17	0.000E+00	0.000E+00
-234	Pb-210+D	4.196E-08	2.552E-21	3.703E-20	4.009E-19	8.115E-18	9.209E-17	2.152E-16	0.000E+00	0.000E+00
-234	äDSR(j)		1.927E-11	1.831E-11	1.654E-11	1.155E-11	4.088E-12	7.921E-14	0.000E+00	0.000E+00
-234	U-234	5.538E-14	2.543E-17	2.417E-17	2.182E-17	1.525E-17	5.389E-18	1.008E-19	0.000E+00	0.000E+00
-234	Th-230	5.538E-14	2.278E-22	6.663E-22	1.470E-21	3.626E-21	6.188E-21	3.411E-21	0.000E+00	0.000E+00
-234	Ra-226+D3	5.538E-14	7.922E-26	5.395E-25	2.680E-24	1.920E-23	8.652E-23	1.000E-22	0.000E+00	0.000E+00
-234	Pb-210+D1	5.538E-14	2.489E-27	3.612E-26	3.910E-25	7.914E-24	8.982E-23	2.099E-22	0.000E+00	0.000E+00
-234	äDSR(j)		2.543E-17	2.417E-17	2.183E-17	1.525E-17	5.395E-18	1.045E-19	0.000E+00	0.000E+00
-234	U-234	7.972E-16	3.661E-19	3.479E-19	3.141E-19	2.194E-19	7.757E-20	1.450E-21	0.000E+00	0.000E+00
-234	Th-230	7.972E-16	3.280E-24	9.591E-24	2.116E-23	5.220E-23	8.907E-23	4.909E-23	0.000E+00	0.000E+00
-234	Ra-226+D3	7.972E-16	1.140E-27	7.766E-27	3.858E-26	2.764E-25	1.245E-24	1.440E-24	0.000E+00	0.000E+00
-234	Pb-210+D2	7.972E-16	3.579E-29	5.193E-28	5.622E-27	1.138E-25	1.291E-24	3.017E-24	0.000E+00	0.000E+00
-234	äDSR(j)		3.661E-19	3.479E-19	3.142E-19	2.195E-19	7.766E-20	1.504E-21	0.000E+00	0.000E+00
-234	U-234	2.000E-07	9.185E-11	8.728E-11	7.881E-11	5.505E-11	1.946E-11	3.639E-13	0.000E+00	0.000E+00
-234	Th-230	2.000E-07	8.228E-16	2.406E-15	5.308E-15	1.310E-14	2.235E-14	1.232E-14	0.000E+00	0.000E+00
-234	Ra-226+D4	2.000E-07	2.860E-19	1.948E-18	9.676E-18	6.933E-17	3.124E-16	3.611E-16	0.000E+00	0.000E+00
-234	Pb-210+D	2.000E-07	1.217E-20	1.765E-19	1.911E-18	3.868E-17	4.390E-16	1.026E-15	0.000E+00	0.000E+00
-234	äDSR(j)		9.185E-11	8.728E-11	7.882E-11	5.507E-11	1.948E-11	3.776E-13	0.000E+00	0.000E+00

ummary : GKP Maintenance Worker Ingestion
ile : C:\USERS\CLAUDE\DOCUMENTS\0 GKP DOSE\RESRAD CW\GKP MAINTENANCE WORKER -INGESTION.RAD

Dose/Source Ratios Summed Over All Pathways
Parent and Progeny Principal Radionuclide Contributions Indicated

Parent (i)	Product (j)	Thread Fraction	DSR(j,t) At Time in Years (mrem/yr)/(pCi/g) 0.000E+00	1.000E+00	3.000E+00	1.000E+01	3.000E+01	1.000E+02	3.000E+02	1.000E+03
ÄÄÄÄÄÄÄÄ	ÄÄÄÄÄÄÄÄÄÄ	ÄÄÄÄÄÄÄÄ	ÄÄÄÄÄÄÄÄ	ÄÄÄÄÄÄÄÄ	ÄÄÄÄÄÄÄÄ	ÄÄÄÄÄÄÄÄ	ÄÄÄÄÄÄÄÄ	ÄÄÄÄÄÄÄÄ	ÄÄÄÄÄÄÄÄ	ÄÄÄÄÄÄÄÄ
-234	U-234	2.640E-13	1.212E-16	1.152E-16	1.040E-16	7.267E-17	2.569E-17	4.803E-19	0.000E+00	0.000E+00
-234	Th-230	2.640E-13	1.086E-21	3.176E-21	7.007E-21	1.729E-20	2.950E-20	1.626E-20	0.000E+00	0.000E+00
-234	Ra-226+D4	2.640E-13	3.775E-25	2.571E-24	1.277E-23	9.152E-23	4.123E-22	4.767E-22	0.000E+00	0.000E+00
-234	Pb-210+D1	2.640E-13	1.187E-26	1.722E-25	1.864E-24	3.773E-23	4.281E-22	1.000E-21	0.000E+00	0.000E+00
-234	äDSR(j)		1.212E-16	1.152E-16	1.040E-16	7.269E-17	2.572E-17	4.980E-19	0.000E+00	0.000E+00
-234	U-234	3.800E-15	1.745E-18	1.658E-18	1.497E-18	1.046E-18	3.698E-19	6.914E-21	0.000E+00	0.000E+00
-234	Th-230	3.800E-15	1.563E-23	4.572E-23	1.009E-22	2.488E-22	4.246E-22	2.340E-22	0.000E+00	0.000E+00
-234	Ra-226+D4	3.800E-15	5.434E-27	3.701E-26	1.838E-25	1.317E-24	5.935E-24	6.861E-24	0.000E+00	0.000E+00
-234	Pb-210+D2	3.800E-15	1.706E-28	2.475E-27	2.680E-26	5.424E-25	6.155E-24	1.438E-23	0.000E+00	0.000E+00
-234	äDSR(j)		1.745E-18	1.658E-18	1.498E-18	1.046E-18	3.702E-19	7.169E-21	0.000E+00	0.000E+00
-235+D	U-235+D	9.835E-01	4.267E-04	4.055E-04	3.661E-04	2.558E-04	9.041E-05	1.691E-06	0.000E+00	0.000E+00
-235+D	Pa-231	9.835E-01	1.774E-07	5.088E-07	1.074E-06	2.252E-06	2.312E-06	1.424E-07	0.000E+00	0.000E+00
-235+D	Ac-227+D	9.835E-01	2.555E-09	1.666E-08	7.509E-08	3.840E-07	7.176E-07	5.828E-08	0.000E+00	0.000E+00
-235+D	äDSR(j)		4.268E-04	4.060E-04	3.673E-04	2.584E-04	9.344E-05	1.892E-06	0.000E+00	0.000E+00
-235+D	U-235+D	2.722E-03	1.181E-06	1.122E-06	1.013E-06	7.078E-07	2.502E-07	4.680E-09	0.000E+00	0.000E+00
-235+D	Pa-231	2.722E-03	4.911E-10	1.408E-09	2.971E-09	6.232E-09	6.399E-09	3.941E-10	0.000E+00	0.000E+00
-235+D	Ac-227+D1	2.722E-03	7.072E-12	4.611E-11	2.078E-10	1.063E-09	1.986E-09	1.613E-10	0.000E+00	0.000E+00
-235+D	äDSR(j)		1.181E-06	1.124E-06	1.016E-06	7.151E-07	2.586E-07	5.235E-09	0.000E+00	0.000E+00
-235+D	U-235+D	1.376E-02	5.970E-06	5.673E-06	5.123E-06	3.579E-06	1.265E-06	2.366E-08	0.000E+00	0.000E+00
-235+D	Pa-231	1.376E-02	2.483E-09	7.119E-09	1.502E-08	3.151E-08	3.235E-08	1.992E-09	0.000E+00	0.000E+00
-235+D	Ac-227+D2	1.376E-02	3.568E-11	2.327E-10	1.049E-09	5.362E-09	1.002E-08	8.139E-10	0.000E+00	0.000E+00
-235+D	äDSR(j)		5.973E-06	5.681E-06	5.139E-06	3.615E-06	1.307E-06	2.646E-08	0.000E+00	0.000E+00
-235+D	U-235+D	3.809E-05	1.652E-08	1.570E-08	1.418E-08	9.904E-09	3.501E-09	6.548E-11	0.000E+00	0.000E+00
-235+D	Pa-231	3.809E-05	6.872E-12	1.970E-11	4.158E-11	8.720E-11	8.954E-11	5.514E-12	0.000E+00	0.000E+00
-235+D	Ac-227+D3	3.809E-05	9.875E-14	6.440E-13	2.902E-12	1.484E-11	2.773E-11	2.252E-12	0.000E+00	0.000E+00
-235+D	äDSR(j)		1.653E-08	1.572E-08	1.422E-08	1.001E-08	3.619E-09	7.325E-11	0.000E+00	0.000E+00
-235+D	U-235+D	8.257E-07	3.582E-10	3.404E-10	3.074E-10	2.147E-10	7.591E-11	1.420E-12	0.000E+00	0.000E+00
-235+D	Pa-231	8.257E-07	1.490E-13	4.271E-13	9.014E-13	1.890E-12	1.941E-12	1.196E-13	0.000E+00	0.000E+00
-235+D	Ac-227+D4	8.257E-07	2.045E-15	1.334E-14	6.011E-14	3.074E-13	5.745E-13	4.666E-14	0.000E+00	0.000E+00
-235+D	äDSR(j)		3.584E-10	3.409E-10	3.084E-10	2.169E-10	7.842E-11	1.586E-12	0.000E+00	0.000E+00
-235+D	U-235+D	2.285E-09	9.914E-13	9.422E-13	8.507E-13	5.943E-13	2.101E-13	3.929E-15	0.000E+00	0.000E+00
-235+D	Pa-231	2.285E-09	4.123E-16	1.182E-15	2.495E-15	5.232E-15	5.373E-15	3.309E-16	0.000E+00	0.000E+00
-235+D	Ac-227+D5	2.285E-09	5.661E-18	3.692E-17	1.664E-16	8.508E-16	1.590E-15	1.291E-16	0.000E+00	0.000E+00
-235+D	äDSR(j)		9.919E-13	9.434E-13	8.534E-13	6.004E-13	2.171E-13	4.389E-15	0.000E+00	0.000E+00
-238	U-238	5.450E-07	2.255E-10	2.143E-10	1.935E-10	1.352E-10	4.779E-11	8.937E-13	0.000E+00	0.000E+00

ummary : GKP Maintenance Worker Ingestion
ile : C:\USERS\CLAUDE\DOCUMENTS\0 GKP DOSE\RESRAD CW\GKP MAINTENANCE WORKER -INGESTION.RAD

Dose/Source Ratios Summed Over All Pathways
Parent and Progeny Principal Radionuclide Contributions Indicated

Parent (i)	Product (j)	Thread Fraction	DSR(j,t) At Time in Years (mrem/yr)/(pCi/g) 0.000E+00	1.000E+00	3.000E+00	1.000E+01	3.000E+01	1.000E+02	3.000E+02	1.000E+03
ÄÄÄÄÄÄÄÄÄ	ÄÄÄÄÄÄÄÄÄÄ	ÄÄÄÄÄÄÄÄÄ	ÄÄÄÄÄÄÄÄÄ	ÄÄÄÄÄÄÄÄÄ	ÄÄÄÄÄÄÄÄÄ	ÄÄÄÄÄÄÄÄÄ	ÄÄÄÄÄÄÄÄÄ	ÄÄÄÄÄÄÄÄÄ	ÄÄÄÄÄÄÄÄÄ	ÄÄÄÄÄÄÄÄÄ
-238+D	U-238+D	1.599E-03	7.030E-07	6.680E-07	6.032E-07	4.214E-07	1.490E-07	2.786E-09	0.000E+00	0.000E+00
-238+D	U-234	1.599E-03	1.028E-12	2.948E-12	6.220E-12	1.305E-11	1.340E-11	8.257E-13	0.000E+00	0.000E+00
-238+D	Th-230	1.599E-03	6.143E-18	4.169E-17	2.055E-16	1.433E-15	6.015E-15	5.957E-15	0.000E+00	0.000E+00
-238+D	Ra-226+D	1.599E-03	1.607E-21	2.336E-20	2.540E-19	5.219E-18	6.158E-17	1.570E-16	0.000E+00	0.000E+00
-238+D	Pb-210+D	1.599E-03	5.477E-23	1.638E-21	3.815E-20	2.238E-18	6.955E-17	4.087E-16	0.000E+00	0.000E+00
-238+D	äDSR(j)		7.030E-07	6.680E-07	6.032E-07	4.214E-07	1.490E-07	2.787E-09	0.000E+00	0.000E+00
-238+D	U-238+D	2.111E-09	9.279E-13	8.818E-13	7.962E-13	5.562E-13	1.966E-13	3.677E-15	0.000E+00	0.000E+00
-238+D	U-234	2.111E-09	1.357E-18	3.891E-18	8.211E-18	1.722E-17	1.769E-17	1.090E-18	0.000E+00	0.000E+00
-238+D	Th-230	2.111E-09	8.109E-24	5.504E-23	2.713E-22	1.892E-21	7.940E-21	7.864E-21	0.000E+00	0.000E+00
-238+D	Ra-226+D	2.111E-09	2.121E-27	3.083E-26	3.352E-25	6.889E-24	8.129E-23	2.073E-22	0.000E+00	0.000E+00
-238+D	Pb-210+D1	2.111E-09	5.342E-29	1.598E-27	3.721E-26	2.182E-24	6.783E-23	3.986E-22	0.000E+00	0.000E+00
-238+D	äDSR(j)		9.279E-13	8.818E-13	7.962E-13	5.562E-13	1.966E-13	3.678E-15	0.000E+00	0.000E+00
-238+D	U-238+D	3.039E-11	1.336E-14	1.269E-14	1.146E-14	8.006E-15	2.830E-15	5.293E-17	0.000E+00	0.000E+00
-238+D	U-234	3.039E-11	1.953E-20	5.600E-20	1.182E-19	2.479E-19	2.546E-19	1.569E-20	0.000E+00	0.000E+00
-238+D	Th-230	3.039E-11	1.167E-25	7.922E-25	3.905E-24	2.723E-23	1.143E-22	1.132E-22	0.000E+00	0.000E+00
-238+D	Ra-226+D	3.039E-11	3.053E-29	4.438E-28	4.825E-27	9.916E-26	1.170E-24	2.984E-24	0.000E+00	0.000E+00
-238+D	Pb-210+D2	3.039E-11	7.679E-31	2.297E-29	5.349E-28	3.138E-26	9.752E-25	5.730E-24	0.000E+00	0.000E+00
-238+D	äDSR(j)		1.336E-14	1.269E-14	1.146E-14	8.006E-15	2.830E-15	5.295E-17	0.000E+00	0.000E+00
-238+D	U-238+D	3.359E-07	1.477E-10	1.403E-10	1.267E-10	8.851E-11	3.129E-11	5.851E-13	0.000E+00	0.000E+00
-238+D	U-234	3.359E-07	2.159E-16	6.191E-16	1.307E-15	2.740E-15	2.815E-15	1.734E-16	0.000E+00	0.000E+00
-238+D	Th-230	3.359E-07	1.290E-21	8.758E-21	4.317E-20	3.010E-19	1.263E-18	1.251E-18	0.000E+00	0.000E+00
-238+D	Ra-226+D1	3.359E-07	3.375E-25	4.906E-24	5.334E-23	1.096E-21	1.293E-20	3.298E-20	0.000E+00	0.000E+00
-238+D	Pb-210+D	3.359E-07	1.150E-26	3.441E-25	8.013E-24	4.700E-22	1.461E-20	8.584E-20	0.000E+00	0.000E+00
-238+D	äDSR(j)		1.477E-10	1.403E-10	1.267E-10	8.851E-11	3.129E-11	5.853E-13	0.000E+00	0.000E+00
-238+D	U-238+D	4.434E-13	1.949E-16	1.852E-16	1.672E-16	1.168E-16	4.130E-17	7.724E-19	0.000E+00	0.000E+00
-238+D	U-234	4.434E-13	2.850E-22	8.172E-22	1.725E-21	3.617E-21	3.715E-21	2.289E-22	0.000E+00	0.000E+00
-238+D	Th-230	4.434E-13	1.703E-27	1.156E-26	5.698E-26	3.974E-25	1.668E-24	1.652E-24	0.000E+00	0.000E+00
-238+D	Ra-226+D1	4.434E-13	4.455E-31	6.476E-30	7.042E-29	1.447E-27	1.707E-26	4.354E-26	0.000E+00	0.000E+00
-238+D	Pb-210+D1	4.434E-13	1.122E-32	3.356E-31	7.815E-30	4.584E-28	1.425E-26	8.372E-26	0.000E+00	0.000E+00
-238+D	äDSR(j)		1.949E-16	1.852E-16	1.672E-16	1.168E-16	4.130E-17	7.726E-19	0.000E+00	0.000E+00
-238+D	U-238+D	6.383E-15	2.805E-18	2.666E-18	2.407E-18	1.682E-18	5.945E-19	1.112E-20	0.000E+00	0.000E+00
-238+D	U-234	6.383E-15	4.103E-24	1.176E-23	2.482E-23	5.207E-23	5.348E-23	3.295E-24	0.000E+00	0.000E+00
-238+D	Th-230	6.383E-15	2.452E-29	1.664E-28	8.201E-28	5.720E-27	2.401E-26	2.377E-26	0.000E+00	0.000E+00
-238+D	Ra-226+D1	6.383E-15	6.413E-33	9.322E-32	1.014E-30	2.083E-29	2.458E-28	6.267E-28	0.000E+00	0.000E+00
-238+D	Pb-210+D2	6.383E-15	1.613E-34	4.825E-33	1.124E-31	6.590E-30	2.048E-28	1.204E-27	0.000E+00	0.000E+00
-238+D	äDSR(j)		2.805E-18	2.666E-18	2.407E-18	1.682E-18	5.945E-19	1.112E-20	0.000E+00	0.000E+00

ummary : GKP Maintenance Worker Ingestion
ile : C:\USERS\CLAUDE\DOCUMENTS\0 GKP DOSE\RESRAD CW\GKP MAINTENANCE WORKER -INGESTION.RAD

Dose/Source Ratios Summed Over All Pathways
Parent and Progeny Principal Radionuclide Contributions Indicated

Parent (i)	Product (j)	Thread Fraction	DSR(j,t) At Time in Years (mrem/yr)/(pCi/g) 0.000E+00	1.000E+00	3.000E+00	1.000E+01	3.000E+01	1.000E+02	3.000E+02	1.000E+03
ÄÄÄÄÄÄÄÄ	ÄÄÄÄÄÄÄÄÄÄ	ÄÄÄÄÄÄÄÄÄ	ÄÄÄÄÄÄÄÄÄ	ÄÄÄÄÄÄÄÄÄ	ÄÄÄÄÄÄÄÄÄ	ÄÄÄÄÄÄÄÄÄ	ÄÄÄÄÄÄÄÄÄ	ÄÄÄÄÄÄÄÄÄ	ÄÄÄÄÄÄÄÄÄ	ÄÄÄÄÄÄÄÄÄ
-238+D	U-238+D	3.196E-07	1.405E-10	1.335E-10	1.205E-10	8.421E-11	2.977E-11	5.567E-13	0.000E+00	0.000E+00
-238+D	U-234	3.196E-07	2.054E-16	5.890E-16	1.243E-15	2.607E-15	2.678E-15	1.650E-16	0.000E+00	0.000E+00
-238+D	Th-230	3.196E-07	1.228E-21	8.332E-21	4.107E-20	2.864E-19	1.202E-18	1.190E-18	0.000E+00	0.000E+00
-238+D	Ra-226+D2	3.196E-07	3.210E-25	4.666E-24	5.073E-23	1.042E-21	1.230E-20	3.137E-20	0.000E+00	0.000E+00
-238+D	Pb-210+D	3.196E-07	1.094E-26	3.274E-25	7.623E-24	4.472E-22	1.390E-20	8.167E-20	0.000E+00	0.000E+00
-238+D	äDSR(j)		1.405E-10	1.335E-10	1.205E-10	8.421E-11	2.977E-11	5.569E-13	0.000E+00	0.000E+00
-238+D	U-238+D	4.219E-13	1.854E-16	1.762E-16	1.591E-16	1.112E-16	3.929E-17	7.349E-19	0.000E+00	0.000E+00
-238+D	U-234	4.219E-13	2.712E-22	7.775E-22	1.641E-21	3.441E-21	3.535E-21	2.178E-22	0.000E+00	0.000E+00
-238+D	Th-230	4.219E-13	1.621E-27	1.100E-26	5.421E-26	3.781E-25	1.587E-24	1.571E-24	0.000E+00	0.000E+00
-238+D	Ra-226+D2	4.219E-13	4.237E-31	6.159E-30	6.696E-29	1.376E-27	1.624E-26	4.140E-26	0.000E+00	0.000E+00
-238+D	Pb-210+D1	4.219E-13	1.067E-32	3.193E-31	7.435E-30	4.361E-28	1.356E-26	7.965E-26	0.000E+00	0.000E+00
-238+D	äDSR(j)		1.854E-16	1.762E-16	1.591E-16	1.112E-16	3.930E-17	7.351E-19	0.000E+00	0.000E+00
-238+D	U-238+D	6.073E-15	2.669E-18	2.536E-18	2.290E-18	1.600E-18	5.656E-19	1.058E-20	0.000E+00	0.000E+00
-238+D	U-234	6.073E-15	3.903E-24	1.119E-23	2.362E-23	4.954E-23	5.088E-23	3.135E-24	0.000E+00	0.000E+00
-238+D	Th-230	6.073E-15	2.333E-29	1.583E-28	7.803E-28	5.442E-27	2.284E-26	2.262E-26	0.000E+00	0.000E+00
-238+D	Ra-226+D2	6.073E-15	6.098E-33	8.865E-32	9.639E-31	1.981E-29	2.337E-28	5.960E-28	0.000E+00	0.000E+00
-238+D	Pb-210+D2	6.073E-15	1.535E-34	4.591E-33	1.069E-31	6.270E-30	1.949E-28	1.145E-27	0.000E+00	0.000E+00
-238+D	äDSR(j)		2.669E-18	2.536E-18	2.290E-18	1.600E-18	5.656E-19	1.058E-20	0.000E+00	0.000E+00
-238+D	U-238+D	6.713E-11	2.951E-14	2.804E-14	2.532E-14	1.769E-14	6.253E-15	1.169E-16	0.000E+00	0.000E+00
-238+D	U-234	6.713E-11	4.315E-20	1.237E-19	2.611E-19	5.476E-19	5.625E-19	3.466E-20	0.000E+00	0.000E+00
-238+D	Th-230	6.713E-11	2.579E-25	1.750E-24	8.626E-24	6.016E-23	2.525E-22	2.501E-22	0.000E+00	0.000E+00
-238+D	Ra-226+D3	6.713E-11	6.742E-29	9.800E-28	1.066E-26	2.190E-25	2.584E-24	6.588E-24	0.000E+00	0.000E+00
-238+D	Pb-210+D	6.713E-11	2.299E-30	6.876E-29	1.601E-27	9.392E-26	2.919E-24	1.715E-23	0.000E+00	0.000E+00
-238+D	äDSR(j)		2.951E-14	2.804E-14	2.532E-14	1.769E-14	6.253E-15	1.170E-16	0.000E+00	0.000E+00
-238+D	U-238+D	8.862E-17	3.895E-20	3.701E-20	3.342E-20	2.335E-20	8.253E-21	1.544E-22	0.000E+00	0.000E+00
-238+D	U-234	8.862E-17	5.696E-26	1.633E-25	3.447E-25	7.229E-25	7.425E-25	4.575E-26	0.000E+00	0.000E+00
-238+D	Th-230	8.862E-17	3.404E-31	2.310E-30	1.139E-29	7.941E-29	3.333E-28	3.301E-28	0.000E+00	0.000E+00
-238+D	Ra-226+D3	8.862E-17	8.899E-35	1.294E-33	1.407E-32	2.890E-31	3.411E-30	8.697E-30	0.000E+00	0.000E+00
-238+D	Pb-210+D1	8.862E-17	2.242E-36	6.707E-35	1.562E-33	9.161E-32	2.847E-30	1.673E-29	0.000E+00	0.000E+00
-238+D	äDSR(j)		3.895E-20	3.701E-20	3.342E-20	2.335E-20	8.254E-21	1.544E-22	0.000E+00	0.000E+00
-238+D	U-238+D	1.276E-18	5.606E-22	5.328E-22	4.811E-22	3.361E-22	1.188E-22	2.222E-24	0.000E+00	0.000E+00
-238+D	U-234	1.276E-18	8.199E-28	2.351E-27	4.961E-27	1.040E-26	1.069E-26	6.585E-28	0.000E+00	0.000E+00
-238+D	Th-230	1.276E-18	4.899E-33	3.325E-32	1.639E-31	1.143E-30	4.797E-30	4.751E-30	0.000E+00	0.000E+00
-238+D	Ra-226+D3	1.276E-18	1.281E-36	1.862E-35	2.025E-34	4.160E-33	4.909E-32	1.252E-31	0.000E+00	0.000E+00
-238+D	Pb-210+D2	1.276E-18	3.223E-38	9.642E-37	2.245E-35	1.317E-33	4.094E-32	2.405E-31	0.000E+00	0.000E+00
-238+D	äDSR(j)		5.606E-22	5.328E-22	4.811E-22	3.361E-22	1.188E-22	2.222E-24	0.000E+00	0.000E+00

ummary : GKP Maintenance Worker Ingestion
ile : C:\USERS\CLAUDE\DOCUMENTS\0 GKP DOSE\RESRAD CW\GKP MAINTENANCE WORKER -INGESTION.RAD

Dose/Source Ratios Summed Over All Pathways
Parent and Progeny Principal Radionuclide Contributions Indicated

Parent (i)	Product (j)	Thread Fraction	DSR(j,t) At Time in Years (mrem/yr)/(pCi/g) 0.000E+00	1.000E+00	3.000E+00	1.000E+01	3.000E+01	1.000E+02	3.000E+02	1.000E+03
ÄÄÄÄÄÄÄÄÄ	ÄÄÄÄÄÄÄÄÄÄ	ÄÄÄÄÄÄÄÄÄ	ÄÄÄÄÄÄÄÄÄ	ÄÄÄÄÄÄÄÄÄ	ÄÄÄÄÄÄÄÄÄ	ÄÄÄÄÄÄÄÄÄ	ÄÄÄÄÄÄÄÄÄ	ÄÄÄÄÄÄÄÄÄ	ÄÄÄÄÄÄÄÄÄ	ÄÄÄÄÄÄÄÄÄ
-238+D	U-238+D	3.200E-10	1.406E-13	1.337E-13	1.207E-13	8.431E-14	2.980E-14	5.574E-16	0.000E+00	0.000E+00
-238+D	U-234	3.200E-10	2.057E-19	5.898E-19	1.245E-18	2.610E-18	2.681E-18	1.652E-19	0.000E+00	0.000E+00
-238+D	Th-230	3.200E-10	1.229E-24	8.342E-24	4.112E-23	2.868E-22	1.204E-21	1.192E-21	0.000E+00	0.000E+00
-238+D	Ra-226+D4	3.200E-10	3.213E-28	4.670E-27	5.078E-26	1.043E-24	1.231E-23	3.140E-23	0.000E+00	0.000E+00
-238+D	Pb-210+D	3.200E-10	1.096E-29	3.278E-28	7.633E-27	4.477E-25	1.392E-23	8.177E-23	0.000E+00	0.000E+00
-238+D	äDSR(j)		1.406E-13	1.337E-13	1.207E-13	8.431E-14	2.981E-14	5.575E-16	0.000E+00	0.000E+00
-238+D	U-238+D	4.224E-16	1.857E-19	1.764E-19	1.593E-19	1.113E-19	3.934E-20	7.357E-22	0.000E+00	0.000E+00
-238+D	U-234	4.224E-16	2.715E-25	7.785E-25	1.643E-24	3.446E-24	3.539E-24	2.181E-25	0.000E+00	0.000E+00
-238+D	Th-230	4.224E-16	1.623E-30	1.101E-29	5.428E-29	3.785E-28	1.589E-27	1.573E-27	0.000E+00	0.000E+00
-238+D	Ra-226+D4	4.224E-16	4.241E-34	6.165E-33	6.703E-32	1.377E-30	1.625E-29	4.144E-29	0.000E+00	0.000E+00
-238+D	Pb-210+D1	4.224E-16	1.069E-35	3.197E-34	7.444E-33	4.367E-31	1.357E-29	7.975E-29	0.000E+00	0.000E+00
-238+D	äDSR(j)		1.857E-19	1.764E-19	1.593E-19	1.113E-19	3.934E-20	7.360E-22	0.000E+00	0.000E+00
-238+D	U-238+D	6.080E-18	2.672E-21	2.540E-21	2.293E-21	1.602E-21	5.663E-22	1.059E-23	0.000E+00	0.000E+00
-238+D	U-234	6.080E-18	3.908E-27	1.121E-26	2.365E-26	4.960E-26	5.094E-26	3.139E-27	0.000E+00	0.000E+00
-238+D	Th-230	6.080E-18	2.335E-32	1.585E-31	7.812E-31	5.448E-30	2.287E-29	2.265E-29	0.000E+00	0.000E+00
-238+D	Ra-226+D4	6.080E-18	6.104E-36	8.874E-35	9.648E-34	1.983E-32	2.339E-31	5.966E-31	0.000E+00	0.000E+00
-238+D	Pb-210+D2	6.080E-18	1.537E-37	4.596E-36	1.070E-34	6.278E-33	1.951E-31	1.147E-30	0.000E+00	0.000E+00
-238+D	äDSR(j)		2.672E-21	2.540E-21	2.293E-21	1.602E-21	5.663E-22	1.059E-23	0.000E+00	0.000E+00
-238+D1	U-238+D1	9.980E-01	4.351E-04	4.135E-04	3.734E-04	2.608E-04	9.221E-05	1.724E-06	0.000E+00	0.000E+00
-238+D1	U-234	9.980E-01	6.415E-10	1.839E-09	3.882E-09	8.141E-09	8.362E-09	5.153E-10	0.000E+00	0.000E+00
-238+D1	Th-230	9.980E-01	3.833E-15	2.602E-14	1.282E-13	8.943E-13	3.753E-12	3.717E-12	0.000E+00	0.000E+00
-238+D1	Ra-226+D	9.980E-01	1.003E-18	1.458E-17	1.585E-16	3.257E-15	3.843E-14	9.799E-14	0.000E+00	0.000E+00
-238+D1	Pb-210+D	9.980E-01	3.417E-20	1.022E-18	2.380E-17	1.396E-15	4.340E-14	2.550E-13	0.000E+00	0.000E+00
-238+D1	äDSR(j)		4.351E-04	4.135E-04	3.734E-04	2.608E-04	9.222E-05	1.725E-06	0.000E+00	0.000E+00
-238+D1	U-238+D1	1.317E-06	5.744E-10	5.459E-10	4.929E-10	3.443E-10	1.217E-10	2.276E-12	0.000E+00	0.000E+00
-238+D1	U-234	1.317E-06	8.468E-16	2.428E-15	5.124E-15	1.075E-14	1.104E-14	6.801E-16	0.000E+00	0.000E+00
-238+D1	Th-230	1.317E-06	5.060E-21	3.434E-20	1.693E-19	1.180E-18	4.955E-18	4.907E-18	0.000E+00	0.000E+00
-238+D1	Ra-226+D	1.317E-06	1.324E-24	1.924E-23	2.092E-22	4.299E-21	5.072E-20	1.293E-19	0.000E+00	0.000E+00
-238+D1	Pb-210+D1	1.317E-06	3.333E-26	9.970E-25	2.322E-23	1.362E-21	4.233E-20	2.487E-19	0.000E+00	0.000E+00
-238+D1	äDSR(j)		5.744E-10	5.459E-10	4.929E-10	3.443E-10	1.217E-10	2.277E-12	0.000E+00	0.000E+00
-238+D1	U-238+D1	1.896E-08	8.268E-12	7.857E-12	7.095E-12	4.956E-12	1.752E-12	3.276E-14	0.000E+00	0.000E+00
-238+D1	U-234	1.896E-08	1.219E-17	3.495E-17	7.375E-17	1.547E-16	1.589E-16	9.790E-18	0.000E+00	0.000E+00
-238+D1	Th-230	1.896E-08	7.284E-23	4.943E-22	2.436E-21	1.699E-20	7.131E-20	7.063E-20	0.000E+00	0.000E+00
-238+D1	Ra-226+D	1.896E-08	1.905E-26	2.769E-25	3.011E-24	6.187E-23	7.301E-22	1.862E-21	0.000E+00	0.000E+00
-238+D1	Pb-210+D2	1.896E-08	4.792E-28	1.433E-26	3.338E-25	1.958E-23	6.085E-22	3.576E-21	0.000E+00	0.000E+00
-238+D1	äDSR(j)		8.268E-12	7.857E-12	7.095E-12	4.956E-12	1.752E-12	3.277E-14	0.000E+00	0.000E+00

ummary : GKP Maintenance Worker Ingestion
ile : C:\USERS\CLAUDE\DOCUMENTS\0 GKP DOSE\RESRAD CW\GKP MAINTENANCE WORKER -INGESTION.RAD

Dose/Source Ratios Summed Over All Pathways
Parent and Progeny Principal Radionuclide Contributions Indicated

Parent (i)	Product (j)	Thread Fraction	DSR(j,t) At Time in Years (mrem/yr)/(pCi/g) 0.000E+00	1.000E+00	3.000E+00	1.000E+01	3.000E+01	1.000E+02	3.000E+02	1.000E+03
ÄÄÄÄÄÄÄÄ	ÄÄÄÄÄÄÄÄÄÄ	ÄÄÄÄÄÄÄÄ	ÄÄÄÄÄÄÄÄ	ÄÄÄÄÄÄÄÄ	ÄÄÄÄÄÄÄÄ	ÄÄÄÄÄÄÄÄ	ÄÄÄÄÄÄÄÄ	ÄÄÄÄÄÄÄÄ	ÄÄÄÄÄÄÄÄ	ÄÄÄÄÄÄÄÄ
-238+D1	U-238+D1	2.096E-04	9.140E-08	8.686E-08	7.843E-08	5.479E-08	1.937E-08	3.622E-10	0.000E+00	0.000E+00
-238+D1	U-234	2.096E-04	1.347E-13	3.863E-13	8.153E-13	1.710E-12	1.756E-12	1.082E-13	0.000E+00	0.000E+00
-238+D1	Th-230	2.096E-04	8.052E-19	5.465E-18	2.694E-17	1.878E-16	7.884E-16	7.808E-16	0.000E+00	0.000E+00
-238+D1	Ra-226+D1	2.096E-04	2.106E-22	3.062E-21	3.329E-20	6.840E-19	8.071E-18	2.058E-17	0.000E+00	0.000E+00
-238+D1	Pb-210+D	2.096E-04	7.178E-24	2.147E-22	5.000E-21	2.933E-19	9.116E-18	5.356E-17	0.000E+00	0.000E+00
-238+D1	äDSR(j)		9.140E-08	8.686E-08	7.843E-08	5.479E-08	1.937E-08	3.623E-10	0.000E+00	0.000E+00
-238+D1	U-238+D1	2.767E-10	1.206E-13	1.147E-13	1.035E-13	7.232E-14	2.557E-14	4.781E-16	0.000E+00	0.000E+00
-238+D1	U-234	2.767E-10	1.779E-19	5.100E-19	1.076E-18	2.257E-18	2.318E-18	1.429E-19	0.000E+00	0.000E+00
-238+D1	Th-230	2.767E-10	1.063E-24	7.213E-24	3.555E-23	2.480E-22	1.041E-21	1.031E-21	0.000E+00	0.000E+00
-238+D1	Ra-226+D1	2.767E-10	2.780E-28	4.041E-27	4.394E-26	9.029E-25	1.065E-23	2.717E-23	0.000E+00	0.000E+00
-238+D1	Pb-210+D1	2.767E-10	7.001E-30	2.094E-28	4.876E-27	2.860E-25	8.891E-24	5.224E-23	0.000E+00	0.000E+00
-238+D1	äDSR(j)		1.206E-13	1.147E-13	1.035E-13	7.232E-14	2.557E-14	4.783E-16	0.000E+00	0.000E+00
-238+D1	U-238+D1	3.983E-12	1.737E-15	1.650E-15	1.490E-15	1.041E-15	3.680E-16	6.882E-18	0.000E+00	0.000E+00
-238+D1	U-234	3.983E-12	2.560E-21	7.340E-21	1.549E-20	3.249E-20	3.337E-20	2.056E-21	0.000E+00	0.000E+00
-238+D1	Th-230	3.983E-12	1.530E-26	1.038E-25	5.118E-25	3.569E-24	1.498E-23	1.484E-23	0.000E+00	0.000E+00
-238+D1	Ra-226+D1	3.983E-12	4.002E-30	5.817E-29	6.325E-28	1.300E-26	1.534E-25	3.911E-25	0.000E+00	0.000E+00
-238+D1	Pb-210+D2	3.983E-12	1.007E-31	3.011E-30	7.011E-29	4.112E-27	1.278E-25	7.511E-25	0.000E+00	0.000E+00
-238+D1	äDSR(j)		1.737E-15	1.650E-15	1.490E-15	1.041E-15	3.680E-16	6.884E-18	0.000E+00	0.000E+00
-238+D1	U-238+D1	1.994E-04	8.696E-08	8.264E-08	7.462E-08	5.213E-08	1.843E-08	3.446E-10	0.000E+00	0.000E+00
-238+D1	U-234	1.994E-04	1.282E-13	3.676E-13	7.757E-13	1.627E-12	1.671E-12	1.030E-13	0.000E+00	0.000E+00
-238+D1	Th-230	1.994E-04	7.661E-19	5.199E-18	2.563E-17	1.787E-16	7.501E-16	7.429E-16	0.000E+00	0.000E+00
-238+D1	Ra-226+D2	1.994E-04	2.003E-22	2.911E-21	3.166E-20	6.505E-19	7.676E-18	1.957E-17	0.000E+00	0.000E+00
-238+D1	Pb-210+D	1.994E-04	6.829E-24	2.043E-22	4.757E-21	2.790E-19	8.673E-18	5.096E-17	0.000E+00	0.000E+00
-238+D1	äDSR(j)		8.696E-08	8.264E-08	7.462E-08	5.213E-08	1.843E-08	3.447E-10	0.000E+00	0.000E+00
-238+D1	U-238+D1	2.633E-10	1.148E-13	1.091E-13	9.850E-14	6.881E-14	2.432E-14	4.549E-16	0.000E+00	0.000E+00
-238+D1	U-234	2.633E-10	1.692E-19	4.852E-19	1.024E-18	2.147E-18	2.206E-18	1.359E-19	0.000E+00	0.000E+00
-238+D1	Th-230	2.633E-10	1.011E-24	6.863E-24	3.383E-23	2.359E-22	9.901E-22	9.806E-22	0.000E+00	0.000E+00
-238+D1	Ra-226+D2	2.633E-10	2.644E-28	3.843E-27	4.178E-26	8.586E-25	1.013E-23	2.584E-23	0.000E+00	0.000E+00
-238+D1	Pb-210+D1	2.633E-10	6.661E-30	1.992E-28	4.640E-27	2.721E-25	8.459E-24	4.970E-23	0.000E+00	0.000E+00
-238+D1	äDSR(j)		1.148E-13	1.091E-13	9.850E-14	6.881E-14	2.433E-14	4.550E-16	0.000E+00	0.000E+00
-238+D1	U-238+D1	3.789E-12	1.652E-15	1.570E-15	1.418E-15	9.904E-16	3.501E-16	6.548E-18	0.000E+00	0.000E+00
-238+D1	U-234	3.789E-12	2.436E-21	6.984E-21	1.474E-20	3.091E-20	3.175E-20	1.956E-21	0.000E+00	0.000E+00
-238+D1	Th-230	3.789E-12	1.456E-26	9.879E-26	4.869E-25	3.396E-24	1.425E-23	1.411E-23	0.000E+00	0.000E+00
-238+D1	Ra-226+D2	3.789E-12	3.805E-30	5.532E-29	6.014E-28	1.236E-26	1.458E-25	3.719E-25	0.000E+00	0.000E+00
-238+D1	Pb-210+D2	3.789E-12	9.576E-32	2.865E-30	6.670E-29	3.913E-27	1.216E-25	7.146E-25	0.000E+00	0.000E+00
-238+D1	äDSR(j)		1.652E-15	1.570E-15	1.418E-15	9.904E-16	3.501E-16	6.550E-18	0.000E+00	0.000E+00

ummary : GKP Maintenance Worker Ingestion
ile : C:\USERS\CLAUDE\DOCUMENTS\0 GKP DOSE\RESRAD CW\GKP MAINTENANCE WORKER -INGESTION.RAD

Dose/Source Ratios Summed Over All Pathways
Parent and Progeny Principal Radionuclide Contributions Indicated

Parent	Product	Thread	DSR(j,t) At Time in Years (mrem/yr)/(pCi/g)							
(i)	(j)	Fraction	0.000E+00	1.000E+00	3.000E+00	1.000E+01	3.000E+01	1.000E+02	3.000E+02	1.000E+03
ÄÄÄÄÄÄÄÄ	ÄÄÄÄÄÄÄÄÄÄ	ÄÄÄÄÄÄÄÄ	ÄÄÄÄÄÄÄÄ	ÄÄÄÄÄÄÄÄ	ÄÄÄÄÄÄÄÄ	ÄÄÄÄÄÄÄÄ	ÄÄÄÄÄÄÄÄ	ÄÄÄÄÄÄÄÄ	ÄÄÄÄÄÄÄÄ	ÄÄÄÄÄÄÄÄ
-238+D1	U-238+D1	4.189E-08	1.827E-11	1.736E-11	1.567E-11	1.095E-11	3.871E-12	7.238E-14	0.000E+00	0.000E+00
-238+D1	U-234	4.189E-08	2.693E-17	7.721E-17	1.629E-16	3.417E-16	3.510E-16	2.163E-17	0.000E+00	0.000E+00
-238+D1	Th-230	4.189E-08	1.609E-22	1.092E-21	5.383E-21	3.754E-20	1.576E-19	1.560E-19	0.000E+00	0.000E+00
-238+D1	Ra-226+D3	4.189E-08	4.207E-26	6.115E-25	6.649E-24	1.366E-22	1.612E-21	4.111E-21	0.000E+00	0.000E+00
-238+D1	Pb-210+D	4.189E-08	1.434E-27	4.291E-26	9.992E-25	5.861E-23	1.822E-21	1.070E-20	0.000E+00	0.000E+00
-238+D1	äDSR(j)		1.827E-11	1.736E-11	1.567E-11	1.095E-11	3.871E-12	7.241E-14	0.000E+00	0.000E+00
-238+D1	U-238+D1	5.530E-14	2.411E-17	2.291E-17	2.069E-17	1.445E-17	5.109E-18	9.555E-20	0.000E+00	0.000E+00
-238+D1	U-234	5.530E-14	3.554E-23	1.019E-22	2.151E-22	4.511E-22	4.633E-22	2.855E-23	0.000E+00	0.000E+00
-238+D1	Th-230	5.530E-14	2.124E-28	1.442E-27	7.105E-27	4.955E-26	2.080E-25	2.060E-25	0.000E+00	0.000E+00
-238+D1	Ra-226+D3	5.530E-14	5.553E-32	8.072E-31	8.777E-30	1.804E-28	2.128E-27	5.427E-27	0.000E+00	0.000E+00
-238+D1	Pb-210+D1	5.530E-14	1.399E-33	4.185E-32	9.745E-31	5.716E-29	1.777E-27	1.044E-26	0.000E+00	0.000E+00
-238+D1	äDSR(j)		2.411E-17	2.291E-17	2.069E-17	1.445E-17	5.110E-18	9.558E-20	0.000E+00	0.000E+00
-238+D1	U-238+D1	7.959E-16	3.470E-19	3.298E-19	2.978E-19	2.080E-19	7.354E-20	1.375E-21	0.000E+00	0.000E+00
-238+D1	U-234	7.959E-16	5.116E-25	1.467E-24	3.096E-24	6.493E-24	6.669E-24	4.109E-25	0.000E+00	0.000E+00
-238+D1	Th-230	7.959E-16	3.057E-30	2.075E-29	1.023E-28	7.132E-28	2.993E-27	2.965E-27	0.000E+00	0.000E+00
-238+D1	Ra-226+D3	7.959E-16	7.993E-34	1.162E-32	1.263E-31	2.596E-30	3.063E-29	7.811E-29	0.000E+00	0.000E+00
-238+D1	Pb-210+D2	7.959E-16	2.011E-35	6.017E-34	1.401E-32	8.218E-31	2.554E-29	1.501E-28	0.000E+00	0.000E+00
-238+D1	äDSR(j)		3.470E-19	3.298E-19	2.978E-19	2.080E-19	7.355E-20	1.376E-21	0.000E+00	0.000E+00
-238+D1	U-238+D1	1.997E-07	8.707E-11	8.274E-11	7.471E-11	5.219E-11	1.845E-11	3.450E-13	0.000E+00	0.000E+00
-238+D1	U-234	1.997E-07	1.284E-16	3.680E-16	7.766E-16	1.629E-15	1.673E-15	1.031E-16	0.000E+00	0.000E+00
-238+D1	Th-230	1.997E-07	7.670E-22	5.206E-21	2.566E-20	1.789E-19	7.510E-19	7.438E-19	0.000E+00	0.000E+00
-238+D1	Ra-226+D4	1.997E-07	2.005E-25	2.914E-24	3.169E-23	6.511E-22	7.683E-21	1.959E-20	0.000E+00	0.000E+00
-238+D1	Pb-210+D	1.997E-07	6.838E-27	2.045E-25	4.763E-24	2.794E-22	8.683E-21	5.102E-20	0.000E+00	0.000E+00
-238+D1	äDSR(j)		8.707E-11	8.274E-11	7.471E-11	5.219E-11	1.845E-11	3.451E-13	0.000E+00	0.000E+00
-238+D1	U-238+D1	2.636E-13	1.149E-16	1.092E-16	9.862E-17	6.889E-17	2.435E-17	4.554E-19	0.000E+00	0.000E+00
-238+D1	U-234	2.636E-13	1.694E-22	4.858E-22	1.025E-21	2.150E-21	2.208E-21	1.361E-22	0.000E+00	0.000E+00
-238+D1	Th-230	2.636E-13	1.012E-27	6.871E-27	3.387E-26	2.362E-25	9.913E-25	9.818E-25	0.000E+00	0.000E+00
-238+D1	Ra-226+D4	2.636E-13	2.646E-31	3.847E-30	4.183E-29	8.595E-28	1.014E-26	2.586E-26	0.000E+00	0.000E+00
-238+D1	Pb-210+D1	2.636E-13	6.669E-33	1.995E-31	4.645E-30	2.725E-28	8.469E-27	4.976E-26	0.000E+00	0.000E+00
-238+D1	äDSR(j)		1.149E-16	1.092E-16	9.862E-17	6.889E-17	2.436E-17	4.556E-19	0.000E+00	0.000E+00
-238+D1	U-238+D1	3.794E-15	1.654E-18	1.572E-18	1.420E-18	9.916E-19	3.505E-19	6.556E-21	0.000E+00	0.000E+00
-238+D1	U-234	3.794E-15	2.439E-24	6.992E-24	1.476E-23	3.095E-23	3.179E-23	1.959E-24	0.000E+00	0.000E+00
-238+D1	Th-230	3.794E-15	1.457E-29	9.890E-29	4.875E-28	3.400E-27	1.427E-26	1.413E-26	0.000E+00	0.000E+00
-238+D1	Ra-226+D4	3.794E-15	3.809E-33	5.537E-32	6.020E-31	1.237E-29	1.460E-28	3.722E-28	0.000E+00	0.000E+00
-238+D1	Pb-210+D2	3.794E-15	9.588E-35	2.868E-33	6.678E-32	3.917E-30	1.218E-28	7.154E-28	0.000E+00	0.000E+00
-238+D1	äDSR(j)		1.654E-18	1.572E-18	1.420E-18	9.916E-19	3.506E-19	6.558E-21	0.000E+00	0.000E+00
íííííííííí	íííííííííí	íííííííííí	íííííííííí	íííííííííí	íííííííííí	íííííííííí	íííííííííí	íííííííííí	íííííííííí	íííííííííí

ne DSR includes contributions from associated (half-life ó 180 days) daughters.

ummary : GKP Maintenance Worker Ingestion
ile : C:\USERS\CLAUDE\DOCUMENTS\0 GKP DOSE\RESRAD CW\GKP MAINTENANCE WORKER -INGESTION.RAD

Single Radionuclide Soil Guidelines G(i,t) in pCi/g
Basic Radiation Dose Limit = 2.500E+01 mrem/yr

uclide (i)	t= 0.000E+00	1.000E+00	3.000E+00	1.000E+01	3.000E+01	1.000E+02	3.000E+02	1.000E+03
ÄÄÄÄÄÄ	ÄÄÄÄÄÄÄÄÄÄ	ÄÄÄÄÄÄÄÄÄÄ	ÄÄÄÄÄÄÄÄÄÄ	ÄÄÄÄÄÄÄÄÄÄ	ÄÄÄÄÄÄÄÄÄÄ	ÄÄÄÄÄÄÄÄÄÄ	ÄÄÄÄÄÄÄÄÄÄ	ÄÄÄÄÄÄÄÄÄÄ
a-226	1.064E+04	9.584E+03	8.225E+03	6.531E+03	7.812E+03	1.066E+05	*9.885E+11	*9.885E+11
n-232	5.343E+03	5.037E+03	4.528E+03	3.726E+03	3.811E+03	8.097E+03	*1.097E+05	*1.097E+05
-234	5.444E+04	5.728E+04	6.344E+04	9.080E+04	2.566E+05	1.324E+07	*6.222E+09	*6.222E+09
-235	5.760E+04	6.056E+04	6.694E+04	9.515E+04	2.631E+05	*2.160E+06	*2.160E+06	*2.160E+06
-238	5.734E+04	6.033E+04	6.682E+04	9.565E+04	2.705E+05	*3.361E+05	*3.361E+05	*3.361E+05
íííííí	íííííííííí	íííííííííí	íííííííííí	íííííííííí	íííííííííí	íííííííííí	íííííííííí	íííííííííí

At specific activity limit

Summed Dose/Source Ratios DSR(i,t) in (mrem/yr)/(pCi/g)
and Single Radionuclide Soil Guidelines G(i,t) in pCi/g
at tmin = time of minimum single radionuclide soil guideline
and at tmax = time of maximum total dose = 13.55 ñ 0.03 years

uclide (i)	Initial (pCi/g)	tmin (years)	DSR(i,tmin)	G(i,tmin) (pCi/g)	DSR(i,tmax)	G(i,tmax) (pCi/g)
ÄÄÄÄÄÄ	ÄÄÄÄÄÄÄÄÄÄ	ÄÄÄÄÄÄÄÄÄÄÄÄÄÄÄÄ	ÄÄÄÄÄÄÄÄÄÄ	ÄÄÄÄÄÄÄÄÄÄ	ÄÄÄÄÄÄÄÄÄÄ	ÄÄÄÄÄÄÄÄÄÄ
a-226	3.650E+01	14.25 ñ 0.03	3.928E-03	6.364E+03	3.926E-03	6.368E+03
n-232	2.400E+00	16.62 ñ 0.03	6.950E-03	3.597E+03	6.907E-03	3.620E+03
-234	1.390E+01	0.000E+00	4.592E-04	5.444E+04	2.294E-04	1.090E+05
-235	8.400E-01	0.000E+00	4.340E-04	5.760E+04	2.197E-04	1.138E+05
-238	1.390E+01	0.000E+00	4.360E-04	5.734E+04	2.177E-04	1.148E+05
íííííí	íííííííííí	íííííííííííííííííí	íííííííííí	íííííííííí	íííííííííí	íííííííííí

ummary : GKP Maintenance Worker Ingestion
ile : C:\USERS\CLAUDE\DOCUMENTS\0 GKP DOSE\RESRAD CW\GKP MAINTENANCE WORKER -INGESTION.RAD

Individual Nuclide Dose Summed Over All Pathways
Parent Nuclide and Branch Fraction Indicated

uclide (j)	Parent (i)	THF(i)	DOSE(j,t), mrem/yr t= 0.000E+00	1.000E+00	3.000E+00	1.000E+01	3.000E+01	1.000E+02	3.000E+02	1.000E+03
ÄÄÄÄÄÄ	ÄÄÄÄÄÄÄ	ÄÄÄÄÄÄÄÄÄÄ	ÄÄÄÄÄÄÄÄÄÄ	ÄÄÄÄÄÄÄÄÄÄ	ÄÄÄÄÄÄÄÄÄÄ	ÄÄÄÄÄÄÄÄÄÄ	ÄÄÄÄÄÄÄÄÄÄ	ÄÄÄÄÄÄÄÄÄÄ	ÄÄÄÄÄÄÄÄÄÄ	ÄÄÄÄÄÄÄÄÄÄ
a-226	Ra-226	9.996E-01	7.902E-02	7.601E-02	7.032E-02	5.350E-02	2.412E-02	1.058E-03	0.000E+00	0.000E+00
a-226	Ra-226	1.319E-06	1.043E-07	1.003E-07	9.283E-08	7.061E-08	3.184E-08	1.396E-09	0.000E+00	0.000E+00
a-226	U-234	9.996E-01	1.988E-11	1.354E-10	6.726E-10	4.820E-09	2.172E-08	2.510E-08	0.000E+00	0.000E+00
a-226	U-234	1.319E-06	2.625E-17	1.787E-16	8.879E-16	6.363E-15	2.867E-14	3.314E-14	0.000E+00	0.000E+00
a-226	U-234	1.899E-08	3.778E-19	2.573E-18	1.278E-17	9.158E-17	4.126E-16	4.770E-16	0.000E+00	0.000E+00
a-226	U-238	1.599E-03	2.234E-20	3.247E-19	3.530E-18	7.254E-17	8.560E-16	2.183E-15	0.000E+00	0.000E+00
a-226	U-238	2.111E-09	2.948E-26	4.286E-25	4.660E-24	9.575E-23	1.130E-21	2.881E-21	0.000E+00	0.000E+00
a-226	U-238	3.039E-11	4.226E-28	6.169E-27	6.707E-26	1.378E-24	1.626E-23	4.147E-23	0.000E+00	0.000E+00
a-226	U-238	9.980E-01	1.394E-17	2.026E-16	2.203E-15	4.527E-14	5.341E-13	1.362E-12	0.000E+00	0.000E+00
a-226	U-238	1.317E-06	1.840E-23	2.674E-22	2.908E-21	5.975E-20	7.051E-19	1.798E-18	0.000E+00	0.000E+00
a-226	U-238	1.896E-08	2.648E-25	3.849E-24	4.185E-23	8.600E-22	1.015E-20	2.588E-20	0.000E+00	0.000E+00
a-226	äDOSE(j)		7.902E-02	7.601E-02	7.032E-02	5.350E-02	2.412E-02	1.058E-03	0.000E+00	0.000E+00
o-210	Ra-226	9.996E-01	6.675E-03	1.917E-02	4.057E-02	8.616E-02	9.264E-02	7.501E-03	0.000E+00	0.000E+00
o-210	Ra-226	2.100E-04	1.402E-06	4.026E-06	8.522E-06	1.810E-05	1.946E-05	1.575E-06	0.000E+00	0.000E+00
o-210	Ra-226	1.998E-04	1.334E-06	3.830E-06	8.108E-06	1.722E-05	1.851E-05	1.499E-06	0.000E+00	0.000E+00
o-210	Ra-226	4.196E-08	2.802E-10	8.045E-10	1.703E-09	3.617E-09	3.889E-09	3.148E-10	0.000E+00	0.000E+00
o-210	Ra-226	2.000E-07	1.336E-09	3.835E-09	8.118E-09	1.724E-08	1.854E-08	1.501E-09	0.000E+00	0.000E+00
o-210	U-234	9.996E-01	8.452E-13	1.226E-11	1.328E-10	2.687E-09	3.049E-08	7.125E-08	0.000E+00	0.000E+00
o-210	U-234	2.100E-04	1.775E-16	2.576E-15	2.789E-14	5.644E-13	6.405E-12	1.497E-11	0.000E+00	0.000E+00
o-210	U-234	1.998E-04	1.689E-16	2.451E-15	2.653E-14	5.370E-13	6.094E-12	1.424E-11	0.000E+00	0.000E+00
o-210	U-234	4.196E-08	3.548E-20	5.147E-19	5.573E-18	1.128E-16	1.280E-15	2.991E-15	0.000E+00	0.000E+00
o-210	U-234	2.000E-07	1.691E-19	2.454E-18	2.656E-17	5.377E-16	6.101E-15	1.426E-14	0.000E+00	0.000E+00
o-210	U-238	1.599E-03	7.613E-22	2.277E-20	5.302E-19	3.110E-17	9.667E-16	5.680E-15	0.000E+00	0.000E+00
o-210	U-238	3.359E-07	1.599E-25	4.783E-24	1.114E-22	6.533E-21	2.031E-19	1.193E-18	0.000E+00	0.000E+00
o-210	U-238	3.196E-07	1.521E-25	4.551E-24	1.060E-22	6.216E-21	1.932E-19	1.135E-18	0.000E+00	0.000E+00
o-210	U-238	6.713E-11	3.195E-29	9.558E-28	2.226E-26	1.306E-24	4.058E-23	2.384E-22	0.000E+00	0.000E+00
o-210	U-238	3.200E-10	1.523E-28	4.556E-27	1.061E-25	6.223E-24	1.934E-22	1.137E-21	0.000E+00	0.000E+00
o-210	U-238	9.980E-01	4.750E-19	1.421E-17	3.309E-16	1.941E-14	6.032E-13	3.545E-12	0.000E+00	0.000E+00
o-210	U-238	2.096E-04	9.978E-23	2.985E-21	6.950E-20	4.077E-18	1.267E-16	7.445E-16	0.000E+00	0.000E+00
o-210	U-238	1.994E-04	9.493E-23	2.840E-21	6.612E-20	3.879E-18	1.206E-16	7.083E-16	0.000E+00	0.000E+00
o-210	U-238	4.189E-08	1.994E-26	5.964E-25	1.389E-23	8.147E-22	2.532E-20	1.488E-19	0.000E+00	0.000E+00
o-210	U-238	1.997E-07	9.504E-26	2.843E-24	6.620E-23	3.883E-21	1.207E-19	7.092E-19	0.000E+00	0.000E+00
o-210	äDOSE(j)		6.678E-03	1.917E-02	4.059E-02	8.620E-02	9.268E-02	7.504E-03	0.000E+00	0.000E+00
o-210	Ra-226	1.319E-06	6.510E-09	1.869E-08	3.957E-08	8.404E-08	9.036E-08	7.315E-09	0.000E+00	0.000E+00
o-210	Ra-226	1.899E-08	9.360E-11	2.687E-10	5.689E-10	1.208E-09	1.299E-09	1.052E-10	0.000E+00	0.000E+00
o-210	Ra-226	2.771E-10	1.367E-12	3.926E-12	8.312E-12	1.765E-11	1.898E-11	1.537E-12	0.000E+00	0.000E+00
o-210	Ra-226	2.637E-10	1.301E-12	3.735E-12	7.908E-12	1.679E-11	1.806E-11	1.462E-12	0.000E+00	0.000E+00
o-210	Ra-226	5.538E-14	2.733E-16	7.846E-16	1.661E-15	3.527E-15	3.793E-15	3.071E-16	0.000E+00	0.000E+00
o-210	Ra-226	2.640E-13	1.303E-15	3.740E-15	7.918E-15	1.681E-14	1.808E-14	1.464E-15	0.000E+00	0.000E+00
o-210	U-234	1.319E-06	8.244E-19	1.196E-17	1.295E-16	2.621E-15	2.974E-14	6.949E-14	0.000E+00	0.000E+00
o-210	U-234	2.771E-10	1.732E-22	2.512E-21	2.720E-20	5.505E-19	6.247E-18	1.460E-17	0.000E+00	0.000E+00
o-210	U-234	2.637E-10	1.647E-22	2.390E-21	2.588E-20	5.238E-19	5.944E-18	1.389E-17	0.000E+00	0.000E+00
o-210	U-234	5.538E-14	3.460E-26	5.020E-25	5.435E-24	1.100E-22	1.248E-21	2.917E-21	0.000E+00	0.000E+00
o-210	U-234	2.640E-13	1.649E-25	2.393E-24	2.591E-23	5.244E-22	5.951E-21	1.390E-20	0.000E+00	0.000E+00
o-210	U-238	2.111E-09	7.425E-28	2.221E-26	5.172E-25	3.034E-23	9.429E-22	5.540E-21	0.000E+00	0.000E+00
o-210	U-238	4.434E-13	0.000E+00	0.000E+00	1.086E-28	6.372E-27	1.980E-25	1.164E-24	0.000E+00	0.000E+00
o-210	U-238	4.219E-13	0.000E+00	0.000E+00	1.033E-28	6.062E-27	1.884E-25	1.107E-24	0.000E+00	0.000E+00

ummary : GKP Maintenance Worker Ingestion
ile : C:\USERS\CLAUDE\DOCUMENTS\0 GKP DOSE\RESRAD CW\GKP MAINTENANCE WORKER -INGESTION.RAD

Individual Nuclide Dose Summed Over All Pathways
Parent Nuclide and Branch Fraction Indicated

uclide (j)	Parent (i)	THF(i)	DOSE(j,t), mrem/yr t= 0.000E+00	1.000E+00	3.000E+00	1.000E+01	3.000E+01	1.000E+02	3.000E+02	1.000E+03
ÄÄÄÄÄ	ÄÄÄÄÄÄ	ÄÄÄÄÄÄÄÄÄ	ÄÄÄÄÄÄÄÄÄ	ÄÄÄÄÄÄÄÄÄ	ÄÄÄÄÄÄÄÄÄ	ÄÄÄÄÄÄÄÄÄ	ÄÄÄÄÄÄÄÄÄ	ÄÄÄÄÄÄÄÄÄ	ÄÄÄÄÄÄÄÄÄ	ÄÄÄÄÄÄÄÄÄ
o-210	U-238	8.862E-17	0.000E+00	0.000E+00	0.000E+00	0.000E+00	3.958E-29	2.326E-28	0.000E+00	0.000E+00
o-210	U-238	4.224E-16	0.000E+00	0.000E+00	0.000E+00	0.000E+00	1.887E-28	1.108E-27	0.000E+00	0.000E+00
o-210	U-238	1.317E-06	4.633E-25	1.386E-23	3.227E-22	1.893E-20	5.884E-19	3.457E-18	0.000E+00	0.000E+00
o-210	U-238	2.767E-10	9.732E-29	2.911E-27	6.778E-26	3.976E-24	1.236E-22	7.261E-22	0.000E+00	0.000E+00
o-210	U-238	2.633E-10	9.259E-29	2.770E-27	6.449E-26	3.783E-24	1.176E-22	6.909E-22	0.000E+00	0.000E+00
o-210	U-238	5.530E-14	0.000E+00	0.000E+00	0.000E+00	7.946E-28	2.470E-26	1.451E-25	0.000E+00	0.000E+00
o-210	U-238	2.636E-13	0.000E+00	0.000E+00	6.457E-29	3.787E-27	1.177E-25	6.917E-25	0.000E+00	0.000E+00
o-210	äDOSE(j)		6.607E-09	1.897E-08	4.016E-08	8.528E-08	9.169E-08	7.424E-09	0.000E+00	0.000E+00
a-226	Ra-226	1.899E-08	1.501E-09	1.444E-09	1.336E-09	1.016E-09	4.584E-10	2.010E-11	0.000E+00	0.000E+00
a-226	Ra-226	2.100E-04	1.660E-05	1.597E-05	1.477E-05	1.124E-05	5.067E-06	2.222E-07	0.000E+00	0.000E+00
a-226	äDOSE(j)		1.660E-05	1.597E-05	1.477E-05	1.124E-05	5.068E-06	2.222E-07	0.000E+00	0.000E+00
a-226	Ra-226	2.771E-10	2.191E-11	2.107E-11	1.950E-11	1.483E-11	6.689E-12	2.933E-13	0.000E+00	0.000E+00
a-226	Ra-226	3.989E-12	3.153E-13	3.033E-13	2.807E-13	2.135E-13	9.627E-14	4.221E-15	0.000E+00	0.000E+00
a-226	äDOSE(j)		2.222E-11	2.138E-11	1.978E-11	1.505E-11	6.785E-12	2.975E-13	0.000E+00	0.000E+00
o-210	Ra-226	3.989E-12	1.966E-14	5.645E-14	1.195E-13	2.538E-13	2.729E-13	2.209E-14	0.000E+00	0.000E+00
o-210	Ra-226	3.795E-12	1.870E-14	5.370E-14	1.137E-13	2.414E-13	2.596E-13	2.102E-14	0.000E+00	0.000E+00
o-210	Ra-226	7.972E-16	3.929E-18	1.128E-17	2.388E-17	5.071E-17	5.453E-17	4.415E-18	0.000E+00	0.000E+00
o-210	Ra-226	3.800E-15	1.873E-17	5.377E-17	1.138E-16	2.417E-16	2.599E-16	2.104E-17	0.000E+00	0.000E+00
o-210	U-234	1.899E-08	1.185E-20	1.720E-19	1.862E-18	3.768E-17	4.276E-16	9.991E-16	0.000E+00	0.000E+00
o-210	U-234	3.989E-12	2.489E-24	3.612E-23	3.910E-22	7.914E-21	8.981E-20	2.099E-19	0.000E+00	0.000E+00
o-210	U-234	3.795E-12	2.368E-24	3.436E-23	3.720E-22	7.530E-21	8.545E-20	1.997E-19	0.000E+00	0.000E+00
o-210	U-234	7.972E-16	4.975E-28	7.218E-27	7.814E-26	1.582E-24	1.795E-23	4.194E-23	0.000E+00	0.000E+00
o-210	U-234	3.800E-15	2.371E-27	3.440E-26	3.725E-25	7.539E-24	8.555E-23	1.999E-22	0.000E+00	0.000E+00
o-210	U-238	3.039E-11	0.000E+00	3.193E-28	7.435E-27	4.361E-25	1.356E-23	7.965E-23	0.000E+00	0.000E+00
o-210	U-238	6.383E-15	0.000E+00	0.000E+00	0.000E+00	9.161E-29	2.847E-27	1.673E-26	0.000E+00	0.000E+00
o-210	U-238	6.073E-15	0.000E+00	0.000E+00	0.000E+00	8.715E-29	2.709E-27	1.592E-26	0.000E+00	0.000E+00
o-210	U-238	1.276E-18	0.000E+00	0.000E+00	0.000E+00	0.000E+00	0.000E+00	0.000E+00	0.000E+00	0.000E+00
o-210	U-238	6.080E-18	0.000E+00	0.000E+00	0.000E+00	0.000E+00	0.000E+00	1.594E-29	0.000E+00	0.000E+00
o-210	U-238	1.896E-08	6.661E-27	1.992E-25	4.640E-24	2.721E-22	8.459E-21	4.970E-20	0.000E+00	0.000E+00
o-210	U-238	3.983E-12	0.000E+00	4.185E-29	9.745E-28	5.716E-26	1.777E-24	1.044E-23	0.000E+00	0.000E+00
o-210	U-238	3.789E-12	0.000E+00	3.982E-29	9.272E-28	5.438E-26	1.690E-24	9.932E-24	0.000E+00	0.000E+00
o-210	U-238	7.959E-16	0.000E+00	0.000E+00	0.000E+00	0.000E+00	3.551E-28	2.086E-27	0.000E+00	0.000E+00
o-210	U-238	3.794E-15	0.000E+00	0.000E+00	0.000E+00	5.445E-29	1.692E-27	9.944E-27	0.000E+00	0.000E+00
o-210	äDOSE(j)		3.839E-14	1.102E-13	2.333E-13	4.955E-13	5.332E-13	4.413E-14	0.000E+00	0.000E+00
a-226	Ra-226	1.998E-04	1.578E-05	1.518E-05	1.405E-05	1.069E-05	4.819E-06	2.113E-07	0.000E+00	0.000E+00
a-226	Ra-226	2.637E-10	2.083E-11	2.004E-11	1.854E-11	1.410E-11	6.361E-12	2.789E-13	0.000E+00	0.000E+00
a-226	U-234	1.998E-04	3.972E-15	2.705E-14	1.344E-13	9.628E-13	4.338E-12	5.015E-12	0.000E+00	0.000E+00
a-226	U-234	2.637E-10	5.243E-21	3.570E-20	1.774E-19	1.271E-18	5.726E-18	6.619E-18	0.000E+00	0.000E+00
a-226	U-234	3.795E-12	7.546E-23	5.139E-22	2.553E-21	1.829E-20	8.242E-20	9.528E-20	0.000E+00	0.000E+00
a-226	U-238	3.196E-07	4.461E-24	6.485E-23	7.051E-22	1.449E-20	1.710E-19	4.360E-19	0.000E+00	0.000E+00
a-226	U-238	4.219E-13	0.000E+00	8.524E-29	9.268E-28	1.913E-26	2.257E-25	5.755E-25	0.000E+00	0.000E+00
a-226	U-238	6.073E-15	0.000E+00	0.000E+00	0.000E+00	2.741E-28	3.249E-27	8.284E-27	0.000E+00	0.000E+00
a-226	U-238	1.994E-04	2.784E-21	4.047E-20	4.400E-19	9.042E-18	1.067E-16	2.721E-16	0.000E+00	0.000E+00
a-226	U-238	2.633E-10	3.675E-27	5.342E-26	5.808E-25	1.193E-23	1.408E-22	3.591E-22	0.000E+00	0.000E+00
a-226	U-238	3.789E-12	5.267E-29	7.656E-28	8.360E-27	1.718E-25	2.027E-24	5.169E-24	0.000E+00	0.000E+00
a-226	äDOSE(j)		1.578E-05	1.518E-05	1.405E-05	1.069E-05	4.819E-06	2.113E-07	0.000E+00	0.000E+00

ummary : GKP Maintenance Worker Ingestion
ile : C:\USERS\CLAUDE\DOCUMENTS\0 GKP DOSE\RESRAD CW\GKP MAINTENANCE WORKER -INGESTION.RAD

Individual Nuclide Dose Summed Over All Pathways
Parent Nuclide and Branch Fraction Indicated

uclide (j)	Parent (i)	THF(i)	DOSE(j,t), mrem/yr t= 0.000E+00	1.000E+00	3.000E+00	1.000E+01	3.000E+01	1.000E+02	3.000E+02	1.000E+03
ÄÄÄÄÄÄ	ÄÄÄÄÄÄÄ	ÄÄÄÄÄÄÄÄÄ	ÄÄÄÄÄÄÄÄÄ	ÄÄÄÄÄÄÄÄÄ	ÄÄÄÄÄÄÄÄÄ	ÄÄÄÄÄÄÄÄÄ	ÄÄÄÄÄÄÄÄÄ	ÄÄÄÄÄÄÄÄÄ	ÄÄÄÄÄÄÄÄÄ	ÄÄÄÄÄÄÄÄÄ
a-226	Ra-226	3.795E-12	2.999E-13	2.885E-13	2.669E-13	2.030E-13	9.155E-14	4.014E-15	0.000E+00	0.000E+00
a-226	Ra-226	4.196E-08	3.315E-09	3.189E-09	2.951E-09	2.244E-09	1.012E-09	4.438E-11	0.000E+00	0.000E+00
a-226	äDOSE(j)		3.315E-09	3.189E-09	2.951E-09	2.245E-09	1.012E-09	4.438E-11	0.000E+00	0.000E+00
a-226	Ra-226	5.538E-14	4.376E-15	4.209E-15	3.895E-15	2.963E-15	1.336E-15	5.858E-17	0.000E+00	0.000E+00
a-226	Ra-226	7.972E-16	6.299E-17	6.059E-17	5.606E-17	4.264E-17	1.923E-17	8.432E-19	0.000E+00	0.000E+00
a-226	äDOSE(j)		4.439E-15	4.270E-15	3.951E-15	3.005E-15	1.355E-15	5.942E-17	0.000E+00	0.000E+00
a-226	Ra-226	2.000E-07	1.580E-08	1.520E-08	1.406E-08	1.070E-08	4.823E-09	2.115E-10	0.000E+00	0.000E+00
a-226	Ra-226	2.640E-13	2.085E-14	2.006E-14	1.856E-14	1.412E-14	6.367E-15	2.792E-16	0.000E+00	0.000E+00
a-226	U-234	2.000E-07	3.976E-18	2.708E-17	1.345E-16	9.638E-16	4.342E-15	5.020E-15	0.000E+00	0.000E+00
a-226	U-234	2.640E-13	5.248E-24	3.574E-23	1.775E-22	1.272E-21	5.732E-21	6.626E-21	0.000E+00	0.000E+00
a-226	U-234	3.800E-15	7.554E-26	5.144E-25	2.555E-24	1.831E-23	8.250E-23	9.537E-23	0.000E+00	0.000E+00
a-226	U-238	3.200E-10	4.466E-27	6.492E-26	7.058E-25	1.450E-23	1.712E-22	4.364E-22	0.000E+00	0.000E+00
a-226	U-238	4.224E-16	0.000E+00	0.000E+00	0.000E+00	1.906E-29	2.250E-28	5.736E-28	0.000E+00	0.000E+00
a-226	U-238	6.080E-18	0.000E+00	0.000E+00	0.000E+00	0.000E+00	0.000E+00	0.000E+00	0.000E+00	0.000E+00
a-226	U-238	1.997E-07	2.787E-24	4.051E-23	4.404E-22	9.051E-21	1.068E-19	2.723E-19	0.000E+00	0.000E+00
a-226	U-238	2.636E-13	0.000E+00	5.324E-29	5.789E-28	1.195E-26	1.410E-25	3.595E-25	0.000E+00	0.000E+00
a-226	U-238	3.794E-15	0.000E+00	0.000E+00	0.000E+00	1.712E-28	2.020E-27	5.174E-27	0.000E+00	0.000E+00
a-226	äDOSE(j)		1.580E-08	1.520E-08	1.406E-08	1.070E-08	4.823E-09	2.115E-10	0.000E+00	0.000E+00
a-226	Ra-226	3.800E-15	3.002E-16	2.888E-16	2.672E-16	2.032E-16	9.165E-17	4.018E-18	0.000E+00	0.000E+00
n-232	Th-232	1.000E+00	1.087E-02	1.080E-02	1.065E-02	1.014E-02	8.678E-03	3.585E-03	0.000E+00	0.000E+00
a-228	Th-232	1.000E+00	3.288E-04	9.182E-04	1.837E-03	3.383E-03	3.597E-03	1.501E-03	0.000E+00	0.000E+00
n-228	Th-232	1.000E+00	3.272E-05	1.982E-04	7.652E-04	2.582E-03	3.468E-03	2.325E-03	0.000E+00	0.000E+00
-234	U-234	9.996E-01	6.381E-03	6.064E-03	5.475E-03	3.825E-03	1.352E-03	2.528E-05	0.000E+00	0.000E+00
-234	U-234	1.319E-06	8.422E-09	8.004E-09	7.227E-09	5.049E-09	1.785E-09	3.337E-11	0.000E+00	0.000E+00
-234	U-238	1.599E-03	1.429E-11	4.097E-11	8.646E-11	1.813E-10	1.863E-10	1.148E-11	0.000E+00	0.000E+00
-234	U-238	2.111E-09	1.886E-17	5.408E-17	1.141E-16	2.394E-16	2.459E-16	1.515E-17	0.000E+00	0.000E+00
-234	U-238	3.039E-11	2.715E-19	7.785E-19	1.643E-18	3.446E-18	3.539E-18	2.181E-19	0.000E+00	0.000E+00
-234	U-238	3.359E-07	3.001E-15	8.606E-15	1.816E-14	3.809E-14	3.912E-14	2.411E-15	0.000E+00	0.000E+00
-234	U-238	4.434E-13	3.962E-21	1.136E-20	2.397E-20	5.028E-20	5.164E-20	3.182E-21	0.000E+00	0.000E+00
-234	U-238	6.383E-15	5.703E-23	1.635E-22	3.451E-22	7.237E-22	7.433E-22	4.581E-23	0.000E+00	0.000E+00
-234	U-238	3.196E-07	2.856E-15	8.188E-15	1.728E-14	3.624E-14	3.722E-14	2.294E-15	0.000E+00	0.000E+00
-234	U-238	4.219E-13	3.769E-21	1.081E-20	2.281E-20	4.784E-20	4.913E-20	3.028E-21	0.000E+00	0.000E+00
-234	U-238	6.073E-15	5.426E-23	1.556E-22	3.283E-22	6.886E-22	7.072E-22	4.358E-23	0.000E+00	0.000E+00
-234	U-238	6.713E-11	5.998E-19	1.720E-18	3.629E-18	7.612E-18	7.818E-18	4.818E-19	0.000E+00	0.000E+00
-234	U-238	8.862E-17	7.918E-25	2.270E-24	4.791E-24	1.005E-23	1.032E-23	6.359E-25	0.000E+00	0.000E+00
-234	U-238	1.276E-18	1.140E-26	3.268E-26	6.896E-26	1.446E-25	1.485E-25	9.154E-27	0.000E+00	0.000E+00
-234	U-238	3.200E-10	2.859E-18	8.198E-18	1.730E-17	3.628E-17	3.727E-17	2.296E-18	0.000E+00	0.000E+00
-234	U-238	4.224E-16	3.774E-24	1.082E-23	2.284E-23	4.789E-23	4.919E-23	3.031E-24	0.000E+00	0.000E+00
-234	U-238	6.080E-18	5.432E-26	1.558E-25	3.287E-25	6.894E-25	7.081E-25	4.363E-26	0.000E+00	0.000E+00
-234	U-238	9.980E-01	8.917E-09	2.557E-08	5.395E-08	1.132E-07	1.162E-07	7.162E-09	0.000E+00	0.000E+00
-234	U-238	1.317E-06	1.177E-14	3.375E-14	7.122E-14	1.494E-13	1.534E-13	9.454E-15	0.000E+00	0.000E+00
-234	U-238	1.896E-08	1.694E-16	4.858E-16	1.025E-15	2.150E-15	2.208E-15	1.361E-16	0.000E+00	0.000E+00

ummary : GKP Maintenance Worker Ingestion

ile : C:\USERS\CLAUDE\DOCUMENTS\0 GKP DOSE\RESRAD CW\GKP MAINTENANCE WORKER -INGESTION.RAD

Individual Nuclide Dose Summed Over All Pathways

Parent Nuclide and Branch Fraction Indicated

uclide (j)	Parent (i)	THF(i)	DOSE(j,t), mrem/yr t= 0.000E+00	1.000E+00	3.000E+00	1.000E+01	3.000E+01	1.000E+02	3.000E+02	1.000E+03
ÄÄÄÄÄÄ	ÄÄÄÄÄÄÄ	ÄÄÄÄÄÄÄÄÄ	ÄÄÄÄÄÄÄÄÄ	ÄÄÄÄÄÄÄÄÄ	ÄÄÄÄÄÄÄÄÄ	ÄÄÄÄÄÄÄÄÄ	ÄÄÄÄÄÄÄÄÄ	ÄÄÄÄÄÄÄÄÄ	ÄÄÄÄÄÄÄÄÄ	ÄÄÄÄÄÄÄÄÄ
-234	U-238	2.096E-04	1.873E-12	5.370E-12	1.133E-11	2.377E-11	2.441E-11	1.504E-12	0.000E+00	0.000E+00
-234	U-238	2.767E-10	2.472E-18	7.088E-18	1.496E-17	3.137E-17	3.222E-17	1.986E-18	0.000E+00	0.000E+00
-234	U-238	3.983E-12	3.559E-20	1.020E-19	2.153E-19	4.516E-19	4.638E-19	2.858E-20	0.000E+00	0.000E+00
-234	U-238	1.994E-04	1.782E-12	5.109E-12	1.078E-11	2.261E-11	2.323E-11	1.431E-12	0.000E+00	0.000E+00
-234	U-238	2.633E-10	2.352E-18	6.744E-18	1.423E-17	2.985E-17	3.066E-17	1.889E-18	0.000E+00	0.000E+00
-234	U-238	3.789E-12	3.386E-20	9.707E-20	2.049E-19	4.297E-19	4.413E-19	2.719E-20	0.000E+00	0.000E+00
-234	U-238	4.189E-08	3.743E-16	1.073E-15	2.265E-15	4.750E-15	4.879E-15	3.006E-16	0.000E+00	0.000E+00
-234	U-238	5.530E-14	4.941E-22	1.417E-21	2.989E-21	6.270E-21	6.440E-21	3.968E-22	0.000E+00	0.000E+00
-234	U-238	7.959E-16	7.111E-24	2.039E-23	4.303E-23	9.025E-23	9.269E-23	5.712E-24	0.000E+00	0.000E+00
-234	U-238	1.997E-07	1.784E-15	5.115E-15	1.080E-14	2.264E-14	2.325E-14	1.433E-15	0.000E+00	0.000E+00
-234	U-238	2.636E-13	2.355E-21	6.752E-21	1.425E-20	2.989E-20	3.070E-20	1.892E-21	0.000E+00	0.000E+00
-234	U-238	3.794E-15	3.390E-23	9.719E-23	2.051E-22	4.302E-22	4.418E-22	2.723E-23	0.000E+00	0.000E+00
-234	äDOSE(j)		6.381E-03	6.064E-03	5.475E-03	3.825E-03	1.352E-03	2.529E-05	0.000E+00	0.000E+00
n-230	U-234	9.996E-01	5.716E-08	1.672E-07	3.688E-07	9.097E-07	1.552E-06	8.556E-07	0.000E+00	0.000E+00
n-230	U-234	1.319E-06	7.545E-14	2.207E-13	4.868E-13	1.201E-12	2.049E-12	1.129E-12	0.000E+00	0.000E+00
n-230	U-234	1.899E-08	1.086E-15	3.176E-15	7.006E-15	1.728E-14	2.950E-14	1.626E-14	0.000E+00	0.000E+00
n-230	U-234	2.100E-04	1.201E-11	3.511E-11	7.746E-11	1.911E-10	3.261E-10	1.797E-10	0.000E+00	0.000E+00
n-230	U-234	2.771E-10	1.585E-17	4.635E-17	1.022E-16	2.522E-16	4.304E-16	2.372E-16	0.000E+00	0.000E+00
n-230	U-234	3.989E-12	2.281E-19	6.671E-19	1.472E-18	3.631E-18	6.195E-18	3.415E-18	0.000E+00	0.000E+00
n-230	U-234	1.998E-04	1.142E-11	3.341E-11	7.369E-11	1.818E-10	3.102E-10	1.710E-10	0.000E+00	0.000E+00
n-230	U-234	2.637E-10	1.508E-17	4.410E-17	9.727E-17	2.400E-16	4.095E-16	2.257E-16	0.000E+00	0.000E+00
n-230	U-234	3.795E-12	2.170E-19	6.347E-19	1.400E-18	3.454E-18	5.894E-18	3.249E-18	0.000E+00	0.000E+00
n-230	U-234	4.196E-08	2.399E-15	7.017E-15	1.548E-14	3.819E-14	6.516E-14	3.591E-14	0.000E+00	0.000E+00
n-230	U-234	5.538E-14	3.167E-21	9.262E-21	2.043E-20	5.041E-20	8.601E-20	4.741E-20	0.000E+00	0.000E+00
n-230	U-234	7.972E-16	4.559E-23	1.333E-22	2.941E-22	7.255E-22	1.238E-21	6.824E-22	0.000E+00	0.000E+00
n-230	U-234	2.000E-07	1.144E-14	3.345E-14	7.378E-14	1.820E-13	3.106E-13	1.712E-13	0.000E+00	0.000E+00
n-230	U-234	2.640E-13	1.510E-20	4.415E-20	9.739E-20	2.403E-19	4.100E-19	2.260E-19	0.000E+00	0.000E+00
n-230	U-234	3.800E-15	2.173E-22	6.355E-22	1.402E-21	3.458E-21	5.901E-21	3.253E-21	0.000E+00	0.000E+00
n-230	U-238	1.599E-03	8.539E-17	5.795E-16	2.857E-15	1.992E-14	8.361E-14	8.281E-14	0.000E+00	0.000E+00
n-230	U-238	2.111E-09	1.127E-22	7.650E-22	3.771E-21	2.630E-20	1.104E-19	1.093E-19	0.000E+00	0.000E+00
n-230	U-238	3.039E-11	1.622E-24	1.101E-23	5.427E-23	3.785E-22	1.589E-21	1.573E-21	0.000E+00	0.000E+00
n-230	U-238	3.359E-07	1.794E-20	1.217E-19	6.000E-19	4.184E-18	1.756E-17	1.739E-17	0.000E+00	0.000E+00
n-230	U-238	4.434E-13	2.368E-26	1.607E-25	7.920E-25	5.523E-24	2.318E-23	2.296E-23	0.000E+00	0.000E+00
n-230	U-238	6.383E-15	3.408E-28	2.313E-27	1.140E-26	7.950E-26	3.337E-25	3.305E-25	0.000E+00	0.000E+00
n-230	U-238	3.196E-07	1.706E-20	1.158E-19	5.708E-19	3.981E-18	1.671E-17	1.655E-17	0.000E+00	0.000E+00
n-230	U-238	4.219E-13	2.253E-26	1.529E-25	7.535E-25	5.255E-24	2.206E-23	2.184E-23	0.000E+00	0.000E+00
n-230	U-238	6.073E-15	3.242E-28	2.201E-27	1.085E-26	7.564E-26	3.175E-25	3.144E-25	0.000E+00	0.000E+00
n-230	U-238	6.713E-11	3.584E-24	2.433E-23	1.199E-22	8.362E-22	3.510E-21	3.476E-21	0.000E+00	0.000E+00
n-230	U-238	8.862E-17	0.000E+00	3.211E-29	1.583E-28	1.104E-27	4.633E-27	4.588E-27	0.000E+00	0.000E+00
n-230	U-238	1.276E-18	0.000E+00	0.000E+00	0.000E+00	1.589E-29	6.668E-29	6.604E-29	0.000E+00	0.000E+00
n-230	U-238	3.200E-10	1.709E-23	1.160E-22	5.715E-22	3.986E-21	1.673E-20	1.657E-20	0.000E+00	0.000E+00
n-230	U-238	4.224E-16	2.255E-29	1.531E-28	7.544E-28	5.261E-27	2.208E-26	2.187E-26	0.000E+00	0.000E+00
n-230	U-238	6.080E-18	0.000E+00	0.000E+00	0.000E+00	7.573E-29	3.178E-28	3.148E-28	0.000E+00	0.000E+00
n-230	U-238	9.980E-01	5.328E-14	3.616E-13	1.782E-12	1.243E-11	5.217E-11	5.167E-11	0.000E+00	0.000E+00
n-230	U-238	1.317E-06	7.034E-20	4.774E-19	2.353E-18	1.641E-17	6.887E-17	6.820E-17	0.000E+00	0.000E+00
n-230	U-238	1.896E-08	1.012E-21	6.871E-21	3.387E-20	2.362E-19	9.913E-19	9.817E-19	0.000E+00	0.000E+00
n-230	U-238	2.096E-04	1.119E-17	7.596E-17	3.744E-16	2.611E-15	1.096E-14	1.085E-14	0.000E+00	0.000E+00
n-230	U-238	2.767E-10	1.477E-23	1.003E-22	4.942E-22	3.447E-21	1.447E-20	1.433E-20	0.000E+00	0.000E+00

ummary : GKP Maintenance Worker Ingestion
ile : C:\USERS\CLAUDE\DOCUMENTS\0 GKP DOSE\RESRAD CW\GKP MAINTENANCE WORKER -INGESTION.RAD

Individual Nuclide Dose Summed Over All Pathways
Parent Nuclide and Branch Fraction Indicated

uclide (j)	Parent (i)	THF(i)	DOSE(j,t), mrem/yr t= 0.000E+00	1.000E+00	3.000E+00	1.000E+01	3.000E+01	1.000E+02	3.000E+02	1.000E+03
ÄÄÄÄÄ	ÄÄÄÄÄÄ	ÄÄÄÄÄÄÄÄ	ÄÄÄÄÄÄÄÄ	ÄÄÄÄÄÄÄÄ	ÄÄÄÄÄÄÄÄ	ÄÄÄÄÄÄÄÄ	ÄÄÄÄÄÄÄÄ	ÄÄÄÄÄÄÄÄ	ÄÄÄÄÄÄÄÄ	ÄÄÄÄÄÄÄÄ
n-230	U-238	3.983E-12	2.127E-25	1.443E-24	7.114E-24	4.961E-23	2.082E-22	2.062E-22	0.000E+00	0.000E+00
n-230	U-238	1.994E-04	1.065E-17	7.227E-17	3.562E-16	2.484E-15	1.043E-14	1.033E-14	0.000E+00	0.000E+00
n-230	U-238	2.633E-10	1.406E-23	9.540E-23	4.702E-22	3.279E-21	1.376E-20	1.363E-20	0.000E+00	0.000E+00
n-230	U-238	3.789E-12	2.023E-25	1.373E-24	6.768E-24	4.720E-23	1.981E-22	1.962E-22	0.000E+00	0.000E+00
n-230	U-238	4.189E-08	2.237E-21	1.518E-20	7.482E-20	5.218E-19	2.190E-18	2.169E-18	0.000E+00	0.000E+00
n-230	U-238	5.530E-14	2.952E-27	2.004E-26	9.876E-26	6.888E-25	2.891E-24	2.863E-24	0.000E+00	0.000E+00
n-230	U-238	7.959E-16	4.250E-29	2.884E-28	1.422E-27	9.914E-27	4.161E-26	4.121E-26	0.000E+00	0.000E+00
n-230	U-238	1.997E-07	1.066E-20	7.236E-20	3.566E-19	2.487E-18	1.044E-17	1.034E-17	0.000E+00	0.000E+00
n-230	U-238	2.636E-13	1.407E-26	9.551E-26	4.708E-25	3.283E-24	1.378E-23	1.365E-23	0.000E+00	0.000E+00
n-230	U-238	3.794E-15	2.026E-28	1.375E-27	6.776E-27	4.726E-26	1.983E-25	1.964E-25	0.000E+00	0.000E+00
n-230	äDOSE(j)		5.718E-08	1.672E-07	3.689E-07	9.101E-07	1.553E-06	8.560E-07	0.000E+00	0.000E+00
-234	U-234	1.899E-08	1.212E-10	1.152E-10	1.040E-10	7.267E-11	2.569E-11	4.803E-13	0.000E+00	0.000E+00
-234	U-234	2.100E-04	1.340E-06	1.274E-06	1.150E-06	8.033E-07	2.840E-07	5.310E-09	0.000E+00	0.000E+00
-234	äDOSE(j)		1.340E-06	1.274E-06	1.150E-06	8.034E-07	2.840E-07	5.310E-09	0.000E+00	0.000E+00
a-226	U-234	2.100E-04	4.176E-15	2.844E-14	1.413E-13	1.012E-12	4.561E-12	5.273E-12	0.000E+00	0.000E+00
a-226	U-234	3.989E-12	7.935E-23	5.404E-22	2.684E-21	1.924E-20	8.667E-20	1.002E-19	0.000E+00	0.000E+00
a-226	U-238	3.359E-07	4.691E-24	6.820E-23	7.415E-22	1.524E-20	1.798E-19	4.585E-19	0.000E+00	0.000E+00
a-226	U-238	4.434E-13	0.000E+00	8.964E-29	9.746E-28	2.011E-26	2.373E-25	6.052E-25	0.000E+00	0.000E+00
a-226	U-238	6.383E-15	0.000E+00	0.000E+00	1.403E-29	2.883E-28	3.416E-27	8.711E-27	0.000E+00	0.000E+00
a-226	U-238	2.096E-04	2.927E-21	4.256E-20	4.627E-19	9.508E-18	1.122E-16	2.861E-16	0.000E+00	0.000E+00
a-226	U-238	2.767E-10	3.864E-27	5.617E-26	6.108E-25	1.255E-23	1.481E-22	3.776E-22	0.000E+00	0.000E+00
a-226	U-238	3.983E-12	5.538E-29	8.051E-28	8.791E-27	1.806E-25	2.132E-24	5.436E-24	0.000E+00	0.000E+00
a-226	äDOSE(j)		4.176E-15	2.844E-14	1.413E-13	1.012E-12	4.562E-12	5.273E-12	0.000E+00	0.000E+00
-234	U-234	2.771E-10	1.769E-12	1.681E-12	1.518E-12	1.060E-12	3.748E-13	7.009E-15	0.000E+00	0.000E+00
-234	U-234	3.989E-12	2.546E-14	2.420E-14	2.185E-14	1.526E-14	5.395E-15	1.009E-16	0.000E+00	0.000E+00
-234	äDOSE(j)		1.795E-12	1.705E-12	1.540E-12	1.076E-12	3.802E-13	7.110E-15	0.000E+00	0.000E+00
a-226	U-234	2.771E-10	5.513E-21	3.754E-20	1.865E-19	1.336E-18	6.021E-18	6.961E-18	0.000E+00	0.000E+00
-234	U-234	1.998E-04	1.275E-06	1.212E-06	1.094E-06	7.643E-07	2.702E-07	5.052E-09	0.000E+00	0.000E+00
-234	U-234	2.637E-10	1.683E-12	1.600E-12	1.444E-12	1.009E-12	3.566E-13	6.668E-15	0.000E+00	0.000E+00
-234	äDOSE(j)		1.275E-06	1.212E-06	1.094E-06	7.643E-07	2.702E-07	5.052E-09	0.000E+00	0.000E+00
-234	U-234	3.795E-12	2.423E-14	2.302E-14	2.079E-14	1.452E-14	5.133E-15	9.598E-17	0.000E+00	0.000E+00
-234	U-234	4.196E-08	2.678E-10	2.545E-10	2.298E-10	1.605E-10	5.675E-11	1.061E-12	0.000E+00	0.000E+00
-234	äDOSE(j)		2.679E-10	2.545E-10	2.298E-10	1.606E-10	5.675E-11	1.061E-12	0.000E+00	0.000E+00
a-226	U-234	4.196E-08	8.342E-19	5.681E-18	2.822E-17	2.022E-16	9.111E-16	1.053E-15	0.000E+00	0.000E+00
a-226	U-234	7.972E-16	1.585E-26	1.079E-25	5.362E-25	3.842E-24	1.731E-23	2.001E-23	0.000E+00	0.000E+00
a-226	U-238	6.713E-11	9.331E-28	1.362E-26	1.481E-25	3.043E-24	3.591E-23	9.158E-23	0.000E+00	0.000E+00
a-226	U-238	8.862E-17	0.000E+00	0.000E+00	0.000E+00	0.000E+00	4.720E-29	1.204E-28	0.000E+00	0.000E+00
a-226	U-238	1.276E-18	0.000E+00	0.000E+00	0.000E+00	0.000E+00	0.000E+00	0.000E+00	0.000E+00	0.000E+00
a-226	U-238	4.189E-08	5.847E-25	8.500E-24	9.242E-23	1.899E-21	2.241E-20	5.714E-20	0.000E+00	0.000E+00
a-226	U-238	5.530E-14	0.000E+00	0.000E+00	1.215E-28	2.496E-27	2.958E-26	7.543E-26	0.000E+00	0.000E+00
a-226	U-238	7.959E-16	0.000E+00	0.000E+00	0.000E+00	3.593E-29	4.240E-28	1.081E-27	0.000E+00	0.000E+00
a-226	äDOSE(j)		8.342E-19	5.681E-18	2.822E-17	2.022E-16	9.111E-16	1.053E-15	0.000E+00	0.000E+00

ummary : GKP Maintenance Worker Ingestion
ile : C:\USERS\CLAUDE\DOCUMENTS\0 GKP DOSE\RESRAD CW\GKP MAINTENANCE WORKER -INGESTION.RAD

Individual Nuclide Dose Summed Over All Pathways
Parent Nuclide and Branch Fraction Indicated

uclide (j)	Parent (i)	THF(i)	DOSE(j,t), mrem/yr t= 0.000E+00	1.000E+00	3.000E+00	1.000E+01	3.000E+01	1.000E+02	3.000E+02	1.000E+03
ÄÄÄÄÄÄ	ÄÄÄÄÄÄÄ	ÄÄÄÄÄÄÄÄÄ	ÄÄÄÄÄÄÄÄÄ	ÄÄÄÄÄÄÄÄÄ	ÄÄÄÄÄÄÄÄÄ	ÄÄÄÄÄÄÄÄÄ	ÄÄÄÄÄÄÄÄÄ	ÄÄÄÄÄÄÄÄÄ	ÄÄÄÄÄÄÄÄÄ	ÄÄÄÄÄÄÄÄÄ
-234	U-234	5.538E-14	3.535E-16	3.360E-16	3.034E-16	2.119E-16	7.491E-17	1.401E-18	0.000E+00	0.000E+00
-234	U-234	7.972E-16	5.089E-18	4.836E-18	4.367E-18	3.050E-18	1.078E-18	2.016E-20	0.000E+00	0.000E+00
-234	äDOSE(j)		3.586E-16	3.408E-16	3.077E-16	2.150E-16	7.599E-17	1.421E-18	0.000E+00	0.000E+00
a-226	U-234	5.538E-14	1.101E-24	7.499E-24	3.725E-23	2.669E-22	1.203E-21	1.390E-21	0.000E+00	0.000E+00
-234	U-234	2.000E-07	1.277E-09	1.213E-09	1.095E-09	7.652E-10	2.705E-10	5.058E-12	0.000E+00	0.000E+00
-234	U-234	2.640E-13	1.685E-15	1.601E-15	1.446E-15	1.010E-15	3.571E-16	6.676E-18	0.000E+00	0.000E+00
-234	äDOSE(j)		1.277E-09	1.213E-09	1.095E-09	7.652E-10	2.705E-10	5.058E-12	0.000E+00	0.000E+00
-234	U-234	3.800E-15	2.426E-17	2.305E-17	2.081E-17	1.454E-17	5.140E-18	9.610E-20	0.000E+00	0.000E+00
-235	U-235	9.835E-01	3.584E-04	3.406E-04	3.075E-04	2.148E-04	7.595E-05	1.420E-06	0.000E+00	0.000E+00
-235	U-235	2.722E-03	9.919E-07	9.426E-07	8.512E-07	5.946E-07	2.102E-07	3.931E-09	0.000E+00	0.000E+00
-235	äDOSE(j)		3.594E-04	3.415E-04	3.084E-04	2.154E-04	7.616E-05	1.424E-06	0.000E+00	0.000E+00
a-231	U-235	9.835E-01	1.491E-07	4.274E-07	9.019E-07	1.891E-06	1.942E-06	1.196E-07	0.000E+00	0.000E+00
a-231	U-235	2.722E-03	4.125E-10	1.183E-09	2.496E-09	5.235E-09	5.376E-09	3.310E-10	0.000E+00	0.000E+00
a-231	U-235	1.376E-02	2.086E-09	5.980E-09	1.262E-08	2.646E-08	2.718E-08	1.674E-09	0.000E+00	0.000E+00
a-231	U-235	3.809E-05	5.772E-12	1.655E-11	3.492E-11	7.324E-11	7.522E-11	4.632E-12	0.000E+00	0.000E+00
a-231	U-235	8.257E-07	1.251E-13	3.588E-13	7.572E-13	1.588E-12	1.631E-12	1.004E-13	0.000E+00	0.000E+00
a-231	U-235	2.285E-09	3.463E-16	9.930E-16	2.096E-15	4.395E-15	4.513E-15	2.779E-16	0.000E+00	0.000E+00
a-231	äDOSE(j)		1.516E-07	4.345E-07	9.170E-07	1.923E-06	1.975E-06	1.216E-07	0.000E+00	0.000E+00
c-227	U-235	9.835E-01	2.146E-09	1.400E-08	6.307E-08	3.226E-07	6.028E-07	4.896E-08	0.000E+00	0.000E+00
c-227	U-235	2.722E-03	5.940E-12	3.874E-11	1.746E-10	8.927E-10	1.668E-09	1.355E-10	0.000E+00	0.000E+00
c-227	U-235	1.376E-02	2.997E-11	1.954E-10	8.808E-10	4.504E-09	8.418E-09	6.836E-10	0.000E+00	0.000E+00
c-227	äDOSE(j)		3.591E-11	2.342E-10	1.055E-09	5.397E-09	1.009E-08	8.191E-10	0.000E+00	0.000E+00
-235	U-235	1.376E-02	5.015E-06	4.766E-06	4.303E-06	3.006E-06	1.063E-06	1.987E-08	0.000E+00	0.000E+00
-235	U-235	3.809E-05	1.388E-08	1.319E-08	1.191E-08	8.320E-09	2.941E-09	5.500E-11	0.000E+00	0.000E+00
-235	äDOSE(j)		5.029E-06	4.779E-06	4.315E-06	3.014E-06	1.066E-06	1.993E-08	0.000E+00	0.000E+00
c-227	U-235	3.809E-05	8.295E-14	5.409E-13	2.438E-12	1.247E-11	2.330E-11	1.892E-12	0.000E+00	0.000E+00
c-227	U-235	8.257E-07	1.718E-15	1.120E-14	5.049E-14	2.582E-13	4.826E-13	3.919E-14	0.000E+00	0.000E+00
c-227	äDOSE(j)		8.467E-14	5.521E-13	2.488E-12	1.272E-11	2.378E-11	1.931E-12	0.000E+00	0.000E+00
-235	U-235	8.257E-07	3.009E-10	2.860E-10	2.582E-10	1.804E-10	6.376E-11	1.192E-12	0.000E+00	0.000E+00
-235	U-235	2.285E-09	8.328E-13	7.914E-13	7.146E-13	4.992E-13	1.765E-13	3.300E-15	0.000E+00	0.000E+00
-235	äDOSE(j)		3.017E-10	2.867E-10	2.589E-10	1.809E-10	6.394E-11	1.196E-12	0.000E+00	0.000E+00
c-227	U-235	2.285E-09	4.755E-18	3.101E-17	1.397E-16	7.147E-16	1.336E-15	1.085E-16	0.000E+00	0.000E+00
-238	U-238	5.450E-07	3.135E-09	2.979E-09	2.690E-09	1.879E-09	6.643E-10	1.242E-11	0.000E+00	0.000E+00
-238	U-238	1.599E-03	9.771E-06	9.286E-06	8.385E-06	5.857E-06	2.071E-06	3.872E-08	0.000E+00	0.000E+00
-238	äDOSE(j)		9.774E-06	9.289E-06	8.387E-06	5.859E-06	2.071E-06	3.873E-08	0.000E+00	0.000E+00
-238	U-238	2.111E-09	1.290E-11	1.226E-11	1.107E-11	7.731E-12	2.733E-12	5.111E-14	0.000E+00	0.000E+00

ummary : GKP Maintenance Worker Ingestion
ile : C:\USERS\CLAUDE\DOCUMENTS\0 GKP DOSE\RESRAD CW\GKP MAINTENANCE WORKER -INGESTION.RAD

Individual Nuclide Dose Summed Over All Pathways
Parent Nuclide and Branch Fraction Indicated

uclide (j)	Parent (i)	THF(i)	DOSE(j,t), mrem/yr t= 0.000E+00	1.000E+00	3.000E+00	1.000E+01	3.000E+01	1.000E+02	3.000E+02	1.000E+03
ÄÄÄÄÄ	ÄÄÄÄÄÄÄ	ÄÄÄÄÄÄÄÄÄ	ÄÄÄÄÄÄÄÄÄ	ÄÄÄÄÄÄÄÄÄ	ÄÄÄÄÄÄÄÄÄ	ÄÄÄÄÄÄÄÄÄ	ÄÄÄÄÄÄÄÄÄ	ÄÄÄÄÄÄÄÄÄ	ÄÄÄÄÄÄÄÄÄ	ÄÄÄÄÄÄÄÄÄ
-238	U-238	3.039E-11	1.857E-13	1.764E-13	1.593E-13	1.113E-13	3.934E-14	7.357E-16	0.000E+00	0.000E+00
-238	äDOSE(j)		1.308E-11	1.243E-11	1.123E-11	7.843E-12	2.772E-12	5.185E-14	0.000E+00	0.000E+00
-238	U-238	3.359E-07	2.052E-09	1.950E-09	1.761E-09	1.230E-09	4.349E-10	8.133E-12	0.000E+00	0.000E+00
-238	U-238	4.434E-13	2.709E-15	2.575E-15	2.325E-15	1.624E-15	5.741E-16	1.074E-17	0.000E+00	0.000E+00
-238	äDOSE(j)		2.052E-09	1.950E-09	1.761E-09	1.230E-09	4.349E-10	8.133E-12	0.000E+00	0.000E+00
-238	U-238	6.383E-15	3.900E-17	3.706E-17	3.346E-17	2.337E-17	8.263E-18	1.545E-19	0.000E+00	0.000E+00
-238	U-238	3.196E-07	1.953E-09	1.856E-09	1.676E-09	1.170E-09	4.138E-10	7.738E-12	0.000E+00	0.000E+00
-238	äDOSE(j)		1.953E-09	1.856E-09	1.676E-09	1.170E-09	4.138E-10	7.738E-12	0.000E+00	0.000E+00
-238	U-238	4.219E-13	2.578E-15	2.449E-15	2.212E-15	1.545E-15	5.462E-16	1.021E-17	0.000E+00	0.000E+00
-238	U-238	6.073E-15	3.710E-17	3.526E-17	3.184E-17	2.224E-17	7.862E-18	1.470E-19	0.000E+00	0.000E+00
-238	äDOSE(j)		2.615E-15	2.485E-15	2.244E-15	1.567E-15	5.540E-16	1.036E-17	0.000E+00	0.000E+00
-238	U-238	6.713E-11	4.101E-13	3.898E-13	3.519E-13	2.459E-13	8.691E-14	1.625E-15	0.000E+00	0.000E+00
-238	U-238	8.862E-17	5.414E-19	5.145E-19	4.646E-19	3.245E-19	1.147E-19	2.145E-21	0.000E+00	0.000E+00
-238	äDOSE(j)		4.101E-13	3.898E-13	3.519E-13	2.459E-13	8.691E-14	1.625E-15	0.000E+00	0.000E+00
-238	U-238	1.276E-18	7.793E-21	7.406E-21	6.687E-21	4.671E-21	1.651E-21	3.088E-23	0.000E+00	0.000E+00
-238	U-238	3.200E-10	1.955E-12	1.858E-12	1.678E-12	1.172E-12	4.143E-13	7.748E-15	0.000E+00	0.000E+00
-238	äDOSE(j)		1.955E-12	1.858E-12	1.678E-12	1.172E-12	4.143E-13	7.748E-15	0.000E+00	0.000E+00
-238	U-238	4.224E-16	2.581E-18	2.452E-18	2.214E-18	1.547E-18	5.468E-19	1.023E-20	0.000E+00	0.000E+00
-238	U-238	6.080E-18	3.715E-20	3.530E-20	3.187E-20	2.227E-20	7.871E-21	1.472E-22	0.000E+00	0.000E+00
-238	äDOSE(j)		2.618E-18	2.488E-18	2.246E-18	1.569E-18	5.547E-19	1.037E-20	0.000E+00	0.000E+00
-238	U-238	9.980E-01	6.049E-03	5.748E-03	5.190E-03	3.626E-03	1.282E-03	2.397E-05	0.000E+00	0.000E+00
-238	U-238	1.317E-06	7.984E-09	7.587E-09	6.851E-09	4.786E-09	1.692E-09	3.164E-11	0.000E+00	0.000E+00
-238	äDOSE(j)		6.049E-03	5.748E-03	5.190E-03	3.626E-03	1.282E-03	2.397E-05	0.000E+00	0.000E+00
-238	U-238	1.896E-08	1.149E-10	1.092E-10	9.862E-11	6.889E-11	2.435E-11	4.554E-13	0.000E+00	0.000E+00
-238	U-238	2.096E-04	1.270E-06	1.207E-06	1.090E-06	7.616E-07	2.692E-07	5.035E-09	0.000E+00	0.000E+00
-238	äDOSE(j)		1.271E-06	1.207E-06	1.090E-06	7.616E-07	2.692E-07	5.035E-09	0.000E+00	0.000E+00
-238	U-238	2.767E-10	1.677E-12	1.594E-12	1.439E-12	1.005E-12	3.554E-13	6.646E-15	0.000E+00	0.000E+00
-238	U-238	3.983E-12	2.414E-14	2.294E-14	2.071E-14	1.447E-14	5.115E-15	9.566E-17	0.000E+00	0.000E+00
-238	äDOSE(j)		1.701E-12	1.617E-12	1.460E-12	1.020E-12	3.605E-13	6.741E-15	0.000E+00	0.000E+00
-238	U-238	1.994E-04	1.209E-06	1.149E-06	1.037E-06	7.246E-07	2.561E-07	4.790E-09	0.000E+00	0.000E+00
-238	U-238	2.633E-10	1.596E-12	1.516E-12	1.369E-12	9.564E-13	3.381E-13	6.323E-15	0.000E+00	0.000E+00
-238	äDOSE(j)		1.209E-06	1.149E-06	1.037E-06	7.246E-07	2.561E-07	4.790E-09	0.000E+00	0.000E+00
-238	U-238	3.789E-12	2.297E-14	2.182E-14	1.971E-14	1.377E-14	4.867E-15	9.101E-17	0.000E+00	0.000E+00
-238	U-238	4.189E-08	2.539E-10	2.413E-10	2.179E-10	1.522E-10	5.380E-11	1.006E-12	0.000E+00	0.000E+00
-238	äDOSE(j)		2.539E-10	2.413E-10	2.179E-10	1.522E-10	5.380E-11	1.006E-12	0.000E+00	0.000E+00
-238	U-238	5.530E-14	3.351E-16	3.185E-16	2.876E-16	2.009E-16	7.102E-17	1.328E-18	0.000E+00	0.000E+00
-238	U-238	7.959E-16	4.824E-18	4.584E-18	4.139E-18	2.892E-18	1.022E-18	1.912E-20	0.000E+00	0.000E+00
-238	äDOSE(j)		3.400E-16	3.231E-16	2.917E-16	2.038E-16	7.204E-17	1.347E-18	0.000E+00	0.000E+00

ummary : GKP Maintenance Worker Ingestion
ile : C:\USERS\CLAUDE\DOCUMENTS\0 GKP DOSE\RESRAD CW\GKP MAINTENANCE WORKER -INGESTION.RAD

Individual Nuclide Dose Summed Over All Pathways
Parent Nuclide and Branch Fraction Indicated

uclide (j)	Parent (i)	THF(i)	DOSE(j,t), mrem/yr t= 0.000E+00	1.000E+00	3.000E+00	1.000E+01	3.000E+01	1.000E+02	3.000E+02	1.000E+03
ÄÄÄÄÄÄ	ÄÄÄÄÄÄÄ	ÄÄÄÄÄÄÄÄÄ	ÄÄÄÄÄÄÄÄÄ	ÄÄÄÄÄÄÄÄÄ	ÄÄÄÄÄÄÄÄÄ	ÄÄÄÄÄÄÄÄÄ	ÄÄÄÄÄÄÄÄÄ	ÄÄÄÄÄÄÄÄÄ	ÄÄÄÄÄÄÄÄÄ	ÄÄÄÄÄÄÄÄÄ
-238	U-238	1.997E-07	1.210E-09	1.150E-09	1.038E-09	7.254E-10	2.564E-10	4.796E-12	0.000E+00	0.000E+00
-238	U-238	2.636E-13	1.597E-15	1.518E-15	1.371E-15	9.576E-16	3.385E-16	6.331E-18	0.000E+00	0.000E+00
-238	äDOSE(j)		1.210E-09	1.150E-09	1.038E-09	7.254E-10	2.564E-10	4.796E-12	0.000E+00	0.000E+00
-238	U-238	3.794E-15	2.299E-17	2.185E-17	1.973E-17	1.378E-17	4.872E-18	9.112E-20	0.000E+00	0.000E+00
íííííí	ííííííí	ííííííííí	ííííííííí	ííííííííí	ííííííííí	ííííííííí	ííííííííí	ííííííííí	ííííííííí	ííííííííí

HF(i) is the thread fraction of the parent nuclide.

ummary : GKP Maintenance Worker Ingestion

ile : C:\USERS\CLAUDE\DOCUMENTS\0 GKP DOSE\RESRAD CW\GKP MAINTENANCE WORKER -INGESTION.RAD

Individual Nuclide Soil Concentration

Parent Nuclide and Branch Fraction Indicated

uclide (j)	Parent (i)	THF(i)	S(j,t), pCi/g t= 0.000E+00	1.000E+00	3.000E+00	1.000E+01	3.000E+01	1.000E+02	3.000E+02	1.000E+03
ÄÄÄÄÄ	ÄÄÄÄÄÄ	ÄÄÄÄÄÄÄÄ	ÄÄÄÄÄÄÄÄ	ÄÄÄÄÄÄÄÄ	ÄÄÄÄÄÄÄÄ	ÄÄÄÄÄÄÄÄ	ÄÄÄÄÄÄÄÄ	ÄÄÄÄÄÄÄÄ	ÄÄÄÄÄÄÄÄ	ÄÄÄÄÄÄÄÄ
a-226	Ra-226	9.996E-01	3.648E+01	3.533E+01	3.314E+01	2.647E+01	1.394E+01	1.475E+00	2.411E-03	4.255E-13
a-226	Ra-226	1.319E-06	4.816E-05	4.664E-05	4.374E-05	3.494E-05	1.839E-05	1.947E-06	3.182E-09	5.616E-19
a-226	U-234	9.996E-01	0.000E+00	2.698E-08	2.308E-07	2.155E-06	1.208E-05	3.439E-05	3.853E-05	3.731E-05
a-226	U-234	1.319E-06	0.000E+00	3.561E-14	3.047E-13	2.844E-12	1.595E-11	4.540E-11	5.086E-11	4.925E-11
a-226	U-234	1.899E-08	0.000E+00	5.126E-16	4.386E-15	4.094E-14	2.295E-13	6.534E-13	7.321E-13	7.089E-13
a-226	U-238	1.599E-03	0.000E+00	4.044E-17	1.028E-15	3.093E-14	4.696E-13	2.984E-12	3.935E-12	3.813E-12
a-226	U-238	2.111E-09	0.000E+00	5.338E-23	1.357E-21	4.082E-20	6.199E-19	3.939E-18	5.194E-18	5.033E-18
a-226	U-238	3.039E-11	0.000E+00	7.683E-25	1.953E-23	5.876E-22	8.923E-21	5.670E-20	7.477E-20	7.244E-20
a-226	U-238	9.980E-01	0.000E+00	2.523E-14	6.416E-13	1.930E-11	2.930E-10	1.862E-09	2.455E-09	2.379E-09
a-226	U-238	1.317E-06	0.000E+00	3.331E-20	8.469E-19	2.547E-17	3.868E-16	2.458E-15	3.241E-15	3.140E-15
a-226	U-238	1.896E-08	0.000E+00	4.794E-22	1.219E-20	3.667E-19	5.568E-18	3.538E-17	4.665E-17	4.520E-17
a-226	äS(j):		3.649E+01	3.533E+01	3.314E+01	2.647E+01	1.394E+01	1.475E+00	2.449E-03	3.731E-05
o-210	Ra-226	9.996E-01	0.000E+00	1.092E+00	3.007E+00	7.444E+00	9.643E+00	1.904E+00	3.525E-03	6.232E-13
o-210	Ra-226	2.100E-04	0.000E+00	2.293E-04	6.315E-04	1.564E-03	2.026E-03	4.000E-04	7.405E-07	1.309E-16
o-210	Ra-226	1.998E-04	0.000E+00	2.181E-04	6.009E-04	1.488E-03	1.927E-03	3.805E-04	7.045E-07	1.245E-16
o-210	Ra-226	4.196E-08	0.000E+00	4.582E-08	1.262E-07	3.125E-07	4.048E-07	7.993E-08	1.480E-10	2.616E-20
o-210	Ra-226	2.000E-07	0.000E+00	2.184E-07	6.016E-07	1.489E-06	1.929E-06	3.810E-07	7.053E-10	1.247E-19
o-210	U-234	9.996E-01	0.000E+00	2.788E-10	7.058E-09	2.091E-07	3.053E-06	1.777E-05	2.254E-05	2.184E-05
o-210	U-234	2.100E-04	0.000E+00	5.857E-14	1.482E-12	4.392E-11	6.412E-10	3.732E-09	4.735E-09	4.587E-09
o-210	U-234	1.998E-04	0.000E+00	5.572E-14	1.410E-12	4.178E-11	6.101E-10	3.550E-09	4.505E-09	4.364E-09
o-210	U-234	4.196E-08	0.000E+00	1.170E-17	2.963E-16	8.776E-15	1.281E-13	7.457E-13	9.462E-13	9.166E-13
o-210	U-234	2.000E-07	0.000E+00	5.579E-17	1.412E-15	4.183E-14	6.108E-13	3.555E-12	4.510E-12	4.369E-12
o-210	U-238	1.599E-03	0.000E+00	3.142E-19	2.374E-17	2.303E-15	9.533E-14	1.413E-12	2.300E-12	2.231E-12
o-210	U-238	3.359E-07	0.000E+00	6.599E-23	4.987E-21	4.838E-19	2.002E-17	2.967E-16	4.832E-16	4.687E-16
o-210	U-238	3.196E-07	0.000E+00	6.278E-23	4.745E-21	4.603E-19	1.905E-17	2.823E-16	4.597E-16	4.459E-16
o-210	U-238	6.713E-11	0.000E+00	1.319E-26	9.966E-25	9.669E-23	4.001E-21	5.929E-20	9.656E-20	9.366E-20
o-210	U-238	3.200E-10	0.000E+00	6.286E-26	4.750E-24	4.609E-22	1.907E-20	2.826E-19	4.603E-19	4.464E-19
o-210	U-238	9.980E-01	0.000E+00	1.960E-16	1.481E-14	1.437E-12	5.948E-11	8.814E-10	1.435E-09	1.392E-09
o-210	U-238	2.096E-04	0.000E+00	4.118E-20	3.112E-18	3.019E-16	1.249E-14	1.851E-13	3.015E-13	2.925E-13
o-210	U-238	1.994E-04	0.000E+00	3.918E-20	2.961E-18	2.872E-16	1.189E-14	1.761E-13	2.869E-13	2.782E-13
o-210	U-238	4.189E-08	0.000E+00	8.229E-24	6.219E-22	6.033E-20	2.497E-18	3.700E-17	6.025E-17	5.844E-17
o-210	U-238	1.997E-07	0.000E+00	3.922E-23	2.964E-21	2.876E-19	1.190E-17	1.764E-16	2.872E-16	2.786E-16
o-210	äS(j):		0.000E+00	1.092E+00	3.008E+00	7.447E+00	9.647E+00	1.905E+00	3.549E-03	2.185E-05
o-210	Ra-226	1.319E-06	0.000E+00	1.441E-06	3.969E-06	9.826E-06	1.273E-05	2.514E-06	4.653E-09	8.226E-19
o-210	Ra-226	1.899E-08	0.000E+00	2.074E-08	5.713E-08	1.414E-07	1.832E-07	3.618E-08	6.698E-11	1.184E-20
o-210	Ra-226	2.771E-10	0.000E+00	3.026E-10	8.336E-10	2.064E-09	2.674E-09	5.280E-10	9.774E-13	1.728E-22
o-210	Ra-226	2.637E-10	0.000E+00	2.879E-10	7.931E-10	1.964E-09	2.544E-09	5.023E-10	9.299E-13	1.644E-22
o-210	Ra-226	5.538E-14	0.000E+00	6.048E-14	1.666E-13	4.124E-13	5.343E-13	1.055E-13	1.953E-16	3.453E-26
o-210	Ra-226	2.640E-13	0.000E+00	2.883E-13	7.941E-13	1.966E-12	2.547E-12	5.029E-13	9.311E-16	1.646E-25
o-210	U-234	1.319E-06	0.000E+00	3.681E-16	9.317E-15	2.760E-13	4.030E-12	2.345E-11	2.975E-11	2.882E-11
o-210	U-234	2.771E-10	0.000E+00	7.731E-20	1.957E-18	5.797E-17	8.464E-16	4.926E-15	6.250E-15	6.054E-15
o-210	U-234	2.637E-10	0.000E+00	7.356E-20	1.862E-18	5.515E-17	8.053E-16	4.686E-15	5.946E-15	5.760E-15
o-210	U-234	5.538E-14	0.000E+00	1.545E-23	3.911E-22	1.158E-20	1.691E-19	9.844E-19	1.249E-18	1.210E-18
o-210	U-234	2.640E-13	0.000E+00	7.364E-23	1.864E-21	5.522E-20	8.063E-19	4.692E-18	5.953E-18	5.767E-18
o-210	U-238	2.111E-09	0.000E+00	4.147E-25	3.134E-23	3.041E-21	1.258E-19	1.865E-18	3.037E-18	2.945E-18
o-210	U-238	4.434E-13	0.000E+00	8.711E-29	6.583E-27	6.387E-25	2.643E-23	3.916E-22	6.378E-22	6.187E-22
o-210	U-238	4.219E-13	0.000E+00	8.287E-29	6.263E-27	6.076E-25	2.515E-23	3.726E-22	6.068E-22	5.886E-22

ummary : GKP Maintenance Worker Ingestion
ile : C:\USERS\CLAUDE\DOCUMENTS\0 GKP DOSE\RESRAD CW\GKP MAINTENANCE WORKER -INGESTION.RAD

Individual Nuclide Soil Concentration
Parent Nuclide and Branch Fraction Indicated

uclide (j)	Parent (i)	THF(i)	S(j,t), pCi/g t= 0.000E+00	1.000E+00	3.000E+00	1.000E+01	3.000E+01	1.000E+02	3.000E+02	1.000E+03
ÄÄÄÄÄ	ÄÄÄÄÄÄ	ÄÄÄÄÄÄÄÄ	ÄÄÄÄÄÄÄÄ	ÄÄÄÄÄÄÄÄ	ÄÄÄÄÄÄÄÄ	ÄÄÄÄÄÄÄÄ	ÄÄÄÄÄÄÄÄ	ÄÄÄÄÄÄÄÄ	ÄÄÄÄÄÄÄÄ	ÄÄÄÄÄÄÄÄ
o-210	U-238	8.862E-17	0.000E+00	1.741E-32	1.315E-30	1.276E-28	5.282E-27	7.826E-26	1.275E-25	1.236E-25
o-210	U-238	4.224E-16	0.000E+00	8.297E-32	6.270E-30	6.084E-28	2.518E-26	3.731E-25	6.076E-25	5.893E-25
o-210	U-238	1.317E-06	0.000E+00	2.588E-22	1.956E-20	1.897E-18	7.852E-17	1.163E-15	1.895E-15	1.838E-15
o-210	U-238	2.767E-10	0.000E+00	5.435E-26	4.108E-24	3.985E-22	1.649E-20	2.444E-19	3.980E-19	3.860E-19
o-210	U-238	2.633E-10	0.000E+00	5.171E-26	3.908E-24	3.792E-22	1.569E-20	2.325E-19	3.787E-19	3.673E-19
o-210	U-238	5.530E-14	0.000E+00	1.086E-29	8.209E-28	7.964E-26	3.296E-24	4.884E-23	7.954E-23	7.715E-23
o-210	U-238	2.636E-13	0.000E+00	5.178E-29	3.913E-27	3.796E-25	1.571E-23	2.328E-22	3.791E-22	3.677E-22
o-210	äS(j):		0.000E+00	1.462E-06	4.028E-06	9.971E-06	1.292E-05	2.551E-06	4.752E-09	2.884E-11
a-226	Ra-226	1.899E-08	6.932E-07	6.713E-07	6.296E-07	5.030E-07	2.648E-07	2.802E-08	4.580E-11	8.084E-21
a-226	Ra-226	2.100E-04	7.663E-03	7.421E-03	6.960E-03	5.560E-03	2.927E-03	3.098E-04	5.063E-07	8.936E-17
a-226	äS(j):		7.664E-03	7.422E-03	6.961E-03	5.561E-03	2.927E-03	3.098E-04	5.064E-07	8.937E-17
a-226	Ra-226	2.771E-10	1.012E-08	9.796E-09	9.188E-09	7.340E-09	3.864E-09	4.090E-10	6.684E-13	1.180E-22
a-226	Ra-226	3.989E-12	1.456E-10	1.410E-10	1.322E-10	1.056E-10	5.561E-11	5.886E-12	9.621E-15	1.698E-24
a-226	äS(j):		1.026E-08	9.937E-09	9.320E-09	7.445E-09	3.919E-09	4.148E-10	6.780E-13	1.197E-22
o-210	Ra-226	3.989E-12	0.000E+00	4.356E-12	1.200E-11	2.971E-11	3.849E-11	7.599E-12	1.407E-14	2.487E-24
o-210	Ra-226	3.795E-12	0.000E+00	4.144E-12	1.142E-11	2.826E-11	3.662E-11	7.230E-12	1.339E-14	2.366E-24
o-210	Ra-226	7.972E-16	0.000E+00	8.705E-16	2.398E-15	5.937E-15	7.691E-15	1.519E-15	2.812E-18	4.970E-28
o-210	Ra-226	3.800E-15	0.000E+00	4.149E-15	1.143E-14	2.830E-14	3.666E-14	7.239E-15	1.340E-17	2.369E-27
o-210	U-234	1.899E-08	0.000E+00	5.298E-18	1.341E-16	3.973E-15	5.800E-14	3.376E-13	4.283E-13	4.149E-13
o-210	U-234	3.989E-12	0.000E+00	1.113E-21	2.817E-20	8.344E-19	1.218E-17	7.090E-17	8.996E-17	8.715E-17
o-210	U-234	3.795E-12	0.000E+00	1.059E-21	2.680E-20	7.939E-19	1.159E-17	6.746E-17	8.559E-17	8.291E-17
o-210	U-234	7.972E-16	0.000E+00	2.224E-25	5.629E-24	1.667E-22	2.435E-21	1.417E-20	1.798E-20	1.742E-20
o-210	U-234	3.800E-15	0.000E+00	1.060E-24	2.683E-23	7.948E-22	1.161E-20	6.754E-20	8.569E-20	8.301E-20
o-210	U-238	3.039E-11	0.000E+00	5.969E-27	4.511E-25	4.377E-23	1.811E-21	2.684E-20	4.371E-20	4.240E-20
o-210	U-238	6.383E-15	0.000E+00	1.254E-30	9.475E-29	9.193E-27	3.804E-25	5.637E-24	9.181E-24	8.905E-24
o-210	U-238	6.073E-15	0.000E+00	1.193E-30	9.015E-29	8.746E-27	3.620E-25	5.363E-24	8.735E-24	8.472E-24
o-210	U-238	1.276E-18	0.000E+00	2.506E-34	1.893E-32	1.837E-30	7.603E-29	1.127E-27	1.835E-27	1.780E-27
o-210	U-238	6.080E-18	0.000E+00	1.194E-33	9.026E-32	8.757E-30	3.624E-28	5.370E-27	8.745E-27	8.483E-27
o-210	U-238	1.896E-08	0.000E+00	3.725E-24	2.815E-22	2.731E-20	1.130E-18	1.675E-17	2.727E-17	2.645E-17
o-210	U-238	3.983E-12	0.000E+00	7.824E-28	5.912E-26	5.736E-24	2.374E-22	3.518E-21	5.729E-21	5.557E-21
o-210	U-238	3.789E-12	0.000E+00	7.444E-28	5.625E-26	5.458E-24	2.259E-22	3.347E-21	5.450E-21	5.287E-21
o-210	U-238	7.959E-16	0.000E+00	1.563E-31	1.182E-29	1.146E-27	4.744E-26	7.029E-25	1.145E-24	1.110E-24
o-210	U-238	3.794E-15	0.000E+00	7.453E-31	5.632E-29	5.464E-27	2.261E-25	3.351E-24	5.457E-24	5.293E-24
o-210	äS(j):		0.000E+00	8.506E-12	2.343E-11	5.801E-11	7.520E-11	1.518E-11	4.560E-13	4.151E-13
a-226	Ra-226	1.998E-04	7.291E-03	7.061E-03	6.622E-03	5.290E-03	2.785E-03	2.948E-04	4.817E-07	8.502E-17
a-226	Ra-226	2.637E-10	9.624E-09	9.320E-09	8.741E-09	6.983E-09	3.676E-09	3.891E-10	6.359E-13	1.122E-22
a-226	U-234	1.998E-04	0.000E+00	5.392E-12	4.613E-11	4.306E-10	2.414E-09	6.873E-09	7.700E-09	7.457E-09
a-226	U-234	2.637E-10	0.000E+00	7.117E-18	6.089E-17	5.684E-16	3.187E-15	9.072E-15	1.016E-14	9.843E-15
a-226	U-234	3.795E-12	0.000E+00	1.024E-19	8.765E-19	8.182E-18	4.587E-17	1.306E-16	1.463E-16	1.417E-16
a-226	U-238	3.196E-07	0.000E+00	8.081E-21	2.055E-19	6.180E-18	9.385E-17	5.963E-16	7.864E-16	7.619E-16
a-226	U-238	4.219E-13	0.000E+00	1.067E-26	2.712E-25	8.158E-24	1.239E-22	7.872E-22	1.038E-21	1.006E-21
a-226	U-238	6.073E-15	0.000E+00	1.535E-28	3.904E-27	1.174E-25	1.783E-24	1.133E-23	1.494E-23	1.448E-23
a-226	U-238	1.994E-04	0.000E+00	5.042E-18	1.282E-16	3.856E-15	5.856E-14	3.721E-13	4.907E-13	4.755E-13
a-226	U-238	2.633E-10	0.000E+00	6.656E-24	1.692E-22	5.090E-21	7.730E-20	4.912E-19	6.477E-19	6.276E-19
a-226	U-238	3.789E-12	0.000E+00	9.581E-26	2.436E-24	7.327E-23	1.113E-21	7.070E-21	9.323E-21	9.034E-21
a-226	äS(j):		7.291E-03	7.061E-03	6.622E-03	5.290E-03	2.785E-03	2.948E-04	4.894E-07	7.457E-09

ummary : GKP Maintenance Worker Ingestion
ile : C:\USERS\CLAUDE\DOCUMENTS\0 GKP DOSE\RESRAD CW\GKP MAINTENANCE WORKER -INGESTION.RAD

Individual Nuclide Soil Concentration
Parent Nuclide and Branch Fraction Indicated

uclide (j)	Parent (i)	THF(i)	S(j,t), pCi/g t= 0.000E+00	1.000E+00	3.000E+00	1.000E+01	3.000E+01	1.000E+02	3.000E+02	1.000E+03
ÄÄÄÄÄÄ	ÄÄÄÄÄÄÄ	ÄÄÄÄÄÄÄÄÄ	ÄÄÄÄÄÄÄÄÄ	ÄÄÄÄÄÄÄÄÄ	ÄÄÄÄÄÄÄÄÄ	ÄÄÄÄÄÄÄÄÄ	ÄÄÄÄÄÄÄÄÄ	ÄÄÄÄÄÄÄÄÄ	ÄÄÄÄÄÄÄÄÄ	ÄÄÄÄÄÄÄÄÄ
a-226	Ra-226	3.795E-12	1.385E-10	1.342E-10	1.258E-10	1.005E-10	5.291E-11	5.600E-12	9.153E-15	1.615E-24
a-226	Ra-226	4.196E-08	1.531E-06	1.483E-06	1.391E-06	1.111E-06	5.849E-07	6.191E-08	1.012E-10	1.786E-20
a-226	äS(j):		1.532E-06	1.483E-06	1.391E-06	1.111E-06	5.850E-07	6.192E-08	1.012E-10	1.786E-20
a-226	Ra-226	5.538E-14	2.022E-12	1.958E-12	1.836E-12	1.467E-12	7.721E-13	8.173E-14	1.336E-16	2.357E-26
a-226	Ra-226	7.972E-16	2.910E-14	2.818E-14	2.643E-14	2.111E-14	1.111E-14	1.176E-15	1.923E-18	3.393E-28
a-226	äS(j):		2.051E-12	1.986E-12	1.862E-12	1.488E-12	7.832E-13	8.290E-14	1.355E-16	2.391E-26
a-226	Ra-226	2.000E-07	7.300E-06	7.070E-06	6.630E-06	5.297E-06	2.788E-06	2.951E-07	4.823E-10	8.513E-20
a-226	Ra-226	2.640E-13	9.636E-12	9.332E-12	8.752E-12	6.991E-12	3.680E-12	3.896E-13	6.367E-16	1.124E-25
a-226	U-234	2.000E-07	0.000E+00	5.398E-15	4.619E-14	4.311E-13	2.417E-12	6.881E-12	7.709E-12	7.466E-12
a-226	U-234	2.640E-13	0.000E+00	7.126E-21	6.097E-20	5.691E-19	3.191E-18	9.083E-18	1.018E-17	9.855E-18
a-226	U-234	3.800E-15	0.000E+00	1.026E-22	8.776E-22	8.192E-21	4.593E-20	1.307E-19	1.465E-19	1.418E-19
a-226	U-238	3.200E-10	0.000E+00	8.091E-24	2.057E-22	6.188E-21	9.396E-20	5.971E-19	7.873E-19	7.629E-19
a-226	U-238	4.224E-16	0.000E+00	1.068E-29	2.715E-28	8.168E-27	1.240E-25	7.881E-25	1.039E-24	1.007E-24
a-226	U-238	6.080E-18	0.000E+00	1.537E-31	3.909E-30	1.176E-28	1.785E-27	1.134E-26	1.496E-26	1.449E-26
a-226	U-238	1.997E-07	0.000E+00	5.048E-21	1.284E-19	3.861E-18	5.863E-17	3.726E-16	4.913E-16	4.760E-16
a-226	U-238	2.636E-13	0.000E+00	6.664E-27	1.694E-25	5.097E-24	7.739E-23	4.918E-22	6.485E-22	6.284E-22
a-226	U-238	3.794E-15	0.000E+00	9.592E-29	2.439E-27	7.336E-26	1.114E-24	7.079E-24	9.335E-24	9.045E-24
a-226	äS(j):		7.300E-06	7.070E-06	6.630E-06	5.297E-06	2.788E-06	2.951E-07	4.900E-10	7.466E-12
a-226	Ra-226	3.800E-15	1.387E-13	1.343E-13	1.260E-13	1.006E-13	5.298E-14	5.607E-15	9.164E-18	1.617E-27
n-232	Th-232	1.000E+00	2.400E+00	2.400E+00	2.400E+00	2.399E+00	2.397E+00	2.391E+00	2.373E+00	2.313E+00
a-228	Th-232	1.000E+00	0.000E+00	2.684E-01	6.968E-01	1.486E+00	1.879E+00	1.894E+00	1.880E+00	1.832E+00
n-228	Th-232	1.000E+00	0.000E+00	4.430E-02	2.891E-01	1.222E+00	1.865E+00	1.894E+00	1.880E+00	1.832E+00
-234	U-234	9.996E-01	1.389E+01	1.329E+01	1.217E+01	8.925E+00	3.683E+00	1.662E-01	2.380E-05	8.354E-19
-234	U-234	1.319E-06	1.834E-05	1.755E-05	1.606E-05	1.178E-05	4.862E-06	2.194E-07	3.141E-11	1.103E-24
-234	U-238	1.599E-03	0.000E+00	6.005E-08	1.649E-07	4.032E-07	4.992E-07	7.511E-08	3.227E-11	3.779E-24
-234	U-238	2.111E-09	0.000E+00	7.927E-14	2.177E-13	5.322E-13	6.589E-13	9.914E-14	4.259E-17	4.988E-30
-234	U-238	3.039E-11	0.000E+00	1.141E-15	3.133E-15	7.661E-15	9.484E-15	1.427E-15	6.131E-19	7.180E-32
-234	U-238	3.359E-07	0.000E+00	1.261E-11	3.463E-11	8.469E-11	1.048E-10	1.578E-11	6.777E-15	7.938E-28
-234	U-238	4.434E-13	0.000E+00	1.665E-17	4.572E-17	1.118E-16	1.384E-16	2.082E-17	8.946E-21	1.048E-33
-234	U-238	6.383E-15	0.000E+00	2.396E-19	6.580E-19	1.609E-18	1.992E-18	2.998E-19	1.288E-22	1.508E-35
-234	U-238	3.196E-07	0.000E+00	1.200E-11	3.295E-11	8.058E-11	9.975E-11	1.501E-11	6.448E-15	7.552E-28
-234	U-238	4.219E-13	0.000E+00	1.584E-17	4.350E-17	1.064E-16	1.317E-16	1.981E-17	8.511E-21	9.969E-34
-234	U-238	6.073E-15	0.000E+00	2.280E-19	6.261E-19	1.531E-18	1.895E-18	2.852E-19	1.225E-22	1.435E-35
-234	U-238	6.713E-11	0.000E+00	2.521E-15	6.921E-15	1.692E-14	2.095E-14	3.153E-15	1.354E-18	1.586E-31
-234	U-238	8.862E-17	0.000E+00	3.327E-21	9.136E-21	2.234E-20	2.766E-20	4.162E-21	1.788E-24	2.094E-37
-234	U-238	1.276E-18	0.000E+00	4.789E-23	1.315E-22	3.216E-22	3.981E-22	5.990E-23	2.573E-26	3.014E-39
-234	U-238	3.200E-10	0.000E+00	1.201E-14	3.299E-14	8.067E-14	9.987E-14	1.503E-14	6.456E-18	7.561E-31
-234	U-238	4.224E-16	0.000E+00	1.586E-20	4.355E-20	1.065E-19	1.318E-19	1.984E-20	8.522E-24	9.981E-37
-234	U-238	6.080E-18	0.000E+00	2.283E-22	6.268E-22	1.533E-21	1.898E-21	2.855E-22	1.227E-25	1.437E-38
-234	U-238	9.980E-01	0.000E+00	3.747E-05	1.029E-04	2.516E-04	3.115E-04	4.687E-05	2.013E-08	2.358E-21
-234	U-238	1.317E-06	0.000E+00	4.946E-11	1.358E-10	3.321E-10	4.111E-10	6.187E-11	2.658E-14	3.113E-27
-234	U-238	1.896E-08	0.000E+00	7.119E-13	1.955E-12	4.780E-12	5.918E-12	8.905E-13	3.825E-16	4.480E-29

ummary : GKP Maintenance Worker Ingestion
ile : C:\USERS\CLAUDE\DOCUMENTS\0 GKP DOSE\RESRAD CW\GKP MAINTENANCE WORKER -INGESTION.RAD

Individual Nuclide Soil Concentration
Parent Nuclide and Branch Fraction Indicated

uclide (j)	Parent (i)	THF(i)	S(j,t), pCi/g t= 0.000E+00	1.000E+00	3.000E+00	1.000E+01	3.000E+01	1.000E+02	3.000E+02	1.000E+03
ÄÄÄÄÄ	ÄÄÄÄÄÄ	ÄÄÄÄÄÄÄÄÄ	ÄÄÄÄÄÄÄÄÄ	ÄÄÄÄÄÄÄÄÄ	ÄÄÄÄÄÄÄÄÄ	ÄÄÄÄÄÄÄÄÄ	ÄÄÄÄÄÄÄÄÄ	ÄÄÄÄÄÄÄÄÄ	ÄÄÄÄÄÄÄÄÄ	ÄÄÄÄÄÄÄÄÄ
-234	U-238	2.096E-04	0.000E+00	7.871E-09	2.161E-08	5.285E-08	6.542E-08	9.844E-09	4.229E-12	4.953E-25
-234	U-238	2.767E-10	0.000E+00	1.039E-14	2.853E-14	6.976E-14	8.636E-14	1.299E-14	5.582E-18	6.538E-31
-234	U-238	3.983E-12	0.000E+00	1.495E-16	4.106E-16	1.004E-15	1.243E-15	1.870E-16	8.035E-20	9.411E-33
-234	U-238	1.994E-04	0.000E+00	7.488E-09	2.056E-08	5.028E-08	6.225E-08	9.366E-09	4.024E-12	4.712E-25
-234	U-238	2.633E-10	0.000E+00	9.884E-15	2.714E-14	6.637E-14	8.216E-14	1.236E-14	5.311E-18	6.220E-31
-234	U-238	3.789E-12	0.000E+00	1.423E-16	3.907E-16	9.553E-16	1.183E-15	1.780E-16	7.645E-20	8.954E-33
-234	U-238	4.189E-08	0.000E+00	1.573E-12	4.319E-12	1.056E-11	1.307E-11	1.967E-12	8.451E-16	9.898E-29
-234	U-238	5.530E-14	0.000E+00	2.076E-18	5.701E-18	1.394E-17	1.726E-17	2.597E-18	1.116E-21	1.307E-34
-234	U-238	7.959E-16	0.000E+00	2.988E-20	8.206E-20	2.007E-19	2.484E-19	3.738E-20	1.606E-23	1.881E-36
-234	U-238	1.997E-07	0.000E+00	7.497E-12	2.059E-11	5.034E-11	6.232E-11	9.378E-12	4.028E-15	4.718E-28
-234	U-238	2.636E-13	0.000E+00	9.896E-18	2.717E-17	6.645E-17	8.226E-17	1.238E-17	5.318E-21	6.228E-34
-234	U-238	3.794E-15	0.000E+00	1.424E-19	3.911E-19	9.565E-19	1.184E-18	1.782E-19	7.654E-23	8.965E-36
-234	äS(j):		1.389E+01	1.329E+01	1.217E+01	8.926E+00	3.683E+00	1.663E-01	2.382E-05	8.377E-19
a-230	U-234	9.996E-01	0.000E+00	1.250E-04	3.589E-04	1.032E-03	2.120E-03	2.842E-03	2.850E-03	2.759E-03
a-230	U-234	1.319E-06	0.000E+00	1.650E-10	4.738E-10	1.362E-09	2.798E-09	3.751E-09	3.762E-09	3.642E-09
a-230	U-234	1.899E-08	0.000E+00	2.375E-12	6.819E-12	1.961E-11	4.028E-11	5.400E-11	5.415E-11	5.243E-11
a-230	U-234	2.100E-04	0.000E+00	2.625E-08	7.539E-08	2.168E-07	4.452E-07	5.969E-07	5.986E-07	5.796E-07
a-230	U-234	2.771E-10	0.000E+00	3.465E-14	9.951E-14	2.862E-13	5.877E-13	7.879E-13	7.902E-13	7.650E-13
a-230	U-234	3.989E-12	0.000E+00	4.988E-16	1.432E-15	4.119E-15	8.460E-15	1.134E-14	1.137E-14	1.101E-14
a-230	U-234	1.998E-04	0.000E+00	2.497E-08	7.172E-08	2.063E-07	4.236E-07	5.679E-07	5.695E-07	5.514E-07
a-230	U-234	2.637E-10	0.000E+00	3.297E-14	9.468E-14	2.723E-13	5.592E-13	7.497E-13	7.518E-13	7.279E-13
a-230	U-234	3.795E-12	0.000E+00	4.745E-16	1.363E-15	3.919E-15	8.049E-15	1.079E-14	1.082E-14	1.048E-14
a-230	U-234	4.196E-08	0.000E+00	5.246E-12	1.507E-11	4.332E-11	8.898E-11	1.193E-10	1.196E-10	1.158E-10
a-230	U-234	5.538E-14	0.000E+00	6.924E-18	1.989E-17	5.719E-17	1.175E-16	1.575E-16	1.579E-16	1.529E-16
a-230	U-234	7.972E-16	0.000E+00	9.967E-20	2.862E-19	8.231E-19	1.691E-18	2.267E-18	2.273E-18	2.201E-18
a-230	U-234	2.000E-07	0.000E+00	2.501E-11	7.181E-11	2.065E-10	4.241E-10	5.686E-10	5.702E-10	5.521E-10
a-230	U-234	2.640E-13	0.000E+00	3.301E-17	9.479E-17	2.726E-16	5.599E-16	7.506E-16	7.527E-16	7.287E-16
a-230	U-234	3.800E-15	0.000E+00	4.751E-19	1.364E-18	3.924E-18	8.058E-18	1.080E-17	1.083E-17	1.049E-17
a-230	U-238	1.599E-03	0.000E+00	2.802E-13	2.378E-12	2.160E-11	1.128E-10	2.748E-10	2.912E-10	2.820E-10
a-230	U-238	2.111E-09	0.000E+00	3.699E-19	3.139E-18	2.851E-17	1.489E-16	3.627E-16	3.844E-16	3.722E-16
a-230	U-238	3.039E-11	0.000E+00	5.324E-21	4.519E-20	4.104E-19	2.143E-18	5.221E-18	5.533E-18	5.357E-18
a-230	U-238	3.359E-07	0.000E+00	5.885E-17	4.995E-16	4.537E-15	2.369E-14	5.771E-14	6.117E-14	5.922E-14
a-230	U-238	4.434E-13	0.000E+00	7.769E-23	6.594E-22	5.989E-21	3.127E-20	7.618E-20	8.074E-20	7.817E-20
a-230	U-238	6.383E-15	0.000E+00	1.118E-24	9.491E-24	8.621E-23	4.501E-22	1.097E-21	1.162E-21	1.125E-21
a-230	U-238	3.196E-07	0.000E+00	5.600E-17	4.753E-16	4.317E-15	2.254E-14	5.491E-14	5.820E-14	5.635E-14
a-230	U-238	4.219E-13	0.000E+00	7.391E-23	6.274E-22	5.698E-21	2.975E-20	7.248E-20	7.682E-20	7.438E-20
a-230	U-238	6.073E-15	0.000E+00	1.064E-24	9.030E-24	8.202E-23	4.282E-22	1.043E-21	1.106E-21	1.071E-21
a-230	U-238	6.713E-11	0.000E+00	1.176E-20	9.983E-20	9.067E-19	4.734E-18	1.153E-17	1.222E-17	1.183E-17
a-230	U-238	8.862E-17	0.000E+00	1.553E-26	1.318E-25	1.197E-24	6.249E-24	1.522E-23	1.614E-23	1.562E-23
a-230	U-238	1.276E-18	0.000E+00	2.235E-28	1.897E-27	1.723E-26	8.995E-26	2.191E-25	2.323E-25	2.249E-25
a-230	U-238	3.200E-10	0.000E+00	5.606E-20	4.759E-19	4.322E-18	2.257E-17	5.498E-17	5.827E-17	5.641E-17
a-230	U-238	4.224E-16	0.000E+00	7.400E-26	6.281E-25	5.705E-24	2.979E-23	7.257E-23	7.691E-23	7.447E-23
a-230	U-238	6.080E-18	0.000E+00	1.065E-27	9.041E-27	8.212E-26	4.288E-25	1.045E-24	1.107E-24	1.072E-24
a-230	U-238	9.980E-01	0.000E+00	1.748E-10	1.484E-09	1.348E-08	7.038E-08	1.715E-07	1.817E-07	1.759E-07
a-230	U-238	1.317E-06	0.000E+00	2.308E-16	1.959E-15	1.779E-14	9.290E-14	2.263E-13	2.399E-13	2.322E-13
a-230	U-238	1.896E-08	0.000E+00	3.322E-18	2.820E-17	2.561E-16	1.337E-15	3.258E-15	3.453E-15	3.343E-15
a-230	U-238	2.096E-04	0.000E+00	3.673E-14	3.117E-13	2.831E-12	1.478E-11	3.601E-11	3.817E-11	3.695E-11
a-230	U-238	2.767E-10	0.000E+00	4.848E-20	4.115E-19	3.737E-18	1.951E-17	4.754E-17	5.038E-17	4.878E-17

ummary : GKP Maintenance Worker Ingestion
ile : C:\USERS\CLAUDE\DOCUMENTS\0 GKP DOSE\RESRAD CW\GKP MAINTENANCE WORKER -INGESTION.RAD

Individual Nuclide Soil Concentration
Parent Nuclide and Branch Fraction Indicated

uclide (j)	Parent (i)	THF(i)	S(j,t), pCi/g t= 0.000E+00	1.000E+00	3.000E+00	1.000E+01	3.000E+01	1.000E+02	3.000E+02	1.000E+03
ÄÄÄÄÄÄ	ÄÄÄÄÄÄÄ	ÄÄÄÄÄÄÄÄÄ	ÄÄÄÄÄÄÄÄÄ	ÄÄÄÄÄÄÄÄÄ	ÄÄÄÄÄÄÄÄÄ	ÄÄÄÄÄÄÄÄÄ	ÄÄÄÄÄÄÄÄÄ	ÄÄÄÄÄÄÄÄÄ	ÄÄÄÄÄÄÄÄÄ	ÄÄÄÄÄÄÄÄÄ
n-230	U-238	3.983E-12	0.000E+00	6.978E-22	5.923E-21	5.379E-20	2.809E-19	6.843E-19	7.252E-19	7.021E-19
n-230	U-238	1.994E-04	0.000E+00	3.494E-14	2.966E-13	2.694E-12	1.406E-11	3.426E-11	3.631E-11	3.516E-11
n-230	U-238	2.633E-10	0.000E+00	4.612E-20	3.915E-19	3.556E-18	1.856E-17	4.523E-17	4.794E-17	4.641E-17
n-230	U-238	3.789E-12	0.000E+00	6.639E-22	5.635E-21	5.118E-20	2.672E-19	6.510E-19	6.900E-19	6.680E-19
n-230	U-238	4.189E-08	0.000E+00	7.339E-18	6.229E-17	5.658E-16	2.954E-15	7.197E-15	7.628E-15	7.385E-15
n-230	U-238	5.530E-14	0.000E+00	9.688E-24	8.223E-23	7.468E-22	3.899E-21	9.500E-21	1.007E-20	9.748E-21
n-230	U-238	7.959E-16	0.000E+00	1.394E-25	1.184E-24	1.075E-23	5.613E-23	1.367E-22	1.449E-22	1.403E-22
n-230	U-238	1.997E-07	0.000E+00	3.498E-17	2.969E-16	2.697E-15	1.408E-14	3.431E-14	3.636E-14	3.520E-14
n-230	U-238	2.636E-13	0.000E+00	4.618E-23	3.920E-22	3.560E-21	1.859E-20	4.528E-20	4.799E-20	4.647E-20
n-230	U-238	3.794E-15	0.000E+00	6.647E-25	5.642E-24	5.124E-23	2.675E-22	6.518E-22	6.908E-22	6.688E-22
n-230	äS(j):		0.000E+00	1.250E-04	3.591E-04	1.033E-03	2.121E-03	2.843E-03	2.851E-03	2.761E-03
-234	U-234	1.899E-08	2.640E-07	2.526E-07	2.312E-07	1.696E-07	6.998E-08	3.159E-09	4.522E-13	1.587E-26
-234	U-234	2.100E-04	2.918E-03	2.792E-03	2.556E-03	1.875E-03	7.736E-04	3.492E-05	4.999E-09	1.755E-22
-234	äS(j):		2.919E-03	2.792E-03	2.556E-03	1.875E-03	7.737E-04	3.492E-05	4.999E-09	1.755E-22
a-226	U-234	2.100E-04	0.000E+00	5.667E-12	4.849E-11	4.526E-10	2.538E-09	7.224E-09	8.093E-09	7.837E-09
a-226	U-234	3.989E-12	0.000E+00	1.077E-19	9.213E-19	8.600E-18	4.821E-17	1.373E-16	1.538E-16	1.489E-16
a-226	U-238	3.359E-07	0.000E+00	8.493E-21	2.160E-19	6.496E-18	9.864E-17	6.268E-16	8.265E-16	8.008E-16
a-226	U-238	4.434E-13	0.000E+00	1.121E-26	2.851E-25	8.574E-24	1.302E-22	8.274E-22	1.091E-21	1.057E-21
a-226	U-238	6.383E-15	0.000E+00	1.614E-28	4.103E-27	1.234E-25	1.874E-24	1.191E-23	1.570E-23	1.522E-23
a-226	U-238	2.096E-04	0.000E+00	5.300E-18	1.348E-16	4.053E-15	6.155E-14	3.911E-13	5.158E-13	4.997E-13
a-226	U-238	2.767E-10	0.000E+00	6.996E-24	1.779E-22	5.350E-21	8.125E-20	5.163E-19	6.808E-19	6.596E-19
a-226	U-238	3.983E-12	0.000E+00	1.007E-25	2.560E-24	7.701E-23	1.169E-21	7.431E-21	9.799E-21	9.495E-21
a-226	äS(j):		0.000E+00	5.667E-12	4.849E-11	4.526E-10	2.538E-09	7.224E-09	8.094E-09	7.838E-09
-234	U-234	2.771E-10	3.852E-09	3.686E-09	3.373E-09	2.475E-09	1.021E-09	4.609E-11	6.598E-15	2.316E-28
-234	U-234	3.989E-12	5.545E-11	5.305E-11	4.856E-11	3.562E-11	1.470E-11	6.634E-13	9.498E-17	3.334E-30
-234	äS(j):		3.908E-09	3.739E-09	3.422E-09	2.510E-09	1.036E-09	4.676E-11	6.693E-15	2.349E-28
a-226	U-234	2.771E-10	0.000E+00	7.480E-18	6.400E-17	5.974E-16	3.350E-15	9.535E-15	1.068E-14	1.035E-14
-234	U-234	1.998E-04	2.777E-03	2.656E-03	2.431E-03	1.784E-03	7.360E-04	3.322E-05	4.756E-09	1.669E-22
-234	U-234	2.637E-10	3.665E-09	3.506E-09	3.209E-09	2.354E-09	9.715E-10	4.385E-11	6.278E-15	2.204E-28
-234	äS(j):		2.777E-03	2.656E-03	2.431E-03	1.784E-03	7.360E-04	3.322E-05	4.756E-09	1.669E-22
-234	U-234	3.795E-12	5.276E-11	5.047E-11	4.620E-11	3.389E-11	1.398E-11	6.312E-13	9.036E-17	3.172E-30
-234	U-234	4.196E-08	5.832E-07	5.580E-07	5.107E-07	3.746E-07	1.546E-07	6.978E-09	9.989E-13	3.506E-26
-234	äS(j):		5.833E-07	5.580E-07	5.107E-07	3.747E-07	1.546E-07	6.979E-09	9.990E-13	3.507E-26
a-226	U-234	4.196E-08	0.000E+00	1.132E-15	9.690E-15	9.045E-14	5.071E-13	1.444E-12	1.617E-12	1.566E-12
a-226	U-234	7.972E-16	0.000E+00	2.152E-23	1.841E-22	1.719E-21	9.635E-21	2.743E-20	3.073E-20	2.976E-20
a-226	U-238	6.713E-11	0.000E+00	1.697E-24	4.316E-23	1.298E-21	1.971E-20	1.253E-19	1.652E-19	1.600E-19
a-226	U-238	8.862E-17	0.000E+00	2.240E-30	5.697E-29	1.713E-27	2.602E-26	1.653E-25	2.180E-25	2.113E-25
a-226	U-238	1.276E-18	0.000E+00	3.225E-32	8.200E-31	2.466E-29	3.745E-28	2.380E-27	3.138E-27	3.041E-27
a-226	U-238	4.189E-08	0.000E+00	1.059E-21	2.693E-20	8.100E-19	1.230E-17	7.816E-17	1.031E-16	9.987E-17
a-226	U-238	5.530E-14	0.000E+00	1.398E-27	3.555E-26	1.069E-24	1.624E-23	1.032E-22	1.360E-22	1.318E-22
a-226	U-238	7.959E-16	0.000E+00	2.012E-29	5.117E-28	1.539E-26	2.337E-25	1.485E-24	1.958E-24	1.897E-24
a-226	äS(j):		0.000E+00	1.132E-15	9.690E-15	9.045E-14	5.071E-13	1.444E-12	1.617E-12	1.566E-12

ummary : GKP Maintenance Worker Ingestion
ile : C:\USERS\CLAUDE\DOCUMENTS\0 GKP DOSE\RESRAD CW\GKP MAINTENANCE WORKER -INGESTION.RAD

Individual Nuclide Soil Concentration
Parent Nuclide and Branch Fraction Indicated

uclide (j)	Parent (i)	THF(i)	S(j,t), pCi/g t= 0.000E+00	1.000E+00	3.000E+00	1.000E+01	3.000E+01	1.000E+02	3.000E+02	1.000E+03
ÄÄÄÄÄ	ÄÄÄÄÄÄ	ÄÄÄÄÄÄÄÄÄ	ÄÄÄÄÄÄÄÄÄ	ÄÄÄÄÄÄÄÄÄ	ÄÄÄÄÄÄÄÄÄ	ÄÄÄÄÄÄÄÄÄ	ÄÄÄÄÄÄÄÄÄ	ÄÄÄÄÄÄÄÄÄ	ÄÄÄÄÄÄÄÄÄ	ÄÄÄÄÄÄÄÄÄ
-234	U-234	5.538E-14	7.698E-13	7.365E-13	6.741E-13	4.945E-13	2.041E-13	9.211E-15	1.319E-18	4.629E-32
-234	U-234	7.972E-16	1.108E-14	1.060E-14	9.703E-15	7.118E-15	2.937E-15	1.326E-16	1.898E-20	6.662E-34
-234	äS(j):		7.809E-13	7.471E-13	6.838E-13	5.016E-13	2.070E-13	9.344E-15	1.338E-18	4.695E-32
a-226	U-234	5.538E-14	0.000E+00	1.495E-21	1.279E-20	1.194E-19	6.694E-19	1.906E-18	2.135E-18	2.067E-18
-234	U-234	2.000E-07	2.780E-06	2.660E-06	2.434E-06	1.786E-06	7.369E-07	3.326E-08	4.762E-12	1.671E-25
-234	U-234	2.640E-13	3.670E-12	3.511E-12	3.213E-12	2.357E-12	9.727E-13	4.391E-14	6.285E-18	2.206E-31
-234	äS(j):		2.780E-06	2.660E-06	2.434E-06	1.786E-06	7.369E-07	3.326E-08	4.762E-12	1.671E-25
-234	U-234	3.800E-15	5.282E-14	5.053E-14	4.625E-14	3.393E-14	1.400E-14	6.320E-16	9.047E-20	3.176E-33
-235	U-235	9.835E-01	8.261E-01	7.904E-01	7.234E-01	5.307E-01	2.190E-01	9.887E-03	1.416E-06	4.981E-20
-235	U-235	2.722E-03	2.286E-03	2.187E-03	2.002E-03	1.469E-03	6.061E-04	2.736E-05	3.920E-09	1.379E-22
-235	äS(j):		8.284E-01	7.925E-01	7.254E-01	5.322E-01	2.196E-01	9.914E-03	1.420E-06	4.995E-20
a-231	U-235	9.835E-01	0.000E+00	1.672E-05	4.592E-05	1.123E-04	1.390E-04	2.090E-05	8.961E-09	1.043E-21
a-231	U-235	2.722E-03	0.000E+00	4.628E-08	1.271E-07	3.107E-07	3.846E-07	5.784E-08	2.480E-11	2.886E-24
a-231	U-235	1.376E-02	0.000E+00	2.340E-07	6.425E-07	1.571E-06	1.944E-06	2.924E-07	1.254E-10	1.459E-23
a-231	U-235	3.809E-05	0.000E+00	6.476E-10	1.778E-09	4.348E-09	5.382E-09	8.093E-10	3.470E-13	4.038E-26
a-231	U-235	8.257E-07	0.000E+00	1.404E-11	3.855E-11	9.426E-11	1.167E-10	1.755E-11	7.523E-15	8.755E-28
a-231	U-235	2.285E-09	0.000E+00	3.886E-14	1.067E-13	2.609E-13	3.229E-13	4.856E-14	2.082E-17	2.423E-30
a-231	äS(j):		0.000E+00	1.700E-05	4.669E-05	1.142E-04	1.413E-04	2.125E-05	9.111E-09	1.060E-21
c-227	U-235	9.835E-01	0.000E+00	2.577E-07	1.994E-06	1.324E-05	3.070E-05	6.123E-06	2.826E-09	3.370E-22
c-227	U-235	2.722E-03	0.000E+00	7.134E-10	5.518E-09	3.665E-08	8.495E-08	1.695E-08	7.821E-12	9.327E-25
c-227	U-235	1.376E-02	0.000E+00	3.606E-09	2.790E-08	1.853E-07	4.295E-07	8.568E-08	3.954E-11	4.715E-24
c-227	äS(j):		0.000E+00	4.320E-09	3.341E-08	2.219E-07	5.144E-07	1.026E-07	4.736E-11	5.648E-24
-235	U-235	1.376E-02	1.156E-02	1.106E-02	1.012E-02	7.426E-03	3.064E-03	1.383E-04	1.982E-08	6.969E-22
-235	U-235	3.809E-05	3.199E-05	3.061E-05	2.801E-05	2.055E-05	8.481E-06	3.829E-07	5.484E-11	1.929E-24
-235	äS(j):		1.159E-02	1.109E-02	1.015E-02	7.446E-03	3.073E-03	1.387E-04	1.987E-08	6.989E-22
c-227	U-235	3.809E-05	0.000E+00	9.981E-12	7.721E-11	5.128E-10	1.189E-09	2.371E-10	1.094E-13	1.305E-26
c-227	U-235	8.257E-07	0.000E+00	2.164E-13	1.674E-12	1.112E-11	2.577E-11	5.141E-12	2.372E-15	2.829E-28
c-227	äS(j):		0.000E+00	1.020E-11	7.888E-11	5.239E-10	1.214E-09	2.423E-10	1.118E-13	1.333E-26
-235	U-235	8.257E-07	6.936E-07	6.636E-07	6.074E-07	4.456E-07	1.839E-07	8.301E-09	1.189E-12	4.182E-26
-235	U-235	2.285E-09	1.920E-09	1.837E-09	1.681E-09	1.233E-09	5.089E-10	2.297E-11	3.291E-15	1.157E-28
-235	äS(j):		6.955E-07	6.654E-07	6.090E-07	4.468E-07	1.844E-07	8.324E-09	1.192E-12	4.193E-26
c-227	U-235	2.285E-09	0.000E+00	5.989E-16	4.633E-15	3.077E-14	7.133E-14	1.423E-14	6.566E-18	7.831E-31
-238	U-238	5.450E-07	7.575E-06	7.248E-06	6.634E-06	4.866E-06	2.008E-06	9.066E-08	1.299E-11	4.567E-25
-238	U-238	1.599E-03	2.223E-02	2.127E-02	1.947E-02	1.428E-02	5.893E-03	2.661E-04	3.811E-08	1.340E-21
-238	äS(j):		2.224E-02	2.128E-02	1.947E-02	1.429E-02	5.895E-03	2.662E-04	3.812E-08	1.341E-21
-238	U-238	2.111E-09	2.934E-08	2.807E-08	2.570E-08	1.885E-08	7.779E-09	3.512E-10	5.030E-14	1.769E-27

ummary : GKP Maintenance Worker Ingestion
ile : C:\USERS\CLAUDE\DOCUMENTS\0 GKP DOSE\RESRAD CW\GKP MAINTENANCE WORKER -INGESTION.RAD

Individual Nuclide Soil Concentration
Parent Nuclide and Branch Fraction Indicated

uclide (j)	Parent (i)	THF(i)	S(j,t), pCi/g t= 0.000E+00	1.000E+00	3.000E+00	1.000E+01	3.000E+01	1.000E+02	3.000E+02	1.000E+03
ÄÄÄÄÄ	ÄÄÄÄÄÄÄ	ÄÄÄÄÄÄÄÄÄ	ÄÄÄÄÄÄÄÄÄ	ÄÄÄÄÄÄÄÄÄ	ÄÄÄÄÄÄÄÄÄ	ÄÄÄÄÄÄÄÄÄ	ÄÄÄÄÄÄÄÄÄ	ÄÄÄÄÄÄÄÄÄ	ÄÄÄÄÄÄÄÄÄ	ÄÄÄÄÄÄÄÄÄ
-238	U-238	3.039E-11	4.224E-10	4.041E-10	3.699E-10	2.713E-10	1.120E-10	5.055E-12	7.241E-16	2.547E-29
-238	äS(j):		2.977E-08	2.848E-08	2.607E-08	1.912E-08	7.891E-09	3.563E-10	5.103E-14	1.795E-27
-238	U-238	3.359E-07	4.669E-06	4.467E-06	4.089E-06	3.000E-06	1.238E-06	5.588E-08	8.005E-12	2.815E-25
-238	U-238	4.434E-13	6.164E-12	5.897E-12	5.397E-12	3.960E-12	1.634E-12	7.377E-14	1.057E-17	3.716E-31
-238	äS(j):		4.669E-06	4.467E-06	4.089E-06	3.000E-06	1.238E-06	5.588E-08	8.005E-12	2.815E-25
-238	U-238	6.383E-15	8.872E-14	8.488E-14	7.769E-14	5.699E-14	2.352E-14	1.062E-15	1.521E-19	5.349E-33
-238	U-238	3.196E-07	4.443E-06	4.250E-06	3.890E-06	2.854E-06	1.178E-06	5.317E-08	7.616E-12	2.679E-25
-238	äS(j):		4.443E-06	4.250E-06	3.890E-06	2.854E-06	1.178E-06	5.317E-08	7.616E-12	2.679E-25
-238	U-238	4.219E-13	5.864E-12	5.610E-12	5.135E-12	3.767E-12	1.555E-12	7.018E-14	1.005E-17	3.536E-31
-238	U-238	6.073E-15	8.441E-14	8.076E-14	7.392E-14	5.422E-14	2.238E-14	1.010E-15	1.447E-19	5.089E-33
-238	äS(j):		5.949E-12	5.691E-12	5.209E-12	3.821E-12	1.577E-12	7.119E-14	1.020E-17	3.587E-31
-238	U-238	6.713E-11	9.331E-10	8.927E-10	8.171E-10	5.994E-10	2.474E-10	1.117E-11	1.600E-15	5.626E-29
-238	U-238	8.862E-17	1.232E-15	1.178E-15	1.079E-15	7.913E-16	3.265E-16	1.474E-17	2.112E-21	7.427E-35
-238	äS(j):		9.331E-10	8.927E-10	8.171E-10	5.994E-10	2.474E-10	1.117E-11	1.600E-15	5.626E-29
-238	U-238	1.276E-18	1.773E-17	1.696E-17	1.553E-17	1.139E-17	4.700E-18	2.122E-19	3.039E-23	1.069E-36
-238	U-238	3.200E-10	4.448E-09	4.255E-09	3.895E-09	2.857E-09	1.179E-09	5.323E-11	7.625E-15	2.682E-28
-238	äS(j):		4.448E-09	4.255E-09	3.895E-09	2.857E-09	1.179E-09	5.323E-11	7.625E-15	2.682E-28
-238	U-238	4.224E-16	5.871E-15	5.617E-15	5.141E-15	3.772E-15	1.556E-15	7.027E-17	1.007E-20	3.540E-34
-238	U-238	6.080E-18	8.451E-17	8.085E-17	7.400E-17	5.429E-17	2.240E-17	1.011E-18	1.449E-22	5.095E-36
-238	äS(j):		5.956E-15	5.698E-15	5.215E-15	3.826E-15	1.579E-15	7.128E-17	1.021E-20	3.591E-34
-238	U-238	9.980E-01	1.387E+01	1.327E+01	1.215E+01	8.911E+00	3.677E+00	1.660E-01	2.378E-05	8.364E-19
-238	U-238	1.317E-06	1.831E-05	1.752E-05	1.603E-05	1.176E-05	4.854E-06	2.191E-07	3.139E-11	1.104E-24
-238	äS(j):		1.387E+01	1.327E+01	1.215E+01	8.911E+00	3.677E+00	1.660E-01	2.378E-05	8.364E-19
-238	U-238	1.896E-08	2.636E-07	2.522E-07	2.308E-07	1.693E-07	6.987E-08	3.154E-09	4.518E-13	1.589E-26
-238	U-238	2.096E-04	2.914E-03	2.788E-03	2.551E-03	1.872E-03	7.724E-04	3.487E-05	4.995E-09	1.757E-22
-238	äS(j):		2.914E-03	2.788E-03	2.552E-03	1.872E-03	7.725E-04	3.488E-05	4.995E-09	1.757E-22
-238	U-238	2.767E-10	3.846E-09	3.680E-09	3.368E-09	2.471E-09	1.020E-09	4.603E-11	6.593E-15	2.319E-28
-238	U-238	3.983E-12	5.536E-11	5.296E-11	4.848E-11	3.556E-11	1.468E-11	6.626E-13	9.490E-17	3.338E-30
-238	äS(j):		3.902E-09	3.733E-09	3.416E-09	2.506E-09	1.034E-09	4.669E-11	6.688E-15	2.352E-28
-238	U-238	1.994E-04	2.772E-03	2.652E-03	2.428E-03	1.781E-03	7.349E-04	3.318E-05	4.752E-09	1.671E-22
-238	U-238	2.633E-10	3.659E-09	3.501E-09	3.204E-09	2.351E-09	9.701E-10	4.379E-11	6.273E-15	2.206E-28
-238	äS(j):		2.772E-03	2.652E-03	2.428E-03	1.781E-03	7.349E-04	3.318E-05	4.752E-09	1.671E-22
-238	U-238	3.789E-12	5.267E-11	5.039E-11	4.612E-11	3.384E-11	1.396E-11	6.304E-13	9.029E-17	3.176E-30
-238	U-238	4.189E-08	5.823E-07	5.571E-07	5.099E-07	3.741E-07	1.544E-07	6.969E-09	9.982E-13	3.511E-26
-238	äS(j):		5.823E-07	5.571E-07	5.099E-07	3.741E-07	1.544E-07	6.969E-09	9.983E-13	3.511E-26
-238	U-238	5.530E-14	7.686E-13	7.353E-13	6.731E-13	4.938E-13	2.038E-13	9.199E-15	1.318E-18	4.634E-32
-238	U-238	7.959E-16	1.106E-14	1.058E-14	9.688E-15	7.107E-15	2.933E-15	1.324E-16	1.897E-20	6.670E-34
-238	äS(j):		7.797E-13	7.459E-13	6.827E-13	5.009E-13	2.067E-13	9.331E-15	1.337E-18	4.701E-32

ummary : GKP Maintenance Worker Ingestion
ile : C:\USERS\CLAUDE\DOCUMENTS\0 GKP DOSE\RESRAD CW\GKP MAINTENANCE WORKER -INGESTION.RAD

Individual Nuclide Soil Concentration
Parent Nuclide and Branch Fraction Indicated

uclide (j)	Parent (i)	THF(i)	S(j,t), pCi/g t= 0.000E+00	1.000E+00	3.000E+00	1.000E+01	3.000E+01	1.000E+02	3.000E+02	1.000E+03
ÄÄÄÄÄÄ	ÄÄÄÄÄÄÄ	ÄÄÄÄÄÄÄÄÄ	ÄÄÄÄÄÄÄÄÄ	ÄÄÄÄÄÄÄÄÄ	ÄÄÄÄÄÄÄÄÄ	ÄÄÄÄÄÄÄÄÄ	ÄÄÄÄÄÄÄÄÄ	ÄÄÄÄÄÄÄÄÄ	ÄÄÄÄÄÄÄÄÄ	ÄÄÄÄÄÄÄÄÄ
-238	U-238	1.997E-07	2.776E-06	2.655E-06	2.430E-06	1.783E-06	7.358E-07	3.322E-08	4.758E-12	1.673E-25
-238	U-238	2.636E-13	3.664E-12	3.505E-12	3.208E-12	2.354E-12	9.712E-13	4.385E-14	6.281E-18	2.209E-31
-238	äS(j):		2.776E-06	2.655E-06	2.430E-06	1.783E-06	7.358E-07	3.322E-08	4.758E-12	1.673E-25
-238	U-238	3.794E-15	5.274E-14	5.045E-14	4.618E-14	3.388E-14	1.398E-14	6.311E-16	9.040E-20	3.180E-33
ÍÍÍÍÍÍ	ÍÍÍÍÍÍÍ	ÍÍÍÍÍÍÍÍÍ	ÍÍÍÍÍÍÍÍÍ	ÍÍÍÍÍÍÍÍÍ	ÍÍÍÍÍÍÍÍÍ	ÍÍÍÍÍÍÍÍÍ	ÍÍÍÍÍÍÍÍÍ	ÍÍÍÍÍÍÍÍÍ	ÍÍÍÍÍÍÍÍÍ	ÍÍÍÍÍÍÍÍÍ

HF(i) is the thread fraction of the parent nuclide.

ESCALC.EXE execution time = 37.55 seconds

ummary : GKP Maintenance Worker Inhalation
ile : C:\USERS\CLAUDE\DOCUMENTS\0 GKP DOSE\RESRAD CW\GKP MAINTENANCE WORKER - INHALATION.RAD

Table of Contents
ÄÄÄÄÄÄÄÄÄÄÄÄÄÄÄÄÄ

Part I: Mixture Sums and Single Radionuclide Guidelines
ÍÍ

ummary : GKP Maintenance Worker Inhalation
ile : C:\USERS\CLAUDE\DOCUMENTS\0 GKP DOSE\RESRAD CW\GKP MAINTENANCE WORKER - INHALATION.RAD

Dose Conversion Factor (and Related) Parameter Summary
Dose Library: FGR 11

enu	Parameter	Current Value#	Base Case*	Parameter Name
-1	DCF's for external ground radiation, (mrem/yr)/(pCi/g)			
-1	Ac-227 (Source: FGR 12)	4.951E-04	4.951E-04	DCF1(1)
-1	Ac-228 (Source: FGR 12)	5.978E+00	5.978E+00	DCF1(2)
-1	At-218 (Source: FGR 12)	5.847E-03	5.847E-03	DCF1(3)
-1	At-219 (Source: no data)	0.000E+00	-2.000E+00	DCF1(4)
-1	Bi-210 (Source: FGR 12)	3.606E-03	3.606E-03	DCF1(5)
-1	Bi-211 (Source: FGR 12)	2.559E-01	2.559E-01	DCF1(6)
-1	Bi-212 (Source: FGR 12)	1.171E+00	1.171E+00	DCF1(7)
-1	Bi-214 (Source: FGR 12)	9.808E+00	9.808E+00	DCF1(8)
-1	Bi-215 (Source: no data)	0.000E+00	-2.000E+00	DCF1(9)
-1	Fr-223 (Source: FGR 12)	1.980E-01	1.980E-01	DCF1(10)
-1	Hg-206 (Source: no data)	0.000E+00	-2.000E+00	DCF1(11)
-1	Pa-231 (Source: FGR 12)	1.906E-01	1.906E-01	DCF1(12)
-1	Pa-234 (Source: FGR 12)	1.155E+01	1.155E+01	DCF1(13)
-1	Pa-234m (Source: FGR 12)	8.967E-02	8.967E-02	DCF1(14)
-1	Pb-210 (Source: FGR 12)	2.447E-03	2.447E-03	DCF1(15)
-1	Pb-211 (Source: FGR 12)	3.064E-01	3.064E-01	DCF1(16)
-1	Pb-212 (Source: FGR 12)	7.043E-01	7.043E-01	DCF1(17)
-1	Pb-214 (Source: FGR 12)	1.341E+00	1.341E+00	DCF1(18)
-1	Po-210 (Source: FGR 12)	5.231E-05	5.231E-05	DCF1(19)
-1	Po-211 (Source: FGR 12)	4.764E-02	4.764E-02	DCF1(20)
-1	Po-212 (Source: FGR 12)	0.000E+00	0.000E+00	DCF1(21)
-1	Po-214 (Source: FGR 12)	5.138E-04	5.138E-04	DCF1(22)
-1	Po-215 (Source: FGR 12)	1.016E-03	1.016E-03	DCF1(23)
-1	Po-216 (Source: FGR 12)	1.042E-04	1.042E-04	DCF1(24)
-1	Po-218 (Source: FGR 12)	5.642E-05	5.642E-05	DCF1(25)
-1	Ra-223 (Source: FGR 12)	6.034E-01	6.034E-01	DCF1(26)
-1	Ra-224 (Source: FGR 12)	5.119E-02	5.119E-02	DCF1(27)
-1	Ra-226 (Source: FGR 12)	3.176E-02	3.176E-02	DCF1(28)
-1	Ra-228 (Source: FGR 12)	0.000E+00	0.000E+00	DCF1(29)
-1	Rn-218 (Source: FGR 12)	4.540E-03	4.540E-03	DCF1(30)
-1	Rn-219 (Source: FGR 12)	3.083E-01	3.083E-01	DCF1(31)
-1	Rn-220 (Source: FGR 12)	2.298E-03	2.298E-03	DCF1(32)
-1	Rn-222 (Source: FGR 12)	2.354E-03	2.354E-03	DCF1(33)
-1	Th-227 (Source: FGR 12)	5.212E-01	5.212E-01	DCF1(34)
-1	Th-228 (Source: FGR 12)	7.940E-03	7.940E-03	DCF1(35)
-1	Th-230 (Source: FGR 12)	1.209E-03	1.209E-03	DCF1(36)
-1	Th-231 (Source: FGR 12)	3.643E-02	3.643E-02	DCF1(37)
-1	Th-232 (Source: FGR 12)	5.212E-04	5.212E-04	DCF1(38)
-1	Th-234 (Source: FGR 12)	2.410E-02	2.410E-02	DCF1(39)
-1	Tl-206 (Source: FGR 12)	7.697E-03	7.697E-03	DCF1(40)
-1	Tl-207 (Source: FGR 12)	1.980E-02	1.980E-02	DCF1(41)
-1	Tl-208 (Source: FGR 12)	2.298E+01	2.298E+01	DCF1(42)
-1	Tl-210 (Source: no data)	0.000E+00	-2.000E+00	DCF1(43)
-1	U-234 (Source: FGR 12)	4.017E-04	4.017E-04	DCF1(44)
-1	U-235 (Source: FGR 12)	7.211E-01	7.211E-01	DCF1(45)
-1	U-238 (Source: FGR 12)	1.031E-04	1.031E-04	DCF1(46)
-1	Dose conversion factors for inhalation, mrem/pCi:			
-1	Ac-227+D	6.724E+00	6.700E+00	DCF2(1)

Dose Conversion Factor (and Related) Parameter Summary (continued)

Dose Library: FGR 11

enu	Parameter	Current Value#	Base Case*	Parameter Name
-1	Ac-227+D1	6.724E+00	6.700E+00	DCF2(2)
-1	Ac-227+D2	6.708E+00	6.700E+00	DCF2(3)
-1	Ac-227+D3	6.708E+00	6.700E+00	DCF2(4)
-1	Ac-227+D4	6.700E+00	6.700E+00	DCF2(5)
-1	Ac-227+D5	6.700E+00	6.700E+00	DCF2(6)
-1	Pa-231	1.280E+00	1.280E+00	DCF2(7)
-1	Pb-210+D	2.320E-02	1.360E-02	DCF2(13)
-1	Pb-210+D1	1.380E-02	1.360E-02	DCF2(14)
-1	Pb-210+D2	1.360E-02	1.360E-02	DCF2(15)
-1	Ra-226+D	8.594E-03	8.580E-03	DCF2(16)
-1	Ra-226+D1	8.594E-03	8.580E-03	DCF2(19)
-1	Ra-226+D2	8.587E-03	8.580E-03	DCF2(22)
-1	Ra-226+D3	8.587E-03	8.580E-03	DCF2(25)
-1	Ra-226+D4	8.580E-03	8.580E-03	DCF2(28)
-1	Ra-228+D	5.078E-03	4.770E-03	DCF2(31)
-1	Th-228+D	3.454E-01	3.420E-01	DCF2(32)
-1	Th-230	3.260E-01	3.260E-01	DCF2(33)
-1	Th-232	1.640E+00	1.640E+00	DCF2(48)
-1	U-234	1.320E-01	1.320E-01	DCF2(49)
-1	U-235+D	1.230E-01	1.230E-01	DCF2(64)
-1	U-238	1.180E-01	1.180E-01	DCF2(70)
-1	U-238+D	1.180E-01	1.180E-01	DCF2(71)
-1	U-238+D1	1.180E-01	1.180E-01	DCF2(86)
-1	Dose conversion factors for ingestion, mrem/pCi:			
-1	Ac-227+D	1.480E-02	1.410E-02	DCF3(1)
-1	Ac-227+D1	1.480E-02	1.410E-02	DCF3(2)
-1	Ac-227+D2	1.477E-02	1.410E-02	DCF3(3)
-1	Ac-227+D3	1.477E-02	1.410E-02	DCF3(4)
-1	Ac-227+D4	1.411E-02	1.410E-02	DCF3(5)
-1	Ac-227+D5	1.411E-02	1.410E-02	DCF3(6)
-1	Pa-231	1.060E-02	1.060E-02	DCF3(7)
-1	Pb-210+D	7.276E-03	5.370E-03	DCF3(13)
-1	Pb-210+D1	5.376E-03	5.370E-03	DCF3(14)
-1	Pb-210+D2	5.370E-03	5.370E-03	DCF3(15)
-1	Ra-226+D	1.321E-03	1.320E-03	DCF3(16)
-1	Ra-226+D1	1.321E-03	1.320E-03	DCF3(19)
-1	Ra-226+D2	1.320E-03	1.320E-03	DCF3(22)
-1	Ra-226+D3	1.320E-03	1.320E-03	DCF3(25)
-1	Ra-226+D4	1.320E-03	1.320E-03	DCF3(28)
-1	Ra-228+D	1.442E-03	1.440E-03	DCF3(31)
-1	Th-228+D	8.086E-04	3.960E-04	DCF3(32)
-1	Th-230	5.480E-04	5.480E-04	DCF3(33)
-1	Th-232	2.730E-03	2.730E-03	DCF3(48)
-1	U-234	2.830E-04	2.830E-04	DCF3(49)
-1	U-235+D	2.673E-04	2.660E-04	DCF3(64)
-1	U-238	2.550E-04	2.550E-04	DCF3(70)
-1	U-238+D	2.709E-04	2.550E-04	DCF3(71)
-1	U-238+D1	2.687E-04	2.550E-04	DCF3(86)

Dose Conversion Factor (and Related) Parameter Summary (continued)

Dose Library: FGR 11

enu	Parameter	Current Value#	Base Case*	Parameter Name
-34	Food transfer factors:			
-34	Ac-227+D , plant/soil concentration ratio, dimensionless	2.500E-03	2.500E-03	RTF(1,1)
-34	Ac-227+D , beef/livestock-intake ratio, (pCi/kg)/(pCi/d)	2.000E-05	2.000E-05	RTF(1,2)
-34	Ac-227+D , milk/livestock-intake ratio, (pCi/L)/(pCi/d)	2.000E-05	2.000E-05	RTF(1,3)
-34				
-34	Ac-227+D1 , plant/soil concentration ratio, dimensionless	2.500E-03	2.500E-03	RTF(2,1)
-34	Ac-227+D1 , beef/livestock-intake ratio, (pCi/kg)/(pCi/d)	2.000E-05	2.000E-05	RTF(2,2)
-34	Ac-227+D1 , milk/livestock-intake ratio, (pCi/L)/(pCi/d)	2.000E-05	2.000E-05	RTF(2,3)
-34				
-34	Ac-227+D2 , plant/soil concentration ratio, dimensionless	2.500E-03	2.500E-03	RTF(3,1)
-34	Ac-227+D2 , beef/livestock-intake ratio, (pCi/kg)/(pCi/d)	2.000E-05	2.000E-05	RTF(3,2)
-34	Ac-227+D2 , milk/livestock-intake ratio, (pCi/L)/(pCi/d)	2.000E-05	2.000E-05	RTF(3,3)
-34				
-34	Ac-227+D3 , plant/soil concentration ratio, dimensionless	2.500E-03	2.500E-03	RTF(4,1)
-34	Ac-227+D3 , beef/livestock-intake ratio, (pCi/kg)/(pCi/d)	2.000E-05	2.000E-05	RTF(4,2)
-34	Ac-227+D3 , milk/livestock-intake ratio, (pCi/L)/(pCi/d)	2.000E-05	2.000E-05	RTF(4,3)
-34				
-34	Ac-227+D4 , plant/soil concentration ratio, dimensionless	2.500E-03	2.500E-03	RTF(5,1)
-34	Ac-227+D4 , beef/livestock-intake ratio, (pCi/kg)/(pCi/d)	2.000E-05	2.000E-05	RTF(5,2)
-34	Ac-227+D4 , milk/livestock-intake ratio, (pCi/L)/(pCi/d)	2.000E-05	2.000E-05	RTF(5,3)
-34				
-34	Ac-227+D5 , plant/soil concentration ratio, dimensionless	2.500E-03	2.500E-03	RTF(6,1)
-34	Ac-227+D5 , beef/livestock-intake ratio, (pCi/kg)/(pCi/d)	2.000E-05	2.000E-05	RTF(6,2)
-34	Ac-227+D5 , milk/livestock-intake ratio, (pCi/L)/(pCi/d)	2.000E-05	2.000E-05	RTF(6,3)
-34				
-34	Pa-231 , plant/soil concentration ratio, dimensionless	1.000E-02	1.000E-02	RTF(7,1)
-34	Pa-231 , beef/livestock-intake ratio, (pCi/kg)/(pCi/d)	5.000E-03	5.000E-03	RTF(7,2)
-34	Pa-231 , milk/livestock-intake ratio, (pCi/L)/(pCi/d)	5.000E-06	5.000E-06	RTF(7,3)
-34				
-34	Pb-210+D , plant/soil concentration ratio, dimensionless	1.000E-02	1.000E-02	RTF(13,1)
-34	Pb-210+D , beef/livestock-intake ratio, (pCi/kg)/(pCi/d)	8.000E-04	8.000E-04	RTF(13,2)
-34	Pb-210+D , milk/livestock-intake ratio, (pCi/L)/(pCi/d)	3.000E-04	3.000E-04	RTF(13,3)
-34				
-34	Pb-210+D1 , plant/soil concentration ratio, dimensionless	1.000E-02	1.000E-02	RTF(14,1)
-34	Pb-210+D1 , beef/livestock-intake ratio, (pCi/kg)/(pCi/d)	8.000E-04	8.000E-04	RTF(14,2)
-34	Pb-210+D1 , milk/livestock-intake ratio, (pCi/L)/(pCi/d)	3.000E-04	3.000E-04	RTF(14,3)
-34				
-34	Pb-210+D2 , plant/soil concentration ratio, dimensionless	1.000E-02	1.000E-02	RTF(15,1)
-34	Pb-210+D2 , beef/livestock-intake ratio, (pCi/kg)/(pCi/d)	8.000E-04	8.000E-04	RTF(15,2)
-34	Pb-210+D2 , milk/livestock-intake ratio, (pCi/L)/(pCi/d)	3.000E-04	3.000E-04	RTF(15,3)
-34				
-34	Ra-226+D , plant/soil concentration ratio, dimensionless	4.000E-02	4.000E-02	RTF(16,1)
-34	Ra-226+D , beef/livestock-intake ratio, (pCi/kg)/(pCi/d)	1.000E-03	1.000E-03	RTF(16,2)
-34	Ra-226+D , milk/livestock-intake ratio, (pCi/L)/(pCi/d)	1.000E-03	1.000E-03	RTF(16,3)
-34				
-34	Ra-226+D1 , plant/soil concentration ratio, dimensionless	4.000E-02	4.000E-02	RTF(19,1)
-34	Ra-226+D1 , beef/livestock-intake ratio, (pCi/kg)/(pCi/d)	1.000E-03	1.000E-03	RTF(19,2)
-34	Ra-226+D1 , milk/livestock-intake ratio, (pCi/L)/(pCi/d)	1.000E-03	1.000E-03	RTF(19,3)
-34				

Dose Conversion Factor (and Related) Parameter Summary (continued)

Dose Library: FGR 11

enu	Parameter	Current Value#	Base Case*	Parameter Name
-34	Ra-226+D2 , plant/soil concentration ratio, dimensionless	4.000E-02	4.000E-02	RTF(22,1)
-34	Ra-226+D2 , beef/livestock-intake ratio, (pCi/kg)/(pCi/d)	1.000E-03	1.000E-03	RTF(22,2)
-34	Ra-226+D2 , milk/livestock-intake ratio, (pCi/L)/(pCi/d)	1.000E-03	1.000E-03	RTF(22,3)
-34				
-34	Ra-226+D3 , plant/soil concentration ratio, dimensionless	4.000E-02	4.000E-02	RTF(25,1)
-34	Ra-226+D3 , beef/livestock-intake ratio, (pCi/kg)/(pCi/d)	1.000E-03	1.000E-03	RTF(25,2)
-34	Ra-226+D3 , milk/livestock-intake ratio, (pCi/L)/(pCi/d)	1.000E-03	1.000E-03	RTF(25,3)
-34				
-34	Ra-226+D4 , plant/soil concentration ratio, dimensionless	4.000E-02	4.000E-02	RTF(28,1)
-34	Ra-226+D4 , beef/livestock-intake ratio, (pCi/kg)/(pCi/d)	1.000E-03	1.000E-03	RTF(28,2)
-34	Ra-226+D4 , milk/livestock-intake ratio, (pCi/L)/(pCi/d)	1.000E-03	1.000E-03	RTF(28,3)
-34				
-34	Ra-228+D , plant/soil concentration ratio, dimensionless	4.000E-02	4.000E-02	RTF(31,1)
-34	Ra-228+D , beef/livestock-intake ratio, (pCi/kg)/(pCi/d)	1.000E-03	1.000E-03	RTF(31,2)
-34	Ra-228+D , milk/livestock-intake ratio, (pCi/L)/(pCi/d)	1.000E-03	1.000E-03	RTF(31,3)
-34				
-34	Th-228+D , plant/soil concentration ratio, dimensionless	1.000E-03	1.000E-03	RTF(32,1)
-34	Th-228+D , beef/livestock-intake ratio, (pCi/kg)/(pCi/d)	1.000E-04	1.000E-04	RTF(32,2)
-34	Th-228+D , milk/livestock-intake ratio, (pCi/L)/(pCi/d)	5.000E-06	5.000E-06	RTF(32,3)
-34				
-34	Th-230 , plant/soil concentration ratio, dimensionless	1.000E-03	1.000E-03	RTF(33,1)
-34	Th-230 , beef/livestock-intake ratio, (pCi/kg)/(pCi/d)	1.000E-04	1.000E-04	RTF(33,2)
-34	Th-230 , milk/livestock-intake ratio, (pCi/L)/(pCi/d)	5.000E-06	5.000E-06	RTF(33,3)
-34				
-34	Th-232 , plant/soil concentration ratio, dimensionless	1.000E-03	1.000E-03	RTF(48,1)
-34	Th-232 , beef/livestock-intake ratio, (pCi/kg)/(pCi/d)	1.000E-04	1.000E-04	RTF(48,2)
-34	Th-232 , milk/livestock-intake ratio, (pCi/L)/(pCi/d)	5.000E-06	5.000E-06	RTF(48,3)
-34				
-34	U-234 , plant/soil concentration ratio, dimensionless	2.500E-03	2.500E-03	RTF(49,1)
-34	U-234 , beef/livestock-intake ratio, (pCi/kg)/(pCi/d)	3.400E-04	3.400E-04	RTF(49,2)
-34	U-234 , milk/livestock-intake ratio, (pCi/L)/(pCi/d)	6.000E-04	6.000E-04	RTF(49,3)
-34				
-34	U-235+D , plant/soil concentration ratio, dimensionless	2.500E-03	2.500E-03	RTF(64,1)
-34	U-235+D , beef/livestock-intake ratio, (pCi/kg)/(pCi/d)	3.400E-04	3.400E-04	RTF(64,2)
-34	U-235+D , milk/livestock-intake ratio, (pCi/L)/(pCi/d)	6.000E-04	6.000E-04	RTF(64,3)
-34				
-34	U-238 , plant/soil concentration ratio, dimensionless	2.500E-03	2.500E-03	RTF(70,1)
-34	U-238 , beef/livestock-intake ratio, (pCi/kg)/(pCi/d)	3.400E-04	3.400E-04	RTF(70,2)
-34	U-238 , milk/livestock-intake ratio, (pCi/L)/(pCi/d)	6.000E-04	6.000E-04	RTF(70,3)
-34				
-34	U-238+D , plant/soil concentration ratio, dimensionless	2.500E-03	2.500E-03	RTF(71,1)
-34	U-238+D , beef/livestock-intake ratio, (pCi/kg)/(pCi/d)	3.400E-04	3.400E-04	RTF(71,2)
-34	U-238+D , milk/livestock-intake ratio, (pCi/L)/(pCi/d)	6.000E-04	6.000E-04	RTF(71,3)
-34				
-34	U-238+D1 , plant/soil concentration ratio, dimensionless	2.500E-03	2.500E-03	RTF(86,1)
-34	U-238+D1 , beef/livestock-intake ratio, (pCi/kg)/(pCi/d)	3.400E-04	3.400E-04	RTF(86,2)
-34	U-238+D1 , milk/livestock-intake ratio, (pCi/L)/(pCi/d)	6.000E-04	6.000E-04	RTF(86,3)
-34				

ummary : GKP Maintenance Worker Inhalation
ile : C:\USERS\CLAUDE\DOCUMENTS\0 GKP DOSE\RESRAD CW\GKP MAINTENANCE WORKER - INHALATION.RAD

Dose Conversion Factor (and Related) Parameter Summary (continued)
Dose Library: FGR 11

enu	Parameter	Current Value#	Base Case*	Parameter Name
-5	Bioaccumulation factors, fresh water, L/kg:			
-5	Ac-227+D , fish	1.500E+01	1.500E+01	BIOFAC(1,1)
-5	Ac-227+D , crustacea and mollusks	1.000E+03	1.000E+03	BIOFAC(1,2)
-5				
-5	Ac-227+D1 , fish	1.500E+01	1.500E+01	BIOFAC(2,1)
-5	Ac-227+D1 , crustacea and mollusks	1.000E+03	1.000E+03	BIOFAC(2,2)
-5				
-5	Ac-227+D2 , fish	1.500E+01	1.500E+01	BIOFAC(3,1)
-5	Ac-227+D2 , crustacea and mollusks	1.000E+03	1.000E+03	BIOFAC(3,2)
-5				
-5	Ac-227+D3 , fish	1.500E+01	1.500E+01	BIOFAC(4,1)
-5	Ac-227+D3 , crustacea and mollusks	1.000E+03	1.000E+03	BIOFAC(4,2)
-5				
-5	Ac-227+D4 , fish	1.500E+01	1.500E+01	BIOFAC(5,1)
-5	Ac-227+D4 , crustacea and mollusks	1.000E+03	1.000E+03	BIOFAC(5,2)
-5				
-5	Ac-227+D5 , fish	1.500E+01	1.500E+01	BIOFAC(6,1)
-5	Ac-227+D5 , crustacea and mollusks	1.000E+03	1.000E+03	BIOFAC(6,2)
-5				
-5	Pa-231 , fish	1.000E+01	1.000E+01	BIOFAC(7,1)
-5	Pa-231 , crustacea and mollusks	1.100E+02	1.100E+02	BIOFAC(7,2)
-5				
-5	Pb-210+D , fish	3.000E+02	3.000E+02	BIOFAC(13,1)
-5	Pb-210+D , crustacea and mollusks	1.000E+02	1.000E+02	BIOFAC(13,2)
-5				
-5	Pb-210+D1 , fish	3.000E+02	3.000E+02	BIOFAC(14,1)
-5	Pb-210+D1 , crustacea and mollusks	1.000E+02	1.000E+02	BIOFAC(14,2)
-5				
-5	Pb-210+D2 , fish	3.000E+02	3.000E+02	BIOFAC(15,1)
-5	Pb-210+D2 , crustacea and mollusks	1.000E+02	1.000E+02	BIOFAC(15,2)
-5				
-5	Ra-226+D , fish	5.000E+01	5.000E+01	BIOFAC(16,1)
-5	Ra-226+D , crustacea and mollusks	2.500E+02	2.500E+02	BIOFAC(16,2)
-5				
-5	Ra-226+D1 , fish	5.000E+01	5.000E+01	BIOFAC(19,1)
-5	Ra-226+D1 , crustacea and mollusks	2.500E+02	2.500E+02	BIOFAC(19,2)
-5				
-5	Ra-226+D2 , fish	5.000E+01	5.000E+01	BIOFAC(22,1)
-5	Ra-226+D2 , crustacea and mollusks	2.500E+02	2.500E+02	BIOFAC(22,2)
-5				
-5	Ra-226+D3 , fish	5.000E+01	5.000E+01	BIOFAC(25,1)
-5	Ra-226+D3 , crustacea and mollusks	2.500E+02	2.500E+02	BIOFAC(25,2)
-5				
-5	Ra-226+D4 , fish	5.000E+01	5.000E+01	BIOFAC(28,1)
-5	Ra-226+D4 , crustacea and mollusks	2.500E+02	2.500E+02	BIOFAC(28,2)
-5				
-5	Ra-228+D , fish	5.000E+01	5.000E+01	BIOFAC(31,1)
-5	Ra-228+D , crustacea and mollusks	2.500E+02	2.500E+02	BIOFAC(31,2)
-5				

ummary : GKP Maintenance Worker Inhalation
ile : C:\USERS\CLAUDE\DOCUMENTS\0 GKP DOSE\RESRAD CW\GKP MAINTENANCE WORKER - INHALATION.RAD

Dose Conversion Factor (and Related) Parameter Summary (continued)
Dose Library: FGR 11

enu	Parameter	Current Value#	Base Case*	Parameter Name
-5	Th-228+D , fish	1.000E+02	1.000E+02	BIOFAC(32,1)
-5	Th-228+D , crustacea and mollusks	5.000E+02	5.000E+02	BIOFAC(32,2)
-5				
-5	Th-230 , fish	1.000E+02	1.000E+02	BIOFAC(33,1)
-5	Th-230 , crustacea and mollusks	5.000E+02	5.000E+02	BIOFAC(33,2)
-5				
-5	Th-232 , fish	1.000E+02	1.000E+02	BIOFAC(48,1)
-5	Th-232 , crustacea and mollusks	5.000E+02	5.000E+02	BIOFAC(48,2)
-5				
-5	U-234 , fish	1.000E+01	1.000E+01	BIOFAC(49,1)
-5	U-234 , crustacea and mollusks	6.000E+01	6.000E+01	BIOFAC(49,2)
-5				
-5	U-235+D , fish	1.000E+01	1.000E+01	BIOFAC(64,1)
-5	U-235+D , crustacea and mollusks	6.000E+01	6.000E+01	BIOFAC(64,2)
-5				
-5	U-238 , fish	1.000E+01	1.000E+01	BIOFAC(70,1)
-5	U-238 , crustacea and mollusks	6.000E+01	6.000E+01	BIOFAC(70,2)
-5				
-5	U-238+D , fish	1.000E+01	1.000E+01	BIOFAC(71,1)
-5	U-238+D , crustacea and mollusks	6.000E+01	6.000E+01	BIOFAC(71,2)
-5				
-5	U-238+D1 , fish	1.000E+01	1.000E+01	BIOFAC(86,1)
-5	U-238+D1 , crustacea and mollusks	6.000E+01	6.000E+01	BIOFAC(86,2)
-5				

For DCF1(xxx) only, factors are for infinite depth & area. See ETFG table in Ground Pathway of Detailed Report.
Base Case means Default.Lib w/o Associate Nuclide contributions.

ummary : GKP Maintenance Worker Inhalation
ile : C:\USERS\CLAUDE\DOCUMENTS\0 GKP DOSE\RESRAD CW\GKP MAINTENANCE WORKER - INHALATION.RAD

Site-Specific Parameter Summary

enu	Parameter	User Input	Default	Used by RESRAD (If different from user input)	Parameter Name
011	Area of contaminated zone (m**2)	2.000E+02	1.000E+04	---	AREA
011	Thickness of contaminated zone (m)	1.500E-01	2.000E+00	---	THICK0
011	Fraction of contamination that is submerged	0.000E+00	0.000E+00	---	SUBMFRACT
011	Length parallel to aquifer flow (m)	1.000E+02	1.000E+02	---	LCZPAQ
011	Basic radiation dose limit (mrem/yr)	2.500E+01	3.000E+01	---	BRDL
011	Time since placement of material (yr)	0.000E+00	0.000E+00	---	TI
011	Times for calculations (yr)	1.000E+00	1.000E+00	---	T(2)
011	Times for calculations (yr)	3.000E+00	3.000E+00	---	T(3)
011	Times for calculations (yr)	1.000E+01	1.000E+01	---	T(4)
011	Times for calculations (yr)	3.000E+01	3.000E+01	---	T(5)
011	Times for calculations (yr)	1.000E+02	1.000E+02	---	T(6)
011	Times for calculations (yr)	3.000E+02	3.000E+02	---	T(7)
011	Times for calculations (yr)	1.000E+03	1.000E+03	---	T(8)
011	Times for calculations (yr)	not used	0.000E+00	---	T(9)
011	Times for calculations (yr)	not used	0.000E+00	---	T(10)
012	Initial principal radionuclide (pCi/g): Ra-226	3.650E+01	0.000E+00	---	S1(16)
012	Initial principal radionuclide (pCi/g): Th-232	2.400E+00	0.000E+00	---	S1(48)
012	Initial principal radionuclide (pCi/g): U-234	1.390E+01	0.000E+00	---	S1(49)
012	Initial principal radionuclide (pCi/g): U-235	8.400E-01	0.000E+00	---	S1(64)
012	Initial principal radionuclide (pCi/g): U-238	1.390E+01	0.000E+00	---	S1(70)
012	Concentration in groundwater (pCi/L): Ra-226	not used	0.000E+00	---	W1(16)
012	Concentration in groundwater (pCi/L): Th-232	not used	0.000E+00	---	W1(48)
012	Concentration in groundwater (pCi/L): U-234	not used	0.000E+00	---	W1(49)
012	Concentration in groundwater (pCi/L): U-235	not used	0.000E+00	---	W1(64)
012	Concentration in groundwater (pCi/L): U-238	not used	0.000E+00	---	W1(70)
013	Cover depth (m)	0.000E+00	0.000E+00	---	COVER0
013	Density of cover material (g/cm**3)	not used	1.500E+00	---	DENSCV
013	Cover depth erosion rate (m/yr)	not used	1.000E-03	---	VCV
013	Density of contaminated zone (g/cm**3)	1.500E+00	1.500E+00	---	DENSCZ
013	Contaminated zone erosion rate (m/yr)	1.000E-03	1.000E-03	---	VCZ
013	Contaminated zone total porosity	4.000E-01	4.000E-01	---	TPCZ
013	Contaminated zone field capacity	2.000E-01	2.000E-01	---	FCCZ
013	Contaminated zone hydraulic conductivity (m/yr)	1.000E+01	1.000E+01	---	HCCZ
013	Contaminated zone b parameter	5.300E+00	5.300E+00	---	BCZ
013	Average annual wind speed (m/sec)	2.000E+00	2.000E+00	---	WIND
013	Humidity in air (g/m**3)	not used	8.000E+00	---	HUMID
013	Evapotranspiration coefficient	5.000E-01	5.000E-01	---	EVAPTR
013	Precipitation (m/yr)	1.000E+00	1.000E+00	---	PRECIP
013	Irrigation (m/yr)	2.000E-01	2.000E-01	---	RI
013	Irrigation mode	overhead	overhead	---	IDITCH
013	Runoff coefficient	2.000E-01	2.000E-01	---	RUNOFF
013	Watershed area for nearby stream or pond (m**2)	1.000E+06	1.000E+06	---	WAREA
013	Accuracy for water/soil computations	1.000E-03	1.000E-03	---	EPS
014	Density of saturated zone (g/cm**3)	1.500E+00	1.500E+00	---	DENSAQ
014	Saturated zone total porosity	4.000E-01	4.000E-01	---	TPSZ
014	Saturated zone effective porosity	2.000E-01	2.000E-01	---	EPSZ
014	Saturated zone field capacity	2.000E-01	2.000E-01	---	FCSZ

Site-Specific Parameter Summary (continued)

enu	Parameter	User Input	Default	Used by RESRAD (If different from user input)	Parameter Name
014	Saturated zone hydraulic conductivity (m/yr)	1.000E+02	1.000E+02	---	HCSZ
014	Saturated zone hydraulic gradient	2.000E-02	2.000E-02	---	HGWT
014	Saturated zone b parameter	5.300E+00	5.300E+00	---	BSZ
014	Water table drop rate (m/yr)	1.000E-03	1.000E-03	---	VWT
014	Well pump intake depth (m below water table)	1.000E+01	1.000E+01	---	DWIBWT
014	Model: Nondispersion (ND) or Mass-Balance (MB)	ND	ND	---	MODEL
014	Well pumping rate (m**3/yr)	2.500E+02	2.500E+02	---	UW
015	Number of unsaturated zone strata	1	1	---	NS
015	Unsat. zone 1, thickness (m)	4.000E+00	4.000E+00	---	H(1)
015	Unsat. zone 1, soil density (g/cm**3)	1.500E+00	1.500E+00	---	DENSUZ(1)
015	Unsat. zone 1, total porosity	4.000E-01	4.000E-01	---	TPUZ(1)
015	Unsat. zone 1, effective porosity	2.000E-01	2.000E-01	---	EPUZ(1)
015	Unsat. zone 1, field capacity	2.000E-01	2.000E-01	---	FCUZ(1)
015	Unsat. zone 1, soil-specific b parameter	5.300E+00	5.300E+00	---	BUZ(1)
015	Unsat. zone 1, hydraulic conductivity (m/yr)	1.000E+01	1.000E+01	---	HCUZ(1)
016	Distribution coefficients for Ra-226				
016	Contaminated zone (cm**3/g)	7.000E+01	7.000E+01	---	DCNUCC(16)
016	Unsaturated zone 1 (cm**3/g)	7.000E+01	7.000E+01	---	DCNUCU(16,1)
016	Saturated zone (cm**3/g)	7.000E+01	7.000E+01	---	DCNUCS(16)
016	Leach rate (/yr)	0.000E+00	0.000E+00	3.165E-02	ALEACH(16)
016	Solubility constant	0.000E+00	0.000E+00	not used	SOLUBK(16)
016	Distribution coefficients for Th-232				
016	Contaminated zone (cm**3/g)	6.000E+04	6.000E+04	---	DCNUCC(48)
016	Unsaturated zone 1 (cm**3/g)	6.000E+04	6.000E+04	---	DCNUCU(48,1)
016	Saturated zone (cm**3/g)	6.000E+04	6.000E+04	---	DCNUCS(48)
016	Leach rate (/yr)	0.000E+00	0.000E+00	3.704E-05	ALEACH(48)
016	Solubility constant	0.000E+00	0.000E+00	not used	SOLUBK(48)
016	Distribution coefficients for U-234				
016	Contaminated zone (cm**3/g)	5.000E+01	5.000E+01	---	DCNUCC(49)
016	Unsaturated zone 1 (cm**3/g)	5.000E+01	5.000E+01	---	DCNUCU(49,1)
016	Saturated zone (cm**3/g)	5.000E+01	5.000E+01	---	DCNUCS(49)
016	Leach rate (/yr)	0.000E+00	0.000E+00	4.426E-02	ALEACH(49)
016	Solubility constant	0.000E+00	0.000E+00	not used	SOLUBK(49)
016	Distribution coefficients for U-235				
016	Contaminated zone (cm**3/g)	5.000E+01	5.000E+01	---	DCNUCC(64)
016	Unsaturated zone 1 (cm**3/g)	5.000E+01	5.000E+01	---	DCNUCU(64,1)
016	Saturated zone (cm**3/g)	5.000E+01	5.000E+01	---	DCNUCS(64)
016	Leach rate (/yr)	0.000E+00	0.000E+00	4.426E-02	ALEACH(64)
016	Solubility constant	0.000E+00	0.000E+00	not used	SOLUBK(64)
016	Distribution coefficients for U-238				
016	Contaminated zone (cm**3/g)	5.000E+01	5.000E+01	---	DCNUCC(70)
016	Unsaturated zone 1 (cm**3/g)	5.000E+01	5.000E+01	---	DCNUCU(70,1)
016	Saturated zone (cm**3/g)	5.000E+01	5.000E+01	---	DCNUCS(70)
016	Leach rate (/yr)	0.000E+00	0.000E+00	4.426E-02	ALEACH(70)
016	Solubility constant	0.000E+00	0.000E+00	not used	SOLUBK(70)

Site-Specific Parameter Summary (continued)

enu	Parameter	User Input	Default	Used by RESRAD (If different from user input)	Parameter Name
016	Distribution coefficients for daughter Ac-227				
016	Contaminated zone (cm**3/g)	2.000E+01	2.000E+01	---	DCNUCC(1)
016	Unsaturated zone 1 (cm**3/g)	2.000E+01	2.000E+01	---	DCNUCU(1,1)
016	Saturated zone (cm**3/g)	2.000E+01	2.000E+01	---	DCNUCS(1)
016	Leach rate (/yr)	0.000E+00	0.000E+00	1.099E-01	ALEACH(1)
016	Solubility constant	0.000E+00	0.000E+00	not used	SOLUBK(1)
016	Distribution coefficients for daughter Pa-231				
016	Contaminated zone (cm**3/g)	5.000E+01	5.000E+01	---	DCNUCC(7)
016	Unsaturated zone 1 (cm**3/g)	5.000E+01	5.000E+01	---	DCNUCU(7,1)
016	Saturated zone (cm**3/g)	5.000E+01	5.000E+01	---	DCNUCS(7)
016	Leach rate (/yr)	0.000E+00	0.000E+00	4.426E-02	ALEACH(7)
016	Solubility constant	0.000E+00	0.000E+00	not used	SOLUBK(7)
016	Distribution coefficients for daughter Pb-210				
016	Contaminated zone (cm**3/g)	1.000E+02	1.000E+02	---	DCNUCC(13)
016	Unsaturated zone 1 (cm**3/g)	1.000E+02	1.000E+02	---	DCNUCU(13,1)
016	Saturated zone (cm**3/g)	1.000E+02	1.000E+02	---	DCNUCS(13)
016	Leach rate (/yr)	0.000E+00	0.000E+00	2.217E-02	ALEACH(13)
016	Solubility constant	0.000E+00	0.000E+00	not used	SOLUBK(13)
016	Distribution coefficients for daughter Ra-228				
016	Contaminated zone (cm**3/g)	7.000E+01	7.000E+01	---	DCNUCC(31)
016	Unsaturated zone 1 (cm**3/g)	7.000E+01	7.000E+01	---	DCNUCU(31,1)
016	Saturated zone (cm**3/g)	7.000E+01	7.000E+01	---	DCNUCS(31)
016	Leach rate (/yr)	0.000E+00	0.000E+00	3.165E-02	ALEACH(31)
016	Solubility constant	0.000E+00	0.000E+00	not used	SOLUBK(31)
016	Distribution coefficients for daughter Th-228				
016	Contaminated zone (cm**3/g)	6.000E+04	6.000E+04	---	DCNUCC(32)
016	Unsaturated zone 1 (cm**3/g)	6.000E+04	6.000E+04	---	DCNUCU(32,1)
016	Saturated zone (cm**3/g)	6.000E+04	6.000E+04	---	DCNUCS(32)
016	Leach rate (/yr)	0.000E+00	0.000E+00	3.704E-05	ALEACH(32)
016	Solubility constant	0.000E+00	0.000E+00	not used	SOLUBK(32)
016	Distribution coefficients for daughter Th-230				
016	Contaminated zone (cm**3/g)	6.000E+04	6.000E+04	---	DCNUCC(33)
016	Unsaturated zone 1 (cm**3/g)	6.000E+04	6.000E+04	---	DCNUCU(33,1)
016	Saturated zone (cm**3/g)	6.000E+04	6.000E+04	---	DCNUCS(33)
016	Leach rate (/yr)	0.000E+00	0.000E+00	3.704E-05	ALEACH(33)
016	Solubility constant	0.000E+00	0.000E+00	not used	SOLUBK(33)
017	Inhalation rate (m**3/yr)	6.840E+03	8.400E+03	---	INHALR
017	Mass loading for inhalation (g/m**3)	1.000E-04	1.000E-04	---	MLINH
017	Exposure duration	3.000E+01	3.000E+01	---	ED
017	Shielding factor, inhalation	4.000E-01	4.000E-01	---	SHF3
017	Shielding factor, external gamma	not used	7.000E-01	---	SHF1
017	Fraction of time spent indoors	0.000E+00	5.000E-01	---	FIND
017	Fraction of time spent outdoors (on site)	2.280E-01	2.500E-01	---	FOTD
017	Shape factor flag, external gamma	not used	1.000E+00	>0 shows circular AREA.	FS

Site-Specific Parameter Summary (continued)

enu	Parameter	User Input	Default	Used by RESRAD (If different from user input)	Parameter Name
017	Radii of shape factor array (used if FS = -1):				
017	Outer annular radius (m), ring 1:	not used	5.000E+01	---	RAD_SHAPE(1)
017	Outer annular radius (m), ring 2:	not used	7.071E+01	---	RAD_SHAPE(2)
017	Outer annular radius (m), ring 3:	not used	0.000E+00	---	RAD_SHAPE(3)
017	Outer annular radius (m), ring 4:	not used	0.000E+00	---	RAD_SHAPE(4)
017	Outer annular radius (m), ring 5:	not used	0.000E+00	---	RAD_SHAPE(5)
017	Outer annular radius (m), ring 6:	not used	0.000E+00	---	RAD_SHAPE(6)
017	Outer annular radius (m), ring 7:	not used	0.000E+00	---	RAD_SHAPE(7)
017	Outer annular radius (m), ring 8:	not used	0.000E+00	---	RAD_SHAPE(8)
017	Outer annular radius (m), ring 9:	not used	0.000E+00	---	RAD_SHAPE(9)
017	Outer annular radius (m), ring 10:	not used	0.000E+00	---	RAD_SHAPE(10)
017	Outer annular radius (m), ring 11:	not used	0.000E+00	---	RAD_SHAPE(11)
017	Outer annular radius (m), ring 12:	not used	0.000E+00	---	RAD_SHAPE(12)
017	Fractions of annular areas within AREA:				
017	Ring 1	not used	1.000E+00	---	FRACA(1)
017	Ring 2	not used	2.732E-01	---	FRACA(2)
017	Ring 3	not used	0.000E+00	---	FRACA(3)
017	Ring 4	not used	0.000E+00	---	FRACA(4)
017	Ring 5	not used	0.000E+00	---	FRACA(5)
017	Ring 6	not used	0.000E+00	---	FRACA(6)
017	Ring 7	not used	0.000E+00	---	FRACA(7)
017	Ring 8	not used	0.000E+00	---	FRACA(8)
017	Ring 9	not used	0.000E+00	---	FRACA(9)
017	Ring 10	not used	0.000E+00	---	FRACA(10)
017	Ring 11	not used	0.000E+00	---	FRACA(11)
017	Ring 12	not used	0.000E+00	---	FRACA(12)
018	Fruits, vegetables and grain consumption (kg/yr)	not used	1.600E+02	---	DIET(1)
018	Leafy vegetable consumption (kg/yr)	not used	1.400E+01	---	DIET(2)
018	Milk consumption (L/yr)	not used	9.200E+01	---	DIET(3)
018	Meat and poultry consumption (kg/yr)	not used	6.300E+01	---	DIET(4)
018	Fish consumption (kg/yr)	not used	5.400E+00	---	DIET(5)
018	Other seafood consumption (kg/yr)	not used	9.000E-01	---	DIET(6)
018	Soil ingestion rate (g/yr)	not used	3.650E+01	---	SOIL
018	Drinking water intake (L/yr)	not used	5.100E+02	---	DWI
018	Contamination fraction of drinking water	not used	1.000E+00	---	FDW
018	Contamination fraction of household water	1.000E+00	1.000E+00	---	FHHW
018	Contamination fraction of livestock water	not used	1.000E+00	---	FLW
018	Contamination fraction of irrigation water	not used	1.000E+00	---	FIRW
018	Contamination fraction of aquatic food	not used	5.000E-01	---	FR9
018	Contamination fraction of plant food	not used	-1	---	FPLANT
018	Contamination fraction of meat	not used	-1	---	FMEAT
018	Contamination fraction of milk	not used	-1	---	FMILK
019	Livestock fodder intake for meat (kg/day)	not used	6.800E+01	---	LFI5
019	Livestock fodder intake for milk (kg/day)	not used	5.500E+01	---	LFI6
019	Livestock water intake for meat (L/day)	not used	5.000E+01	---	LWI5
019	Livestock water intake for milk (L/day)	not used	1.600E+02	---	LWI6
019	Livestock soil intake (kg/day)	not used	5.000E-01	---	LSI

Site-Specific Parameter Summary (continued)

enu	Parameter	User Input	Default	Used by RESRAD (If different from user input)	Parameter Name
019	Mass loading for foliar deposition (g/m**3)	not used	1.000E-04	---	MLFD
019	Depth of soil mixing layer (m)	1.500E-01	1.500E-01	---	DM
019	Depth of roots (m)	not used	9.000E-01	---	DROOT
019	Drinking water fraction from ground water	not used	1.000E+00	---	FGWDW
019	Household water fraction from ground water	1.000E+00	1.000E+00	---	FGWHH
019	Livestock water fraction from ground water	not used	1.000E+00	---	FGWLW
019	Irrigation fraction from ground water	not used	1.000E+00	---	FGWIR
19B	Wet weight crop yield for Non-Leafy (kg/m**2)	not used	7.000E-01	---	YV(1)
19B	Wet weight crop yield for Leafy (kg/m**2)	not used	1.500E+00	---	YV(2)
19B	Wet weight crop yield for Fodder (kg/m**2)	not used	1.100E+00	---	YV(3)
19B	Growing Season for Non-Leafy (years)	not used	1.700E-01	---	TE(1)
19B	Growing Season for Leafy (years)	not used	2.500E-01	---	TE(2)
19B	Growing Season for Fodder (years)	not used	8.000E-02	---	TE(3)
19B	Translocation Factor for Non-Leafy	not used	1.000E-01	---	TIV(1)
19B	Translocation Factor for Leafy	not used	1.000E+00	---	TIV(2)
19B	Translocation Factor for Fodder	not used	1.000E+00	---	TIV(3)
19B	Dry Foliar Interception Fraction for Non-Leafy	not used	2.500E-01	---	RDRY(1)
19B	Dry Foliar Interception Fraction for Leafy	not used	2.500E-01	---	RDRY(2)
19B	Dry Foliar Interception Fraction for Fodder	not used	2.500E-01	---	RDRY(3)
19B	Wet Foliar Interception Fraction for Non-Leafy	not used	2.500E-01	---	RWET(1)
19B	Wet Foliar Interception Fraction for Leafy	not used	2.500E-01	---	RWET(2)
19B	Wet Foliar Interception Fraction for Fodder	not used	2.500E-01	---	RWET(3)
19B	Weathering Removal Constant for Vegetation	not used	2.000E+01	---	WLAM
14	C-12 concentration in water (g/cm**3)	not used	2.000E-05	---	C12WTR
14	C-12 concentration in contaminated soil (g/g)	not used	3.000E-02	---	C12CZ
14	Fraction of vegetation carbon from soil	not used	2.000E-02	---	CSOIL
14	Fraction of vegetation carbon from air	not used	9.800E-01	---	CAIR
14	C-14 evasion layer thickness in soil (m)	not used	3.000E-01	---	DMC
14	C-14 evasion flux rate from soil (1/sec)	not used	7.000E-07	---	EVSN
14	C-12 evasion flux rate from soil (1/sec)	not used	1.000E-10	---	REVSN
14	Fraction of grain in beef cattle feed	not used	8.000E-01	---	AVFG4
14	Fraction of grain in milk cow feed	not used	2.000E-01	---	AVFG5
TOR	Storage times of contaminated foodstuffs (days):				
TOR	Fruits, non-leafy vegetables, and grain	1.400E+01	1.400E+01	---	STOR_T(1)
TOR	Leafy vegetables	1.000E+00	1.000E+00	---	STOR_T(2)
TOR	Milk	1.000E+00	1.000E+00	---	STOR_T(3)
TOR	Meat and poultry	2.000E+01	2.000E+01	---	STOR_T(4)
TOR	Fish	7.000E+00	7.000E+00	---	STOR_T(5)
TOR	Crustacea and mollusks	7.000E+00	7.000E+00	---	STOR_T(6)
TOR	Well water	1.000E+00	1.000E+00	---	STOR_T(7)
TOR	Surface water	1.000E+00	1.000E+00	---	STOR_T(8)
TOR	Livestock fodder	4.500E+01	4.500E+01	---	STOR_T(9)
021	Thickness of building foundation (m)	not used	1.500E-01	---	FLOOR1
021	Bulk density of building foundation (g/cm**3)	not used	2.400E+00	---	DENSFL
021	Total porosity of the cover material	not used	4.000E-01	---	TPCV
021	Total porosity of the building foundation	not used	1.000E-01	---	TPFL

Site-Specific Parameter Summary (continued)

enu	Parameter	User Input	Default	Used by RESRAD (If different from user input)	Parameter Name
021	Volumetric water content of the cover material	not used	5.000E-02	---	PH2OCV
021	Volumetric water content of the foundation	not used	3.000E-02	---	PH2OFL
021	Diffusion coefficient for radon gas (m/sec):				
021	in cover material	not used	2.000E-06	---	DIFCV
021	in foundation material	not used	3.000E-07	---	DIFFL
021	in contaminated zone soil	2.000E-06	2.000E-06	---	DIFCZ
021	Radon vertical dimension of mixing (m)	2.000E+00	2.000E+00	---	HMIX
021	Average building air exchange rate (1/hr)	not used	5.000E-01	---	REXG
021	Height of the building (room) (m)	not used	2.500E+00	---	HRM
021	Building interior area factor	not used	0.000E+00	code computed (time dependent)	FAI
021	Building depth below ground surface (m)	not used	-1.000E+00	code computed (time dependent)	DMFL
021	Emanating power of Rn-222 gas	2.500E-01	2.500E-01	---	EMANA(1)
021	Emanating power of Rn-220 gas	1.500E-01	1.500E-01	---	EMANA(2)
ITL	Number of graphical time points	32	---	---	NPTS
ITL	Maximum number of integration points for dose	17	---	---	LYMAX
ITL	Maximum number of integration points for risk	257	---	---	KYMAX

Summary of Pathway Selections

Pathway	User Selection
1 -- external gamma	suppressed
2 -- inhalation (w/o radon)	active
3 -- plant ingestion	suppressed
4 -- meat ingestion	suppressed
5 -- milk ingestion	suppressed
6 -- aquatic foods	suppressed
7 -- drinking water	suppressed
8 -- soil ingestion	suppressed
9 -- radon	active
Find peak pathway doses	suppressed

ummary : GKP Maintenance Worker Inhalation
ile : C:\USERS\CLAUDE\DOCUMENTS\0 GKP DOSE\RESRAD CW\GKP MAINTENANCE WORKER - INHALATION.RAD

Contaminated Zone Dimensions		Initial Soil Concentrations, pCi/g	
Area:	200.00 square meters	Ra-226	3.650E+01
Thickness:	0.15 meters	Th-232	2.400E+00
over Depth:	0.00 meters	U-234	1.390E+01
		U-235	8.400E-01
		U-238	1.390E+01

Total Dose TDOSE(t), mrem/yr
Basic Radiation Dose Limit = 2.500E+01 mrem/yr
Total Mixture Sum M(t) = Fraction of Basic Dose Limit Received at Time (t)

t (years):	0.000E+00	1.000E+00	3.000E+00	1.000E+01	3.000E+01	1.000E+02	3.000E+02	1.000E+03
TDOSE(t):	1.361E-01	1.334E-01	1.289E-01	1.159E-01	8.342E-02	2.861E-02	0.000E+00	0.000E+00
M(t):	5.445E-03	5.335E-03	5.158E-03	4.638E-03	3.337E-03	1.144E-03	0.000E+00	0.000E+00

aximum TDOSE(t): 1.361E-01 mrem/yr at t = 0.000E+00 years

ummary : GKP Maintenance Worker Inhalation
ile : C:\USERS\CLAUDE\DOCUMENTS\0 GKP DOSE\RESRAD CW\GKP MAINTENANCE WORKER - INHALATION.RAD

Total Dose Contributions TDOSE(i,p,t) for Individual Radionuclides (i) and Pathways (p)
As mrem/yr and Fraction of Total Dose At t = 0.000E+00 years

Water Independent Pathways (Inhalation excludes radon)

	Ground		Inhalation		Radon		Plant		Meat		Milk		Soil	
adio-	ÄÄÄÄÄÄÄÄÄÄÄÄÄÄÄÄ		ÄÄÄÄÄÄÄÄÄÄÄÄÄÄÄÄ		ÄÄÄÄÄÄÄÄÄÄÄÄÄÄÄÄ		ÄÄÄÄÄÄÄÄÄÄÄÄÄÄÄÄ		ÄÄÄÄÄÄÄÄÄÄÄÄÄÄÄÄ		ÄÄÄÄÄÄÄÄÄÄÄÄÄÄÄÄ		ÄÄÄÄÄÄÄÄÄÄÄÄÄÄÄÄ	
uclide	mrem/yr	fract.	mrem/yr	fract.	mrem/yr	fract.	mrem/yr	fract.	mrem/yr	fract.	mrem/yr	fract.	mrem/yr	fract.
ÄÄÄÄÄÄ	ÄÄÄÄÄÄÄÄÄ	ÄÄÄÄÄÄ	ÄÄÄÄÄÄÄÄÄ	ÄÄÄÄÄÄ	ÄÄÄÄÄÄÄÄÄ	ÄÄÄÄÄÄ	ÄÄÄÄÄÄÄÄÄ	ÄÄÄÄÄÄ	ÄÄÄÄÄÄÄÄÄ	ÄÄÄÄÄÄ	ÄÄÄÄÄÄÄÄÄ	ÄÄÄÄÄÄ	ÄÄÄÄÄÄÄÄÄ	ÄÄÄÄÄÄ
a-226	0.000E+00	0.0000	5.623E-03	0.0413	3.372E-04	0.0025	0.000E+00	0.0000	0.000E+00	0.0000	0.000E+00	0.0000	0.000E+00	0.0000
h-232	0.000E+00	0.0000	6.893E-02	0.5064	1.209E-05	0.0001	0.000E+00	0.0000	0.000E+00	0.0000	0.000E+00	0.0000	0.000E+00	0.0000
-234	0.000E+00	0.0000	3.138E-02	0.2306	8.487E-14	0.0000	0.000E+00	0.0000	0.000E+00	0.0000	0.000E+00	0.0000	0.000E+00	0.0000
-235	0.000E+00	0.0000	1.768E-03	0.0130	0.000E+00	0.0000	0.000E+00	0.0000	0.000E+00	0.0000	0.000E+00	0.0000	0.000E+00	0.0000
-238	0.000E+00	0.0000	2.806E-02	0.2062	5.958E-20	0.0000	0.000E+00	0.0000	0.000E+00	0.0000	0.000E+00	0.0000	0.000E+00	0.0000
íííííí	íííííííííí	íííííí	íííííííííí	íííííí	íííííííííí	íííííí	íííííííííí	íííííí	íííííííííí	íííííí	íííííííííí	íííííí	íííííííííí	íííííí
otal	0.000E+00	0.0000	1.358E-01	0.9974	3.493E-04	0.0026	0.000E+00	0.0000	0.000E+00	0.0000	0.000E+00	0.0000	0.000E+00	0.0000

Total Dose Contributions TDOSE(i,p,t) for Individual Radionuclides (i) and Pathways (p)
As mrem/yr and Fraction of Total Dose At t = 0.000E+00 years

Water Dependent Pathways

	Water		Fish		Radon		Plant		Meat		Milk		All Pathways*	
adio-	ÄÄÄÄÄÄÄÄÄÄÄÄÄÄÄÄ		ÄÄÄÄÄÄÄÄÄÄÄÄÄÄÄÄ		ÄÄÄÄÄÄÄÄÄÄÄÄÄÄÄÄ		ÄÄÄÄÄÄÄÄÄÄÄÄÄÄÄÄ		ÄÄÄÄÄÄÄÄÄÄÄÄÄÄÄÄ		ÄÄÄÄÄÄÄÄÄÄÄÄÄÄÄÄ		ÄÄÄÄÄÄÄÄÄÄÄÄÄÄÄÄ	
uclide	mrem/yr	fract.	mrem/yr	fract.	mrem/yr	fract.	mrem/yr	fract.	mrem/yr	fract.	mrem/yr	fract.	mrem/yr	fract.
ÄÄÄÄÄÄ	ÄÄÄÄÄÄÄÄÄ	ÄÄÄÄÄÄ	ÄÄÄÄÄÄÄÄÄ	ÄÄÄÄÄÄ	ÄÄÄÄÄÄÄÄÄ	ÄÄÄÄÄÄ	ÄÄÄÄÄÄÄÄÄ	ÄÄÄÄÄÄ	ÄÄÄÄÄÄÄÄÄ	ÄÄÄÄÄÄ	ÄÄÄÄÄÄÄÄÄ	ÄÄÄÄÄÄ	ÄÄÄÄÄÄÄÄÄ	ÄÄÄÄÄÄ
a-226	0.000E+00	0.0000	0.000E+00	0.0000	0.000E+00	0.0000	0.000E+00	0.0000	0.000E+00	0.0000	0.000E+00	0.0000	5.960E-03	0.0438
h-232	0.000E+00	0.0000	0.000E+00	0.0000	0.000E+00	0.0000	0.000E+00	0.0000	0.000E+00	0.0000	0.000E+00	0.0000	6.894E-02	0.5065
-234	0.000E+00	0.0000	0.000E+00	0.0000	0.000E+00	0.0000	0.000E+00	0.0000	0.000E+00	0.0000	0.000E+00	0.0000	3.138E-02	0.2306
-235	0.000E+00	0.0000	0.000E+00	0.0000	0.000E+00	0.0000	0.000E+00	0.0000	0.000E+00	0.0000	0.000E+00	0.0000	1.768E-03	0.0130
-238	0.000E+00	0.0000	0.000E+00	0.0000	0.000E+00	0.0000	0.000E+00	0.0000	0.000E+00	0.0000	0.000E+00	0.0000	2.806E-02	0.2062
íííííí	íííííííííí	íííííí	íííííííííí	íííííí	íííííííííí	íííííí	íííííííííí	íííííí	íííííííííí	íííííí	íííííííííí	íííííí	íííííííííí	íííííí
otal	0.000E+00	0.0000	0.000E+00	0.0000	0.000E+00	0.0000	0.000E+00	0.0000	0.000E+00	0.0000	0.000E+00	0.0000	1.361E-01	1.0000

Sum of all water independent and dependent pathways.

ummary : GKP Maintenance Worker Inhalation
ile : C:\USERS\CLAUDE\DOCUMENTS\0 GKP DOSE\RESRAD CW\GKP MAINTENANCE WORKER - INHALATION.RAD

Total Dose Contributions TDOSE(i,p,t) for Individual Radionuclides (i) and Pathways (p)
As mrem/yr and Fraction of Total Dose At t = 1.000E+00 years

Water Independent Pathways (Inhalation excludes radon)

	Ground		Inhalation		Radon		Plant		Meat		Milk		Soil	
adio-	ÄÄÄÄÄÄÄÄÄÄÄÄÄÄÄÄ		ÄÄÄÄÄÄÄÄÄÄÄÄÄÄÄÄ		ÄÄÄÄÄÄÄÄÄÄÄÄÄÄÄÄ		ÄÄÄÄÄÄÄÄÄÄÄÄÄÄÄÄ		ÄÄÄÄÄÄÄÄÄÄÄÄÄÄÄÄ		ÄÄÄÄÄÄÄÄÄÄÄÄÄÄÄÄ		ÄÄÄÄÄÄÄÄÄÄÄÄÄÄÄÄ		ÄÄÄÄÄÄÄÄÄÄÄÄÄÄÄÄ	
uclide	mrem/yr	fract.	mrem/yr	fract.	mrem/yr	fract.	mrem/yr	fract.	mrem/yr	fract.	mrem/yr	fract.	mrem/yr	fract.
ÄÄÄÄÄÄ	ÄÄÄÄÄÄÄÄÄ	ÄÄÄÄÄÄ	ÄÄÄÄÄÄÄÄÄ	ÄÄÄÄÄÄ	ÄÄÄÄÄÄÄÄÄ	ÄÄÄÄÄÄ	ÄÄÄÄÄÄÄÄÄ	ÄÄÄÄÄÄ	ÄÄÄÄÄÄÄÄÄ	ÄÄÄÄÄÄ	ÄÄÄÄÄÄÄÄÄ	ÄÄÄÄÄÄ	ÄÄÄÄÄÄÄÄÄ	ÄÄÄÄÄÄ
a-226	0.000E+00	0.0000	5.837E-03	0.0438	3.244E-04	0.0024	0.000E+00	0.0000	0.000E+00	0.0000	0.000E+00	0.0000	0.000E+00	0.0000
n-232	0.000E+00	0.0000	6.896E-02	0.5170	7.349E-05	0.0006	0.000E+00	0.0000	0.000E+00	0.0000	0.000E+00	0.0000	0.000E+00	0.0000
-234	0.000E+00	0.0000	2.983E-02	0.2236	5.780E-13	0.0000	0.000E+00	0.0000	0.000E+00	0.0000	0.000E+00	0.0000	0.000E+00	0.0000
-235	0.000E+00	0.0000	1.680E-03	0.0126	0.000E+00	0.0000	0.000E+00	0.0000	0.000E+00	0.0000	0.000E+00	0.0000	0.000E+00	0.0000
-238	0.000E+00	0.0000	2.667E-02	0.2000	8.662E-19	0.0000	0.000E+00	0.0000	0.000E+00	0.0000	0.000E+00	0.0000	0.000E+00	0.0000
íííííí	íííííííííí	íííííí	íííííííííí	íííííí	íííííííííí	íííííí	íííííííííí	íííííí	íííííííííí	íííííí	íííííííííí	íííííí	íííííííííí	íííííí
otal	0.000E+00	0.0000	1.330E-01	0.9970	3.979E-04	0.0030	0.000E+00	0.0000	0.000E+00	0.0000	0.000E+00	0.0000	0.000E+00	0.0000

Total Dose Contributions TDOSE(i,p,t) for Individual Radionuclides (i) and Pathways (p)
As mrem/yr and Fraction of Total Dose At t = 1.000E+00 years

Water Dependent Pathways

	Water		Fish		Radon		Plant		Meat		Milk		All Pathways*	
adio-	ÄÄÄÄÄÄÄÄÄÄÄÄÄÄÄÄ		ÄÄÄÄÄÄÄÄÄÄÄÄÄÄÄÄ		ÄÄÄÄÄÄÄÄÄÄÄÄÄÄÄÄ		ÄÄÄÄÄÄÄÄÄÄÄÄÄÄÄÄ		ÄÄÄÄÄÄÄÄÄÄÄÄÄÄÄÄ		ÄÄÄÄÄÄÄÄÄÄÄÄÄÄÄÄ		ÄÄÄÄÄÄÄÄÄÄÄÄÄÄÄÄ	
uclide	mrem/yr	fract.	mrem/yr	fract.	mrem/yr	fract.	mrem/yr	fract.	mrem/yr	fract.	mrem/yr	fract.	mrem/yr	fract.
ÄÄÄÄÄÄ	ÄÄÄÄÄÄÄÄÄ	ÄÄÄÄÄÄ	ÄÄÄÄÄÄÄÄÄ	ÄÄÄÄÄÄ	ÄÄÄÄÄÄÄÄÄ	ÄÄÄÄÄÄ	ÄÄÄÄÄÄÄÄÄ	ÄÄÄÄÄÄ	ÄÄÄÄÄÄÄÄÄ	ÄÄÄÄÄÄ	ÄÄÄÄÄÄÄÄÄ	ÄÄÄÄÄÄ	ÄÄÄÄÄÄÄÄÄ	ÄÄÄÄÄÄ
a-226	0.000E+00	0.0000	0.000E+00	0.0000	0.000E+00	0.0000	0.000E+00	0.0000	0.000E+00	0.0000	0.000E+00	0.0000	6.162E-03	0.0462
n-232	0.000E+00	0.0000	0.000E+00	0.0000	0.000E+00	0.0000	0.000E+00	0.0000	0.000E+00	0.0000	0.000E+00	0.0000	6.903E-02	0.5176
-234	0.000E+00	0.0000	0.000E+00	0.0000	0.000E+00	0.0000	0.000E+00	0.0000	0.000E+00	0.0000	0.000E+00	0.0000	2.983E-02	0.2236
-235	0.000E+00	0.0000	0.000E+00	0.0000	0.000E+00	0.0000	0.000E+00	0.0000	0.000E+00	0.0000	0.000E+00	0.0000	1.680E-03	0.0126
-238	0.000E+00	0.0000	0.000E+00	0.0000	0.000E+00	0.0000	0.000E+00	0.0000	0.000E+00	0.0000	0.000E+00	0.0000	2.667E-02	0.2000
íííííí	íííííííííí	íííííí	íííííííííí	íííííí	íííííííííí	íííííí	íííííííííí	íííííí	íííííííííí	íííííí	íííííííííí	íííííí	íííííííííí	íííííí
otal	0.000E+00	0.0000	0.000E+00	0.0000	0.000E+00	0.0000	0.000E+00	0.0000	0.000E+00	0.0000	0.000E+00	0.0000	1.334E-01	1.0000

Sum of all water independent and dependent pathways.

ummary : GKP Maintenance Worker Inhalation
ile : C:\USERS\CLAUDE\DOCUMENTS\0 GKP DOSE\RESRAD CW\GKP MAINTENANCE WORKER - INHALATION.RAD

Total Dose Contributions TDOSE(i,p,t) for Individual Radionuclides (i) and Pathways (p)
As mrem/yr and Fraction of Total Dose At t = 3.000E+00 years

Water Independent Pathways (Inhalation excludes radon)

	Ground		Inhalation		Radon		Plant		Meat		Milk		Soil	
adio-	ÄÄÄÄÄÄÄÄÄÄÄÄÄÄÄÄ		ÄÄÄÄÄÄÄÄÄÄÄÄÄÄÄÄ		ÄÄÄÄÄÄÄÄÄÄÄÄÄÄÄÄ		ÄÄÄÄÄÄÄÄÄÄÄÄÄÄÄÄ		ÄÄÄÄÄÄÄÄÄÄÄÄÄÄÄÄ		ÄÄÄÄÄÄÄÄÄÄÄÄÄÄÄÄ		ÄÄÄÄÄÄÄÄÄÄÄÄÄÄÄÄ	
uclide	mrem/yr	fract.	mrem/yr	fract.	mrem/yr	fract.	mrem/yr	fract.	mrem/yr	fract.	mrem/yr	fract.	mrem/yr	fract.
ÄÄÄÄÄÄ	ÄÄÄÄÄÄÄÄÄ	ÄÄÄÄÄÄ	ÄÄÄÄÄÄÄÄÄ	ÄÄÄÄÄÄ	ÄÄÄÄÄÄÄÄÄ	ÄÄÄÄÄÄ	ÄÄÄÄÄÄÄÄÄ	ÄÄÄÄÄÄ	ÄÄÄÄÄÄÄÄÄ	ÄÄÄÄÄÄ	ÄÄÄÄÄÄÄÄÄ	ÄÄÄÄÄÄ	ÄÄÄÄÄÄÄÄÄ	ÄÄÄÄÄÄ
a-226	0.000E+00	0.0000	6.169E-03	0.0478	3.002E-04	0.0023	0.000E+00	0.0000	0.000E+00	0.0000	0.000E+00	0.0000	0.000E+00	0.0000
n-232	0.000E+00	0.0000	6.966E-02	0.5402	2.861E-04	0.0022	0.000E+00	0.0000	0.000E+00	0.0000	0.000E+00	0.0000	0.000E+00	0.0000
-234	0.000E+00	0.0000	2.693E-02	0.2089	2.872E-12	0.0000	0.000E+00	0.0000	0.000E+00	0.0000	0.000E+00	0.0000	0.000E+00	0.0000
-235	0.000E+00	0.0000	1.518E-03	0.0118	0.000E+00	0.0000	0.000E+00	0.0000	0.000E+00	0.0000	0.000E+00	0.0000	0.000E+00	0.0000
-238	0.000E+00	0.0000	2.408E-02	0.1868	9.420E-18	0.0000	0.000E+00	0.0000	0.000E+00	0.0000	0.000E+00	0.0000	0.000E+00	0.0000
íííííí	íííííííííí	íííííí	íííííííííí	íííííí	íííííííííí	íííííí	íííííííííí	íííííí	íííííííííí	íííííí	íííííííííí	íííííí	íííííííííí	íííííí
otal	0.000E+00	0.0000	1.284E-01	0.9955	5.863E-04	0.0045	0.000E+00	0.0000	0.000E+00	0.0000	0.000E+00	0.0000	0.000E+00	0.0000

Total Dose Contributions TDOSE(i,p,t) for Individual Radionuclides (i) and Pathways (p)
As mrem/yr and Fraction of Total Dose At t = 3.000E+00 years

Water Dependent Pathways

	Water		Fish		Radon		Plant		Meat		Milk		All Pathways*	
adio-	ÄÄÄÄÄÄÄÄÄÄÄÄÄÄÄÄ		ÄÄÄÄÄÄÄÄÄÄÄÄÄÄÄÄ		ÄÄÄÄÄÄÄÄÄÄÄÄÄÄÄÄ		ÄÄÄÄÄÄÄÄÄÄÄÄÄÄÄÄ		ÄÄÄÄÄÄÄÄÄÄÄÄÄÄÄÄ		ÄÄÄÄÄÄÄÄÄÄÄÄÄÄÄÄ		ÄÄÄÄÄÄÄÄÄÄÄÄÄÄÄÄ	
uclide	mrem/yr	fract.	mrem/yr	fract.	mrem/yr	fract.	mrem/yr	fract.	mrem/yr	fract.	mrem/yr	fract.	mrem/yr	fract.
ÄÄÄÄÄÄ	ÄÄÄÄÄÄÄÄÄ	ÄÄÄÄÄÄ	ÄÄÄÄÄÄÄÄÄ	ÄÄÄÄÄÄ	ÄÄÄÄÄÄÄÄÄ	ÄÄÄÄÄÄ	ÄÄÄÄÄÄÄÄÄ	ÄÄÄÄÄÄ	ÄÄÄÄÄÄÄÄÄ	ÄÄÄÄÄÄ	ÄÄÄÄÄÄÄÄÄ	ÄÄÄÄÄÄ	ÄÄÄÄÄÄÄÄÄ	ÄÄÄÄÄÄ
a-226	0.000E+00	0.0000	0.000E+00	0.0000	0.000E+00	0.0000	0.000E+00	0.0000	0.000E+00	0.0000	0.000E+00	0.0000	6.469E-03	0.0502
n-232	0.000E+00	0.0000	0.000E+00	0.0000	0.000E+00	0.0000	0.000E+00	0.0000	0.000E+00	0.0000	0.000E+00	0.0000	6.995E-02	0.5424
-234	0.000E+00	0.0000	0.000E+00	0.0000	0.000E+00	0.0000	0.000E+00	0.0000	0.000E+00	0.0000	0.000E+00	0.0000	2.693E-02	0.2089
-235	0.000E+00	0.0000	0.000E+00	0.0000	0.000E+00	0.0000	0.000E+00	0.0000	0.000E+00	0.0000	0.000E+00	0.0000	1.518E-03	0.0118
-238	0.000E+00	0.0000	0.000E+00	0.0000	0.000E+00	0.0000	0.000E+00	0.0000	0.000E+00	0.0000	0.000E+00	0.0000	2.408E-02	0.1868
íííííí	íííííííííí	íííííí	íííííííííí	íííííí	íííííííííí	íííííí	íííííííííí	íííííí	íííííííííí	íííííí	íííííííííí	íííííí	íííííííííí	íííííí
otal	0.000E+00	0.0000	0.000E+00	0.0000	0.000E+00	0.0000	0.000E+00	0.0000	0.000E+00	0.0000	0.000E+00	0.0000	1.289E-01	1.0000

Sum of all water independent and dependent pathways.

ummary : GKP Maintenance Worker Inhalation
ile : C:\USERS\CLAUDE\DOCUMENTS\0 GKP DOSE\RESRAD CW\GKP MAINTENANCE WORKER - INHALATION.RAD

Total Dose Contributions TDOSE(i,p,t) for Individual Radionuclides (i) and Pathways (p)
As mrem/yr and Fraction of Total Dose At t = 1.000E+01 years

Water Independent Pathways (Inhalation excludes radon)

	Ground		Inhalation		Radon		Plant		Meat		Milk		Soil	
adio-	ÄÄÄÄÄÄÄÄÄÄÄÄÄÄÄ		ÄÄÄÄÄÄÄÄÄÄÄÄÄÄÄ		ÄÄÄÄÄÄÄÄÄÄÄÄÄÄÄ		ÄÄÄÄÄÄÄÄÄÄÄÄÄÄÄ		ÄÄÄÄÄÄÄÄÄÄÄÄÄÄÄ		ÄÄÄÄÄÄÄÄÄÄÄÄÄÄÄ		ÄÄÄÄÄÄÄÄÄÄÄÄÄÄÄ	
uclide	mrem/yr	fract.	mrem/yr	fract.	mrem/yr	fract.	mrem/yr	fract.	mrem/yr	fract.	mrem/yr	fract.	mrem/yr	fract.
ÄÄÄÄÄÄ	ÄÄÄÄÄÄÄÄÄ	ÄÄÄÄÄÄ	ÄÄÄÄÄÄÄÄÄ	ÄÄÄÄÄÄ	ÄÄÄÄÄÄÄÄÄ	ÄÄÄÄÄÄ	ÄÄÄÄÄÄÄÄÄ	ÄÄÄÄÄÄ	ÄÄÄÄÄÄÄÄÄ	ÄÄÄÄÄÄ	ÄÄÄÄÄÄÄÄÄ	ÄÄÄÄÄÄ	ÄÄÄÄÄÄÄÄÄ	ÄÄÄÄÄÄ
a-226	0.000E+00	0.0000	6.551E-03	0.0565	2.285E-04	0.0020	0.000E+00	0.0000	0.000E+00	0.0000	0.000E+00	0.0000	0.000E+00	0.0000
n-232	0.000E+00	0.0000	7.147E-02	0.6164	9.950E-04	0.0086	0.000E+00	0.0000	0.000E+00	0.0000	0.000E+00	0.0000	0.000E+00	0.0000
-234	0.000E+00	0.0000	1.882E-02	0.1623	2.059E-11	0.0000	0.000E+00	0.0000	0.000E+00	0.0000	0.000E+00	0.0000	0.000E+00	0.0000
-235	0.000E+00	0.0000	1.063E-03	0.0092	0.000E+00	0.0000	0.000E+00	0.0000	0.000E+00	0.0000	0.000E+00	0.0000	0.000E+00	0.0000
-238	0.000E+00	0.0000	1.682E-02	0.1451	1.937E-16	0.0000	0.000E+00	0.0000	0.000E+00	0.0000	0.000E+00	0.0000	0.000E+00	0.0000
íííííí	íííííííííí	íííííí	íííííííííí	íííííí	íííííííííí	íííííí	íííííííííí	íííííí	íííííííííí	íííííí	íííííííííí	íííííí	íííííííííí	íííííí
otal	0.000E+00	0.0000	1.147E-01	0.9894	1.224E-03	0.0106	0.000E+00	0.0000	0.000E+00	0.0000	0.000E+00	0.0000	0.000E+00	0.0000

Total Dose Contributions TDOSE(i,p,t) for Individual Radionuclides (i) and Pathways (p)
As mrem/yr and Fraction of Total Dose At t = 1.000E+01 years

Water Dependent Pathways

	Water		Fish		Radon		Plant		Meat		Milk		All Pathways*	
adio-	ÄÄÄÄÄÄÄÄÄÄÄÄÄÄÄ		ÄÄÄÄÄÄÄÄÄÄÄÄÄÄÄ		ÄÄÄÄÄÄÄÄÄÄÄÄÄÄÄ		ÄÄÄÄÄÄÄÄÄÄÄÄÄÄÄ		ÄÄÄÄÄÄÄÄÄÄÄÄÄÄÄ		ÄÄÄÄÄÄÄÄÄÄÄÄÄÄÄ		ÄÄÄÄÄÄÄÄÄÄÄÄÄÄÄ	
uclide	mrem/yr	fract.	mrem/yr	fract.	mrem/yr	fract.	mrem/yr	fract.	mrem/yr	fract.	mrem/yr	fract.	mrem/yr	fract.
ÄÄÄÄÄÄ	ÄÄÄÄÄÄÄÄÄ	ÄÄÄÄÄÄ	ÄÄÄÄÄÄÄÄÄ	ÄÄÄÄÄÄ	ÄÄÄÄÄÄÄÄÄ	ÄÄÄÄÄÄ	ÄÄÄÄÄÄÄÄÄ	ÄÄÄÄÄÄ	ÄÄÄÄÄÄÄÄÄ	ÄÄÄÄÄÄ	ÄÄÄÄÄÄÄÄÄ	ÄÄÄÄÄÄ	ÄÄÄÄÄÄÄÄÄ	ÄÄÄÄÄÄ
a-226	0.000E+00	0.0000	0.000E+00	0.0000	0.000E+00	0.0000	0.000E+00	0.0000	0.000E+00	0.0000	0.000E+00	0.0000	6.780E-03	0.0585
n-232	0.000E+00	0.0000	0.000E+00	0.0000	0.000E+00	0.0000	0.000E+00	0.0000	0.000E+00	0.0000	0.000E+00	0.0000	7.246E-02	0.6250
-234	0.000E+00	0.0000	0.000E+00	0.0000	0.000E+00	0.0000	0.000E+00	0.0000	0.000E+00	0.0000	0.000E+00	0.0000	1.882E-02	0.1623
-235	0.000E+00	0.0000	0.000E+00	0.0000	0.000E+00	0.0000	0.000E+00	0.0000	0.000E+00	0.0000	0.000E+00	0.0000	1.063E-03	0.0092
-238	0.000E+00	0.0000	0.000E+00	0.0000	0.000E+00	0.0000	0.000E+00	0.0000	0.000E+00	0.0000	0.000E+00	0.0000	1.682E-02	0.1451
íííííí	íííííííííí	íííííí	íííííííííí	íííííí	íííííííííí	íííííí	íííííííííí	íííííí	íííííííííí	íííííí	íííííííííí	íííííí	íííííííííí	íííííí
otal	0.000E+00	0.0000	0.000E+00	0.0000	0.000E+00	0.0000	0.000E+00	0.0000	0.000E+00	0.0000	0.000E+00	0.0000	1.159E-01	1.0000

Sum of all water independent and dependent pathways.

ummary : GKP Maintenance Worker Inhalation
ile : C:\USERS\CLAUDE\DOCUMENTS\0 GKP DOSE\RESRAD CW\GKP MAINTENANCE WORKER - INHALATION.RAD

Total Dose Contributions TDOSE(i,p,t) for Individual Radionuclides (i) and Pathways (p)
As mrem/yr and Fraction of Total Dose At t = 3.000E+01 years

Water Independent Pathways (Inhalation excludes radon)

	Ground		Inhalation		Radon		Plant		Meat		Milk		Soil	
adio-	ÄÄÄÄÄÄÄÄÄÄÄÄÄÄÄÄ		ÄÄÄÄÄÄÄÄÄÄÄÄÄÄÄÄ		ÄÄÄÄÄÄÄÄÄÄÄÄÄÄÄÄ		ÄÄÄÄÄÄÄÄÄÄÄÄÄÄÄÄ		ÄÄÄÄÄÄÄÄÄÄÄÄÄÄÄÄ		ÄÄÄÄÄÄÄÄÄÄÄÄÄÄÄÄ		ÄÄÄÄÄÄÄÄÄÄÄÄÄÄÄÄ		ÄÄÄÄÄÄÄÄÄÄÄÄÄÄÄÄ	
uclide	mrem/yr	fract.	mrem/yr	fract.	mrem/yr	fract.	mrem/yr	fract.	mrem/yr	fract.	mrem/yr	fract.	mrem/yr	fract.
ÄÄÄÄÄÄ	ÄÄÄÄÄÄÄÄÄÄ	ÄÄÄÄÄÄ	ÄÄÄÄÄÄÄÄÄÄ	ÄÄÄÄÄÄ	ÄÄÄÄÄÄÄÄÄÄ	ÄÄÄÄÄÄ	ÄÄÄÄÄÄÄÄÄÄ	ÄÄÄÄÄÄ	ÄÄÄÄÄÄÄÄÄÄ	ÄÄÄÄÄÄ	ÄÄÄÄÄÄÄÄÄÄ	ÄÄÄÄÄÄ	ÄÄÄÄÄÄÄÄÄÄ	ÄÄÄÄÄÄ
a-226	0.000E+00	0.0000	4.762E-03	0.0571	1.033E-04	0.0012	0.000E+00	0.0000	0.000E+00	0.0000	0.000E+00	0.0000	0.000E+00	0.0000
h-232	0.000E+00	0.0000	6.410E-02	0.7684	1.465E-03	0.0176	0.000E+00	0.0000	0.000E+00	0.0000	0.000E+00	0.0000	0.000E+00	0.0000
-234	0.000E+00	0.0000	6.660E-03	0.0798	9.295E-11	0.0000	0.000E+00	0.0000	0.000E+00	0.0000	0.000E+00	0.0000	0.000E+00	0.0000
-235	0.000E+00	0.0000	3.800E-04	0.0046	0.000E+00	0.0000	0.000E+00	0.0000	0.000E+00	0.0000	0.000E+00	0.0000	0.000E+00	0.0000
-238	0.000E+00	0.0000	5.947E-03	0.0713	2.290E-15	0.0000	0.000E+00	0.0000	0.000E+00	0.0000	0.000E+00	0.0000	0.000E+00	0.0000
íííííí	íííííííííí	íííííí	íííííííííí	íííííí	íííííííííí	íííííí	íííííííííí	íííííí	íííííííííí	íííííí	íííííííííí	íííííí	íííííííííí	íííííí
otal	0.000E+00	0.0000	8.185E-02	0.9812	1.569E-03	0.0188	0.000E+00	0.0000	0.000E+00	0.0000	0.000E+00	0.0000	0.000E+00	0.0000

Total Dose Contributions TDOSE(i,p,t) for Individual Radionuclides (i) and Pathways (p)
As mrem/yr and Fraction of Total Dose At t = 3.000E+01 years

Water Dependent Pathways

	Water		Fish		Radon		Plant		Meat		Milk		All Pathways*	
adio-	ÄÄÄÄÄÄÄÄÄÄÄÄÄÄÄÄ		ÄÄÄÄÄÄÄÄÄÄÄÄÄÄÄÄ		ÄÄÄÄÄÄÄÄÄÄÄÄÄÄÄÄ		ÄÄÄÄÄÄÄÄÄÄÄÄÄÄÄÄ		ÄÄÄÄÄÄÄÄÄÄÄÄÄÄÄÄ		ÄÄÄÄÄÄÄÄÄÄÄÄÄÄÄÄ		ÄÄÄÄÄÄÄÄÄÄÄÄÄÄÄÄ	
uclide	mrem/yr	fract.	mrem/yr	fract.	mrem/yr	fract.	mrem/yr	fract.	mrem/yr	fract.	mrem/yr	fract.	mrem/yr	fract.
ÄÄÄÄÄÄ	ÄÄÄÄÄÄÄÄÄÄ	ÄÄÄÄÄÄ	ÄÄÄÄÄÄÄÄÄÄ	ÄÄÄÄÄÄ	ÄÄÄÄÄÄÄÄÄÄ	ÄÄÄÄÄÄ	ÄÄÄÄÄÄÄÄÄÄ	ÄÄÄÄÄÄ	ÄÄÄÄÄÄÄÄÄÄ	ÄÄÄÄÄÄ	ÄÄÄÄÄÄÄÄÄÄ	ÄÄÄÄÄÄ	ÄÄÄÄÄÄÄÄÄÄ	ÄÄÄÄÄÄ
a-226	0.000E+00	0.0000	0.000E+00	0.0000	0.000E+00	0.0000	0.000E+00	0.0000	0.000E+00	0.0000	0.000E+00	0.0000	4.866E-03	0.0583
h-232	0.000E+00	0.0000	0.000E+00	0.0000	0.000E+00	0.0000	0.000E+00	0.0000	0.000E+00	0.0000	0.000E+00	0.0000	6.557E-02	0.7860
-234	0.000E+00	0.0000	0.000E+00	0.0000	0.000E+00	0.0000	0.000E+00	0.0000	0.000E+00	0.0000	0.000E+00	0.0000	6.660E-03	0.0798
-235	0.000E+00	0.0000	0.000E+00	0.0000	0.000E+00	0.0000	0.000E+00	0.0000	0.000E+00	0.0000	0.000E+00	0.0000	3.800E-04	0.0046
-238	0.000E+00	0.0000	0.000E+00	0.0000	0.000E+00	0.0000	0.000E+00	0.0000	0.000E+00	0.0000	0.000E+00	0.0000	5.947E-03	0.0713
íííííí	íííííííííí	íííííí	íííííííííí	íííííí	íííííííííí	íííííí	íííííííííí	íííííí	íííííííííí	íííííí	íííííííííí	íííííí	íííííííííí	íííííí
otal	0.000E+00	0.0000	0.000E+00	0.0000	0.000E+00	0.0000	0.000E+00	0.0000	0.000E+00	0.0000	0.000E+00	0.0000	8.342E-02	1.0000

Sum of all water independent and dependent pathways.

ummary : GKP Maintenance Worker Inhalation
ile : C:\USERS\CLAUDE\DOCUMENTS\0 GKP DOSE\RESRAD CW\GKP MAINTENANCE WORKER - INHALATION.RAD

Total Dose Contributions TDOSE(i,p,t) for Individual Radionuclides (i) and Pathways (p)
As mrem/yr and Fraction of Total Dose At t = 1.000E+02 years

Water Independent Pathways (Inhalation excludes radon)

	Ground		Inhalation		Radon		Plant		Meat		Milk		Soil	
adio-	ÄÄÄÄÄÄÄÄÄÄÄÄÄÄÄÄ		ÄÄÄÄÄÄÄÄÄÄÄÄÄÄÄÄ		ÄÄÄÄÄÄÄÄÄÄÄÄÄÄÄÄ		ÄÄÄÄÄÄÄÄÄÄÄÄÄÄÄÄ		ÄÄÄÄÄÄÄÄÄÄÄÄÄÄÄÄ		ÄÄÄÄÄÄÄÄÄÄÄÄÄÄÄÄ		ÄÄÄÄÄÄÄÄÄÄÄÄÄÄÄÄ	
uclide	mrem/yr	fract.	mrem/yr	fract.	mrem/yr	fract.	mrem/yr	fract.	mrem/yr	fract.	mrem/yr	fract.	mrem/yr	fract.
ÄÄÄÄÄÄ	ÄÄÄÄÄÄÄÄÄ	ÄÄÄÄÄÄ	ÄÄÄÄÄÄÄÄÄ	ÄÄÄÄÄÄ	ÄÄÄÄÄÄÄÄÄ	ÄÄÄÄÄÄ	ÄÄÄÄÄÄÄÄÄ	ÄÄÄÄÄÄ	ÄÄÄÄÄÄÄÄÄ	ÄÄÄÄÄÄ	ÄÄÄÄÄÄÄÄÄ	ÄÄÄÄÄÄ	ÄÄÄÄÄÄÄÄÄ	ÄÄÄÄÄÄ
a-226	0.000E+00	0.0000	3.244E-04	0.0113	4.546E-06	0.0002	0.000E+00	0.0000	0.000E+00	0.0000	0.000E+00	0.0000	0.000E+00	0.0000
h-232	0.000E+00	0.0000	2.655E-02	0.9280	1.483E-03	0.0519	0.000E+00	0.0000	0.000E+00	0.0000	0.000E+00	0.0000	0.000E+00	0.0000
-234	0.000E+00	0.0000	1.297E-04	0.0045	1.079E-10	0.0000	0.000E+00	0.0000	0.000E+00	0.0000	0.000E+00	0.0000	0.000E+00	0.0000
-235	0.000E+00	0.0000	7.397E-06	0.0003	0.000E+00	0.0000	0.000E+00	0.0000	0.000E+00	0.0000	0.000E+00	0.0000	0.000E+00	0.0000
-238	0.000E+00	0.0000	1.113E-04	0.0039	5.863E-15	0.0000	0.000E+00	0.0000	0.000E+00	0.0000	0.000E+00	0.0000	0.000E+00	0.0000
íííííí	íííííííííí	íííííí	íííííííííí	íííííí	íííííííííí	íííííí	íííííííííí	íííííí	íííííííííí	íííííí	íííííííííí	íííííí	íííííííííí	íííííí
otal	0.000E+00	0.0000	2.712E-02	0.9480	1.488E-03	0.0520	0.000E+00	0.0000	0.000E+00	0.0000	0.000E+00	0.0000	0.000E+00	0.0000

Total Dose Contributions TDOSE(i,p,t) for Individual Radionuclides (i) and Pathways (p)
As mrem/yr and Fraction of Total Dose At t = 1.000E+02 years

Water Dependent Pathways

	Water		Fish		Radon		Plant		Meat		Milk		All Pathways*	
adio-	ÄÄÄÄÄÄÄÄÄÄÄÄÄÄÄÄ		ÄÄÄÄÄÄÄÄÄÄÄÄÄÄÄÄ		ÄÄÄÄÄÄÄÄÄÄÄÄÄÄÄÄ		ÄÄÄÄÄÄÄÄÄÄÄÄÄÄÄÄ		ÄÄÄÄÄÄÄÄÄÄÄÄÄÄÄÄ		ÄÄÄÄÄÄÄÄÄÄÄÄÄÄÄÄ		ÄÄÄÄÄÄÄÄÄÄÄÄÄÄÄÄ	
uclide	mrem/yr	fract.	mrem/yr	fract.	mrem/yr	fract.	mrem/yr	fract.	mrem/yr	fract.	mrem/yr	fract.	mrem/yr	fract.
ÄÄÄÄÄÄ	ÄÄÄÄÄÄÄÄÄ	ÄÄÄÄÄÄ	ÄÄÄÄÄÄÄÄÄ	ÄÄÄÄÄÄ	ÄÄÄÄÄÄÄÄÄ	ÄÄÄÄÄÄ	ÄÄÄÄÄÄÄÄÄ	ÄÄÄÄÄÄ	ÄÄÄÄÄÄÄÄÄ	ÄÄÄÄÄÄ	ÄÄÄÄÄÄÄÄÄ	ÄÄÄÄÄÄ	ÄÄÄÄÄÄÄÄÄ	ÄÄÄÄÄÄ
a-226	0.000E+00	0.0000	0.000E+00	0.0000	0.000E+00	0.0000	0.000E+00	0.0000	0.000E+00	0.0000	0.000E+00	0.0000	3.290E-04	0.0115
h-232	0.000E+00	0.0000	0.000E+00	0.0000	0.000E+00	0.0000	0.000E+00	0.0000	0.000E+00	0.0000	0.000E+00	0.0000	2.803E-02	0.9798
-234	0.000E+00	0.0000	0.000E+00	0.0000	0.000E+00	0.0000	0.000E+00	0.0000	0.000E+00	0.0000	0.000E+00	0.0000	1.297E-04	0.0045
-235	0.000E+00	0.0000	0.000E+00	0.0000	0.000E+00	0.0000	0.000E+00	0.0000	0.000E+00	0.0000	0.000E+00	0.0000	7.397E-06	0.0003
-238	0.000E+00	0.0000	0.000E+00	0.0000	0.000E+00	0.0000	0.000E+00	0.0000	0.000E+00	0.0000	0.000E+00	0.0000	1.113E-04	0.0039
íííííí	íííííííííí	íííííí	íííííííííí	íííííí	íííííííííí	íííííí	íííííííííí	íííííí	íííííííííí	íííííí	íííííííííí	íííííí	íííííííííí	íííííí
otal	0.000E+00	0.0000	0.000E+00	0.0000	0.000E+00	0.0000	0.000E+00	0.0000	0.000E+00	0.0000	0.000E+00	0.0000	2.861E-02	1.0000

Sum of all water independent and dependent pathways.

ummary : GKP Maintenance Worker Inhalation
ile : C:\USERS\CLAUDE\DOCUMENTS\0 GKP DOSE\RESRAD CW\GKP MAINTENANCE WORKER - INHALATION.RAD

Total Dose Contributions TDOSE(i,p,t) for Individual Radionuclides (i) and Pathways (p)
As mrem/yr and Fraction of Total Dose At t = 3.000E+02 years

Water Independent Pathways (Inhalation excludes radon)

	Ground		Inhalation		Radon		Plant		Meat		Milk		Soil	
adio-	ÄÄÄÄÄÄÄÄÄÄÄÄÄÄÄ		ÄÄÄÄÄÄÄÄÄÄÄÄÄÄÄ		ÄÄÄÄÄÄÄÄÄÄÄÄÄÄÄ		ÄÄÄÄÄÄÄÄÄÄÄÄÄÄÄ		ÄÄÄÄÄÄÄÄÄÄÄÄÄÄÄ		ÄÄÄÄÄÄÄÄÄÄÄÄÄÄÄ		ÄÄÄÄÄÄÄÄÄÄÄÄÄÄÄ	
uclide	mrem/yr	fract.	mrem/yr	fract.	mrem/yr	fract.	mrem/yr	fract.	mrem/yr	fract.	mrem/yr	fract.	mrem/yr	fract.
ÄÄÄÄÄÄ	ÄÄÄÄÄÄÄÄÄ	ÄÄÄÄÄÄ	ÄÄÄÄÄÄÄÄÄ	ÄÄÄÄÄÄ	ÄÄÄÄÄÄÄÄÄ	ÄÄÄÄÄÄ	ÄÄÄÄÄÄÄÄÄ	ÄÄÄÄÄÄ	ÄÄÄÄÄÄÄÄÄ	ÄÄÄÄÄÄ	ÄÄÄÄÄÄÄÄÄ	ÄÄÄÄÄÄ	ÄÄÄÄÄÄÄÄÄ	ÄÄÄÄÄÄ
a-226	0.000E+00	0.0000	0.000E+00	0.0000	0.000E+00	0.0000	0.000E+00	0.0000	0.000E+00	0.0000	0.000E+00	0.0000	0.000E+00	0.0000
n-232	0.000E+00	0.0000	0.000E+00	0.0000	0.000E+00	0.0000	0.000E+00	0.0000	0.000E+00	0.0000	0.000E+00	0.0000	0.000E+00	0.0000
-234	0.000E+00	0.0000	0.000E+00	0.0000	0.000E+00	0.0000	0.000E+00	0.0000	0.000E+00	0.0000	0.000E+00	0.0000	0.000E+00	0.0000
-235	0.000E+00	0.0000	0.000E+00	0.0000	0.000E+00	0.0000	0.000E+00	0.0000	0.000E+00	0.0000	0.000E+00	0.0000	0.000E+00	0.0000
-238	0.000E+00	0.0000	0.000E+00	0.0000	0.000E+00	0.0000	0.000E+00	0.0000	0.000E+00	0.0000	0.000E+00	0.0000	0.000E+00	0.0000
íííííí	íííííííííí	íííííí	íííííííííí	íííííí	íííííííííí	íííííí	íííííííííí	íííííí	íííííííííí	íííííí	íííííííííí	íííííí	íííííííííí	íííííí
otal	0.000E+00	0.0000	0.000E+00	0.0000	0.000E+00	0.0000	0.000E+00	0.0000	0.000E+00	0.0000	0.000E+00	0.0000	0.000E+00	0.0000

Total Dose Contributions TDOSE(i,p,t) for Individual Radionuclides (i) and Pathways (p)
As mrem/yr and Fraction of Total Dose At t = 3.000E+02 years

Water Dependent Pathways

	Water		Fish		Radon		Plant		Meat		Milk		All Pathways*	
adio-	ÄÄÄÄÄÄÄÄÄÄÄÄÄÄÄ		ÄÄÄÄÄÄÄÄÄÄÄÄÄÄÄ		ÄÄÄÄÄÄÄÄÄÄÄÄÄÄÄ		ÄÄÄÄÄÄÄÄÄÄÄÄÄÄÄ		ÄÄÄÄÄÄÄÄÄÄÄÄÄÄÄ		ÄÄÄÄÄÄÄÄÄÄÄÄÄÄÄ		ÄÄÄÄÄÄÄÄÄÄÄÄÄÄÄ	
uclide	mrem/yr	fract.	mrem/yr	fract.	mrem/yr	fract.	mrem/yr	fract.	mrem/yr	fract.	mrem/yr	fract.	mrem/yr	fract.
ÄÄÄÄÄÄ	ÄÄÄÄÄÄÄÄÄ	ÄÄÄÄÄÄ	ÄÄÄÄÄÄÄÄÄ	ÄÄÄÄÄÄ	ÄÄÄÄÄÄÄÄÄ	ÄÄÄÄÄÄ	ÄÄÄÄÄÄÄÄÄ	ÄÄÄÄÄÄ	ÄÄÄÄÄÄÄÄÄ	ÄÄÄÄÄÄ	ÄÄÄÄÄÄÄÄÄ	ÄÄÄÄÄÄ	ÄÄÄÄÄÄÄÄÄ	ÄÄÄÄÄÄ
a-226	0.000E+00	0.0000	0.000E+00	0.0000	0.000E+00	0.0000	0.000E+00	0.0000	0.000E+00	0.0000	0.000E+00	0.0000	0.000E+00	0.0000
n-232	0.000E+00	0.0000	0.000E+00	0.0000	0.000E+00	0.0000	0.000E+00	0.0000	0.000E+00	0.0000	0.000E+00	0.0000	0.000E+00	0.0000
-234	0.000E+00	0.0000	0.000E+00	0.0000	0.000E+00	0.0000	0.000E+00	0.0000	0.000E+00	0.0000	0.000E+00	0.0000	0.000E+00	0.0000
-235	0.000E+00	0.0000	0.000E+00	0.0000	0.000E+00	0.0000	0.000E+00	0.0000	0.000E+00	0.0000	0.000E+00	0.0000	0.000E+00	0.0000
-238	0.000E+00	0.0000	0.000E+00	0.0000	0.000E+00	0.0000	0.000E+00	0.0000	0.000E+00	0.0000	0.000E+00	0.0000	0.000E+00	0.0000
íííííí	íííííííííí	íííííí	íííííííííí	íííííí	íííííííííí	íííííí	íííííííííí	íííííí	íííííííííí	íííííí	íííííííííí	íííííí	íííííííííí	íííííí
otal	0.000E+00	0.0000	0.000E+00	0.0000	0.000E+00	0.0000	0.000E+00	0.0000	0.000E+00	0.0000	0.000E+00	0.0000	0.000E+00	0.0000

Sum of all water independent and dependent pathways.

ummary : GKP Maintenance Worker Inhalation
ile : C:\USERS\CLAUDE\DOCUMENTS\0 GKP DOSE\RESRAD CW\GKP MAINTENANCE WORKER - INHALATION.RAD

Total Dose Contributions TDOSE(i,p,t) for Individual Radionuclides (i) and Pathways (p)
As mrem/yr and Fraction of Total Dose At t = 1.000E+03 years

Water Independent Pathways (Inhalation excludes radon)

	Ground		Inhalation		Radon		Plant		Meat		Milk		Soil	
adio-	ÄÄÄÄÄÄÄÄÄÄÄÄÄÄÄÄ		ÄÄÄÄÄÄÄÄÄÄÄÄÄÄÄÄ		ÄÄÄÄÄÄÄÄÄÄÄÄÄÄÄÄ		ÄÄÄÄÄÄÄÄÄÄÄÄÄÄÄÄ		ÄÄÄÄÄÄÄÄÄÄÄÄÄÄÄÄ		ÄÄÄÄÄÄÄÄÄÄÄÄÄÄÄÄ		ÄÄÄÄÄÄÄÄÄÄÄÄÄÄÄÄ		ÄÄÄÄÄÄÄÄÄÄÄÄÄÄÄÄ	
uclide	mrem/yr	fract.	mrem/yr	fract.	mrem/yr	fract.	mrem/yr	fract.	mrem/yr	fract.	mrem/yr	fract.	mrem/yr	fract.
ÄÄÄÄÄÄ	ÄÄÄÄÄÄÄÄÄ	ÄÄÄÄÄÄ	ÄÄÄÄÄÄÄÄÄ	ÄÄÄÄÄÄ	ÄÄÄÄÄÄÄÄÄ	ÄÄÄÄÄÄ	ÄÄÄÄÄÄÄÄÄ	ÄÄÄÄÄÄ	ÄÄÄÄÄÄÄÄÄ	ÄÄÄÄÄÄ	ÄÄÄÄÄÄÄÄÄ	ÄÄÄÄÄÄ	ÄÄÄÄÄÄÄÄÄ	ÄÄÄÄÄÄ
a-226	0.000E+00	0.0000	0.000E+00	0.0000	0.000E+00	0.0000	0.000E+00	0.0000	0.000E+00	0.0000	0.000E+00	0.0000	0.000E+00	0.0000
n-232	0.000E+00	0.0000	0.000E+00	0.0000	0.000E+00	0.0000	0.000E+00	0.0000	0.000E+00	0.0000	0.000E+00	0.0000	0.000E+00	0.0000
-234	0.000E+00	0.0000	0.000E+00	0.0000	0.000E+00	0.0000	0.000E+00	0.0000	0.000E+00	0.0000	0.000E+00	0.0000	0.000E+00	0.0000
-235	0.000E+00	0.0000	0.000E+00	0.0000	0.000E+00	0.0000	0.000E+00	0.0000	0.000E+00	0.0000	0.000E+00	0.0000	0.000E+00	0.0000
-238	0.000E+00	0.0000	0.000E+00	0.0000	0.000E+00	0.0000	0.000E+00	0.0000	0.000E+00	0.0000	0.000E+00	0.0000	0.000E+00	0.0000
íííííí	íííííííííí	íííííí	íííííííííí	íííííí	íííííííííí	íííííí	íííííííííí	íííííí	íííííííííí	íííííí	íííííííííí	íííííí	íííííííííí	íííííí
otal	0.000E+00	0.0000	0.000E+00	0.0000	0.000E+00	0.0000	0.000E+00	0.0000	0.000E+00	0.0000	0.000E+00	0.0000	0.000E+00	0.0000

Total Dose Contributions TDOSE(i,p,t) for Individual Radionuclides (i) and Pathways (p)
As mrem/yr and Fraction of Total Dose At t = 1.000E+03 years

Water Dependent Pathways

	Water		Fish		Radon		Plant		Meat		Milk		All Pathways*	
adio-	ÄÄÄÄÄÄÄÄÄÄÄÄÄÄÄÄ		ÄÄÄÄÄÄÄÄÄÄÄÄÄÄÄÄ		ÄÄÄÄÄÄÄÄÄÄÄÄÄÄÄÄ		ÄÄÄÄÄÄÄÄÄÄÄÄÄÄÄÄ		ÄÄÄÄÄÄÄÄÄÄÄÄÄÄÄÄ		ÄÄÄÄÄÄÄÄÄÄÄÄÄÄÄÄ		ÄÄÄÄÄÄÄÄÄÄÄÄÄÄÄÄ	
uclide	mrem/yr	fract.	mrem/yr	fract.	mrem/yr	fract.	mrem/yr	fract.	mrem/yr	fract.	mrem/yr	fract.	mrem/yr	fract.
ÄÄÄÄÄÄ	ÄÄÄÄÄÄÄÄÄ	ÄÄÄÄÄÄ	ÄÄÄÄÄÄÄÄÄ	ÄÄÄÄÄÄ	ÄÄÄÄÄÄÄÄÄ	ÄÄÄÄÄÄ	ÄÄÄÄÄÄÄÄÄ	ÄÄÄÄÄÄ	ÄÄÄÄÄÄÄÄÄ	ÄÄÄÄÄÄ	ÄÄÄÄÄÄÄÄÄ	ÄÄÄÄÄÄ	ÄÄÄÄÄÄÄÄÄ	ÄÄÄÄÄÄ
a-226	0.000E+00	0.0000	0.000E+00	0.0000	0.000E+00	0.0000	0.000E+00	0.0000	0.000E+00	0.0000	0.000E+00	0.0000	0.000E+00	0.0000
n-232	0.000E+00	0.0000	0.000E+00	0.0000	0.000E+00	0.0000	0.000E+00	0.0000	0.000E+00	0.0000	0.000E+00	0.0000	0.000E+00	0.0000
-234	0.000E+00	0.0000	0.000E+00	0.0000	0.000E+00	0.0000	0.000E+00	0.0000	0.000E+00	0.0000	0.000E+00	0.0000	0.000E+00	0.0000
-235	0.000E+00	0.0000	0.000E+00	0.0000	0.000E+00	0.0000	0.000E+00	0.0000	0.000E+00	0.0000	0.000E+00	0.0000	0.000E+00	0.0000
-238	0.000E+00	0.0000	0.000E+00	0.0000	0.000E+00	0.0000	0.000E+00	0.0000	0.000E+00	0.0000	0.000E+00	0.0000	0.000E+00	0.0000
íííííí	íííííííííí	íííííí	íííííííííí	íííííí	íííííííííí	íííííí	íííííííííí	íííííí	íííííííííí	íííííí	íííííííííí	íííííí	íííííííííí	íííííí
otal	0.000E+00	0.0000	0.000E+00	0.0000	0.000E+00	0.0000	0.000E+00	0.0000	0.000E+00	0.0000	0.000E+00	0.0000	0.000E+00	0.0000

Sum of all water independent and dependent pathways.

ummary : GKP Maintenance Worker Inhalation
ile : C:\USERS\CLAUDE\DOCUMENTS\0 GKP DOSE\RESRAD CW\GKP MAINTENANCE WORKER - INHALATION.RAD

Dose/Source Ratios Summed Over All Pathways
Parent and Progeny Principal Radionuclide Contributions Indicated

Parent	Product	Thread	DSR(j,t) At Time in Years (mrem/yr)/(pCi/g)							
(i)	(j)	Fraction	0.000E+00	1.000E+00	3.000E+00	1.000E+01	3.000E+01	1.000E+02	3.000E+02	1.000E+03
ÄÄÄÄÄÄÄÄÄ	ÄÄÄÄÄÄÄÄÄÄ	ÄÄÄÄÄÄÄÄÄ	ÄÄÄÄÄÄÄÄÄ	ÄÄÄÄÄÄÄÄÄ	ÄÄÄÄÄÄÄÄÄ	ÄÄÄÄÄÄÄÄÄ	ÄÄÄÄÄÄÄÄÄ	ÄÄÄÄÄÄÄÄÄ	ÄÄÄÄÄÄÄÄÄ	ÄÄÄÄÄÄÄÄÄ
a-226+D	Ra-226+D	9.996E-01	1.571E-04	1.511E-04	1.398E-04	1.063E-04	4.796E-05	2.103E-06	0.000E+00	0.000E+00
a-226+D	Pb-210+D	9.996E-01	6.145E-06	1.764E-05	3.735E-05	7.932E-05	8.529E-05	6.905E-06	0.000E+00	0.000E+00
a-226+D	äDSR(j)		1.632E-04	1.687E-04	1.772E-04	1.857E-04	1.333E-04	9.009E-06	0.000E+00	0.000E+00
a-226+D	Ra-226+D	1.319E-06	2.073E-10	1.995E-10	1.845E-10	1.404E-10	6.331E-11	2.777E-12	0.000E+00	0.000E+00
a-226+D	Pb-210+D1	1.319E-06	4.825E-12	1.385E-11	2.933E-11	6.228E-11	6.696E-11	5.421E-12	0.000E+00	0.000E+00
a-226+D	äDSR(j)		2.122E-10	2.133E-10	2.139E-10	2.027E-10	1.303E-10	8.198E-12	0.000E+00	0.000E+00
a-226+D	Ra-226+D	1.899E-08	2.984E-12	2.871E-12	2.656E-12	2.021E-12	9.113E-13	3.997E-14	0.000E+00	0.000E+00
a-226+D	Pb-210+D2	1.899E-08	6.846E-14	1.966E-13	4.161E-13	8.837E-13	9.501E-13	7.692E-14	0.000E+00	0.000E+00
a-226+D	äDSR(j)		3.053E-12	3.067E-12	3.072E-12	2.904E-12	1.861E-12	1.169E-13	0.000E+00	0.000E+00
a-226+D1	Ra-226+D1	2.100E-04	3.299E-08	3.174E-08	2.936E-08	2.234E-08	1.007E-08	4.418E-10	0.000E+00	0.000E+00
a-226+D1	Pb-210+D	2.100E-04	1.291E-09	3.706E-09	7.846E-09	1.666E-08	1.791E-08	1.450E-09	0.000E+00	0.000E+00
a-226+D1	äDSR(j)		3.428E-08	3.544E-08	3.721E-08	3.900E-08	2.799E-08	1.892E-09	0.000E+00	0.000E+00
a-226+D1	Ra-226+D1	2.771E-10	4.355E-14	4.189E-14	3.876E-14	2.949E-14	1.330E-14	5.832E-16	0.000E+00	0.000E+00
a-226+D1	Pb-210+D1	2.771E-10	1.013E-15	2.910E-15	6.160E-15	1.308E-14	1.406E-14	1.139E-15	0.000E+00	0.000E+00
a-226+D1	äDSR(j)		4.456E-14	4.480E-14	4.492E-14	4.257E-14	2.736E-14	1.722E-15	0.000E+00	0.000E+00
a-226+D1	Ra-226+D1	3.989E-12	6.269E-16	6.030E-16	5.579E-16	4.244E-16	1.914E-16	8.395E-18	0.000E+00	0.000E+00
a-226+D1	Pb-210+D2	3.989E-12	1.438E-17	4.128E-17	8.740E-17	1.856E-16	1.996E-16	1.616E-17	0.000E+00	0.000E+00
a-226+D1	äDSR(j)		6.412E-16	6.443E-16	6.453E-16	6.100E-16	3.910E-16	2.455E-17	0.000E+00	0.000E+00
a-226+D2	Ra-226+D2	1.998E-04	3.136E-08	3.017E-08	2.791E-08	2.123E-08	9.577E-09	4.200E-10	0.000E+00	0.000E+00
a-226+D2	Pb-210+D	1.998E-04	1.228E-09	3.526E-09	7.465E-09	1.585E-08	1.704E-08	1.380E-09	0.000E+00	0.000E+00
a-226+D2	äDSR(j)		3.259E-08	3.370E-08	3.538E-08	3.709E-08	2.662E-08	1.800E-09	0.000E+00	0.000E+00
a-226+D2	Ra-226+D2	2.637E-10	4.140E-14	3.982E-14	3.685E-14	2.803E-14	1.264E-14	5.544E-16	0.000E+00	0.000E+00
a-226+D2	Pb-210+D1	2.637E-10	9.641E-16	2.768E-15	5.860E-15	1.245E-14	1.338E-14	1.083E-15	0.000E+00	0.000E+00
a-226+D2	äDSR(j)		4.236E-14	4.259E-14	4.271E-14	4.047E-14	2.602E-14	1.638E-15	0.000E+00	0.000E+00
a-226+D2	Ra-226+D2	3.795E-12	5.959E-16	5.732E-16	5.304E-16	4.035E-16	1.820E-16	7.980E-18	0.000E+00	0.000E+00
a-226+D2	Pb-210+D2	3.795E-12	1.368E-17	3.928E-17	8.316E-17	1.766E-16	1.899E-16	1.537E-17	0.000E+00	0.000E+00
a-226+D2	äDSR(j)		6.096E-16	6.125E-16	6.135E-16	5.800E-16	3.718E-16	2.335E-17	0.000E+00	0.000E+00
a-226+D3	Ra-226+D3	4.196E-08	6.588E-12	6.337E-12	5.863E-12	4.460E-12	2.012E-12	8.822E-14	0.000E+00	0.000E+00
a-226+D3	Pb-210+D	4.196E-08	2.580E-13	7.406E-13	1.568E-12	3.330E-12	3.580E-12	2.899E-13	0.000E+00	0.000E+00
a-226+D3	äDSR(j)		6.846E-12	7.078E-12	7.431E-12	7.790E-12	5.592E-12	3.781E-13	0.000E+00	0.000E+00
a-226+D3	Ra-226+D3	5.538E-14	8.696E-18	8.365E-18	7.739E-18	5.887E-18	2.655E-18	1.164E-19	0.000E+00	0.000E+00
a-226+D3	Pb-210+D1	5.538E-14	2.025E-19	5.814E-19	1.231E-18	2.614E-18	2.811E-18	2.276E-19	0.000E+00	0.000E+00
a-226+D3	äDSR(j)		8.898E-18	8.946E-18	8.970E-18	8.501E-18	5.466E-18	3.440E-19	0.000E+00	0.000E+00
a-226+D3	Ra-226+D3	7.972E-16	1.252E-19	1.204E-19	1.114E-19	8.474E-20	3.822E-20	1.676E-21	0.000E+00	0.000E+00
a-226+D3	Pb-210+D2	7.972E-16	2.874E-21	8.250E-21	1.747E-20	3.709E-20	3.988E-20	3.229E-21	0.000E+00	0.000E+00
a-226+D3	äDSR(j)		1.280E-19	1.287E-19	1.289E-19	1.218E-19	7.810E-20	4.905E-21	0.000E+00	0.000E+00

ummary : GKP Maintenance Worker Inhalation
ile : C:\USERS\CLAUDE\DOCUMENTS\0 GKP DOSE\RESRAD CW\GKP MAINTENANCE WORKER - INHALATION.RAD

Dose/Source Ratios Summed Over All Pathways
Parent and Progeny Principal Radionuclide Contributions Indicated

Parent (i)	Product (j)	Thread Fraction	DSR(j,t) At Time in Years (mrem/yr)/(pCi/g) 0.000E+00	1.000E+00	3.000E+00	1.000E+01	3.000E+01	1.000E+02	3.000E+02	1.000E+03
ÄÄÄÄÄÄÄÄÄ	ÄÄÄÄÄÄÄÄÄÄ	ÄÄÄÄÄÄÄÄÄ	ÄÄÄÄÄÄÄÄÄ	ÄÄÄÄÄÄÄÄÄ	ÄÄÄÄÄÄÄÄÄ	ÄÄÄÄÄÄÄÄÄ	ÄÄÄÄÄÄÄÄÄ	ÄÄÄÄÄÄÄÄÄ	ÄÄÄÄÄÄÄÄÄ	ÄÄÄÄÄÄÄÄÄ
a-226+D4	Ra-226+D4	2.000E-07	3.138E-11	3.018E-11	2.793E-11	2.124E-11	9.581E-12	4.202E-13	0.000E+00	0.000E+00
a-226+D4	Pb-210+D	2.000E-07	1.230E-12	3.530E-12	7.474E-12	1.587E-11	1.706E-11	1.382E-12	0.000E+00	0.000E+00
a-226+D4	äDSR(j)		3.261E-11	3.371E-11	3.540E-11	3.712E-11	2.665E-11	1.802E-12	0.000E+00	0.000E+00
a-226+D4	Ra-226+D4	2.640E-13	4.142E-17	3.984E-17	3.686E-17	2.804E-17	1.265E-17	5.547E-19	0.000E+00	0.000E+00
a-226+D4	Pb-210+D1	2.640E-13	9.653E-19	2.772E-18	5.868E-18	1.246E-17	1.340E-17	1.085E-18	0.000E+00	0.000E+00
a-226+D4	äDSR(j)		4.238E-17	4.262E-17	4.273E-17	4.050E-17	2.604E-17	1.639E-18	0.000E+00	0.000E+00
a-226+D4	Ra-226+D4	3.800E-15	5.962E-19	5.735E-19	5.306E-19	4.037E-19	1.820E-19	7.984E-21	0.000E+00	0.000E+00
a-226+D4	Pb-210+D2	3.800E-15	1.370E-20	3.933E-20	8.326E-20	1.768E-19	1.901E-19	1.539E-20	0.000E+00	0.000E+00
a-226+D4	äDSR(j)		6.099E-19	6.128E-19	6.139E-19	5.805E-19	3.721E-19	2.338E-20	0.000E+00	0.000E+00
n-232	Th-232	1.000E+00	2.868E-02	2.848E-02	2.810E-02	2.675E-02	2.290E-02	9.460E-03	0.000E+00	0.000E+00
n-232	Ra-228+D	1.000E+00	5.085E-06	1.420E-05	2.842E-05	5.232E-05	5.562E-05	2.321E-05	0.000E+00	0.000E+00
n-232	Th-228+D	1.000E+00	4.374E-05	2.646E-04	1.018E-03	3.391E-03	4.367E-03	2.196E-03	0.000E+00	0.000E+00
n-232	äDSR(j)		2.873E-02	2.876E-02	2.914E-02	3.019E-02	2.732E-02	1.168E-02	0.000E+00	0.000E+00
-234	U-234	9.996E-01	2.257E-03	2.145E-03	1.937E-03	1.353E-03	4.782E-04	8.942E-06	0.000E+00	0.000E+00
-234	Th-230	9.996E-01	2.579E-08	7.541E-08	1.664E-07	4.104E-07	7.003E-07	3.860E-07	0.000E+00	0.000E+00
-234	Ra-226+D	9.996E-01	1.038E-13	7.069E-13	3.511E-12	2.516E-11	1.134E-10	1.311E-10	0.000E+00	0.000E+00
-234	Pb-210+D	9.996E-01	2.043E-15	2.965E-14	3.209E-13	6.496E-12	7.372E-11	1.722E-10	0.000E+00	0.000E+00
-234	äDSR(j)		2.257E-03	2.145E-03	1.937E-03	1.353E-03	4.789E-04	9.328E-06	0.000E+00	0.000E+00
-234	U-234	1.319E-06	2.979E-09	2.831E-09	2.556E-09	1.786E-09	6.312E-10	1.180E-11	0.000E+00	0.000E+00
-234	Th-230	1.319E-06	3.404E-14	9.955E-14	2.196E-13	5.417E-13	9.244E-13	5.095E-13	0.000E+00	0.000E+00
-234	Ra-226+D	1.319E-06	1.370E-19	9.331E-19	4.635E-18	3.321E-17	1.497E-16	1.731E-16	0.000E+00	0.000E+00
-234	Pb-210+D1	1.319E-06	1.604E-21	2.327E-20	2.520E-19	5.100E-18	5.788E-17	1.352E-16	0.000E+00	0.000E+00
-234	äDSR(j)		2.979E-09	2.831E-09	2.557E-09	1.786E-09	6.322E-10	1.231E-11	0.000E+00	0.000E+00
-234	U-234	1.899E-08	4.288E-11	4.075E-11	3.680E-11	2.570E-11	9.086E-12	1.699E-13	0.000E+00	0.000E+00
-234	Th-230	1.899E-08	4.900E-16	1.433E-15	3.161E-15	7.798E-15	1.331E-14	7.334E-15	0.000E+00	0.000E+00
-234	Ra-226+D	1.899E-08	1.972E-21	1.343E-20	6.671E-20	4.781E-19	2.154E-18	2.491E-18	0.000E+00	0.000E+00
-234	Pb-210+D2	1.899E-08	2.276E-23	3.302E-22	3.575E-21	7.237E-20	8.212E-19	1.919E-18	0.000E+00	0.000E+00
-234	äDSR(j)		4.288E-11	4.075E-11	3.680E-11	2.571E-11	9.099E-12	1.772E-13	0.000E+00	0.000E+00
-234	U-234	2.100E-04	4.741E-07	4.505E-07	4.068E-07	2.842E-07	1.004E-07	1.878E-09	0.000E+00	0.000E+00
-234	Th-230	2.100E-04	5.416E-12	1.584E-11	3.494E-11	8.620E-11	1.471E-10	8.107E-11	0.000E+00	0.000E+00
-234	Ra-226+D1	2.100E-04	2.180E-17	1.485E-16	7.375E-16	5.285E-15	2.381E-14	2.754E-14	0.000E+00	0.000E+00
-234	Pb-210+D	2.100E-04	4.292E-19	6.227E-18	6.741E-17	1.364E-15	1.548E-14	3.618E-14	0.000E+00	0.000E+00
-234	äDSR(j)		4.741E-07	4.505E-07	4.068E-07	2.842E-07	1.006E-07	1.959E-09	0.000E+00	0.000E+00
-234	U-234	2.771E-10	6.258E-13	5.947E-13	5.370E-13	3.751E-13	1.326E-13	2.479E-15	0.000E+00	0.000E+00
-234	Th-230	2.771E-10	7.150E-18	2.091E-17	4.612E-17	1.138E-16	1.942E-16	1.070E-16	0.000E+00	0.000E+00
-234	Ra-226+D1	2.771E-10	2.878E-23	1.960E-22	9.735E-22	6.977E-21	3.143E-20	3.635E-20	0.000E+00	0.000E+00
-234	Pb-210+D1	2.771E-10	3.369E-25	4.889E-24	5.292E-23	1.071E-21	1.216E-20	2.840E-20	0.000E+00	0.000E+00
-234	äDSR(j)		6.258E-13	5.947E-13	5.370E-13	3.752E-13	1.328E-13	2.586E-15	0.000E+00	0.000E+00

ummary : GKP Maintenance Worker Inhalation
ile : C:\USERS\CLAUDE\DOCUMENTS\0 GKP DOSE\RESRAD CW\GKP MAINTENANCE WORKER - INHALATION.RAD

Dose/Source Ratios Summed Over All Pathways
Parent and Progeny Principal Radionuclide Contributions Indicated

Parent (i)	Product (j)	Thread Fraction	DSR(j,t) At Time in Years (mrem/yr)/(pCi/g) 0.000E+00	1.000E+00	3.000E+00	1.000E+01	3.000E+01	1.000E+02	3.000E+02	1.000E+03
ÄÄÄÄÄÄÄÄÄ	ÄÄÄÄÄÄÄÄÄÄ	ÄÄÄÄÄÄÄÄÄ	ÄÄÄÄÄÄÄÄÄ	ÄÄÄÄÄÄÄÄÄ	ÄÄÄÄÄÄÄÄÄ	ÄÄÄÄÄÄÄÄÄ	ÄÄÄÄÄÄÄÄÄ	ÄÄÄÄÄÄÄÄÄ	ÄÄÄÄÄÄÄÄÄ	ÄÄÄÄÄÄÄÄÄ
-234	U-234	3.989E-12	9.007E-15	8.560E-15	7.729E-15	5.399E-15	1.908E-15	3.568E-17	0.000E+00	0.000E+00
-234	Th-230	3.989E-12	1.029E-19	3.010E-19	6.639E-19	1.638E-18	2.795E-18	1.540E-18	0.000E+00	0.000E+00
-234	Ra-226+D1	3.989E-12	4.142E-25	2.821E-24	1.401E-23	1.004E-22	4.525E-22	5.232E-22	0.000E+00	0.000E+00
-234	Pb-210+D2	3.989E-12	4.781E-27	6.937E-26	7.510E-25	1.520E-23	1.725E-22	4.030E-22	0.000E+00	0.000E+00
-234	äDSR(j)		9.007E-15	8.560E-15	7.730E-15	5.401E-15	1.911E-15	3.723E-17	0.000E+00	0.000E+00
-234	U-234	1.998E-04	4.510E-07	4.286E-07	3.870E-07	2.704E-07	9.557E-08	1.787E-09	0.000E+00	0.000E+00
-234	Th-230	1.998E-04	5.153E-12	1.507E-11	3.325E-11	8.202E-11	1.400E-10	7.714E-11	0.000E+00	0.000E+00
-234	Ra-226+D2	1.998E-04	2.072E-17	1.411E-16	7.011E-16	5.024E-15	2.264E-14	2.618E-14	0.000E+00	0.000E+00
-234	Pb-210+D	1.998E-04	4.083E-19	5.924E-18	6.414E-17	1.298E-15	1.473E-14	3.442E-14	0.000E+00	0.000E+00
-234	äDSR(j)		4.510E-07	4.286E-07	3.871E-07	2.704E-07	9.571E-08	1.864E-09	0.000E+00	0.000E+00
-234	U-234	2.637E-10	5.954E-13	5.658E-13	5.109E-13	3.569E-13	1.261E-13	2.359E-15	0.000E+00	0.000E+00
-234	Th-230	2.637E-10	6.802E-18	1.989E-17	4.388E-17	1.083E-16	1.847E-16	1.018E-16	0.000E+00	0.000E+00
-234	Ra-226+D2	2.637E-10	2.736E-23	1.863E-22	9.254E-22	6.632E-21	2.988E-20	3.455E-20	0.000E+00	0.000E+00
-234	Pb-210+D1	2.637E-10	3.206E-25	4.651E-24	5.035E-23	1.019E-21	1.157E-20	2.702E-20	0.000E+00	0.000E+00
-234	äDSR(j)		5.954E-13	5.658E-13	5.109E-13	3.570E-13	1.263E-13	2.461E-15	0.000E+00	0.000E+00
-234	U-234	3.795E-12	8.570E-15	8.144E-15	7.353E-15	5.137E-15	1.816E-15	3.395E-17	0.000E+00	0.000E+00
-234	Th-230	3.795E-12	9.791E-20	2.863E-19	6.317E-19	1.558E-18	2.659E-18	1.466E-18	0.000E+00	0.000E+00
-234	Ra-226+D2	3.795E-12	3.938E-25	2.682E-24	1.332E-23	9.546E-23	4.301E-22	4.974E-22	0.000E+00	0.000E+00
-234	Pb-210+D2	3.795E-12	4.549E-27	6.600E-26	7.145E-25	1.446E-23	1.641E-22	3.835E-22	0.000E+00	0.000E+00
-234	äDSR(j)		8.570E-15	8.144E-15	7.354E-15	5.138E-15	1.818E-15	3.542E-17	0.000E+00	0.000E+00
-234	U-234	4.196E-08	9.474E-11	9.003E-11	8.129E-11	5.679E-11	2.007E-11	3.753E-13	0.000E+00	0.000E+00
-234	Th-230	4.196E-08	1.082E-15	3.166E-15	6.983E-15	1.723E-14	2.940E-14	1.620E-14	0.000E+00	0.000E+00
-234	Ra-226+D3	4.196E-08	4.353E-21	2.965E-20	1.473E-19	1.055E-18	4.755E-18	5.498E-18	0.000E+00	0.000E+00
-234	Pb-210+D	4.196E-08	8.577E-23	1.244E-21	1.347E-20	2.727E-19	3.094E-18	7.230E-18	0.000E+00	0.000E+00
-234	äDSR(j)		9.474E-11	9.003E-11	8.130E-11	5.680E-11	2.010E-11	3.915E-13	0.000E+00	0.000E+00
-234	U-234	5.538E-14	1.251E-16	1.188E-16	1.073E-16	7.496E-17	2.650E-17	4.954E-19	0.000E+00	0.000E+00
-234	Th-230	5.538E-14	1.429E-21	4.178E-21	9.218E-21	2.274E-20	3.880E-20	2.139E-20	0.000E+00	0.000E+00
-234	Ra-226+D3	5.538E-14	5.746E-27	3.913E-26	1.944E-25	1.393E-24	6.277E-24	7.258E-24	0.000E+00	0.000E+00
-234	Pb-210+D1	5.538E-14	6.734E-29	9.769E-28	1.058E-26	2.141E-25	2.429E-24	5.676E-24	0.000E+00	0.000E+00
-234	äDSR(j)		1.251E-16	1.188E-16	1.073E-16	7.498E-17	2.654E-17	5.168E-19	0.000E+00	0.000E+00
-234	U-234	7.972E-16	1.800E-18	1.711E-18	1.545E-18	1.079E-18	3.814E-19	7.131E-21	0.000E+00	0.000E+00
-234	Th-230	7.972E-16	2.057E-23	6.014E-23	1.327E-22	3.273E-22	5.585E-22	3.078E-22	0.000E+00	0.000E+00
-234	Ra-226+D3	7.972E-16	8.271E-29	5.633E-28	2.798E-27	2.005E-26	9.034E-26	1.045E-25	0.000E+00	0.000E+00
-234	Pb-210+D2	7.972E-16	9.555E-31	1.386E-29	1.501E-28	3.038E-27	3.447E-26	8.054E-26	0.000E+00	0.000E+00
-234	äDSR(j)		1.800E-18	1.711E-18	1.545E-18	1.079E-18	3.819E-19	7.439E-21	0.000E+00	0.000E+00
-234	U-234	2.000E-07	4.516E-10	4.291E-10	3.875E-10	2.707E-10	9.568E-11	1.789E-12	0.000E+00	0.000E+00
-234	Th-230	2.000E-07	5.160E-15	1.509E-14	3.329E-14	8.212E-14	1.401E-13	7.723E-14	0.000E+00	0.000E+00
-234	Ra-226+D4	2.000E-07	2.073E-20	1.412E-19	7.014E-19	5.027E-18	2.265E-17	2.619E-17	0.000E+00	0.000E+00
-234	Pb-210+D	2.000E-07	4.088E-22	5.932E-21	6.422E-20	1.300E-18	1.475E-17	3.446E-17	0.000E+00	0.000E+00
-234	äDSR(j)		4.516E-10	4.292E-10	3.875E-10	2.708E-10	9.582E-11	1.866E-12	0.000E+00	0.000E+00

ummary : GKP Maintenance Worker Inhalation
ile : C:\USERS\CLAUDE\DOCUMENTS\0 GKP DOSE\RESRAD CW\GKP MAINTENANCE WORKER - INHALATION.RAD

Dose/Source Ratios Summed Over All Pathways
Parent and Progeny Principal Radionuclide Contributions Indicated

Parent (i)	Product (j)	Thread Fraction	DSR(j,t) At Time in Years (mrem/yr)/(pCi/g) 0.000E+00	1.000E+00	3.000E+00	1.000E+01	3.000E+01	1.000E+02	3.000E+02	1.000E+03
-234	U-234	2.640E-13	5.961E-16	5.665E-16	5.115E-16	3.573E-16	1.263E-16	2.362E-18	0.000E+00	0.000E+00
-234	Th-230	2.640E-13	6.811E-21	1.992E-20	4.394E-20	1.084E-19	1.850E-19	1.019E-19	0.000E+00	0.000E+00
-234	Ra-226+D4	2.640E-13	2.737E-26	1.864E-25	9.259E-25	6.635E-24	2.990E-23	3.457E-23	0.000E+00	0.000E+00
-234	Pb-210+D1	2.640E-13	3.210E-28	4.657E-27	5.041E-26	1.020E-24	1.158E-23	2.706E-23	0.000E+00	0.000E+00
-234	äDSR(j)		5.961E-16	5.665E-16	5.115E-16	3.574E-16	1.265E-16	2.464E-18	0.000E+00	0.000E+00
-234	U-234	3.800E-15	8.580E-18	8.154E-18	7.362E-18	5.143E-18	1.818E-18	3.399E-20	0.000E+00	0.000E+00
-234	Th-230	3.800E-15	9.803E-23	2.867E-22	6.324E-22	1.560E-21	2.662E-21	1.467E-21	0.000E+00	0.000E+00
-234	Ra-226+D4	3.800E-15	3.940E-28	2.683E-27	1.333E-26	9.551E-26	4.303E-25	4.976E-25	0.000E+00	0.000E+00
-234	Pb-210+D2	3.800E-15	4.554E-30	6.608E-29	7.154E-28	1.448E-26	1.643E-25	3.839E-25	0.000E+00	0.000E+00
-234	äDSR(j)		8.580E-18	8.154E-18	7.363E-18	5.144E-18	1.821E-18	3.546E-20	0.000E+00	0.000E+00
-235+D	U-235+D	9.835E-01	2.069E-03	1.966E-03	1.776E-03	1.240E-03	4.385E-04	8.200E-06	0.000E+00	0.000E+00
-235+D	Pa-231	9.835E-01	2.259E-07	6.476E-07	1.367E-06	2.866E-06	2.943E-06	1.813E-07	0.000E+00	0.000E+00
-235+D	Ac-227+D	9.835E-01	1.224E-08	7.981E-08	3.597E-07	1.839E-06	3.437E-06	2.792E-07	0.000E+00	0.000E+00
-235+D	äDSR(j)		2.069E-03	1.967E-03	1.777E-03	1.245E-03	4.448E-04	8.660E-06	0.000E+00	0.000E+00
-235+D	U-235+D	2.722E-03	5.727E-06	5.442E-06	4.914E-06	3.433E-06	1.214E-06	2.269E-08	0.000E+00	0.000E+00
-235+D	Pa-231	2.722E-03	6.251E-10	1.792E-09	3.782E-09	7.932E-09	8.146E-09	5.016E-10	0.000E+00	0.000E+00
-235+D	Ac-227+D1	2.722E-03	3.387E-11	2.209E-10	9.954E-10	5.091E-09	9.513E-09	7.726E-10	0.000E+00	0.000E+00
-235+D	äDSR(j)		5.727E-06	5.444E-06	4.919E-06	3.446E-06	1.231E-06	2.397E-08	0.000E+00	0.000E+00
-235+D	U-235+D	1.376E-02	2.895E-05	2.751E-05	2.484E-05	1.736E-05	6.135E-06	1.147E-07	0.000E+00	0.000E+00
-235+D	Pa-231	1.376E-02	3.160E-09	9.061E-09	1.912E-08	4.010E-08	4.118E-08	2.536E-09	0.000E+00	0.000E+00
-235+D	Ac-227+D2	1.376E-02	1.708E-10	1.114E-09	5.020E-09	2.567E-08	4.798E-08	3.897E-09	0.000E+00	0.000E+00
-235+D	äDSR(j)		2.896E-05	2.752E-05	2.487E-05	1.742E-05	6.224E-06	1.212E-07	0.000E+00	0.000E+00
-235+D	U-235+D	3.809E-05	8.013E-08	7.615E-08	6.876E-08	4.803E-08	1.698E-08	3.175E-10	0.000E+00	0.000E+00
-235+D	Pa-231	3.809E-05	8.747E-12	2.508E-11	5.292E-11	1.110E-10	1.140E-10	7.019E-12	0.000E+00	0.000E+00
-235+D	Ac-227+D3	3.809E-05	4.728E-13	3.083E-12	1.389E-11	7.106E-11	1.328E-10	1.078E-11	0.000E+00	0.000E+00
-235+D	äDSR(j)		8.014E-08	7.618E-08	6.883E-08	4.821E-08	1.723E-08	3.354E-10	0.000E+00	0.000E+00
-235+D	U-235+D	8.257E-07	1.737E-09	1.651E-09	1.491E-09	1.041E-09	3.681E-10	6.885E-12	0.000E+00	0.000E+00
-235+D	Pa-231	8.257E-07	1.896E-13	5.437E-13	1.147E-12	2.406E-12	2.471E-12	1.522E-13	0.000E+00	0.000E+00
-235+D	Ac-227+D4	8.257E-07	1.024E-14	6.677E-14	3.009E-13	1.539E-12	2.876E-12	2.335E-13	0.000E+00	0.000E+00
-235+D	äDSR(j)		1.737E-09	1.652E-09	1.492E-09	1.045E-09	3.735E-10	7.270E-12	0.000E+00	0.000E+00
-235+D	U-235+D	2.285E-09	4.808E-12	4.569E-12	4.126E-12	2.882E-12	1.019E-12	1.905E-14	0.000E+00	0.000E+00
-235+D	Pa-231	2.285E-09	5.248E-16	1.505E-15	3.176E-15	6.660E-15	6.839E-15	4.212E-16	0.000E+00	0.000E+00
-235+D	Ac-227+D5	2.285E-09	2.834E-17	1.848E-16	8.327E-16	4.259E-15	7.959E-15	6.463E-16	0.000E+00	0.000E+00
-235+D	äDSR(j)		4.809E-12	4.571E-12	4.130E-12	2.893E-12	1.034E-12	2.012E-14	0.000E+00	0.000E+00
-238	U-238	5.450E-07	1.100E-09	1.045E-09	9.439E-10	6.594E-10	2.331E-10	4.359E-12	0.000E+00	0.000E+00

ummary : GKP Maintenance Worker Inhalation
ile : C:\USERS\CLAUDE\DOCUMENTS\0 GKP DOSE\RESRAD CW\GKP MAINTENANCE WORKER - INHALATION.RAD

Dose/Source Ratios Summed Over All Pathways
Parent and Progeny Principal Radionuclide Contributions Indicated

Parent (i)	Product (j)	Thread Fraction	DSR(j,t) At Time in Years (mrem/yr)/(pCi/g) 0.000E+00	1.000E+00	3.000E+00	1.000E+01	3.000E+01	1.000E+02	3.000E+02	1.000E+03
ÄÄÄÄÄÄÄÄ	ÄÄÄÄÄÄÄÄÄÄ	ÄÄÄÄÄÄÄÄ	ÄÄÄÄÄÄÄÄ	ÄÄÄÄÄÄÄÄ	ÄÄÄÄÄÄÄÄ	ÄÄÄÄÄÄÄÄ	ÄÄÄÄÄÄÄÄ	ÄÄÄÄÄÄÄÄ	ÄÄÄÄÄÄÄÄ	ÄÄÄÄÄÄÄÄ
-238+D	U-238+D	1.599E-03	3.229E-06	3.069E-06	2.771E-06	1.936E-06	6.843E-07	1.280E-08	0.000E+00	0.000E+00
-238+D	U-234	1.599E-03	5.055E-12	1.449E-11	3.058E-11	6.414E-11	6.588E-11	4.060E-12	0.000E+00	0.000E+00
-238+D	Th-230	1.599E-03	3.852E-17	2.615E-16	1.289E-15	8.987E-15	3.772E-14	3.736E-14	0.000E+00	0.000E+00
-238+D	Ra-226+D	1.599E-03	1.166E-22	1.695E-21	1.843E-20	3.787E-19	4.469E-18	1.140E-17	0.000E+00	0.000E+00
-238+D	Pb-210+D	1.599E-03	1.840E-24	5.505E-23	1.282E-21	7.519E-20	2.337E-18	1.373E-17	0.000E+00	0.000E+00
-238+D	äDSR(j)		3.229E-06	3.069E-06	2.771E-06	1.936E-06	6.843E-07	1.280E-08	0.000E+00	0.000E+00
-238+D	U-238+D	2.111E-09	4.262E-12	4.051E-12	3.658E-12	2.555E-12	9.032E-13	1.689E-14	0.000E+00	0.000E+00
-238+D	U-234	2.111E-09	6.672E-18	1.913E-17	4.037E-17	8.467E-17	8.697E-17	5.359E-18	0.000E+00	0.000E+00
-238+D	Th-230	2.111E-09	5.085E-23	3.451E-22	1.701E-21	1.186E-20	4.979E-20	4.931E-20	0.000E+00	0.000E+00
-238+D	Ra-226+D	2.111E-09	1.539E-28	2.237E-27	2.432E-26	4.999E-25	5.899E-24	1.505E-23	0.000E+00	0.000E+00
-238+D	Pb-210+D1	2.111E-09	1.445E-30	4.322E-29	1.006E-27	5.903E-26	1.835E-24	1.078E-23	0.000E+00	0.000E+00
-238+D	äDSR(j)		4.262E-12	4.051E-12	3.658E-12	2.555E-12	9.033E-13	1.690E-14	0.000E+00	0.000E+00
-238+D	U-238+D	3.039E-11	6.135E-14	5.830E-14	5.265E-14	3.678E-14	1.300E-14	2.431E-16	0.000E+00	0.000E+00
-238+D	U-234	3.039E-11	9.604E-20	2.754E-19	5.811E-19	1.219E-18	1.252E-18	7.714E-20	0.000E+00	0.000E+00
-238+D	Th-230	3.039E-11	7.319E-25	4.968E-24	2.449E-23	1.708E-22	7.167E-22	7.098E-22	0.000E+00	0.000E+00
-238+D	Ra-226+D	3.039E-11	2.215E-30	3.220E-29	3.501E-28	7.195E-27	8.491E-26	2.166E-25	0.000E+00	0.000E+00
-238+D	Pb-210+D2	3.039E-11	2.050E-32	6.132E-31	1.428E-29	8.376E-28	2.604E-26	1.530E-25	0.000E+00	0.000E+00
-238+D	äDSR(j)		6.135E-14	5.830E-14	5.265E-14	3.678E-14	1.300E-14	2.432E-16	0.000E+00	0.000E+00
-238+D	U-238+D	3.359E-07	6.783E-10	6.446E-10	5.820E-10	4.066E-10	1.437E-10	2.688E-12	0.000E+00	0.000E+00
-238+D	U-234	3.359E-07	1.062E-15	3.044E-15	6.424E-15	1.347E-14	1.384E-14	8.527E-16	0.000E+00	0.000E+00
-238+D	Th-230	3.359E-07	8.092E-21	5.492E-20	2.707E-19	1.888E-18	7.923E-18	7.846E-18	0.000E+00	0.000E+00
-238+D	Ra-226+D1	3.359E-07	2.449E-26	3.560E-25	3.871E-24	7.954E-23	9.387E-22	2.394E-21	0.000E+00	0.000E+00
-238+D	Pb-210+D	3.359E-07	3.866E-28	1.156E-26	2.692E-25	1.579E-23	4.909E-22	2.884E-21	0.000E+00	0.000E+00
-238+D	äDSR(j)		6.783E-10	6.446E-10	5.820E-10	4.066E-10	1.437E-10	2.689E-12	0.000E+00	0.000E+00
-238+D	U-238+D	4.434E-13	8.953E-16	8.508E-16	7.683E-16	5.367E-16	1.897E-16	3.548E-18	0.000E+00	0.000E+00
-238+D	U-234	4.434E-13	1.401E-21	4.018E-21	8.480E-21	1.778E-20	1.827E-20	1.126E-21	0.000E+00	0.000E+00
-238+D	Th-230	4.434E-13	1.068E-26	7.249E-26	3.573E-25	2.492E-24	1.046E-23	1.036E-23	0.000E+00	0.000E+00
-238+D	Ra-226+D1	4.434E-13	3.233E-32	4.699E-31	5.109E-30	1.050E-28	1.239E-27	3.160E-27	0.000E+00	0.000E+00
-238+D	Pb-210+D1	4.434E-13	3.035E-34	9.078E-33	2.114E-31	1.240E-29	3.854E-28	2.264E-27	0.000E+00	0.000E+00
-238+D	äDSR(j)		8.953E-16	8.508E-16	7.683E-16	5.367E-16	1.897E-16	3.549E-18	0.000E+00	0.000E+00
-238+D	U-238+D	6.383E-15	1.289E-17	1.225E-17	1.106E-17	7.725E-18	2.731E-18	5.107E-20	0.000E+00	0.000E+00
-238+D	U-234	6.383E-15	2.017E-23	5.784E-23	1.221E-22	2.560E-22	2.629E-22	1.620E-23	0.000E+00	0.000E+00
-238+D	Th-230	6.383E-15	1.537E-28	1.043E-27	5.143E-27	3.587E-26	1.505E-25	1.491E-25	0.000E+00	0.000E+00
-238+D	Ra-226+D1	6.383E-15	4.653E-34	6.764E-33	7.354E-32	1.511E-30	1.784E-29	4.549E-29	0.000E+00	0.000E+00
-238+D	Pb-210+D2	6.383E-15	4.306E-36	1.288E-34	2.999E-33	1.759E-31	5.468E-30	3.213E-29	0.000E+00	0.000E+00
-238+D	äDSR(j)		1.289E-17	1.225E-17	1.106E-17	7.725E-18	2.731E-18	5.109E-20	0.000E+00	0.000E+00

ummary : GKP Maintenance Worker Inhalation
ile : C:\USERS\CLAUDE\DOCUMENTS\0 GKP DOSE\RESRAD CW\GKP MAINTENANCE WORKER - INHALATION.RAD

Dose/Source Ratios Summed Over All Pathways
Parent and Progeny Principal Radionuclide Contributions Indicated

Parent	Product	Thread	DSR(j,t) At Time in Years (mrem/yr)/(pCi/g)							
(i)	(j)	Fraction	0.000E+00	1.000E+00	3.000E+00	1.000E+01	3.000E+01	1.000E+02	3.000E+02	1.000E+03
ÄÄÄÄÄÄÄÄÄ	ÄÄÄÄÄÄÄÄÄÄ	ÄÄÄÄÄÄÄÄÄ	ÄÄÄÄÄÄÄÄÄ	ÄÄÄÄÄÄÄÄÄ	ÄÄÄÄÄÄÄÄÄ	ÄÄÄÄÄÄÄÄÄ	ÄÄÄÄÄÄÄÄÄ	ÄÄÄÄÄÄÄÄÄ	ÄÄÄÄÄÄÄÄÄ	ÄÄÄÄÄÄÄÄÄ
-238+D	U-238+D	3.196E-07	6.453E-10	6.132E-10	5.537E-10	3.868E-10	1.367E-10	2.557E-12	0.000E+00	0.000E+00
-238+D	U-234	3.196E-07	1.010E-15	2.896E-15	6.112E-15	1.282E-14	1.317E-14	8.113E-16	0.000E+00	0.000E+00
-238+D	Th-230	3.196E-07	7.699E-21	5.225E-20	2.575E-19	1.796E-18	7.538E-18	7.465E-18	0.000E+00	0.000E+00
-238+D	Ra-226+D2	3.196E-07	2.328E-26	3.384E-25	3.680E-24	7.561E-23	8.923E-22	2.276E-21	0.000E+00	0.000E+00
-238+D	Pb-210+D	3.196E-07	3.678E-28	1.100E-26	2.562E-25	1.503E-23	4.670E-22	2.744E-21	0.000E+00	0.000E+00
-238+D	äDSR(j)		6.453E-10	6.132E-10	5.537E-10	3.868E-10	1.368E-10	2.558E-12	0.000E+00	0.000E+00
-238+D	U-238+D	4.219E-13	8.518E-16	8.095E-16	7.309E-16	5.106E-16	1.805E-16	3.376E-18	0.000E+00	0.000E+00
-238+D	U-234	4.219E-13	1.333E-21	3.823E-21	8.068E-21	1.692E-20	1.738E-20	1.071E-21	0.000E+00	0.000E+00
-238+D	Th-230	4.219E-13	1.016E-26	6.897E-26	3.399E-25	2.371E-24	9.950E-24	9.854E-24	0.000E+00	0.000E+00
-238+D	Ra-226+D2	4.219E-13	3.073E-32	4.467E-31	4.857E-30	9.981E-29	1.178E-27	3.004E-27	0.000E+00	0.000E+00
-238+D	Pb-210+D1	4.219E-13	2.887E-34	8.637E-33	2.011E-31	1.180E-29	3.667E-28	2.154E-27	0.000E+00	0.000E+00
-238+D	äDSR(j)		8.518E-16	8.095E-16	7.309E-16	5.106E-16	1.805E-16	3.377E-18	0.000E+00	0.000E+00
-238+D	U-238+D	6.073E-15	1.226E-17	1.165E-17	1.052E-17	7.349E-18	2.598E-18	4.859E-20	0.000E+00	0.000E+00
-238+D	U-234	6.073E-15	1.919E-23	5.503E-23	1.161E-22	2.436E-22	2.502E-22	1.542E-23	0.000E+00	0.000E+00
-238+D	Th-230	6.073E-15	1.463E-28	9.927E-28	4.893E-27	3.412E-26	1.432E-25	1.418E-25	0.000E+00	0.000E+00
-238+D	Ra-226+D2	6.073E-15	4.423E-34	6.430E-33	6.991E-32	1.437E-30	1.695E-29	4.324E-29	0.000E+00	0.000E+00
-238+D	Pb-210+D2	6.073E-15	4.097E-36	1.226E-34	2.854E-33	1.674E-31	5.203E-30	3.057E-29	0.000E+00	0.000E+00
-238+D	äDSR(j)		1.226E-17	1.165E-17	1.052E-17	7.350E-18	2.598E-18	4.860E-20	0.000E+00	0.000E+00
-238+D	U-238+D	6.713E-11	1.355E-13	1.288E-13	1.163E-13	8.125E-14	2.872E-14	5.371E-16	0.000E+00	0.000E+00
-238+D	U-234	6.713E-11	2.122E-19	6.083E-19	1.284E-18	2.692E-18	2.765E-18	1.704E-19	0.000E+00	0.000E+00
-238+D	Th-230	6.713E-11	1.617E-24	1.097E-23	5.409E-23	3.772E-22	1.583E-21	1.568E-21	0.000E+00	0.000E+00
-238+D	Ra-226+D3	6.713E-11	4.890E-30	7.108E-29	7.729E-28	1.588E-26	1.874E-25	4.780E-25	0.000E+00	0.000E+00
-238+D	Pb-210+D	6.713E-11	7.725E-32	2.311E-30	5.381E-29	3.156E-27	9.810E-26	5.764E-25	0.000E+00	0.000E+00
-238+D	äDSR(j)		1.355E-13	1.288E-13	1.163E-13	8.125E-14	2.872E-14	5.373E-16	0.000E+00	0.000E+00
-238+D	U-238+D	8.862E-17	1.789E-19	1.700E-19	1.535E-19	1.072E-19	3.791E-20	7.090E-22	0.000E+00	0.000E+00
-238+D	U-234	8.862E-17	2.801E-25	8.030E-25	1.695E-24	3.554E-24	3.650E-24	2.249E-25	0.000E+00	0.000E+00
-238+D	Th-230	8.862E-17	2.134E-30	1.449E-29	7.140E-29	4.980E-28	2.090E-27	2.070E-27	0.000E+00	0.000E+00
-238+D	Ra-226+D3	8.862E-17	6.455E-36	9.383E-35	1.020E-33	2.096E-32	2.474E-31	6.310E-31	0.000E+00	0.000E+00
-238+D	Pb-210+D1	8.862E-17	6.065E-38	1.814E-36	4.224E-35	2.478E-33	7.702E-32	4.525E-31	0.000E+00	0.000E+00
-238+D	äDSR(j)		1.789E-19	1.700E-19	1.535E-19	1.073E-19	3.792E-20	7.093E-22	0.000E+00	0.000E+00
-238+D	U-238+D	1.276E-18	2.575E-21	2.447E-21	2.210E-21	1.544E-21	5.457E-22	1.021E-23	0.000E+00	0.000E+00
-238+D	U-234	1.276E-18	4.031E-27	1.156E-26	2.439E-26	5.116E-26	5.254E-26	3.238E-27	0.000E+00	0.000E+00
-238+D	Th-230	1.276E-18	3.072E-32	2.085E-31	1.028E-30	7.168E-30	3.008E-29	2.979E-29	0.000E+00	0.000E+00
-238+D	Ra-226+D3	1.276E-18	9.291E-38	1.351E-36	1.468E-35	3.018E-34	3.561E-33	9.083E-33	0.000E+00	0.000E+00
-238+D	Pb-210+D2	1.276E-18	8.605E-40	2.574E-38	5.994E-37	3.516E-35	1.093E-33	6.421E-33	0.000E+00	0.000E+00
-238+D	äDSR(j)		2.575E-21	2.447E-21	2.210E-21	1.544E-21	5.458E-22	1.021E-23	0.000E+00	0.000E+00

ummary : GKP Maintenance Worker Inhalation
ile : C:\USERS\CLAUDE\DOCUMENTS\0 GKP DOSE\RESRAD CW\GKP MAINTENANCE WORKER - INHALATION.RAD

Dose/Source Ratios Summed Over All Pathways
Parent and Progeny Principal Radionuclide Contributions Indicated

Parent (i)	Product (j)	Thread Fraction	DSR(j,t) At Time in Years (mrem/yr)/(pCi/g) 0.000E+00	1.000E+00	3.000E+00	1.000E+01	3.000E+01	1.000E+02	3.000E+02	1.000E+03
ÄÄÄÄÄÄÄÄÄ	ÄÄÄÄÄÄÄÄÄÄ	ÄÄÄÄÄÄÄÄÄ	ÄÄÄÄÄÄÄÄÄ	ÄÄÄÄÄÄÄÄÄ	ÄÄÄÄÄÄÄÄÄ	ÄÄÄÄÄÄÄÄÄ	ÄÄÄÄÄÄÄÄÄ	ÄÄÄÄÄÄÄÄÄ	ÄÄÄÄÄÄÄÄÄ	ÄÄÄÄÄÄÄÄÄ
-238+D	U-238+D	3.200E-10	6.461E-13	6.140E-13	5.544E-13	3.873E-13	1.369E-13	2.560E-15	0.000E+00	0.000E+00
-238+D	U-234	3.200E-10	1.011E-18	2.900E-18	6.119E-18	1.283E-17	1.318E-17	8.123E-19	0.000E+00	0.000E+00
-238+D	Th-230	3.200E-10	7.708E-24	5.231E-23	2.578E-22	1.798E-21	7.547E-21	7.474E-21	0.000E+00	0.000E+00
-238+D	Ra-226+D4	3.200E-10	2.329E-29	3.386E-28	3.681E-27	7.565E-26	8.928E-25	2.277E-24	0.000E+00	0.000E+00
-238+D	Pb-210+D	3.200E-10	3.682E-31	1.101E-29	2.565E-28	1.504E-26	4.676E-25	2.748E-24	0.000E+00	0.000E+00
-238+D	äDSR(j)		6.461E-13	6.140E-13	5.544E-13	3.873E-13	1.369E-13	2.561E-15	0.000E+00	0.000E+00
-238+D	U-238+D	4.224E-16	8.528E-19	8.105E-19	7.318E-19	5.112E-19	1.807E-19	3.380E-21	0.000E+00	0.000E+00
-238+D	U-234	4.224E-16	1.335E-24	3.828E-24	8.077E-24	1.694E-23	1.740E-23	1.072E-24	0.000E+00	0.000E+00
-238+D	Th-230	4.224E-16	1.017E-29	6.905E-29	3.404E-28	2.374E-27	9.962E-27	9.866E-27	0.000E+00	0.000E+00
-238+D	Ra-226+D4	4.224E-16	3.074E-35	4.469E-34	4.859E-33	9.986E-32	1.178E-30	3.006E-30	0.000E+00	0.000E+00
-238+D	Pb-210+D1	4.224E-16	2.891E-37	8.647E-36	2.014E-34	1.181E-32	3.671E-31	2.157E-30	0.000E+00	0.000E+00
-238+D	äDSR(j)		8.528E-19	8.105E-19	7.318E-19	5.112E-19	1.807E-19	3.381E-21	0.000E+00	0.000E+00
-238+D	U-238+D	6.080E-18	1.228E-20	1.167E-20	1.053E-20	7.358E-21	2.601E-21	4.865E-23	0.000E+00	0.000E+00
-238+D	U-234	6.080E-18	1.922E-26	5.509E-26	1.163E-25	2.438E-25	2.505E-25	1.543E-26	0.000E+00	0.000E+00
-238+D	Th-230	6.080E-18	1.464E-31	9.939E-31	4.899E-30	3.417E-29	1.434E-28	1.420E-28	0.000E+00	0.000E+00
-238+D	Ra-226+D4	6.080E-18	4.425E-37	6.433E-36	6.994E-35	1.437E-33	1.696E-32	4.326E-32	0.000E+00	0.000E+00
-238+D	Pb-210+D2	6.080E-18	4.102E-39	1.227E-37	2.857E-36	1.676E-34	5.209E-33	3.061E-32	0.000E+00	0.000E+00
-238+D	äDSR(j)		1.228E-20	1.167E-20	1.053E-20	7.359E-21	2.602E-21	4.866E-23	0.000E+00	0.000E+00
-238+D1	U-238+D1	9.980E-01	2.015E-03	1.915E-03	1.729E-03	1.208E-03	4.270E-04	7.985E-06	0.000E+00	0.000E+00
-238+D1	U-234	9.980E-01	3.154E-09	9.043E-09	1.908E-08	4.003E-08	4.111E-08	2.533E-09	0.000E+00	0.000E+00
-238+D1	Th-230	9.980E-01	2.404E-14	1.631E-13	8.041E-13	5.608E-12	2.354E-11	2.331E-11	0.000E+00	0.000E+00
-238+D1	Ra-226+D	9.980E-01	7.275E-20	1.058E-18	1.150E-17	2.363E-16	2.789E-15	7.112E-15	0.000E+00	0.000E+00
-238+D1	Pb-210+D	9.980E-01	1.148E-21	3.435E-20	7.999E-19	4.692E-17	1.458E-15	8.569E-15	0.000E+00	0.000E+00
-238+D1	äDSR(j)		2.015E-03	1.915E-03	1.729E-03	1.208E-03	4.270E-04	7.988E-06	0.000E+00	0.000E+00
-238+D1	U-238+D1	1.317E-06	2.660E-09	2.528E-09	2.282E-09	1.594E-09	5.636E-10	1.054E-11	0.000E+00	0.000E+00
-238+D1	U-234	1.317E-06	4.163E-15	1.194E-14	2.519E-14	5.283E-14	5.427E-14	3.344E-15	0.000E+00	0.000E+00
-238+D1	Th-230	1.317E-06	3.173E-20	2.154E-19	1.061E-18	7.403E-18	3.107E-17	3.077E-17	0.000E+00	0.000E+00
-238+D1	Ra-226+D	1.317E-06	9.603E-26	1.396E-24	1.518E-23	3.119E-22	3.681E-21	9.389E-21	0.000E+00	0.000E+00
-238+D1	Pb-210+D1	1.317E-06	9.016E-28	2.697E-26	6.280E-25	3.684E-23	1.145E-21	6.727E-21	0.000E+00	0.000E+00
-238+D1	äDSR(j)		2.660E-09	2.528E-09	2.282E-09	1.594E-09	5.637E-10	1.054E-11	0.000E+00	0.000E+00
-238+D1	U-238+D1	1.896E-08	3.828E-11	3.638E-11	3.285E-11	2.295E-11	8.113E-12	1.517E-13	0.000E+00	0.000E+00
-238+D1	U-234	1.896E-08	5.993E-17	1.718E-16	3.626E-16	7.605E-16	7.811E-16	4.813E-17	0.000E+00	0.000E+00
-238+D1	Th-230	1.896E-08	4.567E-22	3.100E-21	1.528E-20	1.066E-19	4.472E-19	4.429E-19	0.000E+00	0.000E+00
-238+D1	Ra-226+D	1.896E-08	1.382E-27	2.009E-26	2.185E-25	4.490E-24	5.298E-23	1.351E-22	0.000E+00	0.000E+00
-238+D1	Pb-210+D2	1.896E-08	1.279E-29	3.827E-28	8.911E-27	5.227E-25	1.625E-23	9.546E-23	0.000E+00	0.000E+00
-238+D1	äDSR(j)		3.828E-11	3.638E-11	3.285E-11	2.295E-11	8.113E-12	1.518E-13	0.000E+00	0.000E+00

ummary : GKP Maintenance Worker Inhalation
ile : C:\USERS\CLAUDE\DOCUMENTS\0 GKP DOSE\RESRAD CW\GKP MAINTENANCE WORKER - INHALATION.RAD

Dose/Source Ratios Summed Over All Pathways
Parent and Progeny Principal Radionuclide Contributions Indicated

Parent (i)	Product (j)	Thread Fraction	DSR(j,t) At Time in Years (mrem/yr)/(pCi/g) 0.000E+00	1.000E+00	3.000E+00	1.000E+01	3.000E+01	1.000E+02	3.000E+02	1.000E+03
ÄÄÄÄÄÄÄÄ	ÄÄÄÄÄÄÄÄÄÄ	ÄÄÄÄÄÄÄÄÄ	ÄÄÄÄÄÄÄÄÄ	ÄÄÄÄÄÄÄÄÄ	ÄÄÄÄÄÄÄÄÄ	ÄÄÄÄÄÄÄÄÄ	ÄÄÄÄÄÄÄÄÄ	ÄÄÄÄÄÄÄÄÄ	ÄÄÄÄÄÄÄÄÄ	ÄÄÄÄÄÄÄÄÄ
-238+D1	U-238+D1	2.096E-04	4.232E-07	4.022E-07	3.632E-07	2.537E-07	8.968E-08	1.677E-09	0.000E+00	0.000E+00
-238+D1	U-234	2.096E-04	6.625E-13	1.899E-12	4.009E-12	8.407E-12	8.635E-12	5.321E-13	0.000E+00	0.000E+00
-238+D1	Th-230	2.096E-04	5.049E-18	3.427E-17	1.689E-16	1.178E-15	4.944E-15	4.896E-15	0.000E+00	0.000E+00
-238+D1	Ra-226+D1	2.096E-04	1.528E-23	2.221E-22	2.415E-21	4.963E-20	5.857E-19	1.494E-18	0.000E+00	0.000E+00
-238+D1	Pb-210+D	2.096E-04	2.412E-25	7.215E-24	1.680E-22	9.855E-21	3.063E-19	1.800E-18	0.000E+00	0.000E+00
-238+D1	äDSR(j)		4.232E-07	4.022E-07	3.632E-07	2.537E-07	8.969E-08	1.678E-09	0.000E+00	0.000E+00
-238+D1	U-238+D1	2.767E-10	5.587E-13	5.309E-13	4.794E-13	3.349E-13	1.184E-13	2.214E-15	0.000E+00	0.000E+00
-238+D1	U-234	2.767E-10	8.745E-19	2.507E-18	5.291E-18	1.110E-17	1.140E-17	7.024E-19	0.000E+00	0.000E+00
-238+D1	Th-230	2.767E-10	6.665E-24	4.523E-23	2.230E-22	1.555E-21	6.526E-21	6.463E-21	0.000E+00	0.000E+00
-238+D1	Ra-226+D1	2.767E-10	2.017E-29	2.932E-28	3.188E-27	6.552E-26	7.732E-25	1.972E-24	0.000E+00	0.000E+00
-238+D1	Pb-210+D1	2.767E-10	1.894E-31	5.665E-30	1.319E-28	7.737E-27	2.405E-25	1.413E-24	0.000E+00	0.000E+00
-238+D1	äDSR(j)		5.587E-13	5.309E-13	4.794E-13	3.349E-13	1.184E-13	2.215E-15	0.000E+00	0.000E+00
-238+D1	U-238+D1	3.983E-12	8.041E-15	7.642E-15	6.900E-15	4.820E-15	1.704E-15	3.187E-17	0.000E+00	0.000E+00
-238+D1	U-234	3.983E-12	1.259E-20	3.609E-20	7.616E-20	1.597E-19	1.641E-19	1.011E-20	0.000E+00	0.000E+00
-238+D1	Th-230	3.983E-12	9.593E-26	6.511E-25	3.209E-24	2.238E-23	9.393E-23	9.303E-23	0.000E+00	0.000E+00
-238+D1	Ra-226+D1	3.983E-12	2.903E-31	4.221E-30	4.589E-29	9.430E-28	1.113E-26	2.838E-26	0.000E+00	0.000E+00
-238+D1	Pb-210+D2	3.983E-12	2.687E-33	8.038E-32	1.872E-30	1.098E-28	3.412E-27	2.005E-26	0.000E+00	0.000E+00
-238+D1	äDSR(j)		8.041E-15	7.642E-15	6.900E-15	4.820E-15	1.704E-15	3.188E-17	0.000E+00	0.000E+00
-238+D1	U-238+D1	1.994E-04	4.027E-07	3.827E-07	3.455E-07	2.414E-07	8.533E-08	1.596E-09	0.000E+00	0.000E+00
-238+D1	U-234	1.994E-04	6.303E-13	1.807E-12	3.814E-12	7.999E-12	8.216E-12	5.063E-13	0.000E+00	0.000E+00
-238+D1	Th-230	1.994E-04	4.804E-18	3.260E-17	1.607E-16	1.121E-15	4.704E-15	4.658E-15	0.000E+00	0.000E+00
-238+D1	Ra-226+D2	1.994E-04	1.453E-23	2.112E-22	2.296E-21	4.718E-20	5.568E-19	1.420E-18	0.000E+00	0.000E+00
-238+D1	Pb-210+D	1.994E-04	2.295E-25	6.865E-24	1.598E-22	9.376E-21	2.914E-19	1.712E-18	0.000E+00	0.000E+00
-238+D1	äDSR(j)		4.027E-07	3.827E-07	3.455E-07	2.414E-07	8.533E-08	1.596E-09	0.000E+00	0.000E+00
-238+D1	U-238+D1	2.633E-10	5.315E-13	5.051E-13	4.561E-13	3.186E-13	1.126E-13	2.106E-15	0.000E+00	0.000E+00
-238+D1	U-234	2.633E-10	8.320E-19	2.386E-18	5.034E-18	1.056E-17	1.084E-17	6.683E-19	0.000E+00	0.000E+00
-238+D1	Th-230	2.633E-10	6.341E-24	4.304E-23	2.121E-22	1.479E-21	6.209E-21	6.149E-21	0.000E+00	0.000E+00
-238+D1	Ra-226+D2	2.633E-10	1.918E-29	2.787E-28	3.031E-27	6.228E-26	7.350E-25	1.875E-24	0.000E+00	0.000E+00
-238+D1	Pb-210+D1	2.633E-10	1.802E-31	5.389E-30	1.255E-28	7.361E-27	2.288E-25	1.344E-24	0.000E+00	0.000E+00
-238+D1	äDSR(j)		5.315E-13	5.051E-13	4.561E-13	3.186E-13	1.126E-13	2.107E-15	0.000E+00	0.000E+00
-238+D1	U-238+D1	3.789E-12	7.651E-15	7.271E-15	6.565E-15	4.586E-15	1.621E-15	3.032E-17	0.000E+00	0.000E+00
-238+D1	U-234	3.789E-12	1.198E-20	3.434E-20	7.246E-20	1.520E-19	1.561E-19	9.619E-21	0.000E+00	0.000E+00
-238+D1	Th-230	3.789E-12	9.127E-26	6.195E-25	3.053E-24	2.129E-23	8.937E-23	8.851E-23	0.000E+00	0.000E+00
-238+D1	Ra-226+D2	3.789E-12	2.760E-31	4.012E-30	4.362E-29	8.965E-28	1.058E-26	2.698E-26	0.000E+00	0.000E+00
-238+D1	Pb-210+D2	3.789E-12	2.557E-33	7.647E-32	1.781E-30	1.045E-28	3.247E-27	1.908E-26	0.000E+00	0.000E+00
-238+D1	äDSR(j)		7.651E-15	7.271E-15	6.565E-15	4.586E-15	1.621E-15	3.033E-17	0.000E+00	0.000E+00

ummary : GKP Maintenance Worker Inhalation
ile : C:\USERS\CLAUDE\DOCUMENTS\0 GKP DOSE\RESRAD CW\GKP MAINTENANCE WORKER - INHALATION.RAD

Dose/Source Ratios Summed Over All Pathways
Parent and Progeny Principal Radionuclide Contributions Indicated

Parent	Product	Thread	DSR(j,t) At Time in Years (mrem/yr)/(pCi/g)							
(i)	(j)	Fraction	0.000E+00	1.000E+00	3.000E+00	1.000E+01	3.000E+01	1.000E+02	3.000E+02	1.000E+03
ÄÄÄÄÄÄÄÄÄ	ÄÄÄÄÄÄÄÄÄÄ	ÄÄÄÄÄÄÄÄÄ	ÄÄÄÄÄÄÄÄÄ	ÄÄÄÄÄÄÄÄÄ	ÄÄÄÄÄÄÄÄÄ	ÄÄÄÄÄÄÄÄÄ	ÄÄÄÄÄÄÄÄÄ	ÄÄÄÄÄÄÄÄÄ	ÄÄÄÄÄÄÄÄÄ	ÄÄÄÄÄÄÄÄÄ
-238+D1	U-238+D1	4.189E-08	8.458E-11	8.038E-11	7.258E-11	5.070E-11	1.792E-11	3.352E-13	0.000E+00	0.000E+00
-238+D1	U-234	4.189E-08	1.324E-16	3.796E-16	8.011E-16	1.680E-15	1.726E-15	1.063E-16	0.000E+00	0.000E+00
-238+D1	Th-230	4.189E-08	1.009E-21	6.848E-21	3.375E-20	2.354E-19	9.880E-19	9.785E-19	0.000E+00	0.000E+00
-238+D1	Ra-226+D3	4.189E-08	3.051E-27	4.435E-26	4.823E-25	9.910E-24	1.170E-22	2.983E-22	0.000E+00	0.000E+00
-238+D1	Pb-210+D	4.189E-08	4.820E-29	1.442E-27	3.358E-26	1.969E-24	6.121E-23	3.597E-22	0.000E+00	0.000E+00
-238+D1	äDSR(j)		8.458E-11	8.038E-11	7.258E-11	5.070E-11	1.792E-11	3.353E-13	0.000E+00	0.000E+00
-238+D1	U-238+D1	5.530E-14	1.116E-16	1.061E-16	9.580E-17	6.692E-17	2.366E-17	4.424E-19	0.000E+00	0.000E+00
-238+D1	U-234	5.530E-14	1.748E-22	5.011E-22	1.057E-21	2.218E-21	2.278E-21	1.404E-22	0.000E+00	0.000E+00
-238+D1	Th-230	5.530E-14	1.332E-27	9.039E-27	4.456E-26	3.107E-25	1.304E-24	1.292E-24	0.000E+00	0.000E+00
-238+D1	Ra-226+D3	5.530E-14	4.028E-33	5.855E-32	6.366E-31	1.308E-29	1.544E-28	3.937E-28	0.000E+00	0.000E+00
-238+D1	Pb-210+D1	5.530E-14	3.784E-35	1.132E-33	2.636E-32	1.546E-30	4.806E-29	2.824E-28	0.000E+00	0.000E+00
-238+D1	äDSR(j)		1.116E-16	1.061E-16	9.580E-17	6.692E-17	2.366E-17	4.426E-19	0.000E+00	0.000E+00
-238+D1	U-238+D1	7.959E-16	1.607E-18	1.527E-18	1.379E-18	9.633E-19	3.405E-19	6.368E-21	0.000E+00	0.000E+00
-238+D1	U-234	7.959E-16	2.515E-24	7.212E-24	1.522E-23	3.192E-23	3.279E-23	2.020E-24	0.000E+00	0.000E+00
-238+D1	Th-230	7.959E-16	1.917E-29	1.301E-28	6.413E-28	4.473E-27	1.877E-26	1.859E-26	0.000E+00	0.000E+00
-238+D1	Ra-226+D3	7.959E-16	5.797E-35	8.427E-34	9.163E-33	1.883E-31	2.222E-30	5.668E-30	0.000E+00	0.000E+00
-238+D1	Pb-210+D2	7.959E-16	5.370E-37	1.606E-35	3.740E-34	2.194E-32	6.819E-31	4.007E-30	0.000E+00	0.000E+00
-238+D1	äDSR(j)		1.607E-18	1.527E-18	1.379E-18	9.633E-19	3.406E-19	6.370E-21	0.000E+00	0.000E+00
-238+D1	U-238+D1	1.997E-07	4.032E-10	3.831E-10	3.459E-10	2.417E-10	8.543E-11	1.598E-12	0.000E+00	0.000E+00
-238+D1	U-234	1.997E-07	6.311E-16	1.809E-15	3.818E-15	8.009E-15	8.226E-15	5.069E-16	0.000E+00	0.000E+00
-238+D1	Th-230	1.997E-07	4.810E-21	3.264E-20	1.609E-19	1.122E-18	4.709E-18	4.664E-18	0.000E+00	0.000E+00
-238+D1	Ra-226+D4	1.997E-07	1.453E-26	2.113E-25	2.297E-24	4.721E-23	5.571E-22	1.421E-21	0.000E+00	0.000E+00
-238+D1	Pb-210+D	1.997E-07	2.298E-28	6.873E-27	1.600E-25	9.388E-24	2.918E-22	1.714E-21	0.000E+00	0.000E+00
-238+D1	äDSR(j)		4.032E-10	3.831E-10	3.460E-10	2.417E-10	8.544E-11	1.598E-12	0.000E+00	0.000E+00
-238+D1	U-238+D1	2.636E-13	5.322E-16	5.057E-16	4.567E-16	3.190E-16	1.128E-16	2.109E-18	0.000E+00	0.000E+00
-238+D1	U-234	2.636E-13	8.330E-22	2.388E-21	5.040E-21	1.057E-20	1.086E-20	6.691E-22	0.000E+00	0.000E+00
-238+D1	Th-230	2.636E-13	6.349E-27	4.309E-26	2.124E-25	1.481E-24	6.216E-24	6.156E-24	0.000E+00	0.000E+00
-238+D1	Ra-226+D4	2.636E-13	1.918E-32	2.789E-31	3.032E-30	6.231E-29	7.353E-28	1.876E-27	0.000E+00	0.000E+00
-238+D1	Pb-210+D1	2.636E-13	1.804E-34	5.396E-33	1.256E-31	7.370E-30	2.291E-28	1.346E-27	0.000E+00	0.000E+00
-238+D1	äDSR(j)		5.322E-16	5.057E-16	4.567E-16	3.190E-16	1.128E-16	2.110E-18	0.000E+00	0.000E+00
-238+D1	U-238+D1	3.794E-15	7.660E-18	7.279E-18	6.573E-18	4.592E-18	1.623E-18	3.036E-20	0.000E+00	0.000E+00
-238+D1	U-234	3.794E-15	1.199E-23	3.438E-23	7.255E-23	1.522E-22	1.563E-22	9.631E-24	0.000E+00	0.000E+00
-238+D1	Th-230	3.794E-15	9.138E-29	6.202E-28	3.057E-27	2.132E-26	8.948E-26	8.862E-26	0.000E+00	0.000E+00
-238+D1	Ra-226+D4	3.794E-15	2.761E-34	4.014E-33	4.365E-32	8.969E-31	1.058E-29	2.700E-29	0.000E+00	0.000E+00
-238+D1	Pb-210+D2	3.794E-15	2.560E-36	7.656E-35	1.783E-33	1.046E-31	3.251E-30	1.910E-29	0.000E+00	0.000E+00
-238+D1	äDSR(j)		7.660E-18	7.279E-18	6.573E-18	4.592E-18	1.623E-18	3.037E-20	0.000E+00	0.000E+00
íííííííííí	íííííííííí	íííííííííí	íííííííííí	íííííííííí	íííííííííí	íííííííííí	íííííííííí	íííííííííí	íííííííííí	íííííííííí

ne DSR includes contributions from associated (half-life ó 180 days) daughters.

ummary : GKP Maintenance Worker Inhalation
ile : C:\USERS\CLAUDE\DOCUMENTS\0 GKP DOSE\RESRAD CW\GKP MAINTENANCE WORKER - INHALATION.RAD

Single Radionuclide Soil Guidelines G(i,t) in pCi/g
Basic Radiation Dose Limit = 2.500E+01 mrem/yr

uclide (i)	t= 0.000E+00	1.000E+00	3.000E+00	1.000E+01	3.000E+01	1.000E+02	3.000E+02	1.000E+03
ÄÄÄÄÄÄ	ÄÄÄÄÄÄÄÄÄÄ	ÄÄÄÄÄÄÄÄÄÄ	ÄÄÄÄÄÄÄÄÄÄ	ÄÄÄÄÄÄÄÄÄÄ	ÄÄÄÄÄÄÄÄÄÄ	ÄÄÄÄÄÄÄÄÄÄ	ÄÄÄÄÄÄÄÄÄÄ	ÄÄÄÄÄÄÄÄÄÄ
a-226	1.531E+05	1.481E+05	1.411E+05	1.346E+05	1.875E+05	2.774E+06	*9.885E+11	*9.885E+11
n-232	8.703E+02	8.692E+02	8.578E+02	8.280E+02	9.151E+02	2.141E+03	*1.097E+05	*1.097E+05
-234	1.107E+04	1.165E+04	1.290E+04	1.847E+04	5.218E+04	2.679E+06	*6.222E+09	*6.222E+09
-235	1.188E+04	1.250E+04	1.383E+04	1.975E+04	5.527E+04	*2.160E+06	*2.160E+06	*2.160E+06
-238	1.238E+04	1.303E+04	1.443E+04	2.066E+04	5.843E+04	*3.361E+05	*3.361E+05	*3.361E+05
íííííí	íííííííííí	íííííííííí	íííííííííí	íííííííííí	íííííííííí	íííííííííí	íííííííííí	íííííííííí

At specific activity limit

Summed Dose/Source Ratios DSR(i,t) in (mrem/yr)/(pCi/g)
and Single Radionuclide Soil Guidelines G(i,t) in pCi/g
at tmin = time of minimum single radionuclide soil guideline
and at tmax = time of maximum total dose = 0.000E+00 years

uclide (i)	Initial (pCi/g)	tmin (years)	DSR(i,tmin)	G(i,tmin) (pCi/g)	DSR(i,tmax)	G(i,tmax) (pCi/g)
ÄÄÄÄÄÄ	ÄÄÄÄÄÄÄÄÄÄ	ÄÄÄÄÄÄÄÄÄÄÄÄÄÄÄÄ	ÄÄÄÄÄÄÄÄÄÄ	ÄÄÄÄÄÄÄÄÄÄ	ÄÄÄÄÄÄÄÄÄÄ	ÄÄÄÄÄÄÄÄÄÄ
a-226	3.650E+01	8.71 ñ 0.02	1.861E-04	1.343E+05	1.633E-04	1.531E+05
n-232	2.400E+00	10.86 ñ 0.02	3.020E-02	8.277E+02	2.873E-02	8.703E+02
-234	1.390E+01	0.000E+00	2.258E-03	1.107E+04	2.258E-03	1.107E+04
-235	8.400E-01	0.000E+00	2.104E-03	1.188E+04	2.104E-03	1.188E+04
-238	1.390E+01	0.000E+00	2.019E-03	1.238E+04	2.019E-03	1.238E+04
íííííí	íííííííííí	íííííííííííííííííí	íííííííííí	íííííííííí	íííííííííí	íííííííííí

ummary : GKP Maintenance Worker Inhalation
ile : C:\USERS\CLAUDE\DOCUMENTS\0 GKP DOSE\RESRAD CW\GKP MAINTENANCE WORKER - INHALATION.RAD

Individual Nuclide Dose Summed Over All Pathways
Parent Nuclide and Branch Fraction Indicated

uclide (j)	Parent (i)	THF(i)	DOSE(j,t), mrem/yr t= 0.000E+00	1.000E+00	3.000E+00	1.000E+01	3.000E+01	1.000E+02	3.000E+02	1.000E+03
ÄÄÄÄÄ	ÄÄÄÄÄÄ	ÄÄÄÄÄÄÄÄ	ÄÄÄÄÄÄÄÄ	ÄÄÄÄÄÄÄÄ	ÄÄÄÄÄÄÄÄ	ÄÄÄÄÄÄÄÄ	ÄÄÄÄÄÄÄÄ	ÄÄÄÄÄÄÄÄ	ÄÄÄÄÄÄÄÄ	ÄÄÄÄÄÄÄÄ
a-226	Ra-226	9.996E-01	5.733E-03	5.515E-03	5.103E-03	3.882E-03	1.751E-03	7.678E-05	0.000E+00	0.000E+00
a-226	Ra-226	1.319E-06	7.568E-09	7.280E-09	6.736E-09	5.124E-09	2.311E-09	1.013E-10	0.000E+00	0.000E+00
a-226	U-234	9.996E-01	1.443E-12	9.825E-12	4.881E-11	3.498E-10	1.576E-09	1.822E-09	0.000E+00	0.000E+00
a-226	U-234	1.319E-06	1.904E-18	1.297E-17	6.443E-17	4.617E-16	2.080E-15	2.405E-15	0.000E+00	0.000E+00
a-226	U-234	1.899E-08	2.741E-20	1.867E-19	9.273E-19	6.645E-18	2.994E-17	3.462E-17	0.000E+00	0.000E+00
a-226	U-238	1.599E-03	1.621E-21	2.356E-20	2.561E-19	5.264E-18	6.212E-17	1.584E-16	0.000E+00	0.000E+00
a-226	U-238	2.111E-09	2.139E-27	3.110E-26	3.381E-25	6.948E-24	8.200E-23	2.091E-22	0.000E+00	0.000E+00
a-226	U-238	3.039E-11	2.898E-29	4.476E-28	4.867E-27	1.000E-25	1.180E-24	3.010E-24	0.000E+00	0.000E+00
a-226	U-238	9.980E-01	1.011E-18	1.470E-17	1.598E-16	3.285E-15	3.876E-14	9.886E-14	0.000E+00	0.000E+00
a-226	U-238	1.317E-06	1.335E-24	1.940E-23	2.110E-22	4.336E-21	5.117E-20	1.305E-19	0.000E+00	0.000E+00
a-226	U-238	1.896E-08	1.921E-26	2.793E-25	3.037E-24	6.241E-23	7.365E-22	1.878E-21	0.000E+00	0.000E+00
a-226	äDOSE(j)		5.733E-03	5.515E-03	5.103E-03	3.882E-03	1.751E-03	7.678E-05	0.000E+00	0.000E+00
o-210	Ra-226	9.996E-01	2.243E-04	6.440E-04	1.363E-03	2.895E-03	3.113E-03	2.520E-04	0.000E+00	0.000E+00
o-210	Ra-226	2.100E-04	4.711E-08	1.353E-07	2.864E-07	6.081E-07	6.539E-07	5.294E-08	0.000E+00	0.000E+00
o-210	Ra-226	1.998E-04	4.482E-08	1.287E-07	2.725E-07	5.786E-07	6.221E-07	5.037E-08	0.000E+00	0.000E+00
o-210	Ra-226	4.196E-08	9.415E-12	2.703E-11	5.723E-11	1.215E-10	1.307E-10	1.058E-11	0.000E+00	0.000E+00
o-210	Ra-226	2.000E-07	4.488E-11	1.289E-10	2.728E-10	5.793E-10	6.229E-10	5.043E-11	0.000E+00	0.000E+00
o-210	U-234	9.996E-01	2.840E-14	4.121E-13	4.461E-12	9.030E-11	1.025E-09	2.394E-09	0.000E+00	0.000E+00
o-210	U-234	2.100E-04	5.966E-18	8.655E-17	9.370E-16	1.897E-14	2.152E-13	5.029E-13	0.000E+00	0.000E+00
o-210	U-234	1.998E-04	5.676E-18	8.235E-17	8.915E-16	1.804E-14	2.048E-13	4.785E-13	0.000E+00	0.000E+00
o-210	U-234	4.196E-08	1.192E-21	1.730E-20	1.873E-19	3.790E-18	4.301E-17	1.005E-16	0.000E+00	0.000E+00
o-210	U-234	2.000E-07	5.683E-21	8.245E-20	8.926E-19	1.807E-17	2.050E-16	4.790E-16	0.000E+00	0.000E+00
o-210	U-238	1.599E-03	2.558E-23	7.652E-22	1.782E-20	1.045E-18	3.249E-17	1.909E-16	0.000E+00	0.000E+00
o-210	U-238	3.359E-07	5.373E-27	1.607E-25	3.743E-24	2.195E-22	6.823E-21	4.009E-20	0.000E+00	0.000E+00
o-210	U-238	3.196E-07	5.112E-27	1.529E-25	3.561E-24	2.089E-22	6.492E-21	3.815E-20	0.000E+00	0.000E+00
o-210	U-238	6.713E-11	0.000E+00	3.212E-29	7.479E-28	4.387E-26	1.364E-24	8.012E-24	0.000E+00	0.000E+00
o-210	U-238	3.200E-10	0.000E+00	1.531E-28	3.565E-27	2.091E-25	6.500E-24	3.819E-23	0.000E+00	0.000E+00
o-210	U-238	9.980E-01	1.596E-20	4.775E-19	1.112E-17	6.522E-16	2.027E-14	1.191E-13	0.000E+00	0.000E+00
o-210	U-238	2.096E-04	3.353E-24	1.003E-22	2.335E-21	1.370E-19	4.258E-18	2.502E-17	0.000E+00	0.000E+00
o-210	U-238	1.994E-04	3.190E-24	9.542E-23	2.222E-21	1.303E-19	4.051E-18	2.380E-17	0.000E+00	0.000E+00
o-210	U-238	4.189E-08	6.700E-28	2.004E-26	4.667E-25	2.738E-23	8.509E-22	5.000E-21	0.000E+00	0.000E+00
o-210	U-238	1.997E-07	3.194E-27	9.553E-26	2.225E-24	1.305E-22	4.056E-21	2.383E-20	0.000E+00	0.000E+00
o-210	äDOSE(j)		2.244E-04	6.443E-04	1.364E-03	2.896E-03	3.114E-03	2.521E-04	0.000E+00	0.000E+00
o-210	Ra-226	1.319E-06	1.761E-10	5.056E-10	1.070E-09	2.273E-09	2.444E-09	1.979E-10	0.000E+00	0.000E+00
o-210	Ra-226	1.899E-08	2.499E-12	7.174E-12	1.519E-11	3.225E-11	3.468E-11	2.808E-12	0.000E+00	0.000E+00
o-210	Ra-226	2.771E-10	3.699E-14	1.062E-13	2.248E-13	4.774E-13	5.134E-13	4.156E-14	0.000E+00	0.000E+00
o-210	Ra-226	2.637E-10	3.519E-14	1.010E-13	2.139E-13	4.542E-13	4.884E-13	3.954E-14	0.000E+00	0.000E+00
o-210	Ra-226	5.538E-14	7.392E-18	2.122E-17	4.493E-17	9.541E-17	1.026E-16	8.306E-18	0.000E+00	0.000E+00
o-210	Ra-226	2.640E-13	3.523E-17	1.012E-16	2.142E-16	4.548E-16	4.890E-16	3.959E-17	0.000E+00	0.000E+00
o-210	U-234	1.319E-06	2.230E-20	3.235E-19	3.502E-18	7.089E-17	8.045E-16	1.880E-15	0.000E+00	0.000E+00
o-210	U-234	2.771E-10	4.684E-24	6.795E-23	7.357E-22	1.489E-20	1.690E-19	3.948E-19	0.000E+00	0.000E+00
o-210	U-234	2.637E-10	4.456E-24	6.465E-23	6.999E-22	1.417E-20	1.608E-19	3.756E-19	0.000E+00	0.000E+00
o-210	U-234	5.538E-14	9.360E-28	1.358E-26	1.470E-25	2.976E-24	3.377E-23	7.890E-23	0.000E+00	0.000E+00
o-210	U-234	2.640E-13	4.461E-27	6.473E-26	7.008E-25	1.418E-23	1.610E-22	3.761E-22	0.000E+00	0.000E+00
o-210	U-238	2.111E-09	2.008E-29	6.007E-28	1.399E-26	8.205E-25	2.550E-23	1.499E-22	0.000E+00	0.000E+00
o-210	U-238	4.434E-13	0.000E+00	0.000E+00	0.000E+00	1.723E-28	5.357E-27	3.148E-26	0.000E+00	0.000E+00
o-210	U-238	4.219E-13	0.000E+00	0.000E+00	0.000E+00	1.640E-28	5.097E-27	2.995E-26	0.000E+00	0.000E+00

ummary : GKP Maintenance Worker Inhalation
ile : C:\USERS\CLAUDE\DOCUMENTS\0 GKP DOSE\RESRAD CW\GKP MAINTENANCE WORKER - INHALATION.RAD

Individual Nuclide Dose Summed Over All Pathways
Parent Nuclide and Branch Fraction Indicated

uclide (j)	Parent (i)	THF(i)	DOSE(j,t), mrem/yr t= 0.000E+00	1.000E+00	3.000E+00	1.000E+01	3.000E+01	1.000E+02	3.000E+02	1.000E+03
ÄÄÄÄÄ	ÄÄÄÄÄÄ	ÄÄÄÄÄÄÄÄ	ÄÄÄÄÄÄÄÄÄ	ÄÄÄÄÄÄÄÄÄ	ÄÄÄÄÄÄÄÄÄ	ÄÄÄÄÄÄÄÄÄ	ÄÄÄÄÄÄÄÄÄ	ÄÄÄÄÄÄÄÄÄ	ÄÄÄÄÄÄÄÄÄ	ÄÄÄÄÄÄÄÄÄ
o-210	U-238	8.862E-17	0.000E+00	0.000E+00	0.000E+00	0.000E+00	0.000E+00	0.000E+00	0.000E+00	0.000E+00
o-210	U-238	4.224E-16	0.000E+00	0.000E+00	0.000E+00	0.000E+00	0.000E+00	2.998E-29	0.000E+00	0.000E+00
o-210	U-238	1.317E-06	1.253E-26	3.749E-25	8.729E-24	5.120E-22	1.591E-20	9.351E-20	0.000E+00	0.000E+00
o-210	U-238	2.767E-10	0.000E+00	7.874E-29	1.833E-27	1.075E-25	3.343E-24	1.964E-23	0.000E+00	0.000E+00
o-210	U-238	2.633E-10	0.000E+00	7.491E-29	1.744E-27	1.023E-25	3.180E-24	1.869E-23	0.000E+00	0.000E+00
o-210	U-238	5.530E-14	0.000E+00	0.000E+00	0.000E+00	2.149E-29	6.680E-28	3.925E-27	0.000E+00	0.000E+00
o-210	U-238	2.636E-13	0.000E+00	0.000E+00	0.000E+00	1.024E-28	3.184E-27	1.871E-26	0.000E+00	0.000E+00
o-210	äDOSE(j)		1.787E-10	5.130E-10	1.086E-09	2.306E-09	2.480E-09	2.008E-10	0.000E+00	0.000E+00
a-226	Ra-226	1.899E-08	1.089E-10	1.048E-10	9.695E-11	7.375E-11	3.326E-11	1.459E-12	0.000E+00	0.000E+00
a-226	Ra-226	2.100E-04	1.204E-06	1.158E-06	1.072E-06	8.153E-07	3.677E-07	1.613E-08	0.000E+00	0.000E+00
a-226	äDOSE(j)		1.204E-06	1.159E-06	1.072E-06	8.154E-07	3.677E-07	1.613E-08	0.000E+00	0.000E+00
a-226	Ra-226	2.771E-10	1.590E-12	1.529E-12	1.415E-12	1.076E-12	4.854E-13	2.129E-14	0.000E+00	0.000E+00
a-226	Ra-226	3.989E-12	2.288E-14	2.201E-14	2.036E-14	1.549E-14	6.987E-15	3.064E-16	0.000E+00	0.000E+00
a-226	äDOSE(j)		1.612E-12	1.551E-12	1.435E-12	1.092E-12	4.924E-13	2.159E-14	0.000E+00	0.000E+00
o-210	Ra-226	3.989E-12	5.248E-16	1.507E-15	3.190E-15	6.775E-15	7.284E-15	5.897E-16	0.000E+00	0.000E+00
o-210	Ra-226	3.795E-12	4.993E-16	1.434E-15	3.035E-15	6.446E-15	6.930E-15	5.611E-16	0.000E+00	0.000E+00
o-210	Ra-226	7.972E-16	1.049E-19	3.011E-19	6.375E-19	1.354E-18	1.456E-18	1.179E-19	0.000E+00	0.000E+00
o-210	Ra-226	3.800E-15	4.999E-19	1.435E-18	3.039E-18	6.453E-18	6.939E-18	5.618E-19	0.000E+00	0.000E+00
o-210	U-234	1.899E-08	3.164E-22	4.590E-21	4.970E-20	1.006E-18	1.142E-17	2.667E-17	0.000E+00	0.000E+00
o-210	U-234	3.989E-12	6.646E-26	9.642E-25	1.044E-23	2.113E-22	2.398E-21	5.602E-21	0.000E+00	0.000E+00
o-210	U-234	3.795E-12	6.323E-26	9.174E-25	9.931E-24	2.010E-22	2.281E-21	5.330E-21	0.000E+00	0.000E+00
o-210	U-234	7.972E-16	0.000E+00	1.927E-28	2.086E-27	4.222E-26	4.792E-25	1.120E-24	0.000E+00	0.000E+00
o-210	U-234	3.800E-15	6.331E-29	9.185E-28	9.943E-27	2.013E-25	2.284E-24	5.337E-24	0.000E+00	0.000E+00
o-210	U-238	3.039E-11	0.000E+00	0.000E+00	1.985E-28	1.164E-26	3.619E-25	2.126E-24	0.000E+00	0.000E+00
o-210	U-238	6.383E-15	0.000E+00	0.000E+00	0.000E+00	0.000E+00	7.601E-29	4.466E-28	0.000E+00	0.000E+00
o-210	U-238	6.073E-15	0.000E+00	0.000E+00	0.000E+00	0.000E+00	7.232E-29	4.249E-28	0.000E+00	0.000E+00
o-210	U-238	1.276E-18	0.000E+00	0.000E+00	0.000E+00	0.000E+00	0.000E+00	0.000E+00	0.000E+00	0.000E+00
o-210	U-238	6.080E-18	0.000E+00	0.000E+00	0.000E+00	0.000E+00	0.000E+00	0.000E+00	0.000E+00	0.000E+00
o-210	U-238	1.896E-08	1.778E-28	5.319E-27	1.239E-25	7.265E-24	2.258E-22	1.327E-21	0.000E+00	0.000E+00
o-210	U-238	3.983E-12	0.000E+00	0.000E+00	2.602E-29	1.526E-27	4.743E-26	2.787E-25	0.000E+00	0.000E+00
o-210	U-238	3.789E-12	0.000E+00	0.000E+00	2.475E-29	1.452E-27	4.513E-26	2.652E-25	0.000E+00	0.000E+00
o-210	U-238	7.959E-16	0.000E+00	0.000E+00	0.000E+00	0.000E+00	0.000E+00	5.570E-29	0.000E+00	0.000E+00
o-210	U-238	3.794E-15	0.000E+00	0.000E+00	0.000E+00	0.000E+00	4.518E-29	2.655E-28	0.000E+00	0.000E+00
o-210	äDOSE(j)		1.025E-15	2.942E-15	6.229E-15	1.323E-14	1.423E-14	1.178E-15	0.000E+00	0.000E+00
a-226	Ra-226	1.998E-04	1.145E-06	1.101E-06	1.019E-06	7.751E-07	3.496E-07	1.533E-08	0.000E+00	0.000E+00
a-226	Ra-226	2.637E-10	1.511E-12	1.454E-12	1.345E-12	1.023E-12	4.614E-13	2.024E-14	0.000E+00	0.000E+00
a-226	U-234	1.998E-04	2.881E-16	1.962E-15	9.745E-15	6.984E-14	3.147E-13	3.639E-13	0.000E+00	0.000E+00
a-226	U-234	2.637E-10	3.803E-22	2.590E-21	1.286E-20	9.218E-20	4.154E-19	4.803E-19	0.000E+00	0.000E+00
a-226	U-234	3.795E-12	5.473E-24	3.727E-23	1.852E-22	1.327E-21	5.979E-21	6.913E-21	0.000E+00	0.000E+00
a-226	U-238	3.196E-07	3.236E-25	4.704E-24	5.115E-23	1.051E-21	1.240E-20	3.163E-20	0.000E+00	0.000E+00
a-226	U-238	4.219E-13	0.000E+00	0.000E+00	6.354E-29	1.387E-27	1.637E-26	4.176E-26	0.000E+00	0.000E+00
a-226	U-238	6.073E-15	0.000E+00	0.000E+00	0.000E+00	1.879E-29	2.357E-28	6.011E-28	0.000E+00	0.000E+00
a-226	U-238	1.994E-04	2.019E-22	2.935E-21	3.191E-20	6.558E-19	7.740E-18	1.974E-17	0.000E+00	0.000E+00
a-226	U-238	2.633E-10	2.665E-28	3.875E-27	4.213E-26	8.657E-25	1.022E-23	2.606E-23	0.000E+00	0.000E+00
a-226	U-238	3.789E-12	0.000E+00	5.249E-29	6.064E-28	1.246E-26	1.471E-25	3.751E-25	0.000E+00	0.000E+00
a-226	äDOSE(j)		1.145E-06	1.101E-06	1.019E-06	7.751E-07	3.496E-07	1.533E-08	0.000E+00	0.000E+00

ummary : GKP Maintenance Worker Inhalation
ile : C:\USERS\CLAUDE\DOCUMENTS\0 GKP DOSE\RESRAD CW\GKP MAINTENANCE WORKER - INHALATION.RAD

Individual Nuclide Dose Summed Over All Pathways
Parent Nuclide and Branch Fraction Indicated

uclide (j)	Parent (i)	THF(i)	DOSE(j,t), mrem/yr t= 0.000E+00	1.000E+00	3.000E+00	1.000E+01	3.000E+01	1.000E+02	3.000E+02	1.000E+03
ÄÄÄÄÄÄ	ÄÄÄÄÄÄÄ	ÄÄÄÄÄÄÄÄÄ	ÄÄÄÄÄÄÄÄÄ	ÄÄÄÄÄÄÄÄÄ	ÄÄÄÄÄÄÄÄÄ	ÄÄÄÄÄÄÄÄÄ	ÄÄÄÄÄÄÄÄÄ	ÄÄÄÄÄÄÄÄÄ	ÄÄÄÄÄÄÄÄÄ	ÄÄÄÄÄÄÄÄÄ
a-226	Ra-226	3.795E-12	2.175E-14	2.092E-14	1.936E-14	1.473E-14	6.642E-15	2.913E-16	0.000E+00	0.000E+00
a-226	Ra-226	4.196E-08	2.404E-10	2.313E-10	2.140E-10	1.628E-10	7.342E-11	3.220E-12	0.000E+00	0.000E+00
a-226	äDOSE(j)		2.405E-10	2.313E-10	2.140E-10	1.628E-10	7.343E-11	3.220E-12	0.000E+00	0.000E+00
a-226	Ra-226	5.538E-14	3.174E-16	3.053E-16	2.825E-16	2.149E-16	9.692E-17	4.250E-18	0.000E+00	0.000E+00
a-226	Ra-226	7.972E-16	4.569E-18	4.395E-18	4.066E-18	3.093E-18	1.395E-18	6.118E-20	0.000E+00	0.000E+00
a-226	äDOSE(j)		3.220E-16	3.097E-16	2.866E-16	2.180E-16	9.831E-17	4.312E-18	0.000E+00	0.000E+00
a-226	Ra-226	2.000E-07	1.145E-09	1.102E-09	1.019E-09	7.754E-10	3.497E-10	1.534E-11	0.000E+00	0.000E+00
a-226	Ra-226	2.640E-13	1.512E-15	1.454E-15	1.346E-15	1.024E-15	4.616E-16	2.025E-17	0.000E+00	0.000E+00
a-226	U-234	2.000E-07	2.882E-19	1.963E-18	9.750E-18	6.987E-17	3.148E-16	3.640E-16	0.000E+00	0.000E+00
a-226	U-234	2.640E-13	3.804E-25	2.591E-24	1.287E-23	9.223E-23	4.156E-22	4.805E-22	0.000E+00	0.000E+00
a-226	U-234	3.800E-15	5.476E-27	3.729E-26	1.853E-25	1.328E-24	5.982E-24	6.917E-24	0.000E+00	0.000E+00
a-226	U-238	3.200E-10	3.237E-28	4.706E-27	5.117E-26	1.052E-24	1.241E-23	3.165E-23	0.000E+00	0.000E+00
a-226	U-238	4.224E-16	0.000E+00	0.000E+00	0.000E+00	0.000E+00	1.541E-29	3.930E-29	0.000E+00	0.000E+00
a-226	U-238	6.080E-18	0.000E+00	0.000E+00	0.000E+00	0.000E+00	0.000E+00	0.000E+00	0.000E+00	0.000E+00
a-226	U-238	1.997E-07	2.020E-25	2.937E-24	3.193E-23	6.562E-22	7.743E-21	1.975E-20	0.000E+00	0.000E+00
a-226	U-238	2.636E-13	0.000E+00	0.000E+00	3.966E-29	8.661E-28	1.022E-26	2.607E-26	0.000E+00	0.000E+00
a-226	U-238	3.794E-15	0.000E+00	0.000E+00	0.000E+00	0.000E+00	1.384E-28	3.752E-28	0.000E+00	0.000E+00
a-226	äDOSE(j)		1.145E-09	1.102E-09	1.019E-09	7.754E-10	3.497E-10	1.534E-11	0.000E+00	0.000E+00
a-226	Ra-226	3.800E-15	2.176E-17	2.093E-17	1.937E-17	1.473E-17	6.645E-18	2.914E-19	0.000E+00	0.000E+00
n-232	Th-232	1.000E+00	6.882E-02	6.836E-02	6.744E-02	6.420E-02	5.495E-02	2.270E-02	0.000E+00	0.000E+00
a-228	Th-232	1.000E+00	1.220E-05	3.408E-05	6.820E-05	1.256E-04	1.335E-04	5.569E-05	0.000E+00	0.000E+00
n-228	Th-232	1.000E+00	1.050E-04	6.349E-04	2.443E-03	8.139E-03	1.048E-02	5.271E-03	0.000E+00	0.000E+00
-234	U-234	9.996E-01	3.137E-02	2.981E-02	2.692E-02	1.880E-02	6.647E-03	1.243E-04	0.000E+00	0.000E+00
-234	U-234	1.319E-06	4.141E-08	3.935E-08	3.553E-08	2.482E-08	8.774E-09	1.641E-10	0.000E+00	0.000E+00
-234	U-238	1.599E-03	7.026E-11	2.014E-10	4.251E-10	8.916E-10	9.158E-10	5.643E-11	0.000E+00	0.000E+00
-234	U-238	2.111E-09	9.274E-17	2.659E-16	5.612E-16	1.177E-15	1.209E-15	7.449E-17	0.000E+00	0.000E+00
-234	U-238	3.039E-11	1.335E-18	3.827E-18	8.077E-18	1.694E-17	1.740E-17	1.072E-18	0.000E+00	0.000E+00
-234	U-238	3.359E-07	1.476E-14	4.231E-14	8.929E-14	1.873E-13	1.924E-13	1.185E-14	0.000E+00	0.000E+00
-234	U-238	4.434E-13	1.948E-20	5.585E-20	1.179E-19	2.472E-19	2.539E-19	1.565E-20	0.000E+00	0.000E+00
-234	U-238	6.383E-15	2.804E-22	8.039E-22	1.697E-21	3.558E-21	3.655E-21	2.252E-22	0.000E+00	0.000E+00
-234	U-238	3.196E-07	1.404E-14	4.026E-14	8.496E-14	1.782E-13	1.830E-13	1.128E-14	0.000E+00	0.000E+00
-234	U-238	4.219E-13	1.853E-20	5.314E-20	1.121E-19	2.352E-19	2.416E-19	1.489E-20	0.000E+00	0.000E+00
-234	U-238	6.073E-15	2.668E-22	7.649E-22	1.614E-21	3.385E-21	3.477E-21	2.143E-22	0.000E+00	0.000E+00
-234	U-238	6.713E-11	2.949E-18	8.456E-18	1.784E-17	3.743E-17	3.844E-17	2.369E-18	0.000E+00	0.000E+00
-234	U-238	8.862E-17	3.893E-24	1.116E-23	2.355E-23	4.940E-23	5.074E-23	3.127E-24	0.000E+00	0.000E+00
-234	U-238	1.276E-18	5.603E-26	1.607E-25	3.390E-25	7.111E-25	7.304E-25	4.501E-26	0.000E+00	0.000E+00
-234	U-238	3.200E-10	1.406E-17	4.031E-17	8.506E-17	1.784E-16	1.832E-16	1.129E-17	0.000E+00	0.000E+00
-234	U-238	4.224E-16	1.856E-23	5.320E-23	1.123E-22	2.355E-22	2.419E-22	1.490E-23	0.000E+00	0.000E+00
-234	U-238	6.080E-18	2.671E-25	7.658E-25	1.616E-24	3.390E-24	3.481E-24	2.145E-25	0.000E+00	0.000E+00
-234	U-238	9.980E-01	4.384E-08	1.257E-07	2.653E-07	5.564E-07	5.714E-07	3.521E-08	0.000E+00	0.000E+00
-234	U-238	1.317E-06	5.787E-14	1.659E-13	3.502E-13	7.344E-13	7.543E-13	4.648E-14	0.000E+00	0.000E+00
-234	U-238	1.896E-08	8.330E-16	2.388E-15	5.040E-15	1.057E-14	1.086E-14	6.691E-16	0.000E+00	0.000E+00

ummary : GKP Maintenance Worker Inhalation
ile : C:\USERS\CLAUDE\DOCUMENTS\0 GKP DOSE\RESRAD CW\GKP MAINTENANCE WORKER - INHALATION.RAD

Individual Nuclide Dose Summed Over All Pathways
Parent Nuclide and Branch Fraction Indicated

uclide (j)	Parent (i)	THF(i)	DOSE(j,t), mrem/yr t= 0.000E+00	1.000E+00	3.000E+00	1.000E+01	3.000E+01	1.000E+02	3.000E+02	1.000E+03
ÄÄÄÄÄ	ÄÄÄÄÄÄ	ÄÄÄÄÄÄÄÄÄ	ÄÄÄÄÄÄÄÄÄ	ÄÄÄÄÄÄÄÄÄ	ÄÄÄÄÄÄÄÄÄ	ÄÄÄÄÄÄÄÄÄ	ÄÄÄÄÄÄÄÄÄ	ÄÄÄÄÄÄÄÄÄ	ÄÄÄÄÄÄÄÄÄ	ÄÄÄÄÄÄÄÄÄ
-234	U-238	2.096E-04	9.209E-12	2.640E-11	5.572E-11	1.169E-10	1.200E-10	7.396E-12	0.000E+00	0.000E+00
-234	U-238	2.767E-10	1.216E-17	3.485E-17	7.355E-17	1.543E-16	1.584E-16	9.763E-18	0.000E+00	0.000E+00
-234	U-238	3.983E-12	1.750E-19	5.017E-19	1.059E-18	2.220E-18	2.281E-18	1.405E-19	0.000E+00	0.000E+00
-234	U-238	1.994E-04	8.761E-12	2.512E-11	5.301E-11	1.112E-10	1.142E-10	7.037E-12	0.000E+00	0.000E+00
-234	U-238	2.633E-10	1.156E-17	3.316E-17	6.998E-17	1.468E-16	1.507E-16	9.289E-18	0.000E+00	0.000E+00
-234	U-238	3.789E-12	1.665E-19	4.773E-19	1.007E-18	2.112E-18	2.170E-18	1.337E-19	0.000E+00	0.000E+00
-234	U-238	4.189E-08	1.840E-15	5.276E-15	1.113E-14	2.335E-14	2.399E-14	1.478E-15	0.000E+00	0.000E+00
-234	U-238	5.530E-14	2.429E-21	6.965E-21	1.470E-20	3.083E-20	3.166E-20	1.951E-21	0.000E+00	0.000E+00
-234	U-238	7.959E-16	3.496E-23	1.003E-22	2.116E-22	4.437E-22	4.557E-22	2.808E-23	0.000E+00	0.000E+00
-234	U-238	1.997E-07	8.772E-15	2.515E-14	5.308E-14	1.113E-13	1.143E-13	7.046E-15	0.000E+00	0.000E+00
-234	U-238	2.636E-13	1.158E-20	3.320E-20	7.006E-20	1.469E-19	1.509E-19	9.300E-21	0.000E+00	0.000E+00
-234	U-238	3.794E-15	1.667E-22	4.779E-22	1.008E-21	2.115E-21	2.172E-21	1.339E-22	0.000E+00	0.000E+00
-234	äDOSE(j)		3.137E-02	2.981E-02	2.692E-02	1.881E-02	6.648E-03	1.243E-04	0.000E+00	0.000E+00
a-230	U-234	9.996E-01	3.584E-07	1.048E-06	2.312E-06	5.705E-06	9.735E-06	5.365E-06	0.000E+00	0.000E+00
a-230	U-234	1.319E-06	4.731E-13	1.384E-12	3.052E-12	7.530E-12	1.285E-11	7.082E-12	0.000E+00	0.000E+00
a-230	U-234	1.899E-08	6.810E-15	1.992E-14	4.394E-14	1.084E-13	1.850E-13	1.019E-13	0.000E+00	0.000E+00
a-230	U-234	2.100E-04	7.529E-11	2.202E-10	4.857E-10	1.198E-09	2.045E-09	1.127E-09	0.000E+00	0.000E+00
a-230	U-234	2.771E-10	9.938E-17	2.906E-16	6.411E-16	1.582E-15	2.699E-15	1.488E-15	0.000E+00	0.000E+00
a-230	U-234	3.989E-12	1.430E-18	4.183E-18	9.228E-18	2.277E-17	3.885E-17	2.141E-17	0.000E+00	0.000E+00
a-230	U-234	1.998E-04	7.163E-11	2.095E-10	4.621E-10	1.140E-09	1.945E-09	1.072E-09	0.000E+00	0.000E+00
a-230	U-234	2.637E-10	9.455E-17	2.765E-16	6.100E-16	1.505E-15	2.568E-15	1.415E-15	0.000E+00	0.000E+00
a-230	U-234	3.795E-12	1.361E-18	3.980E-18	8.780E-18	2.166E-17	3.696E-17	2.037E-17	0.000E+00	0.000E+00
a-230	U-234	4.196E-08	1.505E-14	4.400E-14	9.706E-14	2.395E-13	4.086E-13	2.252E-13	0.000E+00	0.000E+00
a-230	U-234	5.538E-14	1.986E-20	5.808E-20	1.281E-19	3.161E-19	5.394E-19	2.973E-19	0.000E+00	0.000E+00
a-230	U-234	7.972E-16	2.859E-22	8.360E-22	1.844E-21	4.550E-21	7.764E-21	4.279E-21	0.000E+00	0.000E+00
a-230	U-234	2.000E-07	7.172E-14	2.097E-13	4.627E-13	1.141E-12	1.948E-12	1.073E-12	0.000E+00	0.000E+00
a-230	U-234	2.640E-13	9.467E-20	2.769E-19	6.107E-19	1.507E-18	2.571E-18	1.417E-18	0.000E+00	0.000E+00
a-230	U-234	3.800E-15	1.363E-21	3.985E-21	8.791E-21	2.169E-20	3.701E-20	2.040E-20	0.000E+00	0.000E+00
a-230	U-238	1.599E-03	5.355E-16	3.634E-15	1.791E-14	1.249E-13	5.243E-13	5.193E-13	0.000E+00	0.000E+00
a-230	U-238	2.111E-09	7.068E-22	4.797E-21	2.364E-20	1.649E-19	6.921E-19	6.854E-19	0.000E+00	0.000E+00
a-230	U-238	3.039E-11	1.017E-23	6.905E-23	3.403E-22	2.374E-21	9.962E-21	9.866E-21	0.000E+00	0.000E+00
a-230	U-238	3.359E-07	1.125E-19	7.633E-19	3.762E-18	2.624E-17	1.101E-16	1.091E-16	0.000E+00	0.000E+00
a-230	U-238	4.434E-13	1.485E-25	1.008E-24	4.966E-24	3.464E-23	1.454E-22	1.440E-22	0.000E+00	0.000E+00
a-230	U-238	6.383E-15	2.137E-27	1.450E-26	7.149E-26	4.985E-25	2.092E-24	2.072E-24	0.000E+00	0.000E+00
a-230	U-238	3.196E-07	1.070E-19	7.263E-19	3.580E-18	2.496E-17	1.048E-16	1.038E-16	0.000E+00	0.000E+00
a-230	U-238	4.219E-13	1.413E-25	9.587E-25	4.725E-24	3.295E-23	1.383E-22	1.370E-22	0.000E+00	0.000E+00
a-230	U-238	6.073E-15	2.033E-27	1.380E-26	6.801E-26	4.743E-25	1.991E-24	1.972E-24	0.000E+00	0.000E+00
a-230	U-238	6.713E-11	2.248E-23	1.525E-22	7.519E-22	5.244E-21	2.201E-20	2.180E-20	0.000E+00	0.000E+00
a-230	U-238	8.862E-17	2.967E-29	2.014E-28	9.925E-28	6.922E-27	2.905E-26	2.877E-26	0.000E+00	0.000E+00
a-230	U-238	1.276E-18	0.000E+00	0.000E+00	1.429E-29	9.963E-29	4.181E-28	4.141E-28	0.000E+00	0.000E+00
a-230	U-238	3.200E-10	1.071E-22	7.271E-22	3.584E-21	2.499E-20	1.049E-19	1.039E-19	0.000E+00	0.000E+00
a-230	U-238	4.224E-16	1.414E-28	9.598E-28	4.731E-27	3.299E-26	1.385E-25	1.371E-25	0.000E+00	0.000E+00
a-230	U-238	6.080E-18	0.000E+00	0.000E+00	6.810E-29	4.749E-28	1.993E-27	1.974E-27	0.000E+00	0.000E+00
a-230	U-238	9.980E-01	3.341E-13	2.268E-12	1.118E-11	7.795E-11	3.272E-10	3.240E-10	0.000E+00	0.000E+00
a-230	U-238	1.317E-06	4.411E-19	2.993E-18	1.475E-17	1.029E-16	4.319E-16	4.277E-16	0.000E+00	0.000E+00
a-230	U-238	1.896E-08	6.349E-21	4.309E-20	2.124E-19	1.481E-18	6.216E-18	6.156E-18	0.000E+00	0.000E+00
a-230	U-238	2.096E-04	7.018E-17	4.763E-16	2.348E-15	1.637E-14	6.872E-14	6.806E-14	0.000E+00	0.000E+00
a-230	U-238	2.767E-10	9.264E-23	6.287E-22	3.099E-21	2.161E-20	9.071E-20	8.984E-20	0.000E+00	0.000E+00

ummary : GKP Maintenance Worker Inhalation
ile : C:\USERS\CLAUDE\DOCUMENTS\0 GKP DOSE\RESRAD CW\GKP MAINTENANCE WORKER - INHALATION.RAD

Individual Nuclide Dose Summed Over All Pathways
Parent Nuclide and Branch Fraction Indicated

uclide (j)	Parent (i)	THF(i)	DOSE(j,t), mrem/yr t= 0.000E+00	1.000E+00	3.000E+00	1.000E+01	3.000E+01	1.000E+02	3.000E+02	1.000E+03
ÄÄÄÄÄ	ÄÄÄÄÄÄ	ÄÄÄÄÄÄÄÄ	ÄÄÄÄÄÄÄÄ	ÄÄÄÄÄÄÄÄ	ÄÄÄÄÄÄÄÄ	ÄÄÄÄÄÄÄÄ	ÄÄÄÄÄÄÄÄ	ÄÄÄÄÄÄÄÄ	ÄÄÄÄÄÄÄÄ	ÄÄÄÄÄÄÄÄ
n-230	U-238	3.983E-12	1.333E-24	9.050E-24	4.461E-23	3.111E-22	1.306E-21	1.293E-21	0.000E+00	0.000E+00
n-230	U-238	1.994E-04	6.677E-17	4.532E-16	2.234E-15	1.558E-14	6.538E-14	6.475E-14	0.000E+00	0.000E+00
n-230	U-238	2.633E-10	8.814E-23	5.982E-22	2.949E-21	2.056E-20	8.630E-20	8.547E-20	0.000E+00	0.000E+00
n-230	U-238	3.789E-12	1.269E-24	8.610E-24	4.244E-23	2.960E-22	1.242E-21	1.230E-21	0.000E+00	0.000E+00
n-230	U-238	4.189E-08	1.403E-20	9.519E-20	4.692E-19	3.272E-18	1.373E-17	1.360E-17	0.000E+00	0.000E+00
n-230	U-238	5.530E-14	1.851E-26	1.256E-25	6.193E-25	4.319E-24	1.813E-23	1.795E-23	0.000E+00	0.000E+00
n-230	U-238	7.959E-16	2.665E-28	1.809E-27	8.914E-27	6.217E-26	2.609E-25	2.584E-25	0.000E+00	0.000E+00
n-230	U-238	1.997E-07	6.685E-20	4.537E-19	2.236E-18	1.560E-17	6.546E-17	6.483E-17	0.000E+00	0.000E+00
n-230	U-238	2.636E-13	8.825E-26	5.989E-25	2.952E-24	2.059E-23	8.641E-23	8.557E-23	0.000E+00	0.000E+00
n-230	U-238	3.794E-15	1.270E-27	8.621E-27	4.249E-26	2.963E-25	1.244E-24	1.232E-24	0.000E+00	0.000E+00
n-230	äDOSE(j)		3.586E-07	1.049E-06	2.313E-06	5.707E-06	9.739E-06	5.368E-06	0.000E+00	0.000E+00
-234	U-234	1.899E-08	5.961E-10	5.664E-10	5.115E-10	3.573E-10	1.263E-10	2.361E-12	0.000E+00	0.000E+00
-234	U-234	2.100E-04	6.589E-06	6.262E-06	5.654E-06	3.950E-06	1.396E-06	2.611E-08	0.000E+00	0.000E+00
-234	äDOSE(j)		6.590E-06	6.263E-06	5.655E-06	3.950E-06	1.396E-06	2.611E-08	0.000E+00	0.000E+00
a-226	U-234	2.100E-04	3.030E-16	2.064E-15	1.025E-14	7.346E-14	3.310E-13	3.828E-13	0.000E+00	0.000E+00
a-226	U-234	3.989E-12	5.758E-24	3.921E-23	1.948E-22	1.396E-21	6.289E-21	7.272E-21	0.000E+00	0.000E+00
a-226	U-238	3.359E-07	3.404E-25	4.948E-24	5.380E-23	1.106E-21	1.305E-20	3.328E-20	0.000E+00	0.000E+00
a-226	U-238	4.434E-13	0.000E+00	0.000E+00	6.684E-29	1.459E-27	1.722E-26	4.393E-26	0.000E+00	0.000E+00
a-226	U-238	6.383E-15	0.000E+00	0.000E+00	0.000E+00	1.977E-29	2.479E-28	6.323E-28	0.000E+00	0.000E+00
a-226	U-238	2.096E-04	2.124E-22	3.088E-21	3.357E-20	6.899E-19	8.142E-18	2.077E-17	0.000E+00	0.000E+00
a-226	U-238	2.767E-10	2.804E-28	4.076E-27	4.432E-26	9.107E-25	1.075E-23	2.741E-23	0.000E+00	0.000E+00
a-226	U-238	3.983E-12	0.000E+00	5.522E-29	6.379E-28	1.311E-26	1.547E-25	3.945E-25	0.000E+00	0.000E+00
a-226	äDOSE(j)		3.030E-16	2.064E-15	1.025E-14	7.347E-14	3.310E-13	3.828E-13	0.000E+00	0.000E+00
-234	U-234	2.771E-10	8.698E-12	8.266E-12	7.464E-12	5.214E-12	1.843E-12	3.446E-14	0.000E+00	0.000E+00
-234	U-234	3.989E-12	1.252E-13	1.190E-13	1.074E-13	7.505E-14	2.653E-14	4.960E-16	0.000E+00	0.000E+00
-234	äDOSE(j)		8.823E-12	8.385E-12	7.571E-12	5.289E-12	1.870E-12	3.496E-14	0.000E+00	0.000E+00
a-226	U-234	2.771E-10	4.000E-22	2.724E-21	1.353E-20	9.697E-20	4.369E-19	5.052E-19	0.000E+00	0.000E+00
-234	U-234	1.998E-04	6.269E-06	5.958E-06	5.380E-06	3.758E-06	1.328E-06	2.484E-08	0.000E+00	0.000E+00
-234	U-234	2.637E-10	8.276E-12	7.864E-12	7.101E-12	4.960E-12	1.753E-12	3.279E-14	0.000E+00	0.000E+00
-234	äDOSE(j)		6.269E-06	5.958E-06	5.380E-06	3.758E-06	1.328E-06	2.484E-08	0.000E+00	0.000E+00
-234	U-234	3.795E-12	1.191E-13	1.132E-13	1.022E-13	7.140E-14	2.524E-14	4.719E-16	0.000E+00	0.000E+00
-234	U-234	4.196E-08	1.317E-09	1.251E-09	1.130E-09	7.893E-10	2.790E-10	5.217E-12	0.000E+00	0.000E+00
-234	äDOSE(j)		1.317E-09	1.252E-09	1.130E-09	7.894E-10	2.790E-10	5.217E-12	0.000E+00	0.000E+00
a-226	U-234	4.196E-08	6.051E-20	4.121E-19	2.047E-18	1.467E-17	6.609E-17	7.642E-17	0.000E+00	0.000E+00
a-226	U-234	7.972E-16	1.150E-27	7.829E-27	3.889E-26	2.787E-25	1.256E-24	1.452E-24	0.000E+00	0.000E+00
a-226	U-238	6.713E-11	6.397E-29	9.880E-28	1.074E-26	2.208E-25	2.605E-24	6.645E-24	0.000E+00	0.000E+00
a-226	U-238	8.862E-17	0.000E+00	0.000E+00	0.000E+00	0.000E+00	0.000E+00	0.000E+00	0.000E+00	0.000E+00
a-226	U-238	1.276E-18	0.000E+00	0.000E+00	0.000E+00	0.000E+00	0.000E+00	0.000E+00	0.000E+00	0.000E+00
a-226	U-238	4.189E-08	4.241E-26	6.165E-25	6.703E-24	1.378E-22	1.626E-21	4.146E-21	0.000E+00	0.000E+00
a-226	U-238	5.530E-14	0.000E+00	0.000E+00	0.000E+00	1.711E-28	2.146E-27	5.473E-27	0.000E+00	0.000E+00
a-226	U-238	7.959E-16	0.000E+00	0.000E+00	0.000E+00	0.000E+00	2.907E-29	7.411E-29	0.000E+00	0.000E+00
a-226	äDOSE(j)		6.051E-20	4.121E-19	2.047E-18	1.467E-17	6.610E-17	7.643E-17	0.000E+00	0.000E+00

ummary : GKP Maintenance Worker Inhalation
ile : C:\USERS\CLAUDE\DOCUMENTS\0 GKP DOSE\RESRAD CW\GKP MAINTENANCE WORKER - INHALATION.RAD

Individual Nuclide Dose Summed Over All Pathways
Parent Nuclide and Branch Fraction Indicated

uclide (j)	Parent (i)	THF(i)	DOSE(j,t), mrem/yr t= 0.000E+00	1.000E+00	3.000E+00	1.000E+01	3.000E+01	1.000E+02	3.000E+02	1.000E+03
ÄÄÄÄÄ	ÄÄÄÄÄÄ	ÄÄÄÄÄÄÄÄ	ÄÄÄÄÄÄÄÄ	ÄÄÄÄÄÄÄÄ	ÄÄÄÄÄÄÄÄ	ÄÄÄÄÄÄÄÄ	ÄÄÄÄÄÄÄÄ	ÄÄÄÄÄÄÄÄ	ÄÄÄÄÄÄÄÄ	ÄÄÄÄÄÄÄÄ
-234	U-234	5.538E-14	1.738E-15	1.652E-15	1.492E-15	1.042E-15	3.683E-16	6.886E-18	0.000E+00	0.000E+00
-234	U-234	7.972E-16	2.502E-17	2.378E-17	2.147E-17	1.500E-17	5.301E-18	9.912E-20	0.000E+00	0.000E+00
-234	äDOSE(j)		1.763E-15	1.676E-15	1.513E-15	1.057E-15	3.736E-16	6.986E-18	0.000E+00	0.000E+00
a-226	U-234	5.538E-14	7.987E-26	5.439E-25	2.702E-24	1.936E-23	8.724E-23	1.009E-22	0.000E+00	0.000E+00
-234	U-234	2.000E-07	6.277E-09	5.965E-09	5.386E-09	3.762E-09	1.330E-09	2.487E-11	0.000E+00	0.000E+00
-234	U-234	2.640E-13	8.286E-15	7.874E-15	7.110E-15	4.966E-15	1.756E-15	3.283E-17	0.000E+00	0.000E+00
-234	äDOSE(j)		6.277E-09	5.965E-09	5.386E-09	3.762E-09	1.330E-09	2.487E-11	0.000E+00	0.000E+00
-234	U-234	3.800E-15	1.193E-16	1.133E-16	1.023E-16	7.149E-17	2.527E-17	4.725E-19	0.000E+00	0.000E+00
-235	U-235	9.835E-01	1.738E-03	1.652E-03	1.491E-03	1.042E-03	3.683E-04	6.888E-06	0.000E+00	0.000E+00
-235	U-235	2.722E-03	4.811E-06	4.571E-06	4.128E-06	2.884E-06	1.019E-06	1.906E-08	0.000E+00	0.000E+00
-235	äDOSE(j)		1.743E-03	1.656E-03	1.496E-03	1.045E-03	3.693E-04	6.907E-06	0.000E+00	0.000E+00
a-231	U-235	9.835E-01	1.897E-07	5.440E-07	1.148E-06	2.407E-06	2.472E-06	1.523E-07	0.000E+00	0.000E+00
a-231	U-235	2.722E-03	5.251E-10	1.506E-09	3.177E-09	6.663E-09	6.842E-09	4.214E-10	0.000E+00	0.000E+00
a-231	U-235	1.376E-02	2.655E-09	7.611E-09	1.606E-08	3.369E-08	3.459E-08	2.130E-09	0.000E+00	0.000E+00
a-231	U-235	3.809E-05	7.347E-12	2.107E-11	4.446E-11	9.323E-11	9.574E-11	5.896E-12	0.000E+00	0.000E+00
a-231	U-235	8.257E-07	1.593E-13	4.567E-13	9.638E-13	2.021E-12	2.076E-12	1.278E-13	0.000E+00	0.000E+00
a-231	U-235	2.285E-09	4.409E-16	1.264E-15	2.667E-15	5.594E-15	5.745E-15	3.538E-16	0.000E+00	0.000E+00
a-231	äDOSE(j)		1.929E-07	5.531E-07	1.167E-06	2.448E-06	2.514E-06	1.548E-07	0.000E+00	0.000E+00
c-227	U-235	9.835E-01	1.028E-08	6.704E-08	3.021E-07	1.545E-06	2.887E-06	2.345E-07	0.000E+00	0.000E+00
c-227	U-235	2.722E-03	2.845E-11	1.855E-10	8.361E-10	4.276E-09	7.991E-09	6.490E-10	0.000E+00	0.000E+00
c-227	U-235	1.376E-02	1.435E-10	9.358E-10	4.217E-09	2.157E-08	4.030E-08	3.273E-09	0.000E+00	0.000E+00
c-227	äDOSE(j)		1.720E-10	1.121E-09	5.053E-09	2.584E-08	4.829E-08	3.922E-09	0.000E+00	0.000E+00
-235	U-235	1.376E-02	2.432E-05	2.311E-05	2.087E-05	1.458E-05	5.154E-06	9.638E-08	0.000E+00	0.000E+00
-235	U-235	3.809E-05	6.731E-08	6.397E-08	5.776E-08	4.035E-08	1.426E-08	2.667E-10	0.000E+00	0.000E+00
-235	äDOSE(j)		2.439E-05	2.318E-05	2.093E-05	1.462E-05	5.168E-06	9.665E-08	0.000E+00	0.000E+00
c-227	U-235	3.809E-05	3.972E-13	2.590E-12	1.167E-11	5.969E-11	1.115E-10	9.059E-12	0.000E+00	0.000E+00
c-227	U-235	8.257E-07	8.601E-15	5.608E-14	2.527E-13	1.293E-12	2.415E-12	1.962E-13	0.000E+00	0.000E+00
c-227	äDOSE(j)		4.058E-13	2.646E-12	1.192E-11	6.098E-11	1.140E-10	9.255E-12	0.000E+00	0.000E+00
-235	U-235	8.257E-07	1.459E-09	1.387E-09	1.252E-09	8.747E-10	3.092E-10	5.783E-12	0.000E+00	0.000E+00
-235	U-235	2.285E-09	4.039E-12	3.838E-12	3.466E-12	2.421E-12	8.558E-13	1.601E-14	0.000E+00	0.000E+00
-235	äDOSE(j)		1.463E-09	1.391E-09	1.256E-09	8.772E-10	3.101E-10	5.799E-12	0.000E+00	0.000E+00
c-227	U-235	2.285E-09	2.380E-17	1.552E-16	6.995E-16	3.577E-15	6.685E-15	5.429E-16	0.000E+00	0.000E+00
-238	U-238	5.450E-07	1.529E-08	1.453E-08	1.312E-08	9.166E-09	3.240E-09	6.059E-11	0.000E+00	0.000E+00
-238	U-238	1.599E-03	4.488E-05	4.265E-05	3.852E-05	2.691E-05	9.511E-06	1.779E-07	0.000E+00	0.000E+00
-238	äDOSE(j)		4.490E-05	4.267E-05	3.853E-05	2.691E-05	9.514E-06	1.779E-07	0.000E+00	0.000E+00
-238	U-238	2.111E-09	5.925E-11	5.630E-11	5.084E-11	3.551E-11	1.255E-11	2.348E-13	0.000E+00	0.000E+00

ummary : GKP Maintenance Worker Inhalation
ile : C:\USERS\CLAUDE\DOCUMENTS\0 GKP DOSE\RESRAD CW\GKP MAINTENANCE WORKER - INHALATION.RAD

Individual Nuclide Dose Summed Over All Pathways
Parent Nuclide and Branch Fraction Indicated

uclide (j)	Parent (i)	THF(i)	DOSE(j,t), mrem/yr t= 0.000E+00	1.000E+00	3.000E+00	1.000E+01	3.000E+01	1.000E+02	3.000E+02	1.000E+03
ÄÄÄÄÄ	ÄÄÄÄÄÄ	ÄÄÄÄÄÄÄÄ	ÄÄÄÄÄÄÄÄ	ÄÄÄÄÄÄÄÄ	ÄÄÄÄÄÄÄÄ	ÄÄÄÄÄÄÄÄ	ÄÄÄÄÄÄÄÄ	ÄÄÄÄÄÄÄÄ	ÄÄÄÄÄÄÄÄ	ÄÄÄÄÄÄÄÄ
-238	U-238	3.039E-11	8.528E-13	8.104E-13	7.318E-13	5.112E-13	1.807E-13	3.380E-15	0.000E+00	0.000E+00
-238	äDOSE(j)		6.010E-11	5.711E-11	5.157E-11	3.603E-11	1.274E-11	2.382E-13	0.000E+00	0.000E+00
-238	U-238	3.359E-07	9.428E-09	8.959E-09	8.090E-09	5.651E-09	1.998E-09	3.736E-11	0.000E+00	0.000E+00
-238	U-238	4.434E-13	1.244E-14	1.183E-14	1.068E-14	7.460E-15	2.637E-15	4.932E-17	0.000E+00	0.000E+00
-238	äDOSE(j)		9.428E-09	8.959E-09	8.090E-09	5.651E-09	1.998E-09	3.736E-11	0.000E+00	0.000E+00
-238	U-238	6.383E-15	1.791E-16	1.702E-16	1.537E-16	1.074E-16	3.796E-17	7.099E-19	0.000E+00	0.000E+00
-238	U-238	3.196E-07	8.970E-09	8.524E-09	7.697E-09	5.377E-09	1.901E-09	3.555E-11	0.000E+00	0.000E+00
-238	äDOSE(j)		8.970E-09	8.524E-09	7.697E-09	5.377E-09	1.901E-09	3.555E-11	0.000E+00	0.000E+00
-238	U-238	4.219E-13	1.184E-14	1.125E-14	1.016E-14	7.097E-15	2.509E-15	4.692E-17	0.000E+00	0.000E+00
-238	U-238	6.073E-15	1.704E-16	1.620E-16	1.462E-16	1.022E-16	3.611E-17	6.754E-19	0.000E+00	0.000E+00
-238	äDOSE(j)		1.201E-14	1.141E-14	1.031E-14	7.199E-15	2.545E-15	4.760E-17	0.000E+00	0.000E+00
-238	U-238	6.713E-11	1.884E-12	1.790E-12	1.617E-12	1.129E-12	3.992E-13	7.466E-15	0.000E+00	0.000E+00
-238	U-238	8.862E-17	2.487E-18	2.363E-18	2.134E-18	1.491E-18	5.270E-19	9.855E-21	0.000E+00	0.000E+00
-238	äDOSE(j)		1.884E-12	1.790E-12	1.617E-12	1.129E-12	3.992E-13	7.466E-15	0.000E+00	0.000E+00
-238	U-238	1.276E-18	3.580E-20	3.402E-20	3.072E-20	2.146E-20	7.585E-21	1.419E-22	0.000E+00	0.000E+00
-238	U-238	3.200E-10	8.981E-12	8.534E-12	7.706E-12	5.383E-12	1.903E-12	3.559E-14	0.000E+00	0.000E+00
-238	äDOSE(j)		8.981E-12	8.534E-12	7.706E-12	5.383E-12	1.903E-12	3.559E-14	0.000E+00	0.000E+00
-238	U-238	4.224E-16	1.185E-17	1.127E-17	1.017E-17	7.106E-18	2.512E-18	4.698E-20	0.000E+00	0.000E+00
-238	U-238	6.080E-18	1.706E-19	1.622E-19	1.464E-19	1.023E-19	3.616E-20	6.762E-22	0.000E+00	0.000E+00
-238	äDOSE(j)		1.203E-17	1.143E-17	1.032E-17	7.208E-18	2.548E-18	4.765E-20	0.000E+00	0.000E+00
-238	U-238	9.980E-01	2.801E-02	2.662E-02	2.403E-02	1.679E-02	5.935E-03	1.110E-04	0.000E+00	0.000E+00
-238	U-238	1.317E-06	3.697E-08	3.513E-08	3.172E-08	2.216E-08	7.834E-09	1.465E-10	0.000E+00	0.000E+00
-238	äDOSE(j)		2.801E-02	2.662E-02	2.403E-02	1.679E-02	5.935E-03	1.110E-04	0.000E+00	0.000E+00
-238	U-238	1.896E-08	5.321E-10	5.057E-10	4.566E-10	3.190E-10	1.128E-10	2.109E-12	0.000E+00	0.000E+00
-238	U-238	2.096E-04	5.883E-06	5.591E-06	5.048E-06	3.526E-06	1.247E-06	2.331E-08	0.000E+00	0.000E+00
-238	äDOSE(j)		5.883E-06	5.591E-06	5.049E-06	3.527E-06	1.247E-06	2.332E-08	0.000E+00	0.000E+00
-238	U-238	2.767E-10	7.765E-12	7.380E-12	6.664E-12	4.655E-12	1.646E-12	3.077E-14	0.000E+00	0.000E+00
-238	U-238	3.983E-12	1.118E-13	1.062E-13	9.591E-14	6.700E-14	2.369E-14	4.430E-16	0.000E+00	0.000E+00
-238	äDOSE(j)		7.877E-12	7.486E-12	6.759E-12	4.722E-12	1.669E-12	3.122E-14	0.000E+00	0.000E+00
-238	U-238	1.994E-04	5.597E-06	5.319E-06	4.803E-06	3.355E-06	1.186E-06	2.218E-08	0.000E+00	0.000E+00
-238	U-238	2.633E-10	7.388E-12	7.021E-12	6.340E-12	4.429E-12	1.566E-12	2.928E-14	0.000E+00	0.000E+00
-238	äDOSE(j)		5.597E-06	5.319E-06	4.803E-06	3.355E-06	1.186E-06	2.218E-08	0.000E+00	0.000E+00
-238	U-238	3.789E-12	1.063E-13	1.011E-13	9.125E-14	6.375E-14	2.253E-14	4.214E-16	0.000E+00	0.000E+00
-238	U-238	4.189E-08	1.176E-09	1.117E-09	1.009E-09	7.047E-10	2.491E-10	4.659E-12	0.000E+00	0.000E+00
-238	äDOSE(j)		1.176E-09	1.117E-09	1.009E-09	7.048E-10	2.491E-10	4.659E-12	0.000E+00	0.000E+00
-238	U-238	5.530E-14	1.552E-15	1.475E-15	1.332E-15	9.302E-16	3.288E-16	6.150E-18	0.000E+00	0.000E+00
-238	U-238	7.959E-16	2.234E-17	2.123E-17	1.917E-17	1.339E-17	4.733E-18	8.852E-20	0.000E+00	0.000E+00
-238	äDOSE(j)		1.574E-15	1.496E-15	1.351E-15	9.436E-16	3.336E-16	6.238E-18	0.000E+00	0.000E+00

ummary : GKP Maintenance Worker Inhalation
ile : C:\USERS\CLAUDE\DOCUMENTS\0 GKP DOSE\RESRAD CW\GKP MAINTENANCE WORKER - INHALATION.RAD

Individual Nuclide Dose Summed Over All Pathways
Parent Nuclide and Branch Fraction Indicated

uclide (j)	Parent (i)	THF(i)	t= 0.000E+00	1.000E+00	3.000E+00	1.000E+01	3.000E+01	1.000E+02	3.000E+02	1.000E+03
			DOSE(j,t), mrem/yr							
ÄÄÄÄÄÄ	ÄÄÄÄÄÄÄ	ÄÄÄÄÄÄÄÄÄÄ	ÄÄÄÄÄÄÄÄÄÄ	ÄÄÄÄÄÄÄÄÄÄ	ÄÄÄÄÄÄÄÄÄÄ	ÄÄÄÄÄÄÄÄÄÄ	ÄÄÄÄÄÄÄÄÄÄ	ÄÄÄÄÄÄÄÄÄÄ	ÄÄÄÄÄÄÄÄÄÄ	ÄÄÄÄÄÄÄÄÄÄ
-238	U-238	1.997E-07	5.604E-09	5.325E-09	4.809E-09	3.359E-09	1.187E-09	2.221E-11	0.000E+00	0.000E+00
-238	U-238	2.636E-13	7.397E-15	7.030E-15	6.347E-15	4.434E-15	1.567E-15	2.931E-17	0.000E+00	0.000E+00
-238	äDOSE(j)		5.604E-09	5.325E-09	4.809E-09	3.359E-09	1.187E-09	2.221E-11	0.000E+00	0.000E+00
-238	U-238	3.794E-15	1.065E-16	1.012E-16	9.136E-17	6.382E-17	2.256E-17	4.219E-19	0.000E+00	0.000E+00
íííííí	íííííííí	ííííííííííí	ííííííííííí	ííííííííííí	ííííííííííí	ííííííííííí	ííííííííííí	ííííííííííí	ííííííííííí	ííííííííííí

HF(i) is the thread fraction of the parent nuclide.

ummary : GKP Maintenance Worker Inhalation
ile : C:\USERS\CLAUDE\DOCUMENTS\0 GKP DOSE\RESRAD CW\GKP MAINTENANCE WORKER - INHALATION.RAD

Individual Nuclide Soil Concentration
Parent Nuclide and Branch Fraction Indicated

uclide (j)	Parent (i)	THF(i)	S(j,t), pCi/g t= 0.000E+00	1.000E+00	3.000E+00	1.000E+01	3.000E+01	1.000E+02	3.000E+02	1.000E+03
ÄÄÄÄÄ	ÄÄÄÄÄÄ	ÄÄÄÄÄÄÄÄ	ÄÄÄÄÄÄÄÄÄ	ÄÄÄÄÄÄÄÄÄ	ÄÄÄÄÄÄÄÄÄ	ÄÄÄÄÄÄÄÄÄ	ÄÄÄÄÄÄÄÄÄ	ÄÄÄÄÄÄÄÄÄ	ÄÄÄÄÄÄÄÄÄ	ÄÄÄÄÄÄÄÄÄ
a-226	Ra-226	9.996E-01	3.648E+01	3.533E+01	3.314E+01	2.647E+01	1.394E+01	1.475E+00	2.411E-03	4.255E-13
a-226	Ra-226	1.319E-06	4.816E-05	4.664E-05	4.374E-05	3.494E-05	1.839E-05	1.947E-06	3.182E-09	5.616E-19
a-226	U-234	9.996E-01	0.000E+00	2.698E-08	2.308E-07	2.155E-06	1.208E-05	3.439E-05	3.853E-05	3.731E-05
a-226	U-234	1.319E-06	0.000E+00	3.561E-14	3.047E-13	2.844E-12	1.595E-11	4.540E-11	5.086E-11	4.925E-11
a-226	U-234	1.899E-08	0.000E+00	5.126E-16	4.386E-15	4.094E-14	2.295E-13	6.534E-13	7.321E-13	7.089E-13
a-226	U-238	1.599E-03	0.000E+00	4.044E-17	1.028E-15	3.093E-14	4.696E-13	2.984E-12	3.935E-12	3.813E-12
a-226	U-238	2.111E-09	0.000E+00	5.338E-23	1.357E-21	4.082E-20	6.199E-19	3.939E-18	5.194E-18	5.033E-18
a-226	U-238	3.039E-11	0.000E+00	7.683E-25	1.953E-23	5.876E-22	8.923E-21	5.670E-20	7.477E-20	7.244E-20
a-226	U-238	9.980E-01	0.000E+00	2.523E-14	6.416E-13	1.930E-11	2.930E-10	1.862E-09	2.455E-09	2.379E-09
a-226	U-238	1.317E-06	0.000E+00	3.331E-20	8.469E-19	2.547E-17	3.868E-16	2.458E-15	3.241E-15	3.140E-15
a-226	U-238	1.896E-08	0.000E+00	4.794E-22	1.219E-20	3.667E-19	5.568E-18	3.538E-17	4.665E-17	4.520E-17
a-226	äS(j):		3.649E+01	3.533E+01	3.314E+01	2.647E+01	1.394E+01	1.475E+00	2.449E-03	3.731E-05
o-210	Ra-226	9.996E-01	0.000E+00	1.092E+00	3.007E+00	7.444E+00	9.643E+00	1.904E+00	3.525E-03	6.232E-13
o-210	Ra-226	2.100E-04	0.000E+00	2.293E-04	6.315E-04	1.564E-03	2.026E-03	4.000E-04	7.405E-07	1.309E-16
o-210	Ra-226	1.998E-04	0.000E+00	2.181E-04	6.009E-04	1.488E-03	1.927E-03	3.805E-04	7.045E-07	1.245E-16
o-210	Ra-226	4.196E-08	0.000E+00	4.582E-08	1.262E-07	3.125E-07	4.048E-07	7.993E-08	1.480E-10	2.616E-20
o-210	Ra-226	2.000E-07	0.000E+00	2.184E-07	6.016E-07	1.489E-06	1.929E-06	3.810E-07	7.053E-10	1.247E-19
o-210	U-234	9.996E-01	0.000E+00	2.788E-10	7.058E-09	2.091E-07	3.053E-06	1.777E-05	2.254E-05	2.184E-05
o-210	U-234	2.100E-04	0.000E+00	5.857E-14	1.482E-12	4.392E-11	6.412E-10	3.732E-09	4.735E-09	4.587E-09
o-210	U-234	1.998E-04	0.000E+00	5.572E-14	1.410E-12	4.178E-11	6.101E-10	3.550E-09	4.505E-09	4.364E-09
o-210	U-234	4.196E-08	0.000E+00	1.170E-17	2.963E-16	8.776E-15	1.281E-13	7.457E-13	9.462E-13	9.166E-13
o-210	U-234	2.000E-07	0.000E+00	5.579E-17	1.412E-15	4.183E-14	6.108E-13	3.555E-12	4.510E-12	4.369E-12
o-210	U-238	1.599E-03	0.000E+00	3.142E-19	2.374E-17	2.303E-15	9.533E-14	1.413E-12	2.300E-12	2.231E-12
o-210	U-238	3.359E-07	0.000E+00	6.599E-23	4.987E-21	4.838E-19	2.002E-17	2.967E-16	4.832E-16	4.687E-16
o-210	U-238	3.196E-07	0.000E+00	6.278E-23	4.745E-21	4.603E-19	1.905E-17	2.823E-16	4.597E-16	4.459E-16
o-210	U-238	6.713E-11	0.000E+00	1.319E-26	9.966E-25	9.669E-23	4.001E-21	5.929E-20	9.656E-20	9.366E-20
o-210	U-238	3.200E-10	0.000E+00	6.286E-26	4.750E-24	4.609E-22	1.907E-20	2.826E-19	4.603E-19	4.464E-19
o-210	U-238	9.980E-01	0.000E+00	1.960E-16	1.481E-14	1.437E-12	5.948E-11	8.814E-10	1.435E-09	1.392E-09
o-210	U-238	2.096E-04	0.000E+00	4.118E-20	3.112E-18	3.019E-16	1.249E-14	1.851E-13	3.015E-13	2.925E-13
o-210	U-238	1.994E-04	0.000E+00	3.918E-20	2.961E-18	2.872E-16	1.189E-14	1.761E-13	2.869E-13	2.782E-13
o-210	U-238	4.189E-08	0.000E+00	8.229E-24	6.219E-22	6.033E-20	2.497E-18	3.700E-17	6.025E-17	5.844E-17
o-210	U-238	1.997E-07	0.000E+00	3.922E-23	2.964E-21	2.876E-19	1.190E-17	1.764E-16	2.872E-16	2.786E-16
o-210	äS(j):		0.000E+00	1.092E+00	3.008E+00	7.447E+00	9.647E+00	1.905E+00	3.549E-03	2.185E-05
o-210	Ra-226	1.319E-06	0.000E+00	1.441E-06	3.969E-06	9.826E-06	1.273E-05	2.514E-06	4.653E-09	8.226E-19
o-210	Ra-226	1.899E-08	0.000E+00	2.074E-08	5.713E-08	1.414E-07	1.832E-07	3.618E-08	6.698E-11	1.184E-20
o-210	Ra-226	2.771E-10	0.000E+00	3.026E-10	8.336E-10	2.064E-09	2.674E-09	5.280E-10	9.774E-13	1.728E-22
o-210	Ra-226	2.637E-10	0.000E+00	2.879E-10	7.931E-10	1.964E-09	2.544E-09	5.023E-10	9.299E-13	1.644E-22
o-210	Ra-226	5.538E-14	0.000E+00	6.048E-14	1.666E-13	4.124E-13	5.343E-13	1.055E-13	1.953E-16	3.453E-26
o-210	Ra-226	2.640E-13	0.000E+00	2.883E-13	7.941E-13	1.966E-12	2.547E-12	5.029E-13	9.311E-16	1.646E-25
o-210	U-234	1.319E-06	0.000E+00	3.681E-16	9.317E-15	2.760E-13	4.030E-12	2.345E-11	2.975E-11	2.882E-11
o-210	U-234	2.771E-10	0.000E+00	7.731E-20	1.957E-18	5.797E-17	8.464E-16	4.926E-15	6.250E-15	6.054E-15
o-210	U-234	2.637E-10	0.000E+00	7.356E-20	1.862E-18	5.515E-17	8.053E-16	4.686E-15	5.946E-15	5.760E-15
o-210	U-234	5.538E-14	0.000E+00	1.545E-23	3.911E-22	1.158E-20	1.691E-19	9.844E-19	1.249E-18	1.210E-18
o-210	U-234	2.640E-13	0.000E+00	7.364E-23	1.864E-21	5.522E-20	8.063E-19	4.692E-18	5.953E-18	5.767E-18
o-210	U-238	2.111E-09	0.000E+00	4.147E-25	3.134E-23	3.041E-21	1.258E-19	1.865E-18	3.037E-18	2.945E-18
o-210	U-238	4.434E-13	0.000E+00	8.711E-29	6.583E-27	6.387E-25	2.643E-23	3.916E-22	6.378E-22	6.187E-22
o-210	U-238	4.219E-13	0.000E+00	8.287E-29	6.263E-27	6.076E-25	2.515E-23	3.726E-22	6.068E-22	5.886E-22

ummary : GKP Maintenance Worker Inhalation
ile : C:\USERS\CLAUDE\DOCUMENTS\0 GKP DOSE\RESRAD CW\GKP MAINTENANCE WORKER - INHALATION.RAD

Individual Nuclide Soil Concentration
Parent Nuclide and Branch Fraction Indicated

uclide (j)	Parent (i)	THF(i)	S(j,t), pCi/g t= 0.000E+00	1.000E+00	3.000E+00	1.000E+01	3.000E+01	1.000E+02	3.000E+02	1.000E+03
ÄÄÄÄÄ	ÄÄÄÄÄÄ	ÄÄÄÄÄÄÄÄ	ÄÄÄÄÄÄÄÄ	ÄÄÄÄÄÄÄÄ	ÄÄÄÄÄÄÄÄ	ÄÄÄÄÄÄÄÄ	ÄÄÄÄÄÄÄÄ	ÄÄÄÄÄÄÄÄ	ÄÄÄÄÄÄÄÄ	ÄÄÄÄÄÄÄÄ
o-210	U-238	8.862E-17	0.000E+00	1.741E-32	1.315E-30	1.276E-28	5.282E-27	7.826E-26	1.275E-25	1.236E-25
o-210	U-238	4.224E-16	0.000E+00	8.297E-32	6.270E-30	6.084E-28	2.518E-26	3.731E-25	6.076E-25	5.893E-25
o-210	U-238	1.317E-06	0.000E+00	2.588E-22	1.956E-20	1.897E-18	7.852E-17	1.163E-15	1.895E-15	1.838E-15
o-210	U-238	2.767E-10	0.000E+00	5.435E-26	4.108E-24	3.985E-22	1.649E-20	2.444E-19	3.980E-19	3.860E-19
o-210	U-238	2.633E-10	0.000E+00	5.171E-26	3.908E-24	3.792E-22	1.569E-20	2.325E-19	3.787E-19	3.673E-19
o-210	U-238	5.530E-14	0.000E+00	1.086E-29	8.209E-28	7.964E-26	3.296E-24	4.884E-23	7.954E-23	7.715E-23
o-210	U-238	2.636E-13	0.000E+00	5.178E-29	3.913E-27	3.796E-25	1.571E-23	2.328E-22	3.791E-22	3.677E-22
o-210	äS(j):		0.000E+00	1.462E-06	4.028E-06	9.971E-06	1.292E-05	2.551E-06	4.752E-09	2.884E-11
a-226	Ra-226	1.899E-08	6.932E-07	6.713E-07	6.296E-07	5.030E-07	2.648E-07	2.802E-08	4.580E-11	8.084E-21
a-226	Ra-226	2.100E-04	7.663E-03	7.421E-03	6.960E-03	5.560E-03	2.927E-03	3.098E-04	5.063E-07	8.936E-17
a-226	äS(j):		7.664E-03	7.422E-03	6.961E-03	5.561E-03	2.927E-03	3.098E-04	5.064E-07	8.937E-17
a-226	Ra-226	2.771E-10	1.012E-08	9.796E-09	9.188E-09	7.340E-09	3.864E-09	4.090E-10	6.684E-13	1.180E-22
a-226	Ra-226	3.989E-12	1.456E-10	1.410E-10	1.322E-10	1.056E-10	5.561E-11	5.886E-12	9.621E-15	1.698E-24
a-226	äS(j):		1.026E-08	9.937E-09	9.320E-09	7.445E-09	3.919E-09	4.148E-10	6.780E-13	1.197E-22
o-210	Ra-226	3.989E-12	0.000E+00	4.356E-12	1.200E-11	2.971E-11	3.849E-11	7.599E-12	1.407E-14	2.487E-24
o-210	Ra-226	3.795E-12	0.000E+00	4.144E-12	1.142E-11	2.826E-11	3.662E-11	7.230E-12	1.339E-14	2.366E-24
o-210	Ra-226	7.972E-16	0.000E+00	8.705E-16	2.398E-15	5.937E-15	7.691E-15	1.519E-15	2.812E-18	4.970E-28
o-210	Ra-226	3.800E-15	0.000E+00	4.149E-15	1.143E-14	2.830E-14	3.666E-14	7.239E-15	1.340E-17	2.369E-27
o-210	U-234	1.899E-08	0.000E+00	5.298E-18	1.341E-16	3.973E-15	5.800E-14	3.376E-13	4.283E-13	4.149E-13
o-210	U-234	3.989E-12	0.000E+00	1.113E-21	2.817E-20	8.344E-19	1.218E-17	7.090E-17	8.996E-17	8.715E-17
o-210	U-234	3.795E-12	0.000E+00	1.059E-21	2.680E-20	7.939E-19	1.159E-17	6.746E-17	8.559E-17	8.291E-17
o-210	U-234	7.972E-16	0.000E+00	2.224E-25	5.629E-24	1.667E-22	2.435E-21	1.417E-20	1.798E-20	1.742E-20
o-210	U-234	3.800E-15	0.000E+00	1.060E-24	2.683E-23	7.948E-22	1.161E-20	6.754E-20	8.569E-20	8.301E-20
o-210	U-238	3.039E-11	0.000E+00	5.969E-27	4.511E-25	4.377E-23	1.811E-21	2.684E-20	4.371E-20	4.240E-20
o-210	U-238	6.383E-15	0.000E+00	1.254E-30	9.475E-29	9.193E-27	3.804E-25	5.637E-24	9.181E-24	8.905E-24
o-210	U-238	6.073E-15	0.000E+00	1.193E-30	9.015E-29	8.746E-27	3.620E-25	5.363E-24	8.735E-24	8.472E-24
o-210	U-238	1.276E-18	0.000E+00	2.506E-34	1.893E-32	1.837E-30	7.603E-29	1.127E-27	1.835E-27	1.780E-27
o-210	U-238	6.080E-18	0.000E+00	1.194E-33	9.026E-32	8.757E-30	3.624E-28	5.370E-27	8.745E-27	8.483E-27
o-210	U-238	1.896E-08	0.000E+00	3.725E-24	2.815E-22	2.731E-20	1.130E-18	1.675E-17	2.727E-17	2.645E-17
o-210	U-238	3.983E-12	0.000E+00	7.824E-28	5.912E-26	5.736E-24	2.374E-22	3.518E-21	5.729E-21	5.557E-21
o-210	U-238	3.789E-12	0.000E+00	7.444E-28	5.625E-26	5.458E-24	2.259E-22	3.347E-21	5.450E-21	5.287E-21
o-210	U-238	7.959E-16	0.000E+00	1.563E-31	1.182E-29	1.146E-27	4.744E-26	7.029E-25	1.145E-24	1.110E-24
o-210	U-238	3.794E-15	0.000E+00	7.453E-31	5.632E-29	5.464E-27	2.261E-25	3.351E-24	5.457E-24	5.293E-24
o-210	äS(j):		0.000E+00	8.506E-12	2.343E-11	5.801E-11	7.520E-11	1.518E-11	4.560E-13	4.151E-13
a-226	Ra-226	1.998E-04	7.291E-03	7.061E-03	6.622E-03	5.290E-03	2.785E-03	2.948E-04	4.817E-07	8.502E-17
a-226	Ra-226	2.637E-10	9.624E-09	9.320E-09	8.741E-09	6.983E-09	3.676E-09	3.891E-10	6.359E-13	1.122E-22
a-226	U-234	1.998E-04	0.000E+00	5.392E-12	4.613E-11	4.306E-10	2.414E-09	6.873E-09	7.700E-09	7.457E-09
a-226	U-234	2.637E-10	0.000E+00	7.117E-18	6.089E-17	5.684E-16	3.187E-15	9.072E-15	1.016E-14	9.843E-15
a-226	U-234	3.795E-12	0.000E+00	1.024E-19	8.765E-19	8.182E-18	4.587E-17	1.306E-16	1.463E-16	1.417E-16
a-226	U-238	3.196E-07	0.000E+00	8.081E-21	2.055E-19	6.180E-18	9.385E-17	5.963E-16	7.864E-16	7.619E-16
a-226	U-238	4.219E-13	0.000E+00	1.067E-26	2.712E-25	8.158E-24	1.239E-22	7.872E-22	1.038E-21	1.006E-21
a-226	U-238	6.073E-15	0.000E+00	1.535E-28	3.904E-27	1.174E-25	1.783E-24	1.133E-23	1.494E-23	1.448E-23
a-226	U-238	1.994E-04	0.000E+00	5.042E-18	1.282E-16	3.856E-15	5.856E-14	3.721E-13	4.907E-13	4.755E-13
a-226	U-238	2.633E-10	0.000E+00	6.656E-24	1.692E-22	5.090E-21	7.730E-20	4.912E-19	6.477E-19	6.276E-19
a-226	U-238	3.789E-12	0.000E+00	9.581E-26	2.436E-24	7.327E-23	1.113E-21	7.070E-21	9.323E-21	9.034E-21
a-226	äS(j):		7.291E-03	7.061E-03	6.622E-03	5.290E-03	2.785E-03	2.948E-04	4.894E-07	7.457E-09

ummary : GKP Maintenance Worker Inhalation
ile : C:\USERS\CLAUDE\DOCUMENTS\0 GKP DOSE\RESRAD CW\GKP MAINTENANCE WORKER - INHALATION.RAD

Individual Nuclide Soil Concentration
Parent Nuclide and Branch Fraction Indicated

uclide (j)	Parent (i)	THF(i)	S(j,t), pCi/g t= 0.000E+00	1.000E+00	3.000E+00	1.000E+01	3.000E+01	1.000E+02	3.000E+02	1.000E+03
ÄÄÄÄÄ	ÄÄÄÄÄÄ	ÄÄÄÄÄÄÄÄ	ÄÄÄÄÄÄÄÄ	ÄÄÄÄÄÄÄÄ	ÄÄÄÄÄÄÄÄ	ÄÄÄÄÄÄÄÄ	ÄÄÄÄÄÄÄÄ	ÄÄÄÄÄÄÄÄ	ÄÄÄÄÄÄÄÄ	ÄÄÄÄÄÄÄÄ
a-226	Ra-226	3.795E-12	1.385E-10	1.342E-10	1.258E-10	1.005E-10	5.291E-11	5.600E-12	9.153E-15	1.615E-24
a-226	Ra-226	4.196E-08	1.531E-06	1.483E-06	1.391E-06	1.111E-06	5.849E-07	6.191E-08	1.012E-10	1.786E-20
a-226	äS(j):		1.532E-06	1.483E-06	1.391E-06	1.111E-06	5.850E-07	6.192E-08	1.012E-10	1.786E-20
a-226	Ra-226	5.538E-14	2.022E-12	1.958E-12	1.836E-12	1.467E-12	7.721E-13	8.173E-14	1.336E-16	2.357E-26
a-226	Ra-226	7.972E-16	2.910E-14	2.818E-14	2.643E-14	2.111E-14	1.111E-14	1.176E-15	1.923E-18	3.393E-28
a-226	äS(j):		2.051E-12	1.986E-12	1.862E-12	1.488E-12	7.832E-13	8.290E-14	1.355E-16	2.391E-26
a-226	Ra-226	2.000E-07	7.300E-06	7.070E-06	6.630E-06	5.297E-06	2.788E-06	2.951E-07	4.823E-10	8.513E-20
a-226	Ra-226	2.640E-13	9.636E-12	9.332E-12	8.752E-12	6.991E-12	3.680E-12	3.896E-13	6.367E-16	1.124E-25
a-226	U-234	2.000E-07	0.000E+00	5.398E-15	4.619E-14	4.311E-13	2.417E-12	6.881E-12	7.709E-12	7.466E-12
a-226	U-234	2.640E-13	0.000E+00	7.126E-21	6.097E-20	5.691E-19	3.191E-18	9.083E-18	1.018E-17	9.855E-18
a-226	U-234	3.800E-15	0.000E+00	1.026E-22	8.776E-22	8.192E-21	4.593E-20	1.307E-19	1.465E-19	1.418E-19
a-226	U-238	3.200E-10	0.000E+00	8.091E-24	2.057E-22	6.188E-21	9.396E-20	5.971E-19	7.873E-19	7.629E-19
a-226	U-238	4.224E-16	0.000E+00	1.068E-29	2.715E-28	8.168E-27	1.240E-25	7.881E-25	1.039E-24	1.007E-24
a-226	U-238	6.080E-18	0.000E+00	1.537E-31	3.909E-30	1.176E-28	1.785E-27	1.134E-26	1.496E-26	1.449E-26
a-226	U-238	1.997E-07	0.000E+00	5.048E-21	1.284E-19	3.861E-18	5.863E-17	3.726E-16	4.913E-16	4.760E-16
a-226	U-238	2.636E-13	0.000E+00	6.664E-27	1.694E-25	5.097E-24	7.739E-23	4.918E-22	6.485E-22	6.284E-22
a-226	U-238	3.794E-15	0.000E+00	9.592E-29	2.439E-27	7.336E-26	1.114E-24	7.079E-24	9.335E-24	9.045E-24
a-226	äS(j):		7.300E-06	7.070E-06	6.630E-06	5.297E-06	2.788E-06	2.951E-07	4.900E-10	7.466E-12
a-226	Ra-226	3.800E-15	1.387E-13	1.343E-13	1.260E-13	1.006E-13	5.298E-14	5.607E-15	9.164E-18	1.617E-27
n-232	Th-232	1.000E+00	2.400E+00	2.400E+00	2.400E+00	2.399E+00	2.397E+00	2.391E+00	2.373E+00	2.313E+00
a-228	Th-232	1.000E+00	0.000E+00	2.684E-01	6.968E-01	1.486E+00	1.879E+00	1.894E+00	1.880E+00	1.832E+00
n-228	Th-232	1.000E+00	0.000E+00	4.430E-02	2.891E-01	1.222E+00	1.865E+00	1.894E+00	1.880E+00	1.832E+00
-234	U-234	9.996E-01	1.389E+01	1.329E+01	1.217E+01	8.925E+00	3.683E+00	1.662E-01	2.380E-05	8.354E-19
-234	U-234	1.319E-06	1.834E-05	1.755E-05	1.606E-05	1.178E-05	4.862E-06	2.194E-07	3.141E-11	1.103E-24
-234	U-238	1.599E-03	0.000E+00	6.005E-08	1.649E-07	4.032E-07	4.992E-07	7.511E-08	3.227E-11	3.779E-24
-234	U-238	2.111E-09	0.000E+00	7.927E-14	2.177E-13	5.322E-13	6.589E-13	9.914E-14	4.259E-17	4.988E-30
-234	U-238	3.039E-11	0.000E+00	1.141E-15	3.133E-15	7.661E-15	9.484E-15	1.427E-15	6.131E-19	7.180E-32
-234	U-238	3.359E-07	0.000E+00	1.261E-11	3.463E-11	8.469E-11	1.048E-10	1.578E-11	6.777E-15	7.938E-28
-234	U-238	4.434E-13	0.000E+00	1.665E-17	4.572E-17	1.118E-16	1.384E-16	2.082E-17	8.946E-21	1.048E-33
-234	U-238	6.383E-15	0.000E+00	2.396E-19	6.580E-19	1.609E-18	1.992E-18	2.998E-19	1.288E-22	1.508E-35
-234	U-238	3.196E-07	0.000E+00	1.200E-11	3.295E-11	8.058E-11	9.975E-11	1.501E-11	6.448E-15	7.552E-28
-234	U-238	4.219E-13	0.000E+00	1.584E-17	4.350E-17	1.064E-16	1.317E-16	1.981E-17	8.511E-21	9.969E-34
-234	U-238	6.073E-15	0.000E+00	2.280E-19	6.261E-19	1.531E-18	1.895E-18	2.852E-19	1.225E-22	1.435E-35
-234	U-238	6.713E-11	0.000E+00	2.521E-15	6.921E-15	1.692E-14	2.095E-14	3.153E-15	1.354E-18	1.586E-31
-234	U-238	8.862E-17	0.000E+00	3.327E-21	9.136E-21	2.234E-20	2.766E-20	4.162E-21	1.788E-24	2.094E-37
-234	U-238	1.276E-18	0.000E+00	4.789E-23	1.315E-22	3.216E-22	3.981E-22	5.990E-23	2.573E-26	3.014E-39
-234	U-238	3.200E-10	0.000E+00	1.201E-14	3.299E-14	8.067E-14	9.987E-14	1.503E-14	6.456E-18	7.561E-31
-234	U-238	4.224E-16	0.000E+00	1.586E-20	4.355E-20	1.065E-19	1.318E-19	1.984E-20	8.522E-24	9.981E-37
-234	U-238	6.080E-18	0.000E+00	2.283E-22	6.268E-22	1.533E-21	1.898E-21	2.855E-22	1.227E-25	1.437E-38
-234	U-238	9.980E-01	0.000E+00	3.747E-05	1.029E-04	2.516E-04	3.115E-04	4.687E-05	2.013E-08	2.358E-21
-234	U-238	1.317E-06	0.000E+00	4.946E-11	1.358E-10	3.321E-10	4.111E-10	6.187E-11	2.658E-14	3.113E-27
-234	U-238	1.896E-08	0.000E+00	7.119E-13	1.955E-12	4.780E-12	5.918E-12	8.905E-13	3.825E-16	4.480E-29

ummary : GKP Maintenance Worker Inhalation
ile : C:\USERS\CLAUDE\DOCUMENTS\0 GKP DOSE\RESRAD CW\GKP MAINTENANCE WORKER - INHALATION.RAD

Individual Nuclide Soil Concentration
Parent Nuclide and Branch Fraction Indicated

uclide (j)	Parent (i)	THF(i)	S(j,t), pCi/g t= 0.000E+00	1.000E+00	3.000E+00	1.000E+01	3.000E+01	1.000E+02	3.000E+02	1.000E+03
ÄÄÄÄÄ	ÄÄÄÄÄÄ	ÄÄÄÄÄÄÄÄ	ÄÄÄÄÄÄÄÄ	ÄÄÄÄÄÄÄÄ	ÄÄÄÄÄÄÄÄ	ÄÄÄÄÄÄÄÄ	ÄÄÄÄÄÄÄÄ	ÄÄÄÄÄÄÄÄ	ÄÄÄÄÄÄÄÄ	ÄÄÄÄÄÄÄÄ
-234	U-238	2.096E-04	0.000E+00	7.871E-09	2.161E-08	5.285E-08	6.542E-08	9.844E-09	4.229E-12	4.953E-25
-234	U-238	2.767E-10	0.000E+00	1.039E-14	2.853E-14	6.976E-14	8.636E-14	1.299E-14	5.582E-18	6.538E-31
-234	U-238	3.983E-12	0.000E+00	1.495E-16	4.106E-16	1.004E-15	1.243E-15	1.870E-16	8.035E-20	9.411E-33
-234	U-238	1.994E-04	0.000E+00	7.488E-09	2.056E-08	5.028E-08	6.225E-08	9.366E-09	4.024E-12	4.712E-25
-234	U-238	2.633E-10	0.000E+00	9.884E-15	2.714E-14	6.637E-14	8.216E-14	1.236E-14	5.311E-18	6.220E-31
-234	U-238	3.789E-12	0.000E+00	1.423E-16	3.907E-16	9.553E-16	1.183E-15	1.780E-16	7.645E-20	8.954E-33
-234	U-238	4.189E-08	0.000E+00	1.573E-12	4.319E-12	1.056E-11	1.307E-11	1.967E-12	8.451E-16	9.898E-29
-234	U-238	5.530E-14	0.000E+00	2.076E-18	5.701E-18	1.394E-17	1.726E-17	2.597E-18	1.116E-21	1.307E-34
-234	U-238	7.959E-16	0.000E+00	2.988E-20	8.206E-20	2.007E-19	2.484E-19	3.738E-20	1.606E-23	1.881E-36
-234	U-238	1.997E-07	0.000E+00	7.497E-12	2.059E-11	5.034E-11	6.232E-11	9.378E-12	4.028E-15	4.718E-28
-234	U-238	2.636E-13	0.000E+00	9.896E-18	2.717E-17	6.645E-17	8.226E-17	1.238E-17	5.318E-21	6.228E-34
-234	U-238	3.794E-15	0.000E+00	1.424E-19	3.911E-19	9.565E-19	1.184E-18	1.782E-19	7.654E-23	8.965E-36
-234	äS(j):		1.389E+01	1.329E+01	1.217E+01	8.926E+00	3.683E+00	1.663E-01	2.382E-05	8.377E-19
a-230	U-234	9.996E-01	0.000E+00	1.250E-04	3.589E-04	1.032E-03	2.120E-03	2.842E-03	2.850E-03	2.759E-03
a-230	U-234	1.319E-06	0.000E+00	1.650E-10	4.738E-10	1.362E-09	2.798E-09	3.751E-09	3.762E-09	3.642E-09
a-230	U-234	1.899E-08	0.000E+00	2.375E-12	6.819E-12	1.961E-11	4.028E-11	5.400E-11	5.415E-11	5.243E-11
a-230	U-234	2.100E-04	0.000E+00	2.625E-08	7.539E-08	2.168E-07	4.452E-07	5.969E-07	5.986E-07	5.796E-07
a-230	U-234	2.771E-10	0.000E+00	3.465E-14	9.951E-14	2.862E-13	5.877E-13	7.879E-13	7.902E-13	7.650E-13
a-230	U-234	3.989E-12	0.000E+00	4.988E-16	1.432E-15	4.119E-15	8.460E-15	1.134E-14	1.137E-14	1.101E-14
a-230	U-234	1.998E-04	0.000E+00	2.497E-08	7.172E-08	2.063E-07	4.236E-07	5.679E-07	5.695E-07	5.514E-07
a-230	U-234	2.637E-10	0.000E+00	3.297E-14	9.468E-14	2.723E-13	5.592E-13	7.497E-13	7.518E-13	7.279E-13
a-230	U-234	3.795E-12	0.000E+00	4.745E-16	1.363E-15	3.919E-15	8.049E-15	1.079E-14	1.082E-14	1.048E-14
a-230	U-234	4.196E-08	0.000E+00	5.246E-12	1.507E-11	4.332E-11	8.898E-11	1.193E-10	1.196E-10	1.158E-10
a-230	U-234	5.538E-14	0.000E+00	6.924E-18	1.989E-17	5.719E-17	1.175E-16	1.575E-16	1.579E-16	1.529E-16
a-230	U-234	7.972E-16	0.000E+00	9.967E-20	2.862E-19	8.231E-19	1.691E-18	2.267E-18	2.273E-18	2.201E-18
a-230	U-234	2.000E-07	0.000E+00	2.501E-11	7.181E-11	2.065E-10	4.241E-10	5.686E-10	5.702E-10	5.521E-10
a-230	U-234	2.640E-13	0.000E+00	3.301E-17	9.479E-17	2.726E-16	5.599E-16	7.506E-16	7.527E-16	7.287E-16
a-230	U-234	3.800E-15	0.000E+00	4.751E-19	1.364E-18	3.924E-18	8.058E-18	1.080E-17	1.083E-17	1.049E-17
a-230	U-238	1.599E-03	0.000E+00	2.802E-13	2.378E-12	2.160E-11	1.128E-10	2.748E-10	2.912E-10	2.820E-10
a-230	U-238	2.111E-09	0.000E+00	3.699E-19	3.139E-18	2.851E-17	1.489E-16	3.627E-16	3.844E-16	3.722E-16
a-230	U-238	3.039E-11	0.000E+00	5.324E-21	4.519E-20	4.104E-19	2.143E-18	5.221E-18	5.533E-18	5.357E-18
a-230	U-238	3.359E-07	0.000E+00	5.885E-17	4.995E-16	4.537E-15	2.369E-14	5.771E-14	6.117E-14	5.922E-14
a-230	U-238	4.434E-13	0.000E+00	7.769E-23	6.594E-22	5.989E-21	3.127E-20	7.618E-20	8.074E-20	7.817E-20
a-230	U-238	6.383E-15	0.000E+00	1.118E-24	9.491E-24	8.621E-23	4.501E-22	1.097E-21	1.162E-21	1.125E-21
a-230	U-238	3.196E-07	0.000E+00	5.600E-17	4.753E-16	4.317E-15	2.254E-14	5.491E-14	5.820E-14	5.635E-14
a-230	U-238	4.219E-13	0.000E+00	7.391E-23	6.274E-22	5.698E-21	2.975E-20	7.248E-20	7.682E-20	7.438E-20
a-230	U-238	6.073E-15	0.000E+00	1.064E-24	9.030E-24	8.202E-23	4.282E-22	1.043E-21	1.106E-21	1.071E-21
a-230	U-238	6.713E-11	0.000E+00	1.176E-20	9.983E-20	9.067E-19	4.734E-18	1.153E-17	1.222E-17	1.183E-17
a-230	U-238	8.862E-17	0.000E+00	1.553E-26	1.318E-25	1.197E-24	6.249E-24	1.522E-23	1.614E-23	1.562E-23
a-230	U-238	1.276E-18	0.000E+00	2.235E-28	1.897E-27	1.723E-26	8.995E-26	2.191E-25	2.323E-25	2.249E-25
a-230	U-238	3.200E-10	0.000E+00	5.606E-20	4.759E-19	4.322E-18	2.257E-17	5.498E-17	5.827E-17	5.641E-17
a-230	U-238	4.224E-16	0.000E+00	7.400E-26	6.281E-25	5.705E-24	2.979E-23	7.257E-23	7.691E-23	7.447E-23
a-230	U-238	6.080E-18	0.000E+00	1.065E-27	9.041E-27	8.212E-26	4.288E-25	1.045E-24	1.107E-24	1.072E-24
a-230	U-238	9.980E-01	0.000E+00	1.748E-10	1.484E-09	1.348E-08	7.038E-08	1.715E-07	1.817E-07	1.759E-07
a-230	U-238	1.317E-06	0.000E+00	2.308E-16	1.959E-15	1.779E-14	9.290E-14	2.263E-13	2.399E-13	2.322E-13
a-230	U-238	1.896E-08	0.000E+00	3.322E-18	2.820E-17	2.561E-16	1.337E-15	3.258E-15	3.453E-15	3.343E-15
a-230	U-238	2.096E-04	0.000E+00	3.673E-14	3.117E-13	2.831E-12	1.478E-11	3.601E-11	3.817E-11	3.695E-11
a-230	U-238	2.767E-10	0.000E+00	4.848E-20	4.115E-19	3.737E-18	1.951E-17	4.754E-17	5.038E-17	4.878E-17

ummary : GKP Maintenance Worker Inhalation
ile : C:\USERS\CLAUDE\DOCUMENTS\0 GKP DOSE\RESRAD CW\GKP MAINTENANCE WORKER - INHALATION.RAD

Individual Nuclide Soil Concentration
Parent Nuclide and Branch Fraction Indicated

uclide (j)	Parent (i)	THF(i)	S(j,t), pCi/g t= 0.000E+00	1.000E+00	3.000E+00	1.000E+01	3.000E+01	1.000E+02	3.000E+02	1.000E+03
ÄÄÄÄÄ	ÄÄÄÄÄÄ	ÄÄÄÄÄÄÄÄ	ÄÄÄÄÄÄÄÄÄ	ÄÄÄÄÄÄÄÄÄ	ÄÄÄÄÄÄÄÄÄ	ÄÄÄÄÄÄÄÄÄ	ÄÄÄÄÄÄÄÄÄ	ÄÄÄÄÄÄÄÄÄ	ÄÄÄÄÄÄÄÄÄ	ÄÄÄÄÄÄÄÄÄ
n-230	U-238	3.983E-12	0.000E+00	6.978E-22	5.923E-21	5.379E-20	2.809E-19	6.843E-19	7.252E-19	7.021E-19
n-230	U-238	1.994E-04	0.000E+00	3.494E-14	2.966E-13	2.694E-12	1.406E-11	3.426E-11	3.631E-11	3.516E-11
n-230	U-238	2.633E-10	0.000E+00	4.612E-20	3.915E-19	3.556E-18	1.856E-17	4.523E-17	4.794E-17	4.641E-17
n-230	U-238	3.789E-12	0.000E+00	6.639E-22	5.635E-21	5.118E-20	2.672E-19	6.510E-19	6.900E-19	6.680E-19
n-230	U-238	4.189E-08	0.000E+00	7.339E-18	6.229E-17	5.658E-16	2.954E-15	7.197E-15	7.628E-15	7.385E-15
n-230	U-238	5.530E-14	0.000E+00	9.688E-24	8.223E-23	7.468E-22	3.899E-21	9.500E-21	1.007E-20	9.748E-21
n-230	U-238	7.959E-16	0.000E+00	1.394E-25	1.184E-24	1.075E-23	5.613E-23	1.367E-22	1.449E-22	1.403E-22
n-230	U-238	1.997E-07	0.000E+00	3.498E-17	2.969E-16	2.697E-15	1.408E-14	3.431E-14	3.636E-14	3.520E-14
n-230	U-238	2.636E-13	0.000E+00	4.618E-23	3.920E-22	3.560E-21	1.859E-20	4.528E-20	4.799E-20	4.647E-20
n-230	U-238	3.794E-15	0.000E+00	6.647E-25	5.642E-24	5.124E-23	2.675E-22	6.518E-22	6.908E-22	6.688E-22
n-230	äS(j):		0.000E+00	1.250E-04	3.591E-04	1.033E-03	2.121E-03	2.843E-03	2.851E-03	2.761E-03
-234	U-234	1.899E-08	2.640E-07	2.526E-07	2.312E-07	1.696E-07	6.998E-08	3.159E-09	4.522E-13	1.587E-26
-234	U-234	2.100E-04	2.918E-03	2.792E-03	2.556E-03	1.875E-03	7.736E-04	3.492E-05	4.999E-09	1.755E-22
-234	äS(j):		2.919E-03	2.792E-03	2.556E-03	1.875E-03	7.737E-04	3.492E-05	4.999E-09	1.755E-22
a-226	U-234	2.100E-04	0.000E+00	5.667E-12	4.849E-11	4.526E-10	2.538E-09	7.224E-09	8.093E-09	7.837E-09
a-226	U-234	3.989E-12	0.000E+00	1.077E-19	9.213E-19	8.600E-18	4.821E-17	1.373E-16	1.538E-16	1.489E-16
a-226	U-238	3.359E-07	0.000E+00	8.493E-21	2.160E-19	6.496E-18	9.864E-17	6.268E-16	8.265E-16	8.008E-16
a-226	U-238	4.434E-13	0.000E+00	1.121E-26	2.851E-25	8.574E-24	1.302E-22	8.274E-22	1.091E-21	1.057E-21
a-226	U-238	6.383E-15	0.000E+00	1.614E-28	4.103E-27	1.234E-25	1.874E-24	1.191E-23	1.570E-23	1.522E-23
a-226	U-238	2.096E-04	0.000E+00	5.300E-18	1.348E-16	4.053E-15	6.155E-14	3.911E-13	5.158E-13	4.997E-13
a-226	U-238	2.767E-10	0.000E+00	6.996E-24	1.779E-22	5.350E-21	8.125E-20	5.163E-19	6.808E-19	6.596E-19
a-226	U-238	3.983E-12	0.000E+00	1.007E-25	2.560E-24	7.701E-23	1.169E-21	7.431E-21	9.799E-21	9.495E-21
a-226	äS(j):		0.000E+00	5.667E-12	4.849E-11	4.526E-10	2.538E-09	7.224E-09	8.094E-09	7.838E-09
-234	U-234	2.771E-10	3.852E-09	3.686E-09	3.373E-09	2.475E-09	1.021E-09	4.609E-11	6.598E-15	2.316E-28
-234	U-234	3.989E-12	5.545E-11	5.305E-11	4.856E-11	3.562E-11	1.470E-11	6.634E-13	9.498E-17	3.334E-30
-234	äS(j):		3.908E-09	3.739E-09	3.422E-09	2.510E-09	1.036E-09	4.676E-11	6.693E-15	2.349E-28
a-226	U-234	2.771E-10	0.000E+00	7.480E-18	6.400E-17	5.974E-16	3.350E-15	9.535E-15	1.068E-14	1.035E-14
-234	U-234	1.998E-04	2.777E-03	2.656E-03	2.431E-03	1.784E-03	7.360E-04	3.322E-05	4.756E-09	1.669E-22
-234	U-234	2.637E-10	3.665E-09	3.506E-09	3.209E-09	2.354E-09	9.715E-10	4.385E-11	6.278E-15	2.204E-28
-234	äS(j):		2.777E-03	2.656E-03	2.431E-03	1.784E-03	7.360E-04	3.322E-05	4.756E-09	1.669E-22
-234	U-234	3.795E-12	5.276E-11	5.047E-11	4.620E-11	3.389E-11	1.398E-11	6.312E-13	9.036E-17	3.172E-30
-234	U-234	4.196E-08	5.832E-07	5.580E-07	5.107E-07	3.746E-07	1.546E-07	6.978E-09	9.989E-13	3.506E-26
-234	äS(j):		5.833E-07	5.580E-07	5.107E-07	3.747E-07	1.546E-07	6.979E-09	9.990E-13	3.507E-26
a-226	U-234	4.196E-08	0.000E+00	1.132E-15	9.690E-15	9.045E-14	5.071E-13	1.444E-12	1.617E-12	1.566E-12
a-226	U-234	7.972E-16	0.000E+00	2.152E-23	1.841E-22	1.719E-21	9.635E-21	2.743E-20	3.073E-20	2.976E-20
a-226	U-238	6.713E-11	0.000E+00	1.697E-24	4.316E-23	1.298E-21	1.971E-20	1.253E-19	1.652E-19	1.600E-19
a-226	U-238	8.862E-17	0.000E+00	2.240E-30	5.697E-29	1.713E-27	2.602E-26	1.653E-25	2.180E-25	2.113E-25
a-226	U-238	1.276E-18	0.000E+00	3.225E-32	8.200E-31	2.466E-29	3.745E-28	2.380E-27	3.138E-27	3.041E-27
a-226	U-238	4.189E-08	0.000E+00	1.059E-21	2.693E-20	8.100E-19	1.230E-17	7.816E-17	1.031E-16	9.987E-17
a-226	U-238	5.530E-14	0.000E+00	1.398E-27	3.555E-26	1.069E-24	1.624E-23	1.032E-22	1.360E-22	1.318E-22
a-226	U-238	7.959E-16	0.000E+00	2.012E-29	5.117E-28	1.539E-26	2.337E-25	1.485E-24	1.958E-24	1.897E-24
a-226	äS(j):		0.000E+00	1.132E-15	9.690E-15	9.045E-14	5.071E-13	1.444E-12	1.617E-12	1.566E-12

ummary : GKP Maintenance Worker Inhalation
ile : C:\USERS\CLAUDE\DOCUMENTS\0 GKP DOSE\RESRAD CW\GKP MAINTENANCE WORKER - INHALATION.RAD

Individual Nuclide Soil Concentration
Parent Nuclide and Branch Fraction Indicated

uclide (j)	Parent (i)	THF(i)	S(j,t), pCi/g t= 0.000E+00	1.000E+00	3.000E+00	1.000E+01	3.000E+01	1.000E+02	3.000E+02	1.000E+03
ÄÄÄÄÄ	ÄÄÄÄÄÄ	ÄÄÄÄÄÄÄÄ	ÄÄÄÄÄÄÄÄÄ	ÄÄÄÄÄÄÄÄÄ	ÄÄÄÄÄÄÄÄÄ	ÄÄÄÄÄÄÄÄÄ	ÄÄÄÄÄÄÄÄÄ	ÄÄÄÄÄÄÄÄÄ	ÄÄÄÄÄÄÄÄÄ	ÄÄÄÄÄÄÄÄÄ
-234	U-234	5.538E-14	7.698E-13	7.365E-13	6.741E-13	4.945E-13	2.041E-13	9.211E-15	1.319E-18	4.629E-32
-234	U-234	7.972E-16	1.108E-14	1.060E-14	9.703E-15	7.118E-15	2.937E-15	1.326E-16	1.898E-20	6.662E-34
-234	äS(j):		7.809E-13	7.471E-13	6.838E-13	5.016E-13	2.070E-13	9.344E-15	1.338E-18	4.695E-32
a-226	U-234	5.538E-14	0.000E+00	1.495E-21	1.279E-20	1.194E-19	6.694E-19	1.906E-18	2.135E-18	2.067E-18
-234	U-234	2.000E-07	2.780E-06	2.660E-06	2.434E-06	1.786E-06	7.369E-07	3.326E-08	4.762E-12	1.671E-25
-234	U-234	2.640E-13	3.670E-12	3.511E-12	3.213E-12	2.357E-12	9.727E-13	4.391E-14	6.285E-18	2.206E-31
-234	äS(j):		2.780E-06	2.660E-06	2.434E-06	1.786E-06	7.369E-07	3.326E-08	4.762E-12	1.671E-25
-234	U-234	3.800E-15	5.282E-14	5.053E-14	4.625E-14	3.393E-14	1.400E-14	6.320E-16	9.047E-20	3.176E-33
-235	U-235	9.835E-01	8.261E-01	7.904E-01	7.234E-01	5.307E-01	2.190E-01	9.887E-03	1.416E-06	4.981E-20
-235	U-235	2.722E-03	2.286E-03	2.187E-03	2.002E-03	1.469E-03	6.061E-04	2.736E-05	3.920E-09	1.379E-22
-235	äS(j):		8.284E-01	7.925E-01	7.254E-01	5.322E-01	2.196E-01	9.914E-03	1.420E-06	4.995E-20
a-231	U-235	9.835E-01	0.000E+00	1.672E-05	4.592E-05	1.123E-04	1.390E-04	2.090E-05	8.961E-09	1.043E-21
a-231	U-235	2.722E-03	0.000E+00	4.628E-08	1.271E-07	3.107E-07	3.846E-07	5.784E-08	2.480E-11	2.886E-24
a-231	U-235	1.376E-02	0.000E+00	2.340E-07	6.425E-07	1.571E-06	1.944E-06	2.924E-07	1.254E-10	1.459E-23
a-231	U-235	3.809E-05	0.000E+00	6.476E-10	1.778E-09	4.348E-09	5.382E-09	8.093E-10	3.470E-13	4.038E-26
a-231	U-235	8.257E-07	0.000E+00	1.404E-11	3.855E-11	9.426E-11	1.167E-10	1.755E-11	7.523E-15	8.755E-28
a-231	U-235	2.285E-09	0.000E+00	3.886E-14	1.067E-13	2.609E-13	3.229E-13	4.856E-14	2.082E-17	2.423E-30
a-231	äS(j):		0.000E+00	1.700E-05	4.669E-05	1.142E-04	1.413E-04	2.125E-05	9.111E-09	1.060E-21
c-227	U-235	9.835E-01	0.000E+00	2.577E-07	1.994E-06	1.324E-05	3.070E-05	6.123E-06	2.826E-09	3.370E-22
c-227	U-235	2.722E-03	0.000E+00	7.134E-10	5.518E-09	3.665E-08	8.495E-08	1.695E-08	7.821E-12	9.327E-25
c-227	U-235	1.376E-02	0.000E+00	3.606E-09	2.790E-08	1.853E-07	4.295E-07	8.568E-08	3.954E-11	4.715E-24
c-227	äS(j):		0.000E+00	4.320E-09	3.341E-08	2.219E-07	5.144E-07	1.026E-07	4.736E-11	5.648E-24
-235	U-235	1.376E-02	1.156E-02	1.106E-02	1.012E-02	7.426E-03	3.064E-03	1.383E-04	1.982E-08	6.969E-22
-235	U-235	3.809E-05	3.199E-05	3.061E-05	2.801E-05	2.055E-05	8.481E-06	3.829E-07	5.484E-11	1.929E-24
-235	äS(j):		1.159E-02	1.109E-02	1.015E-02	7.446E-03	3.073E-03	1.387E-04	1.987E-08	6.989E-22
c-227	U-235	3.809E-05	0.000E+00	9.981E-12	7.721E-11	5.128E-10	1.189E-09	2.371E-10	1.094E-13	1.305E-26
c-227	U-235	8.257E-07	0.000E+00	2.164E-13	1.674E-12	1.112E-11	2.577E-11	5.141E-12	2.372E-15	2.829E-28
c-227	äS(j):		0.000E+00	1.020E-11	7.888E-11	5.239E-10	1.214E-09	2.423E-10	1.118E-13	1.333E-26
-235	U-235	8.257E-07	6.936E-07	6.636E-07	6.074E-07	4.456E-07	1.839E-07	8.301E-09	1.189E-12	4.182E-26
-235	U-235	2.285E-09	1.920E-09	1.837E-09	1.681E-09	1.233E-09	5.089E-10	2.297E-11	3.291E-15	1.157E-28
-235	äS(j):		6.955E-07	6.654E-07	6.090E-07	4.468E-07	1.844E-07	8.324E-09	1.192E-12	4.193E-26
c-227	U-235	2.285E-09	0.000E+00	5.989E-16	4.633E-15	3.077E-14	7.133E-14	1.423E-14	6.566E-18	7.831E-31
-238	U-238	5.450E-07	7.575E-06	7.248E-06	6.634E-06	4.866E-06	2.008E-06	9.066E-08	1.299E-11	4.567E-25
-238	U-238	1.599E-03	2.223E-02	2.127E-02	1.947E-02	1.428E-02	5.893E-03	2.661E-04	3.811E-08	1.340E-21
-238	äS(j):		2.224E-02	2.128E-02	1.947E-02	1.429E-02	5.895E-03	2.662E-04	3.812E-08	1.341E-21
-238	U-238	2.111E-09	2.934E-08	2.807E-08	2.570E-08	1.885E-08	7.779E-09	3.512E-10	5.030E-14	1.769E-27

ummary : GKP Maintenance Worker Inhalation
ile : C:\USERS\CLAUDE\DOCUMENTS\0 GKP DOSE\RESRAD CW\GKP MAINTENANCE WORKER - INHALATION.RAD

Individual Nuclide Soil Concentration
Parent Nuclide and Branch Fraction Indicated

uclide (j)	Parent (i)	THF(i)	S(j,t), pCi/g t= 0.000E+00	1.000E+00	3.000E+00	1.000E+01	3.000E+01	1.000E+02	3.000E+02	1.000E+03
ÄÄÄÄÄÄ	ÄÄÄÄÄÄÄ	ÄÄÄÄÄÄÄÄÄ	ÄÄÄÄÄÄÄÄÄ	ÄÄÄÄÄÄÄÄÄ	ÄÄÄÄÄÄÄÄÄ	ÄÄÄÄÄÄÄÄÄ	ÄÄÄÄÄÄÄÄÄ	ÄÄÄÄÄÄÄÄÄ	ÄÄÄÄÄÄÄÄÄ	ÄÄÄÄÄÄÄÄÄ
-238	U-238	3.039E-11	4.224E-10	4.041E-10	3.699E-10	2.713E-10	1.120E-10	5.055E-12	7.241E-16	2.547E-29
-238	äS(j):		2.977E-08	2.848E-08	2.607E-08	1.912E-08	7.891E-09	3.563E-10	5.103E-14	1.795E-27
-238	U-238	3.359E-07	4.669E-06	4.467E-06	4.089E-06	3.000E-06	1.238E-06	5.588E-08	8.005E-12	2.815E-25
-238	U-238	4.434E-13	6.164E-12	5.897E-12	5.397E-12	3.960E-12	1.634E-12	7.377E-14	1.057E-17	3.716E-31
-238	äS(j):		4.669E-06	4.467E-06	4.089E-06	3.000E-06	1.238E-06	5.588E-08	8.005E-12	2.815E-25
-238	U-238	6.383E-15	8.872E-14	8.488E-14	7.769E-14	5.699E-14	2.352E-14	1.062E-15	1.521E-19	5.349E-33
-238	U-238	3.196E-07	4.443E-06	4.250E-06	3.890E-06	2.854E-06	1.178E-06	5.317E-08	7.616E-12	2.679E-25
-238	äS(j):		4.443E-06	4.250E-06	3.890E-06	2.854E-06	1.178E-06	5.317E-08	7.616E-12	2.679E-25
-238	U-238	4.219E-13	5.864E-12	5.610E-12	5.135E-12	3.767E-12	1.555E-12	7.018E-14	1.005E-17	3.536E-31
-238	U-238	6.073E-15	8.441E-14	8.076E-14	7.392E-14	5.422E-14	2.238E-14	1.010E-15	1.447E-19	5.089E-33
-238	äS(j):		5.949E-12	5.691E-12	5.209E-12	3.821E-12	1.577E-12	7.119E-14	1.020E-17	3.587E-31
-238	U-238	6.713E-11	9.331E-10	8.927E-10	8.171E-10	5.994E-10	2.474E-10	1.117E-11	1.600E-15	5.626E-29
-238	U-238	8.862E-17	1.232E-15	1.178E-15	1.079E-15	7.913E-16	3.265E-16	1.474E-17	2.112E-21	7.427E-35
-238	äS(j):		9.331E-10	8.927E-10	8.171E-10	5.994E-10	2.474E-10	1.117E-11	1.600E-15	5.626E-29
-238	U-238	1.276E-18	1.773E-17	1.696E-17	1.553E-17	1.139E-17	4.700E-18	2.122E-19	3.039E-23	1.069E-36
-238	U-238	3.200E-10	4.448E-09	4.255E-09	3.895E-09	2.857E-09	1.179E-09	5.323E-11	7.625E-15	2.682E-28
-238	äS(j):		4.448E-09	4.255E-09	3.895E-09	2.857E-09	1.179E-09	5.323E-11	7.625E-15	2.682E-28
-238	U-238	4.224E-16	5.871E-15	5.617E-15	5.141E-15	3.772E-15	1.556E-15	7.027E-17	1.007E-20	3.540E-34
-238	U-238	6.080E-18	8.451E-17	8.085E-17	7.400E-17	5.429E-17	2.240E-17	1.011E-18	1.449E-22	5.095E-36
-238	äS(j):		5.956E-15	5.698E-15	5.215E-15	3.826E-15	1.579E-15	7.128E-17	1.021E-20	3.591E-34
-238	U-238	9.980E-01	1.387E+01	1.327E+01	1.215E+01	8.911E+00	3.677E+00	1.660E-01	2.378E-05	8.364E-19
-238	U-238	1.317E-06	1.831E-05	1.752E-05	1.603E-05	1.176E-05	4.854E-06	2.191E-07	3.139E-11	1.104E-24
-238	äS(j):		1.387E+01	1.327E+01	1.215E+01	8.911E+00	3.677E+00	1.660E-01	2.378E-05	8.364E-19
-238	U-238	1.896E-08	2.636E-07	2.522E-07	2.308E-07	1.693E-07	6.987E-08	3.154E-09	4.518E-13	1.589E-26
-238	U-238	2.096E-04	2.914E-03	2.788E-03	2.551E-03	1.872E-03	7.724E-04	3.487E-05	4.995E-09	1.757E-22
-238	äS(j):		2.914E-03	2.788E-03	2.552E-03	1.872E-03	7.725E-04	3.488E-05	4.995E-09	1.757E-22
-238	U-238	2.767E-10	3.846E-09	3.680E-09	3.368E-09	2.471E-09	1.020E-09	4.603E-11	6.593E-15	2.319E-28
-238	U-238	3.983E-12	5.536E-11	5.296E-11	4.848E-11	3.556E-11	1.468E-11	6.626E-13	9.490E-17	3.338E-30
-238	äS(j):		3.902E-09	3.733E-09	3.416E-09	2.506E-09	1.034E-09	4.669E-11	6.688E-15	2.352E-28
-238	U-238	1.994E-04	2.772E-03	2.652E-03	2.428E-03	1.781E-03	7.349E-04	3.318E-05	4.752E-09	1.671E-22
-238	U-238	2.633E-10	3.659E-09	3.501E-09	3.204E-09	2.351E-09	9.701E-10	4.379E-11	6.273E-15	2.206E-28
-238	äS(j):		2.772E-03	2.652E-03	2.428E-03	1.781E-03	7.349E-04	3.318E-05	4.752E-09	1.671E-22
-238	U-238	3.789E-12	5.267E-11	5.039E-11	4.612E-11	3.384E-11	1.396E-11	6.304E-13	9.029E-17	3.176E-30
-238	U-238	4.189E-08	5.823E-07	5.571E-07	5.099E-07	3.741E-07	1.544E-07	6.969E-09	9.982E-13	3.511E-26
-238	äS(j):		5.823E-07	5.571E-07	5.099E-07	3.741E-07	1.544E-07	6.969E-09	9.983E-13	3.511E-26
-238	U-238	5.530E-14	7.686E-13	7.353E-13	6.731E-13	4.938E-13	2.038E-13	9.199E-15	1.318E-18	4.634E-32
-238	U-238	7.959E-16	1.106E-14	1.058E-14	9.688E-15	7.107E-15	2.933E-15	1.324E-16	1.897E-20	6.670E-34
-238	äS(j):		7.797E-13	7.459E-13	6.827E-13	5.009E-13	2.067E-13	9.331E-15	1.337E-18	4.701E-32

ummary : GKP Maintenance Worker Inhalation
ile : C:\USERS\CLAUDE\DOCUMENTS\0 GKP DOSE\RESRAD CW\GKP MAINTENANCE WORKER - INHALATION.RAD

Individual Nuclide Soil Concentration
Parent Nuclide and Branch Fraction Indicated

uclide (j)	Parent (i)	THF(i)	S(j,t), pCi/g t= 0.000E+00	1.000E+00	3.000E+00	1.000E+01	3.000E+01	1.000E+02	3.000E+02	1.000E+03
ÄÄÄÄÄÄ	ÄÄÄÄÄÄÄ	ÄÄÄÄÄÄÄÄÄ	ÄÄÄÄÄÄÄÄÄ	ÄÄÄÄÄÄÄÄÄ	ÄÄÄÄÄÄÄÄÄ	ÄÄÄÄÄÄÄÄÄ	ÄÄÄÄÄÄÄÄÄ	ÄÄÄÄÄÄÄÄÄ	ÄÄÄÄÄÄÄÄÄ	ÄÄÄÄÄÄÄÄÄ
-238	U-238	1.997E-07	2.776E-06	2.655E-06	2.430E-06	1.783E-06	7.358E-07	3.322E-08	4.758E-12	1.673E-25
-238	U-238	2.636E-13	3.664E-12	3.505E-12	3.208E-12	2.354E-12	9.712E-13	4.385E-14	6.281E-18	2.209E-31
-238	äS(j):		2.776E-06	2.655E-06	2.430E-06	1.783E-06	7.358E-07	3.322E-08	4.758E-12	1.673E-25
-238	U-238	3.794E-15	5.274E-14	5.045E-14	4.618E-14	3.388E-14	1.398E-14	6.311E-16	9.040E-20	3.180E-33
íííííí	ííííííí	ííííííííí	ííííííííí	ííííííííí	ííííííííí	ííííííííí	ííííííííí	ííííííííí	ííííííííí	ííííííííí

HF(i) is the thread fraction of the parent nuclide.

ESCALC.EXE execution time = 37.64 seconds

ummary : GKP Park Ranger - External
ile : C:\USERS\CLAUDE\DOCUMENTS\0 GKP DOSE\RESRAD CW\GKP PARK RANGER - EXTERNAL.RAD

Table of Contents
ÄÄÄÄÄÄÄÄÄÄÄÄÄÄÄÄÄ

Part I: Mixture Sums and Single Radionuclide Guidelines
íí

ummary : GKP Park Ranger - External
ile : C:\USERS\CLAUDE\DOCUMENTS\0 GKP DOSE\RESRAD CW\GKP PARK RANGER - EXTERNAL.RAD

Dose Conversion Factor (and Related) Parameter Summary
Dose Library: FGR 11

enu	Parameter	Current Value#	Base Case*	Parameter Name
-1	DCF's for external ground radiation, (mrem/yr)/(pCi/g)			
-1	Ac-227 (Source: FGR 12)	4.951E-04	4.951E-04	DCF1(1)
-1	Ac-228 (Source: FGR 12)	5.978E+00	5.978E+00	DCF1(2)
-1	At-218 (Source: FGR 12)	5.847E-03	5.847E-03	DCF1(3)
-1	At-219 (Source: no data)	0.000E+00	-2.000E+00	DCF1(4)
-1	Bi-210 (Source: FGR 12)	3.606E-03	3.606E-03	DCF1(5)
-1	Bi-211 (Source: FGR 12)	2.559E-01	2.559E-01	DCF1(6)
-1	Bi-212 (Source: FGR 12)	1.171E+00	1.171E+00	DCF1(7)
-1	Bi-214 (Source: FGR 12)	9.808E+00	9.808E+00	DCF1(8)
-1	Bi-215 (Source: no data)	0.000E+00	-2.000E+00	DCF1(9)
-1	Fr-223 (Source: FGR 12)	1.980E-01	1.980E-01	DCF1(10)
-1	Hg-206 (Source: no data)	0.000E+00	-2.000E+00	DCF1(11)
-1	Pa-231 (Source: FGR 12)	1.906E-01	1.906E-01	DCF1(12)
-1	Pa-234 (Source: FGR 12)	1.155E+01	1.155E+01	DCF1(13)
-1	Pa-234m (Source: FGR 12)	8.967E-02	8.967E-02	DCF1(14)
-1	Pb-210 (Source: FGR 12)	2.447E-03	2.447E-03	DCF1(15)
-1	Pb-211 (Source: FGR 12)	3.064E-01	3.064E-01	DCF1(16)
-1	Pb-212 (Source: FGR 12)	7.043E-01	7.043E-01	DCF1(17)
-1	Pb-214 (Source: FGR 12)	1.341E+00	1.341E+00	DCF1(18)
-1	Po-210 (Source: FGR 12)	5.231E-05	5.231E-05	DCF1(19)
-1	Po-211 (Source: FGR 12)	4.764E-02	4.764E-02	DCF1(20)
-1	Po-212 (Source: FGR 12)	0.000E+00	0.000E+00	DCF1(21)
-1	Po-214 (Source: FGR 12)	5.138E-04	5.138E-04	DCF1(22)
-1	Po-215 (Source: FGR 12)	1.016E-03	1.016E-03	DCF1(23)
-1	Po-216 (Source: FGR 12)	1.042E-04	1.042E-04	DCF1(24)
-1	Po-218 (Source: FGR 12)	5.642E-05	5.642E-05	DCF1(25)
-1	Ra-223 (Source: FGR 12)	6.034E-01	6.034E-01	DCF1(26)
-1	Ra-224 (Source: FGR 12)	5.119E-02	5.119E-02	DCF1(27)
-1	Ra-226 (Source: FGR 12)	3.176E-02	3.176E-02	DCF1(28)
-1	Ra-228 (Source: FGR 12)	0.000E+00	0.000E+00	DCF1(29)
-1	Rn-218 (Source: FGR 12)	4.540E-03	4.540E-03	DCF1(30)
-1	Rn-219 (Source: FGR 12)	3.083E-01	3.083E-01	DCF1(31)
-1	Rn-220 (Source: FGR 12)	2.298E-03	2.298E-03	DCF1(32)
-1	Rn-222 (Source: FGR 12)	2.354E-03	2.354E-03	DCF1(33)
-1	Th-227 (Source: FGR 12)	5.212E-01	5.212E-01	DCF1(34)
-1	Th-228 (Source: FGR 12)	7.940E-03	7.940E-03	DCF1(35)
-1	Th-230 (Source: FGR 12)	1.209E-03	1.209E-03	DCF1(36)
-1	Th-231 (Source: FGR 12)	3.643E-02	3.643E-02	DCF1(37)
-1	Th-232 (Source: FGR 12)	5.212E-04	5.212E-04	DCF1(38)
-1	Th-234 (Source: FGR 12)	2.410E-02	2.410E-02	DCF1(39)
-1	Tl-206 (Source: FGR 12)	7.697E-03	7.697E-03	DCF1(40)
-1	Tl-207 (Source: FGR 12)	1.980E-02	1.980E-02	DCF1(41)
-1	Tl-208 (Source: FGR 12)	2.298E+01	2.298E+01	DCF1(42)
-1	Tl-210 (Source: no data)	0.000E+00	-2.000E+00	DCF1(43)
-1	U-234 (Source: FGR 12)	4.017E-04	4.017E-04	DCF1(44)
-1	U-235 (Source: FGR 12)	7.211E-01	7.211E-01	DCF1(45)
-1	U-238 (Source: FGR 12)	1.031E-04	1.031E-04	DCF1(46)
-1	Dose conversion factors for inhalation, mrem/pCi:			
-1	Ac-227+D	6.724E+00	6.700E+00	DCF2(1)

Dose Conversion Factor (and Related) Parameter Summary (continued)

Dose Library: FGR 11

enu	Parameter	Current Value#	Base Case*	Parameter Name
-1	Ac-227+D1	6.724E+00	6.700E+00	DCF2(2)
-1	Ac-227+D2	6.708E+00	6.700E+00	DCF2(3)
-1	Ac-227+D3	6.708E+00	6.700E+00	DCF2(4)
-1	Ac-227+D4	6.700E+00	6.700E+00	DCF2(5)
-1	Ac-227+D5	6.700E+00	6.700E+00	DCF2(6)
-1	Pa-231	1.280E+00	1.280E+00	DCF2(7)
-1	Pb-210+D	2.320E-02	1.360E-02	DCF2(13)
-1	Pb-210+D1	1.380E-02	1.360E-02	DCF2(14)
-1	Pb-210+D2	1.360E-02	1.360E-02	DCF2(15)
-1	Ra-226+D	8.594E-03	8.580E-03	DCF2(16)
-1	Ra-226+D1	8.594E-03	8.580E-03	DCF2(19)
-1	Ra-226+D2	8.587E-03	8.580E-03	DCF2(22)
-1	Ra-226+D3	8.587E-03	8.580E-03	DCF2(25)
-1	Ra-226+D4	8.580E-03	8.580E-03	DCF2(28)
-1	Ra-228+D	5.078E-03	4.770E-03	DCF2(31)
-1	Th-228+D	3.454E-01	3.420E-01	DCF2(32)
-1	Th-230	3.260E-01	3.260E-01	DCF2(33)
-1	Th-232	1.640E+00	1.640E+00	DCF2(48)
-1	U-234	1.320E-01	1.320E-01	DCF2(49)
-1	U-235+D	1.230E-01	1.230E-01	DCF2(64)
-1	U-238	1.180E-01	1.180E-01	DCF2(70)
-1	U-238+D	1.180E-01	1.180E-01	DCF2(71)
-1	U-238+D1	1.180E-01	1.180E-01	DCF2(86)
-1	Dose conversion factors for ingestion, mrem/pCi:			
-1	Ac-227+D	1.480E-02	1.410E-02	DCF3(1)
-1	Ac-227+D1	1.480E-02	1.410E-02	DCF3(2)
-1	Ac-227+D2	1.477E-02	1.410E-02	DCF3(3)
-1	Ac-227+D3	1.477E-02	1.410E-02	DCF3(4)
-1	Ac-227+D4	1.411E-02	1.410E-02	DCF3(5)
-1	Ac-227+D5	1.411E-02	1.410E-02	DCF3(6)
-1	Pa-231	1.060E-02	1.060E-02	DCF3(7)
-1	Pb-210+D	7.276E-03	5.370E-03	DCF3(13)
-1	Pb-210+D1	5.376E-03	5.370E-03	DCF3(14)
-1	Pb-210+D2	5.370E-03	5.370E-03	DCF3(15)
-1	Ra-226+D	1.321E-03	1.320E-03	DCF3(16)
-1	Ra-226+D1	1.321E-03	1.320E-03	DCF3(19)
-1	Ra-226+D2	1.320E-03	1.320E-03	DCF3(22)
-1	Ra-226+D3	1.320E-03	1.320E-03	DCF3(25)
-1	Ra-226+D4	1.320E-03	1.320E-03	DCF3(28)
-1	Ra-228+D	1.442E-03	1.440E-03	DCF3(31)
-1	Th-228+D	8.086E-04	3.960E-04	DCF3(32)
-1	Th-230	5.480E-04	5.480E-04	DCF3(33)
-1	Th-232	2.730E-03	2.730E-03	DCF3(48)
-1	U-234	2.830E-04	2.830E-04	DCF3(49)
-1	U-235+D	2.673E-04	2.660E-04	DCF3(64)
-1	U-238	2.550E-04	2.550E-04	DCF3(70)
-1	U-238+D	2.709E-04	2.550E-04	DCF3(71)
-1	U-238+D1	2.687E-04	2.550E-04	DCF3(86)

Dose Conversion Factor (and Related) Parameter Summary (continued)
Dose Library: FGR 11

enu	Parameter	Current Value#	Base Case*	Parameter Name
-34	Food transfer factors:			
-34	Ac-227+D , plant/soil concentration ratio, dimensionless	2.500E-03	2.500E-03	RTF(1,1)
-34	Ac-227+D , beef/livestock-intake ratio, (pCi/kg)/(pCi/d)	2.000E-05	2.000E-05	RTF(1,2)
-34	Ac-227+D , milk/livestock-intake ratio, (pCi/L)/(pCi/d)	2.000E-05	2.000E-05	RTF(1,3)
-34				
-34	Ac-227+D1 , plant/soil concentration ratio, dimensionless	2.500E-03	2.500E-03	RTF(2,1)
-34	Ac-227+D1 , beef/livestock-intake ratio, (pCi/kg)/(pCi/d)	2.000E-05	2.000E-05	RTF(2,2)
-34	Ac-227+D1 , milk/livestock-intake ratio, (pCi/L)/(pCi/d)	2.000E-05	2.000E-05	RTF(2,3)
-34				
-34	Ac-227+D2 , plant/soil concentration ratio, dimensionless	2.500E-03	2.500E-03	RTF(3,1)
-34	Ac-227+D2 , beef/livestock-intake ratio, (pCi/kg)/(pCi/d)	2.000E-05	2.000E-05	RTF(3,2)
-34	Ac-227+D2 , milk/livestock-intake ratio, (pCi/L)/(pCi/d)	2.000E-05	2.000E-05	RTF(3,3)
-34				
-34	Ac-227+D3 , plant/soil concentration ratio, dimensionless	2.500E-03	2.500E-03	RTF(4,1)
-34	Ac-227+D3 , beef/livestock-intake ratio, (pCi/kg)/(pCi/d)	2.000E-05	2.000E-05	RTF(4,2)
-34	Ac-227+D3 , milk/livestock-intake ratio, (pCi/L)/(pCi/d)	2.000E-05	2.000E-05	RTF(4,3)
-34				
-34	Ac-227+D4 , plant/soil concentration ratio, dimensionless	2.500E-03	2.500E-03	RTF(5,1)
-34	Ac-227+D4 , beef/livestock-intake ratio, (pCi/kg)/(pCi/d)	2.000E-05	2.000E-05	RTF(5,2)
-34	Ac-227+D4 , milk/livestock-intake ratio, (pCi/L)/(pCi/d)	2.000E-05	2.000E-05	RTF(5,3)
-34				
-34	Ac-227+D5 , plant/soil concentration ratio, dimensionless	2.500E-03	2.500E-03	RTF(6,1)
-34	Ac-227+D5 , beef/livestock-intake ratio, (pCi/kg)/(pCi/d)	2.000E-05	2.000E-05	RTF(6,2)
-34	Ac-227+D5 , milk/livestock-intake ratio, (pCi/L)/(pCi/d)	2.000E-05	2.000E-05	RTF(6,3)
-34				
-34	Pa-231 , plant/soil concentration ratio, dimensionless	1.000E-02	1.000E-02	RTF(7,1)
-34	Pa-231 , beef/livestock-intake ratio, (pCi/kg)/(pCi/d)	5.000E-03	5.000E-03	RTF(7,2)
-34	Pa-231 , milk/livestock-intake ratio, (pCi/L)/(pCi/d)	5.000E-06	5.000E-06	RTF(7,3)
-34				
-34	Pb-210+D , plant/soil concentration ratio, dimensionless	1.000E-02	1.000E-02	RTF(13,1)
-34	Pb-210+D , beef/livestock-intake ratio, (pCi/kg)/(pCi/d)	8.000E-04	8.000E-04	RTF(13,2)
-34	Pb-210+D , milk/livestock-intake ratio, (pCi/L)/(pCi/d)	3.000E-04	3.000E-04	RTF(13,3)
-34				
-34	Pb-210+D1 , plant/soil concentration ratio, dimensionless	1.000E-02	1.000E-02	RTF(14,1)
-34	Pb-210+D1 , beef/livestock-intake ratio, (pCi/kg)/(pCi/d)	8.000E-04	8.000E-04	RTF(14,2)
-34	Pb-210+D1 , milk/livestock-intake ratio, (pCi/L)/(pCi/d)	3.000E-04	3.000E-04	RTF(14,3)
-34				
-34	Pb-210+D2 , plant/soil concentration ratio, dimensionless	1.000E-02	1.000E-02	RTF(15,1)
-34	Pb-210+D2 , beef/livestock-intake ratio, (pCi/kg)/(pCi/d)	8.000E-04	8.000E-04	RTF(15,2)
-34	Pb-210+D2 , milk/livestock-intake ratio, (pCi/L)/(pCi/d)	3.000E-04	3.000E-04	RTF(15,3)
-34				
-34	Ra-226+D , plant/soil concentration ratio, dimensionless	4.000E-02	4.000E-02	RTF(16,1)
-34	Ra-226+D , beef/livestock-intake ratio, (pCi/kg)/(pCi/d)	1.000E-03	1.000E-03	RTF(16,2)
-34	Ra-226+D , milk/livestock-intake ratio, (pCi/L)/(pCi/d)	1.000E-03	1.000E-03	RTF(16,3)
-34				
-34	Ra-226+D1 , plant/soil concentration ratio, dimensionless	4.000E-02	4.000E-02	RTF(19,1)
-34	Ra-226+D1 , beef/livestock-intake ratio, (pCi/kg)/(pCi/d)	1.000E-03	1.000E-03	RTF(19,2)
-34	Ra-226+D1 , milk/livestock-intake ratio, (pCi/L)/(pCi/d)	1.000E-03	1.000E-03	RTF(19,3)
-34				

Dose Conversion Factor (and Related) Parameter Summary (continued)
Dose Library: FGR 11

enu	Parameter	Current Value#	Base Case*	Parameter Name
-34	Ra-226+D2 , plant/soil concentration ratio, dimensionless	4.000E-02	4.000E-02	RTF(22,1)
-34	Ra-226+D2 , beef/livestock-intake ratio, (pCi/kg)/(pCi/d)	1.000E-03	1.000E-03	RTF(22,2)
-34	Ra-226+D2 , milk/livestock-intake ratio, (pCi/L)/(pCi/d)	1.000E-03	1.000E-03	RTF(22,3)
-34				
-34	Ra-226+D3 , plant/soil concentration ratio, dimensionless	4.000E-02	4.000E-02	RTF(25,1)
-34	Ra-226+D3 , beef/livestock-intake ratio, (pCi/kg)/(pCi/d)	1.000E-03	1.000E-03	RTF(25,2)
-34	Ra-226+D3 , milk/livestock-intake ratio, (pCi/L)/(pCi/d)	1.000E-03	1.000E-03	RTF(25,3)
-34				
-34	Ra-226+D4 , plant/soil concentration ratio, dimensionless	4.000E-02	4.000E-02	RTF(28,1)
-34	Ra-226+D4 , beef/livestock-intake ratio, (pCi/kg)/(pCi/d)	1.000E-03	1.000E-03	RTF(28,2)
-34	Ra-226+D4 , milk/livestock-intake ratio, (pCi/L)/(pCi/d)	1.000E-03	1.000E-03	RTF(28,3)
-34				
-34	Ra-228+D , plant/soil concentration ratio, dimensionless	4.000E-02	4.000E-02	RTF(31,1)
-34	Ra-228+D , beef/livestock-intake ratio, (pCi/kg)/(pCi/d)	1.000E-03	1.000E-03	RTF(31,2)
-34	Ra-228+D , milk/livestock-intake ratio, (pCi/L)/(pCi/d)	1.000E-03	1.000E-03	RTF(31,3)
-34				
-34	Th-228+D , plant/soil concentration ratio, dimensionless	1.000E-03	1.000E-03	RTF(32,1)
-34	Th-228+D , beef/livestock-intake ratio, (pCi/kg)/(pCi/d)	1.000E-04	1.000E-04	RTF(32,2)
-34	Th-228+D , milk/livestock-intake ratio, (pCi/L)/(pCi/d)	5.000E-06	5.000E-06	RTF(32,3)
-34				
-34	Th-230 , plant/soil concentration ratio, dimensionless	1.000E-03	1.000E-03	RTF(33,1)
-34	Th-230 , beef/livestock-intake ratio, (pCi/kg)/(pCi/d)	1.000E-04	1.000E-04	RTF(33,2)
-34	Th-230 , milk/livestock-intake ratio, (pCi/L)/(pCi/d)	5.000E-06	5.000E-06	RTF(33,3)
-34				
-34	Th-232 , plant/soil concentration ratio, dimensionless	1.000E-03	1.000E-03	RTF(48,1)
-34	Th-232 , beef/livestock-intake ratio, (pCi/kg)/(pCi/d)	1.000E-04	1.000E-04	RTF(48,2)
-34	Th-232 , milk/livestock-intake ratio, (pCi/L)/(pCi/d)	5.000E-06	5.000E-06	RTF(48,3)
-34				
-34	U-234 , plant/soil concentration ratio, dimensionless	2.500E-03	2.500E-03	RTF(49,1)
-34	U-234 , beef/livestock-intake ratio, (pCi/kg)/(pCi/d)	3.400E-04	3.400E-04	RTF(49,2)
-34	U-234 , milk/livestock-intake ratio, (pCi/L)/(pCi/d)	6.000E-04	6.000E-04	RTF(49,3)
-34				
-34	U-235+D , plant/soil concentration ratio, dimensionless	2.500E-03	2.500E-03	RTF(64,1)
-34	U-235+D , beef/livestock-intake ratio, (pCi/kg)/(pCi/d)	3.400E-04	3.400E-04	RTF(64,2)
-34	U-235+D , milk/livestock-intake ratio, (pCi/L)/(pCi/d)	6.000E-04	6.000E-04	RTF(64,3)
-34				
-34	U-238 , plant/soil concentration ratio, dimensionless	2.500E-03	2.500E-03	RTF(70,1)
-34	U-238 , beef/livestock-intake ratio, (pCi/kg)/(pCi/d)	3.400E-04	3.400E-04	RTF(70,2)
-34	U-238 , milk/livestock-intake ratio, (pCi/L)/(pCi/d)	6.000E-04	6.000E-04	RTF(70,3)
-34				
-34	U-238+D , plant/soil concentration ratio, dimensionless	2.500E-03	2.500E-03	RTF(71,1)
-34	U-238+D , beef/livestock-intake ratio, (pCi/kg)/(pCi/d)	3.400E-04	3.400E-04	RTF(71,2)
-34	U-238+D , milk/livestock-intake ratio, (pCi/L)/(pCi/d)	6.000E-04	6.000E-04	RTF(71,3)
-34				
-34	U-238+D1 , plant/soil concentration ratio, dimensionless	2.500E-03	2.500E-03	RTF(86,1)
-34	U-238+D1 , beef/livestock-intake ratio, (pCi/kg)/(pCi/d)	3.400E-04	3.400E-04	RTF(86,2)
-34	U-238+D1 , milk/livestock-intake ratio, (pCi/L)/(pCi/d)	6.000E-04	6.000E-04	RTF(86,3)
-34				

Dose Conversion Factor (and Related) Parameter Summary (continued)
Dose Library: FGR 11

enu	Parameter	Current Value#	Base Case*	Parameter Name
-5	Bioaccumulation factors, fresh water, L/kg:			
-5	Ac-227+D , fish	1.500E+01	1.500E+01	BIOFAC(1,1)
-5	Ac-227+D , crustacea and mollusks	1.000E+03	1.000E+03	BIOFAC(1,2)
-5				
-5	Ac-227+D1 , fish	1.500E+01	1.500E+01	BIOFAC(2,1)
-5	Ac-227+D1 , crustacea and mollusks	1.000E+03	1.000E+03	BIOFAC(2,2)
-5				
-5	Ac-227+D2 , fish	1.500E+01	1.500E+01	BIOFAC(3,1)
-5	Ac-227+D2 , crustacea and mollusks	1.000E+03	1.000E+03	BIOFAC(3,2)
-5				
-5	Ac-227+D3 , fish	1.500E+01	1.500E+01	BIOFAC(4,1)
-5	Ac-227+D3 , crustacea and mollusks	1.000E+03	1.000E+03	BIOFAC(4,2)
-5				
-5	Ac-227+D4 , fish	1.500E+01	1.500E+01	BIOFAC(5,1)
-5	Ac-227+D4 , crustacea and mollusks	1.000E+03	1.000E+03	BIOFAC(5,2)
-5				
-5	Ac-227+D5 , fish	1.500E+01	1.500E+01	BIOFAC(6,1)
-5	Ac-227+D5 , crustacea and mollusks	1.000E+03	1.000E+03	BIOFAC(6,2)
-5				
-5	Pa-231 , fish	1.000E+01	1.000E+01	BIOFAC(7,1)
-5	Pa-231 , crustacea and mollusks	1.100E+02	1.100E+02	BIOFAC(7,2)
-5				
-5	Pb-210+D , fish	3.000E+02	3.000E+02	BIOFAC(13,1)
-5	Pb-210+D , crustacea and mollusks	1.000E+02	1.000E+02	BIOFAC(13,2)
-5				
-5	Pb-210+D1 , fish	3.000E+02	3.000E+02	BIOFAC(14,1)
-5	Pb-210+D1 , crustacea and mollusks	1.000E+02	1.000E+02	BIOFAC(14,2)
-5				
-5	Pb-210+D2 , fish	3.000E+02	3.000E+02	BIOFAC(15,1)
-5	Pb-210+D2 , crustacea and mollusks	1.000E+02	1.000E+02	BIOFAC(15,2)
-5				
-5	Ra-226+D , fish	5.000E+01	5.000E+01	BIOFAC(16,1)
-5	Ra-226+D , crustacea and mollusks	2.500E+02	2.500E+02	BIOFAC(16,2)
-5				
-5	Ra-226+D1 , fish	5.000E+01	5.000E+01	BIOFAC(19,1)
-5	Ra-226+D1 , crustacea and mollusks	2.500E+02	2.500E+02	BIOFAC(19,2)
-5				
-5	Ra-226+D2 , fish	5.000E+01	5.000E+01	BIOFAC(22,1)
-5	Ra-226+D2 , crustacea and mollusks	2.500E+02	2.500E+02	BIOFAC(22,2)
-5				
-5	Ra-226+D3 , fish	5.000E+01	5.000E+01	BIOFAC(25,1)
-5	Ra-226+D3 , crustacea and mollusks	2.500E+02	2.500E+02	BIOFAC(25,2)
-5				
-5	Ra-226+D4 , fish	5.000E+01	5.000E+01	BIOFAC(28,1)
-5	Ra-226+D4 , crustacea and mollusks	2.500E+02	2.500E+02	BIOFAC(28,2)
-5				
-5	Ra-228+D , fish	5.000E+01	5.000E+01	BIOFAC(31,1)
-5	Ra-228+D , crustacea and mollusks	2.500E+02	2.500E+02	BIOFAC(31,2)
-5				

Dose Conversion Factor (and Related) Parameter Summary (continued)

Dose Library: FGR 11

enu	Parameter	Current Value#	Base Case*	Parameter Name
-5	Th-228+D , fish	1.000E+02	1.000E+02	BIOFAC(32,1)
-5	Th-228+D , crustacea and mollusks	5.000E+02	5.000E+02	BIOFAC(32,2)
-5				
-5	Th-230 , fish	1.000E+02	1.000E+02	BIOFAC(33,1)
-5	Th-230 , crustacea and mollusks	5.000E+02	5.000E+02	BIOFAC(33,2)
-5				
-5	Th-232 , fish	1.000E+02	1.000E+02	BIOFAC(48,1)
-5	Th-232 , crustacea and mollusks	5.000E+02	5.000E+02	BIOFAC(48,2)
-5				
-5	U-234 , fish	1.000E+01	1.000E+01	BIOFAC(49,1)
-5	U-234 , crustacea and mollusks	6.000E+01	6.000E+01	BIOFAC(49,2)
-5				
-5	U-235+D , fish	1.000E+01	1.000E+01	BIOFAC(64,1)
-5	U-235+D , crustacea and mollusks	6.000E+01	6.000E+01	BIOFAC(64,2)
-5				
-5	U-238 , fish	1.000E+01	1.000E+01	BIOFAC(70,1)
-5	U-238 , crustacea and mollusks	6.000E+01	6.000E+01	BIOFAC(70,2)
-5				
-5	U-238+D , fish	1.000E+01	1.000E+01	BIOFAC(71,1)
-5	U-238+D , crustacea and mollusks	6.000E+01	6.000E+01	BIOFAC(71,2)
-5				
-5	U-238+D1 , fish	1.000E+01	1.000E+01	BIOFAC(86,1)
-5	U-238+D1 , crustacea and mollusks	6.000E+01	6.000E+01	BIOFAC(86,2)
-5				

For DCF1(xxx) only, factors are for infinite depth & area. See ETFG table in Ground Pathway of Detailed Report.

Base Case means Default.Lib w/o Associate Nuclide contributions.

ummary : GKP Park Ranger - External
ile : C:\USERS\CLAUDE\DOCUMENTS\0 GKP DOSE\RESRAD CW\GKP PARK RANGER - EXTERNAL.RAD

Site-Specific Parameter Summary

enu	Parameter	User Input	Default	Used by RESRAD (If different from user input)	Parameter Name
011	Area of contaminated zone (m**2)	2.000E+02	1.000E+04	---	AREA
011	Thickness of contaminated zone (m)	1.500E-01	2.000E+00	---	THICK0
011	Fraction of contamination that is submerged	0.000E+00	0.000E+00	---	SUBMFRACT
011	Length parallel to aquifer flow (m)	1.000E+02	1.000E+02	---	LCZPAQ
011	Basic radiation dose limit (mrem/yr)	2.500E+01	3.000E+01	---	BRDL
011	Time since placement of material (yr)	0.000E+00	0.000E+00	---	TI
011	Times for calculations (yr)	1.000E+00	1.000E+00	---	T(2)
011	Times for calculations (yr)	3.000E+00	3.000E+00	---	T(3)
011	Times for calculations (yr)	1.000E+01	1.000E+01	---	T(4)
011	Times for calculations (yr)	3.000E+01	3.000E+01	---	T(5)
011	Times for calculations (yr)	1.000E+02	1.000E+02	---	T(6)
011	Times for calculations (yr)	3.000E+02	3.000E+02	---	T(7)
011	Times for calculations (yr)	1.000E+03	1.000E+03	---	T(8)
011	Times for calculations (yr)	not used	0.000E+00	---	T(9)
011	Times for calculations (yr)	not used	0.000E+00	---	T(10)
012	Initial principal radionuclide (pCi/g): Ra-226	3.650E+01	0.000E+00	---	S1(16)
012	Initial principal radionuclide (pCi/g): Th-232	2.400E+00	0.000E+00	---	S1(48)
012	Initial principal radionuclide (pCi/g): U-234	1.390E+01	0.000E+00	---	S1(49)
012	Initial principal radionuclide (pCi/g): U-235	8.400E-01	0.000E+00	---	S1(64)
012	Initial principal radionuclide (pCi/g): U-238	1.390E+01	0.000E+00	---	S1(70)
012	Concentration in groundwater (pCi/L): Ra-226	not used	0.000E+00	---	W1(16)
012	Concentration in groundwater (pCi/L): Th-232	not used	0.000E+00	---	W1(48)
012	Concentration in groundwater (pCi/L): U-234	not used	0.000E+00	---	W1(49)
012	Concentration in groundwater (pCi/L): U-235	not used	0.000E+00	---	W1(64)
012	Concentration in groundwater (pCi/L): U-238	not used	0.000E+00	---	W1(70)
013	Cover depth (m)	0.000E+00	0.000E+00	---	COVER0
013	Density of cover material (g/cm**3)	not used	1.500E+00	---	DENSCV
013	Cover depth erosion rate (m/yr)	not used	1.000E-03	---	VCV
013	Density of contaminated zone (g/cm**3)	1.500E+00	1.500E+00	---	DENSCZ
013	Contaminated zone erosion rate (m/yr)	1.000E-03	1.000E-03	---	VCZ
013	Contaminated zone total porosity	4.000E-01	4.000E-01	---	TPCZ
013	Contaminated zone field capacity	2.000E-01	2.000E-01	---	FCCZ
013	Contaminated zone hydraulic conductivity (m/yr)	1.000E+01	1.000E+01	---	HCCZ
013	Contaminated zone b parameter	5.300E+00	5.300E+00	---	BCZ
013	Average annual wind speed (m/sec)	2.000E+00	2.000E+00	---	WIND
013	Humidity in air (g/m**3)	not used	8.000E+00	---	HUMID
013	Evapotranspiration coefficient	5.000E-01	5.000E-01	---	EVAPTR
013	Precipitation (m/yr)	1.000E+00	1.000E+00	---	PRECIP
013	Irrigation (m/yr)	2.000E-01	2.000E-01	---	RI
013	Irrigation mode	overhead	overhead	---	IDITCH
013	Runoff coefficient	2.000E-01	2.000E-01	---	RUNOFF
013	Watershed area for nearby stream or pond (m**2)	1.000E+06	1.000E+06	---	WAREA
013	Accuracy for water/soil computations	1.000E-03	1.000E-03	---	EPS
014	Density of saturated zone (g/cm**3)	1.500E+00	1.500E+00	---	DENSAQ
014	Saturated zone total porosity	4.000E-01	4.000E-01	---	TPSZ
014	Saturated zone effective porosity	2.000E-01	2.000E-01	---	EPSZ
014	Saturated zone field capacity	2.000E-01	2.000E-01	---	FCSZ

Site-Specific Parameter Summary (continued)

enu	Parameter	User Input	Default	Used by RESRAD (If different from user input)	Parameter Name
014	Saturated zone hydraulic conductivity (m/yr)	1.000E+02	1.000E+02	---	HCSZ
014	Saturated zone hydraulic gradient	2.000E-02	2.000E-02	---	HGWT
014	Saturated zone b parameter	5.300E+00	5.300E+00	---	BSZ
014	Water table drop rate (m/yr)	1.000E-03	1.000E-03	---	VWT
014	Well pump intake depth (m below water table)	1.000E+01	1.000E+01	---	DWIBWT
014	Model: Nondispersion (ND) or Mass-Balance (MB)	ND	ND	---	MODEL
014	Well pumping rate (m**3/yr)	2.500E+02	2.500E+02	---	UW
015	Number of unsaturated zone strata	1	1	---	NS
015	Unsat. zone 1, thickness (m)	4.000E+00	4.000E+00	---	H(1)
015	Unsat. zone 1, soil density (g/cm**3)	1.500E+00	1.500E+00	---	DENSUZ(1)
015	Unsat. zone 1, total porosity	4.000E-01	4.000E-01	---	TPUZ(1)
015	Unsat. zone 1, effective porosity	2.000E-01	2.000E-01	---	EPUZ(1)
015	Unsat. zone 1, field capacity	2.000E-01	2.000E-01	---	FCUZ(1)
015	Unsat. zone 1, soil-specific b parameter	5.300E+00	5.300E+00	---	BUZ(1)
015	Unsat. zone 1, hydraulic conductivity (m/yr)	1.000E+01	1.000E+01	---	HCUZ(1)
016	Distribution coefficients for Ra-226				
016	Contaminated zone (cm**3/g)	7.000E+01	7.000E+01	---	DCNUCC(16)
016	Unsaturated zone 1 (cm**3/g)	7.000E+01	7.000E+01	---	DCNUCU(16,1)
016	Saturated zone (cm**3/g)	7.000E+01	7.000E+01	---	DCNUCS(16)
016	Leach rate (/yr)	0.000E+00	0.000E+00	3.165E-02	ALEACH(16)
016	Solubility constant	0.000E+00	0.000E+00	not used	SOLUBK(16)
016	Distribution coefficients for Th-232				
016	Contaminated zone (cm**3/g)	6.000E+04	6.000E+04	---	DCNUCC(48)
016	Unsaturated zone 1 (cm**3/g)	6.000E+04	6.000E+04	---	DCNUCU(48,1)
016	Saturated zone (cm**3/g)	6.000E+04	6.000E+04	---	DCNUCS(48)
016	Leach rate (/yr)	0.000E+00	0.000E+00	3.704E-05	ALEACH(48)
016	Solubility constant	0.000E+00	0.000E+00	not used	SOLUBK(48)
016	Distribution coefficients for U-234				
016	Contaminated zone (cm**3/g)	5.000E+01	5.000E+01	---	DCNUCC(49)
016	Unsaturated zone 1 (cm**3/g)	5.000E+01	5.000E+01	---	DCNUCU(49,1)
016	Saturated zone (cm**3/g)	5.000E+01	5.000E+01	---	DCNUCS(49)
016	Leach rate (/yr)	0.000E+00	0.000E+00	4.426E-02	ALEACH(49)
016	Solubility constant	0.000E+00	0.000E+00	not used	SOLUBK(49)
016	Distribution coefficients for U-235				
016	Contaminated zone (cm**3/g)	5.000E+01	5.000E+01	---	DCNUCC(64)
016	Unsaturated zone 1 (cm**3/g)	5.000E+01	5.000E+01	---	DCNUCU(64,1)
016	Saturated zone (cm**3/g)	5.000E+01	5.000E+01	---	DCNUCS(64)
016	Leach rate (/yr)	0.000E+00	0.000E+00	4.426E-02	ALEACH(64)
016	Solubility constant	0.000E+00	0.000E+00	not used	SOLUBK(64)
016	Distribution coefficients for U-238				
016	Contaminated zone (cm**3/g)	5.000E+01	5.000E+01	---	DCNUCC(70)
016	Unsaturated zone 1 (cm**3/g)	5.000E+01	5.000E+01	---	DCNUCU(70,1)
016	Saturated zone (cm**3/g)	5.000E+01	5.000E+01	---	DCNUCS(70)
016	Leach rate (/yr)	0.000E+00	0.000E+00	4.426E-02	ALEACH(70)
016	Solubility constant	0.000E+00	0.000E+00	not used	SOLUBK(70)

Site-Specific Parameter Summary (continued)

enu	Parameter	User Input	Default	Used by RESRAD (If different from user input)	Parameter Name
016	Distribution coefficients for daughter Ac-227				
016	Contaminated zone (cm**3/g)	2.000E+01	2.000E+01	---	DCNUCC(1)
016	Unsaturated zone 1 (cm**3/g)	2.000E+01	2.000E+01	---	DCNUCU(1,1)
016	Saturated zone (cm**3/g)	2.000E+01	2.000E+01	---	DCNUCS(1)
016	Leach rate (/yr)	0.000E+00	0.000E+00	1.099E-01	ALEACH(1)
016	Solubility constant	0.000E+00	0.000E+00	not used	SOLUBK(1)
016	Distribution coefficients for daughter Pa-231				
016	Contaminated zone (cm**3/g)	5.000E+01	5.000E+01	---	DCNUCC(7)
016	Unsaturated zone 1 (cm**3/g)	5.000E+01	5.000E+01	---	DCNUCU(7,1)
016	Saturated zone (cm**3/g)	5.000E+01	5.000E+01	---	DCNUCS(7)
016	Leach rate (/yr)	0.000E+00	0.000E+00	4.426E-02	ALEACH(7)
016	Solubility constant	0.000E+00	0.000E+00	not used	SOLUBK(7)
016	Distribution coefficients for daughter Pb-210				
016	Contaminated zone (cm**3/g)	1.000E+02	1.000E+02	---	DCNUCC(13)
016	Unsaturated zone 1 (cm**3/g)	1.000E+02	1.000E+02	---	DCNUCU(13,1)
016	Saturated zone (cm**3/g)	1.000E+02	1.000E+02	---	DCNUCS(13)
016	Leach rate (/yr)	0.000E+00	0.000E+00	2.217E-02	ALEACH(13)
016	Solubility constant	0.000E+00	0.000E+00	not used	SOLUBK(13)
016	Distribution coefficients for daughter Ra-228				
016	Contaminated zone (cm**3/g)	7.000E+01	7.000E+01	---	DCNUCC(31)
016	Unsaturated zone 1 (cm**3/g)	7.000E+01	7.000E+01	---	DCNUCU(31,1)
016	Saturated zone (cm**3/g)	7.000E+01	7.000E+01	---	DCNUCS(31)
016	Leach rate (/yr)	0.000E+00	0.000E+00	3.165E-02	ALEACH(31)
016	Solubility constant	0.000E+00	0.000E+00	not used	SOLUBK(31)
016	Distribution coefficients for daughter Th-228				
016	Contaminated zone (cm**3/g)	6.000E+04	6.000E+04	---	DCNUCC(32)
016	Unsaturated zone 1 (cm**3/g)	6.000E+04	6.000E+04	---	DCNUCU(32,1)
016	Saturated zone (cm**3/g)	6.000E+04	6.000E+04	---	DCNUCS(32)
016	Leach rate (/yr)	0.000E+00	0.000E+00	3.704E-05	ALEACH(32)
016	Solubility constant	0.000E+00	0.000E+00	not used	SOLUBK(32)
016	Distribution coefficients for daughter Th-230				
016	Contaminated zone (cm**3/g)	6.000E+04	6.000E+04	---	DCNUCC(33)
016	Unsaturated zone 1 (cm**3/g)	6.000E+04	6.000E+04	---	DCNUCU(33,1)
016	Saturated zone (cm**3/g)	6.000E+04	6.000E+04	---	DCNUCS(33)
016	Leach rate (/yr)	0.000E+00	0.000E+00	3.704E-05	ALEACH(33)
016	Solubility constant	0.000E+00	0.000E+00	not used	SOLUBK(33)
017	Inhalation rate (m**3/yr)	not used	8.400E+03	---	INHALR
017	Mass loading for inhalation (g/m**3)	not used	1.000E-04	---	MLINH
017	Exposure duration	3.000E+01	3.000E+01	---	ED
017	Shielding factor, inhalation	not used	4.000E-01	---	SHF3
017	Shielding factor, external gamma	7.000E-01	7.000E-01	---	SHF1
017	Fraction of time spent indoors	0.000E+00	5.000E-01	---	FIND
017	Fraction of time spent outdoors (on site)	2.280E-02	2.500E-01	---	FOTD
017	Shape factor flag, external gamma	1.000E+00	1.000E+00	>0 shows circular AREA.	FS

Site-Specific Parameter Summary (continued)

enu	Parameter	User Input	Default	Used by RESRAD (If different from user input)	Parameter Name
017	Radii of shape factor array (used if FS = -1):				
017	Outer annular radius (m), ring 1:	not used	5.000E+01	---	RAD_SHAPE(1)
017	Outer annular radius (m), ring 2:	not used	7.071E+01	---	RAD_SHAPE(2)
017	Outer annular radius (m), ring 3:	not used	0.000E+00	---	RAD_SHAPE(3)
017	Outer annular radius (m), ring 4:	not used	0.000E+00	---	RAD_SHAPE(4)
017	Outer annular radius (m), ring 5:	not used	0.000E+00	---	RAD_SHAPE(5)
017	Outer annular radius (m), ring 6:	not used	0.000E+00	---	RAD_SHAPE(6)
017	Outer annular radius (m), ring 7:	not used	0.000E+00	---	RAD_SHAPE(7)
017	Outer annular radius (m), ring 8:	not used	0.000E+00	---	RAD_SHAPE(8)
017	Outer annular radius (m), ring 9:	not used	0.000E+00	---	RAD_SHAPE(9)
017	Outer annular radius (m), ring 10:	not used	0.000E+00	---	RAD_SHAPE(10)
017	Outer annular radius (m), ring 11:	not used	0.000E+00	---	RAD_SHAPE(11)
017	Outer annular radius (m), ring 12:	not used	0.000E+00	---	RAD_SHAPE(12)
017	Fractions of annular areas within AREA:				
017	Ring 1	not used	1.000E+00	---	FRACA(1)
017	Ring 2	not used	2.732E-01	---	FRACA(2)
017	Ring 3	not used	0.000E+00	---	FRACA(3)
017	Ring 4	not used	0.000E+00	---	FRACA(4)
017	Ring 5	not used	0.000E+00	---	FRACA(5)
017	Ring 6	not used	0.000E+00	---	FRACA(6)
017	Ring 7	not used	0.000E+00	---	FRACA(7)
017	Ring 8	not used	0.000E+00	---	FRACA(8)
017	Ring 9	not used	0.000E+00	---	FRACA(9)
017	Ring 10	not used	0.000E+00	---	FRACA(10)
017	Ring 11	not used	0.000E+00	---	FRACA(11)
017	Ring 12	not used	0.000E+00	---	FRACA(12)
018	Fruits, vegetables and grain consumption (kg/yr)	not used	1.600E+02	---	DIET(1)
018	Leafy vegetable consumption (kg/yr)	not used	1.400E+01	---	DIET(2)
018	Milk consumption (L/yr)	not used	9.200E+01	---	DIET(3)
018	Meat and poultry consumption (kg/yr)	not used	6.300E+01	---	DIET(4)
018	Fish consumption (kg/yr)	not used	5.400E+00	---	DIET(5)
018	Other seafood consumption (kg/yr)	not used	9.000E-01	---	DIET(6)
018	Soil ingestion rate (g/yr)	not used	3.650E+01	---	SOIL
018	Drinking water intake (L/yr)	not used	5.100E+02	---	DWI
018	Contamination fraction of drinking water	not used	1.000E+00	---	FDW
018	Contamination fraction of household water	1.000E+00	1.000E+00	---	FHHW
018	Contamination fraction of livestock water	not used	1.000E+00	---	FLW
018	Contamination fraction of irrigation water	not used	1.000E+00	---	FIRW
018	Contamination fraction of aquatic food	not used	5.000E-01	---	FR9
018	Contamination fraction of plant food	not used	-1	---	FPLANT
018	Contamination fraction of meat	not used	-1	---	FMEAT
018	Contamination fraction of milk	not used	-1	---	FMILK
019	Livestock fodder intake for meat (kg/day)	not used	6.800E+01	---	LFI5
019	Livestock fodder intake for milk (kg/day)	not used	5.500E+01	---	LFI6
019	Livestock water intake for meat (L/day)	not used	5.000E+01	---	LWI5
019	Livestock water intake for milk (L/day)	not used	1.600E+02	---	LWI6
019	Livestock soil intake (kg/day)	not used	5.000E-01	---	LSI

Site-Specific Parameter Summary (continued)

enu	Parameter	User Input	Default	Used by RESRAD (If different from user input)	Parameter Name
019	Mass loading for foliar deposition (g/m**3)	not used	1.000E-04	---	MLFD
019	Depth of soil mixing layer (m)	not used	1.500E-01	---	DM
019	Depth of roots (m)	not used	9.000E-01	---	DROOT
019	Drinking water fraction from ground water	not used	1.000E+00	---	FGWDW
019	Household water fraction from ground water	1.000E+00	1.000E+00	---	FGWHH
019	Livestock water fraction from ground water	not used	1.000E+00	---	FGWLW
019	Irrigation fraction from ground water	not used	1.000E+00	---	FGWIR
19B	Wet weight crop yield for Non-Leafy (kg/m**2)	not used	7.000E-01	---	YV(1)
19B	Wet weight crop yield for Leafy (kg/m**2)	not used	1.500E+00	---	YV(2)
19B	Wet weight crop yield for Fodder (kg/m**2)	not used	1.100E+00	---	YV(3)
19B	Growing Season for Non-Leafy (years)	not used	1.700E-01	---	TE(1)
19B	Growing Season for Leafy (years)	not used	2.500E-01	---	TE(2)
19B	Growing Season for Fodder (years)	not used	8.000E-02	---	TE(3)
19B	Translocation Factor for Non-Leafy	not used	1.000E-01	---	TIV(1)
19B	Translocation Factor for Leafy	not used	1.000E+00	---	TIV(2)
19B	Translocation Factor for Fodder	not used	1.000E+00	---	TIV(3)
19B	Dry Foliar Interception Fraction for Non-Leafy	not used	2.500E-01	---	RDRY(1)
19B	Dry Foliar Interception Fraction for Leafy	not used	2.500E-01	---	RDRY(2)
19B	Dry Foliar Interception Fraction for Fodder	not used	2.500E-01	---	RDRY(3)
19B	Wet Foliar Interception Fraction for Non-Leafy	not used	2.500E-01	---	RWET(1)
19B	Wet Foliar Interception Fraction for Leafy	not used	2.500E-01	---	RWET(2)
19B	Wet Foliar Interception Fraction for Fodder	not used	2.500E-01	---	RWET(3)
19B	Weathering Removal Constant for Vegetation	not used	2.000E+01	---	WLAM
14	C-12 concentration in water (g/cm**3)	not used	2.000E-05	---	C12WTR
14	C-12 concentration in contaminated soil (g/g)	not used	3.000E-02	---	C12CZ
14	Fraction of vegetation carbon from soil	not used	2.000E-02	---	CSOIL
14	Fraction of vegetation carbon from air	not used	9.800E-01	---	CAIR
14	C-14 evasion layer thickness in soil (m)	not used	3.000E-01	---	DMC
14	C-14 evasion flux rate from soil (1/sec)	not used	7.000E-07	---	EVSN
14	C-12 evasion flux rate from soil (1/sec)	not used	1.000E-10	---	REVSN
14	Fraction of grain in beef cattle feed	not used	8.000E-01	---	AVFG4
14	Fraction of grain in milk cow feed	not used	2.000E-01	---	AVFG5
TOR	Storage times of contaminated foodstuffs (days):				
TOR	Fruits, non-leafy vegetables, and grain	1.400E+01	1.400E+01	---	STOR_T(1)
TOR	Leafy vegetables	1.000E+00	1.000E+00	---	STOR_T(2)
TOR	Milk	1.000E+00	1.000E+00	---	STOR_T(3)
TOR	Meat and poultry	2.000E+01	2.000E+01	---	STOR_T(4)
TOR	Fish	7.000E+00	7.000E+00	---	STOR_T(5)
TOR	Crustacea and mollusks	7.000E+00	7.000E+00	---	STOR_T(6)
TOR	Well water	1.000E+00	1.000E+00	---	STOR_T(7)
TOR	Surface water	1.000E+00	1.000E+00	---	STOR_T(8)
TOR	Livestock fodder	4.500E+01	4.500E+01	---	STOR_T(9)
021	Thickness of building foundation (m)	not used	1.500E-01	---	FLOOR1
021	Bulk density of building foundation (g/cm**3)	not used	2.400E+00	---	DENSFL
021	Total porosity of the cover material	not used	4.000E-01	---	TPCV
021	Total porosity of the building foundation	not used	1.000E-01	---	TPFL

Site-Specific Parameter Summary (continued)

enu	Parameter	User Input	Default	Used by RESRAD (If different from user input)	Parameter Name
021	Volumetric water content of the cover material	not used	5.000E-02	---	PH2OCV
021	Volumetric water content of the foundation	not used	3.000E-02	---	PH2OFL
021	Diffusion coefficient for radon gas (m/sec):				
021	in cover material	not used	2.000E-06	---	DIFCV
021	in foundation material	not used	3.000E-07	---	DIFFL
021	in contaminated zone soil	2.000E-06	2.000E-06	---	DIFCZ
021	Radon vertical dimension of mixing (m)	2.000E+00	2.000E+00	---	HMIX
021	Average building air exchange rate (1/hr)	not used	5.000E-01	---	REXG
021	Height of the building (room) (m)	not used	2.500E+00	---	HRM
021	Building interior area factor	not used	0.000E+00	code computed (time dependent)	FAI
021	Building depth below ground surface (m)	not used	-1.000E+00	code computed (time dependent)	DMFL
021	Emanating power of Rn-222 gas	2.500E-01	2.500E-01	---	EMANA(1)
021	Emanating power of Rn-220 gas	1.500E-01	1.500E-01	---	EMANA(2)
ITL	Number of graphical time points	32	---	---	NPTS
ITL	Maximum number of integration points for dose	17	---	---	LYMAX
ITL	Maximum number of integration points for risk	257	---	---	KYMAX

Summary of Pathway Selections

Pathway	User Selection
1 -- external gamma	active
2 -- inhalation (w/o radon)	suppressed
3 -- plant ingestion	suppressed
4 -- meat ingestion	suppressed
5 -- milk ingestion	suppressed
6 -- aquatic foods	suppressed
7 -- drinking water	suppressed
8 -- soil ingestion	suppressed
9 -- radon	active
Find peak pathway doses	suppressed

ummary : GKP Park Ranger - External
ile : C:\USERS\CLAUDE\DOCUMENTS\0 GKP DOSE\RESRAD CW\GKP PARK RANGER - EXTERNAL.RAD

Contaminated Zone Dimensions		Initial Soil Concentrations, pCi/g	
Area:	200.00 square meters	Ra-226	3.650E+01
Thickness:	0.15 meters	Th-232	2.400E+00
over Depth:	0.00 meters	U-234	1.390E+01
		U-235	8.400E-01
		U-238	1.390E+01

Total Dose TDOSE(t), mrem/yr
Basic Radiation Dose Limit = 2.500E+01 mrem/yr
Total Mixture Sum M(t) = Fraction of Basic Dose Limit Received at Time (t)

t (years):	0.000E+00	1.000E+00	3.000E+00	1.000E+01	3.000E+01	1.000E+02	3.000E+02	1.000E+03
TDOSE(t):	6.626E+00	6.434E+00	6.080E+00	4.979E+00	2.690E+00	3.962E-01	0.000E+00	0.000E+00
M(t):	2.650E-01	2.574E-01	2.432E-01	1.992E-01	1.076E-01	1.585E-02	0.000E+00	0.000E+00

aximum TDOSE(t): 6.626E+00 mrem/yr at t = 0.000E+00 years

ummary : GKP Park Ranger - External
ile : C:\USERS\CLAUDE\DOCUMENTS\0 GKP DOSE\RESRAD CW\GKP PARK RANGER - EXTERNAL.RAD

Total Dose Contributions TDOSE(i,p,t) for Individual Radionuclides (i) and Pathways (p)
As mrem/yr and Fraction of Total Dose At t = 0.000E+00 years

Water Independent Pathways (Inhalation excludes radon)

	Ground		Inhalation		Radon		Plant		Meat		Milk		Soil	
adio-	ÄÄÄÄÄÄÄÄÄÄÄÄÄÄÄÄ		ÄÄÄÄÄÄÄÄÄÄÄÄÄÄÄÄ		ÄÄÄÄÄÄÄÄÄÄÄÄÄÄÄÄ		ÄÄÄÄÄÄÄÄÄÄÄÄÄÄÄÄ		ÄÄÄÄÄÄÄÄÄÄÄÄÄÄÄÄ		ÄÄÄÄÄÄÄÄÄÄÄÄÄÄÄÄ		ÄÄÄÄÄÄÄÄÄÄÄÄÄÄÄÄ	
uclide	mrem/yr	fract.	mrem/yr	fract.	mrem/yr	fract.	mrem/yr	fract.	mrem/yr	fract.	mrem/yr	fract.	mrem/yr	fract.
ÄÄÄÄÄÄ	ÄÄÄÄÄÄÄÄÄÄ	ÄÄÄÄÄÄ	ÄÄÄÄÄÄÄÄÄÄ	ÄÄÄÄÄÄ	ÄÄÄÄÄÄÄÄÄÄ	ÄÄÄÄÄÄ	ÄÄÄÄÄÄÄÄÄÄ	ÄÄÄÄÄÄ	ÄÄÄÄÄÄÄÄÄÄ	ÄÄÄÄÄÄ	ÄÄÄÄÄÄÄÄÄÄ	ÄÄÄÄÄÄ	ÄÄÄÄÄÄÄÄÄÄ	ÄÄÄÄÄÄ
a-226	6.565E+00	0.9909	0.000E+00	0.0000	3.372E-05	0.0000	0.000E+00	0.0000	0.000E+00	0.0000	0.000E+00	0.0000	0.000E+00	0.0000
n-232	1.625E-02	0.0025	0.000E+00	0.0000	1.209E-06	0.0000	0.000E+00	0.0000	0.000E+00	0.0000	0.000E+00	0.0000	0.000E+00	0.0000
-234	1.101E-04	0.0000	0.000E+00	0.0000	8.487E-15	0.0000	0.000E+00	0.0000	0.000E+00	0.0000	0.000E+00	0.0000	0.000E+00	0.0000
-235	1.198E-02	0.0018	0.000E+00	0.0000	0.000E+00	0.0000	0.000E+00	0.0000	0.000E+00	0.0000	0.000E+00	0.0000	0.000E+00	0.0000
-238	3.183E-02	0.0048	0.000E+00	0.0000	5.958E-21	0.0000	0.000E+00	0.0000	0.000E+00	0.0000	0.000E+00	0.0000	0.000E+00	0.0000
íííííí	íííííííííí	íííííí	íííííííííí	íííííí	íííííííííí	íííííí	íííííííííí	íííííí	íííííííííí	íííííí	íííííííííí	íííííí	íííííííííí	íííííí
otal	6.626E+00	1.0000	0.000E+00	0.0000	3.493E-05	0.0000	0.000E+00	0.0000	0.000E+00	0.0000	0.000E+00	0.0000	0.000E+00	0.0000

Total Dose Contributions TDOSE(i,p,t) for Individual Radionuclides (i) and Pathways (p)
As mrem/yr and Fraction of Total Dose At t = 0.000E+00 years

Water Dependent Pathways

	Water		Fish		Radon		Plant		Meat		Milk		All Pathways*	
adio-	ÄÄÄÄÄÄÄÄÄÄÄÄÄÄÄÄ		ÄÄÄÄÄÄÄÄÄÄÄÄÄÄÄÄ		ÄÄÄÄÄÄÄÄÄÄÄÄÄÄÄÄ		ÄÄÄÄÄÄÄÄÄÄÄÄÄÄÄÄ		ÄÄÄÄÄÄÄÄÄÄÄÄÄÄÄÄ		ÄÄÄÄÄÄÄÄÄÄÄÄÄÄÄÄ		ÄÄÄÄÄÄÄÄÄÄÄÄÄÄÄÄ	
uclide	mrem/yr	fract.	mrem/yr	fract.	mrem/yr	fract.	mrem/yr	fract.	mrem/yr	fract.	mrem/yr	fract.	mrem/yr	fract.
ÄÄÄÄÄÄ	ÄÄÄÄÄÄÄÄÄÄ	ÄÄÄÄÄÄ	ÄÄÄÄÄÄÄÄÄÄ	ÄÄÄÄÄÄ	ÄÄÄÄÄÄÄÄÄÄ	ÄÄÄÄÄÄ	ÄÄÄÄÄÄÄÄÄÄ	ÄÄÄÄÄÄ	ÄÄÄÄÄÄÄÄÄÄ	ÄÄÄÄÄÄ	ÄÄÄÄÄÄÄÄÄÄ	ÄÄÄÄÄÄ	ÄÄÄÄÄÄÄÄÄÄ	ÄÄÄÄÄÄ
a-226	0.000E+00	0.0000	0.000E+00	0.0000	0.000E+00	0.0000	0.000E+00	0.0000	0.000E+00	0.0000	0.000E+00	0.0000	6.566E+00	0.9909
n-232	0.000E+00	0.0000	0.000E+00	0.0000	0.000E+00	0.0000	0.000E+00	0.0000	0.000E+00	0.0000	0.000E+00	0.0000	1.625E-02	0.0025
-234	0.000E+00	0.0000	0.000E+00	0.0000	0.000E+00	0.0000	0.000E+00	0.0000	0.000E+00	0.0000	0.000E+00	0.0000	1.101E-04	0.0000
-235	0.000E+00	0.0000	0.000E+00	0.0000	0.000E+00	0.0000	0.000E+00	0.0000	0.000E+00	0.0000	0.000E+00	0.0000	1.198E-02	0.0018
-238	0.000E+00	0.0000	0.000E+00	0.0000	0.000E+00	0.0000	0.000E+00	0.0000	0.000E+00	0.0000	0.000E+00	0.0000	3.183E-02	0.0048
íííííí	íííííííííí	íííííí	íííííííííí	íííííí	íííííííííí	íííííí	íííííííííí	íííííí	íííííííííí	íííííí	íííííííííí	íííííí	íííííííííí	íííííí
otal	0.000E+00	0.0000	0.000E+00	0.0000	0.000E+00	0.0000	0.000E+00	0.0000	0.000E+00	0.0000	0.000E+00	0.0000	6.626E+00	1.0000

Sum of all water independent and dependent pathways.

ummary : GKP Park Ranger - External
ile : C:\USERS\CLAUDE\DOCUMENTS\0 GKP DOSE\RESRAD CW\GKP PARK RANGER - EXTERNAL.RAD

Total Dose Contributions TDOSE(i,p,t) for Individual Radionuclides (i) and Pathways (p)
As mrem/yr and Fraction of Total Dose At t = 1.000E+00 years

Water Independent Pathways (Inhalation excludes radon)

	Ground		Inhalation		Radon		Plant		Meat		Milk		Soil	
adio-	ÄÄÄÄÄÄÄÄÄÄÄÄÄÄÄÄ		ÄÄÄÄÄÄÄÄÄÄÄÄÄÄÄÄ		ÄÄÄÄÄÄÄÄÄÄÄÄÄÄÄÄ		ÄÄÄÄÄÄÄÄÄÄÄÄÄÄÄÄ		ÄÄÄÄÄÄÄÄÄÄÄÄÄÄÄÄ		ÄÄÄÄÄÄÄÄÄÄÄÄÄÄÄÄ		ÄÄÄÄÄÄÄÄÄÄÄÄÄÄÄÄ		ÄÄÄÄÄÄÄÄÄÄÄÄÄÄÄÄ	
uclide	mrem/yr	fract.	mrem/yr	fract.	mrem/yr	fract.	mrem/yr	fract.	mrem/yr	fract.	mrem/yr	fract.	mrem/yr	fract.
ÄÄÄÄÄÄ	ÄÄÄÄÄÄÄÄÄ	ÄÄÄÄÄÄ	ÄÄÄÄÄÄÄÄÄ	ÄÄÄÄÄÄ	ÄÄÄÄÄÄÄÄÄ	ÄÄÄÄÄÄ	ÄÄÄÄÄÄÄÄÄ	ÄÄÄÄÄÄ	ÄÄÄÄÄÄÄÄÄ	ÄÄÄÄÄÄ	ÄÄÄÄÄÄÄÄÄ	ÄÄÄÄÄÄ	ÄÄÄÄÄÄÄÄÄ	ÄÄÄÄÄÄ
a-226	6.338E+00	0.9852	0.000E+00	0.0000	3.244E-05	0.0000	0.000E+00	0.0000	0.000E+00	0.0000	0.000E+00	0.0000	0.000E+00	0.0000
n-232	5.343E-02	0.0083	0.000E+00	0.0000	7.349E-06	0.0000	0.000E+00	0.0000	0.000E+00	0.0000	0.000E+00	0.0000	0.000E+00	0.0000
-234	1.053E-04	0.0000	0.000E+00	0.0000	5.780E-14	0.0000	0.000E+00	0.0000	0.000E+00	0.0000	0.000E+00	0.0000	0.000E+00	0.0000
-235	1.144E-02	0.0018	0.000E+00	0.0000	0.000E+00	0.0000	0.000E+00	0.0000	0.000E+00	0.0000	0.000E+00	0.0000	0.000E+00	0.0000
-238	3.039E-02	0.0047	0.000E+00	0.0000	8.662E-20	0.0000	0.000E+00	0.0000	0.000E+00	0.0000	0.000E+00	0.0000	0.000E+00	0.0000
íííííí	íííííííííí	íííííí	íííííííííí	íííííí	íííííííííí	íííííí	íííííííííí	íííííí	íííííííííí	íííííí	íííííííííí	íííííí	íííííííííí	íííííí
otal	6.434E+00	1.0000	0.000E+00	0.0000	3.979E-05	0.0000	0.000E+00	0.0000	0.000E+00	0.0000	0.000E+00	0.0000	0.000E+00	0.0000

Total Dose Contributions TDOSE(i,p,t) for Individual Radionuclides (i) and Pathways (p)
As mrem/yr and Fraction of Total Dose At t = 1.000E+00 years

Water Dependent Pathways

	Water		Fish		Radon		Plant		Meat		Milk		All Pathways*	
adio-	ÄÄÄÄÄÄÄÄÄÄÄÄÄÄÄÄ		ÄÄÄÄÄÄÄÄÄÄÄÄÄÄÄÄ		ÄÄÄÄÄÄÄÄÄÄÄÄÄÄÄÄ		ÄÄÄÄÄÄÄÄÄÄÄÄÄÄÄÄ		ÄÄÄÄÄÄÄÄÄÄÄÄÄÄÄÄ		ÄÄÄÄÄÄÄÄÄÄÄÄÄÄÄÄ		ÄÄÄÄÄÄÄÄÄÄÄÄÄÄÄÄ	
uclide	mrem/yr	fract.	mrem/yr	fract.	mrem/yr	fract.	mrem/yr	fract.	mrem/yr	fract.	mrem/yr	fract.	mrem/yr	fract.
ÄÄÄÄÄÄ	ÄÄÄÄÄÄÄÄÄ	ÄÄÄÄÄÄ	ÄÄÄÄÄÄÄÄÄ	ÄÄÄÄÄÄ	ÄÄÄÄÄÄÄÄÄ	ÄÄÄÄÄÄ	ÄÄÄÄÄÄÄÄÄ	ÄÄÄÄÄÄ	ÄÄÄÄÄÄÄÄÄ	ÄÄÄÄÄÄ	ÄÄÄÄÄÄÄÄÄ	ÄÄÄÄÄÄ	ÄÄÄÄÄÄÄÄÄ	ÄÄÄÄÄÄ
a-226	0.000E+00	0.0000	0.000E+00	0.0000	0.000E+00	0.0000	0.000E+00	0.0000	0.000E+00	0.0000	0.000E+00	0.0000	6.338E+00	0.9852
n-232	0.000E+00	0.0000	0.000E+00	0.0000	0.000E+00	0.0000	0.000E+00	0.0000	0.000E+00	0.0000	0.000E+00	0.0000	5.344E-02	0.0083
-234	0.000E+00	0.0000	0.000E+00	0.0000	0.000E+00	0.0000	0.000E+00	0.0000	0.000E+00	0.0000	0.000E+00	0.0000	1.053E-04	0.0000
-235	0.000E+00	0.0000	0.000E+00	0.0000	0.000E+00	0.0000	0.000E+00	0.0000	0.000E+00	0.0000	0.000E+00	0.0000	1.144E-02	0.0018
-238	0.000E+00	0.0000	0.000E+00	0.0000	0.000E+00	0.0000	0.000E+00	0.0000	0.000E+00	0.0000	0.000E+00	0.0000	3.039E-02	0.0047
íííííí	íííííííííí	íííííí	íííííííííí	íííííí	íííííííííí	íííííí	íííííííííí	íííííí	íííííííííí	íííííí	íííííííííí	íííííí	íííííííííí	íííííí
otal	0.000E+00	0.0000	0.000E+00	0.0000	0.000E+00	0.0000	0.000E+00	0.0000	0.000E+00	0.0000	0.000E+00	0.0000	6.434E+00	1.0000

Sum of all water independent and dependent pathways.

ummary : GKP Park Ranger - External
ile : C:\USERS\CLAUDE\DOCUMENTS\0 GKP DOSE\RESRAD CW\GKP PARK RANGER - EXTERNAL.RAD

Total Dose Contributions TDOSE(i,p,t) for Individual Radionuclides (i) and Pathways (p)
As mrem/yr and Fraction of Total Dose At t = 3.000E+00 years

Water Independent Pathways (Inhalation excludes radon)

	Ground		Inhalation		Radon		Plant		Meat		Milk		Soil	
adio-	ÄÄÄÄÄÄÄÄÄÄÄÄÄÄÄÄ		ÄÄÄÄÄÄÄÄÄÄÄÄÄÄÄÄ		ÄÄÄÄÄÄÄÄÄÄÄÄÄÄÄÄ		ÄÄÄÄÄÄÄÄÄÄÄÄÄÄÄÄ		ÄÄÄÄÄÄÄÄÄÄÄÄÄÄÄÄ		ÄÄÄÄÄÄÄÄÄÄÄÄÄÄÄÄ		ÄÄÄÄÄÄÄÄÄÄÄÄÄÄÄÄ	
uclide	mrem/yr	fract.	mrem/yr	fract.	mrem/yr	fract.	mrem/yr	fract.	mrem/yr	fract.	mrem/yr	fract.	mrem/yr	fract.
ÄÄÄÄÄÄ	ÄÄÄÄÄÄÄÄÄ	ÄÄÄÄÄÄ	ÄÄÄÄÄÄÄÄÄ	ÄÄÄÄÄÄ	ÄÄÄÄÄÄÄÄÄ	ÄÄÄÄÄÄ	ÄÄÄÄÄÄÄÄÄ	ÄÄÄÄÄÄ	ÄÄÄÄÄÄÄÄÄ	ÄÄÄÄÄÄ	ÄÄÄÄÄÄÄÄÄ	ÄÄÄÄÄÄ	ÄÄÄÄÄÄÄÄÄ	ÄÄÄÄÄÄ
a-226	5.907E+00	0.9715	0.000E+00	0.0000	3.002E-05	0.0000	0.000E+00	0.0000	0.000E+00	0.0000	0.000E+00	0.0000	0.000E+00	0.0000
n-232	1.351E-01	0.0222	0.000E+00	0.0000	2.861E-05	0.0000	0.000E+00	0.0000	0.000E+00	0.0000	0.000E+00	0.0000	0.000E+00	0.0000
-234	9.631E-05	0.0000	0.000E+00	0.0000	2.872E-13	0.0000	0.000E+00	0.0000	0.000E+00	0.0000	0.000E+00	0.0000	0.000E+00	0.0000
-235	1.044E-02	0.0017	0.000E+00	0.0000	0.000E+00	0.0000	0.000E+00	0.0000	0.000E+00	0.0000	0.000E+00	0.0000	0.000E+00	0.0000
-238	2.768E-02	0.0046	0.000E+00	0.0000	9.420E-19	0.0000	0.000E+00	0.0000	0.000E+00	0.0000	0.000E+00	0.0000	0.000E+00	0.0000
íííííí	íííííííííí	íííííí	íííííííííí	íííííí	íííííííííí	íííííí	íííííííííí	íííííí	íííííííííí	íííííí	íííííííííí	íííííí	íííííííííí	íííííí
otal	6.080E+00	1.0000	0.000E+00	0.0000	5.863E-05	0.0000	0.000E+00	0.0000	0.000E+00	0.0000	0.000E+00	0.0000	0.000E+00	0.0000

Total Dose Contributions TDOSE(i,p,t) for Individual Radionuclides (i) and Pathways (p)
As mrem/yr and Fraction of Total Dose At t = 3.000E+00 years

Water Dependent Pathways

	Water		Fish		Radon		Plant		Meat		Milk		All Pathways*	
adio-	ÄÄÄÄÄÄÄÄÄÄÄÄÄÄÄÄ		ÄÄÄÄÄÄÄÄÄÄÄÄÄÄÄÄ		ÄÄÄÄÄÄÄÄÄÄÄÄÄÄÄÄ		ÄÄÄÄÄÄÄÄÄÄÄÄÄÄÄÄ		ÄÄÄÄÄÄÄÄÄÄÄÄÄÄÄÄ		ÄÄÄÄÄÄÄÄÄÄÄÄÄÄÄÄ		ÄÄÄÄÄÄÄÄÄÄÄÄÄÄÄÄ	
uclide	mrem/yr	fract.	mrem/yr	fract.	mrem/yr	fract.	mrem/yr	fract.	mrem/yr	fract.	mrem/yr	fract.	mrem/yr	fract.
ÄÄÄÄÄÄ	ÄÄÄÄÄÄÄÄÄ	ÄÄÄÄÄÄ	ÄÄÄÄÄÄÄÄÄ	ÄÄÄÄÄÄ	ÄÄÄÄÄÄÄÄÄ	ÄÄÄÄÄÄ	ÄÄÄÄÄÄÄÄÄ	ÄÄÄÄÄÄ	ÄÄÄÄÄÄÄÄÄ	ÄÄÄÄÄÄ	ÄÄÄÄÄÄÄÄÄ	ÄÄÄÄÄÄ	ÄÄÄÄÄÄÄÄÄ	ÄÄÄÄÄÄ
a-226	0.000E+00	0.0000	0.000E+00	0.0000	0.000E+00	0.0000	0.000E+00	0.0000	0.000E+00	0.0000	0.000E+00	0.0000	5.907E+00	0.9715
n-232	0.000E+00	0.0000	0.000E+00	0.0000	0.000E+00	0.0000	0.000E+00	0.0000	0.000E+00	0.0000	0.000E+00	0.0000	1.351E-01	0.0222
-234	0.000E+00	0.0000	0.000E+00	0.0000	0.000E+00	0.0000	0.000E+00	0.0000	0.000E+00	0.0000	0.000E+00	0.0000	9.631E-05	0.0000
-235	0.000E+00	0.0000	0.000E+00	0.0000	0.000E+00	0.0000	0.000E+00	0.0000	0.000E+00	0.0000	0.000E+00	0.0000	1.044E-02	0.0017
-238	0.000E+00	0.0000	0.000E+00	0.0000	0.000E+00	0.0000	0.000E+00	0.0000	0.000E+00	0.0000	0.000E+00	0.0000	2.768E-02	0.0046
íííííí	íííííííííí	íííííí	íííííííííí	íííííí	íííííííííí	íííííí	íííííííííí	íííííí	íííííííííí	íííííí	íííííííííí	íííííí	íííííííííí	íííííí
otal	0.000E+00	0.0000	0.000E+00	0.0000	0.000E+00	0.0000	0.000E+00	0.0000	0.000E+00	0.0000	0.000E+00	0.0000	6.080E+00	1.0000

Sum of all water independent and dependent pathways.

ummary : GKP Park Ranger - External
ile : C:\USERS\CLAUDE\DOCUMENTS\0 GKP DOSE\RESRAD CW\GKP PARK RANGER - EXTERNAL.RAD

Total Dose Contributions TDOSE(i,p,t) for Individual Radionuclides (i) and Pathways (p)
As mrem/yr and Fraction of Total Dose At t = 1.000E+01 years

Water Independent Pathways (Inhalation excludes radon)

	Ground		Inhalation		Radon		Plant		Meat		Milk		Soil	
adio-	ÄÄÄÄÄÄÄÄÄÄÄÄÄÄÄÄ		ÄÄÄÄÄÄÄÄÄÄÄÄÄÄÄÄ		ÄÄÄÄÄÄÄÄÄÄÄÄÄÄÄÄ		ÄÄÄÄÄÄÄÄÄÄÄÄÄÄÄÄ		ÄÄÄÄÄÄÄÄÄÄÄÄÄÄÄÄ		ÄÄÄÄÄÄÄÄÄÄÄÄÄÄÄÄ		ÄÄÄÄÄÄÄÄÄÄÄÄÄÄÄÄ		ÄÄÄÄÄÄÄÄÄÄÄÄÄÄÄÄ	
uclide	mrem/yr	fract.	mrem/yr	fract.	mrem/yr	fract.	mrem/yr	fract.	mrem/yr	fract.	mrem/yr	fract.	mrem/yr	fract.
ÄÄÄÄÄÄ	ÄÄÄÄÄÄÄÄÄ	ÄÄÄÄÄÄ	ÄÄÄÄÄÄÄÄÄ	ÄÄÄÄÄÄ	ÄÄÄÄÄÄÄÄÄ	ÄÄÄÄÄÄ	ÄÄÄÄÄÄÄÄÄ	ÄÄÄÄÄÄ	ÄÄÄÄÄÄÄÄÄ	ÄÄÄÄÄÄ	ÄÄÄÄÄÄÄÄÄ	ÄÄÄÄÄÄ	ÄÄÄÄÄÄÄÄÄ	ÄÄÄÄÄÄ
a-226	4.610E+00	0.9259	0.000E+00	0.0000	2.285E-05	0.0000	0.000E+00	0.0000	0.000E+00	0.0000	0.000E+00	0.0000	0.000E+00	0.0000
h-232	3.411E-01	0.0685	0.000E+00	0.0000	9.950E-05	0.0000	0.000E+00	0.0000	0.000E+00	0.0000	0.000E+00	0.0000	0.000E+00	0.0000
-234	7.074E-05	0.0000	0.000E+00	0.0000	2.059E-12	0.0000	0.000E+00	0.0000	0.000E+00	0.0000	0.000E+00	0.0000	0.000E+00	0.0000
-235	7.571E-03	0.0015	0.000E+00	0.0000	0.000E+00	0.0000	0.000E+00	0.0000	0.000E+00	0.0000	0.000E+00	0.0000	0.000E+00	0.0000
-238	1.996E-02	0.0040	0.000E+00	0.0000	1.937E-17	0.0000	0.000E+00	0.0000	0.000E+00	0.0000	0.000E+00	0.0000	0.000E+00	0.0000
íííííí	íííííííííí	íííííí	íííííííííí	íííííí	íííííííííí	íííííí	íííííííííí	íííííí	íííííííííí	íííííí	íííííííííí	íííííí	íííííííííí	íííííí
otal	4.979E+00	1.0000	0.000E+00	0.0000	1.224E-04	0.0000	0.000E+00	0.0000	0.000E+00	0.0000	0.000E+00	0.0000	0.000E+00	0.0000

Total Dose Contributions TDOSE(i,p,t) for Individual Radionuclides (i) and Pathways (p)
As mrem/yr and Fraction of Total Dose At t = 1.000E+01 years

Water Dependent Pathways

	Water		Fish		Radon		Plant		Meat		Milk		All Pathways*	
adio-	ÄÄÄÄÄÄÄÄÄÄÄÄÄÄÄÄ		ÄÄÄÄÄÄÄÄÄÄÄÄÄÄÄÄ		ÄÄÄÄÄÄÄÄÄÄÄÄÄÄÄÄ		ÄÄÄÄÄÄÄÄÄÄÄÄÄÄÄÄ		ÄÄÄÄÄÄÄÄÄÄÄÄÄÄÄÄ		ÄÄÄÄÄÄÄÄÄÄÄÄÄÄÄÄ		ÄÄÄÄÄÄÄÄÄÄÄÄÄÄÄÄ	
uclide	mrem/yr	fract.	mrem/yr	fract.	mrem/yr	fract.	mrem/yr	fract.	mrem/yr	fract.	mrem/yr	fract.	mrem/yr	fract.
ÄÄÄÄÄÄ	ÄÄÄÄÄÄÄÄÄ	ÄÄÄÄÄÄ	ÄÄÄÄÄÄÄÄÄ	ÄÄÄÄÄÄ	ÄÄÄÄÄÄÄÄÄ	ÄÄÄÄÄÄ	ÄÄÄÄÄÄÄÄÄ	ÄÄÄÄÄÄ	ÄÄÄÄÄÄÄÄÄ	ÄÄÄÄÄÄ	ÄÄÄÄÄÄÄÄÄ	ÄÄÄÄÄÄ	ÄÄÄÄÄÄÄÄÄ	ÄÄÄÄÄÄ
a-226	0.000E+00	0.0000	0.000E+00	0.0000	0.000E+00	0.0000	0.000E+00	0.0000	0.000E+00	0.0000	0.000E+00	0.0000	4.610E+00	0.9259
h-232	0.000E+00	0.0000	0.000E+00	0.0000	0.000E+00	0.0000	0.000E+00	0.0000	0.000E+00	0.0000	0.000E+00	0.0000	3.412E-01	0.0685
-234	0.000E+00	0.0000	0.000E+00	0.0000	0.000E+00	0.0000	0.000E+00	0.0000	0.000E+00	0.0000	0.000E+00	0.0000	7.074E-05	0.0000
-235	0.000E+00	0.0000	0.000E+00	0.0000	0.000E+00	0.0000	0.000E+00	0.0000	0.000E+00	0.0000	0.000E+00	0.0000	7.571E-03	0.0015
-238	0.000E+00	0.0000	0.000E+00	0.0000	0.000E+00	0.0000	0.000E+00	0.0000	0.000E+00	0.0000	0.000E+00	0.0000	1.996E-02	0.0040
íííííí	íííííííííí	íííííí	íííííííííí	íííííí	íííííííííí	íííííí	íííííííííí	íííííí	íííííííííí	íííííí	íííííííííí	íííííí	íííííííííí	íííííí
otal	0.000E+00	0.0000	0.000E+00	0.0000	0.000E+00	0.0000	0.000E+00	0.0000	0.000E+00	0.0000	0.000E+00	0.0000	4.979E+00	1.0000

Sum of all water independent and dependent pathways.

ummary : GKP Park Ranger - External
ile : C:\USERS\CLAUDE\DOCUMENTS\0 GKP DOSE\RESRAD CW\GKP PARK RANGER - EXTERNAL.RAD

Total Dose Contributions TDOSE(i,p,t) for Individual Radionuclides (i) and Pathways (p)
As mrem/yr and Fraction of Total Dose At t = 3.000E+01 years

Water Independent Pathways (Inhalation excludes radon)

	Ground		Inhalation		Radon		Plant		Meat		Milk		Soil	
adio-	ÄÄÄÄÄÄÄÄÄÄÄÄÄÄÄÄ		ÄÄÄÄÄÄÄÄÄÄÄÄÄÄÄÄ		ÄÄÄÄÄÄÄÄÄÄÄÄÄÄÄÄ		ÄÄÄÄÄÄÄÄÄÄÄÄÄÄÄÄ		ÄÄÄÄÄÄÄÄÄÄÄÄÄÄÄÄ		ÄÄÄÄÄÄÄÄÄÄÄÄÄÄÄÄ		ÄÄÄÄÄÄÄÄÄÄÄÄÄÄÄÄ		ÄÄÄÄÄÄÄÄÄÄÄÄÄÄÄÄ	
uclide	mrem/yr	fract.	mrem/yr	fract.	mrem/yr	fract.	mrem/yr	fract.	mrem/yr	fract.	mrem/yr	fract.	mrem/yr	fract.
ÄÄÄÄÄÄ	ÄÄÄÄÄÄÄÄÄ	ÄÄÄÄÄÄ	ÄÄÄÄÄÄÄÄÄ	ÄÄÄÄÄÄ	ÄÄÄÄÄÄÄÄÄ	ÄÄÄÄÄÄ	ÄÄÄÄÄÄÄÄÄ	ÄÄÄÄÄÄ	ÄÄÄÄÄÄÄÄÄ	ÄÄÄÄÄÄ	ÄÄÄÄÄÄÄÄÄ	ÄÄÄÄÄÄ	ÄÄÄÄÄÄÄÄÄ	ÄÄÄÄÄÄ
a-226	2.247E+00	0.8353	0.000E+00	0.0000	1.033E-05	0.0000	0.000E+00	0.0000	0.000E+00	0.0000	0.000E+00	0.0000	0.000E+00	0.0000
n-232	4.320E-01	0.1606	0.000E+00	0.0000	1.465E-04	0.0001	0.000E+00	0.0000	0.000E+00	0.0000	0.000E+00	0.0000	0.000E+00	0.0000
-234	3.063E-05	0.0000	0.000E+00	0.0000	9.295E-12	0.0000	0.000E+00	0.0000	0.000E+00	0.0000	0.000E+00	0.0000	0.000E+00	0.0000
-235	3.001E-03	0.0011	0.000E+00	0.0000	0.000E+00	0.0000	0.000E+00	0.0000	0.000E+00	0.0000	0.000E+00	0.0000	0.000E+00	0.0000
-238	7.773E-03	0.0029	0.000E+00	0.0000	2.290E-16	0.0000	0.000E+00	0.0000	0.000E+00	0.0000	0.000E+00	0.0000	0.000E+00	0.0000
íííííí	íííííííííí	íííííí	íííííííííí	íííííí	íííííííííí	íííííí	íííííííííí	íííííí	íííííííííí	íííííí	íííííííííí	íííííí	íííííííííí	íííííí
otal	2.689E+00	0.9999	0.000E+00	0.0000	1.569E-04	0.0001	0.000E+00	0.0000	0.000E+00	0.0000	0.000E+00	0.0000	0.000E+00	0.0000

Total Dose Contributions TDOSE(i,p,t) for Individual Radionuclides (i) and Pathways (p)
As mrem/yr and Fraction of Total Dose At t = 3.000E+01 years

Water Dependent Pathways

	Water		Fish		Radon		Plant		Meat		Milk		All Pathways*	
adio-	ÄÄÄÄÄÄÄÄÄÄÄÄÄÄÄÄ		ÄÄÄÄÄÄÄÄÄÄÄÄÄÄÄÄ		ÄÄÄÄÄÄÄÄÄÄÄÄÄÄÄÄ		ÄÄÄÄÄÄÄÄÄÄÄÄÄÄÄÄ		ÄÄÄÄÄÄÄÄÄÄÄÄÄÄÄÄ		ÄÄÄÄÄÄÄÄÄÄÄÄÄÄÄÄ		ÄÄÄÄÄÄÄÄÄÄÄÄÄÄÄÄ	
uclide	mrem/yr	fract.	mrem/yr	fract.	mrem/yr	fract.	mrem/yr	fract.	mrem/yr	fract.	mrem/yr	fract.	mrem/yr	fract.
ÄÄÄÄÄÄ	ÄÄÄÄÄÄÄÄÄ	ÄÄÄÄÄÄ	ÄÄÄÄÄÄÄÄÄ	ÄÄÄÄÄÄ	ÄÄÄÄÄÄÄÄÄ	ÄÄÄÄÄÄ	ÄÄÄÄÄÄÄÄÄ	ÄÄÄÄÄÄ	ÄÄÄÄÄÄÄÄÄ	ÄÄÄÄÄÄ	ÄÄÄÄÄÄÄÄÄ	ÄÄÄÄÄÄ	ÄÄÄÄÄÄÄÄÄ	ÄÄÄÄÄÄ
a-226	0.000E+00	0.0000	0.000E+00	0.0000	0.000E+00	0.0000	0.000E+00	0.0000	0.000E+00	0.0000	0.000E+00	0.0000	2.247E+00	0.8353
n-232	0.000E+00	0.0000	0.000E+00	0.0000	0.000E+00	0.0000	0.000E+00	0.0000	0.000E+00	0.0000	0.000E+00	0.0000	4.322E-01	0.1607
-234	0.000E+00	0.0000	0.000E+00	0.0000	0.000E+00	0.0000	0.000E+00	0.0000	0.000E+00	0.0000	0.000E+00	0.0000	3.063E-05	0.0000
-235	0.000E+00	0.0000	0.000E+00	0.0000	0.000E+00	0.0000	0.000E+00	0.0000	0.000E+00	0.0000	0.000E+00	0.0000	3.001E-03	0.0011
-238	0.000E+00	0.0000	0.000E+00	0.0000	0.000E+00	0.0000	0.000E+00	0.0000	0.000E+00	0.0000	0.000E+00	0.0000	7.773E-03	0.0029
íííííí	íííííííííí	íííííí	íííííííííí	íííííí	íííííííííí	íííííí	íííííííííí	íííííí	íííííííííí	íííííí	íííííííííí	íííííí	íííííííííí	íííííí
otal	0.000E+00	0.0000	0.000E+00	0.0000	0.000E+00	0.0000	0.000E+00	0.0000	0.000E+00	0.0000	0.000E+00	0.0000	2.690E+00	1.0000

Sum of all water independent and dependent pathways.

ummary : GKP Park Ranger - External
ile : C:\USERS\CLAUDE\DOCUMENTS\0 GKP DOSE\RESRAD CW\GKP PARK RANGER - EXTERNAL.RAD

Total Dose Contributions TDOSE(i,p,t) for Individual Radionuclides (i) and Pathways (p)
As mrem/yr and Fraction of Total Dose At t = 1.000E+02 years

Water Independent Pathways (Inhalation excludes radon)

	Ground		Inhalation		Radon		Plant		Meat		Milk		Soil	
adio-	ÄÄÄÄÄÄÄÄÄÄÄÄÄÄÄÄ		ÄÄÄÄÄÄÄÄÄÄÄÄÄÄÄÄ		ÄÄÄÄÄÄÄÄÄÄÄÄÄÄÄÄ		ÄÄÄÄÄÄÄÄÄÄÄÄÄÄÄÄ		ÄÄÄÄÄÄÄÄÄÄÄÄÄÄÄÄ		ÄÄÄÄÄÄÄÄÄÄÄÄÄÄÄÄ		ÄÄÄÄÄÄÄÄÄÄÄÄÄÄÄÄ	
uclide	mrem/yr	fract.	mrem/yr	fract.	mrem/yr	fract.	mrem/yr	fract.	mrem/yr	fract.	mrem/yr	fract.	mrem/yr	fract.
ÄÄÄÄÄÄ	ÄÄÄÄÄÄÄÄÄ	ÄÄÄÄÄÄ	ÄÄÄÄÄÄÄÄÄ	ÄÄÄÄÄÄ	ÄÄÄÄÄÄÄÄÄ	ÄÄÄÄÄÄ	ÄÄÄÄÄÄÄÄÄ	ÄÄÄÄÄÄ	ÄÄÄÄÄÄÄÄÄ	ÄÄÄÄÄÄ	ÄÄÄÄÄÄÄÄÄ	ÄÄÄÄÄÄ	ÄÄÄÄÄÄÄÄÄ	ÄÄÄÄÄÄ
a-226	1.402E-01	0.3538	0.000E+00	0.0000	4.546E-07	0.0000	0.000E+00	0.0000	0.000E+00	0.0000	0.000E+00	0.0000	0.000E+00	0.0000
n-232	2.556E-01	0.6450	0.000E+00	0.0000	1.483E-04	0.0004	0.000E+00	0.0000	0.000E+00	0.0000	0.000E+00	0.0000	0.000E+00	0.0000
-234	4.451E-06	0.0000	0.000E+00	0.0000	1.079E-11	0.0000	0.000E+00	0.0000	0.000E+00	0.0000	0.000E+00	0.0000	0.000E+00	0.0000
-235	9.383E-05	0.0002	0.000E+00	0.0000	0.000E+00	0.0000	0.000E+00	0.0000	0.000E+00	0.0000	0.000E+00	0.0000	0.000E+00	0.0000
-238	2.286E-04	0.0006	0.000E+00	0.0000	5.863E-16	0.0000	0.000E+00	0.0000	0.000E+00	0.0000	0.000E+00	0.0000	0.000E+00	0.0000
íííííí	íííííííííí	íííííí	íííííííííí	íííííí	íííííííííí	íííííí	íííííííííí	íííííí	íííííííííí	íííííí	íííííííííí	íííííí	íííííííííí	íííííí
otal	3.961E-01	0.9996	0.000E+00	0.0000	1.488E-04	0.0004	0.000E+00	0.0000	0.000E+00	0.0000	0.000E+00	0.0000	0.000E+00	0.0000

Total Dose Contributions TDOSE(i,p,t) for Individual Radionuclides (i) and Pathways (p)
As mrem/yr and Fraction of Total Dose At t = 1.000E+02 years

Water Dependent Pathways

	Water		Fish		Radon		Plant		Meat		Milk		All Pathways*	
adio-	ÄÄÄÄÄÄÄÄÄÄÄÄÄÄÄÄ		ÄÄÄÄÄÄÄÄÄÄÄÄÄÄÄÄ		ÄÄÄÄÄÄÄÄÄÄÄÄÄÄÄÄ		ÄÄÄÄÄÄÄÄÄÄÄÄÄÄÄÄ		ÄÄÄÄÄÄÄÄÄÄÄÄÄÄÄÄ		ÄÄÄÄÄÄÄÄÄÄÄÄÄÄÄÄ		ÄÄÄÄÄÄÄÄÄÄÄÄÄÄÄÄ	
uclide	mrem/yr	fract.	mrem/yr	fract.	mrem/yr	fract.	mrem/yr	fract.	mrem/yr	fract.	mrem/yr	fract.	mrem/yr	fract.
ÄÄÄÄÄÄ	ÄÄÄÄÄÄÄÄÄ	ÄÄÄÄÄÄ	ÄÄÄÄÄÄÄÄÄ	ÄÄÄÄÄÄ	ÄÄÄÄÄÄÄÄÄ	ÄÄÄÄÄÄ	ÄÄÄÄÄÄÄÄÄ	ÄÄÄÄÄÄ	ÄÄÄÄÄÄÄÄÄ	ÄÄÄÄÄÄ	ÄÄÄÄÄÄÄÄÄ	ÄÄÄÄÄÄ	ÄÄÄÄÄÄÄÄÄ	ÄÄÄÄÄÄ
a-226	0.000E+00	0.0000	0.000E+00	0.0000	0.000E+00	0.0000	0.000E+00	0.0000	0.000E+00	0.0000	0.000E+00	0.0000	1.402E-01	0.3538
n-232	0.000E+00	0.0000	0.000E+00	0.0000	0.000E+00	0.0000	0.000E+00	0.0000	0.000E+00	0.0000	0.000E+00	0.0000	2.557E-01	0.6454
-234	0.000E+00	0.0000	0.000E+00	0.0000	0.000E+00	0.0000	0.000E+00	0.0000	0.000E+00	0.0000	0.000E+00	0.0000	4.451E-06	0.0000
-235	0.000E+00	0.0000	0.000E+00	0.0000	0.000E+00	0.0000	0.000E+00	0.0000	0.000E+00	0.0000	0.000E+00	0.0000	9.383E-05	0.0002
-238	0.000E+00	0.0000	0.000E+00	0.0000	0.000E+00	0.0000	0.000E+00	0.0000	0.000E+00	0.0000	0.000E+00	0.0000	2.286E-04	0.0006
íííííí	íííííííííí	íííííí	íííííííííí	íííííí	íííííííííí	íííííí	íííííííííí	íííííí	íííííííííí	íííííí	íííííííííí	íííííí	íííííííííí	íííííí
otal	0.000E+00	0.0000	0.000E+00	0.0000	0.000E+00	0.0000	0.000E+00	0.0000	0.000E+00	0.0000	0.000E+00	0.0000	3.962E-01	1.0000

Sum of all water independent and dependent pathways.

ummary : GKP Park Ranger - External
ile : C:\USERS\CLAUDE\DOCUMENTS\0 GKP DOSE\RESRAD CW\GKP PARK RANGER - EXTERNAL.RAD

Total Dose Contributions TDOSE(i,p,t) for Individual Radionuclides (i) and Pathways (p)
As mrem/yr and Fraction of Total Dose At t = 3.000E+02 years

Water Independent Pathways (Inhalation excludes radon)

	Ground		Inhalation		Radon		Plant		Meat		Milk		Soil	
adio-	ÄÄÄÄÄÄÄÄÄÄÄÄÄÄÄÄ		ÄÄÄÄÄÄÄÄÄÄÄÄÄÄÄÄ		ÄÄÄÄÄÄÄÄÄÄÄÄÄÄÄÄ		ÄÄÄÄÄÄÄÄÄÄÄÄÄÄÄÄ		ÄÄÄÄÄÄÄÄÄÄÄÄÄÄÄÄ		ÄÄÄÄÄÄÄÄÄÄÄÄÄÄÄÄ		ÄÄÄÄÄÄÄÄÄÄÄÄÄÄÄÄ	
uclide	mrem/yr	fract.	mrem/yr	fract.	mrem/yr	fract.	mrem/yr	fract.	mrem/yr	fract.	mrem/yr	fract.	mrem/yr	fract.
ÄÄÄÄÄÄ	ÄÄÄÄÄÄÄÄÄ	ÄÄÄÄÄÄ	ÄÄÄÄÄÄÄÄÄ	ÄÄÄÄÄÄ	ÄÄÄÄÄÄÄÄÄ	ÄÄÄÄÄÄ	ÄÄÄÄÄÄÄÄÄ	ÄÄÄÄÄÄ	ÄÄÄÄÄÄÄÄÄ	ÄÄÄÄÄÄ	ÄÄÄÄÄÄÄÄÄ	ÄÄÄÄÄÄ	ÄÄÄÄÄÄÄÄÄ	ÄÄÄÄÄÄ
a-226	0.000E+00	0.0000	0.000E+00	0.0000	0.000E+00	0.0000	0.000E+00	0.0000	0.000E+00	0.0000	0.000E+00	0.0000	0.000E+00	0.0000
n-232	0.000E+00	0.0000	0.000E+00	0.0000	0.000E+00	0.0000	0.000E+00	0.0000	0.000E+00	0.0000	0.000E+00	0.0000	0.000E+00	0.0000
-234	0.000E+00	0.0000	0.000E+00	0.0000	0.000E+00	0.0000	0.000E+00	0.0000	0.000E+00	0.0000	0.000E+00	0.0000	0.000E+00	0.0000
-235	0.000E+00	0.0000	0.000E+00	0.0000	0.000E+00	0.0000	0.000E+00	0.0000	0.000E+00	0.0000	0.000E+00	0.0000	0.000E+00	0.0000
-238	0.000E+00	0.0000	0.000E+00	0.0000	0.000E+00	0.0000	0.000E+00	0.0000	0.000E+00	0.0000	0.000E+00	0.0000	0.000E+00	0.0000
íííííí	íííííííííí	íííííí	íííííííííí	íííííí	íííííííííí	íííííí	íííííííííí	íííííí	íííííííííí	íííííí	íííííííííí	íííííí	íííííííííí	íííííí
otal	0.000E+00	0.0000	0.000E+00	0.0000	0.000E+00	0.0000	0.000E+00	0.0000	0.000E+00	0.0000	0.000E+00	0.0000	0.000E+00	0.0000

Total Dose Contributions TDOSE(i,p,t) for Individual Radionuclides (i) and Pathways (p)
As mrem/yr and Fraction of Total Dose At t = 3.000E+02 years

Water Dependent Pathways

	Water		Fish		Radon		Plant		Meat		Milk		All Pathways*	
adio-	ÄÄÄÄÄÄÄÄÄÄÄÄÄÄÄÄ		ÄÄÄÄÄÄÄÄÄÄÄÄÄÄÄÄ		ÄÄÄÄÄÄÄÄÄÄÄÄÄÄÄÄ		ÄÄÄÄÄÄÄÄÄÄÄÄÄÄÄÄ		ÄÄÄÄÄÄÄÄÄÄÄÄÄÄÄÄ		ÄÄÄÄÄÄÄÄÄÄÄÄÄÄÄÄ		ÄÄÄÄÄÄÄÄÄÄÄÄÄÄÄÄ	
uclide	mrem/yr	fract.	mrem/yr	fract.	mrem/yr	fract.	mrem/yr	fract.	mrem/yr	fract.	mrem/yr	fract.	mrem/yr	fract.
ÄÄÄÄÄÄ	ÄÄÄÄÄÄÄÄÄ	ÄÄÄÄÄÄ	ÄÄÄÄÄÄÄÄÄ	ÄÄÄÄÄÄ	ÄÄÄÄÄÄÄÄÄ	ÄÄÄÄÄÄ	ÄÄÄÄÄÄÄÄÄ	ÄÄÄÄÄÄ	ÄÄÄÄÄÄÄÄÄ	ÄÄÄÄÄÄ	ÄÄÄÄÄÄÄÄÄ	ÄÄÄÄÄÄ	ÄÄÄÄÄÄÄÄÄ	ÄÄÄÄÄÄ
a-226	0.000E+00	0.0000	0.000E+00	0.0000	0.000E+00	0.0000	0.000E+00	0.0000	0.000E+00	0.0000	0.000E+00	0.0000	0.000E+00	0.0000
n-232	0.000E+00	0.0000	0.000E+00	0.0000	0.000E+00	0.0000	0.000E+00	0.0000	0.000E+00	0.0000	0.000E+00	0.0000	0.000E+00	0.0000
-234	0.000E+00	0.0000	0.000E+00	0.0000	0.000E+00	0.0000	0.000E+00	0.0000	0.000E+00	0.0000	0.000E+00	0.0000	0.000E+00	0.0000
-235	0.000E+00	0.0000	0.000E+00	0.0000	0.000E+00	0.0000	0.000E+00	0.0000	0.000E+00	0.0000	0.000E+00	0.0000	0.000E+00	0.0000
-238	0.000E+00	0.0000	0.000E+00	0.0000	0.000E+00	0.0000	0.000E+00	0.0000	0.000E+00	0.0000	0.000E+00	0.0000	0.000E+00	0.0000
íííííí	íííííííííí	íííííí	íííííííííí	íííííí	íííííííííí	íííííí	íííííííííí	íííííí	íííííííííí	íííííí	íííííííííí	íííííí	íííííííííí	íííííí
otal	0.000E+00	0.0000	0.000E+00	0.0000	0.000E+00	0.0000	0.000E+00	0.0000	0.000E+00	0.0000	0.000E+00	0.0000	0.000E+00	0.0000

Sum of all water independent and dependent pathways.

ummary : GKP Park Ranger - External
ile : C:\USERS\CLAUDE\DOCUMENTS\0 GKP DOSE\RESRAD CW\GKP PARK RANGER - EXTERNAL.RAD

Total Dose Contributions TDOSE(i,p,t) for Individual Radionuclides (i) and Pathways (p)
As mrem/yr and Fraction of Total Dose At t = 1.000E+03 years

Water Independent Pathways (Inhalation excludes radon)

	Ground		Inhalation		Radon		Plant		Meat		Milk		Soil	
adio-	ÄÄÄÄÄÄÄÄÄÄÄÄÄÄÄ		ÄÄÄÄÄÄÄÄÄÄÄÄÄÄÄ		ÄÄÄÄÄÄÄÄÄÄÄÄÄÄÄ		ÄÄÄÄÄÄÄÄÄÄÄÄÄÄÄ		ÄÄÄÄÄÄÄÄÄÄÄÄÄÄÄ		ÄÄÄÄÄÄÄÄÄÄÄÄÄÄÄ		ÄÄÄÄÄÄÄÄÄÄÄÄÄÄÄ	
uclide	mrem/yr	fract.	mrem/yr	fract.	mrem/yr	fract.	mrem/yr	fract.	mrem/yr	fract.	mrem/yr	fract.	mrem/yr	fract.
ÄÄÄÄÄÄ	ÄÄÄÄÄÄÄÄÄ	ÄÄÄÄÄÄ	ÄÄÄÄÄÄÄÄÄ	ÄÄÄÄÄÄ	ÄÄÄÄÄÄÄÄÄ	ÄÄÄÄÄÄ	ÄÄÄÄÄÄÄÄÄ	ÄÄÄÄÄÄ	ÄÄÄÄÄÄÄÄÄ	ÄÄÄÄÄÄ	ÄÄÄÄÄÄÄÄÄ	ÄÄÄÄÄÄ	ÄÄÄÄÄÄÄÄÄ	ÄÄÄÄÄÄ
a-226	0.000E+00	0.0000	0.000E+00	0.0000	0.000E+00	0.0000	0.000E+00	0.0000	0.000E+00	0.0000	0.000E+00	0.0000	0.000E+00	0.0000
n-232	0.000E+00	0.0000	0.000E+00	0.0000	0.000E+00	0.0000	0.000E+00	0.0000	0.000E+00	0.0000	0.000E+00	0.0000	0.000E+00	0.0000
-234	0.000E+00	0.0000	0.000E+00	0.0000	0.000E+00	0.0000	0.000E+00	0.0000	0.000E+00	0.0000	0.000E+00	0.0000	0.000E+00	0.0000
-235	0.000E+00	0.0000	0.000E+00	0.0000	0.000E+00	0.0000	0.000E+00	0.0000	0.000E+00	0.0000	0.000E+00	0.0000	0.000E+00	0.0000
-238	0.000E+00	0.0000	0.000E+00	0.0000	0.000E+00	0.0000	0.000E+00	0.0000	0.000E+00	0.0000	0.000E+00	0.0000	0.000E+00	0.0000
íííííí	íííííííííí	íííííí	íííííííííí	íííííí	íííííííííí	íííííí	íííííííííí	íííííí	íííííííííí	íííííí	íííííííííí	íííííí	íííííííííí	íííííí
otal	0.000E+00	0.0000	0.000E+00	0.0000	0.000E+00	0.0000	0.000E+00	0.0000	0.000E+00	0.0000	0.000E+00	0.0000	0.000E+00	0.0000

Total Dose Contributions TDOSE(i,p,t) for Individual Radionuclides (i) and Pathways (p)
As mrem/yr and Fraction of Total Dose At t = 1.000E+03 years

Water Dependent Pathways

	Water		Fish		Radon		Plant		Meat		Milk		All Pathways*	
adio-	ÄÄÄÄÄÄÄÄÄÄÄÄÄÄÄ		ÄÄÄÄÄÄÄÄÄÄÄÄÄÄÄ		ÄÄÄÄÄÄÄÄÄÄÄÄÄÄÄ		ÄÄÄÄÄÄÄÄÄÄÄÄÄÄÄ		ÄÄÄÄÄÄÄÄÄÄÄÄÄÄÄ		ÄÄÄÄÄÄÄÄÄÄÄÄÄÄÄ		ÄÄÄÄÄÄÄÄÄÄÄÄÄÄÄ	
uclide	mrem/yr	fract.	mrem/yr	fract.	mrem/yr	fract.	mrem/yr	fract.	mrem/yr	fract.	mrem/yr	fract.	mrem/yr	fract.
ÄÄÄÄÄÄ	ÄÄÄÄÄÄÄÄÄ	ÄÄÄÄÄÄ	ÄÄÄÄÄÄÄÄÄ	ÄÄÄÄÄÄ	ÄÄÄÄÄÄÄÄÄ	ÄÄÄÄÄÄ	ÄÄÄÄÄÄÄÄÄ	ÄÄÄÄÄÄ	ÄÄÄÄÄÄÄÄÄ	ÄÄÄÄÄÄ	ÄÄÄÄÄÄÄÄÄ	ÄÄÄÄÄÄ	ÄÄÄÄÄÄÄÄÄ	ÄÄÄÄÄÄ
a-226	0.000E+00	0.0000	0.000E+00	0.0000	0.000E+00	0.0000	0.000E+00	0.0000	0.000E+00	0.0000	0.000E+00	0.0000	0.000E+00	0.0000
n-232	0.000E+00	0.0000	0.000E+00	0.0000	0.000E+00	0.0000	0.000E+00	0.0000	0.000E+00	0.0000	0.000E+00	0.0000	0.000E+00	0.0000
-234	0.000E+00	0.0000	0.000E+00	0.0000	0.000E+00	0.0000	0.000E+00	0.0000	0.000E+00	0.0000	0.000E+00	0.0000	0.000E+00	0.0000
-235	0.000E+00	0.0000	0.000E+00	0.0000	0.000E+00	0.0000	0.000E+00	0.0000	0.000E+00	0.0000	0.000E+00	0.0000	0.000E+00	0.0000
-238	0.000E+00	0.0000	0.000E+00	0.0000	0.000E+00	0.0000	0.000E+00	0.0000	0.000E+00	0.0000	0.000E+00	0.0000	0.000E+00	0.0000
íííííí	íííííííííí	íííííí	íííííííííí	íííííí	íííííííííí	íííííí	íííííííííí	íííííí	íííííííííí	íííííí	íííííííííí	íííííí	íííííííííí	íííííí
otal	0.000E+00	0.0000	0.000E+00	0.0000	0.000E+00	0.0000	0.000E+00	0.0000	0.000E+00	0.0000	0.000E+00	0.0000	0.000E+00	0.0000

Sum of all water independent and dependent pathways.

ummary : GKP Park Ranger - External
ile : C:\USERS\CLAUDE\DOCUMENTS\0 GKP DOSE\RESRAD CW\GKP PARK RANGER - EXTERNAL.RAD

Dose/Source Ratios Summed Over All Pathways
Parent and Progeny Principal Radionuclide Contributions Indicated

Parent (i)	Product (j)	Thread Fraction	DSR(j,t) At Time in Years (mrem/yr)/(pCi/g) 0.000E+00	1.000E+00	3.000E+00	1.000E+01	3.000E+01	1.000E+02	3.000E+02	1.000E+03
ÄÄÄÄÄÄÄÄÄ	ÄÄÄÄÄÄÄÄÄÄ	ÄÄÄÄÄÄÄÄÄ	ÄÄÄÄÄÄÄÄÄ	ÄÄÄÄÄÄÄÄÄ	ÄÄÄÄÄÄÄÄÄ	ÄÄÄÄÄÄÄÄÄ	ÄÄÄÄÄÄÄÄÄ	ÄÄÄÄÄÄÄÄÄ	ÄÄÄÄÄÄÄÄÄ	ÄÄÄÄÄÄÄÄÄ
a-226+D	Ra-226+D	9.996E-01	1.798E-01	1.736E-01	1.618E-01	1.262E-01	6.150E-02	3.834E-03	0.000E+00	0.000E+00
a-226+D	Pb-210+D	9.996E-01	1.793E-06	5.175E-06	1.108E-05	2.454E-05	3.009E-05	4.834E-06	0.000E+00	0.000E+00
a-226+D	äDSR(j)		1.798E-01	1.736E-01	1.618E-01	1.263E-01	6.153E-02	3.839E-03	0.000E+00	0.000E+00
a-226+D	Ra-226+D	1.319E-06	2.373E-07	2.291E-07	2.135E-07	1.666E-07	8.117E-08	5.061E-09	0.000E+00	0.000E+00
a-226+D	Pb-210+D1	1.319E-06	5.244E-12	1.513E-11	3.237E-11	7.142E-11	8.649E-11	1.260E-11	0.000E+00	0.000E+00
a-226+D	äDSR(j)		2.374E-07	2.291E-07	2.136E-07	1.667E-07	8.126E-08	5.074E-09	0.000E+00	0.000E+00
a-226+D	Ra-226+D	1.899E-08	3.416E-09	3.298E-09	3.073E-09	2.398E-09	1.168E-09	7.285E-11	0.000E+00	0.000E+00
a-226+D	Pb-210+D2	1.899E-08	5.574E-14	1.608E-13	3.442E-13	7.601E-13	9.231E-13	1.378E-13	0.000E+00	0.000E+00
a-226+D	äDSR(j)		3.416E-09	3.298E-09	3.074E-09	2.399E-09	1.169E-09	7.299E-11	0.000E+00	0.000E+00
a-226+D1	Ra-226+D1	2.100E-04	3.777E-05	3.646E-05	3.397E-05	2.651E-05	1.292E-05	8.054E-07	0.000E+00	0.000E+00
a-226+D1	Pb-210+D	2.100E-04	3.766E-10	1.087E-09	2.328E-09	5.155E-09	6.319E-09	1.015E-09	0.000E+00	0.000E+00
a-226+D1	äDSR(j)		3.777E-05	3.646E-05	3.398E-05	2.652E-05	1.292E-05	8.064E-07	0.000E+00	0.000E+00
a-226+D1	Ra-226+D1	2.771E-10	4.985E-11	4.812E-11	4.485E-11	3.500E-11	1.705E-11	1.063E-12	0.000E+00	0.000E+00
a-226+D1	Pb-210+D1	2.771E-10	1.101E-15	3.178E-15	6.798E-15	1.500E-14	1.817E-14	2.647E-15	0.000E+00	0.000E+00
a-226+D1	äDSR(j)		4.985E-11	4.813E-11	4.485E-11	3.501E-11	1.707E-11	1.066E-12	0.000E+00	0.000E+00
a-226+D1	Ra-226+D1	3.989E-12	7.175E-13	6.927E-13	6.455E-13	5.037E-13	2.454E-13	1.530E-14	0.000E+00	0.000E+00
a-226+D1	Pb-210+D2	3.989E-12	1.171E-17	3.378E-17	7.229E-17	1.597E-16	1.939E-16	2.895E-17	0.000E+00	0.000E+00
a-226+D1	äDSR(j)		7.176E-13	6.927E-13	6.456E-13	5.039E-13	2.456E-13	1.533E-14	0.000E+00	0.000E+00
a-226+D2	Ra-226+D2	1.998E-04	3.112E-05	3.004E-05	2.798E-05	2.181E-05	1.059E-05	6.507E-07	0.000E+00	0.000E+00
a-226+D2	Pb-210+D	1.998E-04	3.583E-10	1.034E-09	2.215E-09	4.905E-09	6.012E-09	9.659E-10	0.000E+00	0.000E+00
a-226+D2	äDSR(j)		3.112E-05	3.004E-05	2.798E-05	2.182E-05	1.060E-05	6.516E-07	0.000E+00	0.000E+00
a-226+D2	Ra-226+D2	2.637E-10	4.108E-11	3.965E-11	3.694E-11	2.879E-11	1.398E-11	8.589E-13	0.000E+00	0.000E+00
a-226+D2	Pb-210+D1	2.637E-10	1.048E-15	3.023E-15	6.468E-15	1.427E-14	1.728E-14	2.519E-15	0.000E+00	0.000E+00
a-226+D2	äDSR(j)		4.108E-11	3.965E-11	3.694E-11	2.881E-11	1.400E-11	8.614E-13	0.000E+00	0.000E+00
a-226+D2	Ra-226+D2	3.795E-12	5.913E-13	5.707E-13	5.317E-13	4.144E-13	2.012E-13	1.236E-14	0.000E+00	0.000E+00
a-226+D2	Pb-210+D2	3.795E-12	1.114E-17	3.214E-17	6.878E-17	1.519E-16	1.845E-16	2.755E-17	0.000E+00	0.000E+00
a-226+D2	äDSR(j)		5.913E-13	5.707E-13	5.317E-13	4.146E-13	2.014E-13	1.239E-14	0.000E+00	0.000E+00
a-226+D3	Ra-226+D3	4.196E-08	6.536E-09	6.309E-09	5.877E-09	4.581E-09	2.224E-09	1.367E-10	0.000E+00	0.000E+00
a-226+D3	Pb-210+D	4.196E-08	7.526E-14	2.172E-13	4.652E-13	1.030E-12	1.263E-12	2.029E-13	0.000E+00	0.000E+00
a-226+D3	äDSR(j)		6.536E-09	6.309E-09	5.878E-09	4.582E-09	2.225E-09	1.369E-10	0.000E+00	0.000E+00
a-226+D3	Ra-226+D3	5.538E-14	8.628E-15	8.328E-15	7.758E-15	6.047E-15	2.936E-15	1.804E-16	0.000E+00	0.000E+00
a-226+D3	Pb-210+D1	5.538E-14	2.201E-19	6.350E-19	1.359E-18	2.998E-18	3.631E-18	5.290E-19	0.000E+00	0.000E+00
a-226+D3	äDSR(j)		8.628E-15	8.328E-15	7.759E-15	6.050E-15	2.939E-15	1.809E-16	0.000E+00	0.000E+00
a-226+D3	Ra-226+D3	7.972E-16	1.242E-16	1.199E-16	1.117E-16	8.705E-17	4.226E-17	2.597E-18	0.000E+00	0.000E+00
a-226+D3	Pb-210+D2	7.972E-16	2.340E-21	6.751E-21	1.445E-20	3.191E-20	3.875E-20	5.786E-21	0.000E+00	0.000E+00
a-226+D3	äDSR(j)		1.242E-16	1.199E-16	1.117E-16	8.708E-17	4.230E-17	2.602E-18	0.000E+00	0.000E+00

ummary : GKP Park Ranger - External
ile : C:\USERS\CLAUDE\DOCUMENTS\0 GKP DOSE\RESRAD CW\GKP PARK RANGER - EXTERNAL.RAD

Dose/Source Ratios Summed Over All Pathways
Parent and Progeny Principal Radionuclide Contributions Indicated

Parent (i)	Product (j)	Thread Fraction	DSR(j,t) At Time in Years (mrem/yr)/(pCi/g) 0.000E+00	1.000E+00	3.000E+00	1.000E+01	3.000E+01	1.000E+02	3.000E+02	1.000E+03
ÄÄÄÄÄÄÄÄÄ	ÄÄÄÄÄÄÄÄÄÄ	ÄÄÄÄÄÄÄÄÄ	ÄÄÄÄÄÄÄÄÄ	ÄÄÄÄÄÄÄÄÄ	ÄÄÄÄÄÄÄÄÄ	ÄÄÄÄÄÄÄÄÄ	ÄÄÄÄÄÄÄÄÄ	ÄÄÄÄÄÄÄÄÄ	ÄÄÄÄÄÄÄÄÄ	ÄÄÄÄÄÄÄÄÄ
a-226+D4	Ra-226+D4	2.000E-07	1.685E-10	1.629E-10	1.523E-10	1.203E-10	6.085E-11	4.586E-12	0.000E+00	0.000E+00
a-226+D4	Pb-210+D	2.000E-07	3.588E-13	1.035E-12	2.217E-12	4.911E-12	6.020E-12	9.671E-13	0.000E+00	0.000E+00
a-226+D4	äDSR(j)		1.689E-10	1.640E-10	1.545E-10	1.252E-10	6.687E-11	5.553E-12	0.000E+00	0.000E+00
a-226+D4	Ra-226+D4	2.640E-13	2.224E-16	2.151E-16	2.011E-16	1.588E-16	8.032E-17	6.054E-18	0.000E+00	0.000E+00
a-226+D4	Pb-210+D1	2.640E-13	1.049E-18	3.027E-18	6.476E-18	1.429E-17	1.731E-17	2.522E-18	0.000E+00	0.000E+00
a-226+D4	äDSR(j)		2.235E-16	2.181E-16	2.076E-16	1.731E-16	9.763E-17	8.575E-18	0.000E+00	0.000E+00
a-226+D4	Ra-226+D4	3.800E-15	3.202E-18	3.096E-18	2.894E-18	2.286E-18	1.156E-18	8.714E-20	0.000E+00	0.000E+00
a-226+D4	Pb-210+D2	3.800E-15	1.115E-20	3.218E-20	6.886E-20	1.521E-19	1.847E-19	2.758E-20	0.000E+00	0.000E+00
a-226+D4	äDSR(j)		3.213E-18	3.128E-18	2.963E-18	2.438E-18	1.341E-18	1.147E-19	0.000E+00	0.000E+00
n-232	Th-232	1.000E+00	1.044E-05	1.043E-05	1.042E-05	1.038E-05	1.023E-05	8.473E-06	0.000E+00	0.000E+00
n-232	Ra-228+D	1.000E+00	5.741E-03	1.609E-02	3.243E-02	6.130E-02	7.059E-02	4.232E-02	0.000E+00	0.000E+00
n-232	Th-228+D	1.000E+00	1.018E-03	6.169E-03	2.385E-02	8.085E-02	1.095E-01	6.422E-02	0.000E+00	0.000E+00
n-232	äDSR(j)		6.769E-03	2.227E-02	5.629E-02	1.422E-01	1.801E-01	1.065E-01	0.000E+00	0.000E+00
-234	U-234	9.996E-01	7.918E-06	7.571E-06	6.921E-06	5.055E-06	2.053E-06	7.722E-08	0.000E+00	0.000E+00
-234	Th-230	9.996E-01	1.084E-10	3.188E-10	7.117E-10	1.834E-09	3.584E-09	3.786E-09	0.000E+00	0.000E+00
-234	Ra-226+D	9.996E-01	1.189E-10	8.124E-10	4.063E-09	2.987E-08	1.454E-07	2.390E-07	0.000E+00	0.000E+00
-234	Pb-210+D	9.996E-01	5.967E-16	8.700E-15	9.525E-14	2.010E-12	2.601E-11	1.206E-10	0.000E+00	0.000E+00
-234	äDSR(j)		7.918E-06	7.572E-06	6.926E-06	5.087E-06	2.202E-06	3.201E-07	0.000E+00	0.000E+00
-234	U-234	1.319E-06	1.045E-11	9.993E-12	9.136E-12	6.673E-12	2.711E-12	1.019E-13	0.000E+00	0.000E+00
-234	Th-230	1.319E-06	1.431E-16	4.208E-16	9.394E-16	2.421E-15	4.731E-15	4.997E-15	0.000E+00	0.000E+00
-234	Ra-226+D	1.319E-06	1.570E-16	1.072E-15	5.364E-15	3.943E-14	1.919E-13	3.155E-13	0.000E+00	0.000E+00
-234	Pb-210+D1	1.319E-06	1.745E-21	2.543E-20	2.782E-19	5.850E-18	7.476E-17	3.144E-16	0.000E+00	0.000E+00
-234	äDSR(j)		1.045E-11	9.995E-12	9.142E-12	6.715E-12	2.907E-12	4.227E-13	0.000E+00	0.000E+00
-234	U-234	1.899E-08	1.504E-13	1.438E-13	1.315E-13	9.605E-14	3.901E-14	1.467E-15	0.000E+00	0.000E+00
-234	Th-230	1.899E-08	2.060E-18	6.057E-18	1.352E-17	3.485E-17	6.809E-17	7.193E-17	0.000E+00	0.000E+00
-234	Ra-226+D	1.899E-08	2.259E-18	1.543E-17	7.721E-17	5.675E-16	2.762E-15	4.541E-15	0.000E+00	0.000E+00
-234	Pb-210+D2	1.899E-08	1.855E-23	2.704E-22	2.958E-21	6.226E-20	7.979E-19	3.438E-18	0.000E+00	0.000E+00
-234	äDSR(j)		1.504E-13	1.439E-13	1.316E-13	9.665E-14	4.185E-14	6.083E-15	0.000E+00	0.000E+00
-234	U-234	2.100E-04	1.663E-09	1.590E-09	1.454E-09	1.062E-09	4.313E-10	1.622E-11	0.000E+00	0.000E+00
-234	Th-230	2.100E-04	2.277E-14	6.696E-14	1.495E-13	3.852E-13	7.528E-13	7.952E-13	0.000E+00	0.000E+00
-234	Ra-226+D1	2.100E-04	2.498E-14	1.706E-13	8.535E-13	6.273E-12	3.053E-11	5.019E-11	0.000E+00	0.000E+00
-234	Pb-210+D	2.100E-04	1.253E-19	1.827E-18	2.001E-17	4.222E-16	5.462E-15	2.533E-14	0.000E+00	0.000E+00
-234	äDSR(j)		1.663E-09	1.590E-09	1.455E-09	1.068E-09	4.626E-10	6.723E-11	0.000E+00	0.000E+00
-234	U-234	2.771E-10	2.195E-15	2.099E-15	1.919E-15	1.402E-15	5.693E-16	2.141E-17	0.000E+00	0.000E+00
-234	Th-230	2.771E-10	3.006E-20	8.838E-20	1.973E-19	5.085E-19	9.937E-19	1.050E-18	0.000E+00	0.000E+00
-234	Ra-226+D1	2.771E-10	3.297E-20	2.252E-19	1.127E-18	8.281E-18	4.030E-17	6.626E-17	0.000E+00	0.000E+00
-234	Pb-210+D1	2.771E-10	3.665E-25	5.342E-24	5.843E-23	1.229E-21	1.570E-20	6.603E-20	0.000E+00	0.000E+00
-234	äDSR(j)		2.195E-15	2.099E-15	1.920E-15	1.410E-15	6.106E-16	8.878E-17	0.000E+00	0.000E+00

ummary : GKP Park Ranger - External
ile : C:\USERS\CLAUDE\DOCUMENTS\0 GKP DOSE\RESRAD CW\GKP PARK RANGER - EXTERNAL.RAD

Dose/Source Ratios Summed Over All Pathways
Parent and Progeny Principal Radionuclide Contributions Indicated

Parent	Product	Thread	DSR(j,t) At Time in Years (mrem/yr)/(pCi/g)							
(i)	(j)	Fraction	0.000E+00	1.000E+00	3.000E+00	1.000E+01	3.000E+01	1.000E+02	3.000E+02	1.000E+03
ÄÄÄÄÄÄÄÄÄ	ÄÄÄÄÄÄÄÄÄÄ	ÄÄÄÄÄÄÄÄÄ	ÄÄÄÄÄÄÄÄÄ	ÄÄÄÄÄÄÄÄÄ	ÄÄÄÄÄÄÄÄÄ	ÄÄÄÄÄÄÄÄÄ	ÄÄÄÄÄÄÄÄÄ	ÄÄÄÄÄÄÄÄÄ	ÄÄÄÄÄÄÄÄÄ	ÄÄÄÄÄÄÄÄÄ
-234	U-234	3.989E-12	3.160E 17	3.021E 17	2.762E-17	2.017E-17	8.195E-18	3.082E-19	0.000E+00	0.000E+00
-234	Th-230	3.989E-12	4.327E-22	1.272E-21	2.840E-21	7.319E-21	1.430E-20	1.511E-20	0.000E+00	0.000E+00
-234	Ra-226+D1	3.989E-12	4.746E-22	3.242E-21	1.622E-20	1.192E-19	5.801E-19	9.537E-19	0.000E+00	0.000E+00
-234	Pb-210+D2	3.989E-12	3.896E-27	5.679E-26	6.213E-25	1.308E-23	1.676E-22	7.222E-22	0.000E+00	0.000E+00
-234	äDSR(j)		3.160E-17	3.022E-17	2.764E-17	2.030E-17	8.789E-18	1.278E-18	0.000E+00	0.000E+00
-234	U-234	1.998E-04	1.582E-09	1.513E-09	1.383E-09	1.010E-09	4.104E-10	1.543E-11	0.000E+00	0.000E+00
-234	Th-230	1.998E-04	2.167E-14	6.370E-14	1.422E-13	3.665E-13	7.162E-13	7.565E-13	0.000E+00	0.000E+00
-234	Ra-226+D2	1.998E-04	2.058E-14	1.406E-13	7.029E-13	5.161E-12	2.503E-11	4.055E-11	0.000E+00	0.000E+00
-234	Pb-210+D	1.998E-04	1.192E-19	1.739E-18	1.903E-17	4.017E-16	5.197E-15	2.410E-14	0.000E+00	0.000E+00
-234	äDSR(j)		1.582E-09	1.513E-09	1.384E-09	1.016E-09	4.361E-10	5.676E-11	0.000E+00	0.000E+00
-234	U-234	2.637E-10	2.089E-15	1.997E-15	1.826E-15	1.334E-15	5.417E-16	2.037E-17	0.000E+00	0.000E+00
-234	Th-230	2.637E-10	2.860E-20	8.409E-20	1.877E-19	4.838E-19	9.454E-19	9.986E-19	0.000E+00	0.000E+00
-234	Ra-226+D2	2.637E-10	2.717E-20	1.856E-19	9.279E-19	6.813E-18	3.304E-17	5.353E-17	0.000E+00	0.000E+00
-234	Pb-210+D1	2.637E-10	3.487E-25	5.082E-24	5.559E-23	1.169E-21	1.494E-20	6.282E-20	0.000E+00	0.000E+00
-234	äDSR(j)		2.089E-15	1.997E-15	1.827E-15	1.341E-15	5.757E-16	7.496E-17	0.000E+00	0.000E+00
-234	U-234	3.795E-12	3.006E-17	2.875E-17	2.628E-17	1.919E-17	7.797E-18	2.932E-19	0.000E+00	0.000E+00
-234	Th-230	3.795E-12	4.117E-22	1.210E-21	2.702E-21	6.964E-21	1.361E-20	1.437E-20	0.000E+00	0.000E+00
-234	Ra-226+D2	3.795E-12	3.910E-22	2.671E-21	1.336E-20	9.806E-20	4.756E-19	7.705E-19	0.000E+00	0.000E+00
-234	Pb-210+D2	3.795E-12	3.707E-27	5.403E-26	5.911E-25	1.244E-23	1.595E-22	6.871E-22	0.000E+00	0.000E+00
-234	äDSR(j)		3.006E-17	2.875E-17	2.630E-17	1.930E-17	8.286E-18	1.079E-18	0.000E+00	0.000E+00
-234	U-234	4.196E-08	3.323E-13	3.178E-13	2.905E-13	2.122E-13	8.619E-14	3.241E-15	0.000E+00	0.000E+00
-234	Th-230	4.196E-08	4.551E-18	1.338E-17	2.987E-17	7.698E-17	1.504E-16	1.589E-16	0.000E+00	0.000E+00
-234	Ra-226+D3	4.196E-08	4.323E-18	2.952E-17	1.476E-16	1.084E-15	5.258E-15	8.517E-15	0.000E+00	0.000E+00
-234	Pb-210+D	4.196E-08	2.505E-23	3.652E-22	3.998E-21	8.438E-20	1.092E-18	5.061E-18	0.000E+00	0.000E+00
-234	äDSR(j)		3.324E-13	3.178E-13	2.907E-13	2.134E-13	9.160E-14	1.192E-14	0.000E+00	0.000E+00
-234	U-234	5.538E-14	4.387E-19	4.195E-19	3.835E-19	2.801E-19	1.138E-19	4.279E-21	0.000E+00	0.000E+00
-234	Th-230	5.538E-14	6.007E-24	1.766E-23	3.943E-23	1.016E-22	1.986E-22	2.098E-22	0.000E+00	0.000E+00
-234	Ra-226+D3	5.538E-14	5.706E-24	3.897E-23	1.949E-22	1.431E-21	6.940E-21	1.124E-20	0.000E+00	0.000E+00
-234	Pb-210+D1	5.538E-14	7.324E-29	1.067E-27	1.168E-26	2.455E-25	3.138E-24	1.320E-23	0.000E+00	0.000E+00
-234	äDSR(j)		4.387E-19	4.195E-19	3.837E-19	2.816E-19	1.209E-19	1.574E-20	0.000E+00	0.000E+00
-234	U-234	7.972E-16	6.315E-21	6.038E-21	5.520E-21	4.032E-21	1.638E-21	6.159E-23	0.000E+00	0.000E+00
-234	Th-230	7.972E-16	8.647E-26	2.542E-25	5.676E-25	1.463E-24	2.858E-24	3.019E-24	0.000E+00	0.000E+00
-234	Ra-226+D3	7.972E-16	8.213E-26	5.610E-25	2.805E-24	2.060E-23	9.989E-23	1.618E-22	0.000E+00	0.000E+00
-234	Pb-210+D2	7.972E-16	7.786E-31	1.135E-29	1.242E-28	2.613E-27	3.349E-26	1.443E-25	0.000E+00	0.000E+00
-234	äDSR(j)		6.315E-21	6.039E-21	5.523E-21	4.054E-21	1.740E-21	2.266E-22	0.000E+00	0.000E+00
-234	U-234	2.000E-07	1.584E-12	1.515E-12	1.385E-12	1.011E-12	4.108E-13	1.545E-14	0.000E+00	0.000E+00
-234	Th-230	2.000E-07	2.169E-17	6.378E-17	1.424E-16	3.670E-16	7.171E-16	7.574E-16	0.000E+00	0.000E+00
-234	Ra-226+D4	2.000E-07	1.115E-19	7.626E-19	3.827E-18	2.846E-17	1.438E-16	2.858E-16	0.000E+00	0.000E+00
-234	Pb-210+D	2.000E-07	1.194E-22	1.741E-21	1.906E-20	4.022E-19	5.203E-18	2.412E-17	0.000E+00	0.000E+00
-234	äDSR(j)		1.584E-12	1.515E-12	1.385E-12	1.012E-12	4.117E-13	1.652E-14	0.000E+00	0.000E+00

ummary : GKP Park Ranger - External
ile : C:\USERS\CLAUDE\DOCUMENTS\0 GKP DOSE\RESRAD CW\GKP PARK RANGER - EXTERNAL.RAD

Dose/Source Ratios Summed Over All Pathways
Parent and Progeny Principal Radionuclide Contributions Indicated

Parent (i)	Product (j)	Thread Fraction	DSR(j,t) At Time in Years (mrem/yr)/(pCi/g) 0.000E+00	1.000E+00	3.000E+00	1.000E+01	3.000E+01	1.000E+02	3.000E+02	1.000E+03
-234	U-234	2.640E-13	2.091E-18	1.999E-18	1.828E-18	1.335E-18	5.423E-19	2.040E-20	0.000E+00	0.000E+00
-234	Th-230	2.640E-13	2.863E-23	8.419E-23	1.880E-22	4.844E-22	9.465E-22	9.998E-22	0.000E+00	0.000E+00
-234	Ra-226+D4	2.640E-13	1.472E-25	1.007E-24	5.052E-24	3.757E-23	1.899E-22	3.773E-22	0.000E+00	0.000E+00
-234	Pb-210+D1	2.640E-13	3.491E-28	5.088E-27	5.566E-26	1.170E-24	1.496E-23	6.290E-23	0.000E+00	0.000E+00
-234	äDSR(j)		2.091E-18	2.000E-18	1.828E-18	1.336E-18	5.435E-19	2.184E-20	0.000E+00	0.000E+00
-234	U-234	3.800E-15	3.010E-20	2.878E-20	2.631E-20	1.922E-20	7.806E-21	2.936E-22	0.000E+00	0.000E+00
-234	Th-230	3.800E-15	4.122E-25	1.212E-24	2.706E-24	6.972E-24	1.362E-23	1.439E-23	0.000E+00	0.000E+00
-234	Ra-226+D4	3.800E-15	2.118E-27	1.449E-26	7.271E-26	5.408E-25	2.733E-24	5.431E-24	0.000E+00	0.000E+00
-234	Pb-210+D2	3.800E-15	3.711E-30	5.410E-29	5.918E-28	1.246E-26	1.597E-25	6.880E-25	0.000E+00	0.000E+00
-234	äDSR(j)		3.010E-20	2.878E-20	2.631E-20	1.923E-20	7.823E-21	3.141E-22	0.000E+00	0.000E+00
-235+D	U-235+D	9.835E-01	1.402E-02	1.340E-02	1.222E-02	8.863E-03	3.511E-03	1.096E-04	0.000E+00	0.000E+00
-235+D	Pa-231	9.835E-01	3.564E-08	1.026E-07	2.185E-07	4.738E-07	5.385E-07	5.188E-08	0.000E+00	0.000E+00
-235+D	Ac-227+D	9.835E-01	3.892E-09	2.548E-08	1.159E-07	6.131E-07	1.270E-06	1.639E-07	0.000E+00	0.000E+00
-235+D	äDSR(j)		1.402E-02	1.340E-02	1.222E-02	8.864E-03	3.513E-03	1.099E-04	0.000E+00	0.000E+00
-235+D	U-235+D	2.722E-03	3.881E-05	3.707E-05	3.383E-05	2.453E-05	9.719E-06	3.034E-07	0.000E+00	0.000E+00
-235+D	Pa-231	2.722E-03	9.864E-11	2.840E-10	6.048E-10	1.311E-09	1.490E-09	1.436E-10	0.000E+00	0.000E+00
-235+D	Ac-227+D1	2.722E-03	1.091E-11	7.141E-11	3.248E-10	1.718E-09	3.559E-09	4.584E-10	0.000E+00	0.000E+00
-235+D	äDSR(j)		3.881E-05	3.708E-05	3.383E-05	2.453E-05	9.724E-06	3.040E-07	0.000E+00	0.000E+00
-235+D	U-235+D	1.376E-02	1.962E-04	1.874E-04	1.710E-04	1.240E-04	4.913E-05	1.534E-06	0.000E+00	0.000E+00
-235+D	Pa-231	1.376E-02	4.987E-10	1.436E-09	3.058E-09	6.630E-09	7.534E-09	7.259E-10	0.000E+00	0.000E+00
-235+D	Ac-227+D2	1.376E-02	4.568E-11	2.991E-10	1.360E-09	7.198E-09	1.493E-08	1.938E-09	0.000E+00	0.000E+00
-235+D	äDSR(j)		1.962E-04	1.874E-04	1.710E-04	1.240E-04	4.916E-05	1.537E-06	0.000E+00	0.000E+00
-235+D	U-235+D	3.809E-05	5.431E-07	5.188E-07	4.733E-07	3.432E-07	1.360E-07	4.246E-09	0.000E+00	0.000E+00
-235+D	Pa-231	3.809E-05	1.380E-12	3.973E-12	8.463E-12	1.835E-11	2.085E-11	2.009E-12	0.000E+00	0.000E+00
-235+D	Ac-227+D3	3.809E-05	1.283E-13	8.401E-13	3.821E-12	2.022E-11	4.190E-11	5.432E-12	0.000E+00	0.000E+00
-235+D	äDSR(j)		5.431E-07	5.188E-07	4.733E-07	3.433E-07	1.360E-07	4.253E-09	0.000E+00	0.000E+00
-235+D	U-235+D	8.257E-07	1.177E-08	1.125E-08	1.026E-08	7.441E-09	2.948E-09	9.205E-11	0.000E+00	0.000E+00
-235+D	Pa-231	8.257E-07	2.992E-14	8.615E-14	1.835E-13	3.978E-13	4.521E-13	4.356E-14	0.000E+00	0.000E+00
-235+D	Ac-227+D4	8.257E-07	1.244E-15	8.144E-15	3.703E-14	1.957E-13	4.040E-13	5.140E-14	0.000E+00	0.000E+00
-235+D	äDSR(j)		1.177E-08	1.125E-08	1.026E-08	7.442E-09	2.949E-09	9.214E-11	0.000E+00	0.000E+00
-235+D	U-235+D	2.285E-09	3.259E-11	3.113E-11	2.840E-11	2.059E-11	8.160E-12	2.548E-13	0.000E+00	0.000E+00
-235+D	Pa-231	2.285E-09	8.281E-17	2.384E-16	5.078E-16	1.101E-15	1.251E-15	1.205E-16	0.000E+00	0.000E+00
-235+D	Ac-227+D5	2.285E-09	3.556E-18	2.328E-17	1.058E-16	5.591E-16	1.154E-15	1.464E-16	0.000E+00	0.000E+00
-235+D	äDSR(j)		3.259E-11	3.113E-11	2.840E-11	2.060E-11	8.162E-12	2.550E-13	0.000E+00	0.000E+00
-238	U-238	5.450E-07	1.166E-12	1.115E-12	1.021E-12	7.497E-13	3.100E-13	1.387E-14	0.000E+00	0.000E+00

ummary : GKP Park Ranger - External
ile : C:\USERS\CLAUDE\DOCUMENTS\0 GKP DOSE\RESRAD CW\GKP PARK RANGER - EXTERNAL.RAD

Dose/Source Ratios Summed Over All Pathways
Parent and Progeny Principal Radionuclide Contributions Indicated

Parent (i)	Product (j)	Thread Fraction	DSR(j,t) At Time in Years (mrem/yr)/(pCi/g) 0.000E+00	1.000E+00	3.000E+00	1.000E+01	3.000E+01	1.000E+02	3.000E+02	1.000E+03
ÄÄÄÄÄÄÄÄÄ	ÄÄÄÄÄÄÄÄÄÄ	ÄÄÄÄÄÄÄÄÄ	ÄÄÄÄÄÄÄÄÄ	ÄÄÄÄÄÄÄÄÄ	ÄÄÄÄÄÄÄÄÄ	ÄÄÄÄÄÄÄÄÄ	ÄÄÄÄÄÄÄÄÄ	ÄÄÄÄÄÄÄÄÄ	ÄÄÄÄÄÄÄÄÄ	ÄÄÄÄÄÄÄÄÄ
-238+D	U-238+D	1.599E-03	3.118E-04	2.975E-04	2.707E-04	1.945E-04	7.477E-05	2.038E-06	0.000E+00	0.000E+00
-238+D	U-234	1.599E-03	1.775E-14	5.117E-14	1.093E-13	2.397E-13	2.829E-13	3.506E-14	0.000E+00	0.000E+00
-238+D	Th-230	1.599E-03	1.621E-19	1.106E-18	5.514E-18	4.016E-17	1.930E-16	3.664E-16	0.000E+00	0.000E+00
-238+D	Ra-226+D	1.599E-03	1.336E-19	1.948E-18	2.133E-17	4.495E-16	5.730E-15	2.078E-14	0.000E+00	0.000E+00
-238+D	Pb-210+D	1.599E-03	5.375E-25	1.616E-23	3.805E-22	2.327E-20	8.244E-19	9.613E-18	0.000E+00	0.000E+00
-238+D	äDSR(j)		3.118E-04	2.975E-04	2.707E-04	1.945E-04	7.477E-05	2.038E-06	0.000E+00	0.000E+00
-238+D	U-238+D	2.111E-09	4.116E-10	3.927E-10	3.574E-10	2.567E-10	9.869E-11	2.690E-12	0.000E+00	0.000E+00
-238+D	U-234	2.111E-09	2.343E-20	6.755E-20	1.443E-19	3.164E-19	3.734E-19	4.628E-20	0.000E+00	0.000E+00
-238+D	Th-230	2.111E-09	2.139E-25	1.459E-24	7.278E-24	5.302E-23	2.548E-22	4.836E-22	0.000E+00	0.000E+00
-238+D	Ra-226+D	2.111E-09	1.764E-25	2.572E-24	2.815E-23	5.934E-22	7.564E-21	2.743E-20	0.000E+00	0.000E+00
-238+D	Pb-210+D1	2.111E-09	1.572E-30	4.723E-29	1.111E-27	6.771E-26	2.370E-24	2.506E-23	0.000E+00	0.000E+00
-238+D	äDSR(j)		4.116E-10	3.927E-10	3.574E-10	2.567E-10	9.869E-11	2.690E-12	0.000E+00	0.000E+00
-238+D	U-238+D	3.039E-11	5.925E-12	5.653E-12	5.144E-12	3.695E-12	1.421E-12	3.871E-14	0.000E+00	0.000E+00
-238+D	U-234	3.039E-11	3.373E-22	9.723E-22	2.077E-21	4.554E-21	5.375E-21	6.662E-22	0.000E+00	0.000E+00
-238+D	Th-230	3.039E-11	3.079E-27	2.100E-26	1.048E-25	7.631E-25	3.668E-24	6.961E-24	0.000E+00	0.000E+00
-238+D	Ra-226+D	3.039E-11	2.539E-27	3.701E-26	4.052E-25	8.541E-24	1.089E-22	3.948E-22	0.000E+00	0.000E+00
-238+D	Pb-210+D2	3.039E-11	1.671E-32	5.022E-31	1.182E-29	7.206E-28	2.530E-26	2.741E-25	0.000E+00	0.000E+00
-238+D	äDSR(j)		5.925E-12	5.653E-12	5.144E-12	3.695E-12	1.421E-12	3.871E-14	0.000E+00	0.000E+00
-238+D	U-238+D	3.359E-07	6.550E-08	6.249E-08	5.687E-08	4.085E-08	1.570E-08	4.280E-10	0.000E+00	0.000E+00
-238+D	U-234	3.359E-07	3.728E-18	1.075E-17	2.296E-17	5.035E-17	5.942E-17	7.365E-18	0.000E+00	0.000E+00
-238+D	Th-230	3.359E-07	3.404E-23	2.322E-22	1.158E-21	8.436E-21	4.054E-20	7.696E-20	0.000E+00	0.000E+00
-238+D	Ra-226+D1	3.359E-07	2.806E-23	4.092E-22	4.480E-21	9.442E-20	1.204E-18	4.364E-18	0.000E+00	0.000E+00
-238+D	Pb-210+D	3.359E-07	1.129E-28	3.394E-27	7.991E-26	4.887E-24	1.732E-22	2.019E-21	0.000E+00	0.000E+00
-238+D	äDSR(j)		6.550E-08	6.249E-08	5.687E-08	4.085E-08	1.570E-08	4.280E-10	0.000E+00	0.000E+00
-238+D	U-238+D	4.434E-13	8.646E-14	8.249E-14	7.507E-14	5.392E-14	2.073E-14	5.649E-16	0.000E+00	0.000E+00
-238+D	U-234	4.434E-13	4.921E-24	1.419E-23	3.031E-23	6.646E-23	7.844E-23	9.721E-24	0.000E+00	0.000E+00
-238+D	Th-230	4.434E-13	4.493E-29	3.065E-28	1.529E-27	1.114E-26	5.352E-26	1.016E-25	0.000E+00	0.000E+00
-238+D	Ra-226+D1	4.434E-13	3.704E-29	5.401E-28	5.913E-27	1.246E-25	1.589E-24	5.761E-24	0.000E+00	0.000E+00
-238+D	Pb-210+D1	4.434E-13	3.302E-34	9.921E-33	2.334E-31	1.422E-29	4.978E-28	5.264E-27	0.000E+00	0.000E+00
-238+D	äDSR(j)		8.646E-14	8.249E-14	7.507E-14	5.392E-14	2.073E-14	5.649E-16	0.000E+00	0.000E+00
-238+D	U-238+D	6.383E-15	1.245E-15	1.187E-15	1.080E-15	7.761E-16	2.984E-16	8.132E-18	0.000E+00	0.000E+00
-238+D	U-234	6.383E-15	7.084E-26	2.042E-25	4.363E-25	9.566E-25	1.129E-24	1.399E-25	0.000E+00	0.000E+00
-238+D	Th-230	6.383E-15	6.467E-31	4.412E-30	2.200E-29	1.603E-28	7.703E-28	1.462E-27	0.000E+00	0.000E+00
-238+D	Ra-226+D1	6.383E-15	5.332E-31	7.774E-30	8.511E-29	1.794E-27	2.287E-26	8.292E-26	0.000E+00	0.000E+00
-238+D	Pb-210+D2	6.383E-15	3.510E-36	1.055E-34	2.482E-33	1.514E-31	5.313E-30	5.758E-29	0.000E+00	0.000E+00
-238+D	äDSR(j)		1.245E-15	1.187E-15	1.080E-15	7.761E-16	2.984E-16	8.132E-18	0.000E+00	0.000E+00

ummary : GKP Park Ranger - External
ile : C:\USERS\CLAUDE\DOCUMENTS\0 GKP DOSE\RESRAD CW\GKP PARK RANGER - EXTERNAL.RAD

Dose/Source Ratios Summed Over All Pathways
Parent and Progeny Principal Radionuclide Contributions Indicated

Parent (i)	Product (j)	Thread Fraction	DSR(j,t) At Time in Years (mrem/yr)/(pCi/g) 0.000E+00	1.000E+00	3.000E+00	1.000E+01	3.000E+01	1.000E+02	3.000E+02	1.000E+03
ÄÄÄÄÄÄÄÄ	ÄÄÄÄÄÄÄÄÄÄ	ÄÄÄÄÄÄÄÄ	ÄÄÄÄÄÄÄÄ	ÄÄÄÄÄÄÄÄ	ÄÄÄÄÄÄÄÄ	ÄÄÄÄÄÄÄÄ	ÄÄÄÄÄÄÄÄ	ÄÄÄÄÄÄÄÄ	ÄÄÄÄÄÄÄÄ	ÄÄÄÄÄÄÄÄ
-238+D	U-238+D	3.196E-07	6.232E-08	5.945E-08	5.411E-08	3.886E-08	1.494E-08	4.072E-10	0.000E+00	0.000E+00
-238+D	U-234	3.196E-07	3.547E-18	1.023E-17	2.185E-17	4.790E-17	5.653E-17	7.007E-18	0.000E+00	0.000E+00
-238+D	Th-230	3.196E-07	3.238E-23	2.209E-22	1.102E-21	8.026E-21	3.857E-20	7.322E-20	0.000E+00	0.000E+00
-238+D	Ra-226+D2	3.196E-07	2.312E-23	3.371E-22	3.689E-21	7.768E-20	9.867E-19	3.526E-18	0.000E+00	0.000E+00
-238+D	Pb-210+D	3.196E-07	1.074E-28	3.229E-27	7.603E-26	4.650E-24	1.648E-22	1.921E-21	0.000E+00	0.000E+00
-238+D	äDSR(j)		6.232E-08	5.945E-08	5.411E-08	3.886E-08	1.494E-08	4.072E-10	0.000E+00	0.000E+00
-238+D	U-238+D	4.219E-13	8.226E-14	7.848E-14	7.142E-14	5.130E-14	1.972E-14	5.375E-16	0.000E+00	0.000E+00
-238+D	U-234	4.219E-13	4.682E-24	1.350E-23	2.884E-23	6.323E-23	7.463E-23	9.249E-24	0.000E+00	0.000E+00
-238+D	Th-230	4.219E-13	4.275E-29	2.916E-28	1.454E-27	1.059E-26	5.092E-26	9.665E-26	0.000E+00	0.000E+00
-238+D	Ra-226+D2	4.219E-13	3.052E-29	4.450E-28	4.870E-27	1.025E-25	1.302E-24	4.654E-24	0.000E+00	0.000E+00
-238+D	Pb-210+D1	4.219E-13	3.141E-34	9.439E-33	2.221E-31	1.353E-29	4.737E-28	5.009E-27	0.000E+00	0.000E+00
-238+D	äDSR(j)		8.226E-14	7.848E-14	7.142E-14	5.130E-14	1.972E-14	5.375E-16	0.000E+00	0.000E+00
-238+D	U-238+D	6.073E-15	1.184E-15	1.130E-15	1.028E-15	7.384E-16	2.839E-16	7.737E-18	0.000E+00	0.000E+00
-238+D	U-234	6.073E-15	6.740E-26	1.943E-25	4.151E-25	9.101E-25	1.074E-24	1.331E-25	0.000E+00	0.000E+00
-238+D	Th-230	6.073E-15	6.153E-31	4.198E-30	2.094E-29	1.525E-28	7.329E-28	1.391E-27	0.000E+00	0.000E+00
-238+D	Ra-226+D2	6.073E-15	4.393E-31	6.405E-30	7.010E-29	1.476E-27	1.875E-26	6.699E-26	0.000E+00	0.000E+00
-238+D	Pb-210+D2	6.073E-15	3.339E-36	1.004E-34	2.361E-33	1.440E-31	5.055E-30	5.478E-29	0.000E+00	0.000E+00
-238+D	äDSR(j)		1.184E-15	1.130E-15	1.028E-15	7.384E-16	2.839E-16	7.737E-18	0.000E+00	0.000E+00
-238+D	U-238+D	6.713E-11	1.309E-11	1.249E-11	1.136E-11	8.163E-12	3.138E-12	8.553E-14	0.000E+00	0.000E+00
-238+D	U-234	6.713E-11	7.451E-22	2.148E-21	4.589E-21	1.006E-20	1.187E-20	1.472E-21	0.000E+00	0.000E+00
-238+D	Th-230	6.713E-11	6.802E-27	4.640E-26	2.314E-25	1.686E-24	8.102E-24	1.538E-23	0.000E+00	0.000E+00
-238+D	Ra-226+D3	6.713E-11	4.856E-27	7.080E-26	7.749E-25	1.631E-23	2.072E-22	7.405E-22	0.000E+00	0.000E+00
-238+D	Pb-210+D	6.713E-11	2.256E-32	6.783E-31	1.597E-29	9.767E-28	3.461E-26	4.035E-25	0.000E+00	0.000E+00
-238+D	äDSR(j)		1.309E-11	1.249E-11	1.136E-11	8.163E-12	3.138E-12	8.553E-14	0.000E+00	0.000E+00
-238+D	U-238+D	8.862E-17	1.728E-17	1.648E-17	1.500E-17	1.077E-17	4.143E-18	1.129E-19	0.000E+00	0.000E+00
-238+D	U-234	8.862E-17	9.835E-28	2.835E-27	6.057E-27	1.328E-26	1.567E-26	1.943E-27	0.000E+00	0.000E+00
-238+D	Th-230	8.862E-17	8.979E-33	6.125E-32	3.055E-31	2.225E-30	1.070E-29	2.030E-29	0.000E+00	0.000E+00
-238+D	Ra-226+D3	8.862E-17	6.411E-33	9.346E-32	1.023E-30	2.154E-29	2.736E-28	9.775E-28	0.000E+00	0.000E+00
-238+D	Pb-210+D1	8.862E-17	6.598E-38	1.983E-36	4.664E-35	2.842E-33	9.949E-32	1.052E-30	0.000E+00	0.000E+00
-238+D	äDSR(j)		1.728E-17	1.648E-17	1.500E-17	1.077E-17	4.143E-18	1.129E-19	0.000E+00	0.000E+00
-238+D	U-238+D	1.276E-18	2.487E-19	2.373E-19	2.159E-19	1.551E-19	5.963E-20	1.625E-21	0.000E+00	0.000E+00
-238+D	U-234	1.276E-18	1.416E-29	4.081E-29	8.718E-29	1.912E-28	2.256E-28	2.796E-29	0.000E+00	0.000E+00
-238+D	Th-230	1.276E-18	1.292E-34	8.817E-34	4.397E-33	3.203E-32	1.539E-31	2.922E-31	0.000E+00	0.000E+00
-238+D	Ra-226+D3	1.276E-18	9.227E-35	1.345E-33	1.472E-32	3.100E-31	3.938E-30	1.407E-29	0.000E+00	0.000E+00
-238+D	Pb-210+D2	1.276E-18	7.014E-40	2.108E-38	4.960E-37	3.025E-35	1.062E-33	1.151E-32	0.000E+00	0.000E+00
-238+D	äDSR(j)		2.487E-19	2.373E-19	2.159E-19	1.551E-19	5.963E-20	1.625E-21	0.000E+00	0.000E+00

ummary : GKP Park Ranger - External
ile : C:\USERS\CLAUDE\DOCUMENTS\0 GKP DOSE\RESRAD CW\GKP PARK RANGER - EXTERNAL.RAD

Dose/Source Ratios Summed Over All Pathways
Parent and Progeny Principal Radionuclide Contributions Indicated

Parent	Product	Thread	DSR(j,t) At Time in Years (mrem/yr)/(pCi/g)							
(i)	(j)	Fraction	0.000E+00	1.000E+00	3.000E+00	1.000E+01	3.000E+01	1.000E+02	3.000E+02	1.000E+03
ÄÄÄÄÄÄÄÄÄ	ÄÄÄÄÄÄÄÄÄÄ	ÄÄÄÄÄÄÄÄÄ	ÄÄÄÄÄÄÄÄÄ	ÄÄÄÄÄÄÄÄÄ	ÄÄÄÄÄÄÄÄÄ	ÄÄÄÄÄÄÄÄÄ	ÄÄÄÄÄÄÄÄÄ	ÄÄÄÄÄÄÄÄÄ	ÄÄÄÄÄÄÄÄÄ	ÄÄÄÄÄÄÄÄÄ
-238+D	U-238+D	3.200E-10	6.240E-11	5.953E-11	5.417E-11	3.891E-11	1.496E-11	4.077E-13	0.000E+00	0.000E+00
-238+D	U-234	3.200E-10	3.552E-21	1.024E-20	2.187E-20	4.796E-20	5.660E-20	7.015E-21	0.000E+00	0.000E+00
-238+D	Th-230	3.200E-10	3.242E-26	2.212E-25	1.103E-24	8.036E-24	3.862E-23	7.331E-23	0.000E+00	0.000E+00
-238+D	Ra-226+D4	3.200E-10	1.253E-28	1.829E-27	2.009E-26	4.284E-25	5.670E-24	2.485E-23	0.000E+00	0.000E+00
-238+D	Pb-210+D	3.200E-10	1.075E-31	3.233E-30	7.612E-29	4.655E-27	1.650E-25	1.923E-24	0.000E+00	0.000E+00
-238+D	äDSR(j)		6.240E-11	5.953E-11	5.417E-11	3.891E-11	1.496E-11	4.077E-13	0.000E+00	0.000E+00
-238+D	U-238+D	4.224E-16	8.236E-17	7.857E-17	7.151E-17	5.136E-17	1.975E-17	5.382E-19	0.000E+00	0.000E+00
-238+D	U-234	4.224E-16	4.688E-27	1.352E-26	2.887E-26	6.331E-26	7.472E-26	9.260E-27	0.000E+00	0.000E+00
-238+D	Th-230	4.224E-16	4.280E-32	2.920E-31	1.456E-30	1.061E-29	5.098E-29	9.676E-29	0.000E+00	0.000E+00
-238+D	Ra-226+D4	4.224E-16	1.654E-34	2.414E-33	2.651E-32	5.655E-31	7.484E-30	3.280E-29	0.000E+00	0.000E+00
-238+D	Pb-210+D1	4.224E-16	3.145E-37	9.451E-36	2.223E-34	1.355E-32	4.742E-31	5.015E-30	0.000E+00	0.000E+00
-238+D	äDSR(j)		8.236E-17	7.857E-17	7.151E-17	5.136E-17	1.975E-17	5.382E-19	0.000E+00	0.000E+00
-238+D	U-238+D	6.080E-18	1.186E-18	1.131E-18	1.029E-18	7.393E-19	2.842E-19	7.746E-21	0.000E+00	0.000E+00
-238+D	U-234	6.080E-18	6.748E-29	1.945E-28	4.156E-28	9.112E-28	1.075E-27	1.333E-28	0.000E+00	0.000E+00
-238+D	Th-230	6.080E-18	6.160E-34	4.203E-33	2.096E-32	1.527E-31	7.338E-31	1.393E-30	0.000E+00	0.000E+00
-238+D	Ra-226+D4	6.080E-18	2.380E-36	3.475E-35	3.817E-34	8.139E-33	1.077E-31	4.722E-31	0.000E+00	0.000E+00
-238+D	Pb-210+D2	6.080E-18	3.343E-39	1.005E-37	2.364E-36	1.442E-34	5.061E-33	5.485E-32	0.000E+00	0.000E+00
-238+D	äDSR(j)		1.186E-18	1.131E-18	1.029E-18	7.393E-19	2.842E-19	7.746E-21	0.000E+00	0.000E+00
-238+D1	U-238+D1	9.980E-01	1.977E-03	1.888E-03	1.720E-03	1.241E-03	4.842E-04	1.440E-05	0.000E+00	0.000E+00
-238+D1	U-234	9.980E-01	1.108E-11	3.193E-11	6.821E-11	1.496E-10	1.765E-10	2.188E-11	0.000E+00	0.000E+00
-238+D1	Th-230	9.980E-01	1.011E-16	6.898E-16	3.441E-15	2.506E-14	1.204E-13	2.286E-13	0.000E+00	0.000E+00
-238+D1	Ra-226+D	9.980E-01	8.337E-17	1.216E-15	1.331E-14	2.805E-13	3.576E-12	1.297E-11	0.000E+00	0.000E+00
-238+D1	Pb-210+D	9.980E-01	3.354E-22	1.008E-20	2.374E-19	1.452E-17	5.145E-16	5.998E-15	0.000E+00	0.000E+00
-238+D1	äDSR(j)		1.977E-03	1.888E-03	1.720E-03	1.241E-03	4.842E-04	1.440E-05	0.000E+00	0.000E+00
-238+D1	U-238+D1	1.317E-06	2.610E-09	2.492E-09	2.270E-09	1.638E-09	6.392E-10	1.901E-11	0.000E+00	0.000E+00
-238+D1	U-234	1.317E-06	1.462E-17	4.215E-17	9.004E-17	1.974E-16	2.330E-16	2.888E-17	0.000E+00	0.000E+00
-238+D1	Th-230	1.317E-06	1.335E-22	9.106E-22	4.542E-21	3.308E-20	1.590E-19	3.018E-19	0.000E+00	0.000E+00
-238+D1	Ra-226+D	1.317E-06	1.101E-22	1.605E-21	1.757E-20	3.703E-19	4.720E-18	1.711E-17	0.000E+00	0.000E+00
-238+D1	Pb-210+D1	1.317E-06	9.809E-28	2.947E-26	6.934E-25	4.225E-23	1.479E-21	1.564E-20	0.000E+00	0.000E+00
-238+D1	äDSR(j)		2.610E-09	2.492E-09	2.270E-09	1.638E-09	6.392E-10	1.901E-11	0.000E+00	0.000E+00
-238+D1	U-238+D1	1.896E-08	3.757E-11	3.586E-11	3.268E-11	2.358E-11	9.200E-12	2.736E-13	0.000E+00	0.000E+00
-238+D1	U-234	1.896E-08	2.104E-19	6.067E-19	1.296E-18	2.842E-18	3.354E-18	4.157E-19	0.000E+00	0.000E+00
-238+D1	Th-230	1.896E-08	1.921E-24	1.311E-23	6.537E-23	4.762E-22	2.289E-21	4.344E-21	0.000E+00	0.000E+00
-238+D1	Ra-226+D	1.896E-08	1.584E-24	2.310E-23	2.529E-22	5.330E-21	6.794E-20	2.463E-19	0.000E+00	0.000E+00
-238+D1	Pb-210+D2	1.896E-08	1.043E-29	3.133E-28	7.373E-27	4.497E-25	1.579E-23	1.711E-22	0.000E+00	0.000E+00
-238+D1	äDSR(j)		3.757E-11	3.586E-11	3.268E-11	2.358E-11	9.200E-12	2.736E-13	0.000E+00	0.000E+00

ummary : GKP Park Ranger - External
ile : C:\USERS\CLAUDE\DOCUMENTS\0 GKP DOSE\RESRAD CW\GKP PARK RANGER - EXTERNAL.RAD

Dose/Source Ratios Summed Over All Pathways
Parent and Progeny Principal Radionuclide Contributions Indicated

Parent	Product	Thread	DSR(j,t) At Time in Years (mrem/yr)/(pCi/g)							
(i)	(j)	Fraction	0.000E+00	1.000E+00	3.000E+00	1.000E+01	3.000E+01	1.000E+02	3.000E+02	1.000E+03
ÄÄÄÄÄÄÄÄ	ÄÄÄÄÄÄÄÄÄÄ	ÄÄÄÄÄÄÄÄ	ÄÄÄÄÄÄÄÄ	ÄÄÄÄÄÄÄÄ	ÄÄÄÄÄÄÄÄ	ÄÄÄÄÄÄÄÄ	ÄÄÄÄÄÄÄÄ	ÄÄÄÄÄÄÄÄ	ÄÄÄÄÄÄÄÄ	ÄÄÄÄÄÄÄÄ
-238+D1	U-238+D1	2.096E-04	4.153E-07	3.965E-07	3.613E-07	2.606E-07	1.017E-07	3.024E-09	0.000E+00	0.000E+00
-238+D1	U-234	2.096E-04	2.327E-15	6.707E-15	1.433E-14	3.142E-14	3.708E-14	4.596E-15	0.000E+00	0.000E+00
-238+D1	Th-230	2.096E-04	2.124E-20	1.449E-19	7.227E-19	5.264E-18	2.530E-17	4.802E-17	0.000E+00	0.000E+00
-238+D1	Ra-226+D1	2.096E-04	1.751E-20	2.553E-19	2.795E-18	5.892E-17	7.510E-16	2.723E-15	0.000E+00	0.000E+00
-238+D1	Pb-210+D	2.096E-04	7.045E-26	2.118E-24	4.987E-23	3.050E-21	1.081E-19	1.260E-18	0.000E+00	0.000E+00
-238+D1	äDSR(j)		4.153E-07	3.965E-07	3.613E-07	2.606E-07	1.017E-07	3.024E-09	0.000E+00	0.000E+00
-238+D1	U-238+D1	2.767E-10	5.483E-13	5.234E-13	4.769E-13	3.440E-13	1.343E-13	3.992E-15	0.000E+00	0.000E+00
-238+D1	U-234	2.767E-10	3.071E-21	8.853E-21	1.891E-20	4.147E-20	4.894E-20	6.066E-21	0.000E+00	0.000E+00
-238+D1	Th-230	2.767E-10	2.804E-26	1.913E-25	9.539E-25	6.949E-24	3.340E-23	6.339E-23	0.000E+00	0.000E+00
-238+D1	Ra-226+D1	2.767E-10	2.311E-26	3.370E-25	3.690E-24	7.777E-23	9.913E-22	3.595E-21	0.000E+00	0.000E+00
-238+D1	Pb-210+D1	2.767E-10	2.060E-31	6.191E-30	1.456E-28	8.875E-27	3.107E-25	3.285E-24	0.000E+00	0.000E+00
-238+D1	äDSR(j)		5.483E-13	5.234E-13	4.769E-13	3.440E-13	1.343E-13	3.992E-15	0.000E+00	0.000E+00
-238+D1	U-238+D1	3.983E-12	7.892E-15	7.533E-15	6.864E-15	4.952E-15	1.932E-15	5.746E-17	0.000E+00	0.000E+00
-238+D1	U-234	3.983E-12	4.420E-23	1.274E-22	2.722E-22	5.969E-22	7.045E-22	8.732E-23	0.000E+00	0.000E+00
-238+D1	Th-230	3.983E-12	4.036E-28	2.753E-27	1.373E-26	1.000E-25	4.807E-25	9.124E-25	0.000E+00	0.000E+00
-238+D1	Ra-226+D1	3.983E-12	3.327E-28	4.851E-27	5.311E-26	1.119E-24	1.427E-23	5.174E-23	0.000E+00	0.000E+00
-238+D1	Pb-210+D2	3.983E-12	2.190E-33	6.582E-32	1.549E-30	9.445E-29	3.316E-27	3.593E-26	0.000E+00	0.000E+00
-238+D1	äDSR(j)		7.892E-15	7.533E-15	6.864E-15	4.952E-15	1.932E-15	5.746E-17	0.000E+00	0.000E+00
-238+D1	U-238+D1	1.994E-04	3.952E-07	3.772E-07	3.437E-07	2.480E-07	9.677E-08	2.877E-09	0.000E+00	0.000E+00
-238+D1	U-234	1.994E-04	2.213E-15	6.381E-15	1.363E-14	2.989E-14	3.528E-14	4.372E-15	0.000E+00	0.000E+00
-238+D1	Th-230	1.994E-04	2.021E-20	1.379E-19	6.876E-19	5.008E-18	2.407E-17	4.569E-17	0.000E+00	0.000E+00
-238+D1	Ra-226+D2	1.994E-04	1.443E-20	2.104E-19	2.302E-18	4.847E-17	6.157E-16	2.200E-15	0.000E+00	0.000E+00
-238+D1	Pb-210+D	1.994E-04	6.703E-26	2.015E-24	4.744E-23	2.901E-21	1.028E-19	1.199E-18	0.000E+00	0.000E+00
-238+D1	äDSR(j)		3.952E-07	3.772E-07	3.437E-07	2.480E-07	9.677E-08	2.877E-09	0.000E+00	0.000E+00
-238+D1	U-238+D1	2.633E-10	5.216E-13	4.979E-13	4.537E-13	3.273E-13	1.277E-13	3.798E-15	0.000E+00	0.000E+00
-238+D1	U-234	2.633E-10	2.922E-21	8.423E-21	1.799E-20	3.946E-20	4.657E-20	5.771E-21	0.000E+00	0.000E+00
-238+D1	Th-230	2.633E-10	2.667E-26	1.820E-25	9.076E-25	6.611E-24	3.177E-23	6.031E-23	0.000E+00	0.000E+00
-238+D1	Ra-226+D2	2.633E-10	1.905E-26	2.777E-25	3.039E-24	6.398E-23	8.127E-22	2.904E-21	0.000E+00	0.000E+00
-238+D1	Pb-210+D1	2.633E-10	1.960E-31	5.890E-30	1.386E-28	8.444E-27	2.956E-25	3.125E-24	0.000E+00	0.000E+00
-238+D1	äDSR(j)		5.216E-13	4.979E-13	4.537E-13	3.273E-13	1.277E-13	3.798E-15	0.000E+00	0.000E+00
-238+D1	U-238+D1	3.789E-12	7.508E-15	7.167E-15	6.530E-15	4.712E-15	1.839E-15	5.467E-17	0.000E+00	0.000E+00
-238+D1	U-234	3.789E-12	4.206E-23	1.212E-22	2.590E-22	5.679E-22	6.703E-22	8.307E-23	0.000E+00	0.000E+00
-238+D1	Th-230	3.789E-12	3.839E-28	2.619E-27	1.306E-26	9.516E-26	4.573E-25	8.681E-25	0.000E+00	0.000E+00
-238+D1	Ra-226+D2	3.789E-12	2.741E-28	3.997E-27	4.374E-26	9.209E-25	1.170E-23	4.180E-23	0.000E+00	0.000E+00
-238+D1	Pb-210+D2	3.789E-12	2.084E-33	6.262E-32	1.473E-30	8.986E-29	3.155E-27	3.418E-26	0.000E+00	0.000E+00
-238+D1	äDSR(j)		7.508E-15	7.167E-15	6.530E-15	4.712E-15	1.839E-15	5.467E-17	0.000E+00	0.000E+00

ummary : GKP Park Ranger - External
ile : C:\USERS\CLAUDE\DOCUMENTS\0 GKP DOSE\RESRAD CW\GKP PARK RANGER - EXTERNAL.RAD

Dose/Source Ratios Summed Over All Pathways
Parent and Progeny Principal Radionuclide Contributions Indicated

Parent (i)	Product (j)	Thread Fraction	DSR(j,t) At Time in Years (mrem/yr)/(pCi/g) 0.000E+00	1.000E+00	3.000E+00	1.000E+01	3.000E+01	1.000E+02	3.000E+02	1.000E+03
ÄÄÄÄÄÄÄÄÄ	ÄÄÄÄÄÄÄÄÄÄ	ÄÄÄÄÄÄÄÄÄ	ÄÄÄÄÄÄÄÄÄ	ÄÄÄÄÄÄÄÄÄ	ÄÄÄÄÄÄÄÄÄ	ÄÄÄÄÄÄÄÄÄ	ÄÄÄÄÄÄÄÄÄ	ÄÄÄÄÄÄÄÄÄ	ÄÄÄÄÄÄÄÄÄ	ÄÄÄÄÄÄÄÄÄ
-238+D1	U-238+D1	4.189E-08	8.300E-11	7.923E-11	7.219E-11	5.209E-11	2.033E-11	6.044E-13	0.000E+00	0.000E+00
-238+D1	U-234	4.189E-08	4.649E-19	1.340E-18	2.863E-18	6.278E-18	7.410E-18	9.184E-19	0.000E+00	0.000E+00
-238+D1	Th-230	4.189E-08	4.245E-24	2.896E-23	1.444E-22	1.052E-21	5.056E-21	9.596E-21	0.000E+00	0.000E+00
-238+D1	Ra-226+D3	4.189E-08	3.030E-24	4.418E-23	4.835E-22	1.018E-20	1.293E-19	4.621E-19	0.000E+00	0.000E+00
-238+D1	Pb-210+D	4.189E-08	1.408E-29	4.232E-28	9.965E-27	6.094E-25	2.159E-23	2.518E-22	0.000E+00	0.000E+00
-238+D1	äDSR(j)		8.300E-11	7.923E-11	7.219E-11	5.209E-11	2.033E-11	6.044E-13	0.000E+00	0.000E+00
-238+D1	U-238+D1	5.530E-14	1.096E-16	1.046E-16	9.529E-17	6.875E-17	2.683E-17	7.978E-19	0.000E+00	0.000E+00
-238+D1	U-234	5.530E-14	6.137E-25	1.769E-24	3.780E-24	8.288E-24	9.781E-24	1.212E-24	0.000E+00	0.000E+00
-238+D1	Th-230	5.530E-14	5.603E-30	3.822E-29	1.906E-28	1.389E-27	6.674E-27	1.267E-26	0.000E+00	0.000E+00
-238+D1	Ra-226+D3	5.530E-14	4.000E-30	5.832E-29	6.383E-28	1.344E-26	1.707E-25	6.100E-25	0.000E+00	0.000E+00
-238+D1	Pb-210+D1	5.530E-14	4.117E-35	1.237E-33	2.910E-32	1.774E-30	6.208E 29	6.565E-28	0.000E+00	0.000E+00
-238+D1	äDSR(j)		1.096E-16	1.046E-16	9.529E-17	6.875E-17	2.683E-17	7.978E-19	0.000E+00	0.000E+00
-238+D1	U-238+D1	7.959E-16	1.577E-18	1.505E-18	1.372E-18	9.896E-19	3.862E-19	1.148E-20	0.000E+00	0.000E+00
-238+D1	U-234	7.959E-16	8.834E-27	2.547E-26	5.440E-26	1.193E-25	1.408E-25	1.745E-26	0.000E+00	0.000E+00
-238+D1	Th-230	7.959E-16	8.065E-32	5.502E-31	2.744E-30	1.999E-29	9.606E-29	1.823E-28	0.000E+00	0.000E+00
-238+D1	Ra-226+D3	7.959E-16	5.758E-32	8.394E-31	9.187E-30	1.934E-28	2.457E-27	8.780E-27	0.000E+00	0.000E+00
-238+D1	Pb-210+D2	7.959E-16	4.377E-37	1.315E-35	3.095E-34	1.887E-32	6.626E-31	7.180E-30	0.000E+00	0.000E+00
-238+D1	äDSR(j)		1.577E-18	1.505E-18	1.372E-18	9.896E-19	3.862E-19	1.148E-20	0.000E+00	0.000E+00
-238+D1	U-238+D1	1.997E-07	3.956E-10	3.777E-10	3.441E-10	2.483E-10	9.688E-11	2.881E-12	0.000E+00	0.000E+00
-238+D1	U-234	1.997E-07	2.216E-18	6.389E-18	1.365E-17	2.993E-17	3.532E-17	4.378E-18	0.000E+00	0.000E+00
-238+D1	Th-230	1.997E-07	2.023E-23	1.380E-22	6.884E-22	5.014E-21	2.410E-20	4.574E-20	0.000E+00	0.000E+00
-238+D1	Ra-226+D4	1.997E-07	7.817E-26	1.141E-24	1.253E-23	2.673E-22	3.538E-21	1.551E-20	0.000E+00	0.000E+00
-238+D1	Pb-210+D	1.997E-07	6.711E-29	2.017E-27	4.750E-26	2.905E-24	1.029E-22	1.200E-21	0.000E+00	0.000E+00
-238+D1	äDSR(j)		3.956E-10	3.777E-10	3.441E-10	2.483E-10	9.688E-11	2.881E-12	0.000E+00	0.000E+00
-238+D1	U-238+D1	2.636E-13	5.223E-16	4.985E-16	4.542E-16	3.277E-16	1.279E-16	3.803E-18	0.000E+00	0.000E+00
-238+D1	U-234	2.636E-13	2.925E-24	8.433E-24	1.802E-23	3.950E-23	4.662E-23	5.778E-24	0.000E+00	0.000E+00
-238+D1	Th-230	2.636E-13	2.671E-29	1.822E-28	9.087E-28	6.619E-27	3.181E-26	6.038E-26	0.000E+00	0.000E+00
-238+D1	Ra-226+D4	2.636E-13	1.032E-31	1.507E-30	1.655E-29	3.529E-28	4.670E-27	2.047E-26	0.000E+00	0.000E+00
-238+D1	Pb-210+D1	2.636E-13	1.963E-34	5.897E-33	1.387E-31	8.454E-30	2.959E-28	3.129E-27	0.000E+00	0.000E+00
-238+D1	äDSR(j)		5.223E-16	4.985E-16	4.542E-16	3.277E-16	1.279E-16	3.803E-18	0.000E+00	0.000E+00
-238+D1	U-238+D1	3.794E-15	7.517E-18	7.176E-18	6.538E-18	4.717E-18	1.841E-18	5.474E-20	0.000E+00	0.000E+00
-238+D1	U-234	3.794E-15	4.211E-26	1.214E-25	2.593E-25	5.686E-25	6.711E-25	8.318E-26	0.000E+00	0.000E+00
-238+D1	Th-230	3.794E-15	3.844E-31	2.622E-30	1.308E-29	9.528E-29	4.579E-28	8.691E-28	0.000E+00	0.000E+00
-238+D1	Ra-226+D4	3.794E-15	1.485E-33	2.169E-32	2.382E-31	5.079E-30	6.722E-29	2.946E-28	0.000E+00	0.000E+00
-238+D1	Pb-210+D2	3.794E-15	2.086E-36	6.269E-35	1.475E-33	8.997E-32	3.158E-30	3.423E-29	0.000E+00	0.000E+00
-238+D1	äDSR(j)		7.517E-18	7.176E-18	6.538E-18	4.717E-18	1.841E-18	5.474E-20	0.000E+00	0.000E+00
íííííííí	íííííííííí	íííííííí	íííííííí	íííííííí	íííííííí	íííííííí	íííííííí	íííííííí	íííííííí	íííííííí

ne DSR includes contributions from associated (half-life ó 180 days) daughters.

ummary : GKP Park Ranger - External
ile : C:\USERS\CLAUDE\DOCUMENTS\0 GKP DOSE\RESRAD CW\GKP PARK RANGER - EXTERNAL.RAD

Single Radionuclide Soil Guidelines G(i,t) in pCi/g
Basic Radiation Dose Limit = 2.500E+01 mrem/yr

uclide (i)	t= 0.000E+00	1.000E+00	3.000E+00	1.000E+01	3.000E+01	1.000E+02	3.000E+02	1.000E+03
ÄÄÄÄÄÄ	ÄÄÄÄÄÄÄÄÄÄ	ÄÄÄÄÄÄÄÄÄÄ	ÄÄÄÄÄÄÄÄÄÄ	ÄÄÄÄÄÄÄÄÄÄ	ÄÄÄÄÄÄÄÄÄÄ	ÄÄÄÄÄÄÄÄÄÄ	ÄÄÄÄÄÄÄÄÄÄ	ÄÄÄÄÄÄÄÄÄÄ
a-226	1.390E+02	1.440E+02	1.545E+02	1.979E+02	4.062E+02	6.509E+03	*9.885E+11	*9.885E+11
n-232	3.693E+03	1.123E+03	4.441E+02	1.759E+02	1.388E+02	2.346E+02	*1.097E+05	*1.097E+05
-234	3.156E+06	3.300E+06	3.608E+06	4.913E+06	1.135E+07	7.807E+07	*6.222E+09	*6.222E+09
-235	1.753E+03	1.835E+03	2.012E+03	2.774E+03	6.998E+03	2.238E+05	*2.160E+06	*2.160E+06
-238	1.092E+04	1.144E+04	1.255E+04	1.741E+04	4.470E+04	*3.361E+05	*3.361E+05	*3.361E+05
íííííí	íííííííííí	íííííííííí	íííííííííí	íííííííííí	íííííííííí	íííííííííí	íííííííííí	íííííííííí

At specific activity limit

Summed Dose/Source Ratios DSR(i,t) in (mrem/yr)/(pCi/g)
and Single Radionuclide Soil Guidelines G(i,t) in pCi/g
at tmin = time of minimum single radionuclide soil guideline
and at tmax = time of maximum total dose = 0.000E+00 years

uclide (i)	Initial (pCi/g)	tmin (years)	DSR(i,tmin)	G(i,tmin) (pCi/g)	DSR(i,tmax)	G(i,tmax) (pCi/g)
ÄÄÄÄÄÄ	ÄÄÄÄÄÄÄÄÄÄ	ÄÄÄÄÄÄÄÄÄÄÄÄÄÄÄÄ	ÄÄÄÄÄÄÄÄÄÄ	ÄÄÄÄÄÄÄÄÄÄ	ÄÄÄÄÄÄÄÄÄÄ	ÄÄÄÄÄÄÄÄÄÄ
a-226	3.650E+01	0.000E+00	1.799E-01	1.390E+02	1.799E-01	1.390E+02
n-232	2.400E+00	25.50 ñ 0.05	1.811E-01	1.380E+02	6.769E-03	3.693E+03
-234	1.390E+01	0.000E+00	7.921E-06	3.156E+06	7.921E-06	3.156E+06
-235	8.400E-01	0.000E+00	1.426E-02	1.753E+03	1.426E-02	1.753E+03
-238	1.390E+01	0.000E+00	2.290E-03	1.092E+04	2.290E-03	1.092E+04
íííííí	íííííííííí	íííííííííííííííííí	íííííííííí	íííííííííí	íííííííííí	íííííííííí

ummary : GKP Park Ranger - External

ile : C:\USERS\CLAUDE\DOCUMENTS\0 GKP DOSE\RESRAD CW\GKP PARK RANGER - EXTERNAL.RAD

Individual Nuclide Dose Summed Over All Pathways

Parent Nuclide and Branch Fraction Indicated

uclide	Parent	THF(i)	DOSE(j,t), mrem/yr							
(j)	(i)	t=	0.000E+00	1.000E+00	3.000E+00	1.000E+01	3.000E+01	1.000E+02	3.000E+02	1.000E+03
ÄÄÄÄÄÄ	ÄÄÄÄÄÄÄ	ÄÄÄÄÄÄÄÄÄ	ÄÄÄÄÄÄÄÄÄ	ÄÄÄÄÄÄÄÄÄ	ÄÄÄÄÄÄÄÄÄ	ÄÄÄÄÄÄÄÄÄ	ÄÄÄÄÄÄÄÄÄ	ÄÄÄÄÄÄÄÄÄ	ÄÄÄÄÄÄÄÄÄ	ÄÄÄÄÄÄÄÄÄ
a-226	Ra-226	9.996E-01	6.563E+00	6.336E+00	5.904E+00	4.607E+00	2.245E+00	1.400E-01	0.000E+00	0.000E+00
a-226	Ra-226	1.319E-06	8.663E-06	8.363E-06	7.794E-06	6.082E-06	2.963E-06	1.847E-07	0.000E+00	0.000E+00
a-226	U-234	9.996E-01	1.653E-09	1.129E-08	5.648E-08	4.152E-07	2.021E-06	3.322E-06	0.000E+00	0.000E+00
a-226	U-234	1.319E-06	2.182E-15	1.491E-14	7.456E-14	5.480E-13	2.667E-12	4.385E-12	0.000E+00	0.000E+00
a-226	U-234	1.899E-08	3.141E-17	2.145E-16	1.073E-15	7.888E-15	3.839E-14	6.311E-14	0.000E+00	0.000E+00
a-226	U-238	1.599E-03	1.857E-18	2.708E-17	2.965E-16	6.248E-15	7.965E-14	2.888E-13	0.000E+00	0.000E+00
a-226	U-238	2.111E-09	2.451E-24	3.574E-23	3.913E-22	8.248E-21	1.051E-19	3.812E-19	0.000E+00	0.000E+00
a-226	U-238	3.039E-11	3.529E-26	5.145E-25	5.633E-24	1.187E-22	1.513E-21	5.487E-21	0.000E+00	0.000E+00
a-226	U-238	9.980E-01	1.159E-15	1.690E-14	1.850E-13	3.899E-12	4.970E-11	1.802E-10	0.000E+00	0.000E+00
a-226	U-238	1.317E-06	1.530E-21	2.230E-20	2.442E-19	5.147E-18	6.560E-17	2.379E-16	0.000E+00	0.000E+00
a-226	U-238	1.896E-08	2.202E-23	3.211E-22	3.515E-21	7.408E-20	9.443E-19	3.424E-18	0.000E+00	0.000E+00
a-226	ädose(j)		6.563E+00	6.336E+00	5.904E+00	4.607E+00	2.245E+00	1.400E-01	0.000E+00	0.000E+00
o-210	Ra-226	9.996E-01	6.545E-05	1.889E-04	4.045E-04	8.958E-04	1.098E-03	1.764E-04	0.000E+00	0.000E+00
o-210	Ra-226	2.100E-04	1.375E-08	3.967E-08	8.496E-08	1.882E-07	2.307E-07	3.706E-08	0.000E+00	0.000E+00
o-210	Ra-226	1.998E-04	1.308E-08	3.775E-08	8.083E-08	1.790E-07	2.194E-07	3.526E-08	0.000E+00	0.000E+00
o-210	Ra-226	4.196E-08	2.747E-12	7.928E-12	1.698E-11	3.760E-11	4.609E-11	7.405E-12	0.000E+00	0.000E+00
o-210	Ra-226	2.000E-07	1.309E-11	3.779E-11	8.093E-11	1.792E-10	2.197E-10	3.530E-11	0.000E+00	0.000E+00
o-210	U-234	9.996E-01	8.294E-15	1.209E-13	1.324E-12	2.794E-11	3.615E-10	1.676E-09	0.000E+00	0.000E+00
o-210	U-234	2.100E-04	1.742E-18	2.540E-17	2.781E-16	5.869E-15	7.593E-14	3.520E-13	0.000E+00	0.000E+00
o-210	U-234	1.998E-04	1.657E-18	2.417E-17	2.646E-16	5.584E-15	7.224E-14	3.349E-13	0.000E+00	0.000E+00
o-210	U-234	4.196E-08	3.481E-22	5.076E-21	5.557E-20	1.173E-18	1.517E-17	7.035E-17	0.000E+00	0.000E+00
o-210	U-234	2.000E-07	1.659E-21	2.420E-20	2.649E-19	5.591E-18	7.233E-17	3.353E-16	0.000E+00	0.000E+00
o-210	U-238	1.599E-03	7.471E-24	2.246E-22	5.288E-21	3.234E-19	1.146E-17	1.336E-16	0.000E+00	0.000E+00
o-210	U-238	3.359E-07	1.569E-27	4.718E-26	1.111E-24	6.793E-23	2.407E-21	2.807E-20	0.000E+00	0.000E+00
o-210	U-238	3.196E-07	1.493E-27	4.488E-26	1.057E-24	6.463E-23	2.290E-21	2.670E-20	0.000E+00	0.000E+00
o-210	U-238	6.713E-11	0.000E+00	0.000E+00	2.220E-28	1.358E-26	4.810E-25	5.609E-24	0.000E+00	0.000E+00
o-210	U-238	3.200E-10	0.000E+00	4.494E-29	1.058E-27	6.471E-26	2.293E-24	2.673E-23	0.000E+00	0.000E+00
o-210	U-238	9.980E-01	4.662E-21	1.402E-19	3.300E-18	2.018E-16	7.151E-15	8.338E-14	0.000E+00	0.000E+00
o-210	U-238	2.096E-04	9.792E-25	2.944E-23	6.931E-22	4.239E-20	1.502E-18	1.751E-17	0.000E+00	0.000E+00
o-210	U-238	1.994E-04	9.317E-25	2.801E-23	6.595E-22	4.033E-20	1.429E-18	1.666E-17	0.000E+00	0.000E+00
o-210	U-238	4.189E-08	1.957E-28	5.883E-27	1.385E-25	8.471E-24	3.002E-22	3.500E-21	0.000E+00	0.000E+00
o-210	U-238	1.997E-07	9.328E-28	2.804E-26	6.603E-25	4.038E-23	1.431E-21	1.668E-20	0.000E+00	0.000E+00
o-210	ädose(j)		6.547E-05	1.890E-04	4.047E-04	8.962E-04	1.099E-03	1.765E-04	0.000E+00	0.000E+00
o-210	Ra-226	1.319E-06	1.914E-10	5.522E-10	1.181E-09	2.607E-09	3.157E-09	4.600E-10	0.000E+00	0.000E+00
o-210	Ra-226	1.899E-08	2.035E-12	5.870E-12	1.256E-11	2.774E-11	3.369E-11	5.031E-12	0.000E+00	0.000E+00
o-210	Ra-226	2.771E-10	4.020E-14	1.160E-13	2.481E-13	5.476E-13	6.631E-13	9.662E-14	0.000E+00	0.000E+00
o-210	Ra-226	2.637E-10	3.825E-14	1.103E-13	2.361E-13	5.210E-13	6.309E-13	9.193E-14	0.000E+00	0.000E+00
o-210	Ra-226	5.538E-14	8.035E-18	2.318E-17	4.959E-17	1.094E-16	1.325E-16	1.931E-17	0.000E+00	0.000E+00
o-210	Ra-226	2.640E-13	3.830E-17	1.105E-16	2.364E-16	5.216E-16	6.317E-16	9.204E-17	0.000E+00	0.000E+00
o-210	U-234	1.319E-06	2.425E-20	3.535E-19	3.867E-18	8.131E-17	1.039E-15	4.370E-15	0.000E+00	0.000E+00
o-210	U-234	2.771E-10	5.095E-24	7.425E-23	8.121E-22	1.708E-20	2.183E-19	9.178E-19	0.000E+00	0.000E+00
o-210	U-234	2.637E-10	4.847E-24	7.064E-23	7.727E-22	1.625E-20	2.077E-19	8.733E-19	0.000E+00	0.000E+00
o-210	U-234	5.538E-14	1.018E-27	1.484E-26	1.623E-25	3.413E-24	4.362E-23	1.834E-22	0.000E+00	0.000E+00
o-210	U-234	2.640E-13	4.853E-27	7.073E-26	7.736E-25	1.627E-23	2.079E-22	8.743E-22	0.000E+00	0.000E+00
o-210	U-238	2.111E-09	2.185E-29	6.566E-28	1.545E-26	9.412E-25	3.295E-23	3.484E-22	0.000E+00	0.000E+00
o-210	U-238	4.434E-13	0.000E+00	0.000E+00	0.000E+00	1.977E-28	6.920E-27	7.317E-26	0.000E+00	0.000E+00
o-210	U-238	4.219E-13	0.000E+00	0.000E+00	0.000E+00	1.881E-28	6.584E-27	6.962E-26	0.000E+00	0.000E+00

ummary : GKP Park Ranger - External
ile : C:\USERS\CLAUDE\DOCUMENTS\0 GKP DOSE\RESRAD CW\GKP PARK RANGER - EXTERNAL.RAD

Individual Nuclide Dose Summed Over All Pathways
Parent Nuclide and Branch Fraction Indicated

uclide (j)	Parent (i)	THF(i)	DOSE(j,t), mrem/yr t= 0.000E+00	1.000E+00	3.000E+00	1.000E+01	3.000E+01	1.000E+02	3.000E+02	1.000E+03
ÄÄÄÄÄ	ÄÄÄÄÄÄ	ÄÄÄÄÄÄÄÄÄ	ÄÄÄÄÄÄÄÄÄ	ÄÄÄÄÄÄÄÄÄ	ÄÄÄÄÄÄÄÄÄ	ÄÄÄÄÄÄÄÄÄ	ÄÄÄÄÄÄÄÄÄ	ÄÄÄÄÄÄÄÄÄ	ÄÄÄÄÄÄÄÄÄ	ÄÄÄÄÄÄÄÄÄ
o-210	U-238	8.862E-17	0.000E+00	0.000E+00	0.000E+00	0.000E+00	0.000E+00	1.462E-29	0.000E+00	0.000E+00
o-210	U-238	4.224E-16	0.000E+00	0.000E+00	0.000E+00	0.000E+00	0.000E+00	6.970E-29	0.000E+00	0.000E+00
o-210	U-238	1.317E-06	1.363E-26	4.097E-25	9.638E-24	5.873E-22	2.056E-20	2.174E-19	0.000E+00	0.000E+00
o-210	U-238	2.767E-10	0.000E+00	8.605E-29	2.024E-27	1.234E-25	4.318E-24	4.566E-23	0.000E+00	0.000E+00
o-210	U-238	2.633E-10	0.000E+00	8.187E-29	1.926E-27	1.174E-25	4.108E-24	4.344E-23	0.000E+00	0.000E+00
o-210	U-238	5.530E-14	0.000E+00	0.000E+00	0.000E+00	2.465E-29	8.629E-28	9.125E-27	0.000E+00	0.000E+00
o-210	U-238	2.636E-13	0.000E+00	0.000E+00	0.000E+00	1.175E-28	4.113E-27	4.350E-26	0.000E+00	0.000E+00
o-210	äDOSE(j)		1.935E-10	5.583E-10	1.194E-09	2.636E-09	3.192E-09	4.652E-10	0.000E+00	0.000E+00
a-226	Ra-226	1.899E-08	1.247E-07	1.204E-07	1.122E-07	8.754E-08	4.265E-08	2.659E-09	0.000E+00	0.000E+00
a-226	Ra-226	2.100E-04	1.378E-03	1.331E-03	1.240E-03	9.677E-04	4.714E-04	2.940E-05	0.000E+00	0.000E+00
a-226	äDOSE(j)		1.379E-03	1.331E-03	1.240E-03	9.678E-04	4.715E-04	2.940E-05	0.000E+00	0.000E+00
a-226	Ra-226	2.771E-10	1.820E-09	1.757E-09	1.637E-09	1.277E-09	6.223E-10	3.880E-11	0.000E+00	0.000E+00
a-226	Ra-226	3.989E-12	2.619E-11	2.528E-11	2.356E-11	1.839E-11	8.957E-12	5.585E-13	0.000E+00	0.000E+00
a-226	äDOSE(j)		1.846E-09	1.782E-09	1.660E-09	1.296E-09	6.313E-10	3.936E-11	0.000E+00	0.000E+00
o-210	Ra-226	3.989E-12	4.274E-16	1.233E-15	2.639E-15	5.828E-15	7.077E-15	1.057E-15	0.000E+00	0.000E+00
o-210	Ra-226	3.795E-12	4.066E-16	1.173E-15	2.510E-15	5.544E-15	6.733E-15	1.005E-15	0.000E+00	0.000E+00
o-210	Ra-226	7.972E-16	8.541E-20	2.464E-19	5.273E-19	1.165E-18	1.414E-18	2.112E-19	0.000E+00	0.000E+00
o-210	Ra-226	3.800E-15	4.071E-19	1.175E-18	2.513E-18	5.551E-18	6.742E-18	1.007E-18	0.000E+00	0.000E+00
o-210	U-234	1.899E-08	2.578E-22	3.758E-21	4.111E-20	8.654E-19	1.109E-17	4.779E-17	0.000E+00	0.000E+00
o-210	U-234	3.989E-12	5.416E-26	7.894E-25	8.636E-24	1.818E-22	2.330E-21	1.004E-20	0.000E+00	0.000E+00
o-210	U-234	3.795E-12	5.152E-26	7.510E-25	8.216E-24	1.729E-22	2.217E-21	9.551E-21	0.000E+00	0.000E+00
o-210	U-234	7.972E-16	0.000E+00	1.577E-28	1.726E-27	3.632E-26	4.656E-25	2.006E-24	0.000E+00	0.000E+00
o-210	U-234	3.800E-15	5.159E-29	7.519E-28	8.226E-27	1.731E-25	2.219E-24	9.563E-24	0.000E+00	0.000E+00
o-210	U-238	3.039E-11	0.000E+00	0.000E+00	1.642E-28	1.002E-26	3.516E-25	3.810E-24	0.000E+00	0.000E+00
o-210	U-238	6.383E-15	0.000E+00	0.000E+00	0.000E+00	0.000E+00	7.386E-29	8.003E-28	0.000E+00	0.000E+00
o-210	U-238	6.073E-15	0.000E+00	0.000E+00	0.000E+00	0.000E+00	7.027E-29	7.615E-28	0.000E+00	0.000E+00
o-210	U-238	1.276E-18	0.000E+00	0.000E+00	0.000E+00	0.000E+00	0.000E+00	0.000E+00	0.000E+00	0.000E+00
o-210	U-238	6.080E-18	0.000E+00	0.000E+00	0.000E+00	0.000E+00	0.000E+00	0.000E+00	0.000E+00	0.000E+00
o-210	U-238	1.896E-08	1.449E-28	4.356E-27	1.025E-25	6.250E-24	2.194E-22	2.378E-21	0.000E+00	0.000E+00
o-210	U-238	3.983E-12	0.000E+00	0.000E+00	2.153E-29	1.313E-27	4.609E-26	4.994E-25	0.000E+00	0.000E+00
o-210	U-238	3.789E-12	0.000E+00	0.000E+00	2.048E-29	1.249E-27	4.385E-26	4.752E-25	0.000E+00	0.000E+00
o-210	U-238	7.959E-16	0.000E+00	0.000E+00	0.000E+00	0.000E+00	0.000E+00	9.980E-29	0.000E+00	0.000E+00
o-210	U-238	3.794E-15	0.000E+00	0.000E+00	0.000E+00	0.000E+00	4.390E-29	4.757E-28	0.000E+00	0.000E+00
o-210	äDOSE(j)		8.345E-16	2.408E-15	5.152E-15	1.138E-14	1.383E-14	2.111E-15	0.000E+00	0.000E+00
a-226	Ra-226	1.998E-04	1.136E-03	1.096E-03	1.021E-03	7.962E-04	3.865E-04	2.375E-05	0.000E+00	0.000E+00
a-226	Ra-226	2.637E-10	1.499E-09	1.447E-09	1.348E-09	1.051E-09	5.102E-10	3.135E-11	0.000E+00	0.000E+00
a-226	U-234	1.998E-04	2.861E-13	1.954E-12	9.771E-12	7.174E-11	3.479E-10	5.637E-10	0.000E+00	0.000E+00
a-226	U-234	2.637E-10	3.776E-19	2.579E-18	1.290E-17	9.470E-17	4.593E-16	7.440E-16	0.000E+00	0.000E+00
a-226	U-234	3.795E-12	5.435E-21	3.713E-20	1.856E-19	1.363E-18	6.611E-18	1.071E-17	0.000E+00	0.000E+00
a-226	U-238	3.196E-07	3.214E-22	4.686E-21	5.128E-20	1.080E-18	1.372E-17	4.901E-17	0.000E+00	0.000E+00
a-226	U-238	4.219E-13	4.243E-28	6.185E-27	6.769E-26	1.425E-24	1.810E-23	6.469E-23	0.000E+00	0.000E+00
a-226	U-238	6.073E-15	0.000E+00	8.903E-29	9.744E-28	2.051E-26	2.606E-25	9.311E-25	0.000E+00	0.000E+00
a-226	U-238	1.994E-04	2.006E-19	2.924E-18	3.200E-17	6.737E-16	8.558E-15	3.058E-14	0.000E+00	0.000E+00
a-226	U-238	2.633E-10	2.647E-25	3.860E-24	4.224E-23	8.893E-22	1.130E-20	4.037E-20	0.000E+00	0.000E+00
a-226	U-238	3.789E-12	3.811E-27	5.555E-26	6.080E-25	1.280E-23	1.626E-22	5.810E-22	0.000E+00	0.000E+00
a-226	äDOSE(j)		1.136E-03	1.096E-03	1.021E-03	7.962E-04	3.865E-04	2.375E-05	0.000E+00	0.000E+00

ummary : GKP Park Ranger - External
ile : C:\USERS\CLAUDE\DOCUMENTS\0 GKP DOSE\RESRAD CW\GKP PARK RANGER - EXTERNAL.RAD

Individual Nuclide Dose Summed Over All Pathways
Parent Nuclide and Branch Fraction Indicated

uclide (j)	Parent (i)	THF(i)	DOSE(j,t), mrem/yr t= 0.000E+00	1.000E+00	3.000E+00	1.000E+01	3.000E+01	1.000E+02	3.000E+02	1.000E+03
ÄÄÄÄÄÄ	ÄÄÄÄÄÄÄ	ÄÄÄÄÄÄÄÄÄ	ÄÄÄÄÄÄÄÄÄ	ÄÄÄÄÄÄÄÄÄ	ÄÄÄÄÄÄÄÄÄ	ÄÄÄÄÄÄÄÄÄ	ÄÄÄÄÄÄÄÄÄ	ÄÄÄÄÄÄÄÄÄ	ÄÄÄÄÄÄÄÄÄ	ÄÄÄÄÄÄÄÄÄ
a-226	Ra-226	3.795E-12	2.158E-11	2.083E-11	1.941E-11	1.513E-11	7.344E-12	4.512E-13	0.000E+00	0.000E+00
a-226	Ra-226	4.196E-08	2.386E-07	2.303E-07	2.145E-07	1.672E-07	8.118E-08	4.988E-09	0.000E+00	0.000E+00
a-226	äDOSE(j)		2.386E-07	2.303E-07	2.145E-07	1.672E-07	8.119E-08	4.988E-09	0.000E+00	0.000E+00
a-226	Ra-226	5.538E-14	3.149E-13	3.040E-13	2.832E-13	2.207E-13	1.072E-13	6.584E-15	0.000E+00	0.000E+00
a-226	Ra-226	7.972E-16	4.533E-15	4.375E-15	4.076E-15	3.177E-15	1.542E-15	9.477E-17	0.000E+00	0.000E+00
a-226	äDOSE(j)		3.194E-13	3.083E-13	2.872E-13	2.239E-13	1.087E-13	6.679E-15	0.000E+00	0.000E+00
a-226	Ra-226	2.000E-07	6.150E-09	5.947E-09	5.560E-09	4.391E-09	2.221E-09	1.674E-10	0.000E+00	0.000E+00
a-226	Ra-226	2.640E-13	8.118E-15	7.850E-15	7.339E-15	5.796E-15	2.932E-15	2.210E-16	0.000E+00	0.000E+00
a-226	U-234	2.000E-07	1.550E-18	1.060E-17	5.319E-17	3.956E-16	1.999E-15	3.973E-15	0.000E+00	0.000E+00
a-226	U-234	2.640E-13	2.046E-24	1.399E-23	7.022E-23	5.223E-22	2.639E-21	5.244E-21	0.000E+00	0.000E+00
a-226	U-234	3.800E-15	2.944E-26	2.014E-25	1.011E-24	7.517E-24	3.799E-23	7.549E-23	0.000E+00	0.000E+00
a-226	U-238	3.200E-10	1.739E-27	2.542E-26	2.792E-25	5.955E-24	7.881E-23	3.454E-22	0.000E+00	0.000E+00
a-226	U-238	4.224E-16	0.000E+00	0.000E+00	0.000E+00	0.000E+00	1.039E-28	4.557E-28	0.000E+00	0.000E+00
a-226	U-238	6.080E-18	0.000E+00	0.000E+00	0.000E+00	0.000E+00	0.000E+00	0.000E+00	0.000E+00	0.000E+00
a-226	U-238	1.997E-07	1.087E-24	1.586E-23	1.742E-22	3.716E-21	4.918E-20	2.155E-19	0.000E+00	0.000E+00
a-226	U-238	2.636E-13	0.000E+00	2.092E-29	2.297E-28	4.900E-27	6.492E-26	2.845E-25	0.000E+00	0.000E+00
a-226	U-238	3.794E-15	0.000E+00	0.000E+00	0.000E+00	7.052E-29	9.335E-28	4.093E-27	0.000E+00	0.000E+00
a-226	äDOSE(j)		6.150E-09	5.947E-09	5.560E-09	4.391E-09	2.221E-09	1.674E-10	0.000E+00	0.000E+00
a-226	Ra-226	3.800E-15	1.169E-16	1.130E-16	1.056E-16	8.342E-17	4.220E-17	3.180E-18	0.000E+00	0.000E+00
n-232	Th-232	1.000E+00	2.505E-05	2.504E-05	2.501E-05	2.492E-05	2.456E-05	2.033E-05	0.000E+00	0.000E+00
a-228	Th-232	1.000E+00	1.378E-02	3.860E-02	7.782E-02	1.471E-01	1.694E-01	1.016E-01	0.000E+00	0.000E+00
n-228	Th-232	1.000E+00	2.443E-03	1.481E-02	5.724E-02	1.940E-01	2.627E-01	1.541E-01	0.000E+00	0.000E+00
-234	U-234	9.996E-01	1.101E-04	1.052E-04	9.620E-05	7.027E-05	2.854E-05	1.073E-06	0.000E+00	0.000E+00
-234	U-234	1.319E-06	1.453E-10	1.389E-10	1.270E-10	9.275E-11	3.768E-11	1.417E-12	0.000E+00	0.000E+00
-234	U-238	1.599E-03	2.467E-13	7.113E-13	1.519E-12	3.332E-12	3.932E-12	4.874E-13	0.000E+00	0.000E+00
-234	U-238	2.111E-09	3.257E-19	9.389E-19	2.006E-18	4.398E-18	5.191E-18	6.433E-19	0.000E+00	0.000E+00
-234	U-238	3.039E-11	4.688E-21	1.351E-20	2.887E-20	6.331E-20	7.471E-20	9.260E-21	0.000E+00	0.000E+00
-234	U-238	3.359E-07	5.182E-17	1.494E-16	3.192E-16	6.998E-16	8.260E-16	1.024E-16	0.000E+00	0.000E+00
-234	U-238	4.434E-13	6.841E-23	1.972E-22	4.213E-22	9.238E-22	1.090E-21	1.351E-22	0.000E+00	0.000E+00
-234	U-238	6.383E-15	9.847E-25	2.839E-24	6.064E-24	1.330E-23	1.569E-23	1.945E-24	0.000E+00	0.000E+00
-234	U-238	3.196E-07	4.931E-17	1.421E-16	3.037E-16	6.658E-16	7.858E-16	9.740E-17	0.000E+00	0.000E+00
-234	U-238	4.219E-13	6.508E-23	1.876E-22	4.008E-22	8.789E-22	1.037E-21	1.286E-22	0.000E+00	0.000E+00
-234	U-238	6.073E-15	9.368E-25	2.701E-24	5.769E-24	1.265E-23	1.493E-23	1.851E-24	0.000E+00	0.000E+00
-234	U-238	6.713E-11	1.036E-20	2.986E-20	6.378E-20	1.399E-19	1.651E-19	2.046E-20	0.000E+00	0.000E+00
-234	U-238	8.862E-17	1.367E-26	3.941E-26	8.419E-26	1.846E-25	2.179E-25	2.700E-26	0.000E+00	0.000E+00
-234	U-238	1.276E-18	1.968E-28	5.673E-28	1.212E-27	2.657E-27	3.136E-27	3.887E-28	0.000E+00	0.000E+00
-234	U-238	3.200E-10	4.937E-20	1.423E-19	3.040E-19	6.666E-19	7.868E-19	9.751E-20	0.000E+00	0.000E+00
-234	U-238	4.224E-16	6.516E-26	1.879E-25	4.013E-25	8.800E-25	1.039E-24	1.287E-25	0.000E+00	0.000E+00
-234	U-238	6.080E-18	9.380E-28	2.704E-27	5.776E-27	1.267E-26	1.495E-26	1.853E-27	0.000E+00	0.000E+00
-234	U-238	9.980E-01	1.540E-10	4.438E-10	9.482E-10	2.079E-09	2.454E-09	3.041E-10	0.000E+00	0.000E+00
-234	U-238	1.317E-06	2.032E-16	5.859E-16	1.252E-15	2.744E-15	3.239E-15	4.014E-16	0.000E+00	0.000E+00
-234	U-238	1.896E-08	2.925E-18	8.433E-18	1.802E-17	3.950E-17	4.662E-17	5.778E-18	0.000E+00	0.000E+00

ummary : GKP Park Ranger - External
ile : C:\USERS\CLAUDE\DOCUMENTS\0 GKP DOSE\RESRAD CW\GKP PARK RANGER - EXTERNAL.RAD

Individual Nuclide Dose Summed Over All Pathways
Parent Nuclide and Branch Fraction Indicated

uclide	Parent	THF(i)	DOSE(j,t), mrem/yr							
(j)	(i)	t=	0.000E+00	1.000E+00	3.000E+00	1.000E+01	3.000E+01	1.000E+02	3.000E+02	1.000E+03
ÄÄÄÄÄ	ÄÄÄÄÄÄ	ÄÄÄÄÄÄÄÄÄ	ÄÄÄÄÄÄÄÄÄ	ÄÄÄÄÄÄÄÄÄ	ÄÄÄÄÄÄÄÄÄ	ÄÄÄÄÄÄÄÄÄ	ÄÄÄÄÄÄÄÄÄ	ÄÄÄÄÄÄÄÄÄ	ÄÄÄÄÄÄÄÄÄ	ÄÄÄÄÄÄÄÄÄ
-234	U-238	2.096E-04	3.234E-14	9.323E-14	1.992E-13	4.367E-13	5.154E-13	6.300E-14	0.000E+00	0.000E+00
-234	U-238	2.767E-10	4.269E-20	1.231E-19	2.629E-19	5.764E-19	6.803E-19	8.432E-20	0.000E+00	0.000E+00
-234	U-238	3.983E-12	6.144E-22	1.771E-21	3.784E-21	8.297E-21	9.793E-21	1.214E-21	0.000E+00	0.000E+00
-234	U-238	1.994E-04	3.077E-14	8.870E-14	1.895E-13	4.155E-13	4.904E-13	6.078E-14	0.000E+00	0.000E+00
-234	U-238	2.633E-10	4.061E-20	1.171E-19	2.501E-19	5.484E-19	6.473E-19	8.022E-20	0.000E+00	0.000E+00
-234	U-238	3.789E-12	5.846E-22	1.685E-21	3.600E-21	7.894E-21	9.317E-21	1.155E-21	0.000E+00	0.000E+00
-234	U-238	4.189E-08	6.463E-18	1.863E-17	3.980E-17	8.727E-17	1.030E-16	1.277E-17	0.000E+00	0.000E+00
-234	U-238	5.530E-14	8.531E-24	2.459E-23	5.254E-23	1.152E-22	1.360E-22	1.685E-23	0.000E+00	0.000E+00
-234	U-238	7.959E-16	1.228E-25	3.540E-25	7.562E-25	1.658E-24	1.957E-24	2.425E-25	0.000E+00	0.000E+00
-234	U-238	1.997E-07	3.080E-17	8.881E-17	1.897E-16	4.160E-16	4.910E-16	6.085E-17	0.000E+00	0.000E+00
-234	U-238	2.636E-13	4.066E-23	1.172E-22	2.504E-22	5.491E-22	6.481E-22	8.032E-23	0.000E+00	0.000E+00
-234	U-238	3.794E-15	5.853E-25	1.687E-24	3.604E-24	7.904E-24	9.328E-24	1.156E-24	0.000E+00	0.000E+00
-234	äDOSE(j)		1.101E-04	1.052E-04	9.621E-05	7.027E-05	2.854E-05	1.074E-06	0.000E+00	0.000E+00
a-230	U-234	9.996E-01	1.507E-09	4.431E-09	9.892E-09	2.549E-08	4.982E-08	5.262E-08	0.000E+00	0.000E+00
a-230	U-234	1.319E-06	1.989E-15	5.849E-15	1.306E-14	3.365E-14	6.576E-14	6.946E-14	0.000E+00	0.000E+00
a-230	U-234	1.899E-08	2.863E-17	8.419E-17	1.880E-16	4.844E-16	9.465E-16	9.998E-16	0.000E+00	0.000E+00
a-230	U-234	2.100E-04	3.165E-13	9.307E-13	2.078E-12	5.355E-12	1.046E-11	1.105E-11	0.000E+00	0.000E+00
a-230	U-234	2.771E-10	4.178E-19	1.229E-18	2.743E-18	7.068E-18	1.381E-17	1.459E-17	0.000E+00	0.000E+00
a-230	U-234	3.989E-12	6.014E-21	1.768E-20	3.948E-20	1.017E-19	1.988E-19	2.100E-19	0.000E+00	0.000E+00
a-230	U-234	1.998E-04	3.012E-13	8.855E-13	1.977E-12	5.095E-12	9.955E-12	1.052E-11	0.000E+00	0.000E+00
a-230	U-234	2.637E-10	3.975E-19	1.169E-18	2.610E-18	6.725E-18	1.314E-17	1.388E-17	0.000E+00	0.000E+00
a-230	U-234	3.795E-12	5.722E-21	1.682E-20	3.756E-20	9.680E-20	1.891E-19	1.998E-19	0.000E+00	0.000E+00
a-230	U-234	4.196E-08	6.326E-17	1.860E-16	4.152E-16	1.070E-15	2.091E-15	2.209E-15	0.000E+00	0.000E+00
a-230	U-234	5.538E-14	8.350E-23	2.455E-22	5.481E-22	1.413E-21	2.760E-21	2.916E-21	0.000E+00	0.000E+00
a-230	U-234	7.972E-16	1.202E-24	3.534E-24	7.890E-24	2.033E-23	3.973E-23	4.197E-23	0.000E+00	0.000E+00
a-230	U-234	2.000E-07	3.015E-16	8.866E-16	1.979E-15	5.101E-15	9.967E-15	1.053E-14	0.000E+00	0.000E+00
a-230	U-234	2.640E-13	3.980E-22	1.170E-21	2.613E-21	6.733E-21	1.316E-20	1.390E-20	0.000E+00	0.000E+00
a-230	U-234	3.800E-15	5.729E-24	1.684E-23	3.761E-23	9.691E-23	1.894E-22	2.000E-22	0.000E+00	0.000E+00
a-230	U-238	1.599E-03	2.253E-18	1.537E-17	7.664E-17	5.583E-16	2.683E-15	5.093E-15	0.000E+00	0.000E+00
a-230	U-238	2.111E-09	2.973E-24	2.028E-23	1.012E-22	7.369E-22	3.542E-21	6.722E-21	0.000E+00	0.000E+00
a-230	U-238	3.039E-11	4.280E-26	2.920E-25	1.456E-24	1.061E-23	5.098E-23	9.676E-23	0.000E+00	0.000E+00
a-230	U-238	3.359E-07	4.731E-22	3.228E-21	1.610E-20	1.173E-19	5.636E-19	1.070E-18	0.000E+00	0.000E+00
a-230	U-238	4.434E-13	6.245E-28	4.261E-27	2.125E-26	1.548E-25	7.439E-25	1.412E-24	0.000E+00	0.000E+00
a-230	U-238	6.383E-15	0.000E+00	6.133E-29	3.059E-28	2.228E-27	1.071E-26	2.032E-26	0.000E+00	0.000E+00
a-230	U-238	3.196E-07	4.501E-22	3.071E-21	1.532E-20	1.116E-19	5.362E-19	1.018E-18	0.000E+00	0.000E+00
a-230	U-238	4.219E-13	5.942E-28	4.054E-27	2.022E-26	1.473E-25	7.078E-25	1.343E-24	0.000E+00	0.000E+00
a-230	U-238	6.073E-15	0.000E+00	5.835E-29	2.910E-28	2.120E-27	1.019E-26	1.934E-26	0.000E+00	0.000E+00
a-230	U-238	6.713E-11	9.455E-26	6.450E-25	3.217E-24	2.343E-23	1.126E-22	2.138E-22	0.000E+00	0.000E+00
a-230	U-238	8.862E-17	0.000E+00	0.000E+00	0.000E+00	3.093E-29	1.487E-28	2.822E-28	0.000E+00	0.000E+00
a-230	U-238	1.276E-18	0.000E+00	0.000E+00	0.000E+00	0.000E+00	0.000E+00	0.000E+00	0.000E+00	0.000E+00
a-230	U-238	3.200E-10	4.507E-25	3.075E-24	1.533E-23	1.117E-22	5.368E-22	1.019E-21	0.000E+00	0.000E+00
a-230	U-238	4.224E-16	0.000E+00	0.000E+00	2.024E-29	1.474E-28	7.086E-28	1.345E-27	0.000E+00	0.000E+00
a-230	U-238	6.080E-18	0.000E+00	0.000E+00	0.000E+00	0.000E+00	0.000E+00	1.936E-29	0.000E+00	0.000E+00
a-230	U-238	9.980E-01	1.406E-15	9.589E-15	4.782E-14	3.484E-13	1.674E-12	3.178E-12	0.000E+00	0.000E+00
a-230	U-238	1.317E-06	1.855E-21	1.266E-20	6.313E-20	4.598E-19	2.210E-18	4.195E-18	0.000E+00	0.000E+00
a-230	U-238	1.896E-08	2.671E-23	1.822E-22	9.087E-22	6.619E-21	3.181E-20	6.038E-20	0.000E+00	0.000E+00
a-230	U-238	2.096E-04	2.952E-19	2.014E-18	1.005E-17	7.317E-17	3.517E-16	6.675E-16	0.000E+00	0.000E+00
a-230	U-238	2.767E-10	3.897E-25	2.659E-24	1.326E-23	9.659E-23	4.642E-22	8.811E-22	0.000E+00	0.000E+00

ummary : GKP Park Ranger - External
ile : C:\USERS\CLAUDE\DOCUMENTS\0 GKP DOSE\RESRAD CW\GKP PARK RANGER - EXTERNAL.RAD

Individual Nuclide Dose Summed Over All Pathways
Parent Nuclide and Branch Fraction Indicated

uclide (j)	Parent (i)	THF(i)	DOSE(j,t), mrem/yr t= 0.000E+00	1.000E+00	3.000E+00	1.000E+01	3.000E+01	1.000E+02	3.000E+02	1.000E+03
ÄÄÄÄÄÄ	ÄÄÄÄÄÄÄ	ÄÄÄÄÄÄÄÄÄ	ÄÄÄÄÄÄÄÄÄ	ÄÄÄÄÄÄÄÄÄ	ÄÄÄÄÄÄÄÄÄ	ÄÄÄÄÄÄÄÄÄ	ÄÄÄÄÄÄÄÄÄ	ÄÄÄÄÄÄÄÄÄ	ÄÄÄÄÄÄÄÄÄ	ÄÄÄÄÄÄÄÄÄ
n-230	U-238	3.983E-12	5.609E-27	3.827E-26	1.909E-25	1.390E-24	6.682E-24	1.260E-23	0.000E+00	0.000E+00
n-230	U-238	1.994E-04	2.809E-19	1.916E-18	9.557E-18	6.962E-17	3.346E-16	6.351E-16	0.000E+00	0.000E+00
n-230	U-238	2.633E-10	3.708E-25	2.529E-24	1.262E-23	9.189E-23	4.416E-22	8.383E-22	0.000E+00	0.000E+00
n-230	U-238	3.789E-12	5.337E-27	3.641E-26	1.816E-25	1.323E-24	6.357E-24	1.207E-23	0.000E+00	0.000E+00
n-230	U-238	4.189E-08	5.900E-23	4.025E-22	2.007E-21	1.462E-20	7.028E-20	1.334E-19	0.000E+00	0.000E+00
n-230	U-238	5.530E-14	7.788E-29	5.313E-28	2.650E-27	1.930E-26	9.277E-26	1.761E-25	0.000E+00	0.000E+00
n-230	U-238	7.959E-16	0.000E+00	0.000E+00	3.814E-29	2.778E-28	1.335E-27	2.534E-27	0.000E+00	0.000E+00
n-230	U-238	1.997E-07	2.812E-22	1.919E-21	9.569E-21	6.970E-20	3.350E-19	6.358E-19	0.000E+00	0.000E+00
n-230	U-238	2.636E-13	3.712E-28	2.532E-27	1.263E-26	9.201E-26	4.422E-25	8.393E-25	0.000E+00	0.000E+00
n-230	U-238	3.794E-15	0.000E+00	3.645E-29	1.818E-28	1.324E-27	6.365E-27	1.208E-26	0.000E+00	0.000E+00
n-230	äDOSE(j)		1.508E-09	4.433E-09	9.897E-09	2.550E-08	4.984E-08	5.265E-08	0.000E+00	0.000E+00
-234	U-234	1.899E-08	2.091E-12	1.999E-12	1.828E-12	1.335E-12	5.423E-13	2.039E-14	0.000E+00	0.000E+00
-234	U-234	2.100E-04	2.312E-08	2.210E-08	2.021E-08	1.476E-08	5.995E-09	2.255E-10	0.000E+00	0.000E+00
-234	äDOSE(j)		2.312E-08	2.211E-08	2.021E-08	1.476E-08	5.996E-09	2.255E-10	0.000E+00	0.000E+00
a-226	U-234	2.100E-04	3.472E-13	2.372E-12	1.186E-11	8.720E-11	4.244E-10	6.977E-10	0.000E+00	0.000E+00
a-226	U-234	3.989E-12	6.597E-21	4.506E-20	2.254E-19	1.657E-18	8.064E-18	1.326E-17	0.000E+00	0.000E+00
a-226	U-238	3.359E-07	3.901E-22	5.688E-21	6.227E-20	1.312E-18	1.673E-17	6.066E-17	0.000E+00	0.000E+00
a-226	U-238	4.434E-13	5.149E-28	7.508E-27	8.219E-26	1.732E-24	2.208E-23	8.007E-23	0.000E+00	0.000E+00
a-226	U-238	6.383E-15	0.000E+00	1.081E-28	1.183E-27	2.494E-26	3.178E-25	1.153E-24	0.000E+00	0.000E+00
a-226	U-238	2.096E-04	2.434E-19	3.549E-18	3.885E-17	8.189E-16	1.044E-14	3.785E-14	0.000E+00	0.000E+00
a-226	U-238	2.767E-10	3.213E-25	4.685E-24	5.129E-23	1.081E-21	1.378E-20	4.996E-20	0.000E+00	0.000E+00
a-226	U-238	3.983E-12	4.625E-27	6.743E-26	7.382E-25	1.556E-23	1.983E-22	7.192E-22	0.000E+00	0.000E+00
a-226	äDOSE(j)		3.472E-13	2.372E-12	1.186E-11	8.720E-11	4.244E-10	6.977E-10	0.000E+00	0.000E+00
-234	U-234	2.771E-10	3.051E-14	2.918E-14	2.667E-14	1.948E-14	7.914E-15	2.976E-16	0.000E+00	0.000E+00
-234	U-234	3.989E-12	4.392E-16	4.200E-16	3.839E-16	2.804E-16	1.139E-16	4.284E-18	0.000E+00	0.000E+00
-234	äDOSE(j)		3.095E-14	2.960E-14	2.706E-14	1.976E-14	8.028E-15	3.019E-16	0.000E+00	0.000E+00
a-226	U-234	2.771E-10	4.583E-19	3.131E-18	1.566E-17	1.151E-16	5.602E-16	9.210E-16	0.000E+00	0.000E+00
-234	U-234	1.998E-04	2.199E-08	2.103E-08	1.923E-08	1.404E-08	5.704E-09	2.145E-10	0.000E+00	0.000E+00
-234	U-234	2.637E-10	2.903E-14	2.776E-14	2.538E-14	1.854E-14	7.529E-15	2.831E-16	0.000E+00	0.000E+00
-234	äDOSE(j)		2.199E-08	2.103E-08	1.923E-08	1.404E-08	5.704E-09	2.145E-10	0.000E+00	0.000E+00
-234	U-234	3.795E-12	4.179E-16	3.996E-16	3.653E-16	2.668E-16	1.084E-16	4.076E-18	0.000E+00	0.000E+00
-234	U-234	4.196E-08	4.620E-12	4.417E-12	4.038E-12	2.949E-12	1.198E-12	4.506E-14	0.000E+00	0.000E+00
-234	äDOSE(j)		4.620E-12	4.418E-12	4.039E-12	2.950E-12	1.198E-12	4.506E-14	0.000E+00	0.000E+00
a-226	U-234	4.196E-08	6.008E-17	4.104E-16	2.052E-15	1.507E-14	7.308E-14	1.184E-13	0.000E+00	0.000E+00
a-226	U-234	7.972E-16	1.142E-24	7.797E-24	3.899E-23	2.863E-22	1.389E-21	2.249E-21	0.000E+00	0.000E+00
a-226	U-238	6.713E-11	6.750E-26	9.842E-25	1.077E-23	2.268E-22	2.881E-21	1.029E-20	0.000E+00	0.000E+00
a-226	U-238	8.862E-17	0.000E+00	0.000E+00	1.422E-29	2.993E-28	3.802E-27	1.359E-26	0.000E+00	0.000E+00
a-226	U-238	1.276E-18	0.000E+00	0.000E+00	0.000E+00	0.000E+00	5.473E-29	1.956E-28	0.000E+00	0.000E+00
a-226	U-238	4.189E-08	4.212E-23	6.141E-22	6.721E-21	1.415E-19	1.798E-18	6.423E-18	0.000E+00	0.000E+00
a-226	U-238	5.530E-14	5.560E-29	8.106E-28	8.872E-27	1.868E-25	2.373E-24	8.478E-24	0.000E+00	0.000E+00
a-226	U-238	7.959E-16	0.000E+00	0.000E+00	1.277E-28	2.689E-27	3.415E-26	1.220E-25	0.000E+00	0.000E+00
a-226	äDOSE(j)		6.008E-17	4.104E-16	2.052E-15	1.507E-14	7.308E-14	1.184E-13	0.000E+00	0.000E+00

ummary : GKP Park Ranger - External
ile : C:\USERS\CLAUDE\DOCUMENTS\0 GKP DOSE\RESRAD CW\GKP PARK RANGER - EXTERNAL.RAD

Individual Nuclide Dose Summed Over All Pathways
Parent Nuclide and Branch Fraction Indicated

uclide (j)	Parent (i)	THF(i)	DOSE(j,t), mrem/yr t= 0.000E+00	1.000E+00	3.000E+00	1.000E+01	3.000E+01	1.000E+02	3.000E+02	1.000E+03
ÄÄÄÄÄÄ	ÄÄÄÄÄÄÄ	ÄÄÄÄÄÄÄÄÄ	ÄÄÄÄÄÄÄÄÄ	ÄÄÄÄÄÄÄÄÄ	ÄÄÄÄÄÄÄÄÄ	ÄÄÄÄÄÄÄÄÄ	ÄÄÄÄÄÄÄÄÄ	ÄÄÄÄÄÄÄÄÄ	ÄÄÄÄÄÄÄÄÄ	ÄÄÄÄÄÄÄÄÄ
-234	U-234	5.538E-14	6.098E-18	5.831E-18	5.330E-18	3.893E-18	1.581E-18	5.947E-20	0.000E+00	0.000E+00
-234	U-234	7.972E-16	8.777E-20	8.393E-20	7.673E-20	5.604E-20	2.276E-20	8.561E-22	0.000E+00	0.000E+00
-234	äDOSE(j)		6.186E-18	5.915E-18	5.407E-18	3.949E-18	1.604E-18	6.033E-20	0.000E+00	0.000E+00
a-226	U-234	5.538E-14	7.931E-23	5.417E-22	2.709E-21	1.989E-20	9.647E-20	1.563E-19	0.000E+00	0.000E+00
-234	U-234	2.000E-07	2.202E-11	2.105E-11	1.925E-11	1.406E-11	5.711E-12	2.148E-13	0.000E+00	0.000E+00
-234	U-234	2.640E-13	2.907E-17	2.779E-17	2.541E-17	1.856E-17	7.538E-18	2.835E-19	0.000E+00	0.000E+00
-234	äDOSE(j)		2.202E-11	2.105E-11	1.925E-11	1.406E-11	5.711E-12	2.148E-13	0.000E+00	0.000E+00
-234	U-234	3.800E-15	4.184E-19	4.000E-19	3.657E-19	2.671E-19	1.085E-19	4.081E-21	0.000E+00	0.000E+00
-235	U-235	9.835E-01	1.178E-02	1.125E-02	1.027E-02	7.445E-03	2.950E-03	9.209E-05	0.000E+00	0.000E+00
-235	U-235	2.722E-03	3.260E-05	3.114E-05	2.842E-05	2.060E-05	8.164E-06	2.549E-07	0.000E+00	0.000E+00
-235	äDOSE(j)		1.181E-02	1.128E-02	1.030E-02	7.465E-03	2.958E-03	9.235E-05	0.000E+00	0.000E+00
a-231	U-235	9.835E-01	2.994E-08	8.619E-08	1.836E-07	3.980E-07	4.523E-07	4.358E-08	0.000E+00	0.000E+00
a-231	U-235	2.722E-03	8.285E-11	2.385E-10	5.080E-10	1.102E-09	1.252E-09	1.206E-10	0.000E+00	0.000E+00
a-231	U-235	1.376E-02	4.189E-10	1.206E-09	2.568E-09	5.569E-09	6.329E-09	6.097E-10	0.000E+00	0.000E+00
a-231	U-235	3.809E-05	1.159E-12	3.338E-12	7.109E-12	1.541E-11	1.752E-11	1.688E-12	0.000E+00	0.000E+00
a-231	U-235	8.257E-07	2.513E-14	7.236E-14	1.541E-13	3.342E-13	3.798E-13	3.659E-14	0.000E+00	0.000E+00
a-231	U-235	2.285E-09	6.956E-17	2.003E-16	4.265E-16	9.249E-16	1.051E-15	1.013E-16	0.000E+00	0.000E+00
a-231	äDOSE(j)		3.044E-08	8.764E-08	1.866E-07	4.047E-07	4.599E-07	4.431E-08	0.000E+00	0.000E+00
c-227	U-235	9.835E-01	3.270E-09	2.141E-08	9.736E-08	5.150E-07	1.067E-06	1.376E-07	0.000E+00	0.000E+00
c-227	U-235	2.722E-03	9.162E-12	5.998E-11	2.728E-10	1.443E-09	2.989E-09	3.851E-10	0.000E+00	0.000E+00
c-227	U-235	1.376E-02	3.837E-11	2.513E-10	1.143E-09	6.047E-09	1.254E-08	1.628E-09	0.000E+00	0.000E+00
c-227	äDOSE(j)		4.754E-11	3.112E-10	1.416E-09	7.490E-09	1.553E-08	2.013E-09	0.000E+00	0.000E+00
-235	U-235	1.376E-02	1.648E-04	1.574E-04	1.437E-04	1.042E-04	4.127E-05	1.289E-06	0.000E+00	0.000E+00
-235	U-235	3.809E-05	4.562E-07	4.358E-07	3.976E-07	2.883E-07	1.142E-07	3.566E-09	0.000E+00	0.000E+00
-235	äDOSE(j)		1.653E-04	1.579E-04	1.441E-04	1.045E-04	4.139E-05	1.292E-06	0.000E+00	0.000E+00
c-227	U-235	3.809E-05	1.078E-13	7.057E-13	3.210E-12	1.698E-11	3.520E-11	4.563E-12	0.000E+00	0.000E+00
c-227	U-235	8.257E-07	1.045E-15	6.841E-15	3.111E-14	1.644E-13	3.393E-13	4.318E-14	0.000E+00	0.000E+00
c-227	äDOSE(j)		1.088E-13	7.125E-13	3.241E-12	1.715E-11	3.554E-11	4.606E-12	0.000E+00	0.000E+00
-235	U-235	8.257E-07	9.890E-09	9.447E-09	8.620E-09	6.250E-09	2.476E-09	7.732E-11	0.000E+00	0.000E+00
-235	U-235	2.285E-09	2.737E-11	2.615E-11	2.386E-11	1.730E-11	6.854E-12	2.140E-13	0.000E+00	0.000E+00
-235	äDOSE(j)		9.917E-09	9.474E-09	8.644E-09	6.268E-09	2.483E-09	7.754E-11	0.000E+00	0.000E+00
c-227	U-235	2.285E-09	2.987E-18	1.955E-17	8.890E-17	4.697E-16	9.691E-16	1.230E-16	0.000E+00	0.000E+00
-238	U-238	5.450E-07	1.621E-11	1.551E-11	1.419E-11	1.042E-11	4.309E-12	1.928E-13	0.000E+00	0.000E+00
-238	U-238	1.599E-03	4.335E-03	4.135E-03	3.763E-03	2.703E-03	1.039E-03	2.832E-05	0.000E+00	0.000E+00
-238	äDOSE(j)		4.335E-03	4.135E-03	3.763E-03	2.703E-03	1.039E-03	2.832E-05	0.000E+00	0.000E+00
-238	U-238	2.111E-09	5.722E-09	5.459E-09	4.968E-09	3.568E-09	1.372E-09	3.739E-11	0.000E+00	0.000E+00

ummary : GKP Park Ranger - External
ile : C:\USERS\CLAUDE\DOCUMENTS\0 GKP DOSE\RESRAD CW\GKP PARK RANGER - EXTERNAL.RAD

Individual Nuclide Dose Summed Over All Pathways
Parent Nuclide and Branch Fraction Indicated

uclide (j)	Parent (i)	THF(i)	DOSE(j,t), mrem/yr t= 0.000E+00	1.000E+00	3.000E+00	1.000E+01	3.000E+01	1.000E+02	3.000E+02	1.000E+03
ÄÄÄÄÄ	ÄÄÄÄÄÄ	ÄÄÄÄÄÄÄÄ	ÄÄÄÄÄÄÄÄ	ÄÄÄÄÄÄÄÄ	ÄÄÄÄÄÄÄÄ	ÄÄÄÄÄÄÄÄ	ÄÄÄÄÄÄÄÄ	ÄÄÄÄÄÄÄÄ	ÄÄÄÄÄÄÄÄ	ÄÄÄÄÄÄÄÄ
-238	U-238	3.039E-11	8.236E-11	7.857E-11	7.150E-11	5.136E-11	1.975E-11	5.381E-13	0.000E+00	0.000E+00
-238	äDOSE(j)		5.804E-09	5.537E-09	5.039E-09	3.619E-09	1.392E-09	3.792E-11	0.000E+00	0.000E+00
-238	U-238	3.359E-07	9.105E-07	8.686E-07	7.905E-07	5.678E-07	2.183E-07	5.949E-09	0.000E+00	0.000E+00
-238	U-238	4.434E-13	1.202E-12	1.147E-12	1.043E-12	7.494E-13	2.881E-13	7.853E-15	0.000E+00	0.000E+00
-238	äDOSE(j)		9.105E-07	8.686E-07	7.905E-07	5.678E-07	2.183E-07	5.949E-09	0.000E+00	0.000E+00
-238	U-238	6.383E-15	1.730E-14	1.650E-14	1.502E-14	1.079E-14	4.148E-15	1.130E-16	0.000E+00	0.000E+00
-238	U-238	3.196E-07	8.662E-07	8.264E-07	7.521E-07	5.402E-07	2.077E-07	5.660E-09	0.000E+00	0.000E+00
-238	äDOSE(j)		8.662E-07	8.264E-07	7.521E-07	5.402E-07	2.077E-07	5.660E-09	0.000E+00	0.000E+00
-238	U-238	4.219E-13	1.143E-12	1.091E-12	9.927E-13	7.130E-13	2.742E-13	7.471E-15	0.000E+00	0.000E+00
-238	U-238	6.073E-15	1.646E-14	1.570E-14	1.429E-14	1.026E-14	3.946E-15	1.075E-16	0.000E+00	0.000E+00
-238	äDOSE(j)		1.160E-12	1.107E-12	1.007E-12	7.233E-13	2.781E-13	7.579E-15	0.000E+00	0.000E+00
-238	U-238	6.713E-11	1.819E-10	1.736E-10	1.580E-10	1.135E-10	4.362E-11	1.189E-12	0.000E+00	0.000E+00
-238	U-238	8.862E-17	2.402E-16	2.291E-16	2.085E-16	1.498E-16	5.758E-17	1.569E-18	0.000E+00	0.000E+00
-238	äDOSE(j)		1.819E-10	1.736E-10	1.580E-10	1.135E-10	4.362E-11	1.189E-12	0.000E+00	0.000E+00
-238	U-238	1.276E-18	3.457E-18	3.298E-18	3.001E-18	2.156E-18	8.289E-19	2.259E-20	0.000E+00	0.000E+00
-238	U-238	3.200E-10	8.673E-10	8.274E-10	7.530E-10	5.408E-10	2.079E-10	5.667E-12	0.000E+00	0.000E+00
-238	äDOSE(j)		8.673E-10	8.274E-10	7.530E-10	5.408E-10	2.079E-10	5.667E-12	0.000E+00	0.000E+00
-238	U-238	4.224E-16	1.145E-15	1.092E-15	9.939E-16	7.139E-16	2.745E-16	7.480E-18	0.000E+00	0.000E+00
-238	U-238	6.080E-18	1.648E-17	1.572E-17	1.431E-17	1.028E-17	3.951E-18	1.077E-19	0.000E+00	0.000E+00
-238	äDOSE(j)		1.161E-15	1.108E-15	1.008E-15	7.242E-16	2.784E-16	7.588E-18	0.000E+00	0.000E+00
-238	U-238	9.980E-01	2.749E-02	2.624E-02	2.391E-02	1.725E-02	6.731E-03	2.001E-04	0.000E+00	0.000E+00
-238	U-238	1.317E-06	3.628E-08	3.463E-08	3.156E-08	2.277E-08	8.885E-09	2.642E-10	0.000E+00	0.000E+00
-238	äDOSE(j)		2.749E-02	2.624E-02	2.391E-02	1.725E-02	6.731E-03	2.001E-04	0.000E+00	0.000E+00
-238	U-238	1.896E-08	5.222E-10	4.985E-10	4.542E-10	3.277E-10	1.279E-10	3.803E-12	0.000E+00	0.000E+00
-238	U-238	2.096E-04	5.773E-06	5.511E-06	5.021E-06	3.623E-06	1.414E-06	4.204E-08	0.000E+00	0.000E+00
-238	äDOSE(j)		5.774E-06	5.512E-06	5.022E-06	3.623E-06	1.414E-06	4.204E-08	0.000E+00	0.000E+00
-238	U-238	2.767E-10	7.621E-12	7.275E-12	6.628E-12	4.782E-12	1.866E-12	5.549E-14	0.000E+00	0.000E+00
-238	U-238	3.983E-12	1.097E-13	1.047E-13	9.541E-14	6.883E-14	2.686E-14	7.987E-16	0.000E+00	0.000E+00
-238	äDOSE(j)		7.730E-12	7.379E-12	6.724E-12	4.851E-12	1.893E-12	5.629E-14	0.000E+00	0.000E+00
-238	U-238	1.994E-04	5.493E-06	5.243E-06	4.777E-06	3.447E-06	1.345E-06	4.000E-08	0.000E+00	0.000E+00
-238	U-238	2.633E-10	7.251E-12	6.921E-12	6.306E-12	4.550E-12	1.775E-12	5.280E-14	0.000E+00	0.000E+00
-238	äDOSE(j)		5.493E-06	5.243E-06	4.777E-06	3.447E-06	1.345E-06	4.000E-08	0.000E+00	0.000E+00
-238	U-238	3.789E-12	1.044E-13	9.962E-14	9.077E-14	6.549E-14	2.556E-14	7.599E-16	0.000E+00	0.000E+00
-238	U-238	4.189E-08	1.154E-09	1.101E-09	1.003E-09	7.240E-10	2.825E-10	8.401E-12	0.000E+00	0.000E+00
-238	äDOSE(j)		1.154E-09	1.101E-09	1.004E-09	7.241E-10	2.825E-10	8.402E-12	0.000E+00	0.000E+00
-238	U-238	5.530E-14	1.523E-15	1.454E-15	1.325E-15	9.557E-16	3.729E-16	1.109E-17	0.000E+00	0.000E+00
-238	U-238	7.959E-16	2.192E-17	2.093E-17	1.907E-17	1.376E-17	5.368E-18	1.596E-19	0.000E+00	0.000E+00
-238	äDOSE(j)		1.545E-15	1.475E-15	1.344E-15	9.694E-16	3.783E-16	1.125E-17	0.000E+00	0.000E+00

ummary : GKP Park Ranger - External
ile : C:\USERS\CLAUDE\DOCUMENTS\0 GKP DOSE\RESRAD CW\GKP PARK RANGER - EXTERNAL.RAD

Individual Nuclide Dose Summed Over All Pathways
Parent Nuclide and Branch Fraction Indicated

uclide (j)	Parent (i)	THF(i)	t= 0.000E+00	1.000E+00	3.000E+00	1.000E+01	3.000E+01	1.000E+02	3.000E+02	1.000E+03
			DOSE(j,t), mrem/yr							
ÄÄÄÄÄÄ	ÄÄÄÄÄÄÄÄ	ÄÄÄÄÄÄÄÄÄÄ	ÄÄÄÄÄÄÄÄÄÄ	ÄÄÄÄÄÄÄÄÄÄ	ÄÄÄÄÄÄÄÄÄÄ	ÄÄÄÄÄÄÄÄÄÄ	ÄÄÄÄÄÄÄÄÄÄ	ÄÄÄÄÄÄÄÄÄÄ	ÄÄÄÄÄÄÄÄÄÄ	ÄÄÄÄÄÄÄÄÄÄ
-238	U-238	1.997E-07	5.499E-09	5.250E-09	4.783E-09	3.451E-09	1.347E-09	4.005E-11	0.000E+00	0.000E+00
-238	U-238	2.636E-13	7.259E-15	6.930E-15	6.314E-15	4.555E-15	1.778E-15	5.286E-17	0.000E+00	0.000E+00
-238	äDOSE(j)		5.499E-09	5.250E-09	4.783E-09	3.451E-09	1.347E-09	4.005E-11	0.000E+00	0.000E+00
-238	U-238	3.794E-15	1.045E-16	9.974E-17	9.088E-17	6.557E-17	2.559E-17	7.609E-19	0.000E+00	0.000E+00
íííííí	íííííííí	ííííííííí	ííííííííí	ííííííííí	ííííííííí	ííííííííí	ííííííííí	ííííííííí	ííííííííí	ííííííííí

HF(i) is the thread fraction of the parent nuclide.

ummary : GKP Park Ranger - External

ile : C:\USERS\CLAUDE\DOCUMENTS\0 GKP DOSE\RESRAD CW\GKP PARK RANGER - EXTERNAL.RAD

Individual Nuclide Soil Concentration

Parent Nuclide and Branch Fraction Indicated

uclide (j)	Parent (i)	THF(i)	S(j,t), pCi/g t= 0.000E+00	1.000E+00	3.000E+00	1.000E+01	3.000E+01	1.000E+02	3.000E+02	1.000E+03
ÄÄÄÄÄÄ	ÄÄÄÄÄÄÄ	ÄÄÄÄÄÄÄÄÄ	ÄÄÄÄÄÄÄÄÄ	ÄÄÄÄÄÄÄÄÄ	ÄÄÄÄÄÄÄÄÄ	ÄÄÄÄÄÄÄÄÄ	ÄÄÄÄÄÄÄÄÄ	ÄÄÄÄÄÄÄÄÄ	ÄÄÄÄÄÄÄÄÄ	ÄÄÄÄÄÄÄÄÄ
a-226	Ra-226	9.996E-01	3.648E+01	3.533E+01	3.314E+01	2.647E+01	1.394E+01	1.475E+00	2.411E-03	4.255E-13
a-226	Ra-226	1.319E-06	4.816E-05	4.664E-05	4.374E-05	3.494E-05	1.839E-05	1.947E-06	3.182E-09	5.616E-19
a-226	U-234	9.996E-01	0.000E+00	2.698E-08	2.308E-07	2.155E-06	1.208E-05	3.439E-05	3.853E-05	3.731E-05
a-226	U-234	1.319E-06	0.000E+00	3.561E-14	3.047E-13	2.844E-12	1.595E-11	4.540E-11	5.086E-11	4.925E-11
a-226	U-234	1.899E-08	0.000E+00	5.126E-16	4.386E-15	4.094E-14	2.295E-13	6.534E-13	7.321E-13	7.089E-13
a-226	U-238	1.599E-03	0.000E+00	4.044E-17	1.028E-15	3.093E-14	4.696E-13	2.984E-12	3.935E-12	3.813E-12
a-226	U-238	2.111E-09	0.000E+00	5.338E-23	1.357E-21	4.082E-20	6.199E-19	3.939E-18	5.194E-18	5.033E-18
a-226	U-238	3.039E-11	0.000E+00	7.683E-25	1.953E-23	5.876E-22	8.923E-21	5.670E-20	7.477E-20	7.244E-20
a-226	U-238	9.980E-01	0.000E+00	2.523E-14	6.416E-13	1.930E-11	2.930E-10	1.862E-09	2.455E-09	2.379E-09
a-226	U-238	1.317E-06	0.000E+00	3.331E-20	8.469E-19	2.547E-17	3.868E-16	2.458E-15	3.241E-15	3.140E-15
a-226	U-238	1.896E-08	0.000E+00	4.794E-22	1.219E-20	3.667E-19	5.568E-18	3.538E-17	4.665E-17	4.520E-17
a-226	äS(j):		3.649E+01	3.533E+01	3.314E+01	2.647E+01	1.394E+01	1.475E+00	2.449E-03	3.731E-05
o-210	Ra-226	9.996E-01	0.000E+00	1.092E+00	3.007E+00	7.444E+00	9.643E+00	1.904E+00	3.525E-03	6.232E-13
o-210	Ra-226	2.100E-04	0.000E+00	2.293E-04	6.315E-04	1.564E-03	2.026E-03	4.000E-04	7.405E-07	1.309E-16
o-210	Ra-226	1.998E-04	0.000E+00	2.181E-04	6.009E-04	1.488E-03	1.927E-03	3.805E-04	7.045E-07	1.245E-16
o-210	Ra-226	4.196E-08	0.000E+00	4.582E-08	1.262E-07	3.125E-07	4.048E-07	7.993E-08	1.480E-10	2.616E-20
o-210	Ra-226	2.000E-07	0.000E+00	2.184E-07	6.016E-07	1.489E-06	1.929E-06	3.810E-07	7.053E-10	1.247E-19
o-210	U-234	9.996E-01	0.000E+00	2.788E-10	7.058E-09	2.091E-07	3.053E-06	1.777E-05	2.254E-05	2.184E-05
o-210	U-234	2.100E-04	0.000E+00	5.857E-14	1.482E-12	4.392E-11	6.412E-10	3.732E-09	4.735E-09	4.587E-09
o-210	U-234	1.998E-04	0.000E+00	5.572E-14	1.410E-12	4.178E-11	6.101E-10	3.550E-09	4.505E-09	4.364E-09
o-210	U-234	4.196E-08	0.000E+00	1.170E-17	2.963E-16	8.776E-15	1.281E-13	7.457E-13	9.462E-13	9.166E-13
o-210	U-234	2.000E-07	0.000E+00	5.579E-17	1.412E-15	4.183E-14	6.108E-13	3.555E-12	4.510E-12	4.369E-12
o-210	U-238	1.599E-03	0.000E+00	3.142E-19	2.374E-17	2.303E-15	9.533E-14	1.413E-12	2.300E-12	2.231E-12
o-210	U-238	3.359E-07	0.000E+00	6.599E-23	4.987E-21	4.838E-19	2.002E-17	2.967E-16	4.832E-16	4.687E-16
o-210	U-238	3.196E-07	0.000E+00	6.278E-23	4.745E-21	4.603E-19	1.905E-17	2.823E-16	4.597E-16	4.459E-16
o-210	U-238	6.713E-11	0.000E+00	1.319E-26	9.966E-25	9.669E-23	4.001E-21	5.929E-20	9.656E-20	9.366E-20
o-210	U-238	3.200E-10	0.000E+00	6.286E-26	4.750E-24	4.609E-22	1.907E-20	2.826E-19	4.603E-19	4.464E-19
o-210	U-238	9.980E-01	0.000E+00	1.960E-16	1.481E-14	1.437E-12	5.948E-11	8.814E-10	1.435E-09	1.392E-09
o-210	U-238	2.096E-04	0.000E+00	4.118E-20	3.112E-18	3.019E-16	1.249E-14	1.851E-13	3.015E-13	2.925E-13
o-210	U-238	1.994E-04	0.000E+00	3.918E-20	2.961E-18	2.872E-16	1.189E-14	1.761E-13	2.869E-13	2.782E-13
o-210	U-238	4.189E-08	0.000E+00	8.229E-24	6.219E-22	6.033E-20	2.497E-18	3.700E-17	6.025E-17	5.844E-17
o-210	U-238	1.997E-07	0.000E+00	3.922E-23	2.964E-21	2.876E-19	1.190E-17	1.764E-16	2.872E-16	2.786E-16
o-210	äS(j):		0.000E+00	1.092E+00	3.008E+00	7.447E+00	9.647E+00	1.905E+00	3.549E-03	2.185E-05
o-210	Ra-226	1.319E-06	0.000E+00	1.441E-06	3.969E-06	9.826E-06	1.273E-05	2.514E-06	4.653E-09	8.226E-19
o-210	Ra-226	1.899E-08	0.000E+00	2.074E-08	5.713E-08	1.414E-07	1.832E-07	3.618E-08	6.698E-11	1.184E-20
o-210	Ra-226	2.771E-10	0.000E+00	3.026E-10	8.336E-10	2.064E-09	2.674E-09	5.280E-10	9.774E-13	1.728E-22
o-210	Ra-226	2.637E-10	0.000E+00	2.879E-10	7.931E-10	1.964E-09	2.544E-09	5.023E-10	9.299E-13	1.644E-22
o-210	Ra-226	5.538E-14	0.000E+00	6.048E-14	1.666E-13	4.124E-13	5.343E-13	1.055E-13	1.953E-16	3.453E-26
o-210	Ra-226	2.640E-13	0.000E+00	2.883E-13	7.941E-13	1.966E-12	2.547E-12	5.029E-13	9.311E-16	1.646E-25
o-210	U-234	1.319E-06	0.000E+00	3.681E-16	9.317E-15	2.760E-13	4.030E-12	2.345E-11	2.975E-11	2.882E-11
o-210	U-234	2.771E-10	0.000E+00	7.731E-20	1.957E-18	5.797E-17	8.464E-16	4.926E-15	6.250E-15	6.054E-15
o-210	U-234	2.637E-10	0.000E+00	7.356E-20	1.862E-18	5.515E-17	8.053E-16	4.686E-15	5.946E-15	5.760E-15
o-210	U-234	5.538E-14	0.000E+00	1.545E-23	3.911E-22	1.158E-20	1.691E-19	9.844E-19	1.249E-18	1.210E-18
o-210	U-234	2.640E-13	0.000E+00	7.364E-23	1.864E-21	5.522E-20	8.063E-19	4.692E-18	5.953E-18	5.767E-18
o-210	U-238	2.111E-09	0.000E+00	4.147E-25	3.134E-23	3.041E-21	1.258E-19	1.865E-18	3.037E-18	2.945E-18
o-210	U-238	4.434E-13	0.000E+00	8.711E-29	6.583E-27	6.387E-25	2.643E-23	3.916E-22	6.378E-22	6.187E-22
o-210	U-238	4.219E-13	0.000E+00	8.287E-29	6.263E-27	6.076E-25	2.515E-23	3.726E-22	6.068E-22	5.886E-22

ummary : GKP Park Ranger - External
ile : C:\USERS\CLAUDE\DOCUMENTS\0 GKP DOSE\RESRAD CW\GKP PARK RANGER - EXTERNAL.RAD

Individual Nuclide Soil Concentration
Parent Nuclide and Branch Fraction Indicated

uclide (j)	Parent (i)	THF(i)	S(j,t), pCi/g t= 0.000E+00	1.000E+00	3.000E+00	1.000E+01	3.000E+01	1.000E+02	3.000E+02	1.000E+03
ÄÄÄÄÄ	ÄÄÄÄÄÄ	ÄÄÄÄÄÄÄÄÄ	ÄÄÄÄÄÄÄÄÄ	ÄÄÄÄÄÄÄÄÄ	ÄÄÄÄÄÄÄÄÄ	ÄÄÄÄÄÄÄÄÄ	ÄÄÄÄÄÄÄÄÄ	ÄÄÄÄÄÄÄÄÄ	ÄÄÄÄÄÄÄÄÄ	ÄÄÄÄÄÄÄÄÄ
o-210	U-238	8.862E-17	0.000E+00	1.741E-32	1.315E-30	1.276E-28	5.282E-27	7.826E-26	1.275E-25	1.236E-25
o-210	U-238	4.224E-16	0.000E+00	8.297E-32	6.270E-30	6.084E-28	2.518E-26	3.731E-25	6.076E-25	5.893E-25
o-210	U-238	1.317E-06	0.000E+00	2.588E-22	1.956E-20	1.897E-18	7.852E-17	1.163E-15	1.895E-15	1.838E-15
o-210	U-238	2.767E-10	0.000E+00	5.435E-26	4.108E-24	3.985E-22	1.649E-20	2.444E-19	3.980E-19	3.860E-19
o-210	U-238	2.633E-10	0.000E+00	5.171E-26	3.908E-24	3.792E-22	1.569E-20	2.325E-19	3.787E-19	3.673E-19
o-210	U-238	5.530E-14	0.000E+00	1.086E-29	8.209E-28	7.964E-26	3.296E-24	4.884E-23	7.954E-23	7.715E-23
o-210	U-238	2.636E-13	0.000E+00	5.178E-29	3.913E-27	3.796E-25	1.571E-23	2.328E-22	3.791E-22	3.677E-22
o-210	äS(j):		0.000E+00	1.462E-06	4.028E-06	9.971E-06	1.292E-05	2.551E-06	4.752E-09	2.884E-11
a-226	Ra-226	1.899E-08	6.932E-07	6.713E-07	6.296E-07	5.030E-07	2.648E-07	2.802E-08	4.580E-11	8.084E-21
a-226	Ra-226	2.100E-04	7.663E-03	7.421E-03	6.960E-03	5.560E-03	2.927E-03	3.098E-04	5.063E-07	8.936E-17
a-226	äS(j):		7.664E-03	7.422E-03	6.961E-03	5.561E-03	2.927E-03	3.098E-04	5.064E-07	8.937E-17
a-226	Ra-226	2.771E-10	1.012E-08	9.796E-09	9.188E-09	7.340E-09	3.864E-09	4.090E-10	6.684E-13	1.180E-22
a-226	Ra-226	3.989E-12	1.456E-10	1.410E-10	1.322E-10	1.056E-10	5.561E-11	5.886E-12	9.621E-15	1.698E-24
a-226	äS(j):		1.026E-08	9.937E-09	9.320E-09	7.445E-09	3.919E-09	4.148E-10	6.780E-13	1.197E-22
o-210	Ra-226	3.989E-12	0.000E+00	4.356E-12	1.200E-11	2.971E-11	3.849E-11	7.599E-12	1.407E-14	2.487E-24
o-210	Ra-226	3.795E-12	0.000E+00	4.144E-12	1.142E-11	2.826E-11	3.662E-11	7.230E-12	1.339E-14	2.366E-24
o-210	Ra-226	7.972E-16	0.000E+00	8.705E-16	2.398E-15	5.937E-15	7.691E-15	1.519E-15	2.812E-18	4.970E-28
o-210	Ra-226	3.800E-15	0.000E+00	4.149E-15	1.143E-14	2.830E-14	3.666E-14	7.239E-15	1.340E-17	2.369E-27
o-210	U-234	1.899E-08	0.000E+00	5.298E-18	1.341E-16	3.973E-15	5.800E-14	3.376E-13	4.283E-13	4.149E-13
o-210	U-234	3.989E-12	0.000E+00	1.113E-21	2.817E-20	8.344E-19	1.218E-17	7.090E-17	8.996E-17	8.715E-17
o-210	U-234	3.795E-12	0.000E+00	1.059E-21	2.680E-20	7.939E-19	1.159E-17	6.746E-17	8.559E-17	8.291E-17
o-210	U-234	7.972E-16	0.000E+00	2.224E-25	5.629E-24	1.667E-22	2.435E-21	1.417E-20	1.798E-20	1.742E-20
o-210	U-234	3.800E-15	0.000E+00	1.060E-24	2.683E-23	7.948E-22	1.161E-20	6.754E-20	8.569E-20	8.301E-20
o-210	U-238	3.039E-11	0.000E+00	5.969E-27	4.511E-25	4.377E-23	1.811E-21	2.684E-20	4.371E-20	4.240E-20
o-210	U-238	6.383E-15	0.000E+00	1.254E-30	9.475E-29	9.193E-27	3.804E-25	5.637E-24	9.181E-24	8.905E-24
o-210	U-238	6.073E-15	0.000E+00	1.193E-30	9.015E-29	8.746E-27	3.620E-25	5.363E-24	8.735E-24	8.472E-24
o-210	U-238	1.276E-18	0.000E+00	2.506E-34	1.893E-32	1.837E-30	7.603E-29	1.127E-27	1.835E-27	1.780E-27
o-210	U-238	6.080E-18	0.000E+00	1.194E-33	9.026E-32	8.757E-30	3.624E-28	5.370E-27	8.745E-27	8.483E-27
o-210	U-238	1.896E-08	0.000E+00	3.725E-24	2.815E-22	2.731E-20	1.130E-18	1.675E-17	2.727E-17	2.645E-17
o-210	U-238	3.983E-12	0.000E+00	7.824E-28	5.912E-26	5.736E-24	2.374E-22	3.518E-21	5.729E-21	5.557E-21
o-210	U-238	3.789E-12	0.000E+00	7.444E-28	5.625E-26	5.458E-24	2.259E-22	3.347E-21	5.450E-21	5.287E-21
o-210	U-238	7.959E-16	0.000E+00	1.563E-31	1.182E-29	1.146E-27	4.744E-26	7.029E-25	1.145E-24	1.110E-24
o-210	U-238	3.794E-15	0.000E+00	7.453E-31	5.632E-29	5.464E-27	2.261E-25	3.351E-24	5.457E-24	5.293E-24
o-210	äS(j):		0.000E+00	8.506E-12	2.343E-11	5.801E-11	7.520E-11	1.518E-11	4.560E-13	4.151E-13
a-226	Ra-226	1.998E-04	7.291E-03	7.061E-03	6.622E-03	5.290E-03	2.785E-03	2.948E-04	4.817E-07	8.502E-17
a-226	Ra-226	2.637E-10	9.624E-09	9.320E-09	8.741E-09	6.983E-09	3.676E-09	3.891E-10	6.359E-13	1.122E-22
a-226	U-234	1.998E-04	0.000E+00	5.392E-12	4.613E-11	4.306E-10	2.414E-09	6.873E-09	7.700E-09	7.457E-09
a-226	U-234	2.637E-10	0.000E+00	7.117E-18	6.089E-17	5.684E-16	3.187E-15	9.072E-15	1.016E-14	9.843E-15
a-226	U-234	3.795E-12	0.000E+00	1.024E-19	8.765E-19	8.182E-18	4.587E-17	1.306E-16	1.463E-16	1.417E-16
a-226	U-238	3.196E-07	0.000E+00	8.081E-21	2.055E-19	6.180E-18	9.385E-17	5.963E-16	7.864E-16	7.619E-16
a-226	U-238	4.219E-13	0.000E+00	1.067E-26	2.712E-25	8.158E-24	1.239E-22	7.872E-22	1.038E-21	1.006E-21
a-226	U-238	6.073E-15	0.000E+00	1.535E-28	3.904E-27	1.174E-25	1.783E-24	1.133E-23	1.494E-23	1.448E-23
a-226	U-238	1.994E-04	0.000E+00	5.042E-18	1.282E-16	3.856E-15	5.856E-14	3.721E-13	4.907E-13	4.755E-13
a-226	U-238	2.633E-10	0.000E+00	6.656E-24	1.692E-22	5.090E-21	7.730E-20	4.912E-19	6.477E-19	6.276E-19
a-226	U-238	3.789E-12	0.000E+00	9.581E-26	2.436E-24	7.327E-23	1.113E-21	7.070E-21	9.323E-21	9.034E-21
a-226	äS(j):		7.291E-03	7.061E-03	6.622E-03	5.290E-03	2.785E-03	2.948E-04	4.894E-07	7.457E-09

ummary : GKP Park Ranger - External
ile : C:\USERS\CLAUDE\DOCUMENTS\0 GKP DOSE\RESRAD CW\GKP PARK RANGER - EXTERNAL.RAD

Individual Nuclide Soil Concentration
Parent Nuclide and Branch Fraction Indicated

uclide (j)	Parent (i)	THF(i)	S(j,t), pCi/g t= 0.000E+00	1.000E+00	3.000E+00	1.000E+01	3.000E+01	1.000E+02	3.000E+02	1.000E+03
ÄÄÄÄÄÄ	ÄÄÄÄÄÄÄ	ÄÄÄÄÄÄÄÄÄ	ÄÄÄÄÄÄÄÄÄ	ÄÄÄÄÄÄÄÄÄ	ÄÄÄÄÄÄÄÄÄ	ÄÄÄÄÄÄÄÄÄ	ÄÄÄÄÄÄÄÄÄ	ÄÄÄÄÄÄÄÄÄ	ÄÄÄÄÄÄÄÄÄ	ÄÄÄÄÄÄÄÄÄ
a-226	Ra-226	3.795E-12	1.385E-10	1.342E-10	1.258E-10	1.005E-10	5.291E-11	5.600E-12	9.153E-15	1.615E-24
a-226	Ra-226	4.196E-08	1.531E-06	1.483E-06	1.391E-06	1.111E-06	5.849E-07	6.191E-08	1.012E-10	1.786E-20
a-226	äS(j):		1.532E-06	1.483E-06	1.391E-06	1.111E-06	5.850E-07	6.192E-08	1.012E-10	1.786E-20
a-226	Ra-226	5.538E-14	2.022E-12	1.958E-12	1.836E-12	1.467E-12	7.721E-13	8.173E-14	1.336E-16	2.357E-26
a-226	Ra-226	7.972E-16	2.910E-14	2.818E-14	2.643E-14	2.111E-14	1.111E-14	1.176E-15	1.923E-18	3.393E-28
a-226	äS(j):		2.051E-12	1.986E-12	1.862E-12	1.488E-12	7.832E-13	8.290E-14	1.355E-16	2.391E-26
a-226	Ra-226	2.000E-07	7.300E-06	7.070E-06	6.630E-06	5.297E-06	2.788E-06	2.951E-07	4.823E-10	8.513E-20
a-226	Ra-226	2.640E-13	9.636E-12	9.332E-12	8.752E-12	6.991E-12	3.680E-12	3.896E-13	6.367E-16	1.124E-25
a-226	U-234	2.000E-07	0.000E+00	5.398E-15	4.619E-14	4.311E-13	2.417E-12	6.881E-12	7.709E-12	7.466E-12
a-226	U-234	2.640E-13	0.000E+00	7.126E-21	6.097E-20	5.691E-19	3.191E-18	9.083E-18	1.018E-17	9.855E-18
a-226	U-234	3.800E-15	0.000E+00	1.026E-22	8.776E 22	8.192E-21	4.593E-20	1.307E-19	1.465E-19	1.418E-19
a 226	U-238	3.200E-10	0.000E+00	8.091E-24	2.057E-22	6.188E-21	9.396E-20	5.971E-19	7.873E-19	7.629E-19
a-226	U-238	4.224E-16	0.000E+00	1.068E-29	2.715E-28	8.168E-27	1.240E-25	7.881E-25	1.039E-24	1.007E-24
a-226	U-238	6.080E-18	0.000E+00	1.537E-31	3.909E-30	1.176E-28	1.785E-27	1.134E-26	1.496E-26	1.449E-26
a-226	U-238	1.997E-07	0.000E+00	5.048E-21	1.284E-19	3.861E-18	5.863E-17	3.726E-16	4.913E-16	4.760E-16
a-226	U-238	2.636E-13	0.000E+00	6.664E-27	1.694E-25	5.097E-24	7.739E-23	4.918E-22	6.485E-22	6.284E-22
a-226	U-238	3.794E-15	0.000E+00	9.592E-29	2.439E-27	7.336E-26	1.114E-24	7.079E-24	9.335E-24	9.045E-24
a-226	äS(j):		7.300E-06	7.070E-06	6.630E-06	5.297E-06	2.788E-06	2.951E-07	4.900E-10	7.466E-12
a-226	Ra-226	3.800E-15	1.387E-13	1.343E-13	1.260E-13	1.006E-13	5.298E-14	5.607E-15	9.164E-18	1.617E-27
n-232	Th-232	1.000E+00	2.400E+00	2.400E+00	2.400E+00	2.399E+00	2.397E+00	2.391E+00	2.373E+00	2.313E+00
a-228	Th-232	1.000E+00	0.000E+00	2.684E-01	6.968E-01	1.486E+00	1.879E+00	1.894E+00	1.880E+00	1.832E+00
n-228	Th-232	1.000E+00	0.000E+00	4.430E-02	2.891E-01	1.222E+00	1.865E+00	1.894E+00	1.880E+00	1.832E+00
-234	U-234	9.996E-01	1.389E+01	1.329E+01	1.217E+01	8.925E+00	3.683E+00	1.662E-01	2.380E-05	8.354E-19
-234	U-234	1.319E-06	1.834E-05	1.755E-05	1.606E-05	1.178E-05	4.862E-06	2.194E-07	3.141E-11	1.103E-24
-234	U-238	1.599E-03	0.000E+00	6.005E-08	1.649E-07	4.032E-07	4.992E-07	7.511E-08	3.227E-11	3.779E-24
-234	U-238	2.111E-09	0.000E+00	7.927E-14	2.177E-13	5.322E-13	6.589E-13	9.914E-14	4.259E-17	4.988E-30
-234	U-238	3.039E-11	0.000E+00	1.141E-15	3.133E-15	7.661E-15	9.484E-15	1.427E-15	6.131E-19	7.180E-32
-234	U-238	3.359E-07	0.000E+00	1.261E-11	3.463E-11	8.469E-11	1.048E-10	1.578E-11	6.777E-15	7.938E-28
-234	U-238	4.434E-13	0.000E+00	1.665E-17	4.572E-17	1.118E-16	1.384E-16	2.082E-17	8.946E-21	1.048E-33
-234	U-238	6.383E-15	0.000E+00	2.396E-19	6.580E-19	1.609E-18	1.992E-18	2.998E-19	1.288E-22	1.508E-35
-234	U-238	3.196E-07	0.000E+00	1.200E-11	3.295E-11	8.058E-11	9.975E-11	1.501E-11	6.448E-15	7.552E-28
-234	U-238	4.219E-13	0.000E+00	1.584E-17	4.350E-17	1.064E-16	1.317E-16	1.981E-17	8.511E-21	9.969E-34
-234	U-238	6.073E-15	0.000E+00	2.280E-19	6.261E-19	1.531E-18	1.895E-18	2.852E-19	1.225E-22	1.435E-35
-234	U-238	6.713E-11	0.000E+00	2.521E-15	6.921E-15	1.692E-14	2.095E-14	3.153E-15	1.354E-18	1.586E-31
-234	U-238	8.862E-17	0.000E+00	3.327E-21	9.136E-21	2.234E-20	2.766E-20	4.162E-21	1.788E-24	2.094E-37
-234	U-238	1.276E-18	0.000E+00	4.789E-23	1.315E-22	3.216E-22	3.981E-22	5.990E-23	2.573E-26	3.014E-39
-234	U-238	3.200E-10	0.000E+00	1.201E-14	3.299E-14	8.067E-14	9.987E-14	1.503E-14	6.456E-18	7.561E-31
-234	U-238	4.224E-16	0.000E+00	1.586E-20	4.355E-20	1.065E-19	1.318E-19	1.984E-20	8.522E-24	9.981E-37
-234	U-238	6.080E-18	0.000E+00	2.283E-22	6.268E-22	1.533E-21	1.898E-21	2.855E-22	1.227E-25	1.437E-38
-234	U-238	9.980E-01	0.000E+00	3.747E-05	1.029E-04	2.516E-04	3.115E-04	4.687E-05	2.013E-08	2.358E-21
-234	U-238	1.317E-06	0.000E+00	4.946E-11	1.358E-10	3.321E-10	4.111E-10	6.187E-11	2.658E-14	3.113E-27
-234	U-238	1.896E-08	0.000E+00	7.119E-13	1.955E-12	4.780E-12	5.918E-12	8.905E-13	3.825E-16	4.480E-29

ummary : GKP Park Ranger - External
ile : C:\USERS\CLAUDE\DOCUMENTS\0 GKP DOSE\RESRAD CW\GKP PARK RANGER - EXTERNAL.RAD

Individual Nuclide Soil Concentration
Parent Nuclide and Branch Fraction Indicated

uclide (j)	Parent (i)	THF(i)	S(j,t), pCi/g t= 0.000E+00	1.000E+00	3.000E+00	1.000E+01	3.000E+01	1.000E+02	3.000E+02	1.000E+03
ÄÄÄÄÄ	ÄÄÄÄÄÄ	ÄÄÄÄÄÄÄÄÄ	ÄÄÄÄÄÄÄÄÄ	ÄÄÄÄÄÄÄÄÄ	ÄÄÄÄÄÄÄÄÄ	ÄÄÄÄÄÄÄÄÄ	ÄÄÄÄÄÄÄÄÄ	ÄÄÄÄÄÄÄÄÄ	ÄÄÄÄÄÄÄÄÄ	ÄÄÄÄÄÄÄÄÄ
-234	U-238	2.096E-04	0.000E+00	7.871E-09	2.161E-08	5.285E-08	6.542E-08	9.844E-09	4.229E-12	4.953E-25
-234	U-238	2.767E-10	0.000E+00	1.039E-14	2.853E-14	6.976E-14	0.636E-14	1.299E-14	5.582E-18	6.538E-31
-234	U-238	3.903E-12	0.000E+00	1.495E-16	4.106E-16	1.004E-15	1.243E-15	1.870E-16	8.035E-20	9.411E-33
-234	U-238	1.994E-04	0.000E+00	7.488E-09	2.056E-08	5.028E-08	6.225E-08	9.366E-09	4.024E-12	4.712E-25
-234	U-238	2.633E-10	0.000E+00	9.884E-15	2.714E-14	6.637E-14	8.216E-14	1.236E-14	5.311E-18	6.220E-31
-234	U-238	3.789E-12	0.000E+00	1.423E-16	3.907E-16	9.553E-16	1.183E-15	1.780E-16	7.645E-20	8.954E-33
-234	U-238	4.189E-08	0.000E+00	1.573E-12	4.319E-12	1.056E-11	1.307E-11	1.967E-12	8.451E-16	9.898E-29
-234	U-238	5.530E-14	0.000E+00	2.076E-18	5.701E-18	1.394E-17	1.726E-17	2.597E-18	1.116E-21	1.307E-34
-234	U-238	7.959E-16	0.000E+00	2.988E-20	8.206E-20	2.007E-19	2.484E-19	3.738E-20	1.606E-23	1.881E-36
-234	U-238	1.997E-07	0.000E+00	7.497E-12	2.059E-11	5.034E-11	6.232E-11	9.378E-12	4.028E-15	4.718E-28
-234	U-238	2.636E-13	0.000E+00	9.896E-18	2.717E-17	6.645E-17	8.226E-17	1.238E-17	5.318E-21	6.228E-34
-234	U-238	3.794E-15	0.000E+00	1.424E-19	3.911E-19	9.565E-19	1.184E-18	1.782E-19	7.654E-23	8.965E-36
-234	äS(j):		1.389E+01	1.329E+01	1.217E+01	8.926E+00	3.683E+00	1.663E-01	2.382E-05	8.377E-19
a-230	U-234	9.996E-01	0.000E+00	1.250E-04	3.589E-04	1.032E-03	2.120E-03	2.842E-03	2.850E-03	2.759E-03
a-230	U-234	1.319E-06	0.000E+00	1.650E-10	4.738E-10	1.362E-09	2.798E-09	3.751E-09	3.762E-09	3.642E-09
a-230	U-234	1.899E-08	0.000E+00	2.375E-12	6.819E-12	1.961E-11	4.028E-11	5.400E-11	5.415E-11	5.243E-11
a-230	U-234	2.100E-04	0.000E+00	2.625E-08	7.539E-08	2.168E-07	4.452E-07	5.969E-07	5.986E-07	5.796E-07
a-230	U-234	2.771E-10	0.000E+00	3.465E-14	9.951E-14	2.862E-13	5.877E-13	7.879E-13	7.902E-13	7.650E-13
a-230	U-234	3.989E-12	0.000E+00	4.988E-16	1.432E-15	4.119E-15	8.460E-15	1.134E-14	1.137E-14	1.101E-14
a-230	U-234	1.998E-04	0.000E+00	2.497E-08	7.172E-08	2.063E-07	4.236E-07	5.679E-07	5.695E-07	5.514E-07
a-230	U-234	2.637E-10	0.000E+00	3.297E-14	9.468E-14	2.723E-13	5.592E-13	7.497E-13	7.518E-13	7.279E-13
a-230	U-234	3.795E-12	0.000E+00	4.745E-16	1.363E-15	3.919E-15	8.049E-15	1.079E-14	1.082E-14	1.048E-14
a-230	U-234	4.196E-08	0.000E+00	5.246E-12	1.507E-11	4.332E-11	8.898E-11	1.193E-10	1.196E-10	1.158E-10
a-230	U-234	5.538E-14	0.000E+00	6.924E-18	1.989E-17	5.719E-17	1.175E-16	1.575E-16	1.579E-16	1.529E-16
a-230	U-234	7.972E-16	0.000E+00	9.967E-20	2.862E-19	8.231E-19	1.691E-18	2.267E-18	2.273E-18	2.201E-18
a-230	U-234	2.000E-07	0.000E+00	2.501E-11	7.181E-11	2.065E-10	4.241E-10	5.686E-10	5.702E-10	5.521E-10
a-230	U-234	2.640E-13	0.000E+00	3.301E-17	9.479E-17	2.726E-16	5.599E-16	7.506E-16	7.527E-16	7.287E-16
a-230	U-234	3.800E-15	0.000E+00	4.751E-19	1.364E-18	3.924E-18	8.058E-18	1.080E-17	1.083E-17	1.049E-17
a-230	U-238	1.599E-03	0.000E+00	2.802E-13	2.378E-12	2.160E-11	1.128E-10	2.748E-10	2.912E-10	2.820E-10
a-230	U-238	2.111E-09	0.000E+00	3.699E-19	3.139E-18	2.851E-17	1.489E-16	3.627E-16	3.844E-16	3.722E-16
a-230	U-238	3.039E-11	0.000E+00	5.324E-21	4.519E-20	4.104E-19	2.143E-18	5.221E-18	5.533E-18	5.357E-18
a-230	U-238	3.359E-07	0.000E+00	5.885E-17	4.995E-16	4.537E-15	2.369E-14	5.771E-14	6.117E-14	5.922E-14
a-230	U-238	4.434E-13	0.000E+00	7.769E-23	6.594E-22	5.989E-21	3.127E-20	7.618E-20	8.074E-20	7.817E-20
a-230	U-238	6.383E-15	0.000E+00	1.118E-24	9.491E-24	8.621E-23	4.501E-22	1.097E-21	1.162E-21	1.125E-21
a-230	U-238	3.196E-07	0.000E+00	5.600E-17	4.753E-16	4.317E-15	2.254E-14	5.491E-14	5.820E-14	5.635E-14
a-230	U-238	4.219E-13	0.000E+00	7.391E-23	6.274E-22	5.698E-21	2.975E-20	7.248E-20	7.682E-20	7.438E-20
a-230	U-238	6.073E-15	0.000E+00	1.064E-24	9.030E-24	8.202E-23	4.282E-22	1.043E-21	1.106E-21	1.071E-21
a-230	U-238	6.713E-11	0.000E+00	1.176E-20	9.983E-20	9.067E-19	4.734E-18	1.153E-17	1.222E-17	1.183E-17
a-230	U-238	8.862E-17	0.000E+00	1.553E-26	1.318E-25	1.197E-24	6.249E-24	1.522E-23	1.614E-23	1.562E-23
a-230	U-238	1.276E-18	0.000E+00	2.235E-28	1.897E-27	1.723E-26	8.995E-26	2.191E-25	2.323E-25	2.249E-25
a-230	U-238	3.200E-10	0.000E+00	5.606E-20	4.759E-19	4.322E-18	2.257E-17	5.498E-17	5.827E-17	5.641E-17
a-230	U-238	4.224E-16	0.000E+00	7.400E-26	6.281E-25	5.705E-24	2.979E-23	7.257E-23	7.691E-23	7.447E-23
a-230	U-238	6.080E-18	0.000E+00	1.065E-27	9.041E-27	8.212E-26	4.288E-25	1.045E-24	1.107E-24	1.072E-24
a-230	U-238	9.980E-01	0.000E+00	1.748E-10	1.484E-09	1.348E-08	7.038E-08	1.715E-07	1.817E-07	1.759E-07
a-230	U-238	1.317E-06	0.000E+00	2.308E-16	1.959E-15	1.779E-14	9.290E-14	2.263E-13	2.399E-13	2.322E-13
a-230	U-238	1.896E-08	0.000E+00	3.322E-18	2.820E-17	2.561E-16	1.337E-15	3.258E-15	3.453E-15	3.343E-15
a-230	U-238	2.096E-04	0.000E+00	3.673E-14	3.117E-13	2.831E-12	1.478E-11	3.601E-11	3.817E-11	3.695E-11
a-230	U-238	2.767E-10	0.000E+00	4.848E-20	4.115E-19	3.737E-18	1.951E-17	4.754E-17	5.038E-17	4.878E-17

ummary : GKP Park Ranger - External
ile : C:\USERS\CLAUDE\DOCUMENTS\0 GKP DOSE\RESRAD CW\GKP PARK RANGER - EXTERNAL.RAD

Individual Nuclide Soil Concentration
Parent Nuclide and Branch Fraction Indicated

uclide (j)	Parent (i)	THF(i)	S(j,t), pCi/g t= 0.000E+00	1.000E+00	3.000E+00	1.000E+01	3.000E+01	1.000E+02	3.000E+02	1.000E+03
ÄÄÄÄÄÄ	ÄÄÄÄÄÄÄ	ÄÄÄÄÄÄÄÄÄ	ÄÄÄÄÄÄÄÄÄ	ÄÄÄÄÄÄÄÄÄ	ÄÄÄÄÄÄÄÄÄ	ÄÄÄÄÄÄÄÄÄ	ÄÄÄÄÄÄÄÄÄ	ÄÄÄÄÄÄÄÄÄ	ÄÄÄÄÄÄÄÄÄ	ÄÄÄÄÄÄÄÄÄ
n-230	U-238	3.983E-12	0.000E+00	6.978E-22	5.923E-21	5.379E-20	2.809E-19	6.843E-19	7.252E-19	7.021E-19
n-230	U-238	1.994E-04	0.000E+00	3.494E-14	2.966E-13	2.694E-12	1.406E-11	3.426E-11	3.631E-11	3.516E-11
n-230	U-238	2.633E-10	0.000E+00	4.612E-20	3.915E-19	3.556E-18	1.856E-17	4.523E-17	4.794E-17	4.641E-17
n-230	U-238	3.789E-12	0.000E+00	6.639E-22	5.635E-21	5.118E-20	2.672E-19	6.510E-19	6.900E-19	6.680E-19
n-230	U-238	4.189E-08	0.000E+00	7.339E-18	6.229E-17	5.658E-16	2.954E-15	7.197E-15	7.628E-15	7.385E-15
n-230	U-238	5.530E-14	0.000E+00	9.688E-24	8.223E-23	7.468E-22	3.899E-21	9.500E-21	1.007E-20	9.748E-21
n-230	U-238	7.959E-16	0.000E+00	1.394E-25	1.184E-24	1.075E-23	5.613E-23	1.367E-22	1.449E-22	1.403E-22
n-230	U-238	1.997E-07	0.000E+00	3.498E-17	2.969E-16	2.697E-15	1.408E-14	3.431E-14	3.636E-14	3.520E-14
n-230	U-238	2.636E-13	0.000E+00	4.618E-23	3.920E-22	3.560E-21	1.859E-20	4.528E-20	4.799E-20	4.647E-20
n-230	U-238	3.794E-15	0.000E+00	6.647E-25	5.642E-24	5.124E-23	2.675E-22	6.518E-22	6.908E-22	6.688E-22
n-230	äS(j):		0.000E+00	1.250E-04	3.591E-04	1.033E-03	2.121E-03	2.843E-03	2.851E-03	2.761E-03
-234	U-234	1.899E-08	2.640E-07	2.526E-07	2.312E-07	1.696E 07	6.998E-08	3.159E-09	4.522E-13	1.587E-26
-234	U-234	2.100E-04	2.918E-03	2.792E-03	2.556E-03	1.875E-03	7.736E-04	3.492E-05	4.999E-09	1.755E-22
-234	äS(j):		2.919E-03	2.792E-03	2.556E-03	1.875E-03	7.737E-04	3.492E-05	4.999E-09	1.755E-22
a-226	U-234	2.100E-04	0.000E+00	5.667E-12	4.849E-11	4.526E-10	2.538E-09	7.224E-09	8.093E-09	7.837E-09
a-226	U-234	3.989E-12	0.000E+00	1.077E-19	9.213E-19	8.600E-18	4.821E-17	1.373E-16	1.538E-16	1.489E-16
a-226	U-238	3.359E-07	0.000E+00	8.493E-21	2.160E-19	6.496E-18	9.864E-17	6.268E-16	8.265E-16	8.008E-16
a-226	U-238	4.434E-13	0.000E+00	1.121E-26	2.851E-25	8.574E-24	1.302E-22	8.274E-22	1.091E-21	1.057E-21
a-226	U-238	6.383E-15	0.000E+00	1.614E-28	4.103E-27	1.234E-25	1.874E-24	1.191E-23	1.570E-23	1.522E-23
a-226	U-238	2.096E-04	0.000E+00	5.300E-18	1.348E-16	4.053E-15	6.155E-14	3.911E-13	5.158E-13	4.997E-13
a-226	U-238	2.767E-10	0.000E+00	6.996E-24	1.779E-22	5.350E-21	8.125E-20	5.163E-19	6.808E-19	6.596E-19
a-226	U-238	3.983E-12	0.000E+00	1.007E-25	2.560E-24	7.701E-23	1.169E-21	7.431E-21	9.799E-21	9.495E-21
a-226	äS(j):		0.000E+00	5.667E-12	4.849E-11	4.526E-10	2.538E-09	7.224E-09	8.094E-09	7.838E-09
-234	U-234	2.771E-10	3.852E-09	3.686E-09	3.373E-09	2.475E-09	1.021E-09	4.609E-11	6.598E-15	2.316E-28
-234	U-234	3.989E-12	5.545E-11	5.305E-11	4.856E-11	3.562E-11	1.470E-11	6.634E-13	9.498E-17	3.334E-30
-234	äS(j):		3.908E-09	3.739E-09	3.422E-09	2.510E-09	1.036E-09	4.676E-11	6.693E-15	2.349E-28
a-226	U-234	2.771E-10	0.000E+00	7.480E-18	6.400E-17	5.974E-16	3.350E-15	9.535E-15	1.068E-14	1.035E-14
-234	U-234	1.998E-04	2.777E-03	2.656E-03	2.431E-03	1.784E-03	7.360E-04	3.322E-05	4.756E-09	1.669E-22
-234	U-234	2.637E-10	3.665E-09	3.506E-09	3.209E-09	2.354E-09	9.715E-10	4.385E-11	6.278E-15	2.204E-28
-234	äS(j):		2.777E-03	2.656E-03	2.431E-03	1.784E-03	7.360E-04	3.322E-05	4.756E-09	1.669E-22
-234	U-234	3.795E-12	5.276E-11	5.047E-11	4.620E-11	3.389E-11	1.398E-11	6.312E-13	9.036E-17	3.172E-30
-234	U-234	4.196E-08	5.832E-07	5.580E-07	5.107E-07	3.746E-07	1.546E-07	6.978E-09	9.989E-13	3.506E-26
-234	äS(j):		5.833E-07	5.580E-07	5.107E-07	3.747E-07	1.546E-07	6.979E-09	9.990E-13	3.507E-26
a-226	U-234	4.196E-08	0.000E+00	1.132E-15	9.690E-15	9.045E-14	5.071E-13	1.444E-12	1.617E-12	1.566E-12
a-226	U-234	7.972E-16	0.000E+00	2.152E-23	1.841E-22	1.719E-21	9.635E-21	2.743E-20	3.073E-20	2.976E-20
a-226	U-238	6.713E-11	0.000E+00	1.697E-24	4.316E-23	1.298E-21	1.971E-20	1.253E-19	1.652E-19	1.600E-19
a-226	U-238	8.862E-17	0.000E+00	2.240E-30	5.697E-29	1.713E-27	2.602E-26	1.653E-25	2.180E-25	2.113E-25
a-226	U-238	1.276E-18	0.000E+00	3.225E-32	8.200E-31	2.466E-29	3.745E-28	2.380E-27	3.138E-27	3.041E-27
a-226	U-238	4.189E-08	0.000E+00	1.059E-21	2.693E-20	8.100E-19	1.230E-17	7.816E-17	1.031E-16	9.987E-17
a-226	U-238	5.530E-14	0.000E+00	1.398E-27	3.555E-26	1.069E-24	1.624E-23	1.032E-22	1.360E-22	1.318E-22
a-226	U-238	7.959E-16	0.000E+00	2.012E-29	5.117E-28	1.539E-26	2.337E-25	1.485E-24	1.958E-24	1.897E-24
a-226	äS(j):		0.000E+00	1.132E-15	9.690E-15	9.045E-14	5.071E-13	1.444E-12	1.617E-12	1.566E-12

ummary : GKP Park Ranger - External
ile : C:\USERS\CLAUDE\DOCUMENTS\0 GKP DOSE\RESRAD CW\GKP PARK RANGER - EXTERNAL.RAD

Individual Nuclide Soil Concentration
Parent Nuclide and Branch Fraction Indicated

uclide (j)	Parent (i)	THF(i)	S(j,t), pCi/g t= 0.000E+00	1.000E+00	3.000E+00	1.000E+01	3.000E+01	1.000E+02	3.000E+02	1.000E+03
ÄÄÄÄÄ	ÄÄÄÄÄÄ	ÄÄÄÄÄÄÄÄ	ÄÄÄÄÄÄÄÄ	ÄÄÄÄÄÄÄÄ	ÄÄÄÄÄÄÄÄ	ÄÄÄÄÄÄÄÄ	ÄÄÄÄÄÄÄÄ	ÄÄÄÄÄÄÄÄ	ÄÄÄÄÄÄÄÄ	ÄÄÄÄÄÄÄÄ
-234	U-234	5.538E-14	7.698E-13	7.365E-13	6.741E-13	4.945E-13	2.041E-13	9.211E-15	1.319E-18	4.629E-32
-234	U-234	7.972E-16	1.108E-14	1.060E-14	9.703E-15	7.118E-15	2.937E-15	1.326E-16	1.898E-20	6.662E-34
-234	äS(j):		7.809E-13	7.471E-13	6.838E-13	5.016E-13	2.070E-13	9.344E-15	1.338E-18	4.695E-32
a-226	U-234	5.538E-14	0.000E+00	1.495E-21	1.279E-20	1.194E-19	6.694E-19	1.906E-18	2.135E-18	2.067E-18
-234	U-234	2.000E-07	2.780E-06	2.660E-06	2.434E-06	1.786E-06	7.369E-07	3.326E-08	4.762E-12	1.671E-25
-234	U-234	2.640E-13	3.670E-12	3.511E-12	3.213E-12	2.357E-12	9.727E-13	4.391E-14	6.285E-18	2.206E-31
-234	äS(j):		2.780E-06	2.660E-06	2.434E-06	1.786E-06	7.369E-07	3.326E-08	4.762E-12	1.671E-25
-234	U-234	3.800E-15	5.282E-14	5.053E-14	4.625E-14	3.393E-14	1.400E-14	6.320E-16	9.047E-20	3.176E-33
-235	U-235	9.835E-01	8.261E-01	7.904E-01	7.234E-01	5.307E-01	2.190E-01	9.887E-03	1.416E-06	4.981E-20
-235	U-235	2.722E-03	2.286E-03	2.187E-03	2.002E-03	1.469E-03	6.061E-04	2.736E-05	3.920E-09	1.379E-22
-235	äS(j):		8.284E-01	7.925E-01	7.254E-01	5.322E-01	2.196E-01	9.914E-03	1.420E-06	4.995E-20
a-231	U-235	9.835E-01	0.000E+00	1.672E-05	4.592E-05	1.123E-04	1.390E-04	2.090E-05	8.961E-09	1.043E-21
a-231	U-235	2.722E-03	0.000E+00	4.628E-08	1.271E-07	3.107E-07	3.846E-07	5.784E-08	2.480E-11	2.886E-24
a-231	U-235	1.376E-02	0.000E+00	2.340E-07	6.425E-07	1.571E-06	1.944E-06	2.924E-07	1.254E-10	1.459E-23
a-231	U-235	3.809E-05	0.000E+00	6.476E-10	1.778E-09	4.348E-09	5.382E-09	8.093E-10	3.470E-13	4.038E-26
a-231	U-235	8.257E-07	0.000E+00	1.404E-11	3.855E-11	9.426E-11	1.167E-10	1.755E-11	7.523E-15	8.755E-28
a-231	U-235	2.285E-09	0.000E+00	3.886E-14	1.067E-13	2.609E-13	3.229E-13	4.856E-14	2.082E-17	2.423E-30
a-231	äS(j):		0.000E+00	1.700E-05	4.669E-05	1.142E-04	1.413E-04	2.125E-05	9.111E-09	1.060E-21
c-227	U-235	9.835E-01	0.000E+00	2.577E-07	1.994E-06	1.324E-05	3.070E-05	6.123E-06	2.826E-09	3.370E-22
c-227	U-235	2.722E-03	0.000E+00	7.134E-10	5.518E-09	3.665E-08	8.495E-08	1.695E-08	7.821E-12	9.327E-25
c-227	U-235	1.376E-02	0.000E+00	3.606E-09	2.790E-08	1.853E-07	4.295E-07	8.568E-08	3.954E-11	4.715E-24
c-227	äS(j):		0.000E+00	4.320E-09	3.341E-08	2.219E-07	5.144E-07	1.026E-07	4.736E-11	5.648E-24
-235	U-235	1.376E-02	1.156E-02	1.106E-02	1.012E-02	7.426E-03	3.064E-03	1.383E-04	1.982E-08	6.969E-22
-235	U-235	3.809E-05	3.199E-05	3.061E-05	2.801E-05	2.055E-05	8.481E-06	3.829E-07	5.484E-11	1.929E-24
-235	äS(j):		1.159E-02	1.109E-02	1.015E-02	7.446E-03	3.073E-03	1.387E-04	1.987E-08	6.989E-22
c-227	U-235	3.809E-05	0.000E+00	9.981E-12	7.721E-11	5.128E-10	1.189E-09	2.371E-10	1.094E-13	1.305E-26
c-227	U-235	8.257E-07	0.000E+00	2.164E-13	1.674E-12	1.112E-11	2.577E-11	5.141E-12	2.372E-15	2.829E-28
c-227	äS(j):		0.000E+00	1.020E-11	7.888E-11	5.239E-10	1.214E-09	2.423E-10	1.118E-13	1.333E-26
-235	U-235	8.257E-07	6.936E-07	6.636E-07	6.074E-07	4.456E-07	1.839E-07	8.301E-09	1.189E-12	4.182E-26
-235	U-235	2.285E-09	1.920E-09	1.837E-09	1.681E-09	1.233E-09	5.089E-10	2.297E-11	3.291E-15	1.157E-28
-235	äS(j):		6.955E-07	6.654E-07	6.090E-07	4.468E-07	1.844E-07	8.324E-09	1.192E-12	4.193E-26
c-227	U-235	2.285E-09	0.000E+00	5.989E-16	4.633E-15	3.077E-14	7.133E-14	1.423E-14	6.566E-18	7.831E-31
-238	U-238	5.450E-07	7.575E-06	7.248E-06	6.634E-06	4.866E-06	2.008E-06	9.066E-08	1.299E-11	4.567E-25
-238	U-238	1.599E-03	2.223E-02	2.127E-02	1.947E-02	1.428E-02	5.893E-03	2.661E-04	3.811E-08	1.340E-21
-238	äS(j):		2.224E-02	2.128E-02	1.947E-02	1.429E-02	5.895E-03	2.662E-04	3.812E-08	1.341E-21
-238	U-238	2.111E-09	2.934E-08	2.807E-08	2.570E-08	1.885E-08	7.779E-09	3.512E-10	5.030E-14	1.769E-27

ummary : GKP Park Ranger - External
ile : C:\USERS\CLAUDE\DOCUMENTS\0 GKP DOSE\RESRAD CW\GKP PARK RANGER - EXTERNAL.RAD

Individual Nuclide Soil Concentration
Parent Nuclide and Branch Fraction Indicated

uclide (j)	Parent (i)	THF(i)	S(j,t), pCi/g t= 0.000E+00	1.000E+00	3.000E+00	1.000E+01	3.000E+01	1.000E+02	3.000E+02	1.000E+03
ÄÄÄÄÄÄ	ÄÄÄÄÄÄÄ	ÄÄÄÄÄÄÄÄÄ	ÄÄÄÄÄÄÄÄÄ	ÄÄÄÄÄÄÄÄÄ	ÄÄÄÄÄÄÄÄÄ	ÄÄÄÄÄÄÄÄÄ	ÄÄÄÄÄÄÄÄÄ	ÄÄÄÄÄÄÄÄÄ	ÄÄÄÄÄÄÄÄÄ	ÄÄÄÄÄÄÄÄÄ
-238	U-238	3.039E-11	4.224E-10	4.041E-10	3.699E-10	2.713E-10	1.120E-10	5.055E-12	7.241E-16	2.547E-29
-238	äS(j):		2.977E-08	2.848E-08	2.607E-08	1.912E-08	7.891E-09	3.563E-10	5.103E-14	1.795E-27
-238	U-238	3.359E-07	4.669E-06	4.467E-06	4.089E-06	3.000E-06	1.238E-06	5.588E-08	8.005E-12	2.815E-25
-238	U-238	4.434E-13	6.164E-12	5.897E-12	5.397E-12	3.960E-12	1.634E-12	7.377E-14	1.057E-17	3.716E-31
-238	äS(j):		4.669E-06	4.467E-06	4.089E-06	3.000E-06	1.238E-06	5.588E-08	8.005E-12	2.815E-25
-238	U-238	6.383E-15	8.872E-14	8.488E-14	7.769E-14	5.699E-14	2.352E-14	1.062E-15	1.521E-19	5.349E-33
-238	U-238	3.196E-07	4.443E-06	4.250E-06	3.890E-06	2.854E-06	1.178E-06	5.317E-08	7.616E-12	2.679E-25
-238	äS(j):		4.443E-06	4.250E-06	3.890E-06	2.854E-06	1.178E-06	5.317E-08	7.616E-12	2.679E-25
-238	U-238	4.219E-13	5.864E-12	5.610E-12	5.135E-12	3.767E-12	1.555E-12	7.018E-14	1.005E-17	3.536E-31
-238	U-238	6.073E-15	8.441E-14	8.076E-14	7.392E-14	5.422E-14	2.238E-14	1.010E-15	1.447E-19	5.089E-33
-238	äS(j):		5.949E-12	5.691E-12	5.209E-12	3.821E-12	1.577E-12	7.119E-14	1.020E-17	3.587E-31
-238	U-238	6.713E-11	9.331E-10	8.927E-10	8.171E-10	5.994E-10	2.474E-10	1.117E-11	1.600E-15	5.626E-29
-238	U-238	8.862E-17	1.232E-15	1.178E-15	1.079E-15	7.913E-16	3.265E-16	1.474E-17	2.112E-21	7.427E-35
-238	äS(j):		9.331E-10	8.927E-10	8.171E-10	5.994E-10	2.474E-10	1.117E-11	1.600E-15	5.626E-29
-238	U-238	1.276E-18	1.773E-17	1.696E-17	1.553E-17	1.139E-17	4.700E-18	2.122E-19	3.039E-23	1.069E-36
-238	U-238	3.200E-10	4.448E-09	4.255E-09	3.895E-09	2.857E-09	1.179E-09	5.323E-11	7.625E-15	2.682E-28
-238	äS(j):		4.448E-09	4.255E-09	3.895E-09	2.857E-09	1.179E-09	5.323E-11	7.625E-15	2.682E-28
-238	U-238	4.224E-16	5.871E-15	5.617E-15	5.141E-15	3.772E-15	1.556E-15	7.027E-17	1.007E-20	3.540E-34
-238	U-238	6.080E-18	8.451E-17	8.085E-17	7.400E-17	5.429E-17	2.240E-17	1.011E-18	1.449E-22	5.095E-36
-238	äS(j):		5.956E-15	5.698E-15	5.215E-15	3.826E-15	1.579E-15	7.128E-17	1.021E-20	3.591E-34
-238	U-238	9.980E-01	1.387E+01	1.327E+01	1.215E+01	8.911E+00	3.677E+00	1.660E-01	2.378E-05	8.364E-19
-238	U-238	1.317E-06	1.831E-05	1.752E-05	1.603E-05	1.176E-05	4.854E-06	2.191E-07	3.139E-11	1.104E-24
-238	äS(j):		1.387E+01	1.327E+01	1.215E+01	8.911E+00	3.677E+00	1.660E-01	2.378E-05	8.364E-19
-238	U-238	1.896E-08	2.636E-07	2.522E-07	2.308E-07	1.693E-07	6.987E-08	3.154E-09	4.518E-13	1.589E-26
-238	U-238	2.096E-04	2.914E-03	2.788E-03	2.551E-03	1.872E-03	7.724E-04	3.487E-05	4.995E-09	1.757E-22
-238	äS(j):		2.914E-03	2.788E-03	2.552E-03	1.872E-03	7.725E-04	3.488E-05	4.995E-09	1.757E-22
-238	U-238	2.767E-10	3.846E-09	3.680E-09	3.368E-09	2.471E-09	1.020E-09	4.603E-11	6.593E-15	2.319E-28
-238	U-238	3.983E-12	5.536E-11	5.296E-11	4.848E-11	3.556E-11	1.468E-11	6.626E-13	9.490E-17	3.338E-30
-238	äS(j):		3.902E-09	3.733E-09	3.416E-09	2.506E-09	1.034E-09	4.669E-11	6.688E-15	2.352E-28
-238	U-238	1.994E-04	2.772E-03	2.652E-03	2.428E-03	1.781E-03	7.349E-04	3.318E-05	4.752E-09	1.671E-22
-238	U-238	2.633E-10	3.659E-09	3.501E-09	3.204E-09	2.351E-09	9.701E-10	4.379E-11	6.273E-15	2.206E-28
-238	äS(j):		2.772E-03	2.652E-03	2.428E-03	1.781E-03	7.349E-04	3.318E-05	4.752E-09	1.671E-22
-238	U-238	3.789E-12	5.267E-11	5.039E-11	4.612E-11	3.384E-11	1.396E-11	6.304E-13	9.029E-17	3.176E-30
-238	U-238	4.189E-08	5.823E-07	5.571E-07	5.099E-07	3.741E-07	1.544E-07	6.969E-09	9.982E-13	3.511E-26
-238	äS(j):		5.823E-07	5.571E-07	5.099E-07	3.741E-07	1.544E-07	6.969E-09	9.983E-13	3.511E-26
-238	U-238	5.530E-14	7.686E-13	7.353E-13	6.731E-13	4.938E-13	2.038E-13	9.199E-15	1.318E-18	4.634E-32
-238	U-238	7.959E-16	1.106E-14	1.058E-14	9.688E-15	7.107E-15	2.933E-15	1.324E-16	1.897E-20	6.670E-34
-238	äS(j):		7.797E-13	7.459E-13	6.827E-13	5.009E-13	2.067E-13	9.331E-15	1.337E-18	4.701E-32

ummary : GKP Park Ranger - External

ile : C:\USERS\CLAUDE\DOCUMENTS\0 GKP DOSE\RESRAD CW\GKP PARK RANGER - EXTERNAL.RAD

Individual Nuclide Soil Concentration

Parent Nuclide and Branch Fraction Indicated

uclide (j)	Parent (i)	THF(i)	S(j,t), pCi/g t= 0.000E+00	1.000E+00	3.000E+00	1.000E+01	3.000E+01	1.000E+02	3.000E+02	1.000E+03
ÄÄÄÄÄÄ	ÄÄÄÄÄÄÄ	ÄÄÄÄÄÄÄÄÄÄ	ÄÄÄÄÄÄÄÄÄÄ	ÄÄÄÄÄÄÄÄÄÄ	ÄÄÄÄÄÄÄÄÄÄ	ÄÄÄÄÄÄÄÄÄÄ	ÄÄÄÄÄÄÄÄÄÄ	ÄÄÄÄÄÄÄÄÄÄ	ÄÄÄÄÄÄÄÄÄÄ	ÄÄÄÄÄÄÄÄÄÄ
-238	U-238	1.997E-07	2.776E-06	2.655E-06	2.430E-06	1.783E-06	7.358E-07	3.322E-08	4.758E-12	1.673E-25
-238	U-238	2.636E-13	3.664E-12	3.505E-12	3.208E-12	2.354E-12	9.712E-13	4.385E-14	6.281E-18	2.209E-31
-238	äS(j):		2.776E-06	2.655E-06	2.430E-06	1.783E-06	7.358E-07	3.322E-08	4.758E-12	1.673E-25
-238	U-238	3.794E-15	5.274E-14	5.045E-14	4.618E-14	3.388E-14	1.398E-14	6.311E-16	9.040E-20	3.180E-33
íííííí	ííííííí	ííííííííí	ííííííííí	ííííííííí	ííííííííí	ííííííííí	ííííííííí	ííííííííí	ííííííííí	ííííííííí

HF(i) is the thread fraction of the parent nuclide.

ESCALC.EXE execution time = 40.46 seconds

ummary : Park Ranger Ingestion

ile : C:\USERS\CLAUDE\DOCUMENTS\0 GKP DOSE\RESRAD CW\GKP PARK RANGER-INGESTION.RAD

Table of Contents

ÄÄÄÄÄÄÄÄÄÄÄÄÄÄÄÄÄ

Part I: Mixture Sums and Single Radionuclide Guidelines

ÍÍ

ummary : Park Ranger Ingestion
ile : C:\USERS\CLAUDE\DOCUMENTS\0 GKP DOSE\RESRAD CW\GKP PARK RANGER-INGESTION.RAD

Dose Conversion Factor (and Related) Parameter Summary
Dose Library: FGR 11

enu	Parameter	Current Value#	Base Case*	Parameter Name
-1	DCF's for external ground radiation, (mrem/yr)/(pCi/g)			
-1	Ac-227 (Source: FGR 12)	4.951E-04	4.951E-04	DCF1(1)
-1	Ac-228 (Source: FGR 12)	5.978E+00	5.978E+00	DCF1(2)
-1	At-218 (Source: FGR 12)	5.847E-03	5.847E-03	DCF1(3)
-1	At-219 (Source: no data)	0.000E+00	-2.000E+00	DCF1(4)
-1	Bi-210 (Source: FGR 12)	3.606E-03	3.606E-03	DCF1(5)
-1	Bi-211 (Source: FGR 12)	2.559E-01	2.559E-01	DCF1(6)
-1	Bi-212 (Source: FGR 12)	1.171E+00	1.171E+00	DCF1(7)
-1	Bi-214 (Source: FGR 12)	9.808E+00	9.808E+00	DCF1(8)
-1	Bi-215 (Source: no data)	0.000E+00	-2.000E+00	DCF1(9)
-1	Fr-223 (Source: FGR 12)	1.980E-01	1.980E-01	DCF1(10)
-1	Hg-206 (Source: no data)	0.000E+00	-2.000E+00	DCF1(11)
-1	Pa-231 (Source: FGR 12)	1.906E-01	1.906E-01	DCF1(12)
-1	Pa-234 (Source: FGR 12)	1.155E+01	1.155E+01	DCF1(13)
-1	Pa-234m (Source: FGR 12)	8.967E-02	8.967E-02	DCF1(14)
-1	Pb-210 (Source: FGR 12)	2.447E-03	2.447E-03	DCF1(15)
-1	Pb-211 (Source: FGR 12)	3.064E-01	3.064E-01	DCF1(16)
-1	Pb-212 (Source: FGR 12)	7.043E-01	7.043E-01	DCF1(17)
-1	Pb-214 (Source: FGR 12)	1.341E+00	1.341E+00	DCF1(18)
-1	Po-210 (Source: FGR 12)	5.231E-05	5.231E-05	DCF1(19)
-1	Po-211 (Source: FGR 12)	4.764E-02	4.764E-02	DCF1(20)
-1	Po-212 (Source: FGR 12)	0.000E+00	0.000E+00	DCF1(21)
-1	Po-214 (Source: FGR 12)	5.138E-04	5.138E-04	DCF1(22)
-1	Po-215 (Source: FGR 12)	1.016E-03	1.016E-03	DCF1(23)
-1	Po-216 (Source: FGR 12)	1.042E-04	1.042E-04	DCF1(24)
-1	Po-218 (Source: FGR 12)	5.642E-05	5.642E-05	DCF1(25)
-1	Ra-223 (Source: FGR 12)	6.034E-01	6.034E-01	DCF1(26)
-1	Ra-224 (Source: FGR 12)	5.119E-02	5.119E-02	DCF1(27)
-1	Ra-226 (Source: FGR 12)	3.176E-02	3.176E-02	DCF1(28)
-1	Ra-228 (Source: FGR 12)	0.000E+00	0.000E+00	DCF1(29)
-1	Rn-218 (Source: FGR 12)	4.540E-03	4.540E-03	DCF1(30)
-1	Rn-219 (Source: FGR 12)	3.083E-01	3.083E-01	DCF1(31)
-1	Rn-220 (Source: FGR 12)	2.298E-03	2.298E-03	DCF1(32)
-1	Rn-222 (Source: FGR 12)	2.354E-03	2.354E-03	DCF1(33)
-1	Th-227 (Source: FGR 12)	5.212E-01	5.212E-01	DCF1(34)
-1	Th-228 (Source: FGR 12)	7.940E-03	7.940E-03	DCF1(35)
-1	Th-230 (Source: FGR 12)	1.209E-03	1.209E-03	DCF1(36)
-1	Th-231 (Source: FGR 12)	3.643E-02	3.643E-02	DCF1(37)
-1	Th-232 (Source: FGR 12)	5.212E-04	5.212E-04	DCF1(38)
-1	Th-234 (Source: FGR 12)	2.410E-02	2.410E-02	DCF1(39)
-1	Tl-206 (Source: FGR 12)	7.697E-03	7.697E-03	DCF1(40)
-1	Tl-207 (Source: FGR 12)	1.980E-02	1.980E-02	DCF1(41)
-1	Tl-208 (Source: FGR 12)	2.298E+01	2.298E+01	DCF1(42)
-1	Tl-210 (Source: no data)	0.000E+00	-2.000E+00	DCF1(43)
-1	U-234 (Source: FGR 12)	4.017E-04	4.017E-04	DCF1(44)
-1	U-235 (Source: FGR 12)	7.211E-01	7.211E-01	DCF1(45)
-1	U-238 (Source: FGR 12)	1.031E-04	1.031E-04	DCF1(46)
-1	Dose conversion factors for inhalation, mrem/pCi:			
-1	Ac-227+D	6.724E+00	6.700E+00	DCF2(1)

ummary : Park Ranger Ingestion
ile : C:\USERS\CLAUDE\DOCUMENTS\0 GKP DOSE\RESRAD CW\GKP PARK RANGER-INGESTION.RAD

Dose Conversion Factor (and Related) Parameter Summary (continued)
Dose Library: FGR 11

enu	Parameter	Current Value#	Base Case*	Parameter Name
-1	Ac-227+D1	6.724E+00	6.700E+00	DCF2(2)
-1	Ac-227+D2	6.708E+00	6.700E+00	DCF2(3)
-1	Ac-227+D3	6.708E+00	6.700E+00	DCF2(4)
-1	Ac-227+D4	6.700E+00	6.700E+00	DCF2(5)
-1	Ac-227+D5	6.700E+00	6.700E+00	DCF2(6)
-1	Pa-231	1.280E+00	1.280E+00	DCF2(7)
-1	Pb-210+D	2.320E-02	1.360E-02	DCF2(13)
-1	Pb-210+D1	1.380E-02	1.360E-02	DCF2(14)
-1	Pb-210+D2	1.360E-02	1.360E-02	DCF2(15)
-1	Ra-226+D	8.594E-03	8.580E-03	DCF2(16)
-1	Ra-226+D1	8.594E-03	8.580E-03	DCF2(19)
-1	Ra-226+D2	8.587E-03	8.580E-03	DCF2(22)
-1	Ra-226+D3	8.587E-03	8.580E-03	DCF2(25)
-1	Ra-226+D4	8.580E-03	8.580E-03	DCF2(28)
-1	Ra-228+D	5.078E-03	4.770E-03	DCF2(31)
-1	Th-228+D	3.454E-01	3.420E-01	DCF2(32)
-1	Th-230	3.260E-01	3.260E-01	DCF2(33)
-1	Th-232	1.640E+00	1.640E+00	DCF2(48)
-1	U-234	1.320E-01	1.320E-01	DCF2(49)
-1	U-235+D	1.230E-01	1.230E-01	DCF2(64)
-1	U-238	1.180E-01	1.180E-01	DCF2(70)
-1	U-238+D	1.180E-01	1.180E-01	DCF2(71)
-1	U-238+D1	1.180E-01	1.180E-01	DCF2(86)
-1	Dose conversion factors for ingestion, mrem/pCi:			
-1	Ac-227+D	1.480E-02	1.410E-02	DCF3(1)
-1	Ac-227+D1	1.480E-02	1.410E-02	DCF3(2)
-1	Ac-227+D2	1.477E-02	1.410E-02	DCF3(3)
-1	Ac-227+D3	1.477E-02	1.410E-02	DCF3(4)
-1	Ac-227+D4	1.411E-02	1.410E-02	DCF3(5)
-1	Ac-227+D5	1.411E-02	1.410E-02	DCF3(6)
-1	Pa-231	1.060E-02	1.060E-02	DCF3(7)
-1	Pb-210+D	7.276E-03	5.370E-03	DCF3(13)
-1	Pb-210+D1	5.376E-03	5.370E-03	DCF3(14)
-1	Pb-210+D2	5.370E-03	5.370E-03	DCF3(15)
-1	Ra-226+D	1.321E-03	1.320E-03	DCF3(16)
-1	Ra-226+D1	1.321E-03	1.320E-03	DCF3(19)
-1	Ra-226+D2	1.320E-03	1.320E-03	DCF3(22)
-1	Ra-226+D3	1.320E-03	1.320E-03	DCF3(25)
-1	Ra-226+D4	1.320E-03	1.320E-03	DCF3(28)
-1	Ra-228+D	1.442E-03	1.440E-03	DCF3(31)
-1	Th-228+D	8.086E-04	3.960E-04	DCF3(32)
-1	Th-230	5.480E-04	5.480E-04	DCF3(33)
-1	Th-232	2.730E-03	2.730E-03	DCF3(48)
-1	U-234	2.830E-04	2.830E-04	DCF3(49)
-1	U-235+D	2.673E-04	2.660E-04	DCF3(64)
-1	U-238	2.550E-04	2.550E-04	DCF3(70)
-1	U-238+D	2.709E-04	2.550E-04	DCF3(71)
-1	U-238+D1	2.687E-04	2.550E-04	DCF3(86)

Dose Conversion Factor (and Related) Parameter Summary (continued)
Dose Library: FGR 11

enu	Parameter	Current Value#	Base Case*	Parameter Name
-34	Food transfer factors:			
-34	Ac-227+D , plant/soil concentration ratio, dimensionless	2.500E-03	2.500E-03	RTF(1,1)
-34	Ac-227+D , beef/livestock-intake ratio, (pCi/kg)/(pCi/d)	2.000E-05	2.000E-05	RTF(1,2)
-34	Ac-227+D , milk/livestock-intake ratio, (pCi/L)/(pCi/d)	2.000E-05	2.000E-05	RTF(1,3)
-34				
-34	Ac-227+D1 , plant/soil concentration ratio, dimensionless	2.500E-03	2.500E-03	RTF(2,1)
-34	Ac-227+D1 , beef/livestock-intake ratio, (pCi/kg)/(pCi/d)	2.000E-05	2.000E-05	RTF(2,2)
-34	Ac-227+D1 , milk/livestock-intake ratio, (pCi/L)/(pCi/d)	2.000E-05	2.000E-05	RTF(2,3)
-34				
-34	Ac-227+D2 , plant/soil concentration ratio, dimensionless	2.500E-03	2.500E-03	RTF(3,1)
-34	Ac-227+D2 , beef/livestock-intake ratio, (pCi/kg)/(pCi/d)	2.000E-05	2.000E-05	RTF(3,2)
-34	Ac-227+D2 , milk/livestock-intake ratio, (pCi/L)/(pCi/d)	2.000E-05	2.000E-05	RTF(3,3)
-34				
-34	Ac-227+D3 , plant/soil concentration ratio, dimensionless	2.500E-03	2.500E-03	RTF(4,1)
-34	Ac-227+D3 , beef/livestock-intake ratio, (pCi/kg)/(pCi/d)	2.000E-05	2.000E-05	RTF(4,2)
-34	Ac-227+D3 , milk/livestock-intake ratio, (pCi/L)/(pCi/d)	2.000E-05	2.000E-05	RTF(4,3)
-34				
-34	Ac-227+D4 , plant/soil concentration ratio, dimensionless	2.500E-03	2.500E-03	RTF(5,1)
-34	Ac-227+D4 , beef/livestock-intake ratio, (pCi/kg)/(pCi/d)	2.000E-05	2.000E-05	RTF(5,2)
-34	Ac-227+D4 , milk/livestock-intake ratio, (pCi/L)/(pCi/d)	2.000E-05	2.000E-05	RTF(5,3)
-34				
-34	Ac-227+D5 , plant/soil concentration ratio, dimensionless	2.500E-03	2.500E-03	RTF(6,1)
-34	Ac-227+D5 , beef/livestock-intake ratio, (pCi/kg)/(pCi/d)	2.000E-05	2.000E-05	RTF(6,2)
-34	Ac-227+D5 , milk/livestock-intake ratio, (pCi/L)/(pCi/d)	2.000E-05	2.000E-05	RTF(6,3)
-34				
-34	Pa-231 , plant/soil concentration ratio, dimensionless	1.000E-02	1.000E-02	RTF(7,1)
-34	Pa-231 , beef/livestock-intake ratio, (pCi/kg)/(pCi/d)	5.000E-03	5.000E-03	RTF(7,2)
-34	Pa-231 , milk/livestock-intake ratio, (pCi/L)/(pCi/d)	5.000E-06	5.000E-06	RTF(7,3)
-34				
-34	Pb-210+D , plant/soil concentration ratio, dimensionless	1.000E-02	1.000E-02	RTF(13,1)
-34	Pb-210+D , beef/livestock-intake ratio, (pCi/kg)/(pCi/d)	8.000E-04	8.000E-04	RTF(13,2)
-34	Pb-210+D , milk/livestock-intake ratio, (pCi/L)/(pCi/d)	3.000E-04	3.000E-04	RTF(13,3)
-34				
-34	Pb-210+D1 , plant/soil concentration ratio, dimensionless	1.000E-02	1.000E-02	RTF(14,1)
-34	Pb-210+D1 , beef/livestock-intake ratio, (pCi/kg)/(pCi/d)	8.000E-04	8.000E-04	RTF(14,2)
-34	Pb-210+D1 , milk/livestock-intake ratio, (pCi/L)/(pCi/d)	3.000E-04	3.000E-04	RTF(14,3)
-34				
-34	Pb-210+D2 , plant/soil concentration ratio, dimensionless	1.000E-02	1.000E-02	RTF(15,1)
-34	Pb-210+D2 , beef/livestock-intake ratio, (pCi/kg)/(pCi/d)	8.000E-04	8.000E-04	RTF(15,2)
-34	Pb-210+D2 , milk/livestock-intake ratio, (pCi/L)/(pCi/d)	3.000E-04	3.000E-04	RTF(15,3)
-34				
-34	Ra-226+D , plant/soil concentration ratio, dimensionless	4.000E-02	4.000E-02	RTF(16,1)
-34	Ra-226+D , beef/livestock-intake ratio, (pCi/kg)/(pCi/d)	1.000E-03	1.000E-03	RTF(16,2)
-34	Ra-226+D , milk/livestock-intake ratio, (pCi/L)/(pCi/d)	1.000E-03	1.000E-03	RTF(16,3)
-34				
-34	Ra-226+D1 , plant/soil concentration ratio, dimensionless	4.000E-02	4.000E-02	RTF(19,1)
-34	Ra-226+D1 , beef/livestock-intake ratio, (pCi/kg)/(pCi/d)	1.000E-03	1.000E-03	RTF(19,2)
-34	Ra-226+D1 , milk/livestock-intake ratio, (pCi/L)/(pCi/d)	1.000E-03	1.000E-03	RTF(19,3)
-34				

Dose Conversion Factor (and Related) Parameter Summary (continued)

Dose Library: FGR 11

enu	Parameter	Current Value#	Base Case*	Parameter Name
-34	Ra-226+D2 , plant/soil concentration ratio, dimensionless	4.000E-02	4.000E-02	RTF(22,1)
-34	Ra-226+D2 , beef/livestock-intake ratio, (pCi/kg)/(pCi/d)	1.000E-03	1.000E-03	RTF(22,2)
-34	Ra-226+D2 , milk/livestock-intake ratio, (pCi/L)/(pCi/d)	1.000E-03	1.000E-03	RTF(22,3)
-34				
-34	Ra-226+D3 , plant/soil concentration ratio, dimensionless	4.000E-02	4.000E-02	RTF(25,1)
-34	Ra-226+D3 , beef/livestock-intake ratio, (pCi/kg)/(pCi/d)	1.000E-03	1.000E-03	RTF(25,2)
-34	Ra-226+D3 , milk/livestock-intake ratio, (pCi/L)/(pCi/d)	1.000E-03	1.000E-03	RTF(25,3)
-34				
-34	Ra-226+D4 , plant/soil concentration ratio, dimensionless	4.000E-02	4.000E-02	RTF(28,1)
-34	Ra-226+D4 , beef/livestock-intake ratio, (pCi/kg)/(pCi/d)	1.000E-03	1.000E-03	RTF(28,2)
-34	Ra-226+D4 , milk/livestock-intake ratio, (pCi/L)/(pCi/d)	1.000E-03	1.000E-03	RTF(28,3)
-34				
-34	Ra-228+D , plant/soil concentration ratio, dimensionless	4.000E-02	4.000E-02	RTF(31,1)
-34	Ra-228+D , beef/livestock-intake ratio, (pCi/kg)/(pCi/d)	1.000E-03	1.000E-03	RTF(31,2)
-34	Ra-228+D , milk/livestock-intake ratio, (pCi/L)/(pCi/d)	1.000E-03	1.000E-03	RTF(31,3)
-34				
-34	Th-228+D , plant/soil concentration ratio, dimensionless	1.000E-03	1.000E-03	RTF(32,1)
-34	Th-228+D , beef/livestock-intake ratio, (pCi/kg)/(pCi/d)	1.000E-04	1.000E-04	RTF(32,2)
-34	Th-228+D , milk/livestock-intake ratio, (pCi/L)/(pCi/d)	5.000E-06	5.000E-06	RTF(32,3)
-34				
-34	Th-230 , plant/soil concentration ratio, dimensionless	1.000E-03	1.000E-03	RTF(33,1)
-34	Th-230 , beef/livestock-intake ratio, (pCi/kg)/(pCi/d)	1.000E-04	1.000E-04	RTF(33,2)
-34	Th-230 , milk/livestock-intake ratio, (pCi/L)/(pCi/d)	5.000E-06	5.000E-06	RTF(33,3)
-34				
-34	Th-232 , plant/soil concentration ratio, dimensionless	1.000E-03	1.000E-03	RTF(48,1)
-34	Th-232 , beef/livestock-intake ratio, (pCi/kg)/(pCi/d)	1.000E-04	1.000E-04	RTF(48,2)
-34	Th-232 , milk/livestock-intake ratio, (pCi/L)/(pCi/d)	5.000E-06	5.000E-06	RTF(48,3)
-34				
-34	U-234 , plant/soil concentration ratio, dimensionless	2.500E-03	2.500E-03	RTF(49,1)
-34	U-234 , beef/livestock-intake ratio, (pCi/kg)/(pCi/d)	3.400E-04	3.400E-04	RTF(49,2)
-34	U-234 , milk/livestock-intake ratio, (pCi/L)/(pCi/d)	6.000E-04	6.000E-04	RTF(49,3)
-34				
-34	U-235+D , plant/soil concentration ratio, dimensionless	2.500E-03	2.500E-03	RTF(64,1)
-34	U-235+D , beef/livestock-intake ratio, (pCi/kg)/(pCi/d)	3.400E-04	3.400E-04	RTF(64,2)
-34	U-235+D , milk/livestock-intake ratio, (pCi/L)/(pCi/d)	6.000E-04	6.000E-04	RTF(64,3)
-34				
-34	U-238 , plant/soil concentration ratio, dimensionless	2.500E-03	2.500E-03	RTF(70,1)
-34	U-238 , beef/livestock-intake ratio, (pCi/kg)/(pCi/d)	3.400E-04	3.400E-04	RTF(70,2)
-34	U-238 , milk/livestock-intake ratio, (pCi/L)/(pCi/d)	6.000E-04	6.000E-04	RTF(70,3)
-34				
-34	U-238+D , plant/soil concentration ratio, dimensionless	2.500E-03	2.500E-03	RTF(71,1)
-34	U-238+D , beef/livestock-intake ratio, (pCi/kg)/(pCi/d)	3.400E-04	3.400E-04	RTF(71,2)
-34	U-238+D , milk/livestock-intake ratio, (pCi/L)/(pCi/d)	6.000E-04	6.000E-04	RTF(71,3)
-34				
-34	U-238+D1 , plant/soil concentration ratio, dimensionless	2.500E-03	2.500E-03	RTF(86,1)
-34	U-238+D1 , beef/livestock-intake ratio, (pCi/kg)/(pCi/d)	3.400E-04	3.400E-04	RTF(86,2)
-34	U-238+D1 , milk/livestock-intake ratio, (pCi/L)/(pCi/d)	6.000E-04	6.000E-04	RTF(86,3)
-34				

Dose Conversion Factor (and Related) Parameter Summary (continued)
Dose Library: FGR 11

enu	Parameter	Current Value#	Base Case*	Parameter Name
-5	Bioaccumulation factors, fresh water, L/kg:			
-5	Ac-227+D , fish	1.500E+01	1.500E+01	BIOFAC(1,1)
-5	Ac-227+D , crustacea and mollusks	1.000E+03	1.000E+03	BIOFAC(1,2)
-5				
-5	Ac-227+D1 , fish	1.500E+01	1.500E+01	BIOFAC(2,1)
-5	Ac-227+D1 , crustacea and mollusks	1.000E+03	1.000E+03	BIOFAC(2,2)
-5				
-5	Ac-227+D2 , fish	1.500E+01	1.500E+01	BIOFAC(3,1)
-5	Ac-227+D2 , crustacea and mollusks	1.000E+03	1.000E+03	BIOFAC(3,2)
-5				
-5	Ac-227+D3 , fish	1.500E+01	1.500E+01	BIOFAC(4,1)
-5	Ac-227+D3 , crustacea and mollusks	1.000E+03	1.000E+03	BIOFAC(4,2)
-5				
-5	Ac-227+D4 , fish	1.500E+01	1.500E+01	BIOFAC(5,1)
-5	Ac-227+D4 , crustacea and mollusks	1.000E+03	1.000E+03	BIOFAC(5,2)
-5				
-5	Ac-227+D5 , fish	1.500E+01	1.500E+01	BIOFAC(6,1)
-5	Ac-227+D5 , crustacea and mollusks	1.000E+03	1.000E+03	BIOFAC(6,2)
-5				
-5	Pa-231 , fish	1.000E+01	1.000E+01	BIOFAC(7,1)
-5	Pa-231 , crustacea and mollusks	1.100E+02	1.100E+02	BIOFAC(7,2)
-5				
-5	Pb-210+D , fish	3.000E+02	3.000E+02	BIOFAC(13,1)
-5	Pb-210+D , crustacea and mollusks	1.000E+02	1.000E+02	BIOFAC(13,2)
-5				
-5	Pb-210+D1 , fish	3.000E+02	3.000E+02	BIOFAC(14,1)
-5	Pb-210+D1 , crustacea and mollusks	1.000E+02	1.000E+02	BIOFAC(14,2)
-5				
-5	Pb-210+D2 , fish	3.000E+02	3.000E+02	BIOFAC(15,1)
-5	Pb-210+D2 , crustacea and mollusks	1.000E+02	1.000E+02	BIOFAC(15,2)
-5				
-5	Ra-226+D , fish	5.000E+01	5.000E+01	BIOFAC(16,1)
-5	Ra-226+D , crustacea and mollusks	2.500E+02	2.500E+02	BIOFAC(16,2)
-5				
-5	Ra-226+D1 , fish	5.000E+01	5.000E+01	BIOFAC(19,1)
-5	Ra-226+D1 , crustacea and mollusks	2.500E+02	2.500E+02	BIOFAC(19,2)
-5				
-5	Ra-226+D2 , fish	5.000E+01	5.000E+01	BIOFAC(22,1)
-5	Ra-226+D2 , crustacea and mollusks	2.500E+02	2.500E+02	BIOFAC(22,2)
-5				
-5	Ra-226+D3 , fish	5.000E+01	5.000E+01	BIOFAC(25,1)
-5	Ra-226+D3 , crustacea and mollusks	2.500E+02	2.500E+02	BIOFAC(25,2)
-5				
-5	Ra-226+D4 , fish	5.000E+01	5.000E+01	BIOFAC(28,1)
-5	Ra-226+D4 , crustacea and mollusks	2.500E+02	2.500E+02	BIOFAC(28,2)
-5				
-5	Ra-228+D , fish	5.000E+01	5.000E+01	BIOFAC(31,1)
-5	Ra-228+D , crustacea and mollusks	2.500E+02	2.500E+02	BIOFAC(31,2)
-5				

Dose Conversion Factor (and Related) Parameter Summary (continued)

Dose Library: FGR 11

enu	Parameter	Current Value#	Base Case*	Parameter Name
-5	Th-228+D , fish	1.000E+02	1.000E+02	BIOFAC(32,1)
-5	Th-228+D , crustacea and mollusks	5.000E+02	5.000E+02	BIOFAC(32,2)
-5				
-5	Th-230 , fish	1.000E+02	1.000E+02	BIOFAC(33,1)
-5	Th-230 , crustacea and mollusks	5.000E+02	5.000E+02	BIOFAC(33,2)
-5				
-5	Th-232 , fish	1.000E+02	1.000E+02	BIOFAC(48,1)
-5	Th-232 , crustacea and mollusks	5.000E+02	5.000E+02	BIOFAC(48,2)
-5				
-5	U-234 , fish	1.000E+01	1.000E+01	BIOFAC(49,1)
-5	U-234 , crustacea and mollusks	6.000E+01	6.000E+01	BIOFAC(49,2)
-5				
-5	U-235+D , fish	1.000E+01	1.000E+01	BIOFAC(64,1)
-5	U-235+D , crustacea and mollusks	6.000E+01	6.000E+01	BIOFAC(64,2)
-5				
-5	U-238 , fish	1.000E+01	1.000E+01	BIOFAC(70,1)
-5	U-238 , crustacea and mollusks	6.000E+01	6.000E+01	BIOFAC(70,2)
-5				
-5	U-238+D , fish	1.000E+01	1.000E+01	BIOFAC(71,1)
-5	U-238+D , crustacea and mollusks	6.000E+01	6.000E+01	BIOFAC(71,2)
-5				
-5	U-238+D1 , fish	1.000E+01	1.000E+01	BIOFAC(86,1)
-5	U-238+D1 , crustacea and mollusks	6.000E+01	6.000E+01	BIOFAC(86,2)
-5				

For DCF1(xxx) only, factors are for infinite depth & area. See ETFG table in Ground Pathway of Detailed Report.
Base Case means Default.Lib w/o Associate Nuclide contributions.

ummary : Park Ranger Ingestion
ile : C:\USERS\CLAUDE\DOCUMENTS\0 GKP DOSE\RESRAD CW\GKP PARK RANGER-INGESTION.RAD

Site-Specific Parameter Summary

enu	Parameter	User Input	Default	Used by RESRAD (If different from user input)	Parameter Name
011	Area of contaminated zone (m**2)	2.000E+02	1.000E+04	---	AREA
011	Thickness of contaminated zone (m)	1.500E-01	2.000E+00	---	THICK0
011	Fraction of contamination that is submerged	0.000E+00	0.000E+00	---	SUBMFRACT
011	Length parallel to aquifer flow (m)	1.000E+02	1.000E+02	---	LCZPAQ
011	Basic radiation dose limit (mrem/yr)	2.500E+01	3.000E+01	---	BRDL
011	Time since placement of material (yr)	0.000E+00	0.000E+00	---	TI
011	Times for calculations (yr)	1.000E+00	1.000E+00	---	T(2)
011	Times for calculations (yr)	3.000E+00	3.000E+00	---	T(3)
011	Times for calculations (yr)	1.000E+01	1.000E+01	---	T(4)
011	Times for calculations (yr)	3.000E+01	3.000E+01	---	T(5)
011	Times for calculations (yr)	1.000E+02	1.000E+02	---	T(6)
011	Times for calculations (yr)	3.000E+02	3.000E+02	---	T(7)
011	Times for calculations (yr)	1.000E+03	1.000E+03	---	T(8)
011	Times for calculations (yr)	not used	0.000E+00	---	T(9)
011	Times for calculations (yr)	not used	0.000E+00	---	T(10)
012	Initial principal radionuclide (pCi/g): Ra-226	3.650E+01	0.000E+00	---	S1(16)
012	Initial principal radionuclide (pCi/g): Th-232	2.400E+00	0.000E+00	---	S1(48)
012	Initial principal radionuclide (pCi/g): U-234	1.390E+01	0.000E+00	---	S1(49)
012	Initial principal radionuclide (pCi/g): U-235	8.400E-01	0.000E+00	---	S1(64)
012	Initial principal radionuclide (pCi/g): U-238	1.390E+01	0.000E+00	---	S1(70)
012	Concentration in groundwater (pCi/L): Ra-226	not used	0.000E+00	---	W1(16)
012	Concentration in groundwater (pCi/L): Th-232	not used	0.000E+00	---	W1(48)
012	Concentration in groundwater (pCi/L): U-234	not used	0.000E+00	---	W1(49)
012	Concentration in groundwater (pCi/L): U-235	not used	0.000E+00	---	W1(64)
012	Concentration in groundwater (pCi/L): U-238	not used	0.000E+00	---	W1(70)
013	Cover depth (m)	0.000E+00	0.000E+00	---	COVER0
013	Density of cover material (g/cm**3)	not used	1.500E+00	---	DENSCV
013	Cover depth erosion rate (m/yr)	not used	1.000E-03	---	VCV
013	Density of contaminated zone (g/cm**3)	1.500E+00	1.500E+00	---	DENSCZ
013	Contaminated zone erosion rate (m/yr)	1.000E-03	1.000E-03	---	VCZ
013	Contaminated zone total porosity	4.000E-01	4.000E-01	---	TPCZ
013	Contaminated zone field capacity	2.000E-01	2.000E-01	---	FCCZ
013	Contaminated zone hydraulic conductivity (m/yr)	1.000E+01	1.000E+01	---	HCCZ
013	Contaminated zone b parameter	5.300E+00	5.300E+00	---	BCZ
013	Average annual wind speed (m/sec)	2.000E+00	2.000E+00	---	WIND
013	Humidity in air (g/m**3)	not used	8.000E+00	---	HUMID
013	Evapotranspiration coefficient	5.000E-01	5.000E-01	---	EVAPTR
013	Precipitation (m/yr)	1.000E+00	1.000E+00	---	PRECIP
013	Irrigation (m/yr)	2.000E-01	2.000E-01	---	RI
013	Irrigation mode	overhead	overhead	---	IDITCH
013	Runoff coefficient	2.000E-01	2.000E-01	---	RUNOFF
013	Watershed area for nearby stream or pond (m**2)	1.000E+06	1.000E+06	---	WAREA
013	Accuracy for water/soil computations	1.000E-03	1.000E-03	---	EPS
014	Density of saturated zone (g/cm**3)	1.500E+00	1.500E+00	---	DENSAQ
014	Saturated zone total porosity	4.000E-01	4.000E-01	---	TPSZ
014	Saturated zone effective porosity	2.000E-01	2.000E-01	---	EPSZ
014	Saturated zone field capacity	2.000E-01	2.000E-01	---	FCSZ

Site-Specific Parameter Summary (continued)

enu	Parameter	User Input	Default	Used by RESRAD (If different from user input)	Parameter Name
014	Saturated zone hydraulic conductivity (m/yr)	1.000E+02	1.000E+02	---	HCSZ
014	Saturated zone hydraulic gradient	2.000E-02	2.000E-02	---	HGWT
014	Saturated zone b parameter	5.300E+00	5.300E+00	---	BSZ
014	Water table drop rate (m/yr)	1.000E-03	1.000E-03	---	VWT
014	Well pump intake depth (m below water table)	1.000E+01	1.000E+01	---	DWIBWT
014	Model: Nondispersion (ND) or Mass-Balance (MB)	ND	ND	---	MODEL
014	Well pumping rate (m**3/yr)	2.500E+02	2.500E+02	---	UW
015	Number of unsaturated zone strata	1	1	---	NS
015	Unsat. zone 1, thickness (m)	4.000E+00	4.000E+00	---	H(1)
015	Unsat. zone 1, soil density (g/cm**3)	1.500E+00	1.500E+00	---	DENSUZ(1)
015	Unsat. zone 1, total porosity	4.000E-01	4.000E-01	---	TPUZ(1)
015	Unsat. zone 1, effective porosity	2.000E-01	2.000E-01	---	EPUZ(1)
015	Unsat. zone 1, field capacity	2.000E-01	2.000E-01	---	FCUZ(1)
015	Unsat. zone 1, soil-specific b parameter	5.300E+00	5.300E+00	---	BUZ(1)
015	Unsat. zone 1, hydraulic conductivity (m/yr)	1.000E+01	1.000E+01	---	HCUZ(1)
016	Distribution coefficients for Ra-226				
016	Contaminated zone (cm**3/g)	7.000E+01	7.000E+01	---	DCNUCC(16)
016	Unsaturated zone 1 (cm**3/g)	7.000E+01	7.000E+01	---	DCNUCU(16,1)
016	Saturated zone (cm**3/g)	7.000E+01	7.000E+01	---	DCNUCS(16)
016	Leach rate (/yr)	0.000E+00	0.000E+00	3.165E-02	ALEACH(16)
016	Solubility constant	0.000E+00	0.000E+00	not used	SOLUBK(16)
016	Distribution coefficients for Th-232				
016	Contaminated zone (cm**3/g)	6.000E+04	6.000E+04	---	DCNUCC(48)
016	Unsaturated zone 1 (cm**3/g)	6.000E+04	6.000E+04	---	DCNUCU(48,1)
016	Saturated zone (cm**3/g)	6.000E+04	6.000E+04	---	DCNUCS(48)
016	Leach rate (/yr)	0.000E+00	0.000E+00	3.704E-05	ALEACH(48)
016	Solubility constant	0.000E+00	0.000E+00	not used	SOLUBK(48)
016	Distribution coefficients for U-234				
016	Contaminated zone (cm**3/g)	5.000E+01	5.000E+01	---	DCNUCC(49)
016	Unsaturated zone 1 (cm**3/g)	5.000E+01	5.000E+01	---	DCNUCU(49,1)
016	Saturated zone (cm**3/g)	5.000E+01	5.000E+01	---	DCNUCS(49)
016	Leach rate (/yr)	0.000E+00	0.000E+00	4.426E-02	ALEACH(49)
016	Solubility constant	0.000E+00	0.000E+00	not used	SOLUBK(49)
016	Distribution coefficients for U-235				
016	Contaminated zone (cm**3/g)	5.000E+01	5.000E+01	---	DCNUCC(64)
016	Unsaturated zone 1 (cm**3/g)	5.000E+01	5.000E+01	---	DCNUCU(64,1)
016	Saturated zone (cm**3/g)	5.000E+01	5.000E+01	---	DCNUCS(64)
016	Leach rate (/yr)	0.000E+00	0.000E+00	4.426E-02	ALEACH(64)
016	Solubility constant	0.000E+00	0.000E+00	not used	SOLUBK(64)
016	Distribution coefficients for U-238				
016	Contaminated zone (cm**3/g)	5.000E+01	5.000E+01	---	DCNUCC(70)
016	Unsaturated zone 1 (cm**3/g)	5.000E+01	5.000E+01	---	DCNUCU(70,1)
016	Saturated zone (cm**3/g)	5.000E+01	5.000E+01	---	DCNUCS(70)
016	Leach rate (/yr)	0.000E+00	0.000E+00	4.426E-02	ALEACH(70)
016	Solubility constant	0.000E+00	0.000E+00	not used	SOLUBK(70)

Site-Specific Parameter Summary (continued)

enu	Parameter	User Input	Default	Used by RESRAD (If different from user input)	Parameter Name
016	Distribution coefficients for daughter Ac-227				
016	Contaminated zone (cm**3/g)	2.000E+01	2.000E+01	---	DCNUCC(1)
016	Unsaturated zone 1 (cm**3/g)	2.000E+01	2.000E+01	---	DCNUCU(1,1)
016	Saturated zone (cm**3/g)	2.000E+01	2.000E+01	---	DCNUCS(1)
016	Leach rate (/yr)	0.000E+00	0.000E+00	1.099E-01	ALEACH(1)
016	Solubility constant	0.000E+00	0.000E+00	not used	SOLUBK(1)
016	Distribution coefficients for daughter Pa-231				
016	Contaminated zone (cm**3/g)	5.000E+01	5.000E+01	---	DCNUCC(7)
016	Unsaturated zone 1 (cm**3/g)	5.000E+01	5.000E+01	---	DCNUCU(7,1)
016	Saturated zone (cm**3/g)	5.000E+01	5.000E+01	---	DCNUCS(7)
016	Leach rate (/yr)	0.000E+00	0.000E+00	4.426E-02	ALEACH(7)
016	Solubility constant	0.000E+00	0.000E+00	not used	SOLUBK(7)
016	Distribution coefficients for daughter Pb-210				
016	Contaminated zone (cm**3/g)	1.000E+02	1.000E+02	---	DCNUCC(13)
016	Unsaturated zone 1 (cm**3/g)	1.000E+02	1.000E+02	---	DCNUCU(13,1)
016	Saturated zone (cm**3/g)	1.000E+02	1.000E+02	---	DCNUCS(13)
016	Leach rate (/yr)	0.000E+00	0.000E+00	2.217E-02	ALEACH(13)
016	Solubility constant	0.000E+00	0.000E+00	not used	SOLUBK(13)
016	Distribution coefficients for daughter Ra-228				
016	Contaminated zone (cm**3/g)	7.000E+01	7.000E+01	---	DCNUCC(31)
016	Unsaturated zone 1 (cm**3/g)	7.000E+01	7.000E+01	---	DCNUCU(31,1)
016	Saturated zone (cm**3/g)	7.000E+01	7.000E+01	---	DCNUCS(31)
016	Leach rate (/yr)	0.000E+00	0.000E+00	3.165E-02	ALEACH(31)
016	Solubility constant	0.000E+00	0.000E+00	not used	SOLUBK(31)
016	Distribution coefficients for daughter Th-228				
016	Contaminated zone (cm**3/g)	6.000E+04	6.000E+04	---	DCNUCC(32)
016	Unsaturated zone 1 (cm**3/g)	6.000E+04	6.000E+04	---	DCNUCU(32,1)
016	Saturated zone (cm**3/g)	6.000E+04	6.000E+04	---	DCNUCS(32)
016	Leach rate (/yr)	0.000E+00	0.000E+00	3.704E-05	ALEACH(32)
016	Solubility constant	0.000E+00	0.000E+00	not used	SOLUBK(32)
016	Distribution coefficients for daughter Th-230				
016	Contaminated zone (cm**3/g)	6.000E+04	6.000E+04	---	DCNUCC(33)
016	Unsaturated zone 1 (cm**3/g)	6.000E+04	6.000E+04	---	DCNUCU(33,1)
016	Saturated zone (cm**3/g)	6.000E+04	6.000E+04	---	DCNUCS(33)
016	Leach rate (/yr)	0.000E+00	0.000E+00	3.704E-05	ALEACH(33)
016	Solubility constant	0.000E+00	0.000E+00	not used	SOLUBK(33)
017	Inhalation rate (m**3/yr)	not used	8.400E+03	---	INHALR
017	Mass loading for inhalation (g/m**3)	not used	1.000E-04	---	MLINH
017	Exposure duration	3.000E+01	3.000E+01	---	ED
017	Shielding factor, inhalation	not used	4.000E-01	---	SHF3
017	Shielding factor, external gamma	not used	7.000E-01	---	SHF1
017	Fraction of time spent indoors	0.000E+00	5.000E-01	---	FIND
017	Fraction of time spent outdoors (on site)	2.280E-01	2.500E-01	---	FOTD
017	Shape factor flag, external gamma	not used	1.000E+00	>0 shows circular AREA.	FS

Site-Specific Parameter Summary (continued)

enu	Parameter	User Input	Default	Used by RESRAD (If different from user input)	Parameter Name
017	Radii of shape factor array (used if FS = -1):				
017	Outer annular radius (m), ring 1:	not used	5.000E+01	---	RAD_SHAPE(1)
017	Outer annular radius (m), ring 2:	not used	7.071E+01	---	RAD_SHAPE(2)
017	Outer annular radius (m), ring 3:	not used	0.000E+00	---	RAD_SHAPE(3)
017	Outer annular radius (m), ring 4:	not used	0.000E+00	---	RAD_SHAPE(4)
017	Outer annular radius (m), ring 5:	not used	0.000E+00	---	RAD_SHAPE(5)
017	Outer annular radius (m), ring 6:	not used	0.000E+00	---	RAD_SHAPE(6)
017	Outer annular radius (m), ring 7:	not used	0.000E+00	---	RAD_SHAPE(7)
017	Outer annular radius (m), ring 8:	not used	0.000E+00	---	RAD_SHAPE(8)
017	Outer annular radius (m), ring 9:	not used	0.000E+00	---	RAD_SHAPE(9)
017	Outer annular radius (m), ring 10:	not used	0.000E+00	---	RAD_SHAPE(10)
017	Outer annular radius (m), ring 11:	not used	0.000E+00	---	RAD_SHAPE(11)
017	Outer annular radius (m), ring 12:	not used	0.000E+00	---	RAD_SHAPE(12)
017	Fractions of annular areas within AREA:				
017	Ring 1	not used	1.000E+00	---	FRACA(1)
017	Ring 2	not used	2.732E-01	---	FRACA(2)
017	Ring 3	not used	0.000E+00	---	FRACA(3)
017	Ring 4	not used	0.000E+00	---	FRACA(4)
017	Ring 5	not used	0.000E+00	---	FRACA(5)
017	Ring 6	not used	0.000E+00	---	FRACA(6)
017	Ring 7	not used	0.000E+00	---	FRACA(7)
017	Ring 8	not used	0.000E+00	---	FRACA(8)
017	Ring 9	not used	0.000E+00	---	FRACA(9)
017	Ring 10	not used	0.000E+00	---	FRACA(10)
017	Ring 11	not used	0.000E+00	---	FRACA(11)
017	Ring 12	not used	0.000E+00	---	FRACA(12)
018	Fruits, vegetables and grain consumption (kg/yr)	not used	1.600E+02	---	DIET(1)
018	Leafy vegetable consumption (kg/yr)	not used	1.400E+01	---	DIET(2)
018	Milk consumption (L/yr)	not used	9.200E+01	---	DIET(3)
018	Meat and poultry consumption (kg/yr)	not used	6.300E+01	---	DIET(4)
018	Fish consumption (kg/yr)	not used	5.400E+00	---	DIET(5)
018	Other seafood consumption (kg/yr)	not used	9.000E-01	---	DIET(6)
018	Soil ingestion rate (g/yr)	3.650E+01	3.650E+01	---	SOIL
018	Drinking water intake (L/yr)	not used	5.100E+02	---	DWI
018	Contamination fraction of drinking water	not used	1.000E+00	---	FDW
018	Contamination fraction of household water	1.000E+00	1.000E+00	---	FHHW
018	Contamination fraction of livestock water	not used	1.000E+00	---	FLW
018	Contamination fraction of irrigation water	not used	1.000E+00	---	FIRW
018	Contamination fraction of aquatic food	not used	5.000E-01	---	FR9
018	Contamination fraction of plant food	not used	-1	---	FPLANT
018	Contamination fraction of meat	not used	-1	---	FMEAT
018	Contamination fraction of milk	not used	-1	---	FMILK
019	Livestock fodder intake for meat (kg/day)	not used	6.800E+01	---	LFI5
019	Livestock fodder intake for milk (kg/day)	not used	5.500E+01	---	LFI6
019	Livestock water intake for meat (L/day)	not used	5.000E+01	---	LWI5
019	Livestock water intake for milk (L/day)	not used	1.600E+02	---	LWI6
019	Livestock soil intake (kg/day)	not used	5.000E-01	---	LSI

Site-Specific Parameter Summary (continued)

enu	Parameter	User Input	Default	Used by RESRAD (If different from user input)	Parameter Name
019	Mass loading for foliar deposition (g/m**3)	not used	1.000E-04	---	MLFD
019	Depth of soil mixing layer (m)	1.500E-01	1.500E-01	---	DM
019	Depth of roots (m)	not used	9.000E-01	---	DROOT
019	Drinking water fraction from ground water	not used	1.000E+00	---	FGWDW
019	Household water fraction from ground water	1.000E+00	1.000E+00	---	FGWHH
019	Livestock water fraction from ground water	not used	1.000E+00	---	FGWLW
019	Irrigation fraction from ground water	not used	1.000E+00	---	FGWIR
19B	Wet weight crop yield for Non-Leafy (kg/m**2)	not used	7.000E-01	---	YV(1)
19B	Wet weight crop yield for Leafy (kg/m**2)	not used	1.500E+00	---	YV(2)
19B	Wet weight crop yield for Fodder (kg/m**2)	not used	1.100E+00	---	YV(3)
19B	Growing Season for Non-Leafy (years)	not used	1.700E-01	---	TE(1)
19B	Growing Season for Leafy (years)	not used	2.500E-01	---	TE(2)
19B	Growing Season for Fodder (years)	not used	8.000E-02	---	TE(3)
19B	Translocation Factor for Non-Leafy	not used	1.000E-01	---	TIV(1)
19B	Translocation Factor for Leafy	not used	1.000E+00	---	TIV(2)
19B	Translocation Factor for Fodder	not used	1.000E+00	---	TIV(3)
19B	Dry Foliar Interception Fraction for Non-Leafy	not used	2.500E-01	---	RDRY(1)
19B	Dry Foliar Interception Fraction for Leafy	not used	2.500E-01	---	RDRY(2)
19B	Dry Foliar Interception Fraction for Fodder	not used	2.500E-01	---	RDRY(3)
19B	Wet Foliar Interception Fraction for Non-Leafy	not used	2.500E-01	---	RWET(1)
19B	Wet Foliar Interception Fraction for Leafy	not used	2.500E-01	---	RWET(2)
19B	Wet Foliar Interception Fraction for Fodder	not used	2.500E-01	---	RWET(3)
19B	Weathering Removal Constant for Vegetation	not used	2.000E+01	---	WLAM
14	C-12 concentration in water (g/cm**3)	not used	2.000E-05	---	C12WTR
14	C-12 concentration in contaminated soil (g/g)	not used	3.000E-02	---	C12CZ
14	Fraction of vegetation carbon from soil	not used	2.000E-02	---	CSOIL
14	Fraction of vegetation carbon from air	not used	9.800E-01	---	CAIR
14	C-14 evasion layer thickness in soil (m)	not used	3.000E-01	---	DMC
14	C-14 evasion flux rate from soil (1/sec)	not used	7.000E-07	---	EVSN
14	C-12 evasion flux rate from soil (1/sec)	not used	1.000E-10	---	REVSN
14	Fraction of grain in beef cattle feed	not used	8.000E-01	---	AVFG4
14	Fraction of grain in milk cow feed	not used	2.000E-01	---	AVFG5
TOR	Storage times of contaminated foodstuffs (days):				
TOR	Fruits, non-leafy vegetables, and grain	1.400E+01	1.400E+01	---	STOR_T(1)
TOR	Leafy vegetables	1.000E+00	1.000E+00	---	STOR_T(2)
TOR	Milk	1.000E+00	1.000E+00	---	STOR_T(3)
TOR	Meat and poultry	2.000E+01	2.000E+01	---	STOR_T(4)
TOR	Fish	7.000E+00	7.000E+00	---	STOR_T(5)
TOR	Crustacea and mollusks	7.000E+00	7.000E+00	---	STOR_T(6)
TOR	Well water	1.000E+00	1.000E+00	---	STOR_T(7)
TOR	Surface water	1.000E+00	1.000E+00	---	STOR_T(8)
TOR	Livestock fodder	4.500E+01	4.500E+01	---	STOR_T(9)
021	Thickness of building foundation (m)	not used	1.500E-01	---	FLOOR1
021	Bulk density of building foundation (g/cm**3)	not used	2.400E+00	---	DENSFL
021	Total porosity of the cover material	not used	4.000E-01	---	TPCV
021	Total porosity of the building foundation	not used	1.000E-01	---	TPFL

Site-Specific Parameter Summary (continued)

enu	Parameter	User Input	Default	Used by RESRAD (If different from user input)	Parameter Name
021	Volumetric water content of the cover material	not used	5.000E-02	---	PH2OCV
021	Volumetric water content of the foundation	not used	3.000E-02	---	PH2OFL
021	Diffusion coefficient for radon gas (m/sec):				
021	in cover material	not used	2.000E-06	---	DIFCV
021	in foundation material	not used	3.000E-07	---	DIFFL
021	in contaminated zone soil	2.000E-06	2.000E-06	---	DIFCZ
021	Radon vertical dimension of mixing (m)	2.000E+00	2.000E+00	---	HMIX
021	Average building air exchange rate (1/hr)	not used	5.000E-01	---	REXG
021	Height of the building (room) (m)	not used	2.500E+00	---	HRM
021	Building interior area factor	not used	0.000E+00	code computed (time dependent)	FAI
021	Building depth below ground surface (m)	not used	-1.000E+00	code computed (time dependent)	DMFL
021	Emanating power of Rn-222 gas	2.500E-01	2.500E-01	---	EMANA(1)
021	Emanating power of Rn-220 gas	1.500E-01	1.500E-01	---	EMANA(2)
ITL	Number of graphical time points	32	---	---	NPTS
ITL	Maximum number of integration points for dose	17	---	---	LYMAX
ITL	Maximum number of integration points for risk	257	---	---	KYMAX

Summary of Pathway Selections

Pathway	User Selection
1 -- external gamma	suppressed
2 -- inhalation (w/o radon)	suppressed
3 -- plant ingestion	suppressed
4 -- meat ingestion	suppressed
5 -- milk ingestion	suppressed
6 -- aquatic foods	suppressed
7 -- drinking water	suppressed
8 -- soil ingestion	active
9 -- radon	active
Find peak pathway doses	suppressed

ummary : Park Ranger Ingestion
ile : C:\USERS\CLAUDE\DOCUMENTS\0 GKP DOSE\RESRAD CW\GKP PARK RANGER-INGESTION.RAD

Contaminated Zone Dimensions		Initial Soil Concentrations, pCi/g	
Area:	200.00 square meters	Ra-226	3.650E+01
Thickness:	0.15 meters	Th-232	2.400E+00
over Depth:	0.00 meters	U-234	1.390E+01
		U-235	8.400E-01
		U-238	1.390E+01

Total Dose TDOSE(t), mrem/yr
Basic Radiation Dose Limit = 2.500E+01 mrem/yr
Total Mixture Sum M(t) = Fraction of Basic Dose Limit Received at Time (t)

t (years):	0.000E+00	1.000E+00	3.000E+00	1.000E+01	3.000E+01	1.000E+02	3.000E+02	1.000E+03
TDOSE(t):	1.098E-01	1.193E-01	1.352E-01	1.635E-01	1.353E-01	1.602E-02	0.000E+00	0.000E+00
M(t):	4.391E-03	4.772E-03	5.408E-03	6.540E-03	5.411E-03	6.410E-04	0.000E+00	0.000E+00

aximum TDOSE(t): 1.663E-01 mrem/yr at t = 13.55 ñ 0.03 years

Total Dose Contributions TDOSE(i,p,t) for Individual Radionuclides (i) and Pathways (p)
As mrem/yr and Fraction of Total Dose At t = 1.355E+01 years

Water Independent Pathways (Inhalation excludes radon)

adio-	Ground		Inhalation		Radon		Plant		Meat		Milk		Soil	
uclide	mrem/yr	fract.	mrem/yr	fract.	mrem/yr	fract.	mrem/yr	fract.	mrem/yr	fract.	mrem/yr	fract.	mrem/yr	fract.
uclide														
a-226	0.000E+00	0.0000	0.000E+00	0.0000	1.989E-04	0.0012	0.000E+00	0.0000	0.000E+00	0.0000	0.000E+00	0.0000	1.431E-01	0.8606
h-232	0.000E+00	0.0000	0.000E+00	0.0000	1.194E-03	0.0072	0.000E+00	0.0000	0.000E+00	0.0000	0.000E+00	0.0000	1.538E-02	0.0925
-234	0.000E+00	0.0000	0.000E+00	0.0000	3.294E-11	0.0000	0.000E+00	0.0000	0.000E+00	0.0000	0.000E+00	0.0000	3.188E-03	0.0192
-235	0.000E+00	0.0000	0.000E+00	0.0000	0.000E+00	0.0000	0.000E+00	0.0000	0.000E+00	0.0000	0.000E+00	0.0000	1.846E-04	0.0011
-238	0.000E+00	0.0000	0.000E+00	0.0000	4.071E-16	0.0000	0.000E+00	0.0000	0.000E+00	0.0000	0.000E+00	0.0000	3.027E-03	0.0182
otal	0.000E+00	0.0000	0.000E+00	0.0000	1.393E-03	0.0084	0.000E+00	0.0000	0.000E+00	0.0000	0.000E+00	0.0000	1.649E-01	0.9916

Total Dose Contributions TDOSE(i,p,t) for Individual Radionuclides (i) and Pathways (p)
As mrem/yr and Fraction of Total Dose At t = 1.355E+01 years

Water Dependent Pathways

adio-	Water		Fish		Radon		Plant		Meat		Milk		All Pathways*	
uclide	mrem/yr	fract.	mrem/yr	fract.	mrem/yr	fract.	mrem/yr	fract.	mrem/yr	fract.	mrem/yr	fract.	mrem/yr	fract.
uclide														
a-226	0.000E+00	0.0000	0.000E+00	0.0000	0.000E+00	0.0000	0.000E+00	0.0000	0.000E+00	0.0000	0.000E+00	0.0000	1.433E-01	0.8618
h-232	0.000E+00	0.0000	0.000E+00	0.0000	0.000E+00	0.0000	0.000E+00	0.0000	0.000E+00	0.0000	0.000E+00	0.0000	1.658E-02	0.0997
-234	0.000E+00	0.0000	0.000E+00	0.0000	0.000E+00	0.0000	0.000E+00	0.0000	0.000E+00	0.0000	0.000E+00	0.0000	3.188E-03	0.0192
-235	0.000E+00	0.0000	0.000E+00	0.0000	0.000E+00	0.0000	0.000E+00	0.0000	0.000E+00	0.0000	0.000E+00	0.0000	1.846E-04	0.0011
-238	0.000E+00	0.0000	0.000E+00	0.0000	0.000E+00	0.0000	0.000E+00	0.0000	0.000E+00	0.0000	0.000E+00	0.0000	3.027E-03	0.0182
otal	0.000E+00	0.0000	0.000E+00	0.0000	0.000E+00	0.0000	0.000E+00	0.0000	0.000E+00	0.0000	0.000E+00	0.0000	1.663E-01	1.0000

Sum of all water independent and dependent pathways.

ummary : Park Ranger Ingestion
ile : C:\USERS\CLAUDE\DOCUMENTS\0 GKP DOSE\RESRAD CW\GKP PARK RANGER-INGESTION.RAD

Total Dose Contributions TDOSE(i,p,t) for Individual Radionuclides (i) and Pathways (p)
As mrem/yr and Fraction of Total Dose At t = 0.000E+00 years

Water Independent Pathways (Inhalation excludes radon)

	Ground		Inhalation		Radon		Plant		Meat		Milk		Soil	
adio-	ÄÄÄÄÄÄÄÄÄÄÄÄÄÄÄÄ		ÄÄÄÄÄÄÄÄÄÄÄÄÄÄÄÄ		ÄÄÄÄÄÄÄÄÄÄÄÄÄÄÄÄ		ÄÄÄÄÄÄÄÄÄÄÄÄÄÄÄÄ		ÄÄÄÄÄÄÄÄÄÄÄÄÄÄÄÄ		ÄÄÄÄÄÄÄÄÄÄÄÄÄÄÄÄ		ÄÄÄÄÄÄÄÄÄÄÄÄÄÄÄÄ		ÄÄÄÄÄÄÄÄÄÄÄÄÄÄÄÄ	
uclide	mrem/yr	fract.	mrem/yr	fract.	mrem/yr	fract.	mrem/yr	fract.	mrem/yr	fract.	mrem/yr	fract.	mrem/yr	fract.
ÄÄÄÄÄÄ	ÄÄÄÄÄÄÄÄÄ	ÄÄÄÄÄÄ	ÄÄÄÄÄÄÄÄÄ	ÄÄÄÄÄÄ	ÄÄÄÄÄÄÄÄÄ	ÄÄÄÄÄÄ	ÄÄÄÄÄÄÄÄÄ	ÄÄÄÄÄÄ	ÄÄÄÄÄÄÄÄÄ	ÄÄÄÄÄÄ	ÄÄÄÄÄÄÄÄÄ	ÄÄÄÄÄÄ	ÄÄÄÄÄÄÄÄÄ	ÄÄÄÄÄÄ
a-226	0.000E+00	0.0000	0.000E+00	0.0000	3.372E-04	0.0031	0.000E+00	0.0000	0.000E+00	0.0000	0.000E+00	0.0000	8.539E-02	0.7779
n-232	0.000E+00	0.0000	0.000E+00	0.0000	1.209E-05	0.0001	0.000E+00	0.0000	0.000E+00	0.0000	0.000E+00	0.0000	1.122E-02	0.1022
-234	0.000E+00	0.0000	0.000E+00	0.0000	8.487E-14	0.0000	0.000E+00	0.0000	0.000E+00	0.0000	0.000E+00	0.0000	6.383E-03	0.0582
-235	0.000E+00	0.0000	0.000E+00	0.0000	0.000E+00	0.0000	0.000E+00	0.0000	0.000E+00	0.0000	0.000E+00	0.0000	3.646E-04	0.0033
-238	0.000E+00	0.0000	0.000E+00	0.0000	5.958E-20	0.0000	0.000E+00	0.0000	0.000E+00	0.0000	0.000E+00	0.0000	6.061E-03	0.0552
íííííí	íííííííííí	íííííí	íííííííííí	íííííí	íííííííííí	íííííí	íííííííííí	íííííí	íííííííííí	íííííí	íííííííííí	íííííí	íííííííííí	íííííí
otal	0.000E+00	0.0000	0.000E+00	0.0000	3.493E-04	0.0032	0.000E+00	0.0000	0.000E+00	0.0000	0.000E+00	0.0000	1.094E-01	0.9968

Total Dose Contributions TDOSE(i,p,t) for Individual Radionuclides (i) and Pathways (p)
As mrem/yr and Fraction of Total Dose At t = 0.000E+00 years

Water Dependent Pathways

	Water		Fish		Radon		Plant		Meat		Milk		All Pathways*	
adio-	ÄÄÄÄÄÄÄÄÄÄÄÄÄÄÄÄ		ÄÄÄÄÄÄÄÄÄÄÄÄÄÄÄÄ		ÄÄÄÄÄÄÄÄÄÄÄÄÄÄÄÄ		ÄÄÄÄÄÄÄÄÄÄÄÄÄÄÄÄ		ÄÄÄÄÄÄÄÄÄÄÄÄÄÄÄÄ		ÄÄÄÄÄÄÄÄÄÄÄÄÄÄÄÄ		ÄÄÄÄÄÄÄÄÄÄÄÄÄÄÄÄ	
uclide	mrem/yr	fract.	mrem/yr	fract.	mrem/yr	fract.	mrem/yr	fract.	mrem/yr	fract.	mrem/yr	fract.	mrem/yr	fract.
ÄÄÄÄÄÄ	ÄÄÄÄÄÄÄÄÄ	ÄÄÄÄÄÄ	ÄÄÄÄÄÄÄÄÄ	ÄÄÄÄÄÄ	ÄÄÄÄÄÄÄÄÄ	ÄÄÄÄÄÄ	ÄÄÄÄÄÄÄÄÄ	ÄÄÄÄÄÄ	ÄÄÄÄÄÄÄÄÄ	ÄÄÄÄÄÄ	ÄÄÄÄÄÄÄÄÄ	ÄÄÄÄÄÄ	ÄÄÄÄÄÄÄÄÄ	ÄÄÄÄÄÄ
a-226	0.000E+00	0.0000	0.000E+00	0.0000	0.000E+00	0.0000	0.000E+00	0.0000	0.000E+00	0.0000	0.000E+00	0.0000	8.573E-02	0.7810
n-232	0.000E+00	0.0000	0.000E+00	0.0000	0.000E+00	0.0000	0.000E+00	0.0000	0.000E+00	0.0000	0.000E+00	0.0000	1.123E-02	0.1023
-234	0.000E+00	0.0000	0.000E+00	0.0000	0.000E+00	0.0000	0.000E+00	0.0000	0.000E+00	0.0000	0.000E+00	0.0000	6.383E-03	0.0582
-235	0.000E+00	0.0000	0.000E+00	0.0000	0.000E+00	0.0000	0.000E+00	0.0000	0.000E+00	0.0000	0.000E+00	0.0000	3.646E-04	0.0033
-238	0.000E+00	0.0000	0.000E+00	0.0000	0.000E+00	0.0000	0.000E+00	0.0000	0.000E+00	0.0000	0.000E+00	0.0000	6.061E-03	0.0552
íííííí	íííííííííí	íííííí	íííííííííí	íííííí	íííííííííí	íííííí	íííííííííí	íííííí	íííííííííí	íííííí	íííííííííí	íííííí	íííííííííí	íííííí
otal	0.000E+00	0.0000	0.000E+00	0.0000	0.000E+00	0.0000	0.000E+00	0.0000	0.000E+00	0.0000	0.000E+00	0.0000	1.098E-01	1.0000

Sum of all water independent and dependent pathways.

ummary : Park Ranger Ingestion
ile : C:\USERS\CLAUDE\DOCUMENTS\0 GKP DOSE\RESRAD CW\GKP PARK RANGER-INGESTION.RAD

Total Dose Contributions TDOSE(i,p,t) for Individual Radionuclides (i) and Pathways (p)
As mrem/yr and Fraction of Total Dose At t = 1.000E+00 years

Water Independent Pathways (Inhalation excludes radon)

	Ground		Inhalation		Radon		Plant		Meat		Milk		Soil	
adio-	ÄÄÄÄÄÄÄÄÄÄÄÄÄÄÄÄ		ÄÄÄÄÄÄÄÄÄÄÄÄÄÄÄÄ		ÄÄÄÄÄÄÄÄÄÄÄÄÄÄÄÄ		ÄÄÄÄÄÄÄÄÄÄÄÄÄÄÄÄ		ÄÄÄÄÄÄÄÄÄÄÄÄÄÄÄÄ		ÄÄÄÄÄÄÄÄÄÄÄÄÄÄÄÄ		ÄÄÄÄÄÄÄÄÄÄÄÄÄÄÄÄ	
uclide	mrem/yr	fract.	mrem/yr	fract.	mrem/yr	fract.	mrem/yr	fract.	mrem/yr	fract.	mrem/yr	fract.	mrem/yr	fract.
ÄÄÄÄÄÄ	ÄÄÄÄÄÄÄÄÄ	ÄÄÄÄÄÄ	ÄÄÄÄÄÄÄÄÄ	ÄÄÄÄÄÄ	ÄÄÄÄÄÄÄÄÄ	ÄÄÄÄÄÄ	ÄÄÄÄÄÄÄÄÄ	ÄÄÄÄÄÄ	ÄÄÄÄÄÄÄÄÄ	ÄÄÄÄÄÄ	ÄÄÄÄÄÄÄÄÄ	ÄÄÄÄÄÄ	ÄÄÄÄÄÄÄÄÄ	ÄÄÄÄÄÄ
a-226	0.000E+00	0.0000	0.000E+00	0.0000	3.244E-04	0.0027	0.000E+00	0.0000	0.000E+00	0.0000	0.000E+00	0.0000	9.489E-02	0.7954
n-232	0.000E+00	0.0000	0.000E+00	0.0000	7.349E-05	0.0006	0.000E+00	0.0000	0.000E+00	0.0000	0.000E+00	0.0000	1.184E-02	0.0992
-234	0.000E+00	0.0000	0.000E+00	0.0000	5.780E-13	0.0000	0.000E+00	0.0000	0.000E+00	0.0000	0.000E+00	0.0000	6.066E-03	0.0508
-235	0.000E+00	0.0000	0.000E+00	0.0000	0.000E+00	0.0000	0.000E+00	0.0000	0.000E+00	0.0000	0.000E+00	0.0000	3.468E-04	0.0029
-238	0.000E+00	0.0000	0.000E+00	0.0000	8.662E-19	0.0000	0.000E+00	0.0000	0.000E+00	0.0000	0.000E+00	0.0000	5.760E-03	0.0483
íííííí	íííííííííí	íííííí	íííííííííí	íííííí	íííííííííí	íííííí	íííííííííí	íííííí	íííííííííí	íííííí	íííííííííí	íííííí	íííííííííí	íííííí
otal	0.000E+00	0.0000	0.000E+00	0.0000	3.979E-04	0.0033	0.000E+00	0.0000	0.000E+00	0.0000	0.000E+00	0.0000	1.189E-01	0.9967

Total Dose Contributions TDOSE(i,p,t) for Individual Radionuclides (i) and Pathways (p)
As mrem/yr and Fraction of Total Dose At t = 1.000E+00 years

Water Dependent Pathways

	Water		Fish		Radon		Plant		Meat		Milk		All Pathways*	
adio-	ÄÄÄÄÄÄÄÄÄÄÄÄÄÄÄÄ		ÄÄÄÄÄÄÄÄÄÄÄÄÄÄÄÄ		ÄÄÄÄÄÄÄÄÄÄÄÄÄÄÄÄ		ÄÄÄÄÄÄÄÄÄÄÄÄÄÄÄÄ		ÄÄÄÄÄÄÄÄÄÄÄÄÄÄÄÄ		ÄÄÄÄÄÄÄÄÄÄÄÄÄÄÄÄ		ÄÄÄÄÄÄÄÄÄÄÄÄÄÄÄÄ	
uclide	mrem/yr	fract.	mrem/yr	fract.	mrem/yr	fract.	mrem/yr	fract.	mrem/yr	fract.	mrem/yr	fract.	mrem/yr	fract.
ÄÄÄÄÄÄ	ÄÄÄÄÄÄÄÄÄ	ÄÄÄÄÄÄ	ÄÄÄÄÄÄÄÄÄ	ÄÄÄÄÄÄ	ÄÄÄÄÄÄÄÄÄ	ÄÄÄÄÄÄ	ÄÄÄÄÄÄÄÄÄ	ÄÄÄÄÄÄ	ÄÄÄÄÄÄÄÄÄ	ÄÄÄÄÄÄ	ÄÄÄÄÄÄÄÄÄ	ÄÄÄÄÄÄ	ÄÄÄÄÄÄÄÄÄ	ÄÄÄÄÄÄ
a-226	0.000E+00	0.0000	0.000E+00	0.0000	0.000E+00	0.0000	0.000E+00	0.0000	0.000E+00	0.0000	0.000E+00	0.0000	9.521E-02	0.7981
n-232	0.000E+00	0.0000	0.000E+00	0.0000	0.000E+00	0.0000	0.000E+00	0.0000	0.000E+00	0.0000	0.000E+00	0.0000	1.191E-02	0.0999
-234	0.000E+00	0.0000	0.000E+00	0.0000	0.000E+00	0.0000	0.000E+00	0.0000	0.000E+00	0.0000	0.000E+00	0.0000	6.066E-03	0.0508
-235	0.000E+00	0.0000	0.000E+00	0.0000	0.000E+00	0.0000	0.000E+00	0.0000	0.000E+00	0.0000	0.000E+00	0.0000	3.468E-04	0.0029
-238	0.000E+00	0.0000	0.000E+00	0.0000	0.000E+00	0.0000	0.000E+00	0.0000	0.000E+00	0.0000	0.000E+00	0.0000	5.760E-03	0.0483
íííííí	íííííííííí	íííííí	íííííííííí	íííííí	íííííííííí	íííííí	íííííííííí	íííííí	íííííííííí	íííííí	íííííííííí	íííííí	íííííííííí	íííííí
otal	0.000E+00	0.0000	0.000E+00	0.0000	0.000E+00	0.0000	0.000E+00	0.0000	0.000E+00	0.0000	0.000E+00	0.0000	1.193E-01	1.0000

Sum of all water independent and dependent pathways.

ummary : Park Ranger Ingestion
ile : C:\USERS\CLAUDE\DOCUMENTS\0 GKP DOSE\RESRAD CW\GKP PARK RANGER-INGESTION.RAD

Total Dose Contributions TDOSE(i,p,t) for Individual Radionuclides (i) and Pathways (p)
As mrem/yr and Fraction of Total Dose At t = 3.000E+00 years

Water Independent Pathways (Inhalation excludes radon)

	Ground		Inhalation		Radon		Plant		Meat		Milk		Soil	
adio-	ÄÄÄÄÄÄÄÄÄÄÄÄÄÄÄ		ÄÄÄÄÄÄÄÄÄÄÄÄÄÄÄ		ÄÄÄÄÄÄÄÄÄÄÄÄÄÄÄ		ÄÄÄÄÄÄÄÄÄÄÄÄÄÄÄ		ÄÄÄÄÄÄÄÄÄÄÄÄÄÄÄ		ÄÄÄÄÄÄÄÄÄÄÄÄÄÄÄ		ÄÄÄÄÄÄÄÄÄÄÄÄÄÄÄ	
uclide	mrem/yr	fract.	mrem/yr	fract.	mrem/yr	fract.	mrem/yr	fract.	mrem/yr	fract.	mrem/yr	fract.	mrem/yr	fract.
ÄÄÄÄÄÄ	ÄÄÄÄÄÄÄÄÄ	ÄÄÄÄÄÄ	ÄÄÄÄÄÄÄÄÄ	ÄÄÄÄÄÄ	ÄÄÄÄÄÄÄÄÄ	ÄÄÄÄÄÄ	ÄÄÄÄÄÄÄÄÄ	ÄÄÄÄÄÄ	ÄÄÄÄÄÄÄÄÄ	ÄÄÄÄÄÄ	ÄÄÄÄÄÄÄÄÄ	ÄÄÄÄÄÄ	ÄÄÄÄÄÄÄÄÄ	ÄÄÄÄÄÄ
a-226	0.000E+00	0.0000	0.000E+00	0.0000	3.002E-04	0.0022	0.000E+00	0.0000	0.000E+00	0.0000	0.000E+00	0.0000	1.106E-01	0.8184
n-232	0.000E+00	0.0000	0.000E+00	0.0000	2.861E-04	0.0021	0.000E+00	0.0000	0.000E+00	0.0000	0.000E+00	0.0000	1.297E-02	0.0959
-234	0.000E+00	0.0000	0.000E+00	0.0000	2.872E-12	0.0000	0.000E+00	0.0000	0.000E+00	0.0000	0.000E+00	0.0000	5.478E-03	0.0405
-235	0.000E+00	0.0000	0.000E+00	0.0000	0.000E+00	0.0000	0.000E+00	0.0000	0.000E+00	0.0000	0.000E+00	0.0000	3.137E-04	0.0023
-238	0.000E+00	0.0000	0.000E+00	0.0000	9.420E-18	0.0000	0.000E+00	0.0000	0.000E+00	0.0000	0.000E+00	0.0000	5.201E-03	0.0385
íííííí	íííííííííí	íííííí	íííííííííí	íííííí	íííííííííí	íííííí	íííííííííí	íííííí	íííííííííí	íííííí	íííííííííí	íííííí	íííííííííí	íííííí
otal	0.000E+00	0.0000	0.000E+00	0.0000	5.863E-04	0.0043	0.000E+00	0.0000	0.000E+00	0.0000	0.000E+00	0.0000	1.346E-01	0.9957

Total Dose Contributions TDOSE(i,p,t) for Individual Radionuclides (i) and Pathways (p)
As mrem/yr and Fraction of Total Dose At t = 3.000E+00 years

Water Dependent Pathways

	Water		Fish		Radon		Plant		Meat		Milk		All Pathways*	
adio-	ÄÄÄÄÄÄÄÄÄÄÄÄÄÄÄ		ÄÄÄÄÄÄÄÄÄÄÄÄÄÄÄ		ÄÄÄÄÄÄÄÄÄÄÄÄÄÄÄ		ÄÄÄÄÄÄÄÄÄÄÄÄÄÄÄ		ÄÄÄÄÄÄÄÄÄÄÄÄÄÄÄ		ÄÄÄÄÄÄÄÄÄÄÄÄÄÄÄ		ÄÄÄÄÄÄÄÄÄÄÄÄÄÄÄ	
uclide	mrem/yr	fract.	mrem/yr	fract.	mrem/yr	fract.	mrem/yr	fract.	mrem/yr	fract.	mrem/yr	fract.	mrem/yr	fract.
ÄÄÄÄÄÄ	ÄÄÄÄÄÄÄÄÄ	ÄÄÄÄÄÄ	ÄÄÄÄÄÄÄÄÄ	ÄÄÄÄÄÄ	ÄÄÄÄÄÄÄÄÄ	ÄÄÄÄÄÄ	ÄÄÄÄÄÄÄÄÄ	ÄÄÄÄÄÄ	ÄÄÄÄÄÄÄÄÄ	ÄÄÄÄÄÄ	ÄÄÄÄÄÄÄÄÄ	ÄÄÄÄÄÄ	ÄÄÄÄÄÄÄÄÄ	ÄÄÄÄÄÄ
a-226	0.000E+00	0.0000	0.000E+00	0.0000	0.000E+00	0.0000	0.000E+00	0.0000	0.000E+00	0.0000	0.000E+00	0.0000	1.109E-01	0.8207
n-232	0.000E+00	0.0000	0.000E+00	0.0000	0.000E+00	0.0000	0.000E+00	0.0000	0.000E+00	0.0000	0.000E+00	0.0000	1.325E-02	0.0980
-234	0.000E+00	0.0000	0.000E+00	0.0000	0.000E+00	0.0000	0.000E+00	0.0000	0.000E+00	0.0000	0.000E+00	0.0000	5.478E-03	0.0405
-235	0.000E+00	0.0000	0.000E+00	0.0000	0.000E+00	0.0000	0.000E+00	0.0000	0.000E+00	0.0000	0.000E+00	0.0000	3.137E-04	0.0023
-238	0.000E+00	0.0000	0.000E+00	0.0000	0.000E+00	0.0000	0.000E+00	0.0000	0.000E+00	0.0000	0.000E+00	0.0000	5.201E-03	0.0385
íííííí	íííííííííí	íííííí	íííííííííí	íííííí	íííííííííí	íííííí	íííííííííí	íííííí	íííííííííí	íííííí	íííííííííí	íííííí	íííííííííí	íííííí
otal	0.000E+00	0.0000	0.000E+00	0.0000	0.000E+00	0.0000	0.000E+00	0.0000	0.000E+00	0.0000	0.000E+00	0.0000	1.352E-01	1.0000

Sum of all water independent and dependent pathways.

ummary : Park Ranger Ingestion
ile : C:\USERS\CLAUDE\DOCUMENTS\0 GKP DOSE\RESRAD CW\GKP PARK RANGER-INGESTION.RAD

Total Dose Contributions TDOSE(i,p,t) for Individual Radionuclides (i) and Pathways (p)
As mrem/yr and Fraction of Total Dose At t = 1.000E+01 years

Water Independent Pathways (Inhalation excludes radon)

	Ground		Inhalation		Radon		Plant		Meat		Milk		Soil	
adio-	ÄÄÄÄÄÄÄÄÄÄÄÄÄÄÄÄ		ÄÄÄÄÄÄÄÄÄÄÄÄÄÄÄÄ		ÄÄÄÄÄÄÄÄÄÄÄÄÄÄÄÄ		ÄÄÄÄÄÄÄÄÄÄÄÄÄÄÄÄ		ÄÄÄÄÄÄÄÄÄÄÄÄÄÄÄÄ		ÄÄÄÄÄÄÄÄÄÄÄÄÄÄÄÄ		ÄÄÄÄÄÄÄÄÄÄÄÄÄÄÄÄ		ÄÄÄÄÄÄÄÄÄÄÄÄÄÄÄÄ	
uclide	mrem/yr	fract.	mrem/yr	fract.	mrem/yr	fract.	mrem/yr	fract.	mrem/yr	fract.	mrem/yr	fract.	mrem/yr	fract.
ÄÄÄÄÄÄ	ÄÄÄÄÄÄÄÄÄ	ÄÄÄÄÄÄ	ÄÄÄÄÄÄÄÄÄ	ÄÄÄÄÄÄ	ÄÄÄÄÄÄÄÄÄ	ÄÄÄÄÄÄ	ÄÄÄÄÄÄÄÄÄ	ÄÄÄÄÄÄ	ÄÄÄÄÄÄÄÄÄ	ÄÄÄÄÄÄ	ÄÄÄÄÄÄÄÄÄ	ÄÄÄÄÄÄ	ÄÄÄÄÄÄÄÄÄ	ÄÄÄÄÄÄ
a-226	0.000E+00	0.0000	0.000E+00	0.0000	2.285E-04	0.0014	0.000E+00	0.0000	0.000E+00	0.0000	0.000E+00	0.0000	1.395E-01	0.8531
h-232	0.000E+00	0.0000	0.000E+00	0.0000	9.950E-04	0.0061	0.000E+00	0.0000	0.000E+00	0.0000	0.000E+00	0.0000	1.511E-02	0.0924
-234	0.000E+00	0.0000	0.000E+00	0.0000	2.059E-11	0.0000	0.000E+00	0.0000	0.000E+00	0.0000	0.000E+00	0.0000	3.827E-03	0.0234
-235	0.000E+00	0.0000	0.000E+00	0.0000	0.000E+00	0.0000	0.000E+00	0.0000	0.000E+00	0.0000	0.000E+00	0.0000	2.207E-04	0.0013
-238	0.000E+00	0.0000	0.000E+00	0.0000	1.937E-16	0.0000	0.000E+00	0.0000	0.000E+00	0.0000	0.000E+00	0.0000	3.633E-03	0.0222
íííííí	íííííííííí	íííííí	íííííííííí	íííííí	íííííííííí	íííííí	íííííííííí	íííííí	íííííííííí	íííííí	íííííííííí	íííííí	íííííííííí	íííííí
otal	0.000E+00	0.0000	0.000E+00	0.0000	1.224E-03	0.0075	0.000E+00	0.0000	0.000E+00	0.0000	0.000E+00	0.0000	1.623E-01	0.9925

Total Dose Contributions TDOSE(i,p,t) for Individual Radionuclides (i) and Pathways (p)
As mrem/yr and Fraction of Total Dose At t = 1.000E+01 years

Water Dependent Pathways

	Water		Fish		Radon		Plant		Meat		Milk		All Pathways*	
adio-	ÄÄÄÄÄÄÄÄÄÄÄÄÄÄÄÄ		ÄÄÄÄÄÄÄÄÄÄÄÄÄÄÄÄ		ÄÄÄÄÄÄÄÄÄÄÄÄÄÄÄÄ		ÄÄÄÄÄÄÄÄÄÄÄÄÄÄÄÄ		ÄÄÄÄÄÄÄÄÄÄÄÄÄÄÄÄ		ÄÄÄÄÄÄÄÄÄÄÄÄÄÄÄÄ		ÄÄÄÄÄÄÄÄÄÄÄÄÄÄÄÄ	
uclide	mrem/yr	fract.	mrem/yr	fract.	mrem/yr	fract.	mrem/yr	fract.	mrem/yr	fract.	mrem/yr	fract.	mrem/yr	fract.
ÄÄÄÄÄÄ	ÄÄÄÄÄÄÄÄÄ	ÄÄÄÄÄÄ	ÄÄÄÄÄÄÄÄÄ	ÄÄÄÄÄÄ	ÄÄÄÄÄÄÄÄÄ	ÄÄÄÄÄÄ	ÄÄÄÄÄÄÄÄÄ	ÄÄÄÄÄÄ	ÄÄÄÄÄÄÄÄÄ	ÄÄÄÄÄÄ	ÄÄÄÄÄÄÄÄÄ	ÄÄÄÄÄÄ	ÄÄÄÄÄÄÄÄÄ	ÄÄÄÄÄÄ
a-226	0.000E+00	0.0000	0.000E+00	0.0000	0.000E+00	0.0000	0.000E+00	0.0000	0.000E+00	0.0000	0.000E+00	0.0000	1.397E-01	0.8545
h-232	0.000E+00	0.0000	0.000E+00	0.0000	0.000E+00	0.0000	0.000E+00	0.0000	0.000E+00	0.0000	0.000E+00	0.0000	1.610E-02	0.0985
-234	0.000E+00	0.0000	0.000E+00	0.0000	0.000E+00	0.0000	0.000E+00	0.0000	0.000E+00	0.0000	0.000E+00	0.0000	3.827E-03	0.0234
-235	0.000E+00	0.0000	0.000E+00	0.0000	0.000E+00	0.0000	0.000E+00	0.0000	0.000E+00	0.0000	0.000E+00	0.0000	2.207E-04	0.0013
-238	0.000E+00	0.0000	0.000E+00	0.0000	0.000E+00	0.0000	0.000E+00	0.0000	0.000E+00	0.0000	0.000E+00	0.0000	3.633E-03	0.0222
íííííí	íííííííííí	íííííí	íííííííííí	íííííí	íííííííííí	íííííí	íííííííííí	íííííí	íííííííííí	íííííí	íííííííííí	íííííí	íííííííííí	íííííí
otal	0.000E+00	0.0000	0.000E+00	0.0000	0.000E+00	0.0000	0.000E+00	0.0000	0.000E+00	0.0000	0.000E+00	0.0000	1.635E-01	1.0000

Sum of all water independent and dependent pathways.

ummary : Park Ranger Ingestion
ile : C:\USERS\CLAUDE\DOCUMENTS\0 GKP DOSE\RESRAD CW\GKP PARK RANGER-INGESTION.RAD

Total Dose Contributions TDOSE(i,p,t) for Individual Radionuclides (i) and Pathways (p)
As mrem/yr and Fraction of Total Dose At t = 3.000E+01 years

Water Independent Pathways (Inhalation excludes radon)

	Ground		Inhalation		Radon		Plant		Meat		Milk		Soil	
adio-	ÄÄÄÄÄÄÄÄÄÄÄÄÄÄÄÄ		ÄÄÄÄÄÄÄÄÄÄÄÄÄÄÄÄ		ÄÄÄÄÄÄÄÄÄÄÄÄÄÄÄÄ		ÄÄÄÄÄÄÄÄÄÄÄÄÄÄÄÄ		ÄÄÄÄÄÄÄÄÄÄÄÄÄÄÄÄ		ÄÄÄÄÄÄÄÄÄÄÄÄÄÄÄÄ		ÄÄÄÄÄÄÄÄÄÄÄÄÄÄÄÄ		ÄÄÄÄÄÄÄÄÄÄÄÄÄÄÄÄ	
uclide	mrem/yr	fract.	mrem/yr	fract.	mrem/yr	fract.	mrem/yr	fract.	mrem/yr	fract.	mrem/yr	fract.	mrem/yr	fract.
ÄÄÄÄÄÄ	ÄÄÄÄÄÄÄÄÄ	ÄÄÄÄÄÄ	ÄÄÄÄÄÄÄÄÄ	ÄÄÄÄÄÄ	ÄÄÄÄÄÄÄÄÄ	ÄÄÄÄÄÄ	ÄÄÄÄÄÄÄÄÄ	ÄÄÄÄÄÄ	ÄÄÄÄÄÄÄÄÄ	ÄÄÄÄÄÄ	ÄÄÄÄÄÄÄÄÄ	ÄÄÄÄÄÄ	ÄÄÄÄÄÄÄÄÄ	ÄÄÄÄÄÄ
a-226	0.000E+00	0.0000	0.000E+00	0.0000	1.033E-04	0.0008	0.000E+00	0.0000	0.000E+00	0.0000	0.000E+00	0.0000	1.167E-01	0.8628
n-232	0.000E+00	0.0000	0.000E+00	0.0000	1.465E-03	0.0108	0.000E+00	0.0000	0.000E+00	0.0000	0.000E+00	0.0000	1.428E-02	0.1055
-234	0.000E+00	0.0000	0.000E+00	0.0000	9.295E-11	0.0000	0.000E+00	0.0000	0.000E+00	0.0000	0.000E+00	0.0000	1.354E-03	0.0100
-235	0.000E+00	0.0000	0.000E+00	0.0000	0.000E+00	0.0000	0.000E+00	0.0000	0.000E+00	0.0000	0.000E+00	0.0000	7.981E-05	0.0006
-238	0.000E+00	0.0000	0.000E+00	0.0000	2.290E-15	0.0000	0.000E+00	0.0000	0.000E+00	0.0000	0.000E+00	0.0000	1.284E-03	0.0095
íííííí	íííííííííí	íííííí	íííííííííí	íííííí	íííííííííí	íííííí	íííííííííí	íííííí	íííííííííí	íííííí	íííííííííí	íííííí	íííííííííí	íííííí
otal	0.000E+00	0.0000	0.000E+00	0.0000	1.569E-03	0.0116	0.000E+00	0.0000	0.000E+00	0.0000	0.000E+00	0.0000	1.337E-01	0.9884

Total Dose Contributions TDOSE(i,p,t) for Individual Radionuclides (i) and Pathways (p)
As mrem/yr and Fraction of Total Dose At t = 3.000E+01 years

Water Dependent Pathways

	Water		Fish		Radon		Plant		Meat		Milk		All Pathways*	
adio-	ÄÄÄÄÄÄÄÄÄÄÄÄÄÄÄÄ		ÄÄÄÄÄÄÄÄÄÄÄÄÄÄÄÄ		ÄÄÄÄÄÄÄÄÄÄÄÄÄÄÄÄ		ÄÄÄÄÄÄÄÄÄÄÄÄÄÄÄÄ		ÄÄÄÄÄÄÄÄÄÄÄÄÄÄÄÄ		ÄÄÄÄÄÄÄÄÄÄÄÄÄÄÄÄ		ÄÄÄÄÄÄÄÄÄÄÄÄÄÄÄÄ	
uclide	mrem/yr	fract.	mrem/yr	fract.	mrem/yr	fract.	mrem/yr	fract.	mrem/yr	fract.	mrem/yr	fract.	mrem/yr	fract.
ÄÄÄÄÄÄ	ÄÄÄÄÄÄÄÄÄ	ÄÄÄÄÄÄ	ÄÄÄÄÄÄÄÄÄ	ÄÄÄÄÄÄ	ÄÄÄÄÄÄÄÄÄ	ÄÄÄÄÄÄ	ÄÄÄÄÄÄÄÄÄ	ÄÄÄÄÄÄ	ÄÄÄÄÄÄÄÄÄ	ÄÄÄÄÄÄ	ÄÄÄÄÄÄÄÄÄ	ÄÄÄÄÄÄ	ÄÄÄÄÄÄÄÄÄ	ÄÄÄÄÄÄ
a-226	0.000E+00	0.0000	0.000E+00	0.0000	0.000E+00	0.0000	0.000E+00	0.0000	0.000E+00	0.0000	0.000E+00	0.0000	1.168E-01	0.8635
n-232	0.000E+00	0.0000	0.000E+00	0.0000	0.000E+00	0.0000	0.000E+00	0.0000	0.000E+00	0.0000	0.000E+00	0.0000	1.574E-02	0.1164
-234	0.000E+00	0.0000	0.000E+00	0.0000	0.000E+00	0.0000	0.000E+00	0.0000	0.000E+00	0.0000	0.000E+00	0.0000	1.354E-03	0.0100
-235	0.000E+00	0.0000	0.000E+00	0.0000	0.000E+00	0.0000	0.000E+00	0.0000	0.000E+00	0.0000	0.000E+00	0.0000	7.981E-05	0.0006
-238	0.000E+00	0.0000	0.000E+00	0.0000	0.000E+00	0.0000	0.000E+00	0.0000	0.000E+00	0.0000	0.000E+00	0.0000	1.284E-03	0.0095
íííííí	íííííííííí	íííííí	íííííííííí	íííííí	íííííííííí	íííííí	íííííííííí	íííííí	íííííííííí	íííííí	íííííííííí	íííííí	íííííííííí	íííííí
otal	0.000E+00	0.0000	0.000E+00	0.0000	0.000E+00	0.0000	0.000E+00	0.0000	0.000E+00	0.0000	0.000E+00	0.0000	1.353E-01	1.0000

Sum of all water independent and dependent pathways.

ummary : Park Ranger Ingestion

ile : C:\USERS\CLAUDE\DOCUMENTS\0 GKP DOSE\RESRAD CW\GKP PARK RANGER-INGESTION.RAD

Total Dose Contributions TDOSE(i,p,t) for Individual Radionuclides (i) and Pathways (p)
As mrem/yr and Fraction of Total Dose At t = 1.000E+02 years

Water Independent Pathways (Inhalation excludes radon)

	Ground		Inhalation		Radon		Plant		Meat		Milk		Soil	
adio-	ÄÄÄÄÄÄÄÄÄÄÄÄÄÄÄÄ		ÄÄÄÄÄÄÄÄÄÄÄÄÄÄÄÄ		ÄÄÄÄÄÄÄÄÄÄÄÄÄÄÄÄ		ÄÄÄÄÄÄÄÄÄÄÄÄÄÄÄÄ		ÄÄÄÄÄÄÄÄÄÄÄÄÄÄÄÄ		ÄÄÄÄÄÄÄÄÄÄÄÄÄÄÄÄ		ÄÄÄÄÄÄÄÄÄÄÄÄÄÄÄÄ		ÄÄÄÄÄÄÄÄÄÄÄÄÄÄÄÄ	
uclide	mrem/yr	fract.	mrem/yr	fract.	mrem/yr	fract.	mrem/yr	fract.	mrem/yr	fract.	mrem/yr	fract.	mrem/yr	fract.
ÄÄÄÄÄÄ	ÄÄÄÄÄÄÄÄÄ	ÄÄÄÄÄÄ	ÄÄÄÄÄÄÄÄÄ	ÄÄÄÄÄÄ	ÄÄÄÄÄÄÄÄÄ	ÄÄÄÄÄÄ	ÄÄÄÄÄÄÄÄÄ	ÄÄÄÄÄÄ	ÄÄÄÄÄÄÄÄÄ	ÄÄÄÄÄÄ	ÄÄÄÄÄÄÄÄÄ	ÄÄÄÄÄÄ	ÄÄÄÄÄÄÄÄÄ	ÄÄÄÄÄÄ
a-226	0.000E+00	0.0000	0.000E+00	0.0000	4.546E-06	0.0003	0.000E+00	0.0000	0.000E+00	0.0000	0.000E+00	0.0000	8.557E-03	0.5340
h-232	0.000E+00	0.0000	0.000E+00	0.0000	1.483E-03	0.0926	0.000E+00	0.0000	0.000E+00	0.0000	0.000E+00	0.0000	5.927E-03	0.3699
-234	0.000E+00	0.0000	0.000E+00	0.0000	1.079E-10	0.0000	0.000E+00	0.0000	0.000E+00	0.0000	0.000E+00	0.0000	2.624E-05	0.0016
-235	0.000E+00	0.0000	0.000E+00	0.0000	0.000E+00	0.0000	0.000E+00	0.0000	0.000E+00	0.0000	0.000E+00	0.0000	1.616E-06	0.0001
-238	0.000E+00	0.0000	0.000E+00	0.0000	5.863E-15	0.0000	0.000E+00	0.0000	0.000E+00	0.0000	0.000E+00	0.0000	2.403E-05	0.0015
íííííí	íííííííííí	íííííí	íííííííííí	íííííí	íííííííííí	íííííí	íííííííííí	íííííí	íííííííííí	íííííí	íííííííííí	íííííí	íííííííííí	íííííí
otal	0.000E+00	0.0000	0.000E+00	0.0000	1.488E-03	0.0929	0.000E+00	0.0000	0.000E+00	0.0000	0.000E+00	0.0000	1.454E-02	0.9071

Total Dose Contributions TDOSE(i,p,t) for Individual Radionuclides (i) and Pathways (p)
As mrem/yr and Fraction of Total Dose At t = 1.000E+02 years

Water Dependent Pathways

	Water		Fish		Radon		Plant		Meat		Milk		All Pathways*	
adio-	ÄÄÄÄÄÄÄÄÄÄÄÄÄÄÄÄ		ÄÄÄÄÄÄÄÄÄÄÄÄÄÄÄÄ		ÄÄÄÄÄÄÄÄÄÄÄÄÄÄÄÄ		ÄÄÄÄÄÄÄÄÄÄÄÄÄÄÄÄ		ÄÄÄÄÄÄÄÄÄÄÄÄÄÄÄÄ		ÄÄÄÄÄÄÄÄÄÄÄÄÄÄÄÄ		ÄÄÄÄÄÄÄÄÄÄÄÄÄÄÄÄ	
uclide	mrem/yr	fract.	mrem/yr	fract.	mrem/yr	fract.	mrem/yr	fract.	mrem/yr	fract.	mrem/yr	fract.	mrem/yr	fract.
ÄÄÄÄÄÄ	ÄÄÄÄÄÄÄÄÄ	ÄÄÄÄÄÄ	ÄÄÄÄÄÄÄÄÄ	ÄÄÄÄÄÄ	ÄÄÄÄÄÄÄÄÄ	ÄÄÄÄÄÄ	ÄÄÄÄÄÄÄÄÄ	ÄÄÄÄÄÄ	ÄÄÄÄÄÄÄÄÄ	ÄÄÄÄÄÄ	ÄÄÄÄÄÄÄÄÄ	ÄÄÄÄÄÄ	ÄÄÄÄÄÄÄÄÄ	ÄÄÄÄÄÄ
a-226	0.000E+00	0.0000	0.000E+00	0.0000	0.000E+00	0.0000	0.000E+00	0.0000	0.000E+00	0.0000	0.000E+00	0.0000	8.562E-03	0.5343
h-232	0.000E+00	0.0000	0.000E+00	0.0000	0.000E+00	0.0000	0.000E+00	0.0000	0.000E+00	0.0000	0.000E+00	0.0000	7.410E-03	0.4625
-234	0.000E+00	0.0000	0.000E+00	0.0000	0.000E+00	0.0000	0.000E+00	0.0000	0.000E+00	0.0000	0.000E+00	0.0000	2.624E-05	0.0016
-235	0.000E+00	0.0000	0.000E+00	0.0000	0.000E+00	0.0000	0.000E+00	0.0000	0.000E+00	0.0000	0.000E+00	0.0000	1.616E-06	0.0001
-238	0.000E+00	0.0000	0.000E+00	0.0000	0.000E+00	0.0000	0.000E+00	0.0000	0.000E+00	0.0000	0.000E+00	0.0000	2.403E-05	0.0015
íííííí	íííííííííí	íííííí	íííííííííí	íííííí	íííííííííí	íííííí	íííííííííí	íííííí	íííííííííí	íííííí	íííííííííí	íííííí	íííííííííí	íííííí
otal	0.000E+00	0.0000	0.000E+00	0.0000	0.000E+00	0.0000	0.000E+00	0.0000	0.000E+00	0.0000	0.000E+00	0.0000	1.602E-02	1.0000

Sum of all water independent and dependent pathways.

ummary : Park Ranger Ingestion
ile : C:\USERS\CLAUDE\DOCUMENTS\0 GKP DOSE\RESRAD CW\GKP PARK RANGER-INGESTION.RAD

Total Dose Contributions TDOSE(i,p,t) for Individual Radionuclides (i) and Pathways (p)
As mrem/yr and Fraction of Total Dose At t = 3.000E+02 years

Water Independent Pathways (Inhalation excludes radon)

	Ground		Inhalation		Radon		Plant		Meat		Milk		Soil	
adio-	ÄÄÄÄÄÄÄÄÄÄÄÄÄÄÄÄ		ÄÄÄÄÄÄÄÄÄÄÄÄÄÄÄÄ		ÄÄÄÄÄÄÄÄÄÄÄÄÄÄÄÄ		ÄÄÄÄÄÄÄÄÄÄÄÄÄÄÄÄ		ÄÄÄÄÄÄÄÄÄÄÄÄÄÄÄÄ		ÄÄÄÄÄÄÄÄÄÄÄÄÄÄÄÄ		ÄÄÄÄÄÄÄÄÄÄÄÄÄÄÄÄ	
uclide	mrem/yr	fract.	mrem/yr	fract.	mrem/yr	fract.	mrem/yr	fract.	mrem/yr	fract.	mrem/yr	fract.	mrem/yr	fract.
ÄÄÄÄÄÄ	ÄÄÄÄÄÄÄÄÄ	ÄÄÄÄÄÄ	ÄÄÄÄÄÄÄÄÄ	ÄÄÄÄÄÄ	ÄÄÄÄÄÄÄÄÄ	ÄÄÄÄÄÄ	ÄÄÄÄÄÄÄÄÄ	ÄÄÄÄÄÄ	ÄÄÄÄÄÄÄÄÄ	ÄÄÄÄÄÄ	ÄÄÄÄÄÄÄÄÄ	ÄÄÄÄÄÄ	ÄÄÄÄÄÄÄÄÄ	ÄÄÄÄÄÄ
a-226	0.000E+00	0.0000	0.000E+00	0.0000	0.000E+00	0.0000	0.000E+00	0.0000	0.000E+00	0.0000	0.000E+00	0.0000	0.000E+00	0.0000
h-232	0.000E+00	0.0000	0.000E+00	0.0000	0.000E+00	0.0000	0.000E+00	0.0000	0.000E+00	0.0000	0.000E+00	0.0000	0.000E+00	0.0000
-234	0.000E+00	0.0000	0.000E+00	0.0000	0.000E+00	0.0000	0.000E+00	0.0000	0.000E+00	0.0000	0.000E+00	0.0000	0.000E+00	0.0000
-235	0.000E+00	0.0000	0.000E+00	0.0000	0.000E+00	0.0000	0.000E+00	0.0000	0.000E+00	0.0000	0.000E+00	0.0000	0.000E+00	0.0000
-238	0.000E+00	0.0000	0.000E+00	0.0000	0.000E+00	0.0000	0.000E+00	0.0000	0.000E+00	0.0000	0.000E+00	0.0000	0.000E+00	0.0000
íííííí	íííííííííí	íííííí	íííííííííí	íííííí	íííííííííí	íííííí	íííííííííí	íííííí	íííííííííí	íííííí	íííííííííí	íííííí	íííííííííí	íííííí
otal	0.000E+00	0.0000	0.000E+00	0.0000	0.000E+00	0.0000	0.000E+00	0.0000	0.000E+00	0.0000	0.000E+00	0.0000	0.000E+00	0.0000

Total Dose Contributions TDOSE(i,p,t) for Individual Radionuclides (i) and Pathways (p)
As mrem/yr and Fraction of Total Dose At t = 3.000E+02 years

Water Dependent Pathways

	Water		Fish		Radon		Plant		Meat		Milk		All Pathways*	
adio-	ÄÄÄÄÄÄÄÄÄÄÄÄÄÄÄÄ		ÄÄÄÄÄÄÄÄÄÄÄÄÄÄÄÄ		ÄÄÄÄÄÄÄÄÄÄÄÄÄÄÄÄ		ÄÄÄÄÄÄÄÄÄÄÄÄÄÄÄÄ		ÄÄÄÄÄÄÄÄÄÄÄÄÄÄÄÄ		ÄÄÄÄÄÄÄÄÄÄÄÄÄÄÄÄ		ÄÄÄÄÄÄÄÄÄÄÄÄÄÄÄÄ	
uclide	mrem/yr	fract.	mrem/yr	fract.	mrem/yr	fract.	mrem/yr	fract.	mrem/yr	fract.	mrem/yr	fract.	mrem/yr	fract.
ÄÄÄÄÄÄ	ÄÄÄÄÄÄÄÄÄ	ÄÄÄÄÄÄ	ÄÄÄÄÄÄÄÄÄ	ÄÄÄÄÄÄ	ÄÄÄÄÄÄÄÄÄ	ÄÄÄÄÄÄ	ÄÄÄÄÄÄÄÄÄ	ÄÄÄÄÄÄ	ÄÄÄÄÄÄÄÄÄ	ÄÄÄÄÄÄ	ÄÄÄÄÄÄÄÄÄ	ÄÄÄÄÄÄ	ÄÄÄÄÄÄÄÄÄ	ÄÄÄÄÄÄ
a-226	0.000E+00	0.0000	0.000E+00	0.0000	0.000E+00	0.0000	0.000E+00	0.0000	0.000E+00	0.0000	0.000E+00	0.0000	0.000E+00	0.0000
h-232	0.000E+00	0.0000	0.000E+00	0.0000	0.000E+00	0.0000	0.000E+00	0.0000	0.000E+00	0.0000	0.000E+00	0.0000	0.000E+00	0.0000
-234	0.000E+00	0.0000	0.000E+00	0.0000	0.000E+00	0.0000	0.000E+00	0.0000	0.000E+00	0.0000	0.000E+00	0.0000	0.000E+00	0.0000
-235	0.000E+00	0.0000	0.000E+00	0.0000	0.000E+00	0.0000	0.000E+00	0.0000	0.000E+00	0.0000	0.000E+00	0.0000	0.000E+00	0.0000
-238	0.000E+00	0.0000	0.000E+00	0.0000	0.000E+00	0.0000	0.000E+00	0.0000	0.000E+00	0.0000	0.000E+00	0.0000	0.000E+00	0.0000
íííííí	íííííííííí	íííííí	íííííííííí	íííííí	íííííííííí	íííííí	íííííííííí	íííííí	íííííííííí	íííííí	íííííííííí	íííííí	íííííííííí	íííííí
otal	0.000E+00	0.0000	0.000E+00	0.0000	0.000E+00	0.0000	0.000E+00	0.0000	0.000E+00	0.0000	0.000E+00	0.0000	0.000E+00	0.0000

Sum of all water independent and dependent pathways.

ummary : Park Ranger Ingestion

ile : C:\USERS\CLAUDE\DOCUMENTS\0 GKP DOSE\RESRAD CW\GKP PARK RANGER-INGESTION.RAD

Total Dose Contributions TDOSE(i,p,t) for Individual Radionuclides (i) and Pathways (p)
As mrem/yr and Fraction of Total Dose At t = 1.000E+03 years

Water Independent Pathways (Inhalation excludes radon)

	Ground		Inhalation		Radon		Plant		Meat		Milk		Soil	
adio-	ÄÄÄÄÄÄÄÄÄÄÄÄÄÄÄÄ		ÄÄÄÄÄÄÄÄÄÄÄÄÄÄÄÄ		ÄÄÄÄÄÄÄÄÄÄÄÄÄÄÄÄ		ÄÄÄÄÄÄÄÄÄÄÄÄÄÄÄÄ		ÄÄÄÄÄÄÄÄÄÄÄÄÄÄÄÄ		ÄÄÄÄÄÄÄÄÄÄÄÄÄÄÄÄ		ÄÄÄÄÄÄÄÄÄÄÄÄÄÄÄÄ	
uclide	mrem/yr	fract.	mrem/yr	fract.	mrem/yr	fract.	mrem/yr	fract.	mrem/yr	fract.	mrem/yr	fract.	mrem/yr	fract.
ÄÄÄÄÄÄ	ÄÄÄÄÄÄÄÄÄ	ÄÄÄÄÄÄ	ÄÄÄÄÄÄÄÄÄ	ÄÄÄÄÄÄ	ÄÄÄÄÄÄÄÄÄ	ÄÄÄÄÄÄ	ÄÄÄÄÄÄÄÄÄ	ÄÄÄÄÄÄ	ÄÄÄÄÄÄÄÄÄ	ÄÄÄÄÄÄ	ÄÄÄÄÄÄÄÄÄ	ÄÄÄÄÄÄ	ÄÄÄÄÄÄÄÄÄ	ÄÄÄÄÄÄ
a-226	0.000E+00	0.0000	0.000E+00	0.0000	0.000E+00	0.0000	0.000E+00	0.0000	0.000E+00	0.0000	0.000E+00	0.0000	0.000E+00	0.0000
h-232	0.000E+00	0.0000	0.000E+00	0.0000	0.000E+00	0.0000	0.000E+00	0.0000	0.000E+00	0.0000	0.000E+00	0.0000	0.000E+00	0.0000
-234	0.000E+00	0.0000	0.000E+00	0.0000	0.000E+00	0.0000	0.000E+00	0.0000	0.000E+00	0.0000	0.000E+00	0.0000	0.000E+00	0.0000
-235	0.000E+00	0.0000	0.000E+00	0.0000	0.000E+00	0.0000	0.000E+00	0.0000	0.000E+00	0.0000	0.000E+00	0.0000	0.000E+00	0.0000
-238	0.000E+00	0.0000	0.000E+00	0.0000	0.000E+00	0.0000	0.000E+00	0.0000	0.000E+00	0.0000	0.000E+00	0.0000	0.000E+00	0.0000
íííííí	íííííííííí	íííííí	íííííííííí	íííííí	íííííííííí	íííííí	íííííííííí	íííííí	íííííííííí	íííííí	íííííííííí	íííííí	íííííííííí	íííííí
otal	0.000E+00	0.0000	0.000E+00	0.0000	0.000E+00	0.0000	0.000E+00	0.0000	0.000E+00	0.0000	0.000E+00	0.0000	0.000E+00	0.0000

Total Dose Contributions TDOSE(i,p,t) for Individual Radionuclides (i) and Pathways (p)
As mrem/yr and Fraction of Total Dose At t = 1.000E+03 years

Water Dependent Pathways

	Water		Fish		Radon		Plant		Meat		Milk		All Pathways*	
adio-	ÄÄÄÄÄÄÄÄÄÄÄÄÄÄÄÄ		ÄÄÄÄÄÄÄÄÄÄÄÄÄÄÄÄ		ÄÄÄÄÄÄÄÄÄÄÄÄÄÄÄÄ		ÄÄÄÄÄÄÄÄÄÄÄÄÄÄÄÄ		ÄÄÄÄÄÄÄÄÄÄÄÄÄÄÄÄ		ÄÄÄÄÄÄÄÄÄÄÄÄÄÄÄÄ		ÄÄÄÄÄÄÄÄÄÄÄÄÄÄÄÄ	
uclide	mrem/yr	fract.	mrem/yr	fract.	mrem/yr	fract.	mrem/yr	fract.	mrem/yr	fract.	mrem/yr	fract.	mrem/yr	fract.
ÄÄÄÄÄÄ	ÄÄÄÄÄÄÄÄÄ	ÄÄÄÄÄÄ	ÄÄÄÄÄÄÄÄÄ	ÄÄÄÄÄÄ	ÄÄÄÄÄÄÄÄÄ	ÄÄÄÄÄÄ	ÄÄÄÄÄÄÄÄÄ	ÄÄÄÄÄÄ	ÄÄÄÄÄÄÄÄÄ	ÄÄÄÄÄÄ	ÄÄÄÄÄÄÄÄÄ	ÄÄÄÄÄÄ	ÄÄÄÄÄÄÄÄÄ	ÄÄÄÄÄÄ
a-226	0.000E+00	0.0000	0.000E+00	0.0000	0.000E+00	0.0000	0.000E+00	0.0000	0.000E+00	0.0000	0.000E+00	0.0000	0.000E+00	0.0000
h-232	0.000E+00	0.0000	0.000E+00	0.0000	0.000E+00	0.0000	0.000E+00	0.0000	0.000E+00	0.0000	0.000E+00	0.0000	0.000E+00	0.0000
-234	0.000E+00	0.0000	0.000E+00	0.0000	0.000E+00	0.0000	0.000E+00	0.0000	0.000E+00	0.0000	0.000E+00	0.0000	0.000E+00	0.0000
-235	0.000E+00	0.0000	0.000E+00	0.0000	0.000E+00	0.0000	0.000E+00	0.0000	0.000E+00	0.0000	0.000E+00	0.0000	0.000E+00	0.0000
-238	0.000E+00	0.0000	0.000E+00	0.0000	0.000E+00	0.0000	0.000E+00	0.0000	0.000E+00	0.0000	0.000E+00	0.0000	0.000E+00	0.0000
íííííí	íííííííííí	íííííí	íííííííííí	íííííí	íííííííííí	íííííí	íííííííííí	íííííí	íííííííííí	íííííí	íííííííííí	íííííí	íííííííííí	íííííí
otal	0.000E+00	0.0000	0.000E+00	0.0000	0.000E+00	0.0000	0.000E+00	0.0000	0.000E+00	0.0000	0.000E+00	0.0000	0.000E+00	0.0000

Sum of all water independent and dependent pathways.

ummary : Park Ranger Ingestion

ile : C:\USERS\CLAUDE\DOCUMENTS\0 GKP DOSE\RESRAD CW\GKP PARK RANGER-INGESTION.RAD

Dose/Source Ratios Summed Over All Pathways

Parent and Progeny Principal Radionuclide Contributions Indicated

Parent (i)	Product (j)	Thread Fraction	DSR(j,t) At Time in Years (mrem/yr)/(pCi/g) 0.000E+00	1.000E+00	3.000E+00	1.000E+01	3.000E+01	1.000E+02	3.000E+02	1.000E+03
ÄÄÄÄÄÄÄÄÄ	ÄÄÄÄÄÄÄÄÄÄ	ÄÄÄÄÄÄÄÄÄ	ÄÄÄÄÄÄÄÄÄ	ÄÄÄÄÄÄÄÄÄ	ÄÄÄÄÄÄÄÄÄ	ÄÄÄÄÄÄÄÄÄ	ÄÄÄÄÄÄÄÄÄ	ÄÄÄÄÄÄÄÄÄ	ÄÄÄÄÄÄÄÄÄ	ÄÄÄÄÄÄÄÄÄ
a-226+D	Ra-226+D	9.996E-01	2.165E-03	2.082E-03	1.927E-03	1.466E-03	6.609E-04	2.898E-05	0.000E+00	0.000E+00
a-226+D	Pb-210+D	9.996E-01	1.829E-04	5.251E-04	1.112E-03	2.361E-03	2.538E-03	2.055E-04	0.000E+00	0.000E+00
a-226+D	äDSR(j)		2.348E-03	2.608E-03	3.038E-03	3.826E-03	3.199E-03	2.345E-04	0.000E+00	0.000E+00
a-226+D	Ra-226+D	1.319E-06	2.858E-09	2.749E-09	2.543E-09	1.935E-09	8.724E-10	3.825E-11	0.000E+00	0.000E+00
a-226+D	Pb-210+D1	1.319E-06	1.784E-10	5.121E-10	1.084E-09	2.302E-09	2.476E-09	2.004E-10	0.000E+00	0.000E+00
a-226+D	äDSR(j)		3.036E-09	3.261E-09	3.627E-09	4.237E-09	3.348E-09	2.387E-10	0.000E+00	0.000E+00
a-226+D	Ra-226+D	1.899E-08	4.113E-11	3.957E-11	3.661E-11	2.785E-11	1.256E-11	5.506E-13	0.000E+00	0.000E+00
a-226+D	Pb-210+D2	1.899E-08	2.564E-12	7.363E-12	1.559E-11	3.310E-11	3.559E-11	2.881E-12	0.000E+00	0.000E+00
a-226+D	äDSR(j)		4.370E-11	4.693E-11	5.219E-11	6.095E-11	4.815E-11	3.432E-12	0.000E+00	0.000E+00
a-226+D1	Ra-226+D1	2.100E-04	4.547E-07	4.374E-07	4.047E-07	3.078E-07	1.388E-07	6.087E-09	0.000E+00	0.000E+00
a-226+D1	Pb-210+D	2.100E-04	3.841E-08	1.103E-07	2.335E-07	4.958E-07	5.331E-07	4.316E-08	0.000E+00	0.000E+00
a-226+D1	äDSR(j)		4.931E-07	5.477E-07	6.382E-07	8.037E-07	6.719E-07	4.925E-08	0.000E+00	0.000E+00
a-226+D1	Ra-226+D1	2.771E-10	6.002E-13	5.774E-13	5.342E-13	4.064E-13	1.832E-13	8.035E-15	0.000E+00	0.000E+00
a-226+D1	Pb-210+D1	2.771E-10	3.746E-14	1.076E-13	2.277E-13	4.836E-13	5.200E-13	4.210E-14	0.000E+00	0.000E+00
a-226+D1	äDSR(j)		6.377E-13	6.849E-13	7.619E-13	8.899E-13	7.032E-13	5.013E-14	0.000E+00	0.000E+00
a-226+D1	Ra-226+D1	3.989E-12	8.639E-15	8.311E-15	7.689E-15	5.849E-15	2.638E-15	1.157E-16	0.000E+00	0.000E+00
a-226+D1	Pb-210+D2	3.989E-12	5.386E-16	1.546E-15	3.274E-15	6.953E-15	7.475E-15	6.052E-16	0.000E+00	0.000E+00
a-226+D1	äDSR(j)		9.178E-15	9.857E-15	1.096E-14	1.280E-14	1.011E-14	7.209E-16	0.000E+00	0.000E+00
a-226+D2	Ra-226+D2	1.998E-04	4.324E-07	4.160E-07	3.849E-07	2.928E-07	1.320E-07	5.788E-09	0.000E+00	0.000E+00
a-226+D2	Pb-210+D	1.998E-04	3.655E-08	1.049E-07	2.221E-07	4.717E-07	5.072E-07	4.107E-08	0.000E+00	0.000E+00
a-226+D2	äDSR(j)		4.690E-07	5.209E-07	6.070E-07	7.645E-07	6.392E-07	4.685E-08	0.000E+00	0.000E+00
a-226+D2	Ra-226+D2	2.637E-10	5.708E-13	5.491E-13	5.080E-13	3.864E-13	1.743E-13	7.641E-15	0.000E+00	0.000E+00
a-226+D2	Pb-210+D1	2.637E-10	3.564E-14	1.023E-13	2.167E-13	4.601E-13	4.947E-13	4.005E-14	0.000E+00	0.000E+00
a-226+D2	äDSR(j)		6.064E-13	6.514E-13	7.247E-13	8.465E-13	6.690E-13	4.769E-14	0.000E+00	0.000E+00
a-226+D2	Ra-226+D2	3.795E-12	8.216E-15	7.903E-15	7.312E-15	5.562E-15	2.508E-15	1.100E-16	0.000E+00	0.000E+00
a-226+D2	Pb-210+D2	3.795E-12	5.125E-16	1.471E-15	3.115E-15	6.615E-15	7.112E-15	5.758E-16	0.000E+00	0.000E+00
a-226+D2	äDSR(j)		8.728E-15	9.375E-15	1.043E-14	1.218E-14	9.621E-15	6.858E-16	0.000E+00	0.000E+00
a-226+D3	Ra-226+D3	4.196E-08	9.083E-11	8.737E-11	8.084E-11	6.149E-11	2.773E-11	1.216E-12	0.000E+00	0.000E+00
a-226+D3	Pb-210+D	4.196E-08	7.676E-12	2.204E-11	4.666E-11	9.909E-11	1.065E-10	8.626E-12	0.000E+00	0.000E+00
a-226+D3	äDSR(j)		9.850E-11	1.094E-10	1.275E-10	1.606E-10	1.343E-10	9.842E-12	0.000E+00	0.000E+00
a-226+D3	Ra-226+D3	5.538E-14	1.199E-16	1.153E-16	1.067E-16	8.117E-17	3.660E-17	1.605E-18	0.000E+00	0.000E+00
a-226+D3	Pb-210+D1	5.538E-14	7.487E-18	2.150E-17	4.551E-17	9.664E-17	1.039E-16	8.413E-18	0.000E+00	0.000E+00
a-226+D3	äDSR(j)		1.274E-16	1.368E-16	1.522E-16	1.778E-16	1.405E-16	1.002E-17	0.000E+00	0.000E+00
a-226+D3	Ra-226+D3	7.972E-16	1.726E-18	1.660E-18	1.536E-18	1.168E-18	5.269E-19	2.310E-20	0.000E+00	0.000E+00
a-226+D3	Pb-210+D2	7.972E-16	1.076E-19	3.090E-19	6.543E-19	1.389E-18	1.494E-18	1.210E-19	0.000E+00	0.000E+00
a-226+D3	äDSR(j)		1.833E-18	1.969E-18	2.190E-18	2.558E-18	2.021E-18	1.441E-19	0.000E+00	0.000E+00

ummary : Park Ranger Ingestion
ile : C:\USERS\CLAUDE\DOCUMENTS\0 GKP DOSE\RESRAD CW\GKP PARK RANGER-INGESTION.RAD

Dose/Source Ratios Summed Over All Pathways
Parent and Progeny Principal Radionuclide Contributions Indicated

Parent (i)	Product (j)	Thread Fraction	DSR(j,t) At Time in Years (mrem/yr)/(pCi/g) 0.000E+00	1.000E+00	3.000E+00	1.000E+01	3.000E+01	1.000E+02	3.000E+02	1.000E+03
ÄÄÄÄÄÄÄÄ	ÄÄÄÄÄÄÄÄÄÄ	ÄÄÄÄÄÄÄÄÄ	ÄÄÄÄÄÄÄÄÄ	ÄÄÄÄÄÄÄÄÄ	ÄÄÄÄÄÄÄÄÄ	ÄÄÄÄÄÄÄÄÄ	ÄÄÄÄÄÄÄÄÄ	ÄÄÄÄÄÄÄÄÄ	ÄÄÄÄÄÄÄÄÄ	ÄÄÄÄÄÄÄÄÄ
a-226+D4	Ra-226+D4	2.000E-07	4.328E-10	4.164E-10	3.852E-10	2.930E-10	1.321E-10	5.794E-12	0.000E+00	0.000E+00
a-226+D4	Pb-210+D	2.000E-07	3.659E-11	1.051E-10	2.224E-10	4.723E-10	5.078E-10	4.112E-11	0.000E+00	0.000E+00
a-226+D4	äDSR(j)		4.694E-10	5.214E-10	6.076E-10	7.654E-10	6.400E-10	4.691E-11	0.000E+00	0.000E+00
a-226+D4	Ra-226+D4	2.640E-13	5.714E-16	5.496E-16	5.085E-16	3.868E-16	1.744E-16	7.648E-18	0.000E+00	0.000E+00
a-226+D4	Pb-210+D1	2.640E-13	3.569E-17	1.025E-16	2.169E-16	4.607E-16	4.953E-16	4.010E-17	0.000E+00	0.000E+00
a-226+D4	äDSR(j)		6.070E-16	6.521E-16	7.254E-16	8.475E-16	6.697E-16	4.775E-17	0.000E+00	0.000E+00
a-226+D4	Ra-226+D4	3.800E-15	8.224E-18	7.911E-18	7.319E-18	5.568E-18	2.511E-18	1.101E-19	0.000E+00	0.000E+00
a-226+D4	Pb-210+D2	3.800E-15	5.131E-19	1.473E-18	3.119E-18	6.623E-18	7.121E-18	5.765E-19	0.000E+00	0.000E+00
a-226+D4	äDSR(j)		8.737E-18	9.384E-18	1.044E-17	1.219E-17	9.632E-18	6.866E-19	0.000E+00	0.000E+00
n-232	Th-232	1.000E+00	4.529E-03	4.498E-03	4.437E-03	4.224E-03	3.616E-03	1.494E-03	0.000E+00	0.000E+00
n-232	Ra-228+D	1.000E+00	1.370E-04	3.826E-04	7.656E-04	1.410E-03	1.499E-03	6.252E-04	0.000E+00	0.000E+00
n-232	Th-228+D	1.000E+00	1.363E-05	8.258E-05	3.188E-04	1.076E-03	1.445E-03	9.686E-04	0.000E+00	0.000E+00
n-232	äDSR(j)		4.679E-03	4.963E-03	5.522E-03	6.710E-03	6.559E-03	3.088E-03	0.000E+00	0.000E+00
-234	U-234	9.996E-01	4.590E-04	4.362E-04	3.939E-04	2.752E-04	9.726E-05	1.819E-06	0.000E+00	0.000E+00
-234	Th-230	9.996E-01	4.112E-09	1.203E-08	2.653E-08	6.545E-08	1.117E-07	6.155E-08	0.000E+00	0.000E+00
-234	Ra-226+D	9.996E-01	1.430E-12	9.742E-12	4.839E-11	3.468E-10	1.562E-09	1.806E-09	0.000E+00	0.000E+00
-234	Pb-210+D	9.996E-01	6.081E-14	8.822E-13	9.551E-12	1.933E-10	2.194E-09	5.126E-09	0.000E+00	0.000E+00
-234	äDSR(j)		4.590E-04	4.362E-04	3.939E-04	2.752E-04	9.738E-05	1.887E-06	0.000E+00	0.000E+00
-234	U-234	1.319E-06	6.059E-10	5.758E-10	5.199E-10	3.632E-10	1.284E-10	2.401E-12	0.000E+00	0.000E+00
-234	Th-230	1.319E-06	5.428E-15	1.587E-14	3.502E-14	8.639E-14	1.474E-13	8.125E-14	0.000E+00	0.000E+00
-234	Ra-226+D	1.319E-06	1.888E-18	1.286E-17	6.388E-17	4.577E-16	2.062E-15	2.384E-15	0.000E+00	0.000E+00
-234	Pb-210+D1	1.319E-06	5.931E-20	8.605E-19	9.315E-18	1.886E-16	2.140E-15	4.999E-15	0.000E+00	0.000E+00
-234	äDSR(j)		6.059E-10	5.758E-10	5.200E-10	3.633E-10	1.285E-10	2.489E-12	0.000E+00	0.000E+00
-234	U-234	1.899E-08	8.722E-12	8.288E-12	7.484E-12	5.228E-12	1.848E-12	3.455E-14	0.000E+00	0.000E+00
-234	Th-230	1.899E-08	7.813E-17	2.285E-16	5.041E-16	1.244E-15	2.122E-15	1.170E-15	0.000E+00	0.000E+00
-234	Ra-226+D	1.899E-08	2.718E-20	1.851E-19	9.194E-19	6.589E-18	2.968E-17	3.432E-17	0.000E+00	0.000E+00
-234	Pb-210+D2	1.899E-08	8.526E-22	1.237E-20	1.339E-19	2.711E-18	3.076E-17	7.188E-17	0.000E+00	0.000E+00
-234	äDSR(j)		8.722E-12	8.289E-12	7.485E-12	5.229E-12	1.850E-12	3.583E-14	0.000E+00	0.000E+00
-234	U-234	2.100E-04	9.642E-08	9.163E-08	8.274E-08	5.779E-08	2.043E-08	3.820E-10	0.000E+00	0.000E+00
-234	Th-230	2.100E-04	8.638E-13	2.526E-12	5.572E-12	1.375E-11	2.346E-11	1.293E-11	0.000E+00	0.000E+00
-234	Ra-226+D1	2.100E-04	3.005E-16	2.046E-15	1.016E-14	7.284E-14	3.282E-13	3.794E-13	0.000E+00	0.000E+00
-234	Pb-210+D	2.100E-04	1.277E-17	1.853E-16	2.006E-15	4.061E-14	4.608E-13	1.077E-12	0.000E+00	0.000E+00
-234	äDSR(j)		9.642E-08	9.163E-08	8.274E-08	5.781E-08	2.045E-08	3.964E-10	0.000E+00	0.000E+00
-234	U-234	2.771E-10	1.273E-13	1.209E-13	1.092E-13	7.629E-14	2.697E-14	5.042E-16	0.000E+00	0.000E+00
-234	Th-230	2.771E-10	1.140E-18	3.334E-18	7.356E-18	1.815E-17	3.096E-17	1.707E-17	0.000E+00	0.000E+00
-234	Ra-226+D1	2.771E-10	3.966E-22	2.701E-21	1.342E-20	9.615E-20	4.332E-19	5.008E-19	0.000E+00	0.000E+00
-234	Pb-210+D1	2.771E-10	1.246E-23	1.807E-22	1.957E-21	3.960E-20	4.494E-19	1.050E-18	0.000E+00	0.000E+00
-234	äDSR(j)		1.273E-13	1.210E-13	1.092E-13	7.631E-14	2.700E-14	5.228E-16	0.000E+00	0.000E+00

ummary : Park Ranger Ingestion
ile : C:\USERS\CLAUDE\DOCUMENTS\0 GKP DOSE\RESRAD CW\GKP PARK RANGER-INGESTION.RAD

Dose/Source Ratios Summed Over All Pathways
Parent and Progeny Principal Radionuclide Contributions Indicated

Parent (i)	Product (j)	Thread Fraction	DSR(j,t) At Time in Years (mrem/yr)/(pCi/g) 0.000E+00	1.000E+00	3.000E+00	1.000E+01	3.000E+01	1.000E+02	3.000E+02	1.000E+03
ÄÄÄÄÄÄÄÄ	ÄÄÄÄÄÄÄÄÄÄ	ÄÄÄÄÄÄÄÄÄ	ÄÄÄÄÄÄÄÄÄ	ÄÄÄÄÄÄÄÄÄ	ÄÄÄÄÄÄÄÄÄ	ÄÄÄÄÄÄÄÄÄ	ÄÄÄÄÄÄÄÄÄ	ÄÄÄÄÄÄÄÄÄ	ÄÄÄÄÄÄÄÄÄ	ÄÄÄÄÄÄÄÄÄ
-234	U-234	3.989E-12	1.832E-15	1.741E-15	1.572E-15	1.098E-15	3.882E-16	7.258E-18	0.000E+00	0.000E+00
-234	Th-230	3.989E-12	1.641E-20	4.799E-20	1.059E-19	2.612E-19	4.457E-19	2.456E-19	0.000E+00	0.000E+00
-234	Ra-226+D1	3.989E-12	5.709E-24	3.888E-23	1.931E-22	1.384E-21	6.235E-21	7.208E-21	0.000E+00	0.000E+00
-234	Pb-210+D2	3.989E-12	1.791E-25	2.598E-24	2.813E-23	5.694E-22	6.461E-21	1.510E-20	0.000E+00	0.000E+00
-234	äDSR(j)		1.832E-15	1.741E-15	1.572E-15	1.098E-15	3.886E-16	7.526E-18	0.000E+00	0.000E+00
-234	U-234	1.998E-04	9.173E-08	8.718E-08	7.872E-08	5.499E-08	1.944E-08	3.634E-10	0.000E+00	0.000E+00
-234	Th-230	1.998E-04	8.218E-13	2.403E-12	5.302E-12	1.308E-11	2.232E-11	1.230E-11	0.000E+00	0.000E+00
-234	Ra-226+D2	1.998E-04	2.857E-16	1.946E-15	9.666E-15	6.927E-14	3.121E-13	3.608E-13	0.000E+00	0.000E+00
-234	Pb-210+D	1.998E-04	1.215E-17	1.763E-16	1.909E-15	3.863E-14	4.384E-13	1.024E-12	0.000E+00	0.000E+00
-234	äDSR(j)		9.174E-08	8.718E-08	7.872E-08	5.500E-08	1.946E-08	3.771E-10	0.000E+00	0.000E+00
-234	U-234	2.637E-10	1.211E-13	1.151E-13	1.039E-13	7.258E-14	2.566E-14	4.797E-16	0.000E+00	0.000E+00
-234	Th-230	2.637E-10	1.085E-18	3.172E-18	6.998E-18	1.726E-17	2.946E-17	1.624E-17	0.000E+00	0.000E+00
-234	Ra-226+D2	2.637E-10	3.772E-22	2.569E-21	1.276E-20	9.143E-20	4.119E-19	4.762E-19	0.000E+00	0.000E+00
-234	Pb-210+D1	2.637E-10	1.185E-23	1.720E-22	1.862E-21	3.768E-20	4.276E-19	9.991E-19	0.000E+00	0.000E+00
-234	äDSR(j)		1.211E-13	1.151E-13	1.039E-13	7.260E-14	2.569E-14	4.974E-16	0.000E+00	0.000E+00
-234	U-234	3.795E-12	1.743E-15	1.656E-15	1.496E-15	1.045E-15	3.693E-16	6.905E-18	0.000E+00	0.000E+00
-234	Th-230	3.795E-12	1.561E-20	4.566E-20	1.007E-19	2.485E-19	4.241E-19	2.337E-19	0.000E+00	0.000E+00
-234	Ra-226+D2	3.795E-12	5.429E-24	3.697E-23	1.837E-22	1.316E-21	5.929E-21	6.855E-21	0.000E+00	0.000E+00
-234	Pb-210+D2	3.795E-12	1.704E-25	2.472E-24	2.676E-23	5.417E-22	6.148E-21	1.436E-20	0.000E+00	0.000E+00
-234	äDSR(j)		1.743E-15	1.656E-15	1.496E-15	1.045E-15	3.697E-16	7.160E-18	0.000E+00	0.000E+00
-234	U-234	4.196E-08	1.927E-11	1.831E-11	1.653E-11	1.155E-11	4.083E-12	7.634E-14	0.000E+00	0.000E+00
-234	Th-230	4.196E-08	1.726E-16	5.048E-16	1.114E-15	2.747E-15	4.688E-15	2.584E-15	0.000E+00	0.000E+00
-234	Ra-226+D3	4.196E-08	6.002E-20	4.087E-19	2.030E-18	1.455E-17	6.555E-17	7.578E-17	0.000E+00	0.000E+00
-234	Pb-210+D	4.196E-08	2.552E-21	3.703E-20	4.009E-19	8.115E-18	9.209E-17	2.152E-16	0.000E+00	0.000E+00
-234	äDSR(j)		1.927E-11	1.831E-11	1.654E-11	1.155E-11	4.088E-12	7.921E-14	0.000E+00	0.000E+00
-234	U-234	5.538E-14	2.543E-17	2.417E-17	2.182E-17	1.525E-17	5.389E-18	1.008E-19	0.000E+00	0.000E+00
-234	Th-230	5.538E-14	2.278E-22	6.663E-22	1.470E-21	3.626E-21	6.188E-21	3.411E-21	0.000E+00	0.000E+00
-234	Ra-226+D3	5.538E-14	7.922E-26	5.395E-25	2.680E-24	1.920E-23	8.652E-23	1.000E-22	0.000E+00	0.000E+00
-234	Pb-210+D1	5.538E-14	2.489E-27	3.612E-26	3.910E-25	7.914E-24	8.982E-23	2.099E-22	0.000E+00	0.000E+00
-234	äDSR(j)		2.543E-17	2.417E-17	2.183E-17	1.525E-17	5.395E-18	1.045E-19	0.000E+00	0.000E+00
-234	U-234	7.972E-16	3.661E-19	3.479E-19	3.141E-19	2.194E-19	7.757E-20	1.450E-21	0.000E+00	0.000E+00
-234	Th-230	7.972E-16	3.280E-24	9.591E-24	2.116E-23	5.220E-23	8.907E-23	4.909E-23	0.000E+00	0.000E+00
-234	Ra-226+D3	7.972E-16	1.140E-27	7.766E-27	3.858E-26	2.764E-25	1.245E-24	1.440E-24	0.000E+00	0.000E+00
-234	Pb-210+D2	7.972E-16	3.579E-29	5.193E-28	5.622E-27	1.138E-25	1.291E-24	3.017E-24	0.000E+00	0.000E+00
-234	äDSR(j)		3.661E-19	3.479E-19	3.142E-19	2.195E-19	7.766E-20	1.504E-21	0.000E+00	0.000E+00
-234	U-234	2.000E-07	9.185E-11	8.728E-11	7.881E-11	5.505E-11	1.946E-11	3.639E-13	0.000E+00	0.000E+00
-234	Th-230	2.000E-07	8.228E-16	2.406E-15	5.308E-15	1.310E-14	2.235E-14	1.232E-14	0.000E+00	0.000E+00
-234	Ra-226+D4	2.000E-07	2.860E-19	1.948E-18	9.676E-18	6.933E-17	3.124E-16	3.611E-16	0.000E+00	0.000E+00
-234	Pb-210+D	2.000E-07	1.217E-20	1.765E-19	1.911E-18	3.868E-17	4.390E-16	1.026E-15	0.000E+00	0.000E+00
-234	äDSR(j)		9.185E-11	8.728E-11	7.882E-11	5.507E-11	1.948E-11	3.776E-13	0.000E+00	0.000E+00

ummary : Park Ranger Ingestion
ile : C:\USERS\CLAUDE\DOCUMENTS\0 GKP DOSE\RESRAD CW\GKP PARK RANGER-INGESTION.RAD

Dose/Source Ratios Summed Over All Pathways
Parent and Progeny Principal Radionuclide Contributions Indicated

Parent	Product	Thread	DSR(j,t) At Time in Years (mrem/yr)/(pCi/g)							
(i)	(j)	Fraction	0.000E+00	1.000E+00	3.000E+00	1.000E+01	3.000E+01	1.000E+02	3.000E+02	1.000E+03
ÄÄÄÄÄÄÄÄÄ	ÄÄÄÄÄÄÄÄÄÄ	ÄÄÄÄÄÄÄÄÄ	ÄÄÄÄÄÄÄÄÄ	ÄÄÄÄÄÄÄÄÄ	ÄÄÄÄÄÄÄÄÄ	ÄÄÄÄÄÄÄÄÄ	ÄÄÄÄÄÄÄÄÄ	ÄÄÄÄÄÄÄÄÄ	ÄÄÄÄÄÄÄÄÄ	ÄÄÄÄÄÄÄÄÄ
-234	U-234	2.640E-13	1.212E-16	1.152E-16	1.040E-16	7.267E-17	2.569E-17	4.803E-19	0.000E+00	0.000E+00
-234	Th-230	2.640E-13	1.086E-21	3.176E-21	7.007E-21	1.729E-20	2.950E-20	1.626E-20	0.000E+00	0.000E+00
-234	Ra-226+D4	2.640E-13	3.775E-25	2.571E-24	1.277E-23	9.152E-23	4.123E-22	4.767E-22	0.000E+00	0.000E+00
-234	Pb-210+D1	2.640E-13	1.187E-26	1.722E-25	1.864E-24	3.773E-23	4.281E-22	1.000E-21	0.000E+00	0.000E+00
-234	äDSR(j)		1.212E-16	1.152E-16	1.040E-16	7.269E-17	2.572E-17	4.980E-19	0.000E+00	0.000E+00
-234	U-234	3.800E-15	1.745E-18	1.658E-18	1.497E-18	1.046E-18	3.698E-19	6.914E-21	0.000E+00	0.000E+00
-234	Th-230	3.800E-15	1.563E-23	4.572E-23	1.009E-22	2.488E-22	4.246E-22	2.340E-22	0.000E+00	0.000E+00
-234	Ra-226+D4	3.800E-15	5.434E-27	3.701E-26	1.838E-25	1.317E-24	5.935E-24	6.861E-24	0.000E+00	0.000E+00
-234	Pb-210+D2	3.800E-15	1.706E-28	2.475E-27	2.680E-26	5.424E-25	6.155E-24	1.438E-23	0.000E+00	0.000E+00
-234	äDSR(j)		1.745E-18	1.658E-18	1.498E-18	1.046E-18	3.702E-19	7.169E-21	0.000E+00	0.000E+00
-235+D	U-235+D	9.835E-01	4.267E-04	4.055E-04	3.661E-04	2.558E-04	9.041E-05	1.691E-06	0.000E+00	0.000E+00
-235+D	Pa-231	9.835E-01	1.774E-07	5.088E-07	1.074E-06	2.252E-06	2.312E-06	1.424E-07	0.000E+00	0.000E+00
-235+D	Ac-227+D	9.835E-01	2.555E-09	1.666E-08	7.509E-08	3.840E-07	7.176E-07	5.828E-08	0.000E+00	0.000E+00
-235+D	äDSR(j)		4.268E-04	4.060E-04	3.673E-04	2.584E-04	9.344E-05	1.892E-06	0.000E+00	0.000E+00
-235+D	U-235+D	2.722E-03	1.181E-06	1.122E-06	1.013E-06	7.078E-07	2.502E-07	4.680E-09	0.000E+00	0.000E+00
-235+D	Pa-231	2.722E-03	4.911E-10	1.408E-09	2.971E-09	6.232E-09	6.399E-09	3.941E-10	0.000E+00	0.000E+00
-235+D	Ac-227+D1	2.722E-03	7.072E-12	4.611E-11	2.078E-10	1.063E-09	1.986E-09	1.613E-10	0.000E+00	0.000E+00
-235+D	äDSR(j)		1.181E-06	1.124E-06	1.016E-06	7.151E-07	2.586E-07	5.235E-09	0.000E+00	0.000E+00
-235+D	U-235+D	1.376E-02	5.970E-06	5.673E-06	5.123E-06	3.579E-06	1.265E-06	2.366E-08	0.000E+00	0.000E+00
-235+D	Pa-231	1.376E-02	2.483E-09	7.119E-09	1.502E-08	3.151E-08	3.235E-08	1.992E-09	0.000E+00	0.000E+00
-235+D	Ac-227+D2	1.376E-02	3.568E-11	2.327E-10	1.049E-09	5.362E-09	1.002E-08	8.139E-10	0.000E+00	0.000E+00
-235+D	äDSR(j)		5.973E-06	5.681E-06	5.139E-06	3.615E-06	1.307E-06	2.646E-08	0.000E+00	0.000E+00
-235+D	U-235+D	3.809E-05	1.652E-08	1.570E-08	1.418E-08	9.904E-09	3.501E-09	6.548E-11	0.000E+00	0.000E+00
-235+D	Pa-231	3.809E-05	6.872E-12	1.970E-11	4.158E-11	8.720E-11	8.954E-11	5.514E-12	0.000E+00	0.000E+00
-235+D	Ac-227+D3	3.809E-05	9.875E-14	6.440E-13	2.902E-12	1.484E-11	2.773E-11	2.252E-12	0.000E+00	0.000E+00
-235+D	äDSR(j)		1.653E-08	1.572E-08	1.422E-08	1.001E-08	3.619E-09	7.325E-11	0.000E+00	0.000E+00
-235+D	U-235+D	8.257E-07	3.582E-10	3.404E-10	3.074E-10	2.147E-10	7.591E-11	1.420E-12	0.000E+00	0.000E+00
-235+D	Pa-231	8.257E-07	1.490E-13	4.271E-13	9.014E-13	1.890E-12	1.941E-12	1.196E-13	0.000E+00	0.000E+00
-235+D	Ac-227+D4	8.257E-07	2.045E-15	1.334E-14	6.011E-14	3.074E-13	5.745E-13	4.666E-14	0.000E+00	0.000E+00
-235+D	äDSR(j)		3.584E-10	3.409E-10	3.084E-10	2.169E-10	7.842E-11	1.586E-12	0.000E+00	0.000E+00
-235+D	U-235+D	2.285E-09	9.914E-13	9.422E-13	8.507E-13	5.943E-13	2.101E-13	3.929E-15	0.000E+00	0.000E+00
-235+D	Pa-231	2.285E-09	4.123E-16	1.182E-15	2.495E-15	5.232E-15	5.373E-15	3.309E-16	0.000E+00	0.000E+00
-235+D	Ac-227+D5	2.285E-09	5.661E-18	3.692E-17	1.664E-16	8.508E-16	1.590E-15	1.291E-16	0.000E+00	0.000E+00
-235+D	äDSR(j)		9.919E-13	9.434E-13	8.534E-13	6.004E-13	2.171E-13	4.389E-15	0.000E+00	0.000E+00
-238	U-238	5.450E-07	2.255E-10	2.143E-10	1.935E-10	1.352E-10	4.779E-11	8.937E-13	0.000E+00	0.000E+00

ummary : Park Ranger Ingestion
ile : C:\USERS\CLAUDE\DOCUMENTS\0 GKP DOSE\RESRAD CW\GKP PARK RANGER-INGESTION.RAD

Dose/Source Ratios Summed Over All Pathways
Parent and Progeny Principal Radionuclide Contributions Indicated

Parent (i)	Product (j)	Thread Fraction	DSR(j,t) At Time in Years (mrem/yr)/(pCi/g) 0.000E+00	1.000E+00	3.000E+00	1.000E+01	3.000E+01	1.000E+02	3.000E+02	1.000E+03
ÄÄÄÄÄÄÄÄ	ÄÄÄÄÄÄÄÄÄÄ	ÄÄÄÄÄÄÄÄ	ÄÄÄÄÄÄÄÄ	ÄÄÄÄÄÄÄÄ	ÄÄÄÄÄÄÄÄ	ÄÄÄÄÄÄÄÄ	ÄÄÄÄÄÄÄÄ	ÄÄÄÄÄÄÄÄ	ÄÄÄÄÄÄÄÄ	ÄÄÄÄÄÄÄÄ
-238+D	U-238+D	1.599E-03	7.030E-07	6.680E-07	6.032E-07	4.214E-07	1.490E-07	2.786E-09	0.000E+00	0.000E+00
-238+D	U-234	1.599E-03	1.028E-12	2.948E-12	6.220E-12	1.305E-11	1.340E-11	8.257E-13	0.000E+00	0.000E+00
-238+D	Th-230	1.599E-03	6.143E-18	4.169E-17	2.055E-16	1.433E-15	6.015E-15	5.957E-15	0.000E+00	0.000E+00
-238+D	Ra-226+D	1.599E-03	1.607E-21	2.336E-20	2.540E-19	5.219E-18	6.158E-17	1.570E-16	0.000E+00	0.000E+00
-238+D	Pb-210+D	1.599E-03	5.477E-23	1.638E-21	3.815E-20	2.238E-18	6.955E-17	4.087E-16	0.000E+00	0.000E+00
-238+D	äDSR(j)		7.030E-07	6.680E-07	6.032E-07	4.214E-07	1.490E-07	2.787E-09	0.000E+00	0.000E+00
-238+D	U-238+D	2.111E-09	9.279E-13	8.818E-13	7.962E-13	5.562E-13	1.966E-13	3.677E-15	0.000E+00	0.000E+00
-238+D	U-234	2.111E-09	1.357E-18	3.891E-18	8.211E-18	1.722E-17	1.769E-17	1.090E-18	0.000E+00	0.000E+00
-238+D	Th-230	2.111E-09	8.109E-24	5.504E-23	2.713E-22	1.892E-21	7.940E-21	7.864E-21	0.000E+00	0.000E+00
-238+D	Ra-226+D	2.111E-09	2.121E-27	3.083E-26	3.352E-25	6.889E-24	8.129E-23	2.073E-22	0.000E+00	0.000E+00
-238+D	Pb-210+D1	2.111E-09	5.342E-29	1.598E-27	3.721E-26	2.182E-24	6.783E-23	3.986E-22	0.000E+00	0.000E+00
-238+D	äDSR(j)		9.279E-13	8.818E-13	7.962E-13	5.562E-13	1.966E-13	3.678E-15	0.000E+00	0.000E+00
-238+D	U-238+D	3.039E-11	1.336E-14	1.269E-14	1.146E-14	8.006E-15	2.830E-15	5.293E-17	0.000E+00	0.000E+00
-238+D	U-234	3.039E-11	1.953E-20	5.600E-20	1.182E-19	2.479E-19	2.546E-19	1.569E-20	0.000E+00	0.000E+00
-238+D	Th-230	3.039E-11	1.167E-25	7.922E-25	3.905E-24	2.723E-23	1.143E-22	1.132E-22	0.000E+00	0.000E+00
-238+D	Ra-226+D	3.039E-11	3.053E-29	4.438E-28	4.825E-27	9.916E-26	1.170E-24	2.984E-24	0.000E+00	0.000E+00
-238+D	Pb-210+D2	3.039E-11	7.679E-31	2.297E-29	5.349E-28	3.138E-26	9.752E-25	5.730E-24	0.000E+00	0.000E+00
-238+D	äDSR(j)		1.336E-14	1.269E-14	1.146E-14	8.006E-15	2.830E-15	5.295E-17	0.000E+00	0.000E+00
-238+D	U-238+D	3.359E-07	1.477E-10	1.403E-10	1.267E-10	8.851E-11	3.129E-11	5.851E-13	0.000E+00	0.000E+00
-238+D	U-234	3.359E-07	2.159E-16	6.191E-16	1.307E-15	2.740E-15	2.815E-15	1.734E-16	0.000E+00	0.000E+00
-238+D	Th-230	3.359E-07	1.290E-21	8.758E-21	4.317E-20	3.010E-19	1.263E-18	1.251E-18	0.000E+00	0.000E+00
-238+D	Ra-226+D1	3.359E-07	3.375E-25	4.906E-24	5.334E-23	1.096E-21	1.293E-20	3.298E-20	0.000E+00	0.000E+00
-238+D	Pb-210+D	3.359E-07	1.150E-26	3.441E-25	8.013E-24	4.700E-22	1.461E-20	8.584E-20	0.000E+00	0.000E+00
-238+D	äDSR(j)		1.477E-10	1.403E-10	1.267E-10	8.851E-11	3.129E-11	5.853E-13	0.000E+00	0.000E+00
-238+D	U-238+D	4.434E-13	1.949E-16	1.852E-16	1.672E-16	1.168E-16	4.130E-17	7.724E-19	0.000E+00	0.000E+00
-238+D	U-234	4.434E-13	2.850E-22	8.172E-22	1.725E-21	3.617E-21	3.715E-21	2.289E-22	0.000E+00	0.000E+00
-238+D	Th-230	4.434E-13	1.703E-27	1.156E-26	5.698E-26	3.974E-25	1.668E-24	1.652E-24	0.000E+00	0.000E+00
-238+D	Ra-226+D1	4.434E-13	4.455E-31	6.476E-30	7.042E-29	1.447E-27	1.707E-26	4.354E-26	0.000E+00	0.000E+00
-238+D	Pb-210+D1	4.434E-13	1.122E-32	3.356E-31	7.815E-30	4.584E-28	1.425E-26	8.372E-26	0.000E+00	0.000E+00
-238+D	äDSR(j)		1.949E-16	1.852E-16	1.672E-16	1.168E-16	4.130E-17	7.726E-19	0.000E+00	0.000E+00
-238+D	U-238+D	6.383E-15	2.805E-18	2.666E-18	2.407E-18	1.682E-18	5.945E-19	1.112E-20	0.000E+00	0.000E+00
-238+D	U-234	6.383E-15	4.103E-24	1.176E-23	2.482E-23	5.207E-23	5.348E-23	3.295E-24	0.000E+00	0.000E+00
-238+D	Th-230	6.383E-15	2.452E-29	1.664E-28	8.201E-28	5.720E-27	2.401E-26	2.377E-26	0.000E+00	0.000E+00
-238+D	Ra-226+D1	6.383E-15	6.413E-33	9.322E-32	1.014E-30	2.083E-29	2.458E-28	6.267E-28	0.000E+00	0.000E+00
-238+D	Pb-210+D2	6.383E-15	1.613E-34	4.825E-33	1.124E-31	6.590E-30	2.048E-28	1.204E-27	0.000E+00	0.000E+00
-238+D	äDSR(j)		2.805E-18	2.666E-18	2.407E-18	1.682E-18	5.945E-19	1.112E-20	0.000E+00	0.000E+00

ummary : Park Ranger Ingestion
ile : C:\USERS\CLAUDE\DOCUMENTS\0 GKP DOSE\RESRAD CW\GKP PARK RANGER-INGESTION.RAD

Dose/Source Ratios Summed Over All Pathways
Parent and Progeny Principal Radionuclide Contributions Indicated

Parent (i)	Product (j)	Thread Fraction	DSR(j,t) At Time in Years (mrem/yr)/(pCi/g) 0.000E+00	1.000E+00	3.000E+00	1.000E+01	3.000E+01	1.000E+02	3.000E+02	1.000E+03
ÄÄÄÄÄÄÄÄÄ	ÄÄÄÄÄÄÄÄÄÄ	ÄÄÄÄÄÄÄÄÄ	ÄÄÄÄÄÄÄÄÄ	ÄÄÄÄÄÄÄÄÄ	ÄÄÄÄÄÄÄÄÄ	ÄÄÄÄÄÄÄÄÄ	ÄÄÄÄÄÄÄÄÄ	ÄÄÄÄÄÄÄÄÄ	ÄÄÄÄÄÄÄÄÄ	ÄÄÄÄÄÄÄÄÄ
-238+D	U-238+D	3.196E-07	1.405E-10	1.335E-10	1.205E-10	8.421E-11	2.977E-11	5.567E-13	0.000E+00	0.000E+00
-238+D	U-234	3.196E-07	2.054E-16	5.890E-16	1.243E-15	2.607E-15	2.678E-15	1.650E-16	0.000E+00	0.000E+00
-238+D	Th-230	3.196E-07	1.228E-21	8.332E-21	4.107E-20	2.864E-19	1.202E-18	1.190E-18	0.000E+00	0.000E+00
-238+D	Ra-226+D2	3.196E-07	3.210E-25	4.666E-24	5.073E-23	1.042E-21	1.230E-20	3.137E-20	0.000E+00	0.000E+00
-238+D	Pb-210+D	3.196E-07	1.094E-26	3.274E-25	7.623E-24	4.472E-22	1.390E-20	8.167E-20	0.000E+00	0.000E+00
-238+D	äDSR(j)		1.405E-10	1.335E-10	1.205E-10	8.421E-11	2.977E-11	5.569E-13	0.000E+00	0.000E+00
-238+D	U-238+D	4.219E-13	1.854E-16	1.762E-16	1.591E-16	1.112E-16	3.929E-17	7.349E-19	0.000E+00	0.000E+00
-238+D	U-234	4.219E-13	2.712E-22	7.775E-22	1.641E-21	3.441E-21	3.535E-21	2.178E-22	0.000E+00	0.000E+00
-238+D	Th-230	4.219E-13	1.621E-27	1.100E-26	5.421E-26	3.781E-25	1.587E-24	1.571E-24	0.000E+00	0.000E+00
-238+D	Ra-226+D2	4.219E-13	4.237E-31	6.159E-30	6.696E-29	1.376E-27	1.624E-26	4.140E-26	0.000E+00	0.000E+00
-238+D	Pb-210+D1	4.219E-13	1.067E-32	3.193E-31	7.435E-30	4.361E-28	1.356E-26	7.965E-26	0.000E+00	0.000E+00
-238+D	äDSR(j)		1.854E-16	1.762E-16	1.591E-16	1.112E-16	3.930E-17	7.351E-19	0.000E+00	0.000E+00
-238+D	U-238+D	6.073E-15	2.669E-18	2.536E-18	2.290E-18	1.600E-18	5.656E-19	1.058E-20	0.000E+00	0.000E+00
-238+D	U-234	6.073E-15	3.903E-24	1.119E-23	2.362E-23	4.954E-23	5.088E-23	3.135E-24	0.000E+00	0.000E+00
-238+D	Th-230	6.073E-15	2.333E-29	1.583E-28	7.803E-28	5.442E-27	2.284E-26	2.262E-26	0.000E+00	0.000E+00
-238+D	Ra-226+D2	6.073E-15	6.098E-33	8.865E-32	9.639E-31	1.981E-29	2.337E-28	5.960E-28	0.000E+00	0.000E+00
-238+D	Pb-210+D2	6.073E-15	1.535E-34	4.591E-33	1.069E-31	6.270E-30	1.949E-28	1.145E-27	0.000E+00	0.000E+00
-238+D	äDSR(j)		2.669E-18	2.536E-18	2.290E-18	1.600E-18	5.656E-19	1.058E-20	0.000E+00	0.000E+00
-238+D	U-238+D	6.713E-11	2.951E-14	2.804E-14	2.532E-14	1.769E-14	6.253E-15	1.169E-16	0.000E+00	0.000E+00
-238+D	U-234	6.713E-11	4.315E-20	1.237E-19	2.611E-19	5.476E-19	5.625E-19	3.466E-20	0.000E+00	0.000E+00
-238+D	Th-230	6.713E-11	2.579E-25	1.750E-24	8.626E-24	6.016E-23	2.525E-22	2.501E-22	0.000E+00	0.000E+00
-238+D	Ra-226+D3	6.713E-11	6.742E-29	9.800E-28	1.066E-26	2.190E-25	2.584E-24	6.588E-24	0.000E+00	0.000E+00
-238+D	Pb-210+D	6.713E-11	2.299E-30	6.876E-29	1.601E-27	9.392E-26	2.919E-24	1.715E-23	0.000E+00	0.000E+00
-238+D	äDSR(j)		2.951E-14	2.804E-14	2.532E-14	1.769E-14	6.253E-15	1.170E-16	0.000E+00	0.000E+00
-238+D	U-238+D	8.862E-17	3.895E-20	3.701E-20	3.342E-20	2.335E-20	8.253E-21	1.544E-22	0.000E+00	0.000E+00
-238+D	U-234	8.862E-17	5.696E-26	1.633E-25	3.447E-25	7.229E-25	7.425E-25	4.575E-26	0.000E+00	0.000E+00
-238+D	Th-230	8.862E-17	3.404E-31	2.310E-30	1.139E-29	7.941E-29	3.333E-28	3.301E-28	0.000E+00	0.000E+00
-238+D	Ra-226+D3	8.862E-17	8.899E-35	1.294E-33	1.407E-32	2.890E-31	3.411E-30	8.697E-30	0.000E+00	0.000E+00
-238+D	Pb-210+D1	8.862E-17	2.242E-36	6.707E-35	1.562E-33	9.161E-32	2.847E-30	1.673E-29	0.000E+00	0.000E+00
-238+D	äDSR(j)		3.895E-20	3.701E-20	3.342E-20	2.335E-20	8.254E-21	1.544E-22	0.000E+00	0.000E+00
-238+D	U-238+D	1.276E-18	5.606E-22	5.328E-22	4.811E-22	3.361E-22	1.188E-22	2.222E-24	0.000E+00	0.000E+00
-238+D	U-234	1.276E-18	8.199E-28	2.351E-27	4.961E-27	1.040E-26	1.069E-26	6.585E-28	0.000E+00	0.000E+00
-238+D	Th-230	1.276E-18	4.899E-33	3.325E-32	1.639E-31	1.143E-30	4.797E-30	4.751E-30	0.000E+00	0.000E+00
-238+D	Ra-226+D3	1.276E-18	1.281E-36	1.862E-35	2.025E-34	4.160E-33	4.909E-32	1.252E-31	0.000E+00	0.000E+00
-238+D	Pb-210+D2	1.276E-18	3.223E-38	9.642E-37	2.245E-35	1.317E-33	4.094E-32	2.405E-31	0.000E+00	0.000E+00
-238+D	äDSR(j)		5.606E-22	5.328E-22	4.811E-22	3.361E-22	1.188E-22	2.222E-24	0.000E+00	0.000E+00

ummary : Park Ranger Ingestion
ile : C:\USERS\CLAUDE\DOCUMENTS\0 GKP DOSE\RESRAD CW\GKP PARK RANGER-INGESTION.RAD

Dose/Source Ratios Summed Over All Pathways
Parent and Progeny Principal Radionuclide Contributions Indicated

Parent (i)	Product (j)	Thread Fraction	DSR(j,t) At Time in Years (mrem/yr)/(pCi/g) 0.000E+00	1.000E+00	3.000E+00	1.000E+01	3.000E+01	1.000E+02	3.000E+02	1.000E+03
ÄÄÄÄÄÄÄÄÄ	ÄÄÄÄÄÄÄÄÄÄ	ÄÄÄÄÄÄÄÄÄ	ÄÄÄÄÄÄÄÄÄ	ÄÄÄÄÄÄÄÄÄ	ÄÄÄÄÄÄÄÄÄ	ÄÄÄÄÄÄÄÄÄ	ÄÄÄÄÄÄÄÄÄ	ÄÄÄÄÄÄÄÄÄ	ÄÄÄÄÄÄÄÄÄ	ÄÄÄÄÄÄÄÄÄ
-238+D	U-238+D	3.200E-10	1.406E-13	1.337E-13	1.207E-13	8.431E-14	2.980E-14	5.574E-16	0.000E+00	0.000E+00
-238+D	U-234	3.200E-10	2.057E-19	5.898E-19	1.245E-18	2.610E-18	2.681E-18	1.652E-19	0.000E+00	0.000E+00
-238+D	Th-230	3.200E-10	1.229E-24	8.342E-24	4.112E-23	2.868E-22	1.204E-21	1.192E-21	0.000E+00	0.000E+00
-238+D	Ra-226+D4	3.200E-10	3.213E-28	4.670E-27	5.078E-26	1.043E-24	1.231E-23	3.140E-23	0.000E+00	0.000E+00
-238+D	Pb-210+D	3.200E-10	1.096E-29	3.278E-28	7.633E-27	4.477E-25	1.392E-23	8.177E-23	0.000E+00	0.000E+00
-238+D	äDSR(j)		1.406E-13	1.337E-13	1.207E-13	8.431E-14	2.981E-14	5.575E-16	0.000E+00	0.000E+00
-238+D	U-238+D	4.224E-16	1.857E-19	1.764E-19	1.593E-19	1.113E-19	3.934E-20	7.357E-22	0.000E+00	0.000E+00
-238+D	U-234	4.224E-16	2.715E-25	7.785E-25	1.643E-24	3.446E-24	3.539E-24	2.181E-25	0.000E+00	0.000E+00
-238+D	Th-230	4.224E-16	1.623E-30	1.101E-29	5.428E-29	3.785E-28	1.589E-27	1.573E-27	0.000E+00	0.000E+00
-238+D	Ra-226+D4	4.224E-16	4.241E-34	6.165E-33	6.703E-32	1.377E-30	1.625E-29	4.144E-29	0.000E+00	0.000E+00
-238+D	Pb-210+D1	4.224E-16	1.069E-35	3.197E-34	7.444E-33	4.367E-31	1.357E-29	7.975E-29	0.000E+00	0.000E+00
-238+D	äDSR(j)		1.857E-19	1.764E-19	1.593E-19	1.113E-19	3.934E-20	7.360E-22	0.000E+00	0.000E+00
-238+D	U-238+D	6.080E-18	2.672E-21	2.540E-21	2.293E-21	1.602E-21	5.663E-22	1.059E-23	0.000E+00	0.000E+00
-238+D	U-234	6.080E-18	3.908E-27	1.121E-26	2.365E-26	4.960E-26	5.094E-26	3.139E-27	0.000E+00	0.000E+00
-238+D	Th-230	6.080E-18	2.335E-32	1.585E-31	7.812E-31	5.448E-30	2.287E-29	2.265E-29	0.000E+00	0.000E+00
-238+D	Ra-226+D4	6.080E-18	6.104E-36	8.874E-35	9.648E-34	1.983E-32	2.339E-31	5.966E-31	0.000E+00	0.000E+00
-238+D	Pb-210+D2	6.080E-18	1.537E-37	4.596E-36	1.070E-34	6.278E-33	1.951E-31	1.147E-30	0.000E+00	0.000E+00
-238+D	äDSR(j)		2.672E-21	2.540E-21	2.293E-21	1.602E-21	5.663E-22	1.059E-23	0.000E+00	0.000E+00
-238+D1	U-238+D1	9.980E-01	4.351E-04	4.135E-04	3.734E-04	2.608E-04	9.221E-05	1.724E-06	0.000E+00	0.000E+00
-238+D1	U-234	9.980E-01	6.415E-10	1.839E-09	3.882E-09	8.141E-09	8.362E-09	5.153E-10	0.000E+00	0.000E+00
-238+D1	Th-230	9.980E-01	3.833E-15	2.602E-14	1.282E-13	8.943E-13	3.753E-12	3.717E-12	0.000E+00	0.000E+00
-238+D1	Ra-226+D	9.980E-01	1.003E-18	1.458E-17	1.585E-16	3.257E-15	3.843E-14	9.799E-14	0.000E+00	0.000E+00
-238+D1	Pb-210+D	9.980E-01	3.417E-20	1.022E-18	2.380E-17	1.396E-15	4.340E-14	2.550E-13	0.000E+00	0.000E+00
-238+D1	äDSR(j)		4.351E-04	4.135E-04	3.734E-04	2.608E-04	9.222E-05	1.725E-06	0.000E+00	0.000E+00
-238+D1	U-238+D1	1.317E-06	5.744E-10	5.459E-10	4.929E-10	3.443E-10	1.217E-10	2.276E-12	0.000E+00	0.000E+00
-238+D1	U-234	1.317E-06	8.468E-16	2.428E-15	5.124E-15	1.075E-14	1.104E-14	6.801E-16	0.000E+00	0.000E+00
-238+D1	Th-230	1.317E-06	5.060E-21	3.434E-20	1.693E-19	1.180E-18	4.955E-18	4.907E-18	0.000E+00	0.000E+00
-238+D1	Ra-226+D	1.317E-06	1.324E-24	1.924E-23	2.092E-22	4.299E-21	5.072E-20	1.293E-19	0.000E+00	0.000E+00
-238+D1	Pb-210+D1	1.317E-06	3.333E-26	9.970E-25	2.322E-23	1.362E-21	4.233E-20	2.487E-19	0.000E+00	0.000E+00
-238+D1	äDSR(j)		5.744E-10	5.459E-10	4.929E-10	3.443E-10	1.217E-10	2.277E-12	0.000E+00	0.000E+00
-238+D1	U-238+D1	1.896E-08	8.268E-12	7.857E-12	7.095E-12	4.956E-12	1.752E-12	3.276E-14	0.000E+00	0.000E+00
-238+D1	U-234	1.896E-08	1.219E-17	3.495E-17	7.375E-17	1.547E-16	1.589E-16	9.790E-18	0.000E+00	0.000E+00
-238+D1	Th-230	1.896E-08	7.284E-23	4.943E-22	2.436E-21	1.699E-20	7.131E-20	7.063E-20	0.000E+00	0.000E+00
-238+D1	Ra-226+D	1.896E-08	1.905E-26	2.769E-25	3.011E-24	6.187E-23	7.301E-22	1.862E-21	0.000E+00	0.000E+00
-238+D1	Pb-210+D2	1.896E-08	4.792E-28	1.433E-26	3.338E-25	1.958E-23	6.085E-22	3.576E-21	0.000E+00	0.000E+00
-238+D1	äDSR(j)		8.268E-12	7.857E-12	7.095E-12	4.956E-12	1.752E-12	3.277E-14	0.000E+00	0.000E+00

ummary : Park Ranger Ingestion
ile : C:\USERS\CLAUDE\DOCUMENTS\0 GKP DOSE\RESRAD CW\GKP PARK RANGER-INGESTION.RAD

Dose/Source Ratios Summed Over All Pathways
Parent and Progeny Principal Radionuclide Contributions Indicated

Parent (i)	Product (j)	Thread Fraction	DSR(j,t) At Time in Years (mrem/yr)/(pCi/g) 0.000E+00	1.000E+00	3.000E+00	1.000E+01	3.000E+01	1.000E+02	3.000E+02	1.000E+03
ÄÄÄÄÄÄÄÄ	ÄÄÄÄÄÄÄÄÄÄ	ÄÄÄÄÄÄÄÄ	ÄÄÄÄÄÄÄÄ	ÄÄÄÄÄÄÄÄ	ÄÄÄÄÄÄÄÄ	ÄÄÄÄÄÄÄÄ	ÄÄÄÄÄÄÄÄ	ÄÄÄÄÄÄÄÄ	ÄÄÄÄÄÄÄÄ	ÄÄÄÄÄÄÄÄ
-238+D1	U-238+D1	2.096E-04	9.140E-08	8.686E-08	7.843E-08	5.479E-08	1.937E-08	3.622E-10	0.000E+00	0.000E+00
-238+D1	U-234	2.096E-04	1.347E-13	3.863E-13	8.153E-13	1.710E-12	1.756E-12	1.082E-13	0.000E+00	0.000E+00
-238+D1	Th-230	2.096E-04	8.052E-19	5.465E-18	2.694E-17	1.878E-16	7.884E-16	7.808E-16	0.000E+00	0.000E+00
-238+D1	Ra-226+D1	2.096E-04	2.106E-22	3.062E-21	3.329E-20	6.840E-19	8.071E-18	2.058E-17	0.000E+00	0.000E+00
-238+D1	Pb-210+D	2.096E-04	7.178E-24	2.147E-22	5.000E-21	2.933E-19	9.116E-18	5.356E-17	0.000E+00	0.000E+00
-238+D1	äDSR(j)		9.140E-08	8.686E-08	7.843E-08	5.479E-08	1.937E-08	3.623E-10	0.000E+00	0.000E+00
-238+D1	U-238+D1	2.767E-10	1.206E-13	1.147E-13	1.035E-13	7.232E-14	2.557E-14	4.781E-16	0.000E+00	0.000E+00
-238+D1	U-234	2.767E-10	1.779E-19	5.100E-19	1.076E-18	2.257E-18	2.318E-18	1.429E-19	0.000E+00	0.000E+00
-238+D1	Th-230	2.767E-10	1.063E-24	7.213E-24	3.555E-23	2.480E-22	1.041E-21	1.031E-21	0.000E+00	0.000E+00
-238+D1	Ra-226+D1	2.767E-10	2.780E-28	4.041E-27	4.394E-26	9.029E-25	1.065E-23	2.717E-23	0.000E+00	0.000E+00
-238+D1	Pb-210+D1	2.767E-10	7.001E-30	2.094E-28	4.876E-27	2.860E-25	8.891E-24	5.224E-23	0.000E+00	0.000E+00
-238+D1	äDSR(j)		1.206E-13	1.147E-13	1.035E-13	7.232E-14	2.557E-14	4.783E-16	0.000E+00	0.000E+00
-238+D1	U-238+D1	3.983E-12	1.737E-15	1.650E-15	1.490E-15	1.041E-15	3.680E-16	6.882E-18	0.000E+00	0.000E+00
-238+D1	U-234	3.983E-12	2.560E-21	7.340E-21	1.549E-20	3.249E-20	3.337E-20	2.056E-21	0.000E+00	0.000E+00
-238+D1	Th-230	3.983E-12	1.530E-26	1.038E-25	5.118E-25	3.569E-24	1.498E-23	1.484E-23	0.000E+00	0.000E+00
-238+D1	Ra-226+D1	3.983E-12	4.002E-30	5.817E-29	6.325E-28	1.300E-26	1.534E-25	3.911E-25	0.000E+00	0.000E+00
-238+D1	Pb-210+D2	3.983E-12	1.007E-31	3.011E-30	7.011E-29	4.112E-27	1.278E-25	7.511E-25	0.000E+00	0.000E+00
-238+D1	äDSR(j)		1.737E-15	1.650E-15	1.490E-15	1.041E-15	3.680E-16	6.884E-18	0.000E+00	0.000E+00
-238+D1	U-238+D1	1.994E-04	8.696E-08	8.264E-08	7.462E-08	5.213E-08	1.843E-08	3.446E-10	0.000E+00	0.000E+00
-238+D1	U-234	1.994E-04	1.282E-13	3.676E-13	7.757E-13	1.627E-12	1.671E-12	1.030E-13	0.000E+00	0.000E+00
-238+D1	Th-230	1.994E-04	7.661E-19	5.199E-18	2.563E-17	1.787E-16	7.501E-16	7.429E-16	0.000E+00	0.000E+00
-238+D1	Ra-226+D2	1.994E-04	2.003E-22	2.911E-21	3.166E-20	6.505E-19	7.676E-18	1.957E-17	0.000E+00	0.000E+00
-238+D1	Pb-210+D	1.994E-04	6.829E-24	2.043E-22	4.757E-21	2.790E-19	8.673E-18	5.096E-17	0.000E+00	0.000E+00
-238+D1	äDSR(j)		8.696E-08	8.264E-08	7.462E-08	5.213E-08	1.843E-08	3.447E-10	0.000E+00	0.000E+00
-238+D1	U-238+D1	2.633E-10	1.148E-13	1.091E-13	9.850E-14	6.881E-14	2.432E-14	4.549E-16	0.000E+00	0.000E+00
-238+D1	U-234	2.633E-10	1.692E-19	4.852E-19	1.024E-18	2.147E-18	2.206E-18	1.359E-19	0.000E+00	0.000E+00
-238+D1	Th-230	2.633E-10	1.011E-24	6.863E-24	3.383E-23	2.359E-22	9.901E-22	9.806E-22	0.000E+00	0.000E+00
-238+D1	Ra-226+D2	2.633E-10	2.644E-28	3.843E-27	4.178E-26	8.586E-25	1.013E-23	2.584E-23	0.000E+00	0.000E+00
-238+D1	Pb-210+D1	2.633E-10	6.661E-30	1.992E-28	4.640E-27	2.721E-25	8.459E-24	4.970E-23	0.000E+00	0.000E+00
-238+D1	äDSR(j)		1.148E-13	1.091E-13	9.850E-14	6.881E-14	2.433E-14	4.550E-16	0.000E+00	0.000E+00
-238+D1	U-238+D1	3.789E-12	1.652E-15	1.570E-15	1.418E-15	9.904E-16	3.501E-16	6.548E-18	0.000E+00	0.000E+00
-238+D1	U-234	3.789E-12	2.436E-21	6.984E-21	1.474E-20	3.091E-20	3.175E-20	1.956E-21	0.000E+00	0.000E+00
-238+D1	Th-230	3.789E-12	1.456E-26	9.879E-26	4.869E-25	3.396E-24	1.425E-23	1.411E-23	0.000E+00	0.000E+00
-238+D1	Ra-226+D2	3.789E-12	3.805E-30	5.532E-29	6.014E-28	1.236E-26	1.458E-25	3.719E-25	0.000E+00	0.000E+00
-238+D1	Pb-210+D2	3.789E-12	9.576E-32	2.865E-30	6.670E-29	3.913E-27	1.216E-25	7.146E-25	0.000E+00	0.000E+00
-238+D1	äDSR(j)		1.652E-15	1.570E-15	1.418E-15	9.904E-16	3.501E-16	6.550E-18	0.000E+00	0.000E+00

ummary : Park Ranger Ingestion
ile : C:\USERS\CLAUDE\DOCUMENTS\0 GKP DOSE\RESRAD CW\GKP PARK RANGER-INGESTION.RAD

Dose/Source Ratios Summed Over All Pathways
Parent and Progeny Principal Radionuclide Contributions Indicated

Parent (i)	Product (j)	Thread Fraction	DSR(j,t) At Time in Years (mrem/yr)/(pCi/g) 0.000E+00	1.000E+00	3.000E+00	1.000E+01	3.000E+01	1.000E+02	3.000E+02	1.000E+03
ÄÄÄÄÄÄÄÄÄ	ÄÄÄÄÄÄÄÄÄÄ	ÄÄÄÄÄÄÄÄÄ	ÄÄÄÄÄÄÄÄÄ	ÄÄÄÄÄÄÄÄÄ	ÄÄÄÄÄÄÄÄÄ	ÄÄÄÄÄÄÄÄÄ	ÄÄÄÄÄÄÄÄÄ	ÄÄÄÄÄÄÄÄÄ	ÄÄÄÄÄÄÄÄÄ	ÄÄÄÄÄÄÄÄÄ
-238+D1	U-238+D1	4.189E-08	1.827E-11	1.736E-11	1.567E-11	1.095E-11	3.871E-12	7.238E-14	0.000E+00	0.000E+00
-238+D1	U-234	4.189E-08	2.693E-17	7.721E-17	1.629E-16	3.417E-16	3.510E-16	2.163E-17	0.000E+00	0.000E+00
-238+D1	Th-230	4.189E-08	1.609E-22	1.092E-21	5.383E-21	3.754E-20	1.576E-19	1.560E-19	0.000E+00	0.000E+00
-238+D1	Ra-226+D3	4.189E-08	4.207E-26	6.115E-25	6.649E-24	1.366E-22	1.612E-21	4.111E-21	0.000E+00	0.000E+00
-238+D1	Pb-210+D	4.189E-08	1.434E-27	4.291E-26	9.992E-25	5.861E-23	1.822E-21	1.070E-20	0.000E+00	0.000E+00
-238+D1	äDSR(j)		1.827E-11	1.736E-11	1.567E-11	1.095E-11	3.871E-12	7.241E-14	0.000E+00	0.000E+00
-238+D1	U-238+D1	5.530E-14	2.411E-17	2.291E-17	2.069E-17	1.445E-17	5.109E-18	9.555E-20	0.000E+00	0.000E+00
-238+D1	U-234	5.530E-14	3.554E-23	1.019E-22	2.151E-22	4.511E-22	4.633E-22	2.855E-23	0.000E+00	0.000E+00
-238+D1	Th-230	5.530E-14	2.124E-28	1.442E-27	7.105E-27	4.955E-26	2.080E-25	2.060E-25	0.000E+00	0.000E+00
-238+D1	Ra-226+D3	5.530E-14	5.553E-32	8.072E-31	8.777E-30	1.804E-28	2.128E-27	5.427E-27	0.000E+00	0.000E+00
-238+D1	Pb-210+D1	5.530E-14	1.399E-33	4.185E-32	9.745E-31	5.716E-29	1.777E 27	1.044E-26	0.000E+00	0.000E+00
-238+D1	äDSR(j)		2.411E-17	2.291E-17	2.069E-17	1.445E-17	5.110E-18	9.558E-20	0.000E+00	0.000E+00
-238+D1	U-238+D1	7.959E-16	3.470E-19	3.298E-19	2.978E-19	2.080E-19	7.354E-20	1.375E-21	0.000E+00	0.000E+00
-238+D1	U-234	7.959E-16	5.116E-25	1.467E-24	3.096E-24	6.493E-24	6.669E-24	4.109E-25	0.000E+00	0.000E+00
-238+D1	Th-230	7.959E-16	3.057E-30	2.075E-29	1.023E-28	7.132E-28	2.993E-27	2.965E-27	0.000E+00	0.000E+00
-238+D1	Ra-226+D3	7.959E-16	7.993E-34	1.162E-32	1.263E-31	2.596E-30	3.063E-29	7.811E-29	0.000E+00	0.000E+00
-238+D1	Pb-210+D2	7.959E-16	2.011E-35	6.017E-34	1.401E-32	8.218E-31	2.554E-29	1.501E-28	0.000E+00	0.000E+00
-238+D1	äDSR(j)		3.470E-19	3.298E-19	2.978E-19	2.080E-19	7.355E-20	1.376E-21	0.000E+00	0.000E+00
-238+D1	U-238+D1	1.997E-07	8.707E-11	8.274E-11	7.471E-11	5.219E-11	1.845E-11	3.450E-13	0.000E+00	0.000E+00
-238+D1	U-234	1.997E-07	1.284E-16	3.680E-16	7.766E-16	1.629E-15	1.673E-15	1.031E-16	0.000E+00	0.000E+00
-238+D1	Th-230	1.997E-07	7.670E-22	5.206E-21	2.566E-20	1.789E-19	7.510E-19	7.438E-19	0.000E+00	0.000E+00
-238+D1	Ra-226+D4	1.997E-07	2.005E-25	2.914E-24	3.169E-23	6.511E-22	7.683E-21	1.959E-20	0.000E+00	0.000E+00
-238+D1	Pb-210+D	1.997E-07	6.838E-27	2.045E-25	4.763E-24	2.794E-22	8.683E-21	5.102E-20	0.000E+00	0.000E+00
-238+D1	äDSR(j)		8.707E-11	8.274E-11	7.471E-11	5.219E-11	1.845E-11	3.451E-13	0.000E+00	0.000E+00
-238+D1	U-238+D1	2.636E-13	1.149E-16	1.092E-16	9.862E-17	6.889E-17	2.435E-17	4.554E-19	0.000E+00	0.000E+00
-238+D1	U-234	2.636E-13	1.694E-22	4.858E-22	1.025E-21	2.150E-21	2.208E-21	1.361E-22	0.000E+00	0.000E+00
-238+D1	Th-230	2.636E-13	1.012E-27	6.871E-27	3.387E-26	2.362E-25	9.913E-25	9.818E-25	0.000E+00	0.000E+00
-238+D1	Ra-226+D4	2.636E-13	2.646E-31	3.847E-30	4.183E-29	8.595E-28	1.014E-26	2.586E-26	0.000E+00	0.000E+00
-238+D1	Pb-210+D1	2.636E-13	6.669E-33	1.995E-31	4.645E-30	2.725E-28	8.469E-27	4.976E-26	0.000E+00	0.000E+00
-238+D1	äDSR(j)		1.149E-16	1.092E-16	9.862E-17	6.889E-17	2.436E-17	4.556E-19	0.000E+00	0.000E+00
-238+D1	U-238+D1	3.794E-15	1.654E-18	1.572E-18	1.420E-18	9.916E-19	3.505E-19	6.556E-21	0.000E+00	0.000E+00
-238+D1	U-234	3.794E-15	2.439E-24	6.992E-24	1.476E-23	3.095E-23	3.179E-23	1.959E-24	0.000E+00	0.000E+00
-238+D1	Th-230	3.794E-15	1.457E-29	9.890E-29	4.875E-28	3.400E-27	1.427E-26	1.413E-26	0.000E+00	0.000E+00
-238+D1	Ra-226+D4	3.794E-15	3.809E-33	5.537E-32	6.020E-31	1.237E-29	1.460E-28	3.722E-28	0.000E+00	0.000E+00
-238+D1	Pb-210+D2	3.794E-15	9.588E-35	2.868E-33	6.678E-32	3.917E-30	1.218E-28	7.154E-28	0.000E+00	0.000E+00
-238+D1	äDSR(j)		1.654E-18	1.572E-18	1.420E-18	9.916E-19	3.506E-19	6.558E-21	0.000E+00	0.000E+00
íííííííííí	íííííííííí	íííííííííí	íííííííííí	íííííííííí	íííííííííí	íííííííííí	íííííííííí	íííííííííí	íííííííííí	íííííííííí

ne DSR includes contributions from associated (half-life ó 180 days) daughters.

ummary : Park Ranger Ingestion

ile : C:\USERS\CLAUDE\DOCUMENTS\0 GKP DOSE\RESRAD CW\GKP PARK RANGER-INGESTION.RAD

Single Radionuclide Soil Guidelines G(i,t) in pCi/g

Basic Radiation Dose Limit = 2.500E+01 mrem/yr

uclide (i)	t= 0.000E+00	1.000E+00	3.000E+00	1.000E+01	3.000E+01	1.000E+02	3.000E+02	1.000E+03
ÄÄÄÄÄÄ	ÄÄÄÄÄÄÄÄÄÄ	ÄÄÄÄÄÄÄÄÄÄ	ÄÄÄÄÄÄÄÄÄÄ	ÄÄÄÄÄÄÄÄÄÄ	ÄÄÄÄÄÄÄÄÄÄ	ÄÄÄÄÄÄÄÄÄÄ	ÄÄÄÄÄÄÄÄÄÄ	ÄÄÄÄÄÄÄÄÄÄ
a-226	1.064E+04	9.584E+03	8.225E+03	6.531E+03	7.812E+03	1.066E+05	*9.885E+11	*9.885E+11
n-232	5.343E+03	5.037E+03	4.528E+03	3.726E+03	3.811E+03	8.097E+03	*1.097E+05	*1.097E+05
-234	5.444E+04	5.728E+04	6.344E+04	9.080E+04	2.566E+05	1.324E+07	*6.222E+09	*6.222E+09
-235	5.760E+04	6.056E+04	6.694E+04	9.515E+04	2.631E+05	*2.160E+06	*2.160E+06	*2.160E+06
-238	5.734E+04	6.033E+04	6.682E+04	9.565E+04	2.705E+05	*3.361E+05	*3.361E+05	*3.361E+05
íííííí	íííííííííí	íííííííííí	íííííííííí	íííííííííí	íííííííííí	íííííííííí	íííííííííí	íííííííííí

At specific activity limit

Summed Dose/Source Ratios DSR(i,t) in (mrem/yr)/(pCi/g)

and Single Radionuclide Soil Guidelines G(i,t) in pCi/g

at tmin = time of minimum single radionuclide soil guideline

and at tmax = time of maximum total dose = 13.55 ñ 0.03 years

uclide (i)	Initial (pCi/g)	tmin (years)	DSR(i,tmin)	G(i,tmin) (pCi/g)	DSR(i,tmax)	G(i,tmax) (pCi/g)
ÄÄÄÄÄÄ	ÄÄÄÄÄÄÄÄÄÄ	ÄÄÄÄÄÄÄÄÄÄÄÄÄÄÄÄ	ÄÄÄÄÄÄÄÄÄÄ	ÄÄÄÄÄÄÄÄÄÄ	ÄÄÄÄÄÄÄÄÄÄ	ÄÄÄÄÄÄÄÄÄÄ
a-226	3.650E+01	14.25 ñ 0.03	3.928E-03	6.364E+03	3.926E-03	6.368E+03
n-232	2.400E+00	16.62 ñ 0.03	6.950E-03	3.597E+03	6.907E-03	3.620E+03
-234	1.390E+01	0.000E+00	4.592E-04	5.444E+04	2.294E-04	1.090E+05
-235	8.400E-01	0.000E+00	4.340E-04	5.760E+04	2.197E-04	1.138E+05
-238	1.390E+01	0.000E+00	4.360E-04	5.734E+04	2.177E-04	1.148E+05
íííííí	íííííííííí	íííííííííííííííííí	íííííííííí	íííííííííí	íííííííííí	íííííííííí

ummary : Park Ranger Ingestion
ile : C:\USERS\CLAUDE\DOCUMENTS\0 GKP DOSE\RESRAD CW\GKP PARK RANGER-INGESTION.RAD

Individual Nuclide Dose Summed Over All Pathways
Parent Nuclide and Branch Fraction Indicated

uclide (j)	Parent (i)	THF(i)	DOSE(j,t), mrem/yr t= 0.000E+00	1.000E+00	3.000E+00	1.000E+01	3.000E+01	1.000E+02	3.000E+02	1.000E+03
ÄÄÄÄÄÄ	ÄÄÄÄÄÄÄ	ÄÄÄÄÄÄÄÄÄ	ÄÄÄÄÄÄÄÄÄ	ÄÄÄÄÄÄÄÄÄ	ÄÄÄÄÄÄÄÄÄ	ÄÄÄÄÄÄÄÄÄ	ÄÄÄÄÄÄÄÄÄ	ÄÄÄÄÄÄÄÄÄ	ÄÄÄÄÄÄÄÄÄ	ÄÄÄÄÄÄÄÄÄ
a-226	Ra-226	9.996E-01	7.902E-02	7.601E-02	7.032E-02	5.350E-02	2.412E-02	1.058E-03	0.000E+00	0.000E+00
a-226	Ra-226	1.319E-06	1.043E-07	1.003E-07	9.283E-08	7.061E-08	3.184E-08	1.396E-09	0.000E+00	0.000E+00
a-226	U-234	9.996E-01	1.988E-11	1.354E-10	6.726E-10	4.820E-09	2.172E-08	2.510E-08	0.000E+00	0.000E+00
a-226	U-234	1.319E-06	2.625E-17	1.787E-16	8.879E-16	6.363E-15	2.867E-14	3.314E-14	0.000E+00	0.000E+00
a-226	U-234	1.899E-08	3.778E-19	2.573E-18	1.278E-17	9.158E-17	4.126E-16	4.770E-16	0.000E+00	0.000E+00
a-226	U-238	1.599E-03	2.234E-20	3.247E-19	3.530E-18	7.254E-17	8.560E-16	2.183E-15	0.000E+00	0.000E+00
a-226	U-238	2.111E-09	2.948E-26	4.286E-25	4.660E-24	9.575E-23	1.130E-21	2.881E-21	0.000E+00	0.000E+00
a-226	U-238	3.039E-11	4.226E-28	6.169E-27	6.707E-26	1.378E-24	1.626E-23	4.147E-23	0.000E+00	0.000E+00
a-226	U-238	9.980E-01	1.394E-17	2.026E-16	2.203E-15	4.527E-14	5.341E-13	1.362E-12	0.000E+00	0.000E+00
a-226	U-238	1.317E-06	1.840E-23	2.674E-22	2.908E-21	5.975E-20	7.051E-19	1.798E-18	0.000E+00	0.000E+00
a-226	U-238	1.896E-08	2.648E-25	3.849E-24	4.185E-23	8.600E-22	1.015E-20	2.588E-20	0.000E+00	0.000E+00
a-226	äDOSE(j)		7.902E-02	7.601E-02	7.032E-02	5.350E-02	2.412E-02	1.058E-03	0.000E+00	0.000E+00
o-210	Ra-226	9.996E-01	6.675E-03	1.917E-02	4.057E-02	8.616E-02	9.264E-02	7.501E-03	0.000E+00	0.000E+00
o-210	Ra-226	2.100E-04	1.402E-06	4.026E-06	8.522E-06	1.810E-05	1.946E-05	1.575E-06	0.000E+00	0.000E+00
o-210	Ra-226	1.998E-04	1.334E-06	3.830E-06	8.108E-06	1.722E-05	1.851E-05	1.499E-06	0.000E+00	0.000E+00
o-210	Ra-226	4.196E-08	2.802E-10	8.045E-10	1.703E-09	3.617E-09	3.889E-09	3.148E-10	0.000E+00	0.000E+00
o-210	Ra-226	2.000E-07	1.336E-09	3.835E-09	8.118E-09	1.724E-08	1.854E-08	1.501E-09	0.000E+00	0.000E+00
o-210	U-234	9.996E-01	8.452E-13	1.226E-11	1.328E-10	2.687E-09	3.049E-08	7.125E-08	0.000E+00	0.000E+00
o-210	U-234	2.100E-04	1.775E-16	2.576E-15	2.789E-14	5.644E-13	6.405E-12	1.497E-11	0.000E+00	0.000E+00
o-210	U-234	1.998E-04	1.689E-16	2.451E-15	2.653E-14	5.370E-13	6.094E-12	1.424E-11	0.000E+00	0.000E+00
o-210	U-234	4.196E-08	3.548E-20	5.147E-19	5.573E-18	1.128E-16	1.280E-15	2.991E-15	0.000E+00	0.000E+00
o-210	U-234	2.000E-07	1.691E-19	2.454E-18	2.656E-17	5.377E-16	6.101E-15	1.426E-14	0.000E+00	0.000E+00
o-210	U-238	1.599E-03	7.613E-22	2.277E-20	5.302E-19	3.110E-17	9.667E-16	5.680E-15	0.000E+00	0.000E+00
o-210	U-238	3.359E-07	1.599E-25	4.783E-24	1.114E-22	6.533E-21	2.031E-19	1.193E-18	0.000E+00	0.000E+00
o-210	U-238	3.196E-07	1.521E-25	4.551E-24	1.060E-22	6.216E-21	1.932E-19	1.135E-18	0.000E+00	0.000E+00
o-210	U-238	6.713E-11	3.195E-29	9.558E-28	2.226E-26	1.306E-24	4.058E-23	2.384E-22	0.000E+00	0.000E+00
o-210	U-238	3.200E-10	1.523E-28	4.556E-27	1.061E-25	6.223E-24	1.934E-22	1.137E-21	0.000E+00	0.000E+00
o-210	U-238	9.980E-01	4.750E-19	1.421E-17	3.309E-16	1.941E-14	6.032E-13	3.545E-12	0.000E+00	0.000E+00
o-210	U-238	2.096E-04	9.978E-23	2.985E-21	6.950E-20	4.077E-18	1.267E-16	7.445E-16	0.000E+00	0.000E+00
o-210	U-238	1.994E-04	9.493E-23	2.840E-21	6.612E-20	3.879E-18	1.206E-16	7.083E-16	0.000E+00	0.000E+00
o-210	U-238	4.189E-08	1.994E-26	5.964E-25	1.389E-23	8.147E-22	2.532E-20	1.488E-19	0.000E+00	0.000E+00
o-210	U-238	1.997E-07	9.504E-26	2.843E-24	6.620E-23	3.883E-21	1.207E-19	7.092E-19	0.000E+00	0.000E+00
o-210	äDOSE(j)		6.678E-03	1.917E-02	4.059E-02	8.620E-02	9.268E-02	7.504E-03	0.000E+00	0.000E+00
o-210	Ra-226	1.319E-06	6.510E-09	1.869E-08	3.957E-08	8.404E-08	9.036E-08	7.315E-09	0.000E+00	0.000E+00
o-210	Ra-226	1.899E-08	9.360E-11	2.687E-10	5.689E-10	1.208E-09	1.299E-09	1.052E-10	0.000E+00	0.000E+00
o-210	Ra-226	2.771E-10	1.367E-12	3.926E-12	8.312E-12	1.765E-11	1.898E-11	1.537E-12	0.000E+00	0.000E+00
o-210	Ra-226	2.637E-10	1.301E-12	3.735E-12	7.908E-12	1.679E-11	1.806E-11	1.462E-12	0.000E+00	0.000E+00
o-210	Ra-226	5.538E-14	2.733E-16	7.846E-16	1.661E-15	3.527E-15	3.793E-15	3.071E-16	0.000E+00	0.000E+00
o-210	Ra-226	2.640E-13	1.303E-15	3.740E-15	7.918E-15	1.681E-14	1.808E-14	1.464E-15	0.000E+00	0.000E+00
o-210	U-234	1.319E-06	8.244E-19	1.196E-17	1.295E-16	2.621E-15	2.974E-14	6.949E-14	0.000E+00	0.000E+00
o-210	U-234	2.771E-10	1.732E-22	2.512E-21	2.720E-20	5.505E-19	6.247E-18	1.460E-17	0.000E+00	0.000E+00
o-210	U-234	2.637E-10	1.647E-22	2.390E-21	2.588E-20	5.238E-19	5.944E-18	1.389E-17	0.000E+00	0.000E+00
o-210	U-234	5.538E-14	3.460E-26	5.020E-25	5.435E-24	1.100E-22	1.248E-21	2.917E-21	0.000E+00	0.000E+00
o-210	U-234	2.640E-13	1.649E-25	2.393E-24	2.591E-23	5.244E-22	5.951E-21	1.390E-20	0.000E+00	0.000E+00
o-210	U-238	2.111E-09	7.425E-28	2.221E-26	5.172E-25	3.034E-23	9.429E-22	5.540E-21	0.000E+00	0.000E+00
o-210	U-238	4.434E-13	0.000E+00	0.000E+00	1.086E-28	6.372E-27	1.980E-25	1.164E-24	0.000E+00	0.000E+00
o-210	U-238	4.219E-13	0.000E+00	0.000E+00	1.033E-28	6.062E-27	1.884E-25	1.107E-24	0.000E+00	0.000E+00

ummary : Park Ranger Ingestion
ile : C:\USERS\CLAUDE\DOCUMENTS\0 GKP DOSE\RESRAD CW\GKP PARK RANGER-INGESTION.RAD

Individual Nuclide Dose Summed Over All Pathways
Parent Nuclide and Branch Fraction Indicated

uclide (j)	Parent (i)	THF(i)	DOSE(j,t), mrem/yr t= 0.000E+00	1.000E+00	3.000E+00	1.000E+01	3.000E+01	1.000E+02	3.000E+02	1.000E+03
ÄÄÄÄÄ	ÄÄÄÄÄÄ	ÄÄÄÄÄÄÄÄ	ÄÄÄÄÄÄÄÄ	ÄÄÄÄÄÄÄÄ	ÄÄÄÄÄÄÄÄ	ÄÄÄÄÄÄÄÄ	ÄÄÄÄÄÄÄÄ	ÄÄÄÄÄÄÄÄ	ÄÄÄÄÄÄÄÄ	ÄÄÄÄÄÄÄÄ
o-210	U-238	8.862E-17	0.000E+00	0.000E+00	0.000E+00	0.000E+00	3.958E-29	2.326E-28	0.000E+00	0.000E+00
o-210	U-238	4.224E-16	0.000E+00	0.000E+00	0.000E+00	0.000E+00	1.887E-28	1.108E-27	0.000E+00	0.000E+00
o-210	U-238	1.317E-06	4.633E-25	1.386E-23	3.227E-22	1.893E-20	5.884E-19	3.457E-18	0.000E+00	0.000E+00
o-210	U-238	2.767E-10	9.732E-29	2.911E-27	6.778E-26	3.976E-24	1.236E-22	7.261E-22	0.000E+00	0.000E+00
o-210	U-238	2.633E-10	9.259E-29	2.770E-27	6.449E-26	3.783E-24	1.176E-22	6.909E-22	0.000E+00	0.000E+00
o-210	U-238	5.530E-14	0.000E+00	0.000E+00	0.000E+00	7.946E-28	2.470E-26	1.451E-25	0.000E+00	0.000E+00
o-210	U-238	2.636E-13	0.000E+00	0.000E+00	6.457E-29	3.787E-27	1.177E-25	6.917E-25	0.000E+00	0.000E+00
o-210	äDOSE(j)		6.607E-09	1.897E-08	4.016E-08	8.528E-08	9.169E-08	7.424E-09	0.000E+00	0.000E+00
a-226	Ra-226	1.899E-08	1.501E-09	1.444E-09	1.336E-09	1.016E-09	4.584E-10	2.010E-11	0.000E+00	0.000E+00
a-226	Ra-226	2.100E-04	1.660E-05	1.597E-05	1.477E-05	1.124E-05	5.067E-06	2.222E-07	0.000E+00	0.000E+00
a-226	äDOSE(j)		1.660E-05	1.597E-05	1.477E-05	1.124E-05	5.068E-06	2.222E-07	0.000E+00	0.000E+00
a-226	Ra-226	2.771E-10	2.191E-11	2.107E-11	1.950E-11	1.483E-11	6.689E-12	2.933E-13	0.000E+00	0.000E+00
a-226	Ra-226	3.989E-12	3.153E-13	3.033E-13	2.807E-13	2.135E-13	9.627E-14	4.221E-15	0.000E+00	0.000E+00
a-226	äDOSE(j)		2.222E-11	2.138E-11	1.978E-11	1.505E-11	6.785E-12	2.975E-13	0.000E+00	0.000E+00
o-210	Ra-226	3.989E-12	1.966E-14	5.645E-14	1.195E-13	2.538E-13	2.729E-13	2.209E-14	0.000E+00	0.000E+00
o-210	Ra-226	3.795E-12	1.870E-14	5.370E-14	1.137E-13	2.414E-13	2.596E-13	2.102E-14	0.000E+00	0.000E+00
o-210	Ra-226	7.972E-16	3.929E-18	1.128E-17	2.388E-17	5.071E-17	5.453E-17	4.415E-18	0.000E+00	0.000E+00
o-210	Ra-226	3.800E-15	1.873E-17	5.377E-17	1.138E-16	2.417E-16	2.599E-16	2.104E-17	0.000E+00	0.000E+00
o-210	U-234	1.899E-08	1.185E-20	1.720E-19	1.862E-18	3.768E-17	4.276E-16	9.991E-16	0.000E+00	0.000E+00
o-210	U-234	3.989E-12	2.489E-24	3.612E-23	3.910E-22	7.914E-21	8.981E-20	2.099E-19	0.000E+00	0.000E+00
o-210	U-234	3.795E-12	2.368E-24	3.436E-23	3.720E-22	7.530E-21	8.545E-20	1.997E-19	0.000E+00	0.000E+00
o-210	U-234	7.972E-16	4.975E-28	7.218E-27	7.814E-26	1.582E-24	1.795E-23	4.194E-23	0.000E+00	0.000E+00
o-210	U-234	3.800E-15	2.371E-27	3.440E-26	3.725E-25	7.539E-24	8.555E-23	1.999E-22	0.000E+00	0.000E+00
o-210	U-238	3.039E-11	0.000E+00	3.193E-28	7.435E-27	4.361E-25	1.356E-23	7.965E-23	0.000E+00	0.000E+00
o-210	U-238	6.383E-15	0.000E+00	0.000E+00	0.000E+00	9.161E-29	2.847E-27	1.673E-26	0.000E+00	0.000E+00
o-210	U-238	6.073E-15	0.000E+00	0.000E+00	0.000E+00	8.715E-29	2.709E-27	1.592E-26	0.000E+00	0.000E+00
o-210	U-238	1.276E-18	0.000E+00	0.000E+00	0.000E+00	0.000E+00	0.000E+00	0.000E+00	0.000E+00	0.000E+00
o-210	U-238	6.080E-18	0.000E+00	0.000E+00	0.000E+00	0.000E+00	0.000E+00	1.594E-29	0.000E+00	0.000E+00
o-210	U-238	1.896E-08	6.661E-27	1.992E-25	4.640E-24	2.721E-22	8.459E-21	4.970E-20	0.000E+00	0.000E+00
o-210	U-238	3.983E-12	0.000E+00	4.185E-29	9.745E-28	5.716E-26	1.777E-24	1.044E-23	0.000E+00	0.000E+00
o-210	U-238	3.789E-12	0.000E+00	3.982E-29	9.272E-28	5.438E-26	1.690E-24	9.932E-24	0.000E+00	0.000E+00
o-210	U-238	7.959E-16	0.000E+00	0.000E+00	0.000E+00	0.000E+00	3.551E-28	2.086E-27	0.000E+00	0.000E+00
o-210	U-238	3.794E-15	0.000E+00	0.000E+00	0.000E+00	5.445E-29	1.692E-27	9.944E-27	0.000E+00	0.000E+00
o-210	äDOSE(j)		3.839E-14	1.102E-13	2.333E-13	4.955E-13	5.332E-13	4.413E-14	0.000E+00	0.000E+00
a-226	Ra-226	1.998E-04	1.578E-05	1.518E-05	1.405E-05	1.069E-05	4.819E-06	2.113E-07	0.000E+00	0.000E+00
a-226	Ra-226	2.637E-10	2.083E-11	2.004E-11	1.854E-11	1.410E-11	6.361E-12	2.789E-13	0.000E+00	0.000E+00
a-226	U-234	1.998E-04	3.972E-15	2.705E-14	1.344E-13	9.628E-13	4.338E-12	5.015E-12	0.000E+00	0.000E+00
a-226	U-234	2.637E-10	5.243E-21	3.570E-20	1.774E-19	1.271E-18	5.726E-18	6.619E-18	0.000E+00	0.000E+00
a-226	U-234	3.795E-12	7.546E-23	5.139E-22	2.553E-21	1.829E-20	8.242E-20	9.528E-20	0.000E+00	0.000E+00
a-226	U-238	3.196E-07	4.461E-24	6.485E-23	7.051E-22	1.449E-20	1.710E-19	4.360E-19	0.000E+00	0.000E+00
a-226	U-238	4.219E-13	0.000E+00	8.524E-29	9.268E-28	1.913E-26	2.257E-25	5.755E-25	0.000E+00	0.000E+00
a-226	U-238	6.073E-15	0.000E+00	0.000E+00	0.000E+00	2.741E-28	3.249E-27	8.284E-27	0.000E+00	0.000E+00
a-226	U-238	1.994E-04	2.784E-21	4.047E-20	4.400E-19	9.042E-18	1.067E-16	2.721E-16	0.000E+00	0.000E+00
a-226	U-238	2.633E-10	3.675E-27	5.342E-26	5.808E-25	1.193E-23	1.408E-22	3.591E-22	0.000E+00	0.000E+00
a-226	U-238	3.789E-12	5.267E-29	7.656E-28	8.360E-27	1.718E-25	2.027E-24	5.169E-24	0.000E+00	0.000E+00
a-226	äDOSE(j)		1.578E-05	1.518E-05	1.405E-05	1.069E-05	4.819E-06	2.113E-07	0.000E+00	0.000E+00

ummary : Park Ranger Ingestion

ile : C:\USERS\CLAUDE\DOCUMENTS\0 GKP DOSE\RESRAD CW\GKP PARK RANGER-INGESTION.RAD

Individual Nuclide Dose Summed Over All Pathways

Parent Nuclide and Branch Fraction Indicated

uclide (j)	Parent (i)	THF(i)	DOSE(j,t), mrem/yr t= 0.000E+00	1.000E+00	3.000E+00	1.000E+01	3.000E+01	1.000E+02	3.000E+02	1.000E+03
ÄÄÄÄÄÄ	ÄÄÄÄÄÄÄ	ÄÄÄÄÄÄÄÄÄÄ	ÄÄÄÄÄÄÄÄÄÄ	ÄÄÄÄÄÄÄÄÄÄ	ÄÄÄÄÄÄÄÄÄÄ	ÄÄÄÄÄÄÄÄÄÄ	ÄÄÄÄÄÄÄÄÄÄ	ÄÄÄÄÄÄÄÄÄÄ	ÄÄÄÄÄÄÄÄÄÄ	ÄÄÄÄÄÄÄÄÄÄ
a-226	Ra-226	3.795E-12	2.999E-13	2.885E-13	2.669E-13	2.030E-13	9.155E-14	4.014E-15	0.000E+00	0.000E+00
a-226	Ra-226	4.196E-08	3.315E-09	3.189E-09	2.951E-09	2.244E-09	1.012E-09	4.438E-11	0.000E+00	0.000E+00
a-226	äDOSE(j)		3.315E-09	3.189E-09	2.951E-09	2.245E-09	1.012E-09	4.438E-11	0.000E+00	0.000E+00
a-226	Ra-226	5.538E-14	4.376E-15	4.209E-15	3.895E-15	2.963E-15	1.336E-15	5.858E-17	0.000E+00	0.000E+00
a-226	Ra-226	7.972E-16	6.299E-17	6.059E-17	5.606E-17	4.264E-17	1.923E-17	8.432E-19	0.000E+00	0.000E+00
a-226	äDOSE(j)		4.439E-15	4.270E-15	3.951E-15	3.005E-15	1.355E-15	5.942E-17	0.000E+00	0.000E+00
a-226	Ra-226	2.000E-07	1.580E-08	1.520E-08	1.406E-08	1.070E-08	4.823E-09	2.115E-10	0.000E+00	0.000E+00
a-226	Ra-226	2.640E-13	2.085E-14	2.006E-14	1.856E-14	1.412E-14	6.367E-15	2.792E-16	0.000E+00	0.000E+00
a-226	U-234	2.000E-07	3.976E-18	2.708E-17	1.345E-16	9.638E-16	4.342E-15	5.020E-15	0.000E+00	0.000E+00
a-226	U-234	2.640E-13	5.248E-24	3.574E-23	1.775E-22	1.272E-21	5.732E-21	6.626E-21	0.000E+00	0.000E+00
a-226	U-234	3.800E-15	7.554E-26	5.144E-25	2.555E-24	1.831E-23	8.250E-23	9.537E-23	0.000E+00	0.000E+00
a-226	U-238	3.200E-10	4.466E-27	6.492E-26	7.058E-25	1.450E-23	1.712E-22	4.364E-22	0.000E+00	0.000E+00
a-226	U-238	4.224E-16	0.000E+00	0.000E+00	0.000E+00	1.906E-29	2.250E-28	5.736E-28	0.000E+00	0.000E+00
a-226	U-238	6.080E-18	0.000E+00	0.000E+00	0.000E+00	0.000E+00	0.000E+00	0.000E+00	0.000E+00	0.000E+00
a-226	U-238	1.997E-07	2.787E-24	4.051E-23	4.404E-22	9.051E-21	1.068E-19	2.723E-19	0.000E+00	0.000E+00
a-226	U-238	2.636E-13	0.000E+00	5.324E-29	5.789E-28	1.195E-26	1.410E-25	3.595E-25	0.000E+00	0.000E+00
a-226	U-238	3.794E-15	0.000E+00	0.000E+00	0.000E+00	1.712E-28	2.020E-27	5.174E-27	0.000E+00	0.000E+00
a-226	äDOSE(j)		1.580E-08	1.520E-08	1.406E-08	1.070E-08	4.823E-09	2.115E-10	0.000E+00	0.000E+00
a-226	Ra-226	3.800E-15	3.002E-16	2.888E-16	2.672E-16	2.032E-16	9.165E-17	4.018E-18	0.000E+00	0.000E+00
n-232	Th-232	1.000E+00	1.087E-02	1.080E-02	1.065E-02	1.014E-02	8.678E-03	3.585E-03	0.000E+00	0.000E+00
a-228	Th-232	1.000E+00	3.288E-04	9.182E-04	1.837E-03	3.383E-03	3.597E-03	1.501E-03	0.000E+00	0.000E+00
n-228	Th-232	1.000E+00	3.272E-05	1.982E-04	7.652E-04	2.582E-03	3.468E-03	2.325E-03	0.000E+00	0.000E+00
-234	U-234	9.996E-01	6.381E-03	6.064E-03	5.475E-03	3.825E-03	1.352E-03	2.528E-05	0.000E+00	0.000E+00
-234	U-234	1.319E-06	8.422E-09	8.004E-09	7.227E-09	5.049E-09	1.785E-09	3.337E-11	0.000E+00	0.000E+00
-234	U-238	1.599E-03	1.429E-11	4.097E-11	8.646E-11	1.813E-10	1.863E-10	1.148E-11	0.000E+00	0.000E+00
-234	U-238	2.111E-09	1.886E-17	5.408E-17	1.141E-16	2.394E-16	2.459E-16	1.515E-17	0.000E+00	0.000E+00
-234	U-238	3.039E-11	2.715E-19	7.785E-19	1.643E-18	3.446E-18	3.539E-18	2.181E-19	0.000E+00	0.000E+00
-234	U-238	3.359E-07	3.001E-15	8.606E-15	1.816E-14	3.809E-14	3.912E-14	2.411E-15	0.000E+00	0.000E+00
-234	U-238	4.434E-13	3.962E-21	1.136E-20	2.397E-20	5.028E-20	5.164E-20	3.182E-21	0.000E+00	0.000E+00
-234	U-238	6.383E-15	5.703E-23	1.635E-22	3.451E-22	7.237E-22	7.433E-22	4.581E-23	0.000E+00	0.000E+00
-234	U-238	3.196E-07	2.856E-15	8.188E-15	1.728E-14	3.624E-14	3.722E-14	2.294E-15	0.000E+00	0.000E+00
-234	U-238	4.219E-13	3.769E-21	1.081E-20	2.281E-20	4.784E-20	4.913E-20	3.028E-21	0.000E+00	0.000E+00
-234	U-238	6.073E-15	5.426E-23	1.556E-22	3.283E-22	6.886E-22	7.072E-22	4.358E-23	0.000E+00	0.000E+00
-234	U-238	6.713E-11	5.998E-19	1.720E-18	3.629E-18	7.612E-18	7.818E-18	4.818E-19	0.000E+00	0.000E+00
-234	U-238	8.862E-17	7.918E-25	2.270E-24	4.791E-24	1.005E-23	1.032E-23	6.359E-25	0.000E+00	0.000E+00
-234	U-238	1.276E-18	1.140E-26	3.268E-26	6.896E-26	1.446E-25	1.485E-25	9.154E-27	0.000E+00	0.000E+00
-234	U-238	3.200E-10	2.859E-18	8.198E-18	1.730E-17	3.628E-17	3.727E-17	2.296E-18	0.000E+00	0.000E+00
-234	U-238	4.224E-16	3.774E-24	1.082E-23	2.284E-23	4.789E-23	4.919E-23	3.031E-24	0.000E+00	0.000E+00
-234	U-238	6.080E-18	5.432E-26	1.558E-25	3.287E-25	6.894E-25	7.081E-25	4.363E-26	0.000E+00	0.000E+00
-234	U-238	9.980E-01	8.917E-09	2.557E-08	5.395E-08	1.132E-07	1.162E-07	7.162E-09	0.000E+00	0.000E+00
-234	U-238	1.317E-06	1.177E-14	3.375E-14	7.122E-14	1.494E-13	1.534E-13	9.454E-15	0.000E+00	0.000E+00
-234	U-238	1.896E-08	1.694E-16	4.858E-16	1.025E-15	2.150E-15	2.208E-15	1.361E-16	0.000E+00	0.000E+00

ummary : Park Ranger Ingestion
ile : C:\USERS\CLAUDE\DOCUMENTS\0 GKP DOSE\RESRAD CW\GKP PARK RANGER-INGESTION.RAD

Individual Nuclide Dose Summed Over All Pathways
Parent Nuclide and Branch Fraction Indicated

uclide (j)	Parent (i)	THF(i)	DOSE(j,t), mrem/yr t= 0.000E+00	1.000E+00	3.000E+00	1.000E+01	3.000E+01	1.000E+02	3.000E+02	1.000E+03
ÄÄÄÄÄÄ	ÄÄÄÄÄÄÄ	ÄÄÄÄÄÄÄÄÄÄ	ÄÄÄÄÄÄÄÄÄÄ	ÄÄÄÄÄÄÄÄÄÄ	ÄÄÄÄÄÄÄÄÄÄ	ÄÄÄÄÄÄÄÄÄÄ	ÄÄÄÄÄÄÄÄÄÄ	ÄÄÄÄÄÄÄÄÄÄ	ÄÄÄÄÄÄÄÄÄÄ	ÄÄÄÄÄÄÄÄÄÄ
-234	U-238	2.096E-04	1.873E-12	5.370E-12	1.133E-11	2.377E-11	2.441E-11	1.504E-12	0.000E+00	0.000E+00
-234	U-238	2.767E-10	2.472E-18	7.088E-18	1.496E-17	3.137E-17	3.222E-17	1.986E-18	0.000E+00	0.000E+00
-234	U-238	3.983E-12	3.559E-20	1.020E-19	2.153E-19	4.516E-19	4.638E-19	2.858E-20	0.000E+00	0.000E+00
-234	U-238	1.994E-04	1.782E-12	5.109E-12	1.078E-11	2.261E-11	2.323E-11	1.431E-12	0.000E+00	0.000E+00
-234	U-238	2.633E-10	2.352E-18	6.744E-18	1.423E-17	2.985E-17	3.066E-17	1.889E-18	0.000E+00	0.000E+00
-234	U-238	3.789E-12	3.386E-20	9.707E-20	2.049E-19	4.297E-19	4.413E-19	2.719E-20	0.000E+00	0.000E+00
-234	U-238	4.189E-08	3.743E-16	1.073E-15	2.265E-15	4.750E-15	4.879E-15	3.006E-16	0.000E+00	0.000E+00
-234	U-238	5.530E-14	4.941E-22	1.417E-21	2.989E-21	6.270E-21	6.440E-21	3.968E-22	0.000E+00	0.000E+00
-234	U-238	7.959E-16	7.111E-24	2.039E-23	4.303E-23	9.025E-23	9.269E-23	5.712E-24	0.000E+00	0.000E+00
-234	U-238	1.997E-07	1.784E-15	5.115E-15	1.080E-14	2.264E-14	2.325E-14	1.433E-15	0.000E+00	0.000E+00
-234	U-238	2.636E-13	2.355E-21	6.752E-21	1.425E-20	2.989E-20	3.070E-20	1.892E-21	0.000E+00	0.000E+00
-234	U-238	3.794E-15	3.390E-23	9.719E-23	2.051E-22	4.302E-22	4.418E 22	2.723E 23	0.000E+00	0.000E+00
-234	äDOSE(j)		6.381E-03	6.064E-03	5.475E-03	3.825E-03	1.352E-03	2.529E-05	0.000E+00	0.000E+00
n-230	U-234	9.996E-01	5.716E-08	1.672E-07	3.688E-07	9.097E-07	1.552E-06	8.556E-07	0.000E+00	0.000E+00
n-230	U-234	1.319E-06	7.545E-14	2.207E-13	4.868E-13	1.201E-12	2.049E-12	1.129E-12	0.000E+00	0.000E+00
n-230	U-234	1.899E-08	1.086E-15	3.176E-15	7.006E-15	1.728E-14	2.950E-14	1.626E-14	0.000E+00	0.000E+00
n-230	U-234	2.100E-04	1.201E-11	3.511E-11	7.746E-11	1.911E-10	3.261E-10	1.797E-10	0.000E+00	0.000E+00
n-230	U-234	2.771E-10	1.585E-17	4.635E-17	1.022E-16	2.522E-16	4.304E-16	2.372E-16	0.000E+00	0.000E+00
n-230	U-234	3.989E-12	2.281E-19	6.671E-19	1.472E-18	3.631E-18	6.195E-18	3.415E-18	0.000E+00	0.000E+00
n-230	U-234	1.998E-04	1.142E-11	3.341E-11	7.369E-11	1.818E-10	3.102E-10	1.710E-10	0.000E+00	0.000E+00
n-230	U-234	2.637E-10	1.508E-17	4.410E-17	9.727E-17	2.400E-16	4.095E-16	2.257E-16	0.000E+00	0.000E+00
n-230	U-234	3.795E-12	2.170E-19	6.347E-19	1.400E-18	3.454E-18	5.894E-18	3.249E-18	0.000E+00	0.000E+00
n-230	U-234	4.196E-08	2.399E-15	7.017E-15	1.548E-14	3.819E-14	6.516E-14	3.591E-14	0.000E+00	0.000E+00
n-230	U-234	5.538E-14	3.167E-21	9.262E-21	2.043E-20	5.041E-20	8.601E-20	4.741E-20	0.000E+00	0.000E+00
n-230	U-234	7.972E-16	4.559E-23	1.333E-22	2.941E-22	7.255E-22	1.238E-21	6.824E-22	0.000E+00	0.000E+00
n-230	U-234	2.000E-07	1.144E-14	3.345E-14	7.378E-14	1.820E-13	3.106E-13	1.712E-13	0.000E+00	0.000E+00
n-230	U-234	2.640E-13	1.510E-20	4.415E-20	9.739E-20	2.403E-19	4.100E-19	2.260E-19	0.000E+00	0.000E+00
n-230	U-234	3.800E-15	2.173E-22	6.355E-22	1.402E-21	3.458E-21	5.901E-21	3.253E-21	0.000E+00	0.000E+00
n-230	U-238	1.599E-03	8.539E-17	5.795E-16	2.857E-15	1.992E-14	8.361E-14	8.281E-14	0.000E+00	0.000E+00
n-230	U-238	2.111E-09	1.127E-22	7.650E-22	3.771E-21	2.630E-20	1.104E-19	1.093E-19	0.000E+00	0.000E+00
n-230	U-238	3.039E-11	1.622E-24	1.101E-23	5.427E-23	3.785E-22	1.589E-21	1.573E-21	0.000E+00	0.000E+00
n-230	U-238	3.359E-07	1.794E-20	1.217E-19	6.000E-19	4.184E-18	1.756E-17	1.739E-17	0.000E+00	0.000E+00
n-230	U-238	4.434E-13	2.368E-26	1.607E-25	7.920E-25	5.523E-24	2.318E-23	2.296E-23	0.000E+00	0.000E+00
n-230	U-238	6.383E-15	3.408E-28	2.313E-27	1.140E-26	7.950E-26	3.337E-25	3.305E-25	0.000E+00	0.000E+00
n-230	U-238	3.196E-07	1.706E-20	1.158E-19	5.708E-19	3.981E-18	1.671E-17	1.655E-17	0.000E+00	0.000E+00
n-230	U-238	4.219E-13	2.253E-26	1.529E-25	7.535E-25	5.255E-24	2.206E-23	2.184E-23	0.000E+00	0.000E+00
n-230	U-238	6.073E-15	3.242E-28	2.201E-27	1.085E-26	7.564E-26	3.175E-25	3.144E-25	0.000E+00	0.000E+00
n-230	U-238	6.713E-11	3.584E-24	2.433E-23	1.199E-22	8.362E-22	3.510E-21	3.476E-21	0.000E+00	0.000E+00
n-230	U-238	8.862E-17	0.000E+00	3.211E-29	1.583E-28	1.104E-27	4.633E-27	4.588E-27	0.000E+00	0.000E+00
n-230	U-238	1.276E-18	0.000E+00	0.000E+00	0.000E+00	1.589E-29	6.668E-29	6.604E-29	0.000E+00	0.000E+00
n-230	U-238	3.200E-10	1.709E-23	1.160E-22	5.715E-22	3.986E-21	1.673E-20	1.657E-20	0.000E+00	0.000E+00
n-230	U-238	4.224E-16	2.255E-29	1.531E-28	7.544E-28	5.261E-27	2.208E-26	2.187E-26	0.000E+00	0.000E+00
n-230	U-238	6.080E-18	0.000E+00	0.000E+00	0.000E+00	7.573E-29	3.178E-28	3.148E-28	0.000E+00	0.000E+00
n-230	U-238	9.980E-01	5.328E-14	3.616E-13	1.782E-12	1.243E-11	5.217E-11	5.167E-11	0.000E+00	0.000E+00
n-230	U-238	1.317E-06	7.034E-20	4.774E-19	2.353E-18	1.641E-17	6.887E-17	6.820E-17	0.000E+00	0.000E+00
n-230	U-238	1.896E-08	1.012E-21	6.871E-21	3.387E-20	2.362E-19	9.913E-19	9.817E-19	0.000E+00	0.000E+00
n-230	U-238	2.096E-04	1.119E-17	7.596E-17	3.744E-16	2.611E-15	1.096E-14	1.085E-14	0.000E+00	0.000E+00
n-230	U-238	2.767E-10	1.477E-23	1.003E-22	4.942E-22	3.447E-21	1.447E-20	1.433E-20	0.000E+00	0.000E+00

ummary : Park Ranger Ingestion
ile : C:\USERS\CLAUDE\DOCUMENTS\0 GKP DOSE\RESRAD CW\GKP PARK RANGER-INGESTION.RAD

Individual Nuclide Dose Summed Over All Pathways
Parent Nuclide and Branch Fraction Indicated

uclide (j)	Parent (i)	THF(i)	DOSE(j,t), mrem/yr t= 0.000E+00	1.000E+00	3.000E+00	1.000E+01	3.000E+01	1.000E+02	3.000E+02	1.000E+03
ÄÄÄÄÄÄ	ÄÄÄÄÄÄÄ	ÄÄÄÄÄÄÄÄÄ	ÄÄÄÄÄÄÄÄÄ	ÄÄÄÄÄÄÄÄÄ	ÄÄÄÄÄÄÄÄÄ	ÄÄÄÄÄÄÄÄÄ	ÄÄÄÄÄÄÄÄÄ	ÄÄÄÄÄÄÄÄÄ	ÄÄÄÄÄÄÄÄÄ	ÄÄÄÄÄÄÄÄÄ
u-230	U-238	3.983E-12	2.127E 25	1.443E-24	7.114E-24	4.961E 23	2.082E-22	2.062E-22	0.000E+00	0.000E+00
n-230	U-238	1.994E-04	1.065E-17	7.227E-17	3.562E-16	2.484E-15	1.043E-14	1.033E-14	0.000E+00	0.000E+00
n-230	U-238	2.633E-10	1.406E-23	9.540E-23	4.702E-22	3.279E-21	1.376E-20	1.363E-20	0.000E+00	0.000E+00
n-230	U-238	3.789E-12	2.023E-25	1.373E-24	6.768E-24	4.720E-23	1.981E-22	1.962E-22	0.000E+00	0.000E+00
n-230	U-238	4.189E-08	2.237E-21	1.518E-20	7.482E-20	5.218E-19	2.190E-18	2.169E-18	0.000E+00	0.000E+00
n-230	U-238	5.530E-14	2.952E-27	2.004E-26	9.876E-26	6.888E-25	2.891E-24	2.863E-24	0.000E+00	0.000E+00
n-230	U-238	7.959E-16	4.250E-29	2.884E-28	1.422E-27	9.914E-27	4.161E-26	4.121E-26	0.000E+00	0.000E+00
n-230	U-238	1.997E-07	1.066E-20	7.236E-20	3.566E-19	2.487E-18	1.044E-17	1.034E-17	0.000E+00	0.000E+00
n-230	U-238	2.636E-13	1.407E-26	9.551E-26	4.708E-25	3.283E-24	1.378E-23	1.365E-23	0.000E+00	0.000E+00
n-230	U-238	3.794E-15	2.026E-28	1.375E-27	6.776E-27	4.726E-26	1.983E-25	1.964E-25	0.000E+00	0.000E+00
n-230	äDOSE(j)		5.718E-08	1.672E-07	3.689E-07	9.101E-07	1.553E-06	8.560E-07	0.000E+00	0.000E+00
-234	U-234	1.899E-08	1.212E-10	1.152E-10	1.040E-10	7.267E-11	2.569E-11	4.803E-13	0.000E+00	0.000E+00
-234	U-234	2.100E-04	1.340E-06	1.274E-06	1.150E-06	8.033E-07	2.840E-07	5.310E-09	0.000E+00	0.000E+00
-234	äDOSE(j)		1.340E-06	1.274E-06	1.150E-06	8.034E-07	2.840E-07	5.310E-09	0.000E+00	0.000E+00
a-226	U-234	2.100E-04	4.176E-15	2.844E-14	1.413E-13	1.012E-12	4.561E-12	5.273E-12	0.000E+00	0.000E+00
a-226	U-234	3.989E-12	7.935E-23	5.404E-22	2.684E-21	1.924E-20	8.667E-20	1.002E-19	0.000E+00	0.000E+00
a-226	U-238	3.359E-07	4.691E-24	6.820E-23	7.415E-22	1.524E-20	1.798E-19	4.585E-19	0.000E+00	0.000E+00
a-226	U-238	4.434E-13	0.000E+00	8.964E-29	9.746E-28	2.011E-26	2.373E-25	6.052E-25	0.000E+00	0.000E+00
a-226	U-238	6.383E-15	0.000E+00	0.000E+00	1.403E-29	2.883E-28	3.416E-27	8.711E-27	0.000E+00	0.000E+00
a-226	U-238	2.096E-04	2.927E-21	4.256E-20	4.627E-19	9.508E-18	1.122E-16	2.861E-16	0.000E+00	0.000E+00
a-226	U-238	2.767E-10	3.864E-27	5.617E-26	6.108E-25	1.255E-23	1.481E-22	3.776E-22	0.000E+00	0.000E+00
a-226	U-238	3.983E-12	5.538E-29	8.051E-28	8.791E-27	1.806E-25	2.132E-24	5.436E-24	0.000E+00	0.000E+00
a-226	äDOSE(j)		4.176E-15	2.844E-14	1.413E-13	1.012E-12	4.562E-12	5.273E-12	0.000E+00	0.000E+00
-234	U-234	2.771E-10	1.769E-12	1.681E-12	1.518E-12	1.060E-12	3.748E-13	7.009E-15	0.000E+00	0.000E+00
-234	U-234	3.989E-12	2.546E-14	2.420E-14	2.185E-14	1.526E-14	5.395E-15	1.009E-16	0.000E+00	0.000E+00
-234	äDOSE(j)		1.795E-12	1.705E-12	1.540E-12	1.076E-12	3.802E-13	7.110E-15	0.000E+00	0.000E+00
a-226	U-234	2.771E-10	5.513E-21	3.754E-20	1.865E-19	1.336E-18	6.021E-18	6.961E-18	0.000E+00	0.000E+00
-234	U-234	1.998E-04	1.275E-06	1.212E-06	1.094E-06	7.643E-07	2.702E-07	5.052E-09	0.000E+00	0.000E+00
-234	U-234	2.637E-10	1.683E-12	1.600E-12	1.444E-12	1.009E-12	3.566E-13	6.668E-15	0.000E+00	0.000E+00
-234	äDOSE(j)		1.275E-06	1.212E-06	1.094E-06	7.643E-07	2.702E-07	5.052E-09	0.000E+00	0.000E+00
-234	U-234	3.795E-12	2.423E-14	2.302E-14	2.079E-14	1.452E-14	5.133E-15	9.598E-17	0.000E+00	0.000E+00
-234	U-234	4.196E-08	2.678E-10	2.545E-10	2.298E-10	1.605E-10	5.675E-11	1.061E-12	0.000E+00	0.000E+00
-234	äDOSE(j)		2.679E-10	2.545E-10	2.298E-10	1.606E-10	5.675E-11	1.061E-12	0.000E+00	0.000E+00
a-226	U-234	4.196E-08	8.342E-19	5.681E-18	2.822E-17	2.022E-16	9.111E-16	1.053E-15	0.000E+00	0.000E+00
a-226	U-234	7.972E-16	1.585E-26	1.079E-25	5.362E-25	3.842E-24	1.731E-23	2.001E-23	0.000E+00	0.000E+00
a-226	U-238	6.713E-11	9.331E-28	1.362E-26	1.481E-25	3.043E-24	3.591E-23	9.158E-23	0.000E+00	0.000E+00
a-226	U-238	8.862E-17	0.000E+00	0.000E+00	0.000E+00	0.000E+00	4.720E-29	1.204E-28	0.000E+00	0.000E+00
a-226	U-238	1.276E-18	0.000E+00	0.000E+00	0.000E+00	0.000E+00	0.000E+00	0.000E+00	0.000E+00	0.000E+00
a-226	U-238	4.189E-08	5.847E-25	8.500E-24	9.242E-23	1.899E-21	2.241E-20	5.714E-20	0.000E+00	0.000E+00
a-226	U-238	5.530E-14	0.000E+00	0.000E+00	1.215E-28	2.496E-27	2.958E-26	7.543E-26	0.000E+00	0.000E+00
a-226	U-238	7.959E-16	0.000E+00	0.000E+00	0.000E+00	3.593E-29	4.240E-28	1.081E-27	0.000E+00	0.000E+00
a-226	äDOSE(j)		8.342E-19	5.681E-18	2.822E-17	2.022E-16	9.111E-16	1.053E-15	0.000E+00	0.000E+00

ummary : Park Ranger Ingestion
ile : C:\USERS\CLAUDE\DOCUMENTS\0 GKP DOSE\RESRAD CW\GKP PARK RANGER-INGESTION.RAD

Individual Nuclide Dose Summed Over All Pathways
Parent Nuclide and Branch Fraction Indicated

uclide (j)	Parent (i)	THF(i)	DOSE(j,t), mrem/yr t= 0.000E+00	1.000E+00	3.000E+00	1.000E+01	3.000E+01	1.000E+02	3.000E+02	1.000E+03
ÄÄÄÄÄ	ÄÄÄÄÄÄ	ÄÄÄÄÄÄÄÄ	ÄÄÄÄÄÄÄÄÄ	ÄÄÄÄÄÄÄÄÄ	ÄÄÄÄÄÄÄÄÄ	ÄÄÄÄÄÄÄÄÄ	ÄÄÄÄÄÄÄÄÄ	ÄÄÄÄÄÄÄÄÄ	ÄÄÄÄÄÄÄÄÄ	ÄÄÄÄÄÄÄÄÄ
-234	U-234	5.538E-14	3.535E-16	3.360E-16	3.034E-16	2.119E-16	7.491E-17	1.401E-18	0.000E+00	0.000E+00
-234	U-234	7.972E-16	5.089E-18	4.836E-18	4.367E-18	3.050E-18	1.078E-18	2.016E-20	0.000E+00	0.000E+00
-234	äDOSE(j)		3.586E-16	3.408E-16	3.077E-16	2.150E-16	7.599E-17	1.421E-18	0.000E+00	0.000E+00
a-226	U-234	5.538E-14	1.101E-24	7.499E-24	3.725E-23	2.669E-22	1.203E-21	1.390E-21	0.000E+00	0.000E+00
-234	U-234	2.000E-07	1.277E-09	1.213E-09	1.095E-09	7.652E-10	2.705E-10	5.058E-12	0.000E+00	0.000E+00
-234	U-234	2.640E-13	1.685E-15	1.601E-15	1.446E-15	1.010E-15	3.571E-16	6.676E-18	0.000E+00	0.000E+00
-234	äDOSE(j)		1.277E-09	1.213E-09	1.095E-09	7.652E-10	2.705E-10	5.058E-12	0.000E+00	0.000E+00
-234	U-234	3.800E-15	2.426E-17	2.305E-17	2.081E-17	1.454E-17	5.140E-18	9.610E-20	0.000E+00	0.000E+00
-235	U-235	9.835E-01	3.584E-04	3.406E-04	3.075E-04	2.148E-04	7.595E-05	1.420E-06	0.000E+00	0.000E+00
-235	U-235	2.722E-03	9.919E-07	9.426E-07	8.512E-07	5.946E-07	2.102E-07	3.931E-09	0.000E+00	0.000E+00
-235	äDOSE(j)		3.594E-04	3.415E-04	3.084E-04	2.154E-04	7.616E-05	1.424E-06	0.000E+00	0.000E+00
a-231	U-235	9.835E-01	1.491E-07	4.274E-07	9.019E-07	1.891E-06	1.942E-06	1.196E-07	0.000E+00	0.000E+00
a-231	U-235	2.722E-03	4.125E-10	1.183E-09	2.496E-09	5.235E-09	5.376E-09	3.310E-10	0.000E+00	0.000E+00
a-231	U-235	1.376E-02	2.086E-09	5.980E-09	1.262E-08	2.646E-08	2.718E-08	1.674E-09	0.000E+00	0.000E+00
a-231	U-235	3.809E-05	5.772E-12	1.655E-11	3.492E-11	7.324E-11	7.522E-11	4.632E-12	0.000E+00	0.000E+00
a-231	U-235	8.257E-07	1.251E-13	3.588E-13	7.572E-13	1.588E-12	1.631E-12	1.004E-13	0.000E+00	0.000E+00
a-231	U-235	2.285E-09	3.463E-16	9.930E-16	2.096E-15	4.395E-15	4.513E-15	2.779E-16	0.000E+00	0.000E+00
a-231	äDOSE(j)		1.516E-07	4.345E-07	9.170E-07	1.923E-06	1.975E-06	1.216E-07	0.000E+00	0.000E+00
c-227	U-235	9.835E-01	2.146E-09	1.400E-08	6.307E-08	3.226E-07	6.028E-07	4.896E-08	0.000E+00	0.000E+00
c-227	U-235	2.722E-03	5.940E-12	3.874E-11	1.746E-10	8.927E-10	1.668E-09	1.355E-10	0.000E+00	0.000E+00
c-227	U-235	1.376E-02	2.997E-11	1.954E-10	8.808E-10	4.504E-09	8.418E-09	6.836E-10	0.000E+00	0.000E+00
c-227	äDOSE(j)		3.591E-11	2.342E-10	1.055E-09	5.397E-09	1.009E-08	8.191E-10	0.000E+00	0.000E+00
-235	U-235	1.376E-02	5.015E-06	4.766E-06	4.303E-06	3.006E-06	1.063E-06	1.987E-08	0.000E+00	0.000E+00
-235	U-235	3.809E-05	1.388E-08	1.319E-08	1.191E-08	8.320E-09	2.941E-09	5.500E-11	0.000E+00	0.000E+00
-235	äDOSE(j)		5.029E-06	4.779E-06	4.315E-06	3.014E-06	1.066E-06	1.993E-08	0.000E+00	0.000E+00
c-227	U-235	3.809E-05	8.295E-14	5.409E-13	2.438E-12	1.247E-11	2.330E-11	1.892E-12	0.000E+00	0.000E+00
c-227	U-235	8.257E-07	1.718E-15	1.120E-14	5.049E-14	2.582E-13	4.826E-13	3.919E-14	0.000E+00	0.000E+00
c-227	äDOSE(j)		8.467E-14	5.521E-13	2.488E-12	1.272E-11	2.378E-11	1.931E-12	0.000E+00	0.000E+00
-235	U-235	8.257E-07	3.009E-10	2.860E-10	2.582E-10	1.804E-10	6.376E-11	1.192E-12	0.000E+00	0.000E+00
-235	U-235	2.285E-09	8.328E-13	7.914E-13	7.146E-13	4.992E-13	1.765E-13	3.300E-15	0.000E+00	0.000E+00
-235	äDOSE(j)		3.017E-10	2.867E-10	2.589E-10	1.809E-10	6.394E-11	1.196E-12	0.000E+00	0.000E+00
c-227	U-235	2.285E-09	4.755E-18	3.101E-17	1.397E-16	7.147E-16	1.336E-15	1.085E-16	0.000E+00	0.000E+00
-238	U-238	5.450E-07	3.135E-09	2.979E-09	2.690E-09	1.879E-09	6.643E-10	1.242E-11	0.000E+00	0.000E+00
-238	U-238	1.599E-03	9.771E-06	9.286E-06	8.385E-06	5.857E-06	2.071E-06	3.872E-08	0.000E+00	0.000E+00
-238	äDOSE(j)		9.774E-06	9.289E-06	8.387E-06	5.859E-06	2.071E-06	3.873E-08	0.000E+00	0.000E+00
-238	U-238	2.111E-09	1.290E-11	1.226E-11	1.107E-11	7.731E-12	2.733E-12	5.111E-14	0.000E+00	0.000E+00

ummary : Park Ranger Ingestion
ile : C:\USERS\CLAUDE\DOCUMENTS\0 GKP DOSE\RESRAD CW\GKP PARK RANGER-INGESTION.RAD

Individual Nuclide Dose Summed Over All Pathways
Parent Nuclide and Branch Fraction Indicated

uclide (j)	Parent (i)	THF(i)	DOSE(j,t), mrem/yr t= 0.000E+00	1.000E+00	3.000E+00	1.000E+01	3.000E+01	1.000E+02	3.000E+02	1.000E+03
ÄÄÄÄÄÄ	ÄÄÄÄÄÄÄ	ÄÄÄÄÄÄÄÄÄ	ÄÄÄÄÄÄÄÄÄ	ÄÄÄÄÄÄÄÄÄ	ÄÄÄÄÄÄÄÄÄ	ÄÄÄÄÄÄÄÄÄ	ÄÄÄÄÄÄÄÄÄ	ÄÄÄÄÄÄÄÄÄ	ÄÄÄÄÄÄÄÄÄ	ÄÄÄÄÄÄÄÄÄ
-238	U-238	3.039E-11	1.857E-13	1.764E-13	1.593E-13	1.113E-13	3.934E-14	7.357E-16	0.000E+00	0.000E+00
-238	äDOSE(j)		1.308E-11	1.243E-11	1.123E-11	7.843E-12	2.772E-12	5.185E-14	0.000E+00	0.000E+00
-238	U-238	3.359E-07	2.052E-09	1.950E-09	1.761E-09	1.230E-09	4.349E-10	8.133E-12	0.000E+00	0.000E+00
-238	U-238	4.434E-13	2.709E-15	2.575E-15	2.325E-15	1.624E-15	5.741E-16	1.074E-17	0.000E+00	0.000E+00
-238	äDOSE(j)		2.052E-09	1.950E-09	1.761E-09	1.230E-09	4.349E-10	8.133E-12	0.000E+00	0.000E+00
-238	U-238	6.383E-15	3.900E-17	3.706E-17	3.346E-17	2.337E-17	8.263E-18	1.545E-19	0.000E+00	0.000E+00
-238	U-238	3.196E-07	1.953E-09	1.856E-09	1.676E-09	1.170E-09	4.138E-10	7.738E-12	0.000E+00	0.000E+00
-238	äDOSE(j)		1.953E-09	1.856E-09	1.676E-09	1.170E-09	4.138E-10	7.738E-12	0.000E+00	0.000E+00
-238	U-238	4.219E-13	2.578E-15	2.449E-15	2.212E-15	1.545E-15	5.462E-16	1.021E-17	0.000E+00	0.000E+00
-238	U-238	6.073E-15	3.710E-17	3.526E-17	3.184E-17	2.224E-17	7.862E-18	1.470E-19	0.000E+00	0.000E+00
-238	äDOSE(j)		2.615E-15	2.485E-15	2.244E-15	1.567E-15	5.540E-16	1.036E-17	0.000E+00	0.000E+00
-238	U-238	6.713E-11	4.101E-13	3.898E-13	3.519E-13	2.459E-13	8.691E-14	1.625E-15	0.000E+00	0.000E+00
-238	U-238	8.862E-17	5.414E-19	5.145E-19	4.646E-19	3.245E-19	1.147E-19	2.145E-21	0.000E+00	0.000E+00
-238	äDOSE(j)		4.101E-13	3.898E-13	3.519E-13	2.459E-13	8.691E-14	1.625E-15	0.000E+00	0.000E+00
-238	U-238	1.276E-18	7.793E-21	7.406E-21	6.687E-21	4.671E-21	1.651E-21	3.088E-23	0.000E+00	0.000E+00
-238	U-238	3.200E-10	1.955E-12	1.858E-12	1.678E-12	1.172E-12	4.143E-13	7.748E-15	0.000E+00	0.000E+00
-238	äDOSE(j)		1.955E-12	1.858E-12	1.678E-12	1.172E-12	4.143E-13	7.748E-15	0.000E+00	0.000E+00
-238	U-238	4.224E-16	2.581E-18	2.452E-18	2.214E-18	1.547E-18	5.468E-19	1.023E-20	0.000E+00	0.000E+00
-238	U-238	6.080E-18	3.715E-20	3.530E-20	3.187E-20	2.227E-20	7.871E-21	1.472E-22	0.000E+00	0.000E+00
-238	äDOSE(j)		2.618E-18	2.488E-18	2.246E-18	1.569E-18	5.547E-19	1.037E-20	0.000E+00	0.000E+00
-238	U-238	9.980E-01	6.049E-03	5.748E-03	5.190E-03	3.626E-03	1.282E-03	2.397E-05	0.000E+00	0.000E+00
-238	U-238	1.317E-06	7.984E-09	7.587E-09	6.851E-09	4.786E-09	1.692E-09	3.164E-11	0.000E+00	0.000E+00
-238	äDOSE(j)		6.049E-03	5.748E-03	5.190E-03	3.626E-03	1.282E-03	2.397E-05	0.000E+00	0.000E+00
-238	U-238	1.896E-08	1.149E-10	1.092E-10	9.862E-11	6.889E-11	2.435E-11	4.554E-13	0.000E+00	0.000E+00
-238	U-238	2.096E-04	1.270E-06	1.207E-06	1.090E-06	7.616E-07	2.692E-07	5.035E-09	0.000E+00	0.000E+00
-238	äDOSE(j)		1.271E-06	1.207E-06	1.090E-06	7.616E-07	2.692E-07	5.035E-09	0.000E+00	0.000E+00
-238	U-238	2.767E-10	1.677E-12	1.594E-12	1.439E-12	1.005E-12	3.554E-13	6.646E-15	0.000E+00	0.000E+00
-238	U-238	3.983E-12	2.414E-14	2.294E-14	2.071E-14	1.447E-14	5.115E-15	9.566E-17	0.000E+00	0.000E+00
-238	äDOSE(j)		1.701E-12	1.617E-12	1.460E-12	1.020E-12	3.605E-13	6.741E-15	0.000E+00	0.000E+00
-238	U-238	1.994E-04	1.209E-06	1.149E-06	1.037E-06	7.246E-07	2.561E-07	4.790E-09	0.000E+00	0.000E+00
-238	U-238	2.633E-10	1.596E-12	1.516E-12	1.369E-12	9.564E-13	3.381E-13	6.323E-15	0.000E+00	0.000E+00
-238	äDOSE(j)		1.209E-06	1.149E-06	1.037E-06	7.246E-07	2.561E-07	4.790E-09	0.000E+00	0.000E+00
-238	U-238	3.789E-12	2.297E-14	2.182E-14	1.971E-14	1.377E-14	4.867E-15	9.101E-17	0.000E+00	0.000E+00
-238	U-238	4.189E-08	2.539E-10	2.413E-10	2.179E-10	1.522E-10	5.380E-11	1.006E-12	0.000E+00	0.000E+00
-238	äDOSE(j)		2.539E-10	2.413E-10	2.179E-10	1.522E-10	5.380E-11	1.006E-12	0.000E+00	0.000E+00
-238	U-238	5.530E-14	3.351E-16	3.185E-16	2.876E-16	2.009E-16	7.102E-17	1.328E-18	0.000E+00	0.000E+00
-238	U-238	7.959E-16	4.824E-18	4.584E-18	4.139E-18	2.892E-18	1.022E-18	1.912E-20	0.000E+00	0.000E+00
-238	äDOSE(j)		3.400E-16	3.231E-16	2.917E-16	2.038E-16	7.204E-17	1.347E-18	0.000E+00	0.000E+00

ummary : Park Ranger Ingestion
ile : C:\USERS\CLAUDE\DOCUMENTS\0 GKP DOSE\RESRAD CW\GKP PARK RANGER-INGESTION.RAD

Individual Nuclide Dose Summed Over All Pathways
Parent Nuclide and Branch Fraction Indicated

uclide (j)	Parent (i)	THF(i)	DOSE(j,t), mrem/yr t= 0.000E+00	1.000E+00	3.000E+00	1.000E+01	3.000E+01	1.000E+02	3.000E+02	1.000E+03
ÄÄÄÄÄÄ	ÄÄÄÄÄÄÄ	ÄÄÄÄÄÄÄÄÄ	ÄÄÄÄÄÄÄÄÄ	ÄÄÄÄÄÄÄÄÄ	ÄÄÄÄÄÄÄÄÄ	ÄÄÄÄÄÄÄÄÄ	ÄÄÄÄÄÄÄÄÄ	ÄÄÄÄÄÄÄÄÄ	ÄÄÄÄÄÄÄÄÄ	ÄÄÄÄÄÄÄÄÄ
-238	U-238	1.997E-07	1.210E-09	1.150E-09	1.038E-09	7.254E-10	2.564E-10	4.796E-12	0.000E+00	0.000E+00
-238	U-238	2.636E-13	1.597E-15	1.518E-15	1.371E-15	9.576E-16	3.385E-16	6.331E-18	0.000E+00	0.000E+00
-238	äDOSE(j)		1.210E-09	1.150E-09	1.038E-09	7.254E-10	2.564E-10	4.796E-12	0.000E+00	0.000E+00
-238	U-238	3.794E-15	2.299E-17	2.185E-17	1.973E-17	1.378E-17	4.872E-18	9.112E-20	0.000E+00	0.000E+00
íííííí	ííííííí	ííííííííí	ííííííííí	ííííííííí	ííííííííí	ííííííííí	ííííííííí	ííííííííí	ííííííííí	ííííííííí

HF(i) is the thread fraction of the parent nuclide.

ummary : Park Ranger Ingestion

ile : C:\USERS\CLAUDE\DOCUMENTS\0 GKP DOSE\RESRAD CW\GKP PARK RANGER-INGESTION.RAD

Individual Nuclide Soil Concentration

Parent Nuclide and Branch Fraction Indicated

uclide (j)	Parent (i)	THF(i)	S(j,t), pCi/g t= 0.000E+00	1.000E+00	3.000E+00	1.000E+01	3.000E+01	1.000E+02	3.000E+02	1.000E+03
ÄÄÄÄÄÄ	ÄÄÄÄÄÄÄ	ÄÄÄÄÄÄÄÄÄ	ÄÄÄÄÄÄÄÄÄ	ÄÄÄÄÄÄÄÄÄ	ÄÄÄÄÄÄÄÄÄ	ÄÄÄÄÄÄÄÄÄ	ÄÄÄÄÄÄÄÄÄ	ÄÄÄÄÄÄÄÄÄ	ÄÄÄÄÄÄÄÄÄ	ÄÄÄÄÄÄÄÄÄ
a-226	Ra-226	9.996E-01	3.648E+01	3.533E+01	3.314E+01	2.647E+01	1.394E+01	1.475E+00	2.411E-03	4.255E-13
a-226	Ra-226	1.319E-06	4.816E-05	4.664E-05	4.374E-05	3.494E-05	1.839E-05	1.947E-06	3.182E-09	5.616E-19
a-226	U-234	9.996E-01	0.000E+00	2.698E-08	2.308E-07	2.155E-06	1.208E-05	3.439E-05	3.853E-05	3.731E-05
a-226	U-234	1.319E-06	0.000E+00	3.561E-14	3.047E-13	2.844E-12	1.595E-11	4.540E-11	5.086E-11	4.925E-11
a-226	U-234	1.899E-08	0.000E+00	5.126E-16	4.386E-15	4.094E-14	2.295E-13	6.534E-13	7.321E-13	7.089E-13
a-226	U-238	1.599E-03	0.000E+00	4.044E-17	1.028E-15	3.093E-14	4.696E-13	2.984E-12	3.935E-12	3.813E-12
a-226	U-238	2.111E-09	0.000E+00	5.338E-23	1.357E-21	4.082E-20	6.199E-19	3.939E-18	5.194E-18	5.033E-18
a-226	U-238	3.039E-11	0.000E+00	7.683E-25	1.953E-23	5.876E-22	8.923E-21	5.670E-20	7.477E-20	7.244E-20
a-226	U-238	9.980E-01	0.000E+00	2.523E-14	6.416E-13	1.930E-11	2.930E-10	1.862E-09	2.455E-09	2.379E-09
a-226	U-238	1.317E-06	0.000E+00	3.331E-20	8.469E-19	2.547E-17	3.868E-16	2.458E-15	3.241E-15	3.140E-15
a-226	U-238	1.896E-08	0.000E+00	4.794E-22	1.219E-20	3.667E-19	5.568E-18	3.538E-17	4.665E-17	4.520E-17
a-226	äS(j):		3.649E+01	3.533E+01	3.314E+01	2.647E+01	1.394E+01	1.475E+00	2.449E-03	3.731E-05
o-210	Ra-226	9.996E-01	0.000E+00	1.092E+00	3.007E+00	7.444E+00	9.643E+00	1.904E+00	3.525E-03	6.232E-13
o-210	Ra-226	2.100E-04	0.000E+00	2.293E-04	6.315E-04	1.564E-03	2.026E-03	4.000E-04	7.405E-07	1.309E-16
o-210	Ra-226	1.998E-04	0.000E+00	2.181E-04	6.009E-04	1.488E-03	1.927E-03	3.805E-04	7.045E-07	1.245E-16
o-210	Ra-226	4.196E-08	0.000E+00	4.582E-08	1.262E-07	3.125E-07	4.048E-07	7.993E-08	1.480E-10	2.616E-20
o-210	Ra-226	2.000E-07	0.000E+00	2.184E-07	6.016E-07	1.489E-06	1.929E-06	3.810E-07	7.053E-10	1.247E-19
o-210	U-234	9.996E-01	0.000E+00	2.788E-10	7.058E-09	2.091E-07	3.053E-06	1.777E-05	2.254E-05	2.184E-05
o-210	U-234	2.100E-04	0.000E+00	5.857E-14	1.482E-12	4.392E-11	6.412E-10	3.732E-09	4.735E-09	4.587E-09
o-210	U-234	1.998E-04	0.000E+00	5.572E-14	1.410E-12	4.178E-11	6.101E-10	3.550E-09	4.505E-09	4.364E-09
o-210	U-234	4.196E-08	0.000E+00	1.170E-17	2.963E-16	8.776E-15	1.281E-13	7.457E-13	9.462E-13	9.166E-13
o-210	U-234	2.000E-07	0.000E+00	5.579E-17	1.412E-15	4.183E-14	6.108E-13	3.555E-12	4.510E-12	4.369E-12
o-210	U-238	1.599E-03	0.000E+00	3.142E-19	2.374E-17	2.303E-15	9.533E-14	1.413E-12	2.300E-12	2.231E-12
o-210	U-238	3.359E-07	0.000E+00	6.599E-23	4.987E-21	4.838E-19	2.002E-17	2.967E-16	4.832E-16	4.687E-16
o-210	U-238	3.196E-07	0.000E+00	6.278E-23	4.745E-21	4.603E-19	1.905E-17	2.823E-16	4.597E-16	4.459E-16
o-210	U-238	6.713E-11	0.000E+00	1.319E-26	9.966E-25	9.669E-23	4.001E-21	5.929E-20	9.656E-20	9.366E-20
o-210	U-238	3.200E-10	0.000E+00	6.286E-26	4.750E-24	4.609E-22	1.907E-20	2.826E-19	4.603E-19	4.464E-19
o-210	U-238	9.980E-01	0.000E+00	1.960E-16	1.481E-14	1.437E-12	5.948E-11	8.814E-10	1.435E-09	1.392E-09
o-210	U-238	2.096E-04	0.000E+00	4.118E-20	3.112E-18	3.019E-16	1.249E-14	1.851E-13	3.015E-13	2.925E-13
o-210	U-238	1.994E-04	0.000E+00	3.918E-20	2.961E-18	2.872E-16	1.189E-14	1.761E-13	2.869E-13	2.782E-13
o-210	U-238	4.189E-08	0.000E+00	8.229E-24	6.219E-22	6.033E-20	2.497E-18	3.700E-17	6.025E-17	5.844E-17
o-210	U-238	1.997E-07	0.000E+00	3.922E-23	2.964E-21	2.876E-19	1.190E-17	1.764E-16	2.872E-16	2.786E-16
o-210	äS(j):		0.000E+00	1.092E+00	3.008E+00	7.447E+00	9.647E+00	1.905E+00	3.549E-03	2.185E-05
o-210	Ra-226	1.319E-06	0.000E+00	1.441E-06	3.969E-06	9.826E-06	1.273E-05	2.514E-06	4.653E-09	8.226E-19
o-210	Ra-226	1.899E-08	0.000E+00	2.074E-08	5.713E-08	1.414E-07	1.832E-07	3.618E-08	6.698E-11	1.184E-20
o-210	Ra-226	2.771E-10	0.000E+00	3.026E-10	8.336E-10	2.064E-09	2.674E-09	5.280E-10	9.774E-13	1.728E-22
o-210	Ra-226	2.637E-10	0.000E+00	2.879E-10	7.931E-10	1.964E-09	2.544E-09	5.023E-10	9.299E-13	1.644E-22
o-210	Ra-226	5.538E-14	0.000E+00	6.048E-14	1.666E-13	4.124E-13	5.343E-13	1.055E-13	1.953E-16	3.453E-26
o-210	Ra-226	2.640E-13	0.000E+00	2.883E-13	7.941E-13	1.966E-12	2.547E-12	5.029E-13	9.311E-16	1.646E-25
o-210	U-234	1.319E-06	0.000E+00	3.681E-16	9.317E-15	2.760E-13	4.030E-12	2.345E-11	2.975E-11	2.882E-11
o-210	U-234	2.771E-10	0.000E+00	7.731E-20	1.957E-18	5.797E-17	8.464E-16	4.926E-15	6.250E-15	6.054E-15
o-210	U-234	2.637E-10	0.000E+00	7.356E-20	1.862E-18	5.515E-17	8.053E-16	4.686E-15	5.946E-15	5.760E-15
o-210	U-234	5.538E-14	0.000E+00	1.545E-23	3.911E-22	1.158E-20	1.691E-19	9.844E-19	1.249E-18	1.210E-18
o-210	U-234	2.640E-13	0.000E+00	7.364E-23	1.864E-21	5.522E-20	8.063E-19	4.692E-18	5.953E-18	5.767E-18
o-210	U-238	2.111E-09	0.000E+00	4.147E-25	3.134E-23	3.041E-21	1.258E-19	1.865E-18	3.037E-18	2.945E-18
o-210	U-238	4.434E-13	0.000E+00	8.711E-29	6.583E-27	6.387E-25	2.643E-23	3.916E-22	6.378E-22	6.187E-22
o-210	U-238	4.219E-13	0.000E+00	8.287E-29	6.263E-27	6.076E-25	2.515E-23	3.726E-22	6.068E-22	5.886E-22

ummary : Park Ranger Ingestion
ile : C:\USERS\CLAUDE\DOCUMENTS\0 GKP DOSE\RESRAD CW\GKP PARK RANGER-INGESTION.RAD

Individual Nuclide Soil Concentration
Parent Nuclide and Branch Fraction Indicated

uclide (j)	Parent (i)	THF(i)	S(j,t), pCi/g t= 0.000E+00	1.000E+00	3.000E+00	1.000E+01	3.000E+01	1.000E+02	3.000E+02	1.000E+03
ÄÄÄÄÄÄ	ÄÄÄÄÄÄÄ	ÄÄÄÄÄÄÄÄÄ	ÄÄÄÄÄÄÄÄÄ	ÄÄÄÄÄÄÄÄÄ	ÄÄÄÄÄÄÄÄÄ	ÄÄÄÄÄÄÄÄÄ	ÄÄÄÄÄÄÄÄÄ	ÄÄÄÄÄÄÄÄÄ	ÄÄÄÄÄÄÄÄÄ	ÄÄÄÄÄÄÄÄÄ
o-210	U-238	8.862E-17	0.000E+00	1.741E-32	1.315E-30	1.276E-28	5.282E-27	7.826E-26	1.275E-25	1.236E-25
o-210	U-238	4.224E-16	0.000E+00	8.297E-32	6.270E-30	6.084E-28	2.518E-26	3.731E-25	6.076E-25	5.893E-25
o-210	U-238	1.317E-06	0.000E+00	2.588E-22	1.956E-20	1.897E-18	7.852E-17	1.163E-15	1.895E-15	1.838E-15
o-210	U-238	2.767E-10	0.000E+00	5.435E-26	4.108E-24	3.985E-22	1.649E-20	2.444E-19	3.980E-19	3.860E-19
o-210	U-238	2.633E-10	0.000E+00	5.171E-26	3.908E-24	3.792E-22	1.569E-20	2.325E-19	3.787E-19	3.673E-19
o-210	U-238	5.530E-14	0.000E+00	1.086E-29	8.209E-28	7.964E-26	3.296E-24	4.884E-23	7.954E-23	7.715E-23
o-210	U-238	2.636E-13	0.000E+00	5.178E-29	3.913E-27	3.796E-25	1.571E-23	2.328E-22	3.791E-22	3.677E-22
o-210	äS(j):		0.000E+00	1.462E-06	4.028E-06	9.971E-06	1.292E-05	2.551E-06	4.752E-09	2.884E-11
a-226	Ra-226	1.899E-08	6.932E-07	6.713E-07	6.296E-07	5.030E-07	2.648E-07	2.802E-08	4.580E-11	8.084E-21
a-226	Ra-226	2.100E-04	7.663E-03	7.421E-03	6.960E-03	5.560E-03	2.927E-03	3.098E-04	5.063E-07	8.936E-17
a-226	äS(j):		7.664E-03	7.422E-03	6.961E-03	5.561E-03	2.927E-03	3.098E 04	5.064E 07	8.937E-17
a-226	Ra-226	2.771E-10	1.012E-08	9.796E-09	9.188E-09	7.340E-09	3.864E-09	4.090E-10	6.684E-13	1.180E-22
a-226	Ra-226	3.989E-12	1.456E-10	1.410E-10	1.322E-10	1.056E-10	5.561E-11	5.886E-12	9.621E-15	1.698E-24
a-226	äS(j):		1.026E-08	9.937E-09	9.320E-09	7.445E-09	3.919E-09	4.148E-10	6.780E-13	1.197E-22
o-210	Ra-226	3.989E-12	0.000E+00	4.356E-12	1.200E-11	2.971E-11	3.849E-11	7.599E-12	1.407E-14	2.487E-24
o-210	Ra-226	3.795E-12	0.000E+00	4.144E-12	1.142E-11	2.826E-11	3.662E-11	7.230E-12	1.339E-14	2.366E-24
o-210	Ra-226	7.972E-16	0.000E+00	8.705E-16	2.398E-15	5.937E-15	7.691E-15	1.519E-15	2.812E-18	4.970E-28
o-210	Ra-226	3.800E-15	0.000E+00	4.149E-15	1.143E-14	2.830E-14	3.666E-14	7.239E-15	1.340E-17	2.369E-27
o-210	U-234	1.899E-08	0.000E+00	5.298E-18	1.341E-16	3.973E-15	5.800E-14	3.376E-13	4.283E-13	4.149E-13
o-210	U-234	3.989E-12	0.000E+00	1.113E-21	2.817E-20	8.344E-19	1.218E-17	7.090E-17	8.996E-17	8.715E-17
o-210	U-234	3.795E-12	0.000E+00	1.059E-21	2.680E-20	7.939E-19	1.159E-17	6.746E-17	8.559E-17	8.291E-17
o-210	U-234	7.972E-16	0.000E+00	2.224E-25	5.629E-24	1.667E-22	2.435E-21	1.417E-20	1.798E-20	1.742E-20
o-210	U-234	3.800E-15	0.000E+00	1.060E-24	2.683E-23	7.948E-22	1.161E-20	6.754E-20	8.569E-20	8.301E-20
o-210	U-238	3.039E-11	0.000E+00	5.969E-27	4.511E-25	4.377E-23	1.811E-21	2.684E-20	4.371E-20	4.240E-20
o-210	U-238	6.383E-15	0.000E+00	1.254E-30	9.475E-29	9.193E-27	3.804E-25	5.637E-24	9.181E-24	8.905E-24
o-210	U-238	6.073E-15	0.000E+00	1.193E-30	9.015E-29	8.746E-27	3.620E-25	5.363E-24	8.735E-24	8.472E-24
o-210	U-238	1.276E-18	0.000E+00	2.506E-34	1.893E-32	1.837E-30	7.603E-29	1.127E-27	1.835E-27	1.780E-27
o-210	U-238	6.080E-18	0.000E+00	1.194E-33	9.026E-32	8.757E-30	3.624E-28	5.370E-27	8.745E-27	8.483E-27
o-210	U-238	1.896E-08	0.000E+00	3.725E-24	2.815E-22	2.731E-20	1.130E-18	1.675E-17	2.727E-17	2.645E-17
o-210	U-238	3.983E-12	0.000E+00	7.824E-28	5.912E-26	5.736E-24	2.374E-22	3.518E-21	5.729E-21	5.557E-21
o-210	U-238	3.789E-12	0.000E+00	7.444E-28	5.625E-26	5.458E-24	2.259E-22	3.347E-21	5.450E-21	5.287E-21
o-210	U-238	7.959E-16	0.000E+00	1.563E-31	1.182E-29	1.146E-27	4.744E-26	7.029E-25	1.145E-24	1.110E-24
o-210	U-238	3.794E-15	0.000E+00	7.453E-31	5.632E-29	5.464E-27	2.261E-25	3.351E-24	5.457E-24	5.293E-24
o-210	äS(j):		0.000E+00	8.506E-12	2.343E-11	5.801E-11	7.520E-11	1.518E-11	4.560E-13	4.151E-13
a-226	Ra-226	1.998E-04	7.291E-03	7.061E-03	6.622E-03	5.290E-03	2.785E-03	2.948E-04	4.817E-07	8.502E-17
a-226	Ra-226	2.637E-10	9.624E-09	9.320E-09	8.741E-09	6.983E-09	3.676E-09	3.891E-10	6.359E-13	1.122E-22
a-226	U-234	1.998E-04	0.000E+00	5.392E-12	4.613E-11	4.306E-10	2.414E-09	6.873E-09	7.700E-09	7.457E-09
a-226	U-234	2.637E-10	0.000E+00	7.117E-18	6.089E-17	5.684E-16	3.187E-15	9.072E-15	1.016E-14	9.843E-15
a-226	U-234	3.795E-12	0.000E+00	1.024E-19	8.765E-19	8.182E-18	4.587E-17	1.306E-16	1.463E-16	1.417E-16
a-226	U-238	3.196E-07	0.000E+00	8.081E-21	2.055E-19	6.180E-18	9.385E-17	5.963E-16	7.864E-16	7.619E-16
a-226	U-238	4.219E-13	0.000E+00	1.067E-26	2.712E-25	8.158E-24	1.239E-22	7.872E-22	1.038E-21	1.006E-21
a-226	U-238	6.073E-15	0.000E+00	1.535E-28	3.904E-27	1.174E-25	1.783E-24	1.133E-23	1.494E-23	1.448E-23
a-226	U-238	1.994E-04	0.000E+00	5.042E-18	1.282E-16	3.856E-15	5.856E-14	3.721E-13	4.907E-13	4.755E-13
a-226	U-238	2.633E-10	0.000E+00	6.656E-24	1.692E-22	5.090E-21	7.730E-20	4.912E-19	6.477E-19	6.276E-19
a-226	U-238	3.789E-12	0.000E+00	9.581E-26	2.436E-24	7.327E-23	1.113E-21	7.070E-21	9.323E-21	9.034E-21
a-226	äS(j):		7.291E-03	7.061E-03	6.622E-03	5.290E-03	2.785E-03	2.948E-04	4.894E-07	7.457E-09

ummary : Park Ranger Ingestion
ile : C:\USERS\CLAUDE\DOCUMENTS\0 GKP DOSE\RESRAD CW\GKP PARK RANGER-INGESTION.RAD

Individual Nuclide Soil Concentration
Parent Nuclide and Branch Fraction Indicated

uclide (j)	Parent (i)	THF(i)	S(j,t), pCi/g t= 0.000E+00	1.000E+00	3.000E+00	1.000E+01	3.000E+01	1.000E+02	3.000E+02	1.000E+03
ÄÄÄÄÄÄ	ÄÄÄÄÄÄÄ	ÄÄÄÄÄÄÄÄÄ	ÄÄÄÄÄÄÄÄÄ	ÄÄÄÄÄÄÄÄÄ	ÄÄÄÄÄÄÄÄÄ	ÄÄÄÄÄÄÄÄÄ	ÄÄÄÄÄÄÄÄÄ	ÄÄÄÄÄÄÄÄÄ	ÄÄÄÄÄÄÄÄÄ	ÄÄÄÄÄÄÄÄÄ
a-226	Ra-226	3.795E-12	1.385E-10	1.342E-10	1.258E-10	1.005E-10	5.291E-11	5.600E-12	9.153E-15	1.615E-24
a-226	Ra-226	4.196E-08	1.531E-06	1.483E-06	1.391E-06	1.111E-06	5.849E-07	6.191E-08	1.012E-10	1.786E-20
a-226	äS(j):		1.532E-06	1.483E-06	1.391E-06	1.111E-06	5.850E-07	6.192E-08	1.012E-10	1.786E-20
a-226	Ra-226	5.538E-14	2.022E-12	1.958E-12	1.836E-12	1.467E-12	7.721E-13	8.173E-14	1.336E-16	2.357E-26
a-226	Ra-226	7.972E-16	2.910E-14	2.818E-14	2.643E-14	2.111E-14	1.111E-14	1.176E-15	1.923E-18	3.393E-28
a-226	äS(j):		2.051E-12	1.986E-12	1.862E-12	1.488E-12	7.832E-13	8.290E-14	1.355E-16	2.391E-26
a-226	Ra-226	2.000E-07	7.300E-06	7.070E-06	6.630E-06	5.297E-06	2.788E-06	2.951E-07	4.823E-10	8.513E-20
a-226	Ra-226	2.640E-13	9.636E-12	9.332E-12	8.752E-12	6.991E-12	3.680E-12	3.896E-13	6.367E-16	1.124E-25
a-226	U-234	2.000E-07	0.000E+00	5.398E-15	4.619E-14	4.311E-13	2.417E-12	6.881E-12	7.709E-12	7.466E-12
a-226	U-234	2.640E-13	0.000E+00	7.126E-21	6.097E-20	5.691E-19	3.191E-18	9.083E-18	1.010E-17	9.855E-18
a-226	U-234	3.800E-15	0.000E+00	1.026E-22	8.776E-22	8.192E-21	4.593E-20	1.307E-19	1.465E-19	1.418E-19
a-226	U-238	3.200E-10	0.000E+00	8.091E-24	2.057E-22	6.188E-21	9.396E-20	5.971E-19	7.873E-19	7.629E-19
a-226	U-238	4.224E-16	0.000E+00	1.068E-29	2.715E-28	8.168E-27	1.240E-25	7.881E-25	1.039E-24	1.007E-24
a-226	U-238	6.080E-18	0.000E+00	1.537E-31	3.909E-30	1.176E-28	1.785E-27	1.134E-26	1.496E-26	1.449E-26
a-226	U-238	1.997E-07	0.000E+00	5.048E-21	1.284E-19	3.861E-18	5.863E-17	3.726E-16	4.913E-16	4.760E-16
a-226	U-238	2.636E-13	0.000E+00	6.664E-27	1.694E-25	5.097E-24	7.739E-23	4.918E-22	6.485E-22	6.284E-22
a-226	U-238	3.794E-15	0.000E+00	9.592E-29	2.439E-27	7.336E-26	1.114E-24	7.079E-24	9.335E-24	9.045E-24
a-226	äS(j):		7.300E-06	7.070E-06	6.630E-06	5.297E-06	2.788E-06	2.951E-07	4.900E-10	7.466E-12
a-226	Ra-226	3.800E-15	1.387E-13	1.343E-13	1.260E-13	1.006E-13	5.298E-14	5.607E-15	9.164E-18	1.617E-27
n-232	Th-232	1.000E+00	2.400E+00	2.400E+00	2.400E+00	2.399E+00	2.397E+00	2.391E+00	2.373E+00	2.313E+00
a-228	Th-232	1.000E+00	0.000E+00	2.684E-01	6.968E-01	1.486E+00	1.879E+00	1.894E+00	1.880E+00	1.832E+00
n-228	Th-232	1.000E+00	0.000E+00	4.430E-02	2.891E-01	1.222E+00	1.865E+00	1.894E+00	1.880E+00	1.832E+00
-234	U-234	9.996E-01	1.389E+01	1.329E+01	1.217E+01	8.925E+00	3.683E+00	1.662E-01	2.380E-05	8.354E-19
-234	U-234	1.319E-06	1.834E-05	1.755E-05	1.606E-05	1.178E-05	4.862E-06	2.194E-07	3.141E-11	1.103E-24
-234	U-238	1.599E-03	0.000E+00	6.005E-08	1.649E-07	4.032E-07	4.992E-07	7.511E-08	3.227E-11	3.779E-24
-234	U-238	2.111E-09	0.000E+00	7.927E-14	2.177E-13	5.322E-13	6.589E-13	9.914E-14	4.259E-17	4.988E-30
-234	U-238	3.039E-11	0.000E+00	1.141E-15	3.133E-15	7.661E-15	9.484E-15	1.427E-15	6.131E-19	7.180E-32
-234	U-238	3.359E-07	0.000E+00	1.261E-11	3.463E-11	8.469E-11	1.048E-10	1.578E-11	6.777E-15	7.938E-28
-234	U-238	4.434E-13	0.000E+00	1.665E-17	4.572E-17	1.118E-16	1.384E-16	2.082E-17	8.946E-21	1.048E-33
-234	U-238	6.383E-15	0.000E+00	2.396E-19	6.580E-19	1.609E-18	1.992E-18	2.998E-19	1.288E-22	1.508E-35
-234	U-238	3.196E-07	0.000E+00	1.200E-11	3.295E-11	8.058E-11	9.975E-11	1.501E-11	6.448E-15	7.552E-28
-234	U-238	4.219E-13	0.000E+00	1.584E-17	4.350E-17	1.064E-16	1.317E-16	1.981E-17	8.511E-21	9.969E-34
-234	U-238	6.073E-15	0.000E+00	2.280E-19	6.261E-19	1.531E-18	1.895E-18	2.852E-19	1.225E-22	1.435E-35
-234	U-238	6.713E-11	0.000E+00	2.521E-15	6.921E-15	1.692E-14	2.095E-14	3.153E-15	1.354E-18	1.586E-31
-234	U-238	8.862E-17	0.000E+00	3.327E-21	9.136E-21	2.234E-20	2.766E-20	4.162E-21	1.788E-24	2.094E-37
-234	U-238	1.276E-18	0.000E+00	4.789E-23	1.315E-22	3.216E-22	3.981E-22	5.990E-23	2.573E-26	3.014E-39
-234	U-238	3.200E-10	0.000E+00	1.201E-14	3.299E-14	8.067E-14	9.987E-14	1.503E-14	6.456E-18	7.561E-31
-234	U-238	4.224E-16	0.000E+00	1.586E-20	4.355E-20	1.065E-19	1.318E-19	1.984E-20	8.522E-24	9.981E-37
-234	U-238	6.080E-18	0.000E+00	2.283E-22	6.268E-22	1.533E-21	1.898E-21	2.855E-22	1.227E-25	1.437E-38
-234	U-238	9.980E-01	0.000E+00	3.747E-05	1.029E-04	2.516E-04	3.115E-04	4.687E-05	2.013E-08	2.358E-21
-234	U-238	1.317E-06	0.000E+00	4.946E-11	1.358E-10	3.321E-10	4.111E-10	6.187E-11	2.658E-14	3.113E-27
-234	U-238	1.896E-08	0.000E+00	7.119E-13	1.955E-12	4.780E-12	5.918E-12	8.905E-13	3.825E-16	4.480E-29

ummary : Park Ranger Ingestion
ile : C:\USERS\CLAUDE\DOCUMENTS\0 GKP DOSE\RESRAD CW\GKP PARK RANGER-INGESTION.RAD

Individual Nuclide Soil Concentration
Parent Nuclide and Branch Fraction Indicated

uclide (j)	Parent (i)	THF(i)	S(j,t), pCi/g t= 0.000E+00	1.000E+00	3.000E+00	1.000E+01	3.000E+01	1.000E+02	3.000E+02	1.000E+03
ÄÄÄÄÄ	ÄÄÄÄÄÄ	ÄÄÄÄÄÄÄÄÄ	ÄÄÄÄÄÄÄÄÄ	ÄÄÄÄÄÄÄÄÄ	ÄÄÄÄÄÄÄÄÄ	ÄÄÄÄÄÄÄÄÄ	ÄÄÄÄÄÄÄÄÄ	ÄÄÄÄÄÄÄÄÄ	ÄÄÄÄÄÄÄÄÄ	ÄÄÄÄÄÄÄÄÄ
-234	U-238	2.096E-04	0.000E+00	7.871E-09	2.161E-08	5.285E-08	6.542E-08	9.844E-09	4.229E-12	4.953E-25
-234	U-238	2.767E-10	0.000E+00	1.039E-14	2.853E-14	6.976E-14	8.636E-14	1.299E-14	5.582E-18	6.538E-31
-234	U-238	3.983E-12	0.000E+00	1.495E-16	4.106E-16	1.004E-15	1.243E-15	1.870E-16	8.035E-20	9.411E-33
-234	U-238	1.994E-04	0.000E+00	7.488E-09	2.056E-08	5.028E-08	6.225E-08	9.366E-09	4.024E-12	4.712E-25
-234	U-238	2.633E-10	0.000E+00	9.884E-15	2.714E-14	6.637E-14	8.216E-14	1.236E-14	5.311E-18	6.220E-31
-234	U-238	3.789E-12	0.000E+00	1.423E-16	3.907E-16	9.553E-16	1.183E-15	1.780E-16	7.645E-20	8.954E-33
-234	U-238	4.189E-08	0.000E+00	1.573E-12	4.319E-12	1.056E-11	1.307E-11	1.967E-12	8.451E-16	9.898E-29
-234	U-238	5.530E-14	0.000E+00	2.076E-18	5.701E-18	1.394E-17	1.726E-17	2.597E-18	1.116E-21	1.307E-34
-234	U-238	7.959E-16	0.000E+00	2.988E-20	8.206E-20	2.007E-19	2.484E-19	3.738E-20	1.606E-23	1.881E-36
-234	U-238	1.997E-07	0.000E+00	7.497E-12	2.059E-11	5.034E-11	6.232E-11	9.378E-12	4.028E-15	4.718E-28
-234	U-238	2.636E-13	0.000E+00	9.896E-18	2.717E-17	6.645E-17	8.226E-17	1.238E-17	5.318E-21	6.228E-34
-234	U-238	3.794E-15	0.000E+00	1.424E-19	3.911E-19	9.565E-19	1.184E-18	1.782E-19	7.654E-23	8.965E-36
-234	äS(j):		1.389E+01	1.329E+01	1.217E+01	8.926E+00	3.683E+00	1.663E-01	2.382E-05	8.377E-19
a-230	U-234	9.996E-01	0.000E+00	1.250E-04	3.589E-04	1.032E-03	2.120E-03	2.842E-03	2.850E-03	2.759E-03
a-230	U-234	1.319E-06	0.000E+00	1.650E-10	4.738E-10	1.362E-09	2.798E-09	3.751E-09	3.762E-09	3.642E-09
a-230	U-234	1.899E-08	0.000E+00	2.375E-12	6.819E-12	1.961E-11	4.028E-11	5.400E-11	5.415E-11	5.243E-11
a-230	U-234	2.100E-04	0.000E+00	2.625E-08	7.539E-08	2.168E-07	4.452E-07	5.969E-07	5.986E-07	5.796E-07
a-230	U-234	2.771E-10	0.000E+00	3.465E-14	9.951E-14	2.862E-13	5.877E-13	7.879E-13	7.902E-13	7.650E-13
a-230	U-234	3.989E-12	0.000E+00	4.988E-16	1.432E-15	4.119E-15	8.460E-15	1.134E-14	1.137E-14	1.101E-14
a-230	U-234	1.998E-04	0.000E+00	2.497E-08	7.172E-08	2.063E-07	4.236E-07	5.679E-07	5.695E-07	5.514E-07
a-230	U-234	2.637E-10	0.000E+00	3.297E-14	9.468E-14	2.723E-13	5.592E-13	7.497E-13	7.518E-13	7.279E-13
a-230	U-234	3.795E-12	0.000E+00	4.745E-16	1.363E-15	3.919E-15	8.049E-15	1.079E-14	1.082E-14	1.048E-14
a-230	U-234	4.196E-08	0.000E+00	5.246E-12	1.507E-11	4.332E-11	8.898E-11	1.193E-10	1.196E-10	1.158E-10
a-230	U-234	5.538E-14	0.000E+00	6.924E-18	1.989E-17	5.719E-17	1.175E-16	1.575E-16	1.579E-16	1.529E-16
a-230	U-234	7.972E-16	0.000E+00	9.967E-20	2.862E-19	8.231E-19	1.691E-18	2.267E-18	2.273E-18	2.201E-18
a-230	U-234	2.000E-07	0.000E+00	2.501E-11	7.181E-11	2.065E-10	4.241E-10	5.686E-10	5.702E-10	5.521E-10
a-230	U-234	2.640E-13	0.000E+00	3.301E-17	9.479E-17	2.726E-16	5.599E-16	7.506E-16	7.527E-16	7.287E-16
a-230	U-234	3.800E-15	0.000E+00	4.751E-19	1.364E-18	3.924E-18	8.058E-18	1.080E-17	1.083E-17	1.049E-17
a-230	U-238	1.599E-03	0.000E+00	2.802E-13	2.378E-12	2.160E-11	1.128E-10	2.748E-10	2.912E-10	2.820E-10
a-230	U-238	2.111E-09	0.000E+00	3.699E-19	3.139E-18	2.851E-17	1.489E-16	3.627E-16	3.844E-16	3.722E-16
a-230	U-238	3.039E-11	0.000E+00	5.324E-21	4.519E-20	4.104E-19	2.143E-18	5.221E-18	5.533E-18	5.357E-18
a-230	U-238	3.359E-07	0.000E+00	5.885E-17	4.995E-16	4.537E-15	2.369E-14	5.771E-14	6.117E-14	5.922E-14
a-230	U-238	4.434E-13	0.000E+00	7.769E-23	6.594E-22	5.989E-21	3.127E-20	7.618E-20	8.074E-20	7.817E-20
a-230	U-238	6.383E-15	0.000E+00	1.118E-24	9.491E-24	8.621E-23	4.501E-22	1.097E-21	1.162E-21	1.125E-21
a-230	U-238	3.196E-07	0.000E+00	5.600E-17	4.753E-16	4.317E-15	2.254E-14	5.491E-14	5.820E-14	5.635E-14
a-230	U-238	4.219E-13	0.000E+00	7.391E-23	6.274E-22	5.698E-21	2.975E-20	7.248E-20	7.682E-20	7.438E-20
a-230	U-238	6.073E-15	0.000E+00	1.064E-24	9.030E-24	8.202E-23	4.282E-22	1.043E-21	1.106E-21	1.071E-21
a-230	U-238	6.713E-11	0.000E+00	1.176E-20	9.983E-20	9.067E-19	4.734E-18	1.153E-17	1.222E-17	1.183E-17
a-230	U-238	8.862E-17	0.000E+00	1.553E-26	1.318E-25	1.197E-24	6.249E-24	1.522E-23	1.614E-23	1.562E-23
a-230	U-238	1.276E-18	0.000E+00	2.235E-28	1.897E-27	1.723E-26	8.995E-26	2.191E-25	2.323E-25	2.249E-25
a-230	U-238	3.200E-10	0.000E+00	5.606E-20	4.759E-19	4.322E-18	2.257E-17	5.498E-17	5.827E-17	5.641E-17
a-230	U-238	4.224E-16	0.000E+00	7.400E-26	6.281E-25	5.705E-24	2.979E-23	7.257E-23	7.691E-23	7.447E-23
a-230	U-238	6.080E-18	0.000E+00	1.065E-27	9.041E-27	8.212E-26	4.288E-25	1.045E-24	1.107E-24	1.072E-24
a-230	U-238	9.980E-01	0.000E+00	1.748E-10	1.484E-09	1.348E-08	7.038E-08	1.715E-07	1.817E-07	1.759E-07
a-230	U-238	1.317E-06	0.000E+00	2.308E-16	1.959E-15	1.779E-14	9.290E-14	2.263E-13	2.399E-13	2.322E-13
a-230	U-238	1.896E-08	0.000E+00	3.322E-18	2.820E-17	2.561E-16	1.337E-15	3.258E-15	3.453E-15	3.343E-15
a-230	U-238	2.096E-04	0.000E+00	3.673E-14	3.117E-13	2.831E-12	1.478E-11	3.601E-11	3.817E-11	3.695E-11
a-230	U-238	2.767E-10	0.000E+00	4.848E-20	4.115E-19	3.737E-18	1.951E-17	4.754E-17	5.038E-17	4.878E-17

ummary : Park Ranger Ingestion
ile : C:\USERS\CLAUDE\DOCUMENTS\0 GKP DOSE\RESRAD CW\GKP PARK RANGER-INGESTION.RAD

Individual Nuclide Soil Concentration
Parent Nuclide and Branch Fraction Indicated

uclide (j)	Parent (i)	THF(i)	S(j,t), pCi/g t= 0.000E+00	1.000E+00	3.000E+00	1.000E+01	3.000E+01	1.000E+02	3.000E+02	1.000E+03
ÄÄÄÄÄ	ÄÄÄÄÄÄÄ	ÄÄÄÄÄÄÄÄÄ	ÄÄÄÄÄÄÄÄÄ	ÄÄÄÄÄÄÄÄÄ	ÄÄÄÄÄÄÄÄÄ	ÄÄÄÄÄÄÄÄÄ	ÄÄÄÄÄÄÄÄÄ	ÄÄÄÄÄÄÄÄÄ	ÄÄÄÄÄÄÄÄÄ	ÄÄÄÄÄÄÄÄÄ
n-230	U-238	3.983E-12	0.000E+00	6.978E-22	5.923E-21	5.379E-20	2.809E-19	6.843E-19	7.252E-19	7.021E-19
n-230	U-238	1.994E-04	0.000E+00	3.494E-14	2.966E-13	2.694E-12	1.406E-11	3.426E-11	3.631E-11	3.516E-11
n-230	U-238	2.633E-10	0.000E+00	4.612E-20	3.915E-19	3.556E-18	1.856E-17	4.523E-17	4.794E-17	4.641E-17
n-230	U-238	3.789E-12	0.000E+00	6.639E-22	5.635E-21	5.118E-20	2.672E-19	6.510E-19	6.900E-19	6.680E-19
n-230	U-238	4.189E-08	0.000E+00	7.339E-18	6.229E-17	5.658E-16	2.954E-15	7.197E-15	7.628E-15	7.385E-15
n-230	U-238	5.530E-14	0.000E+00	9.688E-24	8.223E-23	7.468E-22	3.899E-21	9.500E-21	1.007E-20	9.748E-21
n-230	U-238	7.959E-16	0.000E+00	1.394E-25	1.184E-24	1.075E-23	5.613E-23	1.367E-22	1.449E-22	1.403E-22
n-230	U-238	1.997E-07	0.000E+00	3.498E-17	2.969E-16	2.697E-15	1.408E-14	3.431E-14	3.636E-14	3.520E-14
n-230	U-238	2.636E-13	0.000E+00	4.618E-23	3.920E-22	3.560E-21	1.859E-20	4.528E-20	4.799E-20	4.647E-20
n-230	U-238	3.794E-15	0.000E+00	6.647E-25	5.642E-24	5.124E-23	2.675E-22	6.518E-22	6.908E-22	6.688E-22
n-230	äS(j):		0.000E+00	1.250E-04	3.591E-04	1.033E-03	2.121E-03	2.843E-03	2.851E-03	2.761E-03
-234	U-234	1.899E-08	2.640E-07	2.526E-07	2.312E-07	1.696E-07	6.998E-08	3.159E-09	4.522E-13	1.587E-26
-234	U-234	2.100E-04	2.918E-03	2.792E-03	2.556E-03	1.875E-03	7.736E-04	3.492E-05	4.999E-09	1.755E-22
-234	äS(j):		2.919E-03	2.792E-03	2.556E-03	1.875E-03	7.737E-04	3.492E-05	4.999E-09	1.755E-22
a-226	U-234	2.100E-04	0.000E+00	5.667E-12	4.849E-11	4.526E-10	2.538E-09	7.224E-09	8.093E-09	7.837E-09
a-226	U-234	3.989E-12	0.000E+00	1.077E-19	9.213E-19	8.600E-18	4.821E-17	1.373E-16	1.538E-16	1.489E-16
a-226	U-238	3.359E-07	0.000E+00	8.493E-21	2.160E-19	6.496E-18	9.864E-17	6.268E-16	8.265E-16	8.008E-16
a-226	U-238	4.434E-13	0.000E+00	1.121E-26	2.851E-25	8.574E-24	1.302E-22	8.274E-22	1.091E-21	1.057E-21
a-226	U-238	6.383E-15	0.000E+00	1.614E-28	4.103E-27	1.234E-25	1.874E-24	1.191E-23	1.570E-23	1.522E-23
a-226	U-238	2.096E-04	0.000E+00	5.300E-18	1.348E-16	4.053E-15	6.155E-14	3.911E-13	5.158E-13	4.997E-13
a-226	U-238	2.767E-10	0.000E+00	6.996E-24	1.779E-22	5.350E-21	8.125E-20	5.163E-19	6.808E-19	6.596E-19
a-226	U-238	3.983E-12	0.000E+00	1.007E-25	2.560E-24	7.701E-23	1.169E-21	7.431E-21	9.799E-21	9.495E-21
a-226	äS(j):		0.000E+00	5.667E-12	4.849E-11	4.526E-10	2.538E-09	7.224E-09	8.094E-09	7.838E-09
-234	U-234	2.771E-10	3.852E-09	3.686E-09	3.373E-09	2.475E-09	1.021E-09	4.609E-11	6.598E-15	2.316E-28
-234	U-234	3.989E-12	5.545E-11	5.305E-11	4.856E-11	3.562E-11	1.470E-11	6.634E-13	9.498E-17	3.334E-30
-234	äS(j):		3.908E-09	3.739E-09	3.422E-09	2.510E-09	1.036E-09	4.676E-11	6.693E-15	2.349E-28
a-226	U-234	2.771E-10	0.000E+00	7.480E-18	6.400E-17	5.974E-16	3.350E-15	9.535E-15	1.068E-14	1.035E-14
-234	U-234	1.998E-04	2.777E-03	2.656E-03	2.431E-03	1.784E-03	7.360E-04	3.322E-05	4.756E-09	1.669E-22
-234	U-234	2.637E-10	3.665E-09	3.506E-09	3.209E-09	2.354E-09	9.715E-10	4.385E-11	6.278E-15	2.204E-28
-234	äS(j):		2.777E-03	2.656E-03	2.431E-03	1.784E-03	7.360E-04	3.322E-05	4.756E-09	1.669E-22
-234	U-234	3.795E-12	5.276E-11	5.047E-11	4.620E-11	3.389E-11	1.398E-11	6.312E-13	9.036E-17	3.172E-30
-234	U-234	4.196E-08	5.832E-07	5.580E-07	5.107E-07	3.746E-07	1.546E-07	6.978E-09	9.989E-13	3.506E-26
-234	äS(j):		5.833E-07	5.580E-07	5.107E-07	3.747E-07	1.546E-07	6.979E-09	9.990E-13	3.507E-26
a-226	U-234	4.196E-08	0.000E+00	1.132E-15	9.690E-15	9.045E-14	5.071E-13	1.444E-12	1.617E-12	1.566E-12
a-226	U-234	7.972E-16	0.000E+00	2.152E-23	1.841E-22	1.719E-21	9.635E-21	2.743E-20	3.073E-20	2.976E-20
a-226	U-238	6.713E-11	0.000E+00	1.697E-24	4.316E-23	1.298E-21	1.971E-20	1.253E-19	1.652E-19	1.600E-19
a-226	U-238	8.862E-17	0.000E+00	2.240E-30	5.697E-29	1.713E-27	2.602E-26	1.653E-25	2.180E-25	2.113E-25
a-226	U-238	1.276E-18	0.000E+00	3.225E-32	8.200E-31	2.466E-29	3.745E-28	2.380E-27	3.138E-27	3.041E-27
a-226	U-238	4.189E-08	0.000E+00	1.059E-21	2.693E-20	8.100E-19	1.230E-17	7.816E-17	1.031E-16	9.987E-17
a-226	U-238	5.530E-14	0.000E+00	1.398E-27	3.555E-26	1.069E-24	1.624E-23	1.032E-22	1.360E-22	1.318E-22
a-226	U-238	7.959E-16	0.000E+00	2.012E-29	5.117E-28	1.539E-26	2.337E-25	1.485E-24	1.958E-24	1.897E-24
a-226	äS(j):		0.000E+00	1.132E-15	9.690E-15	9.045E-14	5.071E-13	1.444E-12	1.617E-12	1.566E-12

ummary : Park Ranger Ingestion
ile : C:\USERS\CLAUDE\DOCUMENTS\0 GKP DOSE\RESRAD CW\GKP PARK RANGER-INGESTION.RAD

Individual Nuclide Soil Concentration
Parent Nuclide and Branch Fraction Indicated

uclide (j)	Parent (i)	THF(i)	S(j,t), pCi/g t= 0.000E+00	1.000E+00	3.000E+00	1.000E+01	3.000E+01	1.000E+02	3.000E+02	1.000E+03
ÄÄÄÄÄ	ÄÄÄÄÄÄ	ÄÄÄÄÄÄÄÄÄ	ÄÄÄÄÄÄÄÄÄ	ÄÄÄÄÄÄÄÄÄ	ÄÄÄÄÄÄÄÄÄ	ÄÄÄÄÄÄÄÄÄ	ÄÄÄÄÄÄÄÄÄ	ÄÄÄÄÄÄÄÄÄ	ÄÄÄÄÄÄÄÄÄ	ÄÄÄÄÄÄÄÄÄ
-234	U-234	5.538E-14	7.698E-13	7.365E-13	6.741E-13	4.945E-13	2.041E-13	9.211E-15	1.319E-18	4.629E-32
-234	U-234	7.972E-16	1.108E-14	1.060E-14	9.703E-15	7.118E-15	2.937E-15	1.326E-16	1.898E-20	6.662E-34
-234	äS(j):		7.809E-13	7.471E-13	6.838E-13	5.016E-13	2.070E-13	9.344E-15	1.338E-18	4.695E-32
a-226	U-234	5.538E-14	0.000E+00	1.495E-21	1.279E-20	1.194E-19	6.694E-19	1.906E-18	2.135E-18	2.067E-18
-234	U-234	2.000E-07	2.780E-06	2.660E-06	2.434E-06	1.786E-06	7.369E-07	3.326E-08	4.762E-12	1.671E-25
-234	U-234	2.640E-13	3.670E-12	3.511E-12	3.213E-12	2.357E-12	9.727E-13	4.391E-14	6.285E-18	2.206E-31
-234	äS(j):		2.780E-06	2.660E-06	2.434E-06	1.786E-06	7.369E-07	3.326E-08	4.762E-12	1.671E-25
-234	U-234	3.800E-15	5.282E-14	5.053E-14	4.625E-14	3.393E-14	1.400E-14	6.320E-16	9.047E-20	3.176E-33
-235	U-235	9.835E-01	8.261E-01	7.904E-01	7.234E-01	5.307E-01	2.190E-01	9.887E-03	1.416E-06	4.981E-20
-235	U-235	2.722E-03	2.286E-03	2.187E-03	2.002E-03	1.469E-03	6.061E-04	2.736E-05	3.920E-09	1.379E-22
-235	äS(j):		8.284E-01	7.925E-01	7.254E-01	5.322E-01	2.196E-01	9.914E-03	1.420E-06	4.995E-20
a-231	U-235	9.835E-01	0.000E+00	1.672E-05	4.592E-05	1.123E-04	1.390E-04	2.090E-05	8.961E-09	1.043E-21
a-231	U-235	2.722E-03	0.000E+00	4.628E-08	1.271E-07	3.107E-07	3.846E-07	5.784E-08	2.480E-11	2.886E-24
a-231	U-235	1.376E-02	0.000E+00	2.340E-07	6.425E-07	1.571E-06	1.944E-06	2.924E-07	1.254E-10	1.459E-23
a-231	U-235	3.809E-05	0.000E+00	6.476E-10	1.778E-09	4.348E-09	5.382E-09	8.093E-10	3.470E-13	4.038E-26
a-231	U-235	8.257E-07	0.000E+00	1.404E-11	3.855E-11	9.426E-11	1.167E-10	1.755E-11	7.523E-15	8.755E-28
a-231	U-235	2.285E-09	0.000E+00	3.886E-14	1.067E-13	2.609E-13	3.229E-13	4.856E-14	2.082E-17	2.423E-30
a-231	äS(j):		0.000E+00	1.700E-05	4.669E-05	1.142E-04	1.413E-04	2.125E-05	9.111E-09	1.060E-21
c-227	U-235	9.835E-01	0.000E+00	2.577E-07	1.994E-06	1.324E-05	3.070E-05	6.123E-06	2.826E-09	3.370E-22
c-227	U-235	2.722E-03	0.000E+00	7.134E-10	5.518E-09	3.665E-08	8.495E-08	1.695E-08	7.821E-12	9.327E-25
c-227	U-235	1.376E-02	0.000E+00	3.606E-09	2.790E-08	1.853E-07	4.295E-07	8.568E-08	3.954E-11	4.715E-24
c-227	äS(j):		0.000E+00	4.320E-09	3.341E-08	2.219E-07	5.144E-07	1.026E-07	4.736E-11	5.648E-24
-235	U-235	1.376E-02	1.156E-02	1.106E-02	1.012E-02	7.426E-03	3.064E-03	1.383E-04	1.982E-08	6.969E-22
-235	U-235	3.809E-05	3.199E-05	3.061E-05	2.801E-05	2.055E-05	8.481E-06	3.829E-07	5.484E-11	1.929E-24
-235	äS(j):		1.159E-02	1.109E-02	1.015E-02	7.446E-03	3.073E-03	1.387E-04	1.987E-08	6.989E-22
c-227	U-235	3.809E-05	0.000E+00	9.981E-12	7.721E-11	5.128E-10	1.189E-09	2.371E-10	1.094E-13	1.305E-26
c-227	U-235	8.257E-07	0.000E+00	2.164E-13	1.674E-12	1.112E-11	2.577E-11	5.141E-12	2.372E-15	2.829E-28
c-227	äS(j):		0.000E+00	1.020E-11	7.888E-11	5.239E-10	1.214E-09	2.423E-10	1.118E-13	1.333E-26
-235	U-235	8.257E-07	6.936E-07	6.636E-07	6.074E-07	4.456E-07	1.839E-07	8.301E-09	1.189E-12	4.182E-26
-235	U-235	2.285E-09	1.920E-09	1.837E-09	1.681E-09	1.233E-09	5.089E-10	2.297E-11	3.291E-15	1.157E-28
-235	äS(j):		6.955E-07	6.654E-07	6.090E-07	4.468E-07	1.844E-07	8.324E-09	1.192E-12	4.193E-26
c-227	U-235	2.285E-09	0.000E+00	5.989E-16	4.633E-15	3.077E-14	7.133E-14	1.423E-14	6.566E-18	7.831E-31
-238	U-238	5.450E-07	7.575E-06	7.248E-06	6.634E-06	4.866E-06	2.008E-06	9.066E-08	1.299E-11	4.567E-25
-238	U-238	1.599E-03	2.223E-02	2.127E-02	1.947E-02	1.428E-02	5.893E-03	2.661E-04	3.811E-08	1.340E-21
-238	äS(j):		2.224E-02	2.128E-02	1.947E-02	1.429E-02	5.895E-03	2.662E-04	3.812E-08	1.341E-21
-238	U-238	2.111E-09	2.934E-08	2.807E-08	2.570E-08	1.885E-08	7.779E-09	3.512E-10	5.030E-14	1.769E-27

ummary : Park Ranger Ingestion
ile : C:\USERS\CLAUDE\DOCUMENTS\0 GKP DOSE\RESRAD CW\GKP PARK RANGER-INGESTION.RAD

Individual Nuclide Soil Concentration
Parent Nuclide and Branch Fraction Indicated

uclide (j)	Parent (i)	THF(i)	S(j,t), pCi/g t= 0.000E+00	1.000E+00	3.000E+00	1.000E+01	3.000E+01	1.000E+02	3.000E+02	1.000E+03
ÄÄÄÄÄÄ	ÄÄÄÄÄÄÄ	ÄÄÄÄÄÄÄÄÄ	ÄÄÄÄÄÄÄÄÄ	ÄÄÄÄÄÄÄÄÄ	ÄÄÄÄÄÄÄÄÄ	ÄÄÄÄÄÄÄÄÄ	ÄÄÄÄÄÄÄÄÄ	ÄÄÄÄÄÄÄÄÄ	ÄÄÄÄÄÄÄÄÄ	ÄÄÄÄÄÄÄÄÄ
-238	U-238	3.039E-11	4.224E-10	4.041E-10	3.699E-10	2.713E-10	1.120E-10	5.055E-12	7.241E-16	2.547E-29
-238	äS(j):		2.977E-08	2.848E-08	2.607E-08	1.912E-08	7.891E-09	3.563E-10	5.103E-14	1.795E-27
-238	U-238	3.359E-07	4.669E-06	4.467E-06	4.089E-06	3.000E-06	1.238E-06	5.588E-08	8.005E-12	2.815E-25
-238	U-238	4.434E-13	6.164E-12	5.897E-12	5.397E-12	3.960E-12	1.634E-12	7.377E-14	1.057E-17	3.716E-31
-238	äS(j):		4.669E-06	4.467E-06	4.089E-06	3.000E-06	1.238E-06	5.588E-08	8.005E-12	2.815E-25
-238	U-238	6.383E-15	8.872E-14	8.488E-14	7.769E-14	5.699E-14	2.352E-14	1.062E-15	1.521E-19	5.349E-33
-238	U-238	3.196E-07	4.443E-06	4.250E-06	3.890E-06	2.854E-06	1.178E-06	5.317E-08	7.616E-12	2.679E-25
-238	äS(j):		4.443E-06	4.250E-06	3.890E-06	2.854E-06	1.178E-06	5.317E-08	7.616E-12	2.679E-25
-238	U-238	4.219E-13	5.864E-12	5.610E-12	5.135E-12	3.767E-12	1.555E-12	7.018E-14	1.005E-17	3.536E-31
-238	U-238	6.073E-15	8.441E-14	8.076E-14	7.392E-14	5.422E-14	2.238E-14	1.010E-15	1.447E-19	5.089E-33
-238	äS(j):		5.949E-12	5.691E-12	5.209E-12	3.821E-12	1.577E-12	7.119E-14	1.020E-17	3.587E-31
-238	U-238	6.713E-11	9.331E-10	8.927E-10	8.171E-10	5.994E-10	2.474E-10	1.117E-11	1.600E-15	5.626E-29
-238	U-238	8.862E-17	1.232E-15	1.178E-15	1.079E-15	7.913E-16	3.265E-16	1.474E-17	2.112E-21	7.427E-35
-238	äS(j):		9.331E-10	8.927E-10	8.171E-10	5.994E-10	2.474E-10	1.117E-11	1.600E-15	5.626E-29
-238	U-238	1.276E-18	1.773E-17	1.696E-17	1.553E-17	1.139E-17	4.700E-18	2.122E-19	3.039E-23	1.069E-36
-238	U-238	3.200E-10	4.448E-09	4.255E-09	3.895E-09	2.857E-09	1.179E-09	5.323E-11	7.625E-15	2.682E-28
-238	äS(j):		4.448E-09	4.255E-09	3.895E-09	2.857E-09	1.179E-09	5.323E-11	7.625E-15	2.682E-28
-238	U-238	4.224E-16	5.871E-15	5.617E-15	5.141E-15	3.772E-15	1.556E-15	7.027E-17	1.007E-20	3.540E-34
-238	U-238	6.080E-18	8.451E-17	8.085E-17	7.400E-17	5.429E-17	2.240E-17	1.011E-18	1.449E-22	5.095E-36
-238	äS(j):		5.956E-15	5.698E-15	5.215E-15	3.826E-15	1.579E-15	7.128E-17	1.021E-20	3.591E-34
-238	U-238	9.980E-01	1.387E+01	1.327E+01	1.215E+01	8.911E+00	3.677E+00	1.660E-01	2.378E-05	8.364E-19
-238	U-238	1.317E-06	1.831E-05	1.752E-05	1.603E-05	1.176E-05	4.854E-06	2.191E-07	3.139E-11	1.104E-24
-238	äS(j):		1.387E+01	1.327E+01	1.215E+01	8.911E+00	3.677E+00	1.660E-01	2.378E-05	8.364E-19
-238	U-238	1.896E-08	2.636E-07	2.522E-07	2.308E-07	1.693E-07	6.987E-08	3.154E-09	4.518E-13	1.589E-26
-238	U-238	2.096E-04	2.914E-03	2.788E-03	2.551E-03	1.872E-03	7.724E-04	3.487E-05	4.995E-09	1.757E-22
-238	äS(j):		2.914E-03	2.788E-03	2.552E-03	1.872E-03	7.725E-04	3.488E-05	4.995E-09	1.757E-22
-238	U-238	2.767E-10	3.846E-09	3.680E-09	3.368E-09	2.471E-09	1.020E-09	4.603E-11	6.593E-15	2.319E-28
-238	U-238	3.983E-12	5.536E-11	5.296E-11	4.848E-11	3.556E-11	1.468E-11	6.626E-13	9.490E-17	3.338E-30
-238	äS(j):		3.902E-09	3.733E-09	3.416E-09	2.506E-09	1.034E-09	4.669E-11	6.688E-15	2.352E-28
-238	U-238	1.994E-04	2.772E-03	2.652E-03	2.428E-03	1.781E-03	7.349E-04	3.318E-05	4.752E-09	1.671E-22
-238	U-238	2.633E-10	3.659E-09	3.501E-09	3.204E-09	2.351E-09	9.701E-10	4.379E-11	6.273E-15	2.206E-28
-238	äS(j):		2.772E-03	2.652E-03	2.428E-03	1.781E-03	7.349E-04	3.318E-05	4.752E-09	1.671E-22
-238	U-238	3.789E-12	5.267E-11	5.039E-11	4.612E-11	3.384E-11	1.396E-11	6.304E-13	9.029E-17	3.176E-30
-238	U-238	4.189E-08	5.823E-07	5.571E-07	5.099E-07	3.741E-07	1.544E-07	6.969E-09	9.982E-13	3.511E-26
-238	äS(j):		5.823E-07	5.571E-07	5.099E-07	3.741E-07	1.544E-07	6.969E-09	9.983E-13	3.511E-26
-238	U-238	5.530E-14	7.686E-13	7.353E-13	6.731E-13	4.938E-13	2.038E-13	9.199E-15	1.318E-18	4.634E-32
-238	U-238	7.959E-16	1.106E-14	1.058E-14	9.688E-15	7.107E-15	2.933E-15	1.324E-16	1.897E-20	6.670E-34
-238	äS(j):		7.797E-13	7.459E-13	6.827E-13	5.009E-13	2.067E-13	9.331E-15	1.337E-18	4.701E-32

ummary : Park Ranger Ingestion

ile : C:\USERS\CLAUDE\DOCUMENTS\0 GKP DOSE\RESRAD CW\GKP PARK RANGER-INGESTION.RAD

Individual Nuclide Soil Concentration

Parent Nuclide and Branch Fraction Indicated

uclide (j)	Parent (i)	THF(i)	S(j,t), pCi/g t= 0.000E+00	1.000E+00	3.000E+00	1.000E+01	3.000E+01	1.000E+02	3.000E+02	1.000E+03
ÄÄÄÄÄÄ	ÄÄÄÄÄÄÄ	ÄÄÄÄÄÄÄÄÄ	ÄÄÄÄÄÄÄÄÄ	ÄÄÄÄÄÄÄÄÄ	ÄÄÄÄÄÄÄÄÄ	ÄÄÄÄÄÄÄÄÄ	ÄÄÄÄÄÄÄÄÄ	ÄÄÄÄÄÄÄÄÄ	ÄÄÄÄÄÄÄÄÄ	ÄÄÄÄÄÄÄÄÄ
-238	U-238	1.997E-07	2.776E-06	2.655E-06	2.430E-06	1.783E-06	7.358E-07	3.322E-08	4.758E-12	1.673E 25
-238	U-238	2.636E-13	3.664E-12	3.505E-12	3.208E-12	2.354E-12	9.712E-13	4.385E-14	6.281E-18	2.209E-31
-238	äS(j):		2.776E-06	2.655E-06	2.430E-06	1.783E-06	7.358E-07	3.322E-08	4.758E-12	1.673E-25
-238	U-238	3.794E-15	5.274E-14	5.045E-14	4.618E-14	3.388E-14	1.398E-14	6.311E-16	9.040E-20	3.180E-33
íííííí	ííííííí	ííííííííí	ííííííííí	ííííííííí	ííííííííí	ííííííííí	ííííííííí	ííííííííí	ííííííííí	ííííííííí

HF(i) is the thread fraction of the parent nuclide.

ESCALC.EXE execution time = 38.32 seconds

ummary : GKP Maintenance Worker Inhalation
ile : C:\USERS\CLAUDE\DOCUMENTS\0 GKP DOSE\RESRAD CW\GKP PARK RANGER - INHALATION.RAD

Table of Contents
ÄÄÄÄÄÄÄÄÄÄÄÄÄÄÄÄ

Part I: Mixture Sums and Single Radionuclide Guidelines
íí

ummary : GKP Maintenance Worker Inhalation
ile : C:\USERS\CLAUDE\DOCUMENTS\0 GKP DOSE\RESRAD CW\GKP PARK RANGER - INHALATION.RAD

Dose Conversion Factor (and Related) Parameter Summary
Dose Library: FGR 11

enu	Parameter	Current Value#	Base Case*	Parameter Name
-1	DCF's for external ground radiation, (mrem/yr)/(pCi/g)			
-1	Ac-227 (Source: FGR 12)	4.951E-04	4.951E-04	DCF1(1)
-1	Ac-228 (Source: FGR 12)	5.978E+00	5.978E+00	DCF1(2)
-1	At-218 (Source: FGR 12)	5.847E-03	5.847E-03	DCF1(3)
-1	At-219 (Source: no data)	0.000E+00	-2.000E+00	DCF1(4)
-1	Bi-210 (Source: FGR 12)	3.606E-03	3.606E-03	DCF1(5)
-1	Bi-211 (Source: FGR 12)	2.559E-01	2.559E-01	DCF1(6)
-1	Bi-212 (Source: FGR 12)	1.171E+00	1.171E+00	DCF1(7)
-1	Bi-214 (Source: FGR 12)	9.808E+00	9.808E+00	DCF1(8)
-1	Bi-215 (Source: no data)	0.000E+00	-2.000E+00	DCF1(9)
-1	Fr-223 (Source: FGR 12)	1.980E-01	1.980E-01	DCF1(10)
-1	Hg-206 (Source: no data)	0.000E+00	-2.000E+00	DCF1(11)
-1	Pa-231 (Source: FGR 12)	1.906E-01	1.906E-01	DCF1(12)
-1	Pa-234 (Source: FGR 12)	1.155E+01	1.155E+01	DCF1(13)
-1	Pa-234m (Source: FGR 12)	8.967E-02	8.967E-02	DCF1(14)
-1	Pb-210 (Source: FGR 12)	2.447E-03	2.447E-03	DCF1(15)
-1	Pb-211 (Source: FGR 12)	3.064E-01	3.064E-01	DCF1(16)
-1	Pb-212 (Source: FGR 12)	7.043E-01	7.043E-01	DCF1(17)
-1	Pb-214 (Source: FGR 12)	1.341E+00	1.341E+00	DCF1(18)
-1	Po-210 (Source: FGR 12)	5.231E-05	5.231E-05	DCF1(19)
-1	Po-211 (Source: FGR 12)	4.764E-02	4.764E-02	DCF1(20)
-1	Po-212 (Source: FGR 12)	0.000E+00	0.000E+00	DCF1(21)
-1	Po-214 (Source: FGR 12)	5.138E-04	5.138E-04	DCF1(22)
-1	Po-215 (Source: FGR 12)	1.016E-03	1.016E-03	DCF1(23)
-1	Po-216 (Source: FGR 12)	1.042E-04	1.042E-04	DCF1(24)
-1	Po-218 (Source: FGR 12)	5.642E-05	5.642E-05	DCF1(25)
-1	Ra-223 (Source: FGR 12)	6.034E-01	6.034E-01	DCF1(26)
-1	Ra-224 (Source: FGR 12)	5.119E-02	5.119E-02	DCF1(27)
-1	Ra-226 (Source: FGR 12)	3.176E-02	3.176E-02	DCF1(28)
-1	Ra-228 (Source: FGR 12)	0.000E+00	0.000E+00	DCF1(29)
-1	Rn-218 (Source: FGR 12)	4.540E-03	4.540E-03	DCF1(30)
-1	Rn-219 (Source: FGR 12)	3.083E-01	3.083E-01	DCF1(31)
-1	Rn-220 (Source: FGR 12)	2.298E-03	2.298E-03	DCF1(32)
-1	Rn-222 (Source: FGR 12)	2.354E-03	2.354E-03	DCF1(33)
-1	Th-227 (Source: FGR 12)	5.212E-01	5.212E-01	DCF1(34)
-1	Th-228 (Source: FGR 12)	7.940E-03	7.940E-03	DCF1(35)
-1	Th-230 (Source: FGR 12)	1.209E-03	1.209E-03	DCF1(36)
-1	Th-231 (Source: FGR 12)	3.643E-02	3.643E-02	DCF1(37)
-1	Th-232 (Source: FGR 12)	5.212E-04	5.212E-04	DCF1(38)
-1	Th-234 (Source: FGR 12)	2.410E-02	2.410E-02	DCF1(39)
-1	Tl-206 (Source: FGR 12)	7.697E-03	7.697E-03	DCF1(40)
-1	Tl-207 (Source: FGR 12)	1.980E-02	1.980E-02	DCF1(41)
-1	Tl-208 (Source: FGR 12)	2.298E+01	2.298E+01	DCF1(42)
-1	Tl-210 (Source: no data)	0.000E+00	-2.000E+00	DCF1(43)
-1	U-234 (Source: FGR 12)	4.017E-04	4.017E-04	DCF1(44)
-1	U-235 (Source: FGR 12)	7.211E-01	7.211E-01	DCF1(45)
-1	U-238 (Source: FGR 12)	1.031E-04	1.031E-04	DCF1(46)
-1	Dose conversion factors for inhalation, mrem/pCi:			
-1	Ac-227+D	6.724E+00	6.700E+00	DCF2(1)

Dose Conversion Factor (and Related) Parameter Summary (continued)
Dose Library: FGR 11

enu	Parameter	Current Value#	Base Case*	Parameter Name
-1	Ac-227+D1	6.724E+00	6.700E+00	DCF2(2)
-1	Ac-227+D2	6.708E+00	6.700E+00	DCF2(3)
-1	Ac-227+D3	6.708E+00	6.700E+00	DCF2(4)
-1	Ac-227+D4	6.700E+00	6.700E+00	DCF2(5)
-1	Ac-227+D5	6.700E+00	6.700E+00	DCF2(6)
-1	Pa-231	1.280E+00	1.280E+00	DCF2(7)
-1	Pb-210+D	2.320E-02	1.360E-02	DCF2(13)
-1	Pb-210+D1	1.380E-02	1.360E-02	DCF2(14)
-1	Pb-210+D2	1.360E-02	1.360E-02	DCF2(15)
-1	Ra-226+D	8.594E-03	8.580E-03	DCF2(16)
-1	Ra-226+D1	8.594E-03	8.580E-03	DCF2(19)
-1	Ra-226+D2	8.587E-03	8.580E-03	DCF2(22)
-1	Ra-226+D3	8.587E-03	8.580E-03	DCF2(25)
-1	Ra-226+D4	8.580E-03	8.580E-03	DCF2(28)
-1	Ra-228+D	5.078E-03	4.770E-03	DCF2(31)
-1	Th-228+D	3.454E-01	3.420E-01	DCF2(32)
-1	Th-230	3.260E-01	3.260E-01	DCF2(33)
-1	Th-232	1.640E+00	1.640E+00	DCF2(48)
-1	U-234	1.320E-01	1.320E-01	DCF2(49)
-1	U-235+D	1.230E-01	1.230E-01	DCF2(64)
-1	U-238	1.180E-01	1.180E-01	DCF2(70)
-1	U-238+D	1.180E-01	1.180E-01	DCF2(71)
-1	U-238+D1	1.180E-01	1.180E-01	DCF2(86)
-1	Dose conversion factors for ingestion, mrem/pCi:			
-1	Ac-227+D	1.480E-02	1.410E-02	DCF3(1)
-1	Ac-227+D1	1.480E-02	1.410E-02	DCF3(2)
-1	Ac-227+D2	1.477E-02	1.410E-02	DCF3(3)
-1	Ac-227+D3	1.477E-02	1.410E-02	DCF3(4)
-1	Ac-227+D4	1.411E-02	1.410E-02	DCF3(5)
-1	Ac-227+D5	1.411E-02	1.410E-02	DCF3(6)
-1	Pa-231	1.060E-02	1.060E-02	DCF3(7)
-1	Pb-210+D	7.276E-03	5.370E-03	DCF3(13)
-1	Pb-210+D1	5.376E-03	5.370E-03	DCF3(14)
-1	Pb-210+D2	5.370E-03	5.370E-03	DCF3(15)
-1	Ra-226+D	1.321E-03	1.320E-03	DCF3(16)
-1	Ra-226+D1	1.321E-03	1.320E-03	DCF3(19)
-1	Ra-226+D2	1.320E-03	1.320E-03	DCF3(22)
-1	Ra-226+D3	1.320E-03	1.320E-03	DCF3(25)
-1	Ra-226+D4	1.320E-03	1.320E-03	DCF3(28)
-1	Ra-228+D	1.442E-03	1.440E-03	DCF3(31)
-1	Th-228+D	8.086E-04	3.960E-04	DCF3(32)
-1	Th-230	5.480E-04	5.480E-04	DCF3(33)
-1	Th-232	2.730E-03	2.730E-03	DCF3(48)
-1	U-234	2.830E-04	2.830E-04	DCF3(49)
-1	U-235+D	2.673E-04	2.660E-04	DCF3(64)
-1	U-238	2.550E-04	2.550E-04	DCF3(70)
-1	U-238+D	2.709E-04	2.550E-04	DCF3(71)
-1	U-238+D1	2.687E-04	2.550E-04	DCF3(86)

Dose Conversion Factor (and Related) Parameter Summary (continued)
Dose Library: FGR 11

enu	Parameter	Current Value#	Base Case*	Parameter Name
-34	Food transfer factors:			
-34	Ac-227+D , plant/soil concentration ratio, dimensionless	2.500E-03	2.500E-03	RTF(1,1)
-34	Ac-227+D , beef/livestock-intake ratio, (pCi/kg)/(pCi/d)	2.000E-05	2.000E-05	RTF(1,2)
-34	Ac-227+D , milk/livestock-intake ratio, (pCi/L)/(pCi/d)	2.000E-05	2.000E-05	RTF(1,3)
-34				
-34	Ac-227+D1 , plant/soil concentration ratio, dimensionless	2.500E-03	2.500E-03	RTF(2,1)
-34	Ac-227+D1 , beef/livestock-intake ratio, (pCi/kg)/(pCi/d)	2.000E-05	2.000E-05	RTF(2,2)
-34	Ac-227+D1 , milk/livestock-intake ratio, (pCi/L)/(pCi/d)	2.000E-05	2.000E-05	RTF(2,3)
-34				
-34	Ac-227+D2 , plant/soil concentration ratio, dimensionless	2.500E-03	2.500E-03	RTF(3,1)
-34	Ac-227+D2 , beef/livestock-intake ratio, (pCi/kg)/(pCi/d)	2.000E-05	2.000E-05	RTF(3,2)
-34	Ac-227+D2 , milk/livestock-intake ratio, (pCi/L)/(pCi/d)	2.000E-05	2.000E-05	RTF(3,3)
-34				
-34	Ac-227+D3 , plant/soil concentration ratio, dimensionless	2.500E-03	2.500E-03	RTF(4,1)
-34	Ac-227+D3 , beef/livestock-intake ratio, (pCi/kg)/(pCi/d)	2.000E-05	2.000E-05	RTF(4,2)
-34	Ac-227+D3 , milk/livestock-intake ratio, (pCi/L)/(pCi/d)	2.000E-05	2.000E-05	RTF(4,3)
-34				
-34	Ac-227+D4 , plant/soil concentration ratio, dimensionless	2.500E-03	2.500E-03	RTF(5,1)
-34	Ac-227+D4 , beef/livestock-intake ratio, (pCi/kg)/(pCi/d)	2.000E-05	2.000E-05	RTF(5,2)
-34	Ac-227+D4 , milk/livestock-intake ratio, (pCi/L)/(pCi/d)	2.000E-05	2.000E-05	RTF(5,3)
-34				
-34	Ac-227+D5 , plant/soil concentration ratio, dimensionless	2.500E-03	2.500E-03	RTF(6,1)
-34	Ac-227+D5 , beef/livestock-intake ratio, (pCi/kg)/(pCi/d)	2.000E-05	2.000E-05	RTF(6,2)
-34	Ac-227+D5 , milk/livestock-intake ratio, (pCi/L)/(pCi/d)	2.000E-05	2.000E-05	RTF(6,3)
-34				
-34	Pa-231 , plant/soil concentration ratio, dimensionless	1.000E-02	1.000E-02	RTF(7,1)
-34	Pa-231 , beef/livestock-intake ratio, (pCi/kg)/(pCi/d)	5.000E-03	5.000E-03	RTF(7,2)
-34	Pa-231 , milk/livestock-intake ratio, (pCi/L)/(pCi/d)	5.000E-06	5.000E-06	RTF(7,3)
-34				
-34	Pb-210+D , plant/soil concentration ratio, dimensionless	1.000E-02	1.000E-02	RTF(13,1)
-34	Pb-210+D , beef/livestock-intake ratio, (pCi/kg)/(pCi/d)	8.000E-04	8.000E-04	RTF(13,2)
-34	Pb-210+D , milk/livestock-intake ratio, (pCi/L)/(pCi/d)	3.000E-04	3.000E-04	RTF(13,3)
-34				
-34	Pb-210+D1 , plant/soil concentration ratio, dimensionless	1.000E-02	1.000E-02	RTF(14,1)
-34	Pb-210+D1 , beef/livestock-intake ratio, (pCi/kg)/(pCi/d)	8.000E-04	8.000E-04	RTF(14,2)
-34	Pb-210+D1 , milk/livestock-intake ratio, (pCi/L)/(pCi/d)	3.000E-04	3.000E-04	RTF(14,3)
-34				
-34	Pb-210+D2 , plant/soil concentration ratio, dimensionless	1.000E-02	1.000E-02	RTF(15,1)
-34	Pb-210+D2 , beef/livestock-intake ratio, (pCi/kg)/(pCi/d)	8.000E-04	8.000E-04	RTF(15,2)
-34	Pb-210+D2 , milk/livestock-intake ratio, (pCi/L)/(pCi/d)	3.000E-04	3.000E-04	RTF(15,3)
-34				
-34	Ra-226+D , plant/soil concentration ratio, dimensionless	4.000E-02	4.000E-02	RTF(16,1)
-34	Ra-226+D , beef/livestock-intake ratio, (pCi/kg)/(pCi/d)	1.000E-03	1.000E-03	RTF(16,2)
-34	Ra-226+D , milk/livestock-intake ratio, (pCi/L)/(pCi/d)	1.000E-03	1.000E-03	RTF(16,3)
-34				
-34	Ra-226+D1 , plant/soil concentration ratio, dimensionless	4.000E-02	4.000E-02	RTF(19,1)
-34	Ra-226+D1 , beef/livestock-intake ratio, (pCi/kg)/(pCi/d)	1.000E-03	1.000E-03	RTF(19,2)
-34	Ra-226+D1 , milk/livestock-intake ratio, (pCi/L)/(pCi/d)	1.000E-03	1.000E-03	RTF(19,3)
-34				

Dose Conversion Factor (and Related) Parameter Summary (continued)

Dose Library: FGR 11

enu	Parameter	Current Value#	Base Case*	Parameter Name
-34	Ra-226+D2 , plant/soil concentration ratio, dimensionless	4.000E-02	4.000E-02	RTF(22,1)
-34	Ra-226+D2 , beef/livestock-intake ratio, (pCi/kg)/(pCi/d)	1.000E-03	1.000E-03	RTF(22,2)
-34	Ra-226+D2 , milk/livestock-intake ratio, (pCi/L)/(pCi/d)	1.000E-03	1.000E-03	RTF(22,3)
-34				
-34	Ra-226+D3 , plant/soil concentration ratio, dimensionless	4.000E-02	4.000E-02	RTF(25,1)
-34	Ra-226+D3 , beef/livestock-intake ratio, (pCi/kg)/(pCi/d)	1.000E-03	1.000E-03	RTF(25,2)
-34	Ra-226+D3 , milk/livestock-intake ratio, (pCi/L)/(pCi/d)	1.000E-03	1.000E-03	RTF(25,3)
-34				
-34	Ra-226+D4 , plant/soil concentration ratio, dimensionless	4.000E-02	4.000E-02	RTF(28,1)
-34	Ra-226+D4 , beef/livestock-intake ratio, (pCi/kg)/(pCi/d)	1.000E-03	1.000E-03	RTF(28,2)
-34	Ra-226+D4 , milk/livestock-intake ratio, (pCi/L)/(pCi/d)	1.000E-03	1.000E-03	RTF(28,3)
-34				
-34	Ra-228+D , plant/soil concentration ratio, dimensionless	4.000E-02	4.000E-02	RTF(31,1)
-34	Ra-228+D , beef/livestock-intake ratio, (pCi/kg)/(pCi/d)	1.000E-03	1.000E-03	RTF(31,2)
-34	Ra-228+D , milk/livestock-intake ratio, (pCi/L)/(pCi/d)	1.000E-03	1.000E-03	RTF(31,3)
-34				
-34	Th-228+D , plant/soil concentration ratio, dimensionless	1.000E-03	1.000E-03	RTF(32,1)
-34	Th-228+D , beef/livestock-intake ratio, (pCi/kg)/(pCi/d)	1.000E-04	1.000E-04	RTF(32,2)
-34	Th-228+D , milk/livestock-intake ratio, (pCi/L)/(pCi/d)	5.000E-06	5.000E-06	RTF(32,3)
-34				
-34	Th-230 , plant/soil concentration ratio, dimensionless	1.000E-03	1.000E-03	RTF(33,1)
-34	Th-230 , beef/livestock-intake ratio, (pCi/kg)/(pCi/d)	1.000E-04	1.000E-04	RTF(33,2)
-34	Th-230 , milk/livestock-intake ratio, (pCi/L)/(pCi/d)	5.000E-06	5.000E-06	RTF(33,3)
-34				
-34	Th-232 , plant/soil concentration ratio, dimensionless	1.000E-03	1.000E-03	RTF(48,1)
-34	Th-232 , beef/livestock-intake ratio, (pCi/kg)/(pCi/d)	1.000E-04	1.000E-04	RTF(48,2)
-34	Th-232 , milk/livestock-intake ratio, (pCi/L)/(pCi/d)	5.000E-06	5.000E-06	RTF(48,3)
-34				
-34	U-234 , plant/soil concentration ratio, dimensionless	2.500E-03	2.500E-03	RTF(49,1)
-34	U-234 , beef/livestock-intake ratio, (pCi/kg)/(pCi/d)	3.400E-04	3.400E-04	RTF(49,2)
-34	U-234 , milk/livestock-intake ratio, (pCi/L)/(pCi/d)	6.000E-04	6.000E-04	RTF(49,3)
-34				
-34	U-235+D , plant/soil concentration ratio, dimensionless	2.500E-03	2.500E-03	RTF(64,1)
-34	U-235+D , beef/livestock-intake ratio, (pCi/kg)/(pCi/d)	3.400E-04	3.400E-04	RTF(64,2)
-34	U-235+D , milk/livestock-intake ratio, (pCi/L)/(pCi/d)	6.000E-04	6.000E-04	RTF(64,3)
-34				
-34	U-238 , plant/soil concentration ratio, dimensionless	2.500E-03	2.500E-03	RTF(70,1)
-34	U-238 , beef/livestock-intake ratio, (pCi/kg)/(pCi/d)	3.400E-04	3.400E-04	RTF(70,2)
-34	U-238 , milk/livestock-intake ratio, (pCi/L)/(pCi/d)	6.000E-04	6.000E-04	RTF(70,3)
-34				
-34	U-238+D , plant/soil concentration ratio, dimensionless	2.500E-03	2.500E-03	RTF(71,1)
-34	U-238+D , beef/livestock-intake ratio, (pCi/kg)/(pCi/d)	3.400E-04	3.400E-04	RTF(71,2)
-34	U-238+D , milk/livestock-intake ratio, (pCi/L)/(pCi/d)	6.000E-04	6.000E-04	RTF(71,3)
-34				
-34	U-238+D1 , plant/soil concentration ratio, dimensionless	2.500E-03	2.500E-03	RTF(86,1)
-34	U-238+D1 , beef/livestock-intake ratio, (pCi/kg)/(pCi/d)	3.400E-04	3.400E-04	RTF(86,2)
-34	U-238+D1 , milk/livestock-intake ratio, (pCi/L)/(pCi/d)	6.000E-04	6.000E-04	RTF(86,3)
-34				

Dose Conversion Factor (and Related) Parameter Summary (continued)

Dose Library: FGR 11

enu	Parameter	Current Value#	Base Case*	Parameter Name
-5	Bioaccumulation factors, fresh water, L/kg:			
-5	Ac-227+D , fish	1.500E+01	1.500E+01	BIOFAC(1,1)
-5	Ac-227+D , crustacea and mollusks	1.000E+03	1.000E+03	BIOFAC(1,2)
-5				
-5	Ac-227+D1 , fish	1.500E+01	1.500E+01	BIOFAC(2,1)
-5	Ac-227+D1 , crustacea and mollusks	1.000E+03	1.000E+03	BIOFAC(2,2)
-5				
-5	Ac-227+D2 , fish	1.500E+01	1.500E+01	BIOFAC(3,1)
-5	Ac-227+D2 , crustacea and mollusks	1.000E+03	1.000E+03	BIOFAC(3,2)
-5				
-5	Ac-227+D3 , fish	1.500E+01	1.500E+01	BIOFAC(4,1)
-5	Ac-227+D3 , crustacea and mollusks	1.000E+03	1.000E+03	BIOFAC(4,2)
-5				
-5	Ac-227+D4 , fish	1.500E+01	1.500E+01	BIOFAC(5,1)
-5	Ac-227+D4 , crustacea and mollusks	1.000E+03	1.000E+03	BIOFAC(5,2)
-5				
-5	Ac-227+D5 , fish	1.500E+01	1.500E+01	BIOFAC(6,1)
-5	Ac-227+D5 , crustacea and mollusks	1.000E+03	1.000E+03	BIOFAC(6,2)
-5				
-5	Pa-231 , fish	1.000E+01	1.000E+01	BIOFAC(7,1)
-5	Pa-231 , crustacea and mollusks	1.100E+02	1.100E+02	BIOFAC(7,2)
-5				
-5	Pb-210+D , fish	3.000E+02	3.000E+02	BIOFAC(13,1)
-5	Pb-210+D , crustacea and mollusks	1.000E+02	1.000E+02	BIOFAC(13,2)
-5				
-5	Pb-210+D1 , fish	3.000E+02	3.000E+02	BIOFAC(14,1)
-5	Pb-210+D1 , crustacea and mollusks	1.000E+02	1.000E+02	BIOFAC(14,2)
-5				
-5	Pb-210+D2 , fish	3.000E+02	3.000E+02	BIOFAC(15,1)
-5	Pb-210+D2 , crustacea and mollusks	1.000E+02	1.000E+02	BIOFAC(15,2)
-5				
-5	Ra-226+D , fish	5.000E+01	5.000E+01	BIOFAC(16,1)
-5	Ra-226+D , crustacea and mollusks	2.500E+02	2.500E+02	BIOFAC(16,2)
-5				
-5	Ra-226+D1 , fish	5.000E+01	5.000E+01	BIOFAC(19,1)
-5	Ra-226+D1 , crustacea and mollusks	2.500E+02	2.500E+02	BIOFAC(19,2)
-5				
-5	Ra-226+D2 , fish	5.000E+01	5.000E+01	BIOFAC(22,1)
-5	Ra-226+D2 , crustacea and mollusks	2.500E+02	2.500E+02	BIOFAC(22,2)
-5				
-5	Ra-226+D3 , fish	5.000E+01	5.000E+01	BIOFAC(25,1)
-5	Ra-226+D3 , crustacea and mollusks	2.500E+02	2.500E+02	BIOFAC(25,2)
-5				
-5	Ra-226+D4 , fish	5.000E+01	5.000E+01	BIOFAC(28,1)
-5	Ra-226+D4 , crustacea and mollusks	2.500E+02	2.500E+02	BIOFAC(28,2)
-5				
-5	Ra-228+D , fish	5.000E+01	5.000E+01	BIOFAC(31,1)
-5	Ra-228+D , crustacea and mollusks	2.500E+02	2.500E+02	BIOFAC(31,2)
-5				

Dose Conversion Factor (and Related) Parameter Summary (continued)

Dose Library: FGR 11

enu	Parameter	Current Value#	Base Case*	Parameter Name
-5	Th-228+D , fish	1.000E+02	1.000E+02	BIOFAC(32,1)
-5	Th-228+D , crustacea and mollusks	5.000E+02	5.000E+02	BIOFAC(32,2)
-5				
-5	Th-230 , fish	1.000E+02	1.000E+02	BIOFAC(33,1)
-5	Th-230 , crustacea and mollusks	5.000E+02	5.000E+02	BIOFAC(33,2)
-5				
-5	Th-232 , fish	1.000E+02	1.000E+02	BIOFAC(48,1)
-5	Th-232 , crustacea and mollusks	5.000E+02	5.000E+02	BIOFAC(48,2)
-5				
-5	U-234 , fish	1.000E+01	1.000E+01	BIOFAC(49,1)
-5	U-234 , crustacea and mollusks	6.000E+01	6.000E+01	BIOFAC(49,2)
-5				
-5	U-235+D , fish	1.000E+01	1.000E+01	BIOFAC(64,1)
-5	U-235+D , crustacea and mollusks	6.000E+01	6.000E+01	BIOFAC(64,2)
-5				
-5	U-238 , fish	1.000E+01	1.000E+01	BIOFAC(70,1)
-5	U-238 , crustacea and mollusks	6.000E+01	6.000E+01	BIOFAC(70,2)
-5				
-5	U-238+D , fish	1.000E+01	1.000E+01	BIOFAC(71,1)
-5	U-238+D , crustacea and mollusks	6.000E+01	6.000E+01	BIOFAC(71,2)
-5				
-5	U-238+D1 , fish	1.000E+01	1.000E+01	BIOFAC(86,1)
-5	U-238+D1 , crustacea and mollusks	6.000E+01	6.000E+01	BIOFAC(86,2)
-5				

For DCF1(xxx) only, factors are for infinite depth & area. See ETFG table in Ground Pathway of Detailed Report.
Base Case means Default.Lib w/o Associate Nuclide contributions.

ummary : GKP Maintenance Worker Inhalation
ile : C:\USERS\CLAUDE\DOCUMENTS\0 GKP DOSE\RESRAD CW\GKP PARK RANGER - INHALATION.RAD

Site-Specific Parameter Summary

enu	Parameter	User Input	Default	Used by RESRAD (If different from user input)	Parameter Name
011	Area of contaminated zone (m**2)	2.000E+02	1.000E+04	---	AREA
011	Thickness of contaminated zone (m)	1.500E-01	2.000E+00	---	THICK0
011	Fraction of contamination that is submerged	0.000E+00	0.000E+00	---	SUBMFRACT
011	Length parallel to aquifer flow (m)	1.000E+02	1.000E+02	---	LCZPAQ
011	Basic radiation dose limit (mrem/yr)	2.500E+01	3.000E+01	---	BRDL
011	Time since placement of material (yr)	0.000E+00	0.000E+00	---	TI
011	Times for calculations (yr)	1.000E+00	1.000E+00	---	T(2)
011	Times for calculations (yr)	3.000E+00	3.000E+00	---	T(3)
011	Times for calculations (yr)	1.000E+01	1.000E+01	---	T(4)
011	Times for calculations (yr)	3.000E+01	3.000E+01	---	T(5)
011	Times for calculations (yr)	1.000E+02	1.000E+02	---	T(6)
011	Times for calculations (yr)	3.000E+02	3.000E+02	---	T(7)
011	Times for calculations (yr)	1.000E+03	1.000E+03	---	T(8)
011	Times for calculations (yr)	not used	0.000E+00	---	T(9)
011	Times for calculations (yr)	not used	0.000E+00	---	T(10)
012	Initial principal radionuclide (pCi/g): Ra-226	3.650E+01	0.000E+00	---	S1(16)
012	Initial principal radionuclide (pCi/g): Th-232	2.400E+00	0.000E+00	---	S1(48)
012	Initial principal radionuclide (pCi/g): U-234	1.390E+01	0.000E+00	---	S1(49)
012	Initial principal radionuclide (pCi/g): U-235	8.400E-01	0.000E+00	---	S1(64)
012	Initial principal radionuclide (pCi/g): U-238	1.390E+01	0.000E+00	---	S1(70)
012	Concentration in groundwater (pCi/L): Ra-226	not used	0.000E+00	---	W1(16)
012	Concentration in groundwater (pCi/L): Th-232	not used	0.000E+00	---	W1(48)
012	Concentration in groundwater (pCi/L): U-234	not used	0.000E+00	---	W1(49)
012	Concentration in groundwater (pCi/L): U-235	not used	0.000E+00	---	W1(64)
012	Concentration in groundwater (pCi/L): U-238	not used	0.000E+00	---	W1(70)
013	Cover depth (m)	0.000E+00	0.000E+00	---	COVER0
013	Density of cover material (g/cm**3)	not used	1.500E+00	---	DENSCV
013	Cover depth erosion rate (m/yr)	not used	1.000E-03	---	VCV
013	Density of contaminated zone (g/cm**3)	1.500E+00	1.500E+00	---	DENSCZ
013	Contaminated zone erosion rate (m/yr)	1.000E-03	1.000E-03	---	VCZ
013	Contaminated zone total porosity	4.000E-01	4.000E-01	---	TPCZ
013	Contaminated zone field capacity	2.000E-01	2.000E-01	---	FCCZ
013	Contaminated zone hydraulic conductivity (m/yr)	1.000E+01	1.000E+01	---	HCCZ
013	Contaminated zone b parameter	5.300E+00	5.300E+00	---	BCZ
013	Average annual wind speed (m/sec)	2.000E+00	2.000E+00	---	WIND
013	Humidity in air (g/m**3)	not used	8.000E+00	---	HUMID
013	Evapotranspiration coefficient	5.000E-01	5.000E-01	---	EVAPTR
013	Precipitation (m/yr)	1.000E+00	1.000E+00	---	PRECIP
013	Irrigation (m/yr)	2.000E-01	2.000E-01	---	RI
013	Irrigation mode	overhead	overhead	---	IDITCH
013	Runoff coefficient	2.000E-01	2.000E-01	---	RUNOFF
013	Watershed area for nearby stream or pond (m**2)	1.000E+06	1.000E+06	---	WAREA
013	Accuracy for water/soil computations	1.000E-03	1.000E-03	---	EPS
014	Density of saturated zone (g/cm**3)	1.500E+00	1.500E+00	---	DENSAQ
014	Saturated zone total porosity	4.000E-01	4.000E-01	---	TPSZ
014	Saturated zone effective porosity	2.000E-01	2.000E-01	---	EPSZ
014	Saturated zone field capacity	2.000E-01	2.000E-01	---	FCSZ

Site-Specific Parameter Summary (continued)

enu	Parameter	User Input	Default	Used by RESRAD (If different from user input)	Parameter Name
014	Saturated zone hydraulic conductivity (m/yr)	1.000E+02	1.000E+02	---	HCSZ
014	Saturated zone hydraulic gradient	2.000E-02	2.000E-02	---	HGWT
014	Saturated zone b parameter	5.300E+00	5.300E+00	---	BSZ
014	Water table drop rate (m/yr)	1.000E-03	1.000E-03	---	VWT
014	Well pump intake depth (m below water table)	1.000E+01	1.000E+01	---	DWIBWT
014	Model: Nondispersion (ND) or Mass-Balance (MB)	ND	ND	---	MODEL
014	Well pumping rate (m**3/yr)	2.500E+02	2.500E+02	---	UW
015	Number of unsaturated zone strata	1	1	---	NS
015	Unsat. zone 1, thickness (m)	4.000E+00	4.000E+00	---	H(1)
015	Unsat. zone 1, soil density (g/cm**3)	1.500E+00	1.500E+00	---	DENSUZ(1)
015	Unsat. zone 1, total porosity	4.000E-01	4.000E-01	---	TPUZ(1)
015	Unsat. zone 1, effective porosity	2.000E-01	2.000E-01	---	EPUZ(1)
015	Unsat. zone 1, field capacity	2.000E-01	2.000E-01	---	FCUZ(1)
015	Unsat. zone 1, soil-specific b parameter	5.300E+00	5.300E+00	---	BUZ(1)
015	Unsat. zone 1, hydraulic conductivity (m/yr)	1.000E+01	1.000E+01	---	HCUZ(1)
016	Distribution coefficients for Ra-226				
016	Contaminated zone (cm**3/g)	7.000E+01	7.000E+01	---	DCNUCC(16)
016	Unsaturated zone 1 (cm**3/g)	7.000E+01	7.000E+01	---	DCNUCU(16,1)
016	Saturated zone (cm**3/g)	7.000E+01	7.000E+01	---	DCNUCS(16)
016	Leach rate (/yr)	0.000E+00	0.000E+00	3.165E-02	ALEACH(16)
016	Solubility constant	0.000E+00	0.000E+00	not used	SOLUBK(16)
016	Distribution coefficients for Th-232				
016	Contaminated zone (cm**3/g)	6.000E+04	6.000E+04	---	DCNUCC(48)
016	Unsaturated zone 1 (cm**3/g)	6.000E+04	6.000E+04	---	DCNUCU(48,1)
016	Saturated zone (cm**3/g)	6.000E+04	6.000E+04	---	DCNUCS(48)
016	Leach rate (/yr)	0.000E+00	0.000E+00	3.704E-05	ALEACH(48)
016	Solubility constant	0.000E+00	0.000E+00	not used	SOLUBK(48)
016	Distribution coefficients for U-234				
016	Contaminated zone (cm**3/g)	5.000E+01	5.000E+01	---	DCNUCC(49)
016	Unsaturated zone 1 (cm**3/g)	5.000E+01	5.000E+01	---	DCNUCU(49,1)
016	Saturated zone (cm**3/g)	5.000E+01	5.000E+01	---	DCNUCS(49)
016	Leach rate (/yr)	0.000E+00	0.000E+00	4.426E-02	ALEACH(49)
016	Solubility constant	0.000E+00	0.000E+00	not used	SOLUBK(49)
016	Distribution coefficients for U-235				
016	Contaminated zone (cm**3/g)	5.000E+01	5.000E+01	---	DCNUCC(64)
016	Unsaturated zone 1 (cm**3/g)	5.000E+01	5.000E+01	---	DCNUCU(64,1)
016	Saturated zone (cm**3/g)	5.000E+01	5.000E+01	---	DCNUCS(64)
016	Leach rate (/yr)	0.000E+00	0.000E+00	4.426E-02	ALEACH(64)
016	Solubility constant	0.000E+00	0.000E+00	not used	SOLUBK(64)
016	Distribution coefficients for U-238				
016	Contaminated zone (cm**3/g)	5.000E+01	5.000E+01	---	DCNUCC(70)
016	Unsaturated zone 1 (cm**3/g)	5.000E+01	5.000E+01	---	DCNUCU(70,1)
016	Saturated zone (cm**3/g)	5.000E+01	5.000E+01	---	DCNUCS(70)
016	Leach rate (/yr)	0.000E+00	0.000E+00	4.426E-02	ALEACH(70)
016	Solubility constant	0.000E+00	0.000E+00	not used	SOLUBK(70)

Site-Specific Parameter Summary (continued)

enu	Parameter	User Input	Default	Used by RESRAD (If different from user input)	Parameter Name
016	Distribution coefficients for daughter Ac-227				
016	Contaminated zone (cm**3/g)	2.000E+01	2.000E+01	---	DCNUCC(1)
016	Unsaturated zone 1 (cm**3/g)	2.000E+01	2.000E+01	---	DCNUCU(1,1)
016	Saturated zone (cm**3/g)	2.000E+01	2.000E+01	---	DCNUCS(1)
016	Leach rate (/yr)	0.000E+00	0.000E+00	1.099E-01	ALEACH(1)
016	Solubility constant	0.000E+00	0.000E+00	not used	SOLUBK(1)
016	Distribution coefficients for daughter Pa-231				
016	Contaminated zone (cm**3/g)	5.000E+01	5.000E+01	---	DCNUCC(7)
016	Unsaturated zone 1 (cm**3/g)	5.000E+01	5.000E+01	---	DCNUCU(7,1)
016	Saturated zone (cm**3/g)	5.000E+01	5.000E+01	---	DCNUCS(7)
016	Leach rate (/yr)	0.000E+00	0.000E+00	4.426E-02	ALEACH(7)
016	Solubility constant	0.000E+00	0.000E+00	not used	SOLUBK(7)
016	Distribution coefficients for daughter Pb-210				
016	Contaminated zone (cm**3/g)	1.000E+02	1.000E+02	---	DCNUCC(13)
016	Unsaturated zone 1 (cm**3/g)	1.000E+02	1.000E+02	---	DCNUCU(13,1)
016	Saturated zone (cm**3/g)	1.000E+02	1.000E+02	---	DCNUCS(13)
016	Leach rate (/yr)	0.000E+00	0.000E+00	2.217E-02	ALEACH(13)
016	Solubility constant	0.000E+00	0.000E+00	not used	SOLUBK(13)
016	Distribution coefficients for daughter Ra-228				
016	Contaminated zone (cm**3/g)	7.000E+01	7.000E+01	---	DCNUCC(31)
016	Unsaturated zone 1 (cm**3/g)	7.000E+01	7.000E+01	---	DCNUCU(31,1)
016	Saturated zone (cm**3/g)	7.000E+01	7.000E+01	---	DCNUCS(31)
016	Leach rate (/yr)	0.000E+00	0.000E+00	3.165E-02	ALEACH(31)
016	Solubility constant	0.000E+00	0.000E+00	not used	SOLUBK(31)
016	Distribution coefficients for daughter Th-228				
016	Contaminated zone (cm**3/g)	6.000E+04	6.000E+04	---	DCNUCC(32)
016	Unsaturated zone 1 (cm**3/g)	6.000E+04	6.000E+04	---	DCNUCU(32,1)
016	Saturated zone (cm**3/g)	6.000E+04	6.000E+04	---	DCNUCS(32)
016	Leach rate (/yr)	0.000E+00	0.000E+00	3.704E-05	ALEACH(32)
016	Solubility constant	0.000E+00	0.000E+00	not used	SOLUBK(32)
016	Distribution coefficients for daughter Th-230				
016	Contaminated zone (cm**3/g)	6.000E+04	6.000E+04	---	DCNUCC(33)
016	Unsaturated zone 1 (cm**3/g)	6.000E+04	6.000E+04	---	DCNUCU(33,1)
016	Saturated zone (cm**3/g)	6.000E+04	6.000E+04	---	DCNUCS(33)
016	Leach rate (/yr)	0.000E+00	0.000E+00	3.704E-05	ALEACH(33)
016	Solubility constant	0.000E+00	0.000E+00	not used	SOLUBK(33)
017	Inhalation rate (m**3/yr)	8.400E+03	8.400E+03	---	INHALR
017	Mass loading for inhalation (g/m**3)	1.000E-04	1.000E-04	---	MLINH
017	Exposure duration	3.000E+01	3.000E+01	---	ED
017	Shielding factor, inhalation	4.000E-01	4.000E-01	---	SHF3
017	Shielding factor, external gamma	not used	7.000E-01	---	SHF1
017	Fraction of time spent indoors	0.000E+00	5.000E-01	---	FIND
017	Fraction of time spent outdoors (on site)	2.280E-01	2.500E-01	---	FOTD
017	Shape factor flag, external gamma	not used	1.000E+00	>0 shows circular AREA.	FS

Site-Specific Parameter Summary (continued)

enu	Parameter	User Input	Default	Used by RESRAD (If different from user input)	Parameter Name
017	Radii of shape factor array (used if FS = -1):				
017	Outer annular radius (m), ring 1:	not used	5.000E+01	---	RAD_SHAPE(1)
017	Outer annular radius (m), ring 2:	not used	7.071E+01	---	RAD_SHAPE(2)
017	Outer annular radius (m), ring 3:	not used	0.000E+00	---	RAD_SHAPE(3)
017	Outer annular radius (m), ring 4:	not used	0.000E+00	---	RAD_SHAPE(4)
017	Outer annular radius (m), ring 5:	not used	0.000E+00	---	RAD_SHAPE(5)
017	Outer annular radius (m), ring 6:	not used	0.000E+00	---	RAD_SHAPE(6)
017	Outer annular radius (m), ring 7:	not used	0.000E+00	---	RAD_SHAPE(7)
017	Outer annular radius (m), ring 8:	not used	0.000E+00	---	RAD_SHAPE(8)
017	Outer annular radius (m), ring 9:	not used	0.000E+00	---	RAD_SHAPE(9)
017	Outer annular radius (m), ring 10:	not used	0.000E+00	---	RAD_SHAPE(10)
017	Outer annular radius (m), ring 11:	not used	0.000E+00	---	RAD_SHAPE(11)
017	Outer annular radius (m), ring 12:	not used	0.000E+00	---	RAD_SHAPE(12)
017	Fractions of annular areas within AREA:				
017	Ring 1	not used	1.000E+00	---	FRACA(1)
017	Ring 2	not used	2.732E-01	---	FRACA(2)
017	Ring 3	not used	0.000E+00	---	FRACA(3)
017	Ring 4	not used	0.000E+00	---	FRACA(4)
017	Ring 5	not used	0.000E+00	---	FRACA(5)
017	Ring 6	not used	0.000E+00	---	FRACA(6)
017	Ring 7	not used	0.000E+00	---	FRACA(7)
017	Ring 8	not used	0.000E+00	---	FRACA(8)
017	Ring 9	not used	0.000E+00	---	FRACA(9)
017	Ring 10	not used	0.000E+00	---	FRACA(10)
017	Ring 11	not used	0.000E+00	---	FRACA(11)
017	Ring 12	not used	0.000E+00	---	FRACA(12)
018	Fruits, vegetables and grain consumption (kg/yr)	not used	1.600E+02	---	DIET(1)
018	Leafy vegetable consumption (kg/yr)	not used	1.400E+01	---	DIET(2)
018	Milk consumption (L/yr)	not used	9.200E+01	---	DIET(3)
018	Meat and poultry consumption (kg/yr)	not used	6.300E+01	---	DIET(4)
018	Fish consumption (kg/yr)	not used	5.400E+00	---	DIET(5)
018	Other seafood consumption (kg/yr)	not used	9.000E-01	---	DIET(6)
018	Soil ingestion rate (g/yr)	not used	3.650E+01	---	SOIL
018	Drinking water intake (L/yr)	not used	5.100E+02	---	DWI
018	Contamination fraction of drinking water	not used	1.000E+00	---	FDW
018	Contamination fraction of household water	1.000E+00	1.000E+00	---	FHHW
018	Contamination fraction of livestock water	not used	1.000E+00	---	FLW
018	Contamination fraction of irrigation water	not used	1.000E+00	---	FIRW
018	Contamination fraction of aquatic food	not used	5.000E-01	---	FR9
018	Contamination fraction of plant food	not used	-1	---	FPLANT
018	Contamination fraction of meat	not used	-1	---	FMEAT
018	Contamination fraction of milk	not used	-1	---	FMILK
019	Livestock fodder intake for meat (kg/day)	not used	6.800E+01	---	LFI5
019	Livestock fodder intake for milk (kg/day)	not used	5.500E+01	---	LFI6
019	Livestock water intake for meat (L/day)	not used	5.000E+01	---	LWI5
019	Livestock water intake for milk (L/day)	not used	1.600E+02	---	LWI6
019	Livestock soil intake (kg/day)	not used	5.000E-01	---	LSI

Site-Specific Parameter Summary (continued)

enu	Parameter	User Input	Default	Used by RESRAD (If different from user input)	Parameter Name
019	Mass loading for foliar deposition (g/m**3)	not used	1.000E-04	---	MLFD
019	Depth of soil mixing layer (m)	1.500E-01	1.500E-01	---	DM
019	Depth of roots (m)	not used	9.000E-01	---	DROOT
019	Drinking water fraction from ground water	not used	1.000E+00	---	FGWDW
019	Household water fraction from ground water	1.000E+00	1.000E+00	---	FGWHH
019	Livestock water fraction from ground water	not used	1.000E+00	---	FGWLW
019	Irrigation fraction from ground water	not used	1.000E+00	---	FGWIR
19B	Wet weight crop yield for Non-Leafy (kg/m**2)	not used	7.000E-01	---	YV(1)
19B	Wet weight crop yield for Leafy (kg/m**2)	not used	1.500E+00	---	YV(2)
19B	Wet weight crop yield for Fodder (kg/m**2)	not used	1.100E+00	---	YV(3)
19B	Growing Season for Non-Leafy (years)	not used	1.700E-01	---	TE(1)
19B	Growing Season for Leafy (years)	not used	2.500E-01	---	TE(2)
19B	Growing Season for Fodder (years)	not used	8.000E-02	---	TE(3)
19B	Translocation Factor for Non-Leafy	not used	1.000E-01	---	TIV(1)
19B	Translocation Factor for Leafy	not used	1.000E+00	---	TIV(2)
19B	Translocation Factor for Fodder	not used	1.000E+00	---	TIV(3)
19B	Dry Foliar Interception Fraction for Non-Leafy	not used	2.500E-01	---	RDRY(1)
19B	Dry Foliar Interception Fraction for Leafy	not used	2.500E-01	---	RDRY(2)
19B	Dry Foliar Interception Fraction for Fodder	not used	2.500E-01	---	RDRY(3)
19B	Wet Foliar Interception Fraction for Non-Leafy	not used	2.500E-01	---	RWET(1)
19B	Wet Foliar Interception Fraction for Leafy	not used	2.500E-01	---	RWET(2)
19B	Wet Foliar Interception Fraction for Fodder	not used	2.500E-01	---	RWET(3)
19B	Weathering Removal Constant for Vegetation	not used	2.000E+01	---	WLAM
14	C-12 concentration in water (g/cm**3)	not used	2.000E-05	---	C12WTR
14	C-12 concentration in contaminated soil (g/g)	not used	3.000E-02	---	C12CZ
14	Fraction of vegetation carbon from soil	not used	2.000E-02	---	CSOIL
14	Fraction of vegetation carbon from air	not used	9.800E-01	---	CAIR
14	C-14 evasion layer thickness in soil (m)	not used	3.000E-01	---	DMC
14	C-14 evasion flux rate from soil (1/sec)	not used	7.000E-07	---	EVSN
14	C-12 evasion flux rate from soil (1/sec)	not used	1.000E-10	---	REVSN
14	Fraction of grain in beef cattle feed	not used	8.000E-01	---	AVFG4
14	Fraction of grain in milk cow feed	not used	2.000E-01	---	AVFG5
TOR	Storage times of contaminated foodstuffs (days):				
TOR	Fruits, non-leafy vegetables, and grain	1.400E+01	1.400E+01	---	STOR_T(1)
TOR	Leafy vegetables	1.000E+00	1.000E+00	---	STOR_T(2)
TOR	Milk	1.000E+00	1.000E+00	---	STOR_T(3)
TOR	Meat and poultry	2.000E+01	2.000E+01	---	STOR_T(4)
TOR	Fish	7.000E+00	7.000E+00	---	STOR_T(5)
TOR	Crustacea and mollusks	7.000E+00	7.000E+00	---	STOR_T(6)
TOR	Well water	1.000E+00	1.000E+00	---	STOR_T(7)
TOR	Surface water	1.000E+00	1.000E+00	---	STOR_T(8)
TOR	Livestock fodder	4.500E+01	4.500E+01	---	STOR_T(9)
021	Thickness of building foundation (m)	not used	1.500E-01	---	FLOOR1
021	Bulk density of building foundation (g/cm**3)	not used	2.400E+00	---	DENSFL
021	Total porosity of the cover material	not used	4.000E-01	---	TPCV
021	Total porosity of the building foundation	not used	1.000E-01	---	TPFL

Site-Specific Parameter Summary (continued)

enu	Parameter	User Input	Default	Used by RESRAD (If different from user input)	Parameter Name
021	Volumetric water content of the cover material	not used	5.000E-02	---	PH2OCV
021	Volumetric water content of the foundation	not used	3.000E-02	---	PH2OFL
021	Diffusion coefficient for radon gas (m/sec):				
021	in cover material	not used	2.000E-06	---	DIFCV
021	in foundation material	not used	3.000E-07	---	DIFFL
021	in contaminated zone soil	2.000E-06	2.000E-06	---	DIFCZ
021	Radon vertical dimension of mixing (m)	2.000E+00	2.000E+00	---	HMIX
021	Average building air exchange rate (1/hr)	not used	5.000E-01	---	REXG
021	Height of the building (room) (m)	not used	2.500E+00	---	HRM
021	Building interior area factor	not used	0.000E+00	code computed (time dependent)	FAI
021	Building depth below ground surface (m)	not used	-1.000E+00	code computed (time dependent)	DMFL
021	Emanating power of Rn-222 gas	2.500E-01	2.500E-01	---	EMANA(1)
021	Emanating power of Rn-220 gas	1.500E-01	1.500E-01	---	EMANA(2)
ITL	Number of graphical time points	32	---	---	NPTS
ITL	Maximum number of integration points for dose	17	---	---	LYMAX
ITL	Maximum number of integration points for risk	257	---	---	KYMAX

Summary of Pathway Selections

Pathway	User Selection
1 -- external gamma	suppressed
2 -- inhalation (w/o radon)	active
3 -- plant ingestion	suppressed
4 -- meat ingestion	suppressed
5 -- milk ingestion	suppressed
6 -- aquatic foods	suppressed
7 -- drinking water	suppressed
8 -- soil ingestion	suppressed
9 -- radon	active
Find peak pathway doses	suppressed

ummary : GKP Maintenance Worker Inhalation
ile : C:\USERS\CLAUDE\DOCUMENTS\0 GKP DOSE\RESRAD CW\GKP PARK RANGER - INHALATION.RAD

Contaminated Zone Dimensions		Initial Soil Concentrations, pCi/g	
Area:	200.00 square meters	Ra-226	3.650E+01
Thickness:	0.15 meters	Th-232	2.400E+00
over Depth:	0.00 meters	U-234	1.390E+01
		U-235	8.400E-01
		U-238	1.390E+01

Total Dose TDOSE(t), mrem/yr
Basic Radiation Dose Limit = 2.500E+01 mrem/yr
Total Mixture Sum M(t) = Fraction of Basic Dose Limit Received at Time (t)

t (years):	0.000E+00	1.000E+00	3.000E+00	1.000E+01	3.000E+01	1.000E+02	3.000E+02	1.000E+03
TDOSE(t):	1.671E-01	1.637E-01	1.582E-01	1.421E-01	1.021E-01	3.479E-02	0.000E+00	0.000E+00
M(t):	6.683E-03	6.548E-03	6.329E-03	5.684E-03	4.083E-03	1.392E-03	0.000E+00	0.000E+00

aximum TDOSE(t): 1.671E-01 mrem/yr at t = 0.000E+00 years

ummary : GKP Maintenance Worker Inhalation
ile : C:\USERS\CLAUDE\DOCUMENTS\0 GKP DOSE\RESRAD CW\GKP PARK RANGER - INHALATION.RAD

Total Dose Contributions TDOSE(i,p,t) for Individual Radionuclides (i) and Pathways (p)
As mrem/yr and Fraction of Total Dose At t = 0.000E+00 years

Water Independent Pathways (Inhalation excludes radon)

	Ground		Inhalation		Radon		Plant		Meat		Milk		Soil	
adio-	ÄÄÄÄÄÄÄÄÄÄÄÄÄÄÄÄ		ÄÄÄÄÄÄÄÄÄÄÄÄÄÄÄÄ		ÄÄÄÄÄÄÄÄÄÄÄÄÄÄÄÄ		ÄÄÄÄÄÄÄÄÄÄÄÄÄÄÄÄ		ÄÄÄÄÄÄÄÄÄÄÄÄÄÄÄÄ		ÄÄÄÄÄÄÄÄÄÄÄÄÄÄÄÄ		ÄÄÄÄÄÄÄÄÄÄÄÄÄÄÄÄ	
uclide	mrem/yr	fract.	mrem/yr	fract.	mrem/yr	fract.	mrem/yr	fract.	mrem/yr	fract.	mrem/yr	fract.	mrem/yr	fract.
ÄÄÄÄÄÄ	ÄÄÄÄÄÄÄÄÄ	ÄÄÄÄÄÄ	ÄÄÄÄÄÄÄÄÄ	ÄÄÄÄÄÄ	ÄÄÄÄÄÄÄÄÄ	ÄÄÄÄÄÄ	ÄÄÄÄÄÄÄÄÄ	ÄÄÄÄÄÄ	ÄÄÄÄÄÄÄÄÄ	ÄÄÄÄÄÄ	ÄÄÄÄÄÄÄÄÄ	ÄÄÄÄÄÄ	ÄÄÄÄÄÄÄÄÄ	ÄÄÄÄÄÄ
a-226	0.000E+00	0.0000	6.905E-03	0.0413	3.372E-04	0.0020	0.000E+00	0.0000	0.000E+00	0.0000	0.000E+00	0.0000	0.000E+00	0.0000
n-232	0.000E+00	0.0000	8.465E-02	0.5066	1.209E-05	0.0001	0.000E+00	0.0000	0.000E+00	0.0000	0.000E+00	0.0000	0.000E+00	0.0000
-234	0.000E+00	0.0000	3.854E-02	0.2307	8.487E-14	0.0000	0.000E+00	0.0000	0.000E+00	0.0000	0.000E+00	0.0000	0.000E+00	0.0000
-235	0.000E+00	0.0000	2.171E-03	0.0130	0.000E+00	0.0000	0.000E+00	0.0000	0.000E+00	0.0000	0.000E+00	0.0000	0.000E+00	0.0000
-238	0.000E+00	0.0000	3.446E-02	0.2063	5.958E-20	0.0000	0.000E+00	0.0000	0.000E+00	0.0000	0.000E+00	0.0000	0.000E+00	0.0000
íííííí	íííííííííí	íííííí	íííííííííí	íííííí	íííííííííí	íííííí	íííííííííí	íííííí	íííííííííí	íííííí	íííííííííí	íííííí	íííííííííí	íííííí
otal	0.000E+00	0.0000	1.667E-01	0.9979	3.493E-04	0.0021	0.000E+00	0.0000	0.000E+00	0.0000	0.000E+00	0.0000	0.000E+00	0.0000

Total Dose Contributions TDOSE(i,p,t) for Individual Radionuclides (i) and Pathways (p)
As mrem/yr and Fraction of Total Dose At t = 0.000E+00 years

Water Dependent Pathways

	Water		Fish		Radon		Plant		Meat		Milk		All Pathways*	
adio-	ÄÄÄÄÄÄÄÄÄÄÄÄÄÄÄÄ		ÄÄÄÄÄÄÄÄÄÄÄÄÄÄÄÄ		ÄÄÄÄÄÄÄÄÄÄÄÄÄÄÄÄ		ÄÄÄÄÄÄÄÄÄÄÄÄÄÄÄÄ		ÄÄÄÄÄÄÄÄÄÄÄÄÄÄÄÄ		ÄÄÄÄÄÄÄÄÄÄÄÄÄÄÄÄ		ÄÄÄÄÄÄÄÄÄÄÄÄÄÄÄÄ	
uclide	mrem/yr	fract.	mrem/yr	fract.	mrem/yr	fract.	mrem/yr	fract.	mrem/yr	fract.	mrem/yr	fract.	mrem/yr	fract.
ÄÄÄÄÄÄ	ÄÄÄÄÄÄÄÄÄ	ÄÄÄÄÄÄ	ÄÄÄÄÄÄÄÄÄ	ÄÄÄÄÄÄ	ÄÄÄÄÄÄÄÄÄ	ÄÄÄÄÄÄ	ÄÄÄÄÄÄÄÄÄ	ÄÄÄÄÄÄ	ÄÄÄÄÄÄÄÄÄ	ÄÄÄÄÄÄ	ÄÄÄÄÄÄÄÄÄ	ÄÄÄÄÄÄ	ÄÄÄÄÄÄÄÄÄ	ÄÄÄÄÄÄ
a-226	0.000E+00	0.0000	0.000E+00	0.0000	0.000E+00	0.0000	0.000E+00	0.0000	0.000E+00	0.0000	0.000E+00	0.0000	7.242E-03	0.0433
n-232	0.000E+00	0.0000	0.000E+00	0.0000	0.000E+00	0.0000	0.000E+00	0.0000	0.000E+00	0.0000	0.000E+00	0.0000	8.466E-02	0.5067
-234	0.000E+00	0.0000	0.000E+00	0.0000	0.000E+00	0.0000	0.000E+00	0.0000	0.000E+00	0.0000	0.000E+00	0.0000	3.854E-02	0.2307
-235	0.000E+00	0.0000	0.000E+00	0.0000	0.000E+00	0.0000	0.000E+00	0.0000	0.000E+00	0.0000	0.000E+00	0.0000	2.171E-03	0.0130
-238	0.000E+00	0.0000	0.000E+00	0.0000	0.000E+00	0.0000	0.000E+00	0.0000	0.000E+00	0.0000	0.000E+00	0.0000	3.446E-02	0.2063
íííííí	íííííííííí	íííííí	íííííííííí	íííííí	íííííííííí	íííííí	íííííííííí	íííííí	íííííííííí	íííííí	íííííííííí	íííííí	íííííííííí	íííííí
otal	0.000E+00	0.0000	0.000E+00	0.0000	0.000E+00	0.0000	0.000E+00	0.0000	0.000E+00	0.0000	0.000E+00	0.0000	1.671E-01	1.0000

Sum of all water independent and dependent pathways.

ummary : GKP Maintenance Worker Inhalation
ile : C:\USERS\CLAUDE\DOCUMENTS\0 GKP DOSE\RESRAD CW\GKP PARK RANGER - INHALATION.RAD

Total Dose Contributions TDOSE(i,p,t) for Individual Radionuclides (i) and Pathways (p)
As mrem/yr and Fraction of Total Dose At t = 1.000E+00 years

Water Independent Pathways (Inhalation excludes radon)

	Ground		Inhalation		Radon		Plant		Meat		Milk		Soil	
adio-	ÄÄÄÄÄÄÄÄÄÄÄÄÄÄÄ		ÄÄÄÄÄÄÄÄÄÄÄÄÄÄÄ		ÄÄÄÄÄÄÄÄÄÄÄÄÄÄÄ		ÄÄÄÄÄÄÄÄÄÄÄÄÄÄÄ		ÄÄÄÄÄÄÄÄÄÄÄÄÄÄÄ		ÄÄÄÄÄÄÄÄÄÄÄÄÄÄÄ		ÄÄÄÄÄÄÄÄÄÄÄÄÄÄÄ	
uclide	mrem/yr	fract.	mrem/yr	fract.	mrem/yr	fract.	mrem/yr	fract.	mrem/yr	fract.	mrem/yr	fract.	mrem/yr	fract.
ÄÄÄÄÄÄ	ÄÄÄÄÄÄÄÄÄ	ÄÄÄÄÄÄ	ÄÄÄÄÄÄÄÄÄ	ÄÄÄÄÄÄ	ÄÄÄÄÄÄÄÄÄ	ÄÄÄÄÄÄ	ÄÄÄÄÄÄÄÄÄ	ÄÄÄÄÄÄ	ÄÄÄÄÄÄÄÄÄ	ÄÄÄÄÄÄ	ÄÄÄÄÄÄÄÄÄ	ÄÄÄÄÄÄ	ÄÄÄÄÄÄÄÄÄ	ÄÄÄÄÄÄ
a-226	0.000E+00	0.0000	7.169E-03	0.0438	3.244E-04	0.0020	0.000E+00	0.0000	0.000E+00	0.0000	0.000E+00	0.0000	0.000E+00	0.0000
n-232	0.000E+00	0.0000	8.468E-02	0.5173	7.349E-05	0.0004	0.000E+00	0.0000	0.000E+00	0.0000	0.000E+00	0.0000	0.000E+00	0.0000
-234	0.000E+00	0.0000	3.663E-02	0.2238	5.780E-13	0.0000	0.000E+00	0.0000	0.000E+00	0.0000	0.000E+00	0.0000	0.000E+00	0.0000
-235	0.000E+00	0.0000	2.063E-03	0.0126	0.000E+00	0.0000	0.000E+00	0.0000	0.000E+00	0.0000	0.000E+00	0.0000	0.000E+00	0.0000
-238	0.000E+00	0.0000	3.275E-02	0.2001	8.662E-19	0.0000	0.000E+00	0.0000	0.000E+00	0.0000	0.000E+00	0.0000	0.000E+00	0.0000
íííííí	íííííííííí	íííííí	íííííííííí	íííííí	íííííííííí	íííííí	íííííííííí	íííííí	íííííííííí	íííííí	íííííííííí	íííííí	íííííííííí	íííííí
otal	0.000E+00	0.0000	1.633E-01	0.9976	3.979E-04	0.0024	0.000E+00	0.0000	0.000E+00	0.0000	0.000E+00	0.0000	0.000E+00	0.0000

Total Dose Contributions TDOSE(i,p,t) for Individual Radionuclides (i) and Pathways (p)
As mrem/yr and Fraction of Total Dose At t = 1.000E+00 years

Water Dependent Pathways

	Water		Fish		Radon		Plant		Meat		Milk		All Pathways*	
adio-	ÄÄÄÄÄÄÄÄÄÄÄÄÄÄÄ		ÄÄÄÄÄÄÄÄÄÄÄÄÄÄÄ		ÄÄÄÄÄÄÄÄÄÄÄÄÄÄÄ		ÄÄÄÄÄÄÄÄÄÄÄÄÄÄÄ		ÄÄÄÄÄÄÄÄÄÄÄÄÄÄÄ		ÄÄÄÄÄÄÄÄÄÄÄÄÄÄÄ		ÄÄÄÄÄÄÄÄÄÄÄÄÄÄÄ	
uclide	mrem/yr	fract.	mrem/yr	fract.	mrem/yr	fract.	mrem/yr	fract.	mrem/yr	fract.	mrem/yr	fract.	mrem/yr	fract.
ÄÄÄÄÄÄ	ÄÄÄÄÄÄÄÄÄ	ÄÄÄÄÄÄ	ÄÄÄÄÄÄÄÄÄ	ÄÄÄÄÄÄ	ÄÄÄÄÄÄÄÄÄ	ÄÄÄÄÄÄ	ÄÄÄÄÄÄÄÄÄ	ÄÄÄÄÄÄ	ÄÄÄÄÄÄÄÄÄ	ÄÄÄÄÄÄ	ÄÄÄÄÄÄÄÄÄ	ÄÄÄÄÄÄ	ÄÄÄÄÄÄÄÄÄ	ÄÄÄÄÄÄ
a-226	0.000E+00	0.0000	0.000E+00	0.0000	0.000E+00	0.0000	0.000E+00	0.0000	0.000E+00	0.0000	0.000E+00	0.0000	7.493E-03	0.0458
n-232	0.000E+00	0.0000	0.000E+00	0.0000	0.000E+00	0.0000	0.000E+00	0.0000	0.000E+00	0.0000	0.000E+00	0.0000	8.476E-02	0.5178
-234	0.000E+00	0.0000	0.000E+00	0.0000	0.000E+00	0.0000	0.000E+00	0.0000	0.000E+00	0.0000	0.000E+00	0.0000	3.663E-02	0.2238
-235	0.000E+00	0.0000	0.000E+00	0.0000	0.000E+00	0.0000	0.000E+00	0.0000	0.000E+00	0.0000	0.000E+00	0.0000	2.063E-03	0.0126
-238	0.000E+00	0.0000	0.000E+00	0.0000	0.000E+00	0.0000	0.000E+00	0.0000	0.000E+00	0.0000	0.000E+00	0.0000	3.275E-02	0.2001
íííííí	íííííííííí	íííííí	íííííííííí	íííííí	íííííííííí	íííííí	íííííííííí	íííííí	íííííííííí	íííííí	íííííííííí	íííííí	íííííííííí	íííííí
otal	0.000E+00	0.0000	0.000E+00	0.0000	0.000E+00	0.0000	0.000E+00	0.0000	0.000E+00	0.0000	0.000E+00	0.0000	1.637E-01	1.0000

Sum of all water independent and dependent pathways.

ummary : GKP Maintenance Worker Inhalation
ile : C:\USERS\CLAUDE\DOCUMENTS\0 GKP DOSE\RESRAD CW\GKP PARK RANGER - INHALATION.RAD

Total Dose Contributions TDOSE(i,p,t) for Individual Radionuclides (i) and Pathways (p)
As mrem/yr and Fraction of Total Dose At t = 3.000E+00 years

Water Independent Pathways (Inhalation excludes radon)

	Ground		Inhalation		Radon		Plant		Meat		Milk		Soil	
adio-	ÄÄÄÄÄÄÄÄÄÄÄÄÄÄÄÄ		ÄÄÄÄÄÄÄÄÄÄÄÄÄÄÄÄ		ÄÄÄÄÄÄÄÄÄÄÄÄÄÄÄÄ		ÄÄÄÄÄÄÄÄÄÄÄÄÄÄÄÄ		ÄÄÄÄÄÄÄÄÄÄÄÄÄÄÄÄ		ÄÄÄÄÄÄÄÄÄÄÄÄÄÄÄÄ		ÄÄÄÄÄÄÄÄÄÄÄÄÄÄÄÄ	
uclide	mrem/yr	fract.	mrem/yr	fract.	mrem/yr	fract.	mrem/yr	fract.	mrem/yr	fract.	mrem/yr	fract.	mrem/yr	fract.
ÄÄÄÄÄÄ	ÄÄÄÄÄÄÄÄÄ	ÄÄÄÄÄÄ	ÄÄÄÄÄÄÄÄÄ	ÄÄÄÄÄÄ	ÄÄÄÄÄÄÄÄÄ	ÄÄÄÄÄÄ	ÄÄÄÄÄÄÄÄÄ	ÄÄÄÄÄÄ	ÄÄÄÄÄÄÄÄÄ	ÄÄÄÄÄÄ	ÄÄÄÄÄÄÄÄÄ	ÄÄÄÄÄÄ	ÄÄÄÄÄÄÄÄÄ	ÄÄÄÄÄÄ
a-226	0.000E+00	0.0000	7.575E-03	0.0479	3.002E-04	0.0019	0.000E+00	0.0000	0.000E+00	0.0000	0.000E+00	0.0000	0.000E+00	0.0000
n-232	0.000E+00	0.0000	8.555E-02	0.5407	2.861E-04	0.0018	0.000E+00	0.0000	0.000E+00	0.0000	0.000E+00	0.0000	0.000E+00	0.0000
-234	0.000E+00	0.0000	3.308E-02	0.2090	2.872E-12	0.0000	0.000E+00	0.0000	0.000E+00	0.0000	0.000E+00	0.0000	0.000E+00	0.0000
-235	0.000E+00	0.0000	1.864E-03	0.0118	0.000E+00	0.0000	0.000E+00	0.0000	0.000E+00	0.0000	0.000E+00	0.0000	0.000E+00	0.0000
-238	0.000E+00	0.0000	2.957E-02	0.1869	9.420E-18	0.0000	0.000E+00	0.0000	0.000E+00	0.0000	0.000E+00	0.0000	0.000E+00	0.0000
íííííí	íííííííííí	íííííí	íííííííííí	íííííí	íííííííííí	íííííí	íííííííííí	íííííí	íííííííííí	íííííí	íííííííííí	íííííí	íííííííííí	íííííí
otal	0.000E+00	0.0000	1.576E-01	0.9963	5.863E-04	0.0037	0.000E+00	0.0000	0.000E+00	0.0000	0.000E+00	0.0000	0.000E+00	0.0000

Total Dose Contributions TDOSE(i,p,t) for Individual Radionuclides (i) and Pathways (p)
As mrem/yr and Fraction of Total Dose At t = 3.000E+00 years

Water Dependent Pathways

	Water		Fish		Radon		Plant		Meat		Milk		All Pathways*	
adio-	ÄÄÄÄÄÄÄÄÄÄÄÄÄÄÄÄ		ÄÄÄÄÄÄÄÄÄÄÄÄÄÄÄÄ		ÄÄÄÄÄÄÄÄÄÄÄÄÄÄÄÄ		ÄÄÄÄÄÄÄÄÄÄÄÄÄÄÄÄ		ÄÄÄÄÄÄÄÄÄÄÄÄÄÄÄÄ		ÄÄÄÄÄÄÄÄÄÄÄÄÄÄÄÄ		ÄÄÄÄÄÄÄÄÄÄÄÄÄÄÄÄ	
uclide	mrem/yr	fract.	mrem/yr	fract.	mrem/yr	fract.	mrem/yr	fract.	mrem/yr	fract.	mrem/yr	fract.	mrem/yr	fract.
ÄÄÄÄÄÄ	ÄÄÄÄÄÄÄÄÄ	ÄÄÄÄÄÄ	ÄÄÄÄÄÄÄÄÄ	ÄÄÄÄÄÄ	ÄÄÄÄÄÄÄÄÄ	ÄÄÄÄÄÄ	ÄÄÄÄÄÄÄÄÄ	ÄÄÄÄÄÄ	ÄÄÄÄÄÄÄÄÄ	ÄÄÄÄÄÄ	ÄÄÄÄÄÄÄÄÄ	ÄÄÄÄÄÄ	ÄÄÄÄÄÄÄÄÄ	ÄÄÄÄÄÄ
a-226	0.000E+00	0.0000	0.000E+00	0.0000	0.000E+00	0.0000	0.000E+00	0.0000	0.000E+00	0.0000	0.000E+00	0.0000	7.876E-03	0.0498
n-232	0.000E+00	0.0000	0.000E+00	0.0000	0.000E+00	0.0000	0.000E+00	0.0000	0.000E+00	0.0000	0.000E+00	0.0000	8.583E-02	0.5425
-234	0.000E+00	0.0000	0.000E+00	0.0000	0.000E+00	0.0000	0.000E+00	0.0000	0.000E+00	0.0000	0.000E+00	0.0000	3.308E-02	0.2090
-235	0.000E+00	0.0000	0.000E+00	0.0000	0.000E+00	0.0000	0.000E+00	0.0000	0.000E+00	0.0000	0.000E+00	0.0000	1.864E-03	0.0118
-238	0.000E+00	0.0000	0.000E+00	0.0000	0.000E+00	0.0000	0.000E+00	0.0000	0.000E+00	0.0000	0.000E+00	0.0000	2.957E-02	0.1869
íííííí	íííííííííí	íííííí	íííííííííí	íííííí	íííííííííí	íííííí	íííííííííí	íííííí	íííííííííí	íííííí	íííííííííí	íííííí	íííííííííí	íííííí
otal	0.000E+00	0.0000	0.000E+00	0.0000	0.000E+00	0.0000	0.000E+00	0.0000	0.000E+00	0.0000	0.000E+00	0.0000	1.582E-01	1.0000

Sum of all water independent and dependent pathways.

ummary : GKP Maintenance Worker Inhalation
ile : C:\USERS\CLAUDE\DOCUMENTS\0 GKP DOSE\RESRAD CW\GKP PARK RANGER - INHALATION.RAD

Total Dose Contributions TDOSE(i,p,t) for Individual Radionuclides (i) and Pathways (p)
As mrem/yr and Fraction of Total Dose At t = 1.000E+01 years

Water Independent Pathways (Inhalation excludes radon)

	Ground		Inhalation		Radon		Plant		Meat		Milk		Soil	
adio-	ÄÄÄÄÄÄÄÄÄÄÄÄÄÄÄÄ		AAAAAAAAAAAAAAAA		AAAAAAAAAAAAAAAA		AAAAAAAAAAAAAAAÄ		ÄÄÄÄÄÄÄÄÄÄÄÄÄÄÄÄ		ÄÄÄÄÄÄÄÄÄÄÄÄÄÄÄÄ		ÄÄÄÄÄÄÄÄÄÄÄÄÄÄÄÄ	
uclide	mrem/yr	fract.	mrem/yr	fract.	mrem/yr	fract.	mrem/yr	fract.	mrem/yr	fract.	mrem/yr	fract.	mrem/yr	fract.
ÄÄÄÄÄÄ	ÄÄÄÄÄÄÄÄÄÄ	ÄÄÄÄÄÄ	ÄÄÄÄÄÄÄÄÄÄ	ÄÄÄÄÄÄ	ÄÄÄÄÄÄÄÄÄÄ	ÄÄÄÄÄÄ	ÄÄÄÄÄÄÄÄÄÄ	ÄÄÄÄÄÄ	ÄÄÄÄÄÄÄÄÄÄ	ÄÄÄÄÄÄ	ÄÄÄÄÄÄÄÄÄÄ	ÄÄÄÄÄÄ	ÄÄÄÄÄÄÄÄÄÄ	ÄÄÄÄÄÄ
a-226	0.000E+00	0.0000	8.045E-03	0.0566	2.285E-04	0.0016	0.000E+00	0.0000	0.000E+00	0.0000	0.000E+00	0.0000	0.000E+00	0.0000
n-232	0.000E+00	0.0000	8.777E-02	0.6176	9.950E-04	0.0070	0.000E+00	0.0000	0.000E+00	0.0000	0.000E+00	0.0000	0.000E+00	0.0000
-234	0.000E+00	0.0000	2.311E-02	0.1626	2.059E-11	0.0000	0.000E+00	0.0000	0.000E+00	0.0000	0.000E+00	0.0000	0.000E+00	0.0000
-235	0.000E+00	0.0000	1.306E-03	0.0092	0.000E+00	0.0000	0.000E+00	0.0000	0.000E+00	0.0000	0.000E+00	0.0000	0.000E+00	0.0000
-238	0.000E+00	0.0000	2.066E-02	0.1454	1.937E-16	0.0000	0.000E+00	0.0000	0.000E+00	0.0000	0.000E+00	0.0000	0.000E+00	0.0000
íííííí	íííííííííí	íííííí	íííííííííí	íííííí	íííííííííí	íííííí	íííííííííí	íííííí	íííííííííí	íííííí	íííííííííí	íííííí	íííííííííí	íííííí
otal	0.000E+00	0.0000	1.409E-01	0.9914	1.224E-03	0.0086	0.000E+00	0.0000	0.000E+00	0.0000	0.000E+00	0.0000	0.000E+00	0.0000

Total Dose Contributions TDOSE(i,p,t) for Individual Radionuclides (i) and Pathways (p)
As mrem/yr and Fraction of Total Dose At t = 1.000E+01 years

Water Dependent Pathways

	Water		Fish		Radon		Plant		Meat		Milk		All Pathways*	
adio-	ÄÄÄÄÄÄÄÄÄÄÄÄÄÄÄÄ		ÄÄÄÄÄÄÄÄÄÄÄÄÄÄÄÄ		ÄÄÄÄÄÄÄÄÄÄÄÄÄÄÄÄ		ÄÄÄÄÄÄÄÄÄÄÄÄÄÄÄÄ		ÄÄÄÄÄÄÄÄÄÄÄÄÄÄÄÄ		ÄÄÄÄÄÄÄÄÄÄÄÄÄÄÄÄ		ÄÄÄÄÄÄÄÄÄÄÄÄÄÄÄÄ	
uclide	mrem/yr	fract.	mrem/yr	fract.	mrem/yr	fract.	mrem/yr	fract.	mrem/yr	fract.	mrem/yr	fract.	mrem/yr	fract.
ÄÄÄÄÄÄ	ÄÄÄÄÄÄÄÄÄÄ	ÄÄÄÄÄÄ	ÄÄÄÄÄÄÄÄÄÄ	ÄÄÄÄÄÄ	ÄÄÄÄÄÄÄÄÄÄ	ÄÄÄÄÄÄ	ÄÄÄÄÄÄÄÄÄÄ	ÄÄÄÄÄÄ	ÄÄÄÄÄÄÄÄÄÄ	ÄÄÄÄÄÄ	ÄÄÄÄÄÄÄÄÄÄ	ÄÄÄÄÄÄ	ÄÄÄÄÄÄÄÄÄÄ	ÄÄÄÄÄÄ
a-226	0.000E+00	0.0000	0.000E+00	0.0000	0.000E+00	0.0000	0.000E+00	0.0000	0.000E+00	0.0000	0.000E+00	0.0000	8.274E-03	0.0582
n-232	0.000E+00	0.0000	0.000E+00	0.0000	0.000E+00	0.0000	0.000E+00	0.0000	0.000E+00	0.0000	0.000E+00	0.0000	8.876E-02	0.6246
-234	0.000E+00	0.0000	0.000E+00	0.0000	0.000E+00	0.0000	0.000E+00	0.0000	0.000E+00	0.0000	0.000E+00	0.0000	2.311E-02	0.1626
-235	0.000E+00	0.0000	0.000E+00	0.0000	0.000E+00	0.0000	0.000E+00	0.0000	0.000E+00	0.0000	0.000E+00	0.0000	1.306E-03	0.0092
-238	0.000E+00	0.0000	0.000E+00	0.0000	0.000E+00	0.0000	0.000E+00	0.0000	0.000E+00	0.0000	0.000E+00	0.0000	2.066E-02	0.1454
íííííí	íííííííííí	íííííí	íííííííííí	íííííí	íííííííííí	íííííí	íííííííííí	íííííí	íííííííííí	íííííí	íííííííííí	íííííí	íííííííííí	íííííí
otal	0.000E+00	0.0000	0.000E+00	0.0000	0.000E+00	0.0000	0.000E+00	0.0000	0.000E+00	0.0000	0.000E+00	0.0000	1.421E-01	1.0000

Sum of all water independent and dependent pathways.

ummary : GKP Maintenance Worker Inhalation
ile : C:\USERS\CLAUDE\DOCUMENTS\0 GKP DOSE\RESRAD CW\GKP PARK RANGER - INHALATION.RAD

Total Dose Contributions TDOSE(i,p,t) for Individual Radionuclides (i) and Pathways (p)
As mrem/yr and Fraction of Total Dose At t = 3.000E+01 years

Water Independent Pathways (Inhalation excludes radon)

	Ground		Inhalation		Radon		Plant		Meat		Milk		Soil	
adio-	ÄÄÄÄÄÄÄÄÄÄÄÄÄÄÄÄ		ÄÄÄÄÄÄÄÄÄÄÄÄÄÄÄÄ		ÄÄÄÄÄÄÄÄÄÄÄÄÄÄÄÄ		ÄÄÄÄÄÄÄÄÄÄÄÄÄÄÄÄ		ÄÄÄÄÄÄÄÄÄÄÄÄÄÄÄÄ		ÄÄÄÄÄÄÄÄÄÄÄÄÄÄÄÄ		ÄÄÄÄÄÄÄÄÄÄÄÄÄÄÄÄ	
uclide	mrem/yr	fract.	mrem/yr	fract.	mrem/yr	fract.	mrem/yr	fract.	mrem/yr	fract.	mrem/yr	fract.	mrem/yr	fract.
ÄÄÄÄÄÄ	ÄÄÄÄÄÄÄÄÄ	ÄÄÄÄÄÄ	ÄÄÄÄÄÄÄÄÄ	ÄÄÄÄÄÄ	ÄÄÄÄÄÄÄÄÄ	ÄÄÄÄÄÄ	ÄÄÄÄÄÄÄÄÄ	ÄÄÄÄÄÄ	ÄÄÄÄÄÄÄÄÄ	ÄÄÄÄÄÄ	ÄÄÄÄÄÄÄÄÄ	ÄÄÄÄÄÄ	ÄÄÄÄÄÄÄÄÄ	ÄÄÄÄÄÄ
a-226	0.000E+00	0.0000	5.849E-03	0.0573	1.033E-04	0.0010	0.000E+00	0.0000	0.000E+00	0.0000	0.000E+00	0.0000	0.000E+00	0.0000
h-232	0.000E+00	0.0000	7.872E-02	0.7711	1.465E-03	0.0144	0.000E+00	0.0000	0.000E+00	0.0000	0.000E+00	0.0000	0.000E+00	0.0000
-234	0.000E+00	0.0000	8.179E-03	0.0801	9.295E-11	0.0000	0.000E+00	0.0000	0.000E+00	0.0000	0.000E+00	0.0000	0.000E+00	0.0000
-235	0.000E+00	0.0000	4.666E-04	0.0046	0.000E+00	0.0000	0.000E+00	0.0000	0.000E+00	0.0000	0.000E+00	0.0000	0.000E+00	0.0000
-238	0.000E+00	0.0000	7.304E-03	0.0715	2.290E-15	0.0000	0.000E+00	0.0000	0.000E+00	0.0000	0.000E+00	0.0000	0.000E+00	0.0000
íííííí	íííííííííí	íííííí	íííííííííí	íííííí	íííííííííí	íííííí	íííííííííí	íííííí	íííííííííí	íííííí	íííííííííí	íííííí	íííííííííí	íííííí
otal	0.000E+00	0.0000	1.005E-01	0.9846	1.569E-03	0.0154	0.000E+00	0.0000	0.000E+00	0.0000	0.000E+00	0.0000	0.000E+00	0.0000

Total Dose Contributions TDOSE(i,p,t) for Individual Radionuclides (i) and Pathways (p)
As mrem/yr and Fraction of Total Dose At t = 3.000E+01 years

Water Dependent Pathways

	Water		Fish		Radon		Plant		Meat		Milk		All Pathways*	
adio-	ÄÄÄÄÄÄÄÄÄÄÄÄÄÄÄÄ		ÄÄÄÄÄÄÄÄÄÄÄÄÄÄÄÄ		ÄÄÄÄÄÄÄÄÄÄÄÄÄÄÄÄ		ÄÄÄÄÄÄÄÄÄÄÄÄÄÄÄÄ		ÄÄÄÄÄÄÄÄÄÄÄÄÄÄÄÄ		ÄÄÄÄÄÄÄÄÄÄÄÄÄÄÄÄ		ÄÄÄÄÄÄÄÄÄÄÄÄÄÄÄÄ	
uclide	mrem/yr	fract.	mrem/yr	fract.	mrem/yr	fract.	mrem/yr	fract.	mrem/yr	fract.	mrem/yr	fract.	mrem/yr	fract.
ÄÄÄÄÄÄ	ÄÄÄÄÄÄÄÄÄ	ÄÄÄÄÄÄ	ÄÄÄÄÄÄÄÄÄ	ÄÄÄÄÄÄ	ÄÄÄÄÄÄÄÄÄ	ÄÄÄÄÄÄ	ÄÄÄÄÄÄÄÄÄ	ÄÄÄÄÄÄ	ÄÄÄÄÄÄÄÄÄ	ÄÄÄÄÄÄ	ÄÄÄÄÄÄÄÄÄ	ÄÄÄÄÄÄ	ÄÄÄÄÄÄÄÄÄ	ÄÄÄÄÄÄ
a-226	0.000E+00	0.0000	0.000E+00	0.0000	0.000E+00	0.0000	0.000E+00	0.0000	0.000E+00	0.0000	0.000E+00	0.0000	5.952E-03	0.0583
h-232	0.000E+00	0.0000	0.000E+00	0.0000	0.000E+00	0.0000	0.000E+00	0.0000	0.000E+00	0.0000	0.000E+00	0.0000	8.019E-02	0.7855
-234	0.000E+00	0.0000	0.000E+00	0.0000	0.000E+00	0.0000	0.000E+00	0.0000	0.000E+00	0.0000	0.000E+00	0.0000	8.179E-03	0.0801
-235	0.000E+00	0.0000	0.000E+00	0.0000	0.000E+00	0.0000	0.000E+00	0.0000	0.000E+00	0.0000	0.000E+00	0.0000	4.666E-04	0.0046
-238	0.000E+00	0.0000	0.000E+00	0.0000	0.000E+00	0.0000	0.000E+00	0.0000	0.000E+00	0.0000	0.000E+00	0.0000	7.304E-03	0.0715
íííííí	íííííííííí	íííííí	íííííííííí	íííííí	íííííííííí	íííííí	íííííííííí	íííííí	íííííííííí	íííííí	íííííííííí	íííííí	íííííííííí	íííííí
otal	0.000E+00	0.0000	0.000E+00	0.0000	0.000E+00	0.0000	0.000E+00	0.0000	0.000E+00	0.0000	0.000E+00	0.0000	1.021E-01	1.0000

Sum of all water independent and dependent pathways.

ummary : GKP Maintenance Worker Inhalation
ile : C:\USERS\CLAUDE\DOCUMENTS\0 GKP DOSE\RESRAD CW\GKP PARK RANGER - INHALATION.RAD

Total Dose Contributions TDOSE(i,p,t) for Individual Radionuclides (i) and Pathways (p)
As mrem/yr and Fraction of Total Dose At t = 1.000E+02 years

Water Independent Pathways (Inhalation excludes radon)

	Ground		Inhalation		Radon		Plant		Meat		Milk		Soil	
adio-	ÄÄÄÄÄÄÄÄÄÄÄÄÄÄÄÄ		ÄÄÄÄÄÄÄÄÄÄÄÄÄÄÄÄ		ÄÄÄÄÄÄÄÄÄÄÄÄÄÄÄÄ		ÄÄÄÄÄÄÄÄÄÄÄÄÄÄÄÄ		ÄÄÄÄÄÄÄÄÄÄÄÄÄÄÄÄ		ÄÄÄÄÄÄÄÄÄÄÄÄÄÄÄÄ		ÄÄÄÄÄÄÄÄÄÄÄÄÄÄÄÄ		ÄÄÄÄÄÄÄÄÄÄÄÄÄÄÄÄ	
uclide	mrem/yr	fract.	mrem/yr	fract.	mrem/yr	fract.	mrem/yr	fract.	mrem/yr	fract.	mrem/yr	fract.	mrem/yr	fract.
ÄÄÄÄÄÄ	ÄÄÄÄÄÄÄÄÄ	ÄÄÄÄÄÄ	ÄÄÄÄÄÄÄÄÄ	ÄÄÄÄÄÄ	ÄÄÄÄÄÄÄÄÄ	ÄÄÄÄÄÄ	ÄÄÄÄÄÄÄÄÄ	ÄÄÄÄÄÄ	ÄÄÄÄÄÄÄÄÄ	ÄÄÄÄÄÄ	ÄÄÄÄÄÄÄÄÄ	ÄÄÄÄÄÄ	ÄÄÄÄÄÄÄÄÄ	ÄÄÄÄÄÄ
a-226	0.000E+00	0.0000	3.984E-04	0.0115	4.546E-06	0.0001	0.000E+00	0.0000	0.000E+00	0.0000	0.000E+00	0.0000	0.000E+00	0.0000
n-232	0.000E+00	0.0000	3.260E-02	0.9370	1.483E-03	0.0426	0.000E+00	0.0000	0.000E+00	0.0000	0.000E+00	0.0000	0.000E+00	0.0000
-234	0.000E+00	0.0000	1.593E-04	0.0046	1.079E-10	0.0000	0.000E+00	0.0000	0.000E+00	0.0000	0.000E+00	0.0000	0.000E+00	0.0000
-235	0.000E+00	0.0000	9.084E-06	0.0003	0.000E+00	0.0000	0.000E+00	0.0000	0.000E+00	0.0000	0.000E+00	0.0000	0.000E+00	0.0000
-238	0.000E+00	0.0000	1.366E-04	0.0039	5.863E-15	0.0000	0.000E+00	0.0000	0.000E+00	0.0000	0.000E+00	0.0000	0.000E+00	0.0000
íííííí	íííííííííí	íííííí	íííííííííí	íííííí	íííííííííí	íííííí	íííííííííí	íííííí	íííííííííí	íííííí	íííííííííí	íííííí	íííííííííí	íííííí
otal	0.000E+00	0.0000	3.330E-02	0.9572	1.488E-03	0.0428	0.000E+00	0.0000	0.000E+00	0.0000	0.000E+00	0.0000	0.000E+00	0.0000

Total Dose Contributions TDOSE(i,p,t) for Individual Radionuclides (i) and Pathways (p)
As mrem/yr and Fraction of Total Dose At t = 1.000E+02 years

Water Dependent Pathways

	Water		Fish		Radon		Plant		Meat		Milk		All Pathways*	
adio-	ÄÄÄÄÄÄÄÄÄÄÄÄÄÄÄÄ		ÄÄÄÄÄÄÄÄÄÄÄÄÄÄÄÄ		ÄÄÄÄÄÄÄÄÄÄÄÄÄÄÄÄ		ÄÄÄÄÄÄÄÄÄÄÄÄÄÄÄÄ		ÄÄÄÄÄÄÄÄÄÄÄÄÄÄÄÄ		ÄÄÄÄÄÄÄÄÄÄÄÄÄÄÄÄ		ÄÄÄÄÄÄÄÄÄÄÄÄÄÄÄÄ	
uclide	mrem/yr	fract.	mrem/yr	fract.	mrem/yr	fract.	mrem/yr	fract.	mrem/yr	fract.	mrem/yr	fract.	mrem/yr	fract.
ÄÄÄÄÄÄ	ÄÄÄÄÄÄÄÄÄ	ÄÄÄÄÄÄ	ÄÄÄÄÄÄÄÄÄ	ÄÄÄÄÄÄ	ÄÄÄÄÄÄÄÄÄ	ÄÄÄÄÄÄ	ÄÄÄÄÄÄÄÄÄ	ÄÄÄÄÄÄ	ÄÄÄÄÄÄÄÄÄ	ÄÄÄÄÄÄ	ÄÄÄÄÄÄÄÄÄ	ÄÄÄÄÄÄ	ÄÄÄÄÄÄÄÄÄ	ÄÄÄÄÄÄ
a-226	0.000E+00	0.0000	0.000E+00	0.0000	0.000E+00	0.0000	0.000E+00	0.0000	0.000E+00	0.0000	0.000E+00	0.0000	4.029E-04	0.0116
n-232	0.000E+00	0.0000	0.000E+00	0.0000	0.000E+00	0.0000	0.000E+00	0.0000	0.000E+00	0.0000	0.000E+00	0.0000	3.408E-02	0.9797
-234	0.000E+00	0.0000	0.000E+00	0.0000	0.000E+00	0.0000	0.000E+00	0.0000	0.000E+00	0.0000	0.000E+00	0.0000	1.593E-04	0.0046
-235	0.000E+00	0.0000	0.000E+00	0.0000	0.000E+00	0.0000	0.000E+00	0.0000	0.000E+00	0.0000	0.000E+00	0.0000	9.084E-06	0.0003
-238	0.000E+00	0.0000	0.000E+00	0.0000	0.000E+00	0.0000	0.000E+00	0.0000	0.000E+00	0.0000	0.000E+00	0.0000	1.366E-04	0.0039
íííííí	íííííííííí	íííííí	íííííííííí	íííííí	íííííííííí	íííííí	íííííííííí	íííííí	íííííííííí	íííííí	íííííííííí	íííííí	íííííííííí	íííííí
otal	0.000E+00	0.0000	0.000E+00	0.0000	0.000E+00	0.0000	0.000E+00	0.0000	0.000E+00	0.0000	0.000E+00	0.0000	3.479E-02	1.0000

Sum of all water independent and dependent pathways.

ummary : GKP Maintenance Worker Inhalation
ile : C:\USERS\CLAUDE\DOCUMENTS\0 GKP DOSE\RESRAD CW\GKP PARK RANGER - INHALATION.RAD

Total Dose Contributions TDOSE(i,p,t) for Individual Radionuclides (i) and Pathways (p)
As mrem/yr and Fraction of Total Dose At t = 3.000E+02 years

Water Independent Pathways (Inhalation excludes radon)

	Ground		Inhalation		Radon		Plant		Meat		Milk		Soil	
adio-	ÄÄÄÄÄÄÄÄÄÄÄÄÄÄÄÄ		ÄÄÄÄÄÄÄÄÄÄÄÄÄÄÄÄ		ÄÄÄÄÄÄÄÄÄÄÄÄÄÄÄÄ		ÄÄÄÄÄÄÄÄÄÄÄÄÄÄÄÄ		ÄÄÄÄÄÄÄÄÄÄÄÄÄÄÄÄ		ÄÄÄÄÄÄÄÄÄÄÄÄÄÄÄÄ		ÄÄÄÄÄÄÄÄÄÄÄÄÄÄÄÄ		ÄÄÄÄÄÄÄÄÄÄÄÄÄÄÄÄ	
uclide	mrem/yr	fract.	mrem/yr	fract.	mrem/yr	fract.	mrem/yr	fract.	mrem/yr	fract.	mrem/yr	fract.	mrem/yr	fract.
ÄÄÄÄÄÄ	ÄÄÄÄÄÄÄÄÄ	ÄÄÄÄÄÄ	ÄÄÄÄÄÄÄÄÄ	ÄÄÄÄÄÄ	ÄÄÄÄÄÄÄÄÄ	ÄÄÄÄÄÄ	ÄÄÄÄÄÄÄÄÄ	ÄÄÄÄÄÄ	ÄÄÄÄÄÄÄÄÄ	ÄÄÄÄÄÄ	ÄÄÄÄÄÄÄÄÄ	ÄÄÄÄÄÄ	ÄÄÄÄÄÄÄÄÄ	ÄÄÄÄÄÄ
a-226	0.000E+00	0.0000	0.000E+00	0.0000	0.000E+00	0.0000	0.000E+00	0.0000	0.000E+00	0.0000	0.000E+00	0.0000	0.000E+00	0.0000
n-232	0.000E+00	0.0000	0.000E+00	0.0000	0.000E+00	0.0000	0.000E+00	0.0000	0.000E+00	0.0000	0.000E+00	0.0000	0.000E+00	0.0000
-234	0.000E+00	0.0000	0.000E+00	0.0000	0.000E+00	0.0000	0.000E+00	0.0000	0.000E+00	0.0000	0.000E+00	0.0000	0.000E+00	0.0000
-235	0.000E+00	0.0000	0.000E+00	0.0000	0.000E+00	0.0000	0.000E+00	0.0000	0.000E+00	0.0000	0.000E+00	0.0000	0.000E+00	0.0000
-238	0.000E+00	0.0000	0.000E+00	0.0000	0.000E+00	0.0000	0.000E+00	0.0000	0.000E+00	0.0000	0.000E+00	0.0000	0.000E+00	0.0000
íííííí	íííííííííí	íííííí	íííííííííí	íííííí	íííííííííí	íííííí	íííííííííí	íííííí	íííííííííí	íííííí	íííííííííí	íííííí	íííííííííí	íííííí
otal	0.000E+00	0.0000	0.000E+00	0.0000	0.000E+00	0.0000	0.000E+00	0.0000	0.000E+00	0.0000	0.000E+00	0.0000	0.000E+00	0.0000

Total Dose Contributions TDOSE(i,p,t) for Individual Radionuclides (i) and Pathways (p)
As mrem/yr and Fraction of Total Dose At t = 3.000E+02 years

Water Dependent Pathways

	Water		Fish		Radon		Plant		Meat		Milk		All Pathways*	
adio-	ÄÄÄÄÄÄÄÄÄÄÄÄÄÄÄÄ		ÄÄÄÄÄÄÄÄÄÄÄÄÄÄÄÄ		ÄÄÄÄÄÄÄÄÄÄÄÄÄÄÄÄ		ÄÄÄÄÄÄÄÄÄÄÄÄÄÄÄÄ		ÄÄÄÄÄÄÄÄÄÄÄÄÄÄÄÄ		ÄÄÄÄÄÄÄÄÄÄÄÄÄÄÄÄ		ÄÄÄÄÄÄÄÄÄÄÄÄÄÄÄÄ	
uclide	mrem/yr	fract.	mrem/yr	fract.	mrem/yr	fract.	mrem/yr	fract.	mrem/yr	fract.	mrem/yr	fract.	mrem/yr	fract.
ÄÄÄÄÄÄ	ÄÄÄÄÄÄÄÄÄ	ÄÄÄÄÄÄ	ÄÄÄÄÄÄÄÄÄ	ÄÄÄÄÄÄ	ÄÄÄÄÄÄÄÄÄ	ÄÄÄÄÄÄ	ÄÄÄÄÄÄÄÄÄ	ÄÄÄÄÄÄ	ÄÄÄÄÄÄÄÄÄ	ÄÄÄÄÄÄ	ÄÄÄÄÄÄÄÄÄ	ÄÄÄÄÄÄ	ÄÄÄÄÄÄÄÄÄ	ÄÄÄÄÄÄ
a-226	0.000E+00	0.0000	0.000E+00	0.0000	0.000E+00	0.0000	0.000E+00	0.0000	0.000E+00	0.0000	0.000E+00	0.0000	0.000E+00	0.0000
n-232	0.000E+00	0.0000	0.000E+00	0.0000	0.000E+00	0.0000	0.000E+00	0.0000	0.000E+00	0.0000	0.000E+00	0.0000	0.000E+00	0.0000
-234	0.000E+00	0.0000	0.000E+00	0.0000	0.000E+00	0.0000	0.000E+00	0.0000	0.000E+00	0.0000	0.000E+00	0.0000	0.000E+00	0.0000
-235	0.000E+00	0.0000	0.000E+00	0.0000	0.000E+00	0.0000	0.000E+00	0.0000	0.000E+00	0.0000	0.000E+00	0.0000	0.000E+00	0.0000
-238	0.000E+00	0.0000	0.000E+00	0.0000	0.000E+00	0.0000	0.000E+00	0.0000	0.000E+00	0.0000	0.000E+00	0.0000	0.000E+00	0.0000
íííííí	íííííííííí	íííííí	íííííííííí	íííííí	íííííííííí	íííííí	íííííííííí	íííííí	íííííííííí	íííííí	íííííííííí	íííííí	íííííííííí	íííííí
otal	0.000E+00	0.0000	0.000E+00	0.0000	0.000E+00	0.0000	0.000E+00	0.0000	0.000E+00	0.0000	0.000E+00	0.0000	0.000E+00	0.0000

Sum of all water independent and dependent pathways.

ummary : GKP Maintenance Worker Inhalation
ile : C:\USERS\CLAUDE\DOCUMENTS\0 GKP DOSE\RESRAD CW\GKP PARK RANGER - INHALATION.RAD

Total Dose Contributions TDOSE(i,p,t) for Individual Radionuclides (i) and Pathways (p)
As mrem/yr and Fraction of Total Dose At t = 1.000E+03 years

Water Independent Pathways (Inhalation excludes radon)

	Ground		Inhalation		Radon		Plant		Meat		Milk		Soil	
adio-	ÄÄÄÄÄÄÄÄÄÄÄÄÄÄÄÄ		ÄÄÄÄÄÄÄÄÄÄÄÄÄÄÄÄ		ÄÄÄÄÄÄÄÄÄÄÄÄÄÄÄÄ		ÄÄÄÄÄÄÄÄÄÄÄÄÄÄÄÄ		ÄÄÄÄÄÄÄÄÄÄÄÄÄÄÄÄ		ÄÄÄÄÄÄÄÄÄÄÄÄÄÄÄÄ		ÄÄÄÄÄÄÄÄÄÄÄÄÄÄÄÄ	
uclide	mrem/yr	fract.	mrem/yr	fract.	mrem/yr	fract.	mrem/yr	fract.	mrem/yr	fract.	mrem/yr	fract.	mrem/yr	fract.
ÄÄÄÄÄÄ	ÄÄÄÄÄÄÄÄÄ	ÄÄÄÄÄÄ	ÄÄÄÄÄÄÄÄÄ	ÄÄÄÄÄÄ	ÄÄÄÄÄÄÄÄÄ	ÄÄÄÄÄÄ	ÄÄÄÄÄÄÄÄÄ	ÄÄÄÄÄÄ	ÄÄÄÄÄÄÄÄÄ	ÄÄÄÄÄÄ	ÄÄÄÄÄÄÄÄÄ	ÄÄÄÄÄÄ	ÄÄÄÄÄÄÄÄÄ	ÄÄÄÄÄÄ
a-226	0.000E+00	0.0000	0.000E+00	0.0000	0.000E+00	0.0000	0.000E+00	0.0000	0.000E+00	0.0000	0.000E+00	0.0000	0.000E+00	0.0000
h-232	0.000E+00	0.0000	0.000E+00	0.0000	0.000E+00	0.0000	0.000E+00	0.0000	0.000E+00	0.0000	0.000E+00	0.0000	0.000E+00	0.0000
-234	0.000E+00	0.0000	0.000E+00	0.0000	0.000E+00	0.0000	0.000E+00	0.0000	0.000E+00	0.0000	0.000E+00	0.0000	0.000E+00	0.0000
-235	0.000E+00	0.0000	0.000E+00	0.0000	0.000E+00	0.0000	0.000E+00	0.0000	0.000E+00	0.0000	0.000E+00	0.0000	0.000E+00	0.0000
-238	0.000E+00	0.0000	0.000E+00	0.0000	0.000E+00	0.0000	0.000E+00	0.0000	0.000E+00	0.0000	0.000E+00	0.0000	0.000E+00	0.0000
íííííí	íííííííííí	íííííí	íííííííííí	íííííí	íííííííííí	íííííí	íííííííííí	íííííí	íííííííííí	íííííí	íííííííííí	íííííí	íííííííííí	íííííí
otal	0.000E+00	0.0000	0.000E+00	0.0000	0.000E+00	0.0000	0.000E+00	0.0000	0.000E+00	0.0000	0.000E+00	0.0000	0.000E+00	0.0000

Total Dose Contributions TDOSE(i,p,t) for Individual Radionuclides (i) and Pathways (p)
As mrem/yr and Fraction of Total Dose At t = 1.000E+03 years

Water Dependent Pathways

	Water		Fish		Radon		Plant		Meat		Milk		All Pathways*	
adio-	ÄÄÄÄÄÄÄÄÄÄÄÄÄÄÄÄ		ÄÄÄÄÄÄÄÄÄÄÄÄÄÄÄÄ		ÄÄÄÄÄÄÄÄÄÄÄÄÄÄÄÄ		ÄÄÄÄÄÄÄÄÄÄÄÄÄÄÄÄ		ÄÄÄÄÄÄÄÄÄÄÄÄÄÄÄÄ		ÄÄÄÄÄÄÄÄÄÄÄÄÄÄÄÄ		ÄÄÄÄÄÄÄÄÄÄÄÄÄÄÄÄ	
uclide	mrem/yr	fract.	mrem/yr	fract.	mrem/yr	fract.	mrem/yr	fract.	mrem/yr	fract.	mrem/yr	fract.	mrem/yr	fract.
ÄÄÄÄÄÄ	ÄÄÄÄÄÄÄÄÄ	ÄÄÄÄÄÄ	ÄÄÄÄÄÄÄÄÄ	ÄÄÄÄÄÄ	ÄÄÄÄÄÄÄÄÄ	ÄÄÄÄÄÄ	ÄÄÄÄÄÄÄÄÄ	ÄÄÄÄÄÄ	ÄÄÄÄÄÄÄÄÄ	ÄÄÄÄÄÄ	ÄÄÄÄÄÄÄÄÄ	ÄÄÄÄÄÄ	ÄÄÄÄÄÄÄÄÄ	ÄÄÄÄÄÄ
a-226	0.000E+00	0.0000	0.000E+00	0.0000	0.000E+00	0.0000	0.000E+00	0.0000	0.000E+00	0.0000	0.000E+00	0.0000	0.000E+00	0.0000
h-232	0.000E+00	0.0000	0.000E+00	0.0000	0.000E+00	0.0000	0.000E+00	0.0000	0.000E+00	0.0000	0.000E+00	0.0000	0.000E+00	0.0000
-234	0.000E+00	0.0000	0.000E+00	0.0000	0.000E+00	0.0000	0.000E+00	0.0000	0.000E+00	0.0000	0.000E+00	0.0000	0.000E+00	0.0000
-235	0.000E+00	0.0000	0.000E+00	0.0000	0.000E+00	0.0000	0.000E+00	0.0000	0.000E+00	0.0000	0.000E+00	0.0000	0.000E+00	0.0000
-238	0.000E+00	0.0000	0.000E+00	0.0000	0.000E+00	0.0000	0.000E+00	0.0000	0.000E+00	0.0000	0.000E+00	0.0000	0.000E+00	0.0000
íííííí	íííííííííí	íííííí	íííííííííí	íííííí	íííííííííí	íííííí	íííííííííí	íííííí	íííííííííí	íííííí	íííííííííí	íííííí	íííííííííí	íííííí
otal	0.000E+00	0.0000	0.000E+00	0.0000	0.000E+00	0.0000	0.000E+00	0.0000	0.000E+00	0.0000	0.000E+00	0.0000	0.000E+00	0.0000

Sum of all water independent and dependent pathways.

ummary : GKP Maintenance Worker Inhalation
ile : C:\USERS\CLAUDE\DOCUMENTS\0 GKP DOSE\RESRAD CW\GKP PARK RANGER - INHALATION.RAD

Dose/Source Ratios Summed Over All Pathways
Parent and Progeny Principal Radionuclide Contributions Indicated

Parent (i)	Product (j)	Thread Fraction	DSR(j,t) At Time in Years (mrem/yr)/(pCi/g) 0.000E+00	1.000E+00	3.000E+00	1.000E+01	3.000E+01	1.000E+02	3.000E+02	1.000E+03
ÄÄÄÄÄÄÄÄ	ÄÄÄÄÄÄÄÄÄÄ	ÄÄÄÄÄÄÄÄÄ	ÄÄÄÄÄÄÄÄÄ	ÄÄÄÄÄÄÄÄÄ	ÄÄÄÄÄÄÄÄÄ	ÄÄÄÄÄÄÄÄÄ	ÄÄÄÄÄÄÄÄÄ	ÄÄÄÄÄÄÄÄÄ	ÄÄÄÄÄÄÄÄÄ	ÄÄÄÄÄÄÄÄÄ
a-226+D	Ra-226+D	9.996E-01	1.908E-04	1.835E-04	1.698E-04	1.292E-04	5.826E-05	2.555E-06	0.000E+00	0.000E+00
a-226+D	Pb-210+D	9.996E-01	7.547E-06	2.167E-05	4.587E-05	9.741E-05	1.047E-04	8.480E-06	0.000E+00	0.000E+00
a-226+D	äDSR(j)		1.983E-04	2.052E-04	2.157E-04	2.266E-04	1.630E-04	1.104E-05	0.000E+00	0.000E+00
a-226+D	Ra-226+D	1.319E-06	2.518E-10	2.423E-10	2.241E-10	1.705E-10	7.690E-11	3.372E-12	0.000E+00	0.000E+00
a-226+D	Pb-210+D1	1.319E-06	5.925E-12	1.701E-11	3.601E-11	7.648E-11	8.223E-11	6.658E-12	0.000E+00	0.000E+00
a-226+D	äDSR(j)		2.578E-10	2.593E-10	2.602E-10	2.470E-10	1.591E-10	1.003E-11	0.000E+00	0.000E+00
a-226+D	Ra-226+D	1.899E-08	3.625E-12	3.487E-12	3.226E-12	2.454E-12	1.107E-12	4.854E-14	0.000E+00	0.000E+00
a-226+D	Pb-210+D2	1.899E-08	8.407E-14	2.414E-13	5.110E-13	1.085E-12	1.167E-12	9.447E-14	0.000E+00	0.000E+00
a-226+D	äDSR(j)		3.709E-12	3.729E-12	3.737E-12	3.540E-12	2.274E-12	1.430E-13	0.000E+00	0.000E+00
a-226+D1	Ra-226+D1	2.100E-04	4.007E-08	3.855E-08	3.567E-08	2.713E-08	1.224E-08	5.366E-10	0.000E+00	0.000E+00
a-226+D1	Pb-210+D	2.100E-04	1.585E-09	4.551E-09	9.635E-09	2.046E-08	2.200E-08	1.781E-09	0.000E+00	0.000E+00
a-226+D1	äDSR(j)		4.166E-08	4.310E-08	4.530E-08	4.759E-08	3.424E-08	2.318E-09	0.000E+00	0.000E+00
a-226+D1	Ra-226+D1	2.771E-10	5.290E-14	5.089E-14	4.708E-14	3.582E-14	1.615E-14	7.083E-16	0.000E+00	0.000E+00
a-226+D1	Pb-210+D1	2.771E-10	1.244E-15	3.573E-15	7.564E-15	1.606E-14	1.727E-14	1.398E-15	0.000E+00	0.000E+00
a-226+D1	äDSR(j)		5.414E-14	5.446E-14	5.465E-14	5.188E-14	3.342E-14	2.107E-15	0.000E+00	0.000E+00
a-226+D1	Ra-226+D1	3.989E-12	7.614E-16	7.325E-16	6.777E-16	5.155E-16	2.325E-16	1.020E-17	0.000E+00	0.000E+00
a-226+D1	Pb-210+D2	3.989E-12	1.766E-17	5.070E-17	1.073E-16	2.279E-16	2.451E-16	1.984E-17	0.000E+00	0.000E+00
a-226+D1	äDSR(j)		7.791E-16	7.832E-16	7.850E-16	7.435E-16	4.776E-16	3.004E-17	0.000E+00	0.000E+00
a-226+D2	Ra-226+D2	1.998E-04	3.809E-08	3.665E-08	3.391E-08	2.579E-08	1.163E-08	5.101E-10	0.000E+00	0.000E+00
a-226+D2	Pb-210+D	1.998E-04	1.508E-09	4.330E-09	9.167E-09	1.947E-08	2.093E-08	1.695E-09	0.000E+00	0.000E+00
a-226+D2	äDSR(j)		3.960E-08	4.098E-08	4.307E-08	4.526E-08	3.256E-08	2.205E-09	0.000E+00	0.000E+00
a-226+D2	Ra-226+D2	2.637E-10	5.029E-14	4.837E-14	4.476E-14	3.405E-14	1.535E-14	6.734E-16	0.000E+00	0.000E+00
a-226+D2	Pb-210+D1	2.637E-10	1.184E-15	3.400E-15	7.197E-15	1.528E-14	1.643E-14	1.330E-15	0.000E+00	0.000E+00
a-226+D2	äDSR(j)		5.147E-14	5.177E-14	5.195E-14	4.933E-14	3.179E-14	2.004E-15	0.000E+00	0.000E+00
a-226+D2	Ra-226+D2	3.795E-12	7.238E-16	6.963E-16	6.442E-16	4.901E-16	2.210E-16	9.692E-18	0.000E+00	0.000E+00
a-226+D2	Pb-210+D2	3.795E-12	1.680E-17	4.824E-17	1.021E-16	2.169E-16	2.332E-16	1.888E-17	0.000E+00	0.000E+00
a-226+D2	äDSR(j)		7.406E-16	7.445E-16	7.463E-16	7.069E-16	4.542E-16	2.857E-17	0.000E+00	0.000E+00
a-226+D3	Ra-226+D3	4.196E-08	8.002E-12	7.697E-12	7.122E-12	5.418E-12	2.443E-12	1.071E-13	0.000E+00	0.000E+00
a-226+D3	Pb-210+D	4.196E-08	3.168E-13	9.095E-13	1.926E-12	4.089E-12	4.397E-12	3.560E-13	0.000E+00	0.000E+00
a-226+D3	äDSR(j)		8.318E-12	8.607E-12	9.047E-12	9.507E-12	6.840E-12	4.631E-13	0.000E+00	0.000E+00
a-226+D3	Ra-226+D3	5.538E-14	1.056E-17	1.016E-17	9.401E-18	7.151E-18	3.225E-18	1.414E-19	0.000E+00	0.000E+00
a-226+D3	Pb-210+D1	5.538E-14	2.487E-19	7.141E-19	1.512E-18	3.210E-18	3.452E-18	2.795E-19	0.000E+00	0.000E+00
a-226+D3	äDSR(j)		1.081E-17	1.087E-17	1.091E-17	1.036E-17	6.677E-18	4.209E-19	0.000E+00	0.000E+00
a-226+D3	Ra-226+D3	7.972E-16	1.520E-19	1.462E-19	1.353E-19	1.029E-19	4.642E-20	2.036E-21	0.000E+00	0.000E+00
a-226+D3	Pb-210+D2	7.972E-16	3.529E-21	1.013E-20	2.145E-20	4.555E-20	4.898E-20	3.965E-21	0.000E+00	0.000E+00
a-226+D3	äDSR(j)		1.556E-19	1.564E-19	1.568E-19	1.485E-19	9.540E-20	6.001E-21	0.000E+00	0.000E+00

ummary : GKP Maintenance Worker Inhalation
ile : C:\USERS\CLAUDE\DOCUMENTS\0 GKP DOSE\RESRAD CW\GKP PARK RANGER - INHALATION.RAD

Dose/Source Ratios Summed Over All Pathways
Parent and Progeny Principal Radionuclide Contributions Indicated

Parent (i)	Product (j)	Thread Fraction	DSR(j,t) At Time in Years (mrem/yr)/(pCi/g) 0.000E+00	1.000E+00	3.000E+00	1.000E+01	3.000E+01	1.000E+02	3.000E+02	1.000E+03
ÄÄÄÄÄÄÄÄÄ	ÄÄÄÄÄÄÄÄÄÄ	ÄÄÄÄÄÄÄÄÄ	ÄÄÄÄÄÄÄÄÄ	ÄÄÄÄÄÄÄÄÄ	ÄÄÄÄÄÄÄÄÄ	ÄÄÄÄÄÄÄÄÄ	ÄÄÄÄÄÄÄÄÄ	ÄÄÄÄÄÄÄÄÄ	ÄÄÄÄÄÄÄÄÄ	ÄÄÄÄÄÄÄÄÄ
a-226+D4	Ra-226+D4	2.000E-07	3.811E-11	3.666E-11	3.392E-11	2.580E-11	1.164E-11	5.104E-13	0.000E+00	0.000E+00
a-226+D4	Pb-210+D	2.000E-07	1.510E-12	4.335E-12	9.178E-12	1.949E-11	2.096E-11	1.697E-12	0.000E+00	0.000E+00
a-226+D4	äDSR(j)		3.962E-11	4.100E-11	4.310E-11	4.530E-11	3.259E-11	2.207E-12	0.000E+00	0.000E+00
a-226+D4	Ra-226+D4	2.640E-13	5.031E-17	4.840E-17	4.478E-17	3.406E-17	1.536E-17	6.737E-19	0.000E+00	0.000E+00
a-226+D4	Pb-210+D1	2.640E-13	1.185E-18	3.404E-18	7.206E-18	1.530E-17	1.645E-17	1.332E-18	0.000E+00	0.000E+00
a-226+D4	äDSR(j)		5.150E-17	5.180E-17	5.198E-17	4.936E-17	3.181E-17	2.006E-18	0.000E+00	0.000E+00
a-226+D4	Ra-226+D4	3.800E-15	7.242E-19	6.966E-19	6.445E-19	4.903E-19	2.211E-19	9.697E-21	0.000E+00	0.000E+00
a-226+D4	Pb-210+D2	3.800E-15	1.682E-20	4.830E-20	1.022E-19	2.171E-19	2.335E-19	1.890E-20	0.000E+00	0.000E+00
a-226+D4	äDSR(j)		7.410E-19	7.449E-19	7.468E-19	7.074E-19	4.546E-19	2.860E-20	0.000E+00	0.000E+00
n-232	Th-232	1.000E+00	3.522E-02	3.498E-02	3.451E-02	3.285E-02	2.812E-02	1.162E-02	0.000E+00	0.000E+00
n-232	Ra-228+D	1.000E+00	6.245E-06	1.744E-05	3.490E-05	6.426E-05	6.831E-05	2.850E-05	0.000E+00	0.000E+00
n-232	Th-228+D	1.000E+00	5.257E-05	3.179E-04	1.223E-03	4.070E-03	5.224E-03	2.556E-03	0.000E+00	0.000E+00
n-232	äDSR(j)		3.528E-02	3.532E-02	3.576E-02	3.698E-02	3.341E-02	1.420E-02	0.000E+00	0.000E+00
-234	U-234	9.996E-01	2.772E-03	2.634E-03	2.378E-03	1.661E-03	5.873E-04	1.098E-05	0.000E+00	0.000E+00
-234	Th-230	9.996E-01	3.167E-08	9.261E-08	2.043E-07	5.040E-07	8.601E-07	4.740E-07	0.000E+00	0.000E+00
-234	Ra-226+D	9.996E-01	1.261E-13	8.586E-13	4.265E-12	3.056E-11	1.377E-10	1.592E-10	0.000E+00	0.000E+00
-234	Pb-210+D	9.996E-01	2.509E-15	3.641E-14	3.941E-13	7.978E-12	9.053E-11	2.115E-10	0.000E+00	0.000E+00
-234	äDSR(j)		2.772E-03	2.634E-03	2.379E-03	1.662E-03	5.881E-04	1.146E-05	0.000E+00	0.000E+00
-234	U-234	1.319E-06	3.659E-09	3.477E-09	3.139E-09	2.193E-09	7.752E-10	1.449E-11	0.000E+00	0.000E+00
-234	Th-230	1.319E-06	4.180E-14	1.223E-13	2.697E-13	6.653E-13	1.135E-12	6.257E-13	0.000E+00	0.000E+00
-234	Ra-226+D	1.319E-06	1.664E-19	1.133E-18	5.630E-18	4.034E-17	1.818E-16	2.102E-16	0.000E+00	0.000E+00
-234	Pb-210+D1	1.319E-06	1.970E-21	2.858E-20	3.094E-19	6.263E-18	7.108E-17	1.661E-16	0.000E+00	0.000E+00
-234	äDSR(j)		3.659E-09	3.477E-09	3.140E-09	2.194E-09	7.763E-10	1.512E-11	0.000E+00	0.000E+00
-234	U-234	1.899E-08	5.266E-11	5.005E-11	4.519E-11	3.157E-11	1.116E-11	2.086E-13	0.000E+00	0.000E+00
-234	Th-230	1.899E-08	6.017E-16	1.760E-15	3.882E-15	9.576E-15	1.634E-14	9.006E-15	0.000E+00	0.000E+00
-234	Ra-226+D	1.899E-08	2.395E-21	1.631E-20	8.104E-20	5.807E-19	2.617E-18	3.025E-18	0.000E+00	0.000E+00
-234	Pb-210+D2	1.899E-08	2.795E-23	4.056E-22	4.391E-21	8.887E-20	1.009E-18	2.356E-18	0.000E+00	0.000E+00
-234	äDSR(j)		5.266E-11	5.005E-11	4.519E-11	3.158E-11	1.117E-11	2.176E-13	0.000E+00	0.000E+00
-234	U-234	2.100E-04	5.822E-07	5.532E-07	4.996E-07	3.490E-07	1.234E-07	2.306E-09	0.000E+00	0.000E+00
-234	Th-230	2.100E-04	6.652E-12	1.945E-11	4.291E-11	1.059E-10	1.806E-10	9.956E-11	0.000E+00	0.000E+00
-234	Ra-226+D1	2.100E-04	2.648E-17	1.803E-16	8.958E-16	6.420E-15	2.893E-14	3.344E-14	0.000E+00	0.000E+00
-234	Pb-210+D	2.100E-04	5.271E-19	7.647E-18	8.279E-17	1.676E-15	1.902E-14	4.443E-14	0.000E+00	0.000E+00
-234	äDSR(j)		5.822E-07	5.533E-07	4.996E-07	3.491E-07	1.235E-07	2.406E-09	0.000E+00	0.000E+00
-234	U-234	2.771E-10	7.685E-13	7.303E-13	6.594E-13	4.606E-13	1.628E-13	3.045E-15	0.000E+00	0.000E+00
-234	Th-230	2.771E-10	8.780E-18	2.568E-17	5.664E-17	1.397E-16	2.385E-16	1.314E-16	0.000E+00	0.000E+00
-234	Ra-226+D1	2.771E-10	3.495E-23	2.381E-22	1.183E-21	8.474E-21	3.818E-20	4.415E-20	0.000E+00	0.000E+00
-234	Pb-210+D1	2.771E-10	4.138E-25	6.004E-24	6.500E-23	1.316E-21	1.493E-20	3.488E-20	0.000E+00	0.000E+00
-234	äDSR(j)		7.685E-13	7.303E-13	6.595E-13	4.608E-13	1.631E-13	3.176E-15	0.000E+00	0.000E+00

ummary : GKP Maintenance Worker Inhalation
ile : C:\USERS\CLAUDE\DOCUMENTS\0 GKP DOSE\RESRAD CW\GKP PARK RANGER - INHALATION.RAD

Dose/Source Ratios Summed Over All Pathways
Parent and Progeny Principal Radionuclide Contributions Indicated

Parent (i)	Product (j)	Thread Fraction	DSR(j,t) At Time in Years (mrem/yr)/(pCi/g) 0.000E+00	1.000E+00	3.000E+00	1.000E+01	3.000E+01	1.000E+02	3.000E+02	1.000E+03
ÄÄÄÄÄÄÄÄ	ÄÄÄÄÄÄÄÄÄÄ	ÄÄÄÄÄÄÄÄÄ	ÄÄÄÄÄÄÄÄÄ	ÄÄÄÄÄÄÄÄÄ	ÄÄÄÄÄÄÄÄÄ	ÄÄÄÄÄÄÄÄÄ	ÄÄÄÄÄÄÄÄÄ	ÄÄÄÄÄÄÄÄÄ	ÄÄÄÄÄÄÄÄÄ	ÄÄÄÄÄÄÄÄÄ
-234	U-234	3.989E-12	1.106E-14	1.051E-14	9.492E-15	6.630E-15	2.344E-15	4.382E-17	0.000E+00	0.000E+00
-234	Th-230	3.989E-12	1.264E-19	3.696E-19	8.153E-19	2.011E-18	3.432E-18	1.892E-18	0.000E+00	0.000E+00
-234	Ra-226+D1	3.989E-12	5.031E-25	3.427E-24	1.702E-23	1.220E-22	5.496E-22	6.355E-22	0.000E+00	0.000E+00
-234	Pb-210+D2	3.989E-12	5.872E-27	8.519E-26	9.222E-25	1.867E-23	2.118E-22	4.950E-22	0.000E+00	0.000E+00
-234	äDSR(j)		1.106E-14	1.051E-14	9.493E-15	6.632E-15	2.347E-15	4.572E-17	0.000E+00	0.000E+00
-234	U-234	1.998E-04	5.539E-07	5.264E-07	4.753E-07	3.320E-07	1.174E-07	2.194E-09	0.000E+00	0.000E+00
-234	Th-230	1.998E-04	6.329E-12	1.851E-11	4.083E-11	1.007E-10	1.719E-10	9.473E-11	0.000E+00	0.000E+00
-234	Ra-226+D2	1.998E-04	2.517E-17	1.714E-16	8.516E-16	6.103E-15	2.750E-14	3.179E-14	0.000E+00	0.000E+00
-234	Pb-210+D	1.998E-04	5.015E-19	7.276E-18	7.877E-17	1.594E-15	1.809E-14	4.227E-14	0.000E+00	0.000E+00
-234	äDSR(j)		5.539E-07	5.264E-07	4.753E-07	3.321E-07	1.175E-07	2.289E-09	0.000E+00	0.000E+00
-234	U-234	2.637E-10	7.311E-13	6.948E-13	6.274E-13	4.383E-13	1.549E-13	2.897E-15	0.000E+00	0.000E+00
-234	Th-230	2.637E-10	8.354E-18	2.443E-17	5.389E-17	1.330E-16	2.269E-16	1.250E-16	0.000E+00	0.000E+00
-234	Ra-226+D2	2.637E-10	3.323E-23	2.263E-22	1.124E-21	8.055E-21	3.630E-20	4.197E-20	0.000E+00	0.000E+00
-234	Pb-210+D1	2.637E-10	3.937E-25	5.712E-24	6.184E-23	1.252E-21	1.420E-20	3.319E-20	0.000E+00	0.000E+00
-234	äDSR(j)		7.312E-13	6.948E-13	6.274E-13	4.384E-13	1.551E-13	3.022E-15	0.000E+00	0.000E+00
-234	U-234	3.795E-12	1.052E-14	1.000E-14	9.031E-15	6.308E-15	2.230E-15	4.169E-17	0.000E+00	0.000E+00
-234	Th-230	3.795E-12	1.202E-19	3.517E-19	7.757E-19	1.914E-18	3.266E-18	1.800E-18	0.000E+00	0.000E+00
-234	Ra-226+D2	3.795E-12	4.783E-25	3.257E-24	1.618E-23	1.159E-22	5.224E-22	6.041E-22	0.000E+00	0.000E+00
-234	Pb-210+D2	3.795E-12	5.586E-27	8.105E-26	8.774E-25	1.776E-23	2.015E-22	4.709E-22	0.000E+00	0.000E+00
-234	äDSR(j)		1.052E-14	1.000E-14	9.031E-15	6.310E-15	2.233E-15	4.349E-17	0.000E+00	0.000E+00
-234	U-234	4.196E-08	1.163E-10	1.106E-10	9.983E-11	6.974E-11	2.465E-11	4.609E-13	0.000E+00	0.000E+00
-234	Th-230	4.196E-08	1.329E-15	3.887E-15	8.576E-15	2.116E-14	3.610E-14	1.990E-14	0.000E+00	0.000E+00
-234	Ra-226+D3	4.196E-08	5.287E-21	3.601E-20	1.789E-19	1.282E-18	5.775E-18	6.678E-18	0.000E+00	0.000E+00
-234	Pb-210+D	4.196E-08	1.053E-22	1.528E-21	1.654E-20	3.349E-19	3.800E-18	8.879E-18	0.000E+00	0.000E+00
-234	äDSR(j)		1.163E-10	1.106E-10	9.984E-11	6.976E-11	2.469E-11	4.808E-13	0.000E+00	0.000E+00
-234	U-234	5.538E-14	1.536E-16	1.459E-16	1.318E-16	9.205E-17	3.254E-17	6.084E-19	0.000E+00	0.000E+00
-234	Th-230	5.538E-14	1.755E-21	5.131E-21	1.132E-20	2.793E-20	4.765E-20	2.626E-20	0.000E+00	0.000E+00
-234	Ra-226+D3	5.538E-14	6.979E-27	4.753E-26	2.361E-25	1.692E-24	7.624E-24	8.815E-24	0.000E+00	0.000E+00
-234	Pb-210+D1	5.538E-14	8.269E-29	1.200E-27	1.299E-26	2.629E-25	2.983E-24	6.971E-24	0.000E+00	0.000E+00
-234	äDSR(j)		1.536E-16	1.459E-16	1.318E-16	9.208E-17	3.259E-17	6.347E-19	0.000E+00	0.000E+00
-234	U-234	7.972E-16	2.211E-18	2.101E-18	1.897E-18	1.325E-18	4.684E-19	8.758E-21	0.000E+00	0.000E+00
-234	Th-230	7.972E-16	2.526E-23	7.386E-23	1.629E-22	4.020E-22	6.859E-22	3.780E-22	0.000E+00	0.000E+00
-234	Ra-226+D3	7.972E-16	1.005E-28	6.842E-28	3.399E-27	2.435E-26	1.097E-25	1.269E-25	0.000E+00	0.000E+00
-234	Pb-210+D2	7.972E-16	1.173E-30	1.702E-29	1.843E-28	3.730E-27	4.233E-26	9.891E-26	0.000E+00	0.000E+00
-234	äDSR(j)		2.211E-18	2.101E-18	1.897E-18	1.325E-18	4.691E-19	9.136E-21	0.000E+00	0.000E+00
-234	U-234	2.000E-07	5.546E-10	5.270E-10	4.759E-10	3.324E-10	1.175E-10	2.197E-12	0.000E+00	0.000E+00
-234	Th-230	2.000E-07	6.336E-15	1.853E-14	4.088E-14	1.008E-13	1.721E-13	9.484E-14	0.000E+00	0.000E+00
-234	Ra-226+D4	2.000E-07	2.518E-20	1.715E-19	8.520E-19	6.105E-18	2.751E-17	3.181E-17	0.000E+00	0.000E+00
-234	Pb-210+D	2.000E-07	5.021E-22	7.284E-21	7.886E-20	1.596E-18	1.811E-17	4.232E-17	0.000E+00	0.000E+00
-234	äDSR(j)		5.546E-10	5.270E-10	4.759E-10	3.325E-10	1.177E-10	2.292E-12	0.000E+00	0.000E+00

ummary : GKP Maintenance Worker Inhalation
ile : C:\USERS\CLAUDE\DOCUMENTS\0 GKP DOSE\RESRAD CW\GKP PARK RANGER - INHALATION.RAD

Dose/Source Ratios Summed Over All Pathways
Parent and Progeny Principal Radionuclide Contributions Indicated

Parent (i)	Product (j)	Thread Fraction	DSR(j,t) At Time in Years (mrem/yr)/(pCi/g) 0.000E+00	1.000E+00	3.000E+00	1.000E+01	3.000E+01	1.000E+02	3.000E+02	1.000E+03
ÄÄÄÄÄÄÄÄ	ÄÄÄÄÄÄÄÄÄÄ	ÄÄÄÄÄÄÄÄÄ	ÄÄÄÄÄÄÄÄÄ	ÄÄÄÄÄÄÄÄÄ	ÄÄÄÄÄÄÄÄÄ	ÄÄÄÄÄÄÄÄÄ	ÄÄÄÄÄÄÄÄÄ	ÄÄÄÄÄÄÄÄÄ	ÄÄÄÄÄÄÄÄÄ	ÄÄÄÄÄÄÄÄÄ
-234	U-234	2.640E-13	7.320E-16	6.957E-16	6.281E-16	4.388E-16	1.551E-16	2.900E-18	0.000E+00	0.000E+00
-234	Th-230	2.640E-13	8.364E-21	2.446E-20	5.396E-20	1.331E-19	2.271E-19	1.252E-19	0.000E+00	0.000E+00
-234	Ra-226+D4	2.640E-13	3.324E-26	2.264E-25	1.125E-24	8.059E-24	3.631E-23	4.199E-23	0.000E+00	0.000E+00
-234	Pb-210+D1	2.640E-13	3.942E-28	5.719E-27	6.191E-26	1.253E-24	1.422E-23	3.323E-23	0.000E+00	0.000E+00
-234	äDSR(j)		7.320E-16	6.957E-16	6.282E-16	4.389E-16	1.553E-16	3.025E-18	0.000E+00	0.000E+00
-234	U-234	3.800E-15	1.054E-17	1.001E-17	9.042E-18	6.316E-18	2.233E-18	4.174E-20	0.000E+00	0.000E+00
-234	Th-230	3.800E-15	1.204E-22	3.521E-22	7.767E-22	1.916E-21	3.270E-21	1.802E-21	0.000E+00	0.000E+00
-234	Ra-226+D4	3.800E-15	4.785E-28	3.259E-27	1.619E-26	1.160E-25	5.227E-25	6.044E-25	0.000E+00	0.000E+00
-234	Pb-210+D2	3.800E-15	5.593E-30	8.115E-29	8.785E-28	1.778E-26	2.018E-25	4.715E-25	0.000E+00	0.000E+00
-234	äDSR(j)		1.054E-17	1.001E-17	9.042E-18	6.318E-18	2.236E-18	4.355E-20	0.000E+00	0.000E+00
-235+D	U-235+D	9.835E-01	2.541E-03	2.415E-03	2.181E-03	1.523E-03	5.385E-04	1.007E-05	0.000E+00	0.000E+00
-235+D	Pa-231	9.835E-01	2.774E-07	7.953E-07	1.678E-06	3.520E-06	3.614E-06	2.226E-07	0.000E+00	0.000E+00
-235+D	Ac-227+D	9.835E-01	1.503E-08	9.801E-08	4.417E-07	2.259E-06	4.221E-06	3.428E-07	0.000E+00	0.000E+00
-235+D	äDSR(j)		2.541E-03	2.416E-03	2.183E-03	1.529E-03	5.463E-04	1.064E-05	0.000E+00	0.000E+00
-235+D	U-235+D	2.722E-03	7.033E-06	6.683E-06	6.035E-06	4.216E-06	1.490E-06	2.787E-08	0.000E+00	0.000E+00
-235+D	Pa-231	2.722E-03	7.677E-10	2.201E-09	4.645E-09	9.741E-09	1.000E-08	6.160E-10	0.000E+00	0.000E+00
-235+D	Ac-227+D1	2.722E-03	4.160E-11	2.713E-10	1.222E-09	6.252E-09	1.168E-08	9.488E-10	0.000E+00	0.000E+00
-235+D	äDSR(j)		7.034E-06	6.686E-06	6.041E-06	4.232E-06	1.512E-06	2.944E-08	0.000E+00	0.000E+00
-235+D	U-235+D	1.376E-02	3.556E-05	3.379E-05	3.051E-05	2.131E-05	7.534E-06	1.409E-07	0.000E+00	0.000E+00
-235+D	Pa-231	1.376E-02	3.881E-09	1.113E-08	2.348E-08	4.925E-08	5.057E-08	3.115E-09	0.000E+00	0.000E+00
-235+D	Ac-227+D2	1.376E-02	2.098E-10	1.368E-09	6.165E-09	3.153E-08	5.892E-08	4.785E-09	0.000E+00	0.000E+00
-235+D	äDSR(j)		3.556E-05	3.380E-05	3.054E-05	2.139E-05	7.644E-06	1.488E-07	0.000E+00	0.000E+00
-235+D	U-235+D	3.809E-05	9.841E-08	9.352E-08	8.444E-08	5.899E-08	2.085E-08	3.900E-10	0.000E+00	0.000E+00
-235+D	Pa-231	3.809E-05	1.074E-11	3.080E-11	6.499E-11	1.363E-10	1.400E-10	8.620E-12	0.000E+00	0.000E+00
-235+D	Ac-227+D3	3.809E-05	5.806E-13	3.786E-12	1.706E-11	8.726E-11	1.631E-10	1.324E-11	0.000E+00	0.000E+00
-235+D	äDSR(j)		9.842E-08	9.355E-08	8.452E-08	5.921E-08	2.116E-08	4.118E-10	0.000E+00	0.000E+00
-235+D	U-235+D	8.257E-07	2.133E-09	2.027E-09	1.831E-09	1.279E-09	4.521E-10	8.455E-12	0.000E+00	0.000E+00
-235+D	Pa-231	8.257E-07	2.329E-13	6.677E-13	1.409E-12	2.955E-12	3.035E-12	1.869E-13	0.000E+00	0.000E+00
-235+D	Ac-227+D4	8.257E-07	1.257E-14	8.199E-14	3.695E-13	1.890E-12	3.531E-12	2.868E-13	0.000E+00	0.000E+00
-235+D	äDSR(j)		2.134E-09	2.028E-09	1.833E-09	1.284E-09	4.587E-10	8.928E-12	0.000E+00	0.000E+00
-235+D	U-235+D	2.285E-09	5.905E-12	5.611E-12	5.067E-12	3.539E-12	1.251E-12	2.340E-14	0.000E+00	0.000E+00
-235+D	Pa-231	2.285E-09	6.445E-16	1.848E-15	3.900E-15	8.179E-15	8.399E-15	5.172E-16	0.000E+00	0.000E+00
-235+D	Ac-227+D5	2.285E-09	3.480E-17	2.269E-16	1.023E-15	5.230E-15	9.774E-15	7.938E-16	0.000E+00	0.000E+00
-235+D	äDSR(j)		5.905E-12	5.613E-12	5.072E-12	3.553E-12	1.269E-12	2.471E-14	0.000E+00	0.000E+00
-238	U-238	5.450E-07	1.351E-09	1.284E-09	1.159E-09	8.098E-10	2.863E-10	5.354E-12	0.000E+00	0.000E+00

ummary : GKP Maintenance Worker Inhalation
ile : C:\USERS\CLAUDE\DOCUMENTS\0 GKP DOSE\RESRAD CW\GKP PARK RANGER - INHALATION.RAD

Dose/Source Ratios Summed Over All Pathways
Parent and Progeny Principal Radionuclide Contributions Indicated

Parent (i)	Product (j)	Thread Fraction	DSR(j,t) At Time in Years (mrem/yr)/(pCi/g) 0.000E+00	1.000E+00	3.000E+00	1.000E+01	3.000E+01	1.000E+02	3.000E+02	1.000E+03
ÄÄÄÄÄÄÄÄÄ	ÄÄÄÄÄÄÄÄÄÄ	ÄÄÄÄÄÄÄÄÄ	ÄÄÄÄÄÄÄÄÄ	ÄÄÄÄÄÄÄÄÄ	ÄÄÄÄÄÄÄÄÄ	ÄÄÄÄÄÄÄÄÄ	ÄÄÄÄÄÄÄÄÄ	ÄÄÄÄÄÄÄÄÄ	ÄÄÄÄÄÄÄÄÄ	ÄÄÄÄÄÄÄÄÄ
-238+D	U-238+D	1.599E-03	3.966E-06	3.769E 06	3.403E-06	2.377E-06	8.403E-07	1.572E-08	0.000E+00	0.000E+00
-238+D	U-234	1.599E-03	6.207E-12	1.780E-11	3.756E-11	7.877E-11	8.091E-11	4.986E-12	0.000E+00	0.000E+00
-238+D	Th-230	1.599E-03	4.731E-17	3.211E-16	1.583E-15	1.104E-14	4.632E-14	4.588E-14	0.000E+00	0.000E+00
-238+D	Ra-226+D	1.599E-03	1.416E-22	2.059E-21	2.238E-20	4.600E-19	5.428E-18	1.384E-17	0.000E+00	0.000E+00
-238+D	Pb-210+D	1.599E-03	2.260E-24	6.760E-23	1.574E-21	9.234E-20	2.870E-18	1.686E-17	0.000E+00	0.000E+00
-238+D	äDSR(j)		3.966E-06	3.769E-06	3.403E-06	2.377E-06	8.404E-07	1.572E-08	0.000E+00	0.000E+00
-238+D	U-238+D	2.111E-09	5.235E-12	4.974E-12	4.492E-12	3.138E-12	1.109E-12	2.074E-14	0.000E+00	0.000E+00
-238+D	U-234	2.111E-09	8.194E-18	2.349E-17	4.958E-17	1.040E-16	1.068E-16	6.581E-18	0.000E+00	0.000E+00
-238+D	Th-230	2.111E-09	6.245E-23	4.238E-22	2.089E-21	1.457E-20	6.114E-20	6.056E-20	0.000E+00	0.000E+00
-238+D	Ra-226+D	2.111E-09	1.869E-28	2.717E-27	2.955E-26	6.072E-25	7.165E-24	1.827E-23	0.000E+00	0.000E+00
-238+D	Pb-210+D1	2.111E-09	1.774E-30	5.307E-29	1.236E-27	7.249E-26	2.253E-24	1.324E-23	0.000E+00	0.000E+00
-238+D	äDSR(j)		5.235E-12	4.974E-12	4.492E-12	3.138E-12	1.109E-12	2.075E-14	0.000E+00	0.000E+00
-238+D	U-238+D	3.039E-11	7.535E-14	7.160E-14	6.465E-14	4.516E-14	1.597E-14	2.986E-16	0.000E+00	0.000E+00
-238+D	U-234	3.039E-11	1.179E-19	3.382E-19	7.136E-19	1.497E-18	1.537E-18	9.473E-20	0.000E+00	0.000E+00
-238+D	Th-230	3.039E-11	8.989E-25	6.101E-24	3.007E-23	2.097E-22	8.801E-22	8.716E-22	0.000E+00	0.000E+00
-238+D	Ra-226+D	3.039E-11	2.691E-30	3.912E-29	4.253E-28	8.739E-27	1.031E-25	2.630E-25	0.000E+00	0.000E+00
-238+D	Pb-210+D2	3.039E-11	2.518E-32	7.531E-31	1.754E-29	1.029E-27	3.197E-26	1.879E-25	0.000E+00	0.000E+00
-238+D	äDSR(j)		7.535E-14	7.160E-14	6.466E-14	4.517E-14	1.597E-14	2.987E-16	0.000E+00	0.000E+00
-238+D	U-238+D	3.359E-07	8.329E-10	7.916E-10	7.148E-10	4.993E-10	1.765E-10	3.301E-12	0.000E+00	0.000E+00
-238+D	U-234	3.359E-07	1.304E-15	3.738E-15	7.889E-15	1.655E-14	1.699E-14	1.047E-15	0.000E+00	0.000E+00
-238+D	Th-230	3.359E-07	9.937E-21	6.744E-20	3.324E-19	2.318E-18	9.730E-18	9.636E-18	0.000E+00	0.000E+00
-238+D	Ra-226+D1	3.359E-07	2.975E-26	4.324E-25	4.702E-24	9.661E-23	1.140E-21	2.908E-21	0.000E+00	0.000E+00
-238+D	Pb-210+D	3.359E-07	4.747E-28	1.420E-26	3.307E-25	1.940E-23	6.029E-22	3.542E-21	0.000E+00	0.000E+00
-238+D	äDSR(j)		8.329E-10	7.916E-10	7.148E-10	4.993E-10	1.765E-10	3.302E-12	0.000E+00	0.000E+00
-238+D	U-238+D	4.434E-13	1.099E-15	1.045E-15	9.435E-16	6.591E-16	2.330E-16	4.357E-18	0.000E+00	0.000E+00
-238+D	U-234	4.434E-13	1.721E-21	4.935E-21	1.041E-20	2.184E-20	2.243E-20	1.382E-21	0.000E+00	0.000E+00
-238+D	Th-230	4.434E-13	1.312E-26	8.902E-26	4.388E-25	3.060E-24	1.284E-23	1.272E-23	0.000E+00	0.000E+00
-238+D	Ra-226+D1	4.434E-13	3.927E-32	5.708E-31	6.206E-30	1.275E-28	1.505E-27	3.838E-27	0.000E+00	0.000E+00
-238+D	Pb-210+D1	4.434E-13	3.727E-34	1.115E-32	2.596E-31	1.523E-29	4.733E-28	2.781E-27	0.000E+00	0.000E+00
-238+D	äDSR(j)		1.099E-15	1.045E-15	9.435E-16	6.591E-16	2.330E-16	4.359E-18	0.000E+00	0.000E+00
-238+D	U-238+D	6.383E-15	1.583E-17	1.504E-17	1.358E-17	9.487E-18	3.354E-18	6.272E-20	0.000E+00	0.000E+00
-238+D	U-234	6.383E-15	2.477E-23	7.103E-23	1.499E-22	3.144E-22	3.229E-22	1.990E-23	0.000E+00	0.000E+00
-238+D	Th-230	6.383E-15	1.888E-28	1.281E-27	6.316E-27	4.405E-26	1.849E-25	1.831E-25	0.000E+00	0.000E+00
-238+D	Ra-226+D1	6.383E-15	5.652E-34	8.216E-33	8.933E-32	1.836E-30	2.166E-29	5.525E-29	0.000E+00	0.000E+00
-238+D	Pb-210+D2	6.383E-15	5.288E-36	1.582E-34	3.683E-33	2.161E-31	6.716E-30	3.946E-29	0.000E+00	0.000E+00
-238+D	äDSR(j)		1.583E-17	1.504E-17	1.358E-17	9.487E-18	3.354E-18	6.274E-20	0.000E+00	0.000E+00

ummary : GKP Maintenance Worker Inhalation
ile : C:\USERS\CLAUDE\DOCUMENTS\0 GKP DOSE\RESRAD CW\GKP PARK RANGER - INHALATION.RAD

Dose/Source Ratios Summed Over All Pathways
Parent and Progeny Principal Radionuclide Contributions Indicated

Parent (i)	Product (j)	Thread Fraction	DSR(j,t) At Time in Years (mrem/yr)/(pCi/g) 0.000E+00	1.000E+00	3.000E+00	1.000E+01	3.000E+01	1.000E+02	3.000E+02	1.000E+03
ÄÄÄÄÄÄÄÄ	ÄÄÄÄÄÄÄÄÄÄ	ÄÄÄÄÄÄÄÄ	ÄÄÄÄÄÄÄÄ	ÄÄÄÄÄÄÄÄ	ÄÄÄÄÄÄÄÄ	ÄÄÄÄÄÄÄÄ	ÄÄÄÄÄÄÄÄ	ÄÄÄÄÄÄÄÄ	ÄÄÄÄÄÄÄÄ	ÄÄÄÄÄÄÄÄ
-238+D	U-238+D	3.196E-07	7.925E-10	7.531E-10	6.800E-10	4.750E-10	1.679E-10	3.141E-12	0.000E+00	0.000E+00
-238+D	U-234	3.196E-07	1.240E-15	3.557E-15	7.506E-15	1.574E-14	1.617E-14	9.964E-16	0.000E+00	0.000E+00
-238+D	Th-230	3.196E-07	9.454E-21	6.416E-20	3.163E-19	2.206E-18	9.257E-18	9.168E-18	0.000E+00	0.000E+00
-238+D	Ra-226+D2	3.196E-07	2.828E-26	4.111E-25	4.469E-24	9.184E-23	1.084E-21	2.764E-21	0.000E+00	0.000E+00
-238+D	Pb-210+D	3.196E-07	4.517E-28	1.351E-26	3.146E-25	1.845E-23	5.736E-22	3.370E-21	0.000E+00	0.000E+00
-238+D	äDSR(j)		7.925E-10	7.531E-10	6.800E-10	4.751E-10	1.679E-10	3.142E-12	0.000E+00	0.000E+00
-238+D	U-238+D	4.219E-13	1.046E-15	9.941E-16	8.976E-16	6.270E-16	2.217E-16	4.145E-18	0.000E+00	0.000E+00
-238+D	U-234	4.219E-13	1.637E-21	4.695E-21	9.908E-21	2.078E-20	2.134E-20	1.315E-21	0.000E+00	0.000E+00
-238+D	Th-230	4.219E-13	1.248E-26	8.470E-26	4.175E-25	2.911E-24	1.222E-23	1.210E-23	0.000E+00	0.000E+00
-238+D	Ra-226+D2	4.219E-13	3.733E-32	5.426E-31	5.899E-30	1.212E-28	1.431E-27	3.649E-27	0.000E+00	0.000E+00
-238+D	Pb-210+D1	4.219E-13	3.546E-34	1.061E-32	2.470E-31	1.449E-29	4.503E-28	2.646E-27	0.000E+00	0.000E+00
-238+D	äDSR(j)		1.046E-15	9.941E-16	8.976E-16	6.271E-16	2.217E-16	4.147E-18	0.000E+00	0.000E+00
-238+D	U-238+D	6.073E-15	1.506E-17	1.431E-17	1.292E-17	9.026E-18	3.191E-18	5.967E-20	0.000E+00	0.000E+00
-238+D	U-234	6.073E-15	2.357E-23	6.758E-23	1.426E-22	2.991E-22	3.072E-22	1.893E-23	0.000E+00	0.000E+00
-238+D	Th-230	6.073E-15	1.796E-28	1.219E-27	6.009E-27	4.191E-26	1.759E-25	1.742E-25	0.000E+00	0.000E+00
-238+D	Ra-226+D2	6.073E-15	5.373E-34	7.810E-33	8.492E-32	1.745E-30	2.059E-29	5.252E-29	0.000E+00	0.000E+00
-238+D	Pb-210+D2	6.073E-15	5.031E-36	1.505E-34	3.505E-33	2.056E-31	6.389E-30	3.754E-29	0.000E+00	0.000E+00
-238+D	äDSR(j)		1.506E-17	1.431E-17	1.292E-17	9.026E-18	3.191E-18	5.969E-20	0.000E+00	0.000E+00
-238+D	U-238+D	6.713E-11	1.665E-13	1.582E-13	1.428E-13	9.978E-14	3.527E-14	6.596E-16	0.000E+00	0.000E+00
-238+D	U-234	6.713E-11	2.606E-19	7.471E-19	1.577E-18	3.307E-18	3.396E-18	2.093E-19	0.000E+00	0.000E+00
-238+D	Th-230	6.713E-11	1.986E-24	1.348E-23	6.643E-23	4.633E-22	1.944E-21	1.926E-21	0.000E+00	0.000E+00
-238+D	Ra-226+D3	6.713E-11	5.939E-30	8.634E-29	9.387E-28	1.929E-26	2.277E-25	5.806E-25	0.000E+00	0.000E+00
-238+D	Pb-210+D	6.713E-11	9.487E-32	2.838E-30	6.608E-29	3.876E-27	1.205E-25	7.079E-25	0.000E+00	0.000E+00
-238+D	äDSR(j)		1.665E-13	1.582E-13	1.428E-13	9.978E-14	3.528E-14	6.599E-16	0.000E+00	0.000E+00
-238+D	U-238+D	8.862E-17	2.197E-19	2.088E-19	1.885E-19	1.317E-19	4.656E-20	8.707E-22	0.000E+00	0.000E+00
-238+D	U-234	8.862E-17	3.439E-25	9.861E-25	2.081E-24	4.365E-24	4.483E-24	2.762E-25	0.000E+00	0.000E+00
-238+D	Th-230	8.862E-17	2.621E-30	1.779E-29	8.769E-29	6.115E-28	2.567E-27	2.542E-27	0.000E+00	0.000E+00
-238+D	Ra-226+D3	8.862E-17	7.840E-36	1.140E-34	1.239E-33	2.546E-32	3.005E-31	7.664E-31	0.000E+00	0.000E+00
-238+D	Pb-210+D1	8.862E-17	7.448E-38	2.228E-36	5.188E-35	3.043E-33	9.458E-32	5.557E-31	0.000E+00	0.000E+00
-238+D	äDSR(j)		2.197E-19	2.088E-19	1.885E-19	1.317E-19	4.656E-20	8.710E-22	0.000E+00	0.000E+00
-238+D	U-238+D	1.276E-18	3.163E-21	3.006E-21	2.714E-21	1.896E-21	6.702E-22	1.253E-23	0.000E+00	0.000E+00
-238+D	U-234	1.276E-18	4.951E-27	1.419E-26	2.995E-26	6.282E-26	6.453E-26	3.976E-27	0.000E+00	0.000E+00
-238+D	Th-230	1.276E-18	3.773E-32	2.561E-31	1.262E-30	8.802E-30	3.694E-29	3.659E-29	0.000E+00	0.000E+00
-238+D	Ra-226+D3	1.276E-18	1.128E-37	1.640E-36	1.784E-35	3.665E-34	4.325E-33	1.103E-32	0.000E+00	0.000E+00
-238+D	Pb-210+D2	1.276E-18	1.057E-39	3.161E-38	7.361E-37	4.318E-35	1.342E-33	7.886E-33	0.000E+00	0.000E+00
-238+D	äDSR(j)		3.163E-21	3.006E-21	2.714E-21	1.896E-21	6.702E-22	1.254E-23	0.000E+00	0.000E+00

ummary : GKP Maintenance Worker Inhalation
ile : C:\USERS\CLAUDE\DOCUMENTS\0 GKP DOSE\RESRAD CW\GKP PARK RANGER - INHALATION.RAD

Dose/Source Ratios Summed Over All Pathways
Parent and Progeny Principal Radionuclide Contributions Indicated

Parent	Product	Thread	DSR(j,t) At Time in Years (mrem/yr)/(pCi/g)							
(i)	(j)	Fraction	0.000E+00	1.000E+00	3.000E+00	1.000E+01	3.000E+01	1.000E+02	3.000E+02	1.000E+03
ÄÄÄÄÄÄÄÄÄ	ÄÄÄÄÄÄÄÄÄÄ	ÄÄÄÄÄÄÄÄÄ	ÄÄÄÄÄÄÄÄÄ	ÄÄÄÄÄÄÄÄÄ	ÄÄÄÄÄÄÄÄÄ	ÄÄÄÄÄÄÄÄÄ	ÄÄÄÄÄÄÄÄÄ	ÄÄÄÄÄÄÄÄÄ	ÄÄÄÄÄÄÄÄÄ	ÄÄÄÄÄÄÄÄÄ
-238+D	U-238+D	3.200E-10	7.934E-13	7.540E-13	6.809E-13	4.756E-13	1.681E-13	3.144E-15	0.000E+00	0.000E+00
-238+D	U-234	3.200E-10	1.242E-18	3.561E-18	7.515E-18	1.576E-17	1.619E-17	9.976E-19	0.000E+00	0.000E+00
-238+D	Th-230	3.200E-10	9.466E-24	6.424E-23	3.166E-22	2.208E-21	9.268E-21	9.179E-21	0.000E+00	0.000E+00
-238+D	Ra-226+D4	3.200E-10	2.829E-29	4.112E-28	4.471E-27	9.189E-26	1.084E-24	2.766E-24	0.000E+00	0.000E+00
-238+D	Pb-210+D	3.200E-10	4.522E-31	1.353E-29	3.150E-28	1.848E-26	5.743E-25	3.374E-24	0.000E+00	0.000E+00
-238+D	äDSR(j)		7.934E-13	7.540E-13	6.809E-13	4.756E-13	1.681E-13	3.145E-15	0.000E+00	0.000E+00
-238+D	U-238+D	4.224E-16	1.047E-18	9.953E-19	8.987E-19	6.278E-19	2.219E-19	4.151E-21	0.000E+00	0.000E+00
-238+D	U-234	4.224E-16	1.639E-24	4.701E-24	9.920E-24	2.080E-23	2.137E-23	1.317E-24	0.000E+00	0.000E+00
-238+D	Th-230	4.224E-16	1.249E-29	8.480E-29	4.180E-28	2.915E-27	1.223E-26	1.212E-26	0.000E+00	0.000E+00
-238+D	Ra-226+D4	4.224E-16	3.734E-35	5.428E-34	5.902E-33	1.213E-31	1.431E-30	3.650E-30	0.000E+00	0.000E+00
-238+D	Pb-210+D1	4.224E-16	3.550E-37	1.062E-35	2.473E-34	1.450E-32	4.508E-31	2.649E-30	0.000E+00	0.000E+00
-238+D	äDSR(j)		1.047E-18	9.953E-19	8.987E-19	6.278E-19	2.220E-19	4.152E-21	0.000E+00	0.000E+00
-238+D	U-238+D	6.080E-18	1.508E-20	1.433E-20	1.294E-20	9.037E-21	3.195E-21	5.974E-23	0.000E+00	0.000E+00
-238+D	U-234	6.080E-18	2.360E-26	6.766E-26	1.428E-25	2.995E-25	3.076E-25	1.895E-26	0.000E+00	0.000E+00
-238+D	Th-230	6.080E-18	1.799E-31	1.221E-30	6.016E-30	4.196E-29	1.761E-28	1.744E-28	0.000E+00	0.000E+00
-238+D	Ra-226+D4	6.080E-18	5.375E-37	7.814E-36	8.496E-35	1.746E-33	2.060E-32	5.254E-32	0.000E+00	0.000E+00
-238+D	Pb-210+D2	6.080E-18	5.037E-39	1.507E-37	3.509E-36	2.058E-34	6.397E-33	3.759E-32	0.000E+00	0.000E+00
-238+D	äDSR(j)		1.508E-20	1.433E-20	1.294E-20	9.037E-21	3.195E-21	5.976E-23	0.000E+00	0.000E+00
-238+D1	U-238+D1	9.980E-01	2.475E-03	2.352E-03	2.123E-03	1.483E-03	5.244E-04	9.806E-06	0.000E+00	0.000E+00
-238+D1	U-234	9.980E-01	3.873E-09	1.111E-08	2.344E-08	4.915E-08	5.049E-08	3.111E-09	0.000E+00	0.000E+00
-238+D1	Th-230	9.980E-01	2.952E-14	2.004E-13	9.875E-13	6.887E-12	2.890E-11	2.863E-11	0.000E+00	0.000E+00
-238+D1	Ra-226+D	9.980E-01	8.837E-20	1.285E-18	1.397E-17	2.870E-16	3.387E-15	8.639E-15	0.000E+00	0.000E+00
-238+D1	Pb-210+D	9.980E-01	1.410E-21	4.219E-20	9.823E-19	5.762E-17	1.791E-15	1.052E-14	0.000E+00	0.000E+00
-238+D1	äDSR(j)		2.475E-03	2.352E-03	2.123E-03	1.483E-03	5.244E-04	9.809E-06	0.000E+00	0.000E+00
-238+D1	U-238+D1	1.317E-06	3.266E-09	3.104E-09	2.803E-09	1.958E-09	6.921E-10	1.294E-11	0.000E+00	0.000E+00
-238+D1	U-234	1.317E-06	5.113E-15	1.466E-14	3.094E-14	6.488E-14	6.664E-14	4.107E-15	0.000E+00	0.000E+00
-238+D1	Th-230	1.317E-06	3.897E-20	2.645E-19	1.304E-18	9.091E-18	3.815E-17	3.779E-17	0.000E+00	0.000E+00
-238+D1	Ra-226+D	1.317E-06	1.166E-25	1.696E-24	1.844E-23	3.789E-22	4.471E-21	1.140E-20	0.000E+00	0.000E+00
-238+D1	Pb-210+D1	1.317E-06	1.107E-27	3.312E-26	7.712E-25	4.524E-23	1.406E-21	8.262E-21	0.000E+00	0.000E+00
-238+D1	äDSR(j)		3.266E-09	3.104E-09	2.803E-09	1.958E-09	6.922E-10	1.295E-11	0.000E+00	0.000E+00
-238+D1	U-238+D1	1.896E-08	4.702E-11	4.468E-11	4.034E-11	2.818E-11	9.963E-12	1.863E-13	0.000E+00	0.000E+00
-238+D1	U-234	1.896E-08	7.359E-17	2.110E-16	4.453E-16	9.339E-16	9.593E-16	5.911E-17	0.000E+00	0.000E+00
-238+D1	Th-230	1.896E-08	5.609E-22	3.807E-21	1.876E-20	1.309E-19	5.492E-19	5.439E-19	0.000E+00	0.000E+00
-238+D1	Ra-226+D	1.896E-08	1.679E-27	2.441E-26	2.654E-25	5.453E-24	6.436E-23	1.641E-22	0.000E+00	0.000E+00
-238+D1	Pb-210+D2	1.896E-08	1.571E-29	4.699E-28	1.094E-26	6.419E-25	1.995E-23	1.172E-22	0.000E+00	0.000E+00
-238+D1	äDSR(j)		4.702E-11	4.468E-11	4.034E-11	2.818E-11	9.964E-12	1.864E-13	0.000E+00	0.000E+00

ummary : GKP Maintenance Worker Inhalation
ile : C:\USERS\CLAUDE\DOCUMENTS\0 GKP DOSE\RESRAD CW\GKP PARK RANGER - INHALATION.RAD

Dose/Source Ratios Summed Over All Pathways
Parent and Progeny Principal Radionuclide Contributions Indicated

Parent	Product	Thread	DSR(j,t) At Time in Years (mrem/yr)/(pCi/g)							
(i)	(j)	Fraction	0.000E+00	1.000E+00	3.000E+00	1.000E+01	3.000E+01	1.000E+02	3.000E+02	1.000E+03
ÄÄÄÄÄÄÄÄÄ	ÄÄÄÄÄÄÄÄÄÄ	ÄÄÄÄÄÄÄÄÄ	ÄÄÄÄÄÄÄÄÄ	ÄÄÄÄÄÄÄÄÄ	ÄÄÄÄÄÄÄÄÄ	ÄÄÄÄÄÄÄÄÄ	ÄÄÄÄÄÄÄÄÄ	ÄÄÄÄÄÄÄÄÄ	ÄÄÄÄÄÄÄÄÄ	ÄÄÄÄÄÄÄÄÄ
-238+D1	U-238+D1	2.096E-04	5.198E-07	4.939E-07	4.460E-07	3.116E-07	1.101E-07	2.060E-09	0.000E+00	0.000E+00
-238+D1	U-234	2.096E-04	8.136E-13	2.333E-12	4.923E-12	1.032E-11	1.060E-11	6.535E-13	0.000E+00	0.000E+00
-238+D1	Th-230	2.096E-04	6.201E-18	4.208E-17	2.074E-16	1.447E-15	6.071E-15	6.013E-15	0.000E+00	0.000E+00
-238+D1	Ra-226+D1	2.096E-04	1.856E-23	2.698E-22	2.934E-21	6.029E-20	7.115E-19	1.814E-18	0.000E+00	0.000E+00
-238+D1	Pb-210+D	2.096E-04	2.962E-25	8.861E-24	2.063E-22	1.210E-20	3.762E-19	2.210E-18	0.000E+00	0.000E+00
-238+D1	äDSR(j)		5.198E-07	4.939E-07	4.460E-07	3.116E-07	1.101E-07	2.060E-09	0.000E+00	0.000E+00
-238+D1	U-238+D1	2.767E-10	6.861E-13	6.520E-13	5.887E-13	4.113E-13	1.454E-13	2.719E-15	0.000E+00	0.000E+00
-238+D1	U-234	2.767E-10	1.074E-18	3.079E-18	6.498E-18	1.363E-17	1.400E-17	8.626E-19	0.000E+00	0.000E+00
-238+D1	Th-230	2.767E-10	8.185E-24	5.555E-23	2.738E-22	1.909E-21	8.014E-21	7.937E-21	0.000E+00	0.000E+00
-238+D1	Ra-226+D1	2.767E-10	2.450E-29	3.562E-28	3.873E-27	7.958E-26	9.391E-25	2.395E-24	0.000E+00	0.000E+00
-238+D1	Pb-210+D1	2.767E-10	2.326E-31	6.956E-30	1.620E-28	9.502E-27	2.953E-25	1.735E-24	0.000E+00	0.000E+00
-238+D1	äDSR(j)		6.861E-13	6.520E-13	5.887E-13	4.113E-13	1.454E-13	2.720E-15	0.000E+00	0.000E+00
-238+D1	U-238+D1	3.983E-12	9.875E-15	9.385E-15	8.474E-15	5.920E-15	2.093E-15	3.913E-17	0.000E+00	0.000E+00
-238+D1	U-234	3.983E-12	1.546E-20	4.432E-20	9.353E-20	1.962E-19	2.015E-19	1.242E-20	0.000E+00	0.000E+00
-238+D1	Th-230	3.983E-12	1.178E-25	7.996E-25	3.941E-24	2.748E-23	1.154E-22	1.142E-22	0.000E+00	0.000E+00
-238+D1	Ra-226+D1	3.983E-12	3.527E-31	5.127E-30	5.574E-29	1.145E-27	1.352E-26	3.448E-26	0.000E+00	0.000E+00
-238+D1	Pb-210+D2	3.983E-12	3.300E-33	9.871E-32	2.298E-30	1.348E-28	4.191E-27	2.462E-26	0.000E+00	0.000E+00
-238+D1	äDSR(j)		9.875E-15	9.385E-15	8.474E-15	5.920E-15	2.093E-15	3.915E-17	0.000E+00	0.000E+00
-238+D1	U-238+D1	1.994E-04	4.945E-07	4.699E-07	4.243E-07	2.964E-07	1.048E-07	1.960E-09	0.000E+00	0.000E+00
-238+D1	U-234	1.994E-04	7.741E-13	2.219E-12	4.684E-12	9.823E-12	1.009E-11	6.217E-13	0.000E+00	0.000E+00
-238+D1	Th-230	1.994E-04	5.900E-18	4.004E-17	1.973E-16	1.376E-15	5.776E-15	5.721E-15	0.000E+00	0.000E+00
-238+D1	Ra-226+D2	1.994E-04	1.764E-23	2.565E-22	2.789E-21	5.731E-20	6.763E-19	1.725E-18	0.000E+00	0.000E+00
-238+D1	Pb-210+D	1.994E-04	2.818E-25	8.430E-24	1.963E-22	1.151E-20	3.579E-19	2.103E-18	0.000E+00	0.000E+00
-238+D1	äDSR(j)		4.945E-07	4.699E-07	4.243E-07	2.964E-07	1.048E-07	1.960E-09	0.000E+00	0.000E+00
-238+D1	U-238+D1	2.633E-10	6.527E-13	6.203E-13	5.601E-13	3.913E-13	1.383E-13	2.587E-15	0.000E+00	0.000E+00
-238+D1	U-234	2.633E-10	1.022E-18	2.930E-18	6.182E-18	1.297E-17	1.332E-17	8.207E-19	0.000E+00	0.000E+00
-238+D1	Th-230	2.633E-10	7.787E-24	5.285E-23	2.605E-22	1.817E-21	7.625E-21	7.551E-21	0.000E+00	0.000E+00
-238+D1	Ra-226+D2	2.633E-10	2.329E-29	3.386E-28	3.681E-27	7.565E-26	8.927E-25	2.277E-24	0.000E+00	0.000E+00
-238+D1	Pb-210+D1	2.633E-10	2.213E-31	6.618E-30	1.541E-28	9.040E-27	2.810E-25	1.651E-24	0.000E+00	0.000E+00
-238+D1	äDSR(j)		6.527E-13	6.203E-13	5.601E-13	3.913E-13	1.383E-13	2.588E-15	0.000E+00	0.000E+00
-238+D1	U-238+D1	3.789E-12	9.396E-15	8.929E-15	8.062E-15	5.632E-15	1.991E-15	3.723E-17	0.000E+00	0.000E+00
-238+D1	U-234	3.789E-12	1.471E-20	4.217E-20	8.899E-20	1.866E-19	1.917E-19	1.181E-20	0.000E+00	0.000E+00
-238+D1	Th-230	3.789E-12	1.121E-25	7.607E-25	3.750E-24	2.615E-23	1.098E-22	1.087E-22	0.000E+00	0.000E+00
-238+D1	Ra-226+D2	3.789E-12	3.352E-31	4.873E-30	5.299E-29	1.089E-27	1.285E-26	3.277E-26	0.000E+00	0.000E+00
-238+D1	Pb-210+D2	3.789E-12	3.140E-33	9.391E-32	2.187E-30	1.283E-28	3.987E-27	2.343E-26	0.000E+00	0.000E+00
-238+D1	äDSR(j)		9.396E-15	8.929E-15	8.062E-15	5.632E-15	1.991E-15	3.725E-17	0.000E+00	0.000E+00

ummary : GKP Maintenance Worker Inhalation
ile : C:\USERS\CLAUDE\DOCUMENTS\0 GKP DOSE\RESRAD CW\GKP PARK RANGER - INHALATION.RAD

Dose/Source Ratios Summed Over All Pathways
Parent and Progeny Principal Radionuclide Contributions Indicated

Parent (i)	Product (j)	Thread Fraction	DSR(j,t) At Time in Years (mrem/yr)/(pCi/g) 0.000E+00	1.000E+00	3.000E+00	1.000E+01	3.000E+01	1.000E+02	3.000E+02	1.000E+03
ÄÄÄÄÄÄÄÄÄ	ÄÄÄÄÄÄÄÄÄÄ	ÄÄÄÄÄÄÄÄÄ	ÄÄÄÄÄÄÄÄÄ	ÄÄÄÄÄÄÄÄÄ	ÄÄÄÄÄÄÄÄÄ	ÄÄÄÄÄÄÄÄÄ	ÄÄÄÄÄÄÄÄÄ	ÄÄÄÄÄÄÄÄÄ	ÄÄÄÄÄÄÄÄÄ	ÄÄÄÄÄÄÄÄÄ
-238+D1	U-238+D1	4.189E-08	1.039E-10	9.871E-11	8.913E-11	6.226E-11	2.201E-11	4.116E-13	0.000E+00	0.000E+00
-238+D1	U-234	4.189E-08	1.626E-16	4.662E-16	9.838E-16	2.063E-15	2.119E-15	1.306E-16	0.000E+00	0.000E+00
-238+D1	Th-230	4.189E-08	1.239E-21	8.410E-21	4.145E-20	2.891E-19	1.213E-18	1.202E-18	0.000E+00	0.000E+00
-238+D1	Ra-226+D3	4.189E-08	3.706E-27	5.388E-26	5.858E-25	1.204E-23	1.421E-22	3.623E-22	0.000E+00	0.000E+00
-238+D1	Pb-210+D	4.189E-08	5.920E-29	1.771E-27	4.123E-26	2.419E-24	7.518E-23	4.417E-22	0.000E+00	0.000E+00
-238+D1	äDSR(j)		1.039E-10	9.871E-11	8.913E-11	6.226E-11	2.201E-11	4.117E-13	0.000E+00	0.000E+00
-238+D1	U-238+D1	5.530E-14	1.371E-16	1.303E-16	1.177E-16	8.218E-17	2.905E-17	5.433E-19	0.000E+00	0.000E+00
-238+D1	U-234	5.530E-14	2.146E-22	6.153E-22	1.299E-21	2.724E-21	2.797E-21	1.724E-22	0.000E+00	0.000E+00
-238+D1	Th-230	5.530E-14	1.636E-27	1.110E-26	5.472E-26	3.816E-25	1.602E-24	1.586E-24	0.000E+00	0.000E+00
-238+D1	Ra-226+D3	5.530E-14	4.892E-33	7.112E-32	7.732E-31	1.589E-29	1.875E-28	4.782E-28	0.000E+00	0.000E+00
-238+D1	Pb-210+D1	5.530E-14	4.647E-35	1.390E-33	3.237E-32	1.899E-30	5.902E-29	3.468E-28	0.000E+00	0.000E+00
-238+D1	äDSR(j)		1.371E-16	1.303E-16	1.177E-16	8.219E-17	2.906E-17	5.435E-19	0.000E+00	0.000E+00
-238+D1	U-238+D1	7.959E-16	1.973E-18	1.875E-18	1.693E-18	1.183E-18	4.182E-19	7.821E-21	0.000E+00	0.000E+00
-238+D1	U-234	7.959E-16	3.089E-24	8.857E-24	1.869E-23	3.920E-23	4.027E-23	2.481E-24	0.000E+00	0.000E+00
-238+D1	Th-230	7.959E-16	2.354E-29	1.598E-28	7.876E-28	5.493E-27	2.305E-26	2.283E-26	0.000E+00	0.000E+00
-238+D1	Ra-226+D3	7.959E-16	7.042E-35	1.024E-33	1.113E-32	2.287E-31	2.699E-30	6.884E-30	0.000E+00	0.000E+00
-238+D1	Pb-210+D2	7.959E-16	6.595E-37	1.973E-35	4.593E-34	2.694E-32	8.374E-31	4.921E-30	0.000E+00	0.000E+00
-238+D1	äDSR(j)		1.973E-18	1.875E-18	1.693E-18	1.183E-18	4.182E-19	7.823E-21	0.000E+00	0.000E+00
-238+D1	U-238+D1	1.997E-07	4.951E-10	4.705E-10	4.248E-10	2.968E-10	1.049E-10	1.962E-12	0.000E+00	0.000E+00
-238+D1	U-234	1.997E-07	7.750E-16	2.222E-15	4.689E-15	9.835E-15	1.010E-14	6.225E-16	0.000E+00	0.000E+00
-238+D1	Th-230	1.997E-07	5.907E-21	4.009E-20	1.976E-19	1.378E-18	5.783E-18	5.728E-18	0.000E+00	0.000E+00
-238+D1	Ra-226+D4	1.997E-07	1.765E-26	2.566E-25	2.790E-24	5.734E-23	6.766E-22	1.726E-21	0.000E+00	0.000E+00
-238+D1	Pb-210+D	1.997E-07	2.822E-28	8.440E-27	1.965E-25	1.153E-23	3.583E-22	2.106E-21	0.000E+00	0.000E+00
-238+D1	äDSR(j)		4.951E-10	4.705E-10	4.249E-10	2.968E-10	1.049E-10	1.963E-12	0.000E+00	0.000E+00
-238+D1	U-238+D1	2.636E-13	6.535E-16	6.211E-16	5.608E-16	3.917E-16	1.385E-16	2.590E-18	0.000E+00	0.000E+00
-238+D1	U-234	2.636E-13	1.023E-21	2.933E-21	6.190E-21	1.298E-20	1.333E-20	8.217E-22	0.000E+00	0.000E+00
-238+D1	Th-230	2.636E-13	7.797E-27	5.292E-26	2.608E-25	1.819E-24	7.634E-24	7.561E-24	0.000E+00	0.000E+00
-238+D1	Ra-226+D4	2.636E-13	2.330E-32	3.387E-31	3.683E-30	7.568E-29	8.932E-28	2.278E-27	0.000E+00	0.000E+00
-238+D1	Pb-210+D1	2.636E-13	2.215E-34	6.626E-33	1.543E-31	9.051E-30	2.813E-28	1.653E-27	0.000E+00	0.000E+00
-238+D1	äDSR(j)		6.535E-16	6.211E-16	5.608E-16	3.918E-16	1.385E-16	2.591E-18	0.000E+00	0.000E+00
-238+D1	U-238+D1	3.794E-15	9.407E-18	8.940E-18	8.072E-18	5.639E-18	1.993E-18	3.728E-20	0.000E+00	0.000E+00
-238+D1	U-234	3.794E-15	1.472E-23	4.222E-23	8.910E-23	1.869E-22	1.919E-22	1.183E-23	0.000E+00	0.000E+00
-238+D1	Th-230	3.794E-15	1.122E-28	7.617E-28	3.754E-27	2.618E-26	1.099E-25	1.088E-25	0.000E+00	0.000E+00
-238+D1	Ra-226+D4	3.794E-15	3.354E-34	4.876E-33	5.301E-32	1.089E-30	1.286E-29	3.279E-29	0.000E+00	0.000E+00
-238+D1	Pb-210+D2	3.794E-15	3.143E-36	9.403E-35	2.189E-33	1.284E-31	3.992E-30	2.346E-29	0.000E+00	0.000E+00
-238+D1	äDSR(j)		9.407E-18	8.940E-18	8.072E-18	5.639E-18	1.994E-18	3.729E-20	0.000E+00	0.000E+00
íííííííííí	íííííííííí	íííííííííí	íííííííííí	íííííííííí	íííííííííí	íííííííííí	íííííííííí	íííííííííí	íííííííííí	íííííííííí

ne DSR includes contributions from associated (half-life ó 180 days) daughters.

ummary : GKP Maintenance Worker Inhalation
ile : C:\USERS\CLAUDE\DOCUMENTS\0 GKP DOSE\RESRAD CW\GKP PARK RANGER - INHALATION.RAD

Single Radionuclide Soil Guidelines G(i,t) in pCi/g
Basic Radiation Dose Limit = 2.500E+01 mrem/yr

uclide (i)	t= 0.000E+00	1.000E+00	3.000E+00	1.000E+01	3.000E+01	1.000E+02	3.000E+02	1.000E+03
ÄÄÄÄÄÄ	ÄÄÄÄÄÄÄÄÄÄ	ÄÄÄÄÄÄÄÄÄÄ	ÄÄÄÄÄÄÄÄÄÄ	ÄÄÄÄÄÄÄÄÄÄ	ÄÄÄÄÄÄÄÄÄÄ	ÄÄÄÄÄÄÄÄÄÄ	ÄÄÄÄÄÄÄÄÄÄ	ÄÄÄÄÄÄÄÄÄÄ
a-226	1.260E+05	1.218E+05	1.159E+05	1.103E+05	1.533E+05	2.265E+06	*9.885E+11	*9.885E+11
n-232	7.087E+02	7.079E+02	6.990E+02	6.760E+02	7.483E+02	1.760E+03	*1.097E+05	*1.097E+05
-234	9.016E+03	9.487E+03	1.051E+04	1.504E+04	4.249E+04	2.182E+06	*6.222E+09	*6.222E+09
-235	9.675E+03	1.018E+04	1.126E+04	1.608E+04	4.501E+04	*2.160E+06	*2.160E+06	*2.160E+06
-238	1.008E+04	1.061E+04	1.175E+04	1.682E+04	4.758E+04	*3.361E+05	*3.361E+05	*3.361E+05
íííííí	íííííííííí	íííííííííí	íííííííííí	íííííííííí	íííííííííí	íííííííííí	íííííííííí	íííííííííí

At specific activity limit

Summed Dose/Source Ratios DSR(i,t) in (mrem/yr)/(pCi/g)
and Single Radionuclide Soil Guidelines G(i,t) in pCi/g
at tmin = time of minimum single radionuclide soil guideline
and at tmax = time of maximum total dose = 0.000E+00 years

uclide (i)	Initial (pCi/g)	tmin (years)	DSR(i,tmin)	G(i,tmin) (pCi/g)	DSR(i,tmax)	G(i,tmax) (pCi/g)
ÄÄÄÄÄÄ	ÄÄÄÄÄÄÄÄÄÄ	ÄÄÄÄÄÄÄÄÄÄÄÄÄÄÄÄ	ÄÄÄÄÄÄÄÄÄÄ	ÄÄÄÄÄÄÄÄÄÄ	ÄÄÄÄÄÄÄÄÄÄ	ÄÄÄÄÄÄÄÄÄÄ
a-226	3.650E+01	8.82 ñ 0.02	2.271E-04	1.101E+05	1.984E-04	1.260E+05
n-232	2.400E+00	10.69 ñ 0.02	3.699E-02	6.758E+02	3.528E-02	7.087E+02
-234	1.390E+01	0.000E+00	2.773E-03	9.016E+03	2.773E-03	9.016E+03
-235	8.400E-01	0.000E+00	2.584E-03	9.675E+03	2.584E-03	9.675E+03
-238	1.390E+01	0.000E+00	2.479E-03	1.008E+04	2.479E-03	1.008E+04
íííííí	íííííííííí	íííííííííííííííííí	íííííííííí	íííííííííí	íííííííííí	íííííííííí

ummary : GKP Maintenance Worker Inhalation
ile : C:\USERS\CLAUDE\DOCUMENTS\0 GKP DOSE\RESRAD CW\GKP PARK RANGER - INHALATION.RAD

Individual Nuclide Dose Summed Over All Pathways
Parent Nuclide and Branch Fraction Indicated

uclide (j)	Parent (i)	THF(i)	DOSE(j,t), mrem/yr t= 0.000E+00	1.000E+00	3.000E+00	1.000E+01	3.000E+01	1.000E+02	3.000E+02	1.000E+03
ÄÄÄÄÄÄ	ÄÄÄÄÄÄÄ	ÄÄÄÄÄÄÄÄÄ	ÄÄÄÄÄÄÄÄÄ	ÄÄÄÄÄÄÄÄÄ	ÄÄÄÄÄÄÄÄÄ	ÄÄÄÄÄÄÄÄÄ	ÄÄÄÄÄÄÄÄÄ	ÄÄÄÄÄÄÄÄÄ	ÄÄÄÄÄÄÄÄÄ	ÄÄÄÄÄÄÄÄÄ
a-226	Ra-226	9.996E-01	6.964E-03	6.699E-03	6.198E-03	4.715E-03	2.126E-03	9.325E-05	0.000E+00	0.000E+00
a-226	Ra-226	1.319E-06	9.192E-09	8.843E-09	8.181E-09	6.224E-09	2.807E-09	1.231E-10	0.000E+00	0.000E+00
a-226	U-234	9.996E-01	1.752E-12	1.193E-11	5.928E-11	4.248E-10	1.914E-09	2.213E-09	0.000E+00	0.000E+00
a-226	U-234	1.319E-06	2.313E-18	1.575E-17	7.825E-17	5.608E-16	2.527E-15	2.922E-15	0.000E+00	0.000E+00
a-226	U-234	1.899E-08	3.330E-20	2.268E-19	1.126E-18	8.072E-18	3.637E-17	4.205E-17	0.000E+00	0.000E+00
a-226	U-238	1.599E-03	1.969E-21	2.862E-20	3.111E-19	6.394E-18	7.545E-17	1.924E-16	0.000E+00	0.000E+00
a-226	U-238	2.111E-09	2.598E-27	3.777E-26	4.107E-25	8.440E-24	9.960E-23	2.540E-22	0.000E+00	0.000E+00
a-226	U-238	3.039E-11	3.559E-29	5.437E-28	5.912E-27	1.215E-25	1.434E-24	3.656E-24	0.000E+00	0.000E+00
a-226	U-238	9.980E-01	1.228E-18	1.786E-17	1.941E-16	3.990E-15	4.708E-14	1.201E-13	0.000E+00	0.000E+00
a-226	U-238	1.317E-06	1.621E-24	2.357E-23	2.563E-22	5.266E-21	6.215E-20	1.585E-19	0.000E+00	0.000E+00
a-226	U-238	1.896E-08	2.334E-26	3.393E-25	3.689E-24	7.580E-23	8.946E-22	2.281E-21	0.000E+00	0.000E+00
a-226	äDOSE(j)		6.964E-03	6.699E-03	6.198E-03	4.715E-03	2.126E-03	9.325E-05	0.000E+00	0.000E+00
o-210	Ra-226	9.996E-01	2.755E-04	7.909E-04	1.674E-03	3.556E-03	3.823E-03	3.095E-04	0.000E+00	0.000E+00
o-210	Ra-226	2.100E-04	5.786E-08	1.661E-07	3.517E-07	7.468E-07	8.030E-07	6.501E-08	0.000E+00	0.000E+00
o-210	Ra-226	1.998E-04	5.505E-08	1.581E-07	3.346E-07	7.106E-07	7.640E-07	6.186E-08	0.000E+00	0.000E+00
o-210	Ra-226	4.196E-08	1.156E-11	3.320E-11	7.028E-11	1.492E-10	1.605E-10	1.299E-11	0.000E+00	0.000E+00
o-210	Ra-226	2.000E-07	5.511E-11	1.582E-10	3.350E-10	7.114E-10	7.649E-10	6.193E-11	0.000E+00	0.000E+00
o-210	U-234	9.996E-01	3.488E-14	5.061E-13	5.479E-12	1.109E-10	1.258E-09	2.940E-09	0.000E+00	0.000E+00
o-210	U-234	2.100E-04	7.326E-18	1.063E-16	1.151E-15	2.329E-14	2.643E-13	6.176E-13	0.000E+00	0.000E+00
o-210	U-234	1.998E-04	6.970E-18	1.011E-16	1.095E-15	2.216E-14	2.515E-13	5.876E-13	0.000E+00	0.000E+00
o-210	U-234	4.196E-08	1.464E-21	2.124E-20	2.300E-19	4.655E-18	5.282E-17	1.234E-16	0.000E+00	0.000E+00
o-210	U-234	2.000E-07	6.979E-21	1.013E-19	1.096E-18	2.219E-17	2.518E-16	5.883E-16	0.000E+00	0.000E+00
o-210	U-238	1.599E-03	3.142E-23	9.397E-22	2.188E-20	1.284E-18	3.989E-17	2.344E-16	0.000E+00	0.000E+00
o-210	U-238	3.359E-07	6.599E-27	1.974E-25	4.596E-24	2.696E-22	8.380E-21	4.924E-20	0.000E+00	0.000E+00
o-210	U-238	3.196E-07	6.278E-27	1.878E-25	4.373E-24	2.565E-22	7.973E-21	4.685E-20	0.000E+00	0.000E+00
o-210	U-238	6.713E-11	0.000E+00	3.944E-29	9.185E-28	5.388E-26	1.675E-24	9.840E-24	0.000E+00	0.000E+00
o-210	U-238	3.200E-10	0.000E+00	1.880E-28	4.378E-27	2.568E-25	7.982E-24	4.690E-23	0.000E+00	0.000E+00
o-210	U-238	9.980E-01	1.960E-20	5.864E-19	1.365E-17	8.009E-16	2.489E-14	1.463E-13	0.000E+00	0.000E+00
o-210	U-238	2.096E-04	4.118E-24	1.232E-22	2.868E-21	1.682E-19	5.229E-18	3.072E-17	0.000E+00	0.000E+00
o-210	U-238	1.994E-04	3.917E-24	1.172E-22	2.729E-21	1.601E-19	4.975E-18	2.923E-17	0.000E+00	0.000E+00
o-210	U-238	4.189E-08	8.228E-28	2.461E-26	5.731E-25	3.362E-23	1.045E-21	6.140E-21	0.000E+00	0.000E+00
o-210	U-238	1.997E-07	3.922E-27	1.173E-25	2.732E-24	1.602E-22	4.981E-21	2.927E-20	0.000E+00	0.000E+00
o-210	äDOSE(j)		2.756E-04	7.912E-04	1.675E-03	3.557E-03	3.825E-03	3.097E-04	0.000E+00	0.000E+00
o-210	Ra-226	1.319E-06	2.163E-10	6.209E-10	1.315E-09	2.791E-09	3.001E-09	2.430E-10	0.000E+00	0.000E+00
o-210	Ra-226	1.899E-08	3.069E-12	8.810E-12	1.865E-11	3.961E-11	4.259E-11	3.448E-12	0.000E+00	0.000E+00
o-210	Ra-226	2.771E-10	4.542E-14	1.304E-13	2.761E-13	5.863E-13	6.304E-13	5.104E-14	0.000E+00	0.000E+00
o-210	Ra-226	2.637E-10	4.322E-14	1.241E-13	2.627E-13	5.578E-13	5.998E-13	4.856E-14	0.000E+00	0.000E+00
o-210	Ra-226	5.538E-14	9.078E-18	2.606E-17	5.518E-17	1.172E-16	1.260E-16	1.020E-17	0.000E+00	0.000E+00
o-210	Ra-226	2.640E-13	4.327E-17	1.242E-16	2.630E-16	5.585E-16	6.005E-16	4.862E-17	0.000E+00	0.000E+00
o-210	U-234	1.319E-06	2.738E-20	3.973E-19	4.301E-18	8.706E-17	9.880E-16	2.308E-15	0.000E+00	0.000E+00
o-210	U-234	2.771E-10	5.752E-24	8.345E-23	9.034E-22	1.829E-20	2.075E-19	4.849E-19	0.000E+00	0.000E+00
o-210	U-234	2.637E-10	5.472E-24	7.940E-23	8.595E-22	1.740E-20	1.974E-19	4.613E-19	0.000E+00	0.000E+00
o-210	U-234	5.538E-14	1.149E-27	1.668E-26	1.805E-25	3.654E-24	4.147E-23	9.690E-23	0.000E+00	0.000E+00
o-210	U-234	2.640E-13	5.479E-27	7.949E-26	8.606E-25	1.742E-23	1.977E-22	4.619E-22	0.000E+00	0.000E+00
o-210	U-238	2.111E-09	2.466E-29	7.377E-28	1.718E-26	1.008E-24	3.132E-23	1.840E-22	0.000E+00	0.000E+00
o-210	U-238	4.434E-13	0.000E+00	0.000E+00	0.000E+00	2.117E-28	6.579E-27	3.866E-26	0.000E+00	0.000E+00
o-210	U-238	4.219E-13	0.000E+00	0.000E+00	0.000E+00	2.014E-28	6.259E-27	3.678E-26	0.000E+00	0.000E+00

ummary : GKP Maintenance Worker Inhalation
ile : C:\USERS\CLAUDE\DOCUMENTS\0 GKP DOSE\RESRAD CW\GKP PARK RANGER - INHALATION.RAD

Individual Nuclide Dose Summed Over All Pathways
Parent Nuclide and Branch Fraction Indicated

uclide (j)	Parent (i)	THF(i)	DOSE(j,t), mrem/yr t= 0.000E+00	1.000E+00	3.000E+00	1.000E+01	3.000E+01	1.000E+02	3.000E+02	1.000E+03
ÄÄÄÄÄ	ÄÄÄÄÄÄÄ	ÄÄÄÄÄÄÄÄÄ	ÄÄÄÄÄÄÄÄÄ	ÄÄÄÄÄÄÄÄÄ	ÄÄÄÄÄÄÄÄÄ	ÄÄÄÄÄÄÄÄÄ	ÄÄÄÄÄÄÄÄÄ	ÄÄÄÄÄÄÄÄÄ	ÄÄÄÄÄÄÄÄÄ	ÄÄÄÄÄÄÄÄÄ
o-210	U-238	8.862E-17	0.000E+00	0.000E+00	0.000E+00	0.000E+00	0.000E+00	0.000E+00	0.000E+00	0.000E+00
o-210	U-238	4.224E-16	0.000E+00	0.000E+00	0.000E+00	0.000E+00	0.000E+00	3.682E-29	0.000E+00	0.000E+00
o-210	U-238	1.317E-06	1.539E-26	4.604E-25	1.072E-23	6.288E-22	1.954E-20	1.148E-19	0.000E+00	0.000E+00
o-210	U-238	2.767E-10	0.000E+00	9.669E-29	2.252E-27	1.321E-25	4.105E-24	2.412E-23	0.000E+00	0.000E+00
o-210	U-238	2.633E-10	0.000E+00	9.200E-29	2.142E-27	1.257E-25	3.906E-24	2.295E-23	0.000E+00	0.000E+00
o-210	U-238	5.530E-14	0.000E+00	0.000E+00	0.000E+00	2.639E-29	8.204E-28	4.820E-27	0.000E+00	0.000E+00
o-210	U-238	2.636E-13	0.000E+00	0.000E+00	0.000E+00	1.258E-28	3.910E-27	2.298E-26	0.000E+00	0.000E+00
o-210	äDOSE(j)		2.194E-10	6.300E-10	1.334E-09	2.832E-09	3.045E-09	2.466E-10	0.000E+00	0.000E+00
a-226	Ra-226	1.899E-08	1.323E-10	1.273E-10	1.178E-10	8.958E-11	4.040E-11	1.772E-12	0.000E+00	0.000E+00
a-226	Ra-226	2.100E-04	1.463E-06	1.407E-06	1.302E-06	9.903E-07	4.466E-07	1.959E-08	0.000E+00	0.000E+00
a-226	äDOSE(j)		1.463E-06	1.407E-06	1.302E-06	9.904E-07	4.467E-07	1.959E-08	0.000E+00	0.000E+00
a-226	Ra-226	2.771E-10	1.931E-12	1.857E-12	1.718E-12	1.307E-12	5.896E-13	2.585E-14	0.000E+00	0.000E+00
a-226	Ra-226	3.989E-12	2.779E-14	2.673E-14	2.474E-14	1.882E-14	8.486E-15	3.722E-16	0.000E+00	0.000E+00
a-226	äDOSE(j)		1.959E-12	1.884E-12	1.743E-12	1.326E-12	5.980E-13	2.623E-14	0.000E+00	0.000E+00
o-210	Ra-226	3.989E-12	6.445E-16	1.851E-15	3.918E-15	8.320E-15	8.946E-15	7.243E-16	0.000E+00	0.000E+00
o-210	Ra-226	3.795E-12	6.132E-16	1.761E-15	3.727E-15	7.916E-15	8.511E-15	6.891E-16	0.000E+00	0.000E+00
o-210	Ra-226	7.972E-16	1.288E-19	3.698E-19	7.829E-19	1.663E-18	1.788E-18	1.447E-19	0.000E+00	0.000E+00
o-210	Ra-226	3.800E-15	6.140E-19	1.763E-18	3.732E-18	7.925E-18	8.521E-18	6.899E-19	0.000E+00	0.000E+00
o-210	U-234	1.899E-08	3.886E-22	5.637E-21	6.103E-20	1.235E-18	1.402E-17	3.275E-17	0.000E+00	0.000E+00
o-210	U-234	3.989E-12	8.161E-26	1.184E-24	1.282E-23	2.595E-22	2.945E-21	6.880E-21	0.000E+00	0.000E+00
o-210	U-234	3.795E-12	7.765E-26	1.127E-24	1.220E-23	2.469E-22	2.802E-21	6.546E-21	0.000E+00	0.000E+00
o-210	U-234	7.972E-16	1.631E-29	2.366E-28	2.562E-27	5.185E-26	5.884E-25	1.375E-24	0.000E+00	0.000E+00
o-210	U-234	3.800E-15	7.774E-29	1.128E-27	1.221E-26	2.472E-25	2.805E-24	6.554E-24	0.000E+00	0.000E+00
o-210	U-238	3.039E-11	0.000E+00	0.000E+00	2.438E-28	1.430E-26	4.444E-25	2.611E-24	0.000E+00	0.000E+00
o-210	U-238	6.383E-15	0.000E+00	0.000E+00	0.000E+00	0.000E+00	9.335E-29	5.485E-28	0.000E+00	0.000E+00
o-210	U-238	6.073E-15	0.000E+00	0.000E+00	0.000E+00	0.000E+00	8.881E-29	5.218E-28	0.000E+00	0.000E+00
o-210	U-238	1.276E-18	0.000E+00	0.000E+00	0.000E+00	0.000E+00	0.000E+00	0.000E+00	0.000E+00	0.000E+00
o-210	U-238	6.080E-18	0.000E+00	0.000E+00	0.000E+00	0.000E+00	0.000E+00	0.000E+00	0.000E+00	0.000E+00
o-210	U-238	1.896E-08	2.184E-28	6.532E-27	1.521E-25	8.922E-24	2.773E-22	1.629E-21	0.000E+00	0.000E+00
o-210	U-238	3.983E-12	0.000E+00	0.000E+00	3.195E-29	1.874E-27	5.825E-26	3.423E-25	0.000E+00	0.000E+00
o-210	U-238	3.789E-12	0.000E+00	0.000E+00	3.040E-29	1.783E-27	5.542E-26	3.256E-25	0.000E+00	0.000E+00
o-210	U-238	7.959E-16	0.000E+00	0.000E+00	0.000E+00	0.000E+00	0.000E+00	6.840E-29	0.000E+00	0.000E+00
o-210	U-238	3.794E-15	0.000E+00	0.000E+00	0.000E+00	0.000E+00	5.549E-29	3.260E-28	0.000E+00	0.000E+00
o-210	äDOSE(j)		1.259E-15	3.613E-15	7.650E-15	1.625E-14	1.748E-14	1.447E-15	0.000E+00	0.000E+00
a-226	Ra-226	1.998E-04	1.390E-06	1.338E-06	1.238E-06	9.414E-07	4.246E-07	1.862E-08	0.000E+00	0.000E+00
a-226	Ra-226	2.637E-10	1.835E-12	1.766E-12	1.634E-12	1.243E-12	5.604E-13	2.458E-14	0.000E+00	0.000E+00
a-226	U-234	1.998E-04	3.499E-16	2.383E-15	1.184E-14	8.483E-14	3.822E-13	4.419E-13	0.000E+00	0.000E+00
a-226	U-234	2.637E-10	4.619E-22	3.145E-21	1.562E-20	1.120E-19	5.045E-19	5.833E-19	0.000E+00	0.000E+00
a-226	U-234	3.795E-12	6.648E-24	4.528E-23	2.249E-22	1.612E-21	7.262E-21	8.396E-21	0.000E+00	0.000E+00
a-226	U-238	3.196E-07	3.930E-25	5.714E-24	6.212E-23	1.277E-21	1.507E-20	3.842E-20	0.000E+00	0.000E+00
a-226	U-238	4.219E-13	0.000E+00	0.000E+00	7.803E-29	1.685E-27	1.989E-26	5.072E-26	0.000E+00	0.000E+00
a-226	U-238	6.073E-15	0.000E+00	0.000E+00	0.000E+00	2.308E-29	2.862E-28	7.300E-28	0.000E+00	0.000E+00
a-226	U-238	1.994E-04	2.453E-22	3.565E-21	3.876E-20	7.966E-19	9.401E-18	2.398E-17	0.000E+00	0.000E+00
a-226	U-238	2.633E-10	3.237E-28	4.706E-27	5.117E-26	1.052E-24	1.241E-23	3.165E-23	0.000E+00	0.000E+00
a-226	U-238	3.789E-12	0.000E+00	6.446E-29	7.365E-28	1.514E-26	1.786E-25	4.555E-25	0.000E+00	0.000E+00
a-226	äDOSE(j)		1.390E-06	1.338E-06	1.238E-06	9.414E-07	4.246E-07	1.862E-08	0.000E+00	0.000E+00

ummary : GKP Maintenance Worker Inhalation
ile : C:\USERS\CLAUDE\DOCUMENTS\0 GKP DOSE\RESRAD CW\GKP PARK RANGER - INHALATION.RAD

Individual Nuclide Dose Summed Over All Pathways
Parent Nuclide and Branch Fraction Indicated

uclide (j)	Parent (i)	THF(i)	DOSE(j,t), mrem/yr t= 0.000E+00	1.000E+00	3.000E+00	1.000E+01	3.000E+01	1.000E+02	3.000E+02	1.000E+03
ÄÄÄÄÄÄ	ÄÄÄÄÄÄÄ	ÄÄÄÄÄÄÄÄÄ	ÄÄÄÄÄÄÄÄÄ	ÄÄÄÄÄÄÄÄÄ	ÄÄÄÄÄÄÄÄÄ	ÄÄÄÄÄÄÄÄÄ	ÄÄÄÄÄÄÄÄÄ	ÄÄÄÄÄÄÄÄÄ	ÄÄÄÄÄÄÄÄÄ	ÄÄÄÄÄÄÄÄÄ
a-226	Ra-226	3.795E-12	2.642E-14	2.541E-14	2.351E-14	1.789E-14	8.067E-15	3.538E-16	0.000E+00	0.000E+00
a-226	Ra-226	4.196E-08	2.921E-10	2.809E-10	2.599E-10	1.977E-10	8.918E-11	3.911E-12	0.000E+00	0.000E+00
a-226	äDOSE(j)		2.921E-10	2.810E-10	2.600E-10	1.978E-10	8.919E-11	3.911E-12	0.000E+00	0.000E+00
a-226	Ra-226	5.538E-14	3.855E-16	3.709E-16	3.431E-16	2.610E-16	1.177E-16	5.162E-18	0.000E+00	0.000E+00
a-226	Ra-226	7.972E-16	5.549E-18	5.338E-18	4.939E-18	3.757E-18	1.694E-18	7.431E-20	0.000E+00	0.000E+00
a-226	äDOSE(j)		3.911E-16	3.762E-16	3.481E-16	2.648E-16	1.194E-16	5.237E-18	0.000E+00	0.000E+00
a-226	Ra-226	2.000E-07	1.391E-09	1.338E-09	1.238E-09	9.419E-10	4.248E-10	1.863E-11	0.000E+00	0.000E+00
a-226	Ra-226	2.640E-13	1.836E-15	1.766E-15	1.634E-15	1.243E-15	5.607E-16	2.459E-17	0.000E+00	0.000E+00
a-226	U-234	2.000E-07	3.501E-19	2.384E-18	1.184E-17	8.487E-17	3.824E-16	4.421E-16	0.000E+00	0.000E+00
a-226	U-234	2.640E-13	4.621E-25	3.147E-24	1.563E-23	1.120E-22	5.047E-22	5.836E-22	0.000E+00	0.000E+00
a-226	U-234	3.800E-15	6.651E-27	4.530E-26	2.250E-25	1.612E-24	7.265E-24	8.400E-24	0.000E+00	0.000E+00
a-226	U-238	3.200E-10	3.932E-28	5.716E-27	6.215E-26	1.277E-24	1.507E-23	3.844E-23	0.000E+00	0.000E+00
a-226	U-238	4.224E-16	0.000E+00	0.000E+00	0.000E+00	0.000E+00	1.893E-29	4.827E-29	0.000E+00	0.000E+00
a-226	U-238	6.080E-18	0.000E+00	0.000E+00	0.000E+00	0.000E+00	0.000E+00	0.000E+00	0.000E+00	0.000E+00
a-226	U-238	1.997E-07	2.454E-25	3.567E-24	3.878E-23	7.970E-22	9.405E-21	2.399E-20	0.000E+00	0.000E+00
a-226	U-238	2.636E-13	0.000E+00	0.000E+00	4.871E-29	1.052E-27	1.241E-26	3.166E-26	0.000E+00	0.000E+00
a-226	U-238	3.794E-15	0.000E+00	0.000E+00	0.000E+00	1.441E-29	1.700E-28	4.558E-28	0.000E+00	0.000E+00
a-226	äDOSE(j)		1.391E-09	1.338E-09	1.238E-09	9.419E-10	4.248E-10	1.863E-11	0.000E+00	0.000E+00
a-226	Ra-226	3.800E-15	2.643E-17	2.543E-17	2.352E-17	1.790E-17	8.071E-18	3.539E-19	0.000E+00	0.000E+00
n-232	Th-232	1.000E+00	8.452E-02	8.395E-02	8.282E-02	7.884E-02	6.748E-02	2.788E-02	0.000E+00	0.000E+00
a-228	Th-232	1.000E+00	1.499E-05	4.185E-05	8.376E-05	1.542E-04	1.639E-04	6.840E-05	0.000E+00	0.000E+00
n-228	Th-232	1.000E+00	1.262E-04	7.630E-04	2.935E-03	9.769E-03	1.254E-02	6.135E-03	0.000E+00	0.000E+00
-234	U-234	9.996E-01	3.853E-02	3.661E-02	3.306E-02	2.309E-02	8.163E-03	1.526E-04	0.000E+00	0.000E+00
-234	U-234	1.319E-06	5.086E-08	4.833E-08	4.364E-08	3.048E-08	1.078E-08	2.015E-10	0.000E+00	0.000E+00
-234	U-238	1.599E-03	8.628E-11	2.474E-10	5.221E-10	1.095E-09	1.125E-09	6.930E-11	0.000E+00	0.000E+00
-234	U-238	2.111E-09	1.139E-16	3.266E-16	6.891E-16	1.445E-15	1.485E-15	9.148E-17	0.000E+00	0.000E+00
-234	U-238	3.039E-11	1.639E-18	4.700E-18	9.919E-18	2.080E-17	2.137E-17	1.317E-18	0.000E+00	0.000E+00
-234	U-238	3.359E-07	1.812E-14	5.196E-14	1.097E-13	2.300E-13	2.362E-13	1.456E-14	0.000E+00	0.000E+00
-234	U-238	4.434E-13	2.392E-20	6.859E-20	1.447E-19	3.036E-19	3.118E-19	1.921E-20	0.000E+00	0.000E+00
-234	U-238	6.383E-15	3.443E-22	9.873E-22	2.084E-21	4.370E-21	4.488E-21	2.766E-22	0.000E+00	0.000E+00
-234	U-238	3.196E-07	1.724E-14	4.944E-14	1.043E-13	2.188E-13	2.247E-13	1.385E-14	0.000E+00	0.000E+00
-234	U-238	4.219E-13	2.276E-20	6.526E-20	1.377E-19	2.888E-19	2.967E-19	1.828E-20	0.000E+00	0.000E+00
-234	U-238	6.073E-15	3.276E-22	9.393E-22	1.982E-21	4.158E-21	4.270E-21	2.631E-22	0.000E+00	0.000E+00
-234	U-238	6.713E-11	3.622E-18	1.038E-17	2.191E-17	4.596E-17	4.721E-17	2.909E-18	0.000E+00	0.000E+00
-234	U-238	8.862E-17	4.781E-24	1.371E-23	2.893E-23	6.067E-23	6.231E-23	3.840E-24	0.000E+00	0.000E+00
-234	U-238	1.276E-18	6.881E-26	1.973E-25	4.164E-25	8.733E-25	8.969E-25	5.527E-26	0.000E+00	0.000E+00
-234	U-238	3.200E-10	1.726E-17	4.950E-17	1.045E-16	2.191E-16	2.250E-16	1.387E-17	0.000E+00	0.000E+00
-234	U-238	4.224E-16	2.279E-23	6.534E-23	1.379E-22	2.892E-22	2.970E-22	1.830E-23	0.000E+00	0.000E+00
-234	U-238	6.080E-18	3.280E-25	9.405E-25	1.985E-24	4.163E-24	4.275E-24	2.635E-25	0.000E+00	0.000E+00
-234	U-238	9.980E-01	5.384E-08	1.544E-07	3.258E-07	6.833E-07	7.018E-07	4.324E-08	0.000E+00	0.000E+00
-234	U-238	1.317E-06	7.107E-14	2.038E-13	4.300E-13	9.019E-13	9.263E-13	5.708E-14	0.000E+00	0.000E+00
-234	U-238	1.896E-08	1.023E-15	2.933E-15	6.190E-15	1.298E-14	1.333E-14	8.217E-16	0.000E+00	0.000E+00

ummary : GKP Maintenance Worker Inhalation
ile : C:\USERS\CLAUDE\DOCUMENTS\0 GKP DOSE\RESRAD CW\GKP PARK RANGER - INHALATION.RAD

Individual Nuclide Dose Summed Over All Pathways
Parent Nuclide and Branch Fraction Indicated

uclide (j)	Parent (i)	THF(i)	DOSE(j,t), mrem/yr t= 0.000E+00	1.000E+00	3.000E+00	1.000E+01	3.000E+01	1.000E+02	3.000E+02	1.000E+03
ÄÄÄÄÄÄ	ÄÄÄÄÄÄÄÄ	ÄÄÄÄÄÄÄÄÄÄ	ÄÄÄÄÄÄÄÄÄÄ	ÄÄÄÄÄÄÄÄÄÄ	ÄÄÄÄÄÄÄÄÄÄ	ÄÄÄÄÄÄÄÄÄÄ	ÄÄÄÄÄÄÄÄÄÄ	ÄÄÄÄÄÄÄÄÄÄ	ÄÄÄÄÄÄÄÄÄÄ	ÄÄÄÄÄÄÄÄÄÄ
-234	U-238	2.096E-04	1.131E-11	3.242E-11	6.843E-11	1.435E-10	1.474E-10	9.083E-12	0.000E+00	0.000E+00
-234	U-238	2.767E-10	1.493E-17	4.280E-17	9.032E-17	1.894E-16	1.946E-16	1.199E-17	0.000E+00	0.000E+00
-234	U-238	3.983E-12	2.149E-19	6.161E-19	1.300E-18	2.727E-18	2.801E-18	1.726E-19	0.000E+00	0.000E+00
-234	U-238	1.994E-04	1.076E-11	3.085E-11	6.510E-11	1.365E-10	1.402E-10	8.642E-12	0.000E+00	0.000E+00
-234	U-238	2.633E-10	1.420E-17	4.072E-17	8.594E-17	1.802E-16	1.851E-16	1.141E-17	0.000E+00	0.000E+00
-234	U-238	3.789E-12	2.044E-19	5.861E-19	1.237E-18	2.594E-18	2.665E-18	1.642E-19	0.000E+00	0.000E+00
-234	U-238	4.189E-08	2.260E-15	6.480E-15	1.367E-14	2.868E-14	2.946E-14	1.815E-15	0.000E+00	0.000E+00
-234	U-238	5.530E-14	2.983E-21	8.553E-21	1.805E-20	3.786E-20	3.888E-20	2.396E-21	0.000E+00	0.000E+00
-234	U-238	7.959E-16	4.294E-23	1.231E-22	2.598E-22	5.449E-22	5.597E-22	3.449E-23	0.000E+00	0.000E+00
-234	U-238	1.997E-07	1.077E-14	3.089E-14	6.518E-14	1.367E-13	1.404E-13	8.652E-15	0.000E+00	0.000E+00
-234	U-238	2.636E-13	1.422E-20	4.077E-20	8.604E-20	1.805E-19	1.853E-19	1.142E-20	0.000E+00	0.000E+00
-234	U-238	3.794E-15	2.047E-22	5.868E-22	1.238E-21	2.597E-21	2.668E-21	1.644E-22	0.000E+00	0.000E+00
-234	äDOSE(j)		3.853E-02	3.661E-02	3.306E-02	2.309E-02	8.164E-03	1.527E-04	0.000E+00	0.000E+00
a-230	U-234	9.996E-01	4.402E-07	1.287E-06	2.840E-06	7.006E-06	1.195E-05	6.589E-06	0.000E+00	0.000E+00
a-230	U-234	1.319E-06	5.810E-13	1.699E-12	3.749E-12	9.248E-12	1.578E-11	8.697E-12	0.000E+00	0.000E+00
a-230	U-234	1.899E-08	8.364E-15	2.446E-14	5.396E-14	1.331E-13	2.271E-13	1.252E-13	0.000E+00	0.000E+00
a-230	U-234	2.100E-04	9.246E-11	2.704E-10	5.965E-10	1.472E-09	2.511E-09	1.384E-09	0.000E+00	0.000E+00
a-230	U-234	2.771E-10	1.220E-16	3.569E-16	7.874E-16	1.942E-15	3.315E-15	1.827E-15	0.000E+00	0.000E+00
a-230	U-234	3.989E-12	1.757E-18	5.138E-18	1.133E-17	2.796E-17	4.771E-17	2.630E-17	0.000E+00	0.000E+00
a-230	U-234	1.998E-04	8.797E-11	2.573E-10	5.675E-10	1.400E-09	2.389E-09	1.317E-09	0.000E+00	0.000E+00
a-230	U-234	2.637E-10	1.161E-16	3.396E-16	7.491E-16	1.848E-15	3.154E-15	1.738E-15	0.000E+00	0.000E+00
a-230	U-234	3.795E-12	1.671E-18	4.888E-18	1.078E-17	2.660E-17	4.539E-17	2.502E-17	0.000E+00	0.000E+00
a-230	U-234	4.196E-08	1.848E-14	5.404E-14	1.192E-13	2.941E-13	5.018E-13	2.766E-13	0.000E+00	0.000E+00
a-230	U-234	5.538E-14	2.439E-20	7.133E-20	1.573E-19	3.882E-19	6.624E-19	3.651E-19	0.000E+00	0.000E+00
a-230	U-234	7.972E-16	3.511E-22	1.027E-21	2.265E-21	5.587E-21	9.534E-21	5.255E-21	0.000E+00	0.000E+00
a-230	U-234	2.000E-07	8.807E-14	2.576E-13	5.682E-13	1.402E-12	2.392E-12	1.318E-12	0.000E+00	0.000E+00
a-230	U-234	2.640E-13	1.163E-19	3.400E-19	7.500E-19	1.850E-18	3.157E-18	1.740E-18	0.000E+00	0.000E+00
a-230	U-234	3.800E-15	1.673E-21	4.894E-21	1.080E-20	2.663E-20	4.545E-20	2.505E-20	0.000E+00	0.000E+00
a-230	U-238	1.599E-03	6.576E-16	4.463E-15	2.200E-14	1.534E-13	6.439E-13	6.377E-13	0.000E+00	0.000E+00
a-230	U-238	2.111E-09	8.680E-22	5.891E-21	2.904E-20	2.025E-19	8.499E-19	8.417E-19	0.000E+00	0.000E+00
a-230	U-238	3.039E-11	1.249E-23	8.480E-23	4.180E-22	2.915E-21	1.223E-20	1.212E-20	0.000E+00	0.000E+00
a-230	U-238	3.359E-07	1.381E-19	9.374E-19	4.621E-18	3.222E-17	1.352E-16	1.339E-16	0.000E+00	0.000E+00
a-230	U-238	4.434E-13	1.823E-25	1.237E-24	6.099E-24	4.253E-23	1.785E-22	1.768E-22	0.000E+00	0.000E+00
a-230	U-238	6.383E-15	2.624E-27	1.781E-26	8.779E-26	6.122E-25	2.570E-24	2.545E-24	0.000E+00	0.000E+00
a-230	U-238	3.196E-07	1.314E-19	8.919E-19	4.396E-18	3.066E-17	1.287E-16	1.274E-16	0.000E+00	0.000E+00
a-230	U-238	4.219E-13	1.735E-25	1.177E-24	5.803E-24	4.047E-23	1.698E-22	1.682E-22	0.000E+00	0.000E+00
a-230	U-238	6.073E-15	2.497E-27	1.695E-26	8.353E-26	5.825E-25	2.445E-24	2.421E-24	0.000E+00	0.000E+00
a-230	U-238	6.713E-11	2.760E-23	1.873E-22	9.234E-22	6.440E-21	2.703E-20	2.677E-20	0.000E+00	0.000E+00
a-230	U-238	8.862E-17	3.644E-29	2.473E-28	1.219E-27	8.500E-27	3.568E-26	3.533E-26	0.000E+00	0.000E+00
a-230	U-238	1.276E-18	0.000E+00	0.000E+00	1.754E-29	1.224E-28	5.135E-28	5.086E-28	0.000E+00	0.000E+00
a-230	U-238	3.200E-10	1.316E-22	8.930E-22	4.401E-21	3.070E-20	1.288E-19	1.276E-19	0.000E+00	0.000E+00
a-230	U-238	4.224E-16	1.737E-28	1.179E-27	5.810E-27	4.052E-26	1.701E-25	1.684E-25	0.000E+00	0.000E+00
a-230	U-238	6.080E-18	0.000E+00	1.697E-29	8.363E-29	5.832E-28	2.448E-27	2.424E-27	0.000E+00	0.000E+00
a-230	U-238	9.980E-01	4.103E-13	2.785E-12	1.373E-11	9.573E-11	4.018E-10	3.979E-10	0.000E+00	0.000E+00
a-230	U-238	1.317E-06	5.417E-19	3.676E-18	1.812E-17	1.264E-16	5.303E-16	5.252E-16	0.000E+00	0.000E+00
a-230	U-238	1.896E-08	7.797E-21	5.291E-20	2.608E-19	1.819E-18	7.634E-18	7.560E-18	0.000E+00	0.000E+00
a-230	U-238	2.096E-04	8.619E-17	5.850E-16	2.883E-15	2.011E-14	8.439E-14	8.358E-14	0.000E+00	0.000E+00
a-230	U-238	2.767E-10	1.138E-22	7.721E-22	3.806E-21	2.654E-20	1.114E-19	1.103E-19	0.000E+00	0.000E+00

ummary : GKP Maintenance Worker Inhalation
ile : C:\USERS\CLAUDE\DOCUMENTS\0 GKP DOSE\RESRAD CW\GKP PARK RANGER - INHALATION.RAD

Individual Nuclide Dose Summed Over All Pathways
Parent Nuclide and Branch Fraction Indicated

uclide (j)	Parent (i)	THF(i)	DOSE(j,t), mrem/yr t= 0.000E+00	1.000E+00	3.000E+00	1.000E+01	3.000E+01	1.000E+02	3.000E+02	1.000E+03
ÄÄÄÄÄÄ	ÄÄÄÄÄÄÄ	ÄÄÄÄÄÄÄÄÄ	ÄÄÄÄÄÄÄÄÄ	ÄÄÄÄÄÄÄÄÄ	ÄÄÄÄÄÄÄÄÄ	ÄÄÄÄÄÄÄÄÄ	ÄÄÄÄÄÄÄÄÄ	ÄÄÄÄÄÄÄÄÄ	ÄÄÄÄÄÄÄÄÄ	ÄÄÄÄÄÄÄÄÄ
n-230	U-238	3.983E-12	1.638E-24	1.111E-23	5.478E-23	3.820E-22	1.603E-21	1.588E-21	0.000E+00	0.000E+00
n-230	U-238	1.994E-04	8.200E-17	5.565E-16	2.743E-15	1.913E-14	8.029E-14	7.952E-14	0.000E+00	0.000E+00
n-230	U-238	2.633E-10	1.082E-22	7.346E-22	3.621E-21	2.525E-20	1.060E-19	1.050E-19	0.000E+00	0.000E+00
n-230	U-238	3.789E-12	1.558E-24	1.057E-23	5.212E-23	3.635E-22	1.526E-21	1.511E-21	0.000E+00	0.000E+00
n-230	U-238	4.189E-08	1.722E-20	1.169E-19	5.762E-19	4.018E-18	1.686E-17	1.670E-17	0.000E+00	0.000E+00
n-230	U-238	5.530E-14	2.274E-26	1.543E-25	7.606E-25	5.304E-24	2.226E-23	2.205E-23	0.000E+00	0.000E+00
n-230	U-238	7.959E-16	3.273E-28	2.221E-27	1.095E-26	7.635E-26	3.204E-25	3.173E-25	0.000E+00	0.000E+00
n-230	U-238	1.997E-07	8.210E-20	5.572E-19	2.746E-18	1.915E-17	8.039E-17	7.961E-17	0.000E+00	0.000E+00
n-230	U-238	2.636E-13	1.084E-25	7.355E-25	3.625E-24	2.528E-23	1.061E-22	1.051E-22	0.000E+00	0.000E+00
n-230	U-238	3.794E-15	1.560E-27	1.059E-26	5.218E-26	3.639E-25	1.527E-24	1.513E-24	0.000E+00	0.000E+00
n-230	äDOSE(j)		4.404E-07	1.288E-06	2.841E-06	7.009E-06	1.196E-05	6.592E-06	0.000E+00	0.000E+00
-234	U-234	1.899E-08	7.320E-10	6.956E-10	6.281E-10	4.388E-10	1.551E-10	2.900E-12	0.000E+00	0.000E+00
-234	U-234	2.100E-04	8.092E-06	7.690E-06	6.944E-06	4.851E-06	1.715E-06	3.206E-08	0.000E+00	0.000E+00
-234	äDOSE(j)		8.093E-06	7.691E-06	6.945E-06	4.851E-06	1.715E-06	3.206E-08	0.000E+00	0.000E+00
a-226	U-234	2.100E-04	3.681E-16	2.507E-15	1.245E-14	8.923E-14	4.021E-13	4.649E-13	0.000E+00	0.000E+00
a-226	U-234	3.989E-12	6.994E-24	4.763E-23	2.366E-22	1.695E-21	7.639E-21	8.833E-21	0.000E+00	0.000E+00
a-226	U-238	3.359E-07	4.135E-25	6.011E-24	6.535E-23	1.343E-21	1.585E-20	4.042E-20	0.000E+00	0.000E+00
a-226	U-238	4.434E-13	0.000E+00	0.000E+00	8.209E-29	1.773E-27	2.092E-26	5.335E-26	0.000E+00	0.000E+00
a-226	U-238	6.383E-15	0.000E+00	0.000E+00	0.000E+00	2.428E-29	3.011E-28	7.680E-28	0.000E+00	0.000E+00
a-226	U-238	2.096E-04	2.580E-22	3.751E-21	4.078E-20	8.380E-19	9.889E-18	2.522E-17	0.000E+00	0.000E+00
a-226	U-238	2.767E-10	3.406E-28	4.951E-27	5.383E-26	1.106E-24	1.305E-23	3.329E-23	0.000E+00	0.000E+00
a-226	U-238	3.983E-12	0.000E+00	6.781E-29	7.748E-28	1.592E-26	1.879E-25	4.792E-25	0.000E+00	0.000E+00
a-226	äDOSE(j)		3.681E-16	2.507E-15	1.245E-14	8.923E-14	4.021E-13	4.649E-13	0.000E+00	0.000E+00
-234	U-234	2.771E-10	1.068E-11	1.015E-11	9.166E-12	6.403E-12	2.263E-12	4.232E-14	0.000E+00	0.000E+00
-234	U-234	3.989E-12	1.538E-13	1.461E-13	1.319E-13	9.216E-14	3.258E-14	6.091E-16	0.000E+00	0.000E+00
-234	äDOSE(j)		1.084E-11	1.030E-11	9.298E-12	6.495E-12	2.296E-12	4.293E-14	0.000E+00	0.000E+00
a-226	U-234	2.771E-10	4.859E-22	3.309E-21	1.644E-20	1.178E-19	5.307E-19	6.136E-19	0.000E+00	0.000E+00
-234	U-234	1.998E-04	7.699E-06	7.317E-06	6.607E-06	4.615E-06	1.631E-06	3.050E-08	0.000E+00	0.000E+00
-234	U-234	2.637E-10	1.016E-11	9.658E-12	8.721E-12	6.092E-12	2.153E-12	4.026E-14	0.000E+00	0.000E+00
-234	äDOSE(j)		7.699E-06	7.317E-06	6.607E-06	4.615E-06	1.631E-06	3.050E-08	0.000E+00	0.000E+00
-234	U-234	3.795E-12	1.463E-13	1.390E-13	1.255E-13	8.768E-14	3.100E-14	5.795E-16	0.000E+00	0.000E+00
-234	U-234	4.196E-08	1.617E-09	1.537E-09	1.388E-09	9.693E-10	3.427E-10	6.407E-12	0.000E+00	0.000E+00
-234	äDOSE(j)		1.617E-09	1.537E-09	1.388E-09	9.694E-10	3.427E-10	6.407E-12	0.000E+00	0.000E+00
a-226	U-234	4.196E-08	7.349E-20	5.005E-19	2.486E-18	1.782E-17	8.028E-17	9.282E-17	0.000E+00	0.000E+00
a-226	U-234	7.972E-16	1.396E-27	9.510E-27	4.724E-26	3.385E-25	1.525E-24	1.764E-24	0.000E+00	0.000E+00
a-226	U-238	6.713E-11	7.856E-29	1.200E-27	1.305E-26	2.681E-25	3.164E-24	8.070E-24	0.000E+00	0.000E+00
a-226	U-238	8.862E-17	0.000E+00	0.000E+00	0.000E+00	0.000E+00	0.000E+00	0.000E+00	0.000E+00	0.000E+00
a-226	U-238	1.276E-18	0.000E+00	0.000E+00	0.000E+00	0.000E+00	0.000E+00	0.000E+00	0.000E+00	0.000E+00
a-226	U-238	4.189E-08	5.152E-26	7.489E-25	8.142E-24	1.673E-22	1.975E-21	5.036E-21	0.000E+00	0.000E+00
a-226	U-238	5.530E-14	0.000E+00	0.000E+00	0.000E+00	2.102E-28	2.606E-27	6.647E-27	0.000E+00	0.000E+00
a-226	U-238	7.959E-16	0.000E+00	0.000E+00	0.000E+00	0.000E+00	3.569E-29	9.102E-29	0.000E+00	0.000E+00
a-226	äDOSE(j)		7.349E-20	5.005E-19	2.486E-18	1.782E-17	8.028E-17	9.283E-17	0.000E+00	0.000E+00

ummary : GKP Maintenance Worker Inhalation
ile : C:\USERS\CLAUDE\DOCUMENTS\0 GKP DOSE\RESRAD CW\GKP PARK RANGER - INHALATION.RAD

Individual Nuclide Dose Summed Over All Pathways
Parent Nuclide and Branch Fraction Indicated

uclide (j)	Parent (i)	THF(i)	DOSE(j,t), mrem/yr t= 0.000E+00	1.000E+00	3.000E+00	1.000E+01	3.000E+01	1.000E+02	3.000E+02	1.000E+03
ÄÄÄÄÄÄ	ÄÄÄÄÄÄÄ	ÄÄÄÄÄÄÄÄÄ	ÄÄÄÄÄÄÄÄÄ	ÄÄÄÄÄÄÄÄÄ	ÄÄÄÄÄÄÄÄÄ	ÄÄÄÄÄÄÄÄÄ	ÄÄÄÄÄÄÄÄÄ	ÄÄÄÄÄÄÄÄÄ	ÄÄÄÄÄÄÄÄÄ	ÄÄÄÄÄÄÄÄÄ
-234	U-234	5.538E-14	2.135E-15	2.029E-15	1.832E-15	1.280E-15	4.523E-16	8.457E-18	0.000E+00	0.000E+00
-234	U-234	7.972E-16	3.073E-17	2.920E-17	2.637E-17	1.842E-17	6.510E-18	1.217E-19	0.000E+00	0.000E+00
-234	äDOSE(j)		2.165E-15	2.058E-15	1.858E-15	1.298E-15	4.588E-16	8.579E-18	0.000E+00	0.000E+00
a-226	U-234	5.538E-14	9.701E-26	6.607E-25	3.282E-24	2.352E-23	1.060E-22	1.225E-22	0.000E+00	0.000E+00
-234	U-234	2.000E-07	7.708E-09	7.325E-09	6.615E-09	4.621E-09	1.633E-09	3.054E-11	0.000E+00	0.000E+00
-234	U-234	2.640E-13	1.018E-14	9.670E-15	8.731E-15	6.099E-15	2.156E-15	4.031E-17	0.000E+00	0.000E+00
-234	äDOSE(j)		7.708E-09	7.325E-09	6.615E-09	4.621E-09	1.633E-09	3.054E-11	0.000E+00	0.000E+00
-234	U-234	3.800E-15	1.465E-16	1.392E-16	1.257E-16	8.779E-17	3.103E-17	5.802E-19	0.000E+00	0.000E+00
-235	U-235	9.835E-01	2.135E-03	2.028E-03	1.832E-03	1.280E-03	4.523E-04	8.459E-06	0.000E+00	0.000E+00
-235	U-235	2.722E-03	5.908E-06	5.614E-06	5.069E-06	3.541E-06	1.252E-06	2.341E-08	0.000E+00	0.000E+00
-235	äDOSE(j)		2.140E-03	2.034E-03	1.837E-03	1.283E-03	4.536E-04	8.482E-06	0.000E+00	0.000E+00
a-231	U-235	9.835E-01	2.330E-07	6.680E-07	1.410E-06	2.957E-06	3.036E-06	1.870E-07	0.000E+00	0.000E+00
a-231	U-235	2.722E-03	6.449E-10	1.849E-09	3.902E-09	8.183E-09	8.403E-09	5.175E-10	0.000E+00	0.000E+00
a-231	U-235	1.376E-02	3.260E-09	9.347E-09	1.973E-08	4.137E-08	4.248E-08	2.616E-09	0.000E+00	0.000E+00
a-231	U-235	3.809E-05	9.023E-12	2.587E-11	5.459E-11	1.145E-10	1.176E-10	7.241E-12	0.000E+00	0.000E+00
a-231	U-235	8.257E-07	1.956E-13	5.609E-13	1.184E-12	2.482E-12	2.549E-12	1.570E-13	0.000E+00	0.000E+00
a-231	U-235	2.285E-09	5.414E-16	1.552E-15	3.276E-15	6.870E-15	7.055E-15	4.345E-16	0.000E+00	0.000E+00
a-231	äDOSE(j)		2.369E-07	6.793E-07	1.433E-06	3.006E-06	3.087E-06	1.901E-07	0.000E+00	0.000E+00
c-227	U-235	9.835E-01	1.263E-08	8.233E-08	3.710E-07	1.897E-06	3.546E-06	2.880E-07	0.000E+00	0.000E+00
c-227	U-235	2.722E-03	3.494E-11	2.279E-10	1.027E-09	5.251E-09	9.814E-09	7.970E-10	0.000E+00	0.000E+00
c-227	U-235	1.376E-02	1.762E-10	1.149E-09	5.179E-09	2.648E-08	4.949E-08	4.020E-09	0.000E+00	0.000E+00
c-227	äDOSE(j)		2.112E-10	1.377E-09	6.206E-09	3.174E-08	5.931E-08	4.817E-09	0.000E+00	0.000E+00
-235	U-235	1.376E-02	2.987E-05	2.838E-05	2.563E-05	1.790E-05	6.329E-06	1.184E-07	0.000E+00	0.000E+00
-235	U-235	3.809E-05	8.266E-08	7.855E-08	7.093E-08	4.955E-08	1.752E-08	3.276E-10	0.000E+00	0.000E+00
-235	äDOSE(j)		2.995E-05	2.846E-05	2.570E-05	1.795E-05	6.346E-06	1.187E-07	0.000E+00	0.000E+00
c-227	U-235	3.809E-05	4.877E-13	3.181E-12	1.433E-11	7.330E-11	1.370E-10	1.113E-11	0.000E+00	0.000E+00
c-227	U-235	8.257E-07	1.056E-14	6.887E-14	3.104E-13	1.587E-12	2.966E-12	2.409E-13	0.000E+00	0.000E+00
c-227	äDOSE(j)		4.983E-13	3.249E-12	1.464E-11	7.489E-11	1.400E-10	1.137E-11	0.000E+00	0.000E+00
-235	U-235	8.257E-07	1.792E-09	1.703E-09	1.538E-09	1.074E-09	3.798E-10	7.102E-12	0.000E+00	0.000E+00
-235	U-235	2.285E-09	4.960E-12	4.714E-12	4.256E-12	2.973E-12	1.051E-12	1.966E-14	0.000E+00	0.000E+00
-235	äDOSE(j)		1.797E-09	1.708E-09	1.542E-09	1.077E-09	3.808E-10	7.122E-12	0.000E+00	0.000E+00
c-227	U-235	2.285E-09	2.923E-17	1.906E-16	8.590E-16	4.393E-15	8.210E-15	6.668E-16	0.000E+00	0.000E+00
-238	U-238	5.450E-07	1.878E-08	1.784E-08	1.611E-08	1.126E-08	3.979E-09	7.441E-11	0.000E+00	0.000E+00
-238	U-238	1.599E-03	5.512E-05	5.238E-05	4.730E-05	3.304E-05	1.168E-05	2.184E-07	0.000E+00	0.000E+00
-238	äDOSE(j)		5.514E-05	5.240E-05	4.732E-05	3.305E-05	1.168E-05	2.185E-07	0.000E+00	0.000E+00
-238	U-238	2.111E-09	7.276E-11	6.915E-11	6.244E-11	4.361E-11	1.542E-11	2.883E-13	0.000E+00	0.000E+00

ummary : GKP Maintenance Worker Inhalation
ile : C:\USERS\CLAUDE\DOCUMENTS\0 GKP DOSE\RESRAD CW\GKP PARK RANGER - INHALATION.RAD

Individual Nuclide Dose Summed Over All Pathways
Parent Nuclide and Branch Fraction Indicated

uclide (j)	Parent (i)	THF(i)	DOSE(j,t), mrem/yr t= 0.000E+00	1.000E+00	3.000E+00	1.000E+01	3.000E+01	1.000E+02	3.000E+02	1.000E+03
ÄÄÄÄÄ	ÄÄÄÄÄÄ	ÄÄÄÄÄÄÄÄÄ	ÄÄÄÄÄÄÄÄÄ	ÄÄÄÄÄÄÄÄÄ	ÄÄÄÄÄÄÄÄÄ	ÄÄÄÄÄÄÄÄÄ	ÄÄÄÄÄÄÄÄÄ	ÄÄÄÄÄÄÄÄÄ	ÄÄÄÄÄÄÄÄÄ	ÄÄÄÄÄÄÄÄÄ
-238	U-238	3.039E-11	1.047E-12	9.953E-13	8.987E-13	6.278E-13	2.219E-13	4.150E-15	0.000E+00	0.000E+00
-238	äDOSE(j)		7.381E-11	7.014E-11	6.333E-11	4.424E-11	1.564E-11	2.925E-13	0.000E+00	0.000E+00
-238	U-238	3.359E-07	1.158E-08	1.100E-08	9.935E-09	6.940E-09	2.453E-09	4.588E-11	0.000E+00	0.000E+00
-238	U-238	4.434E-13	1.528E-14	1.452E-14	1.311E-14	9.161E-15	3.238E-15	6.056E-17	0.000E+00	0.000E+00
-238	äDOSE(j)		1.158E-08	1.100E-08	9.935E-09	6.940E-09	2.453E-09	4.588E-11	0.000E+00	0.000E+00
-238	U-238	6.383E-15	2.200E-16	2.091E-16	1.888E-16	1.319E-16	4.661E-17	8.718E-19	0.000E+00	0.000E+00
-238	U-238	3.196E-07	1.102E-08	1.047E-08	9.452E-09	6.603E-09	2.334E-09	4.365E-11	0.000E+00	0.000E+00
-238	äDOSE(j)		1.102E-08	1.047E-08	9.452E-09	6.603E-09	2.334E-09	4.365E-11	0.000E+00	0.000E+00
-238	U-238	4.219E-13	1.454E-14	1.382E-14	1.248E-14	8.716E-15	3.081E-15	5.762E-17	0.000E+00	0.000E+00
-238	U-238	6.073E-15	2.093E-16	1.989E-16	1.796E-16	1.255E-16	4.435E-17	8.294E-19	0.000E+00	0.000E+00
-238	äDOSE(j)		1.475E-14	1.402E-14	1.266E-14	8.841E-15	3.126E-15	5.845E-17	0.000E+00	0.000E+00
-238	U-238	6.713E-11	2.314E-12	2.199E-12	1.985E-12	1.387E-12	4.903E-13	9.169E-15	0.000E+00	0.000E+00
-238	U-238	8.862E-17	3.054E-18	2.902E-18	2.621E-18	1.831E-18	6.472E-19	1.210E-20	0.000E+00	0.000E+00
-238	äDOSE(j)		2.314E-12	2.199E-12	1.985E-12	1.387E-12	4.903E-13	9.169E-15	0.000E+00	0.000E+00
-238	U-238	1.276E-18	4.396E-20	4.178E-20	3.772E-20	2.635E-20	9.315E-21	1.742E-22	0.000E+00	0.000E+00
-238	U-238	3.200E-10	1.103E-11	1.048E-11	9.464E-12	6.611E-12	2.337E-12	4.371E-14	0.000E+00	0.000E+00
-238	äDOSE(j)		1.103E-11	1.048E-11	9.464E-12	6.611E-12	2.337E-12	4.371E-14	0.000E+00	0.000E+00
-238	U-238	4.224E-16	1.456E-17	1.383E-17	1.249E-17	8.727E-18	3.085E-18	5.769E-20	0.000E+00	0.000E+00
-238	U-238	6.080E-18	2.095E-19	1.991E-19	1.798E-19	1.256E-19	4.440E-20	8.304E-22	0.000E+00	0.000E+00
-238	äDOSE(j)		1.477E-17	1.403E-17	1.267E-17	8.852E-18	3.129E-18	5.852E-20	0.000E+00	0.000E+00
-238	U-238	9.980E-01	3.440E-02	3.269E-02	2.951E-02	2.062E-02	7.289E-03	1.363E-04	0.000E+00	0.000E+00
-238	U-238	1.317E-06	4.540E-08	4.315E-08	3.896E-08	2.722E-08	9.621E-09	1.799E-10	0.000E+00	0.000E+00
-238	äDOSE(j)		3.440E-02	3.269E-02	2.951E-02	2.062E-02	7.289E-03	1.363E-04	0.000E+00	0.000E+00
-238	U-238	1.896E-08	6.535E-10	6.210E-10	5.608E-10	3.917E-10	1.385E-10	2.590E-12	0.000E+00	0.000E+00
-238	U-238	2.096E-04	7.225E-06	6.866E-06	6.199E-06	4.331E-06	1.531E-06	2.863E-08	0.000E+00	0.000E+00
-238	äDOSE(j)		7.225E-06	6.866E-06	6.200E-06	4.331E-06	1.531E-06	2.863E-08	0.000E+00	0.000E+00
-238	U-238	2.767E-10	9.536E-12	9.063E-12	8.183E-12	5.716E-12	2.021E-12	3.779E-14	0.000E+00	0.000E+00
-238	U-238	3.983E-12	1.373E-13	1.304E-13	1.178E-13	8.228E-14	2.909E-14	5.440E-16	0.000E+00	0.000E+00
-238	äDOSE(j)		9.674E-12	9.193E-12	8.301E-12	5.799E-12	2.050E-12	3.834E-14	0.000E+00	0.000E+00
-238	U-238	1.994E-04	6.874E-06	6.532E-06	5.898E-06	4.120E-06	1.457E-06	2.724E-08	0.000E+00	0.000E+00
-238	U-238	2.633E-10	9.073E-12	8.622E-12	7.786E-12	5.439E-12	1.923E-12	3.596E-14	0.000E+00	0.000E+00
-238	äDOSE(j)		6.874E-06	6.532E-06	5.898E-06	4.120E-06	1.457E-06	2.724E-08	0.000E+00	0.000E+00
-238	U-238	3.789E-12	1.306E-13	1.241E-13	1.121E-13	7.828E-14	2.767E-14	5.175E-16	0.000E+00	0.000E+00
-238	U-238	4.189E-08	1.444E-09	1.372E-09	1.239E-09	8.654E-10	3.059E-10	5.721E-12	0.000E+00	0.000E+00
-238	äDOSE(j)		1.444E-09	1.372E-09	1.239E-09	8.655E-10	3.060E-10	5.722E-12	0.000E+00	0.000E+00
-238	U-238	5.530E-14	1.906E-15	1.811E-15	1.635E-15	1.142E-15	4.038E-16	7.552E-18	0.000E+00	0.000E+00
-238	U-238	7.959E-16	2.743E-17	2.607E-17	2.354E-17	1.644E-17	5.813E-18	1.087E-19	0.000E+00	0.000E+00
-238	äDOSE(j)		1.933E-15	1.837E-15	1.659E-15	1.159E-15	4.097E-16	7.661E-18	0.000E+00	0.000E+00

ummary : GKP Maintenance Worker Inhalation
ile : C:\USERS\CLAUDE\DOCUMENTS\0 GKP DOSE\RESRAD CW\GKP PARK RANGER - INHALATION.RAD

Individual Nuclide Dose Summed Over All Pathways
Parent Nuclide and Branch Fraction Indicated

uclide (j)	Parent (i)	THF(i)	t= 0.000E+00	1.000E+00	3.000E+00	DOSE(j,t), mrem/yr 1.000E+01	3.000E+01	1.000E+02	3.000E+02	1.000E+03
ÄÄÄÄÄÄ	ÄÄÄÄÄÄÄ	ÄÄÄÄÄÄÄÄÄ	ÄÄÄÄÄÄÄÄÄ	ÄÄÄÄÄÄÄÄÄ	ÄÄÄÄÄÄÄÄÄ	ÄÄÄÄÄÄÄÄÄ	ÄÄÄÄÄÄÄÄÄ	ÄÄÄÄÄÄÄÄÄ	ÄÄÄÄÄÄÄÄÄ	ÄÄÄÄÄÄÄÄÄ
-238	U-238	1.997E-07	6.882E-09	6.540E-09	5.905E-09	4.125E-09	1.458E-09	2.727E-11	0.000E+00	0.000E+00
-238	U-238	2.636E-13	9.084E-15	8.633E-15	7.795E-15	5.445E-15	1.925E-15	3.600E-17	0.000E+00	0.000E+00
-238	äDOSE(j)		6.882E-09	6.540E-09	5.905E-09	4.125E-09	1.458E-09	2.727E-11	0.000E+00	0.000E+00
-238	U-238	3.794E-15	1.308E-16	1.243E-16	1.122E-16	7.838E-17	2.771E-17	5.182E-19	0.000E+00	0.000E+00
íííííí	ííííííí	ííííííííí	ííííííííí	ííííííííí	ííííííííí	ííííííííí	ííííííííí	ííííííííí	ííííííííí	ííííííííí

HF(i) is the thread fraction of the parent nuclide.

ummary : GKP Maintenance Worker Inhalation
ile : C:\USERS\CLAUDE\DOCUMENTS\0 GKP DOSE\RESRAD CW\GKP PARK RANGER - INHALATION.RAD

Individual Nuclide Soil Concentration
Parent Nuclide and Branch Fraction Indicated

uclide (j)	Parent (i)	THF(i)	S(j,t), pCi/g t= 0.000E+00	1.000E+00	3.000E+00	1.000E+01	3.000E+01	1.000E+02	3.000E+02	1.000E+03
ÄÄÄÄÄ	ÄÄÄÄÄÄ	ÄÄÄÄÄÄÄÄÄ	ÄÄÄÄÄÄÄÄÄ	ÄÄÄÄÄÄÄÄÄ	ÄÄÄÄÄÄÄÄÄ	ÄÄÄÄÄÄÄÄÄ	ÄÄÄÄÄÄÄÄÄ	ÄÄÄÄÄÄÄÄÄ	ÄÄÄÄÄÄÄÄÄ	ÄÄÄÄÄÄÄÄÄ
a-226	Ra-226	9.996E-01	3.648E+01	3.533E+01	3.314E+01	2.647E+01	1.394E+01	1.475E+00	2.411E-03	4.255E-13
a-226	Ra-226	1.319E-06	4.816E-05	4.664E-05	4.374E-05	3.494E-05	1.839E-05	1.947E-06	3.182E-09	5.616E-19
a-226	U-234	9.996E-01	0.000E+00	2.698E-08	2.308E-07	2.155E-06	1.208E-05	3.439E-05	3.853E-05	3.731E-05
a-226	U-234	1.319E-06	0.000E+00	3.561E-14	3.047E-13	2.844E-12	1.595E-11	4.540E-11	5.086E-11	4.925E-11
a-226	U-234	1.899E-08	0.000E+00	5.126E-16	4.386E-15	4.094E-14	2.295E-13	6.534E-13	7.321E-13	7.089E-13
a-226	U-238	1.599E-03	0.000E+00	4.044E-17	1.028E-15	3.093E-14	4.696E-13	2.984E-12	3.935E-12	3.813E-12
a-226	U-238	2.111E-09	0.000E+00	5.338E-23	1.357E-21	4.082E-20	6.199E-19	3.939E-18	5.194E-18	5.033E-18
a-226	U-238	3.039E-11	0.000E+00	7.683E-25	1.953E-23	5.876E-22	8.923E-21	5.670E-20	7.477E-20	7.244E-20
a-226	U-238	9.980E-01	0.000E+00	2.523E-14	6.416E-13	1.930E-11	2.930E-10	1.862E-09	2.455E-09	2.379E-09
a-226	U-238	1.317E-06	0.000E+00	3.331E-20	8.469E-19	2.547E-17	3.868E-16	2.458E-15	3.241E-15	3.140E-15
a-226	U-238	1.896E-08	0.000E+00	4.794E-22	1.219E-20	3.667E-19	5.568E-18	3.538E-17	4.665E-17	4.520E-17
a-226	äS(j):		3.649E+01	3.533E+01	3.314E+01	2.647E+01	1.394E+01	1.475E+00	2.449E-03	3.731E-05
o-210	Ra-226	9.996E-01	0.000E+00	1.092E+00	3.007E+00	7.444E+00	9.643E+00	1.904E+00	3.525E-03	6.232E-13
o-210	Ra-226	2.100E-04	0.000E+00	2.293E-04	6.315E-04	1.564E-03	2.026E-03	4.000E-04	7.405E-07	1.309E-16
o-210	Ra-226	1.998E-04	0.000E+00	2.181E-04	6.009E-04	1.488E-03	1.927E-03	3.805E-04	7.045E-07	1.245E-16
o-210	Ra-226	4.196E-08	0.000E+00	4.582E-08	1.262E-07	3.125E-07	4.048E-07	7.993E-08	1.480E-10	2.616E-20
o-210	Ra-226	2.000E-07	0.000E+00	2.184E-07	6.016E-07	1.489E-06	1.929E-06	3.810E-07	7.053E-10	1.247E-19
o-210	U-234	9.996E-01	0.000E+00	2.788E-10	7.058E-09	2.091E-07	3.053E-06	1.777E-05	2.254E-05	2.184E-05
o-210	U-234	2.100E-04	0.000E+00	5.857E-14	1.482E-12	4.392E-11	6.412E-10	3.732E-09	4.735E-09	4.587E-09
o-210	U-234	1.998E-04	0.000E+00	5.572E-14	1.410E-12	4.178E-11	6.101E-10	3.550E-09	4.505E-09	4.364E-09
o-210	U-234	4.196E-08	0.000E+00	1.170E-17	2.963E-16	8.776E-15	1.281E-13	7.457E-13	9.462E-13	9.166E-13
o-210	U-234	2.000E-07	0.000E+00	5.579E-17	1.412E-15	4.183E-14	6.108E-13	3.555E-12	4.510E-12	4.369E-12
o-210	U-238	1.599E-03	0.000E+00	3.142E-19	2.374E-17	2.303E-15	9.533E-14	1.413E-12	2.300E-12	2.231E-12
o-210	U-238	3.359E-07	0.000E+00	6.599E-23	4.987E-21	4.838E-19	2.002E-17	2.967E-16	4.832E-16	4.687E-16
o-210	U-238	3.196E-07	0.000E+00	6.278E-23	4.745E-21	4.603E-19	1.905E-17	2.823E-16	4.597E-16	4.459E-16
o-210	U-238	6.713E-11	0.000E+00	1.319E-26	9.966E-25	9.669E-23	4.001E-21	5.929E-20	9.656E-20	9.366E-20
o-210	U-238	3.200E-10	0.000E+00	6.286E-26	4.750E-24	4.609E-22	1.907E-20	2.826E-19	4.603E-19	4.464E-19
o-210	U-238	9.980E-01	0.000E+00	1.960E-16	1.481E-14	1.437E-12	5.948E-11	8.814E-10	1.435E-09	1.392E-09
o-210	U-238	2.096E-04	0.000E+00	4.118E-20	3.112E-18	3.019E-16	1.249E-14	1.851E-13	3.015E-13	2.925E-13
o-210	U-238	1.994E-04	0.000E+00	3.918E-20	2.961E-18	2.872E-16	1.189E-14	1.761E-13	2.869E-13	2.782E-13
o-210	U-238	4.189E-08	0.000E+00	8.229E-24	6.219E-22	6.033E-20	2.497E-18	3.700E-17	6.025E-17	5.844E-17
o-210	U-238	1.997E-07	0.000E+00	3.922E-23	2.964E-21	2.876E-19	1.190E-17	1.764E-16	2.872E-16	2.786E-16
o-210	äS(j):		0.000E+00	1.092E+00	3.008E+00	7.447E+00	9.647E+00	1.905E+00	3.549E-03	2.185E-05
o-210	Ra-226	1.319E-06	0.000E+00	1.441E-06	3.969E-06	9.826E-06	1.273E-05	2.514E-06	4.653E-09	8.226E-19
o-210	Ra-226	1.899E-08	0.000E+00	2.074E-08	5.713E-08	1.414E-07	1.832E-07	3.618E-08	6.698E-11	1.184E-20
o-210	Ra-226	2.771E-10	0.000E+00	3.026E-10	8.336E-10	2.064E-09	2.674E-09	5.280E-10	9.774E-13	1.728E-22
o-210	Ra-226	2.637E-10	0.000E+00	2.879E-10	7.931E-10	1.964E-09	2.544E-09	5.023E-10	9.299E-13	1.644E-22
o-210	Ra-226	5.538E-14	0.000E+00	6.048E-14	1.666E-13	4.124E-13	5.343E-13	1.055E-13	1.953E-16	3.453E-26
o-210	Ra-226	2.640E-13	0.000E+00	2.883E-13	7.941E-13	1.966E-12	2.547E-12	5.029E-13	9.311E-16	1.646E-25
o-210	U-234	1.319E-06	0.000E+00	3.681E-16	9.317E-15	2.760E-13	4.030E-12	2.345E-11	2.975E-11	2.882E-11
o-210	U-234	2.771E-10	0.000E+00	7.731E-20	1.957E-18	5.797E-17	8.464E-16	4.926E-15	6.250E-15	6.054E-15
o-210	U-234	2.637E-10	0.000E+00	7.356E-20	1.862E-18	5.515E-17	8.053E-16	4.686E-15	5.946E-15	5.760E-15
o-210	U-234	5.538E-14	0.000E+00	1.545E-23	3.911E-22	1.158E-20	1.691E-19	9.844E-19	1.249E-18	1.210E-18
o-210	U-234	2.640E-13	0.000E+00	7.364E-23	1.864E-21	5.522E-20	8.063E-19	4.692E-18	5.953E-18	5.767E-18
o-210	U-238	2.111E-09	0.000E+00	4.147E-25	3.134E-23	3.041E-21	1.258E-19	1.865E-18	3.037E-18	2.945E-18
o-210	U-238	4.434E-13	0.000E+00	8.711E-29	6.583E-27	6.387E-25	2.643E-23	3.916E-22	6.378E-22	6.187E-22
o-210	U-238	4.219E-13	0.000E+00	8.287E-29	6.263E-27	6.076E-25	2.515E-23	3.726E-22	6.068E-22	5.886E-22

ummary : GKP Maintenance Worker Inhalation
ile : C:\USERS\CLAUDE\DOCUMENTS\0 GKP DOSE\RESRAD CW\GKP PARK RANGER - INHALATION.RAD

Individual Nuclide Soil Concentration
Parent Nuclide and Branch Fraction Indicated

uclide (j)	Parent (i)	THF(i)	S(j,t), pCi/g t= 0.000E+00	1.000E+00	3.000E+00	1.000E+01	3.000E+01	1.000E+02	3.000E+02	1.000E+03
ÄÄÄÄÄÄ	ÄÄÄÄÄÄÄ	ÄÄÄÄÄÄÄÄÄÄ	ÄÄÄÄÄÄÄÄÄÄ	ÄÄÄÄÄÄÄÄÄÄ	ÄÄÄÄÄÄÄÄÄÄ	ÄÄÄÄÄÄÄÄÄÄ	ÄÄÄÄÄÄÄÄÄÄ	ÄÄÄÄÄÄÄÄÄÄ	ÄÄÄÄÄÄÄÄÄÄ	ÄÄÄÄÄÄÄÄÄÄ
o-210	U-238	8.862E-17	0.000E+00	1.741E-32	1.315E-30	1.276E-28	5.282E-27	7.826E-26	1.275E-25	1.236E-25
o-210	U-238	4.224E-16	0.000E+00	8.297E-32	6.270E-30	6.084E-28	2.518E-26	3.731E-25	6.076E-25	5.893E-25
o-210	U-238	1.317E-06	0.000E+00	2.588E-22	1.956E-20	1.897E-18	7.852E-17	1.163E-15	1.895E-15	1.838E-15
o-210	U-238	2.767E-10	0.000E+00	5.435E-26	4.108E-24	3.985E-22	1.649E-20	2.444E-19	3.980E-19	3.860E-19
o-210	U-238	2.633E-10	0.000E+00	5.171E-26	3.908E-24	3.792E-22	1.569E-20	2.325E-19	3.787E-19	3.673E-19
o-210	U-238	5.530E-14	0.000E+00	1.086E-29	8.209E-28	7.964E-26	3.296E-24	4.884E-23	7.954E-23	7.715E-23
o-210	U-238	2.636E-13	0.000E+00	5.178E-29	3.913E-27	3.796E-25	1.571E-23	2.328E-22	3.791E-22	3.677E-22
o-210	äS(j):		0.000E+00	1.462E-06	4.028E-06	9.971E-06	1.292E-05	2.551E-06	4.752E-09	2.884E-11
a-226	Ra-226	1.899E-08	6.932E-07	6.713E-07	6.296E-07	5.030E-07	2.648E-07	2.802E-08	4.580E-11	8.084E-21
a-226	Ra-226	2.100E-04	7.663E-03	7.421E-03	6.960E-03	5.560E-03	2.927E-03	3.098E-04	5.063E-07	8.936E-17
a-226	äS(j):		7.664E-03	7.422E-03	6.961E-03	5.561E-03	2.927E-03	3.098E-04	5.064E-07	8.937E-17
a-226	Ra-226	2.771E-10	1.012E-08	9.796E-09	9.188E-09	7.340E-09	3.864E-09	4.090E-10	6.684E-13	1.180E-22
a-226	Ra-226	3.989E-12	1.456E-10	1.410E-10	1.322E-10	1.056E-10	5.561E-11	5.886E-12	9.621E-15	1.698E-24
a-226	äS(j):		1.026E-08	9.937E-09	9.320E-09	7.445E-09	3.919E-09	4.148E-10	6.780E-13	1.197E-22
o-210	Ra-226	3.989E-12	0.000E+00	4.356E-12	1.200E-11	2.971E-11	3.849E-11	7.599E-12	1.407E-14	2.487E-24
o-210	Ra-226	3.795E-12	0.000E+00	4.144E-12	1.142E-11	2.826E-11	3.662E-11	7.230E-12	1.339E-14	2.366E-24
o-210	Ra-226	7.972E-16	0.000E+00	8.705E-16	2.398E-15	5.937E-15	7.691E-15	1.519E-15	2.812E-18	4.970E-28
o-210	Ra-226	3.800E-15	0.000E+00	4.149E-15	1.143E-14	2.830E-14	3.666E-14	7.239E-15	1.340E-17	2.369E-27
o-210	U-234	1.899E-08	0.000E+00	5.298E-18	1.341E-16	3.973E-15	5.800E-14	3.376E-13	4.283E-13	4.149E-13
o-210	U-234	3.989E-12	0.000E+00	1.113E-21	2.817E-20	8.344E-19	1.218E-17	7.090E-17	8.996E-17	8.715E-17
o-210	U-234	3.795E-12	0.000E+00	1.059E-21	2.680E-20	7.939E-19	1.159E-17	6.746E-17	8.559E-17	8.291E-17
o-210	U-234	7.972E-16	0.000E+00	2.224E-25	5.629E-24	1.667E-22	2.435E-21	1.417E-20	1.798E-20	1.742E-20
o-210	U-234	3.800E-15	0.000E+00	1.060E-24	2.683E-23	7.948E-22	1.161E-20	6.754E-20	8.569E-20	8.301E-20
o-210	U-238	3.039E-11	0.000E+00	5.969E-27	4.511E-25	4.377E-23	1.811E-21	2.684E-20	4.371E-20	4.240E-20
o-210	U-238	6.383E-15	0.000E+00	1.254E-30	9.475E-29	9.193E-27	3.804E-25	5.637E-24	9.181E-24	8.905E-24
o-210	U-238	6.073E-15	0.000E+00	1.193E-30	9.015E-29	8.746E-27	3.620E-25	5.363E-24	8.735E-24	8.472E-24
o-210	U-238	1.276E-18	0.000E+00	2.506E-34	1.893E-32	1.837E-30	7.603E-29	1.127E-27	1.835E-27	1.780E-27
o-210	U-238	6.080E-18	0.000E+00	1.194E-33	9.026E-32	8.757E-30	3.624E-28	5.370E-27	8.745E-27	8.483E-27
o-210	U-238	1.896E-08	0.000E+00	3.725E-24	2.815E-22	2.731E-20	1.130E-18	1.675E-17	2.727E-17	2.645E-17
o-210	U-238	3.983E-12	0.000E+00	7.824E-28	5.912E-26	5.736E-24	2.374E-22	3.518E-21	5.729E-21	5.557E-21
o-210	U-238	3.789E-12	0.000E+00	7.444E-28	5.625E-26	5.458E-24	2.259E-22	3.347E-21	5.450E-21	5.287E-21
o-210	U-238	7.959E-16	0.000E+00	1.563E-31	1.182E-29	1.146E-27	4.744E-26	7.029E-25	1.145E-24	1.110E-24
o-210	U-238	3.794E-15	0.000E+00	7.453E-31	5.632E-29	5.464E-27	2.261E-25	3.351E-24	5.457E-24	5.293E-24
o-210	äS(j):		0.000E+00	8.506E-12	2.343E-11	5.801E-11	7.520E-11	1.518E-11	4.560E-13	4.151E-13
a-226	Ra-226	1.998E-04	7.291E-03	7.061E-03	6.622E-03	5.290E-03	2.785E-03	2.948E-04	4.817E-07	8.502E-17
a-226	Ra-226	2.637E-10	9.624E-09	9.320E-09	8.741E-09	6.983E-09	3.676E-09	3.891E-10	6.359E-13	1.122E-22
a-226	U-234	1.998E-04	0.000E+00	5.392E-12	4.613E-11	4.306E-10	2.414E-09	6.873E-09	7.700E-09	7.457E-09
a-226	U-234	2.637E-10	0.000E+00	7.117E-18	6.089E-17	5.684E-16	3.187E-15	9.072E-15	1.016E-14	9.843E-15
a-226	U-234	3.795E-12	0.000E+00	1.024E-19	8.765E-19	8.182E-18	4.587E-17	1.306E-16	1.463E-16	1.417E-16
a-226	U-238	3.196E-07	0.000E+00	8.081E-21	2.055E-19	6.180E-18	9.385E-17	5.963E-16	7.864E-16	7.619E-16
a-226	U-238	4.219E-13	0.000E+00	1.067E-26	2.712E-25	8.158E-24	1.239E-22	7.872E-22	1.038E-21	1.006E-21
a-226	U-238	6.073E-15	0.000E+00	1.535E-28	3.904E-27	1.174E-25	1.783E-24	1.133E-23	1.494E-23	1.448E-23
a-226	U-238	1.994E-04	0.000E+00	5.042E-18	1.282E-16	3.856E-15	5.856E-14	3.721E-13	4.907E-13	4.755E-13
a-226	U-238	2.633E-10	0.000E+00	6.656E-24	1.692E-22	5.090E-21	7.730E-20	4.912E-19	6.477E-19	6.276E-19
a-226	U-238	3.789E-12	0.000E+00	9.581E-26	2.436E-24	7.327E-23	1.113E-21	7.070E-21	9.323E-21	9.034E-21
a-226	äS(j):		7.291E-03	7.061E-03	6.622E-03	5.290E-03	2.785E-03	2.948E-04	4.894E-07	7.457E-09

ummary : GKP Maintenance Worker Inhalation
ile : C:\USERS\CLAUDE\DOCUMENTS\0 GKP DOSE\RESRAD CW\GKP PARK RANGER - INHALATION.RAD

Individual Nuclide Soil Concentration
Parent Nuclide and Branch Fraction Indicated

uclide (j)	Parent (i)	THF(i)	S(j,t), pCi/g t= 0.000E+00	1.000E+00	3.000E+00	1.000E+01	3.000E+01	1.000E+02	3.000E+02	1.000E+03
ÄÄÄÄÄÄ	ÄÄÄÄÄÄÄ	ÄÄÄÄÄÄÄÄÄ	ÄÄÄÄÄÄÄÄÄ	ÄÄÄÄÄÄÄÄÄ	ÄÄÄÄÄÄÄÄÄ	ÄÄÄÄÄÄÄÄÄ	ÄÄÄÄÄÄÄÄÄ	ÄÄÄÄÄÄÄÄÄ	ÄÄÄÄÄÄÄÄÄ	ÄÄÄÄÄÄÄÄÄ
a-226	Ra-226	3.795E-12	1.385E-10	1.342E-10	1.258E-10	1.005E-10	5.291E-11	5.600E-12	9.153E-15	1.615E-24
a-226	Ra-226	4.196E-08	1.531E-06	1.483E-06	1.391E-06	1.111E-06	5.849E-07	6.191E-08	1.012E-10	1.786E-20
a-226	äS(j):		1.532E-06	1.483E-06	1.391E-06	1.111E-06	5.850E-07	6.192E-08	1.012E-10	1.786E-20
a-226	Ra-226	5.538E-14	2.022E-12	1.958E-12	1.836E-12	1.467E-12	7.721E-13	8.173E-14	1.336E-16	2.357E-26
a-226	Ra-226	7.972E-16	2.910E-14	2.818E-14	2.643E-14	2.111E-14	1.111E-14	1.176E-15	1.923E-18	3.393E-28
a-226	äS(j):		2.051E-12	1.986E-12	1.862E-12	1.488E-12	7.832E-13	8.290E-14	1.355E-16	2.391E-26
a-226	Ra-226	2.000E-07	7.300E-06	7.070E-06	6.630E-06	5.297E-06	2.788E-06	2.951E-07	4.823E-10	8.513E-20
a-226	Ra-226	2.640E-13	9.636E-12	9.332E-12	8.752E-12	6.991E-12	3.680E-12	3.896E-13	6.367E-16	1.124E-25
a-226	U-234	2.000E-07	0.000E+00	5.398E-15	4.619E-14	4.311E-13	2.417E-12	6.881E-12	7.709E-12	7.466E-12
a-226	U-234	2.640E-13	0.000E+00	7.126E-21	6.097E-20	5.691E-19	3.191E-18	9.083E-18	1.018E-17	9.855E-18
a-226	U-234	3.800E-15	0.000E+00	1.026E-22	8.776E-22	8.192E-21	4.593E-20	1.307E-19	1.465E-19	1.418E-19
a-226	U-238	3.200E-10	0.000E+00	8.091E-24	2.057E-22	6.188E-21	9.396E-20	5.971E-19	7.873E-19	7.629E-19
a-226	U-238	4.224E-16	0.000E+00	1.068E-29	2.715E-28	8.168E-27	1.240E-25	7.881E-25	1.039E-24	1.007E-24
a-226	U-238	6.080E-18	0.000E+00	1.537E-31	3.909E-30	1.176E-28	1.785E-27	1.134E-26	1.496E-26	1.449E-26
a-226	U-238	1.997E-07	0.000E+00	5.048E-21	1.284E-19	3.861E-18	5.863E-17	3.726E-16	4.913E-16	4.760E-16
a-226	U-238	2.636E-13	0.000E+00	6.664E-27	1.694E-25	5.097E-24	7.739E-23	4.918E-22	6.485E-22	6.284E-22
a-226	U-238	3.794E-15	0.000E+00	9.592E-29	2.439E-27	7.336E-26	1.114E-24	7.079E-24	9.335E-24	9.045E-24
a-226	äS(j):		7.300E-06	7.070E-06	6.630E-06	5.297E-06	2.788E-06	2.951E-07	4.900E-10	7.466E-12
a-226	Ra-226	3.800E-15	1.387E-13	1.343E-13	1.260E-13	1.006E-13	5.298E-14	5.607E-15	9.164E-18	1.617E-27
n-232	Th-232	1.000E+00	2.400E+00	2.400E+00	2.400E+00	2.399E+00	2.397E+00	2.391E+00	2.373E+00	2.313E+00
a-228	Th-232	1.000E+00	0.000E+00	2.684E-01	6.968E-01	1.486E+00	1.879E+00	1.894E+00	1.880E+00	1.832E+00
n-228	Th-232	1.000E+00	0.000E+00	4.430E-02	2.891E-01	1.222E+00	1.865E+00	1.894E+00	1.880E+00	1.832E+00
-234	U-234	9.996E-01	1.389E+01	1.329E+01	1.217E+01	8.925E+00	3.683E+00	1.662E-01	2.380E-05	8.354E-19
-234	U-234	1.319E-06	1.834E-05	1.755E-05	1.606E-05	1.178E-05	4.862E-06	2.194E-07	3.141E-11	1.103E-24
-234	U-238	1.599E-03	0.000E+00	6.005E-08	1.649E-07	4.032E-07	4.992E-07	7.511E-08	3.227E-11	3.779E-24
-234	U-238	2.111E-09	0.000E+00	7.927E-14	2.177E-13	5.322E-13	6.589E-13	9.914E-14	4.259E-17	4.988E-30
-234	U-238	3.039E-11	0.000E+00	1.141E-15	3.133E-15	7.661E-15	9.484E-15	1.427E-15	6.131E-19	7.180E-32
-234	U-238	3.359E-07	0.000E+00	1.261E-11	3.463E-11	8.469E-11	1.048E-10	1.578E-11	6.777E-15	7.938E-28
-234	U-238	4.434E-13	0.000E+00	1.665E-17	4.572E-17	1.118E-16	1.384E-16	2.082E-17	8.946E-21	1.048E-33
-234	U-238	6.383E-15	0.000E+00	2.396E-19	6.580E-19	1.609E-18	1.992E-18	2.998E-19	1.288E-22	1.508E-35
-234	U-238	3.196E-07	0.000E+00	1.200E-11	3.295E-11	8.058E-11	9.975E-11	1.501E-11	6.448E-15	7.552E-28
-234	U-238	4.219E-13	0.000E+00	1.584E-17	4.350E-17	1.064E-16	1.317E-16	1.981E-17	8.511E-21	9.969E-34
-234	U-238	6.073E-15	0.000E+00	2.280E-19	6.261E-19	1.531E-18	1.895E-18	2.852E-19	1.225E-22	1.435E-35
-234	U-238	6.713E-11	0.000E+00	2.521E-15	6.921E-15	1.692E-14	2.095E-14	3.153E-15	1.354E-18	1.586E-31
-234	U-238	8.862E-17	0.000E+00	3.327E-21	9.136E-21	2.234E-20	2.766E-20	4.162E-21	1.788E-24	2.094E-37
-234	U-238	1.276E-18	0.000E+00	4.789E-23	1.315E-22	3.216E-22	3.981E-22	5.990E-23	2.573E-26	3.014E-39
-234	U-238	3.200E-10	0.000E+00	1.201E-14	3.299E-14	8.067E-14	9.987E-14	1.503E-14	6.456E-18	7.561E-31
-234	U-238	4.224E-16	0.000E+00	1.586E-20	4.355E-20	1.065E-19	1.318E-19	1.984E-20	8.522E-24	9.981E-37
-234	U-238	6.080E-18	0.000E+00	2.283E-22	6.268E-22	1.533E-21	1.898E-21	2.855E-22	1.227E-25	1.437E-38
-234	U-238	9.980E-01	0.000E+00	3.747E-05	1.029E-04	2.516E-04	3.115E-04	4.687E-05	2.013E-08	2.358E-21
-234	U-238	1.317E-06	0.000E+00	4.946E-11	1.358E-10	3.321E-10	4.111E-10	6.187E-11	2.658E-14	3.113E-27
-234	U-238	1.896E-08	0.000E+00	7.119E-13	1.955E-12	4.780E-12	5.918E-12	8.905E-13	3.825E-16	4.480E-29

ummary : GKP Maintenance Worker Inhalation
ile : C:\USERS\CLAUDE\DOCUMENTS\0 GKP DOSE\RESRAD CW\GKP PARK RANGER - INHALATION.RAD

Individual Nuclide Soil Concentration
Parent Nuclide and Branch Fraction Indicated

uclide (j)	Parent (i)	THF(i)	S(j,t), pCi/g t= 0.000E+00	1.000E+00	3.000E+00	1.000E+01	3.000E+01	1.000E+02	3.000E+02	1.000E+03
ÄÄÄÄÄ	ÄÄÄÄÄÄ	ÄÄÄÄÄÄÄÄ	ÄÄÄÄÄÄÄÄ	ÄÄÄÄÄÄÄÄ	ÄÄÄÄÄÄÄÄ	ÄÄÄÄÄÄÄÄ	ÄÄÄÄÄÄÄÄ	ÄÄÄÄÄÄÄÄ	ÄÄÄÄÄÄÄÄ	ÄÄÄÄÄÄÄÄ
-234	U-238	2.096E-04	0.000E+00	7.871E-09	2.161E-08	5.285E-08	6.542E-08	9.844E-09	4.229E-12	4.953E-25
-234	U-238	2.767E-10	0.000E+00	1.039E-14	2.853E-14	6.976E-14	8.636E-14	1.299E-14	5.582E-18	6.538E-31
-234	U-238	3.983E-12	0.000E+00	1.495E-16	4.106E-16	1.004E-15	1.243E-15	1.870E-16	8.035E-20	9.411E-33
-234	U-238	1.994E-04	0.000E+00	7.488E-09	2.056E-08	5.028E-08	6.225E-08	9.366E-09	4.024E-12	4.712E-25
-234	U-238	2.633E-10	0.000E+00	9.884E-15	2.714E-14	6.637E-14	8.216E-14	1.236E-14	5.311E-18	6.220E-31
-234	U-238	3.789E-12	0.000E+00	1.423E-16	3.907E-16	9.553E-16	1.183E-15	1.780E-16	7.645E-20	8.954E-33
-234	U-238	4.189E-08	0.000E+00	1.573E-12	4.319E-12	1.056E-11	1.307E-11	1.967E-12	8.451E-16	9.898E-29
-234	U-238	5.530E-14	0.000E+00	2.076E-18	5.701E-18	1.394E-17	1.726E-17	2.597E-18	1.116E-21	1.307E-34
-234	U-238	7.959E-16	0.000E+00	2.988E-20	8.206E-20	2.007E-19	2.484E-19	3.738E-20	1.606E-23	1.881E-36
-234	U-238	1.997E-07	0.000E+00	7.497E-12	2.059E-11	5.034E-11	6.232E-11	9.378E-12	4.028E-15	4.718E-28
-234	U-238	2.636E-13	0.000E+00	9.896E-18	2.717E-17	6.645E-17	8.226E-17	1.238E-17	5.318E-21	6.228E-34
-234	U-238	3.794E-15	0.000E+00	1.424E-19	3.911E-19	9.565E-19	1.184E-18	1.782E-19	7.654E-23	8.965E-36
-234	äS(j):		1.389E+01	1.329E+01	1.217E+01	8.926E+00	3.683E+00	1.663E-01	2.382E-05	8.377E-19
a-230	U-234	9.996E-01	0.000E+00	1.250E-04	3.589E-04	1.032E-03	2.120E-03	2.842E-03	2.850E-03	2.759E-03
a-230	U-234	1.319E-06	0.000E+00	1.650E-10	4.738E-10	1.362E-09	2.798E-09	3.751E-09	3.762E-09	3.642E-09
a-230	U-234	1.899E-08	0.000E+00	2.375E-12	6.819E-12	1.961E-11	4.028E-11	5.400E-11	5.415E-11	5.243E-11
a-230	U-234	2.100E-04	0.000E+00	2.625E-08	7.539E-08	2.168E-07	4.452E-07	5.969E-07	5.986E-07	5.796E-07
a-230	U-234	2.771E-10	0.000E+00	3.465E-14	9.951E-14	2.862E-13	5.877E-13	7.879E-13	7.902E-13	7.650E-13
a-230	U-234	3.989E-12	0.000E+00	4.988E-16	1.432E-15	4.119E-15	8.460E-15	1.134E-14	1.137E-14	1.101E-14
a-230	U-234	1.998E-04	0.000E+00	2.497E-08	7.172E-08	2.063E-07	4.236E-07	5.679E-07	5.695E-07	5.514E-07
a-230	U-234	2.637E-10	0.000E+00	3.297E-14	9.468E-14	2.723E-13	5.592E-13	7.497E-13	7.518E-13	7.279E-13
a-230	U-234	3.795E-12	0.000E+00	4.745E-16	1.363E-15	3.919E-15	8.049E-15	1.079E-14	1.082E-14	1.048E-14
a-230	U-234	4.196E-08	0.000E+00	5.246E-12	1.507E-11	4.332E-11	8.898E-11	1.193E-10	1.196E-10	1.158E-10
a-230	U-234	5.538E-14	0.000E+00	6.924E-18	1.989E-17	5.719E-17	1.175E-16	1.575E-16	1.579E-16	1.529E-16
a-230	U-234	7.972E-16	0.000E+00	9.967E-20	2.862E-19	8.231E-19	1.691E-18	2.267E-18	2.273E-18	2.201E-18
a-230	U-234	2.000E-07	0.000E+00	2.501E-11	7.181E-11	2.065E-10	4.241E-10	5.686E-10	5.702E-10	5.521E-10
a-230	U-234	2.640E-13	0.000E+00	3.301E-17	9.479E-17	2.726E-16	5.599E-16	7.506E-16	7.527E-16	7.287E-16
a-230	U-234	3.800E-15	0.000E+00	4.751E-19	1.364E-18	3.924E-18	8.058E-18	1.080E-17	1.083E-17	1.049E-17
a-230	U-238	1.599E-03	0.000E+00	2.802E-13	2.378E-12	2.160E-11	1.128E-10	2.748E-10	2.912E-10	2.820E-10
a-230	U-238	2.111E-09	0.000E+00	3.699E-19	3.139E-18	2.851E-17	1.489E-16	3.627E-16	3.844E-16	3.722E-16
a-230	U-238	3.039E-11	0.000E+00	5.324E-21	4.519E-20	4.104E-19	2.143E-18	5.221E-18	5.533E-18	5.357E-18
a-230	U-238	3.359E-07	0.000E+00	5.885E-17	4.995E-16	4.537E-15	2.369E-14	5.771E-14	6.117E-14	5.922E-14
a-230	U-238	4.434E-13	0.000E+00	7.769E-23	6.594E-22	5.989E-21	3.127E-20	7.618E-20	8.074E-20	7.817E-20
a-230	U-238	6.383E-15	0.000E+00	1.118E-24	9.491E-24	8.621E-23	4.501E-22	1.097E-21	1.162E-21	1.125E-21
a-230	U-238	3.196E-07	0.000E+00	5.600E-17	4.753E-16	4.317E-15	2.254E-14	5.491E-14	5.820E-14	5.635E-14
a-230	U-238	4.219E-13	0.000E+00	7.391E-23	6.274E-22	5.698E-21	2.975E-20	7.248E-20	7.682E-20	7.438E-20
a-230	U-238	6.073E-15	0.000E+00	1.064E-24	9.030E-24	8.202E-23	4.282E-22	1.043E-21	1.106E-21	1.071E-21
a-230	U-238	6.713E-11	0.000E+00	1.176E-20	9.983E-20	9.067E-19	4.734E-18	1.153E-17	1.222E-17	1.183E-17
a-230	U-238	8.862E-17	0.000E+00	1.553E-26	1.318E-25	1.197E-24	6.249E-24	1.522E-23	1.614E-23	1.562E-23
a-230	U-238	1.276E-18	0.000E+00	2.235E-28	1.897E-27	1.723E-26	8.995E-26	2.191E-25	2.323E-25	2.249E-25
a-230	U-238	3.200E-10	0.000E+00	5.606E-20	4.759E-19	4.322E-18	2.257E-17	5.498E-17	5.827E-17	5.641E-17
a-230	U-238	4.224E-16	0.000E+00	7.400E-26	6.281E-25	5.705E-24	2.979E-23	7.257E-23	7.691E-23	7.447E-23
a-230	U-238	6.080E-18	0.000E+00	1.065E-27	9.041E-27	8.212E-26	4.288E-25	1.045E-24	1.107E-24	1.072E-24
a-230	U-238	9.980E-01	0.000E+00	1.748E-10	1.484E-09	1.348E-08	7.038E-08	1.715E-07	1.817E-07	1.759E-07
a-230	U-238	1.317E-06	0.000E+00	2.308E-16	1.959E-15	1.779E-14	9.290E-14	2.263E-13	2.399E-13	2.322E-13
a-230	U-238	1.896E-08	0.000E+00	3.322E-18	2.820E-17	2.561E-16	1.337E-15	3.258E-15	3.453E-15	3.343E-15
a-230	U-238	2.096E-04	0.000E+00	3.673E-14	3.117E-13	2.831E-12	1.478E-11	3.601E-11	3.817E-11	3.695E-11
a-230	U-238	2.767E-10	0.000E+00	4.848E-20	4.115E-19	3.737E-18	1.951E-17	4.754E-17	5.038E-17	4.878E-17

ummary : GKP Maintenance Worker Inhalation
ile : C:\USERS\CLAUDE\DOCUMENTS\0 GKP DOSE\RESRAD CW\GKP PARK RANGER - INHALATION.RAD

Individual Nuclide Soil Concentration
Parent Nuclide and Branch Fraction Indicated

uclide (j)	Parent (i)	THF(i)	S(j,t), pCi/g t= 0.000E+00	1.000E+00	3.000E+00	1.000E+01	3.000E+01	1.000E+02	3.000E+02	1.000E+03
ÄÄÄÄÄ	ÄÄÄÄÄÄ	ÄÄÄÄÄÄÄÄ	ÄÄÄÄÄÄÄÄÄ	ÄÄÄÄÄÄÄÄÄ	ÄÄÄÄÄÄÄÄÄ	ÄÄÄÄÄÄÄÄÄ	ÄÄÄÄÄÄÄÄÄ	ÄÄÄÄÄÄÄÄÄ	ÄÄÄÄÄÄÄÄÄ	ÄÄÄÄÄÄÄÄÄ
n-230	U-238	3.983E-12	0.000E+00	6.978E-22	5.923E-21	5.379E-20	2.809E-19	6.843E-19	7.252E-19	7.021E-19
n-230	U-238	1.994E-04	0.000E+00	3.494E-14	2.966E-13	2.694E-12	1.406E-11	3.426E-11	3.631E-11	3.516E-11
n-230	U-238	2.633E-10	0.000E+00	4.612E-20	3.915E-19	3.556E-18	1.856E-17	4.523E-17	4.794E-17	4.641E-17
n-230	U-238	3.789E-12	0.000E+00	6.639E-22	5.635E-21	5.118E-20	2.672E-19	6.510E-19	6.900E-19	6.680E-19
n-230	U-238	4.189E-08	0.000E+00	7.339E-18	6.229E-17	5.658E-16	2.954E-15	7.197E-15	7.628E-15	7.385E-15
n-230	U-238	5.530E-14	0.000E+00	9.688E-24	8.223E-23	7.468E-22	3.899E-21	9.500E-21	1.007E-20	9.748E-21
n-230	U-238	7.959E-16	0.000E+00	1.394E-25	1.184E-24	1.075E-23	5.613E-23	1.367E-22	1.449E-22	1.403E-22
n-230	U-238	1.997E-07	0.000E+00	3.498E-17	2.969E-16	2.697E-15	1.408E-14	3.431E-14	3.636E-14	3.520E-14
n-230	U-238	2.636E-13	0.000E+00	4.618E-23	3.920E-22	3.560E-21	1.859E-20	4.528E-20	4.799E-20	4.647E-20
n-230	U-238	3.794E-15	0.000E+00	6.647E-25	5.642E-24	5.124E-23	2.675E-22	6.518E-22	6.908E-22	6.688E-22
n-230	äS(j):		0.000E+00	1.250E-04	3.591E-04	1.033E-03	2.121E-03	2.843E-03	2.851E-03	2.761E-03
-234	U-234	1.899E-08	2.640E-07	2.526E-07	2.312E-07	1.696E-07	6.998E-08	3.159E-09	4.522E-13	1.587E-26
-234	U-234	2.100E-04	2.918E-03	2.792E-03	2.556E-03	1.875E-03	7.736E-04	3.492E-05	4.999E-09	1.755E-22
-234	äS(j):		2.919E-03	2.792E-03	2.556E-03	1.875E-03	7.737E-04	3.492E-05	4.999E-09	1.755E-22
a-226	U-234	2.100E-04	0.000E+00	5.667E-12	4.849E-11	4.526E-10	2.538E-09	7.224E-09	8.093E-09	7.837E-09
a-226	U-234	3.989E-12	0.000E+00	1.077E-19	9.213E-19	8.600E-18	4.821E-17	1.373E-16	1.538E-16	1.489E-16
a-226	U-238	3.359E-07	0.000E+00	8.493E-21	2.160E-19	6.496E-18	9.864E-17	6.268E-16	8.265E-16	8.008E-16
a-226	U-238	4.434E-13	0.000E+00	1.121E-26	2.851E-25	8.574E-24	1.302E-22	8.274E-22	1.091E-21	1.057E-21
a-226	U-238	6.383E-15	0.000E+00	1.614E-28	4.103E-27	1.234E-25	1.874E-24	1.191E-23	1.570E-23	1.522E-23
a-226	U-238	2.096E-04	0.000E+00	5.300E-18	1.348E-16	4.053E-15	6.155E-14	3.911E-13	5.158E-13	4.997E-13
a-226	U-238	2.767E-10	0.000E+00	6.996E-24	1.779E-22	5.350E-21	8.125E-20	5.163E-19	6.808E-19	6.596E-19
a-226	U-238	3.983E-12	0.000E+00	1.007E-25	2.560E-24	7.701E-23	1.169E-21	7.431E-21	9.799E-21	9.495E-21
a-226	äS(j):		0.000E+00	5.667E-12	4.849E-11	4.526E-10	2.538E-09	7.224E-09	8.094E-09	7.838E-09
-234	U-234	2.771E-10	3.852E-09	3.686E-09	3.373E-09	2.475E-09	1.021E-09	4.609E-11	6.598E-15	2.316E-28
-234	U-234	3.989E-12	5.545E-11	5.305E-11	4.856E-11	3.562E-11	1.470E-11	6.634E-13	9.498E-17	3.334E-30
-234	äS(j):		3.908E-09	3.739E-09	3.422E-09	2.510E-09	1.036E-09	4.676E-11	6.693E-15	2.349E-28
a-226	U-234	2.771E-10	0.000E+00	7.480E-18	6.400E-17	5.974E-16	3.350E-15	9.535E-15	1.068E-14	1.035E-14
-234	U-234	1.998E-04	2.777E-03	2.656E-03	2.431E-03	1.784E-03	7.360E-04	3.322E-05	4.756E-09	1.669E-22
-234	U-234	2.637E-10	3.665E-09	3.506E-09	3.209E-09	2.354E-09	9.715E-10	4.385E-11	6.278E-15	2.204E-28
-234	äS(j):		2.777E-03	2.656E-03	2.431E-03	1.784E-03	7.360E-04	3.322E-05	4.756E-09	1.669E-22
-234	U-234	3.795E-12	5.276E-11	5.047E-11	4.620E-11	3.389E-11	1.398E-11	6.312E-13	9.036E-17	3.172E-30
-234	U-234	4.196E-08	5.832E-07	5.580E-07	5.107E-07	3.746E-07	1.546E-07	6.978E-09	9.989E-13	3.506E-26
-234	äS(j):		5.833E-07	5.580E-07	5.107E-07	3.747E-07	1.546E-07	6.979E-09	9.990E-13	3.507E-26
a-226	U-234	4.196E-08	0.000E+00	1.132E-15	9.690E-15	9.045E-14	5.071E-13	1.444E-12	1.617E-12	1.566E-12
a-226	U-234	7.972E-16	0.000E+00	2.152E-23	1.841E-22	1.719E-21	9.635E-21	2.743E-20	3.073E-20	2.976E-20
a-226	U-238	6.713E-11	0.000E+00	1.697E-24	4.316E-23	1.298E-21	1.971E-20	1.253E-19	1.652E-19	1.600E-19
a-226	U-238	8.862E-17	0.000E+00	2.240E-30	5.697E-29	1.713E-27	2.602E-26	1.653E-25	2.180E-25	2.113E-25
a-226	U-238	1.276E-18	0.000E+00	3.225E-32	8.200E-31	2.466E-29	3.745E-28	2.380E-27	3.138E-27	3.041E-27
a-226	U-238	4.189E-08	0.000E+00	1.059E-21	2.693E-20	8.100E-19	1.230E-17	7.816E-17	1.031E-16	9.987E-17
a-226	U-238	5.530E-14	0.000E+00	1.398E-27	3.555E-26	1.069E-24	1.624E-23	1.032E-22	1.360E-22	1.318E-22
a-226	U-238	7.959E-16	0.000E+00	2.012E-29	5.117E-28	1.539E-26	2.337E-25	1.485E-24	1.958E-24	1.897E-24
a-226	äS(j):		0.000E+00	1.132E-15	9.690E-15	9.045E-14	5.071E-13	1.444E-12	1.617E-12	1.566E-12

ummary : GKP Maintenance Worker Inhalation
ile : C:\USERS\CLAUDE\DOCUMENTS\0 GKP DOSE\RESRAD CW\GKP PARK RANGER - INHALATION.RAD

Individual Nuclide Soil Concentration
Parent Nuclide and Branch Fraction Indicated

uclide (j)	Parent (i)	THF(i)	S(j,t), pCi/g t= 0.000E+00	1.000E+00	3.000E+00	1.000E+01	3.000E+01	1.000E+02	3.000E+02	1.000E+03
ÄÄÄÄÄ	ÄÄÄÄÄÄ	ÄÄÄÄÄÄÄÄ	ÄÄÄÄÄÄÄÄ	ÄÄÄÄÄÄÄÄ	ÄÄÄÄÄÄÄÄ	ÄÄÄÄÄÄÄÄ	ÄÄÄÄÄÄÄÄ	ÄÄÄÄÄÄÄÄ	ÄÄÄÄÄÄÄÄ	ÄÄÄÄÄÄÄÄ
-234	U-234	5.538E-14	7.698E-13	7.365E-13	6.741E-13	4.945E-13	2.041E-13	9.211E-15	1.319E-18	4.629E-32
-234	U-234	7.972E-16	1.108E-14	1.060E-14	9.703E-15	7.118E-15	2.937E-15	1.326E-16	1.898E-20	6.662E-34
-234	äS(j):		7.809E-13	7.471E-13	6.838E-13	5.016E-13	2.070E-13	9.344E-15	1.338E-18	4.695E-32
a-226	U-234	5.538E-14	0.000E+00	1.495E-21	1.279E-20	1.194E-19	6.694E-19	1.906E-18	2.135E-18	2.067E-18
-234	U-234	2.000E-07	2.780E-06	2.660E-06	2.434E-06	1.786E-06	7.369E-07	3.326E-08	4.762E-12	1.671E-25
-234	U-234	2.640E-13	3.670E-12	3.511E-12	3.213E-12	2.357E-12	9.727E-13	4.391E-14	6.285E-18	2.206E-31
-234	äS(j):		2.780E-06	2.660E-06	2.434E-06	1.786E-06	7.369E-07	3.326E-08	4.762E-12	1.671E-25
-234	U-234	3.800E-15	5.282E-14	5.053E-14	4.625E-14	3.393E-14	1.400E-14	6.320E-16	9.047E-20	3.176E-33
-235	U-235	9.835E-01	8.261E-01	7.904E-01	7.234E-01	5.307E-01	2.190E-01	9.887E-03	1.416E-06	4.981E-20
-235	U-235	2.722E-03	2.286E-03	2.187E-03	2.002E-03	1.469E-03	6.061E-04	2.736E-05	3.920E-09	1.379E-22
-235	äS(j):		8.284E-01	7.925E-01	7.254E-01	5.322E-01	2.196E-01	9.914E-03	1.420E-06	4.995E-20
a-231	U-235	9.835E-01	0.000E+00	1.672E-05	4.592E-05	1.123E-04	1.390E-04	2.090E-05	8.961E-09	1.043E-21
a-231	U-235	2.722E-03	0.000E+00	4.628E-08	1.271E-07	3.107E-07	3.846E-07	5.784E-08	2.480E-11	2.886E-24
a-231	U-235	1.376E-02	0.000E+00	2.340E-07	6.425E-07	1.571E-06	1.944E-06	2.924E-07	1.254E-10	1.459E-23
a-231	U-235	3.809E-05	0.000E+00	6.476E-10	1.778E-09	4.348E-09	5.382E-09	8.093E-10	3.470E-13	4.038E-26
a-231	U-235	8.257E-07	0.000E+00	1.404E-11	3.855E-11	9.426E-11	1.167E-10	1.755E-11	7.523E-15	8.755E-28
a-231	U-235	2.285E-09	0.000E+00	3.886E-14	1.067E-13	2.609E-13	3.229E-13	4.856E-14	2.082E-17	2.423E-30
a-231	äS(j):		0.000E+00	1.700E-05	4.669E-05	1.142E-04	1.413E-04	2.125E-05	9.111E-09	1.060E-21
c-227	U-235	9.835E-01	0.000E+00	2.577E-07	1.994E-06	1.324E-05	3.070E-05	6.123E-06	2.826E-09	3.370E-22
c-227	U-235	2.722E-03	0.000E+00	7.134E-10	5.518E-09	3.665E-08	8.495E-08	1.695E-08	7.821E-12	9.327E-25
c-227	U-235	1.376E-02	0.000E+00	3.606E-09	2.790E-08	1.853E-07	4.295E-07	8.568E-08	3.954E-11	4.715E-24
c-227	äS(j):		0.000E+00	4.320E-09	3.341E-08	2.219E-07	5.144E-07	1.026E-07	4.736E-11	5.648E-24
-235	U-235	1.376E-02	1.156E-02	1.106E-02	1.012E-02	7.426E-03	3.064E-03	1.383E-04	1.982E-08	6.969E-22
-235	U-235	3.809E-05	3.199E-05	3.061E-05	2.801E-05	2.055E-05	8.481E-06	3.829E-07	5.484E-11	1.929E-24
-235	äS(j):		1.159E-02	1.109E-02	1.015E-02	7.446E-03	3.073E-03	1.387E-04	1.987E-08	6.989E-22
c-227	U-235	3.809E-05	0.000E+00	9.981E-12	7.721E-11	5.128E-10	1.189E-09	2.371E-10	1.094E-13	1.305E-26
c-227	U-235	8.257E-07	0.000E+00	2.164E-13	1.674E-12	1.112E-11	2.577E-11	5.141E-12	2.372E-15	2.829E-28
c-227	äS(j):		0.000E+00	1.020E-11	7.888E-11	5.239E-10	1.214E-09	2.423E-10	1.118E-13	1.333E-26
-235	U-235	8.257E-07	6.936E-07	6.636E-07	6.074E-07	4.456E-07	1.839E-07	8.301E-09	1.189E-12	4.182E-26
-235	U-235	2.285E-09	1.920E-09	1.837E-09	1.681E-09	1.233E-09	5.089E-10	2.297E-11	3.291E-15	1.157E-28
-235	äS(j):		6.955E-07	6.654E-07	6.090E-07	4.468E-07	1.844E-07	8.324E-09	1.192E-12	4.193E-26
c-227	U-235	2.285E-09	0.000E+00	5.989E-16	4.633E-15	3.077E-14	7.133E-14	1.423E-14	6.566E-18	7.831E-31
-238	U-238	5.450E-07	7.575E-06	7.248E-06	6.634E-06	4.866E-06	2.008E-06	9.066E-08	1.299E-11	4.567E-25
-238	U-238	1.599E-03	2.223E-02	2.127E-02	1.947E-02	1.428E-02	5.893E-03	2.661E-04	3.811E-08	1.340E-21
-238	äS(j):		2.224E-02	2.128E-02	1.947E-02	1.429E-02	5.895E-03	2.662E-04	3.812E-08	1.341E-21
-238	U-238	2.111E-09	2.934E-08	2.807E-08	2.570E-08	1.885E-08	7.779E-09	3.512E-10	5.030E-14	1.769E-27

ummary : GKP Maintenance Worker Inhalation
ile : C:\USERS\CLAUDE\DOCUMENTS\0 GKP DOSE\RESRAD CW\GKP PARK RANGER - INHALATION.RAD

Individual Nuclide Soil Concentration
Parent Nuclide and Branch Fraction Indicated

uclide (j)	Parent (i)	THF(i)	S(j,t), pCi/g t= 0.000E+00	1.000E+00	3.000E+00	1.000E+01	3.000E+01	1.000E+02	3.000E+02	1.000E+03
ÄÄÄÄÄÄ	ÄÄÄÄÄÄÄ	ÄÄÄÄÄÄÄÄÄ	ÄÄÄÄÄÄÄÄÄ	ÄÄÄÄÄÄÄÄÄ	ÄÄÄÄÄÄÄÄÄ	ÄÄÄÄÄÄÄÄÄ	ÄÄÄÄÄÄÄÄÄ	ÄÄÄÄÄÄÄÄÄ	ÄÄÄÄÄÄÄÄÄ	ÄÄÄÄÄÄÄÄÄ
-238	U-238	3.039E-11	4.224E-10	4.041E-10	3.699E-10	2.713E-10	1.120E-10	5.055E-12	7.241E-16	2.547E-29
-238	äS(j):		2.977E-08	2.848E-08	2.607E-08	1.912E-08	7.891E-09	3.563E-10	5.103E-14	1.795E-27
-238	U-238	3.359E-07	4.669E-06	4.467E-06	4.089E-06	3.000E-06	1.238E-06	5.588E-08	8.005E-12	2.815E-25
-238	U-238	4.434E-13	6.164E-12	5.897E-12	5.397E-12	3.960E-12	1.634E-12	7.377E-14	1.057E-17	3.716E-31
-238	äS(j):		4.669E-06	4.467E-06	4.089E-06	3.000E-06	1.238E-06	5.588E-08	8.005E-12	2.815E-25
-238	U-238	6.383E-15	8.872E-14	8.488E-14	7.769E-14	5.699E-14	2.352E-14	1.062E-15	1.521E-19	5.349E-33
-238	U-238	3.196E-07	4.443E-06	4.250E-06	3.890E-06	2.854E-06	1.178E-06	5.317E-08	7.616E-12	2.679E-25
-238	äS(j):		4.443E-06	4.250E-06	3.890E-06	2.854E-06	1.178E-06	5.317E-08	7.616E-12	2.679E-25
-238	U-238	4.219E-13	5.864E-12	5.610E-12	5.135E-12	3.767E-12	1.555E-12	7.018E-14	1.005E-17	3.536E-31
-238	U-238	6.073E-15	8.441E-14	8.076E-14	7.392E-14	5.422E-14	2.238E-14	1.010E-15	1.447E-19	5.089E-33
-238	äS(j):		5.949E-12	5.691E-12	5.209E-12	3.821E-12	1.577E-12	7.119E-14	1.020E-17	3.587E-31
-238	U-238	6.713E-11	9.331E-10	8.927E-10	8.171E-10	5.994E-10	2.474E-10	1.117E-11	1.600E-15	5.626E-29
-238	U-238	8.862E-17	1.232E-15	1.178E-15	1.079E-15	7.913E-16	3.265E-16	1.474E-17	2.112E-21	7.427E-35
-238	äS(j):		9.331E-10	8.927E-10	8.171E-10	5.994E-10	2.474E-10	1.117E-11	1.600E-15	5.626E-29
-238	U-238	1.276E-18	1.773E-17	1.696E-17	1.553E-17	1.139E-17	4.700E-18	2.122E-19	3.039E-23	1.069E-36
-238	U-238	3.200E-10	4.448E-09	4.255E-09	3.895E-09	2.857E-09	1.179E-09	5.323E-11	7.625E-15	2.682E-28
-238	äS(j):		4.448E-09	4.255E-09	3.895E-09	2.857E-09	1.179E-09	5.323E-11	7.625E-15	2.682E-28
-238	U-238	4.224E-16	5.871E-15	5.617E-15	5.141E-15	3.772E-15	1.556E-15	7.027E-17	1.007E-20	3.540E-34
-238	U-238	6.080E-18	8.451E-17	8.085E-17	7.400E-17	5.429E-17	2.240E-17	1.011E-18	1.449E-22	5.095E-36
-238	äS(j):		5.956E-15	5.698E-15	5.215E-15	3.826E-15	1.579E-15	7.128E-17	1.021E-20	3.591E-34
-238	U-238	9.980E-01	1.387E+01	1.327E+01	1.215E+01	8.911E+00	3.677E+00	1.660E-01	2.378E-05	8.364E-19
-238	U-238	1.317E-06	1.831E-05	1.752E-05	1.603E-05	1.176E-05	4.854E-06	2.191E-07	3.139E-11	1.104E-24
-238	äS(j):		1.387E+01	1.327E+01	1.215E+01	8.911E+00	3.677E+00	1.660E-01	2.378E-05	8.364E-19
-238	U-238	1.896E-08	2.636E-07	2.522E-07	2.308E-07	1.693E-07	6.987E-08	3.154E-09	4.518E-13	1.589E-26
-238	U-238	2.096E-04	2.914E-03	2.788E-03	2.551E-03	1.872E-03	7.724E-04	3.487E-05	4.995E-09	1.757E-22
-238	äS(j):		2.914E-03	2.788E-03	2.552E-03	1.872E-03	7.725E-04	3.488E-05	4.995E-09	1.757E-22
-238	U-238	2.767E-10	3.846E-09	3.680E-09	3.368E-09	2.471E-09	1.020E-09	4.603E-11	6.593E-15	2.319E-28
-238	U-238	3.983E-12	5.536E-11	5.296E-11	4.848E-11	3.556E-11	1.468E-11	6.626E-13	9.490E-17	3.338E-30
-238	äS(j):		3.902E-09	3.733E-09	3.416E-09	2.506E-09	1.034E-09	4.669E-11	6.688E-15	2.352E-28
-238	U-238	1.994E-04	2.772E-03	2.652E-03	2.428E-03	1.781E-03	7.349E-04	3.318E-05	4.752E-09	1.671E-22
-238	U-238	2.633E-10	3.659E-09	3.501E-09	3.204E-09	2.351E-09	9.701E-10	4.379E-11	6.273E-15	2.206E-28
-238	äS(j):		2.772E-03	2.652E-03	2.428E-03	1.781E-03	7.349E-04	3.318E-05	4.752E-09	1.671E-22
-238	U-238	3.789E-12	5.267E-11	5.039E-11	4.612E-11	3.384E-11	1.396E-11	6.304E-13	9.029E-17	3.176E-30
-238	U-238	4.189E-08	5.823E-07	5.571E-07	5.099E-07	3.741E-07	1.544E-07	6.969E-09	9.982E-13	3.511E-26
-238	äS(j):		5.823E-07	5.571E-07	5.099E-07	3.741E-07	1.544E-07	6.969E-09	9.983E-13	3.511E-26
-238	U-238	5.530E-14	7.686E-13	7.353E-13	6.731E-13	4.938E-13	2.038E-13	9.199E-15	1.318E-18	4.634E-32
-238	U-238	7.959E-16	1.106E-14	1.058E-14	9.688E-15	7.107E-15	2.933E-15	1.324E-16	1.897E-20	6.670E-34
-238	äS(j):		7.797E-13	7.459E-13	6.827E-13	5.009E-13	2.067E-13	9.331E-15	1.337E-18	4.701E-32

ummary : GKP Maintenance Worker Inhalation
ile : C:\USERS\CLAUDE\DOCUMENTS\0 GKP DOSE\RESRAD CW\GKP PARK RANGER - INHALATION.RAD

Individual Nuclide Soil Concentration
Parent Nuclide and Branch Fraction Indicated

uclide (j)	Parent (i)	THF(i)	S(j,t), pCi/g t= 0.000E+00	1.000E+00	3.000E+00	1.000E+01	3.000E+01	1.000E+02	3.000E+02	1.000E+03
ÄÄÄÄÄÄ	ÄÄÄÄÄÄÄ	ÄÄÄÄÄÄÄÄÄ	ÄÄÄÄÄÄÄÄÄ	ÄÄÄÄÄÄÄÄÄ	ÄÄÄÄÄÄÄÄÄ	ÄÄÄÄÄÄÄÄÄ	ÄÄÄÄÄÄÄÄÄ	ÄÄÄÄÄÄÄÄÄ	ÄÄÄÄÄÄÄÄÄ	ÄÄÄÄÄÄÄÄÄ
-238	U-238	1.997E-07	2.776E-06	2.655E-06	2.430E-06	1.783E-06	7.358E-07	3.322E-08	4.758E-12	1.673E-25
-238	U-238	2.636E-13	3.664E-12	3.505E-12	3.208E-12	2.354E-12	9.712E-13	4.385E-14	6.281E-18	2.209E-31
-238	äS(j):		2.776E-06	2.655E-06	2.430E-06	1.783E-06	7.358E-07	3.322E-08	4.758E-12	1.673E-25
-238	U-238	3.794E-15	5.274E-14	5.045E-14	4.618E-14	3.388E-14	1.398E-14	6.311E-16	9.040E-20	3.180E-33
íííííí	ííííííí	ííííííííí	ííííííííí	ííííííííí	ííííííííí	ííííííííí	ííííííííí	ííííííííí	ííííííííí	ííííííííí

HF(i) is the thread fraction of the parent nuclide.

ESCALC.EXE execution time = 40.81 seconds

ummary : GKP Recreational Visitor - External
ile : C:\USERS\CLAUDE\DOCUMENTS\0 GKP DOSE\RESRAD CW\GKP RECREATIONAL VISITOR- EXTERNAL R1.RAD

Table of Contents

Part I: Mixture Sums and Single Radionuclide Guidelines

ummary : GKP Recreational Visitor - External
ile : C:\USERS\CLAUDE\DOCUMENTS\0 GKP DOSE\RESRAD CW\GKP RECREATIONAL VISITOR- EXTERNAL R1.RAD

Dose Conversion Factor (and Related) Parameter Summary
Dose Library: FGR 11

enu	Parameter	Current Value#	Base Case*	Parameter Name
-1	DCF's for external ground radiation, (mrem/yr)/(pCi/g)			
-1	Ac-227 (Source: FGR 12)	4.951E-04	4.951E-04	DCF1(1)
-1	Ac-228 (Source: FGR 12)	5.978E+00	5.978E+00	DCF1(2)
-1	At-218 (Source: FGR 12)	5.847E-03	5.847E-03	DCF1(3)
-1	At-219 (Source: no data)	0.000E+00	-2.000E+00	DCF1(4)
-1	Bi-210 (Source: FGR 12)	3.606E-03	3.606E-03	DCF1(5)
-1	Bi-211 (Source: FGR 12)	2.559E-01	2.559E-01	DCF1(6)
-1	Bi-212 (Source: FGR 12)	1.171E+00	1.171E+00	DCF1(7)
-1	Bi-214 (Source: FGR 12)	9.808E+00	9.808E+00	DCF1(8)
-1	Bi-215 (Source: no data)	0.000E+00	-2.000E+00	DCF1(9)
-1	Fr-223 (Source: FGR 12)	1.980E-01	1.980E-01	DCF1(10)
-1	Hg-206 (Source: no data)	0.000E+00	-2.000E+00	DCF1(11)
-1	Pa-231 (Source: FGR 12)	1.906E-01	1.906E-01	DCF1(12)
-1	Pa-234 (Source: FGR 12)	1.155E+01	1.155E+01	DCF1(13)
-1	Pa-234m (Source: FGR 12)	8.967E-02	8.967E-02	DCF1(14)
-1	Pb-210 (Source: FGR 12)	2.447E-03	2.447E-03	DCF1(15)
-1	Pb-211 (Source: FGR 12)	3.064E-01	3.064E-01	DCF1(16)
-1	Pb-212 (Source: FGR 12)	7.043E-01	7.043E-01	DCF1(17)
-1	Pb-214 (Source: FGR 12)	1.341E+00	1.341E+00	DCF1(18)
-1	Po-210 (Source: FGR 12)	5.231E-05	5.231E-05	DCF1(19)
-1	Po-211 (Source: FGR 12)	4.764E-02	4.764E-02	DCF1(20)
-1	Po-212 (Source: FGR 12)	0.000E+00	0.000E+00	DCF1(21)
-1	Po-214 (Source: FGR 12)	5.138E-04	5.138E-04	DCF1(22)
-1	Po-215 (Source: FGR 12)	1.016E-03	1.016E-03	DCF1(23)
-1	Po-216 (Source: FGR 12)	1.042E-04	1.042E-04	DCF1(24)
-1	Po-218 (Source: FGR 12)	5.642E-05	5.642E-05	DCF1(25)
-1	Ra-223 (Source: FGR 12)	6.034E-01	6.034E-01	DCF1(26)
-1	Ra-224 (Source: FGR 12)	5.119E-02	5.119E-02	DCF1(27)
-1	Ra-226 (Source: FGR 12)	3.176E-02	3.176E-02	DCF1(28)
-1	Ra-228 (Source: FGR 12)	0.000E+00	0.000E+00	DCF1(29)
-1	Rn-218 (Source: FGR 12)	4.540E-03	4.540E-03	DCF1(30)
-1	Rn-219 (Source: FGR 12)	3.083E-01	3.083E-01	DCF1(31)
-1	Rn-220 (Source: FGR 12)	2.298E-03	2.298E-03	DCF1(32)
-1	Rn-222 (Source: FGR 12)	2.354E-03	2.354E-03	DCF1(33)
-1	Th-227 (Source: FGR 12)	5.212E-01	5.212E-01	DCF1(34)
-1	Th-228 (Source: FGR 12)	7.940E-03	7.940E-03	DCF1(35)
-1	Th-230 (Source: FGR 12)	1.209E-03	1.209E-03	DCF1(36)
-1	Th-231 (Source: FGR 12)	3.643E-02	3.643E-02	DCF1(37)
-1	Th-232 (Source: FGR 12)	5.212E-04	5.212E-04	DCF1(38)
-1	Th-234 (Source: FGR 12)	2.410E-02	2.410E-02	DCF1(39)
-1	Tl-206 (Source: FGR 12)	7.697E-03	7.697E-03	DCF1(40)
-1	Tl-207 (Source: FGR 12)	1.980E-02	1.980E-02	DCF1(41)
-1	Tl-208 (Source: FGR 12)	2.298E+01	2.298E+01	DCF1(42)
-1	Tl-210 (Source: no data)	0.000E+00	-2.000E+00	DCF1(43)
-1	U-234 (Source: FGR 12)	4.017E-04	4.017E-04	DCF1(44)
-1	U-235 (Source: FGR 12)	7.211E-01	7.211E-01	DCF1(45)
-1	U-238 (Source: FGR 12)	1.031E-04	1.031E-04	DCF1(46)
-1	Dose conversion factors for inhalation, mrem/pCi:			
-1	Ac-227+D	6.724E+00	6.700E+00	DCF2(1)

Dose Conversion Factor (and Related) Parameter Summary (continued)
Dose Library: FGR 11

enu	Parameter	Current Value#	Base Case*	Parameter Name
-1	Ac-227+D1	6.724E+00	6.700E+00	DCF2(2)
-1	Ac-227+D2	6.708E+00	6.700E+00	DCF2(3)
-1	Ac-227+D3	6.708E+00	6.700E+00	DCF2(4)
-1	Ac-227+D4	6.700E+00	6.700E+00	DCF2(5)
-1	Ac-227+D5	6.700E+00	6.700E+00	DCF2(6)
-1	Pa-231	1.280E+00	1.280E+00	DCF2(7)
-1	Pb-210+D	2.320E-02	1.360E-02	DCF2(13)
-1	Pb-210+D1	1.380E-02	1.360E-02	DCF2(14)
-1	Pb-210+D2	1.360E-02	1.360E-02	DCF2(15)
-1	Ra-226+D	8.594E-03	8.580E-03	DCF2(16)
-1	Ra-226+D1	8.594E-03	8.580E-03	DCF2(19)
-1	Ra-226+D2	8.587E-03	8.580E-03	DCF2(22)
-1	Ra-226+D3	8.587E-03	8.580E-03	DCF2(25)
-1	Ra-226+D4	8.580E-03	8.580E-03	DCF2(28)
-1	Ra-228+D	5.078E-03	4.770E-03	DCF2(31)
-1	Th-228+D	3.454E-01	3.420E-01	DCF2(32)
-1	Th-230	3.260E-01	3.260E-01	DCF2(33)
-1	Th-232	1.640E+00	1.640E+00	DCF2(48)
-1	U-234	1.320E-01	1.320E-01	DCF2(49)
-1	U-235+D	1.230E-01	1.230E-01	DCF2(64)
-1	U-238	1.180E-01	1.180E-01	DCF2(70)
-1	U-238+D	1.180E-01	1.180E-01	DCF2(71)
-1	U-238+D1	1.180E-01	1.180E-01	DCF2(86)
-1	Dose conversion factors for ingestion, mrem/pCi:			
-1	Ac-227+D	1.480E-02	1.410E-02	DCF3(1)
-1	Ac-227+D1	1.480E-02	1.410E-02	DCF3(2)
-1	Ac-227+D2	1.477E-02	1.410E-02	DCF3(3)
-1	Ac-227+D3	1.477E-02	1.410E-02	DCF3(4)
-1	Ac-227+D4	1.411E-02	1.410E-02	DCF3(5)
-1	Ac-227+D5	1.411E-02	1.410E-02	DCF3(6)
-1	Pa-231	1.060E-02	1.060E-02	DCF3(7)
-1	Pb-210+D	7.276E-03	5.370E-03	DCF3(13)
-1	Pb-210+D1	5.376E-03	5.370E-03	DCF3(14)
-1	Pb-210+D2	5.370E-03	5.370E-03	DCF3(15)
-1	Ra-226+D	1.321E-03	1.320E-03	DCF3(16)
-1	Ra-226+D1	1.321E-03	1.320E-03	DCF3(19)
-1	Ra-226+D2	1.320E-03	1.320E-03	DCF3(22)
-1	Ra-226+D3	1.320E-03	1.320E-03	DCF3(25)
-1	Ra-226+D4	1.320E-03	1.320E-03	DCF3(28)
-1	Ra-228+D	1.442E-03	1.440E-03	DCF3(31)
-1	Th-228+D	8.086E-04	3.960E-04	DCF3(32)
-1	Th-230	5.480E-04	5.480E-04	DCF3(33)
-1	Th-232	2.730E-03	2.730E-03	DCF3(48)
-1	U-234	2.830E-04	2.830E-04	DCF3(49)
-1	U-235+D	2.673E-04	2.660E-04	DCF3(64)
-1	U-238	2.550E-04	2.550E-04	DCF3(70)
-1	U-238+D	2.709E-04	2.550E-04	DCF3(71)
-1	U-238+D1	2.687E-04	2.550E-04	DCF3(86)

Dose Conversion Factor (and Related) Parameter Summary (continued)
Dose Library: FGR 11

enu	Parameter	Current Value#	Base Case*	Parameter Name
-34	Food transfer factors:			
-34	Ac-227+D , plant/soil concentration ratio, dimensionless	2.500E-03	2.500E-03	RTF(1,1)
-34	Ac-227+D , beef/livestock-intake ratio, (pCi/kg)/(pCi/d)	2.000E-05	2.000E-05	RTF(1,2)
-34	Ac-227+D , milk/livestock-intake ratio, (pCi/L)/(pCi/d)	2.000E-05	2.000E-05	RTF(1,3)
-34				
-34	Ac-227+D1 , plant/soil concentration ratio, dimensionless	2.500E-03	2.500E-03	RTF(2,1)
-34	Ac-227+D1 , beef/livestock-intake ratio, (pCi/kg)/(pCi/d)	2.000E-05	2.000E-05	RTF(2,2)
-34	Ac-227+D1 , milk/livestock-intake ratio, (pCi/L)/(pCi/d)	2.000E-05	2.000E-05	RTF(2,3)
-34				
-34	Ac-227+D2 , plant/soil concentration ratio, dimensionless	2.500E-03	2.500E-03	RTF(3,1)
-34	Ac-227+D2 , beef/livestock-intake ratio, (pCi/kg)/(pCi/d)	2.000E-05	2.000E-05	RTF(3,2)
-34	Ac-227+D2 , milk/livestock-intake ratio, (pCi/L)/(pCi/d)	2.000E-05	2.000E-05	RTF(3,3)
-34				
-34	Ac-227+D3 , plant/soil concentration ratio, dimensionless	2.500E-03	2.500E-03	RTF(4,1)
-34	Ac-227+D3 , beef/livestock-intake ratio, (pCi/kg)/(pCi/d)	2.000E-05	2.000E-05	RTF(4,2)
-34	Ac-227+D3 , milk/livestock-intake ratio, (pCi/L)/(pCi/d)	2.000E-05	2.000E-05	RTF(4,3)
-34				
-34	Ac-227+D4 , plant/soil concentration ratio, dimensionless	2.500E-03	2.500E-03	RTF(5,1)
-34	Ac-227+D4 , beef/livestock-intake ratio, (pCi/kg)/(pCi/d)	2.000E-05	2.000E-05	RTF(5,2)
-34	Ac-227+D4 , milk/livestock-intake ratio, (pCi/L)/(pCi/d)	2.000E-05	2.000E-05	RTF(5,3)
-34				
-34	Ac-227+D5 , plant/soil concentration ratio, dimensionless	2.500E-03	2.500E-03	RTF(6,1)
-34	Ac-227+D5 , beef/livestock-intake ratio, (pCi/kg)/(pCi/d)	2.000E-05	2.000E-05	RTF(6,2)
-34	Ac-227+D5 , milk/livestock-intake ratio, (pCi/L)/(pCi/d)	2.000E-05	2.000E-05	RTF(6,3)
-34				
-34	Pa-231 , plant/soil concentration ratio, dimensionless	1.000E-02	1.000E-02	RTF(7,1)
-34	Pa-231 , beef/livestock-intake ratio, (pCi/kg)/(pCi/d)	5.000E-03	5.000E-03	RTF(7,2)
-34	Pa-231 , milk/livestock-intake ratio, (pCi/L)/(pCi/d)	5.000E-06	5.000E-06	RTF(7,3)
-34				
-34	Pb-210+D , plant/soil concentration ratio, dimensionless	1.000E-02	1.000E-02	RTF(13,1)
-34	Pb-210+D , beef/livestock-intake ratio, (pCi/kg)/(pCi/d)	8.000E-04	8.000E-04	RTF(13,2)
-34	Pb-210+D , milk/livestock-intake ratio, (pCi/L)/(pCi/d)	3.000E-04	3.000E-04	RTF(13,3)
-34				
-34	Pb-210+D1 , plant/soil concentration ratio, dimensionless	1.000E-02	1.000E-02	RTF(14,1)
-34	Pb-210+D1 , beef/livestock-intake ratio, (pCi/kg)/(pCi/d)	8.000E-04	8.000E-04	RTF(14,2)
-34	Pb-210+D1 , milk/livestock-intake ratio, (pCi/L)/(pCi/d)	3.000E-04	3.000E-04	RTF(14,3)
-34				
-34	Pb-210+D2 , plant/soil concentration ratio, dimensionless	1.000E-02	1.000E-02	RTF(15,1)
-34	Pb-210+D2 , beef/livestock-intake ratio, (pCi/kg)/(pCi/d)	8.000E-04	8.000E-04	RTF(15,2)
-34	Pb-210+D2 , milk/livestock-intake ratio, (pCi/L)/(pCi/d)	3.000E-04	3.000E-04	RTF(15,3)
-34				
-34	Ra-226+D , plant/soil concentration ratio, dimensionless	4.000E-02	4.000E-02	RTF(16,1)
-34	Ra-226+D , beef/livestock-intake ratio, (pCi/kg)/(pCi/d)	1.000E-03	1.000E-03	RTF(16,2)
-34	Ra-226+D , milk/livestock-intake ratio, (pCi/L)/(pCi/d)	1.000E-03	1.000E-03	RTF(16,3)
-34				
-34	Ra-226+D1 , plant/soil concentration ratio, dimensionless	4.000E-02	4.000E-02	RTF(19,1)
-34	Ra-226+D1 , beef/livestock-intake ratio, (pCi/kg)/(pCi/d)	1.000E-03	1.000E-03	RTF(19,2)
-34	Ra-226+D1 , milk/livestock-intake ratio, (pCi/L)/(pCi/d)	1.000E-03	1.000E-03	RTF(19,3)
-34				

Dose Conversion Factor (and Related) Parameter Summary (continued)

Dose Library: FGR 11

enu	Parameter	Current Value#	Base Case*	Parameter Name
-34	Ra-226+D2 , plant/soil concentration ratio, dimensionless	4.000E-02	4.000E-02	RTF(22,1)
-34	Ra-226+D2 , beef/livestock-intake ratio, (pCi/kg)/(pCi/d)	1.000E-03	1.000E-03	RTF(22,2)
-34	Ra-226+D2 , milk/livestock-intake ratio, (pCi/L)/(pCi/d)	1.000E-03	1.000E-03	RTF(22,3)
-34				
-34	Ra-226+D3 , plant/soil concentration ratio, dimensionless	4.000E-02	4.000E-02	RTF(25,1)
-34	Ra-226+D3 , beef/livestock-intake ratio, (pCi/kg)/(pCi/d)	1.000E-03	1.000E-03	RTF(25,2)
-34	Ra-226+D3 , milk/livestock-intake ratio, (pCi/L)/(pCi/d)	1.000E-03	1.000E-03	RTF(25,3)
-34				
-34	Ra-226+D4 , plant/soil concentration ratio, dimensionless	4.000E-02	4.000E-02	RTF(28,1)
-34	Ra-226+D4 , beef/livestock-intake ratio, (pCi/kg)/(pCi/d)	1.000E-03	1.000E-03	RTF(28,2)
-34	Ra-226+D4 , milk/livestock-intake ratio, (pCi/L)/(pCi/d)	1.000E-03	1.000E-03	RTF(28,3)
-34				
-34	Ra-228+D , plant/soil concentration ratio, dimensionless	4.000E-02	4.000E-02	RTF(31,1)
-34	Ra-228+D , beef/livestock-intake ratio, (pCi/kg)/(pCi/d)	1.000E-03	1.000E-03	RTF(31,2)
-34	Ra-228+D , milk/livestock-intake ratio, (pCi/L)/(pCi/d)	1.000E-03	1.000E-03	RTF(31,3)
-34				
-34	Th-228+D , plant/soil concentration ratio, dimensionless	1.000E-03	1.000E-03	RTF(32,1)
-34	Th-228+D , beef/livestock-intake ratio, (pCi/kg)/(pCi/d)	1.000E-04	1.000E-04	RTF(32,2)
-34	Th-228+D , milk/livestock-intake ratio, (pCi/L)/(pCi/d)	5.000E-06	5.000E-06	RTF(32,3)
-34				
-34	Th-230 , plant/soil concentration ratio, dimensionless	1.000E-03	1.000E-03	RTF(33,1)
-34	Th-230 , beef/livestock-intake ratio, (pCi/kg)/(pCi/d)	1.000E-04	1.000E-04	RTF(33,2)
-34	Th-230 , milk/livestock-intake ratio, (pCi/L)/(pCi/d)	5.000E-06	5.000E-06	RTF(33,3)
-34				
-34	Th-232 , plant/soil concentration ratio, dimensionless	1.000E-03	1.000E-03	RTF(48,1)
-34	Th-232 , beef/livestock-intake ratio, (pCi/kg)/(pCi/d)	1.000E-04	1.000E-04	RTF(48,2)
-34	Th-232 , milk/livestock-intake ratio, (pCi/L)/(pCi/d)	5.000E-06	5.000E-06	RTF(48,3)
-34				
-34	U-234 , plant/soil concentration ratio, dimensionless	2.500E-03	2.500E-03	RTF(49,1)
-34	U-234 , beef/livestock-intake ratio, (pCi/kg)/(pCi/d)	3.400E-04	3.400E-04	RTF(49,2)
-34	U-234 , milk/livestock-intake ratio, (pCi/L)/(pCi/d)	6.000E-04	6.000E-04	RTF(49,3)
-34				
-34	U-235+D , plant/soil concentration ratio, dimensionless	2.500E-03	2.500E-03	RTF(64,1)
-34	U-235+D , beef/livestock-intake ratio, (pCi/kg)/(pCi/d)	3.400E-04	3.400E-04	RTF(64,2)
-34	U-235+D , milk/livestock-intake ratio, (pCi/L)/(pCi/d)	6.000E-04	6.000E-04	RTF(64,3)
-34				
-34	U-238 , plant/soil concentration ratio, dimensionless	2.500E-03	2.500E-03	RTF(70,1)
-34	U-238 , beef/livestock-intake ratio, (pCi/kg)/(pCi/d)	3.400E-04	3.400E-04	RTF(70,2)
-34	U-238 , milk/livestock-intake ratio, (pCi/L)/(pCi/d)	6.000E-04	6.000E-04	RTF(70,3)
-34				
-34	U-238+D , plant/soil concentration ratio, dimensionless	2.500E-03	2.500E-03	RTF(71,1)
-34	U-238+D , beef/livestock-intake ratio, (pCi/kg)/(pCi/d)	3.400E-04	3.400E-04	RTF(71,2)
-34	U-238+D , milk/livestock-intake ratio, (pCi/L)/(pCi/d)	6.000E-04	6.000E-04	RTF(71,3)
-34				
-34	U-238+D1 , plant/soil concentration ratio, dimensionless	2.500E-03	2.500E-03	RTF(86,1)
-34	U-238+D1 , beef/livestock-intake ratio, (pCi/kg)/(pCi/d)	3.400E-04	3.400E-04	RTF(86,2)
-34	U-238+D1 , milk/livestock-intake ratio, (pCi/L)/(pCi/d)	6.000E-04	6.000E-04	RTF(86,3)
-34				

Dose Conversion Factor (and Related) Parameter Summary (continued)
Dose Library: FGR 11

enu	Parameter	Current Value#	Base Case*	Parameter Name
-5	Bioaccumulation factors, fresh water, L/kg:			
-5	Ac-227+D , fish	1.500E+01	1.500E+01	BIOFAC(1,1)
-5	Ac-227+D , crustacea and mollusks	1.000E+03	1.000E+03	BIOFAC(1,2)
-5				
-5	Ac-227+D1 , fish	1.500E+01	1.500E+01	BIOFAC(2,1)
-5	Ac-227+D1 , crustacea and mollusks	1.000E+03	1.000E+03	BIOFAC(2,2)
-5				
-5	Ac-227+D2 , fish	1.500E+01	1.500E+01	BIOFAC(3,1)
-5	Ac-227+D2 , crustacea and mollusks	1.000E+03	1.000E+03	BIOFAC(3,2)
-5				
-5	Ac-227+D3 , fish	1.500E+01	1.500E+01	BIOFAC(4,1)
-5	Ac-227+D3 , crustacea and mollusks	1.000E+03	1.000E+03	BIOFAC(4,2)
-5				
-5	Ac-227+D4 , fish	1.500E+01	1.500E+01	BIOFAC(5,1)
-5	Ac-227+D4 , crustacea and mollusks	1.000E+03	1.000E+03	BIOFAC(5,2)
-5				
-5	Ac-227+D5 , fish	1.500E+01	1.500E+01	BIOFAC(6,1)
-5	Ac-227+D5 , crustacea and mollusks	1.000E+03	1.000E+03	BIOFAC(6,2)
-5				
-5	Pa-231 , fish	1.000E+01	1.000E+01	BIOFAC(7,1)
-5	Pa-231 , crustacea and mollusks	1.100E+02	1.100E+02	BIOFAC(7,2)
-5				
-5	Pb-210+D , fish	3.000E+02	3.000E+02	BIOFAC(13,1)
-5	Pb-210+D , crustacea and mollusks	1.000E+02	1.000E+02	BIOFAC(13,2)
-5				
-5	Pb-210+D1 , fish	3.000E+02	3.000E+02	BIOFAC(14,1)
-5	Pb-210+D1 , crustacea and mollusks	1.000E+02	1.000E+02	BIOFAC(14,2)
-5				
-5	Pb-210+D2 , fish	3.000E+02	3.000E+02	BIOFAC(15,1)
-5	Pb-210+D2 , crustacea and mollusks	1.000E+02	1.000E+02	BIOFAC(15,2)
-5				
-5	Ra-226+D , fish	5.000E+01	5.000E+01	BIOFAC(16,1)
-5	Ra-226+D , crustacea and mollusks	2.500E+02	2.500E+02	BIOFAC(16,2)
-5				
-5	Ra-226+D1 , fish	5.000E+01	5.000E+01	BIOFAC(19,1)
-5	Ra-226+D1 , crustacea and mollusks	2.500E+02	2.500E+02	BIOFAC(19,2)
-5				
-5	Ra-226+D2 , fish	5.000E+01	5.000E+01	BIOFAC(22,1)
-5	Ra-226+D2 , crustacea and mollusks	2.500E+02	2.500E+02	BIOFAC(22,2)
-5				
-5	Ra-226+D3 , fish	5.000E+01	5.000E+01	BIOFAC(25,1)
-5	Ra-226+D3 , crustacea and mollusks	2.500E+02	2.500E+02	BIOFAC(25,2)
-5				
-5	Ra-226+D4 , fish	5.000E+01	5.000E+01	BIOFAC(28,1)
-5	Ra-226+D4 , crustacea and mollusks	2.500E+02	2.500E+02	BIOFAC(28,2)
-5				
-5	Ra-228+D , fish	5.000E+01	5.000E+01	BIOFAC(31,1)
-5	Ra-228+D , crustacea and mollusks	2.500E+02	2.500E+02	BIOFAC(31,2)
-5				

Dose Conversion Factor (and Related) Parameter Summary (continued)

Dose Library: FGR 11

enu	Parameter	Current Value#	Base Case*	Parameter Name
-5	Th-228+D , fish	1.000E+02	1.000E+02	BIOFAC(32,1)
-5	Th-228+D , crustacea and mollusks	5.000E+02	5.000E+02	BIOFAC(32,2)
-5				
-5	Th-230 , fish	1.000E+02	1.000E+02	BIOFAC(33,1)
-5	Th-230 , crustacea and mollusks	5.000E+02	5.000E+02	BIOFAC(33,2)
-5				
-5	Th-232 , fish	1.000E+02	1.000E+02	BIOFAC(48,1)
-5	Th-232 , crustacea and mollusks	5.000E+02	5.000E+02	BIOFAC(48,2)
-5				
-5	U-234 , fish	1.000E+01	1.000E+01	BIOFAC(49,1)
-5	U-234 , crustacea and mollusks	6.000E+01	6.000E+01	BIOFAC(49,2)
-5				
-5	U-235+D , fish	1.000E+01	1.000E+01	BIOFAC(64,1)
-5	U-235+D , crustacea and mollusks	6.000E+01	6.000E+01	BIOFAC(64,2)
-5				
-5	U-238 , fish	1.000E+01	1.000E+01	BIOFAC(70,1)
-5	U-238 , crustacea and mollusks	6.000E+01	6.000E+01	BIOFAC(70,2)
-5				
-5	U-238+D , fish	1.000E+01	1.000E+01	BIOFAC(71,1)
-5	U-238+D , crustacea and mollusks	6.000E+01	6.000E+01	BIOFAC(71,2)
-5				
-5	U-238+D1 , fish	1.000E+01	1.000E+01	BIOFAC(86,1)
-5	U-238+D1 , crustacea and mollusks	6.000E+01	6.000E+01	BIOFAC(86,2)
-5				

For DCF1(xxx) only, factors are for infinite depth & area. See ETFG table in Ground Pathway of Detailed Report.
Base Case means Default.Lib w/o Associate Nuclide contributions.

ummary : GKP Recreational Visitor - External
ile : C:\USERS\CLAUDE\DOCUMENTS\0 GKP DOSE\RESRAD CW\GKP RECREATIONAL VISITOR- EXTERNAL R1.RAD

Site-Specific Parameter Summary

enu	Parameter	User Input	Default	Used by RESRAD (If different from user input)	Parameter Name
011	Area of contaminated zone (m**2)	2.000E+02	1.000E+04	---	AREA
011	Thickness of contaminated zone (m)	1.500E-01	2.000E+00	---	THICK0
011	Fraction of contamination that is submerged	0.000E+00	0.000E+00	---	SUBMFRACT
011	Length parallel to aquifer flow (m)	1.000E+02	1.000E+02	---	LCZPAQ
011	Basic radiation dose limit (mrem/yr)	2.500E+01	3.000E+01	---	BRDL
011	Time since placement of material (yr)	0.000E+00	0.000E+00	---	TI
011	Times for calculations (yr)	1.000E+00	1.000E+00	---	T(2)
011	Times for calculations (yr)	3.000E+00	3.000E+00	---	T(3)
011	Times for calculations (yr)	1.000E+01	1.000E+01	---	T(4)
011	Times for calculations (yr)	3.000E+01	3.000E+01	---	T(5)
011	Times for calculations (yr)	1.000E+02	1.000E+02	---	T(6)
011	Times for calculations (yr)	3.000E+02	3.000E+02	---	T(7)
011	Times for calculations (yr)	1.000E+03	1.000E+03	---	T(8)
011	Times for calculations (yr)	not used	0.000E+00	---	T(9)
011	Times for calculations (yr)	not used	0.000E+00	---	T(10)
012	Initial principal radionuclide (pCi/g): Ra-226	3.650E+01	0.000E+00	---	S1(16)
012	Initial principal radionuclide (pCi/g): Th-232	2.400E+00	0.000E+00	---	S1(48)
012	Initial principal radionuclide (pCi/g): U-234	1.390E+01	0.000E+00	---	S1(49)
012	Initial principal radionuclide (pCi/g): U-235	8.400E-01	0.000E+00	---	S1(64)
012	Initial principal radionuclide (pCi/g): U-238	1.390E+01	0.000E+00	---	S1(70)
012	Concentration in groundwater (pCi/L): Ra-226	not used	0.000E+00	---	W1(16)
012	Concentration in groundwater (pCi/L): Th-232	not used	0.000E+00	---	W1(48)
012	Concentration in groundwater (pCi/L): U-234	not used	0.000E+00	---	W1(49)
012	Concentration in groundwater (pCi/L): U-235	not used	0.000E+00	---	W1(64)
012	Concentration in groundwater (pCi/L): U-238	not used	0.000E+00	---	W1(70)
013	Cover depth (m)	0.000E+00	0.000E+00	---	COVER0
013	Density of cover material (g/cm**3)	not used	1.500E+00	---	DENSCV
013	Cover depth erosion rate (m/yr)	not used	1.000E-03	---	VCV
013	Density of contaminated zone (g/cm**3)	1.500E+00	1.500E+00	---	DENSCZ
013	Contaminated zone erosion rate (m/yr)	1.000E-03	1.000E-03	---	VCZ
013	Contaminated zone total porosity	4.000E-01	4.000E-01	---	TPCZ
013	Contaminated zone field capacity	2.000E-01	2.000E-01	---	FCCZ
013	Contaminated zone hydraulic conductivity (m/yr)	1.000E+01	1.000E+01	---	HCCZ
013	Contaminated zone b parameter	5.300E+00	5.300E+00	---	BCZ
013	Average annual wind speed (m/sec)	2.000E+00	2.000E+00	---	WIND
013	Humidity in air (g/m**3)	not used	8.000E+00	---	HUMID
013	Evapotranspiration coefficient	5.000E-01	5.000E-01	---	EVAPTR
013	Precipitation (m/yr)	1.000E+00	1.000E+00	---	PRECIP
013	Irrigation (m/yr)	2.000E-01	2.000E-01	---	RI
013	Irrigation mode	overhead	overhead	---	IDITCH
013	Runoff coefficient	2.000E-01	2.000E-01	---	RUNOFF
013	Watershed area for nearby stream or pond (m**2)	1.000E+06	1.000E+06	---	WAREA
013	Accuracy for water/soil computations	1.000E-03	1.000E-03	---	EPS
014	Density of saturated zone (g/cm**3)	1.500E+00	1.500E+00	---	DENSAQ
014	Saturated zone total porosity	4.000E-01	4.000E-01	---	TPSZ
014	Saturated zone effective porosity	2.000E-01	2.000E-01	---	EPSZ
014	Saturated zone field capacity	2.000E-01	2.000E-01	---	FCSZ

Site-Specific Parameter Summary (continued)

enu	Parameter	User Input	Default	Used by RESRAD (If different from user input)	Parameter Name
014	Saturated zone hydraulic conductivity (m/yr)	1.000E+02	1.000E+02	---	HCSZ
014	Saturated zone hydraulic gradient	2.000E-02	2.000E-02	---	HGWT
014	Saturated zone b parameter	5.300E+00	5.300E+00	---	BSZ
014	Water table drop rate (m/yr)	1.000E-03	1.000E-03	---	VWT
014	Well pump intake depth (m below water table)	1.000E+01	1.000E+01	---	DWIBWT
014	Model: Nondispersion (ND) or Mass-Balance (MB)	ND	ND	---	MODEL
014	Well pumping rate (m**3/yr)	2.500E+02	2.500E+02	---	UW
015	Number of unsaturated zone strata	1	1	---	NS
015	Unsat. zone 1, thickness (m)	4.000E+00	4.000E+00	---	H(1)
015	Unsat. zone 1, soil density (g/cm**3)	1.500E+00	1.500E+00	---	DENSUZ(1)
015	Unsat. zone 1, total porosity	4.000E-01	4.000E-01	---	TPUZ(1)
015	Unsat. zone 1, effective porosity	2.000E-01	2.000E-01	---	EPUZ(1)
015	Unsat. zone 1, field capacity	2.000E-01	2.000E-01	---	FCUZ(1)
015	Unsat. zone 1, soil-specific b parameter	5.300E+00	5.300E+00	---	BUZ(1)
015	Unsat. zone 1, hydraulic conductivity (m/yr)	1.000E+01	1.000E+01	---	HCUZ(1)
016	Distribution coefficients for Ra-226				
016	Contaminated zone (cm**3/g)	7.000E+01	7.000E+01	---	DCNUCC(16)
016	Unsaturated zone 1 (cm**3/g)	7.000E+01	7.000E+01	---	DCNUCU(16,1)
016	Saturated zone (cm**3/g)	7.000E+01	7.000E+01	---	DCNUCS(16)
016	Leach rate (/yr)	0.000E+00	0.000E+00	3.165E-02	ALEACH(16)
016	Solubility constant	0.000E+00	0.000E+00	not used	SOLUBK(16)
016	Distribution coefficients for Th-232				
016	Contaminated zone (cm**3/g)	6.000E+04	6.000E+04	---	DCNUCC(48)
016	Unsaturated zone 1 (cm**3/g)	6.000E+04	6.000E+04	---	DCNUCU(48,1)
016	Saturated zone (cm**3/g)	6.000E+04	6.000E+04	---	DCNUCS(48)
016	Leach rate (/yr)	0.000E+00	0.000E+00	3.704E-05	ALEACH(48)
016	Solubility constant	0.000E+00	0.000E+00	not used	SOLUBK(48)
016	Distribution coefficients for U-234				
016	Contaminated zone (cm**3/g)	5.000E+01	5.000E+01	---	DCNUCC(49)
016	Unsaturated zone 1 (cm**3/g)	5.000E+01	5.000E+01	---	DCNUCU(49,1)
016	Saturated zone (cm**3/g)	5.000E+01	5.000E+01	---	DCNUCS(49)
016	Leach rate (/yr)	0.000E+00	0.000E+00	4.426E-02	ALEACH(49)
016	Solubility constant	0.000E+00	0.000E+00	not used	SOLUBK(49)
016	Distribution coefficients for U-235				
016	Contaminated zone (cm**3/g)	5.000E+01	5.000E+01	---	DCNUCC(64)
016	Unsaturated zone 1 (cm**3/g)	5.000E+01	5.000E+01	---	DCNUCU(64,1)
016	Saturated zone (cm**3/g)	5.000E+01	5.000E+01	---	DCNUCS(64)
016	Leach rate (/yr)	0.000E+00	0.000E+00	4.426E-02	ALEACH(64)
016	Solubility constant	0.000E+00	0.000E+00	not used	SOLUBK(64)
016	Distribution coefficients for U-238				
016	Contaminated zone (cm**3/g)	5.000E+01	5.000E+01	---	DCNUCC(70)
016	Unsaturated zone 1 (cm**3/g)	5.000E+01	5.000E+01	---	DCNUCU(70,1)
016	Saturated zone (cm**3/g)	5.000E+01	5.000E+01	---	DCNUCS(70)
016	Leach rate (/yr)	0.000E+00	0.000E+00	4.426E-02	ALEACH(70)
016	Solubility constant	0.000E+00	0.000E+00	not used	SOLUBK(70)

Site-Specific Parameter Summary (continued)

enu	Parameter	User Input	Default	Used by RESRAD (If different from user input)	Parameter Name
016	Distribution coefficients for daughter Ac-227				
016	Contaminated zone (cm**3/g)	2.000E+01	2.000E+01	---	DCNUCC(1)
016	Unsaturated zone 1 (cm**3/g)	2.000E+01	2.000E+01	---	DCNUCU(1,1)
016	Saturated zone (cm**3/g)	2.000E+01	2.000E+01	---	DCNUCS(1)
016	Leach rate (/yr)	0.000E+00	0.000E+00	1.099E-01	ALEACH(1)
016	Solubility constant	0.000E+00	0.000E+00	not used	SOLUBK(1)
016	Distribution coefficients for daughter Pa-231				
016	Contaminated zone (cm**3/g)	5.000E+01	5.000E+01	---	DCNUCC(7)
016	Unsaturated zone 1 (cm**3/g)	5.000E+01	5.000E+01	---	DCNUCU(7,1)
016	Saturated zone (cm**3/g)	5.000E+01	5.000E+01	---	DCNUCS(7)
016	Leach rate (/yr)	0.000E+00	0.000E+00	4.426E-02	ALEACH(7)
016	Solubility constant	0.000E+00	0.000E+00	not used	SOLUBK(7)
016	Distribution coefficients for daughter Pb-210				
016	Contaminated zone (cm**3/g)	1.000E+02	1.000E+02	---	DCNUCC(13)
016	Unsaturated zone 1 (cm**3/g)	1.000E+02	1.000E+02	---	DCNUCU(13,1)
016	Saturated zone (cm**3/g)	1.000E+02	1.000E+02	---	DCNUCS(13)
016	Leach rate (/yr)	0.000E+00	0.000E+00	2.217E-02	ALEACH(13)
016	Solubility constant	0.000E+00	0.000E+00	not used	SOLUBK(13)
016	Distribution coefficients for daughter Ra-228				
016	Contaminated zone (cm**3/g)	7.000E+01	7.000E+01	---	DCNUCC(31)
016	Unsaturated zone 1 (cm**3/g)	7.000E+01	7.000E+01	---	DCNUCU(31,1)
016	Saturated zone (cm**3/g)	7.000E+01	7.000E+01	---	DCNUCS(31)
016	Leach rate (/yr)	0.000E+00	0.000E+00	3.165E-02	ALEACH(31)
016	Solubility constant	0.000E+00	0.000E+00	not used	SOLUBK(31)
016	Distribution coefficients for daughter Th-228				
016	Contaminated zone (cm**3/g)	6.000E+04	6.000E+04	---	DCNUCC(32)
016	Unsaturated zone 1 (cm**3/g)	6.000E+04	6.000E+04	---	DCNUCU(32,1)
016	Saturated zone (cm**3/g)	6.000E+04	6.000E+04	---	DCNUCS(32)
016	Leach rate (/yr)	0.000E+00	0.000E+00	3.704E-05	ALEACH(32)
016	Solubility constant	0.000E+00	0.000E+00	not used	SOLUBK(32)
016	Distribution coefficients for daughter Th-230				
016	Contaminated zone (cm**3/g)	6.000E+04	6.000E+04	---	DCNUCC(33)
016	Unsaturated zone 1 (cm**3/g)	6.000E+04	6.000E+04	---	DCNUCU(33,1)
016	Saturated zone (cm**3/g)	6.000E+04	6.000E+04	---	DCNUCS(33)
016	Leach rate (/yr)	0.000E+00	0.000E+00	3.704E-05	ALEACH(33)
016	Solubility constant	0.000E+00	0.000E+00	not used	SOLUBK(33)
017	Inhalation rate (m**3/yr)	not used	8.400E+03	---	INHALR
017	Mass loading for inhalation (g/m**3)	not used	1.000E-04	---	MLINH
017	Exposure duration	3.000E+01	3.000E+01	---	ED
017	Shielding factor, inhalation	not used	4.000E-01	---	SHF3
017	Shielding factor, external gamma	7.000E-01	7.000E-01	---	SHF1
017	Fraction of time spent indoors	0.000E+00	5.000E-01	---	FIND
017	Fraction of time spent outdoors (on site)	2.850E-02	2.500E-01	---	FOTD
017	Shape factor flag, external gamma	1.000E+00	1.000E+00	>0 shows circular AREA.	FS

Site-Specific Parameter Summary (continued)

enu	Parameter	User Input	Default	Used by RESRAD (If different from user input)	Parameter Name
017	Radii of shape factor array (used if FS = -1):				
017	Outer annular radius (m), ring 1:	not used	5.000E+01	---	RAD_SHAPE(1)
017	Outer annular radius (m), ring 2:	not used	7.071E+01	---	RAD_SHAPE(2)
017	Outer annular radius (m), ring 3:	not used	0.000E+00	---	RAD_SHAPE(3)
017	Outer annular radius (m), ring 4:	not used	0.000E+00	---	RAD_SHAPE(4)
017	Outer annular radius (m), ring 5:	not used	0.000E+00	---	RAD_SHAPE(5)
017	Outer annular radius (m), ring 6:	not used	0.000E+00	---	RAD_SHAPE(6)
017	Outer annular radius (m), ring 7:	not used	0.000E+00	---	RAD_SHAPE(7)
017	Outer annular radius (m), ring 8:	not used	0.000E+00	---	RAD_SHAPE(8)
017	Outer annular radius (m), ring 9:	not used	0.000E+00	---	RAD_SHAPE(9)
017	Outer annular radius (m), ring 10:	not used	0.000E+00	---	RAD_SHAPE(10)
017	Outer annular radius (m), ring 11:	not used	0.000E+00	---	RAD_SHAPE(11)
017	Outer annular radius (m), ring 12:	not used	0.000E+00	---	RAD_SHAPE(12)
017	Fractions of annular areas within AREA:				
017	Ring 1	not used	1.000E+00	---	FRACA(1)
017	Ring 2	not used	2.732E-01	---	FRACA(2)
017	Ring 3	not used	0.000E+00	---	FRACA(3)
017	Ring 4	not used	0.000E+00	---	FRACA(4)
017	Ring 5	not used	0.000E+00	---	FRACA(5)
017	Ring 6	not used	0.000E+00	---	FRACA(6)
017	Ring 7	not used	0.000E+00	---	FRACA(7)
017	Ring 8	not used	0.000E+00	---	FRACA(8)
017	Ring 9	not used	0.000E+00	---	FRACA(9)
017	Ring 10	not used	0.000E+00	---	FRACA(10)
017	Ring 11	not used	0.000E+00	---	FRACA(11)
017	Ring 12	not used	0.000E+00	---	FRACA(12)
018	Fruits, vegetables and grain consumption (kg/yr)	not used	1.600E+02	---	DIET(1)
018	Leafy vegetable consumption (kg/yr)	not used	1.400E+01	---	DIET(2)
018	Milk consumption (L/yr)	not used	9.200E+01	---	DIET(3)
018	Meat and poultry consumption (kg/yr)	not used	6.300E+01	---	DIET(4)
018	Fish consumption (kg/yr)	not used	5.400E+00	---	DIET(5)
018	Other seafood consumption (kg/yr)	not used	9.000E-01	---	DIET(6)
018	Soil ingestion rate (g/yr)	not used	3.650E+01	---	SOIL
018	Drinking water intake (L/yr)	not used	5.100E+02	---	DWI
018	Contamination fraction of drinking water	not used	1.000E+00	---	FDW
018	Contamination fraction of household water	1.000E+00	1.000E+00	---	FHHW
018	Contamination fraction of livestock water	not used	1.000E+00	---	FLW
018	Contamination fraction of irrigation water	not used	1.000E+00	---	FIRW
018	Contamination fraction of aquatic food	not used	5.000E-01	---	FR9
018	Contamination fraction of plant food	not used	-1	---	FPLANT
018	Contamination fraction of meat	not used	-1	---	FMEAT
018	Contamination fraction of milk	not used	-1	---	FMILK
019	Livestock fodder intake for meat (kg/day)	not used	6.800E+01	---	LFI5
019	Livestock fodder intake for milk (kg/day)	not used	5.500E+01	---	LFI6
019	Livestock water intake for meat (L/day)	not used	5.000E+01	---	LWI5
019	Livestock water intake for milk (L/day)	not used	1.600E+02	---	LWI6
019	Livestock soil intake (kg/day)	not used	5.000E-01	---	LSI

Site-Specific Parameter Summary (continued)

enu	Parameter	User Input	Default	Used by RESRAD (If different from user input)	Parameter Name
019	Mass loading for foliar deposition (g/m**3)	not used	1.000E-04	---	MLFD
019	Depth of soil mixing layer (m)	not used	1.500E-01	---	DM
019	Depth of roots (m)	not used	9.000E-01	---	DROOT
019	Drinking water fraction from ground water	not used	1.000E+00	---	FGWDW
019	Household water fraction from ground water	1.000E+00	1.000E+00	---	FGWHH
019	Livestock water fraction from ground water	not used	1.000E+00	---	FGWLW
019	Irrigation fraction from ground water	not used	1.000E+00	---	FGWIR
19B	Wet weight crop yield for Non-Leafy (kg/m**2)	not used	7.000E-01	---	YV(1)
19B	Wet weight crop yield for Leafy (kg/m**2)	not used	1.500E+00	---	YV(2)
19B	Wet weight crop yield for Fodder (kg/m**2)	not used	1.100E+00	---	YV(3)
19B	Growing Season for Non-Leafy (years)	not used	1.700E-01	---	TE(1)
19B	Growing Season for Leafy (years)	not used	2.500E-01	---	TE(2)
19B	Growing Season for Fodder (years)	not used	8.000E-02	---	TE(3)
19B	Translocation Factor for Non-Leafy	not used	1.000E-01	---	TIV(1)
19B	Translocation Factor for Leafy	not used	1.000E+00	---	TIV(2)
19B	Translocation Factor for Fodder	not used	1.000E+00	---	TIV(3)
19B	Dry Foliar Interception Fraction for Non-Leafy	not used	2.500E-01	---	RDRY(1)
19B	Dry Foliar Interception Fraction for Leafy	not used	2.500E-01	---	RDRY(2)
19B	Dry Foliar Interception Fraction for Fodder	not used	2.500E-01	---	RDRY(3)
19B	Wet Foliar Interception Fraction for Non-Leafy	not used	2.500E-01	---	RWET(1)
19B	Wet Foliar Interception Fraction for Leafy	not used	2.500E-01	---	RWET(2)
19B	Wet Foliar Interception Fraction for Fodder	not used	2.500E-01	---	RWET(3)
19B	Weathering Removal Constant for Vegetation	not used	2.000E+01	---	WLAM
14	C-12 concentration in water (g/cm**3)	not used	2.000E-05	---	C12WTR
14	C-12 concentration in contaminated soil (g/g)	not used	3.000E-02	---	C12CZ
14	Fraction of vegetation carbon from soil	not used	2.000E-02	---	CSOIL
14	Fraction of vegetation carbon from air	not used	9.800E-01	---	CAIR
14	C-14 evasion layer thickness in soil (m)	not used	3.000E-01	---	DMC
14	C-14 evasion flux rate from soil (1/sec)	not used	7.000E-07	---	EVSN
14	C-12 evasion flux rate from soil (1/sec)	not used	1.000E-10	---	REVSN
14	Fraction of grain in beef cattle feed	not used	8.000E-01	---	AVFG4
14	Fraction of grain in milk cow feed	not used	2.000E-01	---	AVFG5
TOR	Storage times of contaminated foodstuffs (days):				
TOR	Fruits, non-leafy vegetables, and grain	1.400E+01	1.400E+01	---	STOR_T(1)
TOR	Leafy vegetables	1.000E+00	1.000E+00	---	STOR_T(2)
TOR	Milk	1.000E+00	1.000E+00	---	STOR_T(3)
TOR	Meat and poultry	2.000E+01	2.000E+01	---	STOR_T(4)
TOR	Fish	7.000E+00	7.000E+00	---	STOR_T(5)
TOR	Crustacea and mollusks	7.000E+00	7.000E+00	---	STOR_T(6)
TOR	Well water	1.000E+00	1.000E+00	---	STOR_T(7)
TOR	Surface water	1.000E+00	1.000E+00	---	STOR_T(8)
TOR	Livestock fodder	4.500E+01	4.500E+01	---	STOR_T(9)
021	Thickness of building foundation (m)	not used	1.500E-01	---	FLOOR1
021	Bulk density of building foundation (g/cm**3)	not used	2.400E+00	---	DENSFL
021	Total porosity of the cover material	not used	4.000E-01	---	TPCV
021	Total porosity of the building foundation	not used	1.000E-01	---	TPFL

Site-Specific Parameter Summary (continued)

enu	Parameter	User Input	Default	Used by RESRAD (If different from user input)	Parameter Name
021	Volumetric water content of the cover material	not used	5.000E-02	---	PH2OCV
021	Volumetric water content of the foundation	not used	3.000E-02	---	PH2OFL
021	Diffusion coefficient for radon gas (m/sec):				
021	in cover material	not used	2.000E-06	---	DIFCV
021	in foundation material	not used	3.000E-07	---	DIFFL
021	in contaminated zone soil	2.000E-06	2.000E-06	---	DIFCZ
021	Radon vertical dimension of mixing (m)	2.000E+00	2.000E+00	---	HMIX
021	Average building air exchange rate (1/hr)	not used	5.000E-01	---	REXG
021	Height of the building (room) (m)	not used	2.500E+00	---	HRM
021	Building interior area factor	not used	0.000E+00	code computed (time dependent)	FAI
021	Building depth below ground surface (m)	not used	-1.000E+00	code computed (time dependent)	DMFL
021	Emanating power of Rn-222 gas	2.500E-01	2.500E-01	---	EMANA(1)
021	Emanating power of Rn-220 gas	1.500E-01	1.500E-01	---	EMANA(2)
ITL	Number of graphical time points	32	---	---	NPTS
ITL	Maximum number of integration points for dose	17	---	---	LYMAX
ITL	Maximum number of integration points for risk	257	---	---	KYMAX

Summary of Pathway Selections

Pathway	User Selection
1 -- external gamma	active
2 -- inhalation (w/o radon)	suppressed
3 -- plant ingestion	suppressed
4 -- meat ingestion	suppressed
5 -- milk ingestion	suppressed
6 -- aquatic foods	suppressed
7 -- drinking water	suppressed
8 -- soil ingestion	suppressed
9 -- radon	active
Find peak pathway doses	suppressed

ummary : GKP Recreational Visitor - External
ile : C:\USERS\CLAUDE\DOCUMENTS\0 GKP DOSE\RESRAD CW\GKP RECREATIONAL VISITOR- EXTERNAL R1.RAD

Contaminated Zone Dimensions		Initial Soil Concentrations, pCi/g	
Area:	200.00 square meters	Ra-226	3.650E+01
Thickness:	0.15 meters	Th-232	2.400E+00
over Depth:	0.00 meters	U-234	1.390E+01
		U-235	8.400E-01
		U-238	1.390E+01

Total Dose TDOSE(t), mrem/yr
Basic Radiation Dose Limit = 2.500E+01 mrem/yr
Total Mixture Sum M(t) = Fraction of Basic Dose Limit Received at Time (t)

t (years):	0.000E+00	1.000E+00	3.000E+00	1.000E+01	3.000E+01	1.000E+02	3.000E+02	1.000E+03
TDOSE(t):	8.282E+00	8.042E+00	7.600E+00	6.224E+00	3.362E+00	4.953E-01	0.000E+00	0.000E+00
M(t):	3.313E-01	3.217E-01	3.040E-01	2.489E-01	1.345E-01	1.981E-02	0.000E+00	0.000E+00

aximum TDOSE(t): 8.282E+00 mrem/yr at t = 0.000E+00 years

ummary : GKP Recreational Visitor - External
ile : C:\USERS\CLAUDE\DOCUMENTS\0 GKP DOSE\RESRAD CW\GKP RECREATIONAL VISITOR- EXTERNAL R1.RAD

Total Dose Contributions TDOSE(i,p,t) for Individual Radionuclides (i) and Pathways (p)
As mrem/yr and Fraction of Total Dose At t = 0.000E+00 years

Water Independent Pathways (Inhalation excludes radon)

	Ground		Inhalation		Radon		Plant		Meat		Milk		Soil	
adio-	ÄÄÄÄÄÄÄÄÄÄÄÄÄÄÄÄ		ÄÄÄÄÄÄÄÄÄÄÄÄÄÄÄÄ		ÄÄÄÄÄÄÄÄÄÄÄÄÄÄÄÄ		ÄÄÄÄÄÄÄÄÄÄÄÄÄÄÄÄ		ÄÄÄÄÄÄÄÄÄÄÄÄÄÄÄÄ		ÄÄÄÄÄÄÄÄÄÄÄÄÄÄÄÄ		ÄÄÄÄÄÄÄÄÄÄÄÄÄÄÄÄ	
uclide	mrem/yr	fract.	mrem/yr	fract.	mrem/yr	fract.	mrem/yr	fract.	mrem/yr	fract.	mrem/yr	fract.	mrem/yr	fract.
ÄÄÄÄÄÄ	ÄÄÄÄÄÄÄÄÄ	ÄÄÄÄÄÄ	ÄÄÄÄÄÄÄÄÄ	ÄÄÄÄÄÄ	ÄÄÄÄÄÄÄÄÄ	ÄÄÄÄÄÄ	ÄÄÄÄÄÄÄÄÄ	ÄÄÄÄÄÄ	ÄÄÄÄÄÄÄÄÄ	ÄÄÄÄÄÄ	ÄÄÄÄÄÄÄÄÄ	ÄÄÄÄÄÄ	ÄÄÄÄÄÄÄÄÄ	ÄÄÄÄÄÄ
a-226	8.207E+00	0.9909	0.000E+00	0.0000	4.215E-05	0.0000	0.000E+00	0.0000	0.000E+00	0.0000	0.000E+00	0.0000	0.000E+00	0.0000
h-232	2.031E-02	0.0025	0.000E+00	0.0000	1.511E-06	0.0000	0.000E+00	0.0000	0.000E+00	0.0000	0.000E+00	0.0000	0.000E+00	0.0000
-234	1.376E-04	0.0000	0.000E+00	0.0000	1.061E-14	0.0000	0.000E+00	0.0000	0.000E+00	0.0000	0.000E+00	0.0000	0.000E+00	0.0000
-235	1.497E-02	0.0018	0.000E+00	0.0000	0.000E+00	0.0000	0.000E+00	0.0000	0.000E+00	0.0000	0.000E+00	0.0000	0.000E+00	0.0000
-238	3.979E-02	0.0048	0.000E+00	0.0000	7.448E-21	0.0000	0.000E+00	0.0000	0.000E+00	0.0000	0.000E+00	0.0000	0.000E+00	0.0000
íííííí	íííííííííí	íííííí	íííííííííí	íííííí	íííííííííí	íííííí	íííííííííí	íííííí	íííííííííí	íííííí	íííííííííí	íííííí	íííííííííí	íííííí
otal	8.282E+00	1.0000	0.000E+00	0.0000	4.367E-05	0.0000	0.000E+00	0.0000	0.000E+00	0.0000	0.000E+00	0.0000	0.000E+00	0.0000

Total Dose Contributions TDOSE(i,p,t) for Individual Radionuclides (i) and Pathways (p)
As mrem/yr and Fraction of Total Dose At t = 0.000E+00 years

Water Dependent Pathways

	Water		Fish		Radon		Plant		Meat		Milk		All Pathways*	
adio-	ÄÄÄÄÄÄÄÄÄÄÄÄÄÄÄÄ		ÄÄÄÄÄÄÄÄÄÄÄÄÄÄÄÄ		ÄÄÄÄÄÄÄÄÄÄÄÄÄÄÄÄ		ÄÄÄÄÄÄÄÄÄÄÄÄÄÄÄÄ		ÄÄÄÄÄÄÄÄÄÄÄÄÄÄÄÄ		ÄÄÄÄÄÄÄÄÄÄÄÄÄÄÄÄ		ÄÄÄÄÄÄÄÄÄÄÄÄÄÄÄÄ	
uclide	mrem/yr	fract.	mrem/yr	fract.	mrem/yr	fract.	mrem/yr	fract.	mrem/yr	fract.	mrem/yr	fract.	mrem/yr	fract.
ÄÄÄÄÄÄ	ÄÄÄÄÄÄÄÄÄ	ÄÄÄÄÄÄ	ÄÄÄÄÄÄÄÄÄ	ÄÄÄÄÄÄ	ÄÄÄÄÄÄÄÄÄ	ÄÄÄÄÄÄ	ÄÄÄÄÄÄÄÄÄ	ÄÄÄÄÄÄ	ÄÄÄÄÄÄÄÄÄ	ÄÄÄÄÄÄ	ÄÄÄÄÄÄÄÄÄ	ÄÄÄÄÄÄ	ÄÄÄÄÄÄÄÄÄ	ÄÄÄÄÄÄ
a-226	0.000E+00	0.0000	0.000E+00	0.0000	0.000E+00	0.0000	0.000E+00	0.0000	0.000E+00	0.0000	0.000E+00	0.0000	8.207E+00	0.9909
h-232	0.000E+00	0.0000	0.000E+00	0.0000	0.000E+00	0.0000	0.000E+00	0.0000	0.000E+00	0.0000	0.000E+00	0.0000	2.031E-02	0.0025
-234	0.000E+00	0.0000	0.000E+00	0.0000	0.000E+00	0.0000	0.000E+00	0.0000	0.000E+00	0.0000	0.000E+00	0.0000	1.376E-04	0.0000
-235	0.000E+00	0.0000	0.000E+00	0.0000	0.000E+00	0.0000	0.000E+00	0.0000	0.000E+00	0.0000	0.000E+00	0.0000	1.497E-02	0.0018
-238	0.000E+00	0.0000	0.000E+00	0.0000	0.000E+00	0.0000	0.000E+00	0.0000	0.000E+00	0.0000	0.000E+00	0.0000	3.979E-02	0.0048
íííííí	íííííííííí	íííííí	íííííííííí	íííííí	íííííííííí	íííííí	íííííííííí	íííííí	íííííííííí	íííííí	íííííííííí	íííííí	íííííííííí	íííííí
otal	0.000E+00	0.0000	0.000E+00	0.0000	0.000E+00	0.0000	0.000E+00	0.0000	0.000E+00	0.0000	0.000E+00	0.0000	8.282E+00	1.0000

Sum of all water independent and dependent pathways.

ummary : GKP Recreational Visitor - External
ile : C:\USERS\CLAUDE\DOCUMENTS\0 GKP DOSE\RESRAD CW\GKP RECREATIONAL VISITOR- EXTERNAL R1.RAD

Total Dose Contributions TDOSE(i,p,t) for Individual Radionuclides (i) and Pathways (p)
As mrem/yr and Fraction of Total Dose At t = 1.000E+00 years

Water Independent Pathways (Inhalation excludes radon)

	Ground		Inhalation		Radon		Plant		Meat		Milk		Soil	
adio-	ÄÄÄÄÄÄÄÄÄÄÄÄÄÄÄÄ		ÄÄÄÄÄÄÄÄÄÄÄÄÄÄÄÄ		ÄÄÄÄÄÄÄÄÄÄÄÄÄÄÄÄ		ÄÄÄÄÄÄÄÄÄÄÄÄÄÄÄÄ		ÄÄÄÄÄÄÄÄÄÄÄÄÄÄÄÄ		ÄÄÄÄÄÄÄÄÄÄÄÄÄÄÄÄ		ÄÄÄÄÄÄÄÄÄÄÄÄÄÄÄÄ	
uclide	mrem/yr	fract.	mrem/yr	fract.	mrem/yr	fract.	mrem/yr	fract.	mrem/yr	fract.	mrem/yr	fract.	mrem/yr	fract.
ÄÄÄÄÄÄ	ÄÄÄÄÄÄÄÄÄ	ÄÄÄÄÄÄ	ÄÄÄÄÄÄÄÄÄ	ÄÄÄÄÄÄ	ÄÄÄÄÄÄÄÄÄ	ÄÄÄÄÄÄ	ÄÄÄÄÄÄÄÄÄ	ÄÄÄÄÄÄ	ÄÄÄÄÄÄÄÄÄ	ÄÄÄÄÄÄ	ÄÄÄÄÄÄÄÄÄ	ÄÄÄÄÄÄ	ÄÄÄÄÄÄÄÄÄ	ÄÄÄÄÄÄ
a-226	7.923E+00	0.9852	0.000E+00	0.0000	4.056E-05	0.0000	0.000E+00	0.0000	0.000E+00	0.0000	0.000E+00	0.0000	0.000E+00	0.0000
n-232	6.679E-02	0.0083	0.000E+00	0.0000	9.187E-06	0.0000	0.000E+00	0.0000	0.000E+00	0.0000	0.000E+00	0.0000	0.000E+00	0.0000
-234	1.316E-04	0.0000	0.000E+00	0.0000	7.225E-14	0.0000	0.000E+00	0.0000	0.000E+00	0.0000	0.000E+00	0.0000	0.000E+00	0.0000
-235	1.430E-02	0.0018	0.000E+00	0.0000	0.000E+00	0.0000	0.000E+00	0.0000	0.000E+00	0.0000	0.000E+00	0.0000	0.000E+00	0.0000
-238	3.798E-02	0.0047	0.000E+00	0.0000	1.083E-19	0.0000	0.000E+00	0.0000	0.000E+00	0.0000	0.000E+00	0.0000	0.000E+00	0.0000
íííííí	íííííííííí	íííííí	íííííííííí	íííííí	íííííííííí	íííííí	íííííííííí	íííííí	íííííííííí	íííííí	íííííííííí	íííííí	íííííííííí	íííííí
otal	8.042E+00	1.0000	0.000E+00	0.0000	4.974E-05	0.0000	0.000E+00	0.0000	0.000E+00	0.0000	0.000E+00	0.0000	0.000E+00	0.0000

Total Dose Contributions TDOSE(i,p,t) for Individual Radionuclides (i) and Pathways (p)
As mrem/yr and Fraction of Total Dose At t = 1.000E+00 years

Water Dependent Pathways

	Water		Fish		Radon		Plant		Meat		Milk		All Pathways*	
adio-	ÄÄÄÄÄÄÄÄÄÄÄÄÄÄÄÄ		ÄÄÄÄÄÄÄÄÄÄÄÄÄÄÄÄ		ÄÄÄÄÄÄÄÄÄÄÄÄÄÄÄÄ		ÄÄÄÄÄÄÄÄÄÄÄÄÄÄÄÄ		ÄÄÄÄÄÄÄÄÄÄÄÄÄÄÄÄ		ÄÄÄÄÄÄÄÄÄÄÄÄÄÄÄÄ		ÄÄÄÄÄÄÄÄÄÄÄÄÄÄÄÄ	
uclide	mrem/yr	fract.	mrem/yr	fract.	mrem/yr	fract.	mrem/yr	fract.	mrem/yr	fract.	mrem/yr	fract.	mrem/yr	fract.
ÄÄÄÄÄÄ	ÄÄÄÄÄÄÄÄÄ	ÄÄÄÄÄÄ	ÄÄÄÄÄÄÄÄÄ	ÄÄÄÄÄÄ	ÄÄÄÄÄÄÄÄÄ	ÄÄÄÄÄÄ	ÄÄÄÄÄÄÄÄÄ	ÄÄÄÄÄÄ	ÄÄÄÄÄÄÄÄÄ	ÄÄÄÄÄÄ	ÄÄÄÄÄÄÄÄÄ	ÄÄÄÄÄÄ	ÄÄÄÄÄÄÄÄÄ	ÄÄÄÄÄÄ
a-226	0.000E+00	0.0000	0.000E+00	0.0000	0.000E+00	0.0000	0.000E+00	0.0000	0.000E+00	0.0000	0.000E+00	0.0000	7.923E+00	0.9852
n-232	0.000E+00	0.0000	0.000E+00	0.0000	0.000E+00	0.0000	0.000E+00	0.0000	0.000E+00	0.0000	0.000E+00	0.0000	6.680E-02	0.0083
-234	0.000E+00	0.0000	0.000E+00	0.0000	0.000E+00	0.0000	0.000E+00	0.0000	0.000E+00	0.0000	0.000E+00	0.0000	1.316E-04	0.0000
-235	0.000E+00	0.0000	0.000E+00	0.0000	0.000E+00	0.0000	0.000E+00	0.0000	0.000E+00	0.0000	0.000E+00	0.0000	1.430E-02	0.0018
-238	0.000E+00	0.0000	0.000E+00	0.0000	0.000E+00	0.0000	0.000E+00	0.0000	0.000E+00	0.0000	0.000E+00	0.0000	3.798E-02	0.0047
íííííí	íííííííííí	íííííí	íííííííííí	íííííí	íííííííííí	íííííí	íííííííííí	íííííí	íííííííííí	íííííí	íííííííííí	íííííí	íííííííííí	íííííí
otal	0.000E+00	0.0000	0.000E+00	0.0000	0.000E+00	0.0000	0.000E+00	0.0000	0.000E+00	0.0000	0.000E+00	0.0000	8.042E+00	1.0000

Sum of all water independent and dependent pathways.

ummary : GKP Recreational Visitor - External
ile : C:\USERS\CLAUDE\DOCUMENTS\0 GKP DOSE\RESRAD CW\GKP RECREATIONAL VISITOR- EXTERNAL R1.RAD

Total Dose Contributions TDOSE(i,p,t) for Individual Radionuclides (i) and Pathways (p)
As mrem/yr and Fraction of Total Dose At t = 3.000E+00 years

Water Independent Pathways (Inhalation excludes radon)

	Ground		Inhalation		Radon		Plant		Meat		Milk		Soil	
adio-	ÄÄÄÄÄÄÄÄÄÄÄÄÄÄÄÄ		ÄÄÄÄÄÄÄÄÄÄÄÄÄÄÄÄ		ÄÄÄÄÄÄÄÄÄÄÄÄÄÄÄÄ		ÄÄÄÄÄÄÄÄÄÄÄÄÄÄÄÄ		ÄÄÄÄÄÄÄÄÄÄÄÄÄÄÄÄ		ÄÄÄÄÄÄÄÄÄÄÄÄÄÄÄÄ		ÄÄÄÄÄÄÄÄÄÄÄÄÄÄÄÄ	
uclide	mrem/yr	fract.	mrem/yr	fract.	mrem/yr	fract.	mrem/yr	fract.	mrem/yr	fract.	mrem/yr	fract.	mrem/yr	fract.
ÄÄÄÄÄÄ	ÄÄÄÄÄÄÄÄÄ	ÄÄÄÄÄÄ	ÄÄÄÄÄÄÄÄÄ	ÄÄÄÄÄÄ	ÄÄÄÄÄÄÄÄÄ	ÄÄÄÄÄÄ	ÄÄÄÄÄÄÄÄÄ	ÄÄÄÄÄÄ	ÄÄÄÄÄÄÄÄÄ	ÄÄÄÄÄÄ	ÄÄÄÄÄÄÄÄÄ	ÄÄÄÄÄÄ	ÄÄÄÄÄÄÄÄÄ	ÄÄÄÄÄÄ
a-226	7.384E+00	0.9715	0.000E+00	0.0000	3.753E-05	0.0000	0.000E+00	0.0000	0.000E+00	0.0000	0.000E+00	0.0000	0.000E+00	0.0000
h-232	1.688E-01	0.0222	0.000E+00	0.0000	3.576E-05	0.0000	0.000E+00	0.0000	0.000E+00	0.0000	0.000E+00	0.0000	0.000E+00	0.0000
-234	1.204E-04	0.0000	0.000E+00	0.0000	3.590E-13	0.0000	0.000E+00	0.0000	0.000E+00	0.0000	0.000E+00	0.0000	0.000E+00	0.0000
-235	1.305E-02	0.0017	0.000E+00	0.0000	0.000E+00	0.0000	0.000E+00	0.0000	0.000E+00	0.0000	0.000E+00	0.0000	0.000E+00	0.0000
-238	3.460E-02	0.0046	0.000E+00	0.0000	1.177E-18	0.0000	0.000E+00	0.0000	0.000E+00	0.0000	0.000E+00	0.0000	0.000E+00	0.0000
íííííí	íííííííííí	íííííí	íííííííííí	íííííí	íííííííííí	íííííí	íííííííííí	íííííí	íííííííííí	íííííí	íííííííííí	íííííí	íííííííííí	íííííí
otal	7.600E+00	1.0000	0.000E+00	0.0000	7.329E-05	0.0000	0.000E+00	0.0000	0.000E+00	0.0000	0.000E+00	0.0000	0.000E+00	0.0000

Total Dose Contributions TDOSE(i,p,t) for Individual Radionuclides (i) and Pathways (p)
As mrem/yr and Fraction of Total Dose At t = 3.000E+00 years

Water Dependent Pathways

	Water		Fish		Radon		Plant		Meat		Milk		All Pathways*	
adio-	ÄÄÄÄÄÄÄÄÄÄÄÄÄÄÄÄ		ÄÄÄÄÄÄÄÄÄÄÄÄÄÄÄÄ		ÄÄÄÄÄÄÄÄÄÄÄÄÄÄÄÄ		ÄÄÄÄÄÄÄÄÄÄÄÄÄÄÄÄ		ÄÄÄÄÄÄÄÄÄÄÄÄÄÄÄÄ		ÄÄÄÄÄÄÄÄÄÄÄÄÄÄÄÄ		ÄÄÄÄÄÄÄÄÄÄÄÄÄÄÄÄ	
uclide	mrem/yr	fract.	mrem/yr	fract.	mrem/yr	fract.	mrem/yr	fract.	mrem/yr	fract.	mrem/yr	fract.	mrem/yr	fract.
ÄÄÄÄÄÄ	ÄÄÄÄÄÄÄÄÄ	ÄÄÄÄÄÄ	ÄÄÄÄÄÄÄÄÄ	ÄÄÄÄÄÄ	ÄÄÄÄÄÄÄÄÄ	ÄÄÄÄÄÄ	ÄÄÄÄÄÄÄÄÄ	ÄÄÄÄÄÄ	ÄÄÄÄÄÄÄÄÄ	ÄÄÄÄÄÄ	ÄÄÄÄÄÄÄÄÄ	ÄÄÄÄÄÄ	ÄÄÄÄÄÄÄÄÄ	ÄÄÄÄÄÄ
a-226	0.000E+00	0.0000	0.000E+00	0.0000	0.000E+00	0.0000	0.000E+00	0.0000	0.000E+00	0.0000	0.000E+00	0.0000	7.384E+00	0.9715
h-232	0.000E+00	0.0000	0.000E+00	0.0000	0.000E+00	0.0000	0.000E+00	0.0000	0.000E+00	0.0000	0.000E+00	0.0000	1.689E-01	0.0222
-234	0.000E+00	0.0000	0.000E+00	0.0000	0.000E+00	0.0000	0.000E+00	0.0000	0.000E+00	0.0000	0.000E+00	0.0000	1.204E-04	0.0000
-235	0.000E+00	0.0000	0.000E+00	0.0000	0.000E+00	0.0000	0.000E+00	0.0000	0.000E+00	0.0000	0.000E+00	0.0000	1.305E-02	0.0017
-238	0.000E+00	0.0000	0.000E+00	0.0000	0.000E+00	0.0000	0.000E+00	0.0000	0.000E+00	0.0000	0.000E+00	0.0000	3.460E-02	0.0046
íííííí	íííííííííí	íííííí	íííííííííí	íííííí	íííííííííí	íííííí	íííííííííí	íííííí	íííííííííí	íííííí	íííííííííí	íííííí	íííííííííí	íííííí
otal	0.000E+00	0.0000	0.000E+00	0.0000	0.000E+00	0.0000	0.000E+00	0.0000	0.000E+00	0.0000	0.000E+00	0.0000	7.600E+00	1.0000

Sum of all water independent and dependent pathways.

ummary : GKP Recreational Visitor - External
ile : C:\USERS\CLAUDE\DOCUMENTS\0 GKP DOSE\RESRAD CW\GKP RECREATIONAL VISITOR- EXTERNAL R1.RAD

Total Dose Contributions TDOSE(i,p,t) for Individual Radionuclides (i) and Pathways (p)
As mrem/yr and Fraction of Total Dose At t = 1.000E+01 years

Water Independent Pathways (Inhalation excludes radon)

	Ground		Inhalation		Radon		Plant		Meat		Milk		Soil	
adio-	AAAAAAAAAAAAAAAA		AAAAAAAAAAAAAAAA		AAAAAAAAAAAAAAAA		AAAAAAAAAAAAAAAA		AAAAAAAAAAAAAAAA		AAAAAAAAAAAAAAAA		AAAAAAAAAAAAAAAA	
uclide	mrem/yr	fract.	mrem/yr	fract.	mrem/yr	fract.	mrem/yr	fract.	mrem/yr	fract.	mrem/yr	fract.	mrem/yr	fract.
AAAAAA	AAAAAAAAA	AAAAAA	AAAAAAAAA	AAAAAA	AAAAAAAAA	AAAAAA	AAAAAAAAA	AAAAAA	AAAAAAAAA	AAAAAA	AAAAAAAAA	AAAAAA	AAAAAAAAA	AAAAAA
a-226	5.763E+00	0.9259	0.000E+00	0.0000	2.857E-05	0.0000	0.000E+00	0.0000	0.000E+00	0.0000	0.000E+00	0.0000	0.000E+00	0.0000
n-232	4.264E-01	0.0685	0.000E+00	0.0000	1.244E-04	0.0000	0.000E+00	0.0000	0.000E+00	0.0000	0.000E+00	0.0000	0.000E+00	0.0000
-234	8.842E-05	0.0000	0.000E+00	0.0000	2.574E-12	0.0000	0.000E+00	0.0000	0.000E+00	0.0000	0.000E+00	0.0000	0.000E+00	0.0000
-235	9.463E-03	0.0015	0.000E+00	0.0000	0.000E+00	0.0000	0.000E+00	0.0000	0.000E+00	0.0000	0.000E+00	0.0000	0.000E+00	0.0000
-238	2.495E-02	0.0040	0.000E+00	0.0000	2.421E-17	0.0000	0.000E+00	0.0000	0.000E+00	0.0000	0.000E+00	0.0000	0.000E+00	0.0000
íííííí	íííííííííí	íííííí	íííííííííí	íííííí	íííííííííí	íííííí	íííííííííí	íííííí	íííííííííí	íííííí	íííííííííí	íííííí	íííííííííí	íííííí
otal	6.224E+00	1.0000	0.000E+00	0.0000	1.529E-04	0.0000	0.000E+00	0.0000	0.000E+00	0.0000	0.000E+00	0.0000	0.000E+00	0.0000

Total Dose Contributions TDOSE(i,p,t) for Individual Radionuclides (i) and Pathways (p)
As mrem/yr and Fraction of Total Dose At t = 1.000E+01 years

Water Dependent Pathways

	Water		Fish		Radon		Plant		Meat		Milk		All Pathways*	
adio-	AAAAAAAAAAAAAAAA		AAAAAAAAAAAAAAAA		AAAAAAAAAAAAAAAA		AAAAAAAAAAAAAAAA		AAAAAAAAAAAAAAAA		AAAAAAAAAAAAAAAA		AAAAAAAAAAAAAAAA	
uclide	mrem/yr	fract.	mrem/yr	fract.	mrem/yr	fract.	mrem/yr	fract.	mrem/yr	fract.	mrem/yr	fract.	mrem/yr	fract.
AAAAAA	AAAAAAAAA	AAAAAA	AAAAAAAAA	AAAAAA	AAAAAAAAA	AAAAAA	AAAAAAAAA	AAAAAA	AAAAAAAAA	AAAAAA	AAAAAAAAA	AAAAAA	AAAAAAAAA	AAAAAA
a-226	0.000E+00	0.0000	0.000E+00	0.0000	0.000E+00	0.0000	0.000E+00	0.0000	0.000E+00	0.0000	0.000E+00	0.0000	5.763E+00	0.9259
n-232	0.000E+00	0.0000	0.000E+00	0.0000	0.000E+00	0.0000	0.000E+00	0.0000	0.000E+00	0.0000	0.000E+00	0.0000	4.265E-01	0.0685
-234	0.000E+00	0.0000	0.000E+00	0.0000	0.000E+00	0.0000	0.000E+00	0.0000	0.000E+00	0.0000	0.000E+00	0.0000	8.842E-05	0.0000
-235	0.000E+00	0.0000	0.000E+00	0.0000	0.000E+00	0.0000	0.000E+00	0.0000	0.000E+00	0.0000	0.000E+00	0.0000	9.463E-03	0.0015
-238	0.000E+00	0.0000	0.000E+00	0.0000	0.000E+00	0.0000	0.000E+00	0.0000	0.000E+00	0.0000	0.000E+00	0.0000	2.495E-02	0.0040
íííííí	íííííííííí	íííííí	íííííííííí	íííííí	íííííííííí	íííííí	íííííííííí	íííííí	íííííííííí	íííííí	íííííííííí	íííííí	íííííííííí	íííííí
otal	0.000E+00	0.0000	0.000E+00	0.0000	0.000E+00	0.0000	0.000E+00	0.0000	0.000E+00	0.0000	0.000E+00	0.0000	6.224E+00	1.0000

Sum of all water independent and dependent pathways.

ummary : GKP Recreational Visitor - External
ile : C:\USERS\CLAUDE\DOCUMENTS\0 GKP DOSE\RESRAD CW\GKP RECREATIONAL VISITOR- EXTERNAL R1.RAD

Total Dose Contributions TDOSE(i,p,t) for Individual Radionuclides (i) and Pathways (p)
As mrem/yr and Fraction of Total Dose At t = 3.000E+01 years

Water Independent Pathways (Inhalation excludes radon)

	Ground		Inhalation		Radon		Plant		Meat		Milk		Soil	
adio-	ÄÄÄÄÄÄÄÄÄÄÄÄÄÄÄÄ		ÄÄÄÄÄÄÄÄÄÄÄÄÄÄÄÄ		ÄÄÄÄÄÄÄÄÄÄÄÄÄÄÄÄ		AAAAAAAAAAAAAAAA		AAAAAAAAÄÄÄÄÄÄÄÄ		ÄÄÄÄÄÄÄÄÄÄÄÄÄÄÄÄ		ÄÄÄÄÄÄÄÄÄÄÄÄÄÄÄÄ	
uclide	mrem/yr	fract.	mrem/yr	fract.	mrem/yr	fract.	mrem/yr	fract.	mrem/yr	fract.	mrem/yr	fract.	mrem/yr	fract.
ÄÄÄÄÄÄ	ÄÄÄÄÄÄÄÄÄ	ÄÄÄÄÄÄ	ÄÄÄÄÄÄÄÄÄ	ÄÄÄÄÄÄ	ÄÄÄÄÄÄÄÄÄ	ÄÄÄÄÄÄ	ÄÄÄÄÄÄÄÄÄ	ÄÄÄÄÄÄ	ÄÄÄÄÄÄÄÄÄ	ÄÄÄÄÄÄ	ÄÄÄÄÄÄÄÄÄ	ÄÄÄÄÄÄ	ÄÄÄÄÄÄÄÄÄ	ÄÄÄÄÄÄ
a-226	2.808E+00	0.8353	0.000E+00	0.0000	1.291E-05	0.0000	0.000E+00	0.0000	0.000E+00	0.0000	0.000E+00	0.0000	0.000E+00	0.0000
h-232	5.400E-01	0.1606	0.000E+00	0.0000	1.832E-04	0.0001	0.000E+00	0.0000	0.000E+00	0.0000	0.000E+00	0.0000	0.000E+00	0.0000
-234	3.828E-05	0.0000	0.000E+00	0.0000	1.162E-11	0.0000	0.000E+00	0.0000	0.000E+00	0.0000	0.000E+00	0.0000	0.000E+00	0.0000
-235	3.751E-03	0.0011	0.000E+00	0.0000	0.000E+00	0.0000	0.000E+00	0.0000	0.000E+00	0.0000	0.000E+00	0.0000	0.000E+00	0.0000
-238	9.717E-03	0.0029	0.000E+00	0.0000	2.862E-16	0.0000	0.000E+00	0.0000	0.000E+00	0.0000	0.000E+00	0.0000	0.000E+00	0.0000
íííííí	íííííííííí	íííííí	íííííííííí	íííííí	íííííííííí	íííííí	íííííííííí	íííííí	íííííííííí	íííííí	íííííííííí	íííííí	íííííííííí	íííííí
otal	3.362E+00	0.9999	0.000E+00	0.0000	1.961E-04	0.0001	0.000E+00	0.0000	0.000E+00	0.0000	0.000E+00	0.0000	0.000E+00	0.0000

Total Dose Contributions TDOSE(i,p,t) for Individual Radionuclides (i) and Pathways (p)
As mrem/yr and Fraction of Total Dose At t = 3.000E+01 years

Water Dependent Pathways

	Water		Fish		Radon		Plant		Meat		Milk		All Pathways*	
adio-	ÄÄÄÄÄÄÄÄÄÄÄÄÄÄÄÄ		ÄÄÄÄÄÄÄÄÄÄÄÄÄÄÄÄ		ÄÄÄÄÄÄÄÄÄÄÄÄÄÄÄÄ		ÄÄÄÄÄÄÄÄÄÄÄÄÄÄÄÄ		ÄÄÄÄÄÄÄÄÄÄÄÄÄÄÄÄ		ÄÄÄÄÄÄÄÄÄÄÄÄÄÄÄÄ		ÄÄÄÄÄÄÄÄÄÄÄÄÄÄÄÄ	
uclide	mrem/yr	fract.	mrem/yr	fract.	mrem/yr	fract.	mrem/yr	fract.	mrem/yr	fract.	mrem/yr	fract.	mrem/yr	fract.
ÄÄÄÄÄÄ	ÄÄÄÄÄÄÄÄÄ	ÄÄÄÄÄÄ	ÄÄÄÄÄÄÄÄÄ	ÄÄÄÄÄÄ	ÄÄÄÄÄÄÄÄÄ	ÄÄÄÄÄÄ	ÄÄÄÄÄÄÄÄÄ	ÄÄÄÄÄÄ	ÄÄÄÄÄÄÄÄÄ	ÄÄÄÄÄÄ	ÄÄÄÄÄÄÄÄÄ	ÄÄÄÄÄÄ	ÄÄÄÄÄÄÄÄÄ	ÄÄÄÄÄÄ
a-226	0.000E+00	0.0000	0.000E+00	0.0000	0.000E+00	0.0000	0.000E+00	0.0000	0.000E+00	0.0000	0.000E+00	0.0000	2.808E+00	0.8353
h-232	0.000E+00	0.0000	0.000E+00	0.0000	0.000E+00	0.0000	0.000E+00	0.0000	0.000E+00	0.0000	0.000E+00	0.0000	5.402E-01	0.1607
-234	0.000E+00	0.0000	0.000E+00	0.0000	0.000E+00	0.0000	0.000E+00	0.0000	0.000E+00	0.0000	0.000E+00	0.0000	3.828E-05	0.0000
-235	0.000E+00	0.0000	0.000E+00	0.0000	0.000E+00	0.0000	0.000E+00	0.0000	0.000E+00	0.0000	0.000E+00	0.0000	3.751E-03	0.0011
-238	0.000E+00	0.0000	0.000E+00	0.0000	0.000E+00	0.0000	0.000E+00	0.0000	0.000E+00	0.0000	0.000E+00	0.0000	9.717E-03	0.0029
íííííí	íííííííííí	íííííí	íííííííííí	íííííí	íííííííííí	íííííí	íííííííííí	íííííí	íííííííííí	íííííí	íííííííííí	íííííí	íííííííííí	íííííí
otal	0.000E+00	0.0000	0.000E+00	0.0000	0.000E+00	0.0000	0.000E+00	0.0000	0.000E+00	0.0000	0.000E+00	0.0000	3.362E+00	1.0000

Sum of all water independent and dependent pathways.

ummary : GKP Recreational Visitor - External

ile : C:\USERS\CLAUDE\DOCUMENTS\0 GKP DOSE\RESRAD CW\GKP RECREATIONAL VISITOR- EXTERNAL R1.RAD

Total Dose Contributions TDOSE(i,p,t) for Individual Radionuclides (i) and Pathways (p)
As mrem/yr and Fraction of Total Dose At t = 1.000E+02 years

Water Independent Pathways (Inhalation excludes radon)

	Ground		Inhalation		Radon		Plant		Meat		Milk		Soil	
adio-	ÄÄÄÄÄÄÄÄÄÄÄÄÄÄÄÄ		ÄÄÄÄÄÄÄÄÄÄÄÄÄÄÄÄ		ÄÄÄÄÄÄÄÄÄÄÄÄÄÄÄÄ		ÄÄÄÄÄÄÄÄÄÄÄÄÄÄÄÄ		ÄÄÄÄÄÄÄÄÄÄÄÄÄÄÄÄ		ÄÄÄÄÄÄÄÄÄÄÄÄÄÄÄÄ		ÄÄÄÄÄÄÄÄÄÄÄÄÄÄÄÄ		ÄÄÄÄÄÄÄÄÄÄÄÄÄÄÄÄ	
uclide	mrem/yr	fract.	mrem/yr	fract.	mrem/yr	fract.	mrem/yr	fract.	mrem/yr	fract.	mrem/yr	fract.	mrem/yr	fract.
ÄÄÄÄÄÄ	ÄÄÄÄÄÄÄÄÄ	ÄÄÄÄÄÄ	ÄÄÄÄÄÄÄÄÄ	ÄÄÄÄÄÄ	ÄÄÄÄÄÄÄÄÄ	ÄÄÄÄÄÄ	ÄÄÄÄÄÄÄÄÄ	ÄÄÄÄÄÄ	ÄÄÄÄÄÄÄÄÄ	ÄÄÄÄÄÄ	ÄÄÄÄÄÄÄÄÄ	ÄÄÄÄÄÄ	ÄÄÄÄÄÄÄÄÄ	ÄÄÄÄÄÄ
a-226	1.752E-01	0.3538	0.000E+00	0.0000	5.682E-07	0.0000	0.000E+00	0.0000	0.000E+00	0.0000	0.000E+00	0.0000	0.000E+00	0.0000
h-232	3.195E-01	0.6450	0.000E+00	0.0000	1.854E-04	0.0004	0.000E+00	0.0000	0.000E+00	0.0000	0.000E+00	0.0000	0.000E+00	0.0000
-234	5.564E-06	0.0000	0.000E+00	0.0000	1.349E-11	0.0000	0.000E+00	0.0000	0.000E+00	0.0000	0.000E+00	0.0000	0.000E+00	0.0000
-235	1.173E-04	0.0002	0.000E+00	0.0000	0.000E+00	0.0000	0.000E+00	0.0000	0.000E+00	0.0000	0.000E+00	0.0000	0.000E+00	0.0000
-238	2.857E-04	0.0006	0.000E+00	0.0000	7.329E-16	0.0000	0.000E+00	0.0000	0.000E+00	0.0000	0.000E+00	0.0000	0.000E+00	0.0000
íííííí	íííííííííí	íííííí	íííííííííí	íííííí	íííííííííí	íííííí	íííííííííí	íííííí	íííííííííí	íííííí	íííííííííí	íííííí	íííííííííí	íííííí
otal	4.951E-01	0.9996	0.000E+00	0.0000	1.860E-04	0.0004	0.000E+00	0.0000	0.000E+00	0.0000	0.000E+00	0.0000	0.000E+00	0.0000

Total Dose Contributions TDOSE(i,p,t) for Individual Radionuclides (i) and Pathways (p)
As mrem/yr and Fraction of Total Dose At t = 1.000E+02 years

Water Dependent Pathways

	Water		Fish		Radon		Plant		Meat		Milk		All Pathways*	
adio-	ÄÄÄÄÄÄÄÄÄÄÄÄÄÄÄÄ		ÄÄÄÄÄÄÄÄÄÄÄÄÄÄÄÄ		ÄÄÄÄÄÄÄÄÄÄÄÄÄÄÄÄ		ÄÄÄÄÄÄÄÄÄÄÄÄÄÄÄÄ		ÄÄÄÄÄÄÄÄÄÄÄÄÄÄÄÄ		ÄÄÄÄÄÄÄÄÄÄÄÄÄÄÄÄ		ÄÄÄÄÄÄÄÄÄÄÄÄÄÄÄÄ	
uclide	mrem/yr	fract.	mrem/yr	fract.	mrem/yr	fract.	mrem/yr	fract.	mrem/yr	fract.	mrem/yr	fract.	mrem/yr	fract.
ÄÄÄÄÄÄ	ÄÄÄÄÄÄÄÄÄ	ÄÄÄÄÄÄ	ÄÄÄÄÄÄÄÄÄ	ÄÄÄÄÄÄ	ÄÄÄÄÄÄÄÄÄ	ÄÄÄÄÄÄ	ÄÄÄÄÄÄÄÄÄ	ÄÄÄÄÄÄ	ÄÄÄÄÄÄÄÄÄ	ÄÄÄÄÄÄ	ÄÄÄÄÄÄÄÄÄ	ÄÄÄÄÄÄ	ÄÄÄÄÄÄÄÄÄ	ÄÄÄÄÄÄ
a-226	0.000E+00	0.0000	0.000E+00	0.0000	0.000E+00	0.0000	0.000E+00	0.0000	0.000E+00	0.0000	0.000E+00	0.0000	1.752E-01	0.3538
h-232	0.000E+00	0.0000	0.000E+00	0.0000	0.000E+00	0.0000	0.000E+00	0.0000	0.000E+00	0.0000	0.000E+00	0.0000	3.196E-01	0.6454
-234	0.000E+00	0.0000	0.000E+00	0.0000	0.000E+00	0.0000	0.000E+00	0.0000	0.000E+00	0.0000	0.000E+00	0.0000	5.564E-06	0.0000
-235	0.000E+00	0.0000	0.000E+00	0.0000	0.000E+00	0.0000	0.000E+00	0.0000	0.000E+00	0.0000	0.000E+00	0.0000	1.173E-04	0.0002
-238	0.000E+00	0.0000	0.000E+00	0.0000	0.000E+00	0.0000	0.000E+00	0.0000	0.000E+00	0.0000	0.000E+00	0.0000	2.857E-04	0.0006
íííííí	íííííííííí	íííííí	íííííííííí	íííííí	íííííííííí	íííííí	íííííííííí	íííííí	íííííííííí	íííííí	íííííííííí	íííííí	íííííííííí	íííííí
otal	0.000E+00	0.0000	0.000E+00	0.0000	0.000E+00	0.0000	0.000E+00	0.0000	0.000E+00	0.0000	0.000E+00	0.0000	4.953E-01	1.0000

Sum of all water independent and dependent pathways.

ummary : GKP Recreational Visitor - External
ile : C:\USERS\CLAUDE\DOCUMENTS\0 GKP DOSE\RESRAD CW\GKP RECREATIONAL VISITOR- EXTERNAL R1.RAD

Total Dose Contributions TDOSE(i,p,t) for Individual Radionuclides (i) and Pathways (p)
As mrem/yr and Fraction of Total Dose At t = 3.000E+02 years

Water Independent Pathways (Inhalation excludes radon)

	Ground		Inhalation		Radon		Plant		Meat		Milk		Soil	
adio-	ÄÄÄÄÄÄÄÄÄÄÄÄÄÄÄÄ		ÄÄÄÄÄÄÄÄÄÄÄÄÄÄÄÄ		ÄÄÄÄÄÄÄÄÄÄÄÄÄÄÄÄ		ÄÄÄÄÄÄÄÄÄÄÄÄÄÄÄÄ		ÄÄÄÄÄÄÄÄÄÄÄÄÄÄÄÄ		ÄÄÄÄÄÄÄÄÄÄÄÄÄÄÄÄ		ÄÄÄÄÄÄÄÄÄÄÄÄÄÄÄÄ		ÄÄÄÄÄÄÄÄÄÄÄÄÄÄÄÄ	
uclide	mrem/yr	fract.	mrem/yr	fract.	mrem/yr	fract.	mrem/yr	fract.	mrem/yr	fract.	mrem/yr	fract.	mrem/yr	fract.
ÄÄÄÄÄÄ	ÄÄÄÄÄÄÄÄÄ	ÄÄÄÄÄÄ	ÄÄÄÄÄÄÄÄÄ	ÄÄÄÄÄÄ	ÄÄÄÄÄÄÄÄÄ	ÄÄÄÄÄÄ	ÄÄÄÄÄÄÄÄÄ	ÄÄÄÄÄÄ	ÄÄÄÄÄÄÄÄÄ	ÄÄÄÄÄÄ	ÄÄÄÄÄÄÄÄÄ	ÄÄÄÄÄÄ	ÄÄÄÄÄÄÄÄÄ	ÄÄÄÄÄÄ
a-226	0.000E+00	0.0000	0.000E+00	0.0000	0.000E+00	0.0000	0.000E+00	0.0000	0.000E+00	0.0000	0.000E+00	0.0000	0.000E+00	0.0000
n-232	0.000E+00	0.0000	0.000E+00	0.0000	0.000E+00	0.0000	0.000E+00	0.0000	0.000E+00	0.0000	0.000E+00	0.0000	0.000E+00	0.0000
-234	0.000E+00	0.0000	0.000E+00	0.0000	0.000E+00	0.0000	0.000E+00	0.0000	0.000E+00	0.0000	0.000E+00	0.0000	0.000E+00	0.0000
-235	0.000E+00	0.0000	0.000E+00	0.0000	0.000E+00	0.0000	0.000E+00	0.0000	0.000E+00	0.0000	0.000E+00	0.0000	0.000E+00	0.0000
-238	0.000E+00	0.0000	0.000E+00	0.0000	0.000E+00	0.0000	0.000E+00	0.0000	0.000E+00	0.0000	0.000E+00	0.0000	0.000E+00	0.0000
íííííí	íííííííííí	íííííí	íííííííííí	íííííí	íííííííííí	íííííí	íííííííííí	íííííí	íííííííííí	íííííí	íííííííííí	íííííí	íííííííííí	íííííí
otal	0.000E+00	0.0000	0.000E+00	0.0000	0.000E+00	0.0000	0.000E+00	0.0000	0.000E+00	0.0000	0.000E+00	0.0000	0.000E+00	0.0000

Total Dose Contributions TDOSE(i,p,t) for Individual Radionuclides (i) and Pathways (p)
As mrem/yr and Fraction of Total Dose At t = 3.000E+02 years

Water Dependent Pathways

	Water		Fish		Radon		Plant		Meat		Milk		All Pathways*	
adio-	ÄÄÄÄÄÄÄÄÄÄÄÄÄÄÄÄ		ÄÄÄÄÄÄÄÄÄÄÄÄÄÄÄÄ		ÄÄÄÄÄÄÄÄÄÄÄÄÄÄÄÄ		ÄÄÄÄÄÄÄÄÄÄÄÄÄÄÄÄ		ÄÄÄÄÄÄÄÄÄÄÄÄÄÄÄÄ		ÄÄÄÄÄÄÄÄÄÄÄÄÄÄÄÄ		ÄÄÄÄÄÄÄÄÄÄÄÄÄÄÄÄ	
uclide	mrem/yr	fract.	mrem/yr	fract.	mrem/yr	fract.	mrem/yr	fract.	mrem/yr	fract.	mrem/yr	fract.	mrem/yr	fract.
ÄÄÄÄÄÄ	ÄÄÄÄÄÄÄÄÄ	ÄÄÄÄÄÄ	ÄÄÄÄÄÄÄÄÄ	ÄÄÄÄÄÄ	ÄÄÄÄÄÄÄÄÄ	ÄÄÄÄÄÄ	ÄÄÄÄÄÄÄÄÄ	ÄÄÄÄÄÄ	ÄÄÄÄÄÄÄÄÄ	ÄÄÄÄÄÄ	ÄÄÄÄÄÄÄÄÄ	ÄÄÄÄÄÄ	ÄÄÄÄÄÄÄÄÄ	ÄÄÄÄÄÄ
a-226	0.000E+00	0.0000	0.000E+00	0.0000	0.000E+00	0.0000	0.000E+00	0.0000	0.000E+00	0.0000	0.000E+00	0.0000	0.000E+00	0.0000
n-232	0.000E+00	0.0000	0.000E+00	0.0000	0.000E+00	0.0000	0.000E+00	0.0000	0.000E+00	0.0000	0.000E+00	0.0000	0.000E+00	0.0000
-234	0.000E+00	0.0000	0.000E+00	0.0000	0.000E+00	0.0000	0.000E+00	0.0000	0.000E+00	0.0000	0.000E+00	0.0000	0.000E+00	0.0000
-235	0.000E+00	0.0000	0.000E+00	0.0000	0.000E+00	0.0000	0.000E+00	0.0000	0.000E+00	0.0000	0.000E+00	0.0000	0.000E+00	0.0000
-238	0.000E+00	0.0000	0.000E+00	0.0000	0.000E+00	0.0000	0.000E+00	0.0000	0.000E+00	0.0000	0.000E+00	0.0000	0.000E+00	0.0000
íííííí	íííííííííí	íííííí	íííííííííí	íííííí	íííííííííí	íííííí	íííííííííí	íííííí	íííííííííí	íííííí	íííííííííí	íííííí	íííííííííí	íííííí
otal	0.000E+00	0.0000	0.000E+00	0.0000	0.000E+00	0.0000	0.000E+00	0.0000	0.000E+00	0.0000	0.000E+00	0.0000	0.000E+00	0.0000

Sum of all water independent and dependent pathways.

ummary : GKP Recreational Visitor - External
ile : C:\USERS\CLAUDE\DOCUMENTS\0 GKP DOSE\RESRAD CW\GKP RECREATIONAL VISITOR- EXTERNAL R1.RAD

Total Dose Contributions TDOSE(i,p,t) for Individual Radionuclides (i) and Pathways (p)
As mrem/yr and Fraction of Total Dose At t = 1.000E+03 years

Water Independent Pathways (Inhalation excludes radon)

	Ground		Inhalation		Radon		Plant		Meat		Milk		Soil	
adio-	ÄÄÄÄÄÄÄÄÄÄÄÄÄÄÄÄ		ÄÄÄÄÄÄÄÄÄÄÄÄÄÄÄÄ		ÄÄÄÄÄÄÄÄÄÄÄÄÄÄÄÄ		ÄÄÄÄÄÄÄÄÄÄÄÄÄÄÄÄ		ÄÄÄÄÄÄÄÄÄÄÄÄÄÄÄÄ		ÄÄÄÄÄÄÄÄÄÄÄÄÄÄÄÄ		ÄÄÄÄÄÄÄÄÄÄÄÄÄÄÄÄ	
uclide	mrem/yr	fract.	mrem/yr	fract.	mrem/yr	fract.	mrem/yr	fract.	mrem/yr	fract.	mrem/yr	fract.	mrem/yr	fract.
ÄÄÄÄÄÄ	ÄÄÄÄÄÄÄÄÄ	ÄÄÄÄÄÄ	ÄÄÄÄÄÄÄÄÄ	ÄÄÄÄÄÄ	ÄÄÄÄÄÄÄÄÄ	ÄÄÄÄÄÄ	ÄÄÄÄÄÄÄÄÄ	ÄÄÄÄÄÄ	ÄÄÄÄÄÄÄÄÄ	ÄÄÄÄÄÄ	ÄÄÄÄÄÄÄÄÄ	ÄÄÄÄÄÄ	ÄÄÄÄÄÄÄÄÄ	ÄÄÄÄÄÄ
a-226	0.000E+00	0.0000	0.000E+00	0.0000	0.000E+00	0.0000	0.000E+00	0.0000	0.000E+00	0.0000	0.000E+00	0.0000	0.000E+00	0.0000
h-232	0.000E+00	0.0000	0.000E+00	0.0000	0.000E+00	0.0000	0.000E+00	0.0000	0.000E+00	0.0000	0.000E+00	0.0000	0.000E+00	0.0000
-234	0.000E+00	0.0000	0.000E+00	0.0000	0.000E+00	0.0000	0.000E+00	0.0000	0.000E+00	0.0000	0.000E+00	0.0000	0.000E+00	0.0000
-235	0.000E+00	0.0000	0.000E+00	0.0000	0.000E+00	0.0000	0.000E+00	0.0000	0.000E+00	0.0000	0.000E+00	0.0000	0.000E+00	0.0000
-238	0.000E+00	0.0000	0.000E+00	0.0000	0.000E+00	0.0000	0.000E+00	0.0000	0.000E+00	0.0000	0.000E+00	0.0000	0.000E+00	0.0000
íííííí	íííííííííí	íííííí	íííííííííí	íííííí	íííííííííí	íííííí	íííííííííí	íííííí	íííííííííí	íííííí	íííííííííí	íííííí	íííííííííí	íííííí
otal	0.000E+00	0.0000	0.000E+00	0.0000	0.000E+00	0.0000	0.000E+00	0.0000	0.000E+00	0.0000	0.000E+00	0.0000	0.000E+00	0.0000

Total Dose Contributions TDOSE(i,p,t) for Individual Radionuclides (i) and Pathways (p)
As mrem/yr and Fraction of Total Dose At t = 1.000E+03 years

Water Dependent Pathways

	Water		Fish		Radon		Plant		Meat		Milk		All Pathways*	
adio-	ÄÄÄÄÄÄÄÄÄÄÄÄÄÄÄÄ		ÄÄÄÄÄÄÄÄÄÄÄÄÄÄÄÄ		ÄÄÄÄÄÄÄÄÄÄÄÄÄÄÄÄ		ÄÄÄÄÄÄÄÄÄÄÄÄÄÄÄÄ		ÄÄÄÄÄÄÄÄÄÄÄÄÄÄÄÄ		ÄÄÄÄÄÄÄÄÄÄÄÄÄÄÄÄ		ÄÄÄÄÄÄÄÄÄÄÄÄÄÄÄÄ	
uclide	mrem/yr	fract.	mrem/yr	fract.	mrem/yr	fract.	mrem/yr	fract.	mrem/yr	fract.	mrem/yr	fract.	mrem/yr	fract.
ÄÄÄÄÄÄ	ÄÄÄÄÄÄÄÄÄ	ÄÄÄÄÄÄ	ÄÄÄÄÄÄÄÄÄ	ÄÄÄÄÄÄ	ÄÄÄÄÄÄÄÄÄ	ÄÄÄÄÄÄ	ÄÄÄÄÄÄÄÄÄ	ÄÄÄÄÄÄ	ÄÄÄÄÄÄÄÄÄ	ÄÄÄÄÄÄ	ÄÄÄÄÄÄÄÄÄ	ÄÄÄÄÄÄ	ÄÄÄÄÄÄÄÄÄ	ÄÄÄÄÄÄ
a-226	0.000E+00	0.0000	0.000E+00	0.0000	0.000E+00	0.0000	0.000E+00	0.0000	0.000E+00	0.0000	0.000E+00	0.0000	0.000E+00	0.0000
h-232	0.000E+00	0.0000	0.000E+00	0.0000	0.000E+00	0.0000	0.000E+00	0.0000	0.000E+00	0.0000	0.000E+00	0.0000	0.000E+00	0.0000
-234	0.000E+00	0.0000	0.000E+00	0.0000	0.000E+00	0.0000	0.000E+00	0.0000	0.000E+00	0.0000	0.000E+00	0.0000	0.000E+00	0.0000
-235	0.000E+00	0.0000	0.000E+00	0.0000	0.000E+00	0.0000	0.000E+00	0.0000	0.000E+00	0.0000	0.000E+00	0.0000	0.000E+00	0.0000
-238	0.000E+00	0.0000	0.000E+00	0.0000	0.000E+00	0.0000	0.000E+00	0.0000	0.000E+00	0.0000	0.000E+00	0.0000	0.000E+00	0.0000
íííííí	íííííííííí	íííííí	íííííííííí	íííííí	íííííííííí	íííííí	íííííííííí	íííííí	íííííííííí	íííííí	íííííííííí	íííííí	íííííííííí	íííííí
otal	0.000E+00	0.0000	0.000E+00	0.0000	0.000E+00	0.0000	0.000E+00	0.0000	0.000E+00	0.0000	0.000E+00	0.0000	0.000E+00	0.0000

Sum of all water independent and dependent pathways.

ummary : GKP Recreational Visitor - External
ile : C:\USERS\CLAUDE\DOCUMENTS\0 GKP DOSE\RESRAD CW\GKP RECREATIONAL VISITOR- EXTERNAL R1.RAD

Dose/Source Ratios Summed Over All Pathways
Parent and Progeny Principal Radionuclide Contributions Indicated

Parent (i)	Product (j)	Thread Fraction	DSR(j,t) At Time in Years (mrem/yr)/(pCi/g) 0.000E+00	1.000E+00	3.000E+00	1.000E+01	3.000E+01	1.000E+02	3.000E+02	1.000E+03
ÄÄÄÄÄÄÄÄÄ	ÄÄÄÄÄÄÄÄÄÄ	ÄÄÄÄÄÄÄÄÄ	ÄÄÄÄÄÄÄÄÄ	ÄÄÄÄÄÄÄÄÄ	ÄÄÄÄÄÄÄÄÄ	ÄÄÄÄÄÄÄÄÄ	ÄÄÄÄÄÄÄÄÄ	ÄÄÄÄÄÄÄÄÄ	ÄÄÄÄÄÄÄÄÄ	ÄÄÄÄÄÄÄÄÄ
a-226+D	Ra-226+D	9.996E-01	2.248E-01	2.170E-01	2.022E-01	1.578E-01	7.687E-02	4.793E-03	0.000E+00	0.000E+00
a-226+D	Pb-210+D	9.996E-01	2.241E-06	6.468E-06	1.385E-05	3.068E-05	3.761E-05	6.042E-06	0.000E+00	0.000E+00
a-226+D	äDSR(j)		2.248E-01	2.170E-01	2.022E-01	1.578E-01	7.691E-02	4.799E-03	0.000E+00	0.000E+00
a-226+D	Ra-226+D	1.319E-06	2.967E-07	2.864E-07	2.669E-07	2.083E-07	1.015E-07	6.327E-09	0.000E+00	0.000E+00
a-226+D	Pb-210+D1	1.319E-06	6.555E-12	1.891E-11	4.046E-11	8.928E-11	1.081E-10	1.575E-11	0.000E+00	0.000E+00
a-226+D	äDSR(j)		2.967E-07	2.864E-07	2.669E-07	2.084E-07	1.016E-07	6.343E-09	0.000E+00	0.000E+00
a-226+D	Ra-226+D	1.899E-08	4.270E-09	4.123E-09	3.842E-09	2.998E-09	1.461E-09	9.107E-11	0.000E+00	0.000E+00
a-226+D	Pb-210+D2	1.899E-08	6.968E-14	2.010E-13	4.302E-13	9.501E-13	1.154E-12	1.723E-13	0.000E+00	0.000E+00
a-226+D	äDSR(j)		4.270E-09	4.123E-09	3.842E-09	2.999E-09	1.462E-09	9.124E-11	0.000E+00	0.000E+00
a-226+D1	Ra-226+D1	2.100E-04	4.721E-05	4.557E-05	4.247E-05	3.314E-05	1.615E-05	1.007E-06	0.000E+00	0.000E+00
a-226+D1	Pb-210+D	2.100E-04	4.708E-10	1.359E-09	2.910E-09	6.444E-09	7.899E-09	1.269E-09	0.000E+00	0.000E+00
a-226+D1	äDSR(j)		4.721E-05	4.557E-05	4.247E-05	3.315E-05	1.615E-05	1.008E-06	0.000E+00	0.000E+00
a-226+D1	Ra-226+D1	2.771E-10	6.231E-11	6.016E-11	5.606E-11	4.375E-11	2.131E-11	1.329E-12	0.000E+00	0.000E+00
a-226+D1	Pb-210+D1	2.771E-10	1.377E-15	3.972E-15	8.498E-15	1.875E-14	2.271E-14	3.309E-15	0.000E+00	0.000E+00
a-226+D1	äDSR(j)		6.231E-11	6.016E-11	5.607E-11	4.377E-11	2.133E-11	1.332E-12	0.000E+00	0.000E+00
a-226+D1	Ra-226+D1	3.989E-12	8.969E-13	8.659E-13	8.069E-13	6.297E-13	3.068E-13	1.913E-14	0.000E+00	0.000E+00
a-226+D1	Pb-210+D2	3.989E-12	1.464E-17	4.223E-17	9.036E-17	1.996E-16	2.424E-16	3.619E-17	0.000E+00	0.000E+00
a-226+D1	äDSR(j)		8.969E-13	8.659E-13	8.070E-13	6.299E-13	3.070E-13	1.916E-14	0.000E+00	0.000E+00
a-226+D2	Ra-226+D2	1.998E-04	3.890E-05	3.755E-05	3.498E-05	2.727E-05	1.324E-05	8.133E-07	0.000E+00	0.000E+00
a-226+D2	Pb-210+D	1.998E-04	4.479E-10	1.293E-09	2.768E-09	6.131E-09	7.515E-09	1.207E-09	0.000E+00	0.000E+00
a-226+D2	äDSR(j)		3.890E-05	3.755E-05	3.498E-05	2.727E-05	1.324E-05	8.145E-07	0.000E+00	0.000E+00
a-226+D2	Ra-226+D2	2.637E-10	5.135E-11	4.956E-11	4.617E-11	3.599E-11	1.747E-11	1.074E-12	0.000E+00	0.000E+00
a-226+D2	Pb-210+D1	2.637E-10	1.310E-15	3.779E-15	8.085E-15	1.784E-14	2.161E-14	3.148E-15	0.000E+00	0.000E+00
a-226+D2	äDSR(j)		5.135E-11	4.957E-11	4.618E-11	3.601E-11	1.749E-11	1.077E-12	0.000E+00	0.000E+00
a-226+D2	Ra-226+D2	3.795E-12	7.391E-13	7.134E-13	6.646E-13	5.180E-13	2.515E-13	1.545E-14	0.000E+00	0.000E+00
a-226+D2	Pb-210+D2	3.795E-12	1.393E-17	4.017E-17	8.597E-17	1.899E-16	2.306E-16	3.443E-17	0.000E+00	0.000E+00
a-226+D2	äDSR(j)		7.391E-13	7.134E-13	6.647E-13	5.182E-13	2.517E-13	1.549E-14	0.000E+00	0.000E+00
a-226+D3	Ra-226+D3	4.196E-08	8.170E-09	7.886E-09	7.347E-09	5.727E-09	2.780E-09	1.708E-10	0.000E+00	0.000E+00
a-226+D3	Pb-210+D	4.196E-08	9.408E-14	2.715E-13	5.815E-13	1.288E-12	1.579E-12	2.536E-13	0.000E+00	0.000E+00
a-226+D3	äDSR(j)		8.170E-09	7.886E-09	7.347E-09	5.728E-09	2.782E-09	1.711E-10	0.000E+00	0.000E+00
a-226+D3	Ra-226+D3	5.538E-14	1.078E-14	1.041E-14	9.697E-15	7.559E-15	3.670E-15	2.255E-16	0.000E+00	0.000E+00
a-226+D3	Pb-210+D1	5.538E-14	2.752E-19	7.938E-19	1.698E-18	3.748E-18	4.538E-18	6.612E-19	0.000E+00	0.000E+00
a-226+D3	äDSR(j)		1.078E-14	1.041E-14	9.699E-15	7.563E-15	3.674E-15	2.261E-16	0.000E+00	0.000E+00
a-226+D3	Ra-226+D3	7.972E-16	1.552E-16	1.498E-16	1.396E-16	1.088E-16	5.282E-17	3.246E-18	0.000E+00	0.000E+00
a-226+D3	Pb-210+D2	7.972E-16	2.925E-21	8.438E-21	1.806E-20	3.988E-20	4.844E-20	7.232E-21	0.000E+00	0.000E+00
a-226+D3	äDSR(j)		1.552E-16	1.498E-16	1.396E-16	1.088E-16	5.287E-17	3.253E-18	0.000E+00	0.000E+00

ummary : GKP Recreational Visitor - External
ile : C:\USERS\CLAUDE\DOCUMENTS\0 GKP DOSE\RESRAD CW\GKP RECREATIONAL VISITOR- EXTERNAL R1.RAD

Dose/Source Ratios Summed Over All Pathways
Parent and Progeny Principal Radionuclide Contributions Indicated

Parent (i)	Product (j)	Thread Fraction	DSR(j,t) At Time in Years (mrem/yr)/(pCi/g) 0.000E+00	1.000E+00	3.000E+00	1.000E+01	3.000E+01	1.000E+02	3.000E+02	1.000E+03
ÄÄÄÄÄÄÄÄÄ	ÄÄÄÄÄÄÄÄÄÄ	ÄÄÄÄÄÄÄÄÄ	ÄÄÄÄÄÄÄÄÄ	ÄÄÄÄÄÄÄÄÄ	ÄÄÄÄÄÄÄÄÄ	ÄÄÄÄÄÄÄÄÄ	ÄÄÄÄÄÄÄÄÄ	ÄÄÄÄÄÄÄÄÄ	ÄÄÄÄÄÄÄÄÄ	ÄÄÄÄÄÄÄÄÄ
a-226+D4	Ra-226+D4	2.000E-07	2.106E-10	2.037E-10	1.904E-10	1.504E-10	7.606E-11	5.733E-12	0.000E+00	0.000E+00
a-226+D4	Pb-210+D	2.000E-07	4.485E-13	1.294E-12	2.772E-12	6.138E-12	7.524E-12	1.209E-12	0.000E+00	0.000E+00
a-226+D4	äDSR(j)		2.111E-10	2.050E-10	1.932E-10	1.565E-10	8.359E-11	6.941E-12	0.000E+00	0.000E+00
a-226+D4	Ra-226+D4	2.640E-13	2.780E-16	2.688E-16	2.513E-16	1.985E-16	1.004E-16	7.567E-18	0.000E+00	0.000E+00
a-226+D4	Pb-210+D1	2.640E-13	1.312E-18	3.784E-18	8.095E-18	1.786E-17	2.163E-17	3.152E-18	0.000E+00	0.000E+00
a-226+D4	äDSR(j)		2.793E-16	2.726E-16	2.594E-16	2.163E-16	1.220E-16	1.072E-17	0.000E+00	0.000E+00
a-226+D4	Ra-226+D4	3.800E-15	4.002E-18	3.870E-18	3.618E-18	2.857E-18	1.445E-18	1.089E-19	0.000E+00	0.000E+00
a-226+D4	Pb-210+D2	3.800E-15	1.394E-20	4.022E-20	8.608E-20	1.901E-19	2.309E-19	3.447E-20	0.000E+00	0.000E+00
a-226+D4	äDSR(j)		4.016E-18	3.910E-18	3.704E-18	3.047E-18	1.676E-18	1.434E-19	0.000E+00	0.000E+00
n-232	Th-232	1.000E+00	1.305E-05	1.304E-05	1.303E-05	1.298E-05	1.279E-05	1.059E-05	0.000E+00	0.000E+00
n-232	Ra-228+D	1.000E+00	7.176E-03	2.011E-02	4.053E-02	7.663E-02	8.824E-02	5.290E-02	0.000E+00	0.000E+00
n-232	Th-228+D	1.000E+00	1.272E-03	7.712E-03	2.981E-02	1.011E-01	1.368E-01	8.027E-02	0.000E+00	0.000E+00
n-232	äDSR(j)		8.462E-03	2.783E-02	7.036E-02	1.777E-01	2.251E-01	1.332E-01	0.000E+00	0.000E+00
-234	U-234	9.996E-01	9.897E-06	9.463E-06	8.652E-06	6.319E-06	2.567E-06	9.653E-08	0.000E+00	0.000E+00
-234	Th-230	9.996E-01	1.355E-10	3.985E-10	8.896E-10	2.293E-09	4.480E-09	4.732E-09	0.000E+00	0.000E+00
-234	Ra-226+D	9.996E-01	1.487E-10	1.015E-09	5.079E-09	3.734E-08	1.817E-07	2.987E-07	0.000E+00	0.000E+00
-234	Pb-210+D	9.996E-01	7.458E-16	1.087E-14	1.191E-13	2.513E-12	3.251E-11	1.507E-10	0.000E+00	0.000E+00
-234	äDSR(j)		9.897E-06	9.465E-06	8.657E-06	6.359E-06	2.753E-06	4.001E-07	0.000E+00	0.000E+00
-234	U-234	1.319E-06	1.306E-11	1.249E-11	1.142E-11	8.341E-12	3.388E-12	1.274E-13	0.000E+00	0.000E+00
-234	Th-230	1.319E-06	1.789E-16	5.260E-16	1.174E-15	3.026E-15	5.913E-15	6.246E-15	0.000E+00	0.000E+00
-234	Ra-226+D	1.319E-06	1.962E-16	1.340E-15	6.705E-15	4.928E-14	2.399E-13	3.943E-13	0.000E+00	0.000E+00
-234	Pb-210+D1	1.319E-06	2.181E-21	3.179E-20	3.477E-19	7.312E-18	9.345E-17	3.930E-16	0.000E+00	0.000E+00
-234	äDSR(j)		1.306E-11	1.249E-11	1.143E-11	8.393E-12	3.634E-12	5.284E-13	0.000E+00	0.000E+00
-234	U-234	1.899E-08	1.880E-13	1.798E-13	1.644E-13	1.201E-13	4.877E-14	1.834E-15	0.000E+00	0.000E+00
-234	Th-230	1.899E-08	2.575E-18	7.571E-18	1.690E-17	4.356E-17	8.512E-17	8.991E-17	0.000E+00	0.000E+00
-234	Ra-226+D	1.899E-08	2.824E-18	1.929E-17	9.651E-17	7.094E-16	3.453E-15	5.676E-15	0.000E+00	0.000E+00
-234	Pb-210+D2	1.899E-08	2.319E-23	3.380E-22	3.697E-21	7.782E-20	9.974E-19	4.298E-18	0.000E+00	0.000E+00
-234	äDSR(j)		1.881E-13	1.798E-13	1.645E-13	1.208E-13	5.231E-14	7.604E-15	0.000E+00	0.000E+00
-234	U-234	2.100E-04	2.079E-09	1.988E-09	1.817E-09	1.327E-09	5.391E-10	2.028E-11	0.000E+00	0.000E+00
-234	Th-230	2.100E-04	2.847E-14	8.370E-14	1.869E-13	4.815E-13	9.410E-13	9.939E-13	0.000E+00	0.000E+00
-234	Ra-226+D1	2.100E-04	3.122E-14	2.133E-13	1.067E-12	7.842E-12	3.817E-11	6.274E-11	0.000E+00	0.000E+00
-234	Pb-210+D	2.100E-04	1.567E-19	2.284E-18	2.501E-17	5.278E-16	6.828E-15	3.166E-14	0.000E+00	0.000E+00
-234	äDSR(j)		2.079E-09	1.988E-09	1.818E-09	1.336E-09	5.782E-10	8.404E-11	0.000E+00	0.000E+00
-234	U-234	2.771E-10	2.744E-15	2.624E-15	2.399E-15	1.752E-15	7.117E-16	2.676E-17	0.000E+00	0.000E+00
-234	Th-230	2.771E-10	3.758E-20	1.105E-19	2.467E-19	6.356E-19	1.242E-18	1.312E-18	0.000E+00	0.000E+00
-234	Ra-226+D1	2.771E-10	4.121E-20	2.815E-19	1.408E-18	1.035E-17	5.038E-17	8.282E-17	0.000E+00	0.000E+00
-234	Pb-210+D1	2.771E-10	4.581E-25	6.677E-24	7.304E-23	1.536E-21	1.963E-20	8.254E-20	0.000E+00	0.000E+00
-234	äDSR(j)		2.744E-15	2.624E-15	2.400E-15	1.763E-15	7.633E-16	1.110E-16	0.000E+00	0.000E+00

ummary : GKP Recreational Visitor - External
ile : C:\USERS\CLAUDE\DOCUMENTS\0 GKP DOSE\RESRAD CW\GKP RECREATIONAL VISITOR- EXTERNAL R1.RAD

Dose/Source Ratios Summed Over All Pathways
Parent and Progeny Principal Radionuclide Contributions Indicated

Parent	Product	Thread	DSR(j,t) At Time in Years (mrem/yr)/(pCi/g)							
(i)	(j)	Fraction	0.000E+00	1.000E+00	3.000E+00	1.000E+01	3.000E+01	1.000E+02	3.000E+02	1.000E+03
ÄÄÄÄÄÄÄÄÄ	ÄÄÄÄÄÄÄÄÄÄ	ÄÄÄÄÄÄÄÄÄ	ÄÄÄÄÄÄÄÄÄ	ÄÄÄÄÄÄÄÄÄ	ÄÄÄÄÄÄÄÄÄ	ÄÄÄÄÄÄÄÄÄ	ÄÄÄÄÄÄÄÄÄ	ÄÄÄÄÄÄÄÄÄ	ÄÄÄÄÄÄÄÄÄ	ÄÄÄÄÄÄÄÄÄ
-234	U-234	3.989E-12	3.950E-17	3.777E-17	3.453E-17	2.522E-17	1.024E-17	3.852E-19	0.000E+00	0.000E+00
-234	Th-230	3.989E-12	5.409E-22	1.590E-21	3.550E-21	9.149E-21	1.788E-20	1.889E-20	0.000E+00	0.000E+00
-234	Ra-226+D1	3.989E-12	5.932E-22	4.052E-21	2.027E-20	1.490E-19	7.251E-19	1.192E-18	0.000E+00	0.000E+00
-234	Pb-210+D2	3.989E-12	4.870E-27	7.099E-26	7.766E-25	1.635E-23	2.095E-22	9.028E-22	0.000E+00	0.000E+00
-234	äDSR(j)		3.950E-17	3.777E-17	3.455E-17	2.538E-17	1.099E-17	1.597E-18	0.000E+00	0.000E+00
-234	U-234	1.998E-04	1.978E-09	1.891E-09	1.729E-09	1.263E-09	5.129E-10	1.929E-11	0.000E+00	0.000E+00
-234	Th-230	1.998E-04	2.708E-14	7.963E-14	1.778E-13	4.581E-13	8.953E-13	9.457E-13	0.000E+00	0.000E+00
-234	Ra-226+D2	1.998E-04	2.573E-14	1.757E-13	8.787E-13	6.452E-12	3.129E-11	5.069E-11	0.000E+00	0.000E+00
-234	Pb-210+D	1.998E-04	1.490E-19	2.173E-18	2.379E-17	5.021E-16	6.496E-15	3.012E-14	0.000E+00	0.000E+00
-234	äDSR(j)		1.978E-09	1.891E-09	1.730E-09	1.270E-09	5.451E-10	7.096E-11	0.000E+00	0.000E+00
-234	U-234	2.637E-10	2.611E-15	2.496E-15	2.282E-15	1.667E-15	6.771E-16	2.546E-17	0.000E+00	0.000E+00
-234	Th-230	2.637E-10	3.575E-20	1.051E-19	2.347E-19	6.048E-19	1.182E-18	1.248E-18	0.000E+00	0.000E+00
-234	Ra-226+D2	2.637E-10	3.396E-20	2.319E-19	1.160E-18	8.516E-18	4.130E-17	6.691E-17	0.000E+00	0.000E+00
-234	Pb-210+D1	2.637E-10	4.359E-25	6.353E-24	6.949E-23	1.461E-21	1.868E-20	7.853E-20	0.000E+00	0.000E+00
-234	äDSR(j)		2.611E-15	2.497E-15	2.284E-15	1.676E-15	7.196E-16	9.370E-17	0.000E+00	0.000E+00
-234	U-234	3.795E-12	3.758E-17	3.593E-17	3.285E-17	2.399E-17	9.746E-18	3.665E-19	0.000E+00	0.000E+00
-234	Th-230	3.795E-12	5.146E-22	1.513E-21	3.378E-21	8.705E-21	1.701E-20	1.797E-20	0.000E+00	0.000E+00
-234	Ra-226+D2	3.795E-12	4.888E-22	3.339E-21	1.669E-20	1.226E-19	5.945E-19	9.631E-19	0.000E+00	0.000E+00
-234	Pb-210+D2	3.795E-12	4.633E-27	6.754E-26	7.389E-25	1.555E-23	1.993E-22	8.589E-22	0.000E+00	0.000E+00
-234	äDSR(j)		3.758E-17	3.594E-17	3.287E-17	2.412E-17	1.036E-17	1.348E-18	0.000E+00	0.000E+00
-234	U-234	4.196E-08	4.154E-13	3.972E-13	3.631E-13	2.652E-13	1.077E-13	4.052E-15	0.000E+00	0.000E+00
-234	Th-230	4.196E-08	5.689E-18	1.673E-17	3.734E-17	9.623E-17	1.880E-16	1.986E-16	0.000E+00	0.000E+00
-234	Ra-226+D3	4.196E-08	5.403E-18	3.691E-17	1.845E-16	1.355E-15	6.572E-15	1.065E-14	0.000E+00	0.000E+00
-234	Pb-210+D	4.196E-08	3.131E-23	4.565E-22	4.997E-21	1.055E-19	1.364E-18	6.326E-18	0.000E+00	0.000E+00
-234	äDSR(j)		4.154E-13	3.973E-13	3.634E-13	2.667E-13	1.145E-13	1.490E-14	0.000E+00	0.000E+00
-234	U-234	5.538E-14	5.484E-19	5.243E-19	4.794E-19	3.501E-19	1.422E-19	5.348E-21	0.000E+00	0.000E+00
-234	Th-230	5.538E-14	7.509E-24	2.208E-23	4.929E-23	1.270E-22	2.482E-22	2.622E-22	0.000E+00	0.000E+00
-234	Ra-226+D3	5.538E-14	7.132E-24	4.872E-23	2.436E-22	1.789E-21	8.675E-21	1.405E-20	0.000E+00	0.000E+00
-234	Pb-210+D1	5.538E-14	9.155E-29	1.334E-27	1.460E-26	3.069E-25	3.923E-24	1.649E-23	0.000E+00	0.000E+00
-234	äDSR(j)		5.484E-19	5.244E-19	4.797E-19	3.520E-19	1.511E-19	1.968E-20	0.000E+00	0.000E+00
-234	U-234	7.972E-16	7.893E-21	7.547E-21	6.900E-21	5.040E-21	2.047E-21	7.698E-23	0.000E+00	0.000E+00
-234	Th-230	7.972E-16	1.081E-25	3.178E-25	7.095E-25	1.828E-24	3.573E-24	3.774E-24	0.000E+00	0.000E+00
-234	Ra-226+D3	7.972E-16	1.027E-25	7.012E-25	3.506E-24	2.575E-23	1.249E-22	2.023E-22	0.000E+00	0.000E+00
-234	Pb-210+D2	7.972E-16	9.732E-31	1.419E-29	1.552E-28	3.266E-27	4.187E-26	1.804E-25	0.000E+00	0.000E+00
-234	äDSR(j)		7.894E-21	7.548E-21	6.904E-21	5.067E-21	2.176E-21	2.832E-22	0.000E+00	0.000E+00
-234	U-234	2.000E-07	1.980E-12	1.893E-12	1.731E-12	1.264E-12	5.136E-13	1.931E-14	0.000E+00	0.000E+00
-234	Th-230	2.000E-07	2.712E-17	7.973E-17	1.780E-16	4.587E-16	8.963E-16	9.468E-16	0.000E+00	0.000E+00
-234	Ra-226+D4	2.000E-07	1.394E-19	9.533E-19	4.784E-18	3.558E-17	1.798E-16	3.573E-16	0.000E+00	0.000E+00
-234	Pb-210+D	2.000E-07	1.492E-22	2.176E-21	2.382E-20	5.027E-19	6.504E-18	3.016E-17	0.000E+00	0.000E+00
-234	äDSR(j)		1.980E-12	1.894E-12	1.731E-12	1.265E-12	5.146E-13	2.065E-14	0.000E+00	0.000E+00

ummary : GKP Recreational Visitor - External
ile : C:\USERS\CLAUDE\DOCUMENTS\0 GKP DOSE\RESRAD CW\GKP RECREATIONAL VISITOR- EXTERNAL R1.RAD

Dose/Source Ratios Summed Over All Pathways
Parent and Progeny Principal Radionuclide Contributions Indicated

Parent (i)	Product (j)	Thread Fraction	DSR(j,t) At Time in Years (mrem/yr)/(pCi/g) 0.000E+00	1.000E+00	3.000E+00	1.000E+01	3.000E+01	1.000E+02	3.000E+02	1.000E+03
ÄÄÄÄÄÄÄÄÄ	ÄÄÄÄÄÄÄÄÄÄ	ÄÄÄÄÄÄÄÄÄ	ÄÄÄÄÄÄÄÄÄ	ÄÄÄÄÄÄÄÄÄ	ÄÄÄÄÄÄÄÄÄ	ÄÄÄÄÄÄÄÄÄ	ÄÄÄÄÄÄÄÄÄ	ÄÄÄÄÄÄÄÄÄ	ÄÄÄÄÄÄÄÄÄ	ÄÄÄÄÄÄÄÄÄ
-234	U-234	2.640E-13	2.614E-18	2.499E-18	2.285E-18	1.669E-18	6.779E-19	2.549E-20	0.000E+00	0.000E+00
-234	Th-230	2.640E-13	3.579E-23	1.052E-22	2.350E-22	6.055E-22	1.183E-21	1.250E-21	0.000E+00	0.000E+00
-234	Ra-226+D4	2.640E-13	1.840E-25	1.258E-24	6.314E-24	4.697E-23	2.373E-22	4.716E-22	0.000E+00	0.000E+00
-234	Pb-210+D1	2.640E-13	4.364E-28	6.361E-27	6.957E-26	1.463E-24	1.870E-23	7.863E-23	0.000E+00	0.000E+00
-234	äDSR(j)		2.614E-18	2.499E-18	2.285E-18	1.670E-18	6.793E-19	2.729E-20	0.000E+00	0.000E+00
-234	U-234	3.800E-15	3.762E-20	3.598E-20	3.289E-20	2.402E-20	9.758E-21	3.670E-22	0.000E+00	0.000E+00
-234	Th-230	3.800E-15	5.152E-25	1.515E-24	3.382E-24	8.715E-24	1.703E-23	1.799E-23	0.000E+00	0.000E+00
-234	Ra-226+D4	3.800E-15	2.648E-27	1.811E-26	9.089E-26	6.760E-25	3.416E-24	6.788E-24	0.000E+00	0.000E+00
-234	Pb-210+D2	3.800E-15	4.639E-30	6.762E-29	7.398E-28	1.557E-26	1.996E-25	8.600E-25	0.000E+00	0.000E+00
-234	äDSR(j)		3.763E-20	3.598E-20	3.289E-20	2.403E-20	9.778E-21	3.926E-22	0.000E+00	0.000E+00
-235+D	U-235+D	9.835E-01	1.753E-02	1.674E-02	1.528E-02	1.108E-02	4.389E-03	1.370E-04	0.000E+00	0.000E+00
-235+D	Pa-231	9.835E-01	4.455E-08	1.283E-07	2.732E-07	5.923E-07	6.731E-07	6.485E-08	0.000E+00	0.000E+00
-235+D	Ac-227+D	9.835E-01	4.865E-09	3.185E-08	1.449E-07	7.664E-07	1.588E-06	2.048E-07	0.000E+00	0.000E+00
-235+D	äDSR(j)		1.753E-02	1.674E-02	1.528E-02	1.108E-02	4.392E-03	1.373E-04	0.000E+00	0.000E+00
-235+D	U-235+D	2.722E-03	4.852E-05	4.634E-05	4.229E-05	3.066E-05	1.215E-05	3.793E-07	0.000E+00	0.000E+00
-235+D	Pa-231	2.722E-03	1.233E-10	3.550E-10	7.560E-10	1.639E-09	1.863E-09	1.795E-10	0.000E+00	0.000E+00
-235+D	Ac-227+D1	2.722E-03	1.363E-11	8.926E-11	4.060E-10	2.147E-09	4.448E-09	5.730E-10	0.000E+00	0.000E+00
-235+D	äDSR(j)		4.852E-05	4.634E-05	4.229E-05	3.066E-05	1.215E-05	3.800E-07	0.000E+00	0.000E+00
-235+D	U-235+D	1.376E-02	2.453E-04	2.343E-04	2.138E-04	1.550E-04	6.142E-05	1.918E-06	0.000E+00	0.000E+00
-235+D	Pa-231	1.376E-02	6.233E-10	1.795E-09	3.822E-09	8.287E-09	9.418E-09	9.074E-10	0.000E+00	0.000E+00
-235+D	Ac-227+D2	1.376E-02	5.710E-11	3.739E-10	1.701E-09	8.998E-09	1.866E-08	2.422E-09	0.000E+00	0.000E+00
-235+D	äDSR(j)		2.453E-04	2.343E-04	2.138E-04	1.550E-04	6.145E-05	1.921E-06	0.000E+00	0.000E+00
-235+D	U-235+D	3.809E-05	6.788E-07	6.485E-07	5.917E-07	4.290E-07	1.700E-07	5.307E-09	0.000E+00	0.000E+00
-235+D	Pa-231	3.809E-05	1.725E-12	4.967E-12	1.058E-11	2.294E-11	2.607E-11	2.511E-12	0.000E+00	0.000E+00
-235+D	Ac-227+D3	3.809E-05	1.604E-13	1.050E-12	4.776E-12	2.527E-11	5.238E-11	6.790E-12	0.000E+00	0.000E+00
-235+D	äDSR(j)		6.788E-07	6.485E-07	5.917E-07	4.291E-07	1.701E-07	5.316E-09	0.000E+00	0.000E+00
-235+D	U-235+D	8.257E-07	1.472E-08	1.406E-08	1.283E-08	9.301E-09	3.685E-09	1.151E-10	0.000E+00	0.000E+00
-235+D	Pa-231	8.257E-07	3.740E-14	1.077E-13	2.293E-13	4.973E-13	5.651E-13	5.444E-14	0.000E+00	0.000E+00
-235+D	Ac-227+D4	8.257E-07	1.555E-15	1.018E-14	4.629E-14	2.446E-13	5.049E-13	6.426E-14	0.000E+00	0.000E+00
-235+D	äDSR(j)		1.472E-08	1.406E-08	1.283E-08	9.302E-09	3.686E-09	1.152E-10	0.000E+00	0.000E+00
-235+D	U-235+D	2.285E-09	4.073E-11	3.891E-11	3.550E-11	2.574E-11	1.020E-11	3.184E-13	0.000E+00	0.000E+00
-235+D	Pa-231	2.285E-09	1.035E-16	2.980E-16	6.347E-16	1.376E-15	1.564E-15	1.507E-16	0.000E+00	0.000E+00
-235+D	Ac-227+D5	2.285E-09	4.445E-18	2.910E-17	1.323E-16	6.989E-16	1.442E-15	1.830E-16	0.000E+00	0.000E+00
-235+D	äDSR(j)		4.073E-11	3.891E-11	3.550E-11	2.574E-11	1.020E-11	3.188E-13	0.000E+00	0.000E+00
-238	U-238	5.450E-07	1.457E-12	1.394E-12	1.277E-12	9.371E-13	3.875E-13	1.734E-14	0.000E+00	0.000E+00

ummary : GKP Recreational Visitor - External
ile : C:\USERS\CLAUDE\DOCUMENTS\0 GKP DOSE\RESRAD CW\GKP RECREATIONAL VISITOR- EXTERNAL R1.RAD

Dose/Source Ratios Summed Over All Pathways
Parent and Progeny Principal Radionuclide Contributions Indicated

Parent (i)	Product (j)	Thread Fraction	DSR(j,t) At Time in Years (mrem/yr)/(pCi/g) 0.000E+00	1.000E+00	3.000E+00	1.000E+01	3.000E+01	1.000E+02	3.000E+02	1.000E+03
ÄÄÄÄÄÄÄÄ	ÄÄÄÄÄÄÄÄÄÄ	ÄÄÄÄÄÄÄÄ	ÄÄÄÄÄÄÄÄ	ÄÄÄÄÄÄÄÄ	ÄÄÄÄÄÄÄÄ	ÄÄÄÄÄÄÄÄ	ÄÄÄÄÄÄÄÄ	ÄÄÄÄÄÄÄÄ	ÄÄÄÄÄÄÄÄ	ÄÄÄÄÄÄÄÄ
-238+D	U-238+D	1.599E-03	3.898E-04	3.719E-04	3.384E-04	2.431E-04	9.346E-05	2.547E-06	0.000E+00	0.000E+00
-238+D	U-234	1.599E-03	2.219E-14	6.397E-14	1.366E-13	2.996E-13	3.536E-13	4.383E-14	0.000E+00	0.000E+00
-238+D	Th-230	1.599E-03	2.026E-19	1.382E-18	6.892E-18	5.020E-17	2.413E-16	4.580E-16	0.000E+00	0.000E+00
-238+D	Ra-226+D	1.599E-03	1.670E-19	2.435E-18	2.666E-17	5.619E-16	7.163E-15	2.597E-14	0.000E+00	0.000E+00
-238+D	Pb-210+D	1.599E-03	6.719E-25	2.020E-23	4.756E-22	2.908E-20	1.031E-18	1.202E-17	0.000E+00	0.000E+00
-238+D	äDSR(j)		3.898E-04	3.719E-04	3.384E-04	2.431E-04	9.346E-05	2.547E-06	0.000E+00	0.000E+00
-238+D	U-238+D	2.111E-09	5.146E-10	4.909E-10	4.467E-10	3.209E-10	1.234E-10	3.362E-12	0.000E+00	0.000E+00
-238+D	U-234	2.111E-09	2.929E-20	8.443E-20	1.804E-19	3.955E-19	4.668E-19	5.785E-20	0.000E+00	0.000E+00
-238+D	Th-230	2.111E-09	2.674E-25	1.824E-24	9.098E-24	6.627E-23	3.185E-22	6.045E-22	0.000E+00	0.000E+00
-238+D	Ra-226+D	2.111E-09	2.205E-25	3.214E-24	3.519E-23	7.417E-22	9.455E-21	3.428E-20	0.000E+00	0.000E+00
-238+D	Pb-210+D1	2.111E-09	1.965E-30	5.904E-29	1.389E-27	8.464E-26	2.963E-24	3.133E-23	0.000E+00	0.000E+00
-238+D	äDSR(j)		5.146E-10	4.909E-10	4.467E-10	3.209E-10	1.234E-10	3.362E-12	0.000E+00	0.000E+00
-238+D	U-238+D	3.039E-11	7.406E-12	7.066E-12	6.430E-12	4.619E-12	1.776E-12	4.839E-14	0.000E+00	0.000E+00
-238+D	U-234	3.039E-11	4.216E-22	1.215E-21	2.596E-21	5.693E-21	6.719E-21	8.327E-22	0.000E+00	0.000E+00
-238+D	Th-230	3.039E-11	3.849E-27	2.626E-26	1.310E-25	9.539E-25	4.584E-24	8.702E-24	0.000E+00	0.000E+00
-238+D	Ra-226+D	3.039E-11	3.173E-27	4.627E-26	5.065E-25	1.068E-23	1.361E-22	4.935E-22	0.000E+00	0.000E+00
-238+D	Pb-210+D2	3.039E-11	2.089E-32	6.277E-31	1.477E-29	9.008E-28	3.162E-26	3.427E-25	0.000E+00	0.000E+00
-238+D	äDSR(j)		7.406E-12	7.066E-12	6.430E-12	4.619E-12	1.776E-12	4.839E-14	0.000E+00	0.000E+00
-238+D	U-238+D	3.359E-07	8.188E-08	7.811E-08	7.109E-08	5.106E-08	1.963E-08	5.350E-10	0.000E+00	0.000E+00
-238+D	U-234	3.359E-07	4.660E-18	1.344E-17	2.870E-17	6.294E-17	7.428E-17	9.206E-18	0.000E+00	0.000E+00
-238+D	Th-230	3.359E-07	4.255E-23	2.903E-22	1.448E-21	1.055E-20	5.068E-20	9.620E-20	0.000E+00	0.000E+00
-238+D	Ra-226+D1	3.359E-07	3.508E-23	5.115E-22	5.599E-21	1.180E-19	1.504E-18	5.455E-18	0.000E+00	0.000E+00
-238+D	Pb-210+D	3.359E-07	1.411E-28	4.242E-27	9.989E-26	6.109E-24	2.165E-22	2.524E-21	0.000E+00	0.000E+00
-238+D	äDSR(j)		8.188E-08	7.811E-08	7.109E-08	5.106E-08	1.963E-08	5.350E-10	0.000E+00	0.000E+00
-238+D	U-238+D	4.434E-13	1.081E-13	1.031E-13	9.383E-14	6.740E-14	2.591E-14	7.062E-16	0.000E+00	0.000E+00
-238+D	U-234	4.434E-13	6.152E-24	1.773E-23	3.789E-23	8.307E-23	9.805E-23	1.215E-23	0.000E+00	0.000E+00
-238+D	Th-230	4.434E-13	5.616E-29	3.831E-28	1.911E-27	1.392E-26	6.690E-26	1.270E-25	0.000E+00	0.000E+00
-238+D	Ra-226+D1	4.434E-13	4.630E-29	6.751E-28	7.391E-27	1.558E-25	1.986E-24	7.201E-24	0.000E+00	0.000E+00
-238+D	Pb-210+D1	4.434E-13	4.127E-34	1.240E-32	2.917E-31	1.778E-29	6.223E-28	6.580E-27	0.000E+00	0.000E+00
-238+D	äDSR(j)		1.081E-13	1.031E-13	9.383E-14	6.740E-14	2.591E-14	7.062E-16	0.000E+00	0.000E+00
-238+D	U-238+D	6.383E-15	1.556E-15	1.484E-15	1.351E-15	9.701E-16	3.730E-16	1.016E-17	0.000E+00	0.000E+00
-238+D	U-234	6.383E-15	8.855E-26	2.553E-25	5.453E-25	1.196E-24	1.411E-24	1.749E-25	0.000E+00	0.000E+00
-238+D	Th-230	6.383E-15	8.084E-31	5.515E-30	2.751E-29	2.004E-28	9.629E-28	1.828E-27	0.000E+00	0.000E+00
-238+D	Ra-226+D1	6.383E-15	6.665E-31	9.718E-30	1.064E-28	2.242E-27	2.858E-26	1.036E-25	0.000E+00	0.000E+00
-238+D	Pb-210+D2	6.383E-15	4.387E-36	1.318E-34	3.102E-33	1.892E-31	6.642E-30	7.197E-29	0.000E+00	0.000E+00
-238+D	äDSR(j)		1.556E-15	1.484E-15	1.351E-15	9.701E-16	3.730E-16	1.016E-17	0.000E+00	0.000E+00

ummary : GKP Recreational Visitor - External
ile : C:\USERS\CLAUDE\DOCUMENTS\0 GKP DOSE\RESRAD CW\GKP RECREATIONAL VISITOR- EXTERNAL R1.RAD

Dose/Source Ratios Summed Over All Pathways
Parent and Progeny Principal Radionuclide Contributions Indicated

Parent	Product	Thread	DSR(j,t) At Time in Years (mrem/yr)/(pCi/g)							
(i)	(j)	Fraction	0.000E+00	1.000E+00	3.000E+00	1.000E+01	3.000E+01	1.000E+02	3.000E+02	1.000E+03
ÄÄÄÄÄÄÄÄÄ	ÄÄÄÄÄÄÄÄÄÄ	ÄÄÄÄÄÄÄÄÄ	ÄÄÄÄÄÄÄÄÄ	ÄÄÄÄÄÄÄÄÄ	ÄÄÄÄÄÄÄÄÄ	ÄÄÄÄÄÄÄÄÄ	ÄÄÄÄÄÄÄÄÄ	ÄÄÄÄÄÄÄÄÄ	ÄÄÄÄÄÄÄÄÄ	ÄÄÄÄÄÄÄÄÄ
-238+D	U-238+D	3.196E-07	7.790E-08	7.432E-08	6.763E-08	4.858E-08	1.868E-08	5.090E-10	0.000E+00	0.000E+00
-238+D	U-234	3.196E-07	4.434E-18	1.278E-17	2.731E-17	5.988E-17	7.067E-17	8.759E-18	0.000E+00	0.000E+00
-238+D	Th-230	3.196E-07	4.048E-23	2.762E-22	1.377E-21	1.003E-20	4.822E-20	9.152E-20	0.000E+00	0.000E+00
-238+D	Ra-226+D2	3.196E-07	2.890E-23	4.214E-22	4.612E-21	9.710E-20	1.233E-18	4.407E-18	0.000E+00	0.000E+00
-238+D	Pb-210+D	3.196E-07	1.343E-28	4.036E-27	9.504E-26	5.812E-24	2.059E-22	2.401E-21	0.000E+00	0.000E+00
-238+D	äDSR(j)		7.790E-08	7.432E-08	6.763E-08	4.858E-08	1.868E-08	5.090E-10	0.000E+00	0.000E+00
-238+D	U-238+D	4.219E-13	1.028E-13	9.810E-14	8.927E-14	6.412E-14	2.465E-14	6.719E-16	0.000E+00	0.000E+00
-238+D	U-234	4.219E-13	5.853E-24	1.687E-23	3.605E-23	7.904E-23	9.328E-23	1.156E-23	0.000E+00	0.000E+00
-238+D	Th-230	4.219E-13	5.343E-29	3.645E-28	1.818E-27	1.324E-26	6.365E-26	1.208E-25	0.000E+00	0.000E+00
-238+D	Ra-226+D2	4.219E-13	3.815E-29	5.562E-28	6.088E-27	1.282E-25	1.628E-24	5.818E-24	0.000E+00	0.000E+00
-238+D	Pb-210+D1	4.219E-13	3.927E-34	1.180E-32	2.776E-31	1.691E-29	5.921E-28	6.261E-27	0.000E+00	0.000E+00
-238+D	äDSR(j)		1.028E-13	9.810E-14	8.927E-14	6.412E-14	2.465E-14	6.719E-16	0.000E+00	0.000E+00
-238+D	U-238+D	6.073E-15	1.480E-15	1.412E-15	1.285E-15	9.230E-16	3.549E-16	9.671E-18	0.000E+00	0.000E+00
-238+D	U-234	6.073E-15	8.425E-26	2.429E-25	5.188E-25	1.138E-24	1.343E-24	1.664E-25	0.000E+00	0.000E+00
-238+D	Th-230	6.073E-15	7.691E-31	5.247E-30	2.617E-29	1.906E-28	9.161E-28	1.739E-27	0.000E+00	0.000E+00
-238+D	Ra-226+D2	6.073E-15	5.492E-31	8.006E-30	8.762E-29	1.845E-27	2.343E-26	8.374E-26	0.000E+00	0.000E+00
-238+D	Pb-210+D2	6.073E-15	4.174E-36	1.254E-34	2.951E-33	1.800E-31	6.319E-30	6.848E-29	0.000E+00	0.000E+00
-238+D	äDSR(j)		1.480E-15	1.412E-15	1.285E-15	9.230E-16	3.549E-16	9.671E-18	0.000E+00	0.000E+00
-238+D	U-238+D	6.713E-11	1.636E-11	1.561E-11	1.421E-11	1.020E-11	3.923E-12	1.069E-13	0.000E+00	0.000E+00
-238+D	U-234	6.713E-11	9.313E-22	2.685E-21	5.736E-21	1.258E-20	1.484E-20	1.840E-21	0.000E+00	0.000E+00
-238+D	Th-230	6.713E-11	8.503E-27	5.801E-26	2.893E-25	2.107E-24	1.013E-23	1.922E-23	0.000E+00	0.000E+00
-238+D	Ra-226+D3	6.713E-11	6.071E-27	8.850E-26	9.686E-25	2.039E-23	2.590E-22	9.257E-22	0.000E+00	0.000E+00
-238+D	Pb-210+D	6.713E-11	2.820E-32	8.478E-31	1.996E-29	1.221E-27	4.326E-26	5.044E-25	0.000E+00	0.000E+00
-238+D	äDSR(j)		1.636E-11	1.561E-11	1.421E-11	1.020E-11	3.923E-12	1.069E-13	0.000E+00	0.000E+00
-238+D	U-238+D	8.862E-17	2.160E-17	2.060E-17	1.875E-17	1.347E-17	5.178E-18	1.411E-19	0.000E+00	0.000E+00
-238+D	U-234	8.862E-17	1.229E-27	3.544E-27	7.571E-27	1.660E-26	1.959E-26	2.428E-27	0.000E+00	0.000E+00
-238+D	Th-230	8.862E-17	1.122E-32	7.657E-32	3.819E-31	2.782E-30	1.337E-29	2.538E-29	0.000E+00	0.000E+00
-238+D	Ra-226+D3	8.862E-17	8.013E-33	1.168E-31	1.279E-30	2.692E-29	3.419E-28	1.222E-27	0.000E+00	0.000E+00
-238+D	Pb-210+D1	8.862E-17	8.248E-38	2.478E-36	5.830E-35	3.553E-33	1.244E-31	1.315E-30	0.000E+00	0.000E+00
-238+D	äDSR(j)		2.160E-17	2.060E-17	1.875E-17	1.347E-17	5.178E-18	1.411E-19	0.000E+00	0.000E+00
-238+D	U-238+D	1.276E-18	3.109E-19	2.966E-19	2.699E-19	1.939E-19	7.454E-20	2.031E-21	0.000E+00	0.000E+00
-238+D	U-234	1.276E-18	1.770E-29	5.101E-29	1.090E-28	2.390E-28	2.820E-28	3.495E-29	0.000E+00	0.000E+00
-238+D	Th-230	1.276E-18	1.616E-34	1.102E-33	5.497E-33	4.004E-32	1.924E-31	3.653E-31	0.000E+00	0.000E+00
-238+D	Ra-226+D3	1.276E-18	1.153E-34	1.682E-33	1.840E-32	3.875E-31	4.922E-30	1.759E-29	0.000E+00	0.000E+00
-238+D	Pb-210+D2	1.276E-18	8.767E-40	2.635E-38	6.199E-37	3.781E-35	1.327E-33	1.438E-32	0.000E+00	0.000E+00
-238+D	äDSR(j)		3.109E-19	2.966E-19	2.699E-19	1.939E-19	7.454E-20	2.031E-21	0.000E+00	0.000E+00

ummary : GKP Recreational Visitor - External
ile : C:\USERS\CLAUDE\DOCUMENTS\0 GKP DOSE\RESRAD CW\GKP RECREATIONAL VISITOR- EXTERNAL R1.RAD

Dose/Source Ratios Summed Over All Pathways
Parent and Progeny Principal Radionuclide Contributions Indicated

Parent (i)	Product (j)	Thread Fraction	DSR(j,t) At Time in Years (mrem/yr)/(pCi/g) 0.000E+00	1.000E+00	3.000E+00	1.000E+01	3.000E+01	1.000E+02	3.000E+02	1.000E+03
ÄÄÄÄÄÄÄÄÄ	ÄÄÄÄÄÄÄÄÄÄ	ÄÄÄÄÄÄÄÄÄ	ÄÄÄÄÄÄÄÄÄ	ÄÄÄÄÄÄÄÄÄ	ÄÄÄÄÄÄÄÄÄ	ÄÄÄÄÄÄÄÄÄ	ÄÄÄÄÄÄÄÄÄ	ÄÄÄÄÄÄÄÄÄ	ÄÄÄÄÄÄÄÄÄ	ÄÄÄÄÄÄÄÄÄ
-238+D	U-238+D	3.200E-10	7.799E-11	7.441E-11	6.771E-11	4.864E-11	1.870E-11	5.096E-13	0.000E+00	0.000E+00
-238+D	U-234	3.200E-10	4.439E-21	1.280E-20	2.734E-20	5.995E-20	7.075E-20	8.769E-21	0.000E+00	0.000E+00
-238+D	Th-230	3.200E-10	4.053E-26	2.765E-25	1.379E-24	1.005E-23	4.828E-23	9.163E-23	0.000E+00	0.000E+00
-238+D	Ra-226+D4	3.200E-10	1.566E-28	2.286E-27	2.511E-26	5.355E-25	7.087E-24	3.106E-23	0.000E+00	0.000E+00
-238+D	Pb-210+D	3.200E-10	1.344E-31	4.041E-30	9.516E-29	5.819E-27	2.062E-25	2.404E-24	0.000E+00	0.000E+00
-238+D	äDSR(j)		7.799E-11	7.441E-11	6.771E-11	4.864E-11	1.870E-11	5.096E-13	0.000E+00	0.000E+00
-238+D	U-238+D	4.224E-16	1.030E-16	9.822E-17	8.938E-17	6.420E-17	2.468E-17	6.727E-19	0.000E+00	0.000E+00
-238+D	U-234	4.224E-16	5.860E-27	1.689E-26	3.609E-26	7.913E-26	9.340E-26	1.158E-26	0.000E+00	0.000E+00
-238+D	Th-230	4.224E-16	5.350E-32	3.650E-31	1.820E-30	1.326E-29	6.373E-29	1.210E-28	0.000E+00	0.000E+00
-238+D	Ra-226+D4	4.224E-16	2.067E-34	3.018E-33	3.314E-32	7.068E-31	9.355E-30	4.100E-29	0.000E+00	0.000E+00
-238+D	Pb-210+D1	4.224E-16	3.931E-37	1.181E-35	2.779E-34	1.693E-32	5.928E-31	6.268E-30	0.000E+00	0.000E+00
-238+D	äDSR(j)		1.030E-16	9.822E-17	8.938E-17	6.420E-17	2.468E-17	6.727E-19	0.000E+00	0.000E+00
-238+D	U-238+D	6.080E-18	1.482E-18	1.414E-18	1.287E-18	9.241E-19	3.553E-19	9.683E-21	0.000E+00	0.000E+00
-238+D	U-234	6.080E-18	8.435E-29	2.432E-28	5.195E-28	1.139E-27	1.344E-27	1.666E-28	0.000E+00	0.000E+00
-238+D	Th-230	6.080E-18	7.701E-34	5.253E-33	2.620E-32	1.909E-31	9.173E-31	1.741E-30	0.000E+00	0.000E+00
-238+D	Ra-226+D4	6.080E-18	2.975E-36	4.344E-35	4.771E-34	1.017E-32	1.347E-31	5.902E-31	0.000E+00	0.000E+00
-238+D	Pb-210+D2	6.080E-18	4.179E-39	1.256E-37	2.955E-36	1.802E-34	6.327E-33	6.856E-32	0.000E+00	0.000E+00
-238+D	äDSR(j)		1.482E-18	1.414E-18	1.287E-18	9.241E-19	3.553E-19	9.683E-21	0.000E+00	0.000E+00
-238+D1	U-238+D1	9.980E-01	2.472E-03	2.359E-03	2.150E-03	1.551E-03	6.053E-04	1.800E-05	0.000E+00	0.000E+00
-238+D1	U-234	9.980E-01	1.385E-11	3.991E-11	8.527E-11	1.870E-10	2.207E-10	2.735E-11	0.000E+00	0.000E+00
-238+D1	Th-230	9.980E-01	1.264E-16	8.623E-16	4.301E-15	3.133E-14	1.506E-13	2.858E-13	0.000E+00	0.000E+00
-238+D1	Ra-226+D	9.980E-01	1.042E-16	1.520E-15	1.664E-14	3.506E-13	4.469E-12	1.621E-11	0.000E+00	0.000E+00
-238+D1	Pb-210+D	9.980E-01	4.193E-22	1.260E-20	2.968E-19	1.815E-17	6.431E-16	7.498E-15	0.000E+00	0.000E+00
-238+D1	äDSR(j)		2.472E-03	2.359E-03	2.150E-03	1.551E-03	6.053E-04	1.800E-05	0.000E+00	0.000E+00
-238+D1	U-238+D1	1.317E-06	3.263E-09	3.115E-09	2.838E-09	2.047E-09	7.990E-10	2.376E-11	0.000E+00	0.000E+00
-238+D1	U-234	1.317E-06	1.828E-17	5.269E-17	1.126E-16	2.468E-16	2.913E-16	3.610E-17	0.000E+00	0.000E+00
-238+D1	Th-230	1.317E-06	1.668E-22	1.138E-21	5.677E-21	4.135E-20	1.987E-19	3.772E-19	0.000E+00	0.000E+00
-238+D1	Ra-226+D	1.317E-06	1.376E-22	2.006E-21	2.196E-20	4.628E-19	5.900E-18	2.139E-17	0.000E+00	0.000E+00
-238+D1	Pb-210+D1	1.317E-06	1.226E-27	3.684E-26	8.667E-25	5.282E-23	1.849E-21	1.955E-20	0.000E+00	0.000E+00
-238+D1	äDSR(j)		3.263E-09	3.115E-09	2.838E-09	2.047E-09	7.990E-10	2.376E-11	0.000E+00	0.000E+00
-238+D1	U-238+D1	1.896E-08	4.696E-11	4.483E-11	4.085E-11	2.947E-11	1.150E-11	3.420E-13	0.000E+00	0.000E+00
-238+D1	U-234	1.896E-08	2.631E-19	7.584E-19	1.620E-18	3.552E-18	4.193E-18	5.196E-19	0.000E+00	0.000E+00
-238+D1	Th-230	1.896E-08	2.402E-24	1.638E-23	8.171E-23	5.952E-22	2.861E-21	5.430E-21	0.000E+00	0.000E+00
-238+D1	Ra-226+D	1.896E-08	1.980E-24	2.887E-23	3.161E-22	6.662E-21	8.492E-20	3.079E-19	0.000E+00	0.000E+00
-238+D1	Pb-210+D2	1.896E-08	1.303E-29	3.917E-28	9.216E-27	5.621E-25	1.973E-23	2.138E-22	0.000E+00	0.000E+00
-238+D1	äDSR(j)		4.696E-11	4.483E-11	4.085E-11	2.947E-11	1.150E-11	3.420E-13	0.000E+00	0.000E+00

ummary : GKP Recreational Visitor - External
ile : C:\USERS\CLAUDE\DOCUMENTS\0 GKP DOSE\RESRAD CW\GKP RECREATIONAL VISITOR- EXTERNAL R1.RAD

Dose/Source Ratios Summed Over All Pathways
Parent and Progeny Principal Radionuclide Contributions Indicated

Parent (i)	Product (j)	Thread Fraction	DSR(j,t) At Time in Years (mrem/yr)/(pCi/g) 0.000E+00	1.000E+00	3.000E+00	1.000E+01	3.000E+01	1.000E+02	3.000E+02	1.000E+03
ÄÄÄÄÄÄÄÄ	ÄÄÄÄÄÄÄÄÄÄ	ÄÄÄÄÄÄÄÄ	ÄÄÄÄÄÄÄÄ	ÄÄÄÄÄÄÄÄ	ÄÄÄÄÄÄÄÄ	ÄÄÄÄÄÄÄÄ	ÄÄÄÄÄÄÄÄ	ÄÄÄÄÄÄÄÄ	ÄÄÄÄÄÄÄÄ	ÄÄÄÄÄÄÄÄ
-238+D1	U-238+D1	2.096E-04	5.192E-07	4.956E-07	4.516E-07	3.258E-07	1.271E-07	3.780E-09	0.000E+00	0.000E+00
-238+D1	U-234	2.096E-04	2.908E-15	8.384E-15	1.791E-14	3.927E-14	4.635E-14	5.744E-15	0.000E+00	0.000E+00
-238+D1	Th-230	2.096E-04	2.655E-20	1.811E-19	9.033E-19	6.580E-18	3.162E-17	6.003E-17	0.000E+00	0.000E+00
-238+D1	Ra-226+D1	2.096E-04	2.189E-20	3.192E-19	3.494E-18	7.364E-17	9.387E-16	3.404E-15	0.000E+00	0.000E+00
-238+D1	Pb-210+D	2.096E-04	8.806E-26	2.647E-24	6.233E-23	3.812E-21	1.351E-19	1.575E-18	0.000E+00	0.000E+00
-238+D1	äDSR(j)		5.192E-07	4.956E-07	4.516E-07	3.258E-07	1.271E-07	3.780E-09	0.000E+00	0.000E+00
-238+D1	U-238+D1	2.767E-10	6.853E-13	6.542E-13	5.961E-13	4.300E-13	1.678E-13	4.990E-15	0.000E+00	0.000E+00
-238+D1	U-234	2.767E-10	3.839E-21	1.107E-20	2.364E-20	5.184E-20	6.118E-20	7.583E-21	0.000E+00	0.000E+00
-238+D1	Th-230	2.767E-10	3.505E-26	2.391E-25	1.192E-24	8.686E-24	4.174E-23	7.923E-23	0.000E+00	0.000E+00
-238+D1	Ra-226+D1	2.767E-10	2.889E-26	4.213E-25	4.612E-24	9.721E-23	1.239E-21	4.493E-21	0.000E+00	0.000E+00
-238+D1	Pb-210+D1	2.767E-10	2.575E-31	7.739E-30	1.820E-28	1.109E-26	3.883E-25	4.106E-24	0.000E+00	0.000E+00
-238+D1	äDSR(j)		6.853E-13	6.542E-13	5.961E-13	4.300E-13	1.678E-13	4.990E-15	0.000E+00	0.000E+00
-238+D1	U-238+D1	3.983E-12	9.864E-15	9.416E-15	8.580E-15	6.190E-15	2.416E-15	7.183E-17	0.000E+00	0.000E+00
-238+D1	U-234	3.983E-12	5.525E-23	1.593E-22	3.403E-22	7.462E-22	8.806E-22	1.091E-22	0.000E+00	0.000E+00
-238+D1	Th-230	3.983E-12	5.044E-28	3.441E-27	1.716E-26	1.250E-25	6.009E-25	1.140E-24	0.000E+00	0.000E+00
-238+D1	Ra-226+D1	3.983E-12	4.159E-28	6.064E-27	6.639E-26	1.399E-24	1.784E-23	6.468E-23	0.000E+00	0.000E+00
-238+D1	Pb-210+D2	3.983E-12	2.738E-33	8.227E-32	1.936E-30	1.181E-28	4.145E-27	4.491E-26	0.000E+00	0.000E+00
-238+D1	äDSR(j)		9.864E-15	9.416E-15	8.580E-15	6.190E-15	2.416E-15	7.183E-17	0.000E+00	0.000E+00
-238+D1	U-238+D1	1.994E-04	4.940E-07	4.715E-07	4.296E-07	3.100E-07	1.210E-07	3.597E-09	0.000E+00	0.000E+00
-238+D1	U-234	1.994E-04	2.767E-15	7.976E-15	1.704E-14	3.736E-14	4.410E-14	5.465E-15	0.000E+00	0.000E+00
-238+D1	Th-230	1.994E-04	2.526E-20	1.723E-19	8.595E-19	6.261E-18	3.009E-17	5.711E-17	0.000E+00	0.000E+00
-238+D1	Ra-226+D2	1.994E-04	1.804E-20	2.629E-19	2.878E-18	6.059E-17	7.696E-16	2.750E-15	0.000E+00	0.000E+00
-238+D1	Pb-210+D	1.994E-04	8.378E-26	2.519E-24	5.930E-23	3.627E-21	1.285E-19	1.498E-18	0.000E+00	0.000E+00
-238+D1	äDSR(j)		4.940E-07	4.715E-07	4.296E-07	3.100E-07	1.210E-07	3.597E-09	0.000E+00	0.000E+00
-238+D1	U-238+D1	2.633E-10	6.520E-13	6.224E-13	5.671E-13	4.092E-13	1.597E-13	4.748E-15	0.000E+00	0.000E+00
-238+D1	U-234	2.633E-10	3.652E-21	1.053E-20	2.249E-20	4.932E-20	5.821E-20	7.214E-21	0.000E+00	0.000E+00
-238+D1	Th-230	2.633E-10	3.334E-26	2.275E-25	1.134E-24	8.264E-24	3.972E-23	7.539E-23	0.000E+00	0.000E+00
-238+D1	Ra-226+D2	2.633E-10	2.381E-26	3.471E-25	3.799E-24	7.998E-23	1.016E-21	3.630E-21	0.000E+00	0.000E+00
-238+D1	Pb-210+D1	2.633E-10	2.450E-31	7.363E-30	1.732E-28	1.055E-26	3.695E-25	3.907E-24	0.000E+00	0.000E+00
-238+D1	äDSR(j)		6.520E-13	6.224E-13	5.671E-13	4.092E-13	1.597E-13	4.748E-15	0.000E+00	0.000E+00
-238+D1	U-238+D1	3.789E-12	9.385E-15	8.959E-15	8.163E-15	5.889E-15	2.298E-15	6.834E-17	0.000E+00	0.000E+00
-238+D1	U-234	3.789E-12	5.257E-23	1.516E-22	3.238E-22	7.099E-22	8.378E-22	1.038E-22	0.000E+00	0.000E+00
-238+D1	Th-230	3.789E-12	4.799E-28	3.274E-27	1.633E-26	1.189E-25	5.717E-25	1.085E-24	0.000E+00	0.000E+00
-238+D1	Ra-226+D2	3.789E-12	3.427E-28	4.996E-27	5.468E-26	1.151E-24	1.462E-23	5.225E-23	0.000E+00	0.000E+00
-238+D1	Pb-210+D2	3.789E-12	2.605E-33	7.827E-32	1.842E-30	1.123E-28	3.943E-27	4.273E-26	0.000E+00	0.000E+00
-238+D1	äDSR(j)		9.385E-15	8.959E-15	8.163E-15	5.889E-15	2.298E-15	6.834E-17	0.000E+00	0.000E+00

ummary : GKP Recreational Visitor - External
ile : C:\USERS\CLAUDE\DOCUMENTS\0 GKP DOSE\RESRAD CW\GKP RECREATIONAL VISITOR- EXTERNAL R1.RAD

Dose/Source Ratios Summed Over All Pathways
Parent and Progeny Principal Radionuclide Contributions Indicated

Parent (i)	Product (j)	Thread Fraction	DSR(j,t) At Time in Years (mrem/yr)/(pCi/g) 0.000E+00	1.000E+00	3.000E+00	1.000E+01	3.000E+01	1.000E+02	3.000E+02	1.000E+03
ÄÄÄÄÄÄÄÄÄ	ÄÄÄÄÄÄÄÄÄÄ	ÄÄÄÄÄÄÄÄÄ	ÄÄÄÄÄÄÄÄÄ	ÄÄÄÄÄÄÄÄÄ	ÄÄÄÄÄÄÄÄÄ	ÄÄÄÄÄÄÄÄÄ	ÄÄÄÄÄÄÄÄÄ	ÄÄÄÄÄÄÄÄÄ	ÄÄÄÄÄÄÄÄÄ	ÄÄÄÄÄÄÄÄÄ
-238+D1	U-238+D1	4.189E-08	1.038E-10	9.904E-11	9.024E-11	6.511E-11	2.541E-11	7.555E-13	0.000E+00	0.000E+00
-238+D1	U-234	4.189E-08	5.812E-19	1.675E-18	3.579E-18	7.848E-18	9.262E-18	1.148E-18	0.000E+00	0.000E+00
-238+D1	Th-230	4.189E-08	5.306E-24	3.620E-23	1.805E-22	1.315E-21	6.320E-21	1.200E-20	0.000E+00	0.000E+00
-238+D1	Ra-226+D3	4.189E-08	3.788E-24	5.523E-23	6.044E-22	1.273E-20	1.616E-19	5.776E-19	0.000E+00	0.000E+00
-238+D1	Pb-210+D	4.189E-08	1.760E-29	5.290E-28	1.246E-26	7.618E-25	2.699E-23	3.147E-22	0.000E+00	0.000E+00
-238+D1	äDSR(j)		1.038E-10	9.904E-11	9.024E-11	6.511E-11	2.541E-11	7.555E-13	0.000E+00	0.000E+00
-238+D1	U-238+D1	5.530E-14	1.370E-16	1.307E-16	1.191E-16	8.594E-17	3.354E-17	9.973E-19	0.000E+00	0.000E+00
-238+D1	U-234	5.530E-14	7.671E-25	2.212E-24	4.724E-24	1.036E-23	1.223E-23	1.515E-24	0.000E+00	0.000E+00
-238+D1	Th-230	5.530E-14	7.003E-30	4.778E-29	2.383E-28	1.736E-27	8.342E-27	1.583E-26	0.000E+00	0.000E+00
-238+D1	Ra-226+D3	5.530E-14	5.000E-30	7.290E-29	7.978E-28	1.680E-26	2.134E-25	7.624E-25	0.000E+00	0.000E+00
-238+D1	Pb-210+D1	5.530E-14	5.146E-35	1.546E-33	3.638E-32	2.217E-30	7.760E-29	8.206E-28	0.000E+00	0.000E+00
-238+D1	äDSR(j)		1.370E-16	1.307E-16	1.191E-16	8.594E-17	3.354E-17	9.973E-19	0.000E+00	0.000E+00
-238+D1	U-238+D1	7.959E-16	1.971E-18	1.882E-18	1.715E-18	1.237E-18	4.827E-19	1.435E-20	0.000E+00	0.000E+00
-238+D1	U-234	7.959E-16	1.104E-26	3.183E-26	6.800E-26	1.491E-25	1.760E-25	2.181E-26	0.000E+00	0.000E+00
-238+D1	Th-230	7.959E-16	1.008E-31	6.877E-31	3.430E-30	2.498E-29	1.201E-28	2.279E-28	0.000E+00	0.000E+00
-238+D1	Ra-226+D3	7.959E-16	7.197E-32	1.049E-30	1.148E-29	2.418E-28	3.071E-27	1.097E-26	0.000E+00	0.000E+00
-238+D1	Pb-210+D2	7.959E-16	5.471E-37	1.644E-35	3.868E-34	2.359E-32	8.282E-31	8.975E-30	0.000E+00	0.000E+00
-238+D1	äDSR(j)		1.971E-18	1.882E-18	1.715E-18	1.237E-18	4.827E-19	1.435E-20	0.000E+00	0.000E+00
-238+D1	U-238+D1	1.997E-07	4.946E-10	4.721E-10	4.301E-10	3.103E-10	1.211E-10	3.601E-12	0.000E+00	0.000E+00
-238+D1	U-234	1.997E-07	2.770E-18	7.986E-18	1.706E-17	3.741E-17	4.415E-17	5.472E-18	0.000E+00	0.000E+00
-238+D1	Th-230	1.997E-07	2.529E-23	1.725E-22	8.605E-22	6.268E-21	3.012E-20	5.718E-20	0.000E+00	0.000E+00
-238+D1	Ra-226+D4	1.997E-07	9.771E-26	1.427E-24	1.567E-23	3.341E-22	4.423E-21	1.938E-20	0.000E+00	0.000E+00
-238+D1	Pb-210+D	1.997E-07	8.388E-29	2.522E-27	5.938E-26	3.631E-24	1.287E-22	1.500E-21	0.000E+00	0.000E+00
-238+D1	äDSR(j)		4.946E-10	4.721E-10	4.301E-10	3.103E-10	1.211E-10	3.601E-12	0.000E+00	0.000E+00
-238+D1	U-238+D1	2.636E-13	6.528E-16	6.232E-16	5.678E-16	4.097E-16	1.599E-16	4.754E-18	0.000E+00	0.000E+00
-238+D1	U-234	2.636E-13	3.657E-24	1.054E-23	2.252E-23	4.938E-23	5.828E-23	7.223E-24	0.000E+00	0.000E+00
-238+D1	Th-230	2.636E-13	3.338E-29	2.277E-28	1.136E-27	8.274E-27	3.976E-26	7.548E-26	0.000E+00	0.000E+00
-238+D1	Ra-226+D4	2.636E-13	1.290E-31	1.883E-30	2.068E-29	4.411E-28	5.838E-27	2.559E-26	0.000E+00	0.000E+00
-238+D1	Pb-210+D1	2.636E-13	2.453E-34	7.372E-33	1.734E-31	1.057E-29	3.699E-28	3.911E-27	0.000E+00	0.000E+00
-238+D1	äDSR(j)		6.528E-16	6.232E-16	5.678E-16	4.097E-16	1.599E-16	4.754E-18	0.000E+00	0.000E+00
-238+D1	U-238+D1	3.794E-15	9.397E-18	8.970E-18	8.173E-18	5.897E-18	2.301E-18	6.842E-20	0.000E+00	0.000E+00
-238+D1	U-234	3.794E-15	5.263E-26	1.517E-25	3.241E-25	7.108E-25	8.389E-25	1.040E-25	0.000E+00	0.000E+00
-238+D1	Th-230	3.794E-15	4.805E-31	3.278E-30	1.635E-29	1.191E-28	5.724E-28	1.086E-27	0.000E+00	0.000E+00
-238+D1	Ra-226+D4	3.794E-15	1.856E-33	2.711E-32	2.977E-31	6.349E-30	8.403E-29	3.683E-28	0.000E+00	0.000E+00
-238+D1	Pb-210+D2	3.794E-15	2.608E-36	7.837E-35	1.844E-33	1.125E-31	3.948E-30	4.278E-29	0.000E+00	0.000E+00
-238+D1	äDSR(j)		9.397E-18	8.970E-18	8.173E-18	5.897E-18	2.301E-18	6.842E-20	0.000E+00	0.000E+00
ÍÍÍÍÍÍÍÍÍ	ÍÍÍÍÍÍÍÍÍÍ	ÍÍÍÍÍÍÍÍÍ	ÍÍÍÍÍÍÍÍÍ	ÍÍÍÍÍÍÍÍÍ	ÍÍÍÍÍÍÍÍÍ	ÍÍÍÍÍÍÍÍÍ	ÍÍÍÍÍÍÍÍÍ	ÍÍÍÍÍÍÍÍÍ	ÍÍÍÍÍÍÍÍÍ	ÍÍÍÍÍÍÍÍÍ

ne DSR includes contributions from associated (half-life ó 180 days) daughters.

ummary : GKP Recreational Visitor - External
ile : C:\USERS\CLAUDE\DOCUMENTS\0 GKP DOSE\RESRAD CW\GKP RECREATIONAL VISITOR- EXTERNAL R1.RAD

Single Radionuclide Soil Guidelines G(i,t) in pCi/g
Basic Radiation Dose Limit = 2.500E+01 mrem/yr

uclide (i)	t= 0.000E+00	1.000E+00	3.000E+00	1.000E+01	3.000E+01	1.000E+02	3.000E+02	1.000E+03
ÄÄÄÄÄÄ	ÄÄÄÄÄÄÄÄÄÄ	ÄÄÄÄÄÄÄÄÄÄ	ÄÄÄÄÄÄÄÄÄÄ	ÄÄÄÄÄÄÄÄÄÄ	ÄÄÄÄÄÄÄÄÄÄ	ÄÄÄÄÄÄÄÄÄÄ	ÄÄÄÄÄÄÄÄÄÄ	ÄÄÄÄÄÄÄÄÄÄ
a-226	1.112E+02	1.152E+02	1.236E+02	1.583E+02	3.249E+02	5.207E+03	*9.885E+11	*9.885E+11
n-232	2.954E+03	8.983E+02	3.553E+02	1.407E+02	1.111E+02	1.877E+02	*1.097E+05	*1.097E+05
-234	2.525E+06	2.640E+06	2.886E+06	3.930E+06	9.077E+06	6.245E+07	*6.222E+09	*6.222E+09
-235	1.403E+03	1.468E+03	1.609E+03	2.219E+03	5.599E+03	1.791E+05	*2.160E+06	*2.160E+06
-238	8.733E+03	9.149E+03	1.004E+04	1.393E+04	3.576E+04	*3.361E+05	*3.361E+05	*3.361E+05
íííííí	íííííííííí	íííííííííí	íííííííííí	íííííííííí	íííííííííí	íííííííííí	íííííííííí	íííííííííí

At specific activity limit

Summed Dose/Source Ratios DSR(i,t) in (mrem/yr)/(pCi/g)
and Single Radionuclide Soil Guidelines G(i,t) in pCi/g
at tmin = time of minimum single radionuclide soil guideline
and at tmax = time of maximum total dose = 0.000E+00 years

uclide (i)	Initial (pCi/g)	tmin (years)	DSR(i,tmin)	G(i,tmin) (pCi/g)	DSR(i,tmax)	G(i,tmax) (pCi/g)
ÄÄÄÄÄÄ	ÄÄÄÄÄÄÄÄÄÄ	ÄÄÄÄÄÄÄÄÄÄÄÄÄÄÄÄ	ÄÄÄÄÄÄÄÄÄÄ	ÄÄÄÄÄÄÄÄÄÄ	ÄÄÄÄÄÄÄÄÄÄ	ÄÄÄÄÄÄÄÄÄÄ
a-226	3.650E+01	0.000E+00	2.248E-01	1.112E+02	2.248E-01	1.112E+02
n-232	2.400E+00	25.50 ñ 0.05	2.264E-01	1.104E+02	8.462E-03	2.954E+03
-234	1.390E+01	0.000E+00	9.902E-06	2.525E+06	9.902E-06	2.525E+06
-235	8.400E-01	0.000E+00	1.782E-02	1.403E+03	1.782E-02	1.403E+03
-238	1.390E+01	0.000E+00	2.863E-03	8.733E+03	2.863E-03	8.733E+03
íííííí	íííííííííí	íííííííííííííííííí	íííííííííí	íííííííííí	íííííííííí	íííííííííí

ummary : GKP Recreational Visitor - External
ile : C:\USERS\CLAUDE\DOCUMENTS\0 GKP DOSE\RESRAD CW\GKP RECREATIONAL VISITOR- EXTERNAL R1.RAD

Individual Nuclide Dose Summed Over All Pathways
Parent Nuclide and Branch Fraction Indicated

uclide (j)	Parent (i)	THF(i)	DOSE(j,t), mrem/yr t= 0.000E+00	1.000E+00	3.000E+00	1.000E+01	3.000E+01	1.000E+02	3.000E+02	1.000E+03
ÄÄÄÄÄÄ	ÄÄÄÄÄÄÄ	ÄÄÄÄÄÄÄÄÄ	ÄÄÄÄÄÄÄÄÄ	ÄÄÄÄÄÄÄÄÄ	ÄÄÄÄÄÄÄÄÄ	ÄÄÄÄÄÄÄÄÄ	ÄÄÄÄÄÄÄÄÄ	ÄÄÄÄÄÄÄÄÄ	ÄÄÄÄÄÄÄÄÄ	ÄÄÄÄÄÄÄÄÄ
a-226	Ra-226	9.996E-01	8.204E+00	7.920E+00	7.380E+00	5.759E+00	2.806E+00	1.749E-01	0.000E+00	0.000E+00
a-226	Ra-226	1.319E-06	1.083E-05	1.045E-05	9.742E-06	7.602E-06	3.704E-06	2.309E-07	0.000E+00	0.000E+00
a-226	U-234	9.996E-01	2.066E-09	1.411E-08	7.060E-08	5.190E-07	2.526E-06	4.152E-06	0.000E+00	0.000E+00
a-226	U-234	1.319E-06	2.727E-15	1.863E-14	9.320E-14	6.850E-13	3.334E-12	5.481E-12	0.000E+00	0.000E+00
a-226	U-234	1.899E-08	3.926E-17	2.682E-16	1.341E-15	9.860E-15	4.799E-14	7.889E-14	0.000E+00	0.000E+00
a-226	U-238	1.599E-03	2.321E-18	3.385E-17	3.706E-16	7.811E-15	9.956E-14	3.610E-13	0.000E+00	0.000E+00
a-226	U-238	2.111E-09	3.064E-24	4.468E-23	4.892E-22	1.031E-20	1.314E-19	4.765E-19	0.000E+00	0.000E+00
a-226	U-238	3.039E-11	4.411E-26	6.431E-25	7.041E-24	1.484E-22	1.892E-21	6.859E-21	0.000E+00	0.000E+00
a-226	U-238	9.980E-01	1.449E-15	2.112E-14	2.312E-13	4.874E-12	6.213E-11	2.253E-10	0.000E+00	0.000E+00
a-226	U-238	1.317E-06	1.912E-21	2.788E-20	3.052E-19	6.433E-18	8.201E-17	2.974E-16	0.000E+00	0.000E+00
a-226	U-238	1.896E-08	2.752E-23	4.013E-22	4.393E-21	9.260E-20	1.180E-18	4.280E-18	0.000E+00	0.000E+00
a-226	äDOSE(j)		8.204E+00	7.920E+00	7.380E+00	5.759E+00	2.806E+00	1.749E-01	0.000E+00	0.000E+00
o-210	Ra-226	9.996E-01	8.181E-05	2.361E-04	5.056E-04	1.120E-03	1.373E-03	2.205E-04	0.000E+00	0.000E+00
o-210	Ra-226	2.100E-04	1.718E-08	4.959E-08	1.062E-07	2.352E-07	2.883E-07	4.632E-08	0.000E+00	0.000E+00
o-210	Ra-226	1.998E-04	1.635E-08	4.718E-08	1.010E-07	2.238E-07	2.743E-07	4.407E-08	0.000E+00	0.000E+00
o-210	Ra-226	4.196E-08	3.434E-12	9.910E-12	2.122E-11	4.700E-11	5.762E-11	9.257E-12	0.000E+00	0.000E+00
o-210	Ra-226	2.000E-07	1.637E-11	4.724E-11	1.012E-10	2.240E-10	2.746E-10	4.412E-11	0.000E+00	0.000E+00
o-210	U-234	9.996E-01	1.037E-14	1.512E-13	1.655E-12	3.493E-11	4.518E-10	2.095E-09	0.000E+00	0.000E+00
o-210	U-234	2.100E-04	2.178E-18	3.175E-17	3.476E-16	7.336E-15	9.491E-14	4.400E-13	0.000E+00	0.000E+00
o-210	U-234	1.998E-04	2.072E-18	3.021E-17	3.307E-16	6.980E-15	9.030E-14	4.187E-13	0.000E+00	0.000E+00
o-210	U-234	4.196E-08	4.352E-22	6.345E-21	6.946E-20	1.466E-18	1.897E-17	8.794E-17	0.000E+00	0.000E+00
o-210	U-234	2.000E-07	2.074E-21	3.024E-20	3.311E-19	6.988E-18	9.041E-17	4.192E-16	0.000E+00	0.000E+00
o-210	U-238	1.599E-03	9.339E-24	2.808E-22	6.611E-21	4.043E-19	1.432E-17	1.670E-16	0.000E+00	0.000E+00
o-210	U-238	3.359E-07	1.962E-27	5.897E-26	1.389E-24	8.492E-23	3.009E-21	3.508E-20	0.000E+00	0.000E+00
o-210	U-238	3.196E-07	1.866E-27	5.611E-26	1.321E-24	8.079E-23	2.863E-21	3.338E-20	0.000E+00	0.000E+00
o-210	U-238	6.713E-11	0.000E+00	0.000E+00	2.775E-28	1.697E-26	6.013E-25	7.011E-24	0.000E+00	0.000E+00
o-210	U-238	3.200E-10	0.000E+00	5.617E-29	1.323E-27	8.089E-26	2.866E-24	3.342E-23	0.000E+00	0.000E+00
o-210	U-238	9.980E-01	5.828E-21	1.752E-19	4.125E-18	2.523E-16	8.939E-15	1.042E-13	0.000E+00	0.000E+00
o-210	U-238	2.096E-04	1.224E-24	3.680E-23	8.664E-22	5.299E-20	1.878E-18	2.189E-17	0.000E+00	0.000E+00
o-210	U-238	1.994E-04	1.165E-24	3.501E-23	8.243E-22	5.041E-20	1.786E-18	2.083E-17	0.000E+00	0.000E+00
o-210	U-238	4.189E-08	2.446E-28	7.354E-27	1.731E-25	1.059E-23	3.752E-22	4.375E-21	0.000E+00	0.000E+00
o-210	U-238	1.997E-07	1.166E-27	3.505E-26	8.253E-25	5.047E-23	1.788E-21	2.085E-20	0.000E+00	0.000E+00
o-210	äDOSE(j)		8.184E-05	2.362E-04	5.058E-04	1.120E-03	1.373E-03	2.206E-04	0.000E+00	0.000E+00
o-210	Ra-226	1.319E-06	2.393E-10	6.902E-10	1.477E-09	3.259E-09	3.946E-09	5.750E-10	0.000E+00	0.000E+00
o-210	Ra-226	1.899E-08	2.543E-12	7.338E-12	1.570E-11	3.468E-11	4.212E-11	6.289E-12	0.000E+00	0.000E+00
o-210	Ra-226	2.771E-10	5.026E-14	1.450E-13	3.102E-13	6.845E-13	8.289E-13	1.208E-13	0.000E+00	0.000E+00
o-210	Ra-226	2.637E-10	4.781E-14	1.379E-13	2.951E-13	6.512E-13	7.886E-13	1.149E-13	0.000E+00	0.000E+00
o-210	Ra-226	5.538E-14	1.004E-17	2.897E-17	6.199E-17	1.368E-16	1.656E-16	2.414E-17	0.000E+00	0.000E+00
o-210	Ra-226	2.640E-13	4.787E-17	1.381E-16	2.955E-16	6.520E-16	7.896E-16	1.150E-16	0.000E+00	0.000E+00
o-210	U-234	1.319E-06	3.032E-20	4.419E-19	4.833E-18	1.016E-16	1.299E-15	5.462E-15	0.000E+00	0.000E+00
o-210	U-234	2.771E-10	6.368E-24	9.281E-23	1.015E-21	2.135E-20	2.728E-19	1.147E-18	0.000E+00	0.000E+00
o-210	U-234	2.637E-10	6.059E-24	8.830E-23	9.659E-22	2.031E-20	2.596E-19	1.092E-18	0.000E+00	0.000E+00
o-210	U-234	5.538E-14	1.273E-27	1.855E-26	2.029E-25	4.266E-24	5.453E-23	2.293E-22	0.000E+00	0.000E+00
o-210	U-234	2.640E-13	6.066E-27	8.841E-26	9.670E-25	2.034E-23	2.599E-22	1.093E-21	0.000E+00	0.000E+00
o-210	U-238	2.111E-09	2.731E-29	8.207E-28	1.931E-26	1.176E-24	4.118E-23	4.355E-22	0.000E+00	0.000E+00
o-210	U-238	4.434E-13	0.000E+00	0.000E+00	0.000E+00	2.471E-28	8.650E-27	9.147E-26	0.000E+00	0.000E+00
o-210	U-238	4.219E-13	0.000E+00	0.000E+00	0.000E+00	2.351E-28	8.230E-27	8.702E-26	0.000E+00	0.000E+00

ummary : GKP Recreational Visitor - External
ile : C:\USERS\CLAUDE\DOCUMENTS\0 GKP DOSE\RESRAD CW\GKP RECREATIONAL VISITOR- EXTERNAL R1.RAD

Individual Nuclide Dose Summed Over All Pathways
Parent Nuclide and Branch Fraction Indicated

uclide	Parent	THF(i)	DOSE(j,t), mrem/yr							
(j)	(i)	t=	0.000E+00	1.000E+00	3.000E+00	1.000E+01	3.000E+01	1.000E+02	3.000E+02	1.000E+03
ÄÄÄÄÄ	ÄÄÄÄÄÄ	ÄÄÄÄÄÄÄÄ	ÄÄÄÄÄÄÄÄÄ	ÄÄÄÄÄÄÄÄÄ	ÄÄÄÄÄÄÄÄÄ	ÄÄÄÄÄÄÄÄÄ	ÄÄÄÄÄÄÄÄÄ	ÄÄÄÄÄÄÄÄÄ	ÄÄÄÄÄÄÄÄÄ	ÄÄÄÄÄÄÄÄÄ
o-210	U-238	8.862E-17	0.000E+00	0.000E+00	0.000E+00	0.000E+00	0.000E+00	1.828E-29	0.000E+00	0.000E+00
o-210	U-238	4.224E-16	0.000E+00	0.000E+00	0.000E+00	0.000E+00	0.000E+00	8.713E-29	0.000E+00	0.000E+00
o-210	U-238	1.317E-06	1.704E-26	5.121E-25	1.205E-23	7.341E-22	2.570E-20	2.717E-19	0.000E+00	0.000E+00
o-210	U-238	2.767E-10	0.000E+00	1.076E-28	2.530E-27	1.542E-25	5.398E-24	5.708E-23	0.000E+00	0.000E+00
o-210	U-238	2.633E-10	0.000E+00	1.023E-28	2.407E-27	1.467E-25	5.135E-24	5.430E-23	0.000E+00	0.000E+00
o-210	U-238	5.530E-14	0.000E+00	0.000E+00	0.000E+00	3.082E-29	1.079E-27	1.141E-26	0.000E+00	0.000E+00
o-210	U-238	2.636E-13	0.000E+00	0.000E+00	0.000E+00	1.469E-28	5.142E-27	5.437E-26	0.000E+00	0.000E+00
o-210	äDOSE(j)		2.419E-10	6.978E-10	1.493E-09	3.295E-09	3.990E-09	5.815E-10	0.000E+00	0.000E+00
a-226	Ra-226	1.899E-08	1.559E-07	1.505E-07	1.402E-07	1.094E-07	5.331E-08	3.324E-09	0.000E+00	0.000E+00
a-226	Ra-226	2.100E-04	1.723E-03	1.663E-03	1.550E-03	1.210E-03	5.893E-04	3.674E-05	0.000E+00	0.000E+00
a-226	äDOSE(j)		1.723E-03	1.664E-03	1.550E-03	1.210E-03	5.894E-04	3.675E-05	0.000E+00	0.000E+00
a-226	Ra-226	2.771E-10	2.274E-09	2.196E-09	2.046E-09	1.597E-09	7.779E-10	4.850E-11	0.000E+00	0.000E+00
a-226	Ra-226	3.989E-12	3.274E-11	3.160E-11	2.945E-11	2.298E-11	1.120E-11	6.981E-13	0.000E+00	0.000E+00
a-226	äDOSE(j)		2.307E-09	2.227E-09	2.076E-09	1.620E-09	7.891E-10	4.920E-11	0.000E+00	0.000E+00
o-210	Ra-226	3.989E-12	5.342E-16	1.541E-15	3.298E-15	7.284E-15	8.847E-15	1.321E-15	0.000E+00	0.000E+00
o-210	Ra-226	3.795E-12	5.083E-16	1.466E-15	3.138E-15	6.930E-15	8.417E-15	1.257E-15	0.000E+00	0.000E+00
o-210	Ra-226	7.972E-16	1.068E-19	3.080E-19	6.591E-19	1.456E-18	1.768E-18	2.640E-19	0.000E+00	0.000E+00
o-210	Ra-226	3.800E-15	5.089E-19	1.468E-18	3.142E-18	6.939E-18	8.427E-18	1.258E-18	0.000E+00	0.000E+00
o-210	U-234	1.899E-08	3.223E-22	4.698E-21	5.139E-20	1.082E-18	1.386E-17	5.974E-17	0.000E+00	0.000E+00
o-210	U-234	3.989E-12	6.769E-26	9.867E-25	1.079E-23	2.272E-22	2.912E-21	1.255E-20	0.000E+00	0.000E+00
o-210	U-234	3.795E-12	6.441E-26	9.388E-25	1.027E-23	2.162E-22	2.771E-21	1.194E-20	0.000E+00	0.000E+00
o-210	U-234	7.972E-16	0.000E+00	1.972E-28	2.157E-27	4.540E-26	5.820E-25	2.508E-24	0.000E+00	0.000E+00
o-210	U-234	3.800E-15	6.448E-29	9.399E-28	1.028E-26	2.164E-25	2.774E-24	1.195E-23	0.000E+00	0.000E+00
o-210	U-238	3.039E-11	0.000E+00	0.000E+00	2.053E-28	1.252E-26	4.395E-25	4.763E-24	0.000E+00	0.000E+00
o-210	U-238	6.383E-15	0.000E+00	0.000E+00	0.000E+00	0.000E+00	9.232E-29	1.000E-27	0.000E+00	0.000E+00
o-210	U-238	6.073E-15	0.000E+00	0.000E+00	0.000E+00	0.000E+00	8.784E-29	9.518E-28	0.000E+00	0.000E+00
o-210	U-238	1.276E-18	0.000E+00	0.000E+00	0.000E+00	0.000E+00	0.000E+00	0.000E+00	0.000E+00	0.000E+00
o-210	U-238	6.080E-18	0.000E+00	0.000E+00	0.000E+00	0.000E+00	0.000E+00	0.000E+00	0.000E+00	0.000E+00
o-210	U-238	1.896E-08	1.812E-28	5.444E-27	1.281E-25	7.813E-24	2.743E-22	2.972E-21	0.000E+00	0.000E+00
o-210	U-238	3.983E-12	0.000E+00	0.000E+00	2.691E-29	1.641E-27	5.761E-26	6.243E-25	0.000E+00	0.000E+00
o-210	U-238	3.789E-12	0.000E+00	0.000E+00	2.560E-29	1.561E-27	5.481E-26	5.939E-25	0.000E+00	0.000E+00
o-210	U-238	7.959E-16	0.000E+00	0.000E+00	0.000E+00	0.000E+00	0.000E+00	1.248E-28	0.000E+00	0.000E+00
o-210	U-238	3.794E-15	0.000E+00	0.000E+00	0.000E+00	0.000E+00	5.488E-29	5.947E-28	0.000E+00	0.000E+00
o-210	äDOSE(j)		1.043E-15	3.009E-15	6.440E-15	1.422E-14	1.729E-14	2.639E-15	0.000E+00	0.000E+00
a-226	Ra-226	1.998E-04	1.420E-03	1.370E-03	1.277E-03	9.952E-04	4.831E-04	2.969E-05	0.000E+00	0.000E+00
a-226	Ra-226	2.637E-10	1.874E-09	1.809E-09	1.685E-09	1.314E-09	6.377E-10	3.919E-11	0.000E+00	0.000E+00
a-226	U-234	1.998E-04	3.576E-13	2.442E-12	1.221E-11	8.968E-11	4.349E-10	7.046E-10	0.000E+00	0.000E+00
a-226	U-234	2.637E-10	4.720E-19	3.224E-18	1.612E-17	1.184E-16	5.741E-16	9.301E-16	0.000E+00	0.000E+00
a-226	U-234	3.795E-12	6.794E-21	4.641E-20	2.321E-19	1.704E-18	8.264E-18	1.339E-17	0.000E+00	0.000E+00
a-226	U-238	3.196E-07	4.018E-22	5.857E-21	6.410E-20	1.350E-18	1.714E-17	6.126E-17	0.000E+00	0.000E+00
a-226	U-238	4.219E-13	5.303E-28	7.731E-27	8.462E-26	1.782E-24	2.263E-23	8.086E-23	0.000E+00	0.000E+00
a-226	U-238	6.073E-15	0.000E+00	1.113E-28	1.218E-27	2.564E-26	3.257E-25	1.164E-24	0.000E+00	0.000E+00
a-226	U-238	1.994E-04	2.507E-19	3.655E-18	4.000E-17	8.422E-16	1.070E-14	3.823E-14	0.000E+00	0.000E+00
a-226	U-238	2.633E-10	3.309E-25	4.824E-24	5.280E-23	1.112E-21	1.412E-20	5.046E-20	0.000E+00	0.000E+00
a-226	U-238	3.789E-12	4.763E-27	6.944E-26	7.600E-25	1.600E-23	2.033E-22	7.263E-22	0.000E+00	0.000E+00
a-226	äDOSE(j)		1.420E-03	1.370E-03	1.277E-03	9.952E-04	4.831E-04	2.969E-05	0.000E+00	0.000E+00

ummary : GKP Recreational Visitor - External
ile : C:\USERS\CLAUDE\DOCUMENTS\0 GKP DOSE\RESRAD CW\GKP RECREATIONAL VISITOR- EXTERNAL R1.RAD

Individual Nuclide Dose Summed Over All Pathways
Parent Nuclide and Branch Fraction Indicated

uclide (j)	Parent (i)	THF(i)	DOSE(j,t), mrem/yr t= 0.000E+00	1.000E+00	3.000E+00	1.000E+01	3.000E+01	1.000E+02	3.000E+02	1.000E+03
ÄÄÄÄÄÄ	ÄÄÄÄÄÄÄÄ	ÄÄÄÄÄÄÄÄÄÄ	ÄÄÄÄÄÄÄÄÄÄ	ÄÄÄÄÄÄÄÄÄÄ	ÄÄÄÄÄÄÄÄÄÄ	ÄÄÄÄÄÄÄÄÄÄ	ÄÄÄÄÄÄÄÄÄÄ	ÄÄÄÄÄÄÄÄÄÄ	ÄÄÄÄÄÄÄÄÄÄ	ÄÄÄÄÄÄÄÄÄÄ
a-226	Ra-226	3.795E-12	2.698E-11	2.604E-11	2.426E-11	1.891E-11	9.180E-12	5.640E-13	0.000E+00	0.000E+00
a-226	Ra-226	4.196E-08	2.982E-07	2.878E-07	2.681E-07	2.090E-07	1.015E-07	6.235E-09	0.000E+00	0.000E+00
a-226	äDOSE(j)		2.982E-07	2.879E-07	2.682E-07	2.090E-07	1.015E-07	6.236E-09	0.000E+00	0.000E+00
a-226	Ra-226	5.538E-14	3.936E-13	3.799E-13	3.540E-13	2.759E-13	1.339E-13	8.230E-15	0.000E+00	0.000E+00
a-226	Ra-226	7.972E-16	5.666E-15	5.469E-15	5.095E-15	3.971E-15	1.928E-15	1.185E-16	0.000E+00	0.000E+00
a-226	äDOSE(j)		3.993E-13	3.854E-13	3.591E-13	2.799E-13	1.359E-13	8.349E-15	0.000E+00	0.000E+00
a-226	Ra-226	2.000E-07	7.688E-09	7.434E-09	6.950E-09	5.488E-09	2.776E-09	2.092E-10	0.000E+00	0.000E+00
a-226	Ra-226	2.640E-13	1.015E-14	9.813E-15	9.174E-15	7.245E-15	3.665E-15	2.762E-16	0.000E+00	0.000E+00
a-226	U-234	2.000E-07	1.937E-18	1.325E-17	6.649E-17	4.946E-16	2.499E-15	4.966E-15	0.000E+00	0.000E+00
a-226	U-234	2.640E-13	2.557E-24	1.749E-23	8.777E-23	6.528E-22	3.299E-21	6.556E-21	0.000E+00	0.000E+00
a-226	U-234	3.800E-15	3.681E-26	2.518E-25	1.263E-24	9.397E-24	4.749E-23	9.436E-23	0.000E+00	0.000E+00
a-226	U-238	3.200E-10	2.174E-27	3.178E-26	3.490E-25	7.443E-24	9.851E-23	4.318E-22	0.000E+00	0.000E+00
a-226	U-238	4.224E-16	0.000E+00	0.000E+00	0.000E+00	0.000E+00	1.299E-28	5.697E-28	0.000E+00	0.000E+00
a-226	U-238	6.080E-18	0.000E+00	0.000E+00	0.000E+00	0.000E+00	0.000E+00	0.000E+00	0.000E+00	0.000E+00
a-226	U-238	1.997E-07	1.358E-24	1.983E-23	2.178E-22	4.645E-21	6.147E-20	2.694E-19	0.000E+00	0.000E+00
a-226	U-238	2.636E-13	0.000E+00	2.615E-29	2.872E-28	6.125E-27	8.114E-26	3.557E-25	0.000E+00	0.000E+00
a-226	U-238	3.794E-15	0.000E+00	0.000E+00	0.000E+00	8.816E-29	1.167E-27	5.117E-27	0.000E+00	0.000E+00
a-226	äDOSE(j)		7.688E-09	7.434E-09	6.950E-09	5.488E-09	2.776E-09	2.092E-10	0.000E+00	0.000E+00
a-226	Ra-226	3.800E-15	1.461E-16	1.412E-16	1.321E-16	1.043E-16	5.275E-17	3.976E-18	0.000E+00	0.000E+00
n-232	Th-232	1.000E+00	3.132E-05	3.130E-05	3.127E-05	3.114E-05	3.070E-05	2.542E-05	0.000E+00	0.000E+00
a-228	Th-232	1.000E+00	1.722E-02	4.826E-02	9.728E-02	1.839E-01	2.118E-01	1.270E-01	0.000E+00	0.000E+00
n-228	Th-232	1.000E+00	3.053E-03	1.851E-02	7.155E-02	2.426E-01	3.284E-01	1.927E-01	0.000E+00	0.000E+00
-234	U-234	9.996E-01	1.376E-04	1.315E-04	1.203E-04	8.783E-05	3.568E-05	1.342E-06	0.000E+00	0.000E+00
-234	U-234	1.319E-06	1.816E-10	1.736E-10	1.587E-10	1.159E-10	4.709E-11	1.771E-12	0.000E+00	0.000E+00
-234	U-238	1.599E-03	3.084E-13	8.891E-13	1.899E-12	4.165E-12	4.915E-12	6.092E-13	0.000E+00	0.000E+00
-234	U-238	2.111E-09	4.071E-19	1.174E-18	2.507E-18	5.498E-18	6.488E-18	8.042E-19	0.000E+00	0.000E+00
-234	U-238	3.039E-11	5.860E-21	1.689E-20	3.609E-20	7.913E-20	9.339E-20	1.158E-20	0.000E+00	0.000E+00
-234	U-238	3.359E-07	6.478E-17	1.868E-16	3.989E-16	8.748E-16	1.032E-15	1.280E-16	0.000E+00	0.000E+00
-234	U-238	4.434E-13	8.551E-23	2.465E-22	5.266E-22	1.155E-21	1.363E-21	1.689E-22	0.000E+00	0.000E+00
-234	U-238	6.383E-15	1.231E-24	3.548E-24	7.580E-24	1.662E-23	1.962E-23	2.431E-24	0.000E+00	0.000E+00
-234	U-238	3.196E-07	6.163E-17	1.777E-16	3.796E-16	8.323E-16	9.823E-16	1.217E-16	0.000E+00	0.000E+00
-234	U-238	4.219E-13	8.136E-23	2.345E-22	5.010E-22	1.099E-21	1.297E-21	1.607E-22	0.000E+00	0.000E+00
-234	U-238	6.073E-15	1.171E-24	3.376E-24	7.212E-24	1.581E-23	1.866E-23	2.313E-24	0.000E+00	0.000E+00
-234	U-238	6.713E-11	1.295E-20	3.732E-20	7.973E-20	1.748E-19	2.063E-19	2.557E-20	0.000E+00	0.000E+00
-234	U-238	8.862E-17	1.709E-26	4.926E-26	1.052E-25	2.308E-25	2.723E-25	3.376E-26	0.000E+00	0.000E+00
-234	U-238	1.276E-18	2.460E-28	7.091E-28	1.515E-27	3.322E-27	3.920E-27	4.859E-28	0.000E+00	0.000E+00
-234	U-238	3.200E-10	6.171E-20	1.779E-19	3.800E-19	8.333E-19	9.835E-19	1.219E-19	0.000E+00	0.000E+00
-234	U-238	4.224E-16	8.145E-26	2.348E-25	5.016E-25	1.100E-24	1.298E-24	1.609E-25	0.000E+00	0.000E+00
-234	U-238	6.080E-18	1.172E-27	3.380E-27	7.221E-27	1.583E-26	1.869E-26	2.316E-27	0.000E+00	0.000E+00
-234	U-238	9.980E-01	1.924E-10	5.548E-10	1.185E-09	2.599E-09	3.067E-09	3.802E-10	0.000E+00	0.000E+00
-234	U-238	1.317E-06	2.540E-16	7.323E-16	1.564E-15	3.430E-15	4.049E-15	5.018E-16	0.000E+00	0.000E+00
-234	U-238	1.896E-08	3.657E-18	1.054E-17	2.252E-17	4.938E-17	5.828E-17	7.223E-18	0.000E+00	0.000E+00

ummary : GKP Recreational Visitor - External
ile : C:\USERS\CLAUDE\DOCUMENTS\0 GKP DOSE\RESRAD CW\GKP RECREATIONAL VISITOR- EXTERNAL R1.RAD

Individual Nuclide Dose Summed Over All Pathways
Parent Nuclide and Branch Fraction Indicated

uclide (j)	Parent (i)	THF(i)	DOSE(j,t), mrem/yr t= 0.000E+00	1.000E+00	3.000E+00	1.000E+01	3.000E+01	1.000E+02	3.000E+02	1.000E+03
ÄÄÄÄÄ	ÄÄÄÄÄÄ	ÄÄÄÄÄÄÄÄ	ÄÄÄÄÄÄÄÄ	ÄÄÄÄÄÄÄÄ	ÄÄÄÄÄÄÄÄ	ÄÄÄÄÄÄÄÄ	ÄÄÄÄÄÄÄÄ	ÄÄÄÄÄÄÄÄ	ÄÄÄÄÄÄÄÄ	ÄÄÄÄÄÄÄÄ
-234	U-238	2.096E-04	4.042E-14	1.165E-13	2.489E-13	5.459E-13	6.442E-13	7.985E-14	0.000E+00	0.000E+00
-234	U-238	2.767E-10	5.336E-20	1.538E-19	3.286E-19	7.206E-19	8.504E-19	1.054E-19	0.000E+00	0.000E+00
-234	U-238	3.983E-12	7.680E-22	2.214E-21	4.730E-21	1.037E-20	1.224E-20	1.517E-21	0.000E+00	0.000E+00
-234	U-238	1.994E-04	3.846E-14	1.109E-13	2.369E-13	5.194E-13	6.130E-13	7.597E-14	0.000E+00	0.000E+00
-234	U-238	2.633E-10	5.077E-20	1.464E-19	3.126E-19	6.855E-19	8.091E-19	1.003E-19	0.000E+00	0.000E+00
-234	U-238	3.789E-12	7.307E-22	2.107E-21	4.500E-21	9.868E-21	1.165E-20	1.443E-21	0.000E+00	0.000E+00
-234	U-238	4.189E-08	8.078E-18	2.329E-17	4.975E-17	1.091E-16	1.287E-16	1.596E-17	0.000E+00	0.000E+00
-234	U-238	5.530E-14	1.066E-23	3.074E-23	6.567E-23	1.440E-22	1.699E-22	2.106E-23	0.000E+00	0.000E+00
-234	U-238	7.959E-16	1.535E-25	4.425E-25	9.452E-25	2.073E-24	2.446E-24	3.032E-25	0.000E+00	0.000E+00
-234	U-238	1.997E-07	3.851E-17	1.110E-16	2.371E-16	5.200E-16	6.137E-16	7.606E-17	0.000E+00	0.000E+00
-234	U-238	2.636E-13	5.083E-23	1.465E-22	3.130E-22	6.864E-22	8.101E-22	1.004E-22	0.000E+00	0.000E+00
-234	U-238	3.794E-15	7.316E-25	2.109E-24	4.506E-24	9.880E-24	1.166E-23	1.445E-24	0.000E+00	0.000E+00
-234	äDOSE(j)		1.376E-04	1.315E-04	1.203E-04	8.784E-05	3.568E-05	1.342E-06	0.000E+00	0.000E+00
a-230	U-234	9.996E-01	1.884E-09	5.539E-09	1.237E-08	3.187E-08	6.227E-08	6.578E-08	0.000E+00	0.000E+00
a-230	U-234	1.319E-06	2.487E-15	7.311E-15	1.632E-14	4.206E-14	8.220E-14	8.682E-14	0.000E+00	0.000E+00
a-230	U-234	1.899E-08	3.579E-17	1.052E-16	2.349E-16	6.055E-16	1.183E-15	1.250E-15	0.000E+00	0.000E+00
a-230	U-234	2.100E-04	3.957E-13	1.163E-12	2.597E-12	6.693E-12	1.308E-11	1.382E-11	0.000E+00	0.000E+00
a-230	U-234	2.771E-10	5.223E-19	1.536E-18	3.428E-18	8.835E-18	1.726E-17	1.824E-17	0.000E+00	0.000E+00
a-230	U-234	3.989E-12	7.518E-21	2.210E-20	4.935E-20	1.272E-19	2.485E-19	2.625E-19	0.000E+00	0.000E+00
a-230	U-234	1.998E-04	3.765E-13	1.107E-12	2.471E-12	6.368E-12	1.244E-11	1.314E-11	0.000E+00	0.000E+00
a-230	U-234	2.637E-10	4.969E-19	1.461E-18	3.262E-18	8.406E-18	1.643E-17	1.735E-17	0.000E+00	0.000E+00
a-230	U-234	3.795E-12	7.153E-21	2.103E-20	4.695E-20	1.210E-19	2.364E-19	2.497E-19	0.000E+00	0.000E+00
a-230	U-234	4.196E-08	7.907E-17	2.325E-16	5.190E-16	1.338E-15	2.614E-15	2.761E-15	0.000E+00	0.000E+00
a-230	U-234	5.538E-14	1.044E-22	3.069E-22	6.851E-22	1.766E-21	3.450E-21	3.644E-21	0.000E+00	0.000E+00
a-230	U-234	7.972E-16	1.502E-24	4.417E-24	9.862E-24	2.541E-23	4.966E-23	5.246E-23	0.000E+00	0.000E+00
a-230	U-234	2.000E-07	3.769E-16	1.108E-15	2.474E-15	6.376E-15	1.246E-14	1.316E-14	0.000E+00	0.000E+00
a-230	U-234	2.640E-13	4.975E-22	1.463E-21	3.266E-21	8.416E-21	1.645E-20	1.737E-20	0.000E+00	0.000E+00
a-230	U-234	3.800E-15	7.161E-24	2.106E-23	4.701E-23	1.211E-22	2.367E-22	2.501E-22	0.000E+00	0.000E+00
a-230	U-238	1.599E-03	2.816E-18	1.921E-17	9.580E-17	6.978E-16	3.354E-15	6.366E-15	0.000E+00	0.000E+00
a-230	U-238	2.111E-09	3.717E-24	2.536E-23	1.265E-22	9.212E-22	4.427E-21	8.403E-21	0.000E+00	0.000E+00
a-230	U-238	3.039E-11	5.350E-26	3.650E-25	1.820E-24	1.326E-23	6.372E-23	1.210E-22	0.000E+00	0.000E+00
a-230	U-238	3.359E-07	5.914E-22	4.035E-21	2.012E-20	1.466E-19	7.045E-19	1.337E-18	0.000E+00	0.000E+00
a-230	U-238	4.434E-13	7.807E-28	5.326E-27	2.656E-26	1.935E-25	9.299E-25	1.765E-24	0.000E+00	0.000E+00
a-230	U-238	6.383E-15	0.000E+00	7.666E-29	3.823E-28	2.785E-27	1.338E-26	2.541E-26	0.000E+00	0.000E+00
a-230	U-238	3.196E-07	5.627E-22	3.839E-21	1.914E-20	1.395E-19	6.702E-19	1.272E-18	0.000E+00	0.000E+00
a-230	U-238	4.219E-13	7.427E-28	5.067E-27	2.527E-26	1.841E-25	8.847E-25	1.679E-24	0.000E+00	0.000E+00
a-230	U-238	6.073E-15	0.000E+00	7.293E-29	3.638E-28	2.650E-27	1.273E-26	2.417E-26	0.000E+00	0.000E+00
a-230	U-238	6.713E-11	1.182E-25	8.063E-25	4.021E-24	2.929E-23	1.408E-22	2.672E-22	0.000E+00	0.000E+00
a-230	U-238	8.862E-17	0.000E+00	0.000E+00	0.000E+00	3.867E-29	1.858E-28	3.527E-28	0.000E+00	0.000E+00
a-230	U-238	1.276E-18	0.000E+00	0.000E+00	0.000E+00	0.000E+00	0.000E+00	0.000E+00	0.000E+00	0.000E+00
a-230	U-238	3.200E-10	5.634E-25	3.843E-24	1.917E-23	1.396E-22	6.710E-22	1.274E-21	0.000E+00	0.000E+00
a-230	U-238	4.224E-16	0.000E+00	0.000E+00	2.530E-29	1.843E-28	8.858E-28	1.681E-27	0.000E+00	0.000E+00
a-230	U-238	6.080E-18	0.000E+00	0.000E+00	0.000E+00	0.000E+00	0.000E+00	2.420E-29	0.000E+00	0.000E+00
a-230	U-238	9.980E-01	1.757E-15	1.199E-14	5.978E-14	4.355E-13	2.093E-12	3.972E-12	0.000E+00	0.000E+00
a-230	U-238	1.317E-06	2.319E-21	1.582E-20	7.891E-20	5.748E-19	2.763E-18	5.243E-18	0.000E+00	0.000E+00
a-230	U-238	1.896E-08	3.338E-23	2.277E-22	1.136E-21	8.274E-21	3.976E-20	7.547E-20	0.000E+00	0.000E+00
a-230	U-238	2.096E-04	3.690E-19	2.518E-18	1.256E-17	9.146E-17	4.396E-16	8.344E-16	0.000E+00	0.000E+00
a-230	U-238	2.767E-10	4.871E-25	3.323E-24	1.657E-23	1.207E-22	5.802E-22	1.101E-21	0.000E+00	0.000E+00

ummary : GKP Recreational Visitor - External
ile : C:\USERS\CLAUDE\DOCUMENTS\0 GKP DOSE\RESRAD CW\GKP RECREATIONAL VISITOR- EXTERNAL R1.RAD

Individual Nuclide Dose Summed Over All Pathways
Parent Nuclide and Branch Fraction Indicated

uclide (j)	Parent (i)	THF(i)	DOSE(j,t), mrem/yr t= 0.000E+00	1.000E+00	3.000E+00	1.000E+01	3.000E+01	1.000E+02	3.000E+02	1.000E+03
ÄÄÄÄÄÄ	ÄÄÄÄÄÄÄ	ÄÄÄÄÄÄÄÄÄ	ÄÄÄÄÄÄÄÄÄ	ÄÄÄÄÄÄÄÄÄ	ÄÄÄÄÄÄÄÄÄ	ÄÄÄÄÄÄÄÄÄ	ÄÄÄÄÄÄÄÄÄ	ÄÄÄÄÄÄÄÄÄ	ÄÄÄÄÄÄÄÄÄ	ÄÄÄÄÄÄÄÄÄ
n-230	U-238	3.983E-12	7.012E-27	4.783E-26	2.386E-25	1.738E-24	8.352E-24	1.585E-23	0.000E+00	0.000E+00
n-230	U-238	1.994E-04	3.511E-19	2.395E-18	1.195E-17	8.702E-17	4.182E-16	7.938E-16	0.000E+00	0.000E+00
n-230	U-238	2.633E-10	4.635E-25	3.162E-24	1.577E-23	1.149E-22	5.521E-22	1.048E-21	0.000E+00	0.000E+00
n-230	U-238	3.789E-12	6.671E-27	4.551E-26	2.270E-25	1.653E-24	7.946E-24	1.508E-23	0.000E+00	0.000E+00
n-230	U-238	4.189E-08	7.375E-23	5.031E-22	2.509E-21	1.828E-20	8.785E-20	1.667E-19	0.000E+00	0.000E+00
n-230	U-238	5.530E-14	9.735E-29	6.641E-28	3.312E-27	2.413E-26	1.160E-25	2.201E-25	0.000E+00	0.000E+00
n-230	U-238	7.959E-16	0.000E+00	0.000E+00	4.768E-29	3.473E-28	1.669E-27	3.168E-27	0.000E+00	0.000E+00
n-230	U-238	1.997E-07	3.515E-22	2.398E-21	1.196E-20	8.713E-20	4.187E-19	7.948E-19	0.000E+00	0.000E+00
n-230	U-238	2.636E-13	4.640E-28	3.166E-27	1.579E-26	1.150E-25	5.527E-25	1.049E-24	0.000E+00	0.000E+00
n-230	U-238	3.794E-15	0.000E+00	4.557E-29	2.273E-28	1.655E-27	7.956E-27	1.510E-26	0.000E+00	0.000E+00
n-230	äDOSE(j)		1.885E-09	5.541E-09	1.237E-08	3.188E-08	6.230E-08	6.581E-08	0.000E+00	0.000E+00
-234	U-234	1.899E-08	2.614E-12	2.499E-12	2.285E-12	1.669E-12	6.779E-13	2.549E-14	0.000E+00	0.000E+00
-234	U-234	2.100E-04	2.890E-08	2.763E-08	2.526E-08	1.845E-08	7.494E-09	2.818E-10	0.000E+00	0.000E+00
-234	äDOSE(j)		2.890E-08	2.763E-08	2.526E-08	1.845E-08	7.495E-09	2.819E-10	0.000E+00	0.000E+00
a-226	U-234	2.100E-04	4.340E-13	2.965E-12	1.483E-11	1.090E-10	5.305E-10	8.721E-10	0.000E+00	0.000E+00
a-226	U-234	3.989E-12	8.246E-21	5.633E-20	2.818E-19	2.071E-18	1.008E-17	1.657E-17	0.000E+00	0.000E+00
a-226	U-238	3.359E-07	4.876E-22	7.109E-21	7.783E-20	1.640E-18	2.091E-17	7.583E-17	0.000E+00	0.000E+00
a-226	U-238	4.434E-13	6.436E-28	9.384E-27	1.027E-25	2.165E-24	2.760E-23	1.001E-22	0.000E+00	0.000E+00
a-226	U-238	6.383E-15	0.000E+00	1.351E-28	1.479E-27	3.117E-26	3.973E-25	1.441E-24	0.000E+00	0.000E+00
a-226	U-238	2.096E-04	3.043E-19	4.436E-18	4.857E-17	1.024E-15	1.305E-14	4.732E-14	0.000E+00	0.000E+00
a-226	U-238	2.767E-10	4.016E-25	5.856E-24	6.411E-23	1.351E-21	1.722E-20	6.246E-20	0.000E+00	0.000E+00
a-226	U-238	3.983E-12	5.781E-27	8.429E-26	9.228E-25	1.945E-23	2.479E-22	8.990E-22	0.000E+00	0.000E+00
a-226	äDOSE(j)		4.340E-13	2.965E-12	1.483E-11	1.090E-10	5.305E-10	8.722E-10	0.000E+00	0.000E+00
-234	U-234	2.771E-10	3.814E-14	3.647E-14	3.334E-14	2.435E-14	9.892E-15	3.720E-16	0.000E+00	0.000E+00
-234	U-234	3.989E-12	5.490E-16	5.250E-16	4.799E-16	3.505E-16	1.424E-16	5.355E-18	0.000E+00	0.000E+00
-234	äDOSE(j)		3.869E-14	3.700E-14	3.382E-14	2.470E-14	1.003E-14	3.774E-16	0.000E+00	0.000E+00
a-226	U-234	2.771E-10	5.729E-19	3.913E-18	1.957E-17	1.439E-16	7.003E-16	1.151E-15	0.000E+00	0.000E+00
-234	U-234	1.998E-04	2.749E-08	2.629E-08	2.403E-08	1.755E-08	7.130E-09	2.681E-10	0.000E+00	0.000E+00
-234	U-234	2.637E-10	3.629E-14	3.470E-14	3.172E-14	2.317E-14	9.411E-15	3.539E-16	0.000E+00	0.000E+00
-234	äDOSE(j)		2.749E-08	2.629E-08	2.403E-08	1.755E-08	7.130E-09	2.681E-10	0.000E+00	0.000E+00
-234	U-234	3.795E-12	5.224E-16	4.995E-16	4.566E-16	3.335E-16	1.355E-16	5.095E-18	0.000E+00	0.000E+00
-234	U-234	4.196E-08	5.775E-12	5.521E-12	5.048E-12	3.687E-12	1.498E-12	5.632E-14	0.000E+00	0.000E+00
-234	äDOSE(j)		5.775E-12	5.522E-12	5.048E-12	3.687E-12	1.498E-12	5.632E-14	0.000E+00	0.000E+00
a-226	U-234	4.196E-08	7.511E-17	5.130E-16	2.565E-15	1.883E-14	9.135E-14	1.480E-13	0.000E+00	0.000E+00
a-226	U-234	7.972E-16	1.427E-24	9.747E-24	4.874E-23	3.579E-22	1.736E-21	2.812E-21	0.000E+00	0.000E+00
a-226	U-238	6.713E-11	8.438E-26	1.230E-24	1.346E-23	2.835E-22	3.601E-21	1.287E-20	0.000E+00	0.000E+00
a-226	U-238	8.862E-17	0.000E+00	0.000E+00	1.777E-29	3.742E-28	4.753E-27	1.698E-26	0.000E+00	0.000E+00
a-226	U-238	1.276E-18	0.000E+00	0.000E+00	0.000E+00	0.000E+00	6.841E-29	2.445E-28	0.000E+00	0.000E+00
a-226	U-238	4.189E-08	5.265E-23	7.676E-22	8.401E-21	1.769E-19	2.247E-18	8.029E-18	0.000E+00	0.000E+00
a-226	U-238	5.530E-14	6.950E-29	1.013E-27	1.109E-26	2.335E-25	2.966E-24	1.060E-23	0.000E+00	0.000E+00
a-226	U-238	7.959E-16	0.000E+00	1.459E-29	1.596E-28	3.361E-27	4.269E-26	1.525E-25	0.000E+00	0.000E+00
a-226	äDOSE(j)		7.511E-17	5.130E-16	2.565E-15	1.884E-14	9.135E-14	1.480E-13	0.000E+00	0.000E+00

ummary : GKP Recreational Visitor - External

ile : C:\USERS\CLAUDE\DOCUMENTS\0 GKP DOSE\RESRAD CW\GKP RECREATIONAL VISITOR- EXTERNAL R1.RAD

Individual Nuclide Dose Summed Over All Pathways

Parent Nuclide and Branch Fraction Indicated

uclide (j)	Parent (i)	THF(i)	DOSE(j,t), mrem/yr t= 0.000E+00	1.000E+00	3.000E+00	1.000E+01	3.000E+01	1.000E+02	3.000E+02	1.000E+03
ÄÄÄÄÄ	ÄÄÄÄÄÄ	ÄÄÄÄÄÄÄÄ	ÄÄÄÄÄÄÄÄÄ	ÄÄÄÄÄÄÄÄÄ	ÄÄÄÄÄÄÄÄÄ	ÄÄÄÄÄÄÄÄÄ	ÄÄÄÄÄÄÄÄÄ	ÄÄÄÄÄÄÄÄÄ	ÄÄÄÄÄÄÄÄÄ	ÄÄÄÄÄÄÄÄÄ
-234	U-234	5.538E-14	7.622E-18	7.288E-18	6.663E-18	4.867E-18	1.977E-18	7.434E-20	0.000E+00	0.000E+00
-234	U-234	7.972E-16	1.097E-19	1.049E-19	9.591E-20	7.005E-20	2.845E-20	1.070E-21	0.000E+00	0.000E+00
-234	äDOSE(j)		7.732E-18	7.393E-18	6.759E-18	4.937E-18	2.005E-18	7.541E-20	0.000E+00	0.000E+00
a-226	U-234	5.538E-14	9.914E-23	6.771E-22	3.386E-21	2.486E-20	1.206E-19	1.953E-19	0.000E+00	0.000E+00
-234	U-234	2.000E-07	2.753E-11	2.632E-11	2.406E-11	1.757E-11	7.139E-12	2.685E-13	0.000E+00	0.000E+00
-234	U-234	2.640E-13	3.633E-17	3.474E-17	3.176E-17	2.320E-17	9.423E-18	3.544E-19	0.000E+00	0.000E+00
-234	äDOSE(j)		2.753E-11	2.632E-11	2.406E-11	1.757E-11	7.139E-12	2.685E-13	0.000E+00	0.000E+00
-234	U-234	3.800E-15	5.230E-19	5.001E-19	4.572E-19	3.339E-19	1.356E-19	5.101E-21	0.000E+00	0.000E+00
-235	U-235	9.835E-01	1.472E-02	1.407E-02	1.283E-02	9.306E-03	3.687E-03	1.151E-04	0.000E+00	0.000E+00
-235	U-235	2.722E-03	4.075E-05	3.893E-05	3.552E-05	2.576E-05	1.020E-05	3.186E-07	0.000E+00	0.000E+00
-235	äDOSE(j)		1.477E-02	1.410E-02	1.287E-02	9.332E-03	3.697E-03	1.154E-04	0.000E+00	0.000E+00
a-231	U-235	9.835E-01	3.742E-08	1.077E-07	2.295E-07	4.975E-07	5.654E-07	5.447E-08	0.000E+00	0.000E+00
a-231	U-235	2.722E-03	1.036E-10	2.982E-10	6.351E-10	1.377E-09	1.565E-09	1.508E-10	0.000E+00	0.000E+00
a-231	U-235	1.376E-02	5.236E-10	1.507E-09	3.211E-09	6.961E-09	7.911E-09	7.622E-10	0.000E+00	0.000E+00
a-231	U-235	3.809E-05	1.449E-12	4.172E-12	8.886E-12	1.927E-11	2.189E-11	2.109E-12	0.000E+00	0.000E+00
a-231	U-235	8.257E-07	3.142E-14	9.045E-14	1.926E-13	4.177E-13	4.747E-13	4.573E-14	0.000E+00	0.000E+00
a-231	U-235	2.285E-09	8.695E-17	2.503E-16	5.332E-16	1.156E-15	1.314E-15	1.266E-16	0.000E+00	0.000E+00
a-231	äDOSE(j)		3.805E-08	1.095E-07	2.333E-07	5.059E-07	5.749E-07	5.539E-08	0.000E+00	0.000E+00
c-227	U-235	9.835E-01	4.087E-09	2.676E-08	1.217E-07	6.438E-07	1.334E-06	1.720E-07	0.000E+00	0.000E+00
c-227	U-235	2.722E-03	1.145E-11	7.498E-11	3.410E-10	1.804E-09	3.737E-09	4.814E-10	0.000E+00	0.000E+00
c-227	U-235	1.376E-02	4.797E-11	3.141E-10	1.429E-09	7.558E-09	1.567E-08	2.034E-09	0.000E+00	0.000E+00
c-227	äDOSE(j)		5.942E-11	3.890E-10	1.770E-09	9.362E-09	1.941E-08	2.516E-09	0.000E+00	0.000E+00
-235	U-235	1.376E-02	2.060E-04	1.968E-04	1.796E-04	1.302E-04	5.159E-05	1.611E-06	0.000E+00	0.000E+00
-235	U-235	3.809E-05	5.702E-07	5.447E-07	4.970E-07	3.604E-07	1.428E-07	4.458E-09	0.000E+00	0.000E+00
-235	äDOSE(j)		2.066E-04	1.974E-04	1.801E-04	1.306E-04	5.173E-05	1.615E-06	0.000E+00	0.000E+00
c-227	U-235	3.809E-05	1.347E-13	8.821E-13	4.012E-12	2.123E-11	4.400E-11	5.703E-12	0.000E+00	0.000E+00
c-227	U-235	8.257E-07	1.306E-15	8.552E-15	3.888E-14	2.054E-13	4.242E-13	5.398E-14	0.000E+00	0.000E+00
c-227	äDOSE(j)		1.360E-13	8.907E-13	4.051E-12	2.143E-11	4.442E-11	5.757E-12	0.000E+00	0.000E+00
-235	U-235	8.257E-07	1.236E-08	1.181E-08	1.078E-08	7.813E-09	3.096E-09	9.665E-11	0.000E+00	0.000E+00
-235	U-235	2.285E-09	3.422E-11	3.268E-11	2.982E-11	2.162E-11	8.568E-12	2.675E-13	0.000E+00	0.000E+00
-235	äDOSE(j)		1.240E-08	1.184E-08	1.080E-08	7.835E-09	3.104E-09	9.692E-11	0.000E+00	0.000E+00
c-227	U-235	2.285E-09	3.734E-18	2.444E-17	1.111E-16	5.871E-16	1.211E-15	1.537E-16	0.000E+00	0.000E+00
-238	U-238	5.450E-07	2.026E-11	1.938E-11	1.774E-11	1.303E-11	5.386E-12	2.410E-13	0.000E+00	0.000E+00
-238	U-238	1.599E-03	5.418E-03	5.169E-03	4.704E-03	3.379E-03	1.299E-03	3.540E-05	0.000E+00	0.000E+00
-238	äDOSE(j)		5.418E-03	5.169E-03	4.704E-03	3.379E-03	1.299E-03	3.540E-05	0.000E+00	0.000E+00
-238	U-238	2.111E-09	7.152E-09	6.823E-09	6.210E-09	4.460E-09	1.715E-09	4.673E-11	0.000E+00	0.000E+00

ummary : GKP Recreational Visitor - External
ile : C:\USERS\CLAUDE\DOCUMENTS\0 GKP DOSE\RESRAD CW\GKP RECREATIONAL VISITOR- EXTERNAL R1.RAD

Individual Nuclide Dose Summed Over All Pathways
Parent Nuclide and Branch Fraction Indicated

uclide (j)	Parent (i)	THF(i)	DOSE(j,t), mrem/yr t= 0.000E+00	1.000E+00	3.000E+00	1.000E+01	3.000E+01	1.000E+02	3.000E+02	1.000E+03
ÄÄÄÄÄ	ÄÄÄÄÄÄ	ÄÄÄÄÄÄÄÄ	ÄÄÄÄÄÄÄÄ	ÄÄÄÄÄÄÄÄ	ÄÄÄÄÄÄÄÄ	ÄÄÄÄÄÄÄÄ	ÄÄÄÄÄÄÄÄ	ÄÄÄÄÄÄÄÄ	ÄÄÄÄÄÄÄÄ	ÄÄÄÄÄÄÄÄ
-238	U-238	3.039E-11	1.029E-10	9.821E-11	8.938E-11	6.420E-11	2.468E-11	6.727E-13	0.000E+00	0.000E+00
-238	äDOSE(j)		7.255E-09	6.922E-09	6.299E-09	4.524E-09	1.739E-09	4.741E-11	0.000E+00	0.000E+00
-238	U-238	3.359E-07	1.138E-06	1.086E-06	9.881E-07	7.097E-07	2.729E-07	7.436E-09	0.000E+00	0.000E+00
-238	U-238	4.434E-13	1.502E-12	1.433E-12	1.304E-12	9.368E-13	3.602E-13	9.816E-15	0.000E+00	0.000E+00
-238	äDOSE(j)		1.138E-06	1.086E-06	9.881E-07	7.097E-07	2.729E-07	7.436E-09	0.000E+00	0.000E+00
-238	U-238	6.383E-15	2.162E-14	2.063E-14	1.877E-14	1.348E-14	5.185E-15	1.413E-16	0.000E+00	0.000E+00
-238	U-238	3.196E-07	1.083E-06	1.033E-06	9.401E-07	6.752E-07	2.596E-07	7.075E-09	0.000E+00	0.000E+00
-238	äDOSE(j)		1.083E-06	1.033E-06	9.401E-07	6.752E-07	2.596E-07	7.075E-09	0.000E+00	0.000E+00
-238	U-238	4.219E-13	1.429E-12	1.364E-12	1.241E-12	8.913E-13	3.427E-13	9.339E-15	0.000E+00	0.000E+00
-238	U-238	6.073E-15	2.057E-14	1.963E-14	1.786E-14	1.283E-14	4.933E-15	1.344E-16	0.000E+00	0.000E+00
-238	äDOSE(j)		1.450E-12	1.383E-12	1.259E-12	9.041E-13	3.476E-13	9.474E-15	0.000E+00	0.000E+00
-238	U-238	6.713E-11	2.274E-10	2.170E-10	1.975E-10	1.418E-10	5.453E-11	1.486E-12	0.000E+00	0.000E+00
-238	U-238	8.862E-17	3.002E-16	2.864E-16	2.606E-16	1.872E-16	7.198E-17	1.962E-18	0.000E+00	0.000E+00
-238	äDOSE(j)		2.274E-10	2.170E-10	1.975E-10	1.418E-10	5.453E-11	1.486E-12	0.000E+00	0.000E+00
-238	U-238	1.276E-18	4.321E-18	4.123E-18	3.752E-18	2.695E-18	1.036E-18	2.824E-20	0.000E+00	0.000E+00
-238	U-238	3.200E-10	1.084E-09	1.034E-09	9.412E-10	6.760E-10	2.599E-10	7.084E-12	0.000E+00	0.000E+00
-238	äDOSE(j)		1.084E-09	1.034E-09	9.412E-10	6.760E-10	2.599E-10	7.084E-12	0.000E+00	0.000E+00
-238	U-238	4.224E-16	1.431E-15	1.365E-15	1.242E-15	8.924E-16	3.431E-16	9.350E-18	0.000E+00	0.000E+00
-238	U-238	6.080E-18	2.060E-17	1.965E-17	1.788E-17	1.284E-17	4.939E-18	1.346E-19	0.000E+00	0.000E+00
-238	äDOSE(j)		1.452E-15	1.385E-15	1.260E-15	9.052E-16	3.480E-16	9.485E-18	0.000E+00	0.000E+00
-238	U-238	9.980E-01	3.436E-02	3.280E-02	2.988E-02	2.156E-02	8.413E-03	2.502E-04	0.000E+00	0.000E+00
-238	U-238	1.317E-06	4.535E-08	4.329E-08	3.945E-08	2.846E-08	1.111E-08	3.302E-10	0.000E+00	0.000E+00
-238	äDOSE(j)		3.436E-02	3.280E-02	2.988E-02	2.156E-02	8.413E-03	2.502E-04	0.000E+00	0.000E+00
-238	U-238	1.896E-08	6.528E-10	6.231E-10	5.678E-10	4.096E-10	1.599E-10	4.753E-12	0.000E+00	0.000E+00
-238	U-238	2.096E-04	7.217E-06	6.889E-06	6.277E-06	4.529E-06	1.767E-06	5.255E-08	0.000E+00	0.000E+00
-238	äDOSE(j)		7.217E-06	6.889E-06	6.277E-06	4.529E-06	1.767E-06	5.255E-08	0.000E+00	0.000E+00
-238	U-238	2.767E-10	9.526E-12	9.093E-12	8.285E-12	5.978E-12	2.333E-12	6.936E-14	0.000E+00	0.000E+00
-238	U-238	3.983E-12	1.371E-13	1.309E-13	1.193E-13	8.604E-14	3.358E-14	9.984E-16	0.000E+00	0.000E+00
-238	äDOSE(j)		9.663E-12	9.224E-12	8.405E-12	6.064E-12	2.366E-12	7.036E-14	0.000E+00	0.000E+00
-238	U-238	1.994E-04	6.866E-06	6.554E-06	5.972E-06	4.309E-06	1.681E-06	5.000E-08	0.000E+00	0.000E+00
-238	U-238	2.633E-10	9.063E-12	8.651E-12	7.883E-12	5.687E-12	2.219E-12	6.599E-14	0.000E+00	0.000E+00
-238	äDOSE(j)		6.866E-06	6.554E-06	5.972E-06	4.309E-06	1.681E-06	5.000E-08	0.000E+00	0.000E+00
-238	U-238	3.789E-12	1.305E-13	1.245E-13	1.135E-13	8.186E-14	3.195E-14	9.499E-16	0.000E+00	0.000E+00
-238	U-238	4.189E-08	1.442E-09	1.377E-09	1.254E-09	9.050E-10	3.532E-10	1.050E-11	0.000E+00	0.000E+00
-238	äDOSE(j)		1.442E-09	1.377E-09	1.254E-09	9.051E-10	3.532E-10	1.050E-11	0.000E+00	0.000E+00
-238	U-238	5.530E-14	1.904E-15	1.817E-15	1.656E-15	1.195E-15	4.662E-16	1.386E-17	0.000E+00	0.000E+00
-238	U-238	7.959E-16	2.740E-17	2.616E-17	2.383E-17	1.719E-17	6.710E-18	1.995E-19	0.000E+00	0.000E+00
-238	äDOSE(j)		1.931E-15	1.843E-15	1.680E-15	1.212E-15	4.729E-16	1.406E-17	0.000E+00	0.000E+00

ummary : GKP Recreational Visitor - External
ile : C:\USERS\CLAUDE\DOCUMENTS\0 GKP DOSE\RESRAD CW\GKP RECREATIONAL VISITOR- EXTERNAL R1.RAD

Individual Nuclide Dose Summed Over All Pathways
Parent Nuclide and Branch Fraction Indicated

uclide (j)	Parent (i)	THF(i)	DOSE(j,t), mrem/yr t= 0.000E+00	1.000E+00	3.000E+00	1.000E+01	3.000E+01	1.000E+02	3.000E+02	1.000E+03
ÄÄÄÄÄÄ	ÄÄÄÄÄÄÄ	ÄÄÄÄÄÄÄÄÄ	ÄÄÄÄÄÄÄÄÄ	ÄÄÄÄÄÄÄÄÄ	ÄÄÄÄÄÄÄÄÄ	ÄÄÄÄÄÄÄÄÄ	ÄÄÄÄÄÄÄÄÄ	ÄÄÄÄÄÄÄÄÄ	ÄÄÄÄÄÄÄÄÄ	ÄÄÄÄÄÄÄÄÄ
-238	U-238	1.997E-07	6.874E-09	6.562E-09	5.979E-09	4.314E-09	1.683E-09	5.006E-11	0.000E+00	0.000E+00
-238	U-238	2.636E-13	9.074E-15	8.662E-15	7.892E-15	5.694E-15	2.222E-15	6.607E-17	0.000E+00	0.000E+00
-238	äDOSE(j)		6.874E-09	6.562E-09	5.979E-09	4.314E-09	1.683E-09	5.006E-11	0.000E+00	0.000E+00
-238	U-238	3.794E-15	1.306E-16	1.247E-16	1.136E-16	8.196E-17	3.198E-17	9.511E-19	0.000E+00	0.000E+00
íííííí	íííííííí	ííííííííí	ííííííííí	ííííííííí	ííííííííí	ííííííííí	ííííííííí	ííííííííí	ííííííííí	ííííííííí

HF(i) is the thread fraction of the parent nuclide.

ummary : GKP Recreational Visitor - External
ile : C:\USERS\CLAUDE\DOCUMENTS\0 GKP DOSE\RESRAD CW\GKP RECREATIONAL VISITOR- EXTERNAL R1.RAD

Individual Nuclide Soil Concentration
Parent Nuclide and Branch Fraction Indicated

uclide (j)	Parent (i)	THF(i)	S(j,t), pCi/g t= 0.000E+00	1.000E+00	3.000E+00	1.000E+01	3.000E+01	1.000E+02	3.000E+02	1.000E+03
ÄÄÄÄÄÄ	ÄÄÄÄÄÄÄ	ÄÄÄÄÄÄÄÄÄ	ÄÄÄÄÄÄÄÄÄ	ÄÄÄÄÄÄÄÄÄ	ÄÄÄÄÄÄÄÄÄ	ÄÄÄÄÄÄÄÄÄ	ÄÄÄÄÄÄÄÄÄ	ÄÄÄÄÄÄÄÄÄ	ÄÄÄÄÄÄÄÄÄ	ÄÄÄÄÄÄÄÄÄ
a-226	Ra-226	9.996E-01	3.648E+01	3.533E+01	3.314E+01	2.647E+01	1.394E+01	1.475E+00	2.411E-03	4.255E-13
a-226	Ra-226	1.319E-06	4.816E-05	4.664E-05	4.374E-05	3.494E-05	1.839E-05	1.947E-06	3.182E-09	5.616E-19
a-226	U-234	9.996E-01	0.000E+00	2.698E-08	2.308E-07	2.155E-06	1.208E-05	3.439E-05	3.853E-05	3.731E-05
a-226	U-234	1.319E-06	0.000E+00	3.561E-14	3.047E-13	2.844E-12	1.595E-11	4.540E-11	5.086E-11	4.925E-11
a-226	U-234	1.899E-08	0.000E+00	5.126E-16	4.386E-15	4.094E-14	2.295E-13	6.534E-13	7.321E-13	7.089E-13
a-226	U-238	1.599E-03	0.000E+00	4.044E-17	1.028E-15	3.093E-14	4.696E-13	2.984E-12	3.935E-12	3.813E-12
a-226	U-238	2.111E-09	0.000E+00	5.338E-23	1.357E-21	4.082E-20	6.199E-19	3.939E-18	5.194E-18	5.033E-18
a-226	U-238	3.039E-11	0.000E+00	7.683E-25	1.953E-23	5.876E-22	8.923E-21	5.670E-20	7.477E-20	7.244E-20
a-226	U-238	9.980E-01	0.000E+00	2.523E-14	6.416E-13	1.930E-11	2.930E-10	1.862E-09	2.455E-09	2.379E-09
a-226	U-238	1.317E-06	0.000E+00	3.331E-20	8.469E-19	2.547E-17	3.868E-16	2.458E-15	3.241E-15	3.140E-15
a-226	U-238	1.896E-08	0.000E+00	4.794E-22	1.219E-20	3.667E-19	5.568E-18	3.538E-17	4.665E-17	4.520E-17
a-226	äS(j):		3.649E+01	3.533E+01	3.314E+01	2.647E+01	1.394E+01	1.475E+00	2.449E-03	3.731E-05
o-210	Ra-226	9.996E-01	0.000E+00	1.092E+00	3.007E+00	7.444E+00	9.643E+00	1.904E+00	3.525E-03	6.232E-13
o-210	Ra-226	2.100E-04	0.000E+00	2.293E-04	6.315E-04	1.564E-03	2.026E-03	4.000E-04	7.405E-07	1.309E-16
o-210	Ra-226	1.998E-04	0.000E+00	2.181E-04	6.009E-04	1.488E-03	1.927E-03	3.805E-04	7.045E-07	1.245E-16
o-210	Ra-226	4.196E-08	0.000E+00	4.582E-08	1.262E-07	3.125E-07	4.048E-07	7.993E-08	1.480E-10	2.616E-20
o-210	Ra-226	2.000E-07	0.000E+00	2.184E-07	6.016E-07	1.489E-06	1.929E-06	3.810E-07	7.053E-10	1.247E-19
o-210	U-234	9.996E-01	0.000E+00	2.788E-10	7.058E-09	2.091E-07	3.053E-06	1.777E-05	2.254E-05	2.184E-05
o-210	U-234	2.100E-04	0.000E+00	5.857E-14	1.482E-12	4.392E-11	6.412E-10	3.732E-09	4.735E-09	4.587E-09
o-210	U-234	1.998E-04	0.000E+00	5.572E-14	1.410E-12	4.178E-11	6.101E-10	3.550E-09	4.505E-09	4.364E-09
o-210	U-234	4.196E-08	0.000E+00	1.170E-17	2.963E-16	8.776E-15	1.281E-13	7.457E-13	9.462E-13	9.166E-13
o-210	U-234	2.000E-07	0.000E+00	5.579E-17	1.412E-15	4.183E-14	6.108E-13	3.555E-12	4.510E-12	4.369E-12
o-210	U-238	1.599E-03	0.000E+00	3.142E-19	2.374E-17	2.303E-15	9.533E-14	1.413E-12	2.300E-12	2.231E-12
o-210	U-238	3.359E-07	0.000E+00	6.599E-23	4.987E-21	4.838E-19	2.002E-17	2.967E-16	4.832E-16	4.687E-16
o-210	U-238	3.196E-07	0.000E+00	6.278E-23	4.745E-21	4.603E-19	1.905E-17	2.823E-16	4.597E-16	4.459E-16
o-210	U-238	6.713E-11	0.000E+00	1.319E-26	9.966E-25	9.669E-23	4.001E-21	5.929E-20	9.656E-20	9.366E-20
o-210	U-238	3.200E-10	0.000E+00	6.286E-26	4.750E-24	4.609E-22	1.907E-20	2.826E-19	4.603E-19	4.464E-19
o-210	U-238	9.980E-01	0.000E+00	1.960E-16	1.481E-14	1.437E-12	5.948E-11	8.814E-10	1.435E-09	1.392E-09
o-210	U-238	2.096E-04	0.000E+00	4.118E-20	3.112E-18	3.019E-16	1.249E-14	1.851E-13	3.015E-13	2.925E-13
o-210	U-238	1.994E-04	0.000E+00	3.918E-20	2.961E-18	2.872E-16	1.189E-14	1.761E-13	2.869E-13	2.782E-13
o-210	U-238	4.189E-08	0.000E+00	8.229E-24	6.219E-22	6.033E-20	2.497E-18	3.700E-17	6.025E-17	5.844E-17
o-210	U-238	1.997E-07	0.000E+00	3.922E-23	2.964E-21	2.876E-19	1.190E-17	1.764E-16	2.872E-16	2.786E-16
o-210	äS(j):		0.000E+00	1.092E+00	3.008E+00	7.447E+00	9.647E+00	1.905E+00	3.549E-03	2.185E-05
o-210	Ra-226	1.319E-06	0.000E+00	1.441E-06	3.969E-06	9.826E-06	1.273E-05	2.514E-06	4.653E-09	8.226E-19
o-210	Ra-226	1.899E-08	0.000E+00	2.074E-08	5.713E-08	1.414E-07	1.832E-07	3.618E-08	6.698E-11	1.184E-20
o-210	Ra-226	2.771E-10	0.000E+00	3.026E-10	8.336E-10	2.064E-09	2.674E-09	5.280E-10	9.774E-13	1.728E-22
o-210	Ra-226	2.637E-10	0.000E+00	2.879E-10	7.931E-10	1.964E-09	2.544E-09	5.023E-10	9.299E-13	1.644E-22
o-210	Ra-226	5.538E-14	0.000E+00	6.048E-14	1.666E-13	4.124E-13	5.343E-13	1.055E-13	1.953E-16	3.453E-26
o-210	Ra-226	2.640E-13	0.000E+00	2.883E-13	7.941E-13	1.966E-12	2.547E-12	5.029E-13	9.311E-16	1.646E-25
o-210	U-234	1.319E-06	0.000E+00	3.681E-16	9.317E-15	2.760E-13	4.030E-12	2.345E-11	2.975E-11	2.882E-11
o-210	U-234	2.771E-10	0.000E+00	7.731E-20	1.957E-18	5.797E-17	8.464E-16	4.926E-15	6.250E-15	6.054E-15
o-210	U-234	2.637E-10	0.000E+00	7.356E-20	1.862E-18	5.515E-17	8.053E-16	4.686E-15	5.946E-15	5.760E-15
o-210	U-234	5.538E-14	0.000E+00	1.545E-23	3.911E-22	1.158E-20	1.691E-19	9.844E-19	1.249E-18	1.210E-18
o-210	U-234	2.640E-13	0.000E+00	7.364E-23	1.864E-21	5.522E-20	8.063E-19	4.692E-18	5.953E-18	5.767E-18
o-210	U-238	2.111E-09	0.000E+00	4.147E-25	3.134E-23	3.041E-21	1.258E-19	1.865E-18	3.037E-18	2.945E-18
o-210	U-238	4.434E-13	0.000E+00	8.711E-29	6.583E-27	6.387E-25	2.643E-23	3.916E-22	6.378E-22	6.187E-22
o-210	U-238	4.219E-13	0.000E+00	8.287E-29	6.263E-27	6.076E-25	2.515E-23	3.726E-22	6.068E-22	5.886E-22

ummary : GKP Recreational Visitor - External
ile : C:\USERS\CLAUDE\DOCUMENTS\0 GKP DOSE\RESRAD CW\GKP RECREATIONAL VISITOR- EXTERNAL R1.RAD

Individual Nuclide Soil Concentration
Parent Nuclide and Branch Fraction Indicated

uclide (j)	Parent (i)	THF(i)	S(j,t), pCi/g t= 0.000E+00	1.000E+00	3.000E+00	1.000E+01	3.000E+01	1.000E+02	3.000E+02	1.000E+03
ÄÄÄÄÄ	ÄÄÄÄÄÄ	ÄÄÄÄÄÄÄÄÄ	ÄÄÄÄÄÄÄÄÄ	ÄÄÄÄÄÄÄÄÄ	ÄÄÄÄÄÄÄÄÄ	ÄÄÄÄÄÄÄÄÄ	ÄÄÄÄÄÄÄÄÄ	ÄÄÄÄÄÄÄÄÄ	ÄÄÄÄÄÄÄÄÄ	ÄÄÄÄÄÄÄÄÄ
o-210	U-238	8.862E-17	0.000E+00	1.741E-32	1.315E-30	1.276E-28	5.282E-27	7.826E-26	1.275E-25	1.236E-25
o-210	U-238	4.224E-16	0.000E+00	8.297E-32	6.270E-30	6.084E-28	2.518E-26	3.731E-25	6.076E-25	5.893E-25
o-210	U-238	1.317E-06	0.000E+00	2.588E-22	1.956E-20	1.897E-18	7.852E-17	1.163E-15	1.895E-15	1.838E-15
o-210	U-238	2.767E-10	0.000E+00	5.435E-26	4.108E-24	3.985E-22	1.649E-20	2.444E-19	3.980E-19	3.860E-19
o-210	U-238	2.633E-10	0.000E+00	5.171E-26	3.908E-24	3.792E-22	1.569E-20	2.325E-19	3.787E-19	3.673E-19
o-210	U-238	5.530E-14	0.000E+00	1.086E-29	8.209E-28	7.964E-26	3.296E-24	4.884E-23	7.954E-23	7.715E-23
o-210	U-238	2.636E-13	0.000E+00	5.178E-29	3.913E-27	3.796E-25	1.571E-23	2.328E-22	3.791E-22	3.677E-22
o-210	äS(j):		0.000E+00	1.462E-06	4.028E-06	9.971E-06	1.292E-05	2.551E-06	4.752E-09	2.884E-11
a-226	Ra-226	1.899E-08	6.932E-07	6.713E-07	6.296E-07	5.030E-07	2.648E-07	2.802E-08	4.580E-11	8.084E-21
a-226	Ra-226	2.100E-04	7.663E-03	7.421E-03	6.960E-03	5.560E-03	2.927E-03	3.098E-04	5.063E-07	8.936E-17
a-226	äS(j):		7.664E-03	7.422E-03	6.961E-03	5.561E-03	2.927E-03	3.098E-04	5.064E-07	8.937E-17
a-226	Ra-226	2.771E-10	1.012E-08	9.796E-09	9.188E-09	7.340E-09	3.864E-09	4.090E-10	6.684E-13	1.180E-22
a-226	Ra-226	3.989E-12	1.456E-10	1.410E-10	1.322E-10	1.056E-10	5.561E-11	5.886E-12	9.621E-15	1.698E-24
a-226	äS(j):		1.026E-08	9.937E-09	9.320E-09	7.445E-09	3.919E-09	4.148E-10	6.780E-13	1.197E-22
o-210	Ra-226	3.989E-12	0.000E+00	4.356E-12	1.200E-11	2.971E-11	3.849E-11	7.599E-12	1.407E-14	2.487E-24
o-210	Ra-226	3.795E-12	0.000E+00	4.144E-12	1.142E-11	2.826E-11	3.662E-11	7.230E-12	1.339E-14	2.366E-24
o-210	Ra-226	7.972E-16	0.000E+00	8.705E-16	2.398E-15	5.937E-15	7.691E-15	1.519E-15	2.812E-18	4.970E-28
o-210	Ra-226	3.800E-15	0.000E+00	4.149E-15	1.143E-14	2.830E-14	3.666E-14	7.239E-15	1.340E-17	2.369E-27
o-210	U-234	1.899E-08	0.000E+00	5.298E-18	1.341E-16	3.973E-15	5.800E-14	3.376E-13	4.283E-13	4.149E-13
o-210	U-234	3.989E-12	0.000E+00	1.113E-21	2.817E-20	8.344E-19	1.218E-17	7.090E-17	8.996E-17	8.715E-17
o-210	U-234	3.795E-12	0.000E+00	1.059E-21	2.680E-20	7.939E-19	1.159E-17	6.746E-17	8.559E-17	8.291E-17
o-210	U-234	7.972E-16	0.000E+00	2.224E-25	5.629E-24	1.667E-22	2.435E-21	1.417E-20	1.798E-20	1.742E-20
o-210	U-234	3.800E-15	0.000E+00	1.060E-24	2.683E-23	7.948E-22	1.161E-20	6.754E-20	8.569E-20	8.301E-20
o-210	U-238	3.039E-11	0.000E+00	5.969E-27	4.511E-25	4.377E-23	1.811E-21	2.684E-20	4.371E-20	4.240E-20
o-210	U-238	6.383E-15	0.000E+00	1.254E-30	9.475E-29	9.193E-27	3.804E-25	5.637E-24	9.181E-24	8.905E-24
o-210	U-238	6.073E-15	0.000E+00	1.193E-30	9.015E-29	8.746E-27	3.620E-25	5.363E-24	8.735E-24	8.472E-24
o-210	U-238	1.276E-18	0.000E+00	2.506E-34	1.893E-32	1.837E-30	7.603E-29	1.127E-27	1.835E-27	1.780E-27
o-210	U-238	6.080E-18	0.000E+00	1.194E-33	9.026E-32	8.757E-30	3.624E-28	5.370E-27	8.745E-27	8.483E-27
o-210	U-238	1.896E-08	0.000E+00	3.725E-24	2.815E-22	2.731E-20	1.130E-18	1.675E-17	2.727E-17	2.645E-17
o-210	U-238	3.983E-12	0.000E+00	7.824E-28	5.912E-26	5.736E-24	2.374E-22	3.518E-21	5.729E-21	5.557E-21
o-210	U-238	3.789E-12	0.000E+00	7.444E-28	5.625E-26	5.458E-24	2.259E-22	3.347E-21	5.450E-21	5.287E-21
o-210	U-238	7.959E-16	0.000E+00	1.563E-31	1.182E-29	1.146E-27	4.744E-26	7.029E-25	1.145E-24	1.110E-24
o-210	U-238	3.794E-15	0.000E+00	7.453E-31	5.632E-29	5.464E-27	2.261E-25	3.351E-24	5.457E-24	5.293E-24
o-210	äS(j):		0.000E+00	8.506E-12	2.343E-11	5.801E-11	7.520E-11	1.518E-11	4.560E-13	4.151E-13
a-226	Ra-226	1.998E-04	7.291E-03	7.061E-03	6.622E-03	5.290E-03	2.785E-03	2.948E-04	4.817E-07	8.502E-17
a-226	Ra-226	2.637E-10	9.624E-09	9.320E-09	8.741E-09	6.983E-09	3.676E-09	3.891E-10	6.359E-13	1.122E-22
a-226	U-234	1.998E-04	0.000E+00	5.392E-12	4.613E-11	4.306E-10	2.414E-09	6.873E-09	7.700E-09	7.457E-09
a-226	U-234	2.637E-10	0.000E+00	7.117E-18	6.089E-17	5.684E-16	3.187E-15	9.072E-15	1.016E-14	9.843E-15
a-226	U-234	3.795E-12	0.000E+00	1.024E-19	8.765E-19	8.182E-18	4.587E-17	1.306E-16	1.463E-16	1.417E-16
a-226	U-238	3.196E-07	0.000E+00	8.081E-21	2.055E-19	6.180E-18	9.385E-17	5.963E-16	7.864E-16	7.619E-16
a-226	U-238	4.219E-13	0.000E+00	1.067E-26	2.712E-25	8.158E-24	1.239E-22	7.872E-22	1.038E-21	1.006E-21
a-226	U-238	6.073E-15	0.000E+00	1.535E-28	3.904E-27	1.174E-25	1.783E-24	1.133E-23	1.494E-23	1.448E-23
a-226	U-238	1.994E-04	0.000E+00	5.042E-18	1.282E-16	3.856E-15	5.856E-14	3.721E-13	4.907E-13	4.755E-13
a-226	U-238	2.633E-10	0.000E+00	6.656E-24	1.692E-22	5.090E-21	7.730E-20	4.912E-19	6.477E-19	6.276E-19
a-226	U-238	3.789E-12	0.000E+00	9.581E-26	2.436E-24	7.327E-23	1.113E-21	7.070E-21	9.323E-21	9.034E-21
a-226	äS(j):		7.291E-03	7.061E-03	6.622E-03	5.290E-03	2.785E-03	2.948E-04	4.894E-07	7.457E-09

ummary : GKP Recreational Visitor - External
ile : C:\USERS\CLAUDE\DOCUMENTS\0 GKP DOSE\RESRAD CW\GKP RECREATIONAL VISITOR- EXTERNAL R1.RAD

Individual Nuclide Soil Concentration
Parent Nuclide and Branch Fraction Indicated

uclide (j)	Parent (i)	THF(i)	S(j,t), pCi/g t= 0.000E+00	1.000E+00	3.000E+00	1.000E+01	3.000E+01	1.000E+02	3.000E+02	1.000E+03
ÄÄÄÄÄ	ÄÄÄÄÄÄ	ÄÄÄÄÄÄÄÄ	ÄÄÄÄÄÄÄÄ	ÄÄÄÄÄÄÄÄ	ÄÄÄÄÄÄÄÄ	ÄÄÄÄÄÄÄÄ	ÄÄÄÄÄÄÄÄ	ÄÄÄÄÄÄÄÄ	ÄÄÄÄÄÄÄÄ	ÄÄÄÄÄÄÄÄ
a-226	Ra-226	3.795E-12	1.385E-10	1.342E-10	1.258E-10	1.005E-10	5.291E-11	5.600E-12	9.153E-15	1.615E-24
a-226	Ra-226	4.196E-08	1.531E-06	1.483E-06	1.391E-06	1.111E-06	5.849E-07	6.191E-08	1.012E-10	1.786E-20
a-226	äS(j):		1.532E-06	1.483E-06	1.391E-06	1.111E-06	5.850E-07	6.192E-08	1.012E-10	1.786E-20
a-226	Ra-226	5.538E-14	2.022E-12	1.958E-12	1.836E-12	1.467E-12	7.721E-13	8.173E-14	1.336E-16	2.357E-26
a-226	Ra-226	7.972E-16	2.910E-14	2.818E-14	2.643E-14	2.111E-14	1.111E-14	1.176E-15	1.923E-18	3.393E-28
a-226	äS(j):		2.051E-12	1.986E-12	1.862E-12	1.488E-12	7.832E-13	8.290E-14	1.355E-16	2.391E-26
a-226	Ra-226	2.000E-07	7.300E-06	7.070E-06	6.630E-06	5.297E-06	2.788E-06	2.951E-07	4.823E-10	8.513E-20
a-226	Ra-226	2.640E-13	9.636E-12	9.332E-12	8.752E-12	6.991E-12	3.680E-12	3.896E-13	6.367E-16	1.124E-25
a-226	U-234	2.000E-07	0.000E+00	5.398E-15	4.619E-14	4.311E-13	2.417E-12	6.881E-12	7.709E-12	7.466E-12
a-226	U-234	2.640E-13	0.000E+00	7.126E-21	6.097E-20	5.691E-19	3.191E-18	9.083E-18	1.018E-17	9.855E-18
a-226	U-234	3.800E-15	0.000E+00	1.026E-22	8.776E-22	8.192E-21	4.593E-20	1.307E-19	1.465E-19	1.418E-19
a-226	U-238	3.200E-10	0.000E+00	8.091E-24	2.057E-22	6.188E-21	9.396E-20	5.971E-19	7.873E-19	7.629E-19
a-226	U-238	4.224E-16	0.000E+00	1.068E-29	2.715E-28	8.168E-27	1.240E-25	7.881E-25	1.039E-24	1.007E-24
a-226	U-238	6.080E-18	0.000E+00	1.537E-31	3.909E-30	1.176E-28	1.785E-27	1.134E-26	1.496E-26	1.449E-26
a-226	U-238	1.997E-07	0.000E+00	5.048E-21	1.284E-19	3.861E-18	5.863E-17	3.726E-16	4.913E-16	4.760E-16
a-226	U-238	2.636E-13	0.000E+00	6.664E-27	1.694E-25	5.097E-24	7.739E-23	4.918E-22	6.485E-22	6.284E-22
a-226	U-238	3.794E-15	0.000E+00	9.592E-29	2.439E-27	7.336E-26	1.114E-24	7.079E-24	9.335E-24	9.045E-24
a-226	äS(j):		7.300E-06	7.070E-06	6.630E-06	5.297E-06	2.788E-06	2.951E-07	4.900E-10	7.466E-12
a-226	Ra-226	3.800E-15	1.387E-13	1.343E-13	1.260E-13	1.006E-13	5.298E-14	5.607E-15	9.164E-18	1.617E-27
n-232	Th-232	1.000E+00	2.400E+00	2.400E+00	2.400E+00	2.399E+00	2.397E+00	2.391E+00	2.373E+00	2.313E+00
a-228	Th-232	1.000E+00	0.000E+00	2.684E-01	6.968E-01	1.486E+00	1.879E+00	1.894E+00	1.880E+00	1.832E+00
n-228	Th-232	1.000E+00	0.000E+00	4.430E-02	2.891E-01	1.222E+00	1.865E+00	1.894E+00	1.880E+00	1.832E+00
-234	U-234	9.996E-01	1.389E+01	1.329E+01	1.217E+01	8.925E+00	3.683E+00	1.662E-01	2.380E-05	8.354E-19
-234	U-234	1.319E-06	1.834E-05	1.755E-05	1.606E-05	1.178E-05	4.862E-06	2.194E-07	3.141E-11	1.103E-24
-234	U-238	1.599E-03	0.000E+00	6.005E-08	1.649E-07	4.032E-07	4.992E-07	7.511E-08	3.227E-11	3.779E-24
-234	U-238	2.111E-09	0.000E+00	7.927E-14	2.177E-13	5.322E-13	6.589E-13	9.914E-14	4.259E-17	4.988E-30
-234	U-238	3.039E-11	0.000E+00	1.141E-15	3.133E-15	7.661E-15	9.484E-15	1.427E-15	6.131E-19	7.180E-32
-234	U-238	3.359E-07	0.000E+00	1.261E-11	3.463E-11	8.469E-11	1.048E-10	1.578E-11	6.777E-15	7.938E-28
-234	U-238	4.434E-13	0.000E+00	1.665E-17	4.572E-17	1.118E-16	1.384E-16	2.082E-17	8.946E-21	1.048E-33
-234	U-238	6.383E-15	0.000E+00	2.396E-19	6.580E-19	1.609E-18	1.992E-18	2.998E-19	1.288E-22	1.508E-35
-234	U-238	3.196E-07	0.000E+00	1.200E-11	3.295E-11	8.058E-11	9.975E-11	1.501E-11	6.448E-15	7.552E-28
-234	U-238	4.219E-13	0.000E+00	1.584E-17	4.350E-17	1.064E-16	1.317E-16	1.981E-17	8.511E-21	9.969E-34
-234	U-238	6.073E-15	0.000E+00	2.280E-19	6.261E-19	1.531E-18	1.895E-18	2.852E-19	1.225E-22	1.435E-35
-234	U-238	6.713E-11	0.000E+00	2.521E-15	6.921E-15	1.692E-14	2.095E-14	3.153E-15	1.354E-18	1.586E-31
-234	U-238	8.862E-17	0.000E+00	3.327E-21	9.136E-21	2.234E-20	2.766E-20	4.162E-21	1.788E-24	2.094E-37
-234	U-238	1.276E-18	0.000E+00	4.789E-23	1.315E-22	3.216E-22	3.981E-22	5.990E-23	2.573E-26	3.014E-39
-234	U-238	3.200E-10	0.000E+00	1.201E-14	3.299E-14	8.067E-14	9.987E-14	1.503E-14	6.456E-18	7.561E-31
-234	U-238	4.224E-16	0.000E+00	1.586E-20	4.355E-20	1.065E-19	1.318E-19	1.984E-20	8.522E-24	9.981E-37
-234	U-238	6.080E-18	0.000E+00	2.283E-22	6.268E-22	1.533E-21	1.898E-21	2.855E-22	1.227E-25	1.437E-38
-234	U-238	9.980E-01	0.000E+00	3.747E-05	1.029E-04	2.516E-04	3.115E-04	4.687E-05	2.013E-08	2.358E-21
-234	U-238	1.317E-06	0.000E+00	4.946E-11	1.358E-10	3.321E-10	4.111E-10	6.187E-11	2.658E-14	3.113E-27
-234	U-238	1.896E-08	0.000E+00	7.119E-13	1.955E-12	4.780E-12	5.918E-12	8.905E-13	3.825E-16	4.480E-29

ummary : GKP Recreational Visitor - External
ile : C:\USERS\CLAUDE\DOCUMENTS\0 GKP DOSE\RESRAD CW\GKP RECREATIONAL VISITOR- EXTERNAL R1.RAD

Individual Nuclide Soil Concentration
Parent Nuclide and Branch Fraction Indicated

uclide (j)	Parent (i)	THF(i)	S(j,t), pCi/g t= 0.000E+00	1.000E+00	3.000E+00	1.000E+01	3.000E+01	1.000E+02	3.000E+02	1.000E+03
ÄÄÄÄÄ	ÄÄÄÄÄÄÄ	ÄÄÄÄÄÄÄÄÄ	ÄÄÄÄÄÄÄÄÄ	ÄÄÄÄÄÄÄÄÄ	ÄÄÄÄÄÄÄÄÄ	ÄÄÄÄÄÄÄÄÄ	ÄÄÄÄÄÄÄÄÄ	ÄÄÄÄÄÄÄÄÄ	ÄÄÄÄÄÄÄÄÄ	ÄÄÄÄÄÄÄÄÄ
-234	U-238	2.096E-04	0.000E+00	7.871E-09	2.161E-08	5.285E-08	6.542E-08	9.844E-09	4.229E-12	4.953E-25
-234	U-238	2.767E-10	0.000E+00	1.039E-14	2.853E-14	6.976E-14	8.636E-14	1.299E-14	5.582E-18	6.538E-31
-234	U-238	3.983E-12	0.000E+00	1.495E-16	4.106E-16	1.004E-15	1.243E-15	1.870E-16	8.035E-20	9.411E-33
-234	U-238	1.994E-04	0.000E+00	7.488E-09	2.056E-08	5.028E-08	6.225E-08	9.366E-09	4.024E-12	4.712E-25
-234	U-238	2.633E-10	0.000E+00	9.884E-15	2.714E-14	6.637E-14	8.216E-14	1.236E-14	5.311E-18	6.220E-31
-234	U-238	3.789E-12	0.000E+00	1.423E-16	3.907E-16	9.553E-16	1.183E-15	1.780E-16	7.645E-20	8.954E-33
-234	U-238	4.189E-08	0.000E+00	1.573E-12	4.319E-12	1.056E-11	1.307E-11	1.967E-12	8.451E-16	9.898E-29
-234	U-238	5.530E-14	0.000E+00	2.076E-18	5.701E-18	1.394E-17	1.726E-17	2.597E-18	1.116E-21	1.307E-34
-234	U-238	7.959E-16	0.000E+00	2.988E-20	8.206E-20	2.007E-19	2.484E-19	3.738E-20	1.606E-23	1.881E-36
-234	U-238	1.997E-07	0.000E+00	7.497E-12	2.059E-11	5.034E-11	6.232E-11	9.378E-12	4.028E-15	4.718E-28
-234	U-238	2.636E-13	0.000E+00	9.896E-18	2.717E-17	6.645E-17	8.226E-17	1.238E-17	5.318E-21	6.228E-34
-234	U-238	3.794E-15	0.000E+00	1.424E-19	3.911E-19	9.565E-19	1.184E-18	1.782E-19	7.654E-23	8.965E-36
-234	äS(j):		1.389E+01	1.329E+01	1.217E+01	8.926E+00	3.683E+00	1.663E-01	2.382E-05	8.377E-19
a-230	U-234	9.996E-01	0.000E+00	1.250E-04	3.589E-04	1.032E-03	2.120E-03	2.842E-03	2.850E-03	2.759E-03
a-230	U-234	1.319E-06	0.000E+00	1.650E-10	4.738E-10	1.362E-09	2.798E-09	3.751E-09	3.762E-09	3.642E-09
a-230	U-234	1.899E-08	0.000E+00	2.375E-12	6.819E-12	1.961E-11	4.028E-11	5.400E-11	5.415E-11	5.243E-11
a-230	U-234	2.100E-04	0.000E+00	2.625E-08	7.539E-08	2.168E-07	4.452E-07	5.969E-07	5.986E-07	5.796E-07
a-230	U-234	2.771E-10	0.000E+00	3.465E-14	9.951E-14	2.862E-13	5.877E-13	7.879E-13	7.902E-13	7.650E-13
a-230	U-234	3.989E-12	0.000E+00	4.988E-16	1.432E-15	4.119E-15	8.460E-15	1.134E-14	1.137E-14	1.101E-14
a-230	U-234	1.998E-04	0.000E+00	2.497E-08	7.172E-08	2.063E-07	4.236E-07	5.679E-07	5.695E-07	5.514E-07
a-230	U-234	2.637E-10	0.000E+00	3.297E-14	9.468E-14	2.723E-13	5.592E-13	7.497E-13	7.518E-13	7.279E-13
a-230	U-234	3.795E-12	0.000E+00	4.745E-16	1.363E-15	3.919E-15	8.049E-15	1.079E-14	1.082E-14	1.048E-14
a-230	U-234	4.196E-08	0.000E+00	5.246E-12	1.507E-11	4.332E-11	8.898E-11	1.193E-10	1.196E-10	1.158E-10
a-230	U-234	5.538E-14	0.000E+00	6.924E-18	1.989E-17	5.719E-17	1.175E-16	1.575E-16	1.579E-16	1.529E-16
a-230	U-234	7.972E-16	0.000E+00	9.967E-20	2.862E-19	8.231E-19	1.691E-18	2.267E-18	2.273E-18	2.201E-18
a-230	U-234	2.000E-07	0.000E+00	2.501E-11	7.181E-11	2.065E-10	4.241E-10	5.686E-10	5.702E-10	5.521E-10
a-230	U-234	2.640E-13	0.000E+00	3.301E-17	9.479E-17	2.726E-16	5.599E-16	7.506E-16	7.527E-16	7.287E-16
a-230	U-234	3.800E-15	0.000E+00	4.751E-19	1.364E-18	3.924E-18	8.058E-18	1.080E-17	1.083E-17	1.049E-17
a-230	U-238	1.599E-03	0.000E+00	2.802E-13	2.378E-12	2.160E-11	1.128E-10	2.748E-10	2.912E-10	2.820E-10
a-230	U-238	2.111E-09	0.000E+00	3.699E-19	3.139E-18	2.851E-17	1.489E-16	3.627E-16	3.844E-16	3.722E-16
a-230	U-238	3.039E-11	0.000E+00	5.324E-21	4.519E-20	4.104E-19	2.143E-18	5.221E-18	5.533E-18	5.357E-18
a-230	U-238	3.359E-07	0.000E+00	5.885E-17	4.995E-16	4.537E-15	2.369E-14	5.771E-14	6.117E-14	5.922E-14
a-230	U-238	4.434E-13	0.000E+00	7.769E-23	6.594E-22	5.989E-21	3.127E-20	7.618E-20	8.074E-20	7.817E-20
a-230	U-238	6.383E-15	0.000E+00	1.118E-24	9.491E-24	8.621E-23	4.501E-22	1.097E-21	1.162E-21	1.125E-21
a-230	U-238	3.196E-07	0.000E+00	5.600E-17	4.753E-16	4.317E-15	2.254E-14	5.491E-14	5.820E-14	5.635E-14
a-230	U-238	4.219E-13	0.000E+00	7.391E-23	6.274E-22	5.698E-21	2.975E-20	7.248E-20	7.682E-20	7.438E-20
a-230	U-238	6.073E-15	0.000E+00	1.064E-24	9.030E-24	8.202E-23	4.282E-22	1.043E-21	1.106E-21	1.071E-21
a-230	U-238	6.713E-11	0.000E+00	1.176E-20	9.983E-20	9.067E-19	4.734E-18	1.153E-17	1.222E-17	1.183E-17
a-230	U-238	8.862E-17	0.000E+00	1.553E-26	1.318E-25	1.197E-24	6.249E-24	1.522E-23	1.614E-23	1.562E-23
a-230	U-238	1.276E-18	0.000E+00	2.235E-28	1.897E-27	1.723E-26	8.995E-26	2.191E-25	2.323E-25	2.249E-25
a-230	U-238	3.200E-10	0.000E+00	5.606E-20	4.759E-19	4.322E-18	2.257E-17	5.498E-17	5.827E-17	5.641E-17
a-230	U-238	4.224E-16	0.000E+00	7.400E-26	6.281E-25	5.705E-24	2.979E-23	7.257E-23	7.691E-23	7.447E-23
a-230	U-238	6.080E-18	0.000E+00	1.065E-27	9.041E-27	8.212E-26	4.288E-25	1.045E-24	1.107E-24	1.072E-24
a-230	U-238	9.980E-01	0.000E+00	1.748E-10	1.484E-09	1.348E-08	7.038E-08	1.715E-07	1.817E-07	1.759E-07
a-230	U-238	1.317E-06	0.000E+00	2.308E-16	1.959E-15	1.779E-14	9.290E-14	2.263E-13	2.399E-13	2.322E-13
a-230	U-238	1.896E-08	0.000E+00	3.322E-18	2.820E-17	2.561E-16	1.337E-15	3.258E-15	3.453E-15	3.343E-15
a-230	U-238	2.096E-04	0.000E+00	3.673E-14	3.117E-13	2.831E-12	1.478E-11	3.601E-11	3.817E-11	3.695E-11
a-230	U-238	2.767E-10	0.000E+00	4.848E-20	4.115E-19	3.737E-18	1.951E-17	4.754E-17	5.038E-17	4.878E-17

ummary : GKP Recreational Visitor - External

ile : C:\USERS\CLAUDE\DOCUMENTS\0 GKP DOSE\RESRAD CW\GKP RECREATIONAL VISITOR- EXTERNAL R1.RAD

Individual Nuclide Soil Concentration

Parent Nuclide and Branch Fraction Indicated

uclide (j)	Parent (i)	THF(i)	S(j,t), pCi/g t= 0.000E+00	1.000E+00	3.000E+00	1.000E+01	3.000E+01	1.000E+02	3.000E+02	1.000E+03
ÄÄÄÄÄÄ	ÄÄÄÄÄÄÄ	ÄÄÄÄÄÄÄÄÄ	ÄÄÄÄÄÄÄÄÄ	ÄÄÄÄÄÄÄÄÄ	ÄÄÄÄÄÄÄÄÄ	ÄÄÄÄÄÄÄÄÄ	ÄÄÄÄÄÄÄÄÄ	ÄÄÄÄÄÄÄÄÄ	ÄÄÄÄÄÄÄÄÄ	ÄÄÄÄÄÄÄÄÄ
n-230	U-238	3.983E-12	0.000E+00	6.978E-22	5.923E-21	5.379E-20	2.809E-19	6.843E-19	7.252E-19	7.021E-19
n-230	U-238	1.994E-04	0.000E+00	3.494E-14	2.966E-13	2.694E-12	1.406E-11	3.426E-11	3.631E-11	3.516E-11
n-230	U-238	2.633E-10	0.000E+00	4.612E-20	3.915E-19	3.556E-18	1.856E-17	4.523E-17	4.794E-17	4.641E-17
n-230	U-238	3.789E-12	0.000E+00	6.639E-22	5.635E-21	5.118E-20	2.672E-19	6.510E-19	6.900E-19	6.680E-19
n-230	U-238	4.189E-08	0.000E+00	7.339E-18	6.229E-17	5.658E-16	2.954E-15	7.197E-15	7.628E-15	7.385E-15
n-230	U-238	5.530E-14	0.000E+00	9.688E-24	8.223E-23	7.468E-22	3.899E-21	9.500E-21	1.007E-20	9.748E-21
n-230	U-238	7.959E-16	0.000E+00	1.394E-25	1.184E-24	1.075E-23	5.613E-23	1.367E-22	1.449E-22	1.403E-22
n-230	U-238	1.997E-07	0.000E+00	3.498E-17	2.969E-16	2.697E-15	1.408E-14	3.431E-14	3.636E-14	3.520E-14
n-230	U-238	2.636E-13	0.000E+00	4.618E-23	3.920E-22	3.560E-21	1.859E-20	4.528E-20	4.799E-20	4.647E-20
n-230	U-238	3.794E-15	0.000E+00	6.647E-25	5.642E-24	5.124E-23	2.675E-22	6.518E-22	6.908E-22	6.688E-22
n-230	äS(j):		0.000E+00	1.250E-04	3.591E-04	1.033E-03	2.121E-03	2.843E-03	2.851E-03	2.761E-03
-234	U-234	1.899E-08	2.640E-07	2.526E-07	2.312E-07	1.696E-07	6.998E-08	3.159E-09	4.522E-13	1.587E-26
-234	U-234	2.100E-04	2.918E-03	2.792E-03	2.556E-03	1.875E-03	7.736E-04	3.492E-05	4.999E-09	1.755E-22
-234	äS(j):		2.919E-03	2.792E-03	2.556E-03	1.875E-03	7.737E-04	3.492E-05	4.999E-09	1.755E-22
a-226	U-234	2.100E-04	0.000E+00	5.667E-12	4.849E-11	4.526E-10	2.538E-09	7.224E-09	8.093E-09	7.837E-09
a-226	U-234	3.989E-12	0.000E+00	1.077E-19	9.213E-19	8.600E-18	4.821E-17	1.373E-16	1.538E-16	1.489E-16
a-226	U-238	3.359E-07	0.000E+00	8.493E-21	2.160E-19	6.496E-18	9.864E-17	6.268E-16	8.265E-16	8.008E-16
a-226	U-238	4.434E-13	0.000E+00	1.121E-26	2.851E-25	8.574E-24	1.302E-22	8.274E-22	1.091E-21	1.057E-21
a-226	U-238	6.383E-15	0.000E+00	1.614E-28	4.103E-27	1.234E-25	1.874E-24	1.191E-23	1.570E-23	1.522E-23
a-226	U-238	2.096E-04	0.000E+00	5.300E-18	1.348E-16	4.053E-15	6.155E-14	3.911E-13	5.158E-13	4.997E-13
a-226	U-238	2.767E-10	0.000E+00	6.996E-24	1.779E-22	5.350E-21	8.125E-20	5.163E-19	6.808E-19	6.596E-19
a-226	U-238	3.983E-12	0.000E+00	1.007E-25	2.560E-24	7.701E-23	1.169E-21	7.431E-21	9.799E-21	9.495E-21
a-226	äS(j):		0.000E+00	5.667E-12	4.849E-11	4.526E-10	2.538E-09	7.224E-09	8.094E-09	7.838E-09
-234	U-234	2.771E-10	3.852E-09	3.686E-09	3.373E-09	2.475E-09	1.021E-09	4.609E-11	6.598E-15	2.316E-28
-234	U-234	3.989E-12	5.545E-11	5.305E-11	4.856E-11	3.562E-11	1.470E-11	6.634E-13	9.498E-17	3.334E-30
-234	äS(j):		3.908E-09	3.739E-09	3.422E-09	2.510E-09	1.036E-09	4.676E-11	6.693E-15	2.349E-28
a-226	U-234	2.771E-10	0.000E+00	7.480E-18	6.400E-17	5.974E-16	3.350E-15	9.535E-15	1.068E-14	1.035E-14
-234	U-234	1.998E-04	2.777E-03	2.656E-03	2.431E-03	1.784E-03	7.360E-04	3.322E-05	4.756E-09	1.669E-22
-234	U-234	2.637E-10	3.665E-09	3.506E-09	3.209E-09	2.354E-09	9.715E-10	4.385E-11	6.278E-15	2.204E-28
-234	äS(j):		2.777E-03	2.656E-03	2.431E-03	1.784E-03	7.360E-04	3.322E-05	4.756E-09	1.669E-22
-234	U-234	3.795E-12	5.276E-11	5.047E-11	4.620E-11	3.389E-11	1.398E-11	6.312E-13	9.036E-17	3.172E-30
-234	U-234	4.196E-08	5.832E-07	5.580E-07	5.107E-07	3.746E-07	1.546E-07	6.978E-09	9.989E-13	3.506E-26
-234	äS(j):		5.833E-07	5.580E-07	5.107E-07	3.747E-07	1.546E-07	6.979E-09	9.990E-13	3.507E-26
a-226	U-234	4.196E-08	0.000E+00	1.132E-15	9.690E-15	9.045E-14	5.071E-13	1.444E-12	1.617E-12	1.566E-12
a-226	U-234	7.972E-16	0.000E+00	2.152E-23	1.841E-22	1.719E-21	9.635E-21	2.743E-20	3.073E-20	2.976E-20
a-226	U-238	6.713E-11	0.000E+00	1.697E-24	4.316E-23	1.298E-21	1.971E-20	1.253E-19	1.652E-19	1.600E-19
a-226	U-238	8.862E-17	0.000E+00	2.240E-30	5.697E-29	1.713E-27	2.602E-26	1.653E-25	2.180E-25	2.113E-25
a-226	U-238	1.276E-18	0.000E+00	3.225E-32	8.200E-31	2.466E-29	3.745E-28	2.380E-27	3.138E-27	3.041E-27
a-226	U-238	4.189E-08	0.000E+00	1.059E-21	2.693E-20	8.100E-19	1.230E-17	7.816E-17	1.031E-16	9.987E-17
a-226	U-238	5.530E-14	0.000E+00	1.398E-27	3.555E-26	1.069E-24	1.624E-23	1.032E-22	1.360E-22	1.318E-22
a-226	U-238	7.959E-16	0.000E+00	2.012E-29	5.117E-28	1.539E-26	2.337E-25	1.485E-24	1.958E-24	1.897E-24
a-226	äS(j):		0.000E+00	1.132E-15	9.690E-15	9.045E-14	5.071E-13	1.444E-12	1.617E-12	1.566E-12

ummary : GKP Recreational Visitor - External
ile : C:\USERS\CLAUDE\DOCUMENTS\0 GKP DOSE\RESRAD CW\GKP RECREATIONAL VISITOR- EXTERNAL R1.RAD

Individual Nuclide Soil Concentration
Parent Nuclide and Branch Fraction Indicated

uclide (j)	Parent (i)	THF(i)	S(j,t), pCi/g t= 0.000E+00	1.000E+00	3.000E+00	1.000E+01	3.000E+01	1.000E+02	3.000E+02	1.000E+03
ÄÄÄÄÄÄ	ÄÄÄÄÄÄÄ	ÄÄÄÄÄÄÄÄÄ	ÄÄÄÄÄÄÄÄÄ	ÄÄÄÄÄÄÄÄÄ	ÄÄÄÄÄÄÄÄÄ	ÄÄÄÄÄÄÄÄÄ	ÄÄÄÄÄÄÄÄÄ	ÄÄÄÄÄÄÄÄÄ	ÄÄÄÄÄÄÄÄÄ	ÄÄÄÄÄÄÄÄÄ
-234	U-234	5.538E-14	7.698E-13	7.365E-13	6.741E-13	4.945E-13	2.041E-13	9.211E-15	1.319E-18	4.629E-32
-234	U-234	7.972E-16	1.108E-14	1.060E-14	9.703E-15	7.118E-15	2.937E-15	1.326E-16	1.898E-20	6.662E-34
-234	äS(j):		7.809E-13	7.471E-13	6.838E-13	5.016E-13	2.070E-13	9.344E-15	1.338E-18	4.695E-32
a-226	U-234	5.538E-14	0.000E+00	1.495E-21	1.279E-20	1.194E-19	6.694E-19	1.906E-18	2.135E-18	2.067E-18
-234	U-234	2.000E-07	2.780E-06	2.660E-06	2.434E-06	1.786E-06	7.369E-07	3.326E-08	4.762E-12	1.671E-25
-234	U-234	2.640E-13	3.670E-12	3.511E-12	3.213E-12	2.357E-12	9.727E-13	4.391E-14	6.285E-18	2.206E-31
-234	äS(j):		2.780E-06	2.660E-06	2.434E-06	1.786E-06	7.369E-07	3.326E-08	4.762E-12	1.671E-25
-234	U-234	3.800E-15	5.282E-14	5.053E-14	4.625E-14	3.393E-14	1.400E-14	6.320E-16	9.047E-20	3.176E-33
-235	U-235	9.835E-01	8.261E-01	7.904E-01	7.234E-01	5.307E-01	2.190E-01	9.887E-03	1.416E-06	4.981E-20
-235	U-235	2.722E-03	2.286E-03	2.187E-03	2.002E-03	1.469E-03	6.061E-04	2.736E-05	3.920E-09	1.379E-22
-235	äS(j):		8.284E-01	7.925E-01	7.254E-01	5.322E-01	2.196E-01	9.914E-03	1.420E-06	4.995E-20
a-231	U-235	9.835E-01	0.000E+00	1.672E-05	4.592E-05	1.123E-04	1.390E-04	2.090E-05	8.961E-09	1.043E-21
a-231	U-235	2.722E-03	0.000E+00	4.628E-08	1.271E-07	3.107E-07	3.846E-07	5.784E-08	2.480E-11	2.886E-24
a-231	U-235	1.376E-02	0.000E+00	2.340E-07	6.425E-07	1.571E-06	1.944E-06	2.924E-07	1.254E-10	1.459E-23
a-231	U-235	3.809E-05	0.000E+00	6.476E-10	1.778E-09	4.348E-09	5.382E-09	8.093E-10	3.470E-13	4.038E-26
a-231	U-235	8.257E-07	0.000E+00	1.404E-11	3.855E-11	9.426E-11	1.167E-10	1.755E-11	7.523E-15	8.755E-28
a-231	U-235	2.285E-09	0.000E+00	3.886E-14	1.067E-13	2.609E-13	3.229E-13	4.856E-14	2.082E-17	2.423E-30
a-231	äS(j):		0.000E+00	1.700E-05	4.669E-05	1.142E-04	1.413E-04	2.125E-05	9.111E-09	1.060E-21
c-227	U-235	9.835E-01	0.000E+00	2.577E-07	1.994E-06	1.324E-05	3.070E-05	6.123E-06	2.826E-09	3.370E-22
c-227	U-235	2.722E-03	0.000E+00	7.134E-10	5.518E-09	3.665E-08	8.495E-08	1.695E-08	7.821E-12	9.327E-25
c-227	U-235	1.376E-02	0.000E+00	3.606E-09	2.790E-08	1.853E-07	4.295E-07	8.568E-08	3.954E-11	4.715E-24
c-227	äS(j):		0.000E+00	4.320E-09	3.341E-08	2.219E-07	5.144E-07	1.026E-07	4.736E-11	5.648E-24
-235	U-235	1.376E-02	1.156E-02	1.106E-02	1.012E-02	7.426E-03	3.064E-03	1.383E-04	1.982E-08	6.969E-22
-235	U-235	3.809E-05	3.199E-05	3.061E-05	2.801E-05	2.055E-05	8.481E-06	3.829E-07	5.484E-11	1.929E-24
-235	äS(j):		1.159E-02	1.109E-02	1.015E-02	7.446E-03	3.073E-03	1.387E-04	1.987E-08	6.989E-22
c-227	U-235	3.809E-05	0.000E+00	9.981E-12	7.721E-11	5.128E-10	1.189E-09	2.371E-10	1.094E-13	1.305E-26
c-227	U-235	8.257E-07	0.000E+00	2.164E-13	1.674E-12	1.112E-11	2.577E-11	5.141E-12	2.372E-15	2.829E-28
c-227	äS(j):		0.000E+00	1.020E-11	7.888E-11	5.239E-10	1.214E-09	2.423E-10	1.118E-13	1.333E-26
-235	U-235	8.257E-07	6.936E-07	6.636E-07	6.074E-07	4.456E-07	1.839E-07	8.301E-09	1.189E-12	4.182E-26
-235	U-235	2.285E-09	1.920E-09	1.837E-09	1.681E-09	1.233E-09	5.089E-10	2.297E-11	3.291E-15	1.157E-28
-235	äS(j):		6.955E-07	6.654E-07	6.090E-07	4.468E-07	1.844E-07	8.324E-09	1.192E-12	4.193E-26
c-227	U-235	2.285E-09	0.000E+00	5.989E-16	4.633E-15	3.077E-14	7.133E-14	1.423E-14	6.566E-18	7.831E-31
-238	U-238	5.450E-07	7.575E-06	7.248E-06	6.634E-06	4.866E-06	2.008E-06	9.066E-08	1.299E-11	4.567E-25
-238	U-238	1.599E-03	2.223E-02	2.127E-02	1.947E-02	1.428E-02	5.893E-03	2.661E-04	3.811E-08	1.340E-21
-238	äS(j):		2.224E-02	2.128E-02	1.947E-02	1.429E-02	5.895E-03	2.662E-04	3.812E-08	1.341E-21
-238	U-238	2.111E-09	2.934E-08	2.807E-08	2.570E-08	1.885E-08	7.779E-09	3.512E-10	5.030E-14	1.769E-27

ummary : GKP Recreational Visitor - External
ile : C:\USERS\CLAUDE\DOCUMENTS\0 GKP DOSE\RESRAD CW\GKP RECREATIONAL VISITOR- EXTERNAL R1.RAD

Individual Nuclide Soil Concentration
Parent Nuclide and Branch Fraction Indicated

uclide (j)	Parent (i)	THF(i)	S(j,t), pCi/g t= 0.000E+00	1.000E+00	3.000E+00	1.000E+01	3.000E+01	1.000E+02	3.000E+02	1.000E+03
ÄÄÄÄÄ	ÄÄÄÄÄÄÄ	ÄÄÄÄÄÄÄÄÄ	ÄÄÄÄÄÄÄÄÄ	ÄÄÄÄÄÄÄÄÄ	ÄÄÄÄÄÄÄÄÄ	ÄÄÄÄÄÄÄÄÄ	ÄÄÄÄÄÄÄÄÄ	ÄÄÄÄÄÄÄÄÄ	ÄÄÄÄÄÄÄÄÄ	ÄÄÄÄÄÄÄÄÄ
-238	U-238	3.039E-11	4.224E-10	4.041E-10	3.699E-10	2.713E-10	1.120E-10	5.055E-12	7.241E-16	2.547E-29
-238	äS(j):		2.977E-08	2.848E-08	2.607E-08	1.912E-08	7.891E-09	3.563E-10	5.103E-14	1.795E-27
-238	U-238	3.359E-07	4.669E-06	4.467E-06	4.089E-06	3.000E-06	1.238E-06	5.588E-08	8.005E-12	2.815E-25
-238	U-238	4.434E-13	6.164E-12	5.897E-12	5.397E-12	3.960E-12	1.634E-12	7.377E-14	1.057E-17	3.716E-31
-238	äS(j):		4.669E-06	4.467E-06	4.089E-06	3.000E-06	1.238E-06	5.588E-08	8.005E-12	2.815E-25
-238	U-238	6.383E-15	8.872E-14	8.488E-14	7.769E-14	5.699E-14	2.352E-14	1.062E-15	1.521E-19	5.349E-33
-238	U-238	3.196E-07	4.443E-06	4.250E-06	3.890E-06	2.854E-06	1.178E-06	5.317E-08	7.616E-12	2.679E-25
-238	äS(j):		4.443E-06	4.250E-06	3.890E-06	2.854E-06	1.178E-06	5.317E-08	7.616E-12	2.679E-25
-238	U-238	4.219E-13	5.864E-12	5.610E-12	5.135E-12	3.767E-12	1.555E-12	7.018E-14	1.005E-17	3.536E-31
-238	U-238	6.073E-15	8.441E-14	8.076E-14	7.392E-14	5.422E-14	2.238E-14	1.010E-15	1.447E-19	5.089E-33
-238	äS(j):		5.949E-12	5.691E-12	5.209E-12	3.821E-12	1.577E-12	7.119E-14	1.020E-17	3.587E-31
-238	U-238	6.713E-11	9.331E-10	8.927E-10	8.171E-10	5.994E-10	2.474E-10	1.117E-11	1.600E-15	5.626E-29
-238	U-238	8.862E-17	1.232E-15	1.178E-15	1.079E-15	7.913E-16	3.265E-16	1.474E-17	2.112E-21	7.427E-35
-238	äS(j):		9.331E-10	8.927E-10	8.171E-10	5.994E-10	2.474E-10	1.117E-11	1.600E-15	5.626E-29
-238	U-238	1.276E-18	1.773E-17	1.696E-17	1.553E-17	1.139E-17	4.700E-18	2.122E-19	3.039E-23	1.069E-36
-238	U-238	3.200E-10	4.448E-09	4.255E-09	3.895E-09	2.857E-09	1.179E-09	5.323E-11	7.625E-15	2.682E-28
-238	äS(j):		4.448E-09	4.255E-09	3.895E-09	2.857E-09	1.179E-09	5.323E-11	7.625E-15	2.682E-28
-238	U-238	4.224E-16	5.871E-15	5.617E-15	5.141E-15	3.772E-15	1.556E-15	7.027E-17	1.007E-20	3.540E-34
-238	U-238	6.080E-18	8.451E-17	8.085E-17	7.400E-17	5.429E-17	2.240E-17	1.011E-18	1.449E-22	5.095E-36
-238	äS(j):		5.956E-15	5.698E-15	5.215E-15	3.826E-15	1.579E-15	7.128E-17	1.021E-20	3.591E-34
-238	U-238	9.980E-01	1.387E+01	1.327E+01	1.215E+01	8.911E+00	3.677E+00	1.660E-01	2.378E-05	8.364E-19
-238	U-238	1.317E-06	1.831E-05	1.752E-05	1.603E-05	1.176E-05	4.854E-06	2.191E-07	3.139E-11	1.104E-24
-238	äS(j):		1.387E+01	1.327E+01	1.215E+01	8.911E+00	3.677E+00	1.660E-01	2.378E-05	8.364E-19
-238	U-238	1.896E-08	2.636E-07	2.522E-07	2.308E-07	1.693E-07	6.987E-08	3.154E-09	4.518E-13	1.589E-26
-238	U-238	2.096E-04	2.914E-03	2.788E-03	2.551E-03	1.872E-03	7.724E-04	3.487E-05	4.995E-09	1.757E-22
-238	äS(j):		2.914E-03	2.788E-03	2.552E-03	1.872E-03	7.725E-04	3.488E-05	4.995E-09	1.757E-22
-238	U-238	2.767E-10	3.846E-09	3.680E-09	3.368E-09	2.471E-09	1.020E-09	4.603E-11	6.593E-15	2.319E-28
-238	U-238	3.983E-12	5.536E-11	5.296E-11	4.848E-11	3.556E-11	1.468E-11	6.626E-13	9.490E-17	3.338E-30
-238	äS(j):		3.902E-09	3.733E-09	3.416E-09	2.506E-09	1.034E-09	4.669E-11	6.688E-15	2.352E-28
-238	U-238	1.994E-04	2.772E-03	2.652E-03	2.428E-03	1.781E-03	7.349E-04	3.318E-05	4.752E-09	1.671E-22
-238	U-238	2.633E-10	3.659E-09	3.501E-09	3.204E-09	2.351E-09	9.701E-10	4.379E-11	6.273E-15	2.206E-28
-238	äS(j):		2.772E-03	2.652E-03	2.428E-03	1.781E-03	7.349E-04	3.318E-05	4.752E-09	1.671E-22
-238	U-238	3.789E-12	5.267E-11	5.039E-11	4.612E-11	3.384E-11	1.396E-11	6.304E-13	9.029E-17	3.176E-30
-238	U-238	4.189E-08	5.823E-07	5.571E-07	5.099E-07	3.741E-07	1.544E-07	6.969E-09	9.982E-13	3.511E-26
-238	äS(j):		5.823E-07	5.571E-07	5.099E-07	3.741E-07	1.544E-07	6.969E-09	9.983E-13	3.511E-26
-238	U-238	5.530E-14	7.686E-13	7.353E-13	6.731E-13	4.938E-13	2.038E-13	9.199E-15	1.318E-18	4.634E-32
-238	U-238	7.959E-16	1.106E-14	1.058E-14	9.688E-15	7.107E-15	2.933E-15	1.324E-16	1.897E-20	6.670E-34
-238	äS(j):		7.797E-13	7.459E-13	6.827E-13	5.009E-13	2.067E-13	9.331E-15	1.337E-18	4.701E-32

ummary : GKP Recreational Visitor - External
ile : C:\USERS\CLAUDE\DOCUMENTS\0 GKP DOSE\RESRAD CW\GKP RECREATIONAL VISITOR- EXTERNAL R1.RAD

Individual Nuclide Soil Concentration
Parent Nuclide and Branch Fraction Indicated

uclide (j)	Parent (i)	THF(i)	S(j,t), pCi/g t= 0.000E+00	1.000E+00	3.000E+00	1.000E+01	3.000E+01	1.000E+02	3.000E+02	1.000E+03
ÄÄÄÄÄÄ	ÄÄÄÄÄÄÄ	ÄÄÄÄÄÄÄÄÄÄ	ÄÄÄÄÄÄÄÄÄÄ	ÄÄÄÄÄÄÄÄÄÄ	ÄÄÄÄÄÄÄÄÄÄ	ÄÄÄÄÄÄÄÄÄÄ	ÄÄÄÄÄÄÄÄÄÄ	ÄÄÄÄÄÄÄÄÄÄ	ÄÄÄÄÄÄÄÄÄÄ	ÄÄÄÄÄÄÄÄÄÄ
-238	U-238	1.997E-07	2.776E-06	2.655E-06	2.430E-06	1.783E-06	7.358E-07	3.322E-08	4.758E-12	1.673E-25
-238	U-238	2.636E-13	3.664E-12	3.505E-12	3.208E-12	2.354E-12	9.712E-13	4.385E-14	6.281E-18	2.209E-31
-238	äS(j):		2.776E-06	2.655E-06	2.430E-06	1.783E-06	7.358E-07	3.322E-08	4.758E-12	1.673E-25
-238	U-238	3.794E-15	5.274E-14	5.045E-14	4.618E-14	3.388E-14	1.398E-14	6.311E-16	9.040E-20	3.180E-33
íííííí	ííííííí	ííííííííí	ííííííííí	ííííííííí	ííííííííí	ííííííííí	ííííííííí	ííííííííí	ííííííííí	ííííííííí

HF(i) is the thread fraction of the parent nuclide.

ESCALC.EXE execution time = 41.17 seconds

ummary : GKP Recreational Visitor-- Ingestion
ile : C:\USERS\CLAUDE\DOCUMENTS\0 GKP DOSE\RESRAD CW\GKP RECREATIONAL VISITOR -INGESTION R1.RAD

Table of Contents

Part I: Mixture Sums and Single Radionuclide Guidelines

ummary : GKP Recreational Visitor-- Ingestion
ile : C:\USERS\CLAUDE\DOCUMENTS\0 GKP DOSE\RESRAD CW\GKP RECREATIONAL VISITOR -INGESTION R1.RAD

Dose Conversion Factor (and Related) Parameter Summary
Dose Library: FGR 11

enu	Parameter	Current Value#	Base Case*	Parameter Name
-1	DCF's for external ground radiation, (mrem/yr)/(pCi/g)			
-1	Ac-227 (Source: FGR 12)	4.951E-04	4.951E-04	DCF1(1)
-1	Ac-228 (Source: FGR 12)	5.978E+00	5.978E+00	DCF1(2)
-1	At-218 (Source: FGR 12)	5.847E-03	5.847E-03	DCF1(3)
-1	At-219 (Source: no data)	0.000E+00	-2.000E+00	DCF1(4)
-1	Bi-210 (Source: FGR 12)	3.606E-03	3.606E-03	DCF1(5)
-1	Bi-211 (Source: FGR 12)	2.559E-01	2.559E-01	DCF1(6)
-1	Bi-212 (Source: FGR 12)	1.171E+00	1.171E+00	DCF1(7)
-1	Bi-214 (Source: FGR 12)	9.808E+00	9.808E+00	DCF1(8)
-1	Bi-215 (Source: no data)	0.000E+00	-2.000E+00	DCF1(9)
-1	Fr-223 (Source: FGR 12)	1.980E-01	1.980E-01	DCF1(10)
-1	Hg-206 (Source: no data)	0.000E+00	-2.000E+00	DCF1(11)
-1	Pa-231 (Source: FGR 12)	1.906E-01	1.906E-01	DCF1(12)
-1	Pa-234 (Source: FGR 12)	1.155E+01	1.155E+01	DCF1(13)
-1	Pa-234m (Source: FGR 12)	8.967E-02	8.967E-02	DCF1(14)
-1	Pb-210 (Source: FGR 12)	2.447E-03	2.447E-03	DCF1(15)
-1	Pb-211 (Source: FGR 12)	3.064E-01	3.064E-01	DCF1(16)
-1	Pb-212 (Source: FGR 12)	7.043E-01	7.043E-01	DCF1(17)
-1	Pb-214 (Source: FGR 12)	1.341E+00	1.341E+00	DCF1(18)
-1	Po-210 (Source: FGR 12)	5.231E-05	5.231E-05	DCF1(19)
-1	Po-211 (Source: FGR 12)	4.764E-02	4.764E-02	DCF1(20)
-1	Po-212 (Source: FGR 12)	0.000E+00	0.000E+00	DCF1(21)
-1	Po-214 (Source: FGR 12)	5.138E-04	5.138E-04	DCF1(22)
-1	Po-215 (Source: FGR 12)	1.016E-03	1.016E-03	DCF1(23)
-1	Po-216 (Source: FGR 12)	1.042E-04	1.042E-04	DCF1(24)
-1	Po-218 (Source: FGR 12)	5.642E-05	5.642E-05	DCF1(25)
-1	Ra-223 (Source: FGR 12)	6.034E-01	6.034E-01	DCF1(26)
-1	Ra-224 (Source: FGR 12)	5.119E-02	5.119E-02	DCF1(27)
-1	Ra-226 (Source: FGR 12)	3.176E-02	3.176E-02	DCF1(28)
-1	Ra-228 (Source: FGR 12)	0.000E+00	0.000E+00	DCF1(29)
-1	Rn-218 (Source: FGR 12)	4.540E-03	4.540E-03	DCF1(30)
-1	Rn-219 (Source: FGR 12)	3.083E-01	3.083E-01	DCF1(31)
-1	Rn-220 (Source: FGR 12)	2.298E-03	2.298E-03	DCF1(32)
-1	Rn-222 (Source: FGR 12)	2.354E-03	2.354E-03	DCF1(33)
-1	Th-227 (Source: FGR 12)	5.212E-01	5.212E-01	DCF1(34)
-1	Th-228 (Source: FGR 12)	7.940E-03	7.940E-03	DCF1(35)
-1	Th-230 (Source: FGR 12)	1.209E-03	1.209E-03	DCF1(36)
-1	Th-231 (Source: FGR 12)	3.643E-02	3.643E-02	DCF1(37)
-1	Th-232 (Source: FGR 12)	5.212E-04	5.212E-04	DCF1(38)
-1	Th-234 (Source: FGR 12)	2.410E-02	2.410E-02	DCF1(39)
-1	Tl-206 (Source: FGR 12)	7.697E-03	7.697E-03	DCF1(40)
-1	Tl-207 (Source: FGR 12)	1.980E-02	1.980E-02	DCF1(41)
-1	Tl-208 (Source: FGR 12)	2.298E+01	2.298E+01	DCF1(42)
-1	Tl-210 (Source: no data)	0.000E+00	-2.000E+00	DCF1(43)
-1	U-234 (Source: FGR 12)	4.017E-04	4.017E-04	DCF1(44)
-1	U-235 (Source: FGR 12)	7.211E-01	7.211E-01	DCF1(45)
-1	U-238 (Source: FGR 12)	1.031E-04	1.031E-04	DCF1(46)
-1	Dose conversion factors for inhalation, mrem/pCi:			
-1	Ac-227+D	6.724E+00	6.700E+00	DCF2(1)

Dose Conversion Factor (and Related) Parameter Summary (continued)

Dose Library: FGR 11

enu	Parameter	Current Value#	Base Case*	Parameter Name
-1	Ac-227+D1	6.724E+00	6.700E+00	DCF2(2)
-1	Ac-227+D2	6.708E+00	6.700E+00	DCF2(3)
-1	Ac-227+D3	6.708E+00	6.700E+00	DCF2(4)
-1	Ac-227+D4	6.700E+00	6.700E+00	DCF2(5)
-1	Ac-227+D5	6.700E+00	6.700E+00	DCF2(6)
-1	Pa-231	1.280E+00	1.280E+00	DCF2(7)
-1	Pb-210+D	2.320E-02	1.360E-02	DCF2(13)
-1	Pb-210+D1	1.380E-02	1.360E-02	DCF2(14)
-1	Pb-210+D2	1.360E-02	1.360E-02	DCF2(15)
-1	Ra-226+D	8.594E-03	8.580E-03	DCF2(16)
-1	Ra-226+D1	8.594E-03	8.580E-03	DCF2(19)
-1	Ra-226+D2	8.587E-03	8.580E-03	DCF2(22)
-1	Ra-226+D3	8.587E-03	8.580E-03	DCF2(25)
-1	Ra-226+D4	8.580E-03	8.580E-03	DCF2(28)
-1	Ra-228+D	5.078E-03	4.770E-03	DCF2(31)
-1	Th-228+D	3.454E-01	3.420E-01	DCF2(32)
-1	Th-230	3.260E-01	3.260E-01	DCF2(33)
-1	Th-232	1.640E+00	1.640E+00	DCF2(48)
-1	U-234	1.320E-01	1.320E-01	DCF2(49)
-1	U-235+D	1.230E-01	1.230E-01	DCF2(64)
-1	U-238	1.180E-01	1.180E-01	DCF2(70)
-1	U-238+D	1.180E-01	1.180E-01	DCF2(71)
-1	U-238+D1	1.180E-01	1.180E-01	DCF2(86)
-1	Dose conversion factors for ingestion, mrem/pCi:			
-1	Ac-227+D	1.480E-02	1.410E-02	DCF3(1)
-1	Ac-227+D1	1.480E-02	1.410E-02	DCF3(2)
-1	Ac-227+D2	1.477E-02	1.410E-02	DCF3(3)
-1	Ac-227+D3	1.477E-02	1.410E-02	DCF3(4)
-1	Ac-227+D4	1.411E-02	1.410E-02	DCF3(5)
-1	Ac-227+D5	1.411E-02	1.410E-02	DCF3(6)
-1	Pa-231	1.060E-02	1.060E-02	DCF3(7)
-1	Pb-210+D	7.276E-03	5.370E-03	DCF3(13)
-1	Pb-210+D1	5.376E-03	5.370E-03	DCF3(14)
-1	Pb-210+D2	5.370E-03	5.370E-03	DCF3(15)
-1	Ra-226+D	1.321E-03	1.320E-03	DCF3(16)
-1	Ra-226+D1	1.321E-03	1.320E-03	DCF3(19)
-1	Ra-226+D2	1.320E-03	1.320E-03	DCF3(22)
-1	Ra-226+D3	1.320E-03	1.320E-03	DCF3(25)
-1	Ra-226+D4	1.320E-03	1.320E-03	DCF3(28)
-1	Ra-228+D	1.442E-03	1.440E-03	DCF3(31)
-1	Th-228+D	8.086E-04	3.960E-04	DCF3(32)
-1	Th-230	5.480E-04	5.480E-04	DCF3(33)
-1	Th-232	2.730E-03	2.730E-03	DCF3(48)
-1	U-234	2.830E-04	2.830E-04	DCF3(49)
-1	U-235+D	2.673E-04	2.660E-04	DCF3(64)
-1	U-238	2.550E-04	2.550E-04	DCF3(70)
-1	U-238+D	2.709E-04	2.550E-04	DCF3(71)
-1	U-238+D1	2.687E-04	2.550E-04	DCF3(86)

Dose Conversion Factor (and Related) Parameter Summary (continued)
Dose Library: FGR 11

enu	Parameter	Current Value#	Base Case*	Parameter Name
-34	Food transfer factors:			
-34	Ac-227+D , plant/soil concentration ratio, dimensionless	2.500E-03	2.500E-03	RTF(1,1)
-34	Ac-227+D , beef/livestock-intake ratio, (pCi/kg)/(pCi/d)	2.000E-05	2.000E-05	RTF(1,2)
-34	Ac-227+D , milk/livestock-intake ratio, (pCi/L)/(pCi/d)	2.000E-05	2.000E-05	RTF(1,3)
-34				
-34	Ac-227+D1 , plant/soil concentration ratio, dimensionless	2.500E-03	2.500E-03	RTF(2,1)
-34	Ac-227+D1 , beef/livestock-intake ratio, (pCi/kg)/(pCi/d)	2.000E-05	2.000E-05	RTF(2,2)
-34	Ac-227+D1 , milk/livestock-intake ratio, (pCi/L)/(pCi/d)	2.000E-05	2.000E-05	RTF(2,3)
-34				
-34	Ac-227+D2 , plant/soil concentration ratio, dimensionless	2.500E-03	2.500E-03	RTF(3,1)
-34	Ac-227+D2 , beef/livestock-intake ratio, (pCi/kg)/(pCi/d)	2.000E-05	2.000E-05	RTF(3,2)
-34	Ac-227+D2 , milk/livestock-intake ratio, (pCi/L)/(pCi/d)	2.000E-05	2.000E-05	RTF(3,3)
-34				
-34	Ac-227+D3 , plant/soil concentration ratio, dimensionless	2.500E-03	2.500E-03	RTF(4,1)
-34	Ac-227+D3 , beef/livestock-intake ratio, (pCi/kg)/(pCi/d)	2.000E-05	2.000E-05	RTF(4,2)
-34	Ac-227+D3 , milk/livestock-intake ratio, (pCi/L)/(pCi/d)	2.000E-05	2.000E-05	RTF(4,3)
-34				
-34	Ac-227+D4 , plant/soil concentration ratio, dimensionless	2.500E-03	2.500E-03	RTF(5,1)
-34	Ac-227+D4 , beef/livestock-intake ratio, (pCi/kg)/(pCi/d)	2.000E-05	2.000E-05	RTF(5,2)
-34	Ac-227+D4 , milk/livestock-intake ratio, (pCi/L)/(pCi/d)	2.000E-05	2.000E-05	RTF(5,3)
-34				
-34	Ac-227+D5 , plant/soil concentration ratio, dimensionless	2.500E-03	2.500E-03	RTF(6,1)
-34	Ac-227+D5 , beef/livestock-intake ratio, (pCi/kg)/(pCi/d)	2.000E-05	2.000E-05	RTF(6,2)
-34	Ac-227+D5 , milk/livestock-intake ratio, (pCi/L)/(pCi/d)	2.000E-05	2.000E-05	RTF(6,3)
-34				
-34	Pa-231 , plant/soil concentration ratio, dimensionless	1.000E-02	1.000E-02	RTF(7,1)
-34	Pa-231 , beef/livestock-intake ratio, (pCi/kg)/(pCi/d)	5.000E-03	5.000E-03	RTF(7,2)
-34	Pa-231 , milk/livestock-intake ratio, (pCi/L)/(pCi/d)	5.000E-06	5.000E-06	RTF(7,3)
-34				
-34	Pb-210+D , plant/soil concentration ratio, dimensionless	1.000E-02	1.000E-02	RTF(13,1)
-34	Pb-210+D , beef/livestock-intake ratio, (pCi/kg)/(pCi/d)	8.000E-04	8.000E-04	RTF(13,2)
-34	Pb-210+D , milk/livestock-intake ratio, (pCi/L)/(pCi/d)	3.000E-04	3.000E-04	RTF(13,3)
-34				
-34	Pb-210+D1 , plant/soil concentration ratio, dimensionless	1.000E-02	1.000E-02	RTF(14,1)
-34	Pb-210+D1 , beef/livestock-intake ratio, (pCi/kg)/(pCi/d)	8.000E-04	8.000E-04	RTF(14,2)
-34	Pb-210+D1 , milk/livestock-intake ratio, (pCi/L)/(pCi/d)	3.000E-04	3.000E-04	RTF(14,3)
-34				
-34	Pb-210+D2 , plant/soil concentration ratio, dimensionless	1.000E-02	1.000E-02	RTF(15,1)
-34	Pb-210+D2 , beef/livestock-intake ratio, (pCi/kg)/(pCi/d)	8.000E-04	8.000E-04	RTF(15,2)
-34	Pb-210+D2 , milk/livestock-intake ratio, (pCi/L)/(pCi/d)	3.000E-04	3.000E-04	RTF(15,3)
-34				
-34	Ra-226+D , plant/soil concentration ratio, dimensionless	4.000E-02	4.000E-02	RTF(16,1)
-34	Ra-226+D , beef/livestock-intake ratio, (pCi/kg)/(pCi/d)	1.000E-03	1.000E-03	RTF(16,2)
-34	Ra-226+D , milk/livestock-intake ratio, (pCi/L)/(pCi/d)	1.000E-03	1.000E-03	RTF(16,3)
-34				
-34	Ra-226+D1 , plant/soil concentration ratio, dimensionless	4.000E-02	4.000E-02	RTF(19,1)
-34	Ra-226+D1 , beef/livestock-intake ratio, (pCi/kg)/(pCi/d)	1.000E-03	1.000E-03	RTF(19,2)
-34	Ra-226+D1 , milk/livestock-intake ratio, (pCi/L)/(pCi/d)	1.000E-03	1.000E-03	RTF(19,3)
-34				

Dose Conversion Factor (and Related) Parameter Summary (continued)
Dose Library: FGR 11

enu	Parameter	Current Value#	Base Case*	Parameter Name
-34	Ra-226+D2 , plant/soil concentration ratio, dimensionless	4.000E-02	4.000E-02	RTF(22,1)
-34	Ra-226+D2 , beef/livestock-intake ratio, (pCi/kg)/(pCi/d)	1.000E-03	1.000E-03	RTF(22,2)
-34	Ra-226+D2 , milk/livestock-intake ratio, (pCi/L)/(pCi/d)	1.000E-03	1.000E-03	RTF(22,3)
-34				
-34	Ra-226+D3 , plant/soil concentration ratio, dimensionless	4.000E-02	4.000E-02	RTF(25,1)
-34	Ra-226+D3 , beef/livestock-intake ratio, (pCi/kg)/(pCi/d)	1.000E-03	1.000E-03	RTF(25,2)
-34	Ra-226+D3 , milk/livestock-intake ratio, (pCi/L)/(pCi/d)	1.000E-03	1.000E-03	RTF(25,3)
-34				
-34	Ra-226+D4 , plant/soil concentration ratio, dimensionless	4.000E-02	4.000E-02	RTF(28,1)
-34	Ra-226+D4 , beef/livestock-intake ratio, (pCi/kg)/(pCi/d)	1.000E-03	1.000E-03	RTF(28,2)
-34	Ra-226+D4 , milk/livestock-intake ratio, (pCi/L)/(pCi/d)	1.000E-03	1.000E-03	RTF(28,3)
-34				
-34	Ra-228+D , plant/soil concentration ratio, dimensionless	4.000E-02	4.000E-02	RTF(31,1)
-34	Ra-228+D , beef/livestock-intake ratio, (pCi/kg)/(pCi/d)	1.000E-03	1.000E-03	RTF(31,2)
-34	Ra-228+D , milk/livestock-intake ratio, (pCi/L)/(pCi/d)	1.000E-03	1.000E-03	RTF(31,3)
-34				
-34	Th-228+D , plant/soil concentration ratio, dimensionless	1.000E-03	1.000E-03	RTF(32,1)
-34	Th-228+D , beef/livestock-intake ratio, (pCi/kg)/(pCi/d)	1.000E-04	1.000E-04	RTF(32,2)
-34	Th-228+D , milk/livestock-intake ratio, (pCi/L)/(pCi/d)	5.000E-06	5.000E-06	RTF(32,3)
-34				
-34	Th-230 , plant/soil concentration ratio, dimensionless	1.000E-03	1.000E-03	RTF(33,1)
-34	Th-230 , beef/livestock-intake ratio, (pCi/kg)/(pCi/d)	1.000E-04	1.000E-04	RTF(33,2)
-34	Th-230 , milk/livestock-intake ratio, (pCi/L)/(pCi/d)	5.000E-06	5.000E-06	RTF(33,3)
-34				
-34	Th-232 , plant/soil concentration ratio, dimensionless	1.000E-03	1.000E-03	RTF(48,1)
-34	Th-232 , beef/livestock-intake ratio, (pCi/kg)/(pCi/d)	1.000E-04	1.000E-04	RTF(48,2)
-34	Th-232 , milk/livestock-intake ratio, (pCi/L)/(pCi/d)	5.000E-06	5.000E-06	RTF(48,3)
-34				
-34	U-234 , plant/soil concentration ratio, dimensionless	2.500E-03	2.500E-03	RTF(49,1)
-34	U-234 , beef/livestock-intake ratio, (pCi/kg)/(pCi/d)	3.400E-04	3.400E-04	RTF(49,2)
-34	U-234 , milk/livestock-intake ratio, (pCi/L)/(pCi/d)	6.000E-04	6.000E-04	RTF(49,3)
-34				
-34	U-235+D , plant/soil concentration ratio, dimensionless	2.500E-03	2.500E-03	RTF(64,1)
-34	U-235+D , beef/livestock-intake ratio, (pCi/kg)/(pCi/d)	3.400E-04	3.400E-04	RTF(64,2)
-34	U-235+D , milk/livestock-intake ratio, (pCi/L)/(pCi/d)	6.000E-04	6.000E-04	RTF(64,3)
-34				
-34	U-238 , plant/soil concentration ratio, dimensionless	2.500E-03	2.500E-03	RTF(70,1)
-34	U-238 , beef/livestock-intake ratio, (pCi/kg)/(pCi/d)	3.400E-04	3.400E-04	RTF(70,2)
-34	U-238 , milk/livestock-intake ratio, (pCi/L)/(pCi/d)	6.000E-04	6.000E-04	RTF(70,3)
-34				
-34	U-238+D , plant/soil concentration ratio, dimensionless	2.500E-03	2.500E-03	RTF(71,1)
-34	U-238+D , beef/livestock-intake ratio, (pCi/kg)/(pCi/d)	3.400E-04	3.400E-04	RTF(71,2)
-34	U-238+D , milk/livestock-intake ratio, (pCi/L)/(pCi/d)	6.000E-04	6.000E-04	RTF(71,3)
-34				
-34	U-238+D1 , plant/soil concentration ratio, dimensionless	2.500E-03	2.500E-03	RTF(86,1)
-34	U-238+D1 , beef/livestock-intake ratio, (pCi/kg)/(pCi/d)	3.400E-04	3.400E-04	RTF(86,2)
-34	U-238+D1 , milk/livestock-intake ratio, (pCi/L)/(pCi/d)	6.000E-04	6.000E-04	RTF(86,3)
-34				

Dose Conversion Factor (and Related) Parameter Summary (continued)

Dose Library: FGR 11

enu	Parameter	Current Value#	Base Case*	Parameter Name
-5	Bioaccumulation factors, fresh water, L/kg:			
-5	Ac-227+D , fish	1.500E+01	1.500E+01	BIOFAC(1,1)
-5	Ac-227+D , crustacea and mollusks	1.000E+03	1.000E+03	BIOFAC(1,2)
-5				
-5	Ac-227+D1 , fish	1.500E+01	1.500E+01	BIOFAC(2,1)
-5	Ac-227+D1 , crustacea and mollusks	1.000E+03	1.000E+03	BIOFAC(2,2)
-5				
-5	Ac-227+D2 , fish	1.500E+01	1.500E+01	BIOFAC(3,1)
-5	Ac-227+D2 , crustacea and mollusks	1.000E+03	1.000E+03	BIOFAC(3,2)
-5				
-5	Ac-227+D3 , fish	1.500E+01	1.500E+01	BIOFAC(4,1)
-5	Ac-227+D3 , crustacea and mollusks	1.000E+03	1.000E+03	BIOFAC(4,2)
-5				
-5	Ac-227+D4 , fish	1.500E+01	1.500E+01	BIOFAC(5,1)
-5	Ac-227+D4 , crustacea and mollusks	1.000E+03	1.000E+03	BIOFAC(5,2)
-5				
-5	Ac-227+D5 , fish	1.500E+01	1.500E+01	BIOFAC(6,1)
-5	Ac-227+D5 , crustacea and mollusks	1.000E+03	1.000E+03	BIOFAC(6,2)
-5				
-5	Pa-231 , fish	1.000E+01	1.000E+01	BIOFAC(7,1)
-5	Pa-231 , crustacea and mollusks	1.100E+02	1.100E+02	BIOFAC(7,2)
-5				
-5	Pb-210+D , fish	3.000E+02	3.000E+02	BIOFAC(13,1)
-5	Pb-210+D , crustacea and mollusks	1.000E+02	1.000E+02	BIOFAC(13,2)
-5				
-5	Pb-210+D1 , fish	3.000E+02	3.000E+02	BIOFAC(14,1)
-5	Pb-210+D1 , crustacea and mollusks	1.000E+02	1.000E+02	BIOFAC(14,2)
-5				
-5	Pb-210+D2 , fish	3.000E+02	3.000E+02	BIOFAC(15,1)
-5	Pb-210+D2 , crustacea and mollusks	1.000E+02	1.000E+02	BIOFAC(15,2)
-5				
-5	Ra-226+D , fish	5.000E+01	5.000E+01	BIOFAC(16,1)
-5	Ra-226+D , crustacea and mollusks	2.500E+02	2.500E+02	BIOFAC(16,2)
-5				
-5	Ra-226+D1 , fish	5.000E+01	5.000E+01	BIOFAC(19,1)
-5	Ra-226+D1 , crustacea and mollusks	2.500E+02	2.500E+02	BIOFAC(19,2)
-5				
-5	Ra-226+D2 , fish	5.000E+01	5.000E+01	BIOFAC(22,1)
-5	Ra-226+D2 , crustacea and mollusks	2.500E+02	2.500E+02	BIOFAC(22,2)
-5				
-5	Ra-226+D3 , fish	5.000E+01	5.000E+01	BIOFAC(25,1)
-5	Ra-226+D3 , crustacea and mollusks	2.500E+02	2.500E+02	BIOFAC(25,2)
-5				
-5	Ra-226+D4 , fish	5.000E+01	5.000E+01	BIOFAC(28,1)
-5	Ra-226+D4 , crustacea and mollusks	2.500E+02	2.500E+02	BIOFAC(28,2)
-5				
-5	Ra-228+D , fish	5.000E+01	5.000E+01	BIOFAC(31,1)
-5	Ra-228+D , crustacea and mollusks	2.500E+02	2.500E+02	BIOFAC(31,2)
-5				

Dose Conversion Factor (and Related) Parameter Summary (continued)

Dose Library: FGR 11

enu	Parameter	Current Value#	Base Case*	Parameter Name
-5	Th-228+D , fish	1.000E+02	1.000E+02	BIOFAC(32,1)
-5	Th-228+D , crustacea and mollusks	5.000E+02	5.000E+02	BIOFAC(32,2)
-5				
-5	Th-230 , fish	1.000E+02	1.000E+02	BIOFAC(33,1)
-5	Th-230 , crustacea and mollusks	5.000E+02	5.000E+02	BIOFAC(33,2)
-5				
-5	Th-232 , fish	1.000E+02	1.000E+02	BIOFAC(48,1)
-5	Th-232 , crustacea and mollusks	5.000E+02	5.000E+02	BIOFAC(48,2)
-5				
-5	U-234 , fish	1.000E+01	1.000E+01	BIOFAC(49,1)
-5	U-234 , crustacea and mollusks	6.000E+01	6.000E+01	BIOFAC(49,2)
-5				
-5	U-235+D , fish	1.000E+01	1.000E+01	BIOFAC(64,1)
-5	U-235+D , crustacea and mollusks	6.000E+01	6.000E+01	BIOFAC(64,2)
-5				
-5	U-238 , fish	1.000E+01	1.000E+01	BIOFAC(70,1)
-5	U-238 , crustacea and mollusks	6.000E+01	6.000E+01	BIOFAC(70,2)
-5				
-5	U-238+D , fish	1.000E+01	1.000E+01	BIOFAC(71,1)
-5	U-238+D , crustacea and mollusks	6.000E+01	6.000E+01	BIOFAC(71,2)
-5				
-5	U-238+D1 , fish	1.000E+01	1.000E+01	BIOFAC(86,1)
-5	U-238+D1 , crustacea and mollusks	6.000E+01	6.000E+01	BIOFAC(86,2)
-5				

For DCF1(xxx) only, factors are for infinite depth & area. See ETFG table in Ground Pathway of Detailed Report.
Base Case means Default.Lib w/o Associate Nuclide contributions.

ummary : GKP Recreational Visitor-- Ingestion
ile : C:\USERS\CLAUDE\DOCUMENTS\0 GKP DOSE\RESRAD CW\GKP RECREATIONAL VISITOR -INGESTION R1.RAD

Site-Specific Parameter Summary

enu	Parameter	User Input	Default	Used by RESRAD (If different from user input)	Parameter Name
011	Area of contaminated zone (m**2)	2.000E+02	1.000E+04	---	AREA
011	Thickness of contaminated zone (m)	1.500E-01	2.000E+00	---	THICK0
011	Fraction of contamination that is submerged	0.000E+00	0.000E+00	---	SUBMFRACT
011	Length parallel to aquifer flow (m)	1.000E+02	1.000E+02	---	LCZPAQ
011	Basic radiation dose limit (mrem/yr)	2.500E+01	3.000E+01	---	BRDL
011	Time since placement of material (yr)	0.000E+00	0.000E+00	---	TI
011	Times for calculations (yr)	1.000E+00	1.000E+00	---	T(2)
011	Times for calculations (yr)	3.000E+00	3.000E+00	---	T(3)
011	Times for calculations (yr)	1.000E+01	1.000E+01	---	T(4)
011	Times for calculations (yr)	3.000E+01	3.000E+01	---	T(5)
011	Times for calculations (yr)	1.000E+02	1.000E+02	---	T(6)
011	Times for calculations (yr)	3.000E+02	3.000E+02	---	T(7)
011	Times for calculations (yr)	1.000E+03	1.000E+03	---	T(8)
011	Times for calculations (yr)	not used	0.000E+00	---	T(9)
011	Times for calculations (yr)	not used	0.000E+00	---	T(10)
012	Initial principal radionuclide (pCi/g): Ra-226	3.650E+01	0.000E+00	---	S1(16)
012	Initial principal radionuclide (pCi/g): Th-232	2.400E+00	0.000E+00	---	S1(48)
012	Initial principal radionuclide (pCi/g): U-234	1.390E+01	0.000E+00	---	S1(49)
012	Initial principal radionuclide (pCi/g): U-235	8.400E-01	0.000E+00	---	S1(64)
012	Initial principal radionuclide (pCi/g): U-238	1.390E+01	0.000E+00	---	S1(70)
012	Concentration in groundwater (pCi/L): Ra-226	not used	0.000E+00	---	W1(16)
012	Concentration in groundwater (pCi/L): Th-232	not used	0.000E+00	---	W1(48)
012	Concentration in groundwater (pCi/L): U-234	not used	0.000E+00	---	W1(49)
012	Concentration in groundwater (pCi/L): U-235	not used	0.000E+00	---	W1(64)
012	Concentration in groundwater (pCi/L): U-238	not used	0.000E+00	---	W1(70)
013	Cover depth (m)	0.000E+00	0.000E+00	---	COVER0
013	Density of cover material (g/cm**3)	not used	1.500E+00	---	DENSCV
013	Cover depth erosion rate (m/yr)	not used	1.000E-03	---	VCV
013	Density of contaminated zone (g/cm**3)	1.500E+00	1.500E+00	---	DENSCZ
013	Contaminated zone erosion rate (m/yr)	1.000E-03	1.000E-03	---	VCZ
013	Contaminated zone total porosity	4.000E-01	4.000E-01	---	TPCZ
013	Contaminated zone field capacity	2.000E-01	2.000E-01	---	FCCZ
013	Contaminated zone hydraulic conductivity (m/yr)	1.000E+01	1.000E+01	---	HCCZ
013	Contaminated zone b parameter	5.300E+00	5.300E+00	---	BCZ
013	Average annual wind speed (m/sec)	2.000E+00	2.000E+00	---	WIND
013	Humidity in air (g/m**3)	not used	8.000E+00	---	HUMID
013	Evapotranspiration coefficient	5.000E-01	5.000E-01	---	EVAPTR
013	Precipitation (m/yr)	1.000E+00	1.000E+00	---	PRECIP
013	Irrigation (m/yr)	2.000E-01	2.000E-01	---	RI
013	Irrigation mode	overhead	overhead	---	IDITCH
013	Runoff coefficient	2.000E-01	2.000E-01	---	RUNOFF
013	Watershed area for nearby stream or pond (m**2)	1.000E+06	1.000E+06	---	WAREA
013	Accuracy for water/soil computations	1.000E-03	1.000E-03	---	EPS
014	Density of saturated zone (g/cm**3)	1.500E+00	1.500E+00	---	DENSAQ
014	Saturated zone total porosity	4.000E-01	4.000E-01	---	TPSZ
014	Saturated zone effective porosity	2.000E-01	2.000E-01	---	EPSZ
014	Saturated zone field capacity	2.000E-01	2.000E-01	---	FCSZ

Site-Specific Parameter Summary (continued)

enu	Parameter	User Input	Default	Used by RESRAD (If different from user input)	Parameter Name
014	Saturated zone hydraulic conductivity (m/yr)	1.000E+02	1.000E+02	---	HCSZ
014	Saturated zone hydraulic gradient	2.000E-02	2.000E-02	---	HGWT
014	Saturated zone b parameter	5.300E+00	5.300E+00	---	BSZ
014	Water table drop rate (m/yr)	1.000E-03	1.000E-03	---	VWT
014	Well pump intake depth (m below water table)	1.000E+01	1.000E+01	---	DWIBWT
014	Model: Nondispersion (ND) or Mass-Balance (MB)	ND	ND	---	MODEL
014	Well pumping rate (m**3/yr)	2.500E+02	2.500E+02	---	UW
015	Number of unsaturated zone strata	1	1	---	NS
015	Unsat. zone 1, thickness (m)	4.000E+00	4.000E+00	---	H(1)
015	Unsat. zone 1, soil density (g/cm**3)	1.500E+00	1.500E+00	---	DENSUZ(1)
015	Unsat. zone 1, total porosity	4.000E-01	4.000E-01	---	TPUZ(1)
015	Unsat. zone 1, effective porosity	2.000E-01	2.000E-01	---	EPUZ(1)
015	Unsat. zone 1, field capacity	2.000E-01	2.000E-01	---	FCUZ(1)
015	Unsat. zone 1, soil-specific b parameter	5.300E+00	5.300E+00	---	BUZ(1)
015	Unsat. zone 1, hydraulic conductivity (m/yr)	1.000E+01	1.000E+01	---	HCUZ(1)
016	Distribution coefficients for Ra-226				
016	Contaminated zone (cm**3/g)	7.000E+01	7.000E+01	---	DCNUCC(16)
016	Unsaturated zone 1 (cm**3/g)	7.000E+01	7.000E+01	---	DCNUCU(16,1)
016	Saturated zone (cm**3/g)	7.000E+01	7.000E+01	---	DCNUCS(16)
016	Leach rate (/yr)	0.000E+00	0.000E+00	3.165E-02	ALEACH(16)
016	Solubility constant	0.000E+00	0.000E+00	not used	SOLUBK(16)
016	Distribution coefficients for Th-232				
016	Contaminated zone (cm**3/g)	6.000E+04	6.000E+04	---	DCNUCC(48)
016	Unsaturated zone 1 (cm**3/g)	6.000E+04	6.000E+04	---	DCNUCU(48,1)
016	Saturated zone (cm**3/g)	6.000E+04	6.000E+04	---	DCNUCS(48)
016	Leach rate (/yr)	0.000E+00	0.000E+00	3.704E-05	ALEACH(48)
016	Solubility constant	0.000E+00	0.000E+00	not used	SOLUBK(48)
016	Distribution coefficients for U-234				
016	Contaminated zone (cm**3/g)	5.000E+01	5.000E+01	---	DCNUCC(49)
016	Unsaturated zone 1 (cm**3/g)	5.000E+01	5.000E+01	---	DCNUCU(49,1)
016	Saturated zone (cm**3/g)	5.000E+01	5.000E+01	---	DCNUCS(49)
016	Leach rate (/yr)	0.000E+00	0.000E+00	4.426E-02	ALEACH(49)
016	Solubility constant	0.000E+00	0.000E+00	not used	SOLUBK(49)
016	Distribution coefficients for U-235				
016	Contaminated zone (cm**3/g)	5.000E+01	5.000E+01	---	DCNUCC(64)
016	Unsaturated zone 1 (cm**3/g)	5.000E+01	5.000E+01	---	DCNUCU(64,1)
016	Saturated zone (cm**3/g)	5.000E+01	5.000E+01	---	DCNUCS(64)
016	Leach rate (/yr)	0.000E+00	0.000E+00	4.426E-02	ALEACH(64)
016	Solubility constant	0.000E+00	0.000E+00	not used	SOLUBK(64)
016	Distribution coefficients for U-238				
016	Contaminated zone (cm**3/g)	5.000E+01	5.000E+01	---	DCNUCC(70)
016	Unsaturated zone 1 (cm**3/g)	5.000E+01	5.000E+01	---	DCNUCU(70,1)
016	Saturated zone (cm**3/g)	5.000E+01	5.000E+01	---	DCNUCS(70)
016	Leach rate (/yr)	0.000E+00	0.000E+00	4.426E-02	ALEACH(70)
016	Solubility constant	0.000E+00	0.000E+00	not used	SOLUBK(70)

Site-Specific Parameter Summary (continued)

enu	Parameter	User Input	Default	Used by RESRAD (If different from user input)	Parameter Name
016	Distribution coefficients for daughter Ac-227				
016	Contaminated zone (cm**3/g)	2.000E+01	2.000E+01	---	DCNUCC(1)
016	Unsaturated zone 1 (cm**3/g)	2.000E+01	2.000E+01	---	DCNUCU(1,1)
016	Saturated zone (cm**3/g)	2.000E+01	2.000E+01	---	DCNUCS(1)
016	Leach rate (/yr)	0.000E+00	0.000E+00	1.099E-01	ALEACH(1)
016	Solubility constant	0.000E+00	0.000E+00	not used	SOLUBK(1)
016	Distribution coefficients for daughter Pa-231				
016	Contaminated zone (cm**3/g)	5.000E+01	5.000E+01	---	DCNUCC(7)
016	Unsaturated zone 1 (cm**3/g)	5.000E+01	5.000E+01	---	DCNUCU(7,1)
016	Saturated zone (cm**3/g)	5.000E+01	5.000E+01	---	DCNUCS(7)
016	Leach rate (/yr)	0.000E+00	0.000E+00	4.426E-02	ALEACH(7)
016	Solubility constant	0.000E+00	0.000E+00	not used	SOLUBK(7)
016	Distribution coefficients for daughter Pb-210				
016	Contaminated zone (cm**3/g)	1.000E+02	1.000E+02	---	DCNUCC(13)
016	Unsaturated zone 1 (cm**3/g)	1.000E+02	1.000E+02	---	DCNUCU(13,1)
016	Saturated zone (cm**3/g)	1.000E+02	1.000E+02	---	DCNUCS(13)
016	Leach rate (/yr)	0.000E+00	0.000E+00	2.217E-02	ALEACH(13)
016	Solubility constant	0.000E+00	0.000E+00	not used	SOLUBK(13)
016	Distribution coefficients for daughter Ra-228				
016	Contaminated zone (cm**3/g)	7.000E+01	7.000E+01	---	DCNUCC(31)
016	Unsaturated zone 1 (cm**3/g)	7.000E+01	7.000E+01	---	DCNUCU(31,1)
016	Saturated zone (cm**3/g)	7.000E+01	7.000E+01	---	DCNUCS(31)
016	Leach rate (/yr)	0.000E+00	0.000E+00	3.165E-02	ALEACH(31)
016	Solubility constant	0.000E+00	0.000E+00	not used	SOLUBK(31)
016	Distribution coefficients for daughter Th-228				
016	Contaminated zone (cm**3/g)	6.000E+04	6.000E+04	---	DCNUCC(32)
016	Unsaturated zone 1 (cm**3/g)	6.000E+04	6.000E+04	---	DCNUCU(32,1)
016	Saturated zone (cm**3/g)	6.000E+04	6.000E+04	---	DCNUCS(32)
016	Leach rate (/yr)	0.000E+00	0.000E+00	3.704E-05	ALEACH(32)
016	Solubility constant	0.000E+00	0.000E+00	not used	SOLUBK(32)
016	Distribution coefficients for daughter Th-230				
016	Contaminated zone (cm**3/g)	6.000E+04	6.000E+04	---	DCNUCC(33)
016	Unsaturated zone 1 (cm**3/g)	6.000E+04	6.000E+04	---	DCNUCU(33,1)
016	Saturated zone (cm**3/g)	6.000E+04	6.000E+04	---	DCNUCS(33)
016	Leach rate (/yr)	0.000E+00	0.000E+00	3.704E-05	ALEACH(33)
016	Solubility constant	0.000E+00	0.000E+00	not used	SOLUBK(33)
017	Inhalation rate (m**3/yr)	not used	8.400E+03	---	INHALR
017	Mass loading for inhalation (g/m**3)	not used	1.000E-04	---	MLINH
017	Exposure duration	3.000E+01	3.000E+01	---	ED
017	Shielding factor, inhalation	not used	4.000E-01	---	SHF3
017	Shielding factor, external gamma	not used	7.000E-01	---	SHF1
017	Fraction of time spent indoors	0.000E+00	5.000E-01	---	FIND
017	Fraction of time spent outdoors (on site)	2.850E-02	2.500E-01	---	FOTD
017	Shape factor flag, external gamma	not used	1.000E+00	>0 shows circular AREA.	FS

Site-Specific Parameter Summary (continued)

enu	Parameter	User Input	Default	Used by RESRAD (If different from user input)	Parameter Name
017	Radii of shape factor array (used if FS = -1):				
017	Outer annular radius (m), ring 1:	not used	5.000E+01	---	RAD_SHAPE(1)
017	Outer annular radius (m), ring 2:	not used	7.071E+01	---	RAD_SHAPE(2)
017	Outer annular radius (m), ring 3:	not used	0.000E+00	---	RAD_SHAPE(3)
017	Outer annular radius (m), ring 4:	not used	0.000E+00	---	RAD_SHAPE(4)
017	Outer annular radius (m), ring 5:	not used	0.000E+00	---	RAD_SHAPE(5)
017	Outer annular radius (m), ring 6:	not used	0.000E+00	---	RAD_SHAPE(6)
017	Outer annular radius (m), ring 7:	not used	0.000E+00	---	RAD_SHAPE(7)
017	Outer annular radius (m), ring 8:	not used	0.000E+00	---	RAD_SHAPE(8)
017	Outer annular radius (m), ring 9:	not used	0.000E+00	---	RAD_SHAPE(9)
017	Outer annular radius (m), ring 10:	not used	0.000E+00	---	RAD_SHAPE(10)
017	Outer annular radius (m), ring 11:	not used	0.000E+00	---	RAD_SHAPE(11)
017	Outer annular radius (m), ring 12:	not used	0.000E+00	---	RAD_SHAPE(12)
017	Fractions of annular areas within AREA:				
017	Ring 1	not used	1.000E+00	---	FRACA(1)
017	Ring 2	not used	2.732E-01	---	FRACA(2)
017	Ring 3	not used	0.000E+00	---	FRACA(3)
017	Ring 4	not used	0.000E+00	---	FRACA(4)
017	Ring 5	not used	0.000E+00	---	FRACA(5)
017	Ring 6	not used	0.000E+00	---	FRACA(6)
017	Ring 7	not used	0.000E+00	---	FRACA(7)
017	Ring 8	not used	0.000E+00	---	FRACA(8)
017	Ring 9	not used	0.000E+00	---	FRACA(9)
017	Ring 10	not used	0.000E+00	---	FRACA(10)
017	Ring 11	not used	0.000E+00	---	FRACA(11)
017	Ring 12	not used	0.000E+00	---	FRACA(12)
018	Fruits, vegetables and grain consumption (kg/yr)	not used	1.600E+02	---	DIET(1)
018	Leafy vegetable consumption (kg/yr)	not used	1.400E+01	---	DIET(2)
018	Milk consumption (L/yr)	not used	9.200E+01	---	DIET(3)
018	Meat and poultry consumption (kg/yr)	not used	6.300E+01	---	DIET(4)
018	Fish consumption (kg/yr)	not used	5.400E+00	---	DIET(5)
018	Other seafood consumption (kg/yr)	not used	9.000E-01	---	DIET(6)
018	Soil ingestion rate (g/yr)	3.650E+01	3.650E+01	---	SOIL
018	Drinking water intake (L/yr)	not used	5.100E+02	---	DWI
018	Contamination fraction of drinking water	not used	1.000E+00	---	FDW
018	Contamination fraction of household water	1.000E+00	1.000E+00	---	FHHW
018	Contamination fraction of livestock water	not used	1.000E+00	---	FLW
018	Contamination fraction of irrigation water	not used	1.000E+00	---	FIRW
018	Contamination fraction of aquatic food	not used	5.000E-01	---	FR9
018	Contamination fraction of plant food	not used	-1	---	FPLANT
018	Contamination fraction of meat	not used	-1	---	FMEAT
018	Contamination fraction of milk	not used	-1	---	FMILK
019	Livestock fodder intake for meat (kg/day)	not used	6.800E+01	---	LFI5
019	Livestock fodder intake for milk (kg/day)	not used	5.500E+01	---	LFI6
019	Livestock water intake for meat (L/day)	not used	5.000E+01	---	LWI5
019	Livestock water intake for milk (L/day)	not used	1.600E+02	---	LWI6
019	Livestock soil intake (kg/day)	not used	5.000E-01	---	LSI

Site-Specific Parameter Summary (continued)

enu	Parameter	User Input	Default	Used by RESRAD (If different from user input)	Parameter Name
019	Mass loading for foliar deposition (g/m**3)	not used	1.000E-04	---	MLFD
019	Depth of soil mixing layer (m)	1.500E-01	1.500E-01	---	DM
019	Depth of roots (m)	not used	9.000E-01	---	DROOT
019	Drinking water fraction from ground water	not used	1.000E+00	---	FGWDW
019	Household water fraction from ground water	1.000E+00	1.000E+00	---	FGWHH
019	Livestock water fraction from ground water	not used	1.000E+00	---	FGWLW
019	Irrigation fraction from ground water	not used	1.000E+00	---	FGWIR
19B	Wet weight crop yield for Non-Leafy (kg/m**2)	not used	7.000E-01	---	YV(1)
19B	Wet weight crop yield for Leafy (kg/m**2)	not used	1.500E+00	---	YV(2)
19B	Wet weight crop yield for Fodder (kg/m**2)	not used	1.100E+00	---	YV(3)
19B	Growing Season for Non-Leafy (years)	not used	1.700E-01	---	TE(1)
19B	Growing Season for Leafy (years)	not used	2.500E-01	---	TE(2)
19B	Growing Season for Fodder (years)	not used	8.000E-02	---	TE(3)
19B	Translocation Factor for Non-Leafy	not used	1.000E-01	---	TIV(1)
19B	Translocation Factor for Leafy	not used	1.000E+00	---	TIV(2)
19B	Translocation Factor for Fodder	not used	1.000E+00	---	TIV(3)
19B	Dry Foliar Interception Fraction for Non-Leafy	not used	2.500E-01	---	RDRY(1)
19B	Dry Foliar Interception Fraction for Leafy	not used	2.500E-01	---	RDRY(2)
19B	Dry Foliar Interception Fraction for Fodder	not used	2.500E-01	---	RDRY(3)
19B	Wet Foliar Interception Fraction for Non-Leafy	not used	2.500E-01	---	RWET(1)
19B	Wet Foliar Interception Fraction for Leafy	not used	2.500E-01	---	RWET(2)
19B	Wet Foliar Interception Fraction for Fodder	not used	2.500E-01	---	RWET(3)
19B	Weathering Removal Constant for Vegetation	not used	2.000E+01	---	WLAM
14	C-12 concentration in water (g/cm**3)	not used	2.000E-05	---	C12WTR
14	C-12 concentration in contaminated soil (g/g)	not used	3.000E-02	---	C12CZ
14	Fraction of vegetation carbon from soil	not used	2.000E-02	---	CSOIL
14	Fraction of vegetation carbon from air	not used	9.800E-01	---	CAIR
14	C-14 evasion layer thickness in soil (m)	not used	3.000E-01	---	DMC
14	C-14 evasion flux rate from soil (1/sec)	not used	7.000E-07	---	EVSN
14	C-12 evasion flux rate from soil (1/sec)	not used	1.000E-10	---	REVSN
14	Fraction of grain in beef cattle feed	not used	8.000E-01	---	AVFG4
14	Fraction of grain in milk cow feed	not used	2.000E-01	---	AVFG5
TOR	Storage times of contaminated foodstuffs (days):				
TOR	Fruits, non-leafy vegetables, and grain	1.400E+01	1.400E+01	---	STOR_T(1)
TOR	Leafy vegetables	1.000E+00	1.000E+00	---	STOR_T(2)
TOR	Milk	1.000E+00	1.000E+00	---	STOR_T(3)
TOR	Meat and poultry	2.000E+01	2.000E+01	---	STOR_T(4)
TOR	Fish	7.000E+00	7.000E+00	---	STOR_T(5)
TOR	Crustacea and mollusks	7.000E+00	7.000E+00	---	STOR_T(6)
TOR	Well water	1.000E+00	1.000E+00	---	STOR_T(7)
TOR	Surface water	1.000E+00	1.000E+00	---	STOR_T(8)
TOR	Livestock fodder	4.500E+01	4.500E+01	---	STOR_T(9)
021	Thickness of building foundation (m)	not used	1.500E-01	---	FLOOR1
021	Bulk density of building foundation (g/cm**3)	not used	2.400E+00	---	DENSFL
021	Total porosity of the cover material	not used	4.000E-01	---	TPCV
021	Total porosity of the building foundation	not used	1.000E-01	---	TPFL

Site-Specific Parameter Summary (continued)

enu	Parameter	User Input	Default	Used by RESRAD (If different from user input)	Parameter Name
021	Volumetric water content of the cover material	not used	5.000E-02	---	PH2OCV
021	Volumetric water content of the foundation	not used	3.000E-02	---	PH2OFL
021	Diffusion coefficient for radon gas (m/sec):				
021	in cover material	not used	2.000E-06	---	DIFCV
021	in foundation material	not used	3.000E-07	---	DIFFL
021	in contaminated zone soil	2.000E-06	2.000E-06	---	DIFCZ
021	Radon vertical dimension of mixing (m)	2.000E+00	2.000E+00	---	HMIX
021	Average building air exchange rate (1/hr)	not used	5.000E-01	---	REXG
021	Height of the building (room) (m)	not used	2.500E+00	---	HRM
021	Building interior area factor	not used	0.000E+00	code computed (time dependent)	FAI
021	Building depth below ground surface (m)	not used	-1.000E+00	code computed (time dependent)	DMFL
021	Emanating power of Rn-222 gas	2.500E-01	2.500E-01	---	EMANA(1)
021	Emanating power of Rn-220 gas	1.500E-01	1.500E-01	---	EMANA(2)
ITL	Number of graphical time points	32	---	---	NPTS
ITL	Maximum number of integration points for dose	17	---	---	LYMAX
ITL	Maximum number of integration points for risk	257	---	---	KYMAX

Summary of Pathway Selections

Pathway	User Selection
1 -- external gamma	suppressed
2 -- inhalation (w/o radon)	suppressed
3 -- plant ingestion	suppressed
4 -- meat ingestion	suppressed
5 -- milk ingestion	suppressed
6 -- aquatic foods	suppressed
7 -- drinking water	suppressed
8 -- soil ingestion	active
9 -- radon	active
Find peak pathway doses	suppressed

ummary : GKP Recreational Visitor-- Ingestion
ile : C:\USERS\CLAUDE\DOCUMENTS\0 GKP DOSE\RESRAD CW\GKP RECREATIONAL VISITOR -INGESTION R1.RAD

Contaminated Zone Dimensions		Initial Soil Concentrations, pCi/g	
Area:	200.00 square meters	Ra-226	3.650E+01
Thickness:	0.15 meters	Th-232	2.400E+00
over Depth:	0.00 meters	U-234	1.390E+01
		U-235	8.400E-01
		U-238	1.390E+01

Total Dose TDOSE(t), mrem/yr
Basic Radiation Dose Limit = 2.500E+01 mrem/yr
Total Mixture Sum M(t) = Fraction of Basic Dose Limit Received at Time (t)

t (years):	0.000E+00	1.000E+00	3.000E+00	1.000E+01	3.000E+01	1.000E+02	3.000E+02	1.000E+03
TDOSE(t):	1.372E-02	1.491E-02	1.690E-02	2.044E-02	1.691E-02	2.003E-03	0.000E+00	0.000E+00
M(t):	5.488E-04	5.965E-04	6.759E-04	8.175E-04	6.764E-04	8.012E-05	0.000E+00	0.000E+00

aximum TDOSE(t): 2.078E-02 mrem/yr at t = 13.55 ñ 0.03 years

Total Dose Contributions TDOSE(i,p,t) for Individual Radionuclides (i) and Pathways (p)
As mrem/yr and Fraction of Total Dose At t = 1.355E+01 years

Water Independent Pathways (Inhalation excludes radon)

adio-	Ground		Inhalation		Radon		Plant		Meat		Milk		Soil	
uclide	mrem/yr	fract.	mrem/yr	fract.	mrem/yr	fract.	mrem/yr	fract.	mrem/yr	fract.	mrem/yr	fract.	mrem/yr	fract.
uclide														
a-226	0.000E+00	0.0000	0.000E+00	0.0000	2.486E-05	0.0012	0.000E+00	0.0000	0.000E+00	0.0000	0.000E+00	0.0000	1.789E-02	0.8606
h-232	0.000E+00	0.0000	0.000E+00	0.0000	1.493E-04	0.0072	0.000E+00	0.0000	0.000E+00	0.0000	0.000E+00	0.0000	1.923E-03	0.0925
-234	0.000E+00	0.0000	0.000E+00	0.0000	4.118E-12	0.0000	0.000E+00	0.0000	0.000E+00	0.0000	0.000E+00	0.0000	3.986E-04	0.0192
-235	0.000E+00	0.0000	0.000E+00	0.0000	0.000E+00	0.0000	0.000E+00	0.0000	0.000E+00	0.0000	0.000E+00	0.0000	2.307E-05	0.0011
-238	0.000E+00	0.0000	0.000E+00	0.0000	5.088E-17	0.0000	0.000E+00	0.0000	0.000E+00	0.0000	0.000E+00	0.0000	3.783E-04	0.0182
otal	0.000E+00	0.0000	0.000E+00	0.0000	1.742E-04	0.0084	0.000E+00	0.0000	0.000E+00	0.0000	0.000E+00	0.0000	2.061E-02	0.9916

Total Dose Contributions TDOSE(i,p,t) for Individual Radionuclides (i) and Pathways (p)
As mrem/yr and Fraction of Total Dose At t = 1.355E+01 years

Water Dependent Pathways

adio-	Water		Fish		Radon		Plant		Meat		Milk		All Pathways*	
uclide	mrem/yr	fract.	mrem/yr	fract.	mrem/yr	fract.	mrem/yr	fract.	mrem/yr	fract.	mrem/yr	fract.	mrem/yr	fract.
uclide														
a-226	0.000E+00	0.0000	0.000E+00	0.0000	0.000E+00	0.0000	0.000E+00	0.0000	0.000E+00	0.0000	0.000E+00	0.0000	1.791E-02	0.8618
h-232	0.000E+00	0.0000	0.000E+00	0.0000	0.000E+00	0.0000	0.000E+00	0.0000	0.000E+00	0.0000	0.000E+00	0.0000	2.072E-03	0.0997
-234	0.000E+00	0.0000	0.000E+00	0.0000	0.000E+00	0.0000	0.000E+00	0.0000	0.000E+00	0.0000	0.000E+00	0.0000	3.986E-04	0.0192
-235	0.000E+00	0.0000	0.000E+00	0.0000	0.000E+00	0.0000	0.000E+00	0.0000	0.000E+00	0.0000	0.000E+00	0.0000	2.307E-05	0.0011
-238	0.000E+00	0.0000	0.000E+00	0.0000	0.000E+00	0.0000	0.000E+00	0.0000	0.000E+00	0.0000	0.000E+00	0.0000	3.783E-04	0.0182
otal	0.000E+00	0.0000	0.000E+00	0.0000	0.000E+00	0.0000	0.000E+00	0.0000	0.000E+00	0.0000	0.000E+00	0.0000	2.078E-02	1.0000

Sum of all water independent and dependent pathways.

ummary : GKP Recreational Visitor-- Ingestion
ile : C:\USERS\CLAUDE\DOCUMENTS\0 GKP DOSE\RESRAD CW\GKP RECREATIONAL VISITOR -INGESTION R1.RAD

Total Dose Contributions TDOSE(i,p,t) for Individual Radionuclides (i) and Pathways (p)
As mrem/yr and Fraction of Total Dose At t = 0.000E+00 years

Water Independent Pathways (Inhalation excludes radon)

	Ground		Inhalation		Radon		Plant		Meat		Milk		Soil	
adio-	ÄÄÄÄÄÄÄÄÄÄÄÄÄÄÄÄ		ÄÄÄÄÄÄÄÄÄÄÄÄÄÄÄÄ		ÄÄÄÄÄÄÄÄÄÄÄÄÄÄÄÄ		ÄÄÄÄÄÄÄÄÄÄÄÄÄÄÄÄ		AAAAAAAAAAAAAAAÄ		ÄÄÄÄÄÄÄÄÄÄÄÄÄÄÄÄ		ÄÄÄÄÄÄÄÄÄÄÄÄÄÄÄÄ		ÄÄÄÄÄÄÄÄÄÄÄÄÄÄÄÄ	
uclide	mrem/yr	fract.	mrem/yr	fract.	mrem/yr	fract.	mrem/yr	fract.	mrem/yr	fract.	mrem/yr	fract.	mrem/yr	fract.
ÄÄÄÄÄÄ	ÄÄÄÄÄÄÄÄÄÄ	ÄÄÄÄÄÄ	ÄÄÄÄÄÄÄÄÄÄ	ÄÄÄÄÄÄ	ÄÄÄÄÄÄÄÄÄÄ	ÄÄÄÄÄÄ	ÄÄÄÄÄÄÄÄÄÄ	ÄÄÄÄÄÄ	ÄÄÄÄÄÄÄÄÄÄ	ÄÄÄÄÄÄ	ÄÄÄÄÄÄÄÄÄÄ	ÄÄÄÄÄÄ	ÄÄÄÄÄÄÄÄÄÄ	ÄÄÄÄÄÄ
a-226	0.000E+00	0.0000	0.000E+00	0.0000	4.215E-05	0.0031	0.000E+00	0.0000	0.000E+00	0.0000	0.000E+00	0.0000	1.067E-02	0.7779
n-232	0.000E+00	0.0000	0.000E+00	0.0000	1.511E-06	0.0001	0.000E+00	0.0000	0.000E+00	0.0000	0.000E+00	0.0000	1.402E-03	0.1022
-234	0.000E+00	0.0000	0.000E+00	0.0000	1.061E-14	0.0000	0.000E+00	0.0000	0.000E+00	0.0000	0.000E+00	0.0000	7.979E-04	0.0582
-235	0.000E+00	0.0000	0.000E+00	0.0000	0.000E+00	0.0000	0.000E+00	0.0000	0.000E+00	0.0000	0.000E+00	0.0000	4.557E-05	0.0033
-238	0.000E+00	0.0000	0.000E+00	0.0000	7.448E-21	0.0000	0.000E+00	0.0000	0.000E+00	0.0000	0.000E+00	0.0000	7.576E-04	0.0552
íííííí	íííííííííí	íííííí	íííííííííí	íííííí	íííííííííí	íííííí	íííííííííí	íííííí	íííííííííí	íííííí	íííííííííí	íííííí	íííííííííí	íííííí
otal	0.000E+00	0.0000	0.000E+00	0.0000	4.367E-05	0.0032	0.000E+00	0.0000	0.000E+00	0.0000	0.000E+00	0.0000	1.368E-02	0.9968

Total Dose Contributions TDOSE(i,p,t) for Individual Radionuclides (i) and Pathways (p)
As mrem/yr and Fraction of Total Dose At t = 0.000E+00 years

Water Dependent Pathways

	Water		Fish		Radon		Plant		Meat		Milk		All Pathways*	
adio-	ÄÄÄÄÄÄÄÄÄÄÄÄÄÄÄÄ		ÄÄÄÄÄÄÄÄÄÄÄÄÄÄÄÄ		ÄÄÄÄÄÄÄÄÄÄÄÄÄÄÄÄ		ÄÄÄÄÄÄÄÄÄÄÄÄÄÄÄÄ		ÄÄÄÄÄÄÄÄÄÄÄÄÄÄÄÄ		ÄÄÄÄÄÄÄÄÄÄÄÄÄÄÄÄ		ÄÄÄÄÄÄÄÄÄÄÄÄÄÄÄÄ	
uclide	mrem/yr	fract.	mrem/yr	fract.	mrem/yr	fract.	mrem/yr	fract.	mrem/yr	fract.	mrem/yr	fract.	mrem/yr	fract.
ÄÄÄÄÄÄ	ÄÄÄÄÄÄÄÄÄÄ	ÄÄÄÄÄÄ	ÄÄÄÄÄÄÄÄÄÄ	ÄÄÄÄÄÄ	ÄÄÄÄÄÄÄÄÄÄ	ÄÄÄÄÄÄ	ÄÄÄÄÄÄÄÄÄÄ	ÄÄÄÄÄÄ	ÄÄÄÄÄÄÄÄÄÄ	ÄÄÄÄÄÄ	ÄÄÄÄÄÄÄÄÄÄ	ÄÄÄÄÄÄ	ÄÄÄÄÄÄÄÄÄÄ	ÄÄÄÄÄÄ
a-226	0.000E+00	0.0000	0.000E+00	0.0000	0.000E+00	0.0000	0.000E+00	0.0000	0.000E+00	0.0000	0.000E+00	0.0000	1.072E-02	0.7810
n-232	0.000E+00	0.0000	0.000E+00	0.0000	0.000E+00	0.0000	0.000E+00	0.0000	0.000E+00	0.0000	0.000E+00	0.0000	1.404E-03	0.1023
-234	0.000E+00	0.0000	0.000E+00	0.0000	0.000E+00	0.0000	0.000E+00	0.0000	0.000E+00	0.0000	0.000E+00	0.0000	7.979E-04	0.0582
-235	0.000E+00	0.0000	0.000E+00	0.0000	0.000E+00	0.0000	0.000E+00	0.0000	0.000E+00	0.0000	0.000E+00	0.0000	4.557E-05	0.0033
-238	0.000E+00	0.0000	0.000E+00	0.0000	0.000E+00	0.0000	0.000E+00	0.0000	0.000E+00	0.0000	0.000E+00	0.0000	7.576E-04	0.0552
íííííí	íííííííííí	íííííí	íííííííííí	íííííí	íííííííííí	íííííí	íííííííííí	íííííí	íííííííííí	íííííí	íííííííííí	íííííí	íííííííííí	íííííí
otal	0.000E+00	0.0000	0.000E+00	0.0000	0.000E+00	0.0000	0.000E+00	0.0000	0.000E+00	0.0000	0.000E+00	0.0000	1.372E-02	1.0000

Sum of all water independent and dependent pathways.

ummary : GKP Recreational Visitor-- Ingestion
ile : C:\USERS\CLAUDE\DOCUMENTS\0 GKP DOSE\RESRAD CW\GKP RECREATIONAL VISITOR -INGESTION R1.RAD

Total Dose Contributions TDOSE(i,p,t) for Individual Radionuclides (i) and Pathways (p)
As mrem/yr and Fraction of Total Dose At t = 1.000E+00 years

Water Independent Pathways (Inhalation excludes radon)

	Ground		Inhalation		Radon		Plant		Meat		Milk		Soil	
adio-	ÄÄÄÄÄÄÄÄÄÄÄÄÄÄÄÄ		ÄÄÄÄÄÄÄÄÄÄÄÄÄÄÄÄ		ÄÄÄÄÄÄÄÄÄÄÄÄÄÄÄÄ		ÄÄÄÄÄÄÄÄÄÄÄÄÄÄÄÄ		ÄÄÄÄÄÄÄÄÄÄÄÄÄÄÄÄ		ÄÄÄÄÄÄÄÄÄÄÄÄÄÄÄÄ		ÄÄÄÄÄÄÄÄÄÄÄÄÄÄÄÄ	
uclide	mrem/yr	fract.	mrem/yr	fract.	mrem/yr	fract.	mrem/yr	fract.	mrem/yr	fract.	mrem/yr	fract.	mrem/yr	fract.
ÄÄÄÄÄÄ	ÄÄÄÄÄÄÄÄÄ	ÄÄÄÄÄÄ	ÄÄÄÄÄÄÄÄÄ	ÄÄÄÄÄÄ	ÄÄÄÄÄÄÄÄÄ	ÄÄÄÄÄÄ	ÄÄÄÄÄÄÄÄÄ	ÄÄÄÄÄÄ	ÄÄÄÄÄÄÄÄÄ	ÄÄÄÄÄÄ	ÄÄÄÄÄÄÄÄÄ	ÄÄÄÄÄÄ	ÄÄÄÄÄÄÄÄÄ	ÄÄÄÄÄÄ
a-226	0.000E+00	0.0000	0.000E+00	0.0000	4.056E-05	0.0027	0.000E+00	0.0000	0.000E+00	0.0000	0.000E+00	0.0000	1.186E-02	0.7954
h-232	0.000E+00	0.0000	0.000E+00	0.0000	9.187E-06	0.0006	0.000E+00	0.0000	0.000E+00	0.0000	0.000E+00	0.0000	1.480E-03	0.0992
-234	0.000E+00	0.0000	0.000E+00	0.0000	7.225E-14	0.0000	0.000E+00	0.0000	0.000E+00	0.0000	0.000E+00	0.0000	7.583E-04	0.0508
-235	0.000E+00	0.0000	0.000E+00	0.0000	0.000E+00	0.0000	0.000E+00	0.0000	0.000E+00	0.0000	0.000E+00	0.0000	4.335E-05	0.0029
-238	0.000E+00	0.0000	0.000E+00	0.0000	1.083E-19	0.0000	0.000E+00	0.0000	0.000E+00	0.0000	0.000E+00	0.0000	7.200E-04	0.0483
íííííí	íííííííííí	íííííí	íííííííííí	íííííí	íííííííííí	íííííí	íííííííííí	íííííí	íííííííííí	íííííí	íííííííííí	íííííí	íííííííííí	íííííí
otal	0.000E+00	0.0000	0.000E+00	0.0000	4.974E-05	0.0033	0.000E+00	0.0000	0.000E+00	0.0000	0.000E+00	0.0000	1.486E-02	0.9967

Total Dose Contributions TDOSE(i,p,t) for Individual Radionuclides (i) and Pathways (p)
As mrem/yr and Fraction of Total Dose At t = 1.000E+00 years

Water Dependent Pathways

	Water		Fish		Radon		Plant		Meat		Milk		All Pathways*	
adio-	ÄÄÄÄÄÄÄÄÄÄÄÄÄÄÄÄ		ÄÄÄÄÄÄÄÄÄÄÄÄÄÄÄÄ		ÄÄÄÄÄÄÄÄÄÄÄÄÄÄÄÄ		ÄÄÄÄÄÄÄÄÄÄÄÄÄÄÄÄ		ÄÄÄÄÄÄÄÄÄÄÄÄÄÄÄÄ		ÄÄÄÄÄÄÄÄÄÄÄÄÄÄÄÄ		ÄÄÄÄÄÄÄÄÄÄÄÄÄÄÄÄ	
uclide	mrem/yr	fract.	mrem/yr	fract.	mrem/yr	fract.	mrem/yr	fract.	mrem/yr	fract.	mrem/yr	fract.	mrem/yr	fract.
ÄÄÄÄÄÄ	ÄÄÄÄÄÄÄÄÄ	ÄÄÄÄÄÄ	ÄÄÄÄÄÄÄÄÄ	ÄÄÄÄÄÄ	ÄÄÄÄÄÄÄÄÄ	ÄÄÄÄÄÄ	ÄÄÄÄÄÄÄÄÄ	ÄÄÄÄÄÄ	ÄÄÄÄÄÄÄÄÄ	ÄÄÄÄÄÄ	ÄÄÄÄÄÄÄÄÄ	ÄÄÄÄÄÄ	ÄÄÄÄÄÄÄÄÄ	ÄÄÄÄÄÄ
a-226	0.000E+00	0.0000	0.000E+00	0.0000	0.000E+00	0.0000	0.000E+00	0.0000	0.000E+00	0.0000	0.000E+00	0.0000	1.190E-02	0.7981
h-232	0.000E+00	0.0000	0.000E+00	0.0000	0.000E+00	0.0000	0.000E+00	0.0000	0.000E+00	0.0000	0.000E+00	0.0000	1.489E-03	0.0999
-234	0.000E+00	0.0000	0.000E+00	0.0000	0.000E+00	0.0000	0.000E+00	0.0000	0.000E+00	0.0000	0.000E+00	0.0000	7.583E-04	0.0508
-235	0.000E+00	0.0000	0.000E+00	0.0000	0.000E+00	0.0000	0.000E+00	0.0000	0.000E+00	0.0000	0.000E+00	0.0000	4.335E-05	0.0029
-238	0.000E+00	0.0000	0.000E+00	0.0000	0.000E+00	0.0000	0.000E+00	0.0000	0.000E+00	0.0000	0.000E+00	0.0000	7.200E-04	0.0483
íííííí	íííííííííí	íííííí	íííííííííí	íííííí	íííííííííí	íííííí	íííííííííí	íííííí	íííííííííí	íííííí	íííííííííí	íííííí	íííííííííí	íííííí
otal	0.000E+00	0.0000	0.000E+00	0.0000	0.000E+00	0.0000	0.000E+00	0.0000	0.000E+00	0.0000	0.000E+00	0.0000	1.491E-02	1.0000

Sum of all water independent and dependent pathways.

ummary : GKP Recreational Visitor-- Ingestion
ile : C:\USERS\CLAUDE\DOCUMENTS\0 GKP DOSE\RESRAD CW\GKP RECREATIONAL VISITOR -INGESTION R1.RAD

Total Dose Contributions TDOSE(i,p,t) for Individual Radionuclides (i) and Pathways (p)
As mrem/yr and Fraction of Total Dose At t = 3.000E+00 years

Water Independent Pathways (Inhalation excludes radon)

	Ground		Inhalation		Radon		Plant		Meat		Milk		Soil	
adio-	ÄÄÄÄÄÄÄÄÄÄÄÄÄÄÄ		ÄÄÄÄÄÄÄÄÄÄÄÄÄÄÄ		ÄÄÄÄÄÄÄÄÄÄÄÄÄÄÄ		ÄÄÄÄÄÄÄÄÄÄÄÄÄÄÄ		AAAAAAAAAAAAAAAA		ÄÄÄÄÄÄÄÄÄÄÄÄÄÄÄ		ÄÄÄÄÄÄÄÄÄÄÄÄÄÄÄ	
uclide	mrem/yr	fract.	mrem/yr	fract.	mrem/yr	fract.	mrem/yr	fract.	mrem/yr	fract.	mrem/yr	fract.	mrem/yr	fract.
ÄÄÄÄÄÄ	ÄÄÄÄÄÄÄÄÄ	ÄÄÄÄÄÄ	ÄÄÄÄÄÄÄÄÄ	ÄÄÄÄÄÄ	ÄÄÄÄÄÄÄÄÄ	ÄÄÄÄÄÄ	ÄÄÄÄÄÄÄÄÄ	ÄÄÄÄÄÄ	ÄÄÄÄÄÄÄÄÄ	ÄÄÄÄÄÄ	ÄÄÄÄÄÄÄÄÄ	ÄÄÄÄÄÄ	ÄÄÄÄÄÄÄÄÄ	ÄÄÄÄÄÄ
a-226	0.000E+00	0.0000	0.000E+00	0.0000	3.753E-05	0.0022	0.000E+00	0.0000	0.000E+00	0.0000	0.000E+00	0.0000	1.383E-02	0.8184
n-232	0.000E+00	0.0000	0.000E+00	0.0000	3.576E-05	0.0021	0.000E+00	0.0000	0.000E+00	0.0000	0.000E+00	0.0000	1.621E-03	0.0959
-234	0.000E+00	0.0000	0.000E+00	0.0000	3.590E-13	0.0000	0.000E+00	0.0000	0.000E+00	0.0000	0.000E+00	0.0000	6.847E-04	0.0405
-235	0.000E+00	0.0000	0.000E+00	0.0000	0.000E+00	0.0000	0.000E+00	0.0000	0.000E+00	0.0000	0.000E+00	0.0000	3.921E-05	0.0023
-238	0.000E+00	0.0000	0.000E+00	0.0000	1.177E-18	0.0000	0.000E+00	0.0000	0.000E+00	0.0000	0.000E+00	0.0000	6.501E-04	0.0385
íííííí	íííííííííí	íííííí	íííííííííí	íííííí	íííííííííí	íííííí	íííííííííí	íííííí	íííííííííí	íííííí	íííííííííí	íííííí	íííííííííí	íííííí
otal	0.000E+00	0.0000	0.000E+00	0.0000	7.329E-05	0.0043	0.000E+00	0.0000	0.000E+00	0.0000	0.000E+00	0.0000	1.683E-02	0.9957

Total Dose Contributions TDOSE(i,p,t) for Individual Radionuclides (i) and Pathways (p)
As mrem/yr and Fraction of Total Dose At t = 3.000E+00 years

Water Dependent Pathways

	Water		Fish		Radon		Plant		Meat		Milk		All Pathways*	
adio-	ÄÄÄÄÄÄÄÄÄÄÄÄÄÄÄ		ÄÄÄÄÄÄÄÄÄÄÄÄÄÄÄ		ÄÄÄÄÄÄÄÄÄÄÄÄÄÄÄ		ÄÄÄÄÄÄÄÄÄÄÄÄÄÄÄ		ÄÄÄÄÄÄÄÄÄÄÄÄÄÄÄ		ÄÄÄÄÄÄÄÄÄÄÄÄÄÄÄ		ÄÄÄÄÄÄÄÄÄÄÄÄÄÄÄ	
uclide	mrem/yr	fract.	mrem/yr	fract.	mrem/yr	fract.	mrem/yr	fract.	mrem/yr	fract.	mrem/yr	fract.	mrem/yr	fract.
ÄÄÄÄÄÄ	ÄÄÄÄÄÄÄÄÄ	ÄÄÄÄÄÄ	ÄÄÄÄÄÄÄÄÄ	ÄÄÄÄÄÄ	ÄÄÄÄÄÄÄÄÄ	ÄÄÄÄÄÄ	ÄÄÄÄÄÄÄÄÄ	ÄÄÄÄÄÄ	ÄÄÄÄÄÄÄÄÄ	ÄÄÄÄÄÄ	ÄÄÄÄÄÄÄÄÄ	ÄÄÄÄÄÄ	ÄÄÄÄÄÄÄÄÄ	ÄÄÄÄÄÄ
a-226	0.000E+00	0.0000	0.000E+00	0.0000	0.000E+00	0.0000	0.000E+00	0.0000	0.000E+00	0.0000	0.000E+00	0.0000	1.387E-02	0.8207
n-232	0.000E+00	0.0000	0.000E+00	0.0000	0.000E+00	0.0000	0.000E+00	0.0000	0.000E+00	0.0000	0.000E+00	0.0000	1.656E-03	0.0980
-234	0.000E+00	0.0000	0.000E+00	0.0000	0.000E+00	0.0000	0.000E+00	0.0000	0.000E+00	0.0000	0.000E+00	0.0000	6.847E-04	0.0405
-235	0.000E+00	0.0000	0.000E+00	0.0000	0.000E+00	0.0000	0.000E+00	0.0000	0.000E+00	0.0000	0.000E+00	0.0000	3.921E-05	0.0023
-238	0.000E+00	0.0000	0.000E+00	0.0000	0.000E+00	0.0000	0.000E+00	0.0000	0.000E+00	0.0000	0.000E+00	0.0000	6.501E-04	0.0385
íííííí	íííííííííí	íííííí	íííííííííí	íííííí	íííííííííí	íííííí	íííííííííí	íííííí	íííííííííí	íííííí	íííííííííí	íííííí	íííííííííí	íííííí
otal	0.000E+00	0.0000	0.000E+00	0.0000	0.000E+00	0.0000	0.000E+00	0.0000	0.000E+00	0.0000	0.000E+00	0.0000	1.690E-02	1.0000

Sum of all water independent and dependent pathways.

ummary : GKP Recreational Visitor-- Ingestion
ile : C:\USERS\CLAUDE\DOCUMENTS\0 GKP DOSE\RESRAD CW\GKP RECREATIONAL VISITOR -INGESTION R1.RAD

Total Dose Contributions TDOSE(i,p,t) for Individual Radionuclides (i) and Pathways (p)
As mrem/yr and Fraction of Total Dose At t = 1.000E+01 years

Water Independent Pathways (Inhalation excludes radon)

	Ground		Inhalation		Radon		Plant		Meat		Milk		Soil	
adio-	ÄÄÄÄÄÄÄÄÄÄÄÄÄÄÄÄ		ÄÄÄÄÄÄÄÄÄÄÄÄÄÄÄÄ		ÄÄÄÄÄÄÄÄÄÄÄÄÄÄÄÄ		ÄÄÄÄÄÄÄÄÄÄÄÄÄÄÄÄ		ÄÄÄÄÄÄÄÄÄÄÄÄÄÄÄÄ		ÄÄÄÄÄÄÄÄÄÄÄÄÄÄÄÄ		ÄÄÄÄÄÄÄÄÄÄÄÄÄÄÄÄ		ÄÄÄÄÄÄÄÄÄÄÄÄÄÄÄÄ	
uclide	mrem/yr	fract.	mrem/yr	fract.	mrem/yr	fract.	mrem/yr	fract.	mrem/yr	fract.	mrem/yr	fract.	mrem/yr	fract.
ÄÄÄÄÄÄ	ÄÄÄÄÄÄÄÄÄ	ÄÄÄÄÄÄ	ÄÄÄÄÄÄÄÄÄ	ÄÄÄÄÄÄ	ÄÄÄÄÄÄÄÄÄ	ÄÄÄÄÄÄ	ÄÄÄÄÄÄÄÄÄ	ÄÄÄÄÄÄ	ÄÄÄÄÄÄÄÄÄ	ÄÄÄÄÄÄ	ÄÄÄÄÄÄÄÄÄ	ÄÄÄÄÄÄ	ÄÄÄÄÄÄÄÄÄ	ÄÄÄÄÄÄ
a-226	0.000E+00	0.0000	0.000E+00	0.0000	2.857E-05	0.0014	0.000E+00	0.0000	0.000E+00	0.0000	0.000E+00	0.0000	1.744E-02	0.8531
n-232	0.000E+00	0.0000	0.000E+00	0.0000	1.244E-04	0.0061	0.000E+00	0.0000	0.000E+00	0.0000	0.000E+00	0.0000	1.889E-03	0.0924
-234	0.000E+00	0.0000	0.000E+00	0.0000	2.574E-12	0.0000	0.000E+00	0.0000	0.000E+00	0.0000	0.000E+00	0.0000	4.784E-04	0.0234
-235	0.000E+00	0.0000	0.000E+00	0.0000	0.000E+00	0.0000	0.000E+00	0.0000	0.000E+00	0.0000	0.000E+00	0.0000	2.759E-05	0.0013
-238	0.000E+00	0.0000	0.000E+00	0.0000	2.421E-17	0.0000	0.000E+00	0.0000	0.000E+00	0.0000	0.000E+00	0.0000	4.541E-04	0.0222
íííííí	íííííííííí	íííííí	íííííííííí	íííííí	íííííííííí	íííííí	íííííííííí	íííííí	íííííííííí	íííííí	íííííííííí	íííííí	íííííííííí	íííííí
otal	0.000E+00	0.0000	0.000E+00	0.0000	1.529E-04	0.0075	0.000E+00	0.0000	0.000E+00	0.0000	0.000E+00	0.0000	2.028E-02	0.9925

Total Dose Contributions TDOSE(i,p,t) for Individual Radionuclides (i) and Pathways (p)
As mrem/yr and Fraction of Total Dose At t = 1.000E+01 years

Water Dependent Pathways

	Water		Fish		Radon		Plant		Meat		Milk		All Pathways*	
adio-	ÄÄÄÄÄÄÄÄÄÄÄÄÄÄÄÄ		ÄÄÄÄÄÄÄÄÄÄÄÄÄÄÄÄ		ÄÄÄÄÄÄÄÄÄÄÄÄÄÄÄÄ		ÄÄÄÄÄÄÄÄÄÄÄÄÄÄÄÄ		ÄÄÄÄÄÄÄÄÄÄÄÄÄÄÄÄ		ÄÄÄÄÄÄÄÄÄÄÄÄÄÄÄÄ		ÄÄÄÄÄÄÄÄÄÄÄÄÄÄÄÄ	
uclide	mrem/yr	fract.	mrem/yr	fract.	mrem/yr	fract.	mrem/yr	fract.	mrem/yr	fract.	mrem/yr	fract.	mrem/yr	fract.
ÄÄÄÄÄÄ	ÄÄÄÄÄÄÄÄÄ	ÄÄÄÄÄÄ	ÄÄÄÄÄÄÄÄÄ	ÄÄÄÄÄÄ	ÄÄÄÄÄÄÄÄÄ	ÄÄÄÄÄÄ	ÄÄÄÄÄÄÄÄÄ	ÄÄÄÄÄÄ	ÄÄÄÄÄÄÄÄÄ	ÄÄÄÄÄÄ	ÄÄÄÄÄÄÄÄÄ	ÄÄÄÄÄÄ	ÄÄÄÄÄÄÄÄÄ	ÄÄÄÄÄÄ
a-226	0.000E+00	0.0000	0.000E+00	0.0000	0.000E+00	0.0000	0.000E+00	0.0000	0.000E+00	0.0000	0.000E+00	0.0000	1.746E-02	0.8545
n-232	0.000E+00	0.0000	0.000E+00	0.0000	0.000E+00	0.0000	0.000E+00	0.0000	0.000E+00	0.0000	0.000E+00	0.0000	2.013E-03	0.0985
-234	0.000E+00	0.0000	0.000E+00	0.0000	0.000E+00	0.0000	0.000E+00	0.0000	0.000E+00	0.0000	0.000E+00	0.0000	4.784E-04	0.0234
-235	0.000E+00	0.0000	0.000E+00	0.0000	0.000E+00	0.0000	0.000E+00	0.0000	0.000E+00	0.0000	0.000E+00	0.0000	2.759E-05	0.0013
-238	0.000E+00	0.0000	0.000E+00	0.0000	0.000E+00	0.0000	0.000E+00	0.0000	0.000E+00	0.0000	0.000E+00	0.0000	4.541E-04	0.0222
íííííí	íííííííííí	íííííí	íííííííííí	íííííí	íííííííííí	íííííí	íííííííííí	íííííí	íííííííííí	íííííí	íííííííííí	íííííí	íííííííííí	íííííí
otal	0.000E+00	0.0000	0.000E+00	0.0000	0.000E+00	0.0000	0.000E+00	0.0000	0.000E+00	0.0000	0.000E+00	0.0000	2.044E-02	1.0000

Sum of all water independent and dependent pathways.

ummary : GKP Recreational Visitor-- Ingestion
ile : C:\USERS\CLAUDE\DOCUMENTS\0 GKP DOSE\RESRAD CW\GKP RECREATIONAL VISITOR -INGESTION R1.RAD

Total Dose Contributions TDOSE(i,p,t) for Individual Radionuclides (i) and Pathways (p)
As mrem/yr and Fraction of Total Dose At t = 3.000E+01 years

Water Independent Pathways (Inhalation excludes radon)

	Ground		Inhalation		Radon		Plant		Meat		Milk		Soil	
adio-	ÄÄÄÄÄÄÄÄÄÄÄÄÄÄÄÄ		ÄÄÄÄÄÄÄÄÄÄÄÄÄÄÄÄ		ÄÄÄÄÄÄÄÄÄÄÄÄÄÄÄÄ		ÄÄÄÄÄÄÄÄÄÄÄÄÄÄÄÄ		ÄÄÄÄÄÄÄÄÄÄÄÄÄÄÄÄ		ÄÄÄÄÄÄÄÄÄÄÄÄÄÄÄÄ		ÄÄÄÄÄÄÄÄÄÄÄÄÄÄÄÄ		ÄÄÄÄÄÄÄÄÄÄÄÄÄÄÄÄ	
uclide	mrem/yr	fract.	mrem/yr	fract.	mrem/yr	fract.	mrem/yr	fract.	mrem/yr	fract.	mrem/yr	fract.	mrem/yr	fract.
ÄÄÄÄÄÄ	ÄÄÄÄÄÄÄÄÄ	ÄÄÄÄÄÄ	ÄÄÄÄÄÄÄÄÄ	ÄÄÄÄÄÄ	ÄÄÄÄÄÄÄÄÄ	ÄÄÄÄÄÄ	ÄÄÄÄÄÄÄÄÄ	ÄÄÄÄÄÄ	ÄÄÄÄÄÄÄÄÄ	ÄÄÄÄÄÄ	ÄÄÄÄÄÄÄÄÄ	ÄÄÄÄÄÄ	ÄÄÄÄÄÄÄÄÄ	ÄÄÄÄÄÄ
a-226	0.000E+00	0.0000	0.000E+00	0.0000	1.291E-05	0.0008	0.000E+00	0.0000	0.000E+00	0.0000	0.000E+00	0.0000	1.459E-02	0.8628
n-232	0.000E+00	0.0000	0.000E+00	0.0000	1.832E-04	0.0108	0.000E+00	0.0000	0.000E+00	0.0000	0.000E+00	0.0000	1.785E-03	0.1055
-234	0.000E+00	0.0000	0.000E+00	0.0000	1.162E-11	0.0000	0.000E+00	0.0000	0.000E+00	0.0000	0.000E+00	0.0000	1.693E-04	0.0100
-235	0.000E+00	0.0000	0.000E+00	0.0000	0.000E+00	0.0000	0.000E+00	0.0000	0.000E+00	0.0000	0.000E+00	0.0000	9.976E-06	0.0006
-238	0.000E+00	0.0000	0.000E+00	0.0000	2.862E-16	0.0000	0.000E+00	0.0000	0.000E+00	0.0000	0.000E+00	0.0000	1.606E-04	0.0095
íííííí	íííííííííí	íííííí	íííííííííí	íííííí	íííííííííí	íííííí	íííííííííí	íííííí	íííííííííí	íííííí	íííííííííí	íííííí	íííííííííí	íííííí
otal	0.000E+00	0.0000	0.000E+00	0.0000	1.961E-04	0.0116	0.000E+00	0.0000	0.000E+00	0.0000	0.000E+00	0.0000	1.671E-02	0.9884

Total Dose Contributions TDOSE(i,p,t) for Individual Radionuclides (i) and Pathways (p)
As mrem/yr and Fraction of Total Dose At t = 3.000E+01 years

Water Dependent Pathways

	Water		Fish		Radon		Plant		Meat		Milk		All Pathways*	
adio-	ÄÄÄÄÄÄÄÄÄÄÄÄÄÄÄÄ		ÄÄÄÄÄÄÄÄÄÄÄÄÄÄÄÄ		ÄÄÄÄÄÄÄÄÄÄÄÄÄÄÄÄ		ÄÄÄÄÄÄÄÄÄÄÄÄÄÄÄÄ		ÄÄÄÄÄÄÄÄÄÄÄÄÄÄÄÄ		ÄÄÄÄÄÄÄÄÄÄÄÄÄÄÄÄ		ÄÄÄÄÄÄÄÄÄÄÄÄÄÄÄÄ	
uclide	mrem/yr	fract.	mrem/yr	fract.	mrem/yr	fract.	mrem/yr	fract.	mrem/yr	fract.	mrem/yr	fract.	mrem/yr	fract.
ÄÄÄÄÄÄ	ÄÄÄÄÄÄÄÄÄ	ÄÄÄÄÄÄ	ÄÄÄÄÄÄÄÄÄ	ÄÄÄÄÄÄ	ÄÄÄÄÄÄÄÄÄ	ÄÄÄÄÄÄ	ÄÄÄÄÄÄÄÄÄ	ÄÄÄÄÄÄ	ÄÄÄÄÄÄÄÄÄ	ÄÄÄÄÄÄ	ÄÄÄÄÄÄÄÄÄ	ÄÄÄÄÄÄ	ÄÄÄÄÄÄÄÄÄ	ÄÄÄÄÄÄ
a-226	0.000E+00	0.0000	0.000E+00	0.0000	0.000E+00	0.0000	0.000E+00	0.0000	0.000E+00	0.0000	0.000E+00	0.0000	1.460E-02	0.8635
n-232	0.000E+00	0.0000	0.000E+00	0.0000	0.000E+00	0.0000	0.000E+00	0.0000	0.000E+00	0.0000	0.000E+00	0.0000	1.968E-03	0.1164
-234	0.000E+00	0.0000	0.000E+00	0.0000	0.000E+00	0.0000	0.000E+00	0.0000	0.000E+00	0.0000	0.000E+00	0.0000	1.693E-04	0.0100
-235	0.000E+00	0.0000	0.000E+00	0.0000	0.000E+00	0.0000	0.000E+00	0.0000	0.000E+00	0.0000	0.000E+00	0.0000	9.976E-06	0.0006
-238	0.000E+00	0.0000	0.000E+00	0.0000	0.000E+00	0.0000	0.000E+00	0.0000	0.000E+00	0.0000	0.000E+00	0.0000	1.606E-04	0.0095
íííííí	íííííííííí	íííííí	íííííííííí	íííííí	íííííííííí	íííííí	íííííííííí	íííííí	íííííííííí	íííííí	íííííííííí	íííííí	íííííííííí	íííííí
otal	0.000E+00	0.0000	0.000E+00	0.0000	0.000E+00	0.0000	0.000E+00	0.0000	0.000E+00	0.0000	0.000E+00	0.0000	1.691E-02	1.0000

Sum of all water independent and dependent pathways.

ummary : GKP Recreational Visitor-- Ingestion
ile : C:\USERS\CLAUDE\DOCUMENTS\0 GKP DOSE\RESRAD CW\GKP RECREATIONAL VISITOR -INGESTION R1.RAD

Total Dose Contributions TDOSE(i,p,t) for Individual Radionuclides (i) and Pathways (p)
As mrem/yr and Fraction of Total Dose At t = 1.000E+02 years

Water Independent Pathways (Inhalation excludes radon)

	Ground		Inhalation		Radon		Plant		Meat		Milk		Soil	
adio-	ÄÄÄÄÄÄÄÄÄÄÄÄÄÄÄÄ		ÄÄÄÄÄÄÄÄÄÄÄÄÄÄÄÄ		ÄÄÄÄÄÄÄÄÄÄÄÄÄÄÄÄ		ÄÄÄÄÄÄÄÄÄÄÄÄÄÄÄÄ		ÄÄÄÄÄÄÄÄÄÄÄÄÄÄÄÄ		ÄÄÄÄÄÄÄÄÄÄÄÄÄÄÄÄ		ÄÄÄÄÄÄÄÄÄÄÄÄÄÄÄÄ	
uclide	mrem/yr	fract.	mrem/yr	fract.	mrem/yr	fract.	mrem/yr	fract.	mrem/yr	fract.	mrem/yr	fract.	mrem/yr	fract.
ÄÄÄÄÄÄ	ÄÄÄÄÄÄÄÄÄ	ÄÄÄÄÄÄ	ÄÄÄÄÄÄÄÄÄ	ÄÄÄÄÄÄ	ÄÄÄÄÄÄÄÄÄ	ÄÄÄÄÄÄ	ÄÄÄÄÄÄÄÄÄ	ÄÄÄÄÄÄ	ÄÄÄÄÄÄÄÄÄ	ÄÄÄÄÄÄ	ÄÄÄÄÄÄÄÄÄ	ÄÄÄÄÄÄ	ÄÄÄÄÄÄÄÄÄ	ÄÄÄÄÄÄ
a-226	0.000E+00	0.0000	0.000E+00	0.0000	5.682E-07	0.0003	0.000E+00	0.0000	0.000E+00	0.0000	0.000E+00	0.0000	1.070E-03	0.5340
h-232	0.000E+00	0.0000	0.000E+00	0.0000	1.854E-04	0.0926	0.000E+00	0.0000	0.000E+00	0.0000	0.000E+00	0.0000	7.409E-04	0.3699
-234	0.000E+00	0.0000	0.000E+00	0.0000	1.349E-11	0.0000	0.000E+00	0.0000	0.000E+00	0.0000	0.000E+00	0.0000	3.280E-06	0.0016
-235	0.000E+00	0.0000	0.000E+00	0.0000	0.000E+00	0.0000	0.000E+00	0.0000	0.000E+00	0.0000	0.000E+00	0.0000	2.019E-07	0.0001
-238	0.000E+00	0.0000	0.000E+00	0.0000	7.329E-16	0.0000	0.000E+00	0.0000	0.000E+00	0.0000	0.000E+00	0.0000	3.003E-06	0.0015
íííííí	íííííííííí	íííííí	íííííííííí	íííííí	íííííííííí	íííííí	íííííííííí	íííííí	íííííííííí	íííííí	íííííííííí	íííííí	íííííííííí	íííííí
otal	0.000E+00	0.0000	0.000E+00	0.0000	1.860E-04	0.0929	0.000E+00	0.0000	0.000E+00	0.0000	0.000E+00	0.0000	1.817E-03	0.9071

Total Dose Contributions TDOSE(i,p,t) for Individual Radionuclides (i) and Pathways (p)
As mrem/yr and Fraction of Total Dose At t = 1.000E+02 years

Water Dependent Pathways

	Water		Fish		Radon		Plant		Meat		Milk		All Pathways*	
adio-	ÄÄÄÄÄÄÄÄÄÄÄÄÄÄÄÄ		ÄÄÄÄÄÄÄÄÄÄÄÄÄÄÄÄ		ÄÄÄÄÄÄÄÄÄÄÄÄÄÄÄÄ		ÄÄÄÄÄÄÄÄÄÄÄÄÄÄÄÄ		ÄÄÄÄÄÄÄÄÄÄÄÄÄÄÄÄ		ÄÄÄÄÄÄÄÄÄÄÄÄÄÄÄÄ		ÄÄÄÄÄÄÄÄÄÄÄÄÄÄÄÄ	
uclide	mrem/yr	fract.	mrem/yr	fract.	mrem/yr	fract.	mrem/yr	fract.	mrem/yr	fract.	mrem/yr	fract.	mrem/yr	fract.
ÄÄÄÄÄÄ	ÄÄÄÄÄÄÄÄÄ	ÄÄÄÄÄÄ	ÄÄÄÄÄÄÄÄÄ	ÄÄÄÄÄÄ	ÄÄÄÄÄÄÄÄÄ	ÄÄÄÄÄÄ	ÄÄÄÄÄÄÄÄÄ	ÄÄÄÄÄÄ	ÄÄÄÄÄÄÄÄÄ	ÄÄÄÄÄÄ	ÄÄÄÄÄÄÄÄÄ	ÄÄÄÄÄÄ	ÄÄÄÄÄÄÄÄÄ	ÄÄÄÄÄÄ
a-226	0.000E+00	0.0000	0.000E+00	0.0000	0.000E+00	0.0000	0.000E+00	0.0000	0.000E+00	0.0000	0.000E+00	0.0000	1.070E-03	0.5343
h-232	0.000E+00	0.0000	0.000E+00	0.0000	0.000E+00	0.0000	0.000E+00	0.0000	0.000E+00	0.0000	0.000E+00	0.0000	9.263E-04	0.4625
-234	0.000E+00	0.0000	0.000E+00	0.0000	0.000E+00	0.0000	0.000E+00	0.0000	0.000E+00	0.0000	0.000E+00	0.0000	3.280E-06	0.0016
-235	0.000E+00	0.0000	0.000E+00	0.0000	0.000E+00	0.0000	0.000E+00	0.0000	0.000E+00	0.0000	0.000E+00	0.0000	2.019E-07	0.0001
-238	0.000E+00	0.0000	0.000E+00	0.0000	0.000E+00	0.0000	0.000E+00	0.0000	0.000E+00	0.0000	0.000E+00	0.0000	3.003E-06	0.0015
íííííí	íííííííííí	íííííí	íííííííííí	íííííí	íííííííííí	íííííí	íííííííííí	íííííí	íííííííííí	íííííí	íííííííííí	íííííí	íííííííííí	íííííí
otal	0.000E+00	0.0000	0.000E+00	0.0000	0.000E+00	0.0000	0.000E+00	0.0000	0.000E+00	0.0000	0.000E+00	0.0000	2.003E-03	1.0000

Sum of all water independent and dependent pathways.

ummary : GKP Recreational Visitor-- Ingestion
ile : C:\USERS\CLAUDE\DOCUMENTS\0 GKP DOSE\RESRAD CW\GKP RECREATIONAL VISITOR -INGESTION R1.RAD

Total Dose Contributions TDOSE(i,p,t) for Individual Radionuclides (i) and Pathways (p)
As mrem/yr and Fraction of Total Dose At t = 3.000E+02 years

Water Independent Pathways (Inhalation excludes radon)

	Ground		Inhalation		Radon		Plant		Meat		Milk		Soil	
adio-	ÄÄÄÄÄÄÄÄÄÄÄÄÄÄÄÄ		ÄÄÄÄÄÄÄÄÄÄÄÄÄÄÄÄ		ÄÄÄÄÄÄÄÄÄÄÄÄÄÄÄÄ		ÄÄÄÄÄÄÄÄÄÄÄÄÄÄÄÄ		ÄÄÄÄÄÄÄÄÄÄÄÄÄÄÄÄ		ÄÄÄÄÄÄÄÄÄÄÄÄÄÄÄÄ		ÄÄÄÄÄÄÄÄÄÄÄÄÄÄÄÄ		ÄÄÄÄÄÄÄÄÄÄÄÄÄÄÄÄ	
uclide	mrem/yr	fract.	mrem/yr	fract.	mrem/yr	fract.	mrem/yr	fract.	mrem/yr	fract.	mrem/yr	fract.	mrem/yr	fract.
ÄÄÄÄÄÄ	ÄÄÄÄÄÄÄÄÄ	ÄÄÄÄÄÄ	ÄÄÄÄÄÄÄÄÄ	ÄÄÄÄÄÄ	ÄÄÄÄÄÄÄÄÄ	ÄÄÄÄÄÄ	ÄÄÄÄÄÄÄÄÄ	ÄÄÄÄÄÄ	ÄÄÄÄÄÄÄÄÄ	ÄÄÄÄÄÄ	ÄÄÄÄÄÄÄÄÄ	ÄÄÄÄÄÄ	ÄÄÄÄÄÄÄÄÄ	ÄÄÄÄÄÄ
a-226	0.000E+00	0.0000	0.000E+00	0.0000	0.000E+00	0.0000	0.000E+00	0.0000	0.000E+00	0.0000	0.000E+00	0.0000	0.000E+00	0.0000
h-232	0.000E+00	0.0000	0.000E+00	0.0000	0.000E+00	0.0000	0.000E+00	0.0000	0.000E+00	0.0000	0.000E+00	0.0000	0.000E+00	0.0000
-234	0.000E+00	0.0000	0.000E+00	0.0000	0.000E+00	0.0000	0.000E+00	0.0000	0.000E+00	0.0000	0.000E+00	0.0000	0.000E+00	0.0000
-235	0.000E+00	0.0000	0.000E+00	0.0000	0.000E+00	0.0000	0.000E+00	0.0000	0.000E+00	0.0000	0.000E+00	0.0000	0.000E+00	0.0000
-238	0.000E+00	0.0000	0.000E+00	0.0000	0.000E+00	0.0000	0.000E+00	0.0000	0.000E+00	0.0000	0.000E+00	0.0000	0.000E+00	0.0000
íííííí	íííííííííí	íííííí	íííííííííí	íííííí	íííííííííí	íííííí	íííííííííí	íííííí	íííííííííí	íííííí	íííííííííí	íííííí	íííííííííí	íííííí
otal	0.000E+00	0.0000	0.000E+00	0.0000	0.000E+00	0.0000	0.000E+00	0.0000	0.000E+00	0.0000	0.000E+00	0.0000	0.000E+00	0.0000

Total Dose Contributions TDOSE(i,p,t) for Individual Radionuclides (i) and Pathways (p)
As mrem/yr and Fraction of Total Dose At t = 3.000E+02 years

Water Dependent Pathways

	Water		Fish		Radon		Plant		Meat		Milk		All Pathways*	
adio-	ÄÄÄÄÄÄÄÄÄÄÄÄÄÄÄÄ		ÄÄÄÄÄÄÄÄÄÄÄÄÄÄÄÄ		ÄÄÄÄÄÄÄÄÄÄÄÄÄÄÄÄ		ÄÄÄÄÄÄÄÄÄÄÄÄÄÄÄÄ		ÄÄÄÄÄÄÄÄÄÄÄÄÄÄÄÄ		ÄÄÄÄÄÄÄÄÄÄÄÄÄÄÄÄ		ÄÄÄÄÄÄÄÄÄÄÄÄÄÄÄÄ	
uclide	mrem/yr	fract.	mrem/yr	fract.	mrem/yr	fract.	mrem/yr	fract.	mrem/yr	fract.	mrem/yr	fract.	mrem/yr	fract.
ÄÄÄÄÄÄ	ÄÄÄÄÄÄÄÄÄ	ÄÄÄÄÄÄ	ÄÄÄÄÄÄÄÄÄ	ÄÄÄÄÄÄ	ÄÄÄÄÄÄÄÄÄ	ÄÄÄÄÄÄ	ÄÄÄÄÄÄÄÄÄ	ÄÄÄÄÄÄ	ÄÄÄÄÄÄÄÄÄ	ÄÄÄÄÄÄ	ÄÄÄÄÄÄÄÄÄ	ÄÄÄÄÄÄ	ÄÄÄÄÄÄÄÄÄ	ÄÄÄÄÄÄ
a-226	0.000E+00	0.0000	0.000E+00	0.0000	0.000E+00	0.0000	0.000E+00	0.0000	0.000E+00	0.0000	0.000E+00	0.0000	0.000E+00	0.0000
h-232	0.000E+00	0.0000	0.000E+00	0.0000	0.000E+00	0.0000	0.000E+00	0.0000	0.000E+00	0.0000	0.000E+00	0.0000	0.000E+00	0.0000
-234	0.000E+00	0.0000	0.000E+00	0.0000	0.000E+00	0.0000	0.000E+00	0.0000	0.000E+00	0.0000	0.000E+00	0.0000	0.000E+00	0.0000
-235	0.000E+00	0.0000	0.000E+00	0.0000	0.000E+00	0.0000	0.000E+00	0.0000	0.000E+00	0.0000	0.000E+00	0.0000	0.000E+00	0.0000
-238	0.000E+00	0.0000	0.000E+00	0.0000	0.000E+00	0.0000	0.000E+00	0.0000	0.000E+00	0.0000	0.000E+00	0.0000	0.000E+00	0.0000
íííííí	íííííííííí	íííííí	íííííííííí	íííííí	íííííííííí	íííííí	íííííííííí	íííííí	íííííííííí	íííííí	íííííííííí	íííííí	íííííííííí	íííííí
otal	0.000E+00	0.0000	0.000E+00	0.0000	0.000E+00	0.0000	0.000E+00	0.0000	0.000E+00	0.0000	0.000E+00	0.0000	0.000E+00	0.0000

Sum of all water independent and dependent pathways.

ummary : GKP Recreational Visitor-- Ingestion
ile : C:\USERS\CLAUDE\DOCUMENTS\0 GKP DOSE\RESRAD CW\GKP RECREATIONAL VISITOR -INGESTION R1.RAD

Total Dose Contributions TDOSE(i,p,t) for Individual Radionuclides (i) and Pathways (p)
As mrem/yr and Fraction of Total Dose At t = 1.000E+03 years

Water Independent Pathways (Inhalation excludes radon)

	Ground		Inhalation		Radon		Plant		Meat		Milk		Soil	
adio-	ÄÄÄÄÄÄÄÄÄÄÄÄÄÄÄÄ		ÄÄÄÄÄÄÄÄÄÄÄÄÄÄÄÄ		ÄÄÄÄÄÄÄÄÄÄÄÄÄÄÄÄ		ÄÄÄÄÄÄÄÄÄÄÄÄÄÄÄÄ		ÄÄÄÄÄÄÄÄÄÄÄÄÄÄÄÄ		ÄÄÄÄÄÄÄÄÄÄÄÄÄÄÄÄ		ÄÄÄÄÄÄÄÄÄÄÄÄÄÄÄÄ	
uclide	mrem/yr	fract.	mrem/yr	fract.	mrem/yr	fract.	mrem/yr	fract.	mrem/yr	fract.	mrem/yr	fract.	mrem/yr	fract.
ÄÄÄÄÄÄ	ÄÄÄÄÄÄÄÄÄ	ÄÄÄÄÄÄ	ÄÄÄÄÄÄÄÄÄ	ÄÄÄÄÄÄ	ÄÄÄÄÄÄÄÄÄ	ÄÄÄÄÄÄ	ÄÄÄÄÄÄÄÄÄ	ÄÄÄÄÄÄ	ÄÄÄÄÄÄÄÄÄ	ÄÄÄÄÄÄ	ÄÄÄÄÄÄÄÄÄ	ÄÄÄÄÄÄ	ÄÄÄÄÄÄÄÄÄ	ÄÄÄÄÄÄ
a-226	0.000E+00	0.0000	0.000E+00	0.0000	0.000E+00	0.0000	0.000E+00	0.0000	0.000E+00	0.0000	0.000E+00	0.0000	0.000E+00	0.0000
n-232	0.000E+00	0.0000	0.000E+00	0.0000	0.000E+00	0.0000	0.000E+00	0.0000	0.000E+00	0.0000	0.000E+00	0.0000	0.000E+00	0.0000
-234	0.000E+00	0.0000	0.000E+00	0.0000	0.000E+00	0.0000	0.000E+00	0.0000	0.000E+00	0.0000	0.000E+00	0.0000	0.000E+00	0.0000
-235	0.000E+00	0.0000	0.000E+00	0.0000	0.000E+00	0.0000	0.000E+00	0.0000	0.000E+00	0.0000	0.000E+00	0.0000	0.000E+00	0.0000
-238	0.000E+00	0.0000	0.000E+00	0.0000	0.000E+00	0.0000	0.000E+00	0.0000	0.000E+00	0.0000	0.000E+00	0.0000	0.000E+00	0.0000
íííííí	íííííííííí	íííííí	íííííííííí	íííííí	íííííííííí	íííííí	íííííííííí	íííííí	íííííííííí	íííííí	íííííííííí	íííííí	íííííííííí	íííííí
otal	0.000E+00	0.0000	0.000E+00	0.0000	0.000E+00	0.0000	0.000E+00	0.0000	0.000E+00	0.0000	0.000E+00	0.0000	0.000E+00	0.0000

Total Dose Contributions TDOSE(i,p,t) for Individual Radionuclides (i) and Pathways (p)
As mrem/yr and Fraction of Total Dose At t = 1.000E+03 years

Water Dependent Pathways

	Water		Fish		Radon		Plant		Meat		Milk		All Pathways*	
adio-	ÄÄÄÄÄÄÄÄÄÄÄÄÄÄÄÄ		ÄÄÄÄÄÄÄÄÄÄÄÄÄÄÄÄ		ÄÄÄÄÄÄÄÄÄÄÄÄÄÄÄÄ		ÄÄÄÄÄÄÄÄÄÄÄÄÄÄÄÄ		ÄÄÄÄÄÄÄÄÄÄÄÄÄÄÄÄ		ÄÄÄÄÄÄÄÄÄÄÄÄÄÄÄÄ		ÄÄÄÄÄÄÄÄÄÄÄÄÄÄÄÄ	
uclide	mrem/yr	fract.	mrem/yr	fract.	mrem/yr	fract.	mrem/yr	fract.	mrem/yr	fract.	mrem/yr	fract.	mrem/yr	fract.
ÄÄÄÄÄÄ	ÄÄÄÄÄÄÄÄÄ	ÄÄÄÄÄÄ	ÄÄÄÄÄÄÄÄÄ	ÄÄÄÄÄÄ	ÄÄÄÄÄÄÄÄÄ	ÄÄÄÄÄÄ	ÄÄÄÄÄÄÄÄÄ	ÄÄÄÄÄÄ	ÄÄÄÄÄÄÄÄÄ	ÄÄÄÄÄÄ	ÄÄÄÄÄÄÄÄÄ	ÄÄÄÄÄÄ	ÄÄÄÄÄÄÄÄÄ	ÄÄÄÄÄÄ
a-226	0.000E+00	0.0000	0.000E+00	0.0000	0.000E+00	0.0000	0.000E+00	0.0000	0.000E+00	0.0000	0.000E+00	0.0000	0.000E+00	0.0000
n-232	0.000E+00	0.0000	0.000E+00	0.0000	0.000E+00	0.0000	0.000E+00	0.0000	0.000E+00	0.0000	0.000E+00	0.0000	0.000E+00	0.0000
-234	0.000E+00	0.0000	0.000E+00	0.0000	0.000E+00	0.0000	0.000E+00	0.0000	0.000E+00	0.0000	0.000E+00	0.0000	0.000E+00	0.0000
-235	0.000E+00	0.0000	0.000E+00	0.0000	0.000E+00	0.0000	0.000E+00	0.0000	0.000E+00	0.0000	0.000E+00	0.0000	0.000E+00	0.0000
-238	0.000E+00	0.0000	0.000E+00	0.0000	0.000E+00	0.0000	0.000E+00	0.0000	0.000E+00	0.0000	0.000E+00	0.0000	0.000E+00	0.0000
íííííí	íííííííííí	íííííí	íííííííííí	íííííí	íííííííííí	íííííí	íííííííííí	íííííí	íííííííííí	íííííí	íííííííííí	íííííí	íííííííííí	íííííí
otal	0.000E+00	0.0000	0.000E+00	0.0000	0.000E+00	0.0000	0.000E+00	0.0000	0.000E+00	0.0000	0.000E+00	0.0000	0.000E+00	0.0000

Sum of all water independent and dependent pathways.

ummary : GKP Recreational Visitor-- Ingestion
ile : C:\USERS\CLAUDE\DOCUMENTS\0 GKP DOSE\RESRAD CW\GKP RECREATIONAL VISITOR -INGESTION R1.RAD

Dose/Source Ratios Summed Over All Pathways
Parent and Progeny Principal Radionuclide Contributions Indicated

Parent	Product	Thread	DSR(j,t) At Time in Years (mrem/yr)/(pCi/g)							
(i)	(j)	Fraction	0.000E+00	1.000E+00	3.000E+00	1.000E+01	3.000E+01	1.000E+02	3.000E+02	1.000E+03
ÄÄÄÄÄÄÄÄ	ÄÄÄÄÄÄÄÄÄÄ	ÄÄÄÄÄÄÄÄ	ÄÄÄÄÄÄÄÄÄ	ÄÄÄÄÄÄÄÄÄ	ÄÄÄÄÄÄÄÄÄ	ÄÄÄÄÄÄÄÄÄ	ÄÄÄÄÄÄÄÄÄ	ÄÄÄÄÄÄÄÄÄ	ÄÄÄÄÄÄÄÄÄ	ÄÄÄÄÄÄÄÄÄ
a-226+D	Ra-226+D	9.996E-01	2.706E-04	2.603E-04	2.408E-04	1.832E-04	8.262E-05	3.622E-06	0.000E+00	0.000E+00
a-226+D	Pb-210+D	9.996E-01	2.286E-05	6.563E-05	1.390E-04	2.951E-04	3.173E-04	2.569E-05	0.000E+00	0.000E+00
a-226+D	äDSR(j)		2.935E-04	3.259E-04	3.798E-04	4.783E-04	3.999E-04	2.931E-05	0.000E+00	0.000E+00
a-226+D	Ra-226+D	1.319E-06	3.572E-10	3.436E-10	3.179E-10	2.418E-10	1.091E-10	4.782E-12	0.000E+00	0.000E+00
a-226+D	Pb-210+D1	1.319E-06	2.230E-11	6.401E-11	1.355E-10	2.878E-10	3.094E-10	2.505E-11	0.000E+00	0.000E+00
a-226+D	äDSR(j)		3.795E-10	4.076E-10	4.534E-10	5.296E-10	4.185E-10	2.983E-11	0.000E+00	0.000E+00
a-226+D	Ra-226+D	1.899E-08	5.141E-12	4.946E-12	4.576E-12	3.481E-12	1.570E-12	6.883E-14	0.000E+00	0.000E+00
a-226+D	Pb-210+D2	1.899E-08	3.205E-13	9.203E-13	1.948E-12	4.138E-12	4.449E-12	3.602E-13	0.000E+00	0.000E+00
a-226+D	äDSR(j)		5.462E-12	5.866E-12	6.524E-12	7.618E-12	6.018E-12	4.290E-13	0.000E+00	0.000E+00
a-226+D1	Ra-226+D1	2.100E-04	5.684E-08	5.468E-08	5.059E-08	3.848E-08	1.735E-08	7.609E-10	0.000E+00	0.000E+00
a-226+D1	Pb-210+D	2.100E-04	4.802E-09	1.379E-08	2.919E-08	6.198E-08	6.664E-08	5.395E-09	0.000E+00	0.000E+00
a-226+D1	äDSR(j)		6.164E-08	6.846E-08	7.977E-08	1.005E-07	8.399E-08	6.156E-09	0.000E+00	0.000E+00
a-226+D1	Ra-226+D1	2.771E-10	7.503E-14	7.217E-14	6.677E-14	5.079E-14	2.291E-14	1.004E-15	0.000E+00	0.000E+00
a-226+D1	Pb-210+D1	2.771E-10	4.683E-15	1.345E-14	2.847E-14	6.045E-14	6.500E-14	5.262E-15	0.000E+00	0.000E+00
a-226+D1	äDSR(j)		7.971E-14	8.562E-14	9.524E-14	1.112E-13	8.790E-14	6.267E-15	0.000E+00	0.000E+00
a-226+D1	Ra-226+D1	3.989E-12	1.080E-15	1.039E-15	9.611E-16	7.311E-16	3.297E-16	1.446E-17	0.000E+00	0.000E+00
a-226+D1	Pb-210+D2	3.989E-12	6.733E-17	1.933E-16	4.092E-16	8.691E-16	9.344E-16	7.565E-17	0.000E+00	0.000E+00
a-226+D1	äDSR(j)		1.147E-15	1.232E-15	1.370E-15	1.600E-15	1.264E-15	9.011E-17	0.000E+00	0.000E+00
a-226+D2	Ra-226+D2	1.998E-04	5.405E-08	5.199E-08	4.811E-08	3.659E-08	1.650E-08	7.236E-10	0.000E+00	0.000E+00
a-226+D2	Pb-210+D	1.998E-04	4.568E-09	1.312E-08	2.777E-08	5.897E-08	6.340E-08	5.133E-09	0.000E+00	0.000E+00
a-226+D2	äDSR(j)		5.862E-08	6.511E-08	7.587E-08	9.556E-08	7.991E-08	5.857E-09	0.000E+00	0.000E+00
a-226+D2	Ra-226+D2	2.637E-10	7.135E-14	6.863E-14	6.350E-14	4.830E-14	2.178E-14	9.551E-16	0.000E+00	0.000E+00
a-226+D2	Pb-210+D1	2.637E-10	4.456E-15	1.279E-14	2.708E-14	5.751E-14	6.184E-14	5.007E-15	0.000E+00	0.000E+00
a-226+D2	äDSR(j)		7.580E-14	8.143E-14	9.058E-14	1.058E-13	8.362E-14	5.962E-15	0.000E+00	0.000E+00
a-226+D2	Ra-226+D2	3.795E-12	1.027E-15	9.879E-16	9.140E-16	6.953E-16	3.135E-16	1.375E-17	0.000E+00	0.000E+00
a-226+D2	Pb-210+D2	3.795E-12	6.406E-17	1.839E-16	3.894E-16	8.268E-16	8.890E-16	7.198E-17	0.000E+00	0.000E+00
a-226+D2	äDSR(j)		1.091E-15	1.172E-15	1.303E-15	1.522E-15	1.203E-15	8.573E-17	0.000E+00	0.000E+00
a-226+D3	Ra-226+D3	4.196E-08	1.135E-11	1.092E-11	1.010E-11	7.686E-12	3.466E-12	1.520E-13	0.000E+00	0.000E+00
a-226+D3	Pb-210+D	4.196E-08	9.595E-13	2.755E-12	5.832E-12	1.239E-11	1.332E-11	1.078E-12	0.000E+00	0.000E+00
a-226+D3	äDSR(j)		1.231E-11	1.368E-11	1.594E-11	2.007E-11	1.678E-11	1.230E-12	0.000E+00	0.000E+00
a-226+D3	Ra-226+D3	5.538E-14	1.499E-17	1.442E-17	1.334E-17	1.015E-17	4.575E-18	2.006E-19	0.000E+00	0.000E+00
a-226+D3	Pb-210+D1	5.538E-14	9.359E-19	2.687E-18	5.689E-18	1.208E-17	1.299E-17	1.052E-18	0.000E+00	0.000E+00
a-226+D3	äDSR(j)		1.592E-17	1.710E-17	1.903E-17	2.223E-17	1.756E-17	1.252E-18	0.000E+00	0.000E+00
a-226+D3	Ra-226+D3	7.972E-16	2.157E-19	2.075E-19	1.920E-19	1.460E-19	6.586E-20	2.888E-21	0.000E+00	0.000E+00
a-226+D3	Pb-210+D2	7.972E-16	1.345E-20	3.863E-20	8.178E-20	1.737E-19	1.867E-19	1.512E-20	0.000E+00	0.000E+00
a-226+D3	äDSR(j)		2.292E-19	2.461E-19	2.738E-19	3.197E-19	2.526E-19	1.801E-20	0.000E+00	0.000E+00

ummary : GKP Recreational Visitor-- Ingestion
ile : C:\USERS\CLAUDE\DOCUMENTS\0 GKP DOSE\RESRAD CW\GKP RECREATIONAL VISITOR -INGESTION R1.RAD

Dose/Source Ratios Summed Over All Pathways
Parent and Progeny Principal Radionuclide Contributions Indicated

Parent (i)	Product (j)	Thread Fraction	DSR(j,t) At Time in Years (mrem/yr)/(pCi/g) 0.000E+00	1.000E+00	3.000E+00	1.000E+01	3.000E+01	1.000E+02	3.000E+02	1.000E+03
ÄÄÄÄÄÄÄÄÄ	ÄÄÄÄÄÄÄÄÄÄ	ÄÄÄÄÄÄÄÄÄ	ÄÄÄÄÄÄÄÄÄ	ÄÄÄÄÄÄÄÄÄ	ÄÄÄÄÄÄÄÄÄ	ÄÄÄÄÄÄÄÄÄ	ÄÄÄÄÄÄÄÄÄ	ÄÄÄÄÄÄÄÄÄ	ÄÄÄÄÄÄÄÄÄ	ÄÄÄÄÄÄÄÄÄ
a-226+D4	Ra-226+D4	2.000E-07	5.411E-11	5.205E-11	4.815E-11	3.663E-11	1.652E-11	7.243E-13	0.000E+00	0.000E+00
a-226+D4	Pb-210+D	2.000E-07	4.574E-12	1.313E-11	2.780E-11	5.904E-11	6.348E-11	5.139E-12	0.000E+00	0.000E+00
a-226+D4	äDSR(j)		5.868E-11	6.518E-11	7.596E-11	9.567E-11	8.000E-11	5.864E-12	0.000E+00	0.000E+00
a-226+D4	Ra-226+D4	2.640E-13	7.142E-17	6.870E-17	6.356E-17	4.835E-17	2.180E-17	9.560E-19	0.000E+00	0.000E+00
a-226+D4	Pb-210+D1	2.640E-13	4.461E-18	1.281E-17	2.712E-17	5.758E-17	6.191E-17	5.013E-18	0.000E+00	0.000E+00
a-226+D4	äDSR(j)		7.588E-17	8.151E-17	9.068E-17	1.059E-16	8.372E-17	5.969E-18	0.000E+00	0.000E+00
a-226+D4	Ra-226+D4	3.800E-15	1.028E-18	9.889E-19	9.149E-19	6.960E-19	3.139E-19	1.376E-20	0.000E+00	0.000E+00
a-226+D4	Pb-210+D2	3.800E-15	6.413E-20	1.841E-19	3.898E-19	8.278E-19	8.901E-19	7.207E-20	0.000E+00	0.000E+00
a-226+D4	äDSR(j)		1.092E-18	1.173E-18	1.305E-18	1.524E-18	1.204E-18	8.583E-20	0.000E+00	0.000E+00
n-232	Th-232	1.000E+00	5.661E-04	5.623E-04	5.547E-04	5.280E-04	4.520E-04	1.867E-04	0.000E+00	0.000E+00
n-232	Ra-228+D	1.000E+00	1.712E-05	4.782E-05	9.570E-05	1.762E-04	1.873E-04	7.815E-05	0.000E+00	0.000E+00
n-232	Th-228+D	1.000E+00	1.704E-06	1.032E-05	3.985E-05	1.345E-04	1.806E-04	1.211E-04	0.000E+00	0.000E+00
n-232	äDSR(j)		5.849E-04	6.204E-04	6.902E-04	8.387E-04	8.199E-04	3.860E-04	0.000E+00	0.000E+00
-234	U-234	9.996E-01	5.738E-05	5.453E-05	4.924E-05	3.439E-05	1.216E-05	2.273E-07	0.000E+00	0.000E+00
-234	Th-230	9.996E-01	5.140E-10	1.503E-09	3.316E-09	8.181E-09	1.396E-08	7.694E-09	0.000E+00	0.000E+00
-234	Ra-226+D	9.996E-01	1.788E-13	1.218E-12	6.049E-12	4.335E-11	1.953E-10	2.258E-10	0.000E+00	0.000E+00
-234	Pb-210+D	9.996E-01	7.601E-15	1.103E-13	1.194E-12	2.417E-11	2.742E-10	6.407E-10	0.000E+00	0.000E+00
-234	äDSR(j)		5.738E-05	5.453E-05	4.924E-05	3.440E-05	1.217E-05	2.359E-07	0.000E+00	0.000E+00
-234	U-234	1.319E-06	7.574E-11	7.198E-11	6.499E-11	4.540E-11	1.605E-11	3.001E-13	0.000E+00	0.000E+00
-234	Th-230	1.319E-06	6.785E-16	1.984E-15	4.377E-15	1.080E-14	1.843E-14	1.016E-14	0.000E+00	0.000E+00
-234	Ra-226+D	1.319E-06	2.360E-19	1.607E-18	7.985E-18	5.722E-17	2.578E-16	2.980E-16	0.000E+00	0.000E+00
-234	Pb-210+D1	1.319E-06	7.413E-21	1.076E-19	1.164E-18	2.357E-17	2.675E-16	6.249E-16	0.000E+00	0.000E+00
-234	äDSR(j)		7.574E-11	7.198E-11	6.500E-11	4.541E-11	1.607E-11	3.112E-13	0.000E+00	0.000E+00
-234	U-234	1.899E-08	1.090E-12	1.036E-12	9.355E-13	6.535E-13	2.310E-13	4.319E-15	0.000E+00	0.000E+00
-234	Th-230	1.899E-08	9.767E-18	2.856E-17	6.301E-17	1.554E-16	2.652E-16	1.462E-16	0.000E+00	0.000E+00
-234	Ra-226+D	1.899E-08	3.397E-21	2.314E-20	1.149E-19	8.236E-19	3.711E-18	4.290E-18	0.000E+00	0.000E+00
-234	Pb-210+D2	1.899E-08	1.066E-22	1.546E-21	1.674E-20	3.388E-19	3.845E-18	8.985E-18	0.000E+00	0.000E+00
-234	äDSR(j)		1.090E-12	1.036E-12	9.356E-13	6.536E-13	2.313E-13	4.479E-15	0.000E+00	0.000E+00
-234	U-234	2.100E-04	1.205E-08	1.145E-08	1.034E-08	7.224E-09	2.554E-09	4.775E-11	0.000E+00	0.000E+00
-234	Th-230	2.100E-04	1.080E-13	3.158E-13	6.965E-13	1.718E-12	2.932E-12	1.616E-12	0.000E+00	0.000E+00
-234	Ra-226+D1	2.100E-04	3.756E-17	2.558E-16	1.271E-15	9.105E-15	4.102E-14	4.742E-14	0.000E+00	0.000E+00
-234	Pb-210+D	2.100E-04	1.597E-18	2.316E-17	2.508E-16	5.076E-15	5.760E-14	1.346E-13	0.000E+00	0.000E+00
-234	äDSR(j)		1.205E-08	1.145E-08	1.034E-08	7.226E-09	2.557E-09	4.955E-11	0.000E+00	0.000E+00
-234	U-234	2.771E-10	1.591E-14	1.512E-14	1.365E-14	9.536E-15	3.371E-15	6.303E-17	0.000E+00	0.000E+00
-234	Th-230	2.771E-10	1.425E-19	4.168E-19	9.194E-19	2.268E-18	3.871E-18	2.133E-18	0.000E+00	0.000E+00
-234	Ra-226+D1	2.771E-10	4.958E-23	3.376E-22	1.677E-21	1.202E-20	5.415E-20	6.259E-20	0.000E+00	0.000E+00
-234	Pb-210+D1	2.771E-10	1.557E-24	2.259E-23	2.446E-22	4.950E-21	5.618E-20	1.313E-19	0.000E+00	0.000E+00
-234	äDSR(j)		1.591E-14	1.512E-14	1.365E-14	9.538E-15	3.375E-15	6.536E-17	0.000E+00	0.000E+00

ummary : GKP Recreational Visitor-- Ingestion
ile : C:\USERS\CLAUDE\DOCUMENTS\0 GKP DOSE\RESRAD CW\GKP RECREATIONAL VISITOR -INGESTION R1.RAD

Dose/Source Ratios Summed Over All Pathways
Parent and Progeny Principal Radionuclide Contributions Indicated

Parent (i)	Product (j)	Thread Fraction	DSR(j,t) At Time in Years (mrem/yr)/(pCi/g) 0.000E+00	1.000E+00	3.000E+00	1.000E+01	3.000E+01	1.000E+02	3.000E+02	1.000E+03
ÄÄÄÄÄÄÄÄÄ	ÄÄÄÄÄÄÄÄÄÄ	ÄÄÄÄÄÄÄÄÄ	ÄÄÄÄÄÄÄÄÄ	ÄÄÄÄÄÄÄÄÄ	ÄÄÄÄÄÄÄÄÄ	ÄÄÄÄÄÄÄÄÄ	ÄÄÄÄÄÄÄÄÄ	ÄÄÄÄÄÄÄÄÄ	ÄÄÄÄÄÄÄÄÄ	ÄÄÄÄÄÄÄÄÄ
-234	U-234	3.989E-12	2.290E-16	2.176E-16	1.965E-16	1.373E-16	4.852E-17	9.072E-19	0.000E+00	0.000E+00
-234	Th-230	3.989E-12	2.051E-21	5.999E-21	1.323E-20	3.265E-20	5.571E-20	3.071E-20	0.000E+00	0.000E+00
-234	Ra-226+D1	3.989E-12	7.136E-25	4.860E-24	2.414E-23	1.730E-22	7.794E-22	9.010E-22	0.000E+00	0.000E+00
-234	Pb-210+D2	3.989E-12	2.239E-26	3.248E-25	3.516E-24	7.117E-23	8.077E-22	1.887E-21	0.000E+00	0.000E+00
-234	äDSR(j)		2.290E-16	2.176E-16	1.965E-16	1.373E-16	4.858E-17	9.407E-19	0.000E+00	0.000E+00
-234	U-234	1.998E-04	1.147E-08	1.090E-08	9.840E-09	6.873E-09	2.430E-09	4.543E-11	0.000E+00	0.000E+00
-234	Th-230	1.998E-04	1.027E-13	3.004E-13	6.627E-13	1.635E-12	2.790E-12	1.538E-12	0.000E+00	0.000E+00
-234	Ra-226+D2	1.998E-04	3.572E-17	2.432E-16	1.208E-15	8.658E-15	3.901E-14	4.510E-14	0.000E+00	0.000E+00
-234	Pb-210+D	1.998E-04	1.519E-18	2.204E-17	2.386E-16	4.829E-15	5.480E-14	1.280E-13	0.000E+00	0.000E+00
-234	äDSR(j)		1.147E-08	1.090E-08	9.840E-09	6.875E-09	2.433E-09	4.714E-11	0.000E+00	0.000E+00
-234	U-234	2.637E-10	1.514E-14	1.438E-14	1.299E-14	9.073E-15	3.207E-15	5.997E-17	0.000E+00	0.000E+00
-234	Th-230	2.637E-10	1.356E-19	3.965E-19	8.748E-19	2.158E-18	3.683E-18	2.030E-18	0.000E+00	0.000E+00
-234	Ra-226+D2	2.637E-10	4.715E-23	3.211E-22	1.595E-21	1.143E-20	5.149E-20	5.953E-20	0.000E+00	0.000E+00
-234	Pb-210+D1	2.637E-10	1.481E-24	2.149E-23	2.327E-22	4.710E-21	5.345E-20	1.249E-19	0.000E+00	0.000E+00
-234	äDSR(j)		1.514E-14	1.438E-14	1.299E-14	9.075E-15	3.211E-15	6.218E-17	0.000E+00	0.000E+00
-234	U-234	3.795E-12	2.179E-16	2.070E-16	1.870E-16	1.306E-16	4.616E-17	8.632E-19	0.000E+00	0.000E+00
-234	Th-230	3.795E-12	1.952E-21	5.708E-21	1.259E-20	3.106E-20	5.301E-20	2.921E-20	0.000E+00	0.000E+00
-234	Ra-226+D2	3.795E-12	6.786E-25	4.622E-24	2.296E-23	1.645E-22	7.412E-22	8.568E-22	0.000E+00	0.000E+00
-234	Pb-210+D2	3.795E-12	2.130E-26	3.090E-25	3.345E-24	6.771E-23	7.684E-22	1.795E-21	0.000E+00	0.000E+00
-234	äDSR(j)		2.179E-16	2.070E-16	1.870E-16	1.306E-16	4.622E-17	8.950E-19	0.000E+00	0.000E+00
-234	U-234	4.196E-08	2.409E-12	2.289E-12	2.067E-12	1.444E-12	5.103E-13	9.542E-15	0.000E+00	0.000E+00
-234	Th-230	4.196E-08	2.158E-17	6.310E-17	1.392E-16	3.434E-16	5.860E-16	3.230E-16	0.000E+00	0.000E+00
-234	Ra-226+D3	4.196E-08	7.502E-21	5.109E-20	2.538E-19	1.819E-18	8.194E-18	9.472E-18	0.000E+00	0.000E+00
-234	Pb-210+D	4.196E-08	3.190E-22	4.629E-21	5.011E-20	1.014E-18	1.151E-17	2.690E-17	0.000E+00	0.000E+00
-234	äDSR(j)		2.409E-12	2.289E-12	2.067E-12	1.444E-12	5.109E-13	9.901E-15	0.000E+00	0.000E+00
-234	U-234	5.538E-14	3.179E-18	3.021E-18	2.728E-18	1.906E-18	6.736E-19	1.260E-20	0.000E+00	0.000E+00
-234	Th-230	5.538E-14	2.848E-23	8.329E-23	1.837E-22	4.533E-22	7.735E-22	4.263E-22	0.000E+00	0.000E+00
-234	Ra-226+D3	5.538E-14	9.903E-27	6.744E-26	3.350E-25	2.401E-24	1.082E-23	1.250E-23	0.000E+00	0.000E+00
-234	Pb-210+D1	5.538E-14	3.112E-28	4.515E-27	4.888E-26	9.893E-25	1.123E-23	2.623E-23	0.000E+00	0.000E+00
-234	äDSR(j)		3.179E-18	3.021E-18	2.728E-18	1.906E-18	6.744E-19	1.306E-20	0.000E+00	0.000E+00
-234	U-234	7.972E-16	4.576E-20	4.349E-20	3.927E-20	2.743E-20	9.696E-21	1.813E-22	0.000E+00	0.000E+00
-234	Th-230	7.972E-16	4.100E-25	1.199E-24	2.645E-24	6.525E-24	1.113E-23	6.136E-24	0.000E+00	0.000E+00
-234	Ra-226+D3	7.972E-16	1.425E-28	9.707E-28	4.822E-27	3.455E-26	1.557E-25	1.800E-25	0.000E+00	0.000E+00
-234	Pb-210+D2	7.972E-16	4.474E-30	6.491E-29	7.027E-28	1.422E-26	1.614E-25	3.771E-25	0.000E+00	0.000E+00
-234	äDSR(j)		4.576E-20	4.349E-20	3.927E-20	2.744E-20	9.708E-21	1.880E-22	0.000E+00	0.000E+00
-234	U-234	2.000E-07	1.148E-11	1.091E-11	9.852E-12	6.882E-12	2.433E-12	4.548E-14	0.000E+00	0.000E+00
-234	Th-230	2.000E-07	1.028E-16	3.008E-16	6.635E-16	1.637E-15	2.793E-15	1.539E-15	0.000E+00	0.000E+00
-234	Ra-226+D4	2.000E-07	3.575E-20	2.435E-19	1.209E-18	8.667E-18	3.905E-17	4.514E-17	0.000E+00	0.000E+00
-234	Pb-210+D	2.000E-07	1.521E-21	2.206E-20	2.389E-19	4.835E-18	5.487E-17	1.282E-16	0.000E+00	0.000E+00
-234	äDSR(j)		1.148E-11	1.091E-11	9.852E-12	6.883E-12	2.435E-12	4.720E-14	0.000E+00	0.000E+00

ummary : GKP Recreational Visitor-- Ingestion
ile : C:\USERS\CLAUDE\DOCUMENTS\0 GKP DOSE\RESRAD CW\GKP RECREATIONAL VISITOR -INGESTION R1.RAD

Dose/Source Ratios Summed Over All Pathways
Parent and Progeny Principal Radionuclide Contributions Indicated

Parent	Product	Thread	DSR(j,t) At Time in Years (mrem/yr)/(pCi/g)							
(i)	(j)	Fraction	0.000E+00	1.000E+00	3.000E+00	1.000E+01	3.000E+01	1.000E+02	3.000E+02	1.000E+03
ÄÄÄÄÄÄÄÄÄ	ÄÄÄÄÄÄÄÄÄÄ	ÄÄÄÄÄÄÄÄÄ	ÄÄÄÄÄÄÄÄÄ	ÄÄÄÄÄÄÄÄÄ	ÄÄÄÄÄÄÄÄÄ	ÄÄÄÄÄÄÄÄÄ	ÄÄÄÄÄÄÄÄÄ	ÄÄÄÄÄÄÄÄÄ	ÄÄÄÄÄÄÄÄÄ	ÄÄÄÄÄÄÄÄÄ
-234	U-234	2.640E-13	1.515E-17	1.440E-17	1.300E-17	9.084E-18	3.211E-18	6.004E-20	0.000E+00	0.000E+00
-234	Th-230	2.640E-13	1.358E-22	3.970E-22	8.758E-22	2.161E-21	3.687E-21	2.032E-21	0.000E+00	0.000E+00
-234	Ra-226+D4	2.640E-13	4.719E-26	3.214E-25	1.596E-24	1.144E-23	5.154E-23	5.959E-23	0.000E+00	0.000E+00
-234	Pb-210+D1	2.640E-13	1.483E-27	2.152E-26	2.330E-25	4.716E-24	5.352E-23	1.250E-22	0.000E+00	0.000E+00
-234	äDSR(j)		1.515E-17	1.440E-17	1.300E-17	9.086E-18	3.215E-18	6.226E-20	0.000E+00	0.000E+00
-234	U-234	3.800E-15	2.181E-19	2.073E-19	1.872E-19	1.308E-19	4.622E-20	8.642E-22	0.000E+00	0.000E+00
-234	Th-230	3.800E-15	1.954E-24	5.715E-24	1.261E-23	3.110E-23	5.307E-23	2.925E-23	0.000E+00	0.000E+00
-234	Ra-226+D4	3.800E-15	6.793E-28	4.626E-27	2.298E-26	1.647E-25	7.419E-25	8.577E-25	0.000E+00	0.000E+00
-234	Pb-210+D2	3.800E-15	2.132E-29	3.094E-28	3.350E-27	6.780E-26	7.694E-25	1.798E-24	0.000E+00	0.000E+00
-234	äDSR(j)		2.181E-19	2.073E-19	1.872E-19	1.308E-19	4.627E-20	8.961E-22	0.000E+00	0.000E+00
-235+D	U-235+D	9.835E-01	5.333E-05	5.068E-05	4.577E-05	3.197E-05	1.130E-05	2.114E-07	0.000E+00	0.000E+00
-235+D	Pa-231	9.835E-01	2.218E-08	6.360E-08	1.342E-07	2.815E-07	2.890E-07	1.780E-08	0.000E+00	0.000E+00
-235+D	Ac-227+D	9.835E-01	3.194E-10	2.083E-09	9.386E-09	4.800E-08	8.970E-08	7.285E-09	0.000E+00	0.000E+00
-235+D	äDSR(j)		5.336E-05	5.075E-05	4.591E-05	3.230E-05	1.168E-05	2.364E-07	0.000E+00	0.000E+00
-235+D	U-235+D	2.722E-03	1.476E-07	1.403E-07	1.267E-07	8.848E-08	3.128E-08	5.850E-10	0.000E+00	0.000E+00
-235+D	Pa-231	2.722E-03	6.139E-11	1.760E-10	3.714E-10	7.790E-10	7.999E-10	4.926E-11	0.000E+00	0.000E+00
-235+D	Ac-227+D1	2.722E-03	8.840E-13	5.764E-12	2.598E-11	1.328E-10	2.483E-10	2.016E-11	0.000E+00	0.000E+00
-235+D	äDSR(j)		1.477E-07	1.405E-07	1.271E-07	8.939E-08	3.233E-08	6.544E-10	0.000E+00	0.000E+00
-235+D	U-235+D	1.376E-02	7.463E-07	7.092E-07	6.404E-07	4.473E-07	1.581E-07	2.957E-09	0.000E+00	0.000E+00
-235+D	Pa-231	1.376E-02	3.104E-10	8.898E-10	1.878E-09	3.938E-09	4.044E-09	2.491E-10	0.000E+00	0.000E+00
-235+D	Ac-227+D2	1.376E-02	4.460E-12	2.908E-11	1.311E-10	6.703E-10	1.253E-09	1.017E-10	0.000E+00	0.000E+00
-235+D	äDSR(j)		7.466E-07	7.101E-07	6.424E-07	4.519E-07	1.634E-07	3.308E-09	0.000E+00	0.000E+00
-235+D	U-235+D	3.809E-05	2.065E-09	1.963E-09	1.772E-09	1.238E-09	4.377E-10	8.185E-12	0.000E+00	0.000E+00
-235+D	Pa-231	3.809E-05	8.589E-13	2.463E-12	5.197E-12	1.090E-11	1.119E-11	6.893E-13	0.000E+00	0.000E+00
-235+D	Ac-227+D3	3.809E-05	1.234E-14	8.049E-14	3.627E-13	1.855E-12	3.467E-12	2.816E-13	0.000E+00	0.000E+00
-235+D	äDSR(j)		2.066E-09	1.965E-09	1.778E-09	1.251E-09	4.523E-10	9.156E-12	0.000E+00	0.000E+00
-235+D	U-235+D	8.257E-07	4.478E-11	4.255E-11	3.842E-11	2.684E-11	9.489E-12	1.775E-13	0.000E+00	0.000E+00
-235+D	Pa-231	8.257E-07	1.862E-14	5.339E-14	1.127E-13	2.363E-13	2.427E-13	1.494E-14	0.000E+00	0.000E+00
-235+D	Ac-227+D4	8.257E-07	2.557E-16	1.667E-15	7.514E-15	3.843E-14	7.181E-14	5.832E-15	0.000E+00	0.000E+00
-235+D	äDSR(j)		4.480E-11	4.261E-11	3.854E-11	2.712E-11	9.803E-12	1.982E-13	0.000E+00	0.000E+00
-235+D	U-235+D	2.285E-09	1.239E-13	1.178E-13	1.063E-13	7.429E-14	2.626E-14	4.911E-16	0.000E+00	0.000E+00
-235+D	Pa-231	2.285E-09	5.154E-17	1.478E-16	3.118E-16	6.540E-16	6.716E-16	4.136E-17	0.000E+00	0.000E+00
-235+D	Ac-227+D5	2.285E-09	7.076E-19	4.614E-18	2.079E-17	1.063E-16	1.987E-16	1.614E-17	0.000E+00	0.000E+00
-235+D	äDSR(j)		1.240E-13	1.179E-13	1.067E-13	7.505E-14	2.713E-14	5.486E-16	0.000E+00	0.000E+00
-238	U-238	5.450E-07	2.819E-11	2.679E-11	2.419E-11	1.690E-11	5.973E-12	1.117E-13	0.000E+00	0.000E+00

ummary : GKP Recreational Visitor-- Ingestion
ile : C:\USERS\CLAUDE\DOCUMENTS\0 GKP DOSE\RESRAD CW\GKP RECREATIONAL VISITOR -INGESTION R1.RAD

Dose/Source Ratios Summed Over All Pathways
Parent and Progeny Principal Radionuclide Contributions Indicated

Parent (i)	Product (j)	Thread Fraction	DSR(j,t) At Time in Years (mrem/yr)/(pCi/g) 0.000E+00	1.000E+00	3.000E+00	1.000E+01	3.000E+01	1.000E+02	3.000E+02	1.000E+03
ÄÄÄÄÄÄÄÄ	ÄÄÄÄÄÄÄÄÄÄ	ÄÄÄÄÄÄÄÄÄ	ÄÄÄÄÄÄÄÄÄ	ÄÄÄÄÄÄÄÄÄ	ÄÄÄÄÄÄÄÄÄ	ÄÄÄÄÄÄÄÄÄ	ÄÄÄÄÄÄÄÄÄ	ÄÄÄÄÄÄÄÄÄ	ÄÄÄÄÄÄÄÄÄ	ÄÄÄÄÄÄÄÄÄ
-238+D	U-238+D	1.599E-03	8.787E-08	8.350E-08	7.540E-08	5.267E-08	1.862E-08	3.482E-10	0.000E+00	0.000E+00
-238+D	U-234	1.599E-03	1.285E-13	3.685E-13	7.776E-13	1.631E-12	1.675E-12	1.032E-13	0.000E+00	0.000E+00
-238+D	Th-230	1.599E-03	7.679E-19	5.212E-18	2.569E-17	1.791E-16	7.519E-16	7.447E-16	0.000E+00	0.000E+00
-238+D	Ra-226+D	1.599E-03	2.009E-22	2.920E-21	3.175E-20	6.523E-19	7.698E-18	1.963E-17	0.000E+00	0.000E+00
-238+D	Pb-210+D	1.599E-03	6.846E-24	2.048E-22	4.768E-21	2.797E-19	8.694E-18	5.108E-17	0.000E+00	0.000E+00
-238+D	äDSR(j)		8.787E-08	8.350E-08	7.540E-08	5.267E-08	1.862E-08	3.483E-10	0.000E+00	0.000E+00
-238+D	U-238+D	2.111E-09	1.160E-13	1.102E-13	9.953E-14	6.953E-14	2.458E-14	4.596E-16	0.000E+00	0.000E+00
-238+D	U-234	2.111E-09	1.696E-19	4.864E-19	1.026E-18	2.153E-18	2.211E-18	1.362E-19	0.000E+00	0.000E+00
-238+D	Th-230	2.111E-09	1.014E-24	6.879E-24	3.391E-23	2.365E-22	9.925E-22	9.829E-22	0.000E+00	0.000E+00
-238+D	Ra-226+D	2.111E-09	2.651E-28	3.854E-27	4.191E-26	8.611E-25	1.016E-23	2.591E-23	0.000E+00	0.000E+00
-238+D	Pb-210+D1	2.111E-09	6.677E-30	1.997E-28	4.651E-27	2.728E-25	8.479E-24	4.982E-23	0.000E+00	0.000E+00
-238+D	äDSR(j)		1.160E-13	1.102E-13	9.953E-14	6.953E-14	2.458E-14	4.598E-16	0.000E+00	0.000E+00
-238+D	U-238+D	3.039E-11	1.670E-15	1.587E-15	1.433E-15	1.001E-15	3.538E-16	6.616E-18	0.000E+00	0.000E+00
-238+D	U-234	3.039E-11	2.442E-21	7.001E-21	1.477E-20	3.099E-20	3.182E-20	1.961E-21	0.000E+00	0.000E+00
-238+D	Th-230	3.039E-11	1.459E-26	9.902E-26	4.881E-25	3.404E-24	1.429E-23	1.415E-23	0.000E+00	0.000E+00
-238+D	Ra-226+D	3.039E-11	3.816E-30	5.548E-29	6.032E-28	1.239E-26	1.463E-25	3.729E-25	0.000E+00	0.000E+00
-238+D	Pb-210+D2	3.039E-11	9.599E-32	2.871E-30	6.686E-29	3.922E-27	1.219E-25	7.163E-25	0.000E+00	0.000E+00
-238+D	äDSR(j)		1.670E-15	1.587E-15	1.433E-15	1.001E-15	3.538E-16	6.618E-18	0.000E+00	0.000E+00
-238+D	U-238+D	3.359E-07	1.846E-11	1.754E-11	1.584E-11	1.106E-11	3.911E-12	7.314E-14	0.000E+00	0.000E+00
-238+D	U-234	3.359E-07	2.699E-17	7.739E-17	1.633E-16	3.425E-16	3.518E-16	2.168E-17	0.000E+00	0.000E+00
-238+D	Th-230	3.359E-07	1.613E-22	1.095E-21	5.396E-21	3.763E-20	1.579E-19	1.564E-19	0.000E+00	0.000E+00
-238+D	Ra-226+D1	3.359E-07	4.219E-26	6.133E-25	6.668E-24	1.370E-22	1.617E-21	4.123E-21	0.000E+00	0.000E+00
-238+D	Pb-210+D	3.359E-07	1.438E-27	4.301E-26	1.002E-24	5.875E-23	1.826E-21	1.073E-20	0.000E+00	0.000E+00
-238+D	äDSR(j)		1.846E-11	1.754E-11	1.584E-11	1.106E-11	3.911E-12	7.316E-14	0.000E+00	0.000E+00
-238+D	U-238+D	4.434E-13	2.436E-17	2.315E-17	2.091E-17	1.460E-17	5.163E-18	9.655E-20	0.000E+00	0.000E+00
-238+D	U-234	4.434E-13	3.563E-23	1.022E-22	2.156E-22	4.521E-22	4.644E-22	2.862E-23	0.000E+00	0.000E+00
-238+D	Th-230	4.434E-13	2.129E-28	1.445E-27	7.122E-27	4.967E-26	2.085E-25	2.065E-25	0.000E+00	0.000E+00
-238+D	Ra-226+D1	4.434E-13	5.569E-32	8.095E-31	8.802E-30	1.809E-28	2.134E-27	5.442E-27	0.000E+00	0.000E+00
-238+D	Pb-210+D1	4.434E-13	1.402E-33	4.195E-32	9.769E-31	5.730E-29	1.781E-27	1.046E-26	0.000E+00	0.000E+00
-238+D	äDSR(j)		2.436E-17	2.315E-17	2.091E-17	1.460E-17	5.163E-18	9.658E-20	0.000E+00	0.000E+00
-238+D	U-238+D	6.383E-15	3.507E-19	3.333E-19	3.009E-19	2.102E-19	7.431E-20	1.390E-21	0.000E+00	0.000E+00
-238+D	U-234	6.383E-15	5.128E-25	1.470E-24	3.103E-24	6.508E-24	6.685E-24	4.119E-25	0.000E+00	0.000E+00
-238+D	Th-230	6.383E-15	3.065E-30	2.080E-29	1.025E-28	7.149E-28	3.001E-27	2.972E-27	0.000E+00	0.000E+00
-238+D	Ra-226+D1	6.383E-15	8.016E-34	1.165E-32	1.267E-31	2.603E-30	3.072E-29	7.834E-29	0.000E+00	0.000E+00
-238+D	Pb-210+D2	6.383E-15	2.016E-35	6.031E-34	1.404E-32	8.238E-31	2.561E-29	1.505E-28	0.000E+00	0.000E+00
-238+D	äDSR(j)		3.507E-19	3.333E-19	3.009E-19	2.102E-19	7.432E-20	1.390E-21	0.000E+00	0.000E+00

ummary : GKP Recreational Visitor-- Ingestion
ile : C:\USERS\CLAUDE\DOCUMENTS\0 GKP DOSE\RESRAD CW\GKP RECREATIONAL VISITOR -INGESTION R1.RAD

Dose/Source Ratios Summed Over All Pathways
Parent and Progeny Principal Radionuclide Contributions Indicated

Parent (i)	Product (j)	Thread Fraction	DSR(j,t) At Time in Years (mrem/yr)/(pCi/g) 0.000E+00	1.000E+00	3.000E+00	1.000E+01	3.000E+01	1.000E+02	3.000E+02	1.000E+03
ÄÄÄÄÄÄÄÄÄ	ÄÄÄÄÄÄÄÄÄÄ	ÄÄÄÄÄÄÄÄÄ	ÄÄÄÄÄÄÄÄÄ	ÄÄÄÄÄÄÄÄÄ	ÄÄÄÄÄÄÄÄÄ	ÄÄÄÄÄÄÄÄÄ	ÄÄÄÄÄÄÄÄÄ	ÄÄÄÄÄÄÄÄÄ	ÄÄÄÄÄÄÄÄÄ	ÄÄÄÄÄÄÄÄÄ
-238+D	U-238+D	3.196E-07	1.756E-11	1.669E-11	1.507E-11	1.053E-11	3.721E-12	6.959E-14	0.000E+00	0.000E+00
-238+D	U-234	3.196E-07	2.568E-17	7.363E-17	1.554E-16	3.259E-16	3.347E-16	2.063E-17	0.000E+00	0.000E+00
-238+D	Th-230	3.196E-07	1.535E-22	1.042E-21	5.134E-21	3.580E-20	1.503E-19	1.488E-19	0.000E+00	0.000E+00
-238+D	Ra-226+D2	3.196E-07	4.012E-26	5.832E-25	6.341E-24	1.303E-22	1.538E-21	3.921E-21	0.000E+00	0.000E+00
-238+D	Pb-210+D	3.196E-07	1.368E-27	4.092E-26	9.529E-25	5.590E-23	1.737E-21	1.021E-20	0.000E+00	0.000E+00
-238+D	äDSR(j)		1.756E-11	1.669E-11	1.507E-11	1.053E-11	3.721E-12	6.961E-14	0.000E+00	0.000E+00
-238+D	U-238+D	4.219E-13	2.318E-17	2.203E-17	1.989E-17	1.389E-17	4.912E-18	9.186E-20	0.000E+00	0.000E+00
-238+D	U-234	4.219E-13	3.390E-23	9.719E-23	2.051E-22	4.302E-22	4.418E-22	2.723E-23	0.000E+00	0.000E+00
-238+D	Th-230	4.219E-13	2.026E-28	1.375E-27	6.776E-27	4.726E-26	1.983E-25	1.964E-25	0.000E+00	0.000E+00
-238+D	Ra-226+D2	4.219E-13	5.296E-32	7.699E-31	8.370E-30	1.720E-28	2.030E-27	5.175E-27	0.000E+00	0.000E+00
-238+D	Pb-210+D1	4.219E-13	1.334E-33	3.991E-32	9.294E-31	5.452E-29	1.694E-27	9.956E-27	0.000E+00	0.000E+00
-238+D	äDSR(j)		2.318E-17	2.203E-17	1.989E-17	1.389E-17	4.912E-18	9.188E-20	0.000E+00	0.000E+00
-238+D	U-238+D	6.073E-15	3.336E-19	3.171E-19	2.863E-19	2.000E-19	7.070E-20	1.322E-21	0.000E+00	0.000E+00
-238+D	U-234	6.073E-15	4.879E-25	1.399E-24	2.952E-24	6.192E-24	6.360E-24	3.919E-25	0.000E+00	0.000E+00
-238+D	Th-230	6.073E-15	2.916E-30	1.979E-29	9.754E-29	6.802E-28	2.855E-27	2.827E-27	0.000E+00	0.000E+00
-238+D	Ra-226+D2	6.073E-15	7.623E-34	1.108E-32	1.205E-31	2.476E-30	2.921E-29	7.449E-29	0.000E+00	0.000E+00
-238+D	Pb-210+D2	6.073E-15	1.918E-35	5.738E-34	1.336E-32	7.838E-31	2.436E-29	1.431E-28	0.000E+00	0.000E+00
-238+D	äDSR(j)		3.336E-19	3.171E-19	2.863E-19	2.000E-19	7.071E-20	1.323E-21	0.000E+00	0.000E+00
-238+D	U-238+D	6.713E-11	3.688E-15	3.505E-15	3.165E-15	2.211E-15	7.816E-16	1.462E-17	0.000E+00	0.000E+00
-238+D	U-234	6.713E-11	5.394E-21	1.547E-20	3.264E-20	6.845E-20	7.031E-20	4.333E-21	0.000E+00	0.000E+00
-238+D	Th-230	6.713E-11	3.223E-26	2.188E-25	1.078E-24	7.520E-24	3.156E-23	3.126E-23	0.000E+00	0.000E+00
-238+D	Ra-226+D3	6.713E-11	8.427E-30	1.225E-28	1.332E-27	2.737E-26	3.230E-25	8.235E-25	0.000E+00	0.000E+00
-238+D	Pb-210+D	6.713E-11	2.874E-31	8.596E-30	2.002E-28	1.174E-26	3.649E-25	2.144E-24	0.000E+00	0.000E+00
-238+D	äDSR(j)		3.688E-15	3.505E-15	3.165E-15	2.211E-15	7.816E-16	1.462E-17	0.000E+00	0.000E+00
-238+D	U-238+D	8.862E-17	4.869E-21	4.627E-21	4.178E-21	2.918E-21	1.032E-21	1.929E-23	0.000E+00	0.000E+00
-238+D	U-234	8.862E-17	7.120E-27	2.041E-26	4.308E-26	9.036E-26	9.281E-26	5.719E-27	0.000E+00	0.000E+00
-238+D	Th-230	8.862E-17	4.255E-32	2.888E-31	1.423E-30	9.926E-30	4.166E-29	4.126E-29	0.000E+00	0.000E+00
-238+D	Ra-226+D3	8.862E-17	1.112E-35	1.617E-34	1.758E-33	3.613E-32	4.263E-31	1.087E-30	0.000E+00	0.000E+00
-238+D	Pb-210+D1	8.862E-17	2.803E-37	8.383E-36	1.952E-34	1.145E-32	3.559E-31	2.091E-30	0.000E+00	0.000E+00
-238+D	äDSR(j)		4.869E-21	4.627E-21	4.178E-21	2.918E-21	1.032E-21	1.930E-23	0.000E+00	0.000E+00
-238+D	U-238+D	1.276E-18	7.008E-23	6.660E-23	6.013E-23	4.201E-23	1.485E-23	2.777E-25	0.000E+00	0.000E+00
-238+D	U-234	1.276E-18	1.025E-28	2.939E-28	6.201E-28	1.301E-27	1.336E-27	8.232E-29	0.000E+00	0.000E+00
-238+D	Th-230	1.276E-18	6.124E-34	4.156E-33	2.049E-32	1.429E-31	5.997E-31	5.939E-31	0.000E+00	0.000E+00
-238+D	Ra-226+D3	1.276E-18	1.601E-37	2.328E-36	2.531E-35	5.200E-34	6.136E-33	1.565E-32	0.000E+00	0.000E+00
-238+D	Pb-210+D2	1.276E-18	4.029E-39	1.205E-37	2.807E-36	1.646E-34	5.117E-33	3.007E-32	0.000E+00	0.000E+00
-238+D	äDSR(j)		7.008E-23	6.660E-23	6.014E-23	4.201E-23	1.485E-23	2.778E-25	0.000E+00	0.000E+00

ummary : GKP Recreational Visitor-- Ingestion
ile : C:\USERS\CLAUDE\DOCUMENTS\0 GKP DOSE\RESRAD CW\GKP RECREATIONAL VISITOR -INGESTION R1.RAD

Dose/Source Ratios Summed Over All Pathways
Parent and Progeny Principal Radionuclide Contributions Indicated

Parent (i)	Product (j)	Thread Fraction	DSR(j,t) At Time in Years (mrem/yr)/(pCi/g) 0.000E+00	1.000E+00	3.000E+00	1.000E+01	3.000E+01	1.000E+02	3.000E+02	1.000E+03
ÄÄÄÄÄÄÄÄÄ	ÄÄÄÄÄÄÄÄÄÄ	ÄÄÄÄÄÄÄÄÄ	ÄÄÄÄÄÄÄÄÄ	ÄÄÄÄÄÄÄÄÄ	ÄÄÄÄÄÄÄÄÄ	ÄÄÄÄÄÄÄÄÄ	ÄÄÄÄÄÄÄÄÄ	ÄÄÄÄÄÄÄÄÄ	ÄÄÄÄÄÄÄÄÄ	ÄÄÄÄÄÄÄÄÄ
-238+D	U-238+D	3.200E-10	1.758E-14	1.671E-14	1.509E-14	1.054E-14	3.726E-15	6.967E-17	0.000E+00	0.000E+00
-238+D	U-234	3.200E-10	2.571E-20	7.372E-20	1.556E-19	3.263E-19	3.351E-19	2.065E-20	0.000E+00	0.000E+00
-238+D	Th-230	3.200E-10	1.536E-25	1.043E-24	5.140E-24	3.584E-23	1.504E-22	1.490E-22	0.000E+00	0.000E+00
-238+D	Ra-226+D4	3.200E-10	4.016E-29	5.838E-28	6.348E-27	1.304E-25	1.539E-24	3.925E-24	0.000E+00	0.000E+00
-238+D	Pb-210+D	3.200E-10	1.370E-30	4.097E-29	9.541E-28	5.596E-26	1.739E-24	1.022E-23	0.000E+00	0.000E+00
-238+D	äDSR(j)		1.758E-14	1.671E-14	1.509E-14	1.054E-14	3.726E-15	6.969E-17	0.000E+00	0.000E+00
-238+D	U-238+D	4.224E-16	2.321E-20	2.205E-20	1.991E-20	1.391E-20	4.918E-21	9.197E-23	0.000E+00	0.000E+00
-238+D	U-234	4.224E-16	3.394E-26	9.731E-26	2.054E-25	4.307E-25	4.424E-25	2.726E-26	0.000E+00	0.000E+00
-238+D	Th-230	4.224E-16	2.028E-31	1.376E-30	6.784E-30	4.731E-29	1.986E-28	1.967E-28	0.000E+00	0.000E+00
-238+D	Ra-226+D4	4.224E-16	5.301E-35	7.706E-34	8.379E-33	1.722E-31	2.032E-30	5.181E-30	0.000E+00	0.000E+00
-238+D	Pb-210+D1	4.224E-16	1.336E-36	3.996E-35	9.305E-34	5.458E-32	1.697E-30	9.969E-30	0.000E+00	0.000E+00
-238+D	äDSR(j)		2.321E-20	2.205E-20	1.991E-20	1.391E-20	4.918E-21	9.200E-23	0.000E+00	0.000E+00
-238+D	U-238+D	6.080E-18	3.340E-22	3.174E-22	2.866E-22	2.002E-22	7.078E-23	1.324E-24	0.000E+00	0.000E+00
-238+D	U-234	6.080E-18	4.885E-28	1.401E-27	2.956E-27	6.200E-27	6.368E-27	3.924E-28	0.000E+00	0.000E+00
-238+D	Th-230	6.080E-18	2.919E-33	1.981E-32	9.766E-32	6.810E-31	2.858E-30	2.831E-30	0.000E+00	0.000E+00
-238+D	Ra-226+D4	6.080E-18	7.631E-37	1.109E-35	1.206E-34	2.478E-33	2.924E-32	7.457E-32	0.000E+00	0.000E+00
-238+D	Pb-210+D2	6.080E-18	1.921E-38	5.745E-37	1.338E-35	7.847E-34	2.439E-32	1.433E-31	0.000E+00	0.000E+00
-238+D	äDSR(j)		3.340E-22	3.174E-22	2.866E-22	2.002E-22	7.079E-23	1.324E-24	0.000E+00	0.000E+00
-238+D1	U-238+D1	9.980E-01	5.439E-05	5.169E-05	4.668E-05	3.260E-05	1.153E-05	2.156E-07	0.000E+00	0.000E+00
-238+D1	U-234	9.980E-01	8.019E-11	2.299E-10	4.852E-10	1.018E-09	1.045E-09	6.441E-11	0.000E+00	0.000E+00
-238+D1	Th-230	9.980E-01	4.792E-16	3.252E-15	1.603E-14	1.118E-13	4.692E-13	4.647E-13	0.000E+00	0.000E+00
-238+D1	Ra-226+D	9.980E-01	1.253E-19	1.822E-18	1.981E-17	4.071E-16	4.803E-15	1.225E-14	0.000E+00	0.000E+00
-238+D1	Pb-210+D	9.980E-01	4.272E-21	1.278E-19	2.975E-18	1.745E-16	5.425E-15	3.188E-14	0.000E+00	0.000E+00
-238+D1	äDSR(j)		5.439E-05	5.169E-05	4.668E-05	3.261E-05	1.153E-05	2.156E-07	0.000E+00	0.000E+00
-238+D1	U-238+D1	1.317E-06	7.180E-11	6.823E-11	6.161E-11	4.304E-11	1.521E-11	2.845E-13	0.000E+00	0.000E+00
-238+D1	U-234	1.317E-06	1.058E-16	3.035E-16	6.405E-16	1.343E-15	1.380E-15	8.502E-17	0.000E+00	0.000E+00
-238+D1	Th-230	1.317E-06	6.325E-22	4.293E-21	2.116E-20	1.476E-19	6.193E-19	6.134E-19	0.000E+00	0.000E+00
-238+D1	Ra-226+D	1.317E-06	1.654E-25	2.405E-24	2.615E-23	5.373E-22	6.341E-21	1.617E-20	0.000E+00	0.000E+00
-238+D1	Pb-210+D1	1.317E-06	4.166E-27	1.246E-25	2.902E-24	1.702E-22	5.291E-21	3.109E-20	0.000E+00	0.000E+00
-238+D1	äDSR(j)		7.180E-11	6.823E-11	6.161E-11	4.304E-11	1.522E-11	2.846E-13	0.000E+00	0.000E+00
-238+D1	U-238+D1	1.896E-08	1.033E-12	9.821E-13	8.868E-13	6.195E-13	2.190E-13	4.096E-15	0.000E+00	0.000E+00
-238+D1	U-234	1.896E-08	1.524E-18	4.368E-18	9.219E-18	1.933E-17	1.986E-17	1.224E-18	0.000E+00	0.000E+00
-238+D1	Th-230	1.896E-08	9.104E-24	6.179E-23	3.046E-22	2.124E-21	8.914E-21	8.829E-21	0.000E+00	0.000E+00
-238+D1	Ra-226+D	1.896E-08	2.381E-27	3.462E-26	3.764E-25	7.734E-24	9.127E-23	2.327E-22	0.000E+00	0.000E+00
-238+D1	Pb-210+D2	1.896E-08	5.990E-29	1.792E-27	4.172E-26	2.447E-24	7.607E-23	4.470E-22	0.000E+00	0.000E+00
-238+D1	äDSR(j)		1.033E-12	9.821E-13	8.868E-13	6.195E-13	2.190E-13	4.097E-15	0.000E+00	0.000E+00

ummary : GKP Recreational Visitor-- Ingestion
ile : C:\USERS\CLAUDE\DOCUMENTS\0 GKP DOSE\RESRAD CW\GKP RECREATIONAL VISITOR -INGESTION R1.RAD

Dose/Source Ratios Summed Over All Pathways
Parent and Progeny Principal Radionuclide Contributions Indicated

Parent (i)	Product (j)	Thread Fraction	DSR(j,t) At Time in Years (mrem/yr)/(pCi/g) 0.000E+00	1.000E+00	3.000E+00	1.000E+01	3.000E+01	1.000E+02	3.000E+02	1.000E+03
-238+D1	U-238+D1	2.096E-04	1.143E-08	1.086E-08	9.804E-09	6.848E-09	2.421E-09	4.528E-11	0.000E+00	0.000E+00
-238+D1	U-234	2.096E-04	1.684E-14	4.829E-14	1.019E-13	2.137E-13	2.195E-13	1.353E-14	0.000E+00	0.000E+00
-238+D1	Th-230	2.096E-04	1.006E-19	6.831E-19	3.367E-18	2.348E-17	9.855E-17	9.760E-17	0.000E+00	0.000E+00
-238+D1	Ra-226+D1	2.096E-04	2.633E-23	3.827E-22	4.161E-21	8.550E-20	1.009E-18	2.573E-18	0.000E+00	0.000E+00
-238+D1	Pb-210+D	2.096E-04	8.973E-25	2.684E-23	6.250E-22	3.666E-20	1.139E-18	6.695E-18	0.000E+00	0.000E+00
-238+D1	äDSR(j)		1.143E-08	1.086E-08	9.804E-09	6.849E-09	2.421E-09	4.529E-11	0.000E+00	0.000E+00
-238+D1	U-238+D1	2.767E-10	1.508E-14	1.433E-14	1.294E-14	9.040E-15	3.196E-15	5.976E-17	0.000E+00	0.000E+00
-238+D1	U-234	2.767E-10	2.223E-20	6.375E-20	1.345E-19	2.821E-19	2.898E-19	1.786E-20	0.000E+00	0.000E+00
-238+D1	Th-230	2.767E-10	1.329E-25	9.017E-25	4.444E-24	3.099E-23	1.301E-22	1.288E-22	0.000E+00	0.000E+00
-238+D1	Ra-226+D1	2.767E-10	3.475E-29	5.052E-28	5.492E-27	1.129E-25	1.332E-24	3.396E-24	0.000E+00	0.000E+00
-238+D1	Pb-210+D1	2.767E-10	8.751E-31	2.618E-29	6.096E-28	3.576E-26	1.111E-24	6.530E-24	0.000E+00	0.000E+00
-238+D1	äDSR(j)		1.508E-14	1.433E-14	1.294E-14	9.040E-15	3.196E-15	5.978E-17	0.000E+00	0.000E+00
-238+D1	U-238+D1	3.983E-12	2.171E-16	2.063E-16	1.863E-16	1.301E-16	4.600E-17	8.602E-19	0.000E+00	0.000E+00
-238+D1	U-234	3.983E-12	3.200E-22	9.175E-22	1.936E-21	4.061E-21	4.171E-21	2.570E-22	0.000E+00	0.000E+00
-238+D1	Th-230	3.983E-12	1.912E-27	1.298E-26	6.397E-26	4.461E-25	1.872E-24	1.854E-24	0.000E+00	0.000E+00
-238+D1	Ra-226+D1	3.983E-12	5.002E-31	7.271E-30	7.906E-29	1.625E-27	1.917E-26	4.888E-26	0.000E+00	0.000E+00
-238+D1	Pb-210+D2	3.983E-12	1.258E-32	3.763E-31	8.764E-30	5.140E-28	1.598E-26	9.388E-26	0.000E+00	0.000E+00
-238+D1	äDSR(j)		2.171E-16	2.063E-16	1.863E-16	1.301E-16	4.600E-17	8.605E-19	0.000E+00	0.000E+00
-238+D1	U-238+D1	1.994E-04	1.087E-08	1.033E-08	9.328E-09	6.516E-09	2.303E-09	4.308E-11	0.000E+00	0.000E+00
-238+D1	U-234	1.994E-04	1.602E-14	4.595E-14	9.696E-14	2.034E-13	2.089E-13	1.287E-14	0.000E+00	0.000E+00
-238+D1	Th-230	1.994E-04	9.576E-20	6.499E-19	3.203E-18	2.234E-17	9.376E-17	9.286E-17	0.000E+00	0.000E+00
-238+D1	Ra-226+D2	1.994E-04	2.504E-23	3.639E-22	3.957E-21	8.131E-20	9.595E-19	2.447E-18	0.000E+00	0.000E+00
-238+D1	Pb-210+D	1.994E-04	8.537E-25	2.554E-23	5.946E-22	3.488E-20	1.084E-18	6.370E-18	0.000E+00	0.000E+00
-238+D1	äDSR(j)		1.087E-08	1.033E-08	9.328E-09	6.516E-09	2.304E-09	4.309E-11	0.000E+00	0.000E+00
-238+D1	U-238+D1	2.633E-10	1.435E-14	1.364E-14	1.231E-14	8.601E-15	3.040E-15	5.686E-17	0.000E+00	0.000E+00
-238+D1	U-234	2.633E-10	2.115E-20	6.065E-20	1.280E-19	2.684E-19	2.757E-19	1.699E-20	0.000E+00	0.000E+00
-238+D1	Th-230	2.633E-10	1.264E-25	8.579E-25	4.228E-24	2.949E-23	1.238E-22	1.226E-22	0.000E+00	0.000E+00
-238+D1	Ra-226+D2	2.633E-10	3.305E-29	4.804E-28	5.223E-27	1.073E-25	1.266E-24	3.229E-24	0.000E+00	0.000E+00
-238+D1	Pb-210+D1	2.633E-10	8.326E-31	2.491E-29	5.799E-28	3.402E-26	1.057E-24	6.213E-24	0.000E+00	0.000E+00
-238+D1	äDSR(j)		1.435E-14	1.364E-14	1.231E-14	8.601E-15	3.041E-15	5.688E-17	0.000E+00	0.000E+00
-238+D1	U-238+D1	3.789E-12	2.065E-16	1.963E-16	1.772E-16	1.238E-16	4.376E-17	8.185E-19	0.000E+00	0.000E+00
-238+D1	U-234	3.789E-12	3.045E-22	8.730E-22	1.842E-21	3.864E-21	3.969E-21	2.446E-22	0.000E+00	0.000E+00
-238+D1	Th-230	3.789E-12	1.819E-27	1.235E-26	6.086E-26	4.245E-25	1.781E-24	1.764E-24	0.000E+00	0.000E+00
-238+D1	Ra-226+D2	3.789E-12	4.757E-31	6.915E-30	7.518E-29	1.545E-27	1.823E-26	4.648E-26	0.000E+00	0.000E+00
-238+D1	Pb-210+D2	3.789E-12	1.197E-32	3.581E-31	8.338E-30	4.891E-28	1.520E-26	8.932E-26	0.000E+00	0.000E+00
-238+D1	äDSR(j)		2.065E-16	1.963E-16	1.772E-16	1.238E-16	4.377E-17	8.187E-19	0.000E+00	0.000E+00

ummary : GKP Recreational Visitor-- Ingestion
ile : C:\USERS\CLAUDE\DOCUMENTS\0 GKP DOSE\RESRAD CW\GKP RECREATIONAL VISITOR -INGESTION R1.RAD

Dose/Source Ratios Summed Over All Pathways
Parent and Progeny Principal Radionuclide Contributions Indicated

Parent (i)	Product (j)	Thread Fraction	DSR(j,t) At Time in Years (mrem/yr)/(pCi/g) 0.000E+00	1.000E+00	3.000E+00	1.000E+01	3.000E+01	1.000E+02	3.000E+02	1.000E+03
ÄÄÄÄÄÄÄÄÄ	ÄÄÄÄÄÄÄÄÄÄ	ÄÄÄÄÄÄÄÄÄ	ÄÄÄÄÄÄÄÄÄ	ÄÄÄÄÄÄÄÄÄ	ÄÄÄÄÄÄÄÄÄ	ÄÄÄÄÄÄÄÄÄ	ÄÄÄÄÄÄÄÄÄ	ÄÄÄÄÄÄÄÄÄ	ÄÄÄÄÄÄÄÄÄ	ÄÄÄÄÄÄÄÄÄ
-238+D1	U-238+D1	4.189E-08	2.283E-12	2.170E-12	1.959E-12	1.369E-12	4.838E-13	9.048E-15	0.000E+00	0.000E+00
-238+D1	U-234	4.189E-08	3.366E-18	9.651E-18	2.037E-17	4.271E-17	4.387E-17	2.703E-18	0.000E+00	0.000E+00
-238+D1	Th-230	4.189E-08	2.011E-23	1.365E-22	6.728E-22	4.692E-21	1.969E-20	1.950E-20	0.000E+00	0.000E+00
-238+D1	Ra-226+D3	4.189E-08	5.259E-27	7.644E-26	8.311E-25	1.708E-23	2.015E-22	5.139E-22	0.000E+00	0.000E+00
-238+D1	Pb-210+D	4.189E-08	1.793E-28	5.364E-27	1.249E-25	7.326E-24	2.277E-22	1.338E-21	0.000E+00	0.000E+00
-238+D1	äDSR(j)		2.283E-12	2.170E-12	1.959E-12	1.369E-12	4.839E-13	9.051E-15	0.000E+00	0.000E+00
-238+D1	U-238+D1	5.530E-14	3.014E-18	2.864E-18	2.586E-18	1.807E-18	6.386E-19	1.194E-20	0.000E+00	0.000E+00
-238+D1	U-234	5.530E-14	4.443E-24	1.274E-23	2.688E-23	5.638E-23	5.791E-23	3.569E-24	0.000E+00	0.000E+00
-238+D1	Th-230	5.530E-14	2.655E-29	1.802E-28	8.882E-28	6.194E-27	2.600E-26	2.575E-26	0.000E+00	0.000E+00
-238+D1	Ra-226+D3	5.530E-14	6.941E-33	1.009E-31	1.097E-30	2.254E-29	2.660E-28	6.783E-28	0.000E+00	0.000E+00
-238+D1	Pb-210+D1	5.530E-14	1.749E-34	5.231E-33	1.218E-31	7.145E-30	2.221E-28	1.305E-27	0.000E+00	0.000E+00
-238+D1	äDSR(j)		3.014E-18	2.864E-18	2.586E-18	1.807E-18	6.387E-19	1.195E-20	0.000E+00	0.000E+00
-238+D1	U-238+D1	7.959E-16	4.338E-20	4.122E-20	3.722E-20	2.600E-20	9.192E-21	1.719E-22	0.000E+00	0.000E+00
-238+D1	U-234	7.959E-16	6.395E-26	1.834E-25	3.870E-25	8.116E-25	8.336E-25	5.137E-26	0.000E+00	0.000E+00
-238+D1	Th-230	7.959E-16	3.822E-31	2.594E-30	1.278E-29	8.915E-29	3.742E-28	3.706E-28	0.000E+00	0.000E+00
-238+D1	Ra-226+D3	7.959E-16	9.991E-35	1.452E-33	1.579E-32	3.245E-31	3.829E-30	9.764E-30	0.000E+00	0.000E+00
-238+D1	Pb-210+D2	7.959E-16	2.514E-36	7.521E-35	1.751E-33	1.027E-31	3.193E-30	1.876E-29	0.000E+00	0.000E+00
-238+D1	äDSR(j)		4.338E-20	4.123E-20	3.723E-20	2.600E-20	9.193E-21	1.720E-22	0.000E+00	0.000E+00
-238+D1	U-238+D1	1.997E-07	1.088E-11	1.034E-11	9.339E-12	6.524E-12	2.306E-12	4.313E-14	0.000E+00	0.000E+00
-238+D1	U-234	1.997E-07	1.604E-17	4.600E-17	9.708E-17	2.036E-16	2.091E-16	1.289E-17	0.000E+00	0.000E+00
-238+D1	Th-230	1.997E-07	9.588E-23	6.507E-22	3.207E-21	2.237E-20	9.387E-20	9.297E-20	0.000E+00	0.000E+00
-238+D1	Ra-226+D4	1.997E-07	2.506E-26	3.643E-25	3.961E-24	8.139E-23	9.604E-22	2.449E-21	0.000E+00	0.000E+00
-238+D1	Pb-210+D	1.997E-07	8.547E-28	2.557E-26	5.953E-25	3.492E-23	1.085E-21	6.378E-21	0.000E+00	0.000E+00
-238+D1	äDSR(j)		1.088E-11	1.034E-11	9.339E-12	6.524E-12	2.306E-12	4.314E-14	0.000E+00	0.000E+00
-238+D1	U-238+D1	2.636E-13	1.437E-17	1.365E-17	1.233E-17	8.611E-18	3.044E-18	5.693E-20	0.000E+00	0.000E+00
-238+D1	U-234	2.636E-13	2.118E-23	6.072E-23	1.281E-22	2.688E-22	2.760E-22	1.701E-23	0.000E+00	0.000E+00
-238+D1	Th-230	2.636E-13	1.266E-28	8.589E-28	4.234E-27	2.952E-26	1.239E-25	1.227E-25	0.000E+00	0.000E+00
-238+D1	Ra-226+D4	2.636E-13	3.308E-32	4.809E-31	5.228E-30	1.074E-28	1.268E-27	3.233E-27	0.000E+00	0.000E+00
-238+D1	Pb-210+D1	2.636E-13	8.336E-34	2.494E-32	5.807E-31	3.406E-29	1.059E-27	6.220E-27	0.000E+00	0.000E+00
-238+D1	äDSR(j)		1.437E-17	1.365E-17	1.233E-17	8.612E-18	3.044E-18	5.695E-20	0.000E+00	0.000E+00
-238+D1	U-238+D1	3.794E-15	2.068E-19	1.965E-19	1.774E-19	1.239E-19	4.382E-20	8.194E-22	0.000E+00	0.000E+00
-238+D1	U-234	3.794E-15	3.048E-25	8.740E-25	1.844E-24	3.869E-24	3.973E-24	2.448E-25	0.000E+00	0.000E+00
-238+D1	Th-230	3.794E-15	1.822E-30	1.236E-29	6.094E-29	4.250E-28	1.784E-27	1.766E-27	0.000E+00	0.000E+00
-238+D1	Ra-226+D4	3.794E-15	4.761E-34	6.922E-33	7.526E-32	1.546E-30	1.825E-29	4.653E-29	0.000E+00	0.000E+00
-238+D1	Pb-210+D2	3.794E-15	1.198E-35	3.585E-34	8.348E-33	4.897E-31	1.522E-29	8.943E-29	0.000E+00	0.000E+00
-238+D1	äDSR(j)		2.068E-19	1.965E-19	1.774E-19	1.240E-19	4.382E-20	8.197E-22	0.000E+00	0.000E+00
íííííííí	íííííííííí	íííííííí	íííííííí	íííííííí	íííííííí	íííííííí	íííííííí	íííííííí	íííííííí	íííííííí

ne DSR includes contributions from associated (half-life ó 180 days) daughters.

ummary : GKP Recreational Visitor-- Ingestion
ile : C:\USERS\CLAUDE\DOCUMENTS\0 GKP DOSE\RESRAD CW\GKP RECREATIONAL VISITOR -INGESTION R1.RAD

Single Radionuclide Soil Guidelines G(i,t) in pCi/g
Basic Radiation Dose Limit = 2.500E+01 mrem/yr

uclide (i)	t= 0.000E+00	1.000E+00	3.000E+00	1.000E+01	3.000E+01	1.000E+02	3.000E+02	1.000E+03
ÄÄÄÄÄÄ	ÄÄÄÄÄÄÄÄÄÄ	ÄÄÄÄÄÄÄÄÄÄ	ÄÄÄÄÄÄÄÄÄÄ	ÄÄÄÄÄÄÄÄÄÄ	ÄÄÄÄÄÄÄÄÄÄ	ÄÄÄÄÄÄÄÄÄÄ	ÄÄÄÄÄÄÄÄÄÄ	ÄÄÄÄÄÄÄÄÄÄ
a-226	8.516E+04	7.667E+04	6.580E+04	5.225E+04	6.249E+04	8.526E+05	*9.885E+11	*9.885E+11
n-232	4.274E+04	4.030E+04	3.622E+04	2.981E+04	3.049E+04	6.477E+04	*1.097E+05	*1.097E+05
-234	4.355E+05	4.583E+05	5.075E+05	7.264E+05	2.053E+06	1.059E+08	*6.222E+09	*6.222E+09
-235	4.608E+05	4.845E+05	5.356E+05	7.612E+05	2.105E+06	*2.160E+06	*2.160E+06	*2.160E+06
-238	*3.361E+05	*3.361E+05	*3.361E+05	*3.361E+05	*3.361E+05	*3.361E+05	*3.361E+05	*3.361E+05
íííííí	íííííííííí	íííííííííí	íííííííííí	íííííííííí	íííííííííí	íííííííííí	íííííííííí	íííííííííí

At specific activity limit

Summed Dose/Source Ratios DSR(i,t) in (mrem/yr)/(pCi/g)
and Single Radionuclide Soil Guidelines G(i,t) in pCi/g
at tmin = time of minimum single radionuclide soil guideline
and at tmax = time of maximum total dose = 13.55 ñ 0.03 years

uclide (i)	Initial (pCi/g)	tmin (years)	DSR(i,tmin)	G(i,tmin) (pCi/g)	DSR(i,tmax)	G(i,tmax) (pCi/g)
ÄÄÄÄÄÄ	ÄÄÄÄÄÄÄÄÄÄ	ÄÄÄÄÄÄÄÄÄÄÄÄÄÄÄÄ	ÄÄÄÄÄÄÄÄÄÄ	ÄÄÄÄÄÄÄÄÄÄ	ÄÄÄÄÄÄÄÄÄÄ	ÄÄÄÄÄÄÄÄÄÄ
a-226	3.650E+01	14.25 ñ 0.03	4.910E-04	5.091E+04	4.907E-04	5.095E+04
n-232	2.400E+00	16.62 ñ 0.03	8.687E-04	2.878E+04	8.633E-04	2.896E+04
-234	1.390E+01	0.000E+00	5.740E-05	4.355E+05	2.867E-05	8.719E+05
-235	8.400E-01	0.000E+00	5.425E-05	4.608E+05	2.746E-05	9.103E+05
-238	1.390E+01	0.000E+00	5.450E-05	*3.361E+05	2.722E-05	*3.361E+05
íííííí	íííííííííí	íííííííííííííííííí	íííííííííí	íííííííííí	íííííííííí	íííííííííí

At specific activity limit

ummary : GKP Recreational Visitor-- Ingestion

ile : C:\USERS\CLAUDE\DOCUMENTS\0 GKP DOSE\RESRAD CW\GKP RECREATIONAL VISITOR -INGESTION R1.RAD

Individual Nuclide Dose Summed Over All Pathways

Parent Nuclide and Branch Fraction Indicated

uclide (j)	Parent (i)	THF(i)	DOSE(j,t), mrem/yr t= 0.000E+00	1.000E+00	3.000E+00	1.000E+01	3.000E+01	1.000E+02	3.000E+02	1.000E+03
ÄÄÄÄÄÄ	ÄÄÄÄÄÄÄ	ÄÄÄÄÄÄÄÄÄ	ÄÄÄÄÄÄÄÄÄ	ÄÄÄÄÄÄÄÄÄ	ÄÄÄÄÄÄÄÄÄ	ÄÄÄÄÄÄÄÄÄ	ÄÄÄÄÄÄÄÄÄ	ÄÄÄÄÄÄÄÄÄ	ÄÄÄÄÄÄÄÄÄ	ÄÄÄÄÄÄÄÄÄ
a-226	Ra-226	9.996E-01	9.877E-03	9.501E-03	8.791E-03	6.687E-03	3.015E-03	1.322E-04	0.000E+00	0.000E+00
a-226	Ra-226	1.319E-06	1.304E-08	1.254E-08	1.160E-08	8.827E-09	3.980E-09	1.745E-10	0.000E+00	0.000E+00
a-226	U-234	9.996E-01	2.485E-12	1.693E-11	8.408E-11	6.025E-10	2.715E-09	3.138E-09	0.000E+00	0.000E+00
a-226	U-234	1.319E-06	3.281E-18	2.234E-17	1.110E-16	7.953E-16	3.583E-15	4.142E-15	0.000E+00	0.000E+00
a-226	U-234	1.899E-08	4.722E-20	3.216E-19	1.598E-18	1.145E-17	5.158E-17	5.962E-17	0.000E+00	0.000E+00
a-226	U-238	1.599E-03	2.792E-21	4.059E-20	4.413E-19	9.068E-18	1.070E-16	2.728E-16	0.000E+00	0.000E+00
a-226	U-238	2.111E-09	3.685E-27	5.357E-26	5.825E-25	1.197E-23	1.412E-22	3.602E-22	0.000E+00	0.000E+00
a-226	U-238	3.039E-11	5.282E-29	7.678E-28	8.384E-27	1.723E-25	2.033E-24	5.184E-24	0.000E+00	0.000E+00
a-226	U-238	9.980E-01	1.742E-18	2.533E-17	2.754E-16	5.658E-15	6.677E-14	1.703E-13	0.000E+00	0.000E+00
a-226	U-238	1.317E-06	2.300E-24	3.343E-23	3.635E-22	7.469E-21	8.813E-20	2.247E-19	0.000E+00	0.000E+00
a-226	U-238	1.896E-08	3.310E-26	4.812E-25	5.232E-24	1.075E-22	1.269E-21	3.235E-21	0.000E+00	0.000E+00
a-226	äDOSE(j)		9.877E-03	9.501E-03	8.791E-03	6.687E-03	3.015E-03	1.322E-04	0.000E+00	0.000E+00
o-210	Ra-226	9.996E-01	8.344E-04	2.396E-03	5.072E-03	1.077E-02	1.158E-02	9.376E-04	0.000E+00	0.000E+00
o-210	Ra-226	2.100E-04	1.753E-07	5.032E-07	1.065E-06	2.262E-06	2.432E-06	1.969E-07	0.000E+00	0.000E+00
o-210	Ra-226	1.998E-04	1.667E-07	4.787E-07	1.014E-06	2.152E-06	2.314E-06	1.874E-07	0.000E+00	0.000E+00
o-210	Ra-226	4.196E-08	3.502E-11	1.006E-10	2.129E-10	4.521E-10	4.861E-10	3.935E-11	0.000E+00	0.000E+00
o-210	Ra-226	2.000E-07	1.669E-10	4.793E-10	1.015E-09	2.155E-09	2.317E-09	1.876E-10	0.000E+00	0.000E+00
o-210	U-234	9.996E-01	1.057E-13	1.533E-12	1.659E-11	3.359E-10	3.812E-09	8.906E-09	0.000E+00	0.000E+00
o-210	U-234	2.100E-04	2.219E-17	3.220E-16	3.486E-15	7.055E-14	8.007E-13	1.871E-12	0.000E+00	0.000E+00
o-210	U-234	1.998E-04	2.111E-17	3.063E-16	3.316E-15	6.713E-14	7.618E-13	1.780E-12	0.000E+00	0.000E+00
o-210	U-234	4.196E-08	4.435E-21	6.434E-20	6.966E-19	1.410E-17	1.600E-16	3.738E-16	0.000E+00	0.000E+00
o-210	U-234	2.000E-07	2.114E-20	3.067E-19	3.320E-18	6.721E-17	7.627E-16	1.782E-15	0.000E+00	0.000E+00
o-210	U-238	1.599E-03	9.516E-23	2.846E-21	6.628E-20	3.888E-18	1.208E-16	7.100E-16	0.000E+00	0.000E+00
o-210	U-238	3.359E-07	1.999E-26	5.979E-25	1.392E-23	8.166E-22	2.538E-20	1.491E-19	0.000E+00	0.000E+00
o-210	U-238	3.196E-07	1.902E-26	5.688E-25	1.325E-23	7.769E-22	2.415E-20	1.419E-19	0.000E+00	0.000E+00
o-210	U-238	6.713E-11	0.000E+00	1.195E-28	2.782E-27	1.632E-25	5.072E-24	2.980E-23	0.000E+00	0.000E+00
o-210	U-238	3.200E-10	1.904E-29	5.695E-28	1.326E-26	7.779E-25	2.418E-23	1.421E-22	0.000E+00	0.000E+00
o-210	U-238	9.980E-01	5.938E-20	1.776E-18	4.136E-17	2.426E-15	7.541E-14	4.431E-13	0.000E+00	0.000E+00
o-210	U-238	2.096E-04	1.247E-23	3.731E-22	8.687E-21	5.096E-19	1.584E-17	9.306E-17	0.000E+00	0.000E+00
o-210	U-238	1.994E-04	1.187E-23	3.549E-22	8.265E-21	4.848E-19	1.507E-17	8.854E-17	0.000E+00	0.000E+00
o-210	U-238	4.189E-08	2.492E-27	7.455E-26	1.736E-24	1.018E-22	3.165E-21	1.860E-20	0.000E+00	0.000E+00
o-210	U-238	1.997E-07	1.188E-26	3.554E-25	8.275E-24	4.854E-22	1.509E-20	8.865E-20	0.000E+00	0.000E+00
o-210	äDOSE(j)		8.347E-04	2.397E-03	5.074E-03	1.077E-02	1.159E-02	9.380E-04	0.000E+00	0.000E+00
o-210	Ra-226	1.319E-06	8.138E-10	2.337E-09	4.947E-09	1.050E-08	1.129E-08	9.144E-10	0.000E+00	0.000E+00
o-210	Ra-226	1.899E-08	1.170E-11	3.359E-11	7.112E-11	1.510E-10	1.624E-10	1.315E-11	0.000E+00	0.000E+00
o-210	Ra-226	2.771E-10	1.709E-13	4.908E-13	1.039E-12	2.206E-12	2.372E-12	1.921E-13	0.000E+00	0.000E+00
o-210	Ra-226	2.637E-10	1.626E-13	4.669E-13	9.885E-13	2.099E-12	2.257E-12	1.827E-13	0.000E+00	0.000E+00
o-210	Ra-226	5.538E-14	3.416E-17	9.808E-17	2.076E-16	4.409E-16	4.741E-16	3.838E-17	0.000E+00	0.000E+00
o-210	Ra-226	2.640E-13	1.628E-16	4.675E-16	9.897E-16	2.102E-15	2.260E-15	1.830E-16	0.000E+00	0.000E+00
o-210	U-234	1.319E-06	1.030E-19	1.495E-18	1.619E-17	3.276E-16	3.718E-15	8.687E-15	0.000E+00	0.000E+00
o-210	U-234	2.771E-10	2.164E-23	3.140E-22	3.400E-21	6.881E-20	7.809E-19	1.825E-18	0.000E+00	0.000E+00
o-210	U-234	2.637E-10	2.059E-23	2.988E-22	3.235E-21	6.547E-20	7.430E-19	1.736E-18	0.000E+00	0.000E+00
o-210	U-234	5.538E-14	4.325E-27	6.275E-26	6.794E-25	1.375E-23	1.561E-22	3.646E-22	0.000E+00	0.000E+00
o-210	U-234	2.640E-13	2.062E-26	2.991E-25	3.238E-24	6.555E-23	7.439E-22	1.738E-21	0.000E+00	0.000E+00
o-210	U-238	2.111E-09	9.281E-29	2.776E-27	6.465E-26	3.792E-24	1.179E-22	6.925E-22	0.000E+00	0.000E+00
o-210	U-238	4.434E-13	0.000E+00	0.000E+00	0.000E+00	7.965E-28	2.476E-26	1.455E-25	0.000E+00	0.000E+00
o-210	U-238	4.219E-13	0.000E+00	0.000E+00	0.000E+00	7.578E-28	2.355E-26	1.384E-25	0.000E+00	0.000E+00

ummary : GKP Recreational Visitor-- Ingestion
ile : C:\USERS\CLAUDE\DOCUMENTS\0 GKP DOSE\RESRAD CW\GKP RECREATIONAL VISITOR -INGESTION R1.RAD

Individual Nuclide Dose Summed Over All Pathways
Parent Nuclide and Branch Fraction Indicated

uclide (j)	Parent (i)	THF(i)	DOSE(j,t), mrem/yr t= 0.000E+00	1.000E+00	3.000E+00	1.000E+01	3.000E+01	1.000E+02	3.000E+02	1.000E+03
ÄÄÄÄÄ	ÄÄÄÄÄÄ	ÄÄÄÄÄÄÄÄÄ	ÄÄÄÄÄÄÄÄÄ	ÄÄÄÄÄÄÄÄÄ	ÄÄÄÄÄÄÄÄÄ	ÄÄÄÄÄÄÄÄÄ	ÄÄÄÄÄÄÄÄÄ	ÄÄÄÄÄÄÄÄÄ	ÄÄÄÄÄÄÄÄÄ	ÄÄÄÄÄÄÄÄÄ
o-210	U-238	8.862E-17	0.000E+00	0.000E+00	0.000E+00	0.000E+00	0.000E+00	2.907E-29	0.000E+00	0.000E+00
o-210	U-238	4.224E-16	0.000E+00	0.000E+00	0.000E+00	0.000E+00	2.358E-29	1.386E-28	0.000E+00	0.000E+00
o-210	U-238	1.317E-06	5.791E-26	1.732E-24	4.034E-23	2.366E-21	7.355E-20	4.321E-19	0.000E+00	0.000E+00
o-210	U-238	2.767E-10	0.000E+00	3.639E-28	8.473E-27	4.970E-25	1.545E-23	9.077E-23	0.000E+00	0.000E+00
o-210	U-238	2.633E-10	0.000E+00	3.462E-28	8.061E-27	4.729E-25	1.470E-23	8.636E-23	0.000E+00	0.000E+00
o-210	U-238	5.530E-14	0.000E+00	0.000E+00	0.000E+00	9.932E-29	3.087E-27	1.814E-26	0.000E+00	0.000E+00
o-210	U-238	2.636E-13	0.000E+00	0.000E+00	0.000E+00	4.734E-28	1.472E-26	8.646E-26	0.000E+00	0.000E+00
o-210	äDOSE(j)		8.258E-10	2.371E-09	5.020E-09	1.066E-08	1.146E-08	9.280E-10	0.000E+00	0.000E+00
a-226	Ra-226	1.899E-08	1.877E-10	1.805E-10	1.670E-10	1.271E-10	5.729E-11	2.512E-12	0.000E+00	0.000E+00
a-226	Ra-226	2.100E-04	2.075E-06	1.996E-06	1.846E-06	1.405E-06	6.334E-07	2.777E-08	0.000E+00	0.000E+00
a-226	äDOSE(j)		2.075E-06	1.996E-06	1.847E-06	1.405E-06	6.334E-07	2.777E-08	0.000E+00	0.000E+00
a-226	Ra-226	2.771E-10	2.738E-12	2.634E-12	2.437E-12	1.854E-12	8.361E-13	3.666E-14	0.000E+00	0.000E+00
a-226	Ra-226	3.989E-12	3.942E-14	3.792E-14	3.508E-14	2.669E-14	1.203E-14	5.277E-16	0.000E+00	0.000E+00
a-226	äDOSE(j)		2.778E-12	2.672E-12	2.472E-12	1.881E-12	8.481E-13	3.719E-14	0.000E+00	0.000E+00
o-210	Ra-226	3.989E-12	2.457E-15	7.056E-15	1.494E-14	3.172E-14	3.411E-14	2.761E-15	0.000E+00	0.000E+00
o-210	Ra-226	3.795E-12	2.338E-15	6.713E-15	1.421E-14	3.018E-14	3.245E-14	2.627E-15	0.000E+00	0.000E+00
o-210	Ra-226	7.972E-16	4.911E-19	1.410E-18	2.985E-18	6.339E-18	6.816E-18	5.518E-19	0.000E+00	0.000E+00
o-210	Ra-226	3.800E-15	2.341E-18	6.721E-18	1.423E-17	3.022E-17	3.249E-17	2.630E-18	0.000E+00	0.000E+00
o-210	U-234	1.899E-08	1.481E-21	2.149E-20	2.327E-19	4.710E-18	5.345E-17	1.249E-16	0.000E+00	0.000E+00
o-210	U-234	3.989E-12	3.112E-25	4.515E-24	4.888E-23	9.893E-22	1.123E-20	2.623E-20	0.000E+00	0.000E+00
o-210	U-234	3.795E-12	2.961E-25	4.295E-24	4.650E-23	9.412E-22	1.068E-20	2.496E-20	0.000E+00	0.000E+00
o-210	U-234	7.972E-16	6.218E-29	9.022E-28	9.767E-27	1.977E-25	2.244E-24	5.242E-24	0.000E+00	0.000E+00
o-210	U-234	3.800E-15	2.964E-28	4.301E-27	4.656E-26	9.424E-25	1.069E-23	2.499E-23	0.000E+00	0.000E+00
o-210	U-238	3.039E-11	0.000E+00	3.991E-29	9.294E-28	5.452E-26	1.694E-24	9.956E-24	0.000E+00	0.000E+00
o-210	U-238	6.383E-15	0.000E+00	0.000E+00	0.000E+00	0.000E+00	3.559E-28	2.091E-27	0.000E+00	0.000E+00
o-210	U-238	6.073E-15	0.000E+00	0.000E+00	0.000E+00	0.000E+00	3.386E-28	1.990E-27	0.000E+00	0.000E+00
o-210	U-238	1.276E-18	0.000E+00	0.000E+00	0.000E+00	0.000E+00	0.000E+00	0.000E+00	0.000E+00	0.000E+00
o-210	U-238	6.080E-18	0.000E+00	0.000E+00	0.000E+00	0.000E+00	0.000E+00	0.000E+00	0.000E+00	0.000E+00
o-210	U-238	1.896E-08	8.326E-28	2.491E-26	5.799E-25	3.402E-23	1.057E-21	6.213E-21	0.000E+00	0.000E+00
o-210	U-238	3.983E-12	0.000E+00	0.000E+00	1.218E-28	7.145E-27	2.221E-25	1.305E-24	0.000E+00	0.000E+00
o-210	U-238	3.789E-12	0.000E+00	0.000E+00	1.159E-28	6.798E-27	2.113E-25	1.242E-24	0.000E+00	0.000E+00
o-210	U-238	7.959E-16	0.000E+00	0.000E+00	0.000E+00	0.000E+00	4.438E-29	2.608E-28	0.000E+00	0.000E+00
o-210	U-238	3.794E-15	0.000E+00	0.000E+00	0.000E+00	0.000E+00	2.116E-28	1.243E-27	0.000E+00	0.000E+00
o-210	äDOSE(j)		4.798E-15	1.378E-14	2.917E-14	6.194E-14	6.665E-14	5.517E-15	0.000E+00	0.000E+00
a-226	Ra-226	1.998E-04	1.973E-06	1.898E-06	1.756E-06	1.336E-06	6.023E-07	2.641E-08	0.000E+00	0.000E+00
a-226	Ra-226	2.637E-10	2.604E-12	2.505E-12	2.318E-12	1.763E-12	7.951E-13	3.486E-14	0.000E+00	0.000E+00
a-226	U-234	1.998E-04	4.965E-16	3.381E-15	1.679E-14	1.203E-13	5.422E-13	6.268E-13	0.000E+00	0.000E+00
a-226	U-234	2.637E-10	6.553E-22	4.463E-21	2.217E-20	1.589E-19	7.157E-19	8.274E-19	0.000E+00	0.000E+00
a-226	U-234	3.795E-12	9.433E-24	6.424E-23	3.191E-22	2.287E-21	1.030E-20	1.191E-20	0.000E+00	0.000E+00
a-226	U-238	3.196E-07	5.577E-25	8.107E-24	8.814E-23	1.811E-21	2.137E-20	5.450E-20	0.000E+00	0.000E+00
a-226	U-238	4.219E-13	0.000E+00	0.000E+00	1.159E-28	2.381E-27	2.821E-26	7.194E-26	0.000E+00	0.000E+00
a-226	U-238	6.073E-15	0.000E+00	0.000E+00	0.000E+00	3.427E-29	4.043E-28	1.031E-27	0.000E+00	0.000E+00
a-226	U-238	1.994E-04	3.480E-22	5.059E-21	5.500E-20	1.130E-18	1.334E-17	3.401E-17	0.000E+00	0.000E+00
a-226	U-238	2.633E-10	4.574E-28	6.677E-27	7.260E-26	1.492E-24	1.760E-23	4.489E-23	0.000E+00	0.000E+00
a-226	U-238	3.789E-12	0.000E+00	9.570E-29	1.041E-27	2.147E-26	2.534E-25	6.461E-25	0.000E+00	0.000E+00
a-226	äDOSE(j)		1.973E-06	1.898E-06	1.756E-06	1.336E-06	6.023E-07	2.641E-08	0.000E+00	0.000E+00

ummary : GKP Recreational Visitor-- Ingestion
ile : C:\USERS\CLAUDE\DOCUMENTS\0 GKP DOSE\RESRAD CW\GKP RECREATIONAL VISITOR -INGESTION R1.RAD

Individual Nuclide Dose Summed Over All Pathways
Parent Nuclide and Branch Fraction Indicated

uclide (j)	Parent (i)	THF(i)	DOSE(j,t), mrem/yr t= 0.000E+00	1.000E+00	3.000E+00	1.000E+01	3.000E+01	1.000E+02	3.000E+02	1.000E+03
ÄÄÄÄÄÄ	ÄÄÄÄÄÄÄ	ÄÄÄÄÄÄÄÄÄÄ	ÄÄÄÄÄÄÄÄÄÄ	ÄÄÄÄÄÄÄÄÄÄ	ÄÄÄÄÄÄÄÄÄÄ	ÄÄÄÄÄÄÄÄÄÄ	ÄÄÄÄÄÄÄÄÄÄ	ÄÄÄÄÄÄÄÄÄÄ	ÄÄÄÄÄÄÄÄÄÄ	ÄÄÄÄÄÄÄÄÄÄ
a-226	Ra-226	3.795E-12	3.748E-14	3.606E-14	3.336E-14	2.538E-14	1.144E-14	5.018E-16	0.000E+00	0.000E+00
a-226	Ra-226	4.196E-08	4.144E-10	3.986E-10	3.688E-10	2.806E-10	1.265E-10	5.547E-12	0.000E+00	0.000E+00
a-226	äDOSE(j)		4.144E-10	3.987E-10	3.688E-10	2.806E-10	1.265E-10	5.548E-12	0.000E+00	0.000E+00
a-226	Ra-226	5.538E-14	5.470E-16	5.262E-16	4.868E-16	3.703E-16	1.670E-16	7.322E-18	0.000E+00	0.000E+00
a-226	Ra-226	7.972E-16	7.873E-18	7.574E-18	7.007E-18	5.330E-18	2.404E-18	1.054E-19	0.000E+00	0.000E+00
a-226	äDOSE(j)		5.549E-16	5.338E-16	4.938E-16	3.757E-16	1.694E-16	7.428E-18	0.000E+00	0.000E+00
a-226	Ra-226	2.000E-07	1.975E-09	1.900E-09	1.758E-09	1.337E-09	6.029E-10	2.644E-11	0.000E+00	0.000E+00
a-226	Ra-226	2.640E-13	2.607E-15	2.508E-15	2.320E-15	1.765E-15	7.959E-16	3.490E-17	0.000E+00	0.000E+00
a-226	U-234	2.000E-07	4.970E-19	3.384E-18	1.681E-17	1.205E-16	5.428E-16	6.275E-16	0.000E+00	0.000E+00
a-226	U-234	2.640E-13	6.560E-25	4.467E-24	2.219E-23	1.590E-22	7.164E-22	8.282E-22	0.000E+00	0.000E+00
a-226	U-234	3.800E-15	9.442E-27	6.430E-26	3.194E-25	2.289E-24	1.031E-23	1.192E-23	0.000E+00	0.000E+00
a-226	U-238	3.200E-10	5.558E-28	8.115E-27	8.823E-26	1.813E-24	2.139E-23	5.455E-23	0.000E+00	0.000E+00
a-226	U-238	4.224E-16	0.000E+00	0.000E+00	0.000E+00	0.000E+00	2.812E-29	7.170E-29	0.000E+00	0.000E+00
a-226	U-238	6.080E-18	0.000E+00	0.000E+00	0.000E+00	0.000E+00	0.000E+00	0.000E+00	0.000E+00	0.000E+00
a-226	U-238	1.997E-07	3.483E-25	5.064E-24	5.506E-23	1.131E-21	1.335E-20	3.404E-20	0.000E+00	0.000E+00
a-226	U-238	2.636E-13	0.000E+00	0.000E+00	7.236E-29	1.487E-27	1.762E-26	4.493E-26	0.000E+00	0.000E+00
a-226	U-238	3.794E-15	0.000E+00	0.000E+00	0.000E+00	2.140E-29	2.526E-28	6.440E-28	0.000E+00	0.000E+00
a-226	äDOSE(j)		1.975E-09	1.900E-09	1.758E-09	1.337E-09	6.029E-10	2.644E-11	0.000E+00	0.000E+00
a-226	Ra-226	3.800E-15	3.752E-17	3.609E-17	3.340E-17	2.540E-17	1.146E-17	5.023E-19	0.000E+00	0.000E+00
n-232	Th-232	1.000E+00	1.359E-03	1.349E-03	1.331E-03	1.267E-03	1.085E-03	4.482E-04	0.000E+00	0.000E+00
a-228	Th-232	1.000E+00	4.110E-05	1.148E-04	2.297E-04	4.229E-04	4.496E-04	1.876E-04	0.000E+00	0.000E+00
n-228	Th-232	1.000E+00	4.090E-06	2.477E-05	9.565E-05	3.227E-04	4.335E-04	2.906E-04	0.000E+00	0.000E+00
-234	U-234	9.996E-01	7.976E-04	7.579E-04	6.844E-04	4.781E-04	1.690E-04	3.160E-06	0.000E+00	0.000E+00
-234	U-234	1.319E-06	1.053E-09	1.000E-09	9.034E-10	6.311E-10	2.231E-10	4.171E-12	0.000E+00	0.000E+00
-234	U-238	1.599E-03	1.786E-12	5.121E-12	1.081E-11	2.267E-11	2.328E-11	1.435E-12	0.000E+00	0.000E+00
-234	U-238	2.111E-09	2.358E-18	6.760E-18	1.427E-17	2.992E-17	3.073E-17	1.894E-18	0.000E+00	0.000E+00
-234	U-238	3.039E-11	3.394E-20	9.731E-20	2.054E-19	4.307E-19	4.424E-19	2.726E-20	0.000E+00	0.000E+00
-234	U-238	3.359E-07	3.752E-16	1.076E-15	2.270E-15	4.761E-15	4.890E-15	3.014E-16	0.000E+00	0.000E+00
-234	U-238	4.434E-13	4.952E-22	1.420E-21	2.997E-21	6.285E-21	6.455E-21	3.978E-22	0.000E+00	0.000E+00
-234	U-238	6.383E-15	7.129E-24	2.044E-23	4.313E-23	9.046E-23	9.292E-23	5.726E-24	0.000E+00	0.000E+00
-234	U-238	3.196E-07	3.570E-16	1.023E-15	2.160E-15	4.530E-15	4.653E-15	2.867E-16	0.000E+00	0.000E+00
-234	U-238	4.219E-13	4.712E-22	1.351E-21	2.851E-21	5.980E-21	6.142E-21	3.785E-22	0.000E+00	0.000E+00
-234	U-238	6.073E-15	6.782E-24	1.945E-23	4.104E-23	8.607E-23	8.840E-23	5.448E-24	0.000E+00	0.000E+00
-234	U-238	6.713E-11	7.498E-20	2.150E-19	4.537E-19	9.515E-19	9.773E-19	6.022E-20	0.000E+00	0.000E+00
-234	U-238	8.862E-17	9.897E-26	2.838E-25	5.988E-25	1.256E-24	1.290E-24	7.949E-26	0.000E+00	0.000E+00
-234	U-238	1.276E-18	1.425E-27	4.085E-27	8.620E-27	1.808E-26	1.857E-26	1.144E-27	0.000E+00	0.000E+00
-234	U-238	3.200E-10	3.574E-19	1.025E-18	2.162E-18	4.535E-18	4.658E-18	2.871E-19	0.000E+00	0.000E+00
-234	U-238	4.224E-16	4.718E-25	1.353E-24	2.854E-24	5.987E-24	6.149E-24	3.789E-25	0.000E+00	0.000E+00
-234	U-238	6.080E-18	6.790E-27	1.947E-26	4.109E-26	8.617E-26	8.851E-26	5.454E-27	0.000E+00	0.000E+00
-234	U-238	9.980E-01	1.115E-09	3.196E-09	6.744E-09	1.414E-08	1.453E-08	8.953E-10	0.000E+00	0.000E+00
-234	U-238	1.317E-06	1.471E-15	4.218E-15	8.902E-15	1.867E-14	1.918E-14	1.182E-15	0.000E+00	0.000E+00
-234	U-238	1.896E-08	2.118E-17	6.072E-17	1.281E-16	2.688E-16	2.760E-16	1.701E-17	0.000E+00	0.000E+00

ummary : GKP Recreational Visitor-- Ingestion
ile : C:\USERS\CLAUDE\DOCUMENTS\0 GKP DOSE\RESRAD CW\GKP RECREATIONAL VISITOR -INGESTION R1.RAD

Individual Nuclide Dose Summed Over All Pathways
Parent Nuclide and Branch Fraction Indicated

uclide (j)	Parent (i)	THF(i)	DOSE(j,t), mrem/yr t= 0.000E+00	1.000E+00	3.000E+00	1.000E+01	3.000E+01	1.000E+02	3.000E+02	1.000E+03
ÄÄÄÄÄ	ÄÄÄÄÄÄ	ÄÄÄÄÄÄÄÄ	ÄÄÄÄÄÄÄÄ	ÄÄÄÄÄÄÄÄ	ÄÄÄÄÄÄÄÄ	ÄÄÄÄÄÄÄÄ	ÄÄÄÄÄÄÄÄ	ÄÄÄÄÄÄÄÄ	ÄÄÄÄÄÄÄÄ	ÄÄÄÄÄÄÄÄ
-234	U-238	2.096E-04	2.341E-13	6.713E-13	1.417E-12	2.971E-12	3.052E-12	1.880E-13	0.000E+00	0.000E+00
-234	U-238	2.767E-10	3.090E-19	8.861E-19	1.870E-18	3.922E-18	4.028E-18	2.482E-19	0.000E+00	0.000E+00
-234	U-238	3.983E-12	4.448E-21	1.275E-20	2.691E-20	5.645E-20	5.798E-20	3.573E-21	0.000E+00	0.000E+00
-234	U-238	1.994E-04	2.227E-13	6.386E-13	1.348E-12	2.827E-12	2.903E-12	1.789E-13	0.000E+00	0.000E+00
-234	U-238	2.633E-10	2.940E-19	8.430E-19	1.779E-18	3.731E-18	3.832E-18	2.362E-19	0.000E+00	0.000E+00
-234	U-238	3.789E-12	4.232E-21	1.213E-20	2.561E-20	5.371E-20	5.516E-20	3.399E-21	0.000E+00	0.000E+00
-234	U-238	4.189E-08	4.679E-17	1.341E-16	2.831E-16	5.937E-16	6.098E-16	3.758E-17	0.000E+00	0.000E+00
-234	U-238	5.530E-14	6.176E-23	1.771E-22	3.737E-22	7.837E-22	8.050E-22	4.960E-23	0.000E+00	0.000E+00
-234	U-238	7.959E-16	8.889E-25	2.549E-24	5.379E-24	1.128E-23	1.159E-23	7.140E-25	0.000E+00	0.000E+00
-234	U-238	1.997E-07	2.230E-16	6.394E-16	1.349E-15	2.830E-15	2.907E-15	1.791E-16	0.000E+00	0.000E+00
-234	U-238	2.636E-13	2.944E-22	8.440E-22	1.781E-21	3.736E-21	3.837E-21	2.364E-22	0.000E+00	0.000E+00
-234	U-238	3.794E-15	4.237E-24	1.215E-23	2.564E-23	5.377E-23	5.523E-23	3.403E-24	0.000E+00	0.000E+00
-234	äDOSE(j)		7.976E-04	7.580E-04	6.844E-04	4.781E-04	1.690E-04	3.161E-06	0.000E+00	0.000E+00
n-230	U-234	9.996E-01	7.145E-09	2.090E-08	4.609E-08	1.137E-07	1.940E-07	1.069E-07	0.000E+00	0.000E+00
n-230	U-234	1.319E-06	9.431E-15	2.758E-14	6.085E-14	1.501E-13	2.561E-13	1.412E-13	0.000E+00	0.000E+00
n-230	U-234	1.899E-08	1.358E-16	3.970E-16	8.758E-16	2.161E-15	3.687E-15	2.032E-15	0.000E+00	0.000E+00
n-230	U-234	2.100E-04	1.501E-12	4.389E-12	9.682E-12	2.389E-11	4.076E-11	2.246E-11	0.000E+00	0.000E+00
n-230	U-234	2.771E-10	1.981E-18	5.793E-18	1.278E-17	3.153E-17	5.380E-17	2.965E-17	0.000E+00	0.000E+00
n-230	U-234	3.989E-12	2.851E-20	8.339E-20	1.840E-19	4.538E-19	7.744E-19	4.268E-19	0.000E+00	0.000E+00
n-230	U-234	1.998E-04	1.428E-12	4.176E-12	9.212E-12	2.273E-11	3.878E-11	2.137E-11	0.000E+00	0.000E+00
n-230	U-234	2.637E-10	1.885E-18	5.512E-18	1.216E-17	3.000E-17	5.119E-17	2.821E-17	0.000E+00	0.000E+00
n-230	U-234	3.795E-12	2.713E-20	7.934E-20	1.750E-19	4.318E-19	7.368E-19	4.061E-19	0.000E+00	0.000E+00
n-230	U-234	4.196E-08	2.999E-16	8.771E-16	1.935E-15	4.773E-15	8.145E-15	4.489E-15	0.000E+00	0.000E+00
n-230	U-234	5.538E-14	3.959E-22	1.158E-21	2.554E-21	6.301E-21	1.075E-20	5.926E-21	0.000E+00	0.000E+00
n-230	U-234	7.972E-16	5.698E-24	1.666E-23	3.676E-23	9.069E-23	1.548E-22	8.529E-23	0.000E+00	0.000E+00
n-230	U-234	2.000E-07	1.430E-15	4.181E-15	9.223E-15	2.275E-14	3.883E-14	2.140E-14	0.000E+00	0.000E+00
n-230	U-234	2.640E-13	1.887E-21	5.519E-21	1.217E-20	3.003E-20	5.125E-20	2.825E-20	0.000E+00	0.000E+00
n-230	U-234	3.800E-15	2.716E-23	7.944E-23	1.752E-22	4.323E-22	7.377E-22	4.066E-22	0.000E+00	0.000E+00
n-230	U-238	1.599E-03	1.067E-17	7.244E-17	3.571E-16	2.490E-15	1.045E-14	1.035E-14	0.000E+00	0.000E+00
n-230	U-238	2.111E-09	1.409E-23	9.562E-23	4.713E-22	3.287E-21	1.380E-20	1.366E-20	0.000E+00	0.000E+00
n-230	U-238	3.039E-11	2.028E-25	1.376E-24	6.784E-24	4.731E-23	1.986E-22	1.967E-22	0.000E+00	0.000E+00
n-230	U-238	3.359E-07	2.242E-21	1.522E-20	7.500E-20	5.230E-19	2.195E-18	2.174E-18	0.000E+00	0.000E+00
n-230	U-238	4.434E-13	2.959E-27	2.009E-26	9.900E-26	6.904E-25	2.898E-24	2.870E-24	0.000E+00	0.000E+00
n-230	U-238	6.383E-15	4.260E-29	2.891E-28	1.425E-27	9.938E-27	4.171E-26	4.131E-26	0.000E+00	0.000E+00
n-230	U-238	3.196E-07	2.133E-21	1.448E-20	7.136E-20	4.976E-19	2.089E-18	2.068E-18	0.000E+00	0.000E+00
n-230	U-238	4.219E-13	2.816E-27	1.911E-26	9.419E-26	6.569E-25	2.757E-24	2.730E-24	0.000E+00	0.000E+00
n-230	U-238	6.073E-15	4.053E-29	2.751E-28	1.356E-27	9.455E-27	3.968E-26	3.930E-26	0.000E+00	0.000E+00
n-230	U-238	6.713E-11	4.480E-25	3.041E-24	1.499E-23	1.045E-22	4.387E-22	4.345E-22	0.000E+00	0.000E+00
n-230	U-238	8.862E-17	0.000E+00	0.000E+00	1.978E-29	1.380E-28	5.791E-28	5.735E-28	0.000E+00	0.000E+00
n-230	U-238	1.276E-18	0.000E+00	0.000E+00	0.000E+00	0.000E+00	0.000E+00	0.000E+00	0.000E+00	0.000E+00
n-230	U-238	3.200E-10	2.136E-24	1.449E-23	7.144E-23	4.982E-22	2.091E-21	2.071E-21	0.000E+00	0.000E+00
n-230	U-238	4.224E-16	0.000E+00	1.913E-29	9.430E-29	6.577E-28	2.760E-27	2.734E-27	0.000E+00	0.000E+00
n-230	U-238	6.080E-18	0.000E+00	0.000E+00	0.000E+00	0.000E+00	3.973E-29	3.935E-29	0.000E+00	0.000E+00
n-230	U-238	9.980E-01	6.661E-15	4.520E-14	2.228E-13	1.554E-12	6.522E-12	6.459E-12	0.000E+00	0.000E+00
n-230	U-238	1.317E-06	8.792E-21	5.967E-20	2.941E-19	2.051E-18	8.608E-18	8.526E-18	0.000E+00	0.000E+00
n-230	U-238	1.896E-08	1.266E-22	8.589E-22	4.233E-21	2.952E-20	1.239E-19	1.227E-19	0.000E+00	0.000E+00
n-230	U-238	2.096E-04	1.399E-18	9.495E-18	4.680E-17	3.264E-16	1.370E-15	1.357E-15	0.000E+00	0.000E+00
n-230	U-238	2.767E-10	1.847E-24	1.253E-23	6.178E-23	4.308E-22	1.808E-21	1.791E-21	0.000E+00	0.000E+00

ummary : GKP Recreational Visitor-- Ingestion
ile : C:\USERS\CLAUDE\DOCUMENTS\0 GKP DOSE\RESRAD CW\GKP RECREATIONAL VISITOR -INGESTION R1.RAD

Individual Nuclide Dose Summed Over All Pathways
Parent Nuclide and Branch Fraction Indicated

uclide (j)	Parent (i)	THF(i)	DOSE(j,t), mrem/yr t= 0.000E+00	1.000E+00	3.000E+00	1.000E+01	3.000E+01	1.000E+02	3.000E+02	1.000E+03
ÄÄÄÄÄ	ÄÄÄÄÄÄ	ÄÄÄÄÄÄÄÄ	ÄÄÄÄÄÄÄÄ	ÄÄÄÄÄÄÄÄ	ÄÄÄÄÄÄÄÄ	ÄÄÄÄÄÄÄÄ	ÄÄÄÄÄÄÄÄ	ÄÄÄÄÄÄÄÄ	ÄÄÄÄÄÄÄÄ	ÄÄÄÄÄÄÄÄ
n-230	U-238	3.983E-12	2.658E-26	1.804E-25	8.892E-25	6.201E-24	2.603E-23	2.578E-23	0.000E+00	0.000E+00
n-230	U-238	1.994E-04	1.331E-18	9.034E-18	4.453E-17	3.105E-16	1.303E-15	1.291E-15	0.000E+00	0.000E+00
n-230	U-238	2.633E-10	1.757E-24	1.192E-23	5.877E-23	4.099E-22	1.720E-21	1.704E-21	0.000E+00	0.000E+00
n-230	U-238	3.789E-12	2.529E-26	1.716E-25	8.460E-25	5.900E-24	2.476E-23	2.452E-23	0.000E+00	0.000E+00
n-230	U-238	4.189E-08	2.796E-22	1.897E-21	9.352E-21	6.522E-20	2.737E-19	2.711E-19	0.000E+00	0.000E+00
n-230	U-238	5.530E-14	3.690E-28	2.505E-27	1.235E-26	8.609E-26	3.613E-25	3.579E-25	0.000E+00	0.000E+00
n-230	U-238	7.959E-16	0.000E+00	3.605E-29	1.777E-28	1.239E-27	5.201E-27	5.151E-27	0.000E+00	0.000E+00
n-230	U-238	1.997E-07	1.333E-21	9.045E-21	4.458E-20	3.109E-19	1.305E-18	1.292E-18	0.000E+00	0.000E+00
n-230	U-238	2.636E-13	1.759E-27	1.194E-26	5.885E-26	4.104E-25	1.722E-24	1.706E-24	0.000E+00	0.000E+00
n-230	U-238	3.794E-15	2.532E-29	1.718E-28	8.470E-28	5.907E-27	2.479E-26	2.455E-26	0.000E+00	0.000E+00
n-230	äDOSE(j)		7.148E-09	2.090E-08	4.611E-08	1.138E-07	1.941E-07	1.070E-07	0.000E+00	0.000E+00
-234	U-234	1.899E-08	1.515E-11	1.440E-11	1.300E-11	9.084E-12	3.211E-12	6.004E-14	0.000E+00	0.000E+00
-234	U-234	2.100E-04	1.675E-07	1.592E-07	1.438E-07	1.004E-07	3.550E-08	6.637E-10	0.000E+00	0.000E+00
-234	äDOSE(j)		1.675E-07	1.592E-07	1.438E-07	1.004E-07	3.550E-08	6.638E-10	0.000E+00	0.000E+00
a-226	U-234	2.100E-04	5.221E-16	3.555E-15	1.766E-14	1.266E-13	5.702E-13	6.591E-13	0.000E+00	0.000E+00
a-226	U-234	3.989E-12	9.919E-24	6.755E-23	3.356E-22	2.405E-21	1.083E-20	1.252E-20	0.000E+00	0.000E+00
a-226	U-238	3.359E-07	5.864E-25	8.525E-24	9.269E-23	1.905E-21	2.247E-20	5.731E-20	0.000E+00	0.000E+00
a-226	U-238	4.434E-13	0.000E+00	0.000E+00	1.218E-28	2.503E-27	2.967E-26	7.565E-26	0.000E+00	0.000E+00
a-226	U-238	6.383E-15	0.000E+00	0.000E+00	0.000E+00	3.603E-29	4.252E-28	1.084E-27	0.000E+00	0.000E+00
a-226	U-238	2.096E-04	3.659E-22	5.319E-21	5.784E-20	1.188E-18	1.402E-17	3.576E-17	0.000E+00	0.000E+00
a-226	U-238	2.767E-10	4.810E-28	7.022E-27	7.634E-26	1.569E-24	1.851E-23	4.720E-23	0.000E+00	0.000E+00
a-226	U-238	3.983E-12	0.000E+00	1.006E-28	1.094E-27	2.258E-26	2.665E-25	6.795E-25	0.000E+00	0.000E+00
a-226	äDOSE(j)		5.221E-16	3.555E-15	1.766E-14	1.266E-13	5.702E-13	6.592E-13	0.000E+00	0.000E+00
-234	U-234	2.771E-10	2.211E-13	2.101E-13	1.898E-13	1.326E-13	4.686E-14	8.761E-16	0.000E+00	0.000E+00
-234	U-234	3.989E-12	3.183E-15	3.025E-15	2.731E-15	1.908E-15	6.744E-16	1.261E-17	0.000E+00	0.000E+00
-234	äDOSE(j)		2.243E-13	2.132E-13	1.925E-13	1.345E-13	4.753E-14	8.887E-16	0.000E+00	0.000E+00
a-226	U-234	2.771E-10	6.891E-22	4.693E-21	2.331E-20	1.671E-19	7.526E-19	8.701E-19	0.000E+00	0.000E+00
-234	U-234	1.998E-04	1.594E-07	1.515E-07	1.368E-07	9.554E-08	3.377E-08	6.315E-10	0.000E+00	0.000E+00
-234	U-234	2.637E-10	2.104E-13	1.999E-13	1.805E-13	1.261E-13	4.458E-14	8.335E-16	0.000E+00	0.000E+00
-234	äDOSE(j)		1.594E-07	1.515E-07	1.368E-07	9.554E-08	3.377E-08	6.315E-10	0.000E+00	0.000E+00
-234	U-234	3.795E-12	3.028E-15	2.878E-15	2.599E-15	1.815E-15	6.417E-16	1.200E-17	0.000E+00	0.000E+00
-234	U-234	4.196E-08	3.348E-11	3.182E-11	2.873E-11	2.007E-11	7.094E-12	1.326E-13	0.000E+00	0.000E+00
-234	äDOSE(j)		3.348E-11	3.182E-11	2.873E-11	2.007E-11	7.094E-12	1.326E-13	0.000E+00	0.000E+00
a-226	U-234	4.196E-08	1.043E-19	7.102E-19	3.528E-18	2.528E-17	1.139E-16	1.317E-16	0.000E+00	0.000E+00
a-226	U-234	7.972E-16	1.973E-27	1.349E-26	6.703E-26	4.803E-25	2.164E-24	2.502E-24	0.000E+00	0.000E+00
a-226	U-238	6.713E-11	1.166E-28	1.696E-27	1.851E-26	3.804E-25	4.489E-24	1.145E-23	0.000E+00	0.000E+00
a-226	U-238	8.862E-17	0.000E+00	0.000E+00	0.000E+00	0.000E+00	0.000E+00	1.505E-29	0.000E+00	0.000E+00
a-226	U-238	1.276E-18	0.000E+00	0.000E+00	0.000E+00	0.000E+00	0.000E+00	0.000E+00	0.000E+00	0.000E+00
a-226	U-238	4.189E-08	7.309E-26	1.063E-24	1.155E-23	2.374E-22	2.801E-21	7.143E-21	0.000E+00	0.000E+00
a-226	U-238	5.530E-14	0.000E+00	0.000E+00	1.518E-29	3.120E-28	3.698E-27	9.429E-27	0.000E+00	0.000E+00
a-226	U-238	7.959E-16	0.000E+00	0.000E+00	0.000E+00	0.000E+00	5.300E-29	1.351E-28	0.000E+00	0.000E+00
a-226	äDOSE(j)		1.043E-19	7.102E-19	3.528E-18	2.528E-17	1.139E-16	1.317E-16	0.000E+00	0.000E+00

ummary : GKP Recreational Visitor-- Ingestion
ile : C:\USERS\CLAUDE\DOCUMENTS\0 GKP DOSE\RESRAD CW\GKP RECREATIONAL VISITOR -INGESTION R1.RAD

Individual Nuclide Dose Summed Over All Pathways
Parent Nuclide and Branch Fraction Indicated

uclide (j)	Parent (i)	THF(i)	DOSE(j,t), mrem/yr t= 0.000E+00	1.000E+00	3.000E+00	1.000E+01	3.000E+01	1.000E+02	3.000E+02	1.000E+03
ÄÄÄÄÄ	ÄÄÄÄÄÄ	ÄÄÄÄÄÄÄÄ	ÄÄÄÄÄÄÄÄ	ÄÄÄÄÄÄÄÄ	ÄÄÄÄÄÄÄÄ	ÄÄÄÄÄÄÄÄ	ÄÄÄÄÄÄÄÄ	ÄÄÄÄÄÄÄÄ	ÄÄÄÄÄÄÄÄ	ÄÄÄÄÄÄÄÄ
-234	U-234	5.538E-14	4.419E-17	4.200E-17	3.792E-17	2.649E-17	9.364E-18	1.751E-19	0.000E+00	0.000E+00
-234	U-234	7.972E-16	6.361E-19	6.045E-19	5.458E-19	3.813E-19	1.348E-19	2.520E-21	0.000E+00	0.000E+00
-234	äDOSE(j)		4.483E-17	4.260E-17	3.847E-17	2.687E-17	9.498E-18	1.776E-19	0.000E+00	0.000E+00
a-226	U-234	5.538E-14	1.376E-25	9.374E-25	4.656E-24	3.337E-23	1.503E-22	1.738E-22	0.000E+00	0.000E+00
-234	U-234	2.000E-07	1.596E-10	1.517E-10	1.369E-10	9.566E-11	3.381E-11	6.322E-13	0.000E+00	0.000E+00
-234	U-234	2.640E-13	2.106E-16	2.002E-16	1.808E-16	1.263E-16	4.463E-17	8.345E-19	0.000E+00	0.000E+00
-234	äDOSE(j)		1.596E-10	1.517E-10	1.369E-10	9.566E-11	3.381E-11	6.322E-13	0.000E+00	0.000E+00
-234	U-234	3.800E-15	3.032E-18	2.881E-18	2.602E-18	1.817E-18	6.424E-19	1.201E-20	0.000E+00	0.000E+00
-235	U-235	9.835E-01	4.480E-05	4.257E-05	3.844E-05	2.685E-05	9.493E-06	1.775E-07	0.000E+00	0.000E+00
-235	U-235	2.722E-03	1.240E-07	1.178E-07	1.064E-07	7.432E-08	2.627E-08	4.914E-10	0.000E+00	0.000E+00
-235	äDOSE(j)		4.492E-05	4.269E-05	3.855E-05	2.693E-05	9.520E-06	1.780E-07	0.000E+00	0.000E+00
a-231	U-235	9.835E-01	1.863E-08	5.342E-08	1.127E-07	2.364E-07	2.428E-07	1.495E-08	0.000E+00	0.000E+00
a-231	U-235	2.722E-03	5.157E-11	1.478E-10	3.120E-10	6.543E-10	6.719E-10	4.138E-11	0.000E+00	0.000E+00
a-231	U-235	1.376E-02	2.607E-10	7.475E-10	1.577E-09	3.308E-09	3.397E-09	2.092E-10	0.000E+00	0.000E+00
a-231	U-235	3.809E-05	7.215E-13	2.069E-12	4.366E-12	9.156E-12	9.402E-12	5.790E-13	0.000E+00	0.000E+00
a-231	U-235	8.257E-07	1.564E-14	4.485E-14	9.465E-14	1.985E-13	2.038E-13	1.255E-14	0.000E+00	0.000E+00
a-231	U-235	2.285E-09	4.329E-17	1.241E-16	2.620E-16	5.494E-16	5.642E-16	3.474E-17	0.000E+00	0.000E+00
a-231	äDOSE(j)		1.894E-08	5.432E-08	1.146E-07	2.404E-07	2.469E-07	1.520E-08	0.000E+00	0.000E+00
c-227	U-235	9.835E-01	2.683E-10	1.749E-09	7.884E-09	4.032E-08	7.535E-08	6.119E-09	0.000E+00	0.000E+00
c-227	U-235	2.722E-03	7.425E-13	4.842E-12	2.182E-11	1.116E-10	2.085E-10	1.694E-11	0.000E+00	0.000E+00
c-227	U-235	1.376E-02	3.747E-12	2.443E-11	1.101E-10	5.630E-10	1.052E-09	8.545E-11	0.000E+00	0.000E+00
c-227	äDOSE(j)		4.489E-12	2.927E-11	1.319E-10	6.746E-10	1.261E-09	1.024E-10	0.000E+00	0.000E+00
-235	U-235	1.376E-02	6.269E-07	5.957E-07	5.379E-07	3.758E-07	1.328E-07	2.484E-09	0.000E+00	0.000E+00
-235	U-235	3.809E-05	1.735E-09	1.649E-09	1.489E-09	1.040E-09	3.676E-10	6.875E-12	0.000E+00	0.000E+00
-235	äDOSE(j)		6.286E-07	5.974E-07	5.394E-07	3.768E-07	1.332E-07	2.491E-09	0.000E+00	0.000E+00
c-227	U-235	3.809E-05	1.037E-14	6.762E-14	3.047E-13	1.558E-12	2.912E-12	2.365E-13	0.000E+00	0.000E+00
c-227	U-235	8.257E-07	2.148E-16	1.401E-15	6.311E-15	3.228E-14	6.032E-14	4.899E-15	0.000E+00	0.000E+00
c-227	äDOSE(j)		1.058E-14	6.902E-14	3.110E-13	1.591E-12	2.972E-12	2.414E-13	0.000E+00	0.000E+00
-235	U-235	8.257E-07	3.761E-11	3.574E-11	3.228E-11	2.255E-11	7.970E-12	1.491E-13	0.000E+00	0.000E+00
-235	U-235	2.285E-09	1.041E-13	9.893E-14	8.933E-14	6.240E-14	2.206E-14	4.125E-16	0.000E+00	0.000E+00
-235	äDOSE(j)		3.772E-11	3.584E-11	3.237E-11	2.261E-11	7.992E-12	1.495E-13	0.000E+00	0.000E+00
c-227	U-235	2.285E-09	5.944E-19	3.876E-18	1.747E-17	8.933E-17	1.669E-16	1.356E-17	0.000E+00	0.000E+00
-238	U-238	5.450E-07	3.918E-10	3.724E-10	3.362E-10	2.349E-10	8.303E-11	1.553E-12	0.000E+00	0.000E+00
-238	U-238	1.599E-03	1.221E-06	1.161E-06	1.048E-06	7.321E-07	2.588E-07	4.840E-09	0.000E+00	0.000E+00
-238	äDOSE(j)		1.222E-06	1.161E-06	1.048E-06	7.324E-07	2.589E-07	4.842E-09	0.000E+00	0.000E+00
-238	U-238	2.111E-09	1.612E-12	1.532E-12	1.383E-12	9.664E-13	3.416E-13	6.389E-15	0.000E+00	0.000E+00

ummary : GKP Recreational Visitor-- Ingestion
ile : C:\USERS\CLAUDE\DOCUMENTS\0 GKP DOSE\RESRAD CW\GKP RECREATIONAL VISITOR -INGESTION R1.RAD

Individual Nuclide Dose Summed Over All Pathways
Parent Nuclide and Branch Fraction Indicated

uclide (j)	Parent (i)	THF(i)	DOSE(j,t), mrem/yr t= 0.000E+00	1.000E+00	3.000E+00	1.000E+01	3.000E+01	1.000E+02	3.000E+02	1.000E+03
ÄÄÄÄÄ	ÄÄÄÄÄÄ	ÄÄÄÄÄÄÄÄ	ÄÄÄÄÄÄÄÄÄ	ÄÄÄÄÄÄÄÄÄ	ÄÄÄÄÄÄÄÄÄ	ÄÄÄÄÄÄÄÄÄ	ÄÄÄÄÄÄÄÄÄ	ÄÄÄÄÄÄÄÄÄ	ÄÄÄÄÄÄÄÄÄ	ÄÄÄÄÄÄÄÄÄ
-238	U-238	3.039E-11	2.321E-14	2.205E-14	1.991E-14	1.391E-14	4.918E-15	9.196E-17	0.000E+00	0.000E+00
-238	äDOSE(j)		1.635E-12	1.554E-12	1.403E-12	9.803E-13	3.466E-13	6.481E-15	0.000E+00	0.000E+00
-238	U-238	3.359E-07	2.565E-10	2.438E-10	2.201E-10	1.538E-10	5.436E-11	1.017E-12	0.000E+00	0.000E+00
-238	U-238	4.434E-13	3.386E-16	3.218E-16	2.906E-16	2.030E-16	7.176E-17	1.342E-18	0.000E+00	0.000E+00
-238	äDOSE(j)		2.565E-10	2.438E-10	2.201E-10	1.538E-10	5.436E-11	1.017E-12	0.000E+00	0.000E+00
-238	U-238	6.383E-15	4.874E-18	4.632E-18	4.183E-18	2.922E-18	1.033E-18	1.932E-20	0.000E+00	0.000E+00
-238	U-238	3.196E-07	2.441E-10	2.320E-10	2.094E-10	1.463E-10	5.172E-11	9.673E-13	0.000E+00	0.000E+00
-238	äDOSE(j)		2.441E-10	2.320E-10	2.094E-10	1.463E-10	5.172E-11	9.673E-13	0.000E+00	0.000E+00
-238	U-238	4.219E-13	3.222E-16	3.062E-16	2.765E-16	1.931E-16	6.827E-17	1.277E-18	0.000E+00	0.000E+00
-238	U-238	6.073E-15	4.638E-18	4.407E-18	3.980E-18	2.780E-18	9.827E-19	1.838E-20	0.000E+00	0.000E+00
-238	äDOSE(j)		3.268E-16	3.106E-16	2.805E-16	1.959E-16	6.926E-17	1.295E-18	0.000E+00	0.000E+00
-238	U-238	6.713E-11	5.127E-14	4.872E-14	4.399E-14	3.073E-14	1.086E-14	2.032E-16	0.000E+00	0.000E+00
-238	U-238	8.862E-17	6.767E-20	6.431E-20	5.807E-20	4.057E-20	1.434E-20	2.682E-22	0.000E+00	0.000E+00
-238	äDOSE(j)		5.127E-14	4.872E-14	4.399E-14	3.073E-14	1.086E-14	2.032E-16	0.000E+00	0.000E+00
-238	U-238	1.276E-18	9.741E-22	9.257E-22	8.359E-22	5.839E-22	2.064E-22	3.860E-24	0.000E+00	0.000E+00
-238	U-238	3.200E-10	2.444E-13	2.322E-13	2.097E-13	1.465E-13	5.178E-14	9.684E-16	0.000E+00	0.000E+00
-238	äDOSE(j)		2.444E-13	2.322E-13	2.097E-13	1.465E-13	5.178E-14	9.684E-16	0.000E+00	0.000E+00
-238	U-238	4.224E-16	3.226E-19	3.066E-19	2.768E-19	1.934E-19	6.836E-20	1.278E-21	0.000E+00	0.000E+00
-238	U-238	6.080E-18	4.643E-21	4.412E-21	3.984E-21	2.783E-21	9.839E-22	1.840E-23	0.000E+00	0.000E+00
-238	äDOSE(j)		3.272E-19	3.110E-19	2.808E-19	1.961E-19	6.934E-20	1.297E-21	0.000E+00	0.000E+00
-238	U-238	9.980E-01	7.561E-04	7.185E-04	6.488E-04	4.532E-04	1.602E-04	2.996E-06	0.000E+00	0.000E+00
-238	U-238	1.317E-06	9.980E-10	9.484E-10	8.564E-10	5.982E-10	2.115E-10	3.955E-12	0.000E+00	0.000E+00
-238	äDOSE(j)		7.561E-04	7.185E-04	6.488E-04	4.532E-04	1.602E-04	2.996E-06	0.000E+00	0.000E+00
-238	U-238	1.896E-08	1.437E-11	1.365E-11	1.233E-11	8.611E-12	3.044E-12	5.693E-14	0.000E+00	0.000E+00
-238	U-238	2.096E-04	1.588E-07	1.509E-07	1.363E-07	9.519E-08	3.365E-08	6.293E-10	0.000E+00	0.000E+00
-238	äDOSE(j)		1.588E-07	1.509E-07	1.363E-07	9.520E-08	3.365E-08	6.294E-10	0.000E+00	0.000E+00
-238	U-238	2.767E-10	2.096E-13	1.992E-13	1.799E-13	1.257E-13	4.442E-14	8.307E-16	0.000E+00	0.000E+00
-238	U-238	3.983E-12	3.017E-15	2.867E-15	2.589E-15	1.809E-15	6.394E-16	1.196E-17	0.000E+00	0.000E+00
-238	äDOSE(j)		2.126E-13	2.021E-13	1.825E-13	1.275E-13	4.506E-14	8.427E-16	0.000E+00	0.000E+00
-238	U-238	1.994E-04	1.511E-07	1.436E-07	1.297E-07	9.057E-08	3.202E-08	5.988E-10	0.000E+00	0.000E+00
-238	U-238	2.633E-10	1.994E-13	1.895E-13	1.711E-13	1.196E-13	4.226E-14	7.904E-16	0.000E+00	0.000E+00
-238	äDOSE(j)		1.511E-07	1.436E-07	1.297E-07	9.057E-08	3.202E-08	5.988E-10	0.000E+00	0.000E+00
-238	U-238	3.789E-12	2.871E-15	2.728E-15	2.463E-15	1.721E-15	6.083E-16	1.138E-17	0.000E+00	0.000E+00
-238	U-238	4.189E-08	3.174E-11	3.016E-11	2.723E-11	1.902E-11	6.725E-12	1.258E-13	0.000E+00	0.000E+00
-238	äDOSE(j)		3.174E-11	3.016E-11	2.724E-11	1.903E-11	6.726E-12	1.258E-13	0.000E+00	0.000E+00
-238	U-238	5.530E-14	4.189E-17	3.981E-17	3.595E-17	2.511E-17	8.877E-18	1.660E-19	0.000E+00	0.000E+00
-238	U-238	7.959E-16	6.030E-19	5.730E-19	5.174E-19	3.614E-19	1.278E-19	2.390E-21	0.000E+00	0.000E+00
-238	äDOSE(j)		4.249E-17	4.038E-17	3.646E-17	2.547E-17	9.005E-18	1.684E-19	0.000E+00	0.000E+00

ummary : GKP Recreational Visitor-- Ingestion
ile : C:\USERS\CLAUDE\DOCUMENTS\0 GKP DOSE\RESRAD CW\GKP RECREATIONAL VISITOR -INGESTION R1.RAD

Individual Nuclide Dose Summed Over All Pathways
Parent Nuclide and Branch Fraction Indicated

uclide (j)	Parent (i)	THF(i)	DOSE(j,t), mrem/yr t= 0.000E+00	1.000E+00	3.000E+00	1.000E+01	3.000E+01	1.000E+02	3.000E+02	1.000E+03
ÄÄÄÄÄÄ	ÄÄÄÄÄÄÄ	ÄÄÄÄÄÄÄÄÄ	ÄÄÄÄÄÄÄÄÄ	ÄÄÄÄÄÄÄÄÄ	ÄÄÄÄÄÄÄÄÄ	ÄÄÄÄÄÄÄÄÄ	ÄÄÄÄÄÄÄÄÄ	ÄÄÄÄÄÄÄÄÄ	ÄÄÄÄÄÄÄÄÄ	ÄÄÄÄÄÄÄÄÄ
-238	U-238	1.997E-07	1.513E-10	1.438E-10	1.298E-10	9.068E-11	3.206E-11	5.995E-13	0.000E+00	0.000E+00
-238	U-238	2.636E-13	1.997E-16	1.898E-16	1.713E-16	1.197E-16	4.231E-17	7.913E-19	0.000E+00	0.000E+00
-238	äDOSE(j)		1.513E-10	1.438E-10	1.298E-10	9.068E-11	3.206E-11	5.995E-13	0.000E+00	0.000E+00
-238	U-238	3.794E-15	2.874E-18	2.731E-18	2.466E-18	1.723E-18	6.091E-19	1.139E-20	0.000E+00	0.000E+00
íííííí	ííííííí	ííííííííí	ííííííííí	ííííííííí	ííííííííí	ííííííííí	ííííííííí	ííííííííí	ííííííííí	ííííííííí

HF(i) is the thread fraction of the parent nuclide.

ummary : GKP Recreational Visitor-- Ingestion
ile : C:\USERS\CLAUDE\DOCUMENTS\0 GKP DOSE\RESRAD CW\GKP RECREATIONAL VISITOR -INGESTION R1.RAD

Individual Nuclide Soil Concentration
Parent Nuclide and Branch Fraction Indicated

uclide (j)	Parent (i)	THF(i)	S(j,t), pCi/g t= 0.000E+00	1.000E+00	3.000E+00	1.000E+01	3.000E+01	1.000E+02	3.000E+02	1.000E+03
ÄÄÄÄÄÄ	ÄÄÄÄÄÄÄ	ÄÄÄÄÄÄÄÄÄ	ÄÄÄÄÄÄÄÄÄ	ÄÄÄÄÄÄÄÄÄ	ÄÄÄÄÄÄÄÄÄ	ÄÄÄÄÄÄÄÄÄ	ÄÄÄÄÄÄÄÄÄ	ÄÄÄÄÄÄÄÄÄ	ÄÄÄÄÄÄÄÄÄ	ÄÄÄÄÄÄÄÄÄ
a-226	Ra-226	9.996E-01	3.648E+01	3.533E+01	3.314E+01	2.647E+01	1.394E+01	1.475E+00	2.411E-03	4.255E-13
a-226	Ra-226	1.319E-06	4.816E-05	4.664E-05	4.374E-05	3.494E-05	1.839E-05	1.947E-06	3.182E-09	5.616E-19
a-226	U-234	9.996E-01	0.000E+00	2.698E-08	2.308E-07	2.155E-06	1.208E-05	3.439E-05	3.853E-05	3.731E-05
a-226	U-234	1.319E-06	0.000E+00	3.561E-14	3.047E-13	2.844E-12	1.595E-11	4.540E-11	5.086E-11	4.925E-11
a-226	U-234	1.899E-08	0.000E+00	5.126E-16	4.386E-15	4.094E-14	2.295E-13	6.534E-13	7.321E-13	7.089E-13
a-226	U-238	1.599E-03	0.000E+00	4.044E-17	1.028E-15	3.093E-14	4.696E-13	2.984E-12	3.935E-12	3.813E-12
a-226	U-238	2.111E-09	0.000E+00	5.338E-23	1.357E-21	4.082E-20	6.199E-19	3.939E-18	5.194E-18	5.033E-18
a-226	U-238	3.039E-11	0.000E+00	7.683E-25	1.953E-23	5.876E-22	8.923E-21	5.670E-20	7.477E-20	7.244E-20
a-226	U-238	9.980E-01	0.000E+00	2.523E-14	6.416E-13	1.930E-11	2.930E-10	1.862E-09	2.455E-09	2.379E-09
a-226	U-238	1.317E-06	0.000E+00	3.331E-20	8.469E-19	2.547E-17	3.868E-16	2.458E-15	3.241E-15	3.140E-15
a-226	U-238	1.896E-08	0.000E+00	4.794E-22	1.219E-20	3.667E-19	5.568E-18	3.538E-17	4.665E-17	4.520E-17
a-226	äS(j):		3.649E+01	3.533E+01	3.314E+01	2.647E+01	1.394E+01	1.475E+00	2.449E-03	3.731E-05
o-210	Ra-226	9.996E-01	0.000E+00	1.092E+00	3.007E+00	7.444E+00	9.643E+00	1.904E+00	3.525E-03	6.232E-13
o-210	Ra-226	2.100E-04	0.000E+00	2.293E-04	6.315E-04	1.564E-03	2.026E-03	4.000E-04	7.405E-07	1.309E-16
o-210	Ra-226	1.998E-04	0.000E+00	2.181E-04	6.009E-04	1.488E-03	1.927E-03	3.805E-04	7.045E-07	1.245E-16
o-210	Ra-226	4.196E-08	0.000E+00	4.582E-08	1.262E-07	3.125E-07	4.048E-07	7.993E-08	1.480E-10	2.616E-20
o-210	Ra-226	2.000E-07	0.000E+00	2.184E-07	6.016E-07	1.489E-06	1.929E-06	3.810E-07	7.053E-10	1.247E-19
o-210	U-234	9.996E-01	0.000E+00	2.788E-10	7.058E-09	2.091E-07	3.053E-06	1.777E-05	2.254E-05	2.184E-05
o-210	U-234	2.100E-04	0.000E+00	5.857E-14	1.482E-12	4.392E-11	6.412E-10	3.732E-09	4.735E-09	4.587E-09
o-210	U-234	1.998E-04	0.000E+00	5.572E-14	1.410E-12	4.178E-11	6.101E-10	3.550E-09	4.505E-09	4.364E-09
o-210	U-234	4.196E-08	0.000E+00	1.170E-17	2.963E-16	8.776E-15	1.281E-13	7.457E-13	9.462E-13	9.166E-13
o-210	U-234	2.000E-07	0.000E+00	5.579E-17	1.412E-15	4.183E-14	6.108E-13	3.555E-12	4.510E-12	4.369E-12
o-210	U-238	1.599E-03	0.000E+00	3.142E-19	2.374E-17	2.303E-15	9.533E-14	1.413E-12	2.300E-12	2.231E-12
o-210	U-238	3.359E-07	0.000E+00	6.599E-23	4.987E-21	4.838E-19	2.002E-17	2.967E-16	4.832E-16	4.687E-16
o-210	U-238	3.196E-07	0.000E+00	6.278E-23	4.745E-21	4.603E-19	1.905E-17	2.823E-16	4.597E-16	4.459E-16
o-210	U-238	6.713E-11	0.000E+00	1.319E-26	9.966E-25	9.669E-23	4.001E-21	5.929E-20	9.656E-20	9.366E-20
o-210	U-238	3.200E-10	0.000E+00	6.286E-26	4.750E-24	4.609E-22	1.907E-20	2.826E-19	4.603E-19	4.464E-19
o-210	U-238	9.980E-01	0.000E+00	1.960E-16	1.481E-14	1.437E-12	5.948E-11	8.814E-10	1.435E-09	1.392E-09
o-210	U-238	2.096E-04	0.000E+00	4.118E-20	3.112E-18	3.019E-16	1.249E-14	1.851E-13	3.015E-13	2.925E-13
o-210	U-238	1.994E-04	0.000E+00	3.918E-20	2.961E-18	2.872E-16	1.189E-14	1.761E-13	2.869E-13	2.782E-13
o-210	U-238	4.189E-08	0.000E+00	8.229E-24	6.219E-22	6.033E-20	2.497E-18	3.700E-17	6.025E-17	5.844E-17
o-210	U-238	1.997E-07	0.000E+00	3.922E-23	2.964E-21	2.876E-19	1.190E-17	1.764E-16	2.872E-16	2.786E-16
o-210	äS(j):		0.000E+00	1.092E+00	3.008E+00	7.447E+00	9.647E+00	1.905E+00	3.549E-03	2.185E-05
o-210	Ra-226	1.319E-06	0.000E+00	1.441E-06	3.969E-06	9.826E-06	1.273E-05	2.514E-06	4.653E-09	8.226E-19
o-210	Ra-226	1.899E-08	0.000E+00	2.074E-08	5.713E-08	1.414E-07	1.832E-07	3.618E-08	6.698E-11	1.184E-20
o-210	Ra-226	2.771E-10	0.000E+00	3.026E-10	8.336E-10	2.064E-09	2.674E-09	5.280E-10	9.774E-13	1.728E-22
o-210	Ra-226	2.637E-10	0.000E+00	2.879E-10	7.931E-10	1.964E-09	2.544E-09	5.023E-10	9.299E-13	1.644E-22
o-210	Ra-226	5.538E-14	0.000E+00	6.048E-14	1.666E-13	4.124E-13	5.343E-13	1.055E-13	1.953E-16	3.453E-26
o-210	Ra-226	2.640E-13	0.000E+00	2.883E-13	7.941E-13	1.966E-12	2.547E-12	5.029E-13	9.311E-16	1.646E-25
o-210	U-234	1.319E-06	0.000E+00	3.681E-16	9.317E-15	2.760E-13	4.030E-12	2.345E-11	2.975E-11	2.882E-11
o-210	U-234	2.771E-10	0.000E+00	7.731E-20	1.957E-18	5.797E-17	8.464E-16	4.926E-15	6.250E-15	6.054E-15
o-210	U-234	2.637E-10	0.000E+00	7.356E-20	1.862E-18	5.515E-17	8.053E-16	4.686E-15	5.946E-15	5.760E-15
o-210	U-234	5.538E-14	0.000E+00	1.545E-23	3.911E-22	1.158E-20	1.691E-19	9.844E-19	1.249E-18	1.210E-18
o-210	U-234	2.640E-13	0.000E+00	7.364E-23	1.864E-21	5.522E-20	8.063E-19	4.692E-18	5.953E-18	5.767E-18
o-210	U-238	2.111E-09	0.000E+00	4.147E-25	3.134E-23	3.041E-21	1.258E-19	1.865E-18	3.037E-18	2.945E-18
o-210	U-238	4.434E-13	0.000E+00	8.711E-29	6.583E-27	6.387E-25	2.643E-23	3.916E-22	6.378E-22	6.187E-22
o-210	U-238	4.219E-13	0.000E+00	8.287E-29	6.263E-27	6.076E-25	2.515E-23	3.726E-22	6.068E-22	5.886E-22

ummary : GKP Recreational Visitor-- Ingestion
ile : C:\USERS\CLAUDE\DOCUMENTS\0 GKP DOSE\RESRAD CW\GKP RECREATIONAL VISITOR -INGESTION R1.RAD

Individual Nuclide Soil Concentration
Parent Nuclide and Branch Fraction Indicated

uclide (j)	Parent (i)	THF(i)	S(j,t), pCi/g t= 0.000E+00	1.000E+00	3.000E+00	1.000E+01	3.000E+01	1.000E+02	3.000E+02	1.000E+03
ÄÄÄÄÄÄ	ÄÄÄÄÄÄÄ	ÄÄÄÄÄÄÄÄÄ	ÄÄÄÄÄÄÄÄÄ	ÄÄÄÄÄÄÄÄÄ	ÄÄÄÄÄÄÄÄÄ	ÄÄÄÄÄÄÄÄÄ	ÄÄÄÄÄÄÄÄÄ	ÄÄÄÄÄÄÄÄÄ	ÄÄÄÄÄÄÄÄÄ	ÄÄÄÄÄÄÄÄÄ
o-210	U-238	8.862E-17	0.000E+00	1.741E-32	1.315E-30	1.276E-28	5.282E-27	7.826E-26	1.275E-25	1.236E-25
o-210	U-238	4.224E-16	0.000E+00	8.297E-32	6.270E-30	6.084E-28	2.518E-26	3.731E-25	6.076E-25	5.893E-25
o-210	U-238	1.317E-06	0.000E+00	2.588E-22	1.956E-20	1.897E-18	7.852E-17	1.163E-15	1.895E-15	1.838E-15
o-210	U-238	2.767E-10	0.000E+00	5.435E-26	4.108E-24	3.985E-22	1.649E-20	2.444E-19	3.980E-19	3.860E-19
o-210	U-238	2.633E-10	0.000E+00	5.171E-26	3.908E-24	3.792E-22	1.569E-20	2.325E-19	3.787E-19	3.673E-19
o-210	U-238	5.530E-14	0.000E+00	1.086E-29	8.209E-28	7.964E-26	3.296E-24	4.884E-23	7.954E-23	7.715E-23
o-210	U-238	2.636E-13	0.000E+00	5.178E-29	3.913E-27	3.796E-25	1.571E-23	2.328E-22	3.791E-22	3.677E-22
o-210	äS(j):		0.000E+00	1.462E-06	4.028E-06	9.971E-06	1.292E-05	2.551E-06	4.752E-09	2.884E-11
a-226	Ra-226	1.899E-08	6.932E-07	6.713E-07	6.296E-07	5.030E-07	2.648E-07	2.802E-08	4.580E-11	8.084E-21
a-226	Ra-226	2.100E-04	7.663E-03	7.421E-03	6.960E-03	5.560E-03	2.927E-03	3.098E-04	5.063E-07	8.936E-17
a-226	äS(j):		7.664E-03	7.422E-03	6.961E-03	5.561E-03	2.927E-03	3.098E-04	5.064E-07	8.937E-17
a-226	Ra-226	2.771E-10	1.012E-08	9.796E-09	9.188E-09	7.340E-09	3.864E-09	4.090E-10	6.684E-13	1.180E-22
a-226	Ra-226	3.989E-12	1.456E-10	1.410E-10	1.322E-10	1.056E-10	5.561E-11	5.886E-12	9.621E-15	1.698E-24
a-226	äS(j):		1.026E-08	9.937E-09	9.320E-09	7.445E-09	3.919E-09	4.148E-10	6.780E-13	1.197E-22
o-210	Ra-226	3.989E-12	0.000E+00	4.356E-12	1.200E-11	2.971E-11	3.849E-11	7.599E-12	1.407E-14	2.487E-24
o-210	Ra-226	3.795E-12	0.000E+00	4.144E-12	1.142E-11	2.826E-11	3.662E-11	7.230E-12	1.339E-14	2.366E-24
o-210	Ra-226	7.972E-16	0.000E+00	8.705E-16	2.398E-15	5.937E-15	7.691E-15	1.519E-15	2.812E-18	4.970E-28
o-210	Ra-226	3.800E-15	0.000E+00	4.149E-15	1.143E-14	2.830E-14	3.666E-14	7.239E-15	1.340E-17	2.369E-27
o-210	U-234	1.899E-08	0.000E+00	5.298E-18	1.341E-16	3.973E-15	5.800E-14	3.376E-13	4.283E-13	4.149E-13
o-210	U-234	3.989E-12	0.000E+00	1.113E-21	2.817E-20	8.344E-19	1.218E-17	7.090E-17	8.996E-17	8.715E-17
o-210	U-234	3.795E-12	0.000E+00	1.059E-21	2.680E-20	7.939E-19	1.159E-17	6.746E-17	8.559E-17	8.291E-17
o-210	U-234	7.972E-16	0.000E+00	2.224E-25	5.629E-24	1.667E-22	2.435E-21	1.417E-20	1.798E-20	1.742E-20
o-210	U-234	3.800E-15	0.000E+00	1.060E-24	2.683E-23	7.948E-22	1.161E-20	6.754E-20	8.569E-20	8.301E-20
o-210	U-238	3.039E-11	0.000E+00	5.969E-27	4.511E-25	4.377E-23	1.811E-21	2.684E-20	4.371E-20	4.240E-20
o-210	U-238	6.383E-15	0.000E+00	1.254E-30	9.475E-29	9.193E-27	3.804E-25	5.637E-24	9.181E-24	8.905E-24
o-210	U-238	6.073E-15	0.000E+00	1.193E-30	9.015E-29	8.746E-27	3.620E-25	5.363E-24	8.735E-24	8.472E-24
o-210	U-238	1.276E-18	0.000E+00	2.506E-34	1.893E-32	1.837E-30	7.603E-29	1.127E-27	1.835E-27	1.780E-27
o-210	U-238	6.080E-18	0.000E+00	1.194E-33	9.026E-32	8.757E-30	3.624E-28	5.370E-27	8.745E-27	8.483E-27
o-210	U-238	1.896E-08	0.000E+00	3.725E-24	2.815E-22	2.731E-20	1.130E-18	1.675E-17	2.727E-17	2.645E-17
o-210	U-238	3.983E-12	0.000E+00	7.824E-28	5.912E-26	5.736E-24	2.374E-22	3.518E-21	5.729E-21	5.557E-21
o-210	U-238	3.789E-12	0.000E+00	7.444E-28	5.625E-26	5.458E-24	2.259E-22	3.347E-21	5.450E-21	5.287E-21
o-210	U-238	7.959E-16	0.000E+00	1.563E-31	1.182E-29	1.146E-27	4.744E-26	7.029E-25	1.145E-24	1.110E-24
o-210	U-238	3.794E-15	0.000E+00	7.453E-31	5.632E-29	5.464E-27	2.261E-25	3.351E-24	5.457E-24	5.293E-24
o-210	äS(j):		0.000E+00	8.506E-12	2.343E-11	5.801E-11	7.520E-11	1.518E-11	4.560E-13	4.151E-13
a-226	Ra-226	1.998E-04	7.291E-03	7.061E-03	6.622E-03	5.290E-03	2.785E-03	2.948E-04	4.817E-07	8.502E-17
a-226	Ra-226	2.637E-10	9.624E-09	9.320E-09	8.741E-09	6.983E-09	3.676E-09	3.891E-10	6.359E-13	1.122E-22
a-226	U-234	1.998E-04	0.000E+00	5.392E-12	4.613E-11	4.306E-10	2.414E-09	6.873E-09	7.700E-09	7.457E-09
a-226	U-234	2.637E-10	0.000E+00	7.117E-18	6.089E-17	5.684E-16	3.187E-15	9.072E-15	1.016E-14	9.843E-15
a-226	U-234	3.795E-12	0.000E+00	1.024E-19	8.765E-19	8.182E-18	4.587E-17	1.306E-16	1.463E-16	1.417E-16
a-226	U-238	3.196E-07	0.000E+00	8.081E-21	2.055E-19	6.180E-18	9.385E-17	5.963E-16	7.864E-16	7.619E-16
a-226	U-238	4.219E-13	0.000E+00	1.067E-26	2.712E-25	8.158E-24	1.239E-22	7.872E-22	1.038E-21	1.006E-21
a-226	U-238	6.073E-15	0.000E+00	1.535E-28	3.904E-27	1.174E-25	1.783E-24	1.133E-23	1.494E-23	1.448E-23
a-226	U-238	1.994E-04	0.000E+00	5.042E-18	1.282E-16	3.856E-15	5.856E-14	3.721E-13	4.907E-13	4.755E-13
a-226	U-238	2.633E-10	0.000E+00	6.656E-24	1.692E-22	5.090E-21	7.730E-20	4.912E-19	6.477E-19	6.276E-19
a-226	U-238	3.789E-12	0.000E+00	9.581E-26	2.436E-24	7.327E-23	1.113E-21	7.070E-21	9.323E-21	9.034E-21
a-226	äS(j):		7.291E-03	7.061E-03	6.622E-03	5.290E-03	2.785E-03	2.948E-04	4.894E-07	7.457E-09

ummary : GKP Recreational Visitor-- Ingestion
ile : C:\USERS\CLAUDE\DOCUMENTS\0 GKP DOSE\RESRAD CW\GKP RECREATIONAL VISITOR -INGESTION R1.RAD

Individual Nuclide Soil Concentration
Parent Nuclide and Branch Fraction Indicated

uclide (j)	Parent (i)	THF(i)	S(j,t), pCi/g t= 0.000E+00	1.000E+00	3.000E+00	1.000E+01	3.000E+01	1.000E+02	3.000E+02	1.000E+03
ÄÄÄÄÄ	ÄÄÄÄÄÄ	ÄÄÄÄÄÄÄÄ	ÄÄÄÄÄÄÄÄÄ	ÄÄÄÄÄÄÄÄÄ	ÄÄÄÄÄÄÄÄÄ	ÄÄÄÄÄÄÄÄÄ	ÄÄÄÄÄÄÄÄÄ	ÄÄÄÄÄÄÄÄÄ	ÄÄÄÄÄÄÄÄÄ	ÄÄÄÄÄÄÄÄÄ
a-226	Ra-226	3.795E-12	1.385E-10	1.342E-10	1.258E-10	1.005E-10	5.291E-11	5.600E-12	9.153E-15	1.615E-24
a-226	Ra-226	4.196E-08	1.531E-06	1.483E-06	1.391E-06	1.111E-06	5.849E-07	6.191E-08	1.012E-10	1.786E-20
a-226	äS(j):		1.532E-06	1.483E-06	1.391E-06	1.111E-06	5.850E-07	6.192E-08	1.012E-10	1.786E-20
a-226	Ra-226	5.538E-14	2.022E-12	1.958E-12	1.836E-12	1.467E-12	7.721E-13	8.173E-14	1.336E-16	2.357E-26
a-226	Ra-226	7.972E-16	2.910E-14	2.818E-14	2.643E-14	2.111E-14	1.111E-14	1.176E-15	1.923E-18	3.393E-28
a-226	äS(j):		2.051E-12	1.986E-12	1.862E-12	1.488E-12	7.832E-13	8.290E-14	1.355E-16	2.391E-26
a-226	Ra-226	2.000E-07	7.300E-06	7.070E-06	6.630E-06	5.297E-06	2.788E-06	2.951E-07	4.823E-10	8.513E-20
a-226	Ra-226	2.640E-13	9.636E-12	9.332E-12	8.752E-12	6.991E-12	3.680E-12	3.896E-13	6.367E-16	1.124E-25
a-226	U-234	2.000E-07	0.000E+00	5.398E-15	4.619E-14	4.311E-13	2.417E-12	6.881E-12	7.709E-12	7.466E-12
a-226	U-234	2.640E-13	0.000E+00	7.126E-21	6.097E-20	5.691E-19	3.191E-18	9.083E-18	1.018E-17	9.855E-18
a-226	U-234	3.800E-15	0.000E+00	1.026E-22	8.776E-22	8.192E-21	4.593E-20	1.307E-19	1.465E-19	1.418E-19
a-226	U-238	3.200E-10	0.000E+00	8.091E-24	2.057E-22	6.188E-21	9.396E-20	5.971E-19	7.873E-19	7.629E-19
a-226	U-238	4.224E-16	0.000E+00	1.068E-29	2.715E-28	8.168E-27	1.240E-25	7.881E-25	1.039E-24	1.007E-24
a-226	U-238	6.080E-18	0.000E+00	1.537E-31	3.909E-30	1.176E-28	1.785E-27	1.134E-26	1.496E-26	1.449E-26
a-226	U-238	1.997E-07	0.000E+00	5.048E-21	1.284E-19	3.861E-18	5.863E-17	3.726E-16	4.913E-16	4.760E-16
a-226	U-238	2.636E-13	0.000E+00	6.664E-27	1.694E-25	5.097E-24	7.739E-23	4.918E-22	6.485E-22	6.284E-22
a-226	U-238	3.794E-15	0.000E+00	9.592E-29	2.439E-27	7.336E-26	1.114E-24	7.079E-24	9.335E-24	9.045E-24
a-226	äS(j):		7.300E-06	7.070E-06	6.630E-06	5.297E-06	2.788E-06	2.951E-07	4.900E-10	7.466E-12
a-226	Ra-226	3.800E-15	1.387E-13	1.343E-13	1.260E-13	1.006E-13	5.298E-14	5.607E-15	9.164E-18	1.617E-27
n-232	Th-232	1.000E+00	2.400E+00	2.400E+00	2.400E+00	2.399E+00	2.397E+00	2.391E+00	2.373E+00	2.313E+00
a-228	Th-232	1.000E+00	0.000E+00	2.684E-01	6.968E-01	1.486E+00	1.879E+00	1.894E+00	1.880E+00	1.832E+00
n-228	Th-232	1.000E+00	0.000E+00	4.430E-02	2.891E-01	1.222E+00	1.865E+00	1.894E+00	1.880E+00	1.832E+00
-234	U-234	9.996E-01	1.389E+01	1.329E+01	1.217E+01	8.925E+00	3.683E+00	1.662E-01	2.380E-05	8.354E-19
-234	U-234	1.319E-06	1.834E-05	1.755E-05	1.606E-05	1.178E-05	4.862E-06	2.194E-07	3.141E-11	1.103E-24
-234	U-238	1.599E-03	0.000E+00	6.005E-08	1.649E-07	4.032E-07	4.992E-07	7.511E-08	3.227E-11	3.779E-24
-234	U-238	2.111E-09	0.000E+00	7.927E-14	2.177E-13	5.322E-13	6.589E-13	9.914E-14	4.259E-17	4.988E-30
-234	U-238	3.039E-11	0.000E+00	1.141E-15	3.133E-15	7.661E-15	9.484E-15	1.427E-15	6.131E-19	7.180E-32
-234	U-238	3.359E-07	0.000E+00	1.261E-11	3.463E-11	8.469E-11	1.048E-10	1.578E-11	6.777E-15	7.938E-28
-234	U-238	4.434E-13	0.000E+00	1.665E-17	4.572E-17	1.118E-16	1.384E-16	2.082E-17	8.946E-21	1.048E-33
-234	U-238	6.383E-15	0.000E+00	2.396E-19	6.580E-19	1.609E-18	1.992E-18	2.998E-19	1.288E-22	1.508E-35
-234	U-238	3.196E-07	0.000E+00	1.200E-11	3.295E-11	8.058E-11	9.975E-11	1.501E-11	6.448E-15	7.552E-28
-234	U-238	4.219E-13	0.000E+00	1.584E-17	4.350E-17	1.064E-16	1.317E-16	1.981E-17	8.511E-21	9.969E-34
-234	U-238	6.073E-15	0.000E+00	2.280E-19	6.261E-19	1.531E-18	1.895E-18	2.852E-19	1.225E-22	1.435E-35
-234	U-238	6.713E-11	0.000E+00	2.521E-15	6.921E-15	1.692E-14	2.095E-14	3.153E-15	1.354E-18	1.586E-31
-234	U-238	8.862E-17	0.000E+00	3.327E-21	9.136E-21	2.234E-20	2.766E-20	4.162E-21	1.788E-24	2.094E-37
-234	U-238	1.276E-18	0.000E+00	4.789E-23	1.315E-22	3.216E-22	3.981E-22	5.990E-23	2.573E-26	3.014E-39
-234	U-238	3.200E-10	0.000E+00	1.201E-14	3.299E-14	8.067E-14	9.987E-14	1.503E-14	6.456E-18	7.561E-31
-234	U-238	4.224E-16	0.000E+00	1.586E-20	4.355E-20	1.065E-19	1.318E-19	1.984E-20	8.522E-24	9.981E-37
-234	U-238	6.080E-18	0.000E+00	2.283E-22	6.268E-22	1.533E-21	1.898E-21	2.855E-22	1.227E-25	1.437E-38
-234	U-238	9.980E-01	0.000E+00	3.747E-05	1.029E-04	2.516E-04	3.115E-04	4.687E-05	2.013E-08	2.358E-21
-234	U-238	1.317E-06	0.000E+00	4.946E-11	1.358E-10	3.321E-10	4.111E-10	6.187E-11	2.658E-14	3.113E-27
-234	U-238	1.896E-08	0.000E+00	7.119E-13	1.955E-12	4.780E-12	5.918E-12	8.905E-13	3.825E-16	4.480E-29

ummary : GKP Recreational Visitor-- Ingestion
ile : C:\USERS\CLAUDE\DOCUMENTS\0 GKP DOSE\RESRAD CW\GKP RECREATIONAL VISITOR -INGESTION R1.RAD

Individual Nuclide Soil Concentration
Parent Nuclide and Branch Fraction Indicated

uclide (j)	Parent (i)	THF(i)	S(j,t), pCi/g t= 0.000E+00	1.000E+00	3.000E+00	1.000E+01	3.000E+01	1.000E+02	3.000E+02	1.000E+03
ÄÄÄÄÄ	ÄÄÄÄÄÄ	ÄÄÄÄÄÄÄÄÄ	ÄÄÄÄÄÄÄÄÄ	ÄÄÄÄÄÄÄÄÄ	ÄÄÄÄÄÄÄÄÄ	ÄÄÄÄÄÄÄÄÄ	ÄÄÄÄÄÄÄÄÄ	ÄÄÄÄÄÄÄÄÄ	ÄÄÄÄÄÄÄÄÄ	ÄÄÄÄÄÄÄÄÄ
-234	U-238	2.096E-04	0.000E+00	7.871E-09	2.161E-08	5.285E-08	6.542E-08	9.844E-09	4.229E-12	4.953E-25
-234	U-238	2.767E-10	0.000E+00	1.039E-14	2.853E-14	6.976E-14	8.636E-14	1.299E-14	5.582E-18	6.538E-31
-234	U-238	3.983E-12	0.000E+00	1.495E-16	4.106E-16	1.004E-15	1.243E-15	1.870E-16	8.035E-20	9.411E-33
-234	U-238	1.994E-04	0.000E+00	7.488E-09	2.056E-08	5.028E-08	6.225E-08	9.366E-09	4.024E-12	4.712E-25
-234	U-238	2.633E-10	0.000E+00	9.884E-15	2.714E-14	6.637E-14	8.216E-14	1.236E-14	5.311E-18	6.220E-31
-234	U-238	3.789E-12	0.000E+00	1.423E-16	3.907E-16	9.553E-16	1.183E-15	1.780E-16	7.645E-20	8.954E-33
-234	U-238	4.189E-08	0.000E+00	1.573E-12	4.319E-12	1.056E-11	1.307E-11	1.967E-12	8.451E-16	9.898E-29
-234	U-238	5.530E-14	0.000E+00	2.076E-18	5.701E-18	1.394E-17	1.726E-17	2.597E-18	1.116E-21	1.307E-34
-234	U-238	7.959E-16	0.000E+00	2.988E-20	8.206E-20	2.007E-19	2.484E-19	3.738E-20	1.606E-23	1.881E-36
-234	U-238	1.997E-07	0.000E+00	7.497E-12	2.059E-11	5.034E-11	6.232E-11	9.378E-12	4.028E-15	4.718E-28
-234	U-238	2.636E-13	0.000E+00	9.896E-18	2.717E-17	6.645E-17	8.226E-17	1.238E-17	5.318E-21	6.228E-34
-234	U-238	3.794E-15	0.000E+00	1.424E-19	3.911E-19	9.565E-19	1.184E-18	1.782E-19	7.654E-23	8.965E-36
-234	äS(j):		1.389E+01	1.329E+01	1.217E+01	8.926E+00	3.683E+00	1.663E-01	2.382E-05	8.377E-19
a-230	U-234	9.996E-01	0.000E+00	1.250E-04	3.589E-04	1.032E-03	2.120E-03	2.842E-03	2.850E-03	2.759E-03
a-230	U-234	1.319E-06	0.000E+00	1.650E-10	4.738E-10	1.362E-09	2.798E-09	3.751E-09	3.762E-09	3.642E-09
a-230	U-234	1.899E-08	0.000E+00	2.375E-12	6.819E-12	1.961E-11	4.028E-11	5.400E-11	5.415E-11	5.243E-11
a-230	U-234	2.100E-04	0.000E+00	2.625E-08	7.539E-08	2.168E-07	4.452E-07	5.969E-07	5.986E-07	5.796E-07
a-230	U-234	2.771E-10	0.000E+00	3.465E-14	9.951E-14	2.862E-13	5.877E-13	7.879E-13	7.902E-13	7.650E-13
a-230	U-234	3.989E-12	0.000E+00	4.988E-16	1.432E-15	4.119E-15	8.460E-15	1.134E-14	1.137E-14	1.101E-14
a-230	U-234	1.998E-04	0.000E+00	2.497E-08	7.172E-08	2.063E-07	4.236E-07	5.679E-07	5.695E-07	5.514E-07
a-230	U-234	2.637E-10	0.000E+00	3.297E-14	9.468E-14	2.723E-13	5.592E-13	7.497E-13	7.518E-13	7.279E-13
a-230	U-234	3.795E-12	0.000E+00	4.745E-16	1.363E-15	3.919E-15	8.049E-15	1.079E-14	1.082E-14	1.048E-14
a-230	U-234	4.196E-08	0.000E+00	5.246E-12	1.507E-11	4.332E-11	8.898E-11	1.193E-10	1.196E-10	1.158E-10
a-230	U-234	5.538E-14	0.000E+00	6.924E-18	1.989E-17	5.719E-17	1.175E-16	1.575E-16	1.579E-16	1.529E-16
a-230	U-234	7.972E-16	0.000E+00	9.967E-20	2.862E-19	8.231E-19	1.691E-18	2.267E-18	2.273E-18	2.201E-18
a-230	U-234	2.000E-07	0.000E+00	2.501E-11	7.181E-11	2.065E-10	4.241E-10	5.686E-10	5.702E-10	5.521E-10
a-230	U-234	2.640E-13	0.000E+00	3.301E-17	9.479E-17	2.726E-16	5.599E-16	7.506E-16	7.527E-16	7.287E-16
a-230	U-234	3.800E-15	0.000E+00	4.751E-19	1.364E-18	3.924E-18	8.058E-18	1.080E-17	1.083E-17	1.049E-17
a-230	U-238	1.599E-03	0.000E+00	2.802E-13	2.378E-12	2.160E-11	1.128E-10	2.748E-10	2.912E-10	2.820E-10
a-230	U-238	2.111E-09	0.000E+00	3.699E-19	3.139E-18	2.851E-17	1.489E-16	3.627E-16	3.844E-16	3.722E-16
a-230	U-238	3.039E-11	0.000E+00	5.324E-21	4.519E-20	4.104E-19	2.143E-18	5.221E-18	5.533E-18	5.357E-18
a-230	U-238	3.359E-07	0.000E+00	5.885E-17	4.995E-16	4.537E-15	2.369E-14	5.771E-14	6.117E-14	5.922E-14
a-230	U-238	4.434E-13	0.000E+00	7.769E-23	6.594E-22	5.989E-21	3.127E-20	7.618E-20	8.074E-20	7.817E-20
a-230	U-238	6.383E-15	0.000E+00	1.118E-24	9.491E-24	8.621E-23	4.501E-22	1.097E-21	1.162E-21	1.125E-21
a-230	U-238	3.196E-07	0.000E+00	5.600E-17	4.753E-16	4.317E-15	2.254E-14	5.491E-14	5.820E-14	5.635E-14
a-230	U-238	4.219E-13	0.000E+00	7.391E-23	6.274E-22	5.698E-21	2.975E-20	7.248E-20	7.682E-20	7.438E-20
a-230	U-238	6.073E-15	0.000E+00	1.064E-24	9.030E-24	8.202E-23	4.282E-22	1.043E-21	1.106E-21	1.071E-21
a-230	U-238	6.713E-11	0.000E+00	1.176E-20	9.983E-20	9.067E-19	4.734E-18	1.153E-17	1.222E-17	1.183E-17
a-230	U-238	8.862E-17	0.000E+00	1.553E-26	1.318E-25	1.197E-24	6.249E-24	1.522E-23	1.614E-23	1.562E-23
a-230	U-238	1.276E-18	0.000E+00	2.235E-28	1.897E-27	1.723E-26	8.995E-26	2.191E-25	2.323E-25	2.249E-25
a-230	U-238	3.200E-10	0.000E+00	5.606E-20	4.759E-19	4.322E-18	2.257E-17	5.498E-17	5.827E-17	5.641E-17
a-230	U-238	4.224E-16	0.000E+00	7.400E-26	6.281E-25	5.705E-24	2.979E-23	7.257E-23	7.691E-23	7.447E-23
a-230	U-238	6.080E-18	0.000E+00	1.065E-27	9.041E-27	8.212E-26	4.288E-25	1.045E-24	1.107E-24	1.072E-24
a-230	U-238	9.980E-01	0.000E+00	1.748E-10	1.484E-09	1.348E-08	7.038E-08	1.715E-07	1.817E-07	1.759E-07
a-230	U-238	1.317E-06	0.000E+00	2.308E-16	1.959E-15	1.779E-14	9.290E-14	2.263E-13	2.399E-13	2.322E-13
a-230	U-238	1.896E-08	0.000E+00	3.322E-18	2.820E-17	2.561E-16	1.337E-15	3.258E-15	3.453E-15	3.343E-15
a-230	U-238	2.096E-04	0.000E+00	3.673E-14	3.117E-13	2.831E-12	1.478E-11	3.601E-11	3.817E-11	3.695E-11
a-230	U-238	2.767E-10	0.000E+00	4.848E-20	4.115E-19	3.737E-18	1.951E-17	4.754E-17	5.038E-17	4.878E-17

ummary : GKP Recreational Visitor-- Ingestion
ile : C:\USERS\CLAUDE\DOCUMENTS\0 GKP DOSE\RESRAD CW\GKP RECREATIONAL VISITOR -INGESTION R1.RAD

Individual Nuclide Soil Concentration
Parent Nuclide and Branch Fraction Indicated

uclide (j)	Parent (i)	THF(i)	S(j,t), pCi/g t= 0.000E+00	1.000E+00	3.000E+00	1.000E+01	3.000E+01	1.000E+02	3.000E+02	1.000E+03
ÄÄÄÄÄ	ÄÄÄÄÄÄÄ	ÄÄÄÄÄÄÄÄÄ	ÄÄÄÄÄÄÄÄÄ	ÄÄÄÄÄÄÄÄÄ	ÄÄÄÄÄÄÄÄÄ	ÄÄÄÄÄÄÄÄÄ	ÄÄÄÄÄÄÄÄÄ	ÄÄÄÄÄÄÄÄÄ	ÄÄÄÄÄÄÄÄÄ	ÄÄÄÄÄÄÄÄÄ
n-230	U-238	3.983E-12	0.000E+00	6.978E-22	5.923E-21	5.379E-20	2.809E-19	6.843E-19	7.252E-19	7.021E-19
n-230	U-238	1.994E-04	0.000E+00	3.494E-14	2.966E-13	2.694E-12	1.406E-11	3.426E-11	3.631E-11	3.516E-11
n-230	U-238	2.633E-10	0.000E+00	4.612E-20	3.915E-19	3.556E-18	1.856E-17	4.523E-17	4.794E-17	4.641E-17
n-230	U-238	3.789E-12	0.000E+00	6.639E-22	5.635E-21	5.118E-20	2.672E-19	6.510E-19	6.900E-19	6.680E-19
n-230	U-238	4.189E-08	0.000E+00	7.339E-18	6.229E-17	5.658E-16	2.954E-15	7.197E-15	7.628E-15	7.385E-15
n-230	U-238	5.530E-14	0.000E+00	9.688E-24	8.223E-23	7.468E-22	3.899E-21	9.500E-21	1.007E-20	9.748E-21
n-230	U-238	7.959E-16	0.000E+00	1.394E-25	1.184E-24	1.075E-23	5.613E-23	1.367E-22	1.449E-22	1.403E-22
n-230	U-238	1.997E-07	0.000E+00	3.498E-17	2.969E-16	2.697E-15	1.408E-14	3.431E-14	3.636E-14	3.520E-14
n-230	U-238	2.636E-13	0.000E+00	4.618E-23	3.920E-22	3.560E-21	1.859E-20	4.528E-20	4.799E-20	4.647E-20
n-230	U-238	3.794E-15	0.000E+00	6.647E-25	5.642E-24	5.124E-23	2.675E-22	6.518E-22	6.908E-22	6.688E-22
n-230	äS(j):		0.000E+00	1.250E-04	3.591E-04	1.033E-03	2.121E-03	2.843E-03	2.851E-03	2.761E-03
-234	U-234	1.899E-08	2.640E-07	2.526E-07	2.312E-07	1.696E-07	6.998E-08	3.159E-09	4.522E-13	1.587E-26
-234	U-234	2.100E-04	2.918E-03	2.792E-03	2.556E-03	1.875E-03	7.736E-04	3.492E-05	4.999E-09	1.755E-22
-234	äS(j):		2.919E-03	2.792E-03	2.556E-03	1.875E-03	7.737E-04	3.492E-05	4.999E-09	1.755E-22
a-226	U-234	2.100E-04	0.000E+00	5.667E-12	4.849E-11	4.526E-10	2.538E-09	7.224E-09	8.093E-09	7.837E-09
a-226	U-234	3.989E-12	0.000E+00	1.077E-19	9.213E-19	8.600E-18	4.821E-17	1.373E-16	1.538E-16	1.489E-16
a-226	U-238	3.359E-07	0.000E+00	8.493E-21	2.160E-19	6.496E-18	9.864E-17	6.268E-16	8.265E-16	8.008E-16
a-226	U-238	4.434E-13	0.000E+00	1.121E-26	2.851E-25	8.574E-24	1.302E-22	8.274E-22	1.091E-21	1.057E-21
a-226	U-238	6.383E-15	0.000E+00	1.614E-28	4.103E-27	1.234E-25	1.874E-24	1.191E-23	1.570E-23	1.522E-23
a-226	U-238	2.096E-04	0.000E+00	5.300E-18	1.348E-16	4.053E-15	6.155E-14	3.911E-13	5.158E-13	4.997E-13
a-226	U-238	2.767E-10	0.000E+00	6.996E-24	1.779E-22	5.350E-21	8.125E-20	5.163E-19	6.808E-19	6.596E-19
a-226	U-238	3.983E-12	0.000E+00	1.007E-25	2.560E-24	7.701E-23	1.169E-21	7.431E-21	9.799E-21	9.495E-21
a-226	äS(j):		0.000E+00	5.667E-12	4.849E-11	4.526E-10	2.538E-09	7.224E-09	8.094E-09	7.838E-09
-234	U-234	2.771E-10	3.852E-09	3.686E-09	3.373E-09	2.475E-09	1.021E-09	4.609E-11	6.598E-15	2.316E-28
-234	U-234	3.989E-12	5.545E-11	5.305E-11	4.856E-11	3.562E-11	1.470E-11	6.634E-13	9.498E-17	3.334E-30
-234	äS(j):		3.908E-09	3.739E-09	3.422E-09	2.510E-09	1.036E-09	4.676E-11	6.693E-15	2.349E-28
a-226	U-234	2.771E-10	0.000E+00	7.480E-18	6.400E-17	5.974E-16	3.350E-15	9.535E-15	1.068E-14	1.035E-14
-234	U-234	1.998E-04	2.777E-03	2.656E-03	2.431E-03	1.784E-03	7.360E-04	3.322E-05	4.756E-09	1.669E-22
-234	U-234	2.637E-10	3.665E-09	3.506E-09	3.209E-09	2.354E-09	9.715E-10	4.385E-11	6.278E-15	2.204E-28
-234	äS(j):		2.777E-03	2.656E-03	2.431E-03	1.784E-03	7.360E-04	3.322E-05	4.756E-09	1.669E-22
-234	U-234	3.795E-12	5.276E-11	5.047E-11	4.620E-11	3.389E-11	1.398E-11	6.312E-13	9.036E-17	3.172E-30
-234	U-234	4.196E-08	5.832E-07	5.580E-07	5.107E-07	3.746E-07	1.546E-07	6.978E-09	9.989E-13	3.506E-26
-234	äS(j):		5.833E-07	5.580E-07	5.107E-07	3.747E-07	1.546E-07	6.979E-09	9.990E-13	3.507E-26
a-226	U-234	4.196E-08	0.000E+00	1.132E-15	9.690E-15	9.045E-14	5.071E-13	1.444E-12	1.617E-12	1.566E-12
a-226	U-234	7.972E-16	0.000E+00	2.152E-23	1.841E-22	1.719E-21	9.635E-21	2.743E-20	3.073E-20	2.976E-20
a-226	U-238	6.713E-11	0.000E+00	1.697E-24	4.316E-23	1.298E-21	1.971E-20	1.253E-19	1.652E-19	1.600E-19
a-226	U-238	8.862E-17	0.000E+00	2.240E-30	5.697E-29	1.713E-27	2.602E-26	1.653E-25	2.180E-25	2.113E-25
a-226	U-238	1.276E-18	0.000E+00	3.225E-32	8.200E-31	2.466E-29	3.745E-28	2.380E-27	3.138E-27	3.041E-27
a-226	U-238	4.189E-08	0.000E+00	1.059E-21	2.693E-20	8.100E-19	1.230E-17	7.816E-17	1.031E-16	9.987E-17
a-226	U-238	5.530E-14	0.000E+00	1.398E-27	3.555E-26	1.069E-24	1.624E-23	1.032E-22	1.360E-22	1.318E-22
a-226	U-238	7.959E-16	0.000E+00	2.012E-29	5.117E-28	1.539E-26	2.337E-25	1.485E-24	1.958E-24	1.897E-24
a-226	äS(j):		0.000E+00	1.132E-15	9.690E-15	9.045E-14	5.071E-13	1.444E-12	1.617E-12	1.566E-12

ummary : GKP Recreational Visitor-- Ingestion
ile : C:\USERS\CLAUDE\DOCUMENTS\0 GKP DOSE\RESRAD CW\GKP RECREATIONAL VISITOR -INGESTION R1.RAD

Individual Nuclide Soil Concentration
Parent Nuclide and Branch Fraction Indicated

uclide (j)	Parent (i)	THF(i)	S(j,t), pCi/g t= 0.000E+00	1.000E+00	3.000E+00	1.000E+01	3.000E+01	1.000E+02	3.000E+02	1.000E+03
ÄÄÄÄÄ	ÄÄÄÄÄÄ	ÄÄÄÄÄÄÄÄ	ÄÄÄÄÄÄÄÄÄ	ÄÄÄÄÄÄÄÄÄ	ÄÄÄÄÄÄÄÄÄ	ÄÄÄÄÄÄÄÄÄ	ÄÄÄÄÄÄÄÄÄ	ÄÄÄÄÄÄÄÄÄ	ÄÄÄÄÄÄÄÄÄ	ÄÄÄÄÄÄÄÄÄ
-234	U-234	5.538E-14	7.698E-13	7.365E-13	6.741E-13	4.945E-13	2.041E-13	9.211E-15	1.319E-18	4.629E-32
-234	U-234	7.972E-16	1.108E-14	1.060E-14	9.703E-15	7.118E-15	2.937E-15	1.326E-16	1.898E-20	6.662E-34
-234	äS(j):		7.809E-13	7.471E-13	6.838E-13	5.016E-13	2.070E-13	9.344E-15	1.338E-18	4.695E-32
a-226	U-234	5.538E-14	0.000E+00	1.495E-21	1.279E-20	1.194E-19	6.694E-19	1.906E-18	2.135E-18	2.067E-18
-234	U-234	2.000E-07	2.780E-06	2.660E-06	2.434E-06	1.786E-06	7.369E-07	3.326E-08	4.762E-12	1.671E-25
-234	U-234	2.640E-13	3.670E-12	3.511E-12	3.213E-12	2.357E-12	9.727E-13	4.391E-14	6.285E-18	2.206E-31
-234	äS(j):		2.780E-06	2.660E-06	2.434E-06	1.786E-06	7.369E-07	3.326E-08	4.762E-12	1.671E-25
-234	U-234	3.800E-15	5.282E-14	5.053E-14	4.625E-14	3.393E-14	1.400E-14	6.320E-16	9.047E-20	3.176E-33
-235	U-235	9.835E-01	8.261E-01	7.904E-01	7.234E-01	5.307E-01	2.190E-01	9.887E-03	1.416E-06	4.981E-20
-235	U-235	2.722E-03	2.286E-03	2.187E-03	2.002E-03	1.469E-03	6.061E-04	2.736E-05	3.920E-09	1.379E-22
-235	äS(j):		8.284E-01	7.925E-01	7.254E-01	5.322E-01	2.196E-01	9.914E-03	1.420E-06	4.995E-20
a-231	U-235	9.835E-01	0.000E+00	1.672E-05	4.592E-05	1.123E-04	1.390E-04	2.090E-05	8.961E-09	1.043E-21
a-231	U-235	2.722E-03	0.000E+00	4.628E-08	1.271E-07	3.107E-07	3.846E-07	5.784E-08	2.480E-11	2.886E-24
a-231	U-235	1.376E-02	0.000E+00	2.340E-07	6.425E-07	1.571E-06	1.944E-06	2.924E-07	1.254E-10	1.459E-23
a-231	U-235	3.809E-05	0.000E+00	6.476E-10	1.778E-09	4.348E-09	5.382E-09	8.093E-10	3.470E-13	4.038E-26
a-231	U-235	8.257E-07	0.000E+00	1.404E-11	3.855E-11	9.426E-11	1.167E-10	1.755E-11	7.523E-15	8.755E-28
a-231	U-235	2.285E-09	0.000E+00	3.886E-14	1.067E-13	2.609E-13	3.229E-13	4.856E-14	2.082E-17	2.423E-30
a-231	äS(j):		0.000E+00	1.700E-05	4.669E-05	1.142E-04	1.413E-04	2.125E-05	9.111E-09	1.060E-21
c-227	U-235	9.835E-01	0.000E+00	2.577E-07	1.994E-06	1.324E-05	3.070E-05	6.123E-06	2.826E-09	3.370E-22
c-227	U-235	2.722E-03	0.000E+00	7.134E-10	5.518E-09	3.665E-08	8.495E-08	1.695E-08	7.821E-12	9.327E-25
c-227	U-235	1.376E-02	0.000E+00	3.606E-09	2.790E-08	1.853E-07	4.295E-07	8.568E-08	3.954E-11	4.715E-24
c-227	äS(j):		0.000E+00	4.320E-09	3.341E-08	2.219E-07	5.144E-07	1.026E-07	4.736E-11	5.648E-24
-235	U-235	1.376E-02	1.156E-02	1.106E-02	1.012E-02	7.426E-03	3.064E-03	1.383E-04	1.982E-08	6.969E-22
-235	U-235	3.809E-05	3.199E-05	3.061E-05	2.801E-05	2.055E-05	8.481E-06	3.829E-07	5.484E-11	1.929E-24
-235	äS(j):		1.159E-02	1.109E-02	1.015E-02	7.446E-03	3.073E-03	1.387E-04	1.987E-08	6.989E-22
c-227	U-235	3.809E-05	0.000E+00	9.981E-12	7.721E-11	5.128E-10	1.189E-09	2.371E-10	1.094E-13	1.305E-26
c-227	U-235	8.257E-07	0.000E+00	2.164E-13	1.674E-12	1.112E-11	2.577E-11	5.141E-12	2.372E-15	2.829E-28
c-227	äS(j):		0.000E+00	1.020E-11	7.888E-11	5.239E-10	1.214E-09	2.423E-10	1.118E-13	1.333E-26
-235	U-235	8.257E-07	6.936E-07	6.636E-07	6.074E-07	4.456E-07	1.839E-07	8.301E-09	1.189E-12	4.182E-26
-235	U-235	2.285E-09	1.920E-09	1.837E-09	1.681E-09	1.233E-09	5.089E-10	2.297E-11	3.291E-15	1.157E-28
-235	äS(j):		6.955E-07	6.654E-07	6.090E-07	4.468E-07	1.844E-07	8.324E-09	1.192E-12	4.193E-26
c-227	U-235	2.285E-09	0.000E+00	5.989E-16	4.633E-15	3.077E-14	7.133E-14	1.423E-14	6.566E-18	7.831E-31
-238	U-238	5.450E-07	7.575E-06	7.248E-06	6.634E-06	4.866E-06	2.008E-06	9.066E-08	1.299E-11	4.567E-25
-238	U-238	1.599E-03	2.223E-02	2.127E-02	1.947E-02	1.428E-02	5.893E-03	2.661E-04	3.811E-08	1.340E-21
-238	äS(j):		2.224E-02	2.128E-02	1.947E-02	1.429E-02	5.895E-03	2.662E-04	3.812E-08	1.341E-21
-238	U-238	2.111E-09	2.934E-08	2.807E-08	2.570E-08	1.885E-08	7.779E-09	3.512E-10	5.030E-14	1.769E-27

ummary : GKP Recreational Visitor-- Ingestion
ile : C:\USERS\CLAUDE\DOCUMENTS\0 GKP DOSE\RESRAD CW\GKP RECREATIONAL VISITOR -INGESTION R1.RAD

Individual Nuclide Soil Concentration
Parent Nuclide and Branch Fraction Indicated

uclide (j)	Parent (i)	THF(i)	S(j,t), pCi/g t= 0.000E+00	1.000E+00	3.000E+00	1.000E+01	3.000E+01	1.000E+02	3.000E+02	1.000E+03
ÄÄÄÄÄ	ÄÄÄÄÄÄÄ	ÄÄÄÄÄÄÄÄÄ	ÄÄÄÄÄÄÄÄÄ	ÄÄÄÄÄÄÄÄÄ	ÄÄÄÄÄÄÄÄÄ	ÄÄÄÄÄÄÄÄÄ	ÄÄÄÄÄÄÄÄÄ	ÄÄÄÄÄÄÄÄÄ	ÄÄÄÄÄÄÄÄÄ	ÄÄÄÄÄÄÄÄÄ
-238	U-238	3.039E-11	4.224E-10	4.041E-10	3.699E-10	2.713E-10	1.120E-10	5.055E-12	7.241E-16	2.547E-29
-238	äS(j):		2.977E-08	2.848E-08	2.607E-08	1.912E-08	7.891E-09	3.563E-10	5.103E-14	1.795E-27
-238	U-238	3.359E-07	4.669E-06	4.467E-06	4.089E-06	3.000E-06	1.238E-06	5.588E-08	8.005E-12	2.815E-25
-238	U-238	4.434E-13	6.164E-12	5.897E-12	5.397E-12	3.960E-12	1.634E-12	7.377E-14	1.057E-17	3.716E-31
-238	äS(j):		4.669E-06	4.467E-06	4.089E-06	3.000E-06	1.238E-06	5.588E-08	8.005E-12	2.815E-25
-238	U-238	6.383E-15	8.872E-14	8.488E-14	7.769E-14	5.699E-14	2.352E-14	1.062E-15	1.521E-19	5.349E-33
-238	U-238	3.196E-07	4.443E-06	4.250E-06	3.890E-06	2.854E-06	1.178E-06	5.317E-08	7.616E-12	2.679E-25
-238	äS(j):		4.443E-06	4.250E-06	3.890E-06	2.854E-06	1.178E-06	5.317E-08	7.616E-12	2.679E-25
-238	U-238	4.219E-13	5.864E-12	5.610E-12	5.135E-12	3.767E-12	1.555E-12	7.018E-14	1.005E-17	3.536E-31
-238	U-238	6.073E-15	8.441E-14	8.076E-14	7.392E-14	5.422E-14	2.238E-14	1.010E-15	1.447E-19	5.089E-33
-238	äS(j):		5.949E-12	5.691E-12	5.209E-12	3.821E-12	1.577E-12	7.119E-14	1.020E-17	3.587E-31
-238	U-238	6.713E-11	9.331E-10	8.927E-10	8.171E-10	5.994E-10	2.474E-10	1.117E-11	1.600E-15	5.626E-29
-238	U-238	8.862E-17	1.232E-15	1.178E-15	1.079E-15	7.913E-16	3.265E-16	1.474E-17	2.112E-21	7.427E-35
-238	äS(j):		9.331E-10	8.927E-10	8.171E-10	5.994E-10	2.474E-10	1.117E-11	1.600E-15	5.626E-29
-238	U-238	1.276E-18	1.773E-17	1.696E-17	1.553E-17	1.139E-17	4.700E-18	2.122E-19	3.039E-23	1.069E-36
-238	U-238	3.200E-10	4.448E-09	4.255E-09	3.895E-09	2.857E-09	1.179E-09	5.323E-11	7.625E-15	2.682E-28
-238	äS(j):		4.448E-09	4.255E-09	3.895E-09	2.857E-09	1.179E-09	5.323E-11	7.625E-15	2.682E-28
-238	U-238	4.224E-16	5.871E-15	5.617E-15	5.141E-15	3.772E-15	1.556E-15	7.027E-17	1.007E-20	3.540E-34
-238	U-238	6.080E-18	8.451E-17	8.085E-17	7.400E-17	5.429E-17	2.240E-17	1.011E-18	1.449E-22	5.095E-36
-238	äS(j):		5.956E-15	5.698E-15	5.215E-15	3.826E-15	1.579E-15	7.128E-17	1.021E-20	3.591E-34
-238	U-238	9.980E-01	1.387E+01	1.327E+01	1.215E+01	8.911E+00	3.677E+00	1.660E-01	2.378E-05	8.364E-19
-238	U-238	1.317E-06	1.831E-05	1.752E-05	1.603E-05	1.176E-05	4.854E-06	2.191E-07	3.139E-11	1.104E-24
-238	äS(j):		1.387E+01	1.327E+01	1.215E+01	8.911E+00	3.677E+00	1.660E-01	2.378E-05	8.364E-19
-238	U-238	1.896E-08	2.636E-07	2.522E-07	2.308E-07	1.693E-07	6.987E-08	3.154E-09	4.518E-13	1.589E-26
-238	U-238	2.096E-04	2.914E-03	2.788E-03	2.551E-03	1.872E-03	7.724E-04	3.487E-05	4.995E-09	1.757E-22
-238	äS(j):		2.914E-03	2.788E-03	2.552E-03	1.872E-03	7.725E-04	3.488E-05	4.995E-09	1.757E-22
-238	U-238	2.767E-10	3.846E-09	3.680E-09	3.368E-09	2.471E-09	1.020E-09	4.603E-11	6.593E-15	2.319E-28
-238	U-238	3.983E-12	5.536E-11	5.296E-11	4.848E-11	3.556E-11	1.468E-11	6.626E-13	9.490E-17	3.338E-30
-238	äS(j):		3.902E-09	3.733E-09	3.416E-09	2.506E-09	1.034E-09	4.669E-11	6.688E-15	2.352E-28
-238	U-238	1.994E-04	2.772E-03	2.652E-03	2.428E-03	1.781E-03	7.349E-04	3.318E-05	4.752E-09	1.671E-22
-238	U-238	2.633E-10	3.659E-09	3.501E-09	3.204E-09	2.351E-09	9.701E-10	4.379E-11	6.273E-15	2.206E-28
-238	äS(j):		2.772E-03	2.652E-03	2.428E-03	1.781E-03	7.349E-04	3.318E-05	4.752E-09	1.671E-22
-238	U-238	3.789E-12	5.267E-11	5.039E-11	4.612E-11	3.384E-11	1.396E-11	6.304E-13	9.029E-17	3.176E-30
-238	U-238	4.189E-08	5.823E-07	5.571E-07	5.099E-07	3.741E-07	1.544E-07	6.969E-09	9.982E-13	3.511E-26
-238	äS(j):		5.823E-07	5.571E-07	5.099E-07	3.741E-07	1.544E-07	6.969E-09	9.983E-13	3.511E-26
-238	U-238	5.530E-14	7.686E-13	7.353E-13	6.731E-13	4.938E-13	2.038E-13	9.199E-15	1.318E-18	4.634E-32
-238	U-238	7.959E-16	1.106E-14	1.058E-14	9.688E-15	7.107E-15	2.933E-15	1.324E-16	1.897E-20	6.670E-34
-238	äS(j):		7.797E-13	7.459E-13	6.827E-13	5.009E-13	2.067E-13	9.331E-15	1.337E-18	4.701E-32

ummary : GKP Recreational Visitor-- Ingestion
ile : C:\USERS\CLAUDE\DOCUMENTS\0 GKP DOSE\RESRAD CW\GKP RECREATIONAL VISITOR -INGESTION R1.RAD

Individual Nuclide Soil Concentration
Parent Nuclide and Branch Fraction Indicated

uclide (j)	Parent (i)	THF(i)	S(j,t), pCi/g t= 0.000E+00	1.000E+00	3.000E+00	1.000E+01	3.000E+01	1.000E+02	3.000E+02	1.000E+03
ÄÄÄÄÄ	ÄÄÄÄÄÄ	ÄÄÄÄÄÄÄÄÄ	ÄÄÄÄÄÄÄÄÄ	ÄÄÄÄÄÄÄÄÄ	ÄÄÄÄÄÄÄÄÄ	ÄÄÄÄÄÄÄÄÄ	ÄÄÄÄÄÄÄÄÄ	ÄÄÄÄÄÄÄÄÄ	ÄÄÄÄÄÄÄÄÄ	ÄÄÄÄÄÄÄÄÄ
-238	U-238	1.997E-07	2.776E-06	2.655E-06	2.430E-06	1.783E-06	7.358E-07	3.322E-08	4.758E-12	1.673E-25
-238	U-238	2.636E-13	3.664E-12	3.505E-12	3.208E-12	2.354E-12	9.712E-13	4.385E-14	6.281E-18	2.209E-31
-238	äS(j):		2.776E-06	2.655E-06	2.430E-06	1.783E-06	7.358E-07	3.322E-08	4.758E-12	1.673E-25
-238	U-238	3.794E-15	5.274E-14	5.045E-14	4.618E-14	3.388E-14	1.398E-14	6.311E-16	9.040E-20	3.180E-33
íííííí	íííííííí	ííííííííí	ííííííííí	ííííííííí	ííííííííí	ííííííííí	ííííííííí	ííííííííí	ííííííííí	ííííííííí

HF(i) is the thread fraction of the parent nuclide.

ESCALC.EXE execution time = 43.94 seconds

ummary : GKP Recreational Visitor - Inhalation
ile : C:\USERS\CLAUDE\DOCUMENTS\0 GKP DOSE\RESRAD CW\GKP RECREATIONAL VISITOR- INHALATION R1.RAD

Table of Contents

Part I: Mixture Sums and Single Radionuclide Guidelines

ummary : GKP Recreational Visitor - Inhalation
ile : C:\USERS\CLAUDE\DOCUMENTS\0 GKP DOSE\RESRAD CW\GKP RECREATIONAL VISITOR- INHALATION R1.RAD

Dose Conversion Factor (and Related) Parameter Summary
Dose Library: FGR 11

enu	Parameter	Current Value#	Base Case*	Parameter Name
-1	DCF's for external ground radiation, (mrem/yr)/(pCi/g)			
-1	Ac-227 (Source: FGR 12)	4.951E-04	4.951E-04	DCF1(1)
-1	Ac-228 (Source: FGR 12)	5.978E+00	5.978E+00	DCF1(2)
-1	At-218 (Source: FGR 12)	5.847E-03	5.847E-03	DCF1(3)
-1	At-219 (Source: no data)	0.000E+00	-2.000E+00	DCF1(4)
-1	Bi-210 (Source: FGR 12)	3.606E-03	3.606E-03	DCF1(5)
-1	Bi-211 (Source: FGR 12)	2.559E-01	2.559E-01	DCF1(6)
-1	Bi-212 (Source: FGR 12)	1.171E+00	1.171E+00	DCF1(7)
-1	Bi-214 (Source: FGR 12)	9.808E+00	9.808E+00	DCF1(8)
-1	Bi-215 (Source: no data)	0.000E+00	-2.000E+00	DCF1(9)
-1	Fr-223 (Source: FGR 12)	1.980E-01	1.980E-01	DCF1(10)
-1	Hg-206 (Source: no data)	0.000E+00	-2.000E+00	DCF1(11)
-1	Pa-231 (Source: FGR 12)	1.906E-01	1.906E-01	DCF1(12)
-1	Pa-234 (Source: FGR 12)	1.155E+01	1.155E+01	DCF1(13)
-1	Pa-234m (Source: FGR 12)	8.967E-02	8.967E-02	DCF1(14)
-1	Pb-210 (Source: FGR 12)	2.447E-03	2.447E-03	DCF1(15)
-1	Pb-211 (Source: FGR 12)	3.064E-01	3.064E-01	DCF1(16)
-1	Pb-212 (Source: FGR 12)	7.043E-01	7.043E-01	DCF1(17)
-1	Pb-214 (Source: FGR 12)	1.341E+00	1.341E+00	DCF1(18)
-1	Po-210 (Source: FGR 12)	5.231E-05	5.231E-05	DCF1(19)
-1	Po-211 (Source: FGR 12)	4.764E-02	4.764E-02	DCF1(20)
-1	Po-212 (Source: FGR 12)	0.000E+00	0.000E+00	DCF1(21)
-1	Po-214 (Source: FGR 12)	5.138E-04	5.138E-04	DCF1(22)
-1	Po-215 (Source: FGR 12)	1.016E-03	1.016E-03	DCF1(23)
-1	Po-216 (Source: FGR 12)	1.042E-04	1.042E-04	DCF1(24)
-1	Po-218 (Source: FGR 12)	5.642E-05	5.642E-05	DCF1(25)
-1	Ra-223 (Source: FGR 12)	6.034E-01	6.034E-01	DCF1(26)
-1	Ra-224 (Source: FGR 12)	5.119E-02	5.119E-02	DCF1(27)
-1	Ra-226 (Source: FGR 12)	3.176E-02	3.176E-02	DCF1(28)
-1	Ra-228 (Source: FGR 12)	0.000E+00	0.000E+00	DCF1(29)
-1	Rn-218 (Source: FGR 12)	4.540E-03	4.540E-03	DCF1(30)
-1	Rn-219 (Source: FGR 12)	3.083E-01	3.083E-01	DCF1(31)
-1	Rn-220 (Source: FGR 12)	2.298E-03	2.298E-03	DCF1(32)
-1	Rn-222 (Source: FGR 12)	2.354E-03	2.354E-03	DCF1(33)
-1	Th-227 (Source: FGR 12)	5.212E-01	5.212E-01	DCF1(34)
-1	Th-228 (Source: FGR 12)	7.940E-03	7.940E-03	DCF1(35)
-1	Th-230 (Source: FGR 12)	1.209E-03	1.209E-03	DCF1(36)
-1	Th-231 (Source: FGR 12)	3.643E-02	3.643E-02	DCF1(37)
-1	Th-232 (Source: FGR 12)	5.212E-04	5.212E-04	DCF1(38)
-1	Th-234 (Source: FGR 12)	2.410E-02	2.410E-02	DCF1(39)
-1	Tl-206 (Source: FGR 12)	7.697E-03	7.697E-03	DCF1(40)
-1	Tl-207 (Source: FGR 12)	1.980E-02	1.980E-02	DCF1(41)
-1	Tl-208 (Source: FGR 12)	2.298E+01	2.298E+01	DCF1(42)
-1	Tl-210 (Source: no data)	0.000E+00	-2.000E+00	DCF1(43)
-1	U-234 (Source: FGR 12)	4.017E-04	4.017E-04	DCF1(44)
-1	U-235 (Source: FGR 12)	7.211E-01	7.211E-01	DCF1(45)
-1	U-238 (Source: FGR 12)	1.031E-04	1.031E-04	DCF1(46)
-1	Dose conversion factors for inhalation, mrem/pCi:			
-1	Ac-227+D	6.724E+00	6.700E+00	DCF2(1)

ummary : GKP Recreational Visitor - Inhalation
ile : C:\USERS\CLAUDE\DOCUMENTS\0 GKP DOSE\RESRAD CW\GKP RECREATIONAL VISITOR- INHALATION R1.RAD

Dose Conversion Factor (and Related) Parameter Summary (continued)
Dose Library: FGR 11

enu	Parameter	Current Value#	Base Case*	Parameter Name
-1	Ac-227+D1	6.724E+00	6.700E+00	DCF2(2)
-1	Ac-227+D2	6.708E+00	6.700E+00	DCF2(3)
-1	Ac-227+D3	6.708E+00	6.700E+00	DCF2(4)
-1	Ac-227+D4	6.700E+00	6.700E+00	DCF2(5)
-1	Ac-227+D5	6.700E+00	6.700E+00	DCF2(6)
-1	Pa-231	1.280E+00	1.280E+00	DCF2(7)
-1	Pb-210+D	2.320E-02	1.360E-02	DCF2(13)
-1	Pb-210+D1	1.380E-02	1.360E-02	DCF2(14)
-1	Pb-210+D2	1.360E-02	1.360E-02	DCF2(15)
-1	Ra-226+D	8.594E-03	8.580E-03	DCF2(16)
-1	Ra-226+D1	8.594E-03	8.580E-03	DCF2(19)
-1	Ra-226+D2	8.587E-03	8.580E-03	DCF2(22)
-1	Ra-226+D3	8.587E-03	8.580E-03	DCF2(25)
-1	Ra-226+D4	8.580E-03	8.580E-03	DCF2(28)
-1	Ra-228+D	5.078E-03	4.770E-03	DCF2(31)
-1	Th-228+D	3.454E-01	3.420E-01	DCF2(32)
-1	Th-230	3.260E-01	3.260E-01	DCF2(33)
-1	Th-232	1.640E+00	1.640E+00	DCF2(48)
-1	U-234	1.320E-01	1.320E-01	DCF2(49)
-1	U-235+D	1.230E-01	1.230E-01	DCF2(64)
-1	U-238	1.180E-01	1.180E-01	DCF2(70)
-1	U-238+D	1.180E-01	1.180E-01	DCF2(71)
-1	U-238+D1	1.180E-01	1.180E-01	DCF2(86)
-1	Dose conversion factors for ingestion, mrem/pCi:			
-1	Ac-227+D	1.480E-02	1.410E-02	DCF3(1)
-1	Ac-227+D1	1.480E-02	1.410E-02	DCF3(2)
-1	Ac-227+D2	1.477E-02	1.410E-02	DCF3(3)
-1	Ac-227+D3	1.477E-02	1.410E-02	DCF3(4)
-1	Ac-227+D4	1.411E-02	1.410E-02	DCF3(5)
-1	Ac-227+D5	1.411E-02	1.410E-02	DCF3(6)
-1	Pa-231	1.060E-02	1.060E-02	DCF3(7)
-1	Pb-210+D	7.276E-03	5.370E-03	DCF3(13)
-1	Pb-210+D1	5.376E-03	5.370E-03	DCF3(14)
-1	Pb-210+D2	5.370E-03	5.370E-03	DCF3(15)
-1	Ra-226+D	1.321E-03	1.320E-03	DCF3(16)
-1	Ra-226+D1	1.321E-03	1.320E-03	DCF3(19)
-1	Ra-226+D2	1.320E-03	1.320E-03	DCF3(22)
-1	Ra-226+D3	1.320E-03	1.320E-03	DCF3(25)
-1	Ra-226+D4	1.320E-03	1.320E-03	DCF3(28)
-1	Ra-228+D	1.442E-03	1.440E-03	DCF3(31)
-1	Th-228+D	8.086E-04	3.960E-04	DCF3(32)
-1	Th-230	5.480E-04	5.480E-04	DCF3(33)
-1	Th-232	2.730E-03	2.730E-03	DCF3(48)
-1	U-234	2.830E-04	2.830E-04	DCF3(49)
-1	U-235+D	2.673E-04	2.660E-04	DCF3(64)
-1	U-238	2.550E-04	2.550E-04	DCF3(70)
-1	U-238+D	2.709E-04	2.550E-04	DCF3(71)
-1	U-238+D1	2.687E-04	2.550E-04	DCF3(86)

ummary : GKP Recreational Visitor - Inhalation
ile : C:\USERS\CLAUDE\DOCUMENTS\0 GKP DOSE\RESRAD CW\GKP RECREATIONAL VISITOR- INHALATION R1.RAD

Dose Conversion Factor (and Related) Parameter Summary (continued)
Dose Library: FGR 11

enu	Parameter	Current Value#	Base Case*	Parameter Name
-34	Food transfer factors:			
-34	Ac-227+D , plant/soil concentration ratio, dimensionless	2.500E-03	2.500E-03	RTF(1,1)
-34	Ac-227+D , beef/livestock-intake ratio, (pCi/kg)/(pCi/d)	2.000E-05	2.000E-05	RTF(1,2)
-34	Ac-227+D , milk/livestock-intake ratio, (pCi/L)/(pCi/d)	2.000E-05	2.000E-05	RTF(1,3)
-34				
-34	Ac-227+D1 , plant/soil concentration ratio, dimensionless	2.500E-03	2.500E-03	RTF(2,1)
-34	Ac-227+D1 , beef/livestock-intake ratio, (pCi/kg)/(pCi/d)	2.000E-05	2.000E-05	RTF(2,2)
-34	Ac-227+D1 , milk/livestock-intake ratio, (pCi/L)/(pCi/d)	2.000E-05	2.000E-05	RTF(2,3)
-34				
-34	Ac-227+D2 , plant/soil concentration ratio, dimensionless	2.500E-03	2.500E-03	RTF(3,1)
-34	Ac-227+D2 , beef/livestock-intake ratio, (pCi/kg)/(pCi/d)	2.000E-05	2.000E-05	RTF(3,2)
-34	Ac-227+D2 , milk/livestock-intake ratio, (pCi/L)/(pCi/d)	2.000E-05	2.000E-05	RTF(3,3)
-34				
-34	Ac-227+D3 , plant/soil concentration ratio, dimensionless	2.500E-03	2.500E-03	RTF(4,1)
-34	Ac-227+D3 , beef/livestock-intake ratio, (pCi/kg)/(pCi/d)	2.000E-05	2.000E-05	RTF(4,2)
-34	Ac-227+D3 , milk/livestock-intake ratio, (pCi/L)/(pCi/d)	2.000E-05	2.000E-05	RTF(4,3)
-34				
-34	Ac-227+D4 , plant/soil concentration ratio, dimensionless	2.500E-03	2.500E-03	RTF(5,1)
-34	Ac-227+D4 , beef/livestock-intake ratio, (pCi/kg)/(pCi/d)	2.000E-05	2.000E-05	RTF(5,2)
-34	Ac-227+D4 , milk/livestock-intake ratio, (pCi/L)/(pCi/d)	2.000E-05	2.000E-05	RTF(5,3)
-34				
-34	Ac-227+D5 , plant/soil concentration ratio, dimensionless	2.500E-03	2.500E-03	RTF(6,1)
-34	Ac-227+D5 , beef/livestock-intake ratio, (pCi/kg)/(pCi/d)	2.000E-05	2.000E-05	RTF(6,2)
-34	Ac-227+D5 , milk/livestock-intake ratio, (pCi/L)/(pCi/d)	2.000E-05	2.000E-05	RTF(6,3)
-34				
-34	Pa-231 , plant/soil concentration ratio, dimensionless	1.000E-02	1.000E-02	RTF(7,1)
-34	Pa-231 , beef/livestock-intake ratio, (pCi/kg)/(pCi/d)	5.000E-03	5.000E-03	RTF(7,2)
-34	Pa-231 , milk/livestock-intake ratio, (pCi/L)/(pCi/d)	5.000E-06	5.000E-06	RTF(7,3)
-34				
-34	Pb-210+D , plant/soil concentration ratio, dimensionless	1.000E-02	1.000E-02	RTF(13,1)
-34	Pb-210+D , beef/livestock-intake ratio, (pCi/kg)/(pCi/d)	8.000E-04	8.000E-04	RTF(13,2)
-34	Pb-210+D , milk/livestock-intake ratio, (pCi/L)/(pCi/d)	3.000E-04	3.000E-04	RTF(13,3)
-34				
-34	Pb-210+D1 , plant/soil concentration ratio, dimensionless	1.000E-02	1.000E-02	RTF(14,1)
-34	Pb-210+D1 , beef/livestock-intake ratio, (pCi/kg)/(pCi/d)	8.000E-04	8.000E-04	RTF(14,2)
-34	Pb-210+D1 , milk/livestock-intake ratio, (pCi/L)/(pCi/d)	3.000E-04	3.000E-04	RTF(14,3)
-34				
-34	Pb-210+D2 , plant/soil concentration ratio, dimensionless	1.000E-02	1.000E-02	RTF(15,1)
-34	Pb-210+D2 , beef/livestock-intake ratio, (pCi/kg)/(pCi/d)	8.000E-04	8.000E-04	RTF(15,2)
-34	Pb-210+D2 , milk/livestock-intake ratio, (pCi/L)/(pCi/d)	3.000E-04	3.000E-04	RTF(15,3)
-34				
-34	Ra-226+D , plant/soil concentration ratio, dimensionless	4.000E-02	4.000E-02	RTF(16,1)
-34	Ra-226+D , beef/livestock-intake ratio, (pCi/kg)/(pCi/d)	1.000E-03	1.000E-03	RTF(16,2)
-34	Ra-226+D , milk/livestock-intake ratio, (pCi/L)/(pCi/d)	1.000E-03	1.000E-03	RTF(16,3)
-34				
-34	Ra-226+D1 , plant/soil concentration ratio, dimensionless	4.000E-02	4.000E-02	RTF(19,1)
-34	Ra-226+D1 , beef/livestock-intake ratio, (pCi/kg)/(pCi/d)	1.000E-03	1.000E-03	RTF(19,2)
-34	Ra-226+D1 , milk/livestock-intake ratio, (pCi/L)/(pCi/d)	1.000E-03	1.000E-03	RTF(19,3)
-34				

Dose Conversion Factor (and Related) Parameter Summary (continued)
Dose Library: FGR 11

enu	Parameter	Current Value#	Base Case*	Parameter Name
-34	Ra-226+D2 , plant/soil concentration ratio, dimensionless	4.000E-02	4.000E-02	RTF(22,1)
-34	Ra-226+D2 , beef/livestock-intake ratio, (pCi/kg)/(pCi/d)	1.000E-03	1.000E-03	RTF(22,2)
-34	Ra-226+D2 , milk/livestock-intake ratio, (pCi/L)/(pCi/d)	1.000E-03	1.000E-03	RTF(22,3)
-34				
-34	Ra-226+D3 , plant/soil concentration ratio, dimensionless	4.000E-02	4.000E-02	RTF(25,1)
-34	Ra-226+D3 , beef/livestock-intake ratio, (pCi/kg)/(pCi/d)	1.000E-03	1.000E-03	RTF(25,2)
-34	Ra-226+D3 , milk/livestock-intake ratio, (pCi/L)/(pCi/d)	1.000E-03	1.000E-03	RTF(25,3)
-34				
-34	Ra-226+D4 , plant/soil concentration ratio, dimensionless	4.000E-02	4.000E-02	RTF(28,1)
-34	Ra-226+D4 , beef/livestock-intake ratio, (pCi/kg)/(pCi/d)	1.000E-03	1.000E-03	RTF(28,2)
-34	Ra-226+D4 , milk/livestock-intake ratio, (pCi/L)/(pCi/d)	1.000E-03	1.000E-03	RTF(28,3)
-34				
-34	Ra-228+D , plant/soil concentration ratio, dimensionless	4.000E-02	4.000E-02	RTF(31,1)
-34	Ra-228+D , beef/livestock-intake ratio, (pCi/kg)/(pCi/d)	1.000E-03	1.000E-03	RTF(31,2)
-34	Ra-228+D , milk/livestock-intake ratio, (pCi/L)/(pCi/d)	1.000E-03	1.000E-03	RTF(31,3)
-34				
-34	Th-228+D , plant/soil concentration ratio, dimensionless	1.000E-03	1.000E-03	RTF(32,1)
-34	Th-228+D , beef/livestock-intake ratio, (pCi/kg)/(pCi/d)	1.000E-04	1.000E-04	RTF(32,2)
-34	Th-228+D , milk/livestock-intake ratio, (pCi/L)/(pCi/d)	5.000E-06	5.000E-06	RTF(32,3)
-34				
-34	Th-230 , plant/soil concentration ratio, dimensionless	1.000E-03	1.000E-03	RTF(33,1)
-34	Th-230 , beef/livestock-intake ratio, (pCi/kg)/(pCi/d)	1.000E-04	1.000E-04	RTF(33,2)
-34	Th-230 , milk/livestock-intake ratio, (pCi/L)/(pCi/d)	5.000E-06	5.000E-06	RTF(33,3)
-34				
-34	Th-232 , plant/soil concentration ratio, dimensionless	1.000E-03	1.000E-03	RTF(48,1)
-34	Th-232 , beef/livestock-intake ratio, (pCi/kg)/(pCi/d)	1.000E-04	1.000E-04	RTF(48,2)
-34	Th-232 , milk/livestock-intake ratio, (pCi/L)/(pCi/d)	5.000E-06	5.000E-06	RTF(48,3)
-34				
-34	U-234 , plant/soil concentration ratio, dimensionless	2.500E-03	2.500E-03	RTF(49,1)
-34	U-234 , beef/livestock-intake ratio, (pCi/kg)/(pCi/d)	3.400E-04	3.400E-04	RTF(49,2)
-34	U-234 , milk/livestock-intake ratio, (pCi/L)/(pCi/d)	6.000E-04	6.000E-04	RTF(49,3)
-34				
-34	U-235+D , plant/soil concentration ratio, dimensionless	2.500E-03	2.500E-03	RTF(64,1)
-34	U-235+D , beef/livestock-intake ratio, (pCi/kg)/(pCi/d)	3.400E-04	3.400E-04	RTF(64,2)
-34	U-235+D , milk/livestock-intake ratio, (pCi/L)/(pCi/d)	6.000E-04	6.000E-04	RTF(64,3)
-34				
-34	U-238 , plant/soil concentration ratio, dimensionless	2.500E-03	2.500E-03	RTF(70,1)
-34	U-238 , beef/livestock-intake ratio, (pCi/kg)/(pCi/d)	3.400E-04	3.400E-04	RTF(70,2)
-34	U-238 , milk/livestock-intake ratio, (pCi/L)/(pCi/d)	6.000E-04	6.000E-04	RTF(70,3)
-34				
-34	U-238+D , plant/soil concentration ratio, dimensionless	2.500E-03	2.500E-03	RTF(71,1)
-34	U-238+D , beef/livestock-intake ratio, (pCi/kg)/(pCi/d)	3.400E-04	3.400E-04	RTF(71,2)
-34	U-238+D , milk/livestock-intake ratio, (pCi/L)/(pCi/d)	6.000E-04	6.000E-04	RTF(71,3)
-34				
-34	U-238+D1 , plant/soil concentration ratio, dimensionless	2.500E-03	2.500E-03	RTF(86,1)
-34	U-238+D1 , beef/livestock-intake ratio, (pCi/kg)/(pCi/d)	3.400E-04	3.400E-04	RTF(86,2)
-34	U-238+D1 , milk/livestock-intake ratio, (pCi/L)/(pCi/d)	6.000E-04	6.000E-04	RTF(86,3)
-34				

Dose Conversion Factor (and Related) Parameter Summary (continued)

Dose Library: FGR 11

enu	Parameter	Current Value#	Base Case*	Parameter Name
-5	Bioaccumulation factors, fresh water, L/kg:			
-5	Ac-227+D , fish	1.500E+01	1.500E+01	BIOFAC(1,1)
-5	Ac-227+D , crustacea and mollusks	1.000E+03	1.000E+03	BIOFAC(1,2)
-5				
-5	Ac-227+D1 , fish	1.500E+01	1.500E+01	BIOFAC(2,1)
-5	Ac-227+D1 , crustacea and mollusks	1.000E+03	1.000E+03	BIOFAC(2,2)
-5				
-5	Ac-227+D2 , fish	1.500E+01	1.500E+01	BIOFAC(3,1)
-5	Ac-227+D2 , crustacea and mollusks	1.000E+03	1.000E+03	BIOFAC(3,2)
-5				
-5	Ac-227+D3 , fish	1.500E+01	1.500E+01	BIOFAC(4,1)
-5	Ac-227+D3 , crustacea and mollusks	1.000E+03	1.000E+03	BIOFAC(4,2)
-5				
-5	Ac-227+D4 , fish	1.500E+01	1.500E+01	BIOFAC(5,1)
-5	Ac-227+D4 , crustacea and mollusks	1.000E+03	1.000E+03	BIOFAC(5,2)
-5				
-5	Ac-227+D5 , fish	1.500E+01	1.500E+01	BIOFAC(6,1)
-5	Ac-227+D5 , crustacea and mollusks	1.000E+03	1.000E+03	BIOFAC(6,2)
-5				
-5	Pa-231 , fish	1.000E+01	1.000E+01	BIOFAC(7,1)
-5	Pa-231 , crustacea and mollusks	1.100E+02	1.100E+02	BIOFAC(7,2)
-5				
-5	Pb-210+D , fish	3.000E+02	3.000E+02	BIOFAC(13,1)
-5	Pb-210+D , crustacea and mollusks	1.000E+02	1.000E+02	BIOFAC(13,2)
-5				
-5	Pb-210+D1 , fish	3.000E+02	3.000E+02	BIOFAC(14,1)
-5	Pb-210+D1 , crustacea and mollusks	1.000E+02	1.000E+02	BIOFAC(14,2)
-5				
-5	Pb-210+D2 , fish	3.000E+02	3.000E+02	BIOFAC(15,1)
-5	Pb-210+D2 , crustacea and mollusks	1.000E+02	1.000E+02	BIOFAC(15,2)
-5				
-5	Ra-226+D , fish	5.000E+01	5.000E+01	BIOFAC(16,1)
-5	Ra-226+D , crustacea and mollusks	2.500E+02	2.500E+02	BIOFAC(16,2)
-5				
-5	Ra-226+D1 , fish	5.000E+01	5.000E+01	BIOFAC(19,1)
-5	Ra-226+D1 , crustacea and mollusks	2.500E+02	2.500E+02	BIOFAC(19,2)
-5				
-5	Ra-226+D2 , fish	5.000E+01	5.000E+01	BIOFAC(22,1)
-5	Ra-226+D2 , crustacea and mollusks	2.500E+02	2.500E+02	BIOFAC(22,2)
-5				
-5	Ra-226+D3 , fish	5.000E+01	5.000E+01	BIOFAC(25,1)
-5	Ra-226+D3 , crustacea and mollusks	2.500E+02	2.500E+02	BIOFAC(25,2)
-5				
-5	Ra-226+D4 , fish	5.000E+01	5.000E+01	BIOFAC(28,1)
-5	Ra-226+D4 , crustacea and mollusks	2.500E+02	2.500E+02	BIOFAC(28,2)
-5				
-5	Ra-228+D , fish	5.000E+01	5.000E+01	BIOFAC(31,1)
-5	Ra-228+D , crustacea and mollusks	2.500E+02	2.500E+02	BIOFAC(31,2)
-5				

Dose Conversion Factor (and Related) Parameter Summary (continued)

Dose Library: FGR 11

enu	Parameter	Current Value#	Base Case*	Parameter Name
-5	Th-228+D , fish	1.000E+02	1.000E+02	BIOFAC(32,1)
-5	Th-228+D , crustacea and mollusks	5.000E+02	5.000E+02	BIOFAC(32,2)
-5				
-5	Th-230 , fish	1.000E+02	1.000E+02	BIOFAC(33,1)
-5	Th-230 , crustacea and mollusks	5.000E+02	5.000E+02	BIOFAC(33,2)
-5				
-5	Th-232 , fish	1.000E+02	1.000E+02	BIOFAC(48,1)
-5	Th-232 , crustacea and mollusks	5.000E+02	5.000E+02	BIOFAC(48,2)
-5				
-5	U-234 , fish	1.000E+01	1.000E+01	BIOFAC(49,1)
-5	U-234 , crustacea and mollusks	6.000E+01	6.000E+01	BIOFAC(49,2)
-5				
-5	U-235+D , fish	1.000E+01	1.000E+01	BIOFAC(64,1)
-5	U-235+D , crustacea and mollusks	6.000E+01	6.000E+01	BIOFAC(64,2)
-5				
-5	U-238 , fish	1.000E+01	1.000E+01	BIOFAC(70,1)
-5	U-238 , crustacea and mollusks	6.000E+01	6.000E+01	BIOFAC(70,2)
-5				
-5	U-238+D , fish	1.000E+01	1.000E+01	BIOFAC(71,1)
-5	U-238+D , crustacea and mollusks	6.000E+01	6.000E+01	BIOFAC(71,2)
-5				
-5	U-238+D1 , fish	1.000E+01	1.000E+01	BIOFAC(86,1)
-5	U-238+D1 , crustacea and mollusks	6.000E+01	6.000E+01	BIOFAC(86,2)
-5				

For DCF1(xxx) only, factors are for infinite depth & area. See ETFG table in Ground Pathway of Detailed Report.

Base Case means Default.Lib w/o Associate Nuclide contributions.

ummary : GKP Recreational Visitor - Inhalation
ile : C:\USERS\CLAUDE\DOCUMENTS\0 GKP DOSE\RESRAD CW\GKP RECREATIONAL VISITOR- INHALATION R1.RAD

Site-Specific Parameter Summary

enu	Parameter	User Input	Default	Used by RESRAD (If different from user input)	Parameter Name
011	Area of contaminated zone (m**2)	2.000E+02	1.000E+04	---	AREA
011	Thickness of contaminated zone (m)	1.500E-01	2.000E+00	---	THICK0
011	Fraction of contamination that is submerged	0.000E+00	0.000E+00	---	SUBMFRACT
011	Length parallel to aquifer flow (m)	1.000E+02	1.000E+02	---	LCZPAQ
011	Basic radiation dose limit (mrem/yr)	2.500E+01	3.000E+01	---	BRDL
011	Time since placement of material (yr)	0.000E+00	0.000E+00	---	TI
011	Times for calculations (yr)	1.000E+00	1.000E+00	---	T(2)
011	Times for calculations (yr)	3.000E+00	3.000E+00	---	T(3)
011	Times for calculations (yr)	1.000E+01	1.000E+01	---	T(4)
011	Times for calculations (yr)	3.000E+01	3.000E+01	---	T(5)
011	Times for calculations (yr)	1.000E+02	1.000E+02	---	T(6)
011	Times for calculations (yr)	3.000E+02	3.000E+02	---	T(7)
011	Times for calculations (yr)	1.000E+03	1.000E+03	---	T(8)
011	Times for calculations (yr)	not used	0.000E+00	---	T(9)
011	Times for calculations (yr)	not used	0.000E+00	---	T(10)
012	Initial principal radionuclide (pCi/g): Ra-226	3.650E+01	0.000E+00	---	S1(16)
012	Initial principal radionuclide (pCi/g): Th-232	2.400E+00	0.000E+00	---	S1(48)
012	Initial principal radionuclide (pCi/g): U-234	1.390E+01	0.000E+00	---	S1(49)
012	Initial principal radionuclide (pCi/g): U-235	8.400E-01	0.000E+00	---	S1(64)
012	Initial principal radionuclide (pCi/g): U-238	1.390E+01	0.000E+00	---	S1(70)
012	Concentration in groundwater (pCi/L): Ra-226	not used	0.000E+00	---	W1(16)
012	Concentration in groundwater (pCi/L): Th-232	not used	0.000E+00	---	W1(48)
012	Concentration in groundwater (pCi/L): U-234	not used	0.000E+00	---	W1(49)
012	Concentration in groundwater (pCi/L): U-235	not used	0.000E+00	---	W1(64)
012	Concentration in groundwater (pCi/L): U-238	not used	0.000E+00	---	W1(70)
013	Cover depth (m)	0.000E+00	0.000E+00	---	COVER0
013	Density of cover material (g/cm**3)	not used	1.500E+00	---	DENSCV
013	Cover depth erosion rate (m/yr)	not used	1.000E-03	---	VCV
013	Density of contaminated zone (g/cm**3)	1.500E+00	1.500E+00	---	DENSCZ
013	Contaminated zone erosion rate (m/yr)	1.000E-03	1.000E-03	---	VCZ
013	Contaminated zone total porosity	4.000E-01	4.000E-01	---	TPCZ
013	Contaminated zone field capacity	2.000E-01	2.000E-01	---	FCCZ
013	Contaminated zone hydraulic conductivity (m/yr)	1.000E+01	1.000E+01	---	HCCZ
013	Contaminated zone b parameter	5.300E+00	5.300E+00	---	BCZ
013	Average annual wind speed (m/sec)	2.000E+00	2.000E+00	---	WIND
013	Humidity in air (g/m**3)	not used	8.000E+00	---	HUMID
013	Evapotranspiration coefficient	5.000E-01	5.000E-01	---	EVAPTR
013	Precipitation (m/yr)	1.000E+00	1.000E+00	---	PRECIP
013	Irrigation (m/yr)	2.000E-01	2.000E-01	---	RI
013	Irrigation mode	overhead	overhead	---	IDITCH
013	Runoff coefficient	2.000E-01	2.000E-01	---	RUNOFF
013	Watershed area for nearby stream or pond (m**2)	1.000E+06	1.000E+06	---	WAREA
013	Accuracy for water/soil computations	1.000E-03	1.000E-03	---	EPS
014	Density of saturated zone (g/cm**3)	1.500E+00	1.500E+00	---	DENSAQ
014	Saturated zone total porosity	4.000E-01	4.000E-01	---	TPSZ
014	Saturated zone effective porosity	2.000E-01	2.000E-01	---	EPSZ
014	Saturated zone field capacity	2.000E-01	2.000E-01	---	FCSZ

Site-Specific Parameter Summary (continued)

enu	Parameter	User Input	Default	Used by RESRAD (If different from user input)	Parameter Name
014	Saturated zone hydraulic conductivity (m/yr)	1.000E+02	1.000E+02	---	HCSZ
014	Saturated zone hydraulic gradient	2.000E-02	2.000E-02	---	HGWT
014	Saturated zone b parameter	5.300E+00	5.300E+00	---	BSZ
014	Water table drop rate (m/yr)	1.000E-03	1.000E-03	---	VWT
014	Well pump intake depth (m below water table)	1.000E+01	1.000E+01	---	DWIBWT
014	Model: Nondispersion (ND) or Mass-Balance (MB)	ND	ND	---	MODEL
014	Well pumping rate (m**3/yr)	2.500E+02	2.500E+02	---	UW
015	Number of unsaturated zone strata	1	1	---	NS
015	Unsat. zone 1, thickness (m)	4.000E+00	4.000E+00	---	H(1)
015	Unsat. zone 1, soil density (g/cm**3)	1.500E+00	1.500E+00	---	DENSUZ(1)
015	Unsat. zone 1, total porosity	4.000E-01	4.000E-01	---	TPUZ(1)
015	Unsat. zone 1, effective porosity	2.000E-01	2.000E-01	---	EPUZ(1)
015	Unsat. zone 1, field capacity	2.000E-01	2.000E-01	---	FCUZ(1)
015	Unsat. zone 1, soil-specific b parameter	5.300E+00	5.300E+00	---	BUZ(1)
015	Unsat. zone 1, hydraulic conductivity (m/yr)	1.000E+01	1.000E+01	---	HCUZ(1)
016	Distribution coefficients for Ra-226				
016	Contaminated zone (cm**3/g)	7.000E+01	7.000E+01	---	DCNUCC(16)
016	Unsaturated zone 1 (cm**3/g)	7.000E+01	7.000E+01	---	DCNUCU(16,1)
016	Saturated zone (cm**3/g)	7.000E+01	7.000E+01	---	DCNUCS(16)
016	Leach rate (/yr)	0.000E+00	0.000E+00	3.165E-02	ALEACH(16)
016	Solubility constant	0.000E+00	0.000E+00	not used	SOLUBK(16)
016	Distribution coefficients for Th-232				
016	Contaminated zone (cm**3/g)	6.000E+04	6.000E+04	---	DCNUCC(48)
016	Unsaturated zone 1 (cm**3/g)	6.000E+04	6.000E+04	---	DCNUCU(48,1)
016	Saturated zone (cm**3/g)	6.000E+04	6.000E+04	---	DCNUCS(48)
016	Leach rate (/yr)	0.000E+00	0.000E+00	3.704E-05	ALEACH(48)
016	Solubility constant	0.000E+00	0.000E+00	not used	SOLUBK(48)
016	Distribution coefficients for U-234				
016	Contaminated zone (cm**3/g)	5.000E+01	5.000E+01	---	DCNUCC(49)
016	Unsaturated zone 1 (cm**3/g)	5.000E+01	5.000E+01	---	DCNUCU(49,1)
016	Saturated zone (cm**3/g)	5.000E+01	5.000E+01	---	DCNUCS(49)
016	Leach rate (/yr)	0.000E+00	0.000E+00	4.426E-02	ALEACH(49)
016	Solubility constant	0.000E+00	0.000E+00	not used	SOLUBK(49)
016	Distribution coefficients for U-235				
016	Contaminated zone (cm**3/g)	5.000E+01	5.000E+01	---	DCNUCC(64)
016	Unsaturated zone 1 (cm**3/g)	5.000E+01	5.000E+01	---	DCNUCU(64,1)
016	Saturated zone (cm**3/g)	5.000E+01	5.000E+01	---	DCNUCS(64)
016	Leach rate (/yr)	0.000E+00	0.000E+00	4.426E-02	ALEACH(64)
016	Solubility constant	0.000E+00	0.000E+00	not used	SOLUBK(64)
016	Distribution coefficients for U-238				
016	Contaminated zone (cm**3/g)	5.000E+01	5.000E+01	---	DCNUCC(70)
016	Unsaturated zone 1 (cm**3/g)	5.000E+01	5.000E+01	---	DCNUCU(70,1)
016	Saturated zone (cm**3/g)	5.000E+01	5.000E+01	---	DCNUCS(70)
016	Leach rate (/yr)	0.000E+00	0.000E+00	4.426E-02	ALEACH(70)
016	Solubility constant	0.000E+00	0.000E+00	not used	SOLUBK(70)

Site-Specific Parameter Summary (continued)

enu	Parameter	User Input	Default	Used by RESRAD (If different from user input)	Parameter Name
016	Distribution coefficients for daughter Ac-227				
016	Contaminated zone (cm**3/g)	2.000E+01	2.000E+01	---	DCNUCC(1)
016	Unsaturated zone 1 (cm**3/g)	2.000E+01	2.000E+01	---	DCNUCU(1,1)
016	Saturated zone (cm**3/g)	2.000E+01	2.000E+01	---	DCNUCS(1)
016	Leach rate (/yr)	0.000E+00	0.000E+00	1.099E-01	ALEACH(1)
016	Solubility constant	0.000E+00	0.000E+00	not used	SOLUBK(1)
016	Distribution coefficients for daughter Pa-231				
016	Contaminated zone (cm**3/g)	5.000E+01	5.000E+01	---	DCNUCC(7)
016	Unsaturated zone 1 (cm**3/g)	5.000E+01	5.000E+01	---	DCNUCU(7,1)
016	Saturated zone (cm**3/g)	5.000E+01	5.000E+01	---	DCNUCS(7)
016	Leach rate (/yr)	0.000E+00	0.000E+00	4.426E-02	ALEACH(7)
016	Solubility constant	0.000E+00	0.000E+00	not used	SOLUBK(7)
016	Distribution coefficients for daughter Pb-210				
016	Contaminated zone (cm**3/g)	1.000E+02	1.000E+02	---	DCNUCC(13)
016	Unsaturated zone 1 (cm**3/g)	1.000E+02	1.000E+02	---	DCNUCU(13,1)
016	Saturated zone (cm**3/g)	1.000E+02	1.000E+02	---	DCNUCS(13)
016	Leach rate (/yr)	0.000E+00	0.000E+00	2.217E-02	ALEACH(13)
016	Solubility constant	0.000E+00	0.000E+00	not used	SOLUBK(13)
016	Distribution coefficients for daughter Ra-228				
016	Contaminated zone (cm**3/g)	7.000E+01	7.000E+01	---	DCNUCC(31)
016	Unsaturated zone 1 (cm**3/g)	7.000E+01	7.000E+01	---	DCNUCU(31,1)
016	Saturated zone (cm**3/g)	7.000E+01	7.000E+01	---	DCNUCS(31)
016	Leach rate (/yr)	0.000E+00	0.000E+00	3.165E-02	ALEACH(31)
016	Solubility constant	0.000E+00	0.000E+00	not used	SOLUBK(31)
016	Distribution coefficients for daughter Th-228				
016	Contaminated zone (cm**3/g)	6.000E+04	6.000E+04	---	DCNUCC(32)
016	Unsaturated zone 1 (cm**3/g)	6.000E+04	6.000E+04	---	DCNUCU(32,1)
016	Saturated zone (cm**3/g)	6.000E+04	6.000E+04	---	DCNUCS(32)
016	Leach rate (/yr)	0.000E+00	0.000E+00	3.704E-05	ALEACH(32)
016	Solubility constant	0.000E+00	0.000E+00	not used	SOLUBK(32)
016	Distribution coefficients for daughter Th-230				
016	Contaminated zone (cm**3/g)	6.000E+04	6.000E+04	---	DCNUCC(33)
016	Unsaturated zone 1 (cm**3/g)	6.000E+04	6.000E+04	---	DCNUCU(33,1)
016	Saturated zone (cm**3/g)	6.000E+04	6.000E+04	---	DCNUCS(33)
016	Leach rate (/yr)	0.000E+00	0.000E+00	3.704E-05	ALEACH(33)
016	Solubility constant	0.000E+00	0.000E+00	not used	SOLUBK(33)
017	Inhalation rate (m**3/yr)	2.000E+04	8.400E+03	---	INHALR
017	Mass loading for inhalation (g/m**3)	1.000E-04	1.000E-04	---	MLINH
017	Exposure duration	3.000E+01	3.000E+01	---	ED
017	Shielding factor, inhalation	4.000E-01	4.000E-01	---	SHF3
017	Shielding factor, external gamma	not used	7.000E-01	---	SHF1
017	Fraction of time spent indoors	0.000E+00	5.000E-01	---	FIND
017	Fraction of time spent outdoors (on site)	2.850E-02	2.500E-01	---	FOTD
017	Shape factor flag, external gamma	not used	1.000E+00	>0 shows circular AREA.	FS

Site-Specific Parameter Summary (continued)

enu	Parameter	User Input	Default	Used by RESRAD (If different from user input)	Parameter Name
017	Radii of shape factor array (used if FS = -1):				
017	Outer annular radius (m), ring 1:	not used	5.000E+01	---	RAD_SHAPE(1)
017	Outer annular radius (m), ring 2:	not used	7.071E+01	---	RAD_SHAPE(2)
017	Outer annular radius (m), ring 3:	not used	0.000E+00	---	RAD_SHAPE(3)
017	Outer annular radius (m), ring 4:	not used	0.000E+00	---	RAD_SHAPE(4)
017	Outer annular radius (m), ring 5:	not used	0.000E+00	---	RAD_SHAPE(5)
017	Outer annular radius (m), ring 6:	not used	0.000E+00	---	RAD_SHAPE(6)
017	Outer annular radius (m), ring 7:	not used	0.000E+00	---	RAD_SHAPE(7)
017	Outer annular radius (m), ring 8:	not used	0.000E+00	---	RAD_SHAPE(8)
017	Outer annular radius (m), ring 9:	not used	0.000E+00	---	RAD_SHAPE(9)
017	Outer annular radius (m), ring 10:	not used	0.000E+00	---	RAD_SHAPE(10)
017	Outer annular radius (m), ring 11:	not used	0.000E+00	---	RAD_SHAPE(11)
017	Outer annular radius (m), ring 12:	not used	0.000E+00	---	RAD_SHAPE(12)
017	Fractions of annular areas within AREA:				
017	Ring 1	not used	1.000E+00	---	FRACA(1)
017	Ring 2	not used	2.732E-01	---	FRACA(2)
017	Ring 3	not used	0.000E+00	---	FRACA(3)
017	Ring 4	not used	0.000E+00	---	FRACA(4)
017	Ring 5	not used	0.000E+00	---	FRACA(5)
017	Ring 6	not used	0.000E+00	---	FRACA(6)
017	Ring 7	not used	0.000E+00	---	FRACA(7)
017	Ring 8	not used	0.000E+00	---	FRACA(8)
017	Ring 9	not used	0.000E+00	---	FRACA(9)
017	Ring 10	not used	0.000E+00	---	FRACA(10)
017	Ring 11	not used	0.000E+00	---	FRACA(11)
017	Ring 12	not used	0.000E+00	---	FRACA(12)
018	Fruits, vegetables and grain consumption (kg/yr)	not used	1.600E+02	---	DIET(1)
018	Leafy vegetable consumption (kg/yr)	not used	1.400E+01	---	DIET(2)
018	Milk consumption (L/yr)	not used	9.200E+01	---	DIET(3)
018	Meat and poultry consumption (kg/yr)	not used	6.300E+01	---	DIET(4)
018	Fish consumption (kg/yr)	not used	5.400E+00	---	DIET(5)
018	Other seafood consumption (kg/yr)	not used	9.000E-01	---	DIET(6)
018	Soil ingestion rate (g/yr)	not used	3.650E+01	---	SOIL
018	Drinking water intake (L/yr)	not used	5.100E+02	---	DWI
018	Contamination fraction of drinking water	not used	1.000E+00	---	FDW
018	Contamination fraction of household water	1.000E+00	1.000E+00	---	FHHW
018	Contamination fraction of livestock water	not used	1.000E+00	---	FLW
018	Contamination fraction of irrigation water	not used	1.000E+00	---	FIRW
018	Contamination fraction of aquatic food	not used	5.000E-01	---	FR9
018	Contamination fraction of plant food	not used	-1	---	FPLANT
018	Contamination fraction of meat	not used	-1	---	FMEAT
018	Contamination fraction of milk	not used	-1	---	FMILK
019	Livestock fodder intake for meat (kg/day)	not used	6.800E+01	---	LFI5
019	Livestock fodder intake for milk (kg/day)	not used	5.500E+01	---	LFI6
019	Livestock water intake for meat (L/day)	not used	5.000E+01	---	LWI5
019	Livestock water intake for milk (L/day)	not used	1.600E+02	---	LWI6
019	Livestock soil intake (kg/day)	not used	5.000E-01	---	LSI

Site-Specific Parameter Summary (continued)

enu	Parameter	User Input	Default	Used by RESRAD (If different from user input)	Parameter Name
019	Mass loading for foliar deposition (g/m**3)	not used	1.000E-04	---	MLFD
019	Depth of soil mixing layer (m)	1.500E-01	1.500E-01	---	DM
019	Depth of roots (m)	not used	9.000E-01	---	DROOT
019	Drinking water fraction from ground water	not used	1.000E+00	---	FGWDW
019	Household water fraction from ground water	1.000E+00	1.000E+00	---	FGWHH
019	Livestock water fraction from ground water	not used	1.000E+00	---	FGWLW
019	Irrigation fraction from ground water	not used	1.000E+00	---	FGWIR
19B	Wet weight crop yield for Non-Leafy (kg/m**2)	not used	7.000E-01	---	YV(1)
19B	Wet weight crop yield for Leafy (kg/m**2)	not used	1.500E+00	---	YV(2)
19B	Wet weight crop yield for Fodder (kg/m**2)	not used	1.100E+00	---	YV(3)
19B	Growing Season for Non-Leafy (years)	not used	1.700E-01	---	TE(1)
19B	Growing Season for Leafy (years)	not used	2.500E-01	---	TE(2)
19B	Growing Season for Fodder (years)	not used	8.000E-02	---	TE(3)
19B	Translocation Factor for Non-Leafy	not used	1.000E-01	---	TIV(1)
19B	Translocation Factor for Leafy	not used	1.000E+00	---	TIV(2)
19B	Translocation Factor for Fodder	not used	1.000E+00	---	TIV(3)
19B	Dry Foliar Interception Fraction for Non-Leafy	not used	2.500E-01	---	RDRY(1)
19B	Dry Foliar Interception Fraction for Leafy	not used	2.500E-01	---	RDRY(2)
19B	Dry Foliar Interception Fraction for Fodder	not used	2.500E-01	---	RDRY(3)
19B	Wet Foliar Interception Fraction for Non-Leafy	not used	2.500E-01	---	RWET(1)
19B	Wet Foliar Interception Fraction for Leafy	not used	2.500E-01	---	RWET(2)
19B	Wet Foliar Interception Fraction for Fodder	not used	2.500E-01	---	RWET(3)
19B	Weathering Removal Constant for Vegetation	not used	2.000E+01	---	WLAM
14	C-12 concentration in water (g/cm**3)	not used	2.000E-05	---	C12WTR
14	C-12 concentration in contaminated soil (g/g)	not used	3.000E-02	---	C12CZ
14	Fraction of vegetation carbon from soil	not used	2.000E-02	---	CSOIL
14	Fraction of vegetation carbon from air	not used	9.800E-01	---	CAIR
14	C-14 evasion layer thickness in soil (m)	not used	3.000E-01	---	DMC
14	C-14 evasion flux rate from soil (1/sec)	not used	7.000E-07	---	EVSN
14	C-12 evasion flux rate from soil (1/sec)	not used	1.000E-10	---	REVSN
14	Fraction of grain in beef cattle feed	not used	8.000E-01	---	AVFG4
14	Fraction of grain in milk cow feed	not used	2.000E-01	---	AVFG5
TOR	Storage times of contaminated foodstuffs (days):				
TOR	Fruits, non-leafy vegetables, and grain	1.400E+01	1.400E+01	---	STOR_T(1)
TOR	Leafy vegetables	1.000E+00	1.000E+00	---	STOR_T(2)
TOR	Milk	1.000E+00	1.000E+00	---	STOR_T(3)
TOR	Meat and poultry	2.000E+01	2.000E+01	---	STOR_T(4)
TOR	Fish	7.000E+00	7.000E+00	---	STOR_T(5)
TOR	Crustacea and mollusks	7.000E+00	7.000E+00	---	STOR_T(6)
TOR	Well water	1.000E+00	1.000E+00	---	STOR_T(7)
TOR	Surface water	1.000E+00	1.000E+00	---	STOR_T(8)
TOR	Livestock fodder	4.500E+01	4.500E+01	---	STOR_T(9)
021	Thickness of building foundation (m)	not used	1.500E-01	---	FLOOR1
021	Bulk density of building foundation (g/cm**3)	not used	2.400E+00	---	DENSFL
021	Total porosity of the cover material	not used	4.000E-01	---	TPCV
021	Total porosity of the building foundation	not used	1.000E-01	---	TPFL

Site-Specific Parameter Summary (continued)

enu	Parameter	User Input	Default	Used by RESRAD (If different from user input)	Parameter Name
021	Volumetric water content of the cover material	not used	5.000E-02	---	PH2OCV
021	Volumetric water content of the foundation	not used	3.000E-02	---	PH2OFL
021	Diffusion coefficient for radon gas (m/sec):				
021	in cover material	not used	2.000E-06	---	DIFCV
021	in foundation material	not used	3.000E-07	---	DIFFL
021	in contaminated zone soil	2.000E-06	2.000E-06	---	DIFCZ
021	Radon vertical dimension of mixing (m)	2.000E+00	2.000E+00	---	HMIX
021	Average building air exchange rate (1/hr)	not used	5.000E-01	---	REXG
021	Height of the building (room) (m)	not used	2.500E+00	---	HRM
021	Building interior area factor	not used	0.000E+00	code computed (time dependent)	FAI
021	Building depth below ground surface (m)	not used	-1.000E+00	code computed (time dependent)	DMFL
021	Emanating power of Rn-222 gas	2.500E-01	2.500E-01	---	EMANA(1)
021	Emanating power of Rn-220 gas	1.500E-01	1.500E-01	---	EMANA(2)
ITL	Number of graphical time points	32	---	---	NPTS
ITL	Maximum number of integration points for dose	17	---	---	LYMAX
ITL	Maximum number of integration points for risk	257	---	---	KYMAX

Summary of Pathway Selections

Pathway	User Selection
1 -- external gamma	suppressed
2 -- inhalation (w/o radon)	active
3 -- plant ingestion	suppressed
4 -- meat ingestion	suppressed
5 -- milk ingestion	suppressed
6 -- aquatic foods	suppressed
7 -- drinking water	suppressed
8 -- soil ingestion	suppressed
9 -- radon	active
Find peak pathway doses	suppressed

ummary : GKP Recreational Visitor - Inhalation
ile : C:\USERS\CLAUDE\DOCUMENTS\0 GKP DOSE\RESRAD CW\GKP RECREATIONAL VISITOR- INHALATION R1.RAD

Contaminated Zone Dimensions		Initial Soil Concentrations, pCi/g	
Area:	200.00 square meters	Ra-226	3.650E+01
Thickness:	0.15 meters	Th-232	2.400E+00
over Depth:	0.00 meters	U-234	1.390E+01
		U-235	8.400E-01
		U-238	1.390E+01

Total Dose TDOSE(t), mrem/yr
Basic Radiation Dose Limit = 2.500E+01 mrem/yr
Total Mixture Sum M(t) = Fraction of Basic Dose Limit Received at Time (t)

t (years):	0.000E+00	1.000E+00	3.000E+00	1.000E+01	3.000E+01	1.000E+02	3.000E+02	1.000E+03
TDOSE(t):	4.967E-02	4.865E-02	4.699E-02	4.208E-02	3.011E-02	1.010E-02	0.000E+00	0.000E+00
M(t):	1.987E-03	1.946E-03	1.880E-03	1.683E-03	1.204E-03	4.039E-04	0.000E+00	0.000E+00

aximum TDOSE(t): 4.967E-02 mrem/yr at t = 0.000E+00 years

ummary : GKP Recreational Visitor - Inhalation
ile : C:\USERS\CLAUDE\DOCUMENTS\0 GKP DOSE\RESRAD CW\GKP RECREATIONAL VISITOR- INHALATION R1.RAD

Total Dose Contributions TDOSE(i,p,t) for Individual Radionuclides (i) and Pathways (p)
As mrem/yr and Fraction of Total Dose At t = 0.000E+00 years

Water Independent Pathways (Inhalation excludes radon)

	Ground		Inhalation		Radon		Plant		Meat		Milk		Soil	
adio-	ÄÄÄÄÄÄÄÄÄÄÄÄÄÄÄÄ		ÄÄÄÄÄÄÄÄÄÄÄÄÄÄÄÄ		ÄÄÄÄÄÄÄÄÄÄÄÄÄÄÄÄ		ÄÄÄÄÄÄÄÄÄÄÄÄÄÄÄÄ		ÄÄÄÄÄÄÄÄÄÄÄÄÄÄÄÄ		ÄÄÄÄÄÄÄÄÄÄÄÄÄÄÄÄ		ÄÄÄÄÄÄÄÄÄÄÄÄÄÄÄÄ	
uclide	mrem/yr	fract.	mrem/yr	fract.	mrem/yr	fract.	mrem/yr	fract.	mrem/yr	fract.	mrem/yr	fract.	mrem/yr	fract.
ÄÄÄÄÄÄ	ÄÄÄÄÄÄÄÄÄ	ÄÄÄÄÄÄ	ÄÄÄÄÄÄÄÄÄ	ÄÄÄÄÄÄ	ÄÄÄÄÄÄÄÄÄ	ÄÄÄÄÄÄ	ÄÄÄÄÄÄÄÄÄ	ÄÄÄÄÄÄ	ÄÄÄÄÄÄÄÄÄ	ÄÄÄÄÄÄ	ÄÄÄÄÄÄÄÄÄ	ÄÄÄÄÄÄ	ÄÄÄÄÄÄÄÄÄ	ÄÄÄÄÄÄ
a-226	0.000E+00	0.0000	2.055E-03	0.0414	4.215E-05	0.0008	0.000E+00	0.0000	0.000E+00	0.0000	0.000E+00	0.0000	0.000E+00	0.0000
h-232	0.000E+00	0.0000	2.519E-02	0.5072	1.511E-06	0.0000	0.000E+00	0.0000	0.000E+00	0.0000	0.000E+00	0.0000	0.000E+00	0.0000
-234	0.000E+00	0.0000	1.147E-02	0.2310	1.061E-14	0.0000	0.000E+00	0.0000	0.000E+00	0.0000	0.000E+00	0.0000	0.000E+00	0.0000
-235	0.000E+00	0.0000	6.460E-04	0.0130	0.000E+00	0.0000	0.000E+00	0.0000	0.000E+00	0.0000	0.000E+00	0.0000	0.000E+00	0.0000
-238	0.000E+00	0.0000	1.026E-02	0.2065	7.448E-21	0.0000	0.000E+00	0.0000	0.000E+00	0.0000	0.000E+00	0.0000	0.000E+00	0.0000
íííííí	íííííííííí	íííííí	íííííííííí	íííííí	íííííííííí	íííííí	íííííííííí	íííííí	íííííííííí	íííííí	íííííííííí	íííííí	íííííííííí	íííííí
otal	0.000E+00	0.0000	4.962E-02	0.9991	4.367E-05	0.0009	0.000E+00	0.0000	0.000E+00	0.0000	0.000E+00	0.0000	0.000E+00	0.0000

Total Dose Contributions TDOSE(i,p,t) for Individual Radionuclides (i) and Pathways (p)
As mrem/yr and Fraction of Total Dose At t = 0.000E+00 years

Water Dependent Pathways

	Water		Fish		Radon		Plant		Meat		Milk		All Pathways*	
adio-	ÄÄÄÄÄÄÄÄÄÄÄÄÄÄÄÄ		ÄÄÄÄÄÄÄÄÄÄÄÄÄÄÄÄ		ÄÄÄÄÄÄÄÄÄÄÄÄÄÄÄÄ		ÄÄÄÄÄÄÄÄÄÄÄÄÄÄÄÄ		ÄÄÄÄÄÄÄÄÄÄÄÄÄÄÄÄ		ÄÄÄÄÄÄÄÄÄÄÄÄÄÄÄÄ		ÄÄÄÄÄÄÄÄÄÄÄÄÄÄÄÄ	
uclide	mrem/yr	fract.	mrem/yr	fract.	mrem/yr	fract.	mrem/yr	fract.	mrem/yr	fract.	mrem/yr	fract.	mrem/yr	fract.
ÄÄÄÄÄÄ	ÄÄÄÄÄÄÄÄÄ	ÄÄÄÄÄÄ	ÄÄÄÄÄÄÄÄÄ	ÄÄÄÄÄÄ	ÄÄÄÄÄÄÄÄÄ	ÄÄÄÄÄÄ	ÄÄÄÄÄÄÄÄÄ	ÄÄÄÄÄÄ	ÄÄÄÄÄÄÄÄÄ	ÄÄÄÄÄÄ	ÄÄÄÄÄÄÄÄÄ	ÄÄÄÄÄÄ	ÄÄÄÄÄÄÄÄÄ	ÄÄÄÄÄÄ
a-226	0.000E+00	0.0000	0.000E+00	0.0000	0.000E+00	0.0000	0.000E+00	0.0000	0.000E+00	0.0000	0.000E+00	0.0000	2.097E-03	0.0422
h-232	0.000E+00	0.0000	0.000E+00	0.0000	0.000E+00	0.0000	0.000E+00	0.0000	0.000E+00	0.0000	0.000E+00	0.0000	2.519E-02	0.5073
-234	0.000E+00	0.0000	0.000E+00	0.0000	0.000E+00	0.0000	0.000E+00	0.0000	0.000E+00	0.0000	0.000E+00	0.0000	1.147E-02	0.2310
-235	0.000E+00	0.0000	0.000E+00	0.0000	0.000E+00	0.0000	0.000E+00	0.0000	0.000E+00	0.0000	0.000E+00	0.0000	6.460E-04	0.0130
-238	0.000E+00	0.0000	0.000E+00	0.0000	0.000E+00	0.0000	0.000E+00	0.0000	0.000E+00	0.0000	0.000E+00	0.0000	1.026E-02	0.2065
íííííí	íííííííííí	íííííí	íííííííííí	íííííí	íííííííííí	íííííí	íííííííííí	íííííí	íííííííííí	íííííí	íííííííííí	íííííí	íííííííííí	íííííí
otal	0.000E+00	0.0000	0.000E+00	0.0000	0.000E+00	0.0000	0.000E+00	0.0000	0.000E+00	0.0000	0.000E+00	0.0000	4.967E-02	1.0000

Sum of all water independent and dependent pathways.

ummary : GKP Recreational Visitor - Inhalation
ile : C:\USERS\CLAUDE\DOCUMENTS\0 GKP DOSE\RESRAD CW\GKP RECREATIONAL VISITOR- INHALATION R1.RAD

Total Dose Contributions TDOSE(i,p,t) for Individual Radionuclides (i) and Pathways (p)
As mrem/yr and Fraction of Total Dose At t = 1.000E+00 years

Water Independent Pathways (Inhalation excludes radon)

	Ground		Inhalation		Radon		Plant		Meat		Milk		Soil	
adio-	ÄÄÄÄÄÄÄÄÄÄÄÄÄÄÄÄ		ÄÄÄÄÄÄÄÄÄÄÄÄÄÄÄÄ		ÄÄÄÄÄÄÄÄÄÄÄÄÄÄÄÄ		ÄÄÄÄÄÄÄÄÄÄÄÄÄÄÄÄ		ÄÄÄÄÄÄÄÄÄÄÄÄÄÄÄÄ		ÄÄÄÄÄÄÄÄÄÄÄÄÄÄÄÄ		ÄÄÄÄÄÄÄÄÄÄÄÄÄÄÄÄ	
uclide	mrem/yr	fract.	mrem/yr	fract.	mrem/yr	fract.	mrem/yr	fract.	mrem/yr	fract.	mrem/yr	fract.	mrem/yr	fract.
ÄÄÄÄÄÄ	ÄÄÄÄÄÄÄÄÄ	ÄÄÄÄÄÄ	ÄÄÄÄÄÄÄÄÄ	ÄÄÄÄÄÄ	ÄÄÄÄÄÄÄÄÄ	ÄÄÄÄÄÄ	ÄÄÄÄÄÄÄÄÄ	ÄÄÄÄÄÄ	ÄÄÄÄÄÄÄÄÄ	ÄÄÄÄÄÄ	ÄÄÄÄÄÄÄÄÄ	ÄÄÄÄÄÄ	ÄÄÄÄÄÄÄÄÄ	ÄÄÄÄÄÄ
a-226	0.000E+00	0.0000	2.133E-03	0.0439	4.056E-05	0.0008	0.000E+00	0.0000	0.000E+00	0.0000	0.000E+00	0.0000	0.000E+00	0.0000
n-232	0.000E+00	0.0000	2.520E-02	0.5181	9.187E-06	0.0002	0.000E+00	0.0000	0.000E+00	0.0000	0.000E+00	0.0000	0.000E+00	0.0000
-234	0.000E+00	0.0000	1.090E-02	0.2241	7.225E-14	0.0000	0.000E+00	0.0000	0.000E+00	0.0000	0.000E+00	0.0000	0.000E+00	0.0000
-235	0.000E+00	0.0000	6.141E-04	0.0126	0.000E+00	0.0000	0.000E+00	0.0000	0.000E+00	0.0000	0.000E+00	0.0000	0.000E+00	0.0000
-238	0.000E+00	0.0000	9.748E-03	0.2004	1.083E-19	0.0000	0.000E+00	0.0000	0.000E+00	0.0000	0.000E+00	0.0000	0.000E+00	0.0000
íííííí	íííííííííí	íííííí	íííííííííí	íííííí	íííííííííí	íííííí	íííííííííí	íííííí	íííííííííí	íííííí	íííííííííí	íííííí	íííííííííí	íííííí
otal	0.000E+00	0.0000	4.860E-02	0.9990	4.974E-05	0.0010	0.000E+00	0.0000	0.000E+00	0.0000	0.000E+00	0.0000	0.000E+00	0.0000

Total Dose Contributions TDOSE(i,p,t) for Individual Radionuclides (i) and Pathways (p)
As mrem/yr and Fraction of Total Dose At t = 1.000E+00 years

Water Dependent Pathways

	Water		Fish		Radon		Plant		Meat		Milk		All Pathways*	
adio-	ÄÄÄÄÄÄÄÄÄÄÄÄÄÄÄÄ		ÄÄÄÄÄÄÄÄÄÄÄÄÄÄÄÄ		ÄÄÄÄÄÄÄÄÄÄÄÄÄÄÄÄ		ÄÄÄÄÄÄÄÄÄÄÄÄÄÄÄÄ		ÄÄÄÄÄÄÄÄÄÄÄÄÄÄÄÄ		ÄÄÄÄÄÄÄÄÄÄÄÄÄÄÄÄ		ÄÄÄÄÄÄÄÄÄÄÄÄÄÄÄÄ	
uclide	mrem/yr	fract.	mrem/yr	fract.	mrem/yr	fract.	mrem/yr	fract.	mrem/yr	fract.	mrem/yr	fract.	mrem/yr	fract.
ÄÄÄÄÄÄ	ÄÄÄÄÄÄÄÄÄ	ÄÄÄÄÄÄ	ÄÄÄÄÄÄÄÄÄ	ÄÄÄÄÄÄ	ÄÄÄÄÄÄÄÄÄ	ÄÄÄÄÄÄ	ÄÄÄÄÄÄÄÄÄ	ÄÄÄÄÄÄ	ÄÄÄÄÄÄÄÄÄ	ÄÄÄÄÄÄ	ÄÄÄÄÄÄÄÄÄ	ÄÄÄÄÄÄ	ÄÄÄÄÄÄÄÄÄ	ÄÄÄÄÄÄ
a-226	0.000E+00	0.0000	0.000E+00	0.0000	0.000E+00	0.0000	0.000E+00	0.0000	0.000E+00	0.0000	0.000E+00	0.0000	2.174E-03	0.0447
n-232	0.000E+00	0.0000	0.000E+00	0.0000	0.000E+00	0.0000	0.000E+00	0.0000	0.000E+00	0.0000	0.000E+00	0.0000	2.521E-02	0.5182
-234	0.000E+00	0.0000	0.000E+00	0.0000	0.000E+00	0.0000	0.000E+00	0.0000	0.000E+00	0.0000	0.000E+00	0.0000	1.090E-02	0.2241
-235	0.000E+00	0.0000	0.000E+00	0.0000	0.000E+00	0.0000	0.000E+00	0.0000	0.000E+00	0.0000	0.000E+00	0.0000	6.141E-04	0.0126
-238	0.000E+00	0.0000	0.000E+00	0.0000	0.000E+00	0.0000	0.000E+00	0.0000	0.000E+00	0.0000	0.000E+00	0.0000	9.748E-03	0.2004
íííííí	íííííííííí	íííííí	íííííííííí	íííííí	íííííííííí	íííííí	íííííííííí	íííííí	íííííííííí	íííííí	íííííííííí	íííííí	íííííííííí	íííííí
otal	0.000E+00	0.0000	0.000E+00	0.0000	0.000E+00	0.0000	0.000E+00	0.0000	0.000E+00	0.0000	0.000E+00	0.0000	4.865E-02	1.0000

Sum of all water independent and dependent pathways.

ummary : GKP Recreational Visitor - Inhalation
ile : C:\USERS\CLAUDE\DOCUMENTS\0 GKP DOSE\RESRAD CW\GKP RECREATIONAL VISITOR- INHALATION R1.RAD

Total Dose Contributions TDOSE(i,p,t) for Individual Radionuclides (i) and Pathways (p)
As mrem/yr and Fraction of Total Dose At t = 3.000E+00 years

Water Independent Pathways (Inhalation excludes radon)

	Ground		Inhalation		Radon		Plant		Meat		Milk		Soil	
adio-	ÄÄÄÄÄÄÄÄÄÄÄÄÄÄÄÄ		ÄÄÄÄÄÄÄÄÄÄÄÄÄÄÄÄ		ÄÄÄÄÄÄÄÄÄÄÄÄÄÄÄÄ		ÄÄÄÄÄÄÄÄÄÄÄÄÄÄÄÄ		ÄÄÄÄÄÄÄÄÄÄÄÄÄÄÄÄ		ÄÄÄÄÄÄÄÄÄÄÄÄÄÄÄÄ		ÄÄÄÄÄÄÄÄÄÄÄÄÄÄÄÄ	
uclide	mrem/yr	fract.	mrem/yr	fract.	mrem/yr	fract.	mrem/yr	fract.	mrem/yr	fract.	mrem/yr	fract.	mrem/yr	fract.
ÄÄÄÄÄÄ	ÄÄÄÄÄÄÄÄÄÄ	ÄÄÄÄÄÄ	ÄÄÄÄÄÄÄÄÄÄ	ÄÄÄÄÄÄ	ÄÄÄÄÄÄÄÄÄÄ	ÄÄÄÄÄÄ	ÄÄÄÄÄÄÄÄÄÄ	ÄÄÄÄÄÄ	ÄÄÄÄÄÄÄÄÄÄ	ÄÄÄÄÄÄ	ÄÄÄÄÄÄÄÄÄÄ	ÄÄÄÄÄÄ	ÄÄÄÄÄÄÄÄÄÄ	ÄÄÄÄÄÄ
a-226	0.000E+00	0.0000	2.255E-03	0.0480	3.753E-05	0.0008	0.000E+00	0.0000	0.000E+00	0.0000	0.000E+00	0.0000	0.000E+00	0.0000
n-232	0.000E+00	0.0000	2.546E-02	0.5418	3.576E-05	0.0008	0.000E+00	0.0000	0.000E+00	0.0000	0.000E+00	0.0000	0.000E+00	0.0000
-234	0.000E+00	0.0000	9.844E-03	0.2095	3.590E-13	0.0000	0.000E+00	0.0000	0.000E+00	0.0000	0.000E+00	0.0000	0.000E+00	0.0000
-235	0.000E+00	0.0000	5.548E-04	0.0118	0.000E+00	0.0000	0.000E+00	0.0000	0.000E+00	0.0000	0.000E+00	0.0000	0.000E+00	0.0000
-238	0.000E+00	0.0000	8.802E-03	0.1873	1.177E-18	0.0000	0.000E+00	0.0000	0.000E+00	0.0000	0.000E+00	0.0000	0.000E+00	0.0000
íííííí	íííííííííí	íííííí	íííííííííí	íííííí	íííííííííí	íííííí	íííííííííí	íííííí	íííííííííí	íííííí	íííííííííí	íííííí	íííííííííí	íííííí
otal	0.000E+00	0.0000	4.692E-02	0.9984	7.329E-05	0.0016	0.000E+00	0.0000	0.000E+00	0.0000	0.000E+00	0.0000	0.000E+00	0.0000

Total Dose Contributions TDOSE(i,p,t) for Individual Radionuclides (i) and Pathways (p)
As mrem/yr and Fraction of Total Dose At t = 3.000E+00 years

Water Dependent Pathways

	Water		Fish		Radon		Plant		Meat		Milk		All Pathways*	
adio-	ÄÄÄÄÄÄÄÄÄÄÄÄÄÄÄÄ		ÄÄÄÄÄÄÄÄÄÄÄÄÄÄÄÄ		ÄÄÄÄÄÄÄÄÄÄÄÄÄÄÄÄ		ÄÄÄÄÄÄÄÄÄÄÄÄÄÄÄÄ		ÄÄÄÄÄÄÄÄÄÄÄÄÄÄÄÄ		ÄÄÄÄÄÄÄÄÄÄÄÄÄÄÄÄ		ÄÄÄÄÄÄÄÄÄÄÄÄÄÄÄÄ	
uclide	mrem/yr	fract.	mrem/yr	fract.	mrem/yr	fract.	mrem/yr	fract.	mrem/yr	fract.	mrem/yr	fract.	mrem/yr	fract.
ÄÄÄÄÄÄ	ÄÄÄÄÄÄÄÄÄÄ	ÄÄÄÄÄÄ	ÄÄÄÄÄÄÄÄÄÄ	ÄÄÄÄÄÄ	ÄÄÄÄÄÄÄÄÄÄ	ÄÄÄÄÄÄ	ÄÄÄÄÄÄÄÄÄÄ	ÄÄÄÄÄÄ	ÄÄÄÄÄÄÄÄÄÄ	ÄÄÄÄÄÄ	ÄÄÄÄÄÄÄÄÄÄ	ÄÄÄÄÄÄ	ÄÄÄÄÄÄÄÄÄÄ	ÄÄÄÄÄÄ
a-226	0.000E+00	0.0000	0.000E+00	0.0000	0.000E+00	0.0000	0.000E+00	0.0000	0.000E+00	0.0000	0.000E+00	0.0000	2.292E-03	0.0488
n-232	0.000E+00	0.0000	0.000E+00	0.0000	0.000E+00	0.0000	0.000E+00	0.0000	0.000E+00	0.0000	0.000E+00	0.0000	2.550E-02	0.5426
-234	0.000E+00	0.0000	0.000E+00	0.0000	0.000E+00	0.0000	0.000E+00	0.0000	0.000E+00	0.0000	0.000E+00	0.0000	9.844E-03	0.2095
-235	0.000E+00	0.0000	0.000E+00	0.0000	0.000E+00	0.0000	0.000E+00	0.0000	0.000E+00	0.0000	0.000E+00	0.0000	5.548E-04	0.0118
-238	0.000E+00	0.0000	0.000E+00	0.0000	0.000E+00	0.0000	0.000E+00	0.0000	0.000E+00	0.0000	0.000E+00	0.0000	8.802E-03	0.1873
íííííí	íííííííííí	íííííí	íííííííííí	íííííí	íííííííííí	íííííí	íííííííííí	íííííí	íííííííííí	íííííí	íííííííííí	íííííí	íííííííííí	íííííí
otal	0.000E+00	0.0000	0.000E+00	0.0000	0.000E+00	0.0000	0.000E+00	0.0000	0.000E+00	0.0000	0.000E+00	0.0000	4.699E-02	1.0000

Sum of all water independent and dependent pathways.

ummary : GKP Recreational Visitor - Inhalation
ile : C:\USERS\CLAUDE\DOCUMENTS\0 GKP DOSE\RESRAD CW\GKP RECREATIONAL VISITOR- INHALATION R1.RAD

Total Dose Contributions TDOSE(i,p,t) for Individual Radionuclides (i) and Pathways (p)
As mrem/yr and Fraction of Total Dose At t = 1.000E+01 years

Water Independent Pathways (Inhalation excludes radon)

	Ground		Inhalation		Radon		Plant		Meat		Milk		Soil	
adio-	ÄÄÄÄÄÄÄÄÄÄÄÄÄÄÄÄ		ÄÄÄÄÄÄÄÄÄÄÄÄÄÄÄÄ		ÄÄÄÄÄÄÄÄÄÄÄÄÄÄÄÄ		ÄÄÄÄÄÄÄÄÄÄÄÄÄÄÄÄ		ÄÄÄÄÄÄÄÄÄÄÄÄÄÄÄÄ		ÄÄÄÄÄÄÄÄÄÄÄÄÄÄÄÄ		ÄÄÄÄÄÄÄÄÄÄÄÄÄÄÄÄ	
uclide	mrem/yr	fract.	mrem/yr	fract.	mrem/yr	fract.	mrem/yr	fract.	mrem/yr	fract.	mrem/yr	fract.	mrem/yr	fract.
ÄÄÄÄÄÄ	ÄÄÄÄÄÄÄÄÄÄ	ÄÄÄÄÄÄ	ÄÄÄÄÄÄÄÄÄÄ	ÄÄÄÄÄÄ	ÄÄÄÄÄÄÄÄÄÄ	ÄÄÄÄÄÄ	ÄÄÄÄÄÄÄÄÄÄ	ÄÄÄÄÄÄ	ÄÄÄÄÄÄÄÄÄÄ	ÄÄÄÄÄÄ	ÄÄÄÄÄÄÄÄÄÄ	ÄÄÄÄÄÄ	ÄÄÄÄÄÄÄÄÄÄ	ÄÄÄÄÄÄ
a-226	0.000E+00	0.0000	2.394E-03	0.0569	2.857E-05	0.0007	0.000E+00	0.0000	0.000E+00	0.0000	0.000E+00	0.0000	0.000E+00	0.0000
n-232	0.000E+00	0.0000	2.612E-02	0.6207	1.244E-04	0.0030	0.000E+00	0.0000	0.000E+00	0.0000	0.000E+00	0.0000	0.000E+00	0.0000
-234	0.000E+00	0.0000	6.878E-03	0.1634	2.574E-12	0.0000	0.000E+00	0.0000	0.000E+00	0.0000	0.000E+00	0.0000	0.000E+00	0.0000
-235	0.000E+00	0.0000	3.887E-04	0.0092	0.000E+00	0.0000	0.000E+00	0.0000	0.000E+00	0.0000	0.000E+00	0.0000	0.000E+00	0.0000
-238	0.000E+00	0.0000	6.149E-03	0.1461	2.421E-17	0.0000	0.000E+00	0.0000	0.000E+00	0.0000	0.000E+00	0.0000	0.000E+00	0.0000
íííííí	íííííííííí	íííííí	íííííííííí	íííííí	íííííííííí	íííííí	íííííííííí	íííííí	íííííííííí	íííííí	íííííííííí	íííííí	íííííííííí	íííííí
otal	0.000E+00	0.0000	4.193E-02	0.9964	1.529E-04	0.0036	0.000E+00	0.0000	0.000E+00	0.0000	0.000E+00	0.0000	0.000E+00	0.0000

Total Dose Contributions TDOSE(i,p,t) for Individual Radionuclides (i) and Pathways (p)
As mrem/yr and Fraction of Total Dose At t = 1.000E+01 years

Water Dependent Pathways

	Water		Fish		Radon		Plant		Meat		Milk		All Pathways*	
adio-	ÄÄÄÄÄÄÄÄÄÄÄÄÄÄÄÄ		ÄÄÄÄÄÄÄÄÄÄÄÄÄÄÄÄ		ÄÄÄÄÄÄÄÄÄÄÄÄÄÄÄÄ		ÄÄÄÄÄÄÄÄÄÄÄÄÄÄÄÄ		ÄÄÄÄÄÄÄÄÄÄÄÄÄÄÄÄ		ÄÄÄÄÄÄÄÄÄÄÄÄÄÄÄÄ		ÄÄÄÄÄÄÄÄÄÄÄÄÄÄÄÄ	
uclide	mrem/yr	fract.	mrem/yr	fract.	mrem/yr	fract.	mrem/yr	fract.	mrem/yr	fract.	mrem/yr	fract.	mrem/yr	fract.
ÄÄÄÄÄÄ	ÄÄÄÄÄÄÄÄÄÄ	ÄÄÄÄÄÄ	ÄÄÄÄÄÄÄÄÄÄ	ÄÄÄÄÄÄ	ÄÄÄÄÄÄÄÄÄÄ	ÄÄÄÄÄÄ	ÄÄÄÄÄÄÄÄÄÄ	ÄÄÄÄÄÄ	ÄÄÄÄÄÄÄÄÄÄ	ÄÄÄÄÄÄ	ÄÄÄÄÄÄÄÄÄÄ	ÄÄÄÄÄÄ	ÄÄÄÄÄÄÄÄÄÄ	ÄÄÄÄÄÄ
a-226	0.000E+00	0.0000	0.000E+00	0.0000	0.000E+00	0.0000	0.000E+00	0.0000	0.000E+00	0.0000	0.000E+00	0.0000	2.423E-03	0.0576
n-232	0.000E+00	0.0000	0.000E+00	0.0000	0.000E+00	0.0000	0.000E+00	0.0000	0.000E+00	0.0000	0.000E+00	0.0000	2.625E-02	0.6236
-234	0.000E+00	0.0000	0.000E+00	0.0000	0.000E+00	0.0000	0.000E+00	0.0000	0.000E+00	0.0000	0.000E+00	0.0000	6.878E-03	0.1634
-235	0.000E+00	0.0000	0.000E+00	0.0000	0.000E+00	0.0000	0.000E+00	0.0000	0.000E+00	0.0000	0.000E+00	0.0000	3.887E-04	0.0092
-238	0.000E+00	0.0000	0.000E+00	0.0000	0.000E+00	0.0000	0.000E+00	0.0000	0.000E+00	0.0000	0.000E+00	0.0000	6.149E-03	0.1461
íííííí	íííííííííí	íííííí	íííííííííí	íííííí	íííííííííí	íííííí	íííííííííí	íííííí	íííííííííí	íííííí	íííííííííí	íííííí	íííííííííí	íííííí
otal	0.000E+00	0.0000	0.000E+00	0.0000	0.000E+00	0.0000	0.000E+00	0.0000	0.000E+00	0.0000	0.000E+00	0.0000	4.208E-02	1.0000

Sum of all water independent and dependent pathways.

ummary : GKP Recreational Visitor - Inhalation
ile : C:\USERS\CLAUDE\DOCUMENTS\0 GKP DOSE\RESRAD CW\GKP RECREATIONAL VISITOR- INHALATION R1.RAD

Total Dose Contributions TDOSE(i,p,t) for Individual Radionuclides (i) and Pathways (p)
As mrem/yr and Fraction of Total Dose At t = 3.000E+01 years

Water Independent Pathways (Inhalation excludes radon)

	Ground		Inhalation		Radon		Plant		Meat		Milk		Soil	
adio-	ÄÄÄÄÄÄÄÄÄÄÄÄÄÄÄÄ		ÄÄÄÄÄÄÄÄÄÄÄÄÄÄÄÄ		ÄÄÄÄÄÄÄÄÄÄÄÄÄÄÄÄ		ÄÄÄÄÄÄÄÄÄÄÄÄÄÄÄÄ		ÄÄÄÄÄÄÄÄÄÄÄÄÄÄÄÄ		ÄÄÄÄÄÄÄÄÄÄÄÄÄÄÄÄ		ÄÄÄÄÄÄÄÄÄÄÄÄÄÄÄÄ	
uclide	mrem/yr	fract.	mrem/yr	fract.	mrem/yr	fract.	mrem/yr	fract.	mrem/yr	fract.	mrem/yr	fract.	mrem/yr	fract.
ÄÄÄÄÄÄ	ÄÄÄÄÄÄÄÄÄ	ÄÄÄÄÄÄ	ÄÄÄÄÄÄÄÄÄ	ÄÄÄÄÄÄ	ÄÄÄÄÄÄÄÄÄ	ÄÄÄÄÄÄ	ÄÄÄÄÄÄÄÄÄ	ÄÄÄÄÄÄ	ÄÄÄÄÄÄÄÄÄ	ÄÄÄÄÄÄ	ÄÄÄÄÄÄÄÄÄ	ÄÄÄÄÄÄ	ÄÄÄÄÄÄÄÄÄ	ÄÄÄÄÄÄ
a-226	0.000E+00	0.0000	1.741E-03	0.0578	1.291E-05	0.0004	0.000E+00	0.0000	0.000E+00	0.0000	0.000E+00	0.0000	0.000E+00	0.0000
n-232	0.000E+00	0.0000	2.343E-02	0.7780	1.832E-04	0.0061	0.000E+00	0.0000	0.000E+00	0.0000	0.000E+00	0.0000	0.000E+00	0.0000
-234	0.000E+00	0.0000	2.434E-03	0.0808	1.162E-11	0.0000	0.000E+00	0.0000	0.000E+00	0.0000	0.000E+00	0.0000	0.000E+00	0.0000
-235	0.000E+00	0.0000	1.389E-04	0.0046	0.000E+00	0.0000	0.000E+00	0.0000	0.000E+00	0.0000	0.000E+00	0.0000	0.000E+00	0.0000
-238	0.000E+00	0.0000	2.174E-03	0.0722	2.862E-16	0.0000	0.000E+00	0.0000	0.000E+00	0.0000	0.000E+00	0.0000	0.000E+00	0.0000
íííííí	íííííííííí	íííííí	íííííííííí	íííííí	íííííííííí	íííííí	íííííííííí	íííííí	íííííííííí	íííííí	íííííííííí	íííííí	íííííííííí	íííííí
otal	0.000E+00	0.0000	2.992E-02	0.9935	1.961E-04	0.0065	0.000E+00	0.0000	0.000E+00	0.0000	0.000E+00	0.0000	0.000E+00	0.0000

Total Dose Contributions TDOSE(i,p,t) for Individual Radionuclides (i) and Pathways (p)
As mrem/yr and Fraction of Total Dose At t = 3.000E+01 years

Water Dependent Pathways

	Water		Fish		Radon		Plant		Meat		Milk		All Pathways*	
adio-	ÄÄÄÄÄÄÄÄÄÄÄÄÄÄÄÄ		ÄÄÄÄÄÄÄÄÄÄÄÄÄÄÄÄ		ÄÄÄÄÄÄÄÄÄÄÄÄÄÄÄÄ		ÄÄÄÄÄÄÄÄÄÄÄÄÄÄÄÄ		ÄÄÄÄÄÄÄÄÄÄÄÄÄÄÄÄ		ÄÄÄÄÄÄÄÄÄÄÄÄÄÄÄÄ		ÄÄÄÄÄÄÄÄÄÄÄÄÄÄÄÄ	
uclide	mrem/yr	fract.	mrem/yr	fract.	mrem/yr	fract.	mrem/yr	fract.	mrem/yr	fract.	mrem/yr	fract.	mrem/yr	fract.
ÄÄÄÄÄÄ	ÄÄÄÄÄÄÄÄÄ	ÄÄÄÄÄÄ	ÄÄÄÄÄÄÄÄÄ	ÄÄÄÄÄÄ	ÄÄÄÄÄÄÄÄÄ	ÄÄÄÄÄÄ	ÄÄÄÄÄÄÄÄÄ	ÄÄÄÄÄÄ	ÄÄÄÄÄÄÄÄÄ	ÄÄÄÄÄÄ	ÄÄÄÄÄÄÄÄÄ	ÄÄÄÄÄÄ	ÄÄÄÄÄÄÄÄÄ	ÄÄÄÄÄÄ
a-226	0.000E+00	0.0000	0.000E+00	0.0000	0.000E+00	0.0000	0.000E+00	0.0000	0.000E+00	0.0000	0.000E+00	0.0000	1.754E-03	0.0582
n-232	0.000E+00	0.0000	0.000E+00	0.0000	0.000E+00	0.0000	0.000E+00	0.0000	0.000E+00	0.0000	0.000E+00	0.0000	2.361E-02	0.7841
-234	0.000E+00	0.0000	0.000E+00	0.0000	0.000E+00	0.0000	0.000E+00	0.0000	0.000E+00	0.0000	0.000E+00	0.0000	2.434E-03	0.0808
-235	0.000E+00	0.0000	0.000E+00	0.0000	0.000E+00	0.0000	0.000E+00	0.0000	0.000E+00	0.0000	0.000E+00	0.0000	1.389E-04	0.0046
-238	0.000E+00	0.0000	0.000E+00	0.0000	0.000E+00	0.0000	0.000E+00	0.0000	0.000E+00	0.0000	0.000E+00	0.0000	2.174E-03	0.0722
íííííí	íííííííííí	íííííí	íííííííííí	íííííí	íííííííííí	íííííí	íííííííííí	íííííí	íííííííííí	íííííí	íííííííííí	íííííí	íííííííííí	íííííí
otal	0.000E+00	0.0000	0.000E+00	0.0000	0.000E+00	0.0000	0.000E+00	0.0000	0.000E+00	0.0000	0.000E+00	0.0000	3.011E-02	1.0000

Sum of all water independent and dependent pathways.

ummary : GKP Recreational Visitor - Inhalation
ile : C:\USERS\CLAUDE\DOCUMENTS\0 GKP DOSE\RESRAD CW\GKP RECREATIONAL VISITOR- INHALATION R1.RAD

Total Dose Contributions TDOSE(i,p,t) for Individual Radionuclides (i) and Pathways (p)
As mrem/yr and Fraction of Total Dose At t = 1.000E+02 years

Water Independent Pathways (Inhalation excludes radon)

	Ground		Inhalation		Radon		Plant		Meat		Milk		Soil	
adio-	ÄÄÄÄÄÄÄÄÄÄÄÄÄÄÄÄ		ÄÄÄÄÄÄÄÄÄÄÄÄÄÄÄÄ		ÄÄÄÄÄÄÄÄÄÄÄÄÄÄÄÄ		ÄÄÄÄÄÄÄÄÄÄÄÄÄÄÄÄ		ÄÄÄÄÄÄÄÄÄÄÄÄÄÄÄÄ		ÄÄÄÄÄÄÄÄÄÄÄÄÄÄÄÄ		ÄÄÄÄÄÄÄÄÄÄÄÄÄÄÄÄ	
uclide	mrem/yr	fract.	mrem/yr	fract.	mrem/yr	fract.	mrem/yr	fract.	mrem/yr	fract.	mrem/yr	fract.	mrem/yr	fract.
ÄÄÄÄÄÄ	ÄÄÄÄÄÄÄÄÄ	ÄÄÄÄÄÄ	ÄÄÄÄÄÄÄÄÄ	ÄÄÄÄÄÄ	ÄÄÄÄÄÄÄÄÄ	ÄÄÄÄÄÄ	ÄÄÄÄÄÄÄÄÄ	ÄÄÄÄÄÄ	ÄÄÄÄÄÄÄÄÄ	ÄÄÄÄÄÄ	ÄÄÄÄÄÄÄÄÄ	ÄÄÄÄÄÄ	ÄÄÄÄÄÄÄÄÄ	ÄÄÄÄÄÄ
a-226	0.000E+00	0.0000	1.186E-04	0.0117	5.682E-07	0.0001	0.000E+00	0.0000	0.000E+00	0.0000	0.000E+00	0.0000	0.000E+00	0.0000
n-232	0.000E+00	0.0000	9.703E-03	0.9609	1.854E-04	0.0184	0.000E+00	0.0000	0.000E+00	0.0000	0.000E+00	0.0000	0.000E+00	0.0000
-234	0.000E+00	0.0000	4.741E-05	0.0047	1.349E-11	0.0000	0.000E+00	0.0000	0.000E+00	0.0000	0.000E+00	0.0000	0.000E+00	0.0000
-235	0.000E+00	0.0000	2.704E-06	0.0003	0.000E+00	0.0000	0.000E+00	0.0000	0.000E+00	0.0000	0.000E+00	0.0000	0.000E+00	0.0000
-238	0.000E+00	0.0000	4.066E-05	0.0040	7.329E-16	0.0000	0.000E+00	0.0000	0.000E+00	0.0000	0.000E+00	0.0000	0.000E+00	0.0000
íííííí	íííííííííí	íííííí	íííííííííí	íííííí	íííííííííí	íííííí	íííííííííí	íííííí	íííííííííí	íííííí	íííííííííí	íííííí	íííííííííí	íííííí
otal	0.000E+00	0.0000	9.912E-03	0.9816	1.860E-04	0.0184	0.000E+00	0.0000	0.000E+00	0.0000	0.000E+00	0.0000	0.000E+00	0.0000

Total Dose Contributions TDOSE(i,p,t) for Individual Radionuclides (i) and Pathways (p)
As mrem/yr and Fraction of Total Dose At t = 1.000E+02 years

Water Dependent Pathways

	Water		Fish		Radon		Plant		Meat		Milk		All Pathways*	
adio-	ÄÄÄÄÄÄÄÄÄÄÄÄÄÄÄÄ		ÄÄÄÄÄÄÄÄÄÄÄÄÄÄÄÄ		ÄÄÄÄÄÄÄÄÄÄÄÄÄÄÄÄ		ÄÄÄÄÄÄÄÄÄÄÄÄÄÄÄÄ		ÄÄÄÄÄÄÄÄÄÄÄÄÄÄÄÄ		ÄÄÄÄÄÄÄÄÄÄÄÄÄÄÄÄ		ÄÄÄÄÄÄÄÄÄÄÄÄÄÄÄÄ	
uclide	mrem/yr	fract.	mrem/yr	fract.	mrem/yr	fract.	mrem/yr	fract.	mrem/yr	fract.	mrem/yr	fract.	mrem/yr	fract.
ÄÄÄÄÄÄ	ÄÄÄÄÄÄÄÄÄ	ÄÄÄÄÄÄ	ÄÄÄÄÄÄÄÄÄ	ÄÄÄÄÄÄ	ÄÄÄÄÄÄÄÄÄ	ÄÄÄÄÄÄ	ÄÄÄÄÄÄÄÄÄ	ÄÄÄÄÄÄ	ÄÄÄÄÄÄÄÄÄ	ÄÄÄÄÄÄ	ÄÄÄÄÄÄÄÄÄ	ÄÄÄÄÄÄ	ÄÄÄÄÄÄÄÄÄ	ÄÄÄÄÄÄ
a-226	0.000E+00	0.0000	0.000E+00	0.0000	0.000E+00	0.0000	0.000E+00	0.0000	0.000E+00	0.0000	0.000E+00	0.0000	1.191E-04	0.0118
n-232	0.000E+00	0.0000	0.000E+00	0.0000	0.000E+00	0.0000	0.000E+00	0.0000	0.000E+00	0.0000	0.000E+00	0.0000	9.888E-03	0.9792
-234	0.000E+00	0.0000	0.000E+00	0.0000	0.000E+00	0.0000	0.000E+00	0.0000	0.000E+00	0.0000	0.000E+00	0.0000	4.741E-05	0.0047
-235	0.000E+00	0.0000	0.000E+00	0.0000	0.000E+00	0.0000	0.000E+00	0.0000	0.000E+00	0.0000	0.000E+00	0.0000	2.704E-06	0.0003
-238	0.000E+00	0.0000	0.000E+00	0.0000	0.000E+00	0.0000	0.000E+00	0.0000	0.000E+00	0.0000	0.000E+00	0.0000	4.066E-05	0.0040
íííííí	íííííííííí	íííííí	íííííííííí	íííííí	íííííííííí	íííííí	íííííííííí	íííííí	íííííííííí	íííííí	íííííííííí	íííííí	íííííííííí	íííííí
otal	0.000E+00	0.0000	0.000E+00	0.0000	0.000E+00	0.0000	0.000E+00	0.0000	0.000E+00	0.0000	0.000E+00	0.0000	1.010E-02	1.0000

Sum of all water independent and dependent pathways.

ummary : GKP Recreational Visitor - Inhalation
ile : C:\USERS\CLAUDE\DOCUMENTS\0 GKP DOSE\RESRAD CW\GKP RECREATIONAL VISITOR- INHALATION R1.RAD

Total Dose Contributions TDOSE(i,p,t) for Individual Radionuclides (i) and Pathways (p)
As mrem/yr and Fraction of Total Dose At t = 3.000E+02 years

Water Independent Pathways (Inhalation excludes radon)

	Ground		Inhalation		Radon		Plant		Meat		Milk		Soil	
adio-	ÄÄÄÄÄÄÄÄÄÄÄÄÄÄÄÄ		ÄÄÄÄÄÄÄÄÄÄÄÄÄÄÄÄ		ÄÄÄÄÄÄÄÄÄÄÄÄÄÄÄÄ		ÄÄÄÄÄÄÄÄÄÄÄÄÄÄÄÄ		ÄÄÄÄÄÄÄÄÄÄÄÄÄÄÄÄ		ÄÄÄÄÄÄÄÄÄÄÄÄÄÄÄÄ		ÄÄÄÄÄÄÄÄÄÄÄÄÄÄÄÄ	
uclide	mrem/yr	fract.	mrem/yr	fract.	mrem/yr	fract.	mrem/yr	fract.	mrem/yr	fract.	mrem/yr	fract.	mrem/yr	fract.
ÄÄÄÄÄÄ	ÄÄÄÄÄÄÄÄÄ	ÄÄÄÄÄÄ	ÄÄÄÄÄÄÄÄÄ	ÄÄÄÄÄÄ	ÄÄÄÄÄÄÄÄÄ	ÄÄÄÄÄÄ	ÄÄÄÄÄÄÄÄÄ	ÄÄÄÄÄÄ	ÄÄÄÄÄÄÄÄÄ	ÄÄÄÄÄÄ	ÄÄÄÄÄÄÄÄÄ	ÄÄÄÄÄÄ	ÄÄÄÄÄÄÄÄÄ	ÄÄÄÄÄÄ
a-226	0.000E+00	0.0000	0.000E+00	0.0000	0.000E+00	0.0000	0.000E+00	0.0000	0.000E+00	0.0000	0.000E+00	0.0000	0.000E+00	0.0000
n-232	0.000E+00	0.0000	0.000E+00	0.0000	0.000E+00	0.0000	0.000E+00	0.0000	0.000E+00	0.0000	0.000E+00	0.0000	0.000E+00	0.0000
-234	0.000E+00	0.0000	0.000E+00	0.0000	0.000E+00	0.0000	0.000E+00	0.0000	0.000E+00	0.0000	0.000E+00	0.0000	0.000E+00	0.0000
-235	0.000E+00	0.0000	0.000E+00	0.0000	0.000E+00	0.0000	0.000E+00	0.0000	0.000E+00	0.0000	0.000E+00	0.0000	0.000E+00	0.0000
-238	0.000E+00	0.0000	0.000E+00	0.0000	0.000E+00	0.0000	0.000E+00	0.0000	0.000E+00	0.0000	0.000E+00	0.0000	0.000E+00	0.0000
íííííí	íííííííííí	íííííí	íííííííííí	íííííí	íííííííííí	íííííí	íííííííííí	íííííí	íííííííííí	íííííí	íííííííííí	íííííí	íííííííííí	íííííí
otal	0.000E+00	0.0000	0.000E+00	0.0000	0.000E+00	0.0000	0.000E+00	0.0000	0.000E+00	0.0000	0.000E+00	0.0000	0.000E+00	0.0000

Total Dose Contributions TDOSE(i,p,t) for Individual Radionuclides (i) and Pathways (p)
As mrem/yr and Fraction of Total Dose At t = 3.000E+02 years

Water Dependent Pathways

	Water		Fish		Radon		Plant		Meat		Milk		All Pathways*	
adio-	ÄÄÄÄÄÄÄÄÄÄÄÄÄÄÄÄ		ÄÄÄÄÄÄÄÄÄÄÄÄÄÄÄÄ		ÄÄÄÄÄÄÄÄÄÄÄÄÄÄÄÄ		ÄÄÄÄÄÄÄÄÄÄÄÄÄÄÄÄ		ÄÄÄÄÄÄÄÄÄÄÄÄÄÄÄÄ		ÄÄÄÄÄÄÄÄÄÄÄÄÄÄÄÄ		ÄÄÄÄÄÄÄÄÄÄÄÄÄÄÄÄ	
uclide	mrem/yr	fract.	mrem/yr	fract.	mrem/yr	fract.	mrem/yr	fract.	mrem/yr	fract.	mrem/yr	fract.	mrem/yr	fract.
ÄÄÄÄÄÄ	ÄÄÄÄÄÄÄÄÄ	ÄÄÄÄÄÄ	ÄÄÄÄÄÄÄÄÄ	ÄÄÄÄÄÄ	ÄÄÄÄÄÄÄÄÄ	ÄÄÄÄÄÄ	ÄÄÄÄÄÄÄÄÄ	ÄÄÄÄÄÄ	ÄÄÄÄÄÄÄÄÄ	ÄÄÄÄÄÄ	ÄÄÄÄÄÄÄÄÄ	ÄÄÄÄÄÄ	ÄÄÄÄÄÄÄÄÄ	ÄÄÄÄÄÄ
a-226	0.000E+00	0.0000	0.000E+00	0.0000	0.000E+00	0.0000	0.000E+00	0.0000	0.000E+00	0.0000	0.000E+00	0.0000	0.000E+00	0.0000
n-232	0.000E+00	0.0000	0.000E+00	0.0000	0.000E+00	0.0000	0.000E+00	0.0000	0.000E+00	0.0000	0.000E+00	0.0000	0.000E+00	0.0000
-234	0.000E+00	0.0000	0.000E+00	0.0000	0.000E+00	0.0000	0.000E+00	0.0000	0.000E+00	0.0000	0.000E+00	0.0000	0.000E+00	0.0000
-235	0.000E+00	0.0000	0.000E+00	0.0000	0.000E+00	0.0000	0.000E+00	0.0000	0.000E+00	0.0000	0.000E+00	0.0000	0.000E+00	0.0000
-238	0.000E+00	0.0000	0.000E+00	0.0000	0.000E+00	0.0000	0.000E+00	0.0000	0.000E+00	0.0000	0.000E+00	0.0000	0.000E+00	0.0000
íííííí	íííííííííí	íííííí	íííííííííí	íííííí	íííííííííí	íííííí	íííííííííí	íííííí	íííííííííí	íííííí	íííííííííí	íííííí	íííííííííí	íííííí
otal	0.000E+00	0.0000	0.000E+00	0.0000	0.000E+00	0.0000	0.000E+00	0.0000	0.000E+00	0.0000	0.000E+00	0.0000	0.000E+00	0.0000

Sum of all water independent and dependent pathways.

ummary : GKP Recreational Visitor - Inhalation
ile : C:\USERS\CLAUDE\DOCUMENTS\0 GKP DOSE\RESRAD CW\GKP RECREATIONAL VISITOR- INHALATION R1.RAD

Total Dose Contributions TDOSE(i,p,t) for Individual Radionuclides (i) and Pathways (p)
As mrem/yr and Fraction of Total Dose At t = 1.000E+03 years

Water Independent Pathways (Inhalation excludes radon)

	Ground		Inhalation		Radon		Plant		Meat		Milk		Soil	
adio-	ÄÄÄÄÄÄÄÄÄÄÄÄÄÄÄÄ		ÄÄÄÄÄÄÄÄÄÄÄÄÄÄÄÄ		ÄÄÄÄÄÄÄÄÄÄÄÄÄÄÄÄ		ÄÄÄÄÄÄÄÄÄÄÄÄÄÄÄÄ		ÄÄÄÄÄÄÄÄÄÄÄÄÄÄÄÄ		ÄÄÄÄÄÄÄÄÄÄÄÄÄÄÄÄ		ÄÄÄÄÄÄÄÄÄÄÄÄÄÄÄÄ	
uclide	mrem/yr	fract.	mrem/yr	fract.	mrem/yr	fract.	mrem/yr	fract.	mrem/yr	fract.	mrem/yr	fract.	mrem/yr	fract.
ÄÄÄÄÄÄ	ÄÄÄÄÄÄÄÄÄ	ÄÄÄÄÄÄ	ÄÄÄÄÄÄÄÄÄ	ÄÄÄÄÄÄ	ÄÄÄÄÄÄÄÄÄ	ÄÄÄÄÄÄ	ÄÄÄÄÄÄÄÄÄ	ÄÄÄÄÄÄ	ÄÄÄÄÄÄÄÄÄ	ÄÄÄÄÄÄ	ÄÄÄÄÄÄÄÄÄ	ÄÄÄÄÄÄ	ÄÄÄÄÄÄÄÄÄ	ÄÄÄÄÄÄ
a-226	0.000E+00	0.0000	0.000E+00	0.0000	0.000E+00	0.0000	0.000E+00	0.0000	0.000E+00	0.0000	0.000E+00	0.0000	0.000E+00	0.0000
h-232	0.000E+00	0.0000	0.000E+00	0.0000	0.000E+00	0.0000	0.000E+00	0.0000	0.000E+00	0.0000	0.000E+00	0.0000	0.000E+00	0.0000
-234	0.000E+00	0.0000	0.000E+00	0.0000	0.000E+00	0.0000	0.000E+00	0.0000	0.000E+00	0.0000	0.000E+00	0.0000	0.000E+00	0.0000
-235	0.000E+00	0.0000	0.000E+00	0.0000	0.000E+00	0.0000	0.000E+00	0.0000	0.000E+00	0.0000	0.000E+00	0.0000	0.000E+00	0.0000
-238	0.000E+00	0.0000	0.000E+00	0.0000	0.000E+00	0.0000	0.000E+00	0.0000	0.000E+00	0.0000	0.000E+00	0.0000	0.000E+00	0.0000
íííííí	íííííííííí	íííííí	íííííííííí	íííííí	íííííííííí	íííííí	íííííííííí	íííííí	íííííííííí	íííííí	íííííííííí	íííííí	íííííííííí	íííííí
otal	0.000E+00	0.0000	0.000E+00	0.0000	0.000E+00	0.0000	0.000E+00	0.0000	0.000E+00	0.0000	0.000E+00	0.0000	0.000E+00	0.0000

Total Dose Contributions TDOSE(i,p,t) for Individual Radionuclides (i) and Pathways (p)
As mrem/yr and Fraction of Total Dose At t = 1.000E+03 years

Water Dependent Pathways

	Water		Fish		Radon		Plant		Meat		Milk		All Pathways*	
adio-	ÄÄÄÄÄÄÄÄÄÄÄÄÄÄÄÄ		ÄÄÄÄÄÄÄÄÄÄÄÄÄÄÄÄ		ÄÄÄÄÄÄÄÄÄÄÄÄÄÄÄÄ		ÄÄÄÄÄÄÄÄÄÄÄÄÄÄÄÄ		ÄÄÄÄÄÄÄÄÄÄÄÄÄÄÄÄ		ÄÄÄÄÄÄÄÄÄÄÄÄÄÄÄÄ		ÄÄÄÄÄÄÄÄÄÄÄÄÄÄÄÄ	
uclide	mrem/yr	fract.	mrem/yr	fract.	mrem/yr	fract.	mrem/yr	fract.	mrem/yr	fract.	mrem/yr	fract.	mrem/yr	fract.
ÄÄÄÄÄÄ	ÄÄÄÄÄÄÄÄÄ	ÄÄÄÄÄÄ	ÄÄÄÄÄÄÄÄÄ	ÄÄÄÄÄÄ	ÄÄÄÄÄÄÄÄÄ	ÄÄÄÄÄÄ	ÄÄÄÄÄÄÄÄÄ	ÄÄÄÄÄÄ	ÄÄÄÄÄÄÄÄÄ	ÄÄÄÄÄÄ	ÄÄÄÄÄÄÄÄÄ	ÄÄÄÄÄÄ	ÄÄÄÄÄÄÄÄÄ	ÄÄÄÄÄÄ
a-226	0.000E+00	0.0000	0.000E+00	0.0000	0.000E+00	0.0000	0.000E+00	0.0000	0.000E+00	0.0000	0.000E+00	0.0000	0.000E+00	0.0000
h-232	0.000E+00	0.0000	0.000E+00	0.0000	0.000E+00	0.0000	0.000E+00	0.0000	0.000E+00	0.0000	0.000E+00	0.0000	0.000E+00	0.0000
-234	0.000E+00	0.0000	0.000E+00	0.0000	0.000E+00	0.0000	0.000E+00	0.0000	0.000E+00	0.0000	0.000E+00	0.0000	0.000E+00	0.0000
-235	0.000E+00	0.0000	0.000E+00	0.0000	0.000E+00	0.0000	0.000E+00	0.0000	0.000E+00	0.0000	0.000E+00	0.0000	0.000E+00	0.0000
-238	0.000E+00	0.0000	0.000E+00	0.0000	0.000E+00	0.0000	0.000E+00	0.0000	0.000E+00	0.0000	0.000E+00	0.0000	0.000E+00	0.0000
íííííí	íííííííííí	íííííí	íííííííííí	íííííí	íííííííííí	íííííí	íííííííííí	íííííí	íííííííííí	íííííí	íííííííííí	íííííí	íííííííííí	íííííí
otal	0.000E+00	0.0000	0.000E+00	0.0000	0.000E+00	0.0000	0.000E+00	0.0000	0.000E+00	0.0000	0.000E+00	0.0000	0.000E+00	0.0000

Sum of all water independent and dependent pathways.

ummary : GKP Recreational Visitor - Inhalation
ile : C:\USERS\CLAUDE\DOCUMENTS\0 GKP DOSE\RESRAD CW\GKP RECREATIONAL VISITOR- INHALATION R1.RAD

Dose/Source Ratios Summed Over All Pathways
Parent and Progeny Principal Radionuclide Contributions Indicated

Parent (i)	Product (j)	Thread Fraction	DSR(j,t) At Time in Years (mrem/yr)/(pCi/g) 0.000E+00	1.000E+00	3.000E+00	1.000E+01	3.000E+01	1.000E+02	3.000E+02	1.000E+03
ÄÄÄÄÄÄÄÄÄ	ÄÄÄÄÄÄÄÄÄÄÄ	ÄÄÄÄÄÄÄÄÄ	ÄÄÄÄÄÄÄÄÄ	ÄÄÄÄÄÄÄÄÄ	ÄÄÄÄÄÄÄÄÄ	ÄÄÄÄÄÄÄÄÄ	ÄÄÄÄÄÄÄÄÄ	ÄÄÄÄÄÄÄÄÄ	ÄÄÄÄÄÄÄÄÄ	ÄÄÄÄÄÄÄÄÄ
a-226+D	Ra-226+D	9.996E-01	5.519E-05	5.309E-05	4.912E-05	3.736E-05	1.685E-05	7.389E-07	0.000E+00	0.000E+00
a-226+D	Pb-210+D	9.996E-01	2.246E-06	6.449E-06	1.365E-05	2.899E-05	3.117E-05	2.524E-06	0.000E+00	0.000E+00
a-226+D	äDSR(j)		5.744E-05	5.954E-05	6.277E-05	6.636E-05	4.802E-05	3.263E-06	0.000E+00	0.000E+00
a-226+D	Ra-226+D	1.319E-06	7.285E-11	7.008E-11	6.484E-11	4.932E-11	2.224E-11	9.753E-13	0.000E+00	0.000E+00
a-226+D	Pb-210+D1	1.319E-06	1.763E-12	5.063E-12	1.072E-11	2.276E-11	2.447E-11	1.981E-12	0.000E+00	0.000E+00
a-226+D	äDSR(j)		7.461E-11	7.514E-11	7.556E-11	7.208E-11	4.672E-11	2.957E-12	0.000E+00	0.000E+00
a-226+D	Ra-226+D	1.899E-08	1.049E-12	1.009E-12	9.333E-13	7.099E-13	3.202E-13	1.404E-14	0.000E+00	0.000E+00
a-226+D	Pb-210+D2	1.899E-08	2.502E-14	7.184E-14	1.521E-13	3.230E-13	3.473E-13	2.812E-14	0.000E+00	0.000E+00
a-226+D	äDSR(j)		1.074E-12	1.081E-12	1.085E-12	1.033E-12	6.674E-13	4.215E-14	0.000E+00	0.000E+00
a-226+D1	Ra-226+D1	2.100E-04	1.159E-08	1.115E-08	1.032E-08	7.848E-09	3.539E-09	1.552E-10	0.000E+00	0.000E+00
a-226+D1	Pb-210+D	2.100E-04	4.718E-10	1.355E-09	2.868E-09	6.090E-09	6.548E-09	5.301E-10	0.000E+00	0.000E+00
a-226+D1	äDSR(j)		1.206E-08	1.251E-08	1.318E-08	1.394E-08	1.009E-08	6.853E-10	0.000E+00	0.000E+00
a-226+D1	Ra-226+D1	2.771E-10	1.530E-14	1.472E-14	1.362E-14	1.036E-14	4.672E-15	2.049E-16	0.000E+00	0.000E+00
a-226+D1	Pb-210+D1	2.771E-10	3.704E-16	1.063E-15	2.251E-15	4.781E-15	5.141E-15	4.162E-16	0.000E+00	0.000E+00
a-226+D1	äDSR(j)		1.567E-14	1.578E-14	1.587E-14	1.514E-14	9.812E-15	6.210E-16	0.000E+00	0.000E+00
a-226+D1	Ra-226+D1	3.989E-12	2.203E-16	2.119E-16	1.960E-16	1.491E-16	6.725E-17	2.949E-18	0.000E+00	0.000E+00
a-226+D1	Pb-210+D2	3.989E-12	5.256E-18	1.509E-17	3.195E-17	6.784E-17	7.294E-17	5.906E-18	0.000E+00	0.000E+00
a-226+D1	äDSR(j)		2.255E-16	2.270E-16	2.280E-16	2.170E-16	1.402E-16	8.854E-18	0.000E+00	0.000E+00
a-226+D2	Ra-226+D2	1.998E-04	1.102E-08	1.060E-08	9.807E-09	7.460E-09	3.364E-09	1.475E-10	0.000E+00	0.000E+00
a-226+D2	Pb-210+D	1.998E-04	4.489E-10	1.289E-09	2.728E-09	5.794E-09	6.230E-09	5.044E-10	0.000E+00	0.000E+00
a-226+D2	äDSR(j)		1.147E-08	1.189E-08	1.254E-08	1.325E-08	9.594E-09	6.519E-10	0.000E+00	0.000E+00
a-226+D2	Ra-226+D2	2.637E-10	1.455E-14	1.399E-14	1.295E-14	9.848E-15	4.441E-15	1.947E-16	0.000E+00	0.000E+00
a-226+D2	Pb-210+D1	2.637E-10	3.524E-16	1.012E-15	2.142E-15	4.549E-15	4.891E-15	3.960E-16	0.000E+00	0.000E+00
a-226+D2	äDSR(j)		1.490E-14	1.500E-14	1.509E-14	1.440E-14	9.332E-15	5.907E-16	0.000E+00	0.000E+00
a-226+D2	Ra-226+D2	3.795E-12	2.094E-16	2.014E-16	1.863E-16	1.417E-16	6.392E-17	2.803E-18	0.000E+00	0.000E+00
a-226+D2	Pb-210+D2	3.795E-12	5.000E-18	1.436E-17	3.039E-17	6.454E-17	6.940E-17	5.619E-18	0.000E+00	0.000E+00
a-226+D2	äDSR(j)		2.144E-16	2.158E-16	2.167E-16	2.063E-16	1.333E-16	8.422E-18	0.000E+00	0.000E+00
a-226+D3	Ra-226+D3	4.196E-08	2.315E-12	2.226E-12	2.060E-12	1.567E-12	7.067E-13	3.099E-14	0.000E+00	0.000E+00
a-226+D3	Pb-210+D	4.196E-08	9.428E-14	2.707E-13	5.731E-13	1.217E-12	1.309E-12	1.059E-13	0.000E+00	0.000E+00
a-226+D3	äDSR(j)		2.409E-12	2.497E-12	2.633E-12	2.784E-12	2.015E-12	1.369E-13	0.000E+00	0.000E+00
a-226+D3	Ra-226+D3	5.538E-14	3.055E-18	2.939E-18	2.719E-18	2.068E-18	9.328E-19	4.090E-20	0.000E+00	0.000E+00
a-226+D3	Pb-210+D1	5.538E-14	7.402E-20	2.125E-19	4.499E-19	9.554E-19	1.027E-18	8.317E-20	0.000E+00	0.000E+00
a-226+D3	äDSR(j)		3.129E-18	3.151E-18	3.169E-18	3.024E-18	1.960E-18	1.241E-19	0.000E+00	0.000E+00
a-226+D3	Ra-226+D3	7.972E-16	4.398E-20	4.230E-20	3.914E-20	2.977E-20	1.343E-20	5.888E-22	0.000E+00	0.000E+00
a-226+D3	Pb-210+D2	7.972E-16	1.050E-21	3.015E-21	6.384E-21	1.356E-20	1.458E-20	1.180E-21	0.000E+00	0.000E+00
a-226+D3	äDSR(j)		4.503E-20	4.532E-20	4.552E-20	4.333E-20	2.800E-20	1.769E-21	0.000E+00	0.000E+00

ummary : GKP Recreational Visitor - Inhalation
ile : C:\USERS\CLAUDE\DOCUMENTS\0 GKP DOSE\RESRAD CW\GKP RECREATIONAL VISITOR- INHALATION R1.RAD

Dose/Source Ratios Summed Over All Pathways
Parent and Progeny Principal Radionuclide Contributions Indicated

Parent (i)	Product (j)	Thread Fraction	DSR(j,t) At Time in Years (mrem/yr)/(pCi/g) 0.000E+00	1.000E+00	3.000E+00	1.000E+01	3.000E+01	1.000E+02	3.000E+02	1.000E+03
ÄÄÄÄÄÄÄÄÄ	ÄÄÄÄÄÄÄÄÄÄ	ÄÄÄÄÄÄÄÄÄ	ÄÄÄÄÄÄÄÄÄ	ÄÄÄÄÄÄÄÄÄ	ÄÄÄÄÄÄÄÄÄ	ÄÄÄÄÄÄÄÄÄ	ÄÄÄÄÄÄÄÄÄ	ÄÄÄÄÄÄÄÄÄ	ÄÄÄÄÄÄÄÄÄ	ÄÄÄÄÄÄÄÄÄ
a-226+D4	Ra-226+D4	2.000E-07	1.102E-11	1.060E-11	9.812E-12	7.464E-12	3.366E-12	1.476E-13	0.000E+00	0.000E+00
a-226+D4	Pb-210+D	2.000E-07	4.494E-13	1.290E-12	2.732E-12	5.801E-12	6.237E-12	5.050E-13	0.000E+00	0.000E+00
a-226+D4	äDSR(j)		1.147E-11	1.190E-11	1.254E-11	1.326E-11	9.603E-12	6.526E-13	0.000E+00	0.000E+00
a-226+D4	Ra-226+D4	2.640E-13	1.455E-17	1.400E-17	1.295E-17	9.852E-18	4.443E-18	1.948E-19	0.000E+00	0.000E+00
a-226+D4	Pb-210+D1	2.640E-13	3.528E-19	1.013E-18	2.145E-18	4.554E-18	4.897E-18	3.965E-19	0.000E+00	0.000E+00
a-226+D4	äDSR(j)		1.490E-17	1.501E-17	1.510E-17	1.441E-17	9.340E-18	5.913E-19	0.000E+00	0.000E+00
a-226+D4	Ra-226+D4	3.800E-15	2.095E-19	2.015E-19	1.864E-19	1.418E-19	6.395E-20	2.804E-21	0.000E+00	0.000E+00
a-226+D4	Pb-210+D2	3.800E-15	5.006E-21	1.437E-20	3.043E-20	6.462E-20	6.948E-20	5.625E-21	0.000E+00	0.000E+00
a-226+D4	äDSR(j)		2.145E-19	2.159E-19	2.169E-19	2.064E-19	1.334E-19	8.430E-21	0.000E+00	0.000E+00
n-232	Th-232	1.000E+00	1.048E-02	1.041E-02	1.027E-02	9.777E-03	8.369E-03	3.458E-03	0.000E+00	0.000E+00
n-232	Ra-228+D	1.000E+00	1.859E-06	5.190E-06	1.039E-05	1.912E-05	2.033E-05	8.482E-06	0.000E+00	0.000E+00
n-232	Th-228+D	1.000E+00	1.477E-05	8.933E-05	3.434E-04	1.140E-03	1.449E-03	6.541E-04	0.000E+00	0.000E+00
n-232	äDSR(j)		1.050E-02	1.051E-02	1.062E-02	1.094E-02	9.838E-03	4.120E-03	0.000E+00	0.000E+00
-234	U-234	9.996E-01	8.249E-04	7.839E-04	7.078E-04	4.945E-04	1.748E-04	3.268E-06	0.000E+00	0.000E+00
-234	Th-230	9.996E-01	9.425E-09	2.756E-08	6.080E-08	1.500E-07	2.560E-07	1.411E-07	0.000E+00	0.000E+00
-234	Ra-226+D	9.996E-01	3.647E-14	2.484E-13	1.234E-12	8.841E-12	3.983E-11	4.605E-11	0.000E+00	0.000E+00
-234	Pb-210+D	9.996E-01	7.468E-16	1.084E-14	1.173E-13	2.374E-12	2.694E-11	6.296E-11	0.000E+00	0.000E+00
-234	äDSR(j)		8.249E-04	7.839E-04	7.079E-04	4.946E-04	1.750E-04	3.409E-06	0.000E+00	0.000E+00
-234	U-234	1.319E-06	1.089E-09	1.035E-09	9.344E-10	6.527E-10	2.307E-10	4.314E-12	0.000E+00	0.000E+00
-234	Th-230	1.319E-06	1.244E-14	3.638E-14	8.026E-14	1.980E-13	3.379E-13	1.862E-13	0.000E+00	0.000E+00
-234	Ra-226+D	1.319E-06	4.814E-20	3.278E-19	1.628E-18	1.167E-17	5.258E-17	6.079E-17	0.000E+00	0.000E+00
-234	Pb-210+D1	1.319E-06	5.863E-22	8.507E-21	9.209E-20	1.864E-18	2.115E-17	4.943E-17	0.000E+00	0.000E+00
-234	äDSR(j)		1.089E-09	1.035E-09	9.344E-10	6.529E-10	2.311E-10	4.500E-12	0.000E+00	0.000E+00
-234	U-234	1.899E-08	1.567E-11	1.489E-11	1.345E-11	9.395E-12	3.321E-12	6.209E-14	0.000E+00	0.000E+00
-234	Th-230	1.899E-08	1.791E-16	5.237E-16	1.155E-15	2.850E-15	4.863E-15	2.680E-15	0.000E+00	0.000E+00
-234	Ra-226+D	1.899E-08	6.929E-22	4.719E-21	2.344E-20	1.680E-19	7.568E-19	8.750E-19	0.000E+00	0.000E+00
-234	Pb-210+D2	1.899E-08	8.320E-24	1.207E-22	1.307E-21	2.645E-20	3.002E-19	7.013E-19	0.000E+00	0.000E+00
-234	äDSR(j)		1.567E-11	1.490E-11	1.345E-11	9.398E-12	3.326E-12	6.478E-14	0.000E+00	0.000E+00
-234	U-234	2.100E-04	1.733E-07	1.647E-07	1.487E-07	1.039E-07	3.671E-08	6.864E-10	0.000E+00	0.000E+00
-234	Th-230	2.100E-04	1.980E-12	5.790E-12	1.277E-11	3.151E-11	5.376E-11	2.963E-11	0.000E+00	0.000E+00
-234	Ra-226+D1	2.100E-04	7.660E-18	5.217E-17	2.591E-16	1.857E-15	8.366E-15	9.673E-15	0.000E+00	0.000E+00
-234	Pb-210+D	2.100E-04	1.569E-19	2.276E-18	2.464E-17	4.987E-16	5.660E-15	1.322E-14	0.000E+00	0.000E+00
-234	äDSR(j)		1.733E-07	1.647E-07	1.487E-07	1.039E-07	3.677E-08	7.161E-10	0.000E+00	0.000E+00
-234	U-234	2.771E-10	2.287E-13	2.173E-13	1.963E-13	1.371E-13	4.846E-14	9.061E-16	0.000E+00	0.000E+00
-234	Th-230	2.771E-10	2.613E-18	7.642E-18	1.686E-17	4.159E-17	7.097E-17	3.911E-17	0.000E+00	0.000E+00
-234	Ra-226+D1	2.771E-10	1.011E-23	6.886E-23	3.421E-22	2.451E-21	1.104E-20	1.277E-20	0.000E+00	0.000E+00
-234	Pb-210+D1	2.771E-10	1.232E-25	1.787E-24	1.934E-23	3.915E-22	4.443E-21	1.038E-20	0.000E+00	0.000E+00
-234	äDSR(j)		2.287E-13	2.174E-13	1.963E-13	1.371E-13	4.853E-14	9.452E-16	0.000E+00	0.000E+00

ummary : GKP Recreational Visitor - Inhalation
ile : C:\USERS\CLAUDE\DOCUMENTS\0 GKP DOSE\RESRAD CW\GKP RECREATIONAL VISITOR- INHALATION R1.RAD

Dose/Source Ratios Summed Over All Pathways
Parent and Progeny Principal Radionuclide Contributions Indicated

Parent (i)	Product (j)	Thread Fraction	DSR(j,t) At Time in Years (mrem/yr)/(pCi/g) 0.000E+00	1.000E+00	3.000E+00	1.000E+01	3.000E+01	1.000E+02	3.000E+02	1.000E+03
ÄÄÄÄÄÄÄÄÄ	ÄÄÄÄÄÄÄÄÄÄ	ÄÄÄÄÄÄÄÄÄ	ÄÄÄÄÄÄÄÄÄ	ÄÄÄÄÄÄÄÄÄ	ÄÄÄÄÄÄÄÄÄ	ÄÄÄÄÄÄÄÄÄ	ÄÄÄÄÄÄÄÄÄ	ÄÄÄÄÄÄÄÄÄ	ÄÄÄÄÄÄÄÄÄ	ÄÄÄÄÄÄÄÄÄ
-234	U-234	3.989E-12	3.292E-15	3.129E-15	2.825E-15	1.973E-15	6.975E-16	1.304E-17	0.000E+00	0.000E+00
-234	Th-230	3.989E-12	3.761E-20	1.100E-19	2.427E-19	5.986E-19	1.022E-18	5.630E-19	0.000E+00	0.000E+00
-234	Ra-226+D1	3.989E-12	1.455E-25	9.912E-25	4.924E-24	3.528E-23	1.590E-22	1.838E-22	0.000E+00	0.000E+00
-234	Pb-210+D2	3.989E-12	1.747E-27	2.535E-26	2.745E-25	5.556E-24	6.305E-23	1.473E-22	0.000E+00	0.000E+00
-234	äDSR(j)		3.292E-15	3.129E-15	2.825E-15	1.974E-15	6.986E-16	1.361E-17	0.000E+00	0.000E+00
-234	U-234	1.998E-04	1.649E-07	1.567E-07	1.415E-07	9.881E-08	3.493E-08	6.531E-10	0.000E+00	0.000E+00
-234	Th-230	1.998E-04	1.884E-12	5.508E-12	1.215E-11	2.998E-11	5.115E-11	2.819E-11	0.000E+00	0.000E+00
-234	Ra-226+D2	1.998E-04	7.281E-18	4.959E-17	2.463E-16	1.765E-15	7.953E-15	9.194E-15	0.000E+00	0.000E+00
-234	Pb-210+D	1.998E-04	1.492E-19	2.165E-18	2.344E-17	4.745E-16	5.385E-15	1.258E-14	0.000E+00	0.000E+00
-234	äDSR(j)		1.649E-07	1.567E-07	1.415E-07	9.884E-08	3.498E-08	6.813E-10	0.000E+00	0.000E+00
-234	U-234	2.637E-10	2.176E-13	2.068E-13	1.867E-13	1.304E-13	4.611E-14	8.621E-16	0.000E+00	0.000E+00
-234	Th-230	2.637E-10	2.486E-18	7.271E-18	1.604E-17	3.957E-17	6.752E-17	3.721E-17	0.000E+00	0.000E+00
-234	Ra-226+D2	2.637E-10	9.611E-24	6.546E-23	3.251E-22	2.330E-21	1.050E-20	1.214E-20	0.000E+00	0.000E+00
-234	Pb-210+D1	2.637E-10	1.172E-25	1.700E-24	1.840E-23	3.725E-22	4.227E-21	9.877E-21	0.000E+00	0.000E+00
-234	äDSR(j)		2.176E-13	2.068E-13	1.867E-13	1.305E-13	4.617E-14	8.993E-16	0.000E+00	0.000E+00
-234	U-234	3.795E-12	3.132E-15	2.977E-15	2.688E-15	1.877E-15	6.637E-16	1.241E-17	0.000E+00	0.000E+00
-234	Th-230	3.795E-12	3.579E-20	1.047E-19	2.309E-19	5.696E-19	9.719E-19	5.357E-19	0.000E+00	0.000E+00
-234	Ra-226+D2	3.795E-12	1.383E-25	9.422E-25	4.680E-24	3.354E-23	1.511E-22	1.747E-22	0.000E+00	0.000E+00
-234	Pb-210+D2	3.795E-12	1.663E-27	2.412E-26	2.611E-25	5.286E-24	5.998E-23	1.402E-22	0.000E+00	0.000E+00
-234	äDSR(j)		3.132E-15	2.977E-15	2.688E-15	1.878E-15	6.646E-16	1.294E-17	0.000E+00	0.000E+00
-234	U-234	4.196E-08	3.463E-11	3.291E-11	2.971E-11	2.076E-11	7.337E-12	1.372E-13	0.000E+00	0.000E+00
-234	Th-230	4.196E-08	3.956E-16	1.157E-15	2.552E-15	6.296E-15	1.074E-14	5.922E-15	0.000E+00	0.000E+00
-234	Ra-226+D3	4.196E-08	1.529E-21	1.042E-20	5.174E-20	3.708E-19	1.670E-18	1.931E-18	0.000E+00	0.000E+00
-234	Pb-210+D	4.196E-08	3.135E-23	4.548E-22	4.924E-21	9.966E-20	1.131E-18	2.643E-18	0.000E+00	0.000E+00
-234	äDSR(j)		3.463E-11	3.291E-11	2.971E-11	2.076E-11	7.347E-12	1.431E-13	0.000E+00	0.000E+00
-234	U-234	5.538E-14	4.571E-17	4.343E-17	3.922E-17	2.740E-17	9.684E-18	1.811E-19	0.000E+00	0.000E+00
-234	Th-230	5.538E-14	5.222E-22	1.527E-21	3.369E-21	8.311E-21	1.418E-20	7.817E-21	0.000E+00	0.000E+00
-234	Ra-226+D3	5.538E-14	2.019E-27	1.375E-26	6.830E-26	4.894E-25	2.205E-24	2.549E-24	0.000E+00	0.000E+00
-234	Pb-210+D1	5.538E-14	2.461E-29	3.571E-28	3.866E-27	7.824E-26	8.879E-25	2.075E-24	0.000E+00	0.000E+00
-234	äDSR(j)		4.571E-17	4.344E-17	3.922E-17	2.741E-17	9.699E-18	1.889E-19	0.000E+00	0.000E+00
-234	U-234	7.972E-16	6.579E-19	6.252E-19	5.645E-19	3.943E-19	1.394E-19	2.606E-21	0.000E+00	0.000E+00
-234	Th-230	7.972E-16	7.517E-24	2.198E-23	4.849E-23	1.196E-22	2.041E-22	1.125E-22	0.000E+00	0.000E+00
-234	Ra-226+D3	7.972E-16	2.906E-29	1.979E-28	9.830E-28	7.044E-27	3.174E-26	3.669E-26	0.000E+00	0.000E+00
-234	Pb-210+D2	7.972E-16	3.492E-31	5.067E-30	5.485E-29	1.110E-27	1.260E-26	2.944E-26	0.000E+00	0.000E+00
-234	äDSR(j)		6.579E-19	6.252E-19	5.646E-19	3.945E-19	1.396E-19	2.719E-21	0.000E+00	0.000E+00
-234	U-234	2.000E-07	1.650E-10	1.568E-10	1.416E-10	9.893E-11	3.497E-11	6.539E-13	0.000E+00	0.000E+00
-234	Th-230	2.000E-07	1.886E-15	5.515E-15	1.217E-14	3.001E-14	5.121E-14	2.823E-14	0.000E+00	0.000E+00
-234	Ra-226+D4	2.000E-07	7.285E-21	4.961E-20	2.464E-19	1.766E-18	7.957E-18	9.199E-18	0.000E+00	0.000E+00
-234	Pb-210+D	2.000E-07	1.494E-22	2.168E-21	2.347E-20	4.751E-19	5.391E-18	1.260E-17	0.000E+00	0.000E+00
-234	äDSR(j)		1.651E-10	1.569E-10	1.416E-10	9.896E-11	3.502E-11	6.821E-13	0.000E+00	0.000E+00

ummary : GKP Recreational Visitor - Inhalation
ile : C:\USERS\CLAUDE\DOCUMENTS\0 GKP DOSE\RESRAD CW\GKP RECREATIONAL VISITOR- INHALATION R1.RAD

Dose/Source Ratios Summed Over All Pathways
Parent and Progeny Principal Radionuclide Contributions Indicated

Parent (i)	Product (j)	Thread Fraction	DSR(j,t) At Time in Years (mrem/yr)/(pCi/g) 0.000E+00	1.000E+00	3.000E+00	1.000E+01	3.000E+01	1.000E+02	3.000E+02	1.000E+03
ÄÄÄÄÄÄÄÄ	ÄÄÄÄÄÄÄÄÄÄ	ÄÄÄÄÄÄÄÄÄ	ÄÄÄÄÄÄÄÄÄ	ÄÄÄÄÄÄÄÄÄ	ÄÄÄÄÄÄÄÄÄ	ÄÄÄÄÄÄÄÄÄ	ÄÄÄÄÄÄÄÄÄ	ÄÄÄÄÄÄÄÄÄ	ÄÄÄÄÄÄÄÄÄ	ÄÄÄÄÄÄÄÄÄ
-234	U-234	2.640E-13	2.179E-16	2.070E-16	1.869E-16	1.306E-16	4.616E-17	8.631E-19	0.000E+00	0.000E+00
-234	Th-230	2.640E-13	2.489E-21	7.280E-21	1.606E-20	3.962E-20	6.760E-20	3.726E-20	0.000E+00	0.000E+00
-234	Ra-226+D4	2.640E-13	9.616E-27	6.549E-26	3.253E-25	2.331E-24	1.050E-23	1.214E-23	0.000E+00	0.000E+00
-234	Pb-210+D1	2.640E-13	1.173E-28	1.702E-27	1.843E-26	3.730E-25	4.233E-24	9.889E-24	0.000E+00	0.000E+00
-234	äDSR(j)		2.179E-16	2.070E-16	1.870E-16	1.306E-16	4.623E-17	9.004E-19	0.000E+00	0.000E+00
-234	U-234	3.800E-15	3.136E-18	2.980E-18	2.691E-18	1.880E-18	6.645E-19	1.242E-20	0.000E+00	0.000E+00
-234	Th-230	3.800E-15	3.583E-23	1.048E-22	2.312E-22	5.703E-22	9.731E-22	5.363E-22	0.000E+00	0.000E+00
-234	Ra-226+D4	3.800E-15	1.384E-28	9.426E-28	4.682E-27	3.355E-26	1.512E-25	1.748E-25	0.000E+00	0.000E+00
-234	Pb-210+D2	3.800E-15	1.665E-30	2.415E-29	2.615E-28	5.292E-27	6.006E-26	1.403E-25	0.000E+00	0.000E+00
-234	äDSR(j)		3.136E-18	2.980E-18	2.691E-18	1.880E-18	6.654E-19	1.296E-20	0.000E+00	0.000E+00
-235+D	U-235+D	9.835E-01	7.563E-04	7.187E-04	6.490E-04	4.533E-04	1.603E-04	2.997E-06	0.000E+00	0.000E+00
-235+D	Pa-231	9.835E-01	8.255E-08	2.367E-07	4.995E-07	1.048E-06	1.076E-06	6.625E-08	0.000E+00	0.000E+00
-235+D	Ac-227+D	9.835E-01	4.473E-09	2.917E-08	1.315E-07	6.723E-07	1.256E-06	1.020E-07	0.000E+00	0.000E+00
-235+D	äDSR(j)		7.564E-04	7.190E-04	6.496E-04	4.551E-04	1.626E-04	3.165E-06	0.000E+00	0.000E+00
-235+D	U-235+D	2.722E-03	2.093E-06	1.989E-06	1.796E-06	1.255E-06	4.435E-07	8.295E-09	0.000E+00	0.000E+00
-235+D	Pa-231	2.722E-03	2.285E-10	6.551E-10	1.382E-09	2.899E-09	2.977E-09	1.833E-10	0.000E+00	0.000E+00
-235+D	Ac-227+D1	2.722E-03	1.238E-11	8.073E-11	3.638E-10	1.861E-09	3.477E-09	2.824E-10	0.000E+00	0.000E+00
-235+D	äDSR(j)		2.093E-06	1.990E-06	1.798E-06	1.259E-06	4.500E-07	8.761E-09	0.000E+00	0.000E+00
-235+D	U-235+D	1.376E-02	1.058E-05	1.006E-05	9.081E-06	6.343E-06	2.242E-06	4.194E-08	0.000E+00	0.000E+00
-235+D	Pa-231	1.376E-02	1.155E-09	3.312E-09	6.989E-09	1.466E-08	1.505E-08	9.269E-10	0.000E+00	0.000E+00
-235+D	Ac-227+D2	1.376E-02	6.244E-11	4.072E-10	1.835E-09	9.384E-09	1.754E-08	1.424E-09	0.000E+00	0.000E+00
-235+D	äDSR(j)		1.058E-05	1.006E-05	9.089E-06	6.367E-06	2.275E-06	4.429E-08	0.000E+00	0.000E+00
-235+D	U-235+D	3.809E-05	2.929E-08	2.783E-08	2.513E-08	1.756E-08	6.206E-09	1.161E-10	0.000E+00	0.000E+00
-235+D	Pa-231	3.809E-05	3.197E-12	9.166E-12	1.934E-11	4.057E-11	4.166E-11	2.565E-12	0.000E+00	0.000E+00
-235+D	Ac-227+D3	3.809E-05	1.728E-13	1.127E-12	5.078E-12	2.597E-11	4.853E-11	3.942E-12	0.000E+00	0.000E+00
-235+D	äDSR(j)		2.929E-08	2.784E-08	2.516E-08	1.762E-08	6.296E-09	1.226E-10	0.000E+00	0.000E+00
-235+D	U-235+D	8.257E-07	6.350E-10	6.034E-10	5.449E-10	3.806E-10	1.346E-10	2.516E-12	0.000E+00	0.000E+00
-235+D	Pa-231	8.257E-07	6.931E-14	1.987E-13	4.194E-13	8.795E-13	9.032E-13	5.562E-14	0.000E+00	0.000E+00
-235+D	Ac-227+D4	8.257E-07	3.742E-15	2.440E-14	1.100E-13	5.624E-13	1.051E-12	8.536E-14	0.000E+00	0.000E+00
-235+D	äDSR(j)		6.350E-10	6.036E-10	5.454E-10	3.821E-10	1.365E-10	2.657E-12	0.000E+00	0.000E+00
-235+D	U-235+D	2.285E-09	1.757E-12	1.670E-12	1.508E-12	1.053E-12	3.724E-13	6.964E-15	0.000E+00	0.000E+00
-235+D	Pa-231	2.285E-09	1.918E-16	5.500E-16	1.161E-15	2.434E-15	2.500E-15	1.539E-16	0.000E+00	0.000E+00
-235+D	Ac-227+D5	2.285E-09	1.036E-17	6.754E-17	3.044E-16	1.557E-15	2.909E-15	2.362E-16	0.000E+00	0.000E+00
-235+D	äDSR(j)		1.758E-12	1.671E-12	1.509E-12	1.057E-12	3.778E-13	7.354E-15	0.000E+00	0.000E+00
-238	U-238	5.450E-07	4.021E-10	3.821E-10	3.450E-10	2.410E-10	8.520E-11	1.593E-12	0.000E+00	0.000E+00

ummary : GKP Recreational Visitor - Inhalation
ile : C:\USERS\CLAUDE\DOCUMENTS\0 GKP DOSE\RESRAD CW\GKP RECREATIONAL VISITOR- INHALATION R1.RAD

Dose/Source Ratios Summed Over All Pathways
Parent and Progeny Principal Radionuclide Contributions Indicated

Parent (i)	Product (j)	Thread Fraction	DSR(j,t) At Time in Years (mrem/yr)/(pCi/g) 0.000E+00	1.000E+00	3.000E+00	1.000E+01	3.000E+01	1.000E+02	3.000E+02	1.000E+03
-238+D	U-238+D	1.599E-03	1.180E-06	1.122E-06	1.013E-06	7.075E-07	2.501E-07	4.677E-09	0.000E+00	0.000E+00
-238+D	U-234	1.599E-03	1.847E-12	5.297E-12	1.118E-11	2.344E-11	2.408E-11	1.484E-12	0.000E+00	0.000E+00
-238+D	Th-230	1.599E-03	1.408E-17	9.556E-17	4.710E-16	3.285E-15	1.379E-14	1.365E-14	0.000E+00	0.000E+00
-238+D	Ra-226+D	1.599E-03	4.097E-23	5.955E-22	6.475E-21	1.330E-19	1.570E-18	4.004E-18	0.000E+00	0.000E+00
-238+D	Pb-210+D	1.599E-03	6.726E-25	2.012E-23	4.685E-22	2.748E-20	8.542E-19	5.019E-18	0.000E+00	0.000E+00
-238+D	äDSR(j)		1.180E-06	1.122E-06	1.013E-06	7.075E-07	2.501E-07	4.679E-09	0.000E+00	0.000E+00
-238+D	U-238+D	2.111E-09	1.558E-12	1.480E-12	1.337E-12	9.339E-13	3.301E-13	6.174E-15	0.000E+00	0.000E+00
-238+D	U-234	2.111E-09	2.439E-18	6.992E-18	1.476E-17	3.095E-17	3.179E-17	1.959E-18	0.000E+00	0.000E+00
-238+D	Th-230	2.111E-09	1.859E-23	1.261E-22	6.217E-22	4.336E-21	1.820E-20	1.802E-20	0.000E+00	0.000E+00
-238+D	Ra-226+D	2.111E-09	5.407E-29	7.861E-28	8.547E-27	1.756E-25	2.072E-24	5.285E-24	0.000E+00	0.000E+00
-238+D	Pb-210+D1	2.111E-09	5.281E-31	1.580E-29	3.678E-28	2.158E-26	6.706E-25	3.940E-24	0.000E+00	0.000E+00
-238+D	äDSR(j)		1.558E-12	1.481E-12	1.337E-12	9.339E-13	3.302E-13	6.176E-15	0.000E+00	0.000E+00
-238+D	U-238+D	3.039E-11	2.242E-14	2.131E-14	1.924E-14	1.344E-14	4.752E-15	8.887E-17	0.000E+00	0.000E+00
-238+D	U-234	3.039E-11	3.510E-20	1.006E-19	2.124E-19	4.454E-19	4.575E-19	2.819E-20	0.000E+00	0.000E+00
-238+D	Th-230	3.039E-11	2.675E-25	1.816E-24	8.949E-24	6.241E-23	2.619E-22	2.594E-22	0.000E+00	0.000E+00
-238+D	Ra-226+D	3.039E-11	7.783E-31	1.131E-29	1.230E-28	2.528E-27	2.983E-26	7.607E-26	0.000E+00	0.000E+00
-238+D	Pb-210+D2	3.039E-11	7.493E-33	2.241E-31	5.219E-30	3.061E-28	9.516E-27	5.591E-26	0.000E+00	0.000E+00
-238+D	äDSR(j)		2.242E-14	2.131E-14	1.924E-14	1.344E-14	4.752E-15	8.889E-17	0.000E+00	0.000E+00
-238+D	U-238+D	3.359E-07	2.479E-10	2.356E-10	2.127E-10	1.486E-10	5.253E-11	9.824E-13	0.000E+00	0.000E+00
-238+D	U-234	3.359E-07	3.880E-16	1.113E-15	2.348E-15	4.924E-15	5.058E-15	3.117E-16	0.000E+00	0.000E+00
-238+D	Th-230	3.359E-07	2.957E-21	2.007E-20	9.893E-20	6.899E-19	2.896E-18	2.868E-18	0.000E+00	0.000E+00
-238+D	Ra-226+D1	3.359E-07	8.605E-27	1.251E-25	1.360E-24	2.795E-23	3.298E-22	8.410E-22	0.000E+00	0.000E+00
-238+D	Pb-210+D	3.359E-07	1.413E-28	4.226E-27	9.841E-26	5.772E-24	1.794E-22	1.054E-21	0.000E+00	0.000E+00
-238+D	äDSR(j)		2.479E-10	2.356E-10	2.127E-10	1.486E-10	5.254E-11	9.827E-13	0.000E+00	0.000E+00
-238+D	U-238+D	4.434E-13	3.272E-16	3.110E-16	2.808E-16	1.962E-16	6.934E-17	1.297E-18	0.000E+00	0.000E+00
-238+D	U-234	4.434E-13	5.122E-22	1.469E-21	3.099E-21	6.500E-21	6.676E-21	4.114E-22	0.000E+00	0.000E+00
-238+D	Th-230	4.434E-13	3.904E-27	2.649E-26	1.306E-25	9.107E-25	3.822E-24	3.786E-24	0.000E+00	0.000E+00
-238+D	Ra-226+D1	4.434E-13	1.136E-32	1.651E-31	1.795E-30	3.689E-29	4.353E-28	1.110E-27	0.000E+00	0.000E+00
-238+D	Pb-210+D1	4.434E-13	1.109E-34	3.318E-33	7.726E-32	4.532E-30	1.409E-28	8.277E-28	0.000E+00	0.000E+00
-238+D	äDSR(j)		3.272E-16	3.110E-16	2.808E-16	1.962E-16	6.935E-17	1.297E-18	0.000E+00	0.000E+00
-238+D	U-238+D	6.383E-15	4.710E-18	4.476E-18	4.042E-18	2.823E-18	9.981E-19	1.867E-20	0.000E+00	0.000E+00
-238+D	U-234	6.383E-15	7.373E-24	2.114E-23	4.461E-23	9.356E-23	9.610E-23	5.922E-24	0.000E+00	0.000E+00
-238+D	Th-230	6.383E-15	5.619E-29	3.814E-28	1.880E-27	1.311E-26	5.502E-26	5.449E-26	0.000E+00	0.000E+00
-238+D	Ra-226+D1	6.383E-15	1.635E-34	2.377E-33	2.584E-32	5.310E-31	6.266E-30	1.598E-29	0.000E+00	0.000E+00
-238+D	Pb-210+D2	6.383E-15	1.574E-36	4.708E-35	1.096E-33	6.430E-32	1.999E-30	1.174E-29	0.000E+00	0.000E+00
-238+D	äDSR(j)		4.710E-18	4.476E-18	4.042E-18	2.823E-18	9.982E-19	1.867E-20	0.000E+00	0.000E+00

ummary : GKP Recreational Visitor - Inhalation
ile : C:\USERS\CLAUDE\DOCUMENTS\0 GKP DOSE\RESRAD CW\GKP RECREATIONAL VISITOR- INHALATION R1.RAD

Dose/Source Ratios Summed Over All Pathways
Parent and Progeny Principal Radionuclide Contributions Indicated

Parent (i)	Product (j)	Thread Fraction	DSR(j,t) At Time in Years (mrem/yr)/(pCi/g) 0.000E+00	1.000E+00	3.000E+00	1.000E+01	3.000E+01	1.000E+02	3.000E+02	1.000E+03
ÄÄÄÄÄÄÄÄ	ÄÄÄÄÄÄÄÄÄÄ	ÄÄÄÄÄÄÄÄ	ÄÄÄÄÄÄÄÄ	ÄÄÄÄÄÄÄÄ	ÄÄÄÄÄÄÄÄ	ÄÄÄÄÄÄÄÄ	ÄÄÄÄÄÄÄÄ	ÄÄÄÄÄÄÄÄ	ÄÄÄÄÄÄÄÄ	ÄÄÄÄÄÄÄÄ
-238+D	U-238+D	3.196E-07	2.359E-10	2.241E-10	2.024E-10	1.414E-10	4.998E-11	9.347E-13	0.000E+00	0.000E+00
-238+D	U-234	3.196E-07	3.692E-16	1.059E-15	2.234E-15	4.685E-15	4.812E-15	2.965E-16	0.000E+00	0.000E+00
-238+D	Th-230	3.196E-07	2.814E-21	1.910E-20	9.413E-20	6.564E-19	2.755E-18	2.729E-18	0.000E+00	0.000E+00
-238+D	Ra-226+D2	3.196E-07	8.179E-27	1.189E-25	1.293E-24	2.656E-23	3.135E-22	7.994E-22	0.000E+00	0.000E+00
-238+D	Pb-210+D	3.196E-07	1.344E-28	4.021E-27	9.363E-26	5.492E-24	1.707E-22	1.003E-21	0.000E+00	0.000E+00
-238+D	äDSR(j)		2.359E-10	2.241E-10	2.024E-10	1.414E-10	4.998E-11	9.350E-13	0.000E+00	0.000E+00
-238+D	U-238+D	4.219E-13	3.113E-16	2.959E-16	2.672E-16	1.866E-16	6.597E-17	1.234E-18	0.000E+00	0.000E+00
-238+D	U-234	4.219E-13	4.873E-22	1.397E-21	2.949E-21	6.184E-21	6.352E-21	3.914E-22	0.000E+00	0.000E+00
-238+D	Th-230	4.219E-13	3.714E-27	2.521E-26	1.242E-25	8.665E-25	3.637E-24	3.602E-24	0.000E+00	0.000E+00
-238+D	Ra-226+D2	4.219E-13	1.080E-32	1.569E-31	1.706E-30	3.507E-29	4.138E-28	1.055E-27	0.000E+00	0.000E+00
-238+D	Pb-210+D1	4.219E-13	1.055E-34	3.157E-33	7.351E-32	4.312E-30	1.340E-28	7.875E-28	0.000E+00	0.000E+00
-238+D	äDSR(j)		3.113E-16	2.959E-16	2.672E-16	1.866E-16	6.598E-17	1.234E-18	0.000E+00	0.000E+00
-238+D	U-238+D	6.073E-15	4.481E-18	4.259E-18	3.845E-18	2.686E-18	9.496E-19	1.776E-20	0.000E+00	0.000E+00
-238+D	U-234	6.073E-15	7.015E-24	2.011E-23	4.244E-23	8.902E-23	9.143E-23	5.634E-24	0.000E+00	0.000E+00
-238+D	Th-230	6.073E-15	5.346E-29	3.628E-28	1.788E-27	1.247E-26	5.235E-26	5.184E-26	0.000E+00	0.000E+00
-238+D	Ra-226+D2	6.073E-15	1.554E-34	2.259E-33	2.456E-32	5.047E-31	5.956E-30	1.519E-29	0.000E+00	0.000E+00
-238+D	Pb-210+D2	6.073E-15	1.497E-36	4.479E-35	1.043E-33	6.118E-32	1.902E-30	1.117E-29	0.000E+00	0.000E+00
-238+D	äDSR(j)		4.481E-18	4.259E-18	3.845E-18	2.686E-18	9.497E-19	1.776E-20	0.000E+00	0.000E+00
-238+D	U-238+D	6.713E-11	4.954E-14	4.708E-14	4.251E-14	2.970E-14	1.050E-14	1.963E-16	0.000E+00	0.000E+00
-238+D	U-234	6.713E-11	7.755E-20	2.223E-19	4.692E-19	9.841E-19	1.011E-18	6.229E-20	0.000E+00	0.000E+00
-238+D	Th-230	6.713E-11	5.910E-25	4.011E-24	1.977E-23	1.379E-22	5.787E-22	5.731E-22	0.000E+00	0.000E+00
-238+D	Ra-226+D3	6.713E-11	1.718E-30	2.497E-29	2.715E-28	5.580E-27	6.584E-26	1.679E-25	0.000E+00	0.000E+00
-238+D	Pb-210+D	6.713E-11	2.823E-32	8.446E-31	1.967E-29	1.154E-27	3.586E-26	2.107E-25	0.000E+00	0.000E+00
-238+D	äDSR(j)		4.954E-14	4.708E-14	4.251E-14	2.970E-14	1.050E-14	1.964E-16	0.000E+00	0.000E+00
-238+D	U-238+D	8.862E-17	6.539E-20	6.214E-20	5.611E-20	3.920E-20	1.386E-20	2.591E-22	0.000E+00	0.000E+00
-238+D	U-234	8.862E-17	1.024E-25	2.935E-25	6.194E-25	1.299E-24	1.334E-24	8.222E-26	0.000E+00	0.000E+00
-238+D	Th-230	8.862E-17	7.801E-31	5.295E-30	2.610E-29	1.820E-28	7.639E-28	7.565E-28	0.000E+00	0.000E+00
-238+D	Ra-226+D3	8.862E-17	2.268E-36	3.297E-35	3.584E-34	7.365E-33	8.691E-32	2.216E-31	0.000E+00	0.000E+00
-238+D	Pb-210+D1	8.862E-17	2.217E-38	6.630E-37	1.544E-35	9.056E-34	2.815E-32	1.654E-31	0.000E+00	0.000E+00
-238+D	äDSR(j)		6.539E-20	6.214E-20	5.611E-20	3.920E-20	1.386E-20	2.592E-22	0.000E+00	0.000E+00
-238+D	U-238+D	1.276E-18	9.413E-22	8.945E-22	8.077E-22	5.642E-22	1.995E-22	3.730E-24	0.000E+00	0.000E+00
-238+D	U-234	1.276E-18	1.473E-27	4.224E-27	8.915E-27	1.870E-26	1.920E-26	1.183E-27	0.000E+00	0.000E+00
-238+D	Th-230	1.276E-18	1.123E-32	7.621E-32	3.756E-31	2.620E-30	1.099E-29	1.089E-29	0.000E+00	0.000E+00
-238+D	Ra-226+D3	1.276E-18	3.264E-38	4.745E-37	5.159E-36	1.060E-34	1.251E-33	3.190E-33	0.000E+00	0.000E+00
-238+D	Pb-210+D2	1.276E-18	3.145E-40	9.408E-39	2.191E-37	1.285E-35	3.994E-34	2.347E-33	0.000E+00	0.000E+00
-238+D	äDSR(j)		9.413E-22	8.945E-22	8.077E-22	5.642E-22	1.995E-22	3.731E-24	0.000E+00	0.000E+00

ummary : GKP Recreational Visitor - Inhalation
ile : C:\USERS\CLAUDE\DOCUMENTS\0 GKP DOSE\RESRAD CW\GKP RECREATIONAL VISITOR- INHALATION R1.RAD

Dose/Source Ratios Summed Over All Pathways
Parent and Progeny Principal Radionuclide Contributions Indicated

Parent	Product	Thread	DSR(j,t) At Time in Years (mrem/yr)/(pCi/g)							
(i)	(j)	Fraction	0.000E+00	1.000E+00	3.000E+00	1.000E+01	3.000E+01	1.000E+02	3.000E+02	1.000E+03
ÄÄÄÄÄÄÄÄ	ÄÄÄÄÄÄÄÄÄÄ	ÄÄÄÄÄÄÄÄÄ	ÄÄÄÄÄÄÄÄÄ	ÄÄÄÄÄÄÄÄÄ	ÄÄÄÄÄÄÄÄÄ	ÄÄÄÄÄÄÄÄÄ	ÄÄÄÄÄÄÄÄÄ	ÄÄÄÄÄÄÄÄÄ	ÄÄÄÄÄÄÄÄÄ	ÄÄÄÄÄÄÄÄÄ
-238+D	U-238+D	3.200E-10	2.361E-13	2.244E-13	2.026E-13	1.416E-13	5.004E-14	9.358E-16	0.000E+00	0.000E+00
-238+D	U-234	3.200E-10	3.696E-19	1.060E-18	2.237E-18	4.691E-18	4.818E-18	2.969E-19	0.000E+00	0.000E+00
-238+D	Th-230	3.200E-10	2.817E-24	1.912E-23	9.424E-23	6.572E-22	2.758E-21	2.732E-21	0.000E+00	0.000E+00
-238+D	Ra-226+D4	3.200E-10	8.183E-30	1.190E-28	1.293E-27	2.658E-26	3.136E-25	7.998E-25	0.000E+00	0.000E+00
-238+D	Pb-210+D	3.200E-10	1.346E-31	4.026E-30	9.374E-29	5.499E-27	1.709E-25	1.004E-24	0.000E+00	0.000E+00
-238+D	äDSR(j)		2.361E-13	2.244E-13	2.026E-13	1.416E-13	5.004E-14	9.361E-16	0.000E+00	0.000E+00
-238+D	U-238+D	4.224E-16	3.117E-19	2.962E-19	2.675E-19	1.868E-19	6.605E-20	1.235E-21	0.000E+00	0.000E+00
-238+D	U-234	4.224E-16	4.879E-25	1.399E-24	2.952E-24	6.192E-24	6.360E-24	3.919E-25	0.000E+00	0.000E+00
-238+D	Th-230	4.224E-16	3.719E-30	2.524E-29	1.244E-28	8.675E-28	3.641E-27	3.606E-27	0.000E+00	0.000E+00
-238+D	Ra-226+D4	4.224E-16	1.080E-35	1.570E-34	1.707E-33	3.508E-32	4.140E-31	1.056E-30	0.000E+00	0.000E+00
-238+D	Pb-210+D1	4.224E-16	1.057E-37	3.161E-36	7.360E-35	4.317E-33	1.342E-31	7.884E-31	0.000E+00	0.000E+00
-238+D	äDSR(j)		3.117E-19	2.962E-19	2.675E-19	1.869E-19	6.606E-20	1.236E-21	0.000E+00	0.000E+00
-238+D	U-238+D	6.080E-18	4.487E-21	4.264E-21	3.850E-21	2.689E-21	9.508E-22	1.778E-23	0.000E+00	0.000E+00
-238+D	U-234	6.080E-18	7.023E-27	2.014E-26	4.250E-26	8.913E-26	9.154E-26	5.641E-27	0.000E+00	0.000E+00
-238+D	Th-230	6.080E-18	5.353E-32	3.633E-31	1.791E-30	1.249E-29	5.241E-29	5.191E-29	0.000E+00	0.000E+00
-238+D	Ra-226+D4	6.080E-18	1.555E-37	2.260E-36	2.457E-35	5.050E-34	5.959E-33	1.520E-32	0.000E+00	0.000E+00
-238+D	Pb-210+D2	6.080E-18	1.499E-39	4.485E-38	1.044E-36	6.125E-35	1.904E-33	1.119E-32	0.000E+00	0.000E+00
-238+D	äDSR(j)		4.487E-21	4.264E-21	3.850E-21	2.690E-21	9.508E-22	1.779E-23	0.000E+00	0.000E+00
-238+D1	U-238+D1	9.980E-01	7.365E-04	6.999E-04	6.320E-04	4.415E-04	1.561E-04	2.919E-06	0.000E+00	0.000E+00
-238+D1	U-234	9.980E-01	1.153E-09	3.305E-09	6.975E-09	1.463E-08	1.503E-08	9.259E-10	0.000E+00	0.000E+00
-238+D1	Th-230	9.980E-01	8.786E-15	5.963E-14	2.939E-13	2.050E-12	8.603E-12	8.520E-12	0.000E+00	0.000E+00
-238+D1	Ra-226+D	9.980E-01	2.556E-20	3.716E-19	4.040E-18	8.302E-17	9.797E-16	2.498E-15	0.000E+00	0.000E+00
-238+D1	Pb-210+D	9.980E-01	4.197E-22	1.256E-20	2.924E-19	1.715E-17	5.330E-16	3.132E-15	0.000E+00	0.000E+00
-238+D1	äDSR(j)		7.365E-04	6.999E-04	6.320E-04	4.415E-04	1.561E-04	2.919E-06	0.000E+00	0.000E+00
-238+D1	U-238+D1	1.317E-06	9.721E-10	9.238E-10	8.342E-10	5.827E-10	2.060E-10	3.852E-12	0.000E+00	0.000E+00
-238+D1	U-234	1.317E-06	1.522E-15	4.363E-15	9.207E-15	1.931E-14	1.983E-14	1.222E-15	0.000E+00	0.000E+00
-238+D1	Th-230	1.317E-06	1.160E-20	7.871E-20	3.880E-19	2.706E-18	1.136E-17	1.125E-17	0.000E+00	0.000E+00
-238+D1	Ra-226+D	1.317E-06	3.374E-26	4.905E-25	5.333E-24	1.096E-22	1.293E-21	3.298E-21	0.000E+00	0.000E+00
-238+D1	Pb-210+D1	1.317E-06	3.295E-28	9.857E-27	2.295E-25	1.346E-23	4.185E-22	2.459E-21	0.000E+00	0.000E+00
-238+D1	äDSR(j)		9.721E-10	9.238E-10	8.342E-10	5.827E-10	2.060E-10	3.854E-12	0.000E+00	0.000E+00
-238+D1	U-238+D1	1.896E-08	1.399E-11	1.330E-11	1.201E-11	8.388E-12	2.965E-12	5.545E-14	0.000E+00	0.000E+00
-238+D1	U-234	1.896E-08	2.190E-17	6.280E-17	1.325E-16	2.780E-16	2.855E-16	1.759E-17	0.000E+00	0.000E+00
-238+D1	Th-230	1.896E-08	1.669E-22	1.133E-21	5.584E-21	3.894E-20	1.635E-19	1.619E-19	0.000E+00	0.000E+00
-238+D1	Ra-226+D	1.896E-08	4.857E-28	7.060E-27	7.676E-26	1.577E-24	1.861E-23	4.747E-23	0.000E+00	0.000E+00
-238+D1	Pb-210+D2	1.896E-08	4.676E-30	1.399E-28	3.257E-27	1.910E-25	5.938E-24	3.489E-23	0.000E+00	0.000E+00
-238+D1	äDSR(j)		1.399E-11	1.330E-11	1.201E-11	8.388E-12	2.965E-12	5.547E-14	0.000E+00	0.000E+00

ummary : GKP Recreational Visitor - Inhalation
ile : C:\USERS\CLAUDE\DOCUMENTS\0 GKP DOSE\RESRAD CW\GKP RECREATIONAL VISITOR- INHALATION R1.RAD

Dose/Source Ratios Summed Over All Pathways
Parent and Progeny Principal Radionuclide Contributions Indicated

Parent (i)	Product (j)	Thread Fraction	DSR(j,t) At Time in Years (mrem/yr)/(pCi/g) 0.000E+00	1.000E+00	3.000E+00	1.000E+01	3.000E+01	1.000E+02	3.000E+02	1.000E+03
ÄÄÄÄÄÄÄÄ	ÄÄÄÄÄÄÄÄÄÄ	ÄÄÄÄÄÄÄÄ	ÄÄÄÄÄÄÄÄ	ÄÄÄÄÄÄÄÄ	ÄÄÄÄÄÄÄÄ	ÄÄÄÄÄÄÄÄ	ÄÄÄÄÄÄÄÄ	ÄÄÄÄÄÄÄÄ	ÄÄÄÄÄÄÄÄ	ÄÄÄÄÄÄÄÄ
-238+D1	U-238+D1	2.096E-04	1.547E-07	1.470E-07	1.327E-07	9.272E-08	3.278E-08	6.130E-10	0.000E+00	0.000E+00
-238+D1	U-234	2.096E-04	2.421E-13	6.943E-13	1.465E-12	3.073E-12	3.156E-12	1.945E-13	0.000E+00	0.000E+00
-238+D1	Th-230	2.096E-04	1.845E-18	1.252E-17	6.173E-17	4.305E-16	1.807E-15	1.790E-15	0.000E+00	0.000E+00
-238+D1	Ra-226+D1	2.096E-04	5.369E-24	7.805E-23	8.486E-22	1.744E-20	2.058E-19	5.248E-19	0.000E+00	0.000E+00
-238+D1	Pb-210+D	2.096E-04	8.816E-26	2.637E-24	6.141E-23	3.602E-21	1.120E-19	6.578E-19	0.000E+00	0.000E+00
-238+D1	äDSR(j)		1.547E-07	1.470E-07	1.327E-07	9.273E-08	3.278E-08	6.132E-10	0.000E+00	0.000E+00
-238+D1	U-238+D1	2.767E-10	2.042E-13	1.940E-13	1.752E-13	1.224E-13	4.327E-14	8.092E-16	0.000E+00	0.000E+00
-238+D1	U-234	2.767E-10	3.196E-19	9.164E-19	1.934E-18	4.056E-18	4.166E-18	2.567E-19	0.000E+00	0.000E+00
-238+D1	Th-230	2.767E-10	2.436E-24	1.653E-23	8.149E-23	5.683E-22	2.385E-21	2.362E-21	0.000E+00	0.000E+00
-238+D1	Ra-226+D1	2.767E-10	7.087E-30	1.030E-28	1.120E-27	2.302E-26	2.716E-25	6.927E-25	0.000E+00	0.000E+00
-238+D1	Pb-210+D1	2.767E-10	6.921E-32	2.070E-30	4.821E-29	2.828E-27	8.790E-26	5.165E-25	0.000E+00	0.000E+00
-238+D1	äDSR(j)		2.042E-13	1.940E-13	1.752E-13	1.224E-13	4.327E-14	8.094E-16	0.000E+00	0.000E+00
-238+D1	U-238+D1	3.983E-12	2.939E-15	2.793E-15	2.522E-15	1.762E-15	6.228E-16	1.165E-17	0.000E+00	0.000E+00
-238+D1	U-234	3.983E-12	4.601E-21	1.319E-20	2.784E-20	5.838E-20	5.997E-20	3.695E-21	0.000E+00	0.000E+00
-238+D1	Th-230	3.983E-12	3.506E-26	2.380E-25	1.173E-24	8.180E-24	3.433E-23	3.400E-23	0.000E+00	0.000E+00
-238+D1	Ra-226+D1	3.983E-12	1.020E-31	1.483E-30	1.612E-29	3.313E-28	3.910E-27	9.971E-27	0.000E+00	0.000E+00
-238+D1	Pb-210+D2	3.983E-12	9.821E-34	2.938E-32	6.841E-31	4.013E-29	1.247E-27	7.328E-27	0.000E+00	0.000E+00
-238+D1	äDSR(j)		2.939E-15	2.793E-15	2.522E-15	1.762E-15	6.229E-16	1.165E-17	0.000E+00	0.000E+00
-238+D1	U-238+D1	1.994E-04	1.472E-07	1.399E-07	1.263E-07	8.822E-08	3.119E-08	5.832E-10	0.000E+00	0.000E+00
-238+D1	U-234	1.994E-04	2.304E-13	6.605E-13	1.394E-12	2.924E-12	3.003E-12	1.850E-13	0.000E+00	0.000E+00
-238+D1	Th-230	1.994E-04	1.756E-18	1.192E-17	5.874E-17	4.096E-16	1.719E-15	1.703E-15	0.000E+00	0.000E+00
-238+D1	Ra-226+D2	1.994E-04	5.104E-24	7.419E-23	8.067E-22	1.658E-20	1.956E-19	4.988E-19	0.000E+00	0.000E+00
-238+D1	Pb-210+D	1.994E-04	8.388E-26	2.509E-24	5.842E-23	3.427E-21	1.065E-19	6.259E-19	0.000E+00	0.000E+00
-238+D1	äDSR(j)		1.472E-07	1.399E-07	1.263E-07	8.822E-08	3.119E-08	5.834E-10	0.000E+00	0.000E+00
-238+D1	U-238+D1	2.633E-10	1.943E-13	1.846E-13	1.667E-13	1.165E-13	4.117E-14	7.699E-16	0.000E+00	0.000E+00
-238+D1	U-234	2.633E-10	3.041E-19	8.719E-19	1.840E-18	3.859E-18	3.964E-18	2.443E-19	0.000E+00	0.000E+00
-238+D1	Th-230	2.633E-10	2.318E-24	1.573E-23	7.753E-23	5.407E-22	2.269E-21	2.247E-21	0.000E+00	0.000E+00
-238+D1	Ra-226+D2	2.633E-10	6.737E-30	9.793E-29	1.065E-27	2.188E-26	2.582E-25	6.585E-25	0.000E+00	0.000E+00
-238+D1	Pb-210+D1	2.633E-10	6.585E-32	1.970E-30	4.587E-29	2.690E-27	8.363E-26	4.914E-25	0.000E+00	0.000E+00
-238+D1	äDSR(j)		1.943E-13	1.846E-13	1.667E-13	1.165E-13	4.117E-14	7.701E-16	0.000E+00	0.000E+00
-238+D1	U-238+D1	3.789E-12	2.796E-15	2.657E-15	2.400E-15	1.676E-15	5.925E-16	1.108E-17	0.000E+00	0.000E+00
-238+D1	U-234	3.789E-12	4.377E-21	1.255E-20	2.648E-20	5.555E-20	5.705E-20	3.516E-21	0.000E+00	0.000E+00
-238+D1	Th-230	3.789E-12	3.336E-26	2.264E-25	1.116E-24	7.783E-24	3.266E-23	3.235E-23	0.000E+00	0.000E+00
-238+D1	Ra-226+D2	3.789E-12	9.697E-32	1.410E-30	1.533E-29	3.150E-28	3.717E-27	9.478E-27	0.000E+00	0.000E+00
-238+D1	Pb-210+D2	3.789E-12	9.344E-34	2.795E-32	6.508E-31	3.818E-29	1.187E-27	6.972E-27	0.000E+00	0.000E+00
-238+D1	äDSR(j)		2.796E-15	2.657E-15	2.400E-15	1.676E-15	5.926E-16	1.109E-17	0.000E+00	0.000E+00

ummary : GKP Recreational Visitor - Inhalation
ile : C:\USERS\CLAUDE\DOCUMENTS\0 GKP DOSE\RESRAD CW\GKP RECREATIONAL VISITOR- INHALATION R1.RAD

Dose/Source Ratios Summed Over All Pathways
Parent and Progeny Principal Radionuclide Contributions Indicated

Parent (i)	Product (j)	Thread Fraction	DSR(j,t) At Time in Years (mrem/yr)/(pCi/g) 0.000E+00	1.000E+00	3.000E+00	1.000E+01	3.000E+01	1.000E+02	3.000E+02	1.000E+03
ÄÄÄÄÄÄÄÄ	ÄÄÄÄÄÄÄÄÄÄ	ÄÄÄÄÄÄÄÄÄ	ÄÄÄÄÄÄÄÄÄ	ÄÄÄÄÄÄÄÄÄ	ÄÄÄÄÄÄÄÄÄ	ÄÄÄÄÄÄÄÄÄ	ÄÄÄÄÄÄÄÄÄ	ÄÄÄÄÄÄÄÄÄ	ÄÄÄÄÄÄÄÄÄ	ÄÄÄÄÄÄÄÄÄ
-238+D1	U-238+D1	4.189E-08	3.091E-11	2.938E-11	2.653E-11	1.853E-11	6.551E-12	1.225E-13	0.000E+00	0.000E+00
-238+D1	U-234	4.189E-08	4.839E-17	1.387E-16	2.928E-16	6.141E-16	6.307E-16	3.887E-17	0.000E+00	0.000E+00
-238+D1	Th-230	4.189E-08	3.688E-22	2.503E-21	1.234E-20	8.604E-20	3.611E-19	3.576E-19	0.000E+00	0.000E+00
-238+D1	Ra-226+D3	4.189E-08	1.072E-27	1.558E-26	1.694E-25	3.482E-24	4.109E-23	1.048E-22	0.000E+00	0.000E+00
-238+D1	Pb-210+D	4.189E-08	1.762E-29	5.270E-28	1.227E-26	7.198E-25	2.237E-23	1.315E-22	0.000E+00	0.000E+00
-238+D1	äDSR(j)		3.091E-11	2.938E-11	2.653E-11	1.853E-11	6.551E-12	1.225E-13	0.000E+00	0.000E+00
-238+D1	U-238+D1	5.530E-14	4.081E-17	3.878E-17	3.501E-17	2.446E-17	8.647E-18	1.617E-19	0.000E+00	0.000E+00
-238+D1	U-234	5.530E-14	6.387E-23	1.831E-22	3.865E-22	8.106E-22	8.325E-22	5.130E-23	0.000E+00	0.000E+00
-238+D1	Th-230	5.530E-14	4.868E-28	3.304E-27	1.628E-26	1.136E-25	4.766E-25	4.721E-25	0.000E+00	0.000E+00
-238+D1	Ra-226+D3	5.530E-14	1.415E-33	2.057E-32	2.237E-31	4.596E-30	5.423E-29	1.383E-28	0.000E+00	0.000E+00
-238+D1	Pb-210+D1	5.530E-14	1.383E-35	4.137E-34	9.634E-33	5.651E-31	1.757E-29	1.032E-28	0.000E+00	0.000E+00
-238+D1	äDSR(j)		4.081E-17	3.878E-17	3.502E-17	2.446E-17	8.648E-18	1.618E-19	0.000E+00	0.000E+00
-238+D1	U-238+D1	7.959E-16	5.873E-19	5.582E-19	5.040E-19	3.521E-19	1.245E-19	2.328E-21	0.000E+00	0.000E+00
-238+D1	U-234	7.959E-16	9.194E-25	2.636E-24	5.563E-24	1.167E-23	1.198E-23	7.385E-25	0.000E+00	0.000E+00
-238+D1	Th-230	7.959E-16	7.007E-30	4.756E-29	2.344E-28	1.635E-27	6.861E-27	6.795E-27	0.000E+00	0.000E+00
-238+D1	Ra-226+D3	7.959E-16	2.037E-35	2.961E-34	3.219E-33	6.615E-32	7.807E-31	1.991E-30	0.000E+00	0.000E+00
-238+D1	Pb-210+D2	7.959E-16	1.963E-37	5.871E-36	1.367E-34	8.019E-33	2.492E-31	1.464E-30	0.000E+00	0.000E+00
-238+D1	äDSR(j)		5.873E-19	5.582E-19	5.040E-19	3.521E-19	1.245E-19	2.328E-21	0.000E+00	0.000E+00
-238+D1	U-238+D1	1.997E-07	1.474E-10	1.400E-10	1.264E-10	8.833E-11	3.122E-11	5.839E-13	0.000E+00	0.000E+00
-238+D1	U-234	1.997E-07	2.307E-16	6.613E-16	1.396E-15	2.927E-15	3.006E-15	1.853E-16	0.000E+00	0.000E+00
-238+D1	Th-230	1.997E-07	1.758E-21	1.193E-20	5.881E-20	4.101E-19	1.721E-18	1.705E-18	0.000E+00	0.000E+00
-238+D1	Ra-226+D4	1.997E-07	5.106E-27	7.423E-26	8.070E-25	1.658E-23	1.957E-22	4.991E-22	0.000E+00	0.000E+00
-238+D1	Pb-210+D	1.997E-07	8.398E-29	2.512E-27	5.850E-26	3.431E-24	1.066E-22	6.266E-22	0.000E+00	0.000E+00
-238+D1	äDSR(j)		1.474E-10	1.400E-10	1.264E-10	8.833E-11	3.123E-11	5.841E-13	0.000E+00	0.000E+00
-238+D1	U-238+D1	2.636E-13	1.945E-16	1.848E-16	1.669E-16	1.166E-16	4.122E-17	7.708E-19	0.000E+00	0.000E+00
-238+D1	U-234	2.636E-13	3.045E-22	8.730E-22	1.842E-21	3.864E-21	3.968E-21	2.445E-22	0.000E+00	0.000E+00
-238+D1	Th-230	2.636E-13	2.320E-27	1.575E-26	7.762E-26	5.413E-25	2.272E-24	2.250E-24	0.000E+00	0.000E+00
-238+D1	Ra-226+D4	2.636E-13	6.740E-33	9.798E-32	1.065E-30	2.189E-29	2.583E-28	6.588E-28	0.000E+00	0.000E+00
-238+D1	Pb-210+D1	2.636E-13	6.593E-35	1.972E-33	4.592E-32	2.694E-30	8.373E-29	4.920E-28	0.000E+00	0.000E+00
-238+D1	äDSR(j)		1.945E-16	1.848E-16	1.669E-16	1.166E-16	4.122E-17	7.711E-19	0.000E+00	0.000E+00
-238+D1	U-238+D1	3.794E-15	2.800E-18	2.661E-18	2.402E-18	1.678E-18	5.933E-19	1.109E-20	0.000E+00	0.000E+00
-238+D1	U-234	3.794E-15	4.382E-24	1.257E-23	2.652E-23	5.561E-23	5.712E-23	3.520E-24	0.000E+00	0.000E+00
-238+D1	Th-230	3.794E-15	3.340E-29	2.267E-28	1.117E-27	7.792E-27	3.270E-26	3.239E-26	0.000E+00	0.000E+00
-238+D1	Ra-226+D4	3.794E-15	9.702E-35	1.410E-33	1.533E-32	3.151E-31	3.718E-30	9.482E-30	0.000E+00	0.000E+00
-238+D1	Pb-210+D2	3.794E-15	9.355E-37	2.798E-35	6.516E-34	3.822E-32	1.188E-30	6.981E-30	0.000E+00	0.000E+00
-238+D1	äDSR(j)		2.800E-18	2.661E-18	2.402E-18	1.678E-18	5.933E-19	1.110E-20	0.000E+00	0.000E+00
íííííííí	íííííííííí	íííííííí	íííííííí	íííííííí	íííííííí	íííííííí	íííííííí	íííííííí	íííííííí	íííííííí

ne DSR includes contributions from associated (half-life ó 180 days) daughters.

ummary : GKP Recreational Visitor - Inhalation
ile : C:\USERS\CLAUDE\DOCUMENTS\0 GKP DOSE\RESRAD CW\GKP RECREATIONAL VISITOR- INHALATION R1.RAD

Single Radionuclide Soil Guidelines G(i,t) in pCi/g
Basic Radiation Dose Limit = 2.500E+01 mrem/yr

uclide (i)	t= 0.000E+00	1.000E+00	3.000E+00	1.000E+01	3.000E+01	1.000E+02	3.000E+02	1.000E+03
ÄÄÄÄÄÄ	ÄÄÄÄÄÄÄÄÄÄ	ÄÄÄÄÄÄÄÄÄÄ	ÄÄÄÄÄÄÄÄÄÄ	ÄÄÄÄÄÄÄÄÄÄ	ÄÄÄÄÄÄÄÄÄÄ	ÄÄÄÄÄÄÄÄÄÄ	ÄÄÄÄÄÄÄÄÄÄ	ÄÄÄÄÄÄÄÄÄÄ
a-226	4.351E+05	4.197E+05	3.981E+05	3.766E+05	5.204E+05	7.659E+06	*9.885E+11	*9.885E+11
h-232	2.381E+03	2.380E+03	2.353E+03	2.286E+03	2.541E+03	6.068E+03	*1.097E+05	*1.097E+05
-234	3.029E+04	3.188E+04	3.530E+04	5.052E+04	1.428E+05	7.330E+06	*6.222E+09	*6.222E+09
-235	3.251E+04	3.420E+04	3.785E+04	5.403E+04	1.512E+05	*2.160E+06	*2.160E+06	*2.160E+06
-238	3.388E+04	3.565E+04	3.948E+04	5.652E+04	1.599E+05	*3.361E+05	*3.361E+05	*3.361E+05
íííííí	íííííííííí	íííííííííí	íííííííííí	íííííííííí	íííííííííí	íííííííííí	íííííííííí	íííííííííí

At specific activity limit

Summed Dose/Source Ratios DSR(i,t) in (mrem/yr)/(pCi/g)
and Single Radionuclide Soil Guidelines G(i,t) in pCi/g
at tmin = time of minimum single radionuclide soil guideline
and at tmax = time of maximum total dose = 0.000E+00 years

uclide (i)	Initial (pCi/g)	tmin (years)	DSR(i,tmin)	G(i,tmin) (pCi/g)	DSR(i,tmax)	G(i,tmax) (pCi/g)
ÄÄÄÄÄÄ	ÄÄÄÄÄÄÄÄÄÄ	ÄÄÄÄÄÄÄÄÄÄÄÄÄÄÄÄ	ÄÄÄÄÄÄÄÄÄÄ	ÄÄÄÄÄÄÄÄÄÄ	ÄÄÄÄÄÄÄÄÄÄ	ÄÄÄÄÄÄÄÄÄÄ
a-226	3.650E+01	9.09 ñ 0.02	6.645E-05	3.762E+05	5.746E-05	4.351E+05
h-232	2.400E+00	10.26 ñ 0.02	1.094E-02	2.286E+03	1.050E-02	2.381E+03
-234	1.390E+01	0.000E+00	8.253E-04	3.029E+04	8.253E-04	3.029E+04
-235	8.400E-01	0.000E+00	7.691E-04	3.251E+04	7.691E-04	3.251E+04
-238	1.390E+01	0.000E+00	7.379E-04	3.388E+04	7.379E-04	3.388E+04
íííííí	íííííííííí	ííííííííííííííííí	íííííííííí	íííííííííí	íííííííííí	íííííííííí

ummary : GKP Recreational Visitor - Inhalation
ile : C:\USERS\CLAUDE\DOCUMENTS\0 GKP DOSE\RESRAD CW\GKP RECREATIONAL VISITOR- INHALATION R1.RAD

Individual Nuclide Dose Summed Over All Pathways
Parent Nuclide and Branch Fraction Indicated

uclide (j)	Parent (i)	THF(i)	DOSE(j,t), mrem/yr t= 0.000E+00	1.000E+00	3.000E+00	1.000E+01	3.000E+01	1.000E+02	3.000E+02	1.000E+03
ÄÄÄÄÄÄ	ÄÄÄÄÄÄÄ	ÄÄÄÄÄÄÄÄÄÄ	ÄÄÄÄÄÄÄÄÄÄ	ÄÄÄÄÄÄÄÄÄÄ	ÄÄÄÄÄÄÄÄÄÄ	ÄÄÄÄÄÄÄÄÄÄ	ÄÄÄÄÄÄÄÄÄÄ	ÄÄÄÄÄÄÄÄÄÄ	ÄÄÄÄÄÄÄÄÄÄ	ÄÄÄÄÄÄÄÄÄÄ
a-226	Ra-226	9.996E-01	2.014E-03	1.938E-03	1.793E-03	1.364E-03	6.150E-04	2.697E-05	0.000E+00	0.000E+00
a-226	Ra-226	1.319E-06	2.659E-09	2.558E-09	2.367E-09	1.800E-09	8.119E-10	3.560E-11	0.000E+00	0.000E+00
a-226	U-234	9.996E-01	5.069E-13	3.452E-12	1.715E-11	1.229E-10	5.537E-10	6.401E-10	0.000E+00	0.000E+00
a-226	U-234	1.319E-06	6.691E-19	4.557E-18	2.264E-17	1.622E-16	7.308E-16	8.449E-16	0.000E+00	0.000E+00
a-226	U-234	1.899E-08	9.631E-21	6.559E-20	3.258E-19	2.335E-18	1.052E-17	1.216E-17	0.000E+00	0.000E+00
a-226	U-238	1.599E-03	5.694E-22	8.277E-21	9.000E-20	1.849E-18	2.182E-17	5.565E-17	0.000E+00	0.000E+00
a-226	U-238	2.111E-09	7.516E-28	1.093E-26	1.188E-25	2.441E-24	2.881E-23	7.346E-23	0.000E+00	0.000E+00
a-226	U-238	3.039E-11	0.000E+00	1.540E-28	1.710E-27	3.514E-26	4.146E-25	1.057E-24	0.000E+00	0.000E+00
a-226	U-238	9.980E-01	3.553E-19	5.165E-18	5.616E-17	1.154E-15	1.362E-14	3.473E-14	0.000E+00	0.000E+00
a-226	U-238	1.317E-06	4.690E-25	6.818E-24	7.413E-23	1.523E-21	1.798E-20	4.584E-20	0.000E+00	0.000E+00
a-226	U-238	1.896E-08	6.751E-27	9.814E-26	1.067E-24	2.193E-23	2.587E-22	6.598E-22	0.000E+00	0.000E+00
a-226	ädose(j)		2.014E-03	1.938E-03	1.793E-03	1.364E-03	6.150E-04	2.697E-05	0.000E+00	0.000E+00
o-210	Ra-226	9.996E-01	8.198E-05	2.354E-04	4.983E-04	1.058E-03	1.138E-03	9.212E-05	0.000E+00	0.000E+00
o-210	Ra-226	2.100E-04	1.722E-08	4.944E-08	1.047E-07	2.223E-07	2.390E-07	1.935E-08	0.000E+00	0.000E+00
o-210	Ra-226	1.998E-04	1.638E-08	4.704E-08	9.958E-08	2.115E-07	2.274E-07	1.841E-08	0.000E+00	0.000E+00
o-210	Ra-226	4.196E-08	3.441E-12	9.880E-12	2.092E-11	4.442E-11	4.776E-11	3.867E-12	0.000E+00	0.000E+00
o-210	Ra-226	2.000E-07	1.640E-11	4.710E-11	9.970E-11	2.117E-10	2.277E-10	1.843E-11	0.000E+00	0.000E+00
o-210	U-234	9.996E-01	1.038E-14	1.506E-13	1.631E-12	3.300E-11	3.745E-10	8.751E-10	0.000E+00	0.000E+00
o-210	U-234	2.100E-04	2.180E-18	3.164E-17	3.425E-16	6.932E-15	7.867E-14	1.838E-13	0.000E+00	0.000E+00
o-210	U-234	1.998E-04	2.075E-18	3.010E-17	3.258E-16	6.595E-15	7.485E-14	1.749E-13	0.000E+00	0.000E+00
o-210	U-234	4.196E-08	4.357E-22	6.322E-21	6.844E-20	1.385E-18	1.572E-17	3.673E-17	0.000E+00	0.000E+00
o-210	U-234	2.000E-07	2.077E-21	3.013E-20	3.262E-19	6.603E-18	7.494E-17	1.751E-16	0.000E+00	0.000E+00
o-210	U-238	1.599E-03	9.350E-24	2.797E-22	6.512E-21	3.820E-19	1.187E-17	6.977E-17	0.000E+00	0.000E+00
o-210	U-238	3.359E-07	1.964E-27	5.874E-26	1.368E-24	8.024E-23	2.494E-21	1.465E-20	0.000E+00	0.000E+00
o-210	U-238	3.196E-07	1.868E-27	5.589E-26	1.301E-24	7.634E-23	2.373E-21	1.394E-20	0.000E+00	0.000E+00
o-210	U-238	6.713E-11	0.000E+00	0.000E+00	2.734E-28	1.603E-26	4.984E-25	2.928E-24	0.000E+00	0.000E+00
o-210	U-238	3.200E-10	0.000E+00	5.596E-29	1.303E-27	7.643E-26	2.376E-24	1.396E-23	0.000E+00	0.000E+00
o-210	U-238	9.980E-01	5.834E-21	1.745E-19	4.064E-18	2.384E-16	7.409E-15	4.353E-14	0.000E+00	0.000E+00
o-210	U-238	2.096E-04	1.225E-24	3.666E-23	8.536E-22	5.007E-20	1.556E-18	9.144E-18	0.000E+00	0.000E+00
o-210	U-238	1.994E-04	1.166E-24	3.488E-23	8.121E-22	4.764E-20	1.481E-18	8.700E-18	0.000E+00	0.000E+00
o-210	U-238	4.189E-08	2.449E-28	7.325E-27	1.706E-25	1.001E-23	3.110E-22	1.827E-21	0.000E+00	0.000E+00
o-210	U-238	1.997E-07	1.167E-27	3.492E-26	8.131E-25	4.769E-23	1.482E-21	8.710E-21	0.000E+00	0.000E+00
o-210	ädose(j)		8.202E-05	2.355E-04	4.985E-04	1.059E-03	1.138E-03	9.216E-05	0.000E+00	0.000E+00
o-210	Ra-226	1.319E-06	6.436E-11	1.848E-10	3.912E-10	8.308E-10	8.933E-10	7.232E-11	0.000E+00	0.000E+00
o-210	Ra-226	1.899E-08	9.133E-13	2.622E-12	5.551E-12	1.179E-11	1.268E-11	1.026E-12	0.000E+00	0.000E+00
o-210	Ra-226	2.771E-10	1.352E-14	3.882E-14	8.217E-14	1.745E-13	1.876E-13	1.519E-14	0.000E+00	0.000E+00
o-210	Ra-226	2.637E-10	1.286E-14	3.693E-14	7.818E-14	1.660E-13	1.785E-13	1.445E-14	0.000E+00	0.000E+00
o-210	Ra-226	5.538E-14	2.702E-18	7.757E-18	1.642E-17	3.487E-17	3.750E-17	3.036E-18	0.000E+00	0.000E+00
o-210	Ra-226	2.640E-13	1.288E-17	3.697E-17	7.828E-17	1.662E-16	1.787E-16	1.447E-17	0.000E+00	0.000E+00
o-210	U-234	1.319E-06	8.150E-21	1.182E-19	1.280E-18	2.591E-17	2.940E-16	6.870E-16	0.000E+00	0.000E+00
o-210	U-234	2.771E-10	1.712E-24	2.484E-23	2.689E-22	5.442E-21	6.176E-20	1.443E-19	0.000E+00	0.000E+00
o-210	U-234	2.637E-10	1.629E-24	2.363E-23	2.558E-22	5.178E-21	5.876E-20	1.373E-19	0.000E+00	0.000E+00
o-210	U-234	5.538E-14	3.421E-28	4.963E-27	5.373E-26	1.088E-24	1.234E-23	2.884E-23	0.000E+00	0.000E+00
o-210	U-234	2.640E-13	1.631E-27	2.366E-26	2.561E-25	5.184E-24	5.883E-23	1.375E-22	0.000E+00	0.000E+00
o-210	U-238	2.111E-09	0.000E+00	2.196E-28	5.113E-27	2.999E-25	9.322E-24	5.477E-23	0.000E+00	0.000E+00
o-210	U-238	4.434E-13	0.000E+00	0.000E+00	0.000E+00	6.299E-29	1.958E-27	1.150E-26	0.000E+00	0.000E+00
o-210	U-238	4.219E-13	0.000E+00	0.000E+00	0.000E+00	5.993E-29	1.863E-27	1.095E-26	0.000E+00	0.000E+00

ummary : GKP Recreational Visitor - Inhalation
ile : C:\USERS\CLAUDE\DOCUMENTS\0 GKP DOSE\RESRAD CW\GKP RECREATIONAL VISITOR- INHALATION R1.RAD

Individual Nuclide Dose Summed Over All Pathways
Parent Nuclide and Branch Fraction Indicated

uclide (j)	Parent (i)	THF(i)	DOSE(j,t), mrem/yr t= 0.000E+00	1.000E+00	3.000E+00	1.000E+01	3.000E+01	1.000E+02	3.000E+02	1.000E+03
ÄÄÄÄÄÄ	ÄÄÄÄÄÄÄ	ÄÄÄÄÄÄÄÄÄ	ÄÄÄÄÄÄÄÄÄ	ÄÄÄÄÄÄÄÄÄ	ÄÄÄÄÄÄÄÄÄ	ÄÄÄÄÄÄÄÄÄ	ÄÄÄÄÄÄÄÄÄ	ÄÄÄÄÄÄÄÄÄ	ÄÄÄÄÄÄÄÄÄ	ÄÄÄÄÄÄÄÄÄ
o-210	U-238	8.862E-17	0.000E+00	0.000E+00	0.000E+00	0.000E+00	0.000E+00	0.000E+00	0.000E+00	0.000E+00
o-210	U-238	4.224E-16	0.000E+00	0.000E+00	0.000E+00	0.000E+00	0.000E+00	0.000E+00	0.000E+00	0.000E+00
o-210	U-238	1.317E-06	4.580E-27	1.370E-25	3.190E-24	1.871E-22	5.817E-21	3.418E-20	0.000E+00	0.000E+00
o-210	U-238	2.767E-10	0.000E+00	2.878E-29	6.701E-28	3.931E-26	1.222E-24	7.179E-24	0.000E+00	0.000E+00
o-210	U-238	2.633E-10	0.000E+00	2.738E-29	6.376E-28	3.740E-26	1.162E-24	6.830E-24	0.000E+00	0.000E+00
o-210	U-238	5.530E-14	0.000E+00	0.000E+00	0.000E+00	0.000E+00	2.442E-28	1.435E-27	0.000E+00	0.000E+00
o-210	U-238	2.636E-13	0.000E+00	0.000E+00	0.000E+00	3.744E-29	1.164E-27	6.838E-27	0.000E+00	0.000E+00
o-210	äDOSE(j)		6.530E-11	1.875E-10	3.969E-10	8.429E-10	9.063E-10	7.338E-11	0.000E+00	0.000E+00
a-226	Ra-226	1.899E-08	3.827E-11	3.682E-11	3.406E-11	2.591E-11	1.169E-11	5.124E-13	0.000E+00	0.000E+00
a-226	Ra-226	2.100E-04	4.231E-07	4.070E-07	3.766E-07	2.865E-07	1.292E-07	5.665E-09	0.000E+00	0.000E+00
a-226	äDOSE(j)		4.232E-07	4.071E-07	3.766E-07	2.865E-07	1.292E-07	5.665E-09	0.000E+00	0.000E+00
a-226	Ra-226	2.771E-10	5.585E-13	5.373E-13	4.971E-13	3.781E-13	1.705E-13	7.477E-15	0.000E+00	0.000E+00
a-226	Ra-226	3.989E-12	8.039E-15	7.733E-15	7.155E-15	5.443E-15	2.455E-15	1.076E-16	0.000E+00	0.000E+00
a-226	äDOSE(j)		5.666E-13	5.450E-13	5.042E-13	3.836E-13	1.730E-13	7.585E-15	0.000E+00	0.000E+00
o-210	Ra-226	3.989E-12	1.918E-16	5.508E-16	1.166E-15	2.476E-15	2.662E-15	2.156E-16	0.000E+00	0.000E+00
o-210	Ra-226	3.795E-12	1.825E-16	5.240E-16	1.109E-15	2.356E-15	2.533E-15	2.051E-16	0.000E+00	0.000E+00
o-210	Ra-226	7.972E-16	3.833E-20	1.101E-19	2.330E-19	4.948E-19	5.320E-19	4.308E-20	0.000E+00	0.000E+00
o-210	Ra-226	3.800E-15	1.827E-19	5.246E-19	1.111E-18	2.359E-18	2.536E-18	2.053E-19	0.000E+00	0.000E+00
o-210	U-234	1.899E-08	1.156E-22	1.678E-21	1.816E-20	3.677E-19	4.172E-18	9.748E-18	0.000E+00	0.000E+00
o-210	U-234	3.989E-12	2.429E-26	3.524E-25	3.815E-24	7.722E-23	8.764E-22	2.048E-21	0.000E+00	0.000E+00
o-210	U-234	3.795E-12	2.311E-26	3.353E-25	3.630E-24	7.347E-23	8.338E-22	1.948E-21	0.000E+00	0.000E+00
o-210	U-234	7.972E-16	0.000E+00	7.043E-29	7.624E-28	1.543E-26	1.751E-25	4.092E-25	0.000E+00	0.000E+00
o-210	U-234	3.800E-15	2.314E-29	3.357E-28	3.634E-27	7.356E-26	8.348E-25	1.950E-24	0.000E+00	0.000E+00
o-210	U-238	3.039E-11	0.000E+00	0.000E+00	7.255E-29	4.255E-27	1.323E-25	7.772E-25	0.000E+00	0.000E+00
o-210	U-238	6.383E-15	0.000E+00	0.000E+00	0.000E+00	0.000E+00	2.778E-29	1.632E-28	0.000E+00	0.000E+00
o-210	U-238	6.073E-15	0.000E+00	0.000E+00	0.000E+00	0.000E+00	2.643E-29	1.553E-28	0.000E+00	0.000E+00
o-210	U-238	1.276E-18	0.000E+00	0.000E+00	0.000E+00	0.000E+00	0.000E+00	0.000E+00	0.000E+00	0.000E+00
o-210	U-238	6.080E-18	0.000E+00	0.000E+00	0.000E+00	0.000E+00	0.000E+00	0.000E+00	0.000E+00	0.000E+00
o-210	U-238	1.896E-08	6.499E-29	1.944E-27	4.527E-26	2.655E-24	8.254E-23	4.850E-22	0.000E+00	0.000E+00
o-210	U-238	3.983E-12	0.000E+00	0.000E+00	0.000E+00	5.577E-28	1.734E-26	1.019E-25	0.000E+00	0.000E+00
o-210	U-238	3.789E-12	0.000E+00	0.000E+00	0.000E+00	5.307E-28	1.649E-26	9.691E-26	0.000E+00	0.000E+00
o-210	U-238	7.959E-16	0.000E+00	0.000E+00	0.000E+00	0.000E+00	0.000E+00	2.036E-29	0.000E+00	0.000E+00
o-210	U-238	3.794E-15	0.000E+00	0.000E+00	0.000E+00	0.000E+00	1.651E-29	9.703E-29	0.000E+00	0.000E+00
o-210	äDOSE(j)		3.746E-16	1.075E-15	2.277E-15	4.835E-15	5.203E-15	4.306E-16	0.000E+00	0.000E+00
a-226	Ra-226	1.998E-04	4.022E-07	3.869E-07	3.580E-07	2.723E-07	1.228E-07	5.385E-09	0.000E+00	0.000E+00
a-226	Ra-226	2.637E-10	5.309E-13	5.107E-13	4.725E-13	3.594E-13	1.621E-13	7.108E-15	0.000E+00	0.000E+00
a-226	U-234	1.998E-04	1.012E-16	6.893E-16	3.424E-15	2.454E-14	1.105E-13	1.278E-13	0.000E+00	0.000E+00
a-226	U-234	2.637E-10	1.336E-22	9.098E-22	4.520E-21	3.239E-20	1.459E-19	1.687E-19	0.000E+00	0.000E+00
a-226	U-234	3.795E-12	1.923E-24	1.310E-23	6.505E-23	4.662E-22	2.100E-21	2.428E-21	0.000E+00	0.000E+00
a-226	U-238	3.196E-07	1.137E-25	1.653E-24	1.797E-23	3.693E-22	4.357E-21	1.111E-20	0.000E+00	0.000E+00
a-226	U-238	4.219E-13	0.000E+00	0.000E+00	2.322E-29	4.772E-28	5.752E-27	1.467E-26	0.000E+00	0.000E+00
a-226	U-238	6.073E-15	0.000E+00	0.000E+00	0.000E+00	0.000E+00	8.105E-29	2.067E-28	0.000E+00	0.000E+00
a-226	U-238	1.994E-04	7.094E-23	1.031E-21	1.121E-20	2.304E-19	2.719E-18	6.934E-18	0.000E+00	0.000E+00
a-226	U-238	2.633E-10	9.168E-29	1.361E-27	1.480E-26	3.041E-25	3.589E-24	9.153E-24	0.000E+00	0.000E+00
a-226	U-238	3.789E-12	0.000E+00	1.918E-29	2.086E-28	4.378E-27	5.166E-26	1.317E-25	0.000E+00	0.000E+00
a-226	äDOSE(j)		4.022E-07	3.869E-07	3.580E-07	2.723E-07	1.228E-07	5.385E-09	0.000E+00	0.000E+00

ummary : GKP Recreational Visitor - Inhalation
ile : C:\USERS\CLAUDE\DOCUMENTS\0 GKP DOSE\RESRAD CW\GKP RECREATIONAL VISITOR- INHALATION R1.RAD

Individual Nuclide Dose Summed Over All Pathways
Parent Nuclide and Branch Fraction Indicated

uclide (j)	Parent (i)	THF(i)	DOSE(j,t), mrem/yr t= 0.000E+00	1.000E+00	3.000E+00	1.000E+01	3.000E+01	1.000E+02	3.000E+02	1.000E+03
ÄÄÄÄÄÄ	ÄÄÄÄÄÄÄ	ÄÄÄÄÄÄÄÄÄÄ	ÄÄÄÄÄÄÄÄÄÄ	ÄÄÄÄÄÄÄÄÄÄ	ÄÄÄÄÄÄÄÄÄÄ	ÄÄÄÄÄÄÄÄÄÄ	ÄÄÄÄÄÄÄÄÄÄ	ÄÄÄÄÄÄÄÄÄÄ	ÄÄÄÄÄÄÄÄÄÄ	ÄÄÄÄÄÄÄÄÄÄ
a-226	Ra-226	3.795E-12	7.642E-15	7.351E-15	6.801E-15	5.174E-15	2.333E-15	1.023E-16	0.000E+00	0.000E+00
a-226	Ra-226	4.196E-08	8.448E-11	8.127E-11	7.519E-11	5.720E-11	2.579E-11	1.131E-12	0.000E+00	0.000E+00
a-226	äDOSE(j)		8.449E-11	8.127E-11	7.520E-11	5.720E-11	2.580E-11	1.131E-12	0.000E+00	0.000E+00
a-226	Ra-226	5.538E-14	1.115E-16	1.073E-16	9.925E-17	7.550E-17	3.405E-17	1.493E-18	0.000E+00	0.000E+00
a-226	Ra-226	7.972E-16	1.605E-18	1.544E-18	1.429E-18	1.087E-18	4.901E-19	2.149E-20	0.000E+00	0.000E+00
a-226	äDOSE(j)		1.131E-16	1.088E-16	1.007E-16	7.659E-17	3.454E-17	1.514E-18	0.000E+00	0.000E+00
a-226	Ra-226	2.000E-07	4.024E-10	3.871E-10	3.581E-10	2.724E-10	1.229E-10	5.387E-12	0.000E+00	0.000E+00
a-226	Ra-226	2.640E-13	5.311E-16	5.109E-16	4.727E-16	3.596E-16	1.622E-16	7.111E-18	0.000E+00	0.000E+00
a-226	U-234	2.000E-07	1.013E-19	6.896E-19	3.425E-18	2.455E-17	1.106E-16	1.279E-16	0.000E+00	0.000E+00
a-226	U-234	2.640E-13	1.337E-25	9.103E-25	4.522E-24	3.240E-23	1.460E-22	1.688E-22	0.000E+00	0.000E+00
a-226	U-234	3.800E-15	1.924E-27	1.310E-26	6.508E-26	4.664E-25	2.101E-24	2.429E-24	0.000E+00	0.000E+00
a-226	U-238	3.200E-10	1.114E-28	1.653E-27	1.798E-26	3.694E-25	4.359E-24	1.112E-23	0.000E+00	0.000E+00
a-226	U-238	4.224E-16	0.000E+00	0.000E+00	0.000E+00	0.000E+00	0.000E+00	1.436E-29	0.000E+00	0.000E+00
a-226	U-238	6.080E-18	0.000E+00	0.000E+00	0.000E+00	0.000E+00	0.000E+00	0.000E+00	0.000E+00	0.000E+00
a-226	U-238	1.997E-07	7.098E-26	1.032E-24	1.122E-23	2.305E-22	2.720E-21	6.937E-21	0.000E+00	0.000E+00
a-226	U-238	2.636E-13	0.000E+00	0.000E+00	1.450E-29	2.979E-28	3.591E-27	9.157E-27	0.000E+00	0.000E+00
a-226	U-238	3.794E-15	0.000E+00	0.000E+00	0.000E+00	0.000E+00	5.060E-29	1.290E-28	0.000E+00	0.000E+00
a-226	äDOSE(j)		4.024E-10	3.871E-10	3.581E-10	2.724E-10	1.229E-10	5.387E-12	0.000E+00	0.000E+00
a-226	Ra-226	3.800E-15	7.645E-18	7.354E-18	6.804E-18	5.176E-18	2.334E-18	1.024E-19	0.000E+00	0.000E+00
n-232	Th-232	1.000E+00	2.515E-02	2.499E-02	2.465E-02	2.346E-02	2.008E-02	8.298E-03	0.000E+00	0.000E+00
a-228	Th-232	1.000E+00	4.460E-06	1.246E-05	2.493E-05	4.590E-05	4.879E-05	2.036E-05	0.000E+00	0.000E+00
n-228	Th-232	1.000E+00	3.546E-05	2.144E-04	8.241E-04	2.736E-03	3.478E-03	1.570E-03	0.000E+00	0.000E+00
-234	U-234	9.996E-01	1.147E-02	1.090E-02	9.839E-03	6.873E-03	2.430E-03	4.543E-05	0.000E+00	0.000E+00
-234	U-234	1.319E-06	1.514E-08	1.438E-08	1.299E-08	9.072E-09	3.207E-09	5.996E-11	0.000E+00	0.000E+00
-234	U-238	1.599E-03	2.568E-11	7.363E-11	1.554E-10	3.259E-10	3.347E-10	2.063E-11	0.000E+00	0.000E+00
-234	U-238	2.111E-09	3.390E-17	9.719E-17	2.051E-16	4.302E-16	4.418E-16	2.723E-17	0.000E+00	0.000E+00
-234	U-238	3.039E-11	4.879E-19	1.399E-18	2.952E-18	6.192E-18	6.360E-18	3.919E-19	0.000E+00	0.000E+00
-234	U-238	3.359E-07	5.394E-15	1.547E-14	3.264E-14	6.845E-14	7.030E-14	4.332E-15	0.000E+00	0.000E+00
-234	U-238	4.434E-13	7.120E-21	2.041E-20	4.308E-20	9.035E-20	9.280E-20	5.719E-21	0.000E+00	0.000E+00
-234	U-238	6.383E-15	1.025E-22	2.938E-22	6.201E-22	1.301E-21	1.336E-21	8.231E-23	0.000E+00	0.000E+00
-234	U-238	3.196E-07	5.132E-15	1.471E-14	3.105E-14	6.512E-14	6.689E-14	4.122E-15	0.000E+00	0.000E+00
-234	U-238	4.219E-13	6.774E-21	1.942E-20	4.099E-20	8.596E-20	8.829E-20	5.441E-21	0.000E+00	0.000E+00
-234	U-238	6.073E-15	9.750E-23	2.796E-22	5.900E-22	1.237E-21	1.271E-21	7.832E-23	0.000E+00	0.000E+00
-234	U-238	6.713E-11	1.078E-18	3.091E-18	6.522E-18	1.368E-17	1.405E-17	8.658E-19	0.000E+00	0.000E+00
-234	U-238	8.862E-17	1.423E-24	4.080E-24	8.609E-24	1.806E-23	1.855E-23	1.143E-24	0.000E+00	0.000E+00
-234	U-238	1.276E-18	2.048E-26	5.872E-26	1.239E-25	2.599E-25	2.669E-25	1.645E-26	0.000E+00	0.000E+00
-234	U-238	3.200E-10	5.138E-18	1.473E-17	3.109E-17	6.520E-17	6.697E-17	4.127E-18	0.000E+00	0.000E+00
-234	U-238	4.224E-16	6.782E-24	1.945E-23	4.104E-23	8.607E-23	8.840E-23	5.447E-24	0.000E+00	0.000E+00
-234	U-238	6.080E-18	9.762E-26	2.799E-25	5.907E-25	1.239E-24	1.272E-24	7.841E-26	0.000E+00	0.000E+00
-234	U-238	9.980E-01	1.602E-08	4.594E-08	9.696E-08	2.033E-07	2.089E-07	1.287E-08	0.000E+00	0.000E+00
-234	U-238	1.317E-06	2.115E-14	6.065E-14	1.280E-13	2.684E-13	2.757E-13	1.699E-14	0.000E+00	0.000E+00
-234	U-238	1.896E-08	3.045E-16	8.729E-16	1.842E-15	3.864E-15	3.968E-15	2.445E-16	0.000E+00	0.000E+00

ummary : GKP Recreational Visitor - Inhalation

ile : C:\USERS\CLAUDE\DOCUMENTS\0 GKP DOSE\RESRAD CW\GKP RECREATIONAL VISITOR- INHALATION R1.RAD

Individual Nuclide Dose Summed Over All Pathways

Parent Nuclide and Branch Fraction Indicated

uclide (j)	Parent (i)	THF(i)	DOSE(j,t), mrem/yr t= 0.000E+00	1.000E+00	3.000E+00	1.000E+01	3.000E+01	1.000E+02	3.000E+02	1.000E+03
ÄÄÄÄÄ	ÄÄÄÄÄÄ	ÄÄÄÄÄÄÄÄ	ÄÄÄÄÄÄÄÄ	ÄÄÄÄÄÄÄÄ	ÄÄÄÄÄÄÄÄ	ÄÄÄÄÄÄÄÄ	ÄÄÄÄÄÄÄÄ	ÄÄÄÄÄÄÄÄ	ÄÄÄÄÄÄÄÄ	ÄÄÄÄÄÄÄÄ
-234	U-238	2.096E-04	3.366E-12	9.650E-12	2.037E-11	4.271E-11	4.307E-11	2.703E-12	0.000E+00	0.000E+00
-234	U-238	2.767E-10	4.443E-18	1.274E-17	2.688E-17	5.638E-17	5.791E-17	3.568E-18	0.000E+00	0.000E+00
-234	U-238	3.983E-12	6.395E-20	1.834E-19	3.869E-19	8.115E-19	8.335E-19	5.136E-20	0.000E+00	0.000E+00
-234	U-238	1.994E-04	3.202E-12	9.181E-12	1.938E-11	4.064E-11	4.174E-11	2.572E-12	0.000E+00	0.000E+00
-234	U-238	2.633E-10	4.227E-18	1.212E-17	2.558E-17	5.364E-17	5.510E-17	3.395E-18	0.000E+00	0.000E+00
-234	U-238	3.789E-12	6.084E-20	1.744E-19	3.681E-19	7.721E-19	7.930E-19	4.887E-20	0.000E+00	0.000E+00
-234	U-238	4.189E-08	6.726E-16	1.928E-15	4.070E-15	8.536E-15	8.767E-15	5.402E-16	0.000E+00	0.000E+00
-234	U-238	5.530E-14	8.878E-22	2.546E-21	5.372E-21	1.127E-20	1.157E-20	7.131E-22	0.000E+00	0.000E+00
-234	U-238	7.959E-16	1.278E-23	3.664E-23	7.733E-23	1.622E-22	1.666E-22	1.026E-23	0.000E+00	0.000E+00
-234	U-238	1.997E-07	3.206E-15	9.192E-15	1.940E-14	4.069E-14	4.179E-14	2.575E-15	0.000E+00	0.000E+00
-234	U-238	2.636E-13	4.232E-21	1.213E-20	2.561E-20	5.371E-20	5.516E-20	3.399E-21	0.000E+00	0.000E+00
-234	U-238	3.794E-15	6.092E-23	1.747E-22	3.686E-22	7.730E-22	7.940E-22	4.893E-23	0.000E+00	0.000E+00
-234	äDOSE(j)		1.147E-02	1.090E-02	9.839E-03	6.873E-03	2.430E-03	4.544E-05	0.000E+00	0.000E+00
a-230	U-234	9.996E-01	1.310E-07	3.831E-07	8.452E-07	2.085E-06	3.558E-06	1.961E-06	0.000E+00	0.000E+00
a-230	U-234	1.319E-06	1.729E-13	5.057E-13	1.116E-12	2.752E-12	4.697E-12	2.588E-12	0.000E+00	0.000E+00
a-230	U-234	1.899E-08	2.489E-15	7.280E-15	1.606E-14	3.962E-14	6.760E-14	3.726E-14	0.000E+00	0.000E+00
a-230	U-234	2.100E-04	2.752E-11	8.047E-11	1.775E-10	4.380E-10	7.473E-10	4.119E-10	0.000E+00	0.000E+00
a-230	U-234	2.771E-10	3.632E-17	1.062E-16	2.343E-16	5.781E-16	9.865E-16	5.437E-16	0.000E+00	0.000E+00
a-230	U-234	3.989E-12	5.228E-19	1.529E-18	3.373E-18	8.321E-18	1.420E-17	7.826E-18	0.000E+00	0.000E+00
a-230	U-234	1.998E-04	2.618E-11	7.657E-11	1.689E-10	4.167E-10	7.110E-10	3.919E-10	0.000E+00	0.000E+00
a-230	U-234	2.637E-10	3.456E-17	1.011E-16	2.229E-16	5.500E-16	9.386E-16	5.173E-16	0.000E+00	0.000E+00
a-230	U-234	3.795E-12	4.974E-19	1.455E-18	3.209E-18	7.917E-18	1.351E-17	7.446E-18	0.000E+00	0.000E+00
a-230	U-234	4.196E-08	5.499E-15	1.608E-14	3.548E-14	8.752E-14	1.493E-13	8.231E-14	0.000E+00	0.000E+00
a-230	U-234	5.538E-14	7.259E-21	2.123E-20	4.683E-20	1.155E-19	1.971E-19	1.087E-19	0.000E+00	0.000E+00
a-230	U-234	7.972E-16	1.045E-22	3.056E-22	6.741E-22	1.663E-21	2.838E-21	1.564E-21	0.000E+00	0.000E+00
a-230	U-234	2.000E-07	2.621E-14	7.666E-14	1.691E-13	4.172E-13	7.119E-13	3.924E-13	0.000E+00	0.000E+00
a-230	U-234	2.640E-13	3.460E-20	1.012E-19	2.232E-19	5.507E-19	9.397E-19	5.179E-19	0.000E+00	0.000E+00
a-230	U-234	3.800E-15	4.980E-22	1.457E-21	3.213E-21	7.927E-21	1.353E-20	7.455E-21	0.000E+00	0.000E+00
a-230	U-238	1.599E-03	1.957E-16	1.328E-15	6.547E-15	4.566E-14	1.916E-13	1.898E-13	0.000E+00	0.000E+00
a-230	U-238	2.111E-09	2.583E-22	1.753E-21	8.642E-21	6.027E-20	2.530E-19	2.505E-19	0.000E+00	0.000E+00
a-230	U-238	3.039E-11	3.719E-24	2.524E-23	1.244E-22	8.675E-22	3.641E-21	3.606E-21	0.000E+00	0.000E+00
a-230	U-238	3.359E-07	4.111E-20	2.790E-19	1.375E-18	9.590E-18	4.025E-17	3.986E-17	0.000E+00	0.000E+00
a-230	U-238	4.434E-13	5.426E-26	3.683E-25	1.815E-24	1.266E-23	5.313E-23	5.262E-23	0.000E+00	0.000E+00
a-230	U-238	6.383E-15	7.811E-28	5.301E-27	2.613E-26	1.822E-25	7.648E-25	7.574E-25	0.000E+00	0.000E+00
a-230	U-238	3.196E-07	3.911E-20	2.654E-19	1.308E-18	9.124E-18	3.830E-17	3.793E-17	0.000E+00	0.000E+00
a-230	U-238	4.219E-13	5.163E-26	3.504E-25	1.727E-24	1.204E-23	5.055E-23	5.006E-23	0.000E+00	0.000E+00
a-230	U-238	6.073E-15	7.431E-28	5.043E-27	2.486E-26	1.734E-25	7.276E-25	7.206E-25	0.000E+00	0.000E+00
a-230	U-238	6.713E-11	8.215E-24	5.575E-23	2.748E-22	1.917E-21	8.044E-21	7.966E-21	0.000E+00	0.000E+00
a-230	U-238	8.862E-17	0.000E+00	7.360E-29	3.628E-28	2.530E-27	1.062E-26	1.052E-26	0.000E+00	0.000E+00
a-230	U-238	1.276E-18	0.000E+00	0.000E+00	0.000E+00	3.641E-29	1.528E-28	1.514E-28	0.000E+00	0.000E+00
a-230	U-238	3.200E-10	3.916E-23	2.658E-22	1.310E-21	9.135E-21	3.834E-20	3.797E-20	0.000E+00	0.000E+00
a-230	U-238	4.224E-16	5.169E-29	3.508E-28	1.729E-27	1.206E-26	5.061E-26	5.012E-26	0.000E+00	0.000E+00
a-230	U-238	6.080E-18	0.000E+00	0.000E+00	2.489E-29	1.736E-28	7.285E-28	7.215E-28	0.000E+00	0.000E+00
a-230	U-238	9.980E-01	1.221E-13	8.288E-13	4.085E-12	2.849E-11	1.196E-10	1.184E-10	0.000E+00	0.000E+00
a-230	U-238	1.317E-06	1.612E-19	1.094E-18	5.393E-18	3.761E-17	1.578E-16	1.563E-16	0.000E+00	0.000E+00
a-230	U-238	1.896E-08	2.320E-21	1.575E-20	7.762E-20	5.413E-19	2.272E-18	2.250E-18	0.000E+00	0.000E+00
a-230	U-238	2.096E-04	2.565E-17	1.741E-16	8.581E-16	5.984E-15	2.512E-14	2.487E-14	0.000E+00	0.000E+00
a-230	U-238	2.767E-10	3.386E-23	2.298E-22	1.133E-21	7.899E-21	3.315E-20	3.283E-20	0.000E+00	0.000E+00

ummary : GKP Recreational Visitor - Inhalation
ile : C:\USERS\CLAUDE\DOCUMENTS\0 GKP DOSE\RESRAD CW\GKP RECREATIONAL VISITOR- INHALATION R1.RAD

Individual Nuclide Dose Summed Over All Pathways
Parent Nuclide and Branch Fraction Indicated

uclide (j)	Parent (i)	THF(i)	DOSE(j,t), mrem/yr t= 0.000E+00	1.000E+00	3.000E+00	1.000E+01	3.000E+01	1.000E+02	3.000E+02	1.000E+03
ÄÄÄÄÄ	ÄÄÄÄÄÄ	ÄÄÄÄÄÄÄÄ	ÄÄÄÄÄÄÄÄ	ÄÄÄÄÄÄÄÄ	ÄÄÄÄÄÄÄÄ	ÄÄÄÄÄÄÄÄ	ÄÄÄÄÄÄÄÄ	ÄÄÄÄÄÄÄÄ	ÄÄÄÄÄÄÄÄ	ÄÄÄÄÄÄÄÄ
n-230	U-238	3.983E-12	4.874E-25	3.308E-24	1.630E-23	1.137E-22	4.772E-22	4.726E-22	0.000E+00	0.000E+00
n-230	U-238	1.994E-04	2.441E-17	1.656E-16	8.164E-16	5.694E-15	2.390E-14	2.367E-14	0.000E+00	0.000E+00
n-230	U-238	2.633E-10	3.222E-23	2.186E-22	1.078E-21	7.516E-21	3.154E-20	3.124E-20	0.000E+00	0.000E+00
n-230	U-238	3.789E-12	4.637E-25	3.147E-24	1.551E-23	1.082E-22	4.540E-22	4.497E-22	0.000E+00	0.000E+00
n-230	U-238	4.189E-08	5.126E-21	3.479E-20	1.715E-19	1.196E-18	5.019E-18	4.971E-18	0.000E+00	0.000E+00
n-230	U-238	5.530E-14	6.767E-27	4.592E-26	2.264E-25	1.579E-24	6.625E-24	6.562E-24	0.000E+00	0.000E+00
n-230	U-238	7.959E-16	9.740E-29	6.610E-28	3.258E-27	2.272E-26	9.537E-26	9.445E-26	0.000E+00	0.000E+00
n-230	U-238	1.997E-07	2.444E-20	1.658E-19	8.174E-19	5.701E-18	2.393E-17	2.369E-17	0.000E+00	0.000E+00
n-230	U-238	2.636E-13	3.225E-26	2.189E-25	1.079E-24	7.525E-24	3.158E-23	3.128E-23	0.000E+00	0.000E+00
n-230	U-238	3.794E-15	4.643E-28	3.151E-27	1.553E-26	1.083E-25	4.546E-25	4.502E-25	0.000E+00	0.000E+00
n-230	äDOSE(j)		1.311E-07	3.833E-07	8.455E-07	2.086E-06	3.560E-06	1.962E-06	0.000E+00	0.000E+00
-234	U-234	1.899E-08	2.179E-10	2.070E-10	1.869E-10	1.306E-10	4.616E-11	8.631E-13	0.000E+00	0.000E+00
-234	U-234	2.100E-04	2.408E-06	2.289E-06	2.067E-06	1.444E-06	5.103E-07	9.542E-09	0.000E+00	0.000E+00
-234	äDOSE(j)		2.409E-06	2.289E-06	2.067E-06	1.444E-06	5.104E-07	9.542E-09	0.000E+00	0.000E+00
a-226	U-234	2.100E-04	1.065E-16	7.251E-16	3.602E-15	2.581E-14	1.163E-13	1.344E-13	0.000E+00	0.000E+00
a-226	U-234	3.989E-12	2.023E-24	1.378E-23	6.844E-23	4.904E-22	2.210E-21	2.555E-21	0.000E+00	0.000E+00
a-226	U-238	3.359E-07	1.196E-25	1.739E-24	1.890E-23	3.885E-22	4.584E-21	1.169E-20	0.000E+00	0.000E+00
a-226	U-238	4.434E-13	0.000E+00	0.000E+00	2.443E-29	5.020E-28	6.051E-27	1.543E-26	0.000E+00	0.000E+00
a-226	U-238	6.383E-15	0.000E+00	0.000E+00	0.000E+00	0.000E+00	8.527E-29	2.174E-28	0.000E+00	0.000E+00
a-226	U-238	2.096E-04	7.463E-23	1.085E-21	1.180E-20	2.424E-19	2.860E-18	7.294E-18	0.000E+00	0.000E+00
a-226	U-238	2.767E-10	9.645E-29	1.432E-27	1.557E-26	3.200E-25	3.776E-24	9.628E-24	0.000E+00	0.000E+00
a-226	U-238	3.983E-12	0.000E+00	2.018E-29	2.194E-28	4.606E-27	5.435E-26	1.386E-25	0.000E+00	0.000E+00
a-226	äDOSE(j)		1.065E-16	7.251E-16	3.602E-15	2.581E-14	1.163E-13	1.345E-13	0.000E+00	0.000E+00
-234	U-234	2.771E-10	3.179E-12	3.021E-12	2.728E-12	1.906E-12	6.736E-13	1.259E-14	0.000E+00	0.000E+00
-234	U-234	3.989E-12	4.576E-14	4.349E-14	3.927E-14	2.743E-14	9.696E-15	1.813E-16	0.000E+00	0.000E+00
-234	äDOSE(j)		3.225E-12	3.065E-12	2.767E-12	1.933E-12	6.833E-13	1.278E-14	0.000E+00	0.000E+00
a-226	U-234	2.771E-10	1.405E-22	9.572E-22	4.755E-21	3.407E-20	1.535E-19	1.775E-19	0.000E+00	0.000E+00
-234	U-234	1.998E-04	2.291E-06	2.178E-06	1.966E-06	1.373E-06	4.855E-07	9.078E-09	0.000E+00	0.000E+00
-234	U-234	2.637E-10	3.025E-12	2.874E-12	2.595E-12	1.813E-12	6.409E-13	1.198E-14	0.000E+00	0.000E+00
-234	äDOSE(j)		2.291E-06	2.178E-06	1.966E-06	1.374E-06	4.855E-07	9.078E-09	0.000E+00	0.000E+00
-234	U-234	3.795E-12	4.354E-14	4.137E-14	3.736E-14	2.610E-14	9.225E-15	1.725E-16	0.000E+00	0.000E+00
-234	U-234	4.196E-08	4.813E-10	4.574E-10	4.130E-10	2.885E-10	1.020E-10	1.907E-12	0.000E+00	0.000E+00
-234	äDOSE(j)		4.813E-10	4.574E-10	4.130E-10	2.885E-10	1.020E-10	1.907E-12	0.000E+00	0.000E+00
a-226	U-234	4.196E-08	2.126E-20	1.448E-19	7.192E-19	5.154E-18	2.322E-17	2.684E-17	0.000E+00	0.000E+00
a-226	U-234	7.972E-16	3.955E-28	2.751E-27	1.366E-26	9.792E-26	4.412E-25	5.100E-25	0.000E+00	0.000E+00
a-226	U-238	6.713E-11	2.338E-29	3.399E-28	3.774E-27	7.756E-26	9.152E-25	2.334E-24	0.000E+00	0.000E+00
a-226	U-238	8.862E-17	0.000E+00	0.000E+00	0.000E+00	0.000E+00	0.000E+00	0.000E+00	0.000E+00	0.000E+00
a-226	U-238	1.276E-18	0.000E+00	0.000E+00	0.000E+00	0.000E+00	0.000E+00	0.000E+00	0.000E+00	0.000E+00
a-226	U-238	4.189E-08	1.490E-26	2.166E-25	2.355E-24	4.840E-23	5.711E-22	1.456E-21	0.000E+00	0.000E+00
a-226	U-238	5.530E-14	0.000E+00	0.000E+00	0.000E+00	6.255E-29	7.539E-28	1.922E-27	0.000E+00	0.000E+00
a-226	U-238	7.959E-16	0.000E+00	0.000E+00	0.000E+00	0.000E+00	0.000E+00	2.709E-29	0.000E+00	0.000E+00
a-226	äDOSE(j)		2.126E-20	1.448E-19	7.192E-19	5.154E-18	2.322E-17	2.685E-17	0.000E+00	0.000E+00

ummary : GKP Recreational Visitor - Inhalation
ile : C:\USERS\CLAUDE\DOCUMENTS\0 GKP DOSE\RESRAD CW\GKP RECREATIONAL VISITOR- INHALATION R1.RAD

Individual Nuclide Dose Summed Over All Pathways
Parent Nuclide and Branch Fraction Indicated

uclide (j)	Parent (i)	THF(i)	DOSE(j,t), mrem/yr t= 0.000E+00	1.000E+00	3.000E+00	1.000E+01	3.000E+01	1.000E+02	3.000E+02	1.000E+03
ÄÄÄÄÄÄ	ÄÄÄÄÄÄÄ	ÄÄÄÄÄÄÄÄÄ	ÄÄÄÄÄÄÄÄÄ	ÄÄÄÄÄÄÄÄÄ	ÄÄÄÄÄÄÄÄÄ	ÄÄÄÄÄÄÄÄÄ	ÄÄÄÄÄÄÄÄÄ	ÄÄÄÄÄÄÄÄÄ	ÄÄÄÄÄÄÄÄÄ	ÄÄÄÄÄÄÄÄÄ
-234	U-234	5.538E-14	6.353E-16	6.037E-16	5.452E-16	3.808E-16	1.346E-16	2.517E-18	0.000E+00	0.000E+00
-234	U-234	7.972E-16	9.145E-18	8.690E-18	7.847E-18	5.481E-18	1.938E-18	3.623E-20	0.000E+00	0.000E+00
-234	äDOSE(j)		6.445E-16	6.124E-16	5.530E-16	3.863E-16	1.366E-16	2.553E-18	0.000E+00	0.000E+00
a-226	U-234	5.538E-14	2.806E-26	1.911E-25	9.493E-25	6.803E-24	3.065E-23	3.543E-23	0.000E+00	0.000E+00
-234	U-234	2.000E-07	2.294E-09	2.180E-09	1.969E-09	1.375E-09	4.861E-10	9.089E-12	0.000E+00	0.000E+00
-234	U-234	2.640E-13	3.028E-15	2.878E-15	2.599E-15	1.815E-15	6.417E-16	1.200E-17	0.000E+00	0.000E+00
-234	äDOSE(j)		2.294E-09	2.180E-09	1.969E-09	1.375E-09	4.861E-10	9.089E-12	0.000E+00	0.000E+00
-234	U-234	3.800E-15	4.359E-17	4.142E-17	3.740E-17	2.613E-17	9.236E-18	1.727E-19	0.000E+00	0.000E+00
-235	U-235	9.835E-01	6.353E-04	6.037E-04	5.451E-04	3.808E-04	1.346E-04	2.518E-06	0.000E+00	0.000E+00
-235	U-235	2.722E-03	1.758E-06	1.671E-06	1.509E-06	1.054E-06	3.726E-07	6.968E-09	0.000E+00	0.000E+00
-235	äDOSE(j)		6.370E-04	6.054E-04	5.466E-04	3.819E-04	1.350E-04	2.525E-06	0.000E+00	0.000E+00
a-231	U-235	9.835E-01	6.934E-08	1.988E-07	4.196E-07	8.799E-07	9.036E-07	5.565E-08	0.000E+00	0.000E+00
a-231	U-235	2.722E-03	1.919E-10	5.503E-10	1.161E-09	2.435E-09	2.501E-09	1.540E-10	0.000E+00	0.000E+00
a-231	U-235	1.376E-02	9.703E-10	2.782E-09	5.871E-09	1.231E-08	1.264E-08	7.786E-10	0.000E+00	0.000E+00
a-231	U-235	3.809E-05	2.685E-12	7.700E-12	1.625E-11	3.408E-11	3.499E-11	2.155E-12	0.000E+00	0.000E+00
a-231	U-235	8.257E-07	5.822E-14	1.669E-13	3.523E-13	7.388E-13	7.587E-13	4.672E-14	0.000E+00	0.000E+00
a-231	U-235	2.285E-09	1.611E-16	4.620E-16	9.750E-16	2.045E-15	2.100E-15	1.293E-16	0.000E+00	0.000E+00
a-231	äDOSE(j)		7.051E-08	2.022E-07	4.266E-07	8.947E-07	9.188E-07	5.658E-08	0.000E+00	0.000E+00
c-227	U-235	9.835E-01	3.758E-09	2.450E-08	1.104E-07	5.647E-07	1.055E-06	8.571E-08	0.000E+00	0.000E+00
c-227	U-235	2.722E-03	1.040E-11	6.781E-11	3.056E-10	1.563E-09	2.921E-09	2.372E-10	0.000E+00	0.000E+00
c-227	U-235	1.376E-02	5.245E-11	3.420E-10	1.541E-09	7.882E-09	1.473E-08	1.196E-09	0.000E+00	0.000E+00
c-227	äDOSE(j)		6.285E-11	4.098E-10	1.847E-09	9.445E-09	1.765E-08	1.434E-09	0.000E+00	0.000E+00
-235	U-235	1.376E-02	8.889E-06	8.447E-06	7.628E-06	5.328E-06	1.884E-06	3.523E-08	0.000E+00	0.000E+00
-235	U-235	3.809E-05	2.460E-08	2.338E-08	2.111E-08	1.475E-08	5.213E-09	9.749E-11	0.000E+00	0.000E+00
-235	äDOSE(j)		8.914E-06	8.471E-06	7.649E-06	5.343E-06	1.889E-06	3.532E-08	0.000E+00	0.000E+00
c-227	U-235	3.809E-05	1.452E-13	9.466E-13	4.266E-12	2.182E-11	4.077E-11	3.311E-12	0.000E+00	0.000E+00
c-227	U-235	8.257E-07	3.143E-15	2.050E-14	9.238E-14	4.724E-13	8.829E-13	7.170E-14	0.000E+00	0.000E+00
c-227	äDOSE(j)		1.483E-13	9.671E-13	4.358E-12	2.229E-11	4.165E-11	3.383E-12	0.000E+00	0.000E+00
-235	U-235	8.257E-07	5.334E-10	5.069E-10	4.577E-10	3.197E-10	1.130E-10	2.114E-12	0.000E+00	0.000E+00
-235	U-235	2.285E-09	1.476E-12	1.403E-12	1.267E-12	8.849E-13	3.128E-13	5.850E-15	0.000E+00	0.000E+00
-235	äDOSE(j)		5.348E-10	5.083E-10	4.590E-10	3.206E-10	1.133E-10	2.120E-12	0.000E+00	0.000E+00
c-227	U-235	2.285E-09	8.700E-18	5.673E-17	2.557E-16	1.307E-15	2.443E-15	1.984E-16	0.000E+00	0.000E+00
-238	U-238	5.450E-07	5.589E-09	5.311E-09	4.796E-09	3.350E-09	1.184E-09	2.215E-11	0.000E+00	0.000E+00
-238	U-238	1.599E-03	1.641E-05	1.559E-05	1.408E-05	9.834E-06	3.476E-06	6.501E-08	0.000E+00	0.000E+00
-238	äDOSE(j)		1.641E-05	1.560E-05	1.408E-05	9.837E-06	3.478E-06	6.503E-08	0.000E+00	0.000E+00
-238	U-238	2.111E-09	2.165E-11	2.058E-11	1.858E-11	1.298E-11	4.589E-12	8.582E-14	0.000E+00	0.000E+00

ummary : GKP Recreational Visitor - Inhalation

ile : C:\USERS\CLAUDE\DOCUMENTS\0 GKP DOSE\RESRAD CW\GKP RECREATIONAL VISITOR- INHALATION R1.RAD

Individual Nuclide Dose Summed Over All Pathways

Parent Nuclide and Branch Fraction Indicated

uclide (j)	Parent (i)	THF(i)	DOSE(j,t), mrem/yr t= 0.000E+00	1.000E+00	3.000E+00	1.000E+01	3.000E+01	1.000E+02	3.000E+02	1.000E+03
ÄÄÄÄÄ	ÄÄÄÄÄÄ	ÄÄÄÄÄÄÄÄ	ÄÄÄÄÄÄÄÄÄ	ÄÄÄÄÄÄÄÄÄ	ÄÄÄÄÄÄÄÄÄ	ÄÄÄÄÄÄÄÄÄ	ÄÄÄÄÄÄÄÄÄ	ÄÄÄÄÄÄÄÄÄ	ÄÄÄÄÄÄÄÄÄ	ÄÄÄÄÄÄÄÄÄ
-238	U-238	3.039E-11	3.117E-13	2.962E-13	2.675E-13	1.868E-13	6.605E-14	1.235E-15	0.000E+00	0.000E+00
-238	äDOSE(j)		2.197E-11	2.088E-11	1.885E-11	1.317E-11	4.655E-12	8.705E-14	0.000E+00	0.000E+00
-238	U-238	3.359E-07	3.446E-09	3.275E-09	2.957E-09	2.066E-09	7.302E-10	1.366E-11	0.000E+00	0.000E+00
-238	U-238	4.434E-13	4.548E-15	4.322E-15	3.903E-15	2.726E-15	9.638E-16	1.803E-17	0.000E+00	0.000E+00
-238	äDOSE(j)		3.446E-09	3.275E-09	2.957E-09	2.066E-09	7.302E-10	1.366E-11	0.000E+00	0.000E+00
-238	U-238	6.383E-15	6.547E-17	6.222E-17	5.618E-17	3.924E-17	1.387E-17	2.595E-19	0.000E+00	0.000E+00
-238	U-238	3.196E-07	3.278E-09	3.116E-09	2.813E-09	1.965E-09	6.947E-10	1.299E-11	0.000E+00	0.000E+00
-238	äDOSE(j)		3.278E-09	3.116E-09	2.813E-09	1.965E-09	6.947E-10	1.299E-11	0.000E+00	0.000E+00
-238	U-238	4.219E-13	4.328E-15	4.112E-15	3.713E-15	2.594E-15	9.170E-16	1.715E-17	0.000E+00	0.000E+00
-238	U-238	6.073E-15	6.229E-17	5.919E-17	5.345E-17	3.734E-17	1.320E-17	2.468E-19	0.000E+00	0.000E+00
-238	äDOSE(j)		4.390E-15	4.172E-15	3.767E-15	2.631E-15	9.302E-16	1.740E-17	0.000E+00	0.000E+00
-238	U-238	6.713E-11	6.886E-13	6.544E-13	5.909E-13	4.128E-13	1.459E-13	2.729E-15	0.000E+00	0.000E+00
-238	U-238	8.862E-17	9.090E-19	8.638E-19	7.800E-19	5.449E-19	1.926E-19	3.602E-21	0.000E+00	0.000E+00
-238	äDOSE(j)		6.886E-13	6.544E-13	5.909E-13	4.128E-13	1.459E-13	2.729E-15	0.000E+00	0.000E+00
-238	U-238	1.276E-18	1.308E-20	1.243E-20	1.123E-20	7.843E-21	2.772E-21	5.185E-23	0.000E+00	0.000E+00
-238	U-238	3.200E-10	3.282E-12	3.119E-12	2.817E-12	1.968E-12	6.955E-13	1.301E-14	0.000E+00	0.000E+00
-238	äDOSE(j)		3.282E-12	3.119E-12	2.817E-12	1.968E-12	6.955E-13	1.301E-14	0.000E+00	0.000E+00
-238	U-238	4.224E-16	4.333E-18	4.117E-18	3.718E-18	2.597E-18	9.181E-19	1.717E-20	0.000E+00	0.000E+00
-238	U-238	6.080E-18	6.237E-20	5.927E-20	5.352E-20	3.738E-20	1.322E-20	2.471E-22	0.000E+00	0.000E+00
-238	äDOSE(j)		4.395E-18	4.177E-18	3.771E-18	2.635E-18	9.313E-19	1.742E-20	0.000E+00	0.000E+00
-238	U-238	9.980E-01	1.024E-02	9.728E-03	8.784E-03	6.136E-03	2.169E-03	4.057E-05	0.000E+00	0.000E+00
-238	U-238	1.317E-06	1.351E-08	1.284E-08	1.160E-08	8.100E-09	2.863E-09	5.355E-11	0.000E+00	0.000E+00
-238	äDOSE(j)		1.024E-02	9.728E-03	8.784E-03	6.136E-03	2.169E-03	4.057E-05	0.000E+00	0.000E+00
-238	U-238	1.896E-08	1.945E-10	1.848E-10	1.669E-10	1.166E-10	4.121E-11	7.708E-13	0.000E+00	0.000E+00
-238	U-238	2.096E-04	2.150E-06	2.043E-06	1.845E-06	1.289E-06	4.556E-07	8.521E-09	0.000E+00	0.000E+00
-238	äDOSE(j)		2.150E-06	2.044E-06	1.845E-06	1.289E-06	4.557E-07	8.522E-09	0.000E+00	0.000E+00
-238	U-238	2.767E-10	2.838E-12	2.697E-12	2.435E-12	1.701E-12	6.014E-13	1.125E-14	0.000E+00	0.000E+00
-238	U-238	3.983E-12	4.085E-14	3.882E-14	3.506E-14	2.449E-14	8.657E-15	1.619E-16	0.000E+00	0.000E+00
-238	äDOSE(j)		2.879E-12	2.736E-12	2.471E-12	1.726E-12	6.101E-13	1.141E-14	0.000E+00	0.000E+00
-238	U-238	1.994E-04	2.046E-06	1.944E-06	1.755E-06	1.226E-06	4.335E-07	8.107E-09	0.000E+00	0.000E+00
-238	U-238	2.633E-10	2.700E-12	2.566E-12	2.317E-12	1.619E-12	5.722E-13	1.070E-14	0.000E+00	0.000E+00
-238	äDOSE(j)		2.046E-06	1.944E-06	1.755E-06	1.226E-06	4.335E-07	8.107E-09	0.000E+00	0.000E+00
-238	U-238	3.789E-12	3.887E-14	3.694E-14	3.335E-14	2.330E-14	8.236E-15	1.540E-16	0.000E+00	0.000E+00
-238	U-238	4.189E-08	4.297E-10	4.083E-10	3.687E-10	2.576E-10	9.105E-11	1.703E-12	0.000E+00	0.000E+00
-238	äDOSE(j)		4.297E-10	4.084E-10	3.688E-10	2.576E-10	9.106E-11	1.703E-12	0.000E+00	0.000E+00
-238	U-238	5.530E-14	5.672E-16	5.390E-16	4.867E-16	3.400E-16	1.202E-16	2.248E-18	0.000E+00	0.000E+00
-238	U-238	7.959E-16	8.164E-18	7.758E-18	7.006E-18	4.894E-18	1.730E-18	3.235E-20	0.000E+00	0.000E+00
-238	äDOSE(j)		5.754E-16	5.468E-16	4.937E-16	3.449E-16	1.219E-16	2.280E-18	0.000E+00	0.000E+00

ummary : GKP Recreational Visitor - Inhalation
ile : C:\USERS\CLAUDE\DOCUMENTS\0 GKP DOSE\RESRAD CW\GKP RECREATIONAL VISITOR- INHALATION R1.RAD

Individual Nuclide Dose Summed Over All Pathways
Parent Nuclide and Branch Fraction Indicated

uclide (j)	Parent (i)	THF(i)	DOSE(j,t), mrem/yr t= 0.000E+00	1.000E+00	3.000E+00	1.000E+01	3.000E+01	1.000E+02	3.000E+02	1.000E+03
ÄÄÄÄÄÄ	ÄÄÄÄÄÄÄ	ÄÄÄÄÄÄÄÄÄ	ÄÄÄÄÄÄÄÄÄ	ÄÄÄÄÄÄÄÄÄ	ÄÄÄÄÄÄÄÄÄ	ÄÄÄÄÄÄÄÄÄ	ÄÄÄÄÄÄÄÄÄ	ÄÄÄÄÄÄÄÄÄ	ÄÄÄÄÄÄÄÄÄ	ÄÄÄÄÄÄÄÄÄ
-238	U-238	1.997E-07	2.048E-09	1.946E-09	1.758E-09	1.228E-09	4.340E-10	8.117E-12	0.000E+00	0.000E+00
-238	U-238	2.636E-13	2.704E-15	2.569E 15	2.320E-15	1.621E-15	5.729E-16	1.071E-17	0.000E+00	0.000E+00
-238	äDOSE(j)		2.048E-09	1.946E-09	1.758E-09	1.228E-09	4.340E-10	8.117E-12	0.000E+00	0.000E+00
-238	U-238	3.794E-15	3.892E-17	3.698E-17	3.339E-17	2.333E-17	8.246E-18	1.542E-19	0.000E+00	0.000E+00
íííííí	ííííííí	ííííííííí	ííííííííí	ííííííííí	ííííííííí	ííííííííí	ííííííííí	ííííííííí	ííííííííí	ííííííííí

HF(i) is the thread fraction of the parent nuclide.

ummary : GKP Recreational Visitor - Inhalation
ile : C:\USERS\CLAUDE\DOCUMENTS\0 GKP DOSE\RESRAD CW\GKP RECREATIONAL VISITOR- INHALATION R1.RAD

Individual Nuclide Soil Concentration
Parent Nuclide and Branch Fraction Indicated

uclide (j)	Parent (i)	THF(i)	S(j,t), pCi/g t= 0.000E+00	1.000E+00	3.000E+00	1.000E+01	3.000E+01	1.000E+02	3.000E+02	1.000E+03
ÄÄÄÄÄ	ÄÄÄÄÄÄ	ÄÄÄÄÄÄÄÄ	ÄÄÄÄÄÄÄÄ	ÄÄÄÄÄÄÄÄ	ÄÄÄÄÄÄÄÄ	ÄÄÄÄÄÄÄÄ	ÄÄÄÄÄÄÄÄ	ÄÄÄÄÄÄÄÄ	ÄÄÄÄÄÄÄÄ	ÄÄÄÄÄÄÄÄ
a-226	Ra-226	9.996E-01	3.648E+01	3.533E+01	3.314E+01	2.647E+01	1.394E+01	1.475E+00	2.411E-03	4.255E-13
a-226	Ra-226	1.319E-06	4.816E-05	4.664E-05	4.374E-05	3.494E-05	1.839E-05	1.947E-06	3.182E-09	5.616E-19
a-226	U-234	9.996E-01	0.000E+00	2.698E-08	2.308E-07	2.155E-06	1.208E-05	3.439E-05	3.853E-05	3.731E-05
a-226	U-234	1.319E-06	0.000E+00	3.561E-14	3.047E-13	2.844E-12	1.595E-11	4.540E-11	5.086E-11	4.925E-11
a-226	U-234	1.899E-08	0.000E+00	5.126E-16	4.386E-15	4.094E-14	2.295E-13	6.534E-13	7.321E-13	7.089E-13
a-226	U-238	1.599E-03	0.000E+00	4.044E-17	1.028E-15	3.093E-14	4.696E-13	2.984E-12	3.935E-12	3.813E-12
a-226	U-238	2.111E-09	0.000E+00	5.338E-23	1.357E-21	4.082E-20	6.199E-19	3.939E-18	5.194E-18	5.033E-18
a-226	U-238	3.039E-11	0.000E+00	7.683E-25	1.953E-23	5.876E-22	8.923E-21	5.670E-20	7.477E-20	7.244E-20
a-226	U-238	9.980E-01	0.000E+00	2.523E-14	6.416E-13	1.930E-11	2.930E-10	1.862E-09	2.455E-09	2.379E-09
a-226	U-238	1.317E-06	0.000E+00	3.331E-20	8.469E-19	2.547E-17	3.868E-16	2.458E-15	3.241E-15	3.140E-15
a-226	U-238	1.896E-08	0.000E+00	4.794E-22	1.219E-20	3.667E-19	5.568E-18	3.538E-17	4.665E-17	4.520E-17
a-226	äS(j):		3.649E+01	3.533E+01	3.314E+01	2.647E+01	1.394E+01	1.475E+00	2.449E-03	3.731E-05
o-210	Ra-226	9.996E-01	0.000E+00	1.092E+00	3.007E+00	7.444E+00	9.643E+00	1.904E+00	3.525E-03	6.232E-13
o-210	Ra-226	2.100E-04	0.000E+00	2.293E-04	6.315E-04	1.564E-03	2.026E-03	4.000E-04	7.405E-07	1.309E-16
o-210	Ra-226	1.998E-04	0.000E+00	2.181E-04	6.009E-04	1.488E-03	1.927E-03	3.805E-04	7.045E-07	1.245E-16
o-210	Ra-226	4.196E-08	0.000E+00	4.582E-08	1.262E-07	3.125E-07	4.048E-07	7.993E-08	1.480E-10	2.616E-20
o-210	Ra-226	2.000E-07	0.000E+00	2.184E-07	6.016E-07	1.489E-06	1.929E-06	3.810E-07	7.053E-10	1.247E-19
o-210	U-234	9.996E-01	0.000E+00	2.788E-10	7.058E-09	2.091E-07	3.053E-06	1.777E-05	2.254E-05	2.184E-05
o-210	U-234	2.100E-04	0.000E+00	5.857E-14	1.482E-12	4.392E-11	6.412E-10	3.732E-09	4.735E-09	4.587E-09
o-210	U-234	1.998E-04	0.000E+00	5.572E-14	1.410E-12	4.178E-11	6.101E-10	3.550E-09	4.505E-09	4.364E-09
o-210	U-234	4.196E-08	0.000E+00	1.170E-17	2.963E-16	8.776E-15	1.281E-13	7.457E-13	9.462E-13	9.166E-13
o-210	U-234	2.000E-07	0.000E+00	5.579E-17	1.412E-15	4.183E-14	6.108E-13	3.555E-12	4.510E-12	4.369E-12
o-210	U-238	1.599E-03	0.000E+00	3.142E-19	2.374E-17	2.303E-15	9.533E-14	1.413E-12	2.300E-12	2.231E-12
o-210	U-238	3.359E-07	0.000E+00	6.599E-23	4.987E-21	4.838E-19	2.002E-17	2.967E-16	4.832E-16	4.687E-16
o-210	U-238	3.196E-07	0.000E+00	6.278E-23	4.745E-21	4.603E-19	1.905E-17	2.823E-16	4.597E-16	4.459E-16
o-210	U-238	6.713E-11	0.000E+00	1.319E-26	9.966E-25	9.669E-23	4.001E-21	5.929E-20	9.656E-20	9.366E-20
o-210	U-238	3.200E-10	0.000E+00	6.286E-26	4.750E-24	4.609E-22	1.907E-20	2.826E-19	4.603E-19	4.464E-19
o-210	U-238	9.980E-01	0.000E+00	1.960E-16	1.481E-14	1.437E-12	5.948E-11	8.814E-10	1.435E-09	1.392E-09
o-210	U-238	2.096E-04	0.000E+00	4.118E-20	3.112E-18	3.019E-16	1.249E-14	1.851E-13	3.015E-13	2.925E-13
o-210	U-238	1.994E-04	0.000E+00	3.918E-20	2.961E-18	2.872E-16	1.189E-14	1.761E-13	2.869E-13	2.782E-13
o-210	U-238	4.189E-08	0.000E+00	8.229E-24	6.219E-22	6.033E-20	2.497E-18	3.700E-17	6.025E-17	5.844E-17
o-210	U-238	1.997E-07	0.000E+00	3.922E-23	2.964E-21	2.876E-19	1.190E-17	1.764E-16	2.872E-16	2.786E-16
o-210	äS(j):		0.000E+00	1.092E+00	3.008E+00	7.447E+00	9.647E+00	1.905E+00	3.549E-03	2.185E-05
o-210	Ra-226	1.319E-06	0.000E+00	1.441E-06	3.969E-06	9.826E-06	1.273E-05	2.514E-06	4.653E-09	8.226E-19
o-210	Ra-226	1.899E-08	0.000E+00	2.074E-08	5.713E-08	1.414E-07	1.832E-07	3.618E-08	6.698E-11	1.184E-20
o-210	Ra-226	2.771E-10	0.000E+00	3.026E-10	8.336E-10	2.064E-09	2.674E-09	5.280E-10	9.774E-13	1.728E-22
o-210	Ra-226	2.637E-10	0.000E+00	2.879E-10	7.931E-10	1.964E-09	2.544E-09	5.023E-10	9.299E-13	1.644E-22
o-210	Ra-226	5.538E-14	0.000E+00	6.048E-14	1.666E-13	4.124E-13	5.343E-13	1.055E-13	1.953E-16	3.453E-26
o-210	Ra-226	2.640E-13	0.000E+00	2.883E-13	7.941E-13	1.966E-12	2.547E-12	5.029E-13	9.311E-16	1.646E-25
o-210	U-234	1.319E-06	0.000E+00	3.681E-16	9.317E-15	2.760E-13	4.030E-12	2.345E-11	2.975E-11	2.882E-11
o-210	U-234	2.771E-10	0.000E+00	7.731E-20	1.957E-18	5.797E-17	8.464E-16	4.926E-15	6.250E-15	6.054E-15
o-210	U-234	2.637E-10	0.000E+00	7.356E-20	1.862E-18	5.515E-17	8.053E-16	4.686E-15	5.946E-15	5.760E-15
o-210	U-234	5.538E-14	0.000E+00	1.545E-23	3.911E-22	1.158E-20	1.691E-19	9.844E-19	1.249E-18	1.210E-18
o-210	U-234	2.640E-13	0.000E+00	7.364E-23	1.864E-21	5.522E-20	8.063E-19	4.692E-18	5.953E-18	5.767E-18
o-210	U-238	2.111E-09	0.000E+00	4.147E-25	3.134E-23	3.041E-21	1.258E-19	1.865E-18	3.037E-18	2.945E-18
o-210	U-238	4.434E-13	0.000E+00	8.711E-29	6.583E-27	6.387E-25	2.643E-23	3.916E-22	6.378E-22	6.187E-22
o-210	U-238	4.219E-13	0.000E+00	8.287E-29	6.263E-27	6.076E-25	2.515E-23	3.726E-22	6.068E-22	5.886E-22

ummary : GKP Recreational Visitor - Inhalation

ile : C:\USERS\CLAUDE\DOCUMENTS\0 GKP DOSE\RESRAD CW\GKP RECREATIONAL VISITOR- INHALATION R1.RAD

Individual Nuclide Soil Concentration

Parent Nuclide and Branch Fraction Indicated

uclide (j)	Parent (i)	THF(i)	S(j,t), pCi/g t= 0.000E+00	1.000E+00	3.000E+00	1.000E+01	3.000E+01	1.000E+02	3.000E+02	1.000E+03
ÄÄÄÄÄ	ÄÄÄÄÄÄ	ÄÄÄÄÄÄÄÄ	ÄÄÄÄÄÄÄÄÄ	ÄÄÄÄÄÄÄÄÄ	ÄÄÄÄÄÄÄÄÄ	ÄÄÄÄÄÄÄÄÄ	ÄÄÄÄÄÄÄÄÄ	ÄÄÄÄÄÄÄÄÄ	ÄÄÄÄÄÄÄÄÄ	ÄÄÄÄÄÄÄÄÄ
o-210	U-238	8.862E-17	0.000E+00	1.741E-32	1.315E-30	1.276E-28	5.282E-27	7.826E-26	1.275E-25	1.236E-25
o-210	U-238	4.224E-16	0.000E+00	8.297E-32	6.270E-30	6.084E-28	2.518E-26	3.731E-25	6.076E-25	5.893E-25
o-210	U-238	1.317E-06	0.000E+00	2.588E-22	1.956E-20	1.897E-18	7.852E-17	1.163E-15	1.895E-15	1.838E-15
o-210	U-238	2.767E-10	0.000E+00	5.435E-26	4.108E-24	3.985E-22	1.649E-20	2.444E-19	3.980E-19	3.860E-19
o-210	U-238	2.633E-10	0.000E+00	5.171E-26	3.908E-24	3.792E-22	1.569E-20	2.325E-19	3.787E-19	3.673E-19
o-210	U-238	5.530E-14	0.000E+00	1.086E-29	8.209E-28	7.964E-26	3.296E-24	4.884E-23	7.954E-23	7.715E-23
o-210	U-238	2.636E-13	0.000E+00	5.178E-29	3.913E-27	3.796E-25	1.571E-23	2.328E-22	3.791E-22	3.677E-22
o-210	äS(j):		0.000E+00	1.462E-06	4.028E-06	9.971E-06	1.292E-05	2.551E-06	4.752E-09	2.884E-11
a-226	Ra-226	1.899E-08	6.932E-07	6.713E-07	6.296E-07	5.030E-07	2.648E-07	2.802E-08	4.580E-11	8.084E-21
a-226	Ra-226	2.100E-04	7.663E-03	7.421E-03	6.960E-03	5.560E-03	2.927E-03	3.098E-04	5.063E-07	8.936E-17
a-226	äS(j):		7.664E-03	7.422E-03	6.961E-03	5.561E-03	2.927E-03	3.098E-04	5.064E-07	8.937E-17
a-226	Ra-226	2.771E-10	1.012E-08	9.796E-09	9.188E-09	7.340E-09	3.864E-09	4.090E-10	6.684E-13	1.180E-22
a-226	Ra-226	3.989E-12	1.456E-10	1.410E-10	1.322E-10	1.056E-10	5.561E-11	5.886E-12	9.621E-15	1.698E-24
a-226	äS(j):		1.026E-08	9.937E-09	9.320E-09	7.445E-09	3.919E-09	4.148E-10	6.780E-13	1.197E-22
o-210	Ra-226	3.989E-12	0.000E+00	4.356E-12	1.200E-11	2.971E-11	3.849E-11	7.599E-12	1.407E-14	2.487E-24
o-210	Ra-226	3.795E-12	0.000E+00	4.144E-12	1.142E-11	2.826E-11	3.662E-11	7.230E-12	1.339E-14	2.366E-24
o-210	Ra-226	7.972E-16	0.000E+00	8.705E-16	2.398E-15	5.937E-15	7.691E-15	1.519E-15	2.812E-18	4.970E-28
o-210	Ra-226	3.800E-15	0.000E+00	4.149E-15	1.143E-14	2.830E-14	3.666E-14	7.239E-15	1.340E-17	2.369E-27
o-210	U-234	1.899E-08	0.000E+00	5.298E-18	1.341E-16	3.973E-15	5.800E-14	3.376E-13	4.283E-13	4.149E-13
o-210	U-234	3.989E-12	0.000E+00	1.113E-21	2.817E-20	8.344E-19	1.218E-17	7.090E-17	8.996E-17	8.715E-17
o-210	U-234	3.795E-12	0.000E+00	1.059E-21	2.680E-20	7.939E-19	1.159E-17	6.746E-17	8.559E-17	8.291E-17
o-210	U-234	7.972E-16	0.000E+00	2.224E-25	5.629E-24	1.667E-22	2.435E-21	1.417E-20	1.798E-20	1.742E-20
o-210	U-234	3.800E-15	0.000E+00	1.060E-24	2.683E-23	7.948E-22	1.161E-20	6.754E-20	8.569E-20	8.301E-20
o-210	U-238	3.039E-11	0.000E+00	5.969E-27	4.511E-25	4.377E-23	1.811E-21	2.684E-20	4.371E-20	4.240E-20
o-210	U-238	6.383E-15	0.000E+00	1.254E-30	9.475E-29	9.193E-27	3.804E-25	5.637E-24	9.181E-24	8.905E-24
o-210	U-238	6.073E-15	0.000E+00	1.193E-30	9.015E-29	8.746E-27	3.620E-25	5.363E-24	8.735E-24	8.472E-24
o-210	U-238	1.276E-18	0.000E+00	2.506E-34	1.893E-32	1.837E-30	7.603E-29	1.127E-27	1.835E-27	1.780E-27
o-210	U-238	6.080E-18	0.000E+00	1.194E-33	9.026E-32	8.757E-30	3.624E-28	5.370E-27	8.745E-27	8.483E-27
o-210	U-238	1.896E-08	0.000E+00	3.725E-24	2.815E-22	2.731E-20	1.130E-18	1.675E-17	2.727E-17	2.645E-17
o-210	U-238	3.983E-12	0.000E+00	7.824E-28	5.912E-26	5.736E-24	2.374E-22	3.518E-21	5.729E-21	5.557E-21
o-210	U-238	3.789E-12	0.000E+00	7.444E-28	5.625E-26	5.458E-24	2.259E-22	3.347E-21	5.450E-21	5.287E-21
o-210	U-238	7.959E-16	0.000E+00	1.563E-31	1.182E-29	1.146E-27	4.744E-26	7.029E-25	1.145E-24	1.110E-24
o-210	U-238	3.794E-15	0.000E+00	7.453E-31	5.632E-29	5.464E-27	2.261E-25	3.351E-24	5.457E-24	5.293E-24
o-210	äS(j):		0.000E+00	8.506E-12	2.343E-11	5.801E-11	7.520E-11	1.518E-11	4.560E-13	4.151E-13
a-226	Ra-226	1.998E-04	7.291E-03	7.061E-03	6.622E-03	5.290E-03	2.785E-03	2.948E-04	4.817E-07	8.502E-17
a-226	Ra-226	2.637E-10	9.624E-09	9.320E-09	8.741E-09	6.983E-09	3.676E-09	3.891E-10	6.359E-13	1.122E-22
a-226	U-234	1.998E-04	0.000E+00	5.392E-12	4.613E-11	4.306E-10	2.414E-09	6.873E-09	7.700E-09	7.457E-09
a-226	U-234	2.637E-10	0.000E+00	7.117E-18	6.089E-17	5.684E-16	3.187E-15	9.072E-15	1.016E-14	9.843E-15
a-226	U-234	3.795E-12	0.000E+00	1.024E-19	8.765E-19	8.182E-18	4.587E-17	1.306E-16	1.463E-16	1.417E-16
a-226	U-238	3.196E-07	0.000E+00	8.081E-21	2.055E-19	6.180E-18	9.385E-17	5.963E-16	7.864E-16	7.619E-16
a-226	U-238	4.219E-13	0.000E+00	1.067E-26	2.712E-25	8.158E-24	1.239E-22	7.872E-22	1.038E-21	1.006E-21
a-226	U-238	6.073E-15	0.000E+00	1.535E-28	3.904E-27	1.174E-25	1.783E-24	1.133E-23	1.494E-23	1.448E-23
a-226	U-238	1.994E-04	0.000E+00	5.042E-18	1.282E-16	3.856E-15	5.856E-14	3.721E-13	4.907E-13	4.755E-13
a-226	U-238	2.633E-10	0.000E+00	6.656E-24	1.692E-22	5.090E-21	7.730E-20	4.912E-19	6.477E-19	6.276E-19
a-226	U-238	3.789E-12	0.000E+00	9.581E-26	2.436E-24	7.327E-23	1.113E-21	7.070E-21	9.323E-21	9.034E-21
a-226	äS(j):		7.291E-03	7.061E-03	6.622E-03	5.290E-03	2.785E-03	2.948E-04	4.894E-07	7.457E-09

ummary : GKP Recreational Visitor - Inhalation
ile : C:\USERS\CLAUDE\DOCUMENTS\0 GKP DOSE\RESRAD CW\GKP RECREATIONAL VISITOR- INHALATION R1.RAD

Individual Nuclide Soil Concentration
Parent Nuclide and Branch Fraction Indicated

uclide (j)	Parent (i)	THF(i)	S(j,t), pCi/g t= 0.000E+00	1.000E+00	3.000E+00	1.000E+01	3.000E+01	1.000E+02	3.000E+02	1.000E+03
ÄÄÄÄÄÄ	ÄÄÄÄÄÄÄ	ÄÄÄÄÄÄÄÄÄ	ÄÄÄÄÄÄÄÄÄ	ÄÄÄÄÄÄÄÄÄ	ÄÄÄÄÄÄÄÄÄ	ÄÄÄÄÄÄÄÄÄ	ÄÄÄÄÄÄÄÄÄ	ÄÄÄÄÄÄÄÄÄ	ÄÄÄÄÄÄÄÄÄ	ÄÄÄÄÄÄÄÄÄ
a-226	Ra-226	3.795E-12	1.385E-10	1.342E-10	1.258E-10	1.005E-10	5.291E-11	5.600E-12	9.153E-15	1.615E-24
a-226	Ra-226	4.196E-08	1.531E-06	1.483E-06	1.391E-06	1.111E-06	5.849E-07	6.191E-08	1.012E-10	1.786E-20
a-226	äS(j):		1.532E-06	1.483E-06	1.391E-06	1.111E-06	5.850E-07	6.192E-08	1.012E-10	1.786E-20
a-226	Ra-226	5.538E-14	2.022E-12	1.958E-12	1.836E-12	1.467E-12	7.721E-13	8.173E-14	1.336E-16	2.357E-26
a-226	Ra-226	7.972E-16	2.910E-14	2.818E-14	2.643E-14	2.111E-14	1.111E-14	1.176E-15	1.923E-18	3.393E-28
a-226	äS(j):		2.051E-12	1.986E-12	1.862E-12	1.488E-12	7.832E-13	8.290E-14	1.355E-16	2.391E-26
a-226	Ra-226	2.000E-07	7.300E-06	7.070E-06	6.630E-06	5.297E-06	2.788E-06	2.951E-07	4.823E-10	8.513E-20
a-226	Ra-226	2.640E-13	9.636E-12	9.332E-12	8.752E-12	6.991E-12	3.680E-12	3.896E-13	6.367E-16	1.124E-25
a-226	U-234	2.000E-07	0.000E+00	5.398E-15	4.619E-14	4.311E-13	2.417E-12	6.881E-12	7.709E-12	7.466E-12
a-226	U-234	2.640E-13	0.000E+00	7.126E-21	6.097E-20	5.691E-19	3.191E-18	9.083E-18	1.010E-17	9.855E-18
a-226	U-234	3.800E-15	0.000E+00	1.026E-22	8.776E-22	8.192E-21	4.593E-20	1.307E-19	1.465E-19	1.418E-19
a-226	U-238	3.200E-10	0.000E+00	8.091E-24	2.057E-22	6.188E-21	9.396E-20	5.971E-19	7.873E-19	7.629E-19
a-226	U-238	4.224E-16	0.000E+00	1.068E-29	2.715E-28	8.168E-27	1.240E-25	7.881E-25	1.039E-24	1.007E-24
a-226	U-238	6.080E-18	0.000E+00	1.537E-31	3.909E-30	1.176E-28	1.785E-27	1.134E-26	1.496E-26	1.449E-26
a-226	U-238	1.997E-07	0.000E+00	5.048E-21	1.284E-19	3.861E-18	5.863E-17	3.726E-16	4.913E-16	4.760E-16
a-226	U-238	2.636E-13	0.000E+00	6.664E-27	1.694E-25	5.097E-24	7.739E-23	4.918E-22	6.485E-22	6.284E-22
a-226	U-238	3.794E-15	0.000E+00	9.592E-29	2.439E-27	7.336E-26	1.114E-24	7.079E-24	9.335E-24	9.045E-24
a-226	äS(j):		7.300E-06	7.070E-06	6.630E-06	5.297E-06	2.788E-06	2.951E-07	4.900E-10	7.466E-12
a-226	Ra-226	3.800E-15	1.387E-13	1.343E-13	1.260E-13	1.006E-13	5.298E-14	5.607E-15	9.164E-18	1.617E-27
n-232	Th-232	1.000E+00	2.400E+00	2.400E+00	2.400E+00	2.399E+00	2.397E+00	2.391E+00	2.373E+00	2.313E+00
a-228	Th-232	1.000E+00	0.000E+00	2.684E-01	6.968E-01	1.486E+00	1.879E+00	1.894E+00	1.880E+00	1.832E+00
n-228	Th-232	1.000E+00	0.000E+00	4.430E-02	2.891E-01	1.222E+00	1.865E+00	1.894E+00	1.880E+00	1.832E+00
-234	U-234	9.996E-01	1.389E+01	1.329E+01	1.217E+01	8.925E+00	3.683E+00	1.662E-01	2.380E-05	8.354E-19
-234	U-234	1.319E-06	1.834E-05	1.755E-05	1.606E-05	1.178E-05	4.862E-06	2.194E-07	3.141E-11	1.103E-24
-234	U-238	1.599E-03	0.000E+00	6.005E-08	1.649E-07	4.032E-07	4.992E-07	7.511E-08	3.227E-11	3.779E-24
-234	U-238	2.111E-09	0.000E+00	7.927E-14	2.177E-13	5.322E-13	6.589E-13	9.914E-14	4.259E-17	4.988E-30
-234	U-238	3.039E-11	0.000E+00	1.141E-15	3.133E-15	7.661E-15	9.484E-15	1.427E-15	6.131E-19	7.180E-32
-234	U-238	3.359E-07	0.000E+00	1.261E-11	3.463E-11	8.469E-11	1.048E-10	1.578E-11	6.777E-15	7.938E-28
-234	U-238	4.434E-13	0.000E+00	1.665E-17	4.572E-17	1.118E-16	1.384E-16	2.082E-17	8.946E-21	1.048E-33
-234	U-238	6.383E-15	0.000E+00	2.396E-19	6.580E-19	1.609E-18	1.992E-18	2.998E-19	1.288E-22	1.508E-35
-234	U-238	3.196E-07	0.000E+00	1.200E-11	3.295E-11	8.058E-11	9.975E-11	1.501E-11	6.448E-15	7.552E-28
-234	U-238	4.219E-13	0.000E+00	1.584E-17	4.350E-17	1.064E-16	1.317E-16	1.981E-17	8.511E-21	9.969E-34
-234	U-238	6.073E-15	0.000E+00	2.280E-19	6.261E-19	1.531E-18	1.895E-18	2.852E-19	1.225E-22	1.435E-35
-234	U-238	6.713E-11	0.000E+00	2.521E-15	6.921E-15	1.692E-14	2.095E-14	3.153E-15	1.354E-18	1.586E-31
-234	U-238	8.862E-17	0.000E+00	3.327E-21	9.136E-21	2.234E-20	2.766E-20	4.162E-21	1.788E-24	2.094E-37
-234	U-238	1.276E-18	0.000E+00	4.789E-23	1.315E-22	3.216E-22	3.981E-22	5.990E-23	2.573E-26	3.014E-39
-234	U-238	3.200E-10	0.000E+00	1.201E-14	3.299E-14	8.067E-14	9.987E-14	1.503E-14	6.456E-18	7.561E-31
-234	U-238	4.224E-16	0.000E+00	1.586E-20	4.355E-20	1.065E-19	1.318E-19	1.984E-20	8.522E-24	9.981E-37
-234	U-238	6.080E-18	0.000E+00	2.283E-22	6.268E-22	1.533E-21	1.898E-21	2.855E-22	1.227E-25	1.437E-38
-234	U-238	9.980E-01	0.000E+00	3.747E-05	1.029E-04	2.516E-04	3.115E-04	4.687E-05	2.013E-08	2.358E-21
-234	U-238	1.317E-06	0.000E+00	4.946E-11	1.358E-10	3.321E-10	4.111E-10	6.187E-11	2.658E-14	3.113E-27
-234	U-238	1.896E-08	0.000E+00	7.119E-13	1.955E-12	4.780E-12	5.918E-12	8.905E-13	3.825E-16	4.480E-29

ummary : GKP Recreational Visitor - Inhalation
ile : C:\USERS\CLAUDE\DOCUMENTS\0 GKP DOSE\RESRAD CW\GKP RECREATIONAL VISITOR- INHALATION R1.RAD

Individual Nuclide Soil Concentration
Parent Nuclide and Branch Fraction Indicated

uclide (j)	Parent (i)	THF(i)	S(j,t), pCi/g t= 0.000E+00	1.000E+00	3.000E+00	1.000E+01	3.000E+01	1.000E+02	3.000E+02	1.000E+03
ÄÄÄÄÄ	ÄÄÄÄÄÄ	ÄÄÄÄÄÄÄÄ	ÄÄÄÄÄÄÄÄ	ÄÄÄÄÄÄÄÄ	ÄÄÄÄÄÄÄÄ	ÄÄÄÄÄÄÄÄ	ÄÄÄÄÄÄÄÄ	ÄÄÄÄÄÄÄÄ	ÄÄÄÄÄÄÄÄ	ÄÄÄÄÄÄÄÄ
-234	U-238	2.096E-04	0.000E+00	7.871E-09	2.161E-08	5.285E-08	6.542E-08	9.844E-09	4.229E-12	4.953E-25
-234	U-238	2.767E-10	0.000E+00	1.039E-14	2.853E-14	6.976E-14	8.636E-14	1.299E-14	5.582E-18	6.538E-31
-234	U-238	3.983E-12	0.000E+00	1.495E-16	4.106E-16	1.004E-15	1.243E-15	1.870E-16	8.035E-20	9.411E-33
-234	U-238	1.994E-04	0.000E+00	7.488E-09	2.056E-08	5.028E-08	6.225E-08	9.366E-09	4.024E-12	4.712E-25
-234	U-238	2.633E-10	0.000E+00	9.884E-15	2.714E-14	6.637E-14	8.216E-14	1.236E-14	5.311E-18	6.220E-31
-234	U-238	3.789E-12	0.000E+00	1.423E-16	3.907E-16	9.553E-16	1.183E-15	1.780E-16	7.645E-20	8.954E-33
-234	U-238	4.189E-08	0.000E+00	1.573E-12	4.319E-12	1.056E-11	1.307E-11	1.967E-12	8.451E-16	9.898E-29
-234	U-238	5.530E-14	0.000E+00	2.076E-18	5.701E-18	1.394E-17	1.726E-17	2.597E-18	1.116E-21	1.307E-34
-234	U-238	7.959E-16	0.000E+00	2.988E-20	8.206E-20	2.007E-19	2.484E-19	3.738E-20	1.606E-23	1.881E-36
-234	U-238	1.997E-07	0.000E+00	7.497E-12	2.059E-11	5.034E-11	6.232E-11	9.378E-12	4.028E-15	4.718E-28
-234	U-238	2.636E-13	0.000E+00	9.896E-18	2.717E-17	6.645E-17	8.226E-17	1.238E-17	5.318E-21	6.228E-34
-234	U-238	3.794E-15	0.000E+00	1.424E-19	3.911E-19	9.565E-19	1.184E-18	1.782E-19	7.654E-23	8.965E-36
-234	äS(j):		1.389E+01	1.329E+01	1.217E+01	8.926E+00	3.683E+00	1.663E-01	2.382E-05	8.377E-19
n-230	U-234	9.996E-01	0.000E+00	1.250E-04	3.589E-04	1.032E-03	2.120E-03	2.842E-03	2.850E-03	2.759E-03
n-230	U-234	1.319E-06	0.000E+00	1.650E-10	4.738E-10	1.362E-09	2.798E-09	3.751E-09	3.762E-09	3.642E-09
n-230	U-234	1.899E-08	0.000E+00	2.375E-12	6.819E-12	1.961E-11	4.028E-11	5.400E-11	5.415E-11	5.243E-11
n-230	U-234	2.100E-04	0.000E+00	2.625E-08	7.539E-08	2.168E-07	4.452E-07	5.969E-07	5.986E-07	5.796E-07
n-230	U-234	2.771E-10	0.000E+00	3.465E-14	9.951E-14	2.862E-13	5.877E-13	7.879E-13	7.902E-13	7.650E-13
n-230	U-234	3.989E-12	0.000E+00	4.988E-16	1.432E-15	4.119E-15	8.460E-15	1.134E-14	1.137E-14	1.101E-14
n-230	U-234	1.998E-04	0.000E+00	2.497E-08	7.172E-08	2.063E-07	4.236E-07	5.679E-07	5.695E-07	5.514E-07
n-230	U-234	2.637E-10	0.000E+00	3.297E-14	9.468E-14	2.723E-13	5.592E-13	7.497E-13	7.518E-13	7.279E-13
n-230	U-234	3.795E-12	0.000E+00	4.745E-16	1.363E-15	3.919E-15	8.049E-15	1.079E-14	1.082E-14	1.048E-14
n-230	U-234	4.196E-08	0.000E+00	5.246E-12	1.507E-11	4.332E-11	8.898E-11	1.193E-10	1.196E-10	1.158E-10
n-230	U-234	5.538E-14	0.000E+00	6.924E-18	1.989E-17	5.719E-17	1.175E-16	1.575E-16	1.579E-16	1.529E-16
n-230	U-234	7.972E-16	0.000E+00	9.967E-20	2.862E-19	8.231E-19	1.691E-18	2.267E-18	2.273E-18	2.201E-18
n-230	U-234	2.000E-07	0.000E+00	2.501E-11	7.181E-11	2.065E-10	4.241E-10	5.686E-10	5.702E-10	5.521E-10
n-230	U-234	2.640E-13	0.000E+00	3.301E-17	9.479E-17	2.726E-16	5.599E-16	7.506E-16	7.527E-16	7.287E-16
n-230	U-234	3.800E-15	0.000E+00	4.751E-19	1.364E-18	3.924E-18	8.058E-18	1.080E-17	1.083E-17	1.049E-17
n-230	U-238	1.599E-03	0.000E+00	2.802E-13	2.378E-12	2.160E-11	1.128E-10	2.748E-10	2.912E-10	2.820E-10
n-230	U-238	2.111E-09	0.000E+00	3.699E-19	3.139E-18	2.851E-17	1.489E-16	3.627E-16	3.844E-16	3.722E-16
n-230	U-238	3.039E-11	0.000E+00	5.324E-21	4.519E-20	4.104E-19	2.143E-18	5.221E-18	5.533E-18	5.357E-18
n-230	U-238	3.359E-07	0.000E+00	5.885E-17	4.995E-16	4.537E-15	2.369E-14	5.771E-14	6.117E-14	5.922E-14
n-230	U-238	4.434E-13	0.000E+00	7.769E-23	6.594E-22	5.989E-21	3.127E-20	7.618E-20	8.074E-20	7.817E-20
n-230	U-238	6.383E-15	0.000E+00	1.118E-24	9.491E-24	8.621E-23	4.501E-22	1.097E-21	1.162E-21	1.125E-21
n-230	U-238	3.196E-07	0.000E+00	5.600E-17	4.753E-16	4.317E-15	2.254E-14	5.491E-14	5.820E-14	5.635E-14
n-230	U-238	4.219E-13	0.000E+00	7.391E-23	6.274E-22	5.698E-21	2.975E-20	7.248E-20	7.682E-20	7.438E-20
n-230	U-238	6.073E-15	0.000E+00	1.064E-24	9.030E-24	8.202E-23	4.282E-22	1.043E-21	1.106E-21	1.071E-21
n-230	U-238	6.713E-11	0.000E+00	1.176E-20	9.983E-20	9.067E-19	4.734E-18	1.153E-17	1.222E-17	1.183E-17
n-230	U-238	8.862E-17	0.000E+00	1.553E-26	1.318E-25	1.197E-24	6.249E-24	1.522E-23	1.614E-23	1.562E-23
n-230	U-238	1.276E-18	0.000E+00	2.235E-28	1.897E-27	1.723E-26	8.995E-26	2.191E-25	2.323E-25	2.249E-25
n-230	U-238	3.200E-10	0.000E+00	5.606E-20	4.759E-19	4.322E-18	2.257E-17	5.498E-17	5.827E-17	5.641E-17
n-230	U-238	4.224E-16	0.000E+00	7.400E-26	6.281E-25	5.705E-24	2.979E-23	7.257E-23	7.691E-23	7.447E-23
n-230	U-238	6.080E-18	0.000E+00	1.065E-27	9.041E-27	8.212E-26	4.288E-25	1.045E-24	1.107E-24	1.072E-24
n-230	U-238	9.980E-01	0.000E+00	1.748E-10	1.484E-09	1.348E-08	7.038E-08	1.715E-07	1.817E-07	1.759E-07
n-230	U-238	1.317E-06	0.000E+00	2.308E-16	1.959E-15	1.779E-14	9.290E-14	2.263E-13	2.399E-13	2.322E-13
n-230	U-238	1.896E-08	0.000E+00	3.322E-18	2.820E-17	2.561E-16	1.337E-15	3.258E-15	3.453E-15	3.343E-15
n-230	U-238	2.096E-04	0.000E+00	3.673E-14	3.117E-13	2.831E-12	1.478E-11	3.601E-11	3.817E-11	3.695E-11
n-230	U-238	2.767E-10	0.000E+00	4.848E-20	4.115E-19	3.737E-18	1.951E-17	4.754E-17	5.038E-17	4.878E-17

ummary : GKP Recreational Visitor - Inhalation
ile : C:\USERS\CLAUDE\DOCUMENTS\0 GKP DOSE\RESRAD CW\GKP RECREATIONAL VISITOR- INHALATION R1.RAD

Individual Nuclide Soil Concentration
Parent Nuclide and Branch Fraction Indicated

uclide (j)	Parent (i)	THF(i)	S(j,t), pCi/g t= 0.000E+00	1.000E+00	3.000E+00	1.000E+01	3.000E+01	1.000E+02	3.000E+02	1.000E+03
ÄÄÄÄÄ	ÄÄÄÄÄÄ	ÄÄÄÄÄÄÄÄÄ	ÄÄÄÄÄÄÄÄÄ	ÄÄÄÄÄÄÄÄÄ	ÄÄÄÄÄÄÄÄÄ	ÄÄÄÄÄÄÄÄÄ	ÄÄÄÄÄÄÄÄÄ	ÄÄÄÄÄÄÄÄÄ	ÄÄÄÄÄÄÄÄÄ	ÄÄÄÄÄÄÄÄÄ
n-230	U-238	3.983E-12	0.000E+00	6.978E-22	5.923E-21	5.379E-20	2.809E-19	6.843E-19	7.252E-19	7.021E-19
n-230	U-238	1.994E-04	0.000E+00	3.494E-14	2.966E-13	2.694E-12	1.406E-11	3.426E-11	3.631E-11	3.516E-11
n-230	U-238	2.633E-10	0.000E+00	4.612E-20	3.915E-19	3.556E-18	1.856E-17	4.523E-17	4.794E-17	4.641E-17
n-230	U-238	3.789E-12	0.000E+00	6.639E-22	5.635E-21	5.118E-20	2.672E-19	6.510E-19	6.900E-19	6.680E-19
n-230	U-238	4.189E-08	0.000E+00	7.339E-18	6.229E-17	5.658E-16	2.954E-15	7.197E-15	7.628E-15	7.385E-15
n-230	U-238	5.530E-14	0.000E+00	9.688E-24	8.223E-23	7.468E-22	3.899E-21	9.500E-21	1.007E-20	9.748E-21
n-230	U-238	7.959E-16	0.000E+00	1.394E-25	1.184E-24	1.075E-23	5.613E-23	1.367E-22	1.449E-22	1.403E-22
n-230	U-238	1.997E-07	0.000E+00	3.498E-17	2.969E-16	2.697E-15	1.408E-14	3.431E-14	3.636E-14	3.520E-14
n-230	U-238	2.636E-13	0.000E+00	4.618E-23	3.920E-22	3.560E-21	1.859E-20	4.528E-20	4.799E-20	4.647E-20
n-230	U-238	3.794E-15	0.000E+00	6.647E-25	5.642E-24	5.124E-23	2.675E-22	6.518E-22	6.908E-22	6.688E-22
n-230	äS(j):		0.000E+00	1.250E-04	3.591E-04	1.033E-03	2.121E-03	2.843E-03	2.851E-03	2.761E-03
-234	U-234	1.899E-08	2.640E-07	2.526E-07	2.312E-07	1.696E-07	6.998E-08	3.159E-09	4.522E-13	1.587E-26
-234	U-234	2.100E-04	2.918E-03	2.792E-03	2.556E-03	1.875E-03	7.736E-04	3.492E-05	4.999E-09	1.755E-22
-234	äS(j):		2.919E-03	2.792E-03	2.556E-03	1.875E-03	7.737E-04	3.492E-05	4.999E-09	1.755E-22
a-226	U-234	2.100E-04	0.000E+00	5.667E-12	4.849E-11	4.526E-10	2.538E-09	7.224E-09	8.093E-09	7.837E-09
a-226	U-234	3.989E-12	0.000E+00	1.077E-19	9.213E-19	8.600E-18	4.821E-17	1.373E-16	1.538E-16	1.489E-16
a-226	U-238	3.359E-07	0.000E+00	8.493E-21	2.160E-19	6.496E-18	9.864E-17	6.268E-16	8.265E-16	8.008E-16
a-226	U-238	4.434E-13	0.000E+00	1.121E-26	2.851E-25	8.574E-24	1.302E-22	8.274E-22	1.091E-21	1.057E-21
a-226	U-238	6.383E-15	0.000E+00	1.614E-28	4.103E-27	1.234E-25	1.874E-24	1.191E-23	1.570E-23	1.522E-23
a-226	U-238	2.096E-04	0.000E+00	5.300E-18	1.348E-16	4.053E-15	6.155E-14	3.911E-13	5.158E-13	4.997E-13
a-226	U-238	2.767E-10	0.000E+00	6.996E-24	1.779E-22	5.350E-21	8.125E-20	5.163E-19	6.808E-19	6.596E-19
a-226	U-238	3.983E-12	0.000E+00	1.007E-25	2.560E-24	7.701E-23	1.169E-21	7.431E-21	9.799E-21	9.495E-21
a-226	äS(j):		0.000E+00	5.667E-12	4.849E-11	4.526E-10	2.538E-09	7.224E-09	8.094E-09	7.838E-09
-234	U-234	2.771E-10	3.852E-09	3.686E-09	3.373E-09	2.475E-09	1.021E-09	4.609E-11	6.598E-15	2.316E-28
-234	U-234	3.989E-12	5.545E-11	5.305E-11	4.856E-11	3.562E-11	1.470E-11	6.634E-13	9.498E-17	3.334E-30
-234	äS(j):		3.908E-09	3.739E-09	3.422E-09	2.510E-09	1.036E-09	4.676E-11	6.693E-15	2.349E-28
a-226	U-234	2.771E-10	0.000E+00	7.480E-18	6.400E-17	5.974E-16	3.350E-15	9.535E-15	1.068E-14	1.035E-14
-234	U-234	1.998E-04	2.777E-03	2.656E-03	2.431E-03	1.784E-03	7.360E-04	3.322E-05	4.756E-09	1.669E-22
-234	U-234	2.637E-10	3.665E-09	3.506E-09	3.209E-09	2.354E-09	9.715E-10	4.385E-11	6.278E-15	2.204E-28
-234	äS(j):		2.777E-03	2.656E-03	2.431E-03	1.784E-03	7.360E-04	3.322E-05	4.756E-09	1.669E-22
-234	U-234	3.795E-12	5.276E-11	5.047E-11	4.620E-11	3.389E-11	1.398E-11	6.312E-13	9.036E-17	3.172E-30
-234	U-234	4.196E-08	5.832E-07	5.580E-07	5.107E-07	3.746E-07	1.546E-07	6.978E-09	9.989E-13	3.506E-26
-234	äS(j):		5.833E-07	5.580E-07	5.107E-07	3.747E-07	1.546E-07	6.979E-09	9.990E-13	3.507E-26
a-226	U-234	4.196E-08	0.000E+00	1.132E-15	9.690E-15	9.045E-14	5.071E-13	1.444E-12	1.617E-12	1.566E-12
a-226	U-234	7.972E-16	0.000E+00	2.152E-23	1.841E-22	1.719E-21	9.635E-21	2.743E-20	3.073E-20	2.976E-20
a-226	U-238	6.713E-11	0.000E+00	1.697E-24	4.316E-23	1.298E-21	1.971E-20	1.253E-19	1.652E-19	1.600E-19
a-226	U-238	8.862E-17	0.000E+00	2.240E-30	5.697E-29	1.713E-27	2.602E-26	1.653E-25	2.180E-25	2.113E-25
a-226	U-238	1.276E-18	0.000E+00	3.225E-32	8.200E-31	2.466E-29	3.745E-28	2.380E-27	3.138E-27	3.041E-27
a-226	U-238	4.189E-08	0.000E+00	1.059E-21	2.693E-20	8.100E-19	1.230E-17	7.816E-17	1.031E-16	9.987E-17
a-226	U-238	5.530E-14	0.000E+00	1.398E-27	3.555E-26	1.069E-24	1.624E-23	1.032E-22	1.360E-22	1.318E-22
a-226	U-238	7.959E-16	0.000E+00	2.012E-29	5.117E-28	1.539E-26	2.337E-25	1.485E-24	1.958E-24	1.897E-24
a-226	äS(j):		0.000E+00	1.132E-15	9.690E-15	9.045E-14	5.071E-13	1.444E-12	1.617E-12	1.566E-12

ummary : GKP Recreational Visitor - Inhalation
ile : C:\USERS\CLAUDE\DOCUMENTS\0 GKP DOSE\RESRAD CW\GKP RECREATIONAL VISITOR- INHALATION R1.RAD

Individual Nuclide Soil Concentration
Parent Nuclide and Branch Fraction Indicated

uclide (j)	Parent (i)	THF(i)	S(j,t), pCi/g t= 0.000E+00	1.000E+00	3.000E+00	1.000E+01	3.000E+01	1.000E+02	3.000E+02	1.000E+03
ÄÄÄÄÄ	ÄÄÄÄÄÄ	ÄÄÄÄÄÄÄÄ	ÄÄÄÄÄÄÄÄÄ	ÄÄÄÄÄÄÄÄÄ	ÄÄÄÄÄÄÄÄÄ	ÄÄÄÄÄÄÄÄÄ	ÄÄÄÄÄÄÄÄÄ	ÄÄÄÄÄÄÄÄÄ	ÄÄÄÄÄÄÄÄÄ	ÄÄÄÄÄÄÄÄÄ
-234	U-234	5.538E-14	7.698E-13	7.365E-13	6.741E-13	4.945E-13	2.041E-13	9.211E-15	1.319E-18	4.629E-32
-234	U-234	7.972E-16	1.108E-14	1.060E-14	9.703E-15	7.118E-15	2.937E-15	1.326E-16	1.898E-20	6.662E-34
-234	äS(j):		7.809E-13	7.471E-13	6.838E-13	5.016E-13	2.070E-13	9.344E-15	1.338E-18	4.695E-32
a-226	U-234	5.538E-14	0.000E+00	1.495E-21	1.279E-20	1.194E-19	6.694E-19	1.906E-18	2.135E-18	2.067E-18
-234	U-234	2.000E-07	2.780E-06	2.660E-06	2.434E-06	1.786E-06	7.369E-07	3.326E-08	4.762E-12	1.671E-25
-234	U-234	2.640E-13	3.670E-12	3.511E-12	3.213E-12	2.357E-12	9.727E-13	4.391E-14	6.285E-18	2.206E-31
-234	äS(j):		2.780E-06	2.660E-06	2.434E-06	1.786E-06	7.369E-07	3.326E-08	4.762E-12	1.671E-25
-234	U-234	3.800E-15	5.282E-14	5.053E-14	4.625E-14	3.393E-14	1.400E-14	6.320E-16	9.047E-20	3.176E-33
-235	U-235	9.835E-01	8.261E-01	7.904E-01	7.234E-01	5.307E-01	2.190E-01	9.887E-03	1.416E-06	4.981E-20
-235	U-235	2.722E-03	2.286E-03	2.187E-03	2.002E-03	1.469E-03	6.061E-04	2.736E-05	3.920E-09	1.379E-22
-235	äS(j):		8.284E-01	7.925E-01	7.254E-01	5.322E-01	2.196E-01	9.914E-03	1.420E-06	4.995E-20
a-231	U-235	9.835E-01	0.000E+00	1.672E-05	4.592E-05	1.123E-04	1.390E-04	2.090E-05	8.961E-09	1.043E-21
a-231	U-235	2.722E-03	0.000E+00	4.628E-08	1.271E-07	3.107E-07	3.846E-07	5.784E-08	2.480E-11	2.886E-24
a-231	U-235	1.376E-02	0.000E+00	2.340E-07	6.425E-07	1.571E-06	1.944E-06	2.924E-07	1.254E-10	1.459E-23
a-231	U-235	3.809E-05	0.000E+00	6.476E-10	1.778E-09	4.348E-09	5.382E-09	8.093E-10	3.470E-13	4.038E-26
a-231	U-235	8.257E-07	0.000E+00	1.404E-11	3.855E-11	9.426E-11	1.167E-10	1.755E-11	7.523E-15	8.755E-28
a-231	U-235	2.285E-09	0.000E+00	3.886E-14	1.067E-13	2.609E-13	3.229E-13	4.856E-14	2.082E-17	2.423E-30
a-231	äS(j):		0.000E+00	1.700E-05	4.669E-05	1.142E-04	1.413E-04	2.125E-05	9.111E-09	1.060E-21
c-227	U-235	9.835E-01	0.000E+00	2.577E-07	1.994E-06	1.324E-05	3.070E-05	6.123E-06	2.826E-09	3.370E-22
c-227	U-235	2.722E-03	0.000E+00	7.134E-10	5.518E-09	3.665E-08	8.495E-08	1.695E-08	7.821E-12	9.327E-25
c-227	U-235	1.376E-02	0.000E+00	3.606E-09	2.790E-08	1.853E-07	4.295E-07	8.568E-08	3.954E-11	4.715E-24
c-227	äS(j):		0.000E+00	4.320E-09	3.341E-08	2.219E-07	5.144E-07	1.026E-07	4.736E-11	5.648E-24
-235	U-235	1.376E-02	1.156E-02	1.106E-02	1.012E-02	7.426E-03	3.064E-03	1.383E-04	1.982E-08	6.969E-22
-235	U-235	3.809E-05	3.199E-05	3.061E-05	2.801E-05	2.055E-05	8.481E-06	3.829E-07	5.484E-11	1.929E-24
-235	äS(j):		1.159E-02	1.109E-02	1.015E-02	7.446E-03	3.073E-03	1.387E-04	1.987E-08	6.989E-22
c-227	U-235	3.809E-05	0.000E+00	9.981E-12	7.721E-11	5.128E-10	1.189E-09	2.371E-10	1.094E-13	1.305E-26
c-227	U-235	8.257E-07	0.000E+00	2.164E-13	1.674E-12	1.112E-11	2.577E-11	5.141E-12	2.372E-15	2.829E-28
c-227	äS(j):		0.000E+00	1.020E-11	7.888E-11	5.239E-10	1.214E-09	2.423E-10	1.118E-13	1.333E-26
-235	U-235	8.257E-07	6.936E-07	6.636E-07	6.074E-07	4.456E-07	1.839E-07	8.301E-09	1.189E-12	4.182E-26
-235	U-235	2.285E-09	1.920E-09	1.837E-09	1.681E-09	1.233E-09	5.089E-10	2.297E-11	3.291E-15	1.157E-28
-235	äS(j):		6.955E-07	6.654E-07	6.090E-07	4.468E-07	1.844E-07	8.324E-09	1.192E-12	4.193E-26
c-227	U-235	2.285E-09	0.000E+00	5.989E-16	4.633E-15	3.077E-14	7.133E-14	1.423E-14	6.566E-18	7.831E-31
-238	U-238	5.450E-07	7.575E-06	7.248E-06	6.634E-06	4.866E-06	2.008E-06	9.066E-08	1.299E-11	4.567E-25
-238	U-238	1.599E-03	2.223E-02	2.127E-02	1.947E-02	1.428E-02	5.893E-03	2.661E-04	3.811E-08	1.340E-21
-238	äS(j):		2.224E-02	2.128E-02	1.947E-02	1.429E-02	5.895E-03	2.662E-04	3.812E-08	1.341E-21
-238	U-238	2.111E-09	2.934E-08	2.807E-08	2.570E-08	1.885E-08	7.779E-09	3.512E-10	5.030E-14	1.769E-27

ummary : GKP Recreational Visitor - Inhalation
ile : C:\USERS\CLAUDE\DOCUMENTS\0 GKP DOSE\RESRAD CW\GKP RECREATIONAL VISITOR- INHALATION R1.RAD

Individual Nuclide Soil Concentration
Parent Nuclide and Branch Fraction Indicated

uclide (j)	Parent (i)	THF(i)	S(j,t), pCi/g t= 0.000E+00	1.000E+00	3.000E+00	1.000E+01	3.000E+01	1.000E+02	3.000E+02	1.000E+03
ÄÄÄÄÄ	ÄÄÄÄÄÄ	ÄÄÄÄÄÄÄÄ	ÄÄÄÄÄÄÄÄÄ	ÄÄÄÄÄÄÄÄÄ	ÄÄÄÄÄÄÄÄÄ	ÄÄÄÄÄÄÄÄÄ	ÄÄÄÄÄÄÄÄÄ	ÄÄÄÄÄÄÄÄÄ	ÄÄÄÄÄÄÄÄÄ	ÄÄÄÄÄÄÄÄÄ
-238	U-238	3.039E-11	4.224E-10	4.041E-10	3.699E-10	2.713E-10	1.120E-10	5.055E-12	7.241E-16	2.547E-29
-238	äS(j):		2.977E-08	2.848E-08	2.607E-08	1.912E-08	7.891E-09	3.563E-10	5.103E-14	1.795E-27
-238	U-238	3.359E-07	4.669E-06	4.467E-06	4.089E-06	3.000E-06	1.238E-06	5.588E-08	8.005E-12	2.815E-25
-238	U-238	4.434E-13	6.164E-12	5.897E-12	5.397E-12	3.960E-12	1.634E-12	7.377E-14	1.057E-17	3.716E-31
-238	äS(j):		4.669E-06	4.467E-06	4.089E-06	3.000E-06	1.238E-06	5.588E-08	8.005E-12	2.815E-25
-238	U-238	6.383E-15	8.872E-14	8.488E-14	7.769E-14	5.699E-14	2.352E-14	1.062E-15	1.521E-19	5.349E-33
-238	U-238	3.196E-07	4.443E-06	4.250E-06	3.890E-06	2.854E-06	1.178E-06	5.317E-08	7.616E-12	2.679E-25
-238	äS(j):		4.443E-06	4.250E-06	3.890E-06	2.854E-06	1.178E-06	5.317E-08	7.616E-12	2.679E-25
-238	U-238	4.219E-13	5.864E-12	5.610E-12	5.135E-12	3.767E-12	1.555E-12	7.018E-14	1.005E-17	3.536E-31
-238	U-238	6.073E-15	8.441E-14	8.076E-14	7.392E-14	5.422E-14	2.238E-14	1.010E-15	1.447E-19	5.089E-33
-238	äS(j):		5.949E-12	5.691E-12	5.209E-12	3.821E-12	1.577E-12	7.119E-14	1.020E-17	3.587E-31
-238	U-238	6.713E-11	9.331E-10	8.927E-10	8.171E-10	5.994E-10	2.474E-10	1.117E-11	1.600E-15	5.626E-29
-238	U-238	8.862E-17	1.232E-15	1.178E-15	1.079E-15	7.913E-16	3.265E-16	1.474E-17	2.112E-21	7.427E-35
-238	äS(j):		9.331E-10	8.927E-10	8.171E-10	5.994E-10	2.474E-10	1.117E-11	1.600E-15	5.626E-29
-238	U-238	1.276E-18	1.773E-17	1.696E-17	1.553E-17	1.139E-17	4.700E-18	2.122E-19	3.039E-23	1.069E-36
-238	U-238	3.200E-10	4.448E-09	4.255E-09	3.895E-09	2.857E-09	1.179E-09	5.323E-11	7.625E-15	2.682E-28
-238	äS(j):		4.448E-09	4.255E-09	3.895E-09	2.857E-09	1.179E-09	5.323E-11	7.625E-15	2.682E-28
-238	U-238	4.224E-16	5.871E-15	5.617E-15	5.141E-15	3.772E-15	1.556E-15	7.027E-17	1.007E-20	3.540E-34
-238	U-238	6.080E-18	8.451E-17	8.085E-17	7.400E-17	5.429E-17	2.240E-17	1.011E-18	1.449E-22	5.095E-36
-238	äS(j):		5.956E-15	5.698E-15	5.215E-15	3.826E-15	1.579E-15	7.128E-17	1.021E-20	3.591E-34
-238	U-238	9.980E-01	1.387E+01	1.327E+01	1.215E+01	8.911E+00	3.677E+00	1.660E-01	2.378E-05	8.364E-19
-238	U-238	1.317E-06	1.831E-05	1.752E-05	1.603E-05	1.176E-05	4.854E-06	2.191E-07	3.139E-11	1.104E-24
-238	äS(j):		1.387E+01	1.327E+01	1.215E+01	8.911E+00	3.677E+00	1.660E-01	2.378E-05	8.364E-19
-238	U-238	1.896E-08	2.636E-07	2.522E-07	2.308E-07	1.693E-07	6.987E-08	3.154E-09	4.518E-13	1.589E-26
-238	U-238	2.096E-04	2.914E-03	2.788E-03	2.551E-03	1.872E-03	7.724E-04	3.487E-05	4.995E-09	1.757E-22
-238	äS(j):		2.914E-03	2.788E-03	2.552E-03	1.872E-03	7.725E-04	3.488E-05	4.995E-09	1.757E-22
-238	U-238	2.767E-10	3.846E-09	3.680E-09	3.368E-09	2.471E-09	1.020E-09	4.603E-11	6.593E-15	2.319E-28
-238	U-238	3.983E-12	5.536E-11	5.296E-11	4.848E-11	3.556E-11	1.468E-11	6.626E-13	9.490E-17	3.338E-30
-238	äS(j):		3.902E-09	3.733E-09	3.416E-09	2.506E-09	1.034E-09	4.669E-11	6.688E-15	2.352E-28
-238	U-238	1.994E-04	2.772E-03	2.652E-03	2.428E-03	1.781E-03	7.349E-04	3.318E-05	4.752E-09	1.671E-22
-238	U-238	2.633E-10	3.659E-09	3.501E-09	3.204E-09	2.351E-09	9.701E-10	4.379E-11	6.273E-15	2.206E-28
-238	äS(j):		2.772E-03	2.652E-03	2.428E-03	1.781E-03	7.349E-04	3.318E-05	4.752E-09	1.671E-22
-238	U-238	3.789E-12	5.267E-11	5.039E-11	4.612E-11	3.384E-11	1.396E-11	6.304E-13	9.029E-17	3.176E-30
-238	U-238	4.189E-08	5.823E-07	5.571E-07	5.099E-07	3.741E-07	1.544E-07	6.969E-09	9.982E-13	3.511E-26
-238	äS(j):		5.823E-07	5.571E-07	5.099E-07	3.741E-07	1.544E-07	6.969E-09	9.983E-13	3.511E-26
-238	U-238	5.530E-14	7.686E-13	7.353E-13	6.731E-13	4.938E-13	2.038E-13	9.199E-15	1.318E-18	4.634E-32
-238	U-238	7.959E-16	1.106E-14	1.058E-14	9.688E-15	7.107E-15	2.933E-15	1.324E-16	1.897E-20	6.670E-34
-238	äS(j):		7.797E-13	7.459E-13	6.827E-13	5.009E-13	2.067E-13	9.331E-15	1.337E-18	4.701E-32

ummary : GKP Recreational Visitor - Inhalation
ile : C:\USERS\CLAUDE\DOCUMENTS\0 GKP DOSE\RESRAD CW\GKP RECREATIONAL VISITOR- INHALATION R1.RAD

Individual Nuclide Soil Concentration
Parent Nuclide and Branch Fraction Indicated

uclide (j)	Parent (i)	THF(i)	S(j,t), pCi/g t= 0.000E+00	1.000E+00	3.000E+00	1.000E+01	3.000E+01	1.000E+02	3.000E+02	1.000E+03
ÄÄÄÄÄÄ	ÄÄÄÄÄÄÄ	ÄÄÄÄÄÄÄÄÄ	ÄÄÄÄÄÄÄÄÄ	ÄÄÄÄÄÄÄÄÄ	ÄÄÄÄÄÄÄÄÄ	ÄÄÄÄÄÄÄÄÄ	ÄÄÄÄÄÄÄÄÄ	ÄÄÄÄÄÄÄÄÄ	ÄÄÄÄÄÄÄÄÄ	ÄÄÄÄÄÄÄÄÄ
-238	U-238	1.997E-07	2.776E-06	2.655E-06	2.430E-06	1.783E-06	7.358E-07	3.322E-08	4.758E-12	1.673E-25
-238	U-238	2.636E-13	3.664E-12	3.505E-12	3.208E-12	2.354E-12	9.712E-13	4.385E-14	6.281E-18	2.209E-31
-238	äS(j):		2.776E-06	2.655E-06	2.430E-06	1.783E-06	7.358E-07	3.322E-08	4.758E-12	1.673E-25
-238	U-238	3.794E-15	5.274E-14	5.045E-14	4.618E-14	3.388E-14	1.398E-14	6.311E-16	9.040E-20	3.180E-33
íííííí	ííííííí	ííííííííí	ííííííííí	ííííííííí	ííííííííí	ííííííííí	ííííííííí	ííííííííí	ííííííííí	ííííííííí

HF(i) is the thread fraction of the parent nuclide.

ESCALC.EXE execution time = 37.53 seconds

RADIATION DOSE ASSESSMENT FOR THE FIRE FIGHTER, MAINTENANCE WORKER, PARK RANGER AND MEMBER OF THE PUBLIC AT GREAT KILLS PARK

Appendix C

Great Kills Fire Behavior

Great Kills Park Fire Behavior

Using gridded weather data of gridpoint 130259 compiled for use in FireFamily Plus (version 4.1) software by the Western Regional Climate Center for the period 1995 thru 2011 and 1300 EST hour actual weather observations from the John F. Kennedy International Airport ASOS for the period 2012-2014, fire behavior outputs were calculated using BehavePlus (version 5.0.5) software for very high and moderate percentile values of temperature, relative humidity, and wind for head, flanking, and backing fire.

Fire behavior output definitions

Rate of Spread (ROS) – Surface rate of spread is the "speed" the fire travels through the surface fuels. The surface rate of spread prediction uses the Rothermel (1972) surface fire spread model, which assumes the weather, topography and fuel are constant and uniform for the elapsed time.

Heat per Unit Area (HPUA) - Heat per unit area is the heat energy release per area (HPUA; square foot or square meter) within the flaming front of the surface fuel. Heat per unit area is not affected by wind, slope, or direction of spread. HPUA is calculated in Rothermel's (1972) surface fire spread model and is based on only the fine fuels that affect fire spread. Additional energy is released in the burnout phase of combustion, so care should be exercised when using heat per unit area to predict fire effects.

Fireline Intensity – Fireline intensity is the heat energy release per unit time from a one-foot (one-meter) wide section of the fuel bed extending from the front to the rear of the flaming zone. Fireline intensity is a function of rate of spread and heat per unit area, and is directly related to flame length. Fireline intensity and the flame length are related to the heat felt by a person standing next to the flames.

Flame Length – The flame length of a spreading surface fire within the flaming front is measured from midway in the active flaming combustion zone to the average tip of the flames. Fireline intensity and the flame length are related to the heat felt by a person standing next to the flames. Flame length is calculated from fireline intensity, which is a function of rate of spread and heat per unit area.

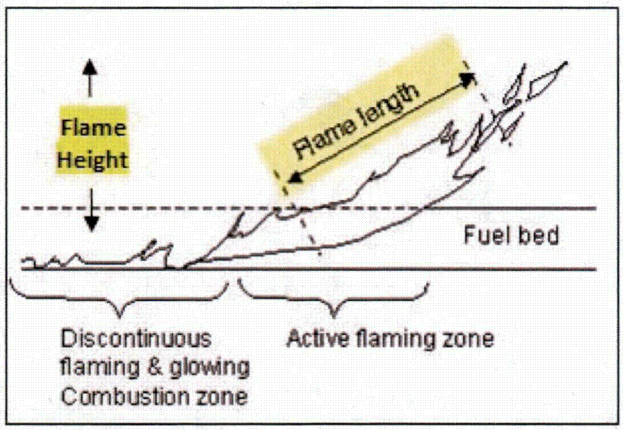

Reaction Intensity – Reaction intensity is the rate of the energy release per area (square foot or square meter) within the flaming front. Reaction intensity is not affected by wind, slope, or direction of spread.

Fire Behavior variable inputs

Very High percentile values	
90th percentile temperature	82°F
3rd percentile relative humidity	33%
Corresponding 1-hour fine dead fuel moisture	5%
Corresponding 10-hour fine dead fuel moisture	6%
Corresponding 100-hour fine dead fuel moisture	7%
90th percentile wind speed	20 mph
Moderate percentile values	
50th percentile temperature	60°F
50th percentile relative humidity	52%
Corresponding 1-hour fine dead fuel moisture	7%
Corresponding 10-hour fine dead fuel moisture	8%
Corresponding 100-hour fine dead fuel moisture	9%
50th percentile wind speed	10 mph

Fuel Model (Scott and Burgan, 2005)	GR8 High load, very coarse, humid climate grass (Dynamic) (108) – *for areas of common reed that have not burned or been mowed for several years (high density stands)*
	GR6 Moderate load, humid climate grass (Dynamic) (106) – *for areas of common reed that have burned or been mowed within one year (low density stands)*
	TL2 Low load, broadleaf litter (Static) (162) – for woodlands and shrublands
Wind Adjustment Factor	0.5
Slope	0%
Live Herbaceous Moisture (for GR8, GR6 only)	30% Cured

	Rate of Spread (ft/min)			Heat Per Unit Area (BTU/ft^2)			Fireline Intensity (BTU/ft/s)			Flame Length (ft)			Reaction Intensity (BTU/ft^2/min)			Acres (after 1 hour)
	H	F	B	H	F	B	H	F	B	H	F	B	H	F	B	
20mph	378	16	8	2692			18654	778	397	42	10	7	9126			3344
10mph	141	15	8	2441			6327	659	348	25	9	7	8275			777

Table 1. GR8 fire behavior. H = Head fire; F = Flanking fire; B= Backing fire.

	Rate of Spread (ft/min)			Heat Per Unit Area (BTU/ft^2)			Fireline Intensity (BTU/ft/s)			Flame Length (ft)			Reaction Intensity (BTU/ft^2/min)			Acres (after 1 hour)
	H	F	B	H	F	B	H	F	B	H	F	B	H	F	B	
20mph	341	14	7	1186			7421	309	158	27	6	5	6194			2728
10mph	104	11	6	1083			2066	215	114	15	5	4	5658			421

Table 2. GR6 fire behavior. H = Head fire; F = Flanking fire; B= Backing fire.

	Rate of Spread (ft/min)			Heat Per Unit Area (BTU/ft^2)			Fireline Intensity (BTU/ft/s)			Flame Length (ft)			Reaction Intensity (BTU/ft^2/min)			Acres (after 1 hour)
	H	F	B	H	F	B	H	F	B	H	F	B	H	F	B	
20mph	3	0.2	0.1	153			7	0	0	1	0.3	0.2	718			0.2
10mph	1	0.1	0.1	139			3	0	0	1	0.3	0.2	654			0.1

Table 3. TL2 fire behavior. H = Head fire; F = Flanking fire; B= Backing fire.

There will be variability of fire behavior throughout the year as new green growth will dampen fire behavior. However, as the overall ratio of cured fuels to green fuels increases, fire behavior increases. Any significant stands of cured growth will make the effects of new green growth negligible.

References

Scott, Joe H.; Burgan, Robert E. 2005. Standard fire behavior fuel models: a comprehensive set for use with Rothermel's surface fire spread model. Gen. Tech. Rep. RMRS-GTR-153. Fort Collins, CO: U.S. Department of Agriculture, Forest Service, Rocky Mountain Research Station. 72 p.

Rothermel, R. C. 1972. A mathematical model for predicting fire spread in wildland fuels. Res. Pap. INT-115. Ogden, UT: U.S. Department of Agriculture, Forest Service, Intermountain Forest and Range Experiment Station. 40 p.

Author:

Tomas Liogys
Assistant Fire Management Officer
Mid-Atlantic Fire Management Area
Gateway National Recreation Area
210 New York Avenue
Staten Island, New York 10305

Date: Feb. 16, 2015

USACE Comments on Draft GKP Dose Assessment

Location	Comment	Resolutuion
Various	Miscellaneous suggested changes	Accepted universally.
Exec Summary - 1st paragraph	This needs to be clarified that the assessment is post-TCRA; i.e. is conservatively representative of current site conditions after removal of isolated areas of elevated activity from surface/near-surface locations.	Added words regarding post-TCRA. The methodology is conservatively representative of current site conditions after removal of isolated areas of elevated activity from surface/near-surface locations.
Exec Summary - 1st paragraph	Clarify why a 100-year old separation is conservative	Added words as to conservatism...which permits accounting for the maximum possible ingrowth of daughter products yielding a conservative dose rate.
Section 2 - 1st paragraph	Clarify which of the 3 ROCs are associated with these values.	Claritied to Table 1 only for just Ra-226. For radium-226 (Ra-226), the average, minimum, and maximum of these the results for the 33 samples were 36.1 pCi/g, 0.5 pCi/g and 1,030 pCi/g, respectively. Results of this sampling are shown in Table 1.
Table 2	Add a footnote to explain why no results are posted in three instances.	Footnote added
Table 2	There is nothing showing up as "green"	Artifact wording was removed.
Paragraph 3.3	Use the semi-colon to clarify which value you are using.	Rewrote paragraph to avoid run-on sentenced. This 200 m2 area is the size which was used conservatively in RESRAD considering that it is not r
Paragraph 5 Summary	This does not match up with Table 21; no inhalation dose to member of public inside GKP is presented for fires. Is this different from a visitor? Recommend separating out each of the five critical groups and addressing what you did to evaluate in each case. Lumping them together under the same bullet gets confusing.	The section was rewritten to agree with Table 21 (renumbered as 16). Doses were calculated for three exposure pathways, external, inhalation, and ingestion, for four critical groups (Maintenance Worker, Recreational Visitor, Park Ranger, and the Fire Fighter). It was logical to assume that a Nearby Resident would only receive a radiation dose from fires. A dose from inhalation of radioactive material during fires was also made for the Fire Fighter. The results are presented in Table 16 and the following comments regarding used parameters and applications...

FINAL
RADIATION DOSE ASSESSMENT FOR THE FIRE FIGHTER, MAINTENANCE WORKER, PARK RANGER AND MEMBER OF THE PUBLIC AT GREAT KILLS PARK

Great Kills Park

Staten Island, New York

Contract No. W912BU-13-C-0010

Prepared for:

NATIONAL PARK SERVICE

and

U. S. ARMY CORPS OF ENGINEERS

Prepared by:

TIDEWATER INC

6625-A Selnick Drive
Elkridge, MD 21075

JUNE 2015

By their specific signature, the undersigned certify that this Firefighter, Maintenance Worker, and Public Member Radiation Dose Assessment was:

Prepared by

Claude Wiblin

Claude Wiblin, CHP

Reviewed by:

Wayne Gaul

Wayne Gaul, PhD, CHP, CHMM

Appendix C – Great Kills Park Fire Behavior was provided by:

Tomas Liogys
Assistant Fire Management Officer
Mid-Atlantic Fire Management Area
Gateway National Recreation Area
210 New York Avenue
Staten Island, New York 10305

EXECUTIVE SUMMARY

This report provides a post-Time Critical Removal Action (TCRA) dose assessment for firefighters, park rangers/law enforcement officers, maintenance workers, nearby residents, and trespassers from residual radioactivity at the Great Kills Park (GKP) in Staten Island, New York. The methodology is conservatively representative of current site conditions after removal of isolated areas of elevated activity from surface/near-surface locations. A total of 33 samples were collected from the elevated areas across GKP to represent an upper bounding of the existing radioactive concentration. Additionally, ten locations were selected as those areas with the best potential to demonstrate the uptake by vegetation for use in the firefighter and nearby resident scenario. Samples were analyzed by gamma and alpha spectroscopy to identify the radionuclides of concern (ROC). Radionuclides of Concern were identified as radium-226 (Ra-226), natural uranium (U_{nat}), and thorium-232 (Th-232). The natural uranium was conservatively assumed to be ore grade material such that all daughter products are present in equilibrium. Similarly, the radium was assumed to have been chemically separated at least 100 years ago when commercial production of radium began, which permits the maximum possible ingrowth of daughter products yielding a conservative dose rate. No assumptions as to the physical or chemical properties of the thorium were made due to limited information, but this ROC was also conservatively assumed to be in equilibrium with its progeny.

Doses were calculated for three exposure pathways; external, inhalation, and ingestion for five critical groups, summed for one year and the results are presented in Table ES-1. The report describes the parameters and assumptions such that a dose recalculation may be made to accommodate any other scenario.

- Radiological doses from fires were calculated with the sample result data and conservative atmospheric models for the firefighter and the nearby resident to GKP.

- The assumptions for the trespasser are conservative as it is assumed that a trespasser disobeys all fencing/signage, spends 250 hours in a contaminated area, stays on established roads and trails, and does not do intrusive activities over the course of a year. This trespasser represents the worst case developed with a resultant dose of less than 10 mrem accumulated in a year.

- A Gaussian Dispersion Model was used in the dose assessment for the off-site resident. As the dispersion model has a minimum required distance from the fire of 100 m, a box model was developed for the fireman who is routinely very near the fire and potentially in smoke.

- An assumption was made that the maintenance worker would be restricted from digging, performing excavations, or making entry into confined spaces such as the storm sewer system. Confined spaces entry should be restricted as no radiological data is available.

- The soil concentration averages used in this report do not represent an average for the Park as samples collection was targeted at the higher dose rate locations. Actual soil and vegetation averages will be much less and the doses calculated represent a worst case conservative estimate.

ES-1. Estimated Annual Dose (mrem)

Critical Group	External Dose (mrem)	Inhalation Dose (mrem)	Ingestion Dose (mrem)	Fire Inhalation Dose (mrem)	Maximum Annual Total Dose (mrem)
Maintenance Worker	6.63	0.14	0.17		6.93
Trespasser	8.28	0.05	0.02		8.35
Park Ranger/Law Enforcement Officer	6.63	0.17	0.17		6.96
Fire Fighter	2.03	0.01	0.01	0.19	2.24
Nearby Resident				0.24	0.24

Given the conservative parameters and assumptions used in this report, it is not probable that under current site restrictions (including no intrusive activities), a Fire Fighter, a Maintenance Worker, or Park Ranger/Law Enforcement Officer, a nearby resident, or trespasser will exceed the Nuclear Regulatory Commission's (NRC) regulatory limit of 25 mrem in a year above natural background. It should be noted that concentration levels of the magnitude which would have resulted in a dose of 25 mrem in a year would have been detected and removed during the TCRA as both the required concentration and its surface proximity would have made the radioactive materials readily identifiable by the TCRA gamma survey process.

TABLE OF CONTENTS

Tables

Figures

Appendices

ACRONYMS, ABBREVIATIONS, AND SYMBOLS

μR/h	microRoentgen per hour
μCi/cc	microcuries per cubic centimeter
ALI	Annual Limits on Intake
AMAD	Activity Median Aerodynamic Diameter
Avg	average
BR	Breathing Rate
C_{air}	Airborne Concentration
C_{vege}	Radioactive concentration in vegetation
Cc	cubic centimeter
CF	Concentration Factor
CFR	Code of Federal Regulations
cpm	counts per minute
DCF	Dose Conversion Factor
EPA	US Environmental Protection Agency
g	Grams
GKP	Great Kills Park, Staten Island, NY
H_{50}	Committed 50-year Effective Dose Equivalent
H	Hour
kg	kilogram
m	meter
m^3	cubic meter
max	maximum
MDC	Minimum Detection Concentration
mg	milligram
Micro*Shield*	Software manufactured by Grove Engineering
mR/hr	milliRoentgen per hour
ml	milliliter
NPS	National Park Service
NRC	US Nuclear Regulatory Commission
ORNL	Oak Ridge National Laboratories
OSHA	US Occupational Safety and Health Administration
pCi	picocurie
pCi/g	picocuries per gram
Q	Source Emission Rate
Ra-226	Radium-226
Th-232	Thorium-232
U	Wind speed
U_{nat}	Natural Uranium
USDA	US Department of Agriculture
MARSSIM	Multi-Agency Radiation Site Survey and Investigation Manual
X	Airborne Concentration

1.0 INTRODUCTION

Great Kills Park comprises approximately 523 acres in the vicinity of the Raritan and Lower Bays of Great Kills Harbor, in the borough of Staten Island. In 1933, under the direction and administration of the Commissioner of the City of New York Department of Parks, the City initiated the Marine Park Project to develop the Great Kills Harbor and vicinity as a shorefront recreation area. In conjunction with the Marine Park Project, the City created, and the New York Department of Sanitation ("DSNY") operated the waste filled area between November of 1944 and July of 1948. During its operation, DSNY transported by barge and truck and disposed at the waste filled area approximately 15 million cubic yards of waste. The waste filled area was then capped with clay and sludge reclaimed from City sewage.

After completing landfilling operations, the City operated Great Kills Park as a City park until the property was transferred to the United States in 1972 and became part of the Staten Island Unit of Gateway National Recreation Area under the jurisdiction of NPS. The waste filled area footprint comprises approximately 265 acres of Great Kills Park. Of those 265 acres, 47 acres are owned by the City of New York.

Radioactive material has been identified in in the waste filled area of GKP. Initially, on August 2, 2005, the New York City Police Department and the U.S. Department of Energy conducted an aerial survey of New York City and identified an elevated radiation reading in a densely vegetated area of GKP. On August 3, 2005, in response to the aerial discovery, the U.S. Environmental Protection Agency (EPA) conducted a radiological survey confirming that an area along the Park's "fire break" had above-background but relatively low-level radiation readings. Since that time, a radiation survey has been conducted over the entire waste filled area and multiple excavations have occurred to remove discrete radioactive objects and radioactively contaminated soil in areas considered to be immediately hazardous with exposure rates greater than 2.0 milliRoentgen per hour (mR/hour) at the ground surface. Radioactive material remains at numerous locations across GKP; however, exposure rates are below the actionable threshold of 2.0 mR/hour for two reasons. First, materials are below the ground surface and the soil overburden or other fill material shields the emitted radiation. Second, for areas where radioactive materials are not subsurface, the concentrations are not sufficient for the exposure rate to exceed the threshold level. Approximately 265 acres of the park are defined as waste filled areas.

The investigation and cleanup activities at GKP are part of the NPS ongoing response action under its delegated Comprehensive Environmental Response, Compensation, and Liability Act (CERCLA) Section 104 authority. CERCLA provides for two types of removal actions, time-critical and non-time-critical. The National Park Service (NPS) proceeded under a time-critical removal action (TCRA). Proceeding on a time-critical approach allowed NPS to simultaneously perform the investigation and cleanup as opposed to proceeding in stages.

1.1. Radionuclides of Concern

Isotopic results of sampling conducted at the site identified three radioactive elements in concentrations that were inconsistent with background concentrations. These are uranium, radium, and thorium which occur naturally in the environment. In nature, the progeny of these

radionuclides are approximately in a state of secular equilibrium, in which the activities of all daughter products within each series are nearly equal. For this report, it was conservatively assumed that the ROCs were in equilibrium with their progeny. Radium is part of the natural uranium series but is identified separately where it has been chemically or physically separated from uranium ore, often for use in commercial/medical products. [ANL 2007]

1.2. Receptors and Conceptual Site Model

The purpose of this dose assessment is to characterize the current and potential dose to human health that may be posed by radiological contaminants present at GKP following the TCRA, to specific critical groups assuming that access restrictions that currently exist are maintained. Specific critical groups are identified as:

- Fire Fighter
- Park Ranger/Law Enforcement Officer
- Maintenance Worker
- Nearby Resident
- Trespasser

A vegetation survey completed by the NPS in 2011 indicates that the approximate percentage of forest area is 25%, the percentage of mosaic (trees, thickets, and reeds) is 40%, and the percentage of herbaceous mowable lands and reed monocultures suited for mowing is 35%. The portion owned by the City of New York is assumed to be at the same percentages. The following map, Figure 1, shows the fire roads/paths and boundary of the fill material established in 2013.

Figure 2 presents the general conceptual site model (CSM) that shows the relationship between the sources of radioactivity, affected media, release mechanisms, and exposure pathways for each identified receptor population. Where site specific data was not available regarding the critical group, data provided by the EPA's *Exposure Factors Handbook* [EPA 2011] was referenced for their recommended physiological and behavioral factors commonly used in assessing exposure to environmental chemicals. Exposure factors are factors related to human behavior and characteristics that help determine an individual's exposure to an agent. All exposure factors are referenced when they are applied in this report.

Several assumptions are listed which bound this dose assessment:

- The current fencing and administrative controls will remain in place to restrict public access. Controls will fail for the casual walker/jogger but are sufficient to prevent longer duration visits such as overnight camping.
- No intrusive activities will be performed by any of the critical groups, i.e., digging holes or excavation within the waste filled area. No entry into storm sewer lines is permitted.

- Park Rangers/Law Enforcement personnel will perform the majority of their surveillance duties within the confines of a vehicle.

Figure 1. Landfill Area of Great Kills Park

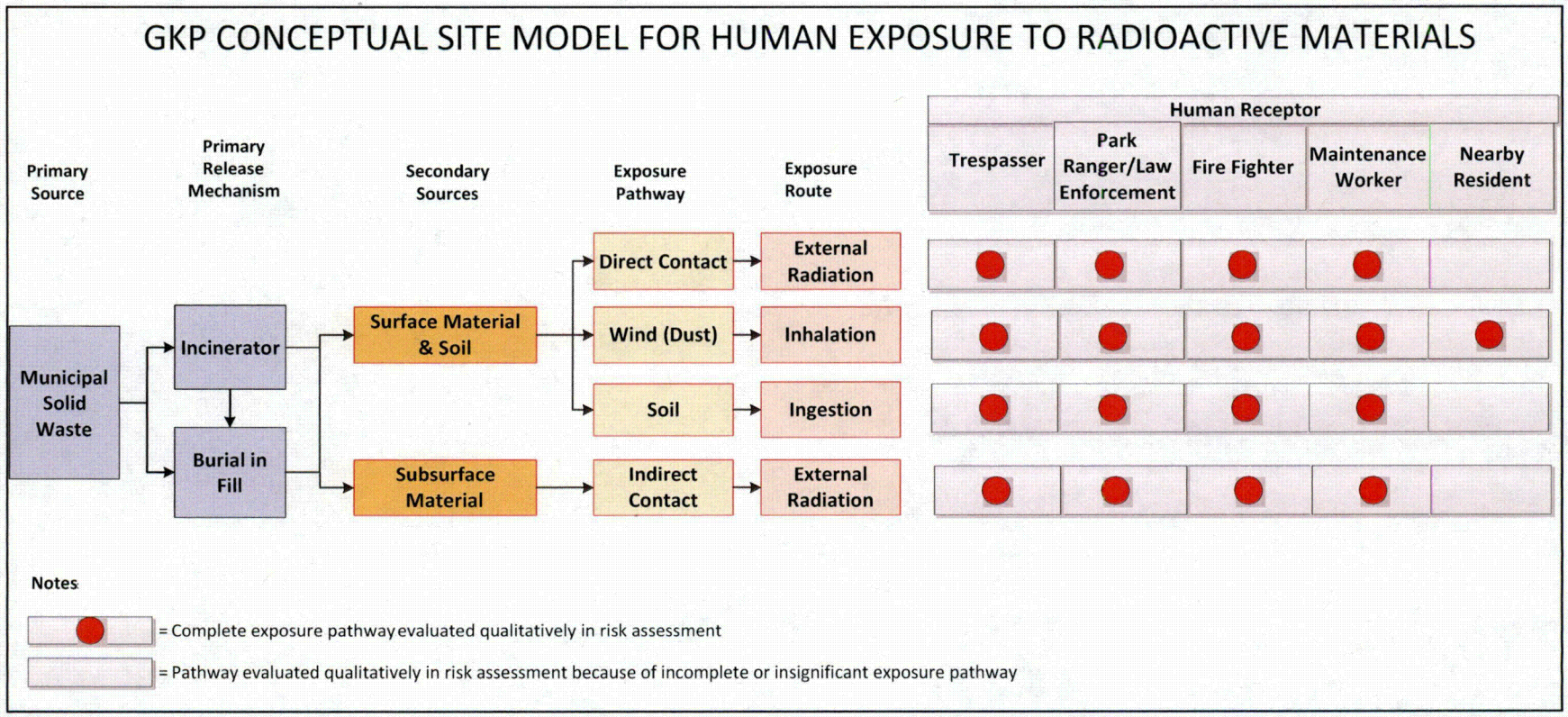

Figure 2. GKP Conceptual Site Model

*Pathways considered as non-applicable were plant ingestion, meat ingestion, milk ingestion, aquatic food ingestion, and drinking water.

*Radon is considered.

2.0 CHARACTERIZATION OF RADIONUCLIDES

On May 6, 2014, samples of soil, roots, and vegetation were collected and analyzed for radioactive contamination from locations shown in Figure 3. These samples were biased to the higher radiation levels in hopes to correlate the radioactive concentrations in the soil to the concentrations in the vegetation. Following TCRA excavations in July and August 2014, soil samples were collected in the top six inches of the soil-like material remaining. For radium-226 (Ra-226), the average, minimum, and maximum of the results for the 33 samples were 36.1 pCi/g, 0.5 pCi/g and 1,030 pCi/g, respectively. Results of this sampling are shown in Table 1.

The analysis approach was to check for a multitude of radionuclides to confirm what radionuclides of concern existed and to eliminate those of insignificance. For gamma spectrometry, the library included: actnium-228 (Ac-228), americium-241 (Am-241), Bismuth-212 (Bi-212), Bismuth-214 (Bi-214), Cobolt-60 (Co-60), cesium-237 (Cs-137), Euproium-152 (Eu-152), Europium-154 (Eu-154), Potassium-40 (K-40), protactinium (metastable)-234 (Pa-234m), lead-212 (Pb-212), lead-214 (Pb-214), thorium-214 (Th-234), thallium-208 (Tl-208), uranium-235 (U-235), uranium-238 (U-238), lead-210 (Pb-210), and thorium-232 (Th-232). This suite of radionuclides considered the possibility of reactor produced radionuclides such as Co-60 and Cs-137 as well as activation products Europium-152 (Eu-152) and europium-154 (Eu-154). Potassium-40 and Am-241 were considered because if present in significant quantities they would create radiological hazards as well. Certain progeny of the uranium and thorium decay chains were also included as confirmatory radionuclides. Radium-226 was analyzed with Lucas cell technology including a grow-in period for radon-222 (Rn-222). Selected samples were also analyzed by alpha spectroscopy for Uranium-234 (U-234), U-235, U-238 and Th-232.

The ALS Environmental laboratory in Fort Collins performed the analyses of all samples. The laboratory is accredited by National Environmental Laboratory Accreditation Conference (NELAC) and performs a full range of organic, inorganic, and radiochemical analyses.

All laboratory results and chain-of-custodies are presented in an attachment to this report and are summarized in Tables 1 and 2. Table 1 provides the Ra-226 results for the soil campaign during the TCRA excavations. Results for Table 1 samples including the suite of nuclides discussed above are available in Appendix A. Results for root samples are also available with the laboratory results but were not considered as a burnable part of the plant and therefore not part of this assessment. For selection and presentation in Table 2, alpha spectrometry results for a specific radionuclide were selected over the respective gamma spectrometry as minimum detectable concentrations (MDC) are generally lower and the results are considered as being more valid.

Establishing background levels for an ROC is somewhat judgmental but was based on published general background concentrations. Background concentrations for soil for U-238, U-234, Ra-226, and Th-232 are 0.3, 0.3, 0.5, and 0.5 pCi/g; respectively [NRC 2001]. Thorium-232 in sewage sludge of the Atlantic Plains has a mean, 95 percentile, and maximum of 0.18, 0.56, and

0.9 pCi/g; respectively [NRC 2003]. The results for the ROCs have exceeded these general background levels and sewage levels as proof of qualification.

Table 1. Soil Sampling Results for Radium-226 following TCRA Excavations

SAMPLE ID	Result (pCi/g)	Flag	PRL
GKP-CS-I31-21	7.37	G	0.32
GKP-CS-H11-16	1.49	G	0.38
GKP-CS-C07-06	6.02	G	0.34
GKP-CS-K15-37	2.68	G	0.41
GKP-CS-I13-22	0.83	G	0.26
GKP-CS-G11-14	2.01	M3,G	0.52
GKP-CS-J17-24	0.84	G	0.28
GKP-CS-H12-18	1.73	G	0.35
GKP-CS-J17-23	1.89	G	0.32
GKP-CS-H11-17	1.51	G	0.44
GKP-CS-D08-07	1.2	G	0.26
GKP-CS-K16-38	38.4	M3,G	0.8
GKP-CS-J18-04	2.91	G	0.42
GKP-CS-E09-09	1.25	G	0.36
GKP-CS-G09-13	2.03	G	0.38
GKP-CS-D05-04	0.79	G	0.2
GKP-CS-I13-20	10.1	G	0.5
GKP-CS-J17-03	9.4	G	0.3
GKP-CS-E08-08	3.04	G	0.29
GKP-CS-I13-19	13.8	G	0.5
GKP-CS-C07-30	2.83	G	0.42
GKP-CS-G11-15	1.2	G	0.38
GKP-CS-K08-02	0.86	G	0.32
GKP-CS-E12-10	11.7	M3,G	0.5
GKP-CS-E19-05	24.1	G	0.4
GKP-CS-C17-30	5.23	G	0.39
GKP-CS-D13-11	1030	M3,G	0
GKP-CS-L18-39	0.48	LT,G	0.24
GKP-CS-M18-26	0.82	G	0.24
GKP-CS-N20-36	0.91	G	0.29
GKP-CS-N20-29	1.3	G	0.2

SAMPLE ID	Result (pCi/g)	Flag	PRL
GKP-CS-O23-40	1.51	G	0.34
GKP-CS-J15-35	2.33	G	0.39

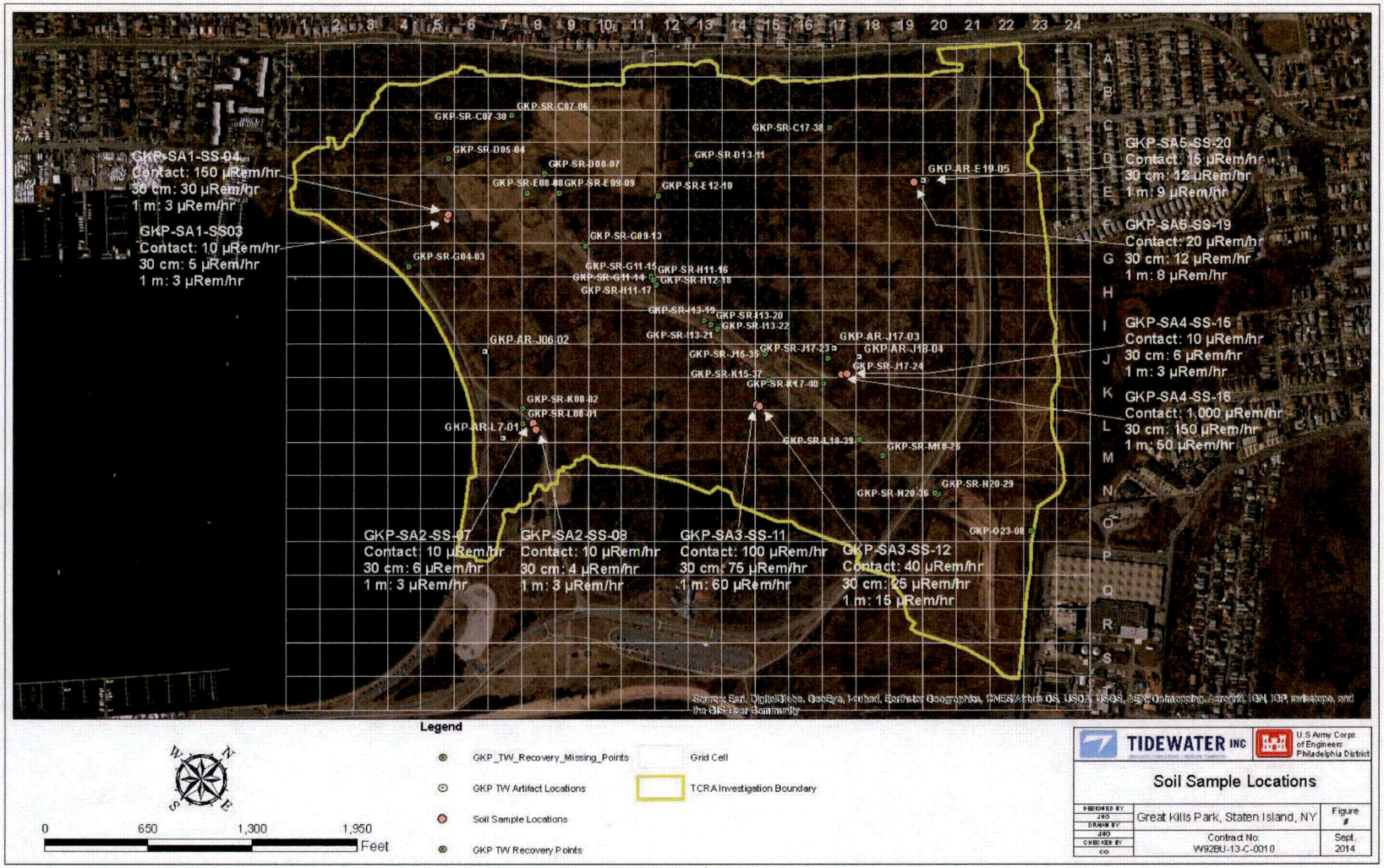

Figure 3. Sampling Locations During TCRA Excavations and the Vegetation Uptake Study

Table 2. Selected Sample Results for Vegetation Uptake Analysis

Sample Area	Sample Matrix	Ra-226 Concentration (pCi/g)		U-238 Concentration (pCi/g)		U-235 Concentration (pCi/g)		U-234 Concentration (pCi/g)		Th-232 Concentration (pCi/g)	
		Result	Uncertainty	Result	Uncertainty	Result	Uncertainty	Result	Uncertainty	Result	Uncertainty
1	Veg	*0.07*	0.12	*0.2*	0.76	*0.02*	0.25	--	--	*0.02*	0.23
	Soil	10.4	1.3	1.22	0.23	0.097	0.041	1.23	0.23	1.52	0.4
	Soil	1.27	0.19	0.65	0.13	0.062	0.032	0.62	0.013	1.19	0.29
2	Veg	*0.034*	0.095	1.2*	0.76	*-0.09*	0.21	--	--	*-0.02*	0.2
	Soil	100	12	0.71	0.17	0.041	0.035	0.82	0.18	*0.67*	0.57
	Soil	1.84	0.26	0.74	0.15	0.05	0.027	0.67	0.14	0.68	0.24
3	Veg	*0.13*	0.1	0.003	0.002	*0.000*	0.001	0.006	0.002	*-0.02*	0.19
	Soil	39.6	4.7	47.4	7.6	2.91	0.55	47.6	7.7	1.71	0.32
	Soil	21.2	2.6	9.9	1.6	0.57	0.13	9.7	1.6	2.05	0.32
4	Veg	*0.03*	0.15	*0.6*	1.2	*0.09*	0.31	--	--	*-0.07*	0.3
	Soil	5.44	0.71	0.68	0.14	0.052	0.028	0.72	0.15	0.65	0.3
	Soil	2.38	0.34	1.68	0.3	0.085	0.041	1.55	0.28	2.13	0.44
5	Veg	0.3	0.19	0.003	0.001	*0.000*	0.001	0.004	0.002	*0*	0.37
	Soil	3.22	0.43	0.61	0.16	0.043	0.036	0.61	0.16	0.87	0.16
	Soil	6.62	0.82	9.3	1.5	0.5	0.12	8.9	1.5	0.93	0.16

NOTES:
Reported results less than the MDC are shown in italics. Ra-226 soil results were obtained from Lucas cell analysis.

—Analysis was not performed.
*ALS stated that the net gamma energy was reported, but U-238 was either not present in the sample or the peak was unresolved. This result is considered suspect and not valid for determining concentration factors from soil to plants.

3.0 APPROACH

Dose assessments were performed for each receptor scenario. Where possible, the *RESidual RADioactivity (RESRAD)* computer code, Version 7.0 [ANL, 2009], was used to estimate the radiological risk for each of the potential receptors. This software was developed by ANL, in coordination with DOE, USEPA, and Nuclear Regulatory Commission (NRC), as a tool for predicting human health risks due to residual radioactivity in soils. The code uses radionuclide cancer slope factors presented in *Federal Guidance Report (*FGR*) No. 13* [EPA 1999].

RESRAD is applicable to exposure to contaminates in soil but the CSM considers a large source of airborne radioactive material for the fire fighter and the nearby resident. *RESRAD* is not applicable for the nearby resident and the Gaussian Distribution Model must be applied. A conservative Box Model is developed for the fire fighter as a 100 m minimum distance away from a source is required for the Gaussian Distribution Model. Usually fire fighters are much closer to the source.

Figure 2 provided the conceptual site model for exposure of the main critical populations. A description of the anticipated activities and restrictions used in this report are presented:

- ***Park Ranger/Law Enforcement*** - Individuals could be on site for a full year (2000 hours). As much as 10% of that was considered as receptor duration or 200 hours within the contaminated areas. All other time is scheduled as office/billet time in non-contaminated buildings that were built on non-contaminated areas.

- ***Maintenance Worker*** – Individuals could be on site for a full year (2000 hours). As much as 10% of that as walking time or 200 hours could be outdoors in contaminated areas. Workers are prohibited from digging or excavations in the land fill areas. No entry into confined spaces such as storm sewer lines is permitted.

- ***Fire Fighter*** – The duration of each fire is about three hours but conservatively modeled such that available radioactive material goes airborne regardless of how long the fireman is present. An estimated 60 hours of time was estimated beyond the fire burning period to permit time for the fire fighter to store equipment and to tend ashes. This scenario assumes that all of these activities occur within contaminated areas.

- ***Nearby Resident*** – It is possible that an offsite but nearby resident would be required to remain in a smoke plume during the entire burning periods. The onsite time is zero and the smoke encountered is modeled as a Gaussian Plume Dispersion Model.

- ***Trespasser*** – Individuals are not generally within the fenced areas; however, an occasional visitor may breach the fencing and meander within the contaminated areas and are guided away from contaminated areas. The frequency and timing of this walking/jogging on established roads and trails was assumed to constitute one hour per

day, 5 days a week and 50 weeks per year. Individuals do not conduct any intrusive activities.

Table 3 provides the onsite time and indicates that there is no indoor time in a building within the landfill area.

Table 3. Onsite Time Parameters

Parameter	Trespasser	Park Ranger/ Law Enforcement	Fire Fighter	Maintenance Worker	Nearby Resident
Onsite Time hours (annual fraction)	250 (0.0285)	2000 (0.228)*	60 (0.007)	2000 (0.228)*	0 (0)
Indoor time fraction in contaminated area	0	0	0	0	0

** Only 10% of this value should be applied as "boots on the ground" for the external pathway.*

The indicated annual fraction was applied to the inhalation and ingestion pathway.

The many required parameters that must be considered for the dose assessment which may be different for the different exposure pathways for the various receptors include but are not limited to:

- the radionuclides of concern and the concentration of radioactive material in the ground,
- breathing rates of the various personnel involved,
- length of exposure as indicted above,
- size of contaminated area involved which is important to external radiation exposure, and
- the ingestion rate for soil for which the default value of 36.5 grams/year from RESRAD will be used.

There are additional considerations for the firefighter and the nearby resident:

- the transfer factor of the radioactive material in the soil to plants,
- the smoke particle size, and
- the dose conversion factors per unit quantity of radionuclide inhaled for a larger size particle from smoke.

3.1. Radionuclides of Concern and Progeny Chain

Results of soil, root, and vegetation samples collected in May 2014 confirm that radium-226, natural uranium, and thorium-232 and their progeny are the ROC.

Sanitation controlled land fill operations moved from Rikers Island, NY, to Great Kills in 1944 and then ceased in 1948. The manufacturing or processing date of the radioactive material post mining is not known, however, radium was processed in the early 1900s so 100 years was selected as a reasonable ingrowth period for progeny.

To approximate the ingrowth of progeny concentrations, unity concentrations for the parent radionuclides were entered into MicroShield® version 8.02 and decayed for 100 years. The uranium ore contains three parent radionuclides, U-238, U-235, and U-234, and each was assigned natural concentration ratios prior to decaying in MicroShield®. The ROCs with progeny and corresponding DCFs are shown in Table 4; the parent ROCs are in bold type.

Table 4. ROCs with Progeny

Nuclide	Chain Fraction
Bi-210	9.66E-01
Bi-214	1.00E+00
Pb-210	9.66E-01
Pb-214	1.00E+00
Po-210	9.66E-01
Ra-226	1.00E+00

Nuclide	Chain Fraction
Ac-228	1.00E+00
Bi-212	1.00E+00
Pb-212	1.00E+00
Ra-224	1.00E+00
Ra-228	1.00E+00
Th-228	1.00E+00
Th-232	1.00E+00

Nuclide	Chain Fraction
Ac-227	3.46E-05
Bi-210	5.21E-06
Fr-223	4.77E-07
Pa-231	4.95E-05
Pa-234	7.81E-04
Pb-210	5.21E-06
Pb-211	3.45E-05
Pb-214	9.38E-06
Po-210	5.14E-06
Ra-223	3.45E-05
Ra-226	9.38E-06
Th-227	3.41E-05
Th-230	4.39E-04
Th-231	2.34E-02
Th-234	4.88E-01
U-234	4.88E-01
U-235	2.34E-02
U-238	4.88E-01

The average result for radium at the TCRA excavations was 36.1 pCi/g. Results of the vegetation uptake study are presented in Table 5 which has the parent radionuclides of the

radium, uranium and thorium chains. The uranium concentrations are in the approximate ratios of that of natural ore.

The chain fractions for the progeny will be applied to the manual dose calculations for the Fire Fighter and Nearby Resident but *RESRAD* automatically builds in fractions of progeny in-growth out to 1,000 years.

Table 5. ROCs and Average Concentrations Identified In Vegetation Uptake Study

Ra-226 (pCi/g)	U-238 (pCi/g)	U-235 (pCi/g)	U-234 (pCi/g)	Th-232 (pCi/g)
19.2	7.3	0.44	7.2	1.24

There were 33 soil samples collected during the TCRA excavation and 10 for the vegetation uptake study. As shown in Figure 3, the TCRA sampling was spread over a larger area of the park and its Ra-226 average should better represent an upper bounding of remaining surface contamination. As the average Ra-226 concentration for the TCRA excavation sampling (see Table 1) was 1.9 times higher than that shown in Table 5 and alpha spectrometry was not performed on the TCRA excavation samples, the concentrations in Table 5 will be increased by a factor of 1.9 for use in the *RESRAD* runs. Also for the *RESRAD* runs, the higher concentration of uranium-238 will be used for U-234 as they are approximately equal in nature

3.2. Receptor Breathing Rates

The selection of inhalation rates to be used for exposure assessments depends on the age of the exposed population and the specific activity levels of this population during the burn. There are several sources for breathing rates.

- The NRC uses $2x10^4$ ml as the volume of air breathed per minute at work by "Reference Man" under working conditions of "light work." [NRC 2014].
- The User Manual for RESRAD is quoted: "RESRAD assumes an average inhalation rate of 8,400 m^3/yr for the resident farmer and suburban resident scenarios. The average inhalation rate of 15.2 m^3/d is given in the EPA *Exposure Factor Handbook* (EPA 1997). For the industrial worker scenario, an hourly average worker inhalation rate (1.3 m^3/h) is assumed (EPA 1997). For the recreationist scenario, it is assumed that the individual would be involved in moderate activity on site; therefore, an inhalation rate of moderate activity (1.6 m^3/h) is assumed (EPA 1997)."

Based on the above comments, inhalation rates were generally selected from the updated EPA Exposure Factor Handbook [EPA 2011] short-term recommended values and RESRAD default values..

For a Fireman and the Trespasser (a jogger -applicable to men and women) performing high-intensity activity, the selected breathing rate was 5.0E-2 m^3/min. For a resident performing

light-intensity activity, the selected breathing rate for adult men and women was 1.3E-2 m^3/min; for children was 1.2E-2 m^3/min; and for infants was 0.5E-3 m^3/min. For the Park Ranger and Law Enforcement Offcer, the *RESRAD* default of 8400 m^3/year was selected. These values were converted to annual rates and used in *RESRAD* as shown in Table 6.

Table 6. Inhalation Rates

Parameter	Trespasser	Park Ranger/ Law Enforcement	Fire Fighter	Maintenance Worker	Nearby Resident
Inhalation Rate (m^3/min)	5.0 E-2	1.6E-2	5E-2	1.3E-2	1.3E-2
Inhalation Rate (m^3/year)	20,000*	8,400	20,000*	6,840	6,840

*Maximum permitted by *RESRAD* software.

3.3. Size of Contaminated Area

The default area size in *RESRAD* is 2.5 acres or 10,000 m^2. However, the largest contiguous area with radioactive contamination within GKP identified to date is by the parking lot across the road from the model airplane field consisting of about 200 m^2. This 200 m^2 area is the size which was used conservatively in *RESRAD* considering that it is not reasonable to assume that receptors will spend all available time on site in this one area.

3.4. Fire Fighter and Nearby Resident Airborne Exposure

The RESRAD inhalation pathway is applicable to all groups except for the fire fighter and nearby resident. RESRAD considers a gradual decay or wearing away of the material across a time period of 1000 years versus the short time for a fire. The radiation dose results from quantities inhaled for an entire burn in a very short period:

Dose = Breathing Rate*Burn Period*Airborne Concentration*Conversion Factors [Equation 1]

Phragmites is considered the largest potential for burning hazard. Phragmites grow rapidly, and each fall, plant material dies back, creating large concentrations of tinder-dry vegetation that increase the potential for fast-spreading fires that can threaten residential and commercial developments on surrounding uplands. According to the Community Wildfire Protection Plan, in extreme cases, phragmites can burn at the rate of one to three football fields a minute, with flame lengths of 56 to 83 feet depending on wind speed. An article in the New York Times reported one individual seeing a 20-foot-tall wall of flame headed to his house in 2010.

Using gridded weather data of gridpoint 130259 compiled for use in FireFamily Plus (version 4.1) software by the Western Regional Climate Center for the period 1995 thru 2011 and 1300 EST hour actual weather observations from the John F. Kennedy International Airport ASOS for the period 2012-2014, fire behavior outputs were calculated by NPS using BehavePlus (version 5.0.5) software for very high and moderate percentile values of temperature, relative humidity,

and wind for head, flanking, and backing fire. The data determined by NPS (found in Appendix C), indicates there can be extreme variability of fire behavior from factors such as wind speed and relative humidity. Variability can be expected of fire behavior throughout the year as new green growth will dampen fire behavior. NPS reported that as the overall ratio of cured fuels to green fuels increases, fire behavior increases. Further, any significant stands of cured growth will make the effects of new green growth negligible. These are important points as phragmites cover a considerable portion of the Park. Review of the presented data indicates that:

- *The areas of common reed that have not burned or been mowed for several years (high density stands) have the highest potential for quick burning.*
- *Even at the 50th percentile wind speed at GKP of 10 mph, the total available acreage of phragmites might be burned in one hour; quicker in higher winds.*

Parameters for particle dispersion will be established for a Box Model and a Gaussian Plume Dispersion Model; full descriptions follow. A radiological assessment for dose from a typical fire to a firefighter will be conducted with the Box Model and an immediate nearby resident with the Gaussian Plume Dispersion at 330 feet (100 m) downwind. This distance was selected as the closest to a release point that can be evaluated with the Gaussian model.

3.4.1. Box Model

The box model is the simplest of the model types. It assumes the airshed (i.e., the volume of atmospheric air in the burn region) is in the shape of a box. It also assumes that the air pollutants inside the box are homogeneously distributed and uses that assumption to estimate the average pollutant concentrations anywhere within the airshed.

- *How much of the smoke mass is inhaled is proportional to the concentration and the time of burn. The faster the burn, the higher the concentration but the smoke mass inhaled will be the same as for a shorter burn if 100% of available fuel material is consumed.*
- *The flame height is a defining parameter for determining the volume of the box model. The goal is to present a space that could happen under a near-worst possible scenario and not one from an average burn height.*
- *To simplify estimations, consideration is made for a 100% burn of available fuel. This assumption is not realistic but supports upper bounding of the issue.*

Although useful, this model is much too simple in its ability to accurately predict dispersion of air pollutants over an airshed as a homogeneous pollutant distribution is not realistic. For this assessment for GKP, the Box Model is simply an imaginary box which begins with a "10-acre" size bottom and a burn *(flame)* ceiling height of 33 feet illustrated in Figure 4. Note that the box will be constantly growing in one direction during the entire burn but the concentration is by design a constant without any loss. (For a 3-hour burn, smoke will be over a total of 30 acres at

the end of the burn.) The height was selected as an approximate average of all vegetation at the site. The following conservative assumptions are considered for the ground release.

- All available fuel is consumed in a fire; all available radioactive material is released.
- Firefighter or immediate nearby neighbor is enveloped by the imaginary Box for the entire burn period, at the centerline of the plume.
- Dose is proportional to inhaled concentrations and a firefighter or immediate nearby resident exposed to the entire burn will receive the same dose regardless of burn time.
- No respiratory protection is used.

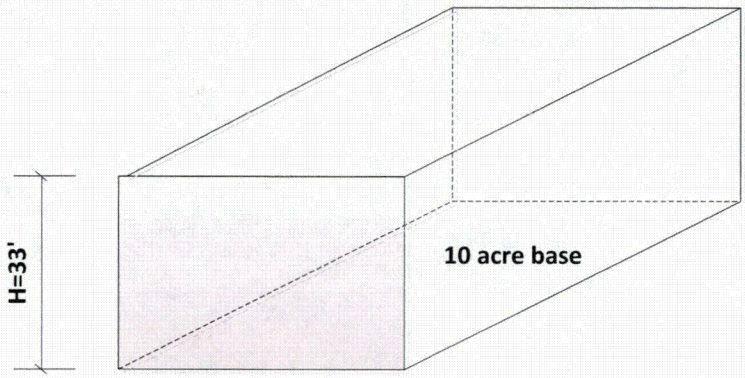

Figure 4. Box Model for Great Kills Park

For this scenario, the concentration in the box will be proportional to the total available fuel and the burn time, i.e., for a 3 hour burn time, the concentration will be 1/3 of that for a one hour burn time.

Note that this model may be envisioned with wind moving the airborne material but the receptors are stationary.

3.4.2. Gaussian Diffusion Model

Everyone has observed that smoke is dispersed more the farther it gets from its source. The Gaussian model was selected to describe this observation. It assumes that the air pollutant dispersion has a Gaussian distribution, meaning that the pollutant distribution has a normal probability distribution. Gaussian models are most often used for predicting the dispersion of continuous, buoyant air pollution plumes originating from ground-level or elevated sources. Gaussian models may also be used for predicting the dispersion of non-continuous air pollution plumes (called puff models). The primary algorithm used in Gaussian modeling is the *Generalized Dispersion Equation For A Continuous Point-Source Plume*. Comments made for the Box Model regarding assumed flame height, potential inhaled quantities and other bounding issues are also applicable to the Gaussian model.

The amount of turbulence in the ambient atmosphere has a major effect on the dispersion of air pollution plumes because turbulence increases the entrainment and mixing of unpolluted air into

the plume and thereby acts to reduce the concentration of pollutants in the plume (i.e., enhances the plume dispersion). It is therefore important to categorize the amount of atmospheric turbulence present at any given time. This paper utilized all stability classes developed by Pasquill in 1961. He categorized the atmospheric turbulence into six stability classes named A, B, C, D, E and F with class A being the most unstable or most turbulent class, and class F the most stable or least turbulent class. Table 7 lists the six classes and provides the meteorological conditions that define each class [Till 1983].

Table 7. Pasquill Stability Classes

Stability Class	Definition
A	Extremely Unstable
B	Unstable
C	Slightly Unstable
D	Neutral
E	Slightly Stable
F	Moderately Stable

For a ground level release at the plum center line the following illustration, Figure 5, shows how the contaminate will spread in the air along the length of the plume.

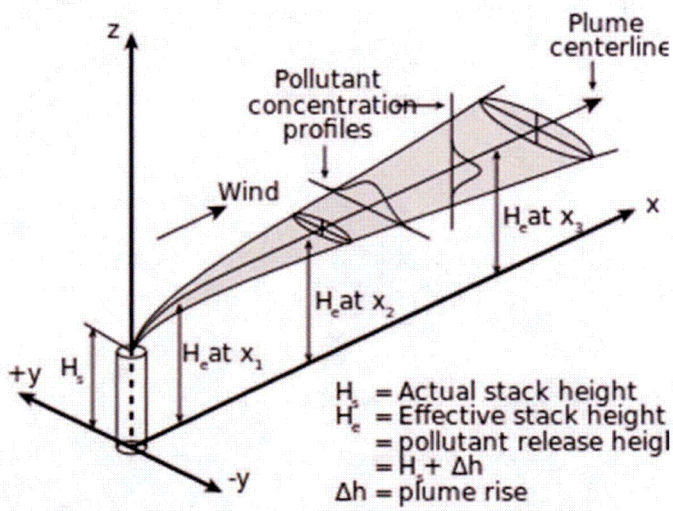

Figure 5. Standard Gaussian Plume Distribution, Till, 1983

The concentration in micrograms per cubic meter at a distance from the release point may be determined with this formula [Cember 1992].

$$X(x = 100, y = 0, z = 0, H) = \frac{Q}{\pi \sigma_y \sigma_z U} e^{-\frac{1}{2}(\frac{H}{\sigma_y})^2} \qquad \text{[Equation 2]}$$

Where:

Q is the source emission rate in grams/sec
U is the average wind speed in m/sec
σ_y, σ_z are the standard deviations of the concentration distributions in the crosswind and vertical distributions, respectively, meters
H is the release height (flame height) assumed to be 10 meters
x is the downwind distance from the release point, meters
y is the crosswind distance from the plume centerline, meters
z is the vertical distance from the ground level, meters

Again, the flame height is used to provide an upper bounding and is not to be considered realistic or average. The actual height may more than an order of magnitude more for a given scenario or circumstances.

The closest distance provided by graphs of σ_y σ_z is 100 m and this will be used as the distance to a close neighbor [Cember 1992; figures 11-7 and 11-8]. These values are provided in Table 8.

Table 8. Distribution Values of σy, σz at 100 m Distance

Class	σ_y (m)	σ_z (m)
A	24	16
B	18	11
C	13	7.5
D	8	5
E	6	3
F	4	1.6

Pasquill's wind speed for the various atmospheric stability classes vary significantly for day and night scenarios and are presented in Table 9 [Cember 1992].

Table 9. Wind Speed with Stability Classifications

Surface Wind Speed (m/s)	Daytime insolation			Nighttime	
	Strong	Moderate	Slight	Thin overcast or >4/8 low cloud cover	<3/8 cloud cover
<2	A	A-B	B	--	--
2-3	A-B	B	C	E	F
3-5	B	B-C	C	D	E

Surface Wind Speed (m/s)	Daytime insolation			Nighttime	
	Strong	Moderate	Slight	Thin overcast or >4/8 low cloud cover	<3/8 cloud cover
5-6	C	C-D	D	D	D
>6	C	D	D	D	D

Table 10 lists the wind speed selected from Table 9 as the lowest for a stability classification; however, 1 m/s was deemed to be reasonable for surface wind speeds <2 m/s, and a combined multiplication factor (CF) to be used in Equation 2 which is now rewritten as Equation 3 below. *Note that this wind speed is conservatively used to yield higher concentrations as the average wind speed is 4.5 m/s.*

Table 10. Stability Class with Conservative Wind Speed (U) and Combined Factors

Stability Class	U (m/s)	Combined Factor (CF) (sec/m^3)
A	1	7.60E-04
B	1	1.38E-03
C	2	1.21E-03
D	3	1.21E-03
E	2	2.20E-03
F	2	1.09E-03

$$X(x = 100, y = 0, z = 0, H = 10) = Q * CF \qquad \text{[Equation 3]}$$

After the source emission rate (Q) is established, the Q and CF may be multiplied together to obtain the concentration for each atmospheric stability class at the downwind distance of 100 m.

3.4.3. Source Emission Rate (Q)

Figure 6 summarizes the steps required to evaluate emissions from a fire [EPA 2002] Information is needed on the fuel consumption, which is dependent upon the land area burned, the amount of fuel materials per unit area (pre-burn fuel loading) and the characteristics and condition of the fuel. In the context of wildfire, the term "fuel" refers to the materials typically burned. Ideally this is restricted to downed trees, fallen branches, decaying leaves and needles (duff), and small trees and shrubs.

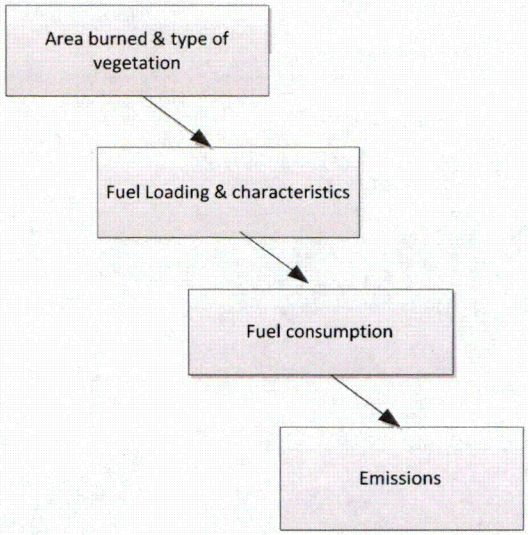

Figure 6. Steps Required to Evaluate Fire Emissions

3.4.3.1. Methodology

The methodology for calculating emissions from a fire is summarized:

$$\text{Total fuel consumption (Mg)} = \text{Area burned (acres)} \times \text{Fuel consumption per unit area (mass/acre)} \quad \text{[Equation 4]}$$

$$\text{Fuel consumption per unit area} = \sum_i \text{Mass of fuel type i per area} \times \text{Fraction burned for fuel type i} \quad \text{[Equation 5]}$$

$$\text{Emissions (kg)} = \text{Total fuel consumption (Mg)} \times \text{Emission factor (kg/Mg)} \quad \text{[Equation 6]}$$

The USDA has provided a biomass for phragmites as 445.6 grams per square meter. EPA's AP42 Chapter 13 *Miscellaneous Sources* provides a means to establish a source emission rate for the Atlantic Northeast which includes the Great Kills Park area. AP42 provides the regional emission factor for the area encompassing the GKP area as 30% of available fuel for grasses. As the fire burn for modeling is described as a "10-acre" fire, the total area is about 10 acres and the emissions (E) may be determined:

$$E = (445.6\ g/m^2) * (0.3\ \text{release factor}) * (4047\ m^2/\text{acre}) * (10\ \text{acres}) * (1\ kg/1000g) \quad \text{[Equation 7]}$$

$$E = 5.41 \times 10^3\ kg \quad \text{[Equation 8]}$$

3.4.3.2. Particle Size and Emission Rate

EPA's AP42 indicates that smoke from prescribed fires (same as wildfires for our purposes) is a complex mixture of carbon, tars, liquids, and different gasses. The open combustion source porduces particles of widely ranging size. The emission factors vary widely and can be as much as 50 percent depending on fuel and fire conditions. Again, the mass of fuel consumed by a fire is defined as the available fuel. Pollutants as particles are formed with an activity median aerodynamic diameter (AMAD) of 10 μm for the dominant fuel types.

As indicated, during the burn of a "10-acre fire", an upper bounding of 5.41 x 10^6 grams of particles are generated. This is the amount available for inhalation over the entire burn event. Regardless of the time of burn, this is the total source; exposure time of firefighters and neighbors will be 100 percent with no allowance for driving time to the fire, no respirators, and no allowance for the resident for a house filtration system. The average particle size is important as regulatory intakes are based upon a 1 μm average size and adjusting to 10 μm should significantly increase the quantity that can be inhaled for the same dose.

Over a three hour period, the rate of release is 5.41×10^6 g divided by 10,800 sec or 500 g/sec. This is the amount available for inhalation over the entire burn event.

3.4.4. Development of Inhalation Dose Conversion Factors (DCF)

The primary reference for individual radionuclide dose conversion factors (DCF) is the Federal Guidance Report No. 11. For dose calculations derived in NUREG/CR-5512, the NRC uses the most restrictive DCF for the three classifications of D, W, and Y. The D, W, and Y classifications refer to biological half-times for clearance from the human respiratory tract of 0 to 10 days, 11 to 100 days, and > 100 days. Applying the most restrictive DCF is not realistic for this evaluation and the following applies:

- Due to the age of the fill and the industry general history, all radioactive material is assumed to have been chemically separated or processed approximately 100 years ago. This is a conservative assumption and should overestimate the progeny ingrowth.
- The uranium material is assumed to be natural uranium (U_{nat}) which is assigned a complex classification by the NRC as U-235/U-238 W; Ra-226 10% D and 90% Y; (Th-230/Pb210/Po210 Y [NRC 1979].
- Radium is Class W per Appendix B to 10 CFR Part 20. FGR-11 also treats all radium as Class W.
- Not enough is known about the chemical composition and biological half-times of the thorium at the site so the most restrictive DCFs will be applied whether it be W or Y.
- The DCFs for all ROCs and progeny are from the FGR-11 not NUREG/CR-5512.

Table 11. Inhalation DCFs

Nuclide	Chain Fraction	DCF (mrem/pCi)
Bi-210	9.66E-01	1.96E-04
Bi-214	1.00E+00	6.59E-06
Pb-210	9.66E-01	1.36E-02
Pb-214	1.00E+00	7.81E-06
Po-210	9.66E-01	9.40E-03
Ra-226	1.00E+00	8.58E-03

Nuclide	Chain Fraction	DCF (mrem/pCi)
Ac-228	1.00E+00	1.25E-04
Bi-212	1.00E+00	2.16E-05
Pb-212	1.00E+00	1.69E-04
Ra-224	1.00E+00	3.16E-03
Ra-228	1.00E+00	4.77E-03
Th-228	1.00E+00	3.42E-01
Th-232	1.00E+00	1.15E+00

Nuclide	Chain Fraction	DCF (mrem/pCi)
Ac-227	3.46E-05	6.70E+00
Bi-210	5.21E-06	1.96E-04
Fr-223	4.77E-07	6.22E-06
Pa-231	4.95E-05	1.28E+00
Pa-234	7.81E-04	8.14E-07
Pb-210	5.21E-06	1.36E-02
Pb-211	3.45E-05	8.70E-06
Pb-214	9.38E-06	7.81E-06
Po-210	5.14E-06	9.40E-03
Ra-223	3.45E-05	7.84E-03
Ra-226	9.38E-06	8.58E-03
Th-227	3.41E-05	1.62E-02
Th-230	4.39E-04	3.26E-01
Th-231	2.34E-02	8.77E-07
Th-234	4.88E-01	3.50E-05
U-234	4.88E-01	7.88E-03
U-235	2.34E-02	7.29E-03
U-238	4.88E-01	7.03E-03

3.4.5. Adjustments to Expected Radiation Dose Because of Particle Size

The calculations of radiation dose used by the NRC are based on a standard aerosol as 1-μm AMAD. Adjustments are permitted for aerosols with an AMAD between 0.2 μm and 10 μm. Inhaled doses are referred to as a 50-year committed dose equivalent, H_{50}.

A dose adjustment is made based on the differing contribution to committed dose equivalent of the radionuclide deposited in the three lung compartments: nasal pharangyl passage (N-P), trachea and bronchial tree (T-B), and pulmonary parenchyma (P). The following equation expresses the adjustment to the committed dose equivalent in term of the changed deposition in the different lung compartments:

$$\frac{H_{50}(AMAD)}{H_{50}\,(1\mu m)} = f_{N-P}\,\frac{D_{N-P}(AMAD)}{D_{N-P}\,(1\mu m)} + f_{T-B}\,\frac{D_{T-B}(AMAD)}{D_{T-B}\,(1\mu m)} + f_{P}\,\frac{D_{P}(AMAD)}{D_{P}\,(1\mu m)} \qquad \text{[Equation 9]}$$

Where f_{N-P}, f_{T-B}, and f_P are fractions of the committed dose equivalents in the reference tissues resulting from deposition in the N-P, T-B, and P regions, and D_{N-P}, D_{T-B}, and D_P are the fractions of inhaled material initially deposited in the three compartments of the lung. For a 10 μm average particle size, NUREG-1400 provides the values for the ratios of deposition fractions (AMAD to 1 μm) which are 0.9, 1, amd 0.2 respectively for Equation 9.

The percentage values for f_{N-P}, f_{T-B}, and f_P for the ROCs are found in the Supplement to Part 1 of ICRP 30 and are presented in Table 12.

Substitution of the fractions of committed dose equivalent and the ratios of deposition fraction into Equation 8 will provide a correction value for the H_{50} (the 50-year committed dose equivalent). These ratios of H_{50} for 10 um to 1m AMED particles are also presented in Table 12. The ratio ranges from 0.20 to 0.24 and as an additional conservative approach, the highest ratio of 0.24 will be used in dose calculations for this report. The Gross Activity DCFs for a 10 μm size particle for Ra-226+C, Th-232+C, and $Uranium_{total}$+C were calculated as 0.0074 mrem/pCi, 0.36 mrem/pCi, and 0.0019 mrem/pCi inhaled; respectively.

Table 12. Clearance Class with Fractions of CEDE and H50 Ratios

Radionuclide	Class	Fractions of CEDE			H_{50} (10 μm)/ H_{50}(1 μm)
		N-P	T-B	P	
U-238	D	3	2	95	0.24
	W	0	0	100	0.20
	Y	0	0	100	0.20
U-235	D	3	2	95	0.24
	W	0	0	100	0.20
	Y	0	0	100	0.20
U-234	D	3	2	95	0.24
	W	0	0	100	0.20
	Y	0	0	100	0.20
Ra-226	W	0	0	100	0.20
Th-232	W*	0	1	99	0.21
	Y	0	0	100	0.20

*Used fraction values from progeny, Th-228, as values for Th-232 were not listed.

3.4.6. Concentration Ratios of Vegetation to Soil

The highest radium concentrations in vegetation and soil collected at the same location for this report was 0.3 pCi/g and 3.22 pCi/g, respectively, for a ratio of plant tissue to soil concentration of 0.09. Similarly, for U-238 and U-234, the ratio of plant tissue to soil concentration were 0.004 and 0.006; respectively when performed with alpha spectrometry. As shown in Table 2, certain vegetation samples were not analyzed and those that were by gamma spectroscopy had results less than MDC; no ratio comparison is made for them.

As the quantity of data is limited, a literature search identified four relevant documents:

- The US Department of Agriculture has determined that the concentration ratios *(mean* concentration the plant tissue/ mean concentration in the soil) of radium in plants growing on a revegetated uranium mill tailings in western South Dakota was 0.03. "Apparently, plants do not readily concentrate elements of the uranium decay series. Concentration ratios for uranium varied in this study, but were on the order of as reported elsewhere ..." [USDA 1986].
- Two studies by Oak Ridge National Laboratories (ORNL) post other values of the soil to plant concentration factor (CF) for radium as 0.015 in ORNL-5786 and as 0.1 in ORNL/TM-8597.
- The concentration of thorium in plants is typically about 0.0042 (or 0.42%) of that in soil. [ANL 2007]

From ORNL/TM-8597, specific values of concentration ratio for soil to plant transfer of Ra-226 were recommended for use in environmental transport assessments where the food category is known (i.e., fruit, grain, etc.); however, the mean and unweighted concentration factor (CF) was listed as 0.1. Using the suggested CF as 0.1 should represent the maximum and is considered a conservative value for use in dose assessments for radium and uranium as the highest identified CF from Table 2 was 0.09. ANL's value of the typical concentration ratio for soil to plant transfer of 0.0042 is selected for thorium [ANL 2007].

4.0 RADIATION DOSE ASSESSMENT

4.1. RESRAD Results for External, Inhalation and Ingestion Pathways

The external, inhalation, and ingestion pathways are applicable to all groups except for the nearby resident. The computer code RESRAD version 7.0 was used to determine the dose to the various critical groups assuming the mix of radionuclides and the parameters discussed in Section 3. Additionally, the size of the contaminated area was assumed to be 200 m^2 with a thickness of 15 cm; results from the RESRAD runs are rounded to three decimal places. A summary of non-default RESRAD parameters and applicable pathways and copies of the RESRAD results are in Appendix B.

The RESRAD assessment for the inhalation is considered as additional to that which would be received during a fire. Calculations for the exposure due to the inhalation pathway for the Fire Fighter and Nearby Resident are presented in Section 4.2.

Table 13. RESRAD Results for External, Inhalation, and Ingestion Pathways.

Critical Group	External Dose (mrem)	Inhalation Dose (mrem)	Ingestion Dose (mrem)
Maintenance Worker	6.626*	0.136	0.166
Recreational Visitor	8.282	0.050	0.021
Park Ranger/Law Enforcement Officer	6.626*	0.167	0.166
Fire Fighter	2.034	0.012	0.005

*Includes factor for 10% for annual time for work at job sites.

4.2. Inhalation Pathway for the Fire Fighter and the Nearby Resident

As indicated earlier, RESRAD is not applicable to inhalation doses from fires for the Fire Fighter and the Nearby Resident. This section completes exposure for the Fire Fighter with the Box Model and the exposure for the Nearby Resident with the Gaussian Plume Model.

The following formula is an extension of Equation 1 and provides additional information:

$$\text{Dose} = \text{BR} * \text{Burn Period} * \text{Air}_{\text{Conc}} * DCF_{10\mu m} * \text{UF} \qquad \text{[Equation 10]}$$

Where:

Dose = Committed Effective Dose Equivalent (CEDE) for 50 years

BR is the most conservative breathing rate for firefighter and resident as 5.0E-2 m^3/min and 1.3E-2 m^3/min, respectively.

Burn Period is a nominal 3 hours (180 min) but could be any interval as long as all fuel is consumed at a constant rate.

Air_{Conc} is the radioactive airborne concentration which is the X g/ml particle releases factored by the radioactive concentration of the vegetation (C_{vege} in pCi/g).

- Particle Emission Rate is 500 g/sec for total "10-acre" burn; 5.41×10^6 g total.

- Box Model - Total volume is 4.356E5 ft^2 x 33 ft. or 1.44E7 cubic feet (4.1E11 ml).

For a 3 hour burn, the average particle concentration (X) is 1.3E-5 g/ml.

- Gaussian Plume - For the worst case stability class (E) and wind speed (2 m/sec), a CF of 0.0022 sec/m^3 (2.2×10^{-9} sec/ml).

$$X = Q * C \qquad \text{[Equation 11]}$$

$$X = 500 \frac{g}{\text{sec}} * 2.2 \times 10^{-9} \text{ sec/ml} \qquad \text{[Equation 12]}$$

$$X = 1.1 \times 10^{-6}\ g/ml \qquad \text{[Equation 13]}$$

- $DCF_{10\mu m}$ is from Table 9, mrem/pCi inhaled.
- UF are any unit conversion factors.

The bounding dose equations for both models are developed separately.

4.2.1. Box Model (Fire Fighter)

Noting that the concentration in vegetation is the product of the soil concentration times the concentration ratio from soil to plants, the final dose equation for the Box model follow. The soil concentration is the average per radionuclide of all sample results listed in Table 2.

H_{50} = BR * Burn Period * X * C_{vege} * $DCF_{10\mu m}$ * [UF] [Equation 14]

Results are tabulated in Table 14 along with the various parameters used.

Table 14. Dose Commitment to Fire Fighter for GKP Fire for Box Model

	BR (m^3/min)	Burn Period (min)	X (g/ml)	C soil (pCi/g)	CF soil to vege (unitless)	UF (ml/m^3)	DCF (mrem/pCi)	H_{50} (mrem)
Ra-226+C	5.00E-02	180	1.1E-06	19.2	0.1	1.00E+06	7.40E-03	0.141
Thorium-232+C				1.24	0.0042		3.60E-01	0.019
$Uranium_{natural}$+C				14.97*	0.1		1.90E-03	0.028
							Total	0.187

* Represents sum of the parent average results.

4.2.2. Gaussian Plume Model at 100 m Downwind (Nearby Resident)

Development of the final dose equations for a receptor located 100 m downwind for the Gaussian Plume Model follow:

$$H_{50} = BR * \text{Burn Period} * X * C_{vege} * DCF_{10\mu m} * [UF] \qquad \text{[Equation 15]}$$

Results are tabulated in Table 15 along with the various parameters used.

Table 15. Nearby Resident Dose Commitment for GKP Fire for Gaussian Dispersion Model

	BR (m^3/min)	Burn Period (min)	*X* (*g/ml*)	C soil (pCi/g)	CF soil to vege (unitless)	UF (ml/m^3)	DCF (mrem/pCi)	H_{50} (mrem)
Ra-226+C	1.30E-02	180	5.41E-6	19.2	0.1	1.00E+06	7.40E-03	0.1799
Thorium-232+C				1.24	0.0042		3.60E-01	0.0237
$Uranium_{natural}$+C				14.97*	0.1		1.90E-03	0.0360
							Total	0.24

* Represents sum of the parent average results.

5.0 SUMMARY

This report provides a post-TCRA dose assessment for firefighters, maintenance workers, park rangers/law enforcement officers, nearby residents, and trespassers from residual radioactivity at the GKP in Staten Island, New York. A total of 33 samples were collected from the elevated areas across GKP to represent an upper bounding of the existing radioactive concentration. Additionally, ten locations were selected as those areas with the best potential to demonstrate the uptake by vegetation and samples were analyzed by gamma and alpha spectroscopy to identify the ROC. Radionuclides of Concern were identified as radium-226, natural uranium, and thorium-232. The natural uranium was assumed to be ore grade material, the radium was chemically separated at least 100 years ago, while no assumptions as to the physical or chemical properties of the thorium were made although ingrowth of decay progeny was assumed for all ROCs.

Doses were calculated for three exposure pathways, external, inhalation, and ingestion, for four critical groups (Maintenance Worker, , Park Ranger/Law Enforcement Offcier, the Fire Fighter, and the Trespasser). It was logical to assume that a Nearby Resident would only receive a radiation dose from fires. A dose from inhalation of radioactive material during fires was also made for the Fire Fighter. The results are presented in Table 16 and the following comments regarding used parameters and applications:

- The Park Ranger/Law Enforcement Officer and Maintenance Worker were both assumed to have boots-on-the ground of 200 hours per year in radiologically contaminated areas.
- For the Fire Fighter and Nearby Resident, Table 16 includes radiological doses from a typical fire and was calculated with the sample result data and conservative atmospheric models for the firefighter and the nearby resident. The Fire Fighter was estimated to be on site for 69 hours during a year including the firefighting times.
- The assumptions for the trespasser are conservative as it is assumed that a trespasser disobeys all fencing/signage, spends 250 hours in a contaminated area, stays on established roads and trails, and does not do intrusive activities over the course of a year. This trespasser represents the worst case developed with a resultant dose of less than 10 mrem accumulated in a year.
- A Gaussian Dispersion Model was required for the off-site resident.
- The soil concentration averages used in this report cannot represent an average for GKP as sample collection was targeted at the higher dose rate locations. Actual soil and vegetation averages will be much less and the doses calculated in Tables 14 and 15 represent a gross over estimation. Regardless, the calculated doses from a typical fire are very low representing 2.2 mrem in a year for a firefighter and 0.24 mrem in a year for a nearby resident.

- Certain parameters such as the soil to plant transfer rates were from published literature and data would be improved with additional sampling results from the site; however, there is no indication that the used parameters are not conservative.

Table 16. Summary of Exposure to Critical Groups

Critical Group	External Dose (mrem)	Inhalation Dose (mrem)	Ingestion Dose (mrem)	Fire Inhalation Dose (mrem)	Maximum Annual Total Dose (mrem)
Maintenance Worker	6.63	0.14	0.17		6.93
Trespasser	8.28	0.05	0.02		8.35
Park Ranger	6.63	0.17	0.17		6.96
Fire Fighter	2.03	0.01	0.01	0.19	2.24
Nearby Resident				0.24	0.24

5.1. Comparison with NRC Release Limit

Following a site cleanup, The NRC has set a limit on radiation dose to the general public and is quoted: "A site will be considered acceptable for unrestricted use if the residual radioactivity that is distinguishable from background radiation results in a TEDE to an average member of the critical group that does not exceed 25 mrem (0.25 mSv) per year, including that from groundwater sources of drinking water, and the residual radioactivity has been reduced to levels that are as low as reasonably achievable (ALARA)[NRC 2014]." This is the regulatory dose standard for which the critical groups considered.

Given the conservative parameters and assumptions used in this report, it is not probable under current site restrictions for a Fire Fighter, Maintenance Worker, Park Ranger/Law Enforcement Officer, Nearby Resident, or Trespasser will exceed the Nuclear Regulatory Commission's (NRC) regulatory limit of 25 mrem in a year above natural background. It should be noted that concentration levels of the magnitude which would have resulted in a dose of 25 mrem in a year would have been detected and removed during the TCRA as both the required concentration and its surface proximity would have made the radioactive materials readily identifiable by the TCRA gamma survey process.

5.2. Comparison of Dose Rates to Soil Concentrations

It was hoped that surface dose rates and concentrations in soil and vegetation would have a linear relationship which would provide a means to further estimate potential airborne concentrations during a fire. This is not the case as soil concentrations and surface dose rates do not correlate due to deeper (non-surface) deposition of some higher activity sources.

6.0 REFERENCES

ANL 2007	Radiological and Chemical Fact Sheets to Support Health Risk Analyses for Contaminated Areas, Argonne National Laboratory, US DOE, March 2007
Cember, 1992	Introduction to Health Physics, Second Edition, Herman Cember, Northwestern University, McGraw-Hill, 1992
ICRP 1979	ICRP, 1979. Limits for Intakes of Radionuclides by Workers. ICRP Publication 30 (Supplement to Part 1). Ann. ICRP 3 (1-4).
NYS 2013	New York State Department of Environmental Conservation, Cleanup Guidelines for Soils Contaminated with Radioactive Materials (DER-38), April 30, 2013
ORNL 1984	Review and Analysis of Parameters for Assessing Transport of Environmentally Released Radionuclides through Agriculture, C. F. Baes III, et al, ORNL-5786. 1984.
ORNL 1983	Radium-226 In Drinking Water and Terrestrial Food Chains: A Review of Parameters and an Estimate of Potential Exposure and Dose, ORNL/TM-8597, A. P. Watson, et al, 1983.
Till, 1983	Radiological Assessment: A Textbook on Environmental Dose Analysis, John E. Till and H. Robert Meyer (1983)
USDA 1986	Uranium and Radium Concentrations in Plants Growing on Uranium Mill Tailings in South Dakota, Mark A. Rumble and Ardell J. Bjugstad, *U.S.D.A. Forest Service, Reclamation and Revegetation Research,4* (1986) 271-277, Elsevier Science Publishers B.V.
USDA 2008	Gucker, Corey L. 2008. Phragmites australis. In: Fire Effects Information System, [Online]. U.S. Department of Agriculture, Forest Service, Rocky Mountain Research Station, Fire Sciences Laboratory (Producer). Available: http://www.fs.fed.us/database/feis/ [2015, February 17].
EPA 1988	Limiting Values OF Radionuclide Intake And Air Concentration and Dose Conversion Factors for Inhalation, Submersion, and Ingestion, Federal Guidance Report No. 11, September 1988
EPA 1993	External Exposure to Radionuclides in Air, Water, And Soil. Federal Guidance Report No. 12. September 1993.
EPA 1999	Cancer Risk Coefficients for Environmental Exposure to Radionuclides, Federal Guidance Report No. 13, September 1999.
EPA 2002	Development of Emissions Inventory Methods for Wildland Fire, US EPA Feb. 2002
EPA 2007	SW-846, *Test Methods for Evaluating Solid Waste, Physical/Chemical Methods,* Rev. 6, February 2007
EPA 2011	EPA Exposure Factors Handbook: 2011 Edition EPA/600/R-09/052F, September 2011.

NPS 2011	Vegetation Survey for the Great Kills Park Site EE/CA Investigation, Gateway National Recreation Area, NY by Natural Resources Management Division, 21 December 2011
NPS 2012	Community Wildfire Protection Plan For the East Shore of Staten Island Richmond County, New York State, draft August 2012; NPS and others
NRC 1979	Solubility classification of airborne products from uranium ores and tailings piles, NUREG/CR-0530, U.S. NRC, 1979-01-01.
NRC 1993	Residual Radioactive Contamination From Decommissioning, NUREG/CR-5512, January 1993.
NRC 2000	*Multi-Agency Radiation Survey and Site Investigation Manual*, EPA/402/R-97-016, Revision 1. NUREG-1575, U.S. NRC, August, 2000.
NRC 2001	Systematic Radiological Assessment of Exemptions for Source and Byproduct Materials, NUREG-1717, June 2001.
NRC 2003	ISCORS Assessment of Radioactivity in Sewage Sludge: Radiological Results and Analyses, EPA 832-R-03-002. NUREG-1775, Nov. 2003.
NRC 2014	Title 10 CFR Part 20, Standards for Protection Against Radiation
NYT 2012	*Staten Island Fights Reeds That Feed Its Brush Fires,* New York Times, Lisa W. Foderaro, Published: April 4, 2012
USACE 1997	U.S. Army Corps of Engineers (USACE); *Radiological Safety*, ER 385-1-80; May 1997
USACE 2008	U.S. Army Corps of Engineers (USACE); *Safety and Health Requirements*, EM 385-1-1; September 2008