INSERVICE INSPECTION REPORT

UNIT 1 OCONEE 1997 REFUELING OUTAGE 17

Location: Hwy. 130/183, Seneca, South Carolina 29679

NRC Docket No. 50-269

Commercial Service Date: July 15, 1973

Owner: Duke Energy Corporation
526 South Church St.
Charlotte, N. C. 28201-1006

Revision 0

Prepared By:	R C Rowe	Date	3/9/98
Reviewed By:	Larry C. Keith	Date	3-9-98
Approved By:	J O Barbour	Date	3/11/98

Copy No.	2	Assigned To	NRC Document Control
Controlled	X	Uncontrolled	

380 Pages

FORM NIS-1 OWNER'S DATA REPORT FOR INSERVICE INSPECTIONS

As required by the Provisions of the ASME Code Rules

1. Owner: Duke Energy Corporation, 526 S. Church St.. Charlotte, NC 28201-1006
(Name and Address of Owner)

2. Plant: Oconee Nuclear Station, Highway 130/183, Seneca, SC 29679
(Name and Address of Plant)

3. Plant Unit: 1 4. Owner Certificate of Authorization (if required) N/A

5. Commercial Service Date: July 15, 1973 6. National Board Number for Unit N/A

7. Components Inspected:

Component or Appurtenance	Manufacturer Installer	Manufacturer Installer Serial No.	State or Province No.	National Board No.
		See Section 1.1 in the Attached Report		

Note: Supplemental sheets in form of lists, sketches, or drawings may be used provided (1) size is $8^1/_2$ in. x 11 in., (2) information in items 1 through 6 on this data report is included on each sheet, and (3) each sheet is numbered and the number of sheets is recorded at the top of this form.

FORM NIS-1 (Back)

8. Examination Dates December 11, 1995 to December 24, 1997

9. Inspection Period Identification: First Period of the Third Interval

10. Inspection Interval Identification: Third Inservice Inspection Interval

11. Applicable Edition of Section XI 1989 Addenda None

12. Date/Revision of Inspection Plan: October 30, 1995 / Revision 3

13. Abstract of Examinations and Test. Include a list of examinations and tests and a statement concerning status of work required for the Inspection Plan. See Sections 3.0 and 4.0

14. Abstract of Results of Examination and Tests. See Section 5.0

15. Abstract of Corrective Measures. See Section 8.0

We certify that a) the statements made in this report are correct b) the examinations and tests meet the Inspection Plan as required by the ASME Code, Section XI, and c) corrective measures taken conform to the rules of the ASME Code, Section XI.

Certificate of Authorization No. (if applicable) NA Expiration Date NA

Date 3/16 19 98 Signed Duke Energy Corp. By [signature]
Owner

CERTIFICATE OF INSERVICE INSPECTION

I, the undersigned, holding a valid commission issued by the National Board of Boiler and Pressure Vessel Inspectors and the State of Province of N. C. employed by *The HSBI&I Co. of Hartford, CT have inspected the components described in this Owners' Report during the period 12-11-95 to 12-24-97, and state that to the best of my knowledge and belief, the Owner has performed examinations and tests and taken corrective measures described in the Owners' Report in accordance with the Inspection Plan and as required by the ASME Code, Section XI.

By signing this certificate neither the Inspector nor his employer makes any warranty, expressed or implied, concerning the examinations, test, and corrective measures described in this Owners' Report. Furthermore, neither the Inspector nor his employer shall be liable in any manner for any personal injury or property damage or a loss of any kind arising from or connected with this inspection

M B. Chapman Commissions NC914
Inspector's Signature National Board, State, Province, and Endorsements

Date 3-17-98 19 98

* The Hartford Steam Boiler Inspection & Insurance Co.
200 Ashford Center North
Suite 300
Atlanta, GA. 30338

CONTROLLED DISTRIBUTION

Copy No.	Assigned To
Original	Duke Energy Corporation Quality Assurance Technical Services
1	Oconee Work Control
2	NRC Document Control

UNCONTROLLED DISTRIBUTION

3	Hartford Steam Boiler Inspection and Insurance Company (ANII) c/o M. B. Chapman Oconee Nuclear Station
4	D. E. LaBarge Project Manager Office of NRR USNRC Washington, DC 20555

TABLE OF CONTENTS

1.0 General Information

This report describes the Inservice Inspection of Duke Energy Corporation's Oconee Nuclear Station, Unit 1, during the 1997 Refueling Outage (also referred to as Outage 17). Outage 17 is the last outage in the first inspection period of the third ten year interval.

Included in this report are the final Inservice Inspection Plan, the inspection results for each item, a summary for each category of examination and corrective action taken when unacceptable conditions were found. In addition, there is a section included for repairs and replacements required since December 11, 1995.

1.1 Identification Numbers

Item	Manufacturer or Installer	Manufacturer or Installer Serial No.	State or Province No.	National Board No.
Reactor Vessel	Babcock & Wilcox	620-0003-51-52	N/A	N-101
Steam Generator A	Babcock & Wilcox	620-0003-55-1	N/A	N-103
Steam Generator B	Babcock & Wilcox	620-0003-55-2	N/A	N-104
Pressurizer	Babcock & Wilcox	620-0003-59	N/A	N-102
Main Steam System	Duke Power	NA	NA	NA
Auxiliary Steam System	Duke Power	NA	NA	NA
Feedwater System	Duke Power	NA	NA	NA
Emergency Feedwater System	Duke Power	NA	NA	NA
Steam Generator Flush System	Duke Power	NA	NA	NA
Condensate System	Duke Power	NA	NA	NA
Vents and Exhaust System	Duke Power	NA	NA	NA

Condenser Circulating Water	Duke Power	NA	NA	NA
High Pressure Service Water System	Duke Power	NA	NA	NA
Low Pressure Service Water System	Duke Power	NA	NA	NA
Reactor Coolant System	Duke Power	NA	NA	NA
High Pressure Injection System	Duke Power	NA	NA	NA
Low Pressure Injection System	Duke Power	NA	NA	NA
Reactor Building Spray System	Duke Power	NA	NA	NA
Component Cooling System	Duke Power	NA	NA	NA
Spent Fuel Cooling System	Duke Power	NA	NA	NA
Vents - Reactor Building Components	Duke Power	NA	NA	NA
Drains - Reactor Building Components	Duke Power	NA	NA	NA

1.2 ***Authorized Nuclear Inservice Inspector(s)***

Name: M. B. Chapman

Employer: The Hartford Steam Boiler Inspection & Insurance Company

Business Address: The Hartford Steam Boiler Inspection & Insurance Co.
200 Ashford Center North
Suite 300
Atlanta, GA 30338

2.0 Summary of Inservice Inspections

The information shown below provides an abstract of ASME Section XI Class 1, Class 2, and Augmented Items scheduled and examined during Outage 17 at Oconee Nuclear Station Unit 1.

2.1 Class 1 Inspection

Examination Category B-A Pressure Retaining Welds in Reactor Vessel

Item Number	*Description*	*Total Examined During Outage*
B01.010	***Shell Welds***	
B01.011	Circumferential	0
B01.012	Longitudinal	NA
B01.020	***Head Welds***	
B01.021	Circumferential	1
B01.022	Meridional	NA
B01.030	Shell to Flange Welds	0
B01.040	Head to Flange Welds	1
B01.050	***Repair Welds***	
B01.051	Beltline Region	N/A
TOTALS		2

Examination Category B-B Pressure Retaining Welds in Vessels Other than Reactor Vessels

Item Number	*Description*	*Total Examined During Outage*
	Pressurizer	
B02.010	***Shell to Head Welds***	
B02.011	Circumferential	0
B02.012	Longitudinal	0
B02.020	***Head Welds***	
B02.021	Circumferential	NA
B02.022	Meridional	NA
	Steam Generator (Primary Side)	
B02.030	***Head Welds***	
B02.031	Circumferential	0
B02.032	Meridional	N/A
B02.040	Tubesheet to Head Weld	2
	Heat Exchangers (Primary Side) -- **Head**	
B02.050	***Head Welds***	
B02.051	Circumferential	NA
B02.052	Meridional	NA
	Heat Exchangers (Primary Side) -- **Shell**	
B02.060	Tubesheet to Head Welds	0
B02.070	Longitudinal Welds	NA
B02.080	Tubesheet-to-Shell Welds	NA
TOTALS		2

Examination Category B-D Full Penetration Welds of Nozzles in Vessels
Inspection Program B

Item Number	*Description*	*Total Examined During Outage*
	Reactor Vessel	
B03.090	Nozzle-to-Vessel Welds	0
B03.100	Nozzle Inside Radius Section	0
	Pressurizer	
B03.110	Nozzle-to-Vessel Welds	1
B03.120	Nozzle Inside Radius Section	1
	Steam Generators (Primary Side)	
B03.130	Nozzle-to-Vessel Welds	0
B03.140	Nozzle Inside Radius Section	0
	Heat Exchangers (Primary Side)	
B03.150	Nozzle-to-Vessel Welds	2
B03.160	Nozzle Inside Radius Section	Request for Relief ONS-009
TOTALS		4

Examination Category B-E Pressure Retaining Partial Penetration Welds in Vessels

REFERENCE SECTION 11.0 OF THIS REPORT

Examination Category B-F Pressure Retaining Dissimilar Metal Welds

Item Number	*Description*	*Total Examined During Outage*
	Reactor Vessel	
B05.010	Nominal Pipe Size 4" or Larger Nozzle-to-Safe End Butt Welds	0
B05.020	Nominal Pipe Size Less Than 4" Nozzle-to-Safe End Butt Weld	NA
B05.030	Nozzle-to-Safe End Socket Welds	NA
	Pressurizer	
B05.040	Nominal Pipe Size 4" or Larger Nozzle-to-Safe End Butt Welds	2
B05.050	Nominal Pipe Size Less Than 4" Nozzle-to-Safe End Butt Welds	0
B05.060	Nozzle-to-Safe End Socket Welds	NA
	Steam Generators	
B05.070	Nominal Pipe Size 4" or Larger Nozzle-to-Safe End Butt Welds	NA
B05.080	Nominal Pipe Size Less Than 4" Nozzle-to-Safe End Butt Welds	NA
B05.090	Nozzle-to-Safe End Socket Welds	NA

Examination Category B-F (Continued)

Item Number	*Description*	*Total Examined During Outage*
	Heat Exchangers	
B05.100	Nominal Pipe Size 4" or Larger Nozzle-to-Safe End Butt Welds	NA
B05.110	Nominal Pipe Size Less Than 4" Nozzle-to-Safe End Butt Welds	NA
B05.120	Nozzle-to-Safe End Socket Welds	NA
	Piping	
B05.130	Nominal Pipe Size 4" or Larger Dissimilar Metal Butt Welds	2
B05.140	Nominal Pipe Size Less Than 4" Dissimilar Metal Butt Welds	0
B05.150	Dissimilar Metal Socket Welds	NA
TOTALS		4

Examination Category B-G-1 Pressure Retaining Bolting, Greater Than 2" in Diameter

Item Number	*Description*	*Total Examined During Outage*
	Reactor Vessel	
B06.010	Closure Head Nuts	0
B06.020	Closure Studs, (in place)	NA
B06.030	Closure Studs, (when removed)	0
B06.040	Threads in Flange	1
B06.050	Closure Washers, Bushings	0
	Pressurizer	
B06.060	Bolts and Studs	0
B06.070	Flange Surface, (when connection disassembled)	0
B06.080	Nuts , Bushings and Washers	0
	Steam Generators	
B06.090	Bolts and Studs	NA
B06.100	Flange Surface, (when connection disassembled)	NA
B06.110	Nuts , Bushings and Washers	NA
	Heat Exchangers	
B06.120	Bolts and Studs	NA
B06.130	Flange Surface, (when connection disassembled)	NA
B06.140	Nuts , Bushings and Washers	NA

Examination Category B-G-1 (Continued)

Item Number	*Description*	*Total Examined During Outage*
	Piping	
B06.150	Bolts and Studs	NA
B06.160	Flange Surface, (when connection disassembled)	NA
B06.170	Nuts , Bushings and Washers	NA
	Pumps	
B06.180	Bolts and Studs	0
B06.190	Flange Surface, (when connection disassembled)	1
B06.200	Nuts , Bushings and Washers	0
	Valves	
B06.210	Bolts and Studs	NA
B06.220	Flange Surface, (when connection disassembled)	NA
B06.230	Nuts , Bushings and Washers	NA
TOTALS		2

Examination Category B-G-2 Pressure Retaining Bolting, 2" and Less in Diameter

Item Number	*Description*	*Total Examined During Outage*
	Reactor Vessel	
B07.010	Bolts, Studs, and Nuts	NA
	Pressurizer	
B07.020	Bolts, Studs, and Nuts	1
	Steam Generators	
B07.030	Bolts, Studs, and Nuts	0
	Heat Exchangers	
B07.040	Bolts, Studs, and Nuts	NA
	Piping	
B07.050	Bolts, Studs, and Nuts	0
	Pumps	
B07.060	Bolts, Studs, and Nuts	NA
	Valves	
B07.070	Bolts, Studs, and Nuts	1
	CRD Housings	
B07.080	Bolts, Studs, and Nuts In CRD Housing When Disassembled	2
TOTALS		4

Examination Category B-H Integral Attachments for Vessels

Item Number	Description	Total Examined During Outage
	Reactor Vessel	
B08.010	Integrally Welded Attachments	NA
	Pressurizer	
B08.020	Integrally Welded Attachments	NA
	Steam Generators	
B08.030	Integrally Welded Attachments	NA
	Heat Exchangers	
B08.040	Integrally Welded Attachments	NA
TOTALS		NA

Examination Category B-J Pressure Retaining Welds in Piping

Item Number	Description	Total Examined During Outage
B09.010	Nominal Pipe Size 4" or Larger	
B09.011	Circumferential Welds	13
B09.012	Longitudinal Welds[1]	0
B09.020	Nominal Pipe Size Less Than 4"	
B09.021	Circumferential Welds	6
B09.022	Longitudinal Welds[1]	NA

[1] Longitudinal welds in Examination Category B-J that intersect circumferential welds are examined per Code Case N-524.

Examination Category B-J (Continued)

Item Number	Description	Total Examined During Outage
B09.030	Branch Pipe Connection Welds	
B09.031	Nominal Pipe Size 4" or Larger	1
B09.032	Less Than Nominal Pipe Size 4"	1
B09.040	Socket Welds	1
TOTALS		22

Examination Category B-K-1 Integral Attachments for Piping, Pumps and Valves

Item Number	Description	Total Examined During Outage
	Piping	
B10.010	Integrally Welded Attachments	NA
	Pumps	
B10.020	Integrally Welded Attachments	NA
	Valves	
B10.030	Integrally Welded Attachments	NA
TOTALS		NA

Examination Category B-L-1, B-M-1 Pressure Retaining Welds in Pump Casings and Valve Bodies

B-L-2, B-M-2 Pump Casings and Valve Bodies

Item Number	*Description*	*Total Examined During Outage*
	Pumps	
B12.010	Pump Casing Welds (B-L-1)	1
B12.020	Pump Casing (B-L-2) (when disassembled for Maintenance, Repair or Volumetric Examination)	1
	Valves	
B12.030	Valves, Nominal Pipe Size Less Than 4" Valve Body Welds (B-M-1)	NA
B12.040	Valves, Nominal Pipe Size 4" or Larger Valve Body Welds (B-M-1)	NA
B12.050	Valve Body, Exceeding 4" Nominal Pipe Size (B-M-2)	2
TOTALS		4

Examination Category B-N-1 Interior of Reactor Vessel

B-N-2 Integrally Welded Core Support Structures and Interior Attachments to Reactor Vessels

B-N-3 Removable Core Support Structures

Item Number	*Description*	*Total Examined During Outage*
	Reactor Vessel	
B13.010	Vessel Interior (B-N-1)	1
	Reactor Vessel (PWR)	
B13.050	Interior Attachments Within The Beltline Region (B-N-2)	NA
B13.060	Interior Attachments Beyond The Beltline Region (B-N-2)	NA
B13.070	Core Support Structure (B-N-3)	0
TOTALS		1

Examination Category B-O Pressure Retaining Welds in Control Rod Housings

Item Number	*Description*	*Total Examined During Outage*
	Reactor Vessel	
B14.010	Welds in CRD Housing	0
TOTALS		0

Examination Category B-P All Pressure Retaining Components

REFERENCE SECTION 11.0 OF THIS REPORT

Examination Category B-Q Steam Generator Tubing[2]

Item Number	*Description*	*Total Examined During Outage*
B16.010	Steam Generator Tubing in Straight Tube Design	NA
B16.020	Steam Generator Tubing in U-Tube Design	NA
TOTALS		NA

Examination Category F-A Class 1 Component Supports

Item Number	*Description*	*Total Examined During Outage*
F1.010	Class 1 Piping Supports Reference Section 4.0 of this report	4
F1.040	Class 1 Supports Other Than Piping Reference Section 4.0 of this report	1
F1.050	Class 1 Snubbers	27
TOTALS		32

[2] Steam Generator Tubing is examined and documented by Steam Generator Maintenance Group of the Station Support Division as required by the Station Technical Specifications and is not included in this report.

2.2 *Class 2 Inspections*

Examination Category C-A Pressure Retaining Welds in Pressure Vessel

Item Number	*Description*	*Total Examined During Outage*
C01.010	Shell Circumferential Welds	1
C01.020	Head Circumferential Welds	2
C01.030	Tubesheet to Shell Weld	0
TOTALS		3

Examination Category C-B Pressure Retaining Nozzle Welds in Vessels

Item Number	*Description*	*Total Examined During Outage*
C02.010	Nozzles in Vessels ≤ $^1/_2$" Nominal Thickness	
C02.011	Nozzle-to-Shell (or Head) Weld	0
C02.020	Nozzles Without Reinforcing Plate In Vessels > $^1/_2$" Nominal Thickness	
C02.021	Nozzle-to-Shell (or Head) Weld	0
C02.022	Nozzle Inside Radius Section	0
C02.030	Nozzles With Reinforcing Plate in Vessels > $^1/_2$" Nominal Thickness	

Examination Category C-B (Continued)

Item Number	Description	Total Examined During Outage
C02.031	Reinforcing Plate Welds to Nozzle and Vessel	0
C02.032	Nozzle-to-Shell (or Head) Welds When Inside of Vessel Is Accessible	0
C02.033	Nozzle-to-Shell (or Head) Welds When Inside of Vessel is Inaccessible	3
TOTALS		3

Examination Category C-C Integral Attachments For Vessels, Piping, Pumps and Valves

Item Number	Description	Total Examined During Outage
	Pressure Vessels	
C03.010	Integrally Welded Attachments	2
	Piping	
C03.020	Integrally Welded Attachments	12
	Pumps	
C03.030	Integrally Welded Attachments	0
	Valves	
C03.040	Integrally Welded Attachments	NA
TOTALS		14

Examination Category C-D Pressure Retaining Bolting Greater Than 2" in Diameter

Item Number	*Description*	*Total Examined During Outage*
	Pressure Vessels	
C04.010	Bolts and Studs	NA
	Piping	
C04.020	Bolts and Studs	NA
	Pumps	
C04.030	Bolts and Studs	1
	Valves	
C04.040	Bolts and Studs	0
TOTALS		1

Examination Category C-F-1 Pressure Retaining Welds in Austenitic Stainless Steel or High Alloy Piping

Item Number	*Description*	*Total Examined During Outage*
C05.010	Piping Welds ≥3/8" Nominal Wall Thickness for Piping > Nominal Pipe Size 4	
C05.011	Circumferential Weld	1
C05.012	Longitudinal Welds[3]	NA
C05.020	Piping Welds >1/5" Nominal Wall Thickness for Piping ≥ Nominal Pipe Size 2 and ≤ Nominal Pipe Size 4	
C05.021	Circumferential Welds	17
C05.022	Longitudinal Welds[3]	NA
C05.030	Socket Welds	0
C05.040	Pipe Branch Connections of Branch Piping ≥ Nominal Pipe Size 2	
C05.041	Circumferential Weld	5
C05.042	Longitudinal Weld[3]	NA
TOTALS		23

[3] Longitudinal welds in Examination Categories C-F-1 and C-F-2 that intersect circumferential welds are examined per Code Case N-524.

Examination Category C-F-2 Pressure Retaining Welds in Carbon or Low Alloy Steel Piping

Item Number	*Description*	*Total Examined During Outage*
C05.050	Piping Welds ≥ $^{3}/_{8}$" Nominal Wall Thickness for Piping > Nominal Pipe Size 4	
C05.051	Circumferential Weld	7
C05.052	Longitudinal Weld[3]	NA
C05.060	Piping Welds > $^{1}/_{5}$" Nominal Wall Thickness for Piping ≥ Nominal Pipe Size 2 and ≤ Nominal Pipe Size 4	
C05.061	Circumferential Weld	NA
C05.062	Longitudinal Weld[3]	NA
C05.070	Socket Welds	NA
C05.080	Pipe Branch Connections of Branch Piping ≥ Nominal Pipe Size 2	
C05.081	Circumferential Weld	0
C05.082	Longitudinal Weld[3]	NA
TOTALS		7

[3] Longitudinal welds in Examination Categories C-F-1 and C-F-2 that intersect circumferential welds are examined per Code Case N-524.

Examination Category C-G Pressure Retaining Welds in Pumps and Valves

Item Number	*Description*	*Total Examined During Outage*
	Pumps	
C06.010	Pump Casing Welds	NA
	Valves	
C06.020	Valve Body Welds	0
TOTALS		0

Examination Category C-H All Pressure Retaining Components

REFERENCE SECTION 11.0 OF THIS REPORT

Examination Category F-A Class 2 Component Supports

Item Number	*Description*	*Total Examined During Outage*
F1.020	Class 2 Piping Supports Reference Section 4.0 of this report	19
F1.040	Class 2 Supports Other Than Piping Reference Section 4.0 of this report	2
F1.050	Class 2 Snubbers Reference Section 4.0 of this report	40
TOTALS		61

2.3 Augmented Inspections

Item Number	Description	Total Examined During Outage
G01.001	Reactor Coolant Pump Flywheel	4
G02.001	HPI Nozzle Safe End Examinations	4 *See Note
G03.001	Pressurizer Surge Line Examinations	0
G04.001	Thermal Stress Piping (NRC Bulletin 88-08)	0
G05.001	Pressurizer Spray Piping Thermal Transient Inspection	NA
G06.001	Auxiliary Feedwater Header Water Hammer Examinations (PSC21-82)	0
G07.001	Augmented Examination of Longitudinal Piping Welds With A Nominal Wall Thickness < $^3/_8$" and > Nominal Pipe Size 4"	0
G08.001	Pressurizer Sensing/ Sampling Nozzle Safe Ends	0
G09.001	Class 2 Piping Welds Nominal Pipe Size > 4" With Nominal Wall Thickness< $^3/_8$"	8
G10.001	Class 1 RTE Mounting Bosses	1
G11.001	Reactor Coolant Pumps 3A2 and 3B1 Alternate Examinations	0
G12.001	HPI System Upgrade Piping Welds With A Nominal Wall Thickness ≤ $^1/_5$" on Piping with a Nominal Pipe Size ≥ 2" and Nominal Pipe Size ≤ 4".	4

* Note: Problems with the examination of the G02 items prior to May 1997 have been identified, investigated and resolved. Details of the problems are documented on PIP 0-O97-1507. A copy of the PIP may be obtained upon request.

A detailed description of each examination listed in Sections 2.1 through 2.3 are located in Section 3 of this report. Results of each examination are located in Section 4 of this report.

3.0 *Third Ten Year Inspection Status*

The completion status of inspections required in the third ten year inspection interval by the 1989 ASME Section XI Code, no Addenda, is summarized in this section. The requirements are listed by the ASME Section XI Examination Category as defined in Table IWB-2500-1 for Class 1 Inspections, and in Table IWC-2500-1 for Class 2 Inspections. Augmented inspections are also included.

Class 1 Inspections

Examination Category	*Description*	*Inspections Required*	*Inspections Completed*	*Percentage Completed*	[4]*Deferral Allowed*
B-A	Pressure Retaining Welds in Reactor Vessel	15 Welds	2.5 Welds	17%	Yes
B-B	Pressure Retaining Welds in Vessels Other than Reactor Vessel	11 Welds	3 Welds	27%	No
B-D	Full Penetration Welds of Nozzles in Vessels Inspection Program B	30 Inspections	10 Inspections	33%	Partial
B-E	Pressure Retaining Partial Penetration Welds in Vessels	REFERENCE SECTION 11.0 OF THIS REPORT			
B-F	Pressure Retaining Dissimilar Metal Welds	32 Welds	11 Welds	34%	No
B-G-1	Pressure Retaining Bolting Greater than 2 Inch Diameter	126 Items	42.83 Items	34%	Yes
B-G-2	Pressure Retaining Bolting 2 Inches and Less in Diameter	23 Items	7 Items	30%	No
B-H	Integral Attachment for Vessels	N/A	N/A	N/A	N/A
B-J	Pressure Retaining Welds in Piping	145 Welds	34 Welds	23%	No

[4]Deferral of inspection to the end of the interval as allowed by ASME Section XI Tables IWB and IWC 2500-1.

Class 1 Inspections (Continued)

Examination Category	*Description*	*Inspections Required*	*Inspections Completed*	*Percentage Completed*	*[5] Deferral Allowed*
B-K-1	Integral Attachments for Piping, Pumps and Valves	N/A	N/A	N/A	N/A
B-L-1	Pressure Retaining Welds in Pump Casings	1 Weld	1 Welds	100%	Yes
B-L-2	Pump Casings	1 Casing	1 Casings	100%	Yes
B-M-1	Pressure Retaining Welds in Valve Bodies	N/A	N/A	N/A	N/A
B-M-2	Valve Body > 4 in. Nominal Pipe Size	3 Valves	2 Valves	67%	Yes
B-N-1	Interior of Reactor Vessel	3 Inspections	1 Inspection	33%	No
B-N-2	Integrally Welded Core Support Structures and Interior Attachments to Reactor Vessels	N/A	N/A	N/A	N/A
B-N-3	Removable Core Support Structures	1 Item	0 Items	0%	Yes
B-0	Pressure Retaining Welds in Control Rod Housings	3 Housings	1 Housing	33%	Yes
B-P	All Pressure Retaining Components	REFERENCE SECTION 11.0 OF THIS REPORT			
B-Q	Steam Generator Tubing	N/A	N/A	N/A	N/A
F-A F1.10 & F1.040 items.	Class 1 Component Supports (Except Snubbers)	33 Supports	10 Supports	30%	No
F-A F1.050 items	Class 1 Component Supports, Snubbers	27 Snubbers	27 Snubbers	100%	No

[5] Deferral of inspection to the end of the interval as allowed by ASME Section XI Tables IWB and IWC 2500-1.

Class 2 Inspections

Examination Category	*Description*	*Inspections Required*	*Inspections Completed*	*Percentage Completed*	*[5] Deferral Allowed*
C-A	Pressure Retaining Welds in Pressure Vessels	13 Welds	4 Welds	31%	No
C-B	Pressure Retaining Nozzle Welds in Vessels	12 Welds	4 Welds	33%	No
C-C	Integral Attachments for Vessels, Piping, Pumps and Valves	93 Attachments	27 Attachments	29%	No
C-D	Pressure Retaining Bolting Greater Than 2 Inches in Diameter	2 Item	1 Items	50%	No
C-F-1	Pressure Retaining Welds in Austenitic Stainless Steel or High Alloy Piping	140 Welds	45 Welds	32%	No
C-F-2	Pressure Retaining Welds in Carbon or Low Alloy Steel Piping	69 Welds	18 Welds	26%	No
C-G	Pressure Retaining Welds in Pumps and Valves	1	1	100%	No
C-H	All Pressure Retaining Components	REFERENCE SECTION 11.0 OF THIS REPORT			
F-A F1.020 & F1.040 items.	Class 2 Component Supports (Except Snubbers)	120 Supports	38 Supports	32%	No
F-A F1.050 items	Class 2 Component Supports, Snubbers	40 Snubbers	40 Snubbers	100%	No

[5] Deferral of inspection to the end of the interval as allowed by ASME Section XI Tables IWB and IWC 2500-1.

Augmented Inspections

Description	*Percentage Complete*
Reactor Coolant Pump Flywheels (Item No. Series G01)	100% of EOC 17 Requirements
High Pressure Injection and Make-Up Nozzle Safe-Ends (Item No. Series G02)	100% of EOC 17 Requirements
Pressurizer Surge Line Drain Line (Item No. Series G03)	Not Scheduled
Thermal Stress Piping (Item No. Series G04)	Not Scheduled
Pressurizer Spray Piping Thermal Transient Inspection (Item No. Series G05)	Not Scheduled
Auxiliary Feedwater Header Preliminary Safety Concern (PSC 21-82) Water Hammer Examinations (Item No. Series G06)	Not Scheduled
Augmented Examination of Longitudinal Piping Welds With A Nominal Wall Thickness Less Than 3/8" and Greater Than Nominal Pipe Size 4" (Item No. Series G07)	No longer applicable. Code Case N-524 is being used for the examination of all longitudinal piping welds.
Pressurizer Sensing/Sampling Nozzle Safe Ends (Item No. Series G08)	Not Scheduled
Class 2 Piping Welds Nominal Pipe Size Greater Than 4" With A Nominal Wall Thickness Less Than $^{3}/_{8}$" (Item No. Series G09)	100% of EOC 17 Requirements
Class 1 RTE Mounting Bosses (Item No. Series G10)	100% of EOC 17 Requirements
HPI System Upgrade (Item No. Series G12)	100% of EOC 17 Requirements

4.0 *Final Inservice Inspection Plan*

The final ISI Plan shown in this section lists all ASME Section XI Class 1 and ASME Section XI Class 2, and Augmented examinations credited for Outage 17 at Oconee Nuclear Station Unit 1.

The information shown below is a field description for the reporting format included in this section of the report:

Item Number	=	ASME Section XI Tables IWB-2500-1 (Class 1), IWC-2500-1 (Class 2), IWF-2500-1 (Class 1 and Class 2), Augmented Requirements
ID Number	=	Unique Identification Number
Iso / Dwg. Numbers	=	Location and/or Detail Drawings
Proc	=	Examination Procedures
Insp Req.	=	Examination Technique - Magnetic Particle, Dye Penetrant, etc.
Mat / Sch.	=	General Description of Material
Diam. / Thick	=	Diameter/Thickness
Cal Blocks	=	Calibration Block Number
Comments	=	General and/or Detail Description

CATEGORY B-A, Pressure Retaining Welds in Reactor Vessel

Head Welds

DUKE ENERGY CORPORATION
QUALITY ASSURANCE TECHNICAL SERVICES
Inservice Inspection Database Management System

Oconee 1

Inservice Inspection Plan for Interval 3 Outage 2

ITEM NUMBER	ID NUMBER	ISO/DWG NUMBERS	PROC	INSP REQ	MAT/SCH	DIA/THK	CAL BLOCKS	COMMENTS
****** Circumferential ******								
B01.021.001	1-RPV-WH5	ISI OCN1-001	NDE-660	UT	CS	0.000	40387	Reactor Vessel Upper Head Cap Section Pc.24 to Upper Head Ring Section Pc. 23.
	Circumferential	OM-201-1122				6.625		
Class A				Rx Upper Hd. Cap Sectionh to Rx Upper Hd. Ring Section				

Total B01.021 Items: 1

CATEGORY B-A, Pressure Retaining Welds in Reactor Vessel

Head-to-Flange Weld

DUKE ENERGY CORPORATION
QUALITY ASSURANCE TECHNICAL SERVICES
Inservice Inspection Database Management System

Oconee 1

Inservice Inspection Plan for Interval 3 Outage 2

ITEM NUMBER	ID NUMBER	ISO/DWG NUMBERS	PROC	INSP REQ	MAT/SCH	DIA/THK	CAL BLOCKS	COMMENTS
B01.040.001	1-RPV-WH7	ISI OCN1-001	NDE-660	UT	CS	147.000	40387	Reactor Vessel Upper Head Ring Section Pc. 23 to Upper Head Flange Pc. 22.
Circumferential		OM-201-1122				6.625		
Class A				Rx Head Ring Section to Flange				
B01.040.001A	1-RPV-WH7	ISI OCN1-001	NDE-25	MT	CS	147.000		Reactor Vessel Upper Head Ring Section Pc. 23 to Upper Head Flange Pc. 22.
Circumferential		OM-201-1122				6.625		
Class A				Rx Head Ring Section to Flange				

Total B01.040 Items: 2

Total B01 Items: 3

CATEGORY B-B, Pressure Retaining Welds in Vessels Other Than Reactor Vessels

Steam Generators (Primary Side)

DUKE ENERGY CORPORATION
QUALITY ASSURANCE TECHNICAL SERVICES
Inservice Inspection Database Management System

Oconee 1

Inservice Inspection Plan for Interval 3 Outage 2

ITEM NUMBER	ID NUMBER	ISO/DWG NUMBERS	PROC	INSP REQ	MAT/SCH	DIA/THK	CAL BLOCKS	COMMENTS
****** Tubesheet-to-Head Weld ******								
B02.040.001	1-SGA-WG58-1	ISI-OCN1-003	NDE-620	UT	CS	119.000	40393	Steam Generator 1A Upper Head to Upper Tubesheet. Piece 08 to 51.
	Circumferential	OM-201-1873	NDE-640			8.500		
Class A				SGA Upper Head to Upper Tubesheet				
B02.040.003	1-SGB-WG58-1	ISI-OCN1-004	NDE-620	UT	CS	119.000	40393	Steam Generator 1B Upper Head to Upper Tubesheet. Piece 08 to 51.(inspect in 1st period of the third interval perIWB-2420(b). Do not count this weld in the percentages. This is a surveillance item).
	Circumferential	OM-201-1873	NDE-640			8.500		
Class A				SGB Upper Head to UpperTubesheet				

Total B02.040 Items: 2

Total B02 Items: 2

CATEGORY B-D, Full Penetration Welds of Nozzles in Vessels

Pressurizer

DUKE ENERGY CORPORATION
QUALITY ASSURANCE TECHNICAL SERVICES
Inservice Inspection Database Management System

Oconee 1

Inservice Inspection Plan for Interval 3 Outage 2

ITEM NUMBER	ID NUMBER	ISO/DWG NUMBERS	PROC	INSP REQ	MAT/SCH	DIA/THK	CAL BLOCKS	COMMENTS
****** Nozzle-to-Vessel Welds ******								
B03.110.001	1-PZR-WP15	ISI OCN1-002	NDE-620	UT	CS	15.250	40394	Pressurizer Surge Nozzle Pc. 8 to Lower Head Pc. 6. The pressurizer LOCA restraint will require removal for inspection of weld 1-PZR-WP15.
	Circumferential	B&W129260E	NDE-640			4.750		
Class A		OM-201-1878		Pzr Surge Nozzle to Pzr Lower Head				

Total B03.110 Items: 1

CATEGORY B-D, Full Penetration Welds of Nozzles in Vessels

Pressurizer

DUKE ENERGY CORPORATION
QUALITY ASSURANCE TECHNICAL SERVICES
Inservice Inspection Database Management System

Oconee 1

Inservice Inspection Plan for Interval 3 Outage 2

ITEM NUMBER	ID NUMBER	ISO/DWG NUMBERS	PROC	INSP REQ	MAT/SCH	DIA/THK	CAL BLOCKS	COMMENTS
****** Nozzle Inside Radius Section ******								
B03.120.001	1-PZR-WP15	ISI OCN1-002	NDE-680	UT	CS	15.250	40394	Pressurizer Surge Nozzle Pc. 8 to Lower Head Pc. 6. (Inside Radius Section). The pressurizer LOCA restraint will require removal for inspection of weld 1-PZR-WP15.
		B&W129260E				3.375		
Class A		OM-201-1878		Pzr Surge Nozzle to Pzr Lower Head				

Total B03.120 Items: 1

CATEGORY B-D, Full Penetration Welds of Nozzles in Vessels

Heat Exchangers (Primary Side)

DUKE ENERGY CORPORATION
QUALITY ASSURANCE TECHNICAL SERVICES
Inservice Inspection Database Management System

Oconee 1

Inservice Inspection Plan for Interval 3 Outage 2

ITEM NUMBER	ID NUMBER	ISO/DWG NUMBERS	PROC	INSP REQ	MAT/SCH	DIA/THK	CAL BLOCKS	COMMENTS
****** Nozzle-to-Vessel Welds ******								
B03.150.001	1-LDCA-IN-V2	ISO-18792-1	NDE-630	UT	SS	3.000	40411	LDC-A Tubeside Inlet Nozzle Pc. 05 to Channel Body Pc. 03.
	Circumferential	OM-201-3107				0.875		
Class A		OFD-101A-1.1		Nozzle Inlet Nozzle to Channel Body				
B03.150.002	1-LDCA-OUT-V6	ISO-18792-1	NDE-630	UT	SS	3.000	40411	LDC-A Tubeside Outlet Nozzle Pc. 05 to Channel Body Pc. 03.
	Circumferential	OM-201-3107				0.875		
Class A		OFD-101A-1.1		Nozzle Outlet Nozzle to Channel Body				

Total B03.150 Items: 2

CATEGORY B-D, Full Penetration Welds of Nozzles in Vessels

Heat Exchangers (Primary Side)

ITEM NUMBER	ID NUMBER	ISO/DWG NUMBERS	PROC	INSP REQ	MAT/SCH	DIA/THK	CAL BLOCKS	COMMENTS
****** Nozzle Inside Radius Section ******								
B03.160.001 Class A	1-LDCA-IN-V2	ISO-18792-1 OM-201-3107 OFD-101A-1.1	NDE-680	UT Inlet Nozzle to Channel Body	SS	3.000 0.875	40411	LDC-A Tubeside Inlet Nozzle Pc. 05 to Channel Body Pc. 03. (Inside Radius Section). Ref. Request for Relief ONS-009
B03.160.002 Class A	1-LDCA-OUT-V6	ISO-18792-1 OM-201-3107 OFD-101A-1.1	NDE-680	UT Outlet Nozzle to Channel Body	SS	3.000 0.875	40411	LDC-A Tubeside Outlet Nozzle Pc. 05 to Channel Body Pc. 03. (Inside Radius Section). Ref. Request for Relief ONS-009.

Total B03.160 Items: 2

Total B03 Items: 6

CATEGORY B-F, Pressure Retaining Dissimilar Metal Welds

Pressurizer

ITEM NUMBER	ID NUMBER	ISO/DWG NUMBERS	PROC	INSP REQ	MAT/SCH	DIA/THK	CAL BLOCKS	COMMENTS
****** NPS 4 or Larger; Nozzle-to-Safe End Butt Welds ******								
B05.040.001	1-PZR-WP23	ISI OCN1-002	NDE-35	PT	SS/CS	11.375		Pressurizer Surge Nozzle Pc. 8 to Pressurizer Surge Nozzle Safe End Pc.37.
	Circumferential	OM-201-287				1.930		
Class A				Nozzle Piece 8 to Safe End Pc.37				
	Dissimilar							
B05.040.001A	1-PZR-WP23	ISI OCN1-002	NDE-610	UT	SS/CS	11.375	40414	Pressurizer Surge Line Nozzle Pc. 8 to Safe End Pc. 37 at Pressurizer. UT from Nozzle Side.
	Circumferential	OM-201-287				1.930		
Class A				Nozzle Piece 8 to Safe End Pc.37				
	Dissimilar							
B05.040.001B	1-PZR-WP23	ISI OCN1-002	NDE-610	UT	SS/CS	11.375	40354	Pressurizer Surge Line Nozzle Pc. 8 to Safe End Pc. 37 at Pressurizer. UT from Safe End Side.
	Circumferential	OM-201-287				1.930		
Class A				Nozzle Piece 8 to Safe End Pc.37				
	Dissimilar							
B05.040.002	1-PZR-WP45	ISI OCN1-002	NDE-35	PT	SS/CS	5.675		Pressurizer Spray Line Nozzle Pc. 9 to Safe End Pc. 45 at Pressurizer.
	Circumferential	B&W129261E				0.750		
Class A				Nozzle Piece 9 to Safe End Pc.45				
	Dissimilar							
B05.040.002A	1-PZR-WP45	ISI OCN1-002	NDE-610	UT	SS/CS	4.000	50373	Pressurizer Spray Line Nozzle Pc. 9 to Safe End Pc. 45 at Pressurizer. UT from Nozzle Side.
	Circumferential	B&W129261E				0.750		
Class A				Nozzle Piece 9 to Safe End Pc.45				
	Dissimilar							
B05.040.002B	1-PZR-WP45	ISI OCN1-002	NDE-610	UT	SS/CS	4.000	50373	Pressurizer Spray Line Nozzle Pc. 9 to Safe End Pc. 45 at Pressurizer. UT from Safe End Side.
	Circumferential	B&W129261E				0.750		
Class A				Nozzle Piece 9 to Safe End Pc.45				
	Dissimilar							

Total B05.040 Items: 6

CATEGORY B-F, Pressure Retaining Dissimilar Metal Welds

Piping

DUKE ENERGY CORPORATION
QUALITY ASSURANCE TECHNICAL SERVICES
Inservice Inspection Database Management System

Oconee 1

Inservice Inspection Plan for Interval 3 Outage 2

ITEM NUMBER	ID NUMBER	ISO/DWG NUMBERS	PROC	INSP REQ	MAT/SCH	DIA/THK	CAL BLOCKS	COMMENTS
****** NPS 4 or Larger; Dissimilar Metal Butt Welds ******								
B05.130.002	1-PDA1-2	ISI OCN1-011	NDE-610	UT	SS/CS	33.500	40350	Examine from the elbow side
	Circumferential	OM-201-1844				2.330		
Class A				Safe end to				
	Dissimilar			Elbow				
B05.130.002A	1-PDA1-2	ISI OCN1-011	NDE-610	UT	SS/CS	33.500	40397	Examine from the safe end side.
	Circumferential	OM-201-1844				2.330		
Class A				Safe end to				
	Dissimilar			Elbow				
B05.130.002B	1-PDA1-2	ISI OCN1-011	NDE-35	PT	SS/CS	33.500		
	Circumferential	OM-201-1844				2.330		
Class A				Safe end to				
	Dissimilar			Elbow				
B05.130.009	1-PSL-10	ISI OCN1-015	NDE-610	UT	SS/CS	10.750	40414	Examine from the nozzle side.
	Circumferential	OM-201-594			140	1.000		
Class A	Stress weld			Pipe to				
	Dissimilar			Nozzle Pressurizer Surge				
B05.130.009A	1-PSL-10	ISI OCN1-015	NDE-610	UT	SS/CS	10.750	40354	Examine from the pipe side
	Circumferential	OM-201-594			140	1.000		
Class A	Stress weld			Pipe to				
	Dissimilar			Nozzle Pressurizer Surge				
B05.130.009B	1-PSL-10	ISI OCN1-015	NDE-35	PT	SS/CS	10.750		
	Circumferential	OM-201-594			140	1.000		
Class A	Stress weld			Pipe to				
	Dissimilar			Nozzle Pressurizer Surge				

Total B05.130 Items: 6

Total B05 Items: 12

CATEGORY B-G-1, Pressure Retaining Bolting, Greater than 2" In Diameter

Reactor Vessel

DUKE ENERGY CORPORATION
QUALITY ASSURANCE TECHNICAL SERVICES
Inservice Inspection Database Management System

Oconee 1

Inservice Inspection Plan for Interval 3 Outage 2

ITEM NUMBER	ID NUMBER	ISO/DWG NUMBERS	PROC	INSP REQ	MAT/SCH	DIA/THK	CAL BLOCKS	COMMENTS
****** Threads in Flange ******								
B06.040.001	1-RPV-LIGAMENTS	OM-201-1007	NDE-640	UT	CS	200.000 12.500	40387	Reactor Vessel Flange Threads - 0-180 Degrees.
Class A								

Total B06.040 Items: 1

CATEGORY B-G-1, Pressure Retaining Bolting, Greater than 2" In Diameter

Pumps

ITEM NUMBER	ID NUMBER	ISO/DWG NUMBERS	PROC	INSP REQ	MAT/SCH	DIA/THK	CAL BLOCKS	COMMENTS
****** Flange Surface, when connection dissassembled ******								
B06.190.001	1-RCP-1A1-FLANGE	OM-201D-34	QAL-13	VT-1	SS	77.000		Reactor Coolant Pump 1A1 Main Flange. 1" annular surface of flange surrounding each stud.(Inspect Only If Disassembled.)
		OM-201D-35A				0.000		
Class A								

Total B06.190 Items:	**1**
Total B06 Items:	**2**

CATEGORY B-G-2, Pressure Retaining Bolting, 2" And Less In Diameter

Pressurizer

DUKE ENERGY CORPORATION
QUALITY ASSURANCE TECHNICAL SERVICES
Inservice Inspection Database Management System

Oconee 1

Inservice Inspection Plan for Interval 3 Outage 2

ITEM NUMBER	ID NUMBER	ISO/DWG NUMBERS	PROC	INSP REQ	MAT/SCH	DIA/THK	CAL BLOCKS	COMMENTS
****** Bolts, Studs, and Nuts ******								
B07.020.001	1-PZR-UHB-STUDS			VT-1	CS	2.000		Pressurizer Upper Heater Bundle Studs Pc. 75 (Total 16 Studs). Length = 17.875. All bolts, studs and nuts.
		OM-201-9				0.000		
Class A		OM-201-1262						

Total B07.020 Items: 1

CATEGORY B-G-2, Pressure Retaining Bolting, 2" And Less In Diameter

Valves

DUKE ENERGY CORPORATION
QUALITY ASSURANCE TECHNICAL SERVICES
Inservice Inspection Database Management System

Oconee 1

Inservice Inspection Plan for Interval 3 Outage 2

ITEM NUMBER	ID NUMBER	ISO/DWG NUMBERS	PROC	INSP REQ	MAT/SCH	DIA/THK	CAL BLOCKS	COMMENTS
****** Bolts, Studs, and Nuts ******								
B07.070.005	1-53A-LP47-BOLTS		QAL-13	VT-1	CS	0.000		10" A-Side LPI Valve Bolting - Valve 1LP-47.
		OM-245-001				0.000		
Class A		OFD-102A-1.2						

Total B07.070 Items: 1

CATEGORY B-G-2, Pressure Retaining Bolting, 2" And Less In Diameter

CRD Housings

DUKE ENERGY CORPORATION
QUALITY ASSURANCE TECHNICAL SERVICES
Inservice Inspection Database Management System

Oconee 1

Inservice Inspection Plan for Interval 3 Outage 2

ITEM NUMBER	ID NUMBER	ISO/DWG NUMBERS	PROC	INSP REQ	MAT/SCH	DIA/THK	CAL BLOCKS	COMMENTS
****** Bolts, Studs, and Nuts ******								
B07.080.001 Class A	1-RPV-CRD-BOLTS	OM-201-2248 DPS 706599-1056 B&W152006E	QAL-13	VT-1	CS	1.250 0.000		CRD Housing Bolts (Total 8 Bolts) 2 Connections inspected to date; CRD # 38, # 59.(Inspect only if Disassembled). Reference Request for Relief ONS-004 & ONS-005.
B07.080.002 Class A	1-RPV-CRD-RINGS	OM-201-2248 DPS 706599-1056 B&W152006E	QAL-13	VT-1	CS	11.500 1.250		CRD Housing Rings ; 1 Pair per CRD Housing. 2 Connections inspected to date ; CRD # 38, #59.(Inspect only if Disassembled)

Total B07.080 Items:	**2**
Total B07 Items:	**4**

CATEGORY B-J, Pressure Retaining Welds In Piping

NPS 4 or Larger

DUKE ENERGY CORPORATION
QUALITY ASSURANCE TECHNICAL SERVICES
Inservice Inspection Database Management System

Oconee 1

Inservice Inspection Plan for Interval 3 Outage 2

ITEM NUMBER	ID NUMBER	ISO/DWG NUMBERS	PROC	INSP REQ	MAT/SCH	DIA/THK	CAL BLOCKS	COMMENTS
****** Circumferential Welds ******								
B09.011.053	1-PIB2-4	ISI OCN1-010	NDE-600	UT	CS	33.500		Reference Request for Relief 95-GO-03 for calibration block. Ref. Addenda ONS1-073.
	Circumferential	OM-201-1845				2.330		
Class A	Stress weld			Pipe to Elbow 90				
B09.011.053A	1-PIB2-4	ISI OCN1-010	NDE-25	MT	CS	33.500		Ref. Addenda ONS1-073.
	Circumferential	OM-201-1845				2.330		
Class A	Stress weld			Pipe to Elbow 90				
B09.011.089	1-53A-02-68L	1-53A-02(3)	NDE-600	UT	SS	14.000		Reference Request for Relief 95-GO-03 for calibration block.
	Circumferential	OFD-102A-1.3				1.250		
Class A				Pipe to Valve 1CF-11				
B09.011.089A	1-53A-02-68L	1-53A-02(3)	NDE-35	PT	SS	14.000		
	Circumferential	OFD-102A-1.3				1.250		
Class A				Pipe to Valve 1CF-11				
B09.011.091	1-53A-02-50L	1-53A-02(3)	NDE-600	UT	SS	14.000		Reference Request for Relief 95-GO-03 for calibration block.
	Circumferential	OFD-102A-1.3				1.250		
Class A				Elbow to Pipe				
B09.011.091A	1-53A-02-50L	1-53A-02(3)	NDE-35	PT	SS	14.000		
	Circumferential	OFD-102A-1.3				1.250		
Class A				Elbow to Pipe				
B09.011.092	1-53A-02-54LB	1-53A-02(2)	NDE-600	UT	SS	10.000		Reference Request for Relief 95-GO-03 for calibration block.
	Circumferential	OFD-102A-1.3				1.000		
Class A				Pipe to Elbow				
B09.011.092A	1-53A-02-54LB	1-53A-02(2)	NDE-35	PT	SS	10.000		
	Circumferential	OFD-102A-1.3				1.000		
Class A				Pipe to Elbow				

CATEGORY B-J, Pressure Retaining Welds In Piping

NPS 4 or Larger

ITEM NUMBER	ID NUMBER	ISO/DWG NUMBERS	PROC	INSP REQ	MAT/SCH	DIA/THK	CAL BLOCKS	COMMENTS
B09.011.094	1-53A-02-56L	1-53A-02(2)	NDE-600	UT	SS	10.000		Reference Request for Relief 95-GO-03 for calibration block.
	Circumferential	OFD-102A-1.3				1.000		
Class A				Elbow to Pipe				
B09.011.094A	1-53A-02-56L	1-53A-02(2)	NDE-35	PT	SS	10.000		
	Circumferential	OFD-102A-1.3				1.000		
Class A				Elbow to Pipe				
B09.011.095	1-53A-02-57L	1-53A-02(2)	NDE-600	UT	SS	10.000		Reference Request for Relief 95-GO-03 for calibration block.
	Circumferential	OFD-102A-1.3				1.000		
Class A				Pipe to Elbow				
B09.011.095A	1-53A-02-57L	1-53A-02(2)	NDE-35	PT	SS	10.000		
	Circumferential	OFD-102A-1.3				1.000		
Class A				Pipe to Elbow				
B09.011.096	1-53A-02-59LA	1-53A-02(2)	NDE-600	UT	SS	10.000		Reference Request for Relief 95-GO-03 for calibration block.
	Circumferential	OFD-102A-1.3				1.000		
Class A				Elbow to Pipe				
B09.011.096A	1-53A-02-59LA	1-53A-02(2)	NDE-35	PT	SS	10.000		
	Circumferential	OFD-102A-1.3				1.000		
Class A				Elbow to Pipe				
B09.011.097	1-53A-02-60L	1-53A-02(2)	NDE-600	UT	SS	10.000		Reference Request for Relief 95-GO-03 for calibration block.
	Circumferential	OFD-102A-1.3				1.000		
Class A				Pipe to Elbow				
B09.011.097A	1-53A-02-60L	1-53A-02(2)	NDE-35	PT	SS	10.000		
	Circumferential	OFD-102A-1.3				1.000		
Class A				Pipe to Elbow				

CATEGORY B-J, Pressure Retaining Welds In Piping

NPS 4 or Larger

DUKE ENERGY CORPORATION
QUALITY ASSURANCE TECHNICAL SERVICES
Inservice Inspection Database Management System

Oconee 1

Inservice Inspection Plan for Interval 3 Outage 2

ITEM NUMBER	ID NUMBER	ISO/DWG NUMBERS	PROC	INSP REQ	MAT/SCH	DIA/THK	CAL BLOCKS	COMMENTS
B09.011.105	1-PSL-7	ISI OCN1-015	NDE-600	UT	SS	10.750		Reference Request for Relief 95-GO-03 for calibration block.
	Circumferential				140	1.000		
Class A	Stress weld			Elbow 90¡ to Pipe				
B09.011.105A	1-PSL-7	ISI OCN1-015	NDE-35	PT	SS	10.750		
	Circumferential				140	1.000		
Class A	Stress weld			Elbow 90¡ to Pipe				
B09.011.106	1-PSL-8	ISI OCN1-015	NDE-600	UT	SS	10.750		Reference Request for Relief 95-GO-03 for calibration block.
	Circumferential				140	1.000		
Class A	Stress weld			Elbow 90¡ to Pipe				
B09.011.106A	1-PSL-8	ISI OCN1-015	NDE-35	PT	SS	10.750		
	Circumferential				140	1.000		
Class A	Stress weld			Elbow 90¡ to Pipe				
B09.011.107	1-PSL-9	ISI OCN1-015	NDE-600	UT	SS	10.750		Reference Request for Relief 95-GO-03 for calibration block.
	Circumferential				140	1.000		
Class A	Stress weld			Elbow 90¡ to Pipe				
B09.011.107A	1-PSL-9	ISI OCN1-015	NDE-35	PT	SS	10.750		
	Circumferential				140	1.000		
Class A	Stress weld			Elbow 90¡ to Pipe				
B09.011.110	1LP-140-2A	1LP-140	NDE-600	UT	SS	12.000		Reference Request for Relief 95-GO-03 for calibration block.
	Circumferential	OFD-102A-1.1				1.125		This weld was listed previously as 1-53A-3-2A until iso 1-53A-3 was redrawn.
Class A				Elbow to Elbow				
B09.011.110A	1LP-140-2A	1LP-140	NDE-35	PT	SS	12.000		This weld was listed previously as 1-53A-3-2A until iso 1-53A-3 was redrawn.
	Circumferential	OFD-102A-1.1				1.125		
Class A				Elbow to Elbow				

CATEGORY B-J, Pressure Retaining Welds In Piping

NPS 4 or Larger

ITEM NUMBER	ID NUMBER	ISO/DWG NUMBERS	PROC	INSP REQ	MAT/SCH	DIA/THK	CAL BLOCKS	COMMENTS
B09.011.119	1-PSP-3	ISI OCN1-016	NDE-600	UT	SS	4.000		Reference Request for Relief 95-GO-03 for calibration block.
	Circumferential				120	0.438		
Class A	Stress weld			Elbow to Reducer 4 x 2.5				
B09.011.119A	1-PSP-3	ISI OCN1-016	NDE-35	PT	SS	4.000		
	Circumferential				120	0.438		
Class A	Stress weld			Elbow to Reducer 4 x 2.5				

Total B09.011 Items: 26

CATEGORY B-J, Pressure Retaining Welds In Piping

Less Than NPS 4

DUKE ENERGY CORPORATION
QUALITY ASSURANCE TECHNICAL SERVICES
Inservice Inspection Database Management System

Oconee 1

Inservice Inspection Plan for Interval 3 Outage 2

ITEM NUMBER	ID NUMBER	ISO/DWG NUMBERS	PROC	INSP REQ	MAT/SCH	DIA/THK	CAL BLOCKS	COMMENTS
****** Circumferential Welds ******								
B09.021.001	1-PSP-7	ISI OCN1-016	NDE-35	PT	SS	2.875		
	Circumferential	1-50-03				0.375		
Class A				Tee 2.5 x 1.5 to Pipe				
B09.021.007	1-PSP-23	ISI OCN1-016	NDE-35	PT	SS	2.875		Duke weld no. 1-50-03-19
	Circumferential	1-50-03(1)			160	0.375		
Class A				Elbow to Nozzle NCP 1A1 disch nozzle				
B09.021.019	1RC-225-1	1RC-225	NDE-35	PT	SS	2.500		Weld was previously listed as 1-50-47-1, until Isometric 1-50-47 was redrawn.
	Circumferential				160	0.375		
Class A				Flange to Reducing Insert 2.5x3				
B09.021.020	1RC-225-2	1RC-225	NDE-35	PT	SS	3.000		Weld was previously listed as 1-50-47-2, until Isometric 1-50-47 was redrawn.
	Circumferential					0.438		
Class A				Reducing Insert 2.5x3 to Valve 1RC-4				
B09.021.021	1RC-225-3	1RC-225	NDE-35	PT	SS	3.000		Weld was previously listed as 1-50-47-3, until Isometric 1-50-47 was redrawn.
	Circumferential				160	0.438		
Class A				Valve 1RC-4 to Reducing Insert 2.5x3				
B09.021.022	1RC-225-4	1RC-225	NDE-35	PT	SS	2.500		Flange is at valve 1RC-66. Weld was previously listed as 1-50-47-4, until Isometric 1-50-47 was redrawn.
	Circumferential				160	0.375		
Class A				Flange to Reducer				

Total B09.021 Items: 6

CATEGORY B-J, Pressure Retaining Welds In Piping

Branch Pipe Connection Welds

DUKE ENERGY CORPORATION
QUALITY ASSURANCE TECHNICAL SERVICES
Inservice Inspection Database Management System

Oconee 1

Inservice Inspection Plan for Interval 3 Outage 2

ITEM NUMBER	ID NUMBER	ISO/DWG NUMBERS	PROC	INSP REQ	MAT/SCH	DIA/THK	CAL BLOCKS	COMMENTS
****** NPS 4 or Larger ******								
B09.031.001	1-PHA-16	ISI OCN1-005	NDE-600	UT	CS	23.000		Reference Request for Relief 95-GO-03 for calibration block.
	Branch	B&W 131918E6				2.875		
Class A	Stress weld	OM-201-594		Pipe to Nozzle Surge Nozzle				
B09.031.001A	1-PHA-16	ISI OCN1-005	NDE-25	MT	CS	23.000		
	Circumferential	B&W 131918E6				2.875		
Class A	Stress weld	OM-201-594		Pipe to Nozzle Surge Nozzle				
Total B09.031 Items:	**2**							
****** Less Than NPS 4 ******								
B09.032.004	1-PDA1-12	ISI OCN1-011	NDE-35	PT	SS	2.880		
	Branch	B&W 131925E9				0.375		
Class A	Stress weld			Safe end to Nozzle Pressure spray nozzle				
Total B09.032 Items:	**1**							

CATEGORY B-J, Pressure Retaining Welds In Piping

Socket Welds

DUKE ENERGY CORPORATION
QUALITY ASSURANCE TECHNICAL SERVICES
Inservice Inspection Database Management System

Oconee 1

Inservice Inspection Plan for Interval 3 Outage 2

ITEM NUMBER	ID NUMBER	ISO/DWG NUMBERS	PROC	INSP REQ	MAT/SCH	DIA/THK	CAL BLOCKS	COMMENTS
B09.040.011	1-51A-134A-39	1-51A-134A	NDE-35	PT	SS	2.500		
Socket		OFD-101A-1.1				0.375		
Class A				Pipe to Full Coupling				

Total B09.040 Items:	**1**
Total B09 Items:	**36**

CATEGORY B-L-1, Pressure Retaining Welds In Pump Casings

Pumps

ITEM NUMBER	ID NUMBER	ISO/DWG NUMBERS	PROC	INSP REQ	MAT/SCH	DIA/THK	CAL BLOCKS	COMMENTS
****** Pump Casing Welds ******								
B12.010.001	1-RCP-1A1	OM-201D-35	NDE-12	RT	SS	77.000		Reactor Coolant Pump 1A1 Casing Weld. (Inspect only if pump is disassembled. See request for relief in section 9 of volume 1).
		OM-201-1148				0.000		
Class A		ISI-OCN1-007		Casing to Casing				

Total B12.010 Items: 1

CATEGORY B-L-2, Pump Casings

DUKE ENERGY CORPORATION
QUALITY ASSURANCE TECHNICAL SERVICES
Inservice Inspection Database Management System

Pumps

Oconee 1

Inservice Inspection Plan for Interval 3 Outage 2

ITEM NUMBER	ID NUMBER	ISO/DWG NUMBERS	PROC	INSP REQ	MAT/SCH	DIA/THK	CAL BLOCKS	COMMENTS
****** Pump Casing ******								
B12.020.001	1-RCP-1A1-CASING	OM-201D-35	QAL-14	VT-3	SS	77.000		Reactor Coolant Pump 1A1; Casing Internal Surfaces. (Inspect only if pump is disassembled for maint. purposes, repair, etc).
		OM-201-1148				0.000		
Class A		ISI-OCN1-007		Casing Internal Surfaces to				

Total B12.020 Items: 1

CATEGORY B-M-2, Valve Bodies

Valves

Oconee 1

Inservice Inspection Plan for Interval 3 Outage 2

ITEM NUMBER	ID NUMBER	ISO/DWG NUMBERS	PROC	INSP REQ	MAT/SCH	DIA/THK	CAL BLOCKS	COMMENTS
****** Valve Body, Exceeding NPS 4 ******								
B12.050.004	1-53A-CF-14	OM-245-001	QAL-14	VT-3	SS	14.250		B- Side Core Flood (Y- Axis) Valve Body - CF-14. (Examine if valve is disassembled for maintenance or repair).
		OFD-102A-1.3				0.000		
Class A				Valve Internal Surfaces to				
B12.050.006	1-53A-LP-2	OM-201-165	QAL-14	VT-3	SS	15.250		Decay Heat Suction from Reactor Coolant System. LP-2 Valve Body. (Inspect only if valve is disassembled for maint. purposes, valve repair, etc).
		OFD-102A-1.1				0.000		
Class A				Valve Internal Surfaces to				

Total B12.050 Items: 2

Total B12 Items: 4

CATEGORY B-N-1, Interior of Reactor Vessel

DUKE ENERGY CORPORATION
QUALITY ASSURANCE TECHNICAL SERVICES
Inservice Inspection Database Management System

Reactor Vessel

Oconee 1

Inservice Inspection Plan for Interval 3 Outage 2

ITEM NUMBER	ID NUMBER	ISO/DWG NUMBERS	PROC	INSP REQ	MAT/SCH	DIA/THK	CAL BLOCKS	COMMENTS
****** Vessel Interior ******								
B13.010.001	1-RPV-INT-SURFACE	OM-201-1008	QAL-14	VT-3	SS	0.000		Reactor Vessel - Interior Surfaces of Vessel.
		ISI OCN1-001				0.000		
Class A				Interior Surfaces to				

Total B13.010 Items: 1

Total B13 Items: 1

CATEGORY C-A, Pressure Retaining Welds In Pressure Vessels

Shell Circumferential Welds

DUKE ENERGY CORPORATION
QUALITY ASSURANCE TECHNICAL SERVICES
Inservice Inspection Database Management System

Oconee 1

Inservice Inspection Plan for Interval 3 Outage 2

ITEM NUMBER	ID NUMBER	ISO/DWG NUMBERS	PROC	INSP REQ	MAT/SCH	DIA/THK	CAL BLOCKS	COMMENTS
C01.010.001	1-SGA-WG8-2	ISI-OCN1-003	NDE-620	UT	CS	138.000	40339	Steam Generator 1A Shell Pc. 02 to Nozzle Belt Pc. 03.
	Circumferential	OM-201-1873	NDE-640			4.188		
Class B				SGA Shell to SGA Nozzle Belt				

Total C01.010 Items: 1

CATEGORY C-A, Pressure Retaining Welds In Pressure Vessels

Head Circumferential Welds

DUKE ENERGY CORPORATION
QUALITY ASSURANCE TECHNICAL SERVICES
Inservice Inspection Database Management System

Oconee 1

Inservice Inspection Plan for Interval 3 Outage 2

ITEM NUMBER	ID NUMBER	ISO/DWG NUMBERS	PROC	INSP REQ	MAT/SCH	DIA/THK	CAL BLOCKS	COMMENTS
C01.020.002	1-LPCB-SH-1	OM-201-0286-001	NDE-630	UT	SS	0.000	40385	LP Cooler 1B Stainless Steel Shell to Shell
	Circumferential	OM-201-3131				0.750		
Class B				Shell to Shell				
C01.020.003	1-LPCB-SH-2	OM-201-0286-001	NDE-630	UT	SS	0.000	40385	LP Cooler 1B Stainless Steel Blind Flange to Shell
	Circumferential	OM-201-3131				0.750		
Class B				Flange to Shell				

Total C01.020 Items: 2

Total C01 Items: 3

CATEGORY C-B, Pressure Retaining Nozzle Welds In Vessels

Nozzles With Reinforcing Plate In Vessels > 1/2 in. Nominal Thickness

DUKE ENERGY CORPORATION
QUALITY ASSURANCE TECHNICAL SERVICES
Inservice Inspection Database Management System

Oconee 1

Inservice Inspection Plan for Interval 3 Outage 2

ITEM NUMBER	ID NUMBER	ISO/DWG NUMBERS	PROC	INSP REQ	MAT/SCH	DIA/THK	CAL BLOCKS	COMMENTS
****** Nozzle-to-Shell (or Head) Welds When Inside of Vessel Is Inaccessible ******								
C02.033.001	1-BWST-OUTLET	OM-12010-80	QAL-15	VT-2	SS	0.000		14" Outlet Nozzle W/Reinf. Pad
Circumferential				.		0.500		Borated Water Storage Tank
Class B				Nozzle to Shell				
C02.033.002	1-53B-LPA-OUTLET	OM 201-286	QAL-15	VT-2	SS	16.000		16" •OUTLET NOZZLE W/REINF. PAD LOW
Branch				.		0.750		PRESSURE INJECTION COOLER 1A
Class B				Nozzle to Shell				
C02.033.003	1-53B-LPA-INLET	OM 201-286	QAL-15	VT-2	SS	16.000		16" INLET NOZZLE W/REINF. PAD LOW
Branch				.		0.750		PRESSURE INJECTION COOLER 1A
Class B				Nozzle to Shell				

Total C02.033 Items: 3

Total C02 Items: 3

CATEGORY C-C, Integral Attachments For Vessels, Piping, Pumps, And Valves

Pressure Vessels

ITEM NUMBER	ID NUMBER	ISO/DWG NUMBERS	PROC	INSP REQ	MAT/SCH	DIA/THK	CAL BLOCKS	COMMENTS
****** Integrally Welded Attachments ******								
C03.010.001	1-SGA-WG84-XY	OM-201-76 OM-201-0006	NDE-25	MT	CS	0.000 1.000		Steam Generator 1A Feedwater Header Support Attachment Pc. 152/153 to Pc. 3 X-Y Quadrant Nearest to X- Axis.
Class B				Attachment to Shell				
C03.010.002	1-SGA-WG84-YX	OM-201-76 OM-201-0006	NDE-25	MT	CS	0.000 1.000		Steam Generator 1A Feedwater Header Support Attachment Pc. 152/153 to Pc. 3 X-Y Quadrant Nearest to Y- Axis.
Class B				Attachment to Shell				

Total C03.010 Items: 2

CATEGORY C-C, Integral Attachments For Vessels, Piping, Pumps, And Valves

Piping

DUKE ENERGY CORPORATION
QUALITY ASSURANCE TECHNICAL SERVICES
Inservice Inspection Database Management System

Oconee 1

Inservice Inspection Plan for Interval 3 Outage 2

ITEM NUMBER	ID NUMBER	ISO/DWG NUMBERS	PROC	INSP REQ	MAT/SCH	DIA/THK	CAL BLOCKS	COMMENTS
**** Integrally Welded Attachments ****								
C03.020.002	1-01A-H12	0-550	NDE-25	MT	CS	34.000		Calculaton No. OSC-320;
	Rigid Restraint	OFD-122A-1.1				0.750		Problem No. 1-01-01;SHT.1 OF 3; System 01A;PAGE# 131.1; MAIN STEAM PIPING
Class B								
C03.020.014	1-01A-R10	0-550	NDE-25	MT	CS	34.000		Calculaton No. OSC-320;
	Rigid Restraint	OFD-122A-1.1				1.000		Problem No. 1-01-01;SHT.2 OF 3; System 01A;PAGE# 132; MAIN STEAM PIPING
Class B								
C03.020.021	1-14-H19A	0-479A	NDE-25	MT	CS	8.000		Problem No;1-14-13 Sht.0-492A-2
	Rigid Restraint	OFD-124B-1.2			.	1.000		Low Pressure Service Water Emergency Cooler 1A Inlet
Class B		1-14-13						
C03.020.022	1-14-H19D	0-479A	NDE-25	MT	CS	8.000		Problem No;1-14-17
	Rigid Restraint	OFD-124B-1.2				1.000		Sht. 0-492A-5
Class B		1-14-17						Low Pressure Service Water Emergency Cooler 1A Outlet
C03.020.025	1-14-H22A	0-480A	NDE-25	MT	CS	8.000		Problem No;1-14-13 Sht.0-492A-2
	Rigid Restraint	OFD-124B-1.2			.	1.000		Low Pressure Service Water Emergency Cooler 1A Inlet
Class B		1-14-13						
C03.020.049	1-53B-H65	3-0-444	NDE-35	PT	SS	8.000		Calculaton No. OS-406;
	Spring Hgr	OFD-102A-1.1				1.500		Problem No. 1-53-03;SHT.1 OF 1 PAGE#71; SYSTEM 53B; DECAY HEAT PUMP 1B & 1C TO DECAY HT COOLER 1B
Class B								
C03.020.051	1-53B-R13	5-0-444	NDE-35	PT	SS	10.000		Calculation Number OS-408 Sheet 2 of 3; Problem
	Rigid Restraint	OFD-102A-1.2				1.000		No. 1-53-02 . System 53B LPI Injection and Decay Heat Removal
Class B								
C03.020.055	1-53B-R7	5-0-435	NDE-35	PT	SS	10.000		Calculation Number OS-408 Sheet 1 of 3; Problem
	Rigid Restraint	OFD-102A-1.2				0.750		1-53-02 . System 53B.LPI Injection and Decay Heat Removal
Class B								

CATEGORY C-C, Integral Attachments For Vessels, Piping, Pumps, And Valves

Piping

ITEM NUMBER	ID NUMBER	ISO/DWG NUMBERS	PROC	INSP REQ	MAT/SCH	DIA/THK	CAL BLOCKS	COMMENTS
C03.020.075	1-51-SR15	0-436H	NDE-35	PT	NA	6.000		Integral Attachment
	Rigid Restraint	OFD-101A-1.2				1.000		Inspect with F01.021.025
Class B								
C03.020.078	1-51-H57	0-436H	NDE-35	PT	NA	4.000		Integral Attachment
	Rigid Restraint	OFD-101A-1.1				0.750		Inspect with F01.020.044
Class B								
C03.020.079	1-51-SR10	0-436D	NDE-35	PT	NA	4.000		Integral Attachment
	Rigid Restraint	OFD-101A-1.1				0.750		Inspect with F01.020.045
Class B								
C03.020.084	1-51-SR7	0-436D	NDE-35	PT	NA	4.000		Integral Attachment
	Rigid Restraint	OFD-101A-1.1				0.750		Inspect with F01.020.050
Class B								

Total C03.020 Items: 12

Total C03 Items: 14

DUKE ENERGY CORPORATION
QUALITY ASSURANCE TECHNICAL SERVICES
Inservice Inspection Database Management System

CATEGORY C-F-1, Pressure Retaining Welds In Austenitic SS or High Alloy Piping

Piping Welds >= 3/8 in. Nominal Wall Thickness for Piping > NPS 4

Oconee 1

Inservice Inspection Plan for Interval 3 Outage 2

ITEM NUMBER	ID NUMBER	ISO/DWG NUMBERS	PROC	INSP REQ	MAT/SCH	DIA/THK	CAL BLOCKS	COMMENTS
****** Circumferential Weld ******								
C05.011.004	1-53A-01-31LD	1-53A-01(3)	NDE-600	UT	SS	10.000		Inspecting this weld in order to meet 7.5% of system 53B. Borrowing from system 53A category C5.11. Reference Request for Relief 95-GO-03 for calibration block.
Circumferential		OFD-102A-1.2				1.125		
Class B				Pipe to Pipe				
C05.011.004A	1-53A-01-31LD	1-53A-01(3)	NDE-35	PT	SS	10.000		Inspecting this weld in order to meet 7.5% of system 53B. Borrowing from system 53A category C5.11.
Circumferential		OFD-102A-1.2				1.125		
Class B				Pipe to Pipe				

Total C05.011 Items: 2

CATEGORY C-F-1, Pressure Retaining Welds In Austenitic SS or High Alloy Piping

Piping Welds > 1/5 in. Nom Wall For Piping >= NPS 2 And <= NPS 4

ITEM NUMBER	ID NUMBER	ISO/DWG NUMBERS	PROC	INSP REQ	MAT/SCH	DIA/THK	CAL BLOCKS	COMMENTS
****** Circumferential Weld ******								
C05.021.005	1HP-192-8	1HP-192	NDE-600	UT	SS	4.000		Reference Request for Relief 95-GO-03 for calibration block.
Class B	Circumferential	OFD-101A-1.4		Elbow to Pipe		0.531		
C05.021.005A	1HP-192-8	1HP-192	NDE-35	PT	SS	4.000		
Class B	Circumferential	OFD-101A-1.4		Elbow to Pipe		0.531		
C05.021.008	1HP-192-22	1HP-192	NDE-600	UT	SS	4.000		Reference Request for Relief 95-GO-03 for calibration block.
Class B	Circumferential	OFD-101A-1.4		Pipe to Elbow		0.674		
C05.021.008A	1HP-192-22	1HP-192	NDE-35	PT	SS	4.000		
Class B	Circumferential	OFD-101A-1.4		Elbow to Pipe		0.674		
C05.021.013	1-51A-123-16	1-51A-123	NDE-600	UT	SS	4.000		Reference Request for Relief 95-GO-03 for calibration block.
Class B	Circumferential	OFD-101A-1.4		Elbow to Pipe		0.531		
C05.021.013A	1-51A-123-16	1-51A-123	NDE-35	PT	SS	4.000		
Class B	Circumferential	OFD-101A-1.4		Elbow to Pipe		0.531		
C05.021.019	1-51A-124-12	1-51A-124	NDE-600	UT	SS	4.000		Reference Request for Relief 95-GO-03 for calibration block.
Class B	Circumferential	OFD-101A-1.3		Elbow to Pipe		0.531		
C05.021.019A	1-51A-124-12	1-51A-124	NDE-35	PT	SS	4.000		
Class B	Circumferential	OFD-101A-1.3		Elbow to Pipe		0.531		

CATEGORY C-F-1, Pressure Retaining Welds In Austenitic SS or High Alloy Piping

Piping Welds > 1/5 in. Nom Wall For Piping >= NPS 2 And <= NPS 4

ITEM NUMBER	ID NUMBER	ISO/DWG NUMBERS	PROC	INSP REQ	MAT/SCH	DIA/THK	CAL BLOCKS	COMMENTS
C05.021.025	1HP-178-15	1HP-178	NDE-600	UT	SS	4.000		Reference Request for Relief 95-GO-03 for calibration block.
Circumferential		OFD-101A-1.4				0.531		
Class B				Elbow to Pipe				
C05.021.025A	1HP-178-15	1HP-178	NDE-35	PT	SS	4.000		
Circumferential		OFD-101A-1.4				0.531		
Class B				Elbow to Pipe				
C05.021.031	1HP-200-20	1HP-200	NDE-600	UT	SS	4.000		Reference Request for Relief 95-GO-03 for calibration block.
Circumferential		OFD-101A-1.1				0.674		This weld was previously listed as weld 1-51A-14-20 until the iso was redrawn.1
Class B				Elbow to Reducer				
C05.021.031A	1HP-200-20	1HP-200	NDE-35	PT	SS	4.000		
Circumferential		OFD-101A-1.1				0.674		
Class B				Elbow to Reducer				
C05.021.035	1HP-180-89E	1HP-180	NDE-600	UT	SS	2.500		Reference Request for Relief 95-GO-03 for calibration block.
Circumferential		OFD-101A-1.1				0.375		
Class B				Elbow to Pipe				
C05.021.035A	1HP-180-89E	1HP-180	NDE-35	PT	SS	2.500		
Circumferential		OFD-101A-1.1				0.375		
Class B				Elbow to Pipe				
C05.021.040	1-51A-01-85A	1-51A-01(3)	NDE-600	UT	SS	4.000		Inspecting this weld in order to meet 7.5% of system 53B. Borrowing from system 51A category C5.21. Reference Request for Relief 95-GO-03 for calibration block.
Circumferential		OFD-101A-1.3				0.531		
Class B				Pipe to Elbow				
C05.021.040A	1-51A-01-85A	1-51A-01(3)	NDE-35	PT	SS	4.000		
Circumferential		OFD-101A-1.3				0.531		
Class B				Pipe to Elbow				

CATEGORY C-F-1, Pressure Retaining Welds In Austenitic SS or High Alloy Piping

Piping Welds > 1/5 in. Nom Wall For Piping >= NPS 2 And <= NPS 4

DUKE ENERGY CORPORATION
QUALITY ASSURANCE TECHNICAL SERVICES
Inservice Inspection Database Management System

Oconee 1

Inservice Inspection Plan for Interval 3 Outage 2

ITEM NUMBER	ID NUMBER	ISO/DWG NUMBERS	PROC	INSP REQ	MAT/SCH	DIA/THK	CAL BLOCKS	COMMENTS
C05.021.046 Class B	1-51A-01-98A Circumferential	1-51A-01(4) OFD-101A-1.3	NDE-600	UT Tee to Pipe	SS	4.000 0.531		Inspecting this weld in order to meet 7.5% of system 53B. Borrowing from system 51A category C5.21. Reference Request for Relief 95-GO-03 for calibration block.
C05.021.046A Class B	1-51A-01-98A Circumferential	1-51A-01(4) OFD-101A-1.3	NDE-35	PT Tee to Pipe	SS	4.000 0.531		Inspecting this weld in order to meet 7.5% of system 53B. Borrowing from system 51A category C5.21
C05.021.052 Class B	1-51A-02-17B Circumferential	1-51A-02 OFD-101A-1.4	NDE-600	UT Tee to Elbow	SS	4.000 0.531		Inspecting this weld in order to meet 7.5% of system 53B. Borrowing from system 51A category C5.21. Reference Request for Relief 95-GO-03 for calibration block.
C05.021.052A Class B	1-51A-02-17B Circumferential	1-51A-02 OFD-101A-1.4	NDE-35	PT Tee to Elbow	SS	4.000 0.531		Inspecting this weld in order to meet 7.5% of system 53B. Borrowing from system 51A category C5.21
C05.021.062 Class B	1HP-193-11 Circumferential	1HP-193 OFD-101A-1.4	NDE-600	UT Pipe to Tee	SS	4.000 0.531		Inspecting this weld in order to meet 7.5% of system 54A. Borrowing from system 51A category C5.21. Reference Request for Relief 95-GO-03 for calibration block.
C05.021.062A Class B	1HP-193-11 Circumferential	1HP-193 OFD-101A-1.4	NDE-35	PT Pipe to Tee	SS	4.000 0.531		Inspecting this weld in order to meet 7.5% of system 54A. Borrowing from system 51A category C5.21
C05.021.075 Class B	1-51A-01-93A Circumferential	1-51A-01(3) OFD-101A-1.3	NDE-600	UT Pipe to Elbow	SS	4.000 0.531		Inspecting this weld in order to meet 7.5% of system 56. Borrowing from system 51A category C5.21. Reference Request for Relief 95-GO-03 for calibration block.
C05.021.075A Class B	1-51A-01-93A Circumferential	1-51A-01(3) OFD-101A-1.3	NDE-35	PT Pipe to Elbow	SS	4.000 0.531		Inspecting this weld in order to meet 7.5% of system 56. Borrowing from system 51A category C5.21

CATEGORY C-F-1, Pressure Retaining Welds In Austenitic SS or High Alloy Piping

Piping Welds > 1/5 in. Nom Wall For Piping >= NPS 2 And <= NPS 4

DUKE ENERGY CORPORATION
QUALITY ASSURANCE TECHNICAL SERVICES
Inservice Inspection Database Management System

Oconee 1

Inservice Inspection Plan for Interval 3 Outage 2

ITEM NUMBER	ID NUMBER	ISO/DWG NUMBERS	PROC	INSP REQ	MAT/SCH	DIA/THK	CAL BLOCKS	COMMENTS
C05.021.079 Class B	1HP-282-75A Circumferential	1HP-282 OFD-101A-1.3	NDE-600	UT Tee to Pipe	SS	4.000 0.531		Reference Request for Relief 95-GO-03 for calibration block. Inspecting this weld in order to meet 7.5% of system 51B. Borrowing from system 51A Category C5.21 This weld was listed previously as 1-51A-01-75A until iso 1-51A-01 part 3 was redrawn.
C05.021.079A Class B	1HP-282-75A Circumferential	1HP-282 OFD-101A-1.3	NDE-35	PT Tee to Pipe	SS	4.000 0.531		Inspecting this weld in order to meet 7.5% of system 51B. Borrowing from system 51A Category C5.21 This weld was listed previously as 1-51A-01-75A until iso 1-51A-01 part 3 was redrawn.
C05.021.085 Class B	1-51A-02-12B Circumferential	1-51A-02 OFD-101A-1.4	NDE-600	UT Elbow to Pipe	SS	4.000 0.531		Reference Request for Relief 95-GO-03 for calibration block. Inspecting this weld in order to meet 7.5% of system 51B. Borrowing from system 51A Category C5.21
C05.021.085A Class B	1-51A-02-12B Circumferential	1-51A-02 OFD-101A-1.4	NDE-35	PT Elbow to Pipe	SS	4.000 0.531		Inspecting this weld in order to meet 7.5% of system 51B. Borrowing from system 51A Category C5.21
C05.021.091 Class B	1-51A-02-51B Circumferential	1-51A-02 OFD-101A-1.4	NDE-12	RT Valve 1HP-29 to Tee	SS	4.000 0.531		Reference Request for Relief 95-GO-03 for calibration block. Inspecting this weld in order to meet 7.5% of system 51B. Borrowing from system 51A Category C5.21. RT is being used in lieu of UT for this weld. UT inspection of this weld will not lend itself to achieving greater than 90% examination coverage.
C05.021.091A Class B	1-51A-02-51B Circumferential	1-51A-02 OFD-101A-1.4	NDE-35	PT Valve 1HP-29 to Tee	SS	4.000 0.531		Inspecting this weld in order to meet 7.5% of system 51B. Borrowing from system 51A Category C5.21
C05.021.097 Class B	1HP-179-118 Circumferential	1HP-179 OFD-101A-1.1	NDE-600	UT Elbow to Reducer	SS	2.500 0.552		Reference Request for Relief 95-GO-03 for calibration block. Inspecting this weld in order to meet 7.5% of system 51B. Borrowing from system 51A Category C5.21

CATEGORY C-F-1, Pressure Retaining Welds In Austenitic SS or High Alloy Piping

Piping Welds > 1/5 in. Nom Wall For Piping >= NPS 2 And <= NPS 4

ITEM NUMBER	ID NUMBER	ISO/DWG NUMBERS	PROC	INSP REQ	MAT/SCH	DIA/THK	CAL BLOCKS	COMMENTS
C05.021.097A	1HP-179-118	1HP-179	NDE-35	PT	SS	2.500		Inspecting this weld in order to meet 7.5% of system 51B. Borrowing from system 51A Category C5.21
Circumferential		OFD-101A-1.1				0.552		
Class B				Elbow to Reducer				
C05.021.107	1-51A-01-100A	1-51A-01(4)	NDE-600	UT	SS	3.000		Reference Request for Relief 95-GO-03 for calibration block.
Circumferential		OFD-101A-1.3				0.438		
Class B				Pipe to Elbow				
C05.021.107A	1-51A-01-100A	1-51A-01(4)	NDE-35	PT	SS	3.000		
Circumferential		OFD-101A-1.3				0.438		
Class B				Pipe to Elbow				

Total C05.021 Items: 34

CATEGORY C-F-1, Pressure Retaining Welds In Austenitic SS or High Alloy Piping

Pipe Branch Connections of Branch Piping >= NPS 2

ITEM NUMBER	ID NUMBER	ISO/DWG NUMBERS	PROC	INSP REQ	MAT/SCH	DIA/THK	CAL BLOCKS	COMMENTS
****** Circumferential Weld ******								
C05.041.003	1LP-107-7	1LP-107	NDE-35	PT	SS	8.000		This weld was previously listed as 1-53B-01-101B before the Iso was redrawn.
Branch		OFD-102A-1.2				0.250		
Class B				Pipe to Pipe				
C05.041.004	1LP-107-7Z	1LP-107	NDE-35	PT	SS	8.000		Reinforcing collar at weld 101B. This weld was previously listed as 1-53B-01-101BA before the Iso was redrawn.
Branch		OFD-102A-1.2				0.250		
Class B				Reinforcing collar to Pipe				
C05.041.013	1-53B-06-26KC	1-53B-06(2)	NDE-35	PT	SS	6.000		
Branch		OFD-102A-1.2				0.134		
Class B				Pipe to Pipe				
C05.041.014	1-53B-06-26KI	1-53B-06(2)	NDE-35	PT	SS	6.000		
Branch		OFD-102A-1.2				0.134		
Class B				Pipe to Pipe				
C05.041.026	1LP-94-15	1LP-94	NDE-35	PT	SS	6.000		
Branch		OFD-102A-1.2				0.280		
Class B				Pipe to 10x6 weldolet				

Total C05.041 Items: 5

CATEGORY C-F-2, Pressure Retaining Welds In Carbon Or Low Alloy Steel Piping

Piping Welds ³ 3/8 in. Nominal Wall Thickness for Piping > NPS 4

ITEM NUMBER	ID NUMBER	ISO/DWG NUMBERS	PROC	INSP REQ	MAT/SCH	DIA/THK	CAL BLOCKS	COMMENTS
****** Circumferential Weld ******								
C05.051.001	1MS-070-1B	1MS-070	NDE-600	UT	CS	36.000		Reference Request for Relief 95-GO-03 for calibration block.
	Circumferential	OFD-122A-1.1				1.164		
Class B				Pipe to Pipe				
C05.051.001A	1MS-070-1B	1MS-070	NDE-25	MT	CS	36.000		
	Circumferential	OFD-122A-1.1				1.164		
Class B				Pipe to Pipe				
C05.051.013	1MS-069-29B	1MS-069	NDE-600	UT	CS	24.000		Reference Request for Relief 95-GO-03 for calibration block.
	Circumferential	OFD-122A-1.1				0.969		
Class B	Term end			Reducer to Nozzle SG 1B				
C05.051.013A	1MS-069-29B	1MS-069	NDE-25	MT	CS	24.000		
	Circumferential	OFD-122A-1.1				0.969		
Class B	Term end			Reducer to Nozzle SG 1B				
C05.051.018	1MS-064-16	1MS-064	NDE-600	UT	CS	6.000		Reference Request for Relief 95-GO-03 for calibration block.
	Circumferential	OFD-122A-1.2				0.432		This weld was previously listed as 1-01A-01-27C before the Iso was redrawn.
Class B				Tee to Pipe				
C05.051.018A	1MS-064-16	1MS-064	NDE-25	MT	CS	6.000		This weld was previously listed as 1-01A-01-27C before the Iso was redrawn.
	Circumferential	OFD-122A-1.2				0.432		
Class B				Tee to Pipe				
C05.051.028	1-FWD83-A	1-03-3(1)	NDE-600	UT	CS	24.000		Grinnell subassembly FWD-83. Reference Request for Relief 95-GO-03 for calibration block.
	Circumferential					1.218		
Class B				Pipe to Elbow				
C05.051.028A	1-FWD83-A	1-03-3(1)	NDE-25	MT	CS	24.000		Grinnell subassembly FWD-83
	Circumferential					1.218		
Class B				Pipe to Elbow				

CATEGORY C-F-2, Pressure Retaining Welds In Carbon Or Low Alloy Steel Piping

Piping Welds ³ 3/8 in. Nominal Wall Thickness for Piping > NPS 4

ITEM NUMBER	ID NUMBER	ISO/DWG NUMBERS	PROC	INSP REQ	MAT/SCH	DIA/THK	CAL BLOCKS	COMMENTS
C05.051.035	1-03-3-30B	1-03-3(1)	NDE-600	UT	CS	14.000		Reference Request for Relief 95-GO-03 for calibration block.
Circumferential		OFD-121B-1.3				0.750		
Class B				Elbow to Reducer				
C05.051.035A	1-03-3-30B	1-03-3(1)	NDE-25	MT	CS	14.000		
Circumferential		OFD-121B-1.3				0.750		
Class B				Elbow to Reducer				
C05.051.042	1LPS-345-21	1LPS-345	NDE-600	UT	CS	8.000		Reference Request for Relief 95-GO-03 for calibration block.
Circumferential		OFD-124B-1.2				0.500		This weld was listed previously as 1-LPSW-345-21 until iso 1-LPSW-345 was redrawn.
Class B				Elbow to Pipe				
C05.051.042A	1LPS-345-21	1LPS-345	NDE-25	MT	CS	8.000		This weld was listed previously as 1-LPSW-345-21 until iso 1-LPSW-345 was redrawn.
Circumferential		OFD-124B-1.2				0.500		
Class B				Elbow to Pipe				
C05.051.046	1-LPSW-346-17	1-LPSW-346	NDE-600	UT	CS	8.000		Reference Request for Relief 95-GO-03 for calibration block.
Circumferential		OFD-124B-1.2				0.500		
Class B				Pipe to Flange				
C05.051.046A	1-LPSW-346-17	1-LPSW-346	NDE-25	MT	CS	8.000		
Circumferential		OFD-124B-1.2				0.500		
Class B				Pipe to Flange				

Total C05.051 Items: 14

Total C05 Items: 55

CATEGORY D-B, Systems In Support Of ECC, CHR, Atmos. Cleanup, And Reactor RHR

Integral Attachment

DUKE ENERGY CORPORATION
QUALITY ASSURANCE TECHNICAL SERVICES
Inservice Inspection Database Management System

Oconee 1

Inservice Inspection Plan for Interval 3 Outage 2

ITEM NUMBER	ID NUMBER	ISO/DWG NUMBERS	PROC	INSP REQ	MAT/SCH	DIA/THK	CAL BLOCKS	COMMENTS
****** Component Supports and Restraints ******								
D02.020.001	1-01A-DE005	0-403C	QAL-14	VT-3	NA	6.000		Calculation Number OSC-325 Sheet 1 of 3; Problem 1-01-06 Page 88. System 01A Steam Supply to Emergency Feedwater Pump Turbine.
Class C	Rigid Restraint	OFD-122A-1.4				0.750		
D02.020.002	1-01A-JEJ-1401	0-400A	QAL-14	VT-3	NA	6.000		Calculation Number OSC-325 Sheet 3 of 3; Problem 1-01-06 Page 91. System 01A Steam Supply to Emergency Feedwater Pump Turbine.
Class C	Rigid Restraint	OFD-122A-1.4				0.250		
D02.020.015	1-03A-H155	1-0-400A	QAL-14	VT-3	NA	6.000		Calculaton No. OSC-1215 Page 21; Problem No.1- 03A-12. System 03A EMER. FEED.WTR. DISCHARGE
Class C	Rigid Restraint	OFD-121D-1.1		SS to		0.216		
D02.020.016	1-03A-H159	1-0-400A	QAL-14	VT-3	NA	6.000		Calculaton No. OSC-1215 Page 21; Problem No.1- 03A-12. System 03A EMER. FEED.WTR. DISCHARGE
Class C	Rigid Restraint	OFD-121D-1.1				0.500		
D02.020.021	1-03A-H33	1-0-400A	QAL-14	VT-3	NA	6.000		Calculaton No. OSC-1215 Page 21; Problem No.1- 03A-12. System 03A EMER. FEED.WTR. DISCHARGE
Class C	Rigid Restraint	OFD-121D-1.1				0.500		
D02.020.033	1-03A-H8	1-0-439C	QAL-14	VT-3	NA	6.000		Calculaton No. OSC-1224-19 Page 27;Problem No.1- 03A-13. System 03A AUX. SERVICE WATER PIPE
Class C	Rigid Restraint	OFD-121D-1.1				0.250		
D02.020.034	1-03A-H82	1-0-439B	QAL-14	VT-3	NA	6.000		Calculaton No. OSC-1224-19 Page 27;Problem No.1- 03A-13. System 03A AUX. SERVICE WATER PIPE
Class C	Rigid Restraint	OFD-121D-1.1				0.500		
D02.020.035	1-03A-H9	1-0-439C	QAL-14	VT-3	NA	6.000		Calculaton No. OSC-1224-19 Page 27;Problem No.1- 03A-13. System 03A AUX. SERVICE WATER PIPE
Class C	Rigid Restraint	OFD-121D-1.1				0.250		

CATEGORY D-B, Systems In Support Of ECC, CHR, Atmos. Cleanup, And Reactor RHR

Integral Attachment

DUKE ENERGY CORPORATION
QUALITY ASSURANCE TECHNICAL SERVICES
Inservice Inspection Database Management System

Oconee 1

Inservice Inspection Plan for Interval 3 Outage 2

ITEM NUMBER	ID NUMBER	ISO/DWG NUMBERS	PROC	INSP REQ	MAT/SCH	DIA/THK	CAL BLOCKS	COMMENTS
D02.020.036	1-03A-R37	1-0-400A	QAL-14	VT-3	NA	6.000		Calculaton No. OSC-343
	Rigid Restraint	OFD-121D-1.1				1.000		Page 49; Problem No. 03A-10 . System 03A
Class C								6"EMER. FEED.WTR.
D02.020.045	1-03A-SR31	1-0-401B	QAL-14	VT-3	NA	6.000		Calculaton No. OSC-343
	Rigid Restraint	OFD-121D-1.1				1.000		Page 50; Problem No. 03A-10 . System 03A
Class C								6"EMER. FEED.WTR.
D02.020.047	1-03A-SR40	1-0-439A	QAL-14	VT-3	NA	6.000		Calculaton No. OSC-1224-19
	Rigid Restraint	OFD-121D-1.1				1.000		Page 27;Problem No.1- 03A-13.
Class C								System 03A
								AUX. SERVICE WATER PIPE
D02.020.048	1-03A-SR46	1-0-401A	QAL-14	VT-3	NA	6.000		Calculaton No. OSC-339
	Rigid Restraint	OFD-121D-1.1				1.000		Page 80; Problem No. 1-03A-5 . System 03A
Class C								6"EMER. F.WTR. TO 24"MAIN F.WTR.
D02.020.063	1-03A-SR98	1-0-439C	QAL-14	VT-3	NA	6.000		Calculaton No. OSC-1224-19
	Rigid Restraint	OFD-121D-1.1				1.000		Page 27;Problem No.1- 03A-13.
Class C								System 03A
								AUX. SERVICE WATER PIPE
D02.020.071	1-07A-SR20	0-400B	QAL-14	VT-3	NA	30.000		Calculaton No. OSC-361
	Rigid Restraint	OFD-121A-1.7				0.375		Page 88.1;
Class C				SS to				Problem No.1-07A-01
								System 07A
D02.020.076	1-14B-ASR21	0-1436C	QAL-14	VT-3	NA	10.000		Calculation No. OSC-394, page 77; Problem No.
	Rigid Restraint	OFD-121D-1.2			.	1.000		4-14-3, sh. 2. Auxiliary Feed water Lines from
Class C		4-14-3						Auxiliary Sevice Water Pump

CATEGORY D-B, Systems In Support Of ECC, CHR, Atmos. Cleanup, And Reactor RHR

Integral Attachment

ITEM NUMBER	ID NUMBER	ISO/DWG NUMBERS	PROC	INSP REQ	MAT/SCH	DIA/THK	CAL BLOCKS	COMMENTS
D02.020.079	1-14B-DE011	0-439B	QAL-14	VT-3	NA	8.000		File OSC-1341 pg. 100. Low Pressure Service Water Suppy from Penetration 21, 30, 31 and 32 to Coolers 1A & 1B.
	Rigid Restraint	OFD-124B-1.2				0.237		
Class C		1-14-06						
D02.020.085	1-14B-H25	0-436F	QAL-14	VT-3	NA	16.000		Calculaton No. OSC-1541; Problem No. 1-14-06 SHT. 2 OF 3. System 14B;PAGE 101; LPSW SUPPLY TO RB COMPONENT COOLERS & LP COOLERS 1A & 1B
	Spring Hgr	OFD-124B-1.1				0.258		
Class C								
D02.020.090	1-14B-SR34	0-400B	QAL-14	VT-3	NA	12.000		Calculation No. OSC-1541 Page 101, problem no. 1-14-06 page 2 of 3. Low Pressure Service Water
	Rigid Restraint	OFD-124A-1.1				0.875		
Class C								
D02.020.096	1-14B-SR45	0-439B	QAL-14	VT-3	NA	8.000		File OSC-376 pg. 78. Low Pressure Service Water Discharge I. E. B. 79-14, System 14B, sheet 1 of 3
	Rigid Restraint	OFD-124B-1.2				0.258		
Class C		1-14-04						

Total D02.020 Items: 19

CATEGORY D-B, Systems In Support Of ECC, CHR, Atmos. Cleanup, And Reactor RHR

Integral Attachment

DUKE ENERGY CORPORATION
QUALITY ASSURANCE TECHNICAL SERVICES
Inservice Inspection Database Management System

Oconee 1

Inservice Inspection Plan for Interval 3 Outage 2

ITEM NUMBER	ID NUMBER	ISO/DWG NUMBERS	PROC	INSP REQ	MAT/SCH	DIA/THK	CAL BLOCKS	COMMENTS
****** Mechanical and Hydraulic Snubbers ******								
D02.030.001	1-01A-R11	4-2-0-400A	QAL-14	VT-3	NA	6.000		Calculation Number OSC-325 Sheet 3 of 3; Problem 1-01-06 Page 91. System 01A Steam Supply to Emergency Feedwater Pump Turbine. Inspect with Item No. F01.050.089.
	Mech Snubber	OFD-122A-1.4				0.250		
Class C								

Total D02.030 Items: 1

CATEGORY D-B, Systems In Support Of ECC, CHR, Atmos. Cleanup, And Reactor RHR

Integral Attachment

ITEM NUMBER	ID NUMBER	ISO/DWG NUMBERS	PROC	INSP REQ	MAT/SCH	DIA/THK	CAL BLOCKS	COMMENTS
****** Spring Type Supports ******								
D02.040.005	1-03-H58	0-551	QAL-14	VT-3	NA	24.000		Calculation No. OS-336 Page 45a.1; Problem No. 1-03-01 Sheet 1 of 2. System 03 Auxiliary and Turbine Building. Ref Addenda ONS1-073
	Spring Hgr	OFD-121B-1.3				0.375		
Class C								
D02.040.013	1-03A-H75	1-0-438B	QAL-14	VT-3	NA	6.000		Calculaton No. OSC-342 Page 102; Problem No. 03A-9 . System 03A 6"EMER. F.WTR. BYPASS
	Spring Hgr	OFD-121D-1.1				0.500		
Class C								

Total D02.040 Items: 2

Total D02 Items: 22

CATEGORY D-C, Systems In Support Of RHR From Spent Fuel Storage Pool

Integral Attachment

ITEM NUMBER	ID NUMBER	ISO/DWG NUMBERS	PROC	INSP REQ	MAT/SCH	DIA/THK	CAL BLOCKS	COMMENTS
****** Component Supports and Restraints ******								
D03.020.002	1-56-H10	4-0-437B	QAL-14	VT-3	NA	8.000		Calculaton No. OS-421
	Rigid Restraint	OFD-104A-1.2				0.125		Page 95;Problem No.4-56-02.
Class C								System 56 Spent Fuel Cooling
								Fig.162 Size 8
D03.020.013	1-56-SR13	0-438C	QAL-14	VT-3	NA	8.000		Calculaton No. OSC-421
	Rigid Restraint	OFD-104A-1.1				0.750		Page 93; Problem No.4-56-02
Class C								Spent Fuel Cooling
								System 56
D03.020.017	1-56-SR21	0-437B	QAL-14	VT-3	NA	8.000		Calculaton No. OSC-421
	Rigid Restraint	OFD-104A-1.1				0.750		Page 94; Problem No.4-56-02
Class C								Spent Fuel Cooling
								System 56

Total D03.020 Items: 3

Total D03 Items: 3

CATEGORY F-A, Supports (Category A)

Class 1 Mech. Conn. to Press. Retaining Comp. & Bld. Structure

Oconee 1

Inservice Inspection Plan for Interval 3 Outage 2

ITEM NUMBER	ID NUMBER	ISO/DWG NUMBERS	PROC	INSP REQ	MAT/SCH	DIA/THK	CAL BLOCKS	COMMENTS
F01.010.006	1-51A-H9B	0-479A	QAL-14	VT-3	NA	2.500		Calculation No. OSC-1304-06, page 6(1)32.2;
	Rigid Restraint	OFD-101A-1.4			.	0.000		Problem No. 1-15-26. High Pressure Injection.
Class A		1-51-26						
Total F01.010 Items:	**1**							
F01.012.001	1-50-H1	0-481A	QAL-14	VT-3	NA	2.500		File OSC-1314-06 page 129. Pressurizer Relief
	Hyd Snubber	OFD-100A-1.2				0.000		Valve System Inspect with Item No. F01.050.011
Class A		1-50-01						
F01.012.002	1-50-H11	0-480A	QAL-14	VT-3	NA	28.000		Calculaton No. OSC-1314-06
	Hyd Snubber	OFD-100A-1.1				0.000		Page 129; Problem No.1-50-01
Class A								Pressurizer Spray System
								System 50. Inspect with Item No. F01.050.016
F01.012.015	1-50-RCPM-S1	0-66A	QAL-14	VT-3	NA	5.000		Calculaton No. OSC-0971-01-0001, Reactor Coolant
	Hyd Snubber	OFD-100A-1.1				0.000		Pump 1A1 Motor Snubbers. Reference PIP
Class A		OFD-100A-1.3						0-O96-1575. Inspect with F01.050.093.
Total F01.012 Items:	**3**							

CATEGORY F-A, Supports (Category A)

Class 2 Weld Connections to Building Structure

ITEM NUMBER	ID NUMBER	ISO/DWG NUMBERS	PROC	INSP REQ	MAT/SCH	DIA/THK	CAL BLOCKS	COMMENTS
F01.020.012 Class B	1-14-H96 Rigid Restraint	0-480A OFD-124B-1.3 1-14-15	QAL-14	VT-3	NA .	8.000 0.237		Calculation No. OSC-1409, Problem 1-14-15 sh. 2. Low Pressure Service Water
F01.020.017 Class B	1-51A-H138 Rigid Support	0-435C OFD-101A-1.3	QAL-14	VT-3	NA	4.000 0.000		Calculaton No. OSC-1410 Page105; Problem No. 1-51-13 . System 51 HPI INJ.
F01.020.023 Class B	1-53-TWE-2879 Rigid Restraint	0-438C OFD-102A-1.1	QAL-14	VT-3	NA	14.000 0.000		Calculaton No. OSC-407; Problem No. 1-53-1;SHT.3 OF 4 PAGE# 106; SYSTEM 53 LP INJECTION LINE
F01.020.024 Class B	1-53B-DE026 Rigid Restraint	0-435B OFD-102A-1.2	QAL-14	VT-3	NA	10.000 0.000		Calculation Number OS-408 Sheet 1 of 3; Problem No. 1-53-02 . System 53B LPI Injection and Decay Heat Removal
F01.020.028 Class B	1-53B-H10 Rigid Support	2-0-436E OFD-101A-1.3	QAL-14	VT-3	NA	6.000 0.216		Calculaton No. OSC-1535 Page 136; Problem No. 1-51-2 Sheet 2 of 8. System 51
F01.020.039 Class B	1-54A-H3 Rigid Restraint	3-0-436D OFD-103A-1.1	QAL-14	VT-3	NA	8.000 0.125		Calculaton No. OSC-1628 Page 60; Problem No. 1-54-01 Sheet 1 of 1. System 54A Auxiliary Building.
F01.020.041 Class B	1-54A-R15 Rigid Restraint	0-444 OFD-103A-1.1	QAL-14	VT-3	NA	8.000 0.500		Calculaton No. OS-416 Page 58.1; Problem No. 1-54-03, Sheet 1 of 1. System 54A Auxiliary Building.
F01.020.044 Class B	1-51-H57 Rigid Restraint	0-436H OFD-101A-1.1	QAL-14	VT-3	NA	4.000 0.750		Calc No.= OSC-400, Page 50 Problem No.= 1-51-01,Sht.1 of 3

CATEGORY F-A, Supports (Category A)

Class 2 Weld Connections to Building Structure

ITEM NUMBER	ID NUMBER	ISO/DWG NUMBERS	PROC	INSP REQ	MAT/SCH	DIA/THK	CAL BLOCKS	COMMENTS
F01.020.045	1-51-SR10	0-436D	QAL-14	VT-3	NA	4.000		Calc No.=OSC-400, Page 50
	Rigid Restraint	OFD-101A-1.1				0.750		Problem No.=1-51-01,Sht. 1 of 3
Class B								
F01.020.050	1-51-SR7	0-436D	QAL-14	VT-3	NA	4.000		Calc No.=OSC-1538, Page 94
	Rigid Restraint	OFD-101A-1.1				0.750		Problem No.=1-51-06,Sht. 2 of 3
Class B								
Total F01.020 Items:	**10**							
F01.021.007	1-14-H22A	0-480A	QAL-14	VT-3	NA	8.000		Problem No;1-14-13 Sht.0-492A-2
	Rigid Restraint	OFD-124B-1.2			.	1.000		Low Pressure Service Water Emergency Cooler 1A Inlet
Class B		1-14-13						
F01.021.009	1-51-SR3	0-436H	QAL-14	VT-3	NA	4.000		Calculaton No. OSC-1535 Page135-1;Problem No.1-51-2
	Rigid Restraint	OFD-101A-1.2				0.000		HPI Pump Suction Header With Branches From B.W.S.T.,L.S.T. And L.P Coolers 1A/1B
Class B								
F01.021.010	1-51-SR45	0-439C	QAL-14	VT-3	NA	4.000		Calculaton No. OSC-1537
	Rigid Support	OFD-101A-1.3				0.000		Page 55.1; Problem No. 1-51-5 . System 51
Class B								
F01.021.021	1-54A-H19	3-0-439A	QAL-14	VT-3	NA	8.000		Calculaton No. OS-416 Page 58.1; Problem No. 1-54-03, Sheet 1 of 1. System 54A Auxiliary Building.
	Rigid Restraint	OFD-103A-1.1				0.500		
Class B								
F01.021.025	1-51-SR15	0-436H	QAL-14	VT-3	NA	6.000		Calculaton No. OSC-1535 Page135-1;Problem No.1-51-2
	Rigid Restraint	OFD-101A-1.2				1.000		HPI Pump Suction Header With Branches From B.W.S.T.,L.S.T. And L.P Coolers 1A/1B
Class B								
Total F01.021 Items:	**5**							

CATEGORY F-A, Supports (Category C)

DUKE ENERGY CORPORATION
QUALITY ASSURANCE TECHNICAL SERVICES
Inservice Inspection Database Management System

Class 2 Weld Connections to Building Structure

Oconee 1

Inservice Inspection Plan for Interval 3 Outage 2

ITEM NUMBER	ID NUMBER	ISO/DWG NUMBERS	PROC	INSP REQ	MAT/SCH	DIA/THK	CAL BLOCKS	COMMENTS
F01.022.002	1-01A-FAC-1203	0-401A	QAL-14	VT-3	NA	8.000		Calculaton No. OSC-324;
	Spring Hgr	OFD-122A-1.3				0.000		Problem No. 1-01-5, SHT. 2 OF 3; PAGE 42.1;System 01A;STEAM SUPPLY TO FEEDWATER PUMP TURBINE
Class B								
F01.022.008	1-03-H2A	0-479A	QAL-14	VT-3	NA	14.000		Calculation No. OSC-1297-06; Problem No. 1-03-06
	Constant Support	OFD-121B-1.3				0.000		Sheet 1 of 2; System 03 Steam Generator 1A .
Class B								
F01.022.009	1-03A-H6202	0-480A	QAL-14	VT-3	NA	6.000		Calculaton No. OSC-1224-16
	Spring Hgr	OFD-121D-1.1				0.000		Page 43;Problem No.1- 03A-14. System 03A AUX. SERVICE WATER PIPE
Class B								
F01.022.013	1-51A-H80	0-439C	QAL-14	VT-3	NA	4.000		Calculation No. OSC-1639, page 33; Problem No.
	Mech Snubber	OFD-101A-1.4			.	0.000		1-51-04. High Pressure Injection. Inspect with Item No. F01.050.070.
Class B		1-51-04						

Total F01.022 Items: 4

CATEGORY F-A, Supports (Category A)

DUKE ENERGY CORPORATION
QUALITY ASSURANCE TECHNICAL SERVICES
Inservice Inspection Database Management System

Class 3 Weld/Mech Conns at Inter Joints in Multiconn Int & Nonint Supp

Oconee 1

Inservice Inspection Plan for Interval 3 Outage 2

ITEM NUMBER	ID NUMBER	ISO/DWG NUMBERS	PROC	INSP REQ	MAT/SCH	DIA/THK	CAL BLOCKS	COMMENTS
F01.030.002	1-02A-TR7	4-403A	QAL-14	VT-3	NA	6.000		Calculation Number OSC-325 Sheet 3 of 3; Problem 1-01-06 Page 91. System 01A Steam Supply to Emergency Feedwater Pump Turbine.
Class C	Rigid Restraint	OFD-122A-1.4		Sway Strut to		0.000		
F01.030.004	1-03A-DE015	0-401A	QAL-14	VT-3	NA	6.000		Calculaton No. OSC-343 Page 51; Problem No. 03A-10 . System 03A 6"EMER. FEED.WTR.
Class C	Rigid Restraint	OFD-121D-1.1				0.000		
F01.030.008	1-03A-H142	1-0-400B	QAL-14	VT-3	NA	6.000		Calculaton No. OSC-1215 Page 21; Problem No.1- 03A-12. System 03A EMER. FEED.WTR. DISCHARGE
Class C	Rigid Restraint	OFD-121D-1.1				0.000		
F01.030.010	1-03A-H19	1-0-439B	QAL-14	VT-3	NA	6.000		Calculaton No. OSC-339 Page 80; Problem No. 1-03A-5 . System 03A 6"EMER. F.WTR. TO 24"MAIN F.WTR.
Class C	Rigid Restraint	OFD-121D-1.1				0.000		
F01.030.013	1-03A-H62	1-0-400B	QAL-14	VT-3	NA	6.000		Calculaton No. OSC-1215 Page 21; Problem No.1- 03A-12. System 03A EMER. FEED.WTR. DISCHARGE
Class C	Rigid Restraint	OFD-121D-1.1				0.000		
F01.030.014	1-03A-H80	1-0-439B	QAL-14	VT-3	NA	6.000		Calculaton No. OSC-1224-19 Page 27;Problem No.1- 03A-13. System 03A AUX. SERVICE WATER PIPE
Class C	Rigid Restraint	OFD-121D-1.1				0.000		
Total F01.030 Items:	**6**							
F01.031.004	1-03A-H82	1-0-439B	QAL-14	VT-3	NA	6.000		Calculaton No. OSC-1224-19 Page 27;Problem No.1- 03A-13. System 03A AUX. SERVICE WATER PIPE
Class C	Rigid Restraint	OFD-121D-1.1				0.500		

CATEGORY F-A, Supports (Category B)

DUKE ENERGY CORPORATION
QUALITY ASSURANCE TECHNICAL SERVICES
Inservice Inspection Database Management System

Class 3 Weld/Mech Conns at Inter Joints in Multiconn Int & Nonint Supp

Oconee 1

Inservice Inspection Plan for Interval 3 Outage 2

ITEM NUMBER	ID NUMBER	ISO/DWG NUMBERS	PROC	INSP REQ	MAT/SCH	DIA/THK	CAL BLOCKS	COMMENTS
F01.031.009	1-14-H6016	0-478E	QAL-14	VT-3	NA	6.000		Calculaton No. OSC-1224-16
	Rigid Restraint	OFD-121D-1.1				0.000		Page 44;Problem No.1- 03A-14.
Class C				SS to				System 03A
								AUX. SERVICE WATER PIPE
Total F01.031 Items:	**2**							
F01.032.009	1-14B-DE060	0-437A	QAL-14	VT-3	NA	16.000		Calculaton No. OSC-393;
	Spring Hgr	OFD-124B-1.1				0.000		Problem No. 1-14-5 SHT.1 OF 1. System 14B;PAGE
Class C								78; LPSW BETWEEN LP COOLER 1B AUX BLD &
								TURBINE BLD BASEMENT FLOOR
F01.032.012	1-14B-H25	0-436F	QAL-14	VT-3	NA	16.000		Calculaton No. OSC-1541;
	Spring Hgr	OFD-124B-1.1				0.258		Problem No. 1-14-06 SHT. 2 OF 3. System
Class C								14B;PAGE 101; LPSW SUPPLY TO RB
								COMPONENT COOLERS & LP COOLERS 1A & 1B
Total F01.032 Items:	**2**							

CATEGORY F-A, Supports

DUKE ENERGY CORPORATION
QUALITY ASSURANCE TECHNICAL SERVICES
Inservice Inspection Database Management System

Clearances of Guides & Stops, Align of Supps, Assembly of Supp Items

Oconee 1

Inservice Inspection Plan for Interval 3 Outage 2

ITEM NUMBER	ID NUMBER	ISO/DWG NUMBERS	PROC	INSP REQ	MAT/SCH	DIA/THK	CAL BLOCKS	COMMENTS
F01.040.004	1-LDCA-SUPPORT	OM-201-3107	QAL-14	VT-3	NA	0.000		1A Letdown Cooler Support
		OFD-101A-1.1			.	0.000		
Class A								
F01.040.008	1-DIESEL ENG. A	OM-351-164	QAL-14	VT-3	NA	0.000		Diesel Engine A Support
		OFD-135B-1.4				0.000		(Drawing found in manual)
Class C								Class C
F01.040.009	1-CTK-UST-A	OM-149-0001	QAL-14	VT-3	NA	0.000		Upper Surge Tank "A" Support Legs. Class C
		OFD-121A-1.7				0.000		
Class C								
F01.040.013	1-LPI-PU-A	OM-1201-1121	QAL-14	VT-3	NA	0.000		LPI Pump "A" Support Pad & Legs. Class B
		OFD-102A-1.2				0.000		
Class B								
F01.040.015	1-LPSW-STR-A	OM-240-0002	QAL-14	VT-3	NA	0.000		Low Pressure Service Water Strainer 1A, Support
		OFD-124A-1.1				0.000		Legs. Class C
Class C								
F01.040.022	1-RCSR-COOLER 1A	OM-201-0086	QAL-14	VT-3	NA	0.000		R C Seal Return Cooler 1A
		OFD-101A-1.1				0.000		
Class B								
F01.040.032	1-MAIN-LBL-FTR. A	OM-351-164	QAL-14	VT-3	NA	0.000		Main Lube Oil Filter Support
		OFD-135B-1.4				0.000		(Diesel Engine A)
								(Drawing found in manual)
Class C								Class C

Total F01.040 Items: 7

CATEGORY F-A, Supports

DUKE ENERGY CORPORATION
QUALITY ASSURANCE TECHNICAL SERVICES
Inservice Inspection Database Management System

Spring Supports & Constant Load Supports

Oconee 1

Inservice Inspection Plan for Interval 3 Outage 2

ITEM NUMBER	ID NUMBER	ISO/DWG NUMBERS	PROC	INSP REQ	MAT/SCH	DIA/THK	CAL BLOCKS	COMMENTS
F01.050.001	1-50-H12	0-479A	QAL-14	VT-3	NA	2.500		Calculaton No. OSC-1314-06
	Hyd Snubber	OFD-100A-1.1				0.000		Page 129; Problem No.1-50-01
Class A								Pressurizer Spray System
								System 50
F01.050.002	1-50-H1A	0-479A	QAL-14	VT-3	NA	10.000		Pressurizer Surge Lines
	Hyd Snubber	OFD-100A-1.1				0.000		
Class A								
F01.050.003	1-50-H2A	0-479A	QAL-14	VT-3	NA	10.000		Pressurizer Surge Lines.
	Hyd Snubber	OFD-100A-1.1				0.000		
Class A								
F01.050.004	1-50-H3	0-481A	QAL-14	VT-3	NA	2.500		File OSC-1314-06 page 129. Pressurizer Relief
	Hyd Snubber	OFD-100A-1.2				0.154		Valve System
Class A		1-50-01						
F01.050.005	1-50-H3A	0-479A	QAL-14	VT-3	NA	10.000		Pressurizer Surge Lines
	Hyd Snubber	OFD-100A-1.1				0.000		
Class A								
F01.050.006	1-50-H7	0-481A	QAL-14	VT-3	NA	2.500		Calculaton No. OSC-1314-06
	Hyd Snubber	OFD-100A-1.1				0.500		Page 129; Problem No.1-50-01
Class A								Pressurizer Spray System
								System 50
F01.050.007	1-50-H8	0-480A	QAL-14	VT-3	NA	2.500		Calculaton No. OSC-1314-06
	Hyd Snubber	OFD-100A-1.1				0.000		Page 129; Problem No.1-50-01
Class A								Pressurizer Spray System
								System 50
F01.050.008	1-50-H9	0-480A	QAL-14	VT-3	NA	2.500		Calculaton No. OSC-1314-06
	Hyd Snubber	OFD-100A-1.1				0.000		Page 129; Problem No.1-50-01
Class A								Pressurizer Spray System
								System 50

CATEGORY F-A, Supports

DUKE ENERGY CORPORATION
QUALITY ASSURANCE TECHNICAL SERVICES
Inservice Inspection Database Management System

Spring Supports & Constant Load Supports

Oconee 1

Inservice Inspection Plan for Interval 3 Outage 2

ITEM NUMBER	ID NUMBER	ISO/DWG NUMBERS	PROC	INSP REQ	MAT/SCH	DIA/THK	CAL BLOCKS	COMMENTS
F01.050.009	1-50-H10	0-480A	QAL-14	VT-3	NA	2.500		Calculaton No. OSC-1314-06
	Hyd Snubber	OFD-100A-1.1				0.000		Page 129; Problem No.1-50-01
Class A								Pressurizer Spray System
								System 50
F01.050.011	1-50-H1	0-481A	QAL-14	VT-3	NA	2.500		File OSC-1314-06 page 129. Pressurizer Relief
	Hyd Snubber	OFD-100A-1.2				0.000		Valve System.
Class A		1-50-01						
F01.050.012	1-51A-H17A	0-479A	QAL-14	VT-3	NA	2.500		Calculation No. OSC-1304-06, page 61; Problem No.
	Hyd Snubber	OFD-101A-1.4				0.145		1-51-15. High Pressure Injection.
Class A		1-51-15						
F01.050.013	1-53A-H5A	0-479A	QAL-14	VT-3	NA	12.000		Calculaton No. OSC-1301-06;
	Hyd Snubber	OFD-102A-1.1				0.000		Problem No. 1-53-07; Page #92; System 53A; Decay
Class B								Heat Removal System
F01.050.014	1-53A-H5B	0-479A	QAL-14	VT-3	NA	12.000		Calculaton No. OSC-1301-06;
	Hyd Snubber	OFD-102A-1.1				0.000		Problem No. 1-53-07; Page #92; System 53A; Decay
Class B								Heat Removal System.
F01.050.015	1-03-H7B	0-480A	QAL-14	VT-3	NA	24.000		Calculation No. OSC-1297-06 ; Problem No. 1-03-05 .
	Hyd Snubber	OFD-121B-1.3				0.237		System 03 Steam Generator 1B .
Class B								
F01.050.016	1-50-H11	0-480A	QAL-14	VT-3	NA	1.500		Calculaton No. OSC-1314-06
	Hyd Snubber	OFD-100A-1.1				0.000		Page 129; Problem No.1-50-01
Class A								Pressurizer Spray System
								System 50.
F01.050.017	1-03-H10A	0-480B	QAL-14	VT-3	NA	20.000		Calculation No. OSC-1297-06; Problem No. 1-03-06
	Hyd Snubber	OFD-121B-1.3				0.000		Sheet 1 of 2; System 03 Steam Generator 1A .
Class B								

CATEGORY F-A, Supports

DUKE ENERGY CORPORATION
QUALITY ASSURANCE TECHNICAL SERVICES
Inservice Inspection Database Management System

Spring Supports & Constant Load Supports

Oconee 1

Inservice Inspection Plan for Interval 3 Outage 2

ITEM NUMBER	ID NUMBER	ISO/DWG NUMBERS	PROC	INSP REQ	MAT/SCH	DIA/THK	CAL BLOCKS	COMMENTS
F01.050.018	1-53A-H40C	0-481A	QAL-14	VT-3	NA	1.500		File OSC-1314-06 page 129. Pressurizer Relief
	Hyd Snubber	OFD-100A-1.2				0.000		Valve System
Class A		1-50-01						
F01.050.019	1-53A-H41C	0-481A	QAL-14	VT-3	NA	2.500		File OSC-1314-06 page 129. Pressurizer Relief
	Hyd Snubber	OFD-100A-1.2				0.000		Valve System
Class A		1-50-01						
F01.050.020	1-57-H10	0-481A	QAL-14	VT-3	NA	6.000		Calculaton No. OS-1313-06
	Hyd Snubber	OFD-100A-1.2				0.000		Page 44.1;Problem No.1-57-01.
Class C								System 57 Pressurizer Relief Valve System
F01.050.021	1-57-H11	0-481A	QAL-14	VT-3	NA	6.000		Calculaton No. OS-1313-06
	Hyd Snubber	OFD-100A-1.2				0.000		Page 44.1;Problem No.1-57-01.
Class C								System 57 Pressurizer Relief Valve System
F01.050.022	1-50-H13A	0-481A	QAL-14	VT-3	NA	4.000		Calculaton No. OS-1313-06
	Hyd Snubber	OFD-100A-1.2				0.000		Page 44.1;Problem No.1-50-01.
Class A								System 50 Pressurizer Relief Valve System.
F01.050.023	1-57-H14	0-481A	QAL-14	VT-3	NA	8.000		Calculaton No. OS-1313-06
	Hyd Snubber	OFD-100A-1.2				0.216		Page 44.1;Problem No.1-57-01.
Class C								System 57 Pressurizer Relief Valve System.
F01.050.024	1-57-H15	0-481A	QAL-14	VT-3	NA	8.000		Calculaton No. OS-1313-06
	Hyd Snubber	OFD-100A-1.2				0.000		Page 44.1;Problem No.1-57-01.
Class C								System 57 Pressurizer Relief Valve System
F01.050.025	1-57-H17	0-481A	QAL-14	VT-3	NA	6.000		Calculaton No. OS-1313-06
	Hyd Snubber	OFD-100A-1.2				0.000		Page 44.1;Problem No.1-57-01.
Class C								System 57 Pressurizer Relief Valve System

CATEGORY F-A, Supports

DUKE ENERGY CORPORATION
QUALITY ASSURANCE TECHNICAL SERVICES
Inservice Inspection Database Management System

Spring Supports & Constant Load Supports

Oconee 1

Inservice Inspection Plan for Interval 3 Outage 2

ITEM NUMBER	ID NUMBER	ISO/DWG NUMBERS	PROC	INSP REQ	MAT/SCH	DIA/THK	CAL BLOCKS	COMMENTS
F01.050.026	1-57-H18	0-481A	QAL-14	VT-3	NA	6.000		Calculaton No. OS-1313-06
	Hyd Snubber	OFD-100A-1.2				0.000		Page 44.1;Problem No.1-57-01.
Class C								System 57 Pressurizer Relief Valve System
F01.050.027	1-57-H22	0-481A	QAL-14	VT-3	NA	6.000		Calculaton No. OS-1313-06
	Hyd Snubber	OFD-100A-1.2				0.000		Page 44.1;Problem No.1-57-01.
Class C								System 57 Pressurizer Relief Valve System
F01.050.028	1-57-H26	0-481A	QAL-14	VT-3	NA	6.000		Calculaton No. OS-1313-06
	Hyd Snubber	OFD-100A-1.2				0.000		Page 44.1;Problem No.1-57-01.
Class C								System 57 Pressurizer Relief Valve System
F01.050.029	1-57-H9	0-481A	QAL-14	VT-3	NA	6.000		Calculaton No. OS-1313-06
	Hyd Snubber	OFD-100A-1.2				1.000		Page 44.1;Problem No.1-57-01.
Class C								System 57 Pressurizer Relief Valve System.
F01.050.030	1-01A-H10B	0-481B	QAL-14	VT-3	NA	24.250		Calculaton No. OSC-1296-06;
	Hyd Snubber	OFD-122A-1.1				0.437		Problem No. 1-01-08; System 01A;Page# 6 (1)-25.18;
Class B				PIPE FAB SKETCH 6" PIPE to				Main Steam From Pen 28 TO SG 1B
F01.050.031	1-01A-H11A	0-481B	QAL-14	VT-3	NA	24.250		Calculaton No. OSC-1296-06;
	Hyd Snubber	OFD-122A-1.1				0.437		Problem No. 1-01-07; System 01A;Page# 6
Class B				PIPE FAB SKETCH 6" PIPE to				(2)-24.23A Main Steam From Pen 26 TO SG 1A
F01.050.032	1-01A-H11B	0-481B	QAL-14	VT-3	NA	24.250		Calculaton No. OSC-1296-06;
	Hyd Snubber	OFD-122A-1.1				0.437		Problem No. 1-01-08; System 01A;Page# 6 (1)-25.18;
Class B				PIPE FAB SKETCH 6" PIPE to				Main Steam From Pen 28 TO SG 1B
F01.050.033	1-01A-H12A	0-481B	QAL-14	VT-3	NA	24.250		Calculaton No. OSC-1296-06;
	Hyd Snubber	OFD-122A-1.1				0.375		Problem No. 1-01-07; System 01A;Page# 6
Class B								(2)-24.23A Main Steam From Pen 26 TO SG 1A

CATEGORY F-A, Supports

DUKE ENERGY CORPORATION
QUALITY ASSURANCE TECHNICAL SERVICES
Inservice Inspection Database Management System

Spring Supports & Constant Load Supports

Oconee 1

Inservice Inspection Plan for Interval 3 Outage 2

ITEM NUMBER	ID NUMBER	ISO/DWG NUMBERS	PROC	INSP REQ	MAT/SCH	DIA/THK	CAL BLOCKS	COMMENTS
F01.050.034	1-01A-DE005	0-550	QAL-14	VT-3	NA	34.000		Calculaton No. OSC-320;
	Hyd Snubber	OFD-122A-1.1				0.000		Problem No. 1-01-01;Sht.1of 3; System 01A;Page# 131.1; Main Steam Piping.
Class B								
F01.050.035	1-01A-DE006	0-550	QAL-14	VT-3	NA	34.000		Calculaton No. OSC-320;
	Hyd Snubber	OFD-122A-1.1				0.000		Problem No. 1-01-01;Sht.1 of 3; System 01A;Page# 131.1; Main Steam Piping.
Class B								
F01.050.036	1-01A-R-2-1	0-550	QAL-14	VT-3	NA	34.000		Calculaton No. OSC-320;
	Hyd Snubber	OFD-122A-1.1				0.687		Problem No. 1-01-01;Sht.1 of 3; System 01A;Page# 131.1; Main Steam Piping
Class B								
F01.050.037	1-01A-R-2-2	0-550	QAL-14	VT-3	NA	34.000		Calculaton No. OSC-320;
	Hyd Snubber	OFD-122A-1.1				0.687		Problem No. 1-01-01;Sht. 1 of 3; System 01A;Page# 131.1; Main Steam Piping
Class B								
F01.050.038	1-01A-R12	0-550	QAL-14	VT-3	NA	34.000		Calculaton No. OSC-320;
	Hyd Snubber	OFD-122A-1.1				0.000		Problem No. 1-01-01;Sht.2 of 3; System 01A;Page# 132; Main Steam Piping
Class B								
F01.050.039	1-01A-R9-1	0-550	QAL-14	VT-3	NA	34.000		Calculaton No. OSC-320;
	Hyd Snubber	OFD-122A-1.1				0.687		Problem No. 1-01-01;Sht.1 of 3; System 01A; Page# 131.1; Main Steam Piping
Class B								
F01.050.040	1-01A-R9-2	0-550	QAL-14	VT-3	NA	34.000		Calculaton No. OSC-320;
	Hyd Snubber	OFD-122A-1.1				0.687		Problem No. 1-01-01; sht. 1 of 3; System 01A; Page# 131.1; Main Steam Piping
Class B								
F01.050.041	1-01A-R9-3	0-550	QAL-14	VT-3	NA	34.000		Calculaton No. OSC-320;
	Hyd Snubber	OFD-122A-1.1				0.687		Problem No. 1-01-01; Sht. 1 of 3; System 01A; Page# 131.1; Main Steam Piping
Class B								

CATEGORY F-A, Supports

Spring Supports & Constant Load Supports

ITEM NUMBER	ID NUMBER	ISO/DWG NUMBERS	PROC	INSP REQ	MAT/SCH	DIA/THK	CAL BLOCKS	COMMENTS
F01.050.042 Class B	1-01A-R9-4 Hyd Snubber	0-550 OFD-122A-1.1	QAL-14	VT-3	NA	34.000 0.687		Calculaton No. OSC-320; Problem No. 1-01-01; Sht.1 of 3; System 01A; Page# 131.1; Main Steam Piping
F01.050.043 Class C	1-03-R12 Hyd Snubber	0-551 OFD-121B-1.3	QAL-14	VT-3	NA	24.000 1.000		Calculation No. OS-336 Page 45a.1; Problem No. 1-03-01 Sheet 1 of 2. System 03 Auxiliary and Turbine Building.
F01.050.044 Class C	1-03-R7 Hyd Snubber	0-551 OFD-121B-1.3	QAL-14	VT-3	NA	24.000 1.000		Calculation No. OS-336 Page 45a.1; Problem No. 1-03-01 Sheet 1 of 2. System 03 Auxiliary and Turbine Building.
F01.050.045 Class C	1-03A-SR56 Hyd Snubber	1-0-400B OFD-121D-1.1	QAL-14	VT-3	NA	6.000 0.000		Calculaton No. OSC-342 Page 104; Problem No. 03A-9 . System 03A 6" Emergency Feedwater Bypass
F01.050.046 Class C	1-03A-SR57 Hyd Snubber	1-0-400B OFD-121D-1.1	QAL-14	VT-3	NA	6.000 0.000		Calculaton No. OSC-342 Page 104; Problem No. 03A-9 . System 03A 6" Emergency Feedwater Bypass
F01.050.047 Class C	1-03A-SR58 Hyd Snubber	1-0-400B OFD-121D-1.1	QAL-14	VT-3	NA	6.000 0.000		Calculaton No. OSC-342 Page 104; Problem No. 03A-9 . System 03A 6" Emergency Feedwater Bypass
F01.050.048 Class C	1-03A-SR59 Hyd Snubber	1-0-400B OFD-121D-1.1	QAL-14	VT-3	NA	6.000 0.000		Calculaton No. OSC-342 Page 104; Problem No. 03A-9 . System 03A 6" Emergency Feedwater Bypass
F01.050.049 Class C	1-03A-SR50 Hyd Snubber	1-0-401A OFD-121B-1.3	QAL-14	VT-3	NA	6.000 0.000		Calculation Number OSC-339; Problem Number 1-03A-5 Sheet 1 of 4; System 03A Emergency Feedwater.

CATEGORY F-A, Supports

DUKE ENERGY CORPORATION
QUALITY ASSURANCE TECHNICAL SERVICES
Inservice Inspection Database Management System

Spring Supports & Constant Load Supports

Oconee 1

Inservice Inspection Plan for Interval 3 Outage 2

ITEM NUMBER	ID NUMBER	ISO/DWG NUMBERS	PROC	INSP REQ	MAT/SCH	DIA/THK	CAL BLOCKS	COMMENTS
F01.050.050	1-03A-SR63	1-0-438B	QAL-14	VT-3	NA	6.000		Calculaton No. OSC-342
	Hyd Snubber	OFD-121D-1.1				0.000		Page 102; Problem No. 03A-9 . System 03A
Class C								6" Emergency Feedwater Bypass
F01.050.051	1-03A-SR64	1-0-439B	QAL-14	VT-3	NA	6.000		Calculaton No. OSC-1224-19
	Hyd Snubber	OFD-121D-1.1				0.000		Page 27;Problem No.1- 03A-13.
Class C								System 03A
								Aux. Service Water Pipe
F01.050.053	1-01A-H44	1-1-0-401A	QAL-14	VT-3	NA	12.000		Calculaton No. OSC-321;
	Hyd Snubber	OFD-122A-1.2				0.000		Problem No. 1-01-2 Sht. 3 of 5. System 01A; Main
Class B								Steam Bypass To Condenser
F01.050.055	1-01A-R2	4-2-0-403C	QAL-14	VT-3	NA	6.000		Calculation Number OSC-325 Sheet 2 of 3; Problem
	Hyd Snubber	OFD-122A-1.4				0.000		1-01-06 Page 89.1. System 01A . Steam Supply to
Class C								Emergency Feedwater Pump Turbine.
F01.050.056	1-03A-DE058	0-401A	QAL-14	VT-3	NA	6.000		Calculaton No. OSC-339
	Mech Snubber	OFD-121D-1.1				0.000		Page79; Problem No. 1-03A-5 . System 03A 6"
Class C								Emergency Feedwater To 24" Main Feedwater.
F01.050.057	1-03-H4171	0-401B	QAL-14	VT-3	NA	24.000		Calculation No. OS-336 Page 45a.1; Problem No.
	Mech Snubber	OFD-121B-1.3				0.322		1-03-01 Sheet 1 of 2. System 03 Auxiliary and
Class C								Turbine Building.
F01.050.058	1-53B-DE056	0-435B	QAL-14	VT-3	NA	10.000		Calculation Number OS-406 Sheet 1 of 1; Problem
	Mech Snubber	OFD-102A-1.2				0.000		No. 1-53-03 Page 71. System 53B Decay Heat
Class B								Pump 1B and 1C to Decay Heat Cooler 1B .
F01.050.059	1-53B-DE059	0-435B	QAL-14	VT-3	NA	10.000		Calculation Number OS-408 Sheet 1 of 3; Problem
	Mech Snubber	OFD-102A-1.2				0.000		No. 1-53-02 . System 53B LPI Injection and Decay
Class B								Heat Removal

CATEGORY F-A, Supports

DUKE ENERGY CORPORATION
QUALITY ASSURANCE TECHNICAL SERVICES
Inservice Inspection Database Management System

Spring Supports & Constant Load Supports

Oconee 1

Inservice Inspection Plan for Interval 3 Outage 2

ITEM NUMBER	ID NUMBER	ISO/DWG NUMBERS	PROC	INSP REQ	MAT/SCH	DIA/THK	CAL BLOCKS	COMMENTS
F01.050.060	1-53B-DE066	0-435B	QAL-14	VT-3	NA	14.000		Calculaton No. OS-407;
	Mech Snubber	OFD-102A-1.1				0.000		Problem No. 1-53-1;SHT.1 OF 4 Page #104; System 53B; LP Injection Line
Class B								
F01.050.061	1-54A-DE-020	0-435B	QAL-14	VT-3	NA	8.000		Calculaton No. OS-415 Page 50; Problem No. 1-54-2
	Mech Snubber	OFD-103A-1.1				0.000		Sheet 1 of 1. System 54A Auxiliary Building.
Class B								
F01.050.062	1-54A-DE015	0-435B	QAL-14	VT-3	NA	8.000		Calculaton No. OSC-1628 Page 60; Problem No.
	Mech Snubber	OFD-103A-1.1				0.000		1-54-01, Sheet 1 of 1. System 54A Auxiliary Building.
Class B								
F01.050.063	1-51A-DE001A	0-435C	QAL-14	VT-3	NA	4.000		Calculaton No. OSC-1410
	Mech Snubber	OFD-101A-1.3				0.000		Page105; Problem No. 1-51-13 . System 51
Class B								HPI.
F01.050.064	1-53B-DE060	0-436D	QAL-14	VT-3	NA	10.000		Calculation Number OS-408 Sheet 1 of 3; Problem
	Mech Snubber	OFD-102A-1.2				0.000		No. 1-53-02 . System 53B LPI Injection and Decay
Class B								Heat Removal
F01.050.065	1-53B-DE055	0-438C	QAL-14	VT-3	NA	12.000		Calculaton No. OS-404;
	Mech Snubber	OFD-102A-1.1				0.000		Problem No. 1-53-04; Sht.1 of 1; Page #39; System
Class B								53B; Decay Heat RemovalL System & LP Injection.
F01.050.066	1-53B-DE057	0-438C	QAL-14	VT-3	NA	8.000		Calculaton No. OS-408;
	Mech Snubber	OFD-102A-1.1				0.000		Problem No. 1-53-02; Sht.2 of 3; Page #73.3; System
Class B								53B; Decay Heat Removal System & LP Injection
F01.050.067	1-51A-H102	0-439A	QAL-14	VT-3	NA	4.000		Calculation No. OSC-1639, page 32.2; Problem No.
	Mech Snubber	OFD-101A-1.4				0.000		1-51-04. High Pressure Injection.
Class B		1-51-04						

CATEGORY F-A, Supports

Spring Supports & Constant Load Supports

ITEM NUMBER	ID NUMBER	ISO/DWG NUMBERS	PROC	INSP REQ	MAT/SCH	DIA/THK	CAL BLOCKS	COMMENTS
F01.050.068	1-51A-H97	0-439A	QAL-14	VT-3	NA	4.000		Calculation No. OSC-1639, page 32.2; Problem No. 1-51-04. High Pressure Injection.
	Mech Snubber	OFD-101A-1.4			.	0.000		
Class B		1-51-04						
F01.050.069	1-54A-R16	0-439A	QAL-14	VT-3	NA	8.000		Calculaton No. OS-416 Page 58.1; Problem No. 1-54-03, Sheet 1 of 1. System 54A Auxiliary Building.
	Mech Snubber	OFD-103A-1.1				1.000		
Class B								
F01.050.070	1-51A-H80	0-439C	QAL-14	VT-3	NA	4.000		Calculation No. OSC-1639, page 33; Problem No. 1-51-04. High Pressure Injection.
	Mech Snubber	OFD-101A-1.4			.	0.000		
Class B		1-51-04						
F01.050.071	1-51A-H86	0-439C	QAL-14	VT-3	NA	4.000		Calculation No. OSC-1639, page 32.2; Problem No. 1-51-04. High Pressure Injection.
	Mech Snubber	OFD-101A-1.4			.	0.000		
Class B		1-51-04						
F01.050.072	1-53A-GPD-H0010	0-479A	QAL-14	VT-3	NA	12.000		Calculaton No. OSC-1301-06; Problem No. 1-53-07; Page #92; System 53A; Decay Heat Removal System
	Mech Snubber	OFD-102A-1.1				0.000		
Class B								
F01.050.073	1-03-H6068	0-479F	QAL-14	VT-3	NA	6.000		Calculaton No. OSC-1224-16 Page 42;Problem No.1- 03A-14. System 03A Aux. Service Water Pipe.
	Mech Snubber	OFD-121D-1.1				0.000		
Class C								
F01.050.074	1-03-H6020	0-480A	QAL-14	VT-3	NA	6.000		Calculaton No. OSC-1224-16 Page 42;Problem No.1- 03A-14. System 03A Aux. Service Water Pipe
	Mech Snubber	OFD-121D-1.1				0.000		
Class C								
F01.050.075	1-03-H6070	0-480A	QAL-14	VT-3	NA	6.000		Calculaton No. OSC-1224-16 Page 41;Problem No.1- 03A-14. System 03A Aux Service Water Pipe.
	Mech Snubber	OFD-121D-1.1				0.000		
Class C								

CATEGORY F-A, Supports

DUKE ENERGY CORPORATION
QUALITY ASSURANCE TECHNICAL SERVICES
Inservice Inspection Database Management System

Spring Supports & Constant Load Supports

Oconee 1

Inservice Inspection Plan for Interval 3 Outage 2

ITEM NUMBER	ID NUMBER	ISO/DWG NUMBERS	PROC	INSP REQ	MAT/SCH	DIA/THK	CAL BLOCKS	COMMENTS
F01.050.076	1-03-H6071	0-480A	QAL-14	VT-3	NA	6.000		Calculaton No. OSC-1224-16
	Mech Snubber	OFD-121D-1.1				0.000		Page 42;Problem No.1- 03A-14.
Class B								System 03A
								Aux. Service Water Pipe.
F01.050.077	1-57-NW1Z	0-480A	QAL-14	VT-3	NA	12.000		Calculaton No. OSC-1313-06
	Mech Snubber	OFD-107A-1.1				0.000		Page 44.1; Problem No.1-57-01
Class C								Pressurizer Relief Valve System
								System 57
F01.050.078	1-57-H23	0-481A	QAL-14	VT-3	NA	12.000		Calculaton No. OS-1313-06
	Mech Snubber	OFD-100A-1.2				0.000		Page 44.1;Problem No.1-57-01.
Class C								System 57 Pressurizer Relief Valve System
F01.050.079	1-01A-R11	0-550	QAL-14	VT-3	NA	34.000		Calculaton No. OSC-320;
	Mech Snubber	OFD-122A-1.1				0.000		Problem No. 1-01-01; Sht.2 of 3; System 01A;Page #
Class B								132; Main Steam Piping
F01.050.080	1-01A-R4	0-550	QAL-14	VT-3	NA	34.000		Calculaton No. OSC-320;
	Mech Snubber	OFD-122A-1.1				0.000		Problem No. 1-01-01; Sht.2 of 3; System 01A; Page #
Class B								132; Main Steam Piping
F01.050.081	1-01A-R5	0-550	QAL-14	VT-3	NA	34.000		Calculaton No. OSC-320;
	Mech Snubber	OFD-122A-1.1				0.000		Problem No. 1-01-01; Sht.2 of 3; System 01A; Page#
Class B								132; Main Steam Piping
F01.050.082	1-01A-R6	0-550	QAL-14	VT-3	NA	34.000		Calculaton No. OSC-320;
	Mech Snubber	OFD-122A-1.1				1.000		Problem No. 1-01-01; Sht. 2 of 3; System 01A; Page
Class B								# 132; Main Steam Piping.
F01.050.083	1-01A-R7	0-550	QAL-14	VT-3	NA	34.000		Calculaton No. OSC-320;
	Hyd Snubber	OFD-122A-1.1				1.000		Problem No. 1-01-01; Sht.1 of 3; System 01A; Page #
Class B								131.1; Main Steam Piping.

CATEGORY F-A, Supports

DUKE ENERGY CORPORATION
QUALITY ASSURANCE TECHNICAL SERVICES
Inservice Inspection Database Management System

Spring Supports & Constant Load Supports

Oconee 1

Inservice Inspection Plan for Interval 3 Outage 2

ITEM NUMBER	ID NUMBER	ISO/DWG NUMBERS	PROC	INSP REQ	MAT/SCH	DIA/THK	CAL BLOCKS	COMMENTS
F01.050.084	1-03-R13	0-551	QAL-14	VT-3	NA	24.000		Calculation No. OS-336 Page 45a.1; Problem No. 1-03-01 Sheet 1 of 2. System 03 Auxiliary and Turbine Building.
Class C	Mech Snubber	OFD-121B-1.3				0.000		
F01.050.085	1-03A-H115	1-0-400B	QAL-14	VT-3	NA	6.000		Calculaton No. OSC-1214 Page 25; Problem No.1- 03A-11. System 03A 6" Emergency Feedwater
Class C	Mech Snubber	OFD-121D-1.1				0.000		
F01.050.086	1-03A-H123	1-0-400B	QAL-14	VT-3	NA	6.000		Calculaton No. OSC-1214 Page 25; Problem No.1- 03A-11. System 03A 6" Emergency Feedwater
Class C	Mech Snubber	OFD-121D-1.1				0.000		
F01.050.087	1-03A-SR62	1-0-437A	QAL-14	VT-3	NA	6.000		Calculaton No. OSC-339 Page 81; Problem No. 1-03A-5 . System 03A 6" Emergency Feedwater to 24" Main Feedwater.
Class C	Hyd Snubber	OFD-121D-1.1				0.000		
F01.050.088	1-01A-H43	1-1-0-401A	QAL-14	VT-3	NA	12.000		Calculaton No. OSC-321; Problem No. 1-01-2 Sht. 3 of 5. System 01A; Main Steam Bypass To Condenser.
Class B	Mech Snubber	OFD-122A-1.2				0.000		
F01.050.089	1-01A-R11	4-2-0-400A	QAL-14	VT-3	NA	6.000		Calculation Number OSC-325 Sheet 3 of 3; Problem 1-01-06 Page 91. System 01A Steam Supply to Emergency Feedwater Pump Turbine.
Class C	Mech Snubber	OFD-122A-1.4				0.250		
F01.050.090	1-07A-H39	6-0-400A	QAL-14	VT-3	NA	20.000		Calculaton No. OSC-361 Page 85.1 Problem No.1-07A-01 L.P.& H.P.Condensate System 07A
Class C	Mech Snubber	OFD-121A-1.8				0.000		
F01.050.091	1-07A-H40	6-0-400A	QAL-14	VT-3	NA	20.000		Calculaton No. OSC-361 Page 85.1 Problem No.1-07A-01 L.P.& H.P.Condensate System 07A
Class C	Mech Snubber	OFD-121A-1.8				0.000		

CATEGORY F-A, Supports

DUKE ENERGY CORPORATION
QUALITY ASSURANCE TECHNICAL SERVICES
Inservice Inspection Database Management System

Spring Supports & Constant Load Supports

Oconee 1

Inservice Inspection Plan for Interval 3 Outage 2

ITEM NUMBER	ID NUMBER	ISO/DWG NUMBERS	PROC	INSP REQ	MAT/SCH	DIA/THK	CAL BLOCKS	COMMENTS
F01.050.092	1-07A-H41	6-0-400A	QAL-14	VT-3	NA	24.000		Calculaton No. OSC-361
	Mech Snubber	OFD-121A-1.8				0.000		Page 85.1 Problem No.1-07A-01
Class C								L.P.& H.P.Condensate System 07A
F01.050.093	1-50-RCPM-S1	0-66A	QAL-14	VT-3	NA	5.000		Calculaton No. OSC-0971-01-0001, Reactor Coolant
	Hyd Snubber	OFD-100A-1.1				0.000		Pump 1A1 Motor Snubbers. Reference PIP
Class A		OFD-100A-1.3						0-O96-1575. Inspect with F01.012.015.
F01.050.094	1-50-RCPM-S2	0-66A	QAL-14	VT-3	NA	5.000		Calculaton No. OSC-0971-01-0002, Reactor Coolant
	Hyd Snubber	OFD-100A-1.1				0.000		Pump 1A1 Motor Snubbers. Reference PIP
Class A		OFD-100A-1.3						0-O96-1575
F01.050.095	1-50-RCPM-S3	0-66A	QAL-14	VT-3	NA	5.000		Calculaton No. OSC-0971-01-0003, Reactor Coolant
	Hyd Snubber	OFD-100A-1.1				0.000		Pump 1A1 Motor Snubbers. Reference PIP
Class A		OFD-100A-1.3						0-O96-1575
F01.050.096	1-50-RCPM-S4	0-66A	QAL-14	VT-3	NA	5.000		Calculaton No. OSC-0971-01-0004, Reactor Coolant
	Hyd Snubber	OFD-100A-1.1				0.000		Pump 1A2 Motor Snubbers. Reference PIP
Class A		OFD-100A-1.3						0-O96-1575
F01.050.097	1-50-RCPM-S5	0-66A	QAL-14	VT-3	NA	5.000		Calculaton No. OSC-0971-01-0005, Reactor Coolant
	Hyd Snubber	OFD-100A-1.1				0.000		Pump 1A2 Motor Snubbers. Reference PIP
Class A		OFD-100A-1.3						0-O96-1575
F01.050.098	1-50-RCPM-S6	0-66A	QAL-14	VT-3	NA	5.000		Calculaton No. OSC-0971-01-0006, Reactor Coolant
	Hyd Snubber	OFD-100A-1.1				0.000		Pump 1A2 Motor Snubbers. Reference PIP
Class A		OFD-100A-1.3						0-O96-1575. Inspect with F01.012.016.
F01.050.099	1-50-RCPM-S7	0-66A	QAL-14	VT-3	NA	5.000		Calculaton No. OSC-0971-01-0007, Reactor Coolant
	Hyd Snubber	OFD-100A-1.1				0.000		Pump 1B1 Motor Snubbers. Reference PIP
Class A		OFD-100A-1.3						0-O96-1575

CATEGORY F-A, Supports

Spring Supports & Constant Load Supports

ITEM NUMBER	ID NUMBER	ISO/DWG NUMBERS	PROC	INSP REQ	MAT/SCH	DIA/THK	CAL BLOCKS	COMMENTS
F01.050.100	1-50-RCPM-S8	0-66A	QAL-14	VT-3	NA	5.000		Calculaton No. OSC-0971-01-0008, Reactor Coolant Pump 1B1 Motor Snubbers. Reference PIP 0-O96-1575
	Hyd Snubber	OFD-100A-1.1				0.000		
Class A		OFD-100A-1.3						
F01.050.101	1-50-RCPM-S9	0-66A	QAL-14	VT-3	NA	5.000		Calculaton No. OSC-0971-01-0009, Reactor Coolant Pump 1B1 Motor Snubbers. Reference PIP 0-O96-1575. Inspect with F01.012.017.
	Hyd Snubber	OFD-100A-1.1				0.000		
Class A		OFD-100A-1.3						
F01.050.102	1-50-RCPM-S10	0-66A	QAL-14	VT-3	NA	5.000		Calculaton No. OSC-0971-01-0010, Reactor Coolant Pump 1B2 Motor Snubbers. Reference PIP 0-O96-1575
	Hyd Snubber	OFD-100A-1.1				0.000		
Class A		OFD-100A-1.3						
F01.050.103	1-50-RCPM-S11	0-66A	QAL-14	VT-3	NA	5.000		Calculaton No. OSC-0971-01-0011, Reactor Coolant Pump 1B2 Motor Snubbers. Reference PIP 0-O96-1575
	Hyd Snubber	OFD-100A-1.1				0.000		
Class A		OFD-100A-1.3						
F01.050.104	1-50-RCPM-S12	0-66A	QAL-14	VT-3	NA	5.000		Calculaton No. OSC-0971-01-0012, Reactor Coolant Pump 1B2 Motor Snubbers. Reference PIP 0-O96-1575. Inspect with F01.012.018.
	Hyd Snubber	OFD-100A-1.1				0.000		
Class A		OFD-100A-1.3						

Total F01.050 Items: 101

Total F01 Items: 141

CATEGORY AUG, Augmented Inspections

DUKE ENERGY CORPORATION
QUALITY ASSURANCE TECHNICAL SERVICES
Inservice Inspection Database Management System

Reactor Coolant Pump Flywheel

Oconee 1

Inservice Inspection Plan for Interval 3 Outage 2

ITEM NUMBER	ID NUMBER	ISO/DWG NUMBERS	PROC	INSP REQ	MAT/SCH	DIA/THK	CAL BLOCKS	COMMENTS
G01.001.001	1-RCP-1A1	OM-201D-38	NDE-900	UT	CS	72.000		The entire volume of the flywheel shall be examined by UT at approximately 3 year intervals. Ref. Section 7 of the ISI Plan Volume 1.
Class A	Circumferential			RCP 1A1 Flywheel to		9.500		
G01.001.002	1-RCP-1A2	OM-201D-38	NDE-900	UT	CS	72.000		The entire volume of the flywheel shall be examined by UT at approximately 3 year intervals. Ref. Section 7 of the ISI Plan Volume 1.
Class A	Circumferential			RCP 1A2 Flywheel to		9.500		
G01.001.003	1-RCP-1B1	OM-201D-38	NDE-900	UT	CS	72.000		The entire volume of the flywheel shall be examined by UT at approximately 3 year intervals. Ref. Section 7 of the ISI Plan Volume 1.
Class A	Circumferential			RCP 1B1 Flywheel to		9.500		
G01.001.004	1-RCP-1B2	OM-201D-38	NDE-900	UT	CS	72.000		The entire volume of the flywheel shall be examined by UT at approximately 3 year intervals. Ref. Section 7 of the ISI Plan Volume 1.
Class A	Circumferential			RCP 1B2 Flywheel to		9.500		

Total G01.001 Items: 4

Total G01 Items: 4

CATEGORY AUG, Augmented Inspections

DUKE ENERGY CORPORATION
QUALITY ASSURANCE TECHNICAL SERVICES
Inservice Inspection Database Management System

High Pressure Injection Nozzle Safe End

Oconee 1

Inservice Inspection Plan for Interval 3 Outage 2

ITEM NUMBER	ID NUMBER	ISO/DWG NUMBERS	PROC	INSP REQ	MAT/SCH	DIA/THK	CAL BLOCKS	COMMENTS
G02.001.001	1-PDA1-47	ISI OCN1-011	NDE-610	UT	SS	3.500		Reference Section 7 of the ISI Plan, Volume 1.
Circumferential		OM-201-597				0.750		Nozzle Safe End PC 47
Class A				Nozzle HPI Nozzle to Safe End, PC 47				
G02.001.001A	1-PDA1-47	ISI OCN1-011	NDE-12	RT	SS	3.500		Reference Section 7 of the ISI Plan, Volume 1.
Circumferential		OM-201-597				0.750		Nozzle Safe End PC 47
Class A				Nozzle HPI Nozzle to Safe End, PC 47				
G02.001.002	1-PDA2-47	ISI OCN1-012	NDE-610	UT	SS	3.500		Reference Section 7 of the ISI Plan, Volume 1.
Circumferential		OM-201-597				0.750		Nozzle Safe End PC 47
Class A				Nozzle HPI Nozzle to Safe End, PC 47				
G02.001.002A	1-PDA2-47	ISI OCN1-012	NDE-12	RT	SS	3.500		Reference Section 7 of the ISI Plan, Volume 1.
Circumferential		OM-201-597				0.750		Nozzle Safe End PC 47
Class A				Nozzle HPI Nozzle to Safe End, PC 47				
G02.001.003	1-PDB1-47	ISI OCN1-013	NDE-610	UT	SS	3.500		Reference Section 7 of the ISI Plan, Volume 1.
Circumferential		OM-201-597				0.750		Nozzle Safe End PC 47
Class A				Nozzle HPI Nozzle to Safe End, PC 47				
G02.001.003A	1-PDB1-47	ISI OCN1-013	NDE-12	RT	SS	3.500		Reference Section 7 of the ISI Plan, Volume 1.
Circumferential		OM-201-597				0.750		Nozzle Safe End PC 47
Class A				Nozzle HPI Nozzle to Safe End, PC 47				
G02.001.004	1-PDB2-47	ISI OCN1-014	NDE-610	UT	SS	3.500		Reference Section 7 of the ISI Plan, Volume 1.
Circumferential		OM-201-597				0.750		Nozzle Safe End PC 47
Class A				Nozzle HPI Nozzle to Safe End, PC 47				
G02.001.004A	1-PDB2-47	ISI OCN1-014	NDE-12	RT	SS	3.500		Reference Section 7 of the ISI Plan, Volume 1.
Circumferential		OM-201-597				0.750		Nozzle Safe End PC 47
Class A				Nozzle HPI Nozzle to Safe End, PC 47				

Total G02.001 Items: 8

Total G02 Items: 8

CATEGORY AUG, Augmented Inspections

DUKE ENERGY CORPORATION
QUALITY ASSURANCE TECHNICAL SERVICES
Inservice Inspection Database Management System

Circumferential Pipe Welds With A Nom. Wall Thk. < 3/8" and > NPS 4"

Oconee 1

Inservice Inspection Plan for Interval 3 Outage 2

ITEM NUMBER	ID NUMBER	ISO/DWG NUMBERS	PROC	INSP REQ	MAT/SCH	DIA/THK	CAL BLOCKS	COMMENTS
G09.001.002	1-51A-01-39A	1-51A-01(1)	NDE-35	PT	SS	6.000		
	Circumferential	OFD-101A-1.3				0.280		
Class B				Elbow to Valve 1HP-107				
G09.001.008	1-53B-02-A33	1-53B-02(2)	NDE-35	PT	SS	14.000		
	Circumferential	OFD-102A-1.1				0.250		
Class B				Tee to Pipe				
G09.001.014	1LP-004-40	1LP-004	NDE-35	PT	SS	14.000		
	Circumferential	OFD-102A-1.1				0.250		
Class B				Pipe to Valve 1LP-30				
G09.001.020	1-53B-06-42K	1-53B-06(4)	NDE-35	PT	SS	10.000		
	Circumferential	OFD-102A-1.2				0.250		
Class B				Elbow to Pipe				
G09.001.026	1-53B-14-5	1-53B-14	NDE-35	PT	SS	12.000		
	Circumferential	OFD-102A-1.1				0.180		
Class B				Elbow to Pipe				
G09.001.032	1LP-103-10A	1LP-103	NDE-35	PT	SS	10.000		Weld was previously listed as 1-54A-1.2-10A.
	Circumferential	OFD-102A-1.1				0.250		
Class B				Elbow to Elbow				
G09.001.038	1-54A-04-28C	1-54A-04(1)	NDE-35	PT	SS	8.000		
	Circumferential	OFD-103A-1.1				0.250		
Class B				Elbow to Pipe				
G09.001.044	1-54A-04-83C	1-54A-04(3)	NDE-35	PT	SS	8.000		
	Circumferential	OFD-103A-1.1				0.250		
Class B				Elbow to Pipe				

Total G09.001 Items: 8

Total G09 Items: 8

ITEM NUMBER	ID NUMBER	ISO/DWG NUMBERS	PROC	INSP REQ	MAT/SCH	DIA/THK	CAL BLOCKS	COMMENTS
G10.001.007	1-PIA1-12	ISI OCN1-007	NDE-35	PT	CS/Inconel	8.750		Reference Section 7, Paragraph 7.1.10 in ISI Plan Volume 1. This weld covers the Z- W Axis. The diameter of hole that penetrates the nozzle into the RCP 1A1 Suction Piping = .613".
Branch		OM-201-1845				2.250		
Class A				Nozzle Salvaged Pipe to Pipe (RTE Mounting Boss)				
Dissimilar								

Total G10.001 Items: 1

Total G10 Items: 1

CATEGORY ,

DUKE ENERGY CORPORATION
QUALITY ASSURANCE TECHNICAL SERVICES
Inservice Inspection Database Management System

Oconee 1

Inservice Inspection Plan for Interval 3 Outage 2

ITEM NUMBER	ID NUMBER	ISO/DWG NUMBERS	PROC	INSP REQ	MAT/SCH	DIA/THK	CAL BLOCKS	COMMENTS
G12.001.002	1-51B-10-39HH	1-51B-10	NDE-35	PT	SS	4.000		
	Circumferential	OFD-101A-1.1				0.120		
Class B				Pipe to Elbow				
G12.001.005	1-51B-1-59A	1-51B-1	NDE-35	PT	SS	2.500		
	Circumferential	OFD-101A-1.2				0.120		
Class B				Pipe to Elbow				
G12.001.008	1-51B-2-143A	1-51B-2	NDE-35	PT	SS	2.500		
	Circumferential	OFD-109A-1.1				0.120		
Class B				Pipe to Elbow				
G12.001.016	1-51B-5-33	1-51B-5	NDE-35	PT	SS	2.500		
	Circumferential	OFD-101A-1.2				0.120		
Class B				Tee to Pipe				

Total G12.001 Items: 4

Total G12 Items: 4

5.0 *Results Of Inspections Performed*

The results of each examination shown in the final ISI Plan (Section 4 of this report) are included in this section. The completion date and status for each examination are shown. Limited examinations are described in further detail in Section 5.2. All examinations revealing reportable indications are described in further detail in Section 6.

5.1 The information shown below is a field description for the reporting format included in this section of the report:

Item Number	=	ASME Section XI Tables IWB-2500-1 (Class 1), IWC-2500-1 (Class 2), IWF-2500-1 (Class 1 and Class 2), Augmented Requirements
ID Number	=	Unique Identification Number
System	=	System examined
Insp Date	=	Date of Examination
Insp Status	=	CLR Clear REC Recordable REP Reportable
Insp Limited	=	Indicates inspection was limited. Coverage obtained is listed
Geo. Ref. (Geometric Reflector applies only to UT)	=	Y Yes N No
RFR	=	Request for Relief Required
Comments	=	General and/or Detail Description

DUKE ENERGY CORPORATION
QUALITY ASSURANCE TECHNICAL SERVICES
In-Service Inspection Database Management System
Oconee 1 Inservice Inspection Listing
Interval 3 Outage 2

ITEM NUMBER	ID NUMBER	SYSTEM	INSP DATE	INSP STATUS	INSP LIMITED	GEO REF	RFR	COMMENTS
B01.021.001	1-RPV-WH5	50	10/03/97	CLR	81.85%	N	Y	Limited weld examination is covered by Request for Relief 95-04.
B01.040.001	1-RPV-WH7	50	10/03/97	CLR	48.55%	N	Y	Limited weld examination is covered by Request for Relief 95-04.
B01.040.001A	1-RPV-WH7	50	10/03/97	CLR	94.00%	N	N	18" OF 492" could not be inspected at 3 lifting lugs.
B02.040.001	1-SGA-WG58-1	50	11/04/97	CLR	71.50%	N	Y	Limited weld examination is covered by Request for Relief 96-02.
B02.040.003	1-SGB-WG58-1	50	10/25/97	REC	---	N	N	Indication shows no growth since last inspection in outage 14.
B03.110.001	1-PZR-WP15	50	10/24/97	CLR	68.39%	N	Y	Limited weld examination is covered by Request for Relief 98-01
B03.120.001	1-PZR-WP15	50	10/24/97	CLR	---	N	N	
B03.150.001	1-LDCA-IN-V2	51A	09/29/97	REC	26.73%	Y	Y	Limited weld examination is covered by Request for Relief 98-01
B03.150.002	1-LDCA-OUT-V6	51A	09/29/97	REC	26.73%	Y	Y	Limited weld examination is covered by Request for Relief 98-01
B03.160.001	1-LDCA-IN-V2	51A	09/29/97		---	N	Y	See Request for Relief ONS-009 in the General Requirement Section of the ISI Plan for Oconee. See inspection record for Item Number B03.150.001.
B03.160.002	1-LDCA-OUT-V6	51A	09/29/97		---	N	Y	See Request for Relief ONS-009 in the General Requirement Section of the ISI Plan for Oconee. See inspection record for Item Number B03.150.002.
B05.040.001	1-PZR-WP23	50	10/08/97	CLR	---	N	N	
B05.040.001A	1-PZR-WP23	50	10/08/97	CLR	---	N	N	
B05.040.001B	1-PZR-WP23	50	10/08/97	CLR	---	N	N	
B05.040.002	1-PZR-WP45	50	09/26/97	CLR	---	N	N	
B05.040.002A	1-PZR-WP45	50	09/27/97	CLR	---	N	N	
B05.040.002B	1-PZR-WP45	50	09/27/97	CLR	---	N	N	
B05.130.002	1-PDA1-2	50	09/29/97	CLR	---	N	N	
B05.130.002A	1-PDA1-2	50	09/29/97	CLR	---	N	N	
B05.130.002B	1-PDA1-2	50	09/28/97	CLR	---	N	N	
B05.130.009	1-PSL-10	50	09/29/97	CLR	---	N	N	
B05.130.009A	1-PSL-10	50	09/29/97	CLR	96.09%	N	N	
B05.130.009B	1-PSL-10	50	09/26/97	CLR	---	N	N	
B06.040.001	1-RPV-LIGAMENTS		10/01/97	CLR	---	N	N	
B06.190.001	1-RCP-1A1-FLANGE		10/17/97	CLR	---	N	N	
B07.020.001	1-PZR-UHB-STUDS		10/22/97	CLR	---	N	N	
B07.070.005	1-53A-LP47-BOLTS	53A	10/08/97	CLR	---	N	N	Localized corrosion exist, but not more than 5% of stud cross sectional area. Work order 94016608-01 has been written to PM 1LP-47.
B07.080.001	1-RPV-CRD-BOLTS		11/11/96	CLR	---	N	N	CRD housing bolts (quanity 80) - CRD # 10, 17, 20, 26, 41, 44, 46, 51 61, 68 (8 bolts per connection) - No apparent service induced damage.
B07.080.001	1-RPV-CRD-BOLTS		10/23/97	CLR	---	N	N	CRD housing bolts (quanity 40) - (8 bolts per connection) - CRD

DUKE ENERGY CORPORATION
QUALITY ASSURANCE TECHNICAL SERVICES
In-Service Inspection Database Management System
Oconee 1 Inservice Inspection Listing
Interval 3 Outage 2

ITEM NUMBER	ID NUMBER	SYSTEM	INSP DATE	INSP STATUS	INSP LIMITED	GEO REF	RFR	COMMENTS
								# 19, 9, 23, 40, and 59 - No apparent service induced damage.
B07.080.002	1-RPV-CRD-RINGS		10/23/97	CLR	---	N	N	CRD housing rings (5 pair) - CRD # 19, 9, 23, 40, and 59 - No apparent service induced damage.
B07.080.002	1-RPV-CRD-RINGS		11/11/96	CLR	---	N	N	CRD housing rings (10 pair) (1 pair per housing) - CRD # 10, 17, 20, 26, 41, 44, 46, 51, 61, and 68 - No apparent service induced damage.
B09.011.053	1-PIB2-4	50	10/21/97	CLR	---	N	N	
B09.011.053A	1-PIB2-4	50	10/21/97	CLR	---	N	N	
B09.011.089	1-53A-02-68L	53A	10/01/97	REC	---	Y	N	
B09.011.089A	1-53A-02-68L	53A	10/01/97	CLR	---	N	N	
B09.011.091	1-53A-02-50L	53A	10/01/97	REC	---	Y	N	
B09.011.091A	1-53A-02-50L	53A	10/01/97	CLR	---	N	N	
B09.011.092	1-53A-02-54LB	53A	10/07/97	REC	---	Y	N	
B09.011.092A	1-53A-02-54LB	53A	10/07/97	CLR	---	N	N	
B09.011.094	1-53A-02-56L	53A	10/07/97	REC	---	Y	N	
B09.011.094A	1-53A-02-56L	53A	10/07/97	CLR	---	N	N	
B09.011.095	1-53A-02-57L	53A	10/07/97	REC	---	Y	N	
B09.011.095A	1-53A-02-57L	53A	10/07/97	CLR	---	N	N	
B09.011.096	1-53A-02-59LA	53A	10/07/97	CLR	---	N	N	
B09.011.096A	1-53A-02-59LA	53A	10/07/97	CLR	---	N	N	
B09.011.097	1-53A-02-60L	53A	10/07/97	REC	---	Y	N	
B09.011.097A	1-53A-02-60L	53A	10/07/97	CLR	---	N	N	
B09.011.105	1-PSL-7	50	09/27/97	REC	---	Y	N	
B09.011.105A	1-PSL-7	50	09/26/97	CLR	---	N	N	
B09.011.106	1-PSL-8	50	09/27/97	REC	---	Y	N	
B09.011.106A	1-PSL-8	50	09/26/97	CLR	---	N	N	
B09.011.107	1-PSL-9	50	09/27/97	REC	---	Y	N	
B09.011.107A	1-PSL-9	50	09/26/97	CLR	---	N	N	
B09.011.110	1-53A-3-2A	53A	09/29/97	CLR	---	N	N	
B09.011.110A	1-53A-3-2A	53A	09/29/97	CLR	---	N	N	
B09.011.119	1-PSP-3	50	09/27/97	CLR	---	N	N	
B09.011.119A	1-PSP-3	50	09/26/97	CLR	---	N	N	
B09.021.001	1-PSP-7	50	09/26/97	CLR	---	N	N	
B09.021.007	1-PSP-23	50	09/26/97	CLR	---	N	N	
B09.021.019	1-50-47-1	50	09/26/97	CLR	---	N	N	
B09.021.020	1-50-47-2	50	09/26/97	CLR	---	N	N	
B09.021.021	1-50-47-3	50	09/26/97	CLR	---	N	N	

ITEM NUMBER	ID NUMBER	SYSTEM	INSP DATE	INSP STATUS	INSP LIMITED	GEO REF	RFR	COMMENTS
B09.021.022	1-50-47-4	50	09/26/97	CLR	---	N	N	
B09.031.001	1-PHA-16	50	09/29/97	CLR	92.00%	N	N	
B09.031.001A	1-PHA-16	50	09/29/97	CLR	---	N	N	
B09.032.004	1-PDA1-12	50	09/28/97	CLR	---	N	N	
B09.040.011	1-51A-134A-39	51A	09/29/97	CLR	---	N	N	
B12.010.001	1-RCP-1A1	50	10/17/97	CLR	---	N	N	Lead numbers and IQIs placed 1/2" from weld. Film marks at each end of radiograph not in exact same location. (See test film) Film marks do not exceed the maximum allowable flaw length of ASME XI.
B12.020.001	1-RCP-1A1-CASING	50	10/20/97	CLR	---	N	N	Video camera/VCR/Monitor used to perform and evaluate the examination.
B12.050.004	1-53A-CF-14	53A	10/19/97	CLR	---	N	N	There are 2 cuts through the outside thread of valve approx. 1/8" wide and 1/4" deep at 5:00 and 8:00. There is a nick in the second thread at 5:00 position approx. 1/16" deep and 1/4" long. The accountable engineer, Calton Burrel, approved the nicks. The nicks are also outside the inspection area of interest.
B12.050.006	1-53A-LP-2	53A	10/24/97	CLR	---	N	N	
B13.010.001	1-RPV-INT-SURFACE	50	10/05/97	CLR	---	N	N	
C01.010.001	1-SGA-WG8-2	03	09/25/97	REC	63.11%	Y	Y	Reference Request for Relief 97-01 for limitation.
C01.020.002	1-LPCB-SH-1		10/15/97	REC	---	Y	N	
C01.020.003	1-LPCB-SH-2		10/15/97	REC	---	Y	N	
C02.033.001	1-BWST-OUTLET	53A	12/05/97	CLR	---	N	N	Test number 12FI-257B for first period.
C02.033.002	1-53B-LPA-OUTLET	53B	09/22/97	CLR	---	N	N	
C02.033.003	1-53B-LPA-INLET	53B	09/22/97	CLR	---	N	N	
C03.010.001	1-SGA-WG84-XY		10/08/97	CLR	---	N	N	
C03.010.002	1-SGA-WG84-YX		10/08/97	CLR	---	N	N	
C03.020.002	1-01A-H12	01A	10/03/97	CLR	---	N	N	
C03.020.014	1-01A-R10	01A	10/12/97	CLR	---	N	N	
C03.020.021	1-14-H19A	14	10/03/97	CLR	---	N	N	
C03.020.022	1-14-H19D	14	10/03/97	CLR	---	N	N	
C03.020.025	1-14-H22A	14	10/12/97	CLR	---	N	N	
C03.020.049	1-53B-H65	53B	09/10/97	CLR	---	N	N	
C03.020.051	1-53B-R13	53B	09/09/97	CLR	---	N	N	
C03.020.055	1-53B-R7	53B	09/05/97	CLR	---	N	N	
C03.020.075	1-51-SR15	51	11/13/97	REC	---	N	N	Examination on 10/13/97 revealed that the weld had a rounded indication ~ 1/8" in diameter. Additionally, adjacent welds were undersized and arc strikes were present on the piping. PIP serial

ITEM NUMBER	ID NUMBER	SYSTEM	INSP DATE	INSP STATUS	INSP LIMITED	GEO REF	RFR	COMMENTS
								number 1-O97-3523 was written to document these conditions. Another PT examination was performed on 11/13/97 and the weld was deemed to be acceptable. No additional sample was required since the indications were not service induced.
C03.020.078	1-51-H57	51B	10/09/97	CLR	---	N	N	
C03.020.079	1-51-SR10	51B	09/04/97	CLR	---	N	N	
C03.020.084	1-51-SR7	51B	09/04/97	CLR	---	N	N	
C05.011.004	1-53A-01-31LD	53A	09/09/97	REC	---	Y	N	
C05.011.004A	1-53A-01-31LD	53A	09/09/97	CLR	---	N	N	
C05.021.005	1HP-192-8	51A	09/04/97	CLR	---	N	N	
C05.021.005A	1HP-192-8	51A	09/03/97	CLR	---	N	N	
C05.021.008	1HP-192-22	51A	09/04/97	CLR	---	N	N	
C05.021.008A	1HP-192-22	51A	09/03/97	CLR	---	N	N	
C05.021.013	1-51A-123-16	51A	09/04/97	CLR	---	N	N	
C05.021.013A	1-51A-123-16	51A	09/03/97	CLR	---	N	N	
C05.021.019	1-51A-124-12	51A	09/05/97	CLR	---	N	N	
C05.021.019A	1-51A-124-12	51A	09/04/97	CLR	---	N	N	
C05.021.025	1HP-178-15	51A	09/04/97	CLR	---	N	N	
C05.021.025A	1HP-178-15	51A	09/03/97	CLR	---	N	N	
C05.021.031	1HP-200-20	51A	09/23/97	REC	---	Y	N	
C05.021.031A	1HP-200-20	51A	09/23/97	CLR	---	N	N	
C05.021.035	1HP-180-89E	51A	10/06/97	CLR	---	N	N	
C05.021.035A	1HP-180-89E	51A	10/06/97	CLR	---	N	N	
C05.021.040	1-51A-01-85A	51A	09/10/97	REC	---	Y	N	
C05.021.040A	1-51A-01-85A	51A	09/05/97	CLR	---	N	N	
C05.021.046	1-51A-01-98A	51A	09/10/97	REC	---	Y	N	
C05.021.046A	1-51A-01-98A	51A	09/05/97	CLR	---	N	N	
C05.021.052	1-51A-02-17B	51A	09/05/97	CLR	---	N	N	
C05.021.052A	1-51A-02-17B	51A	09/04/97	CLR	---	N	N	
C05.021.062	1HP-193-11	51A	09/09/97	CLR	---	N	N	
C05.021.062A	1HP-193-11	51A	09/09/97	CLR	---	N	N	
C05.021.075	1-51A-01-93A	51A	09/10/97	CLR	---	N	N	
C05.021.075A	1-51A-01-93A	51A	09/05/97	CLR	---	N	N	
C05.021.079	1-51A-01-75A	51A	09/05/97	REC	---	Y	N	
C05.021.079A	1-51A-01-75A	51A	09/05/97	CLR	---	N	N	
C05.021.085	1-51A-02-12B	51A	09/05/97	CLR	---	N	N	
C05.021.085A	1-51A-02-12B	51A	09/04/97	CLR	---	N	N	

ITEM NUMBER	ID NUMBER	SYSTEM	INSP DATE	INSP STATUS	INSP LIMITED	GEO REF	RFR	COMMENTS
C05.021.091	1-51A-02-51B	51A	10/11/97	CLR	---	N	N	
C05.021.091A	1-51A-02-51B	51A	09/04/97	CLR	---	N	N	
C05.021.097	1HP-179-118	51A	10/21/97	REC	---	Y	N	
C05.021.097A	1HP-179-118	51A	10/21/97	CLR	---	N	N	
C05.021.107	1-51A-01-100A	51A	09/10/97	CLR	---	N	N	
C05.021.107A	1-51A-01-100A	51A	09/05/97	CLR	---	N	N	
C05.041.003	1LP-107-7	53B	09/09/97	CLR	---	N	N	
C05.041.004	1LP-107-7Z	53B	09/09/97	CLR	---	N	N	
C05.041.013	1-53B-06-26KC	53B	09/09/97	CLR	---	N	N	
C05.041.014	1-53B-06-26KI	53B	09/09/97	CLR	---	N	N	
C05.041.026	1-LP-94-15	53B	09/04/97	CLR	---	N	N	
C05.051.001	1MS-070-1B	01A	10/16/97	REC	---	Y	N	
C05.051.001A	1MS-070-1B	01A	10/16/97	CLR	---	N	N	
C05.051.013	1MS-069-29B	01A	09/29/97	REC	---	Y	N	
C05.051.013A	1MS-069-29B	01A	09/29/97	CLR	---	N	N	
C05.051.018	1MS-064-16	01A	10/15/97	REC	---	Y	N	
C05.051.018A	1MS-064-16	01A	10/15/97	CLR	---	N	N	
C05.051.028	1-FWD83-A	03	10/06/97	REC	---	Y	N	
C05.051.028A	1-FWD83-A	03	10/05/97	CLR	---	N	N	
C05.051.035	1-03-03-30B	03	10/02/97	REC	---	Y	N	
C05.051.035A	1-03-03-30B	03	10/02/97	CLR	---	N	N	
C05.051.042	1-LPSW-345-21	14B	09/04/97	CLR	---	N	N	
C05.051.042A	1-LPSW-345-21	14B	09/03/97	CLR	---	N	N	
C05.051.046	1-LPSW-346-17	14B	09/04/97	CLR	---	N	N	
C05.051.046A	1-LPSW-346-17	14B	09/03/97	CLR	---	N	N	
D02.020.001	1-01A-DE005	01A	09/27/97	REC	---	N	N	Approx. 1/2 of top north end weld is undersized. Also, bottom south weld has a gap present at the top. Civil Engineering evaluation determined that this discrepancy was not service induced. The somewhat undersized weld is acceptable for the configuration and design loads and the support is acceptable. Civil Engineering will update the support calculation and sketch to reflect the as-built condition.
D02.020.002	1-01A-JEJ-1401	01A	09/23/97	REC	---	N	N	1. 8' dimension in location plan on sketch shown is actually 34 7/8". 2. 1" thermal gaps are 1" north, 1/2" south. 3. Unable to verify 1/16" gap over item 2 both sides, appears to have rust between these two items. 4. 1/4" fillet not in place - weld in place is actually smaller than pipe O. D. in places. 5. No ID tag on S/R.

ITEM NUMBER	ID NUMBER	SYSTEM	INSP DATE	INSP STATUS	INSP LIMITED	GEO REF	RFR	COMMENTS
								Civil Engineering review has found this support to be acceptable for service. The discrepancies were determined to be not significant and no root cause investigation is required. See inspection record for more information.
D02.020.015	1-03A-H155	03A	07/15/97	CLR	---	N	N	
D02.020.016	1-03A-H159	03A	07/15/97	CLR	---	N	N	
D02.020.021	1-03A-H33	03A	09/21/97	CLR	---	N	N	
D02.020.033	1-03A-H8	03A	07/23/97	REC	---	N	N	Weld size insufficient on north side of welded attachment - appears to be tacks, not 1/4" fillet welds. After evaluation it was determined that this discrepancy is not service induced. Therefore, the support is acceptable for service per Article IWF-3112 of Section XI of ASME Code. See inspection record for more information.
D02.020.034	1-03A-H82	03A	07/23/97	CLR	---	N	N	
D02.020.035	1-03A-H9	03A	07/22/97	CLR	---	N	N	
D02.020.036	1-03A-R37	03A	09/21/97	REC	---	N	N	1. Sketch does not indicate number of required lugs. As errected, three exist (NW, NE and SE). 2. NW lug is welded accross a full circumferential pipe weld. 3. Weld size on top of NE lug is less than specified 1/4" fillet. 4. Gap at SE lug is greater than .125". 5. Cumulative gap at N side lugs is .153". Civil Engineering review has found this support to be acceptable for service. The discrepanices were determined to be not significant and no root cause investigation is required. See inspection record for more information.
D02.020.045	1-03A-SR31	03A	09/02/97	REC	---	N	N	Six out of eight lugs have weld size / length discrepancies. Civil Engineering review has found this support to be acceptable for service. The discrepancies were determined to be not significant and no root cause investigation is required. See inspection record for more information.
D02.020.047	1-03A-SR40	03A	07/22/97	CLR	---	N	N	
D02.020.048	1-03A-SR46	03A	08/04/97	CLR	---	N	N	
D02.020.063	1-03A-SR98	03A	07/22/97	CLR	---	N	N	
D02.020.071	1-07A-SR20	07A	07/15/97	CLR	---	N	N	
D02.020.076	1-14B-ASR21	14B	08/11/97	CLR	---	N	N	
D02.020.079	1-14B-DE011	14B	07/23/97	REC	---	N	N	Weld between 8" pipe & item #2 - no visible leg length...actually smaller than item #2. After evaluation it was determined that this discrepancy is not service induced. Therefore, the support is acceptable for service per Article IWF-3112 of Section XI of

ITEM NUMBER	ID NUMBER	SYSTEM	INSP DATE	INSP STATUS	INSP LIMITED	GEO REF	RFR	COMMENTS
								ASME Code. See inspection record for more information.
D02.020.085	1-14B-H25	14B	07/22/97	CLR	---	N	N	
D02.020.090	1-14B-SR34	14B	08/20/97	CLR	---	N	N	
D02.020.096	1-14B-SR45	14B	07/23/97	REC	---	N	N	Scaly rust on welds. Weld between pipe & item #4 insufficient or no weld leg length. After evaluation it was determined that this discreapancy is not service induced. Therefore, the support is acceptable for service per Article IWF-3112 of Section XI of ASME Code. See inspection record for additional information.
D02.030.001	1-01A-R11	01A	09/28/97	CLR	---	N	N	
D02.040.005	1-03-H58	03	10/15/97	REC	---	N	N	5/16" fillet item #4 to pipe - not a fillet weld - north side. A welding inspector verified effective throat on 9/22/87. Support acceptable.
D02.040.013	1-03A-H75	03A	08/20/97	CLR	---	N	N	
D03.020.002	1-56-H10	56	08/20/97	REC	---	N	N	No welds exist between pipe and item #4. After evaluation it was determined that this discrepancy is not service induced. Therefore, the support is acceptable for service per Article IWF-3112 of Section XI of ASME Code. See inspection record for additional information.
D03.020.013	1-56-SR13	56	07/28/97	REC	---	N	N	Welds between items #2 and 8" pipe are undersized. Civil Engineering review has found this support to be acceptable for service. The discrepancies were determined to be not significant and no root cause investigation is required. See inspection record for more information.
D03.020.017	1-56-SR21	56	08/20/97	REC	---	N	N	Welds between items #3 and pipe are shown as 1/4" fillet - welds existing are 1/8" - 3/16" with small areas of 1/4" fillet. After evaluation it was determined that this discrepancy is not service induced. Therefore, the support is acceptable for service per Article IWF-3112 of Section XI of ASME Code. See inspection record for more information.
F01.010.006	1-51A-H9B	51A	09/25/97	REC	---	N	N	Sketch shows 1/8" clearance top, 0" bottom. As erected, clearances are reversed. Civil Engineering review has found this support to be acceptable for service. The discrepancies were determined to be not significant and no root cause investigation is required. See inspection record for more information.
F01.012.001	1-50-H1	50	09/22/97	CLR	---	N	N	
F01.012.002	1-50-H11	50	09/22/97	CLR	---	N	N	
F01.012.015	1-50-RCPM-S1	50	09/21/97	CLR	---	N	N	
F01.020.012	1-14-H96	14	10/27/97	REC	---	N	N	1. No ID tag exist on support. 2. Section A-A is drawn 180

ITEM NUMBER	ID NUMBER	SYSTEM	INSP DATE	INSP STATUS	INSP LIMITED	GEO REF	RFR	COMMENTS
								degrees out from actual configuration in field. Pipe is down on the E side of the support. 3. Stanchion welds do not have fillet weld all around. 4" of area that does have a fillet weld have 3/16" fillet. Approx. 3.5" of area on stanchions do not have fillet weld geometry. 4. Gap between top item #3 and top item #5 is .200". 5. Pipe attachment centerline is 5/8" E of steel attachment centerline. Civil Engineering review has found this support to be acceptable for service. The discreapancies were determined to be not significant and no root cause investigation is required.
F01.020.017	1-51A-H138	51A	09/04/97	CLR	---	N	N	
F01.020.023	1-53-TWE-2879	53	10/23/97	REC	---	N	N	Shim welded to item #5 3" wide - should be 4 1/2" min. - welded along top only. Top S anchor W plate 4 3/4" C-C to anchor in another S/R. After evaluation it was determined that this discrepancy is not service induced. Therefore, the support is acceptable for service per Article IWF-3112 of Section XI of ASME Code. See inspection record for more information.
F01.020.024	1-53B-DE026	53B	07/24/97	CLR	---	N	N	
F01.020.028	1-53B-H10	53B	07/22/97	CLR	---	N	N	
F01.020.039	1-54A-H3	54A	07/21/97	CLR	---	N	N	
F01.020.041	1-54A-R15	54A	07/23/97	REC	---	N	N	E top vertical welds between items #1 & 2 are 1 1/4" long. After evaluation it was determined that this discrepancy is not service induced. Therefore, the support is acceptable for service per Article IWF-3112 of Section XI of ASME Code. See inspection record for more infornmation.
F01.020.044	1-51-H57	51B	10/06/97	REC	---	N	N	Sketch shows a 1/4" fillet weld S end and E and W sides of item #1. S end is welded with a 1/8" fillet weld. W side is welded with a 1/8" fillet weld, 3/4" long at S end of item #1. E side is welded 1/8" fillet 3/8" long at S end of item #1. After evaluation it was determined that this discrepancy is not service induced. Therefore, the support is acceptable for service per Article IWF-3112 of Section XI of ASME Code. See inspection record for more information.
F01.020.045	1-51-SR10	51B	09/03/97	REC	---	N	N	Cumulative gap exceeds 1/8" max as specified. Civil Engineering review has found this support to be acceptable for service. The discrepancies were determined to be not significant and no root cause investigation is required. See inspection record for more information.
F01.020.050	1-51-SR7	51B	09/03/97	REC	---	N	N	3/16" to 1/4" gaps exist N & S between lugs & pipe sleeve -

ITEM NUMBER	ID NUMBER	SYSTEM	INSP DATE	INSP STATUS	INSP LIMITED	GEO REF	RFR	COMMENTS
								should be 1/8" max cumulative. After evaluation it was determined that this discrepancy is not service induced. Therefore, the support is acceptable for service per Article IWF-3112 of Section XI of ASME Code. See inspection record for more information.
F01.021.007	1-14-H22A	14	09/25/97	CLR	---	N	N	
F01.021.009	1-51-SR3	51B	10/06/97	REC	---	N	N	1. Center to center dimension bottom anchor to an unused anchor hole is 2 3/4". Min. allowable is one half the specified spacing distance (3" for this support). 2. Shim is not tacked to the base plate. 3. Pipe is not bearing on this support. 4. Cumulative gap E & W is greater than .125". 5. E item #3 is welded 3/16" all around . 6. W item #3 is welded 3/16" all around except inside of angle N side. 7. Bolt on bottom anchor is grade 5 bolt and is not similar to the bolt in the top anchor. Civil Engineering review has found this support to be acceptable for service. The discrepancies were determined to be not significant and no root cause investigation is required. See inspection record for more information.
F01.021.010	1-51-SR45	51B	07/23/97	REC	---	N	N	Base plate does not have proper bearing. Two unused anchors exist 2 1/8" & 2 5/8" from top anchors, bottom base plate. After evaluation it was determined that this discrepancy is not service induced. Therefore, the support is acceptable for service per Article IWF-3112 of Section XI of ASME Code. See inspection record for more information.
F01.021.021	1-54A-H19	54A	07/22/97	CLR	---	N	N	
F01.021.025	1-51-SR15	51B	10/06/97	REC	---	N	N	1. All anchors except top E anchor are out of perpendicular to the base plate. 2. Top W anchor appears to be loose or pulled out of wall approx. 1/4". 3. Pipe is not bearing on this support. 4. Sketch shows 1/4" fillet weld between lugs & 6" pipe. As erected, welds are 1/8". 5. Lower item #5 is welded with 3/16" fillet. Sketch indicates 1/4" fillet. 6. Craft welded two shims to the base plate to maintain 1/16" typical gaps as shown on sketch incorrectly. Civil Engineering review has found this support to be acceptable for service. The discrepancies were determined to be not significant and no root cause investigation is required. See inspection record for more information.
F01.022.002	1-01A-FAC-1203	01A	10/06/97	REC	---	N	N	1. Item #8 is welded on the bottom horizontally & both vertical sides only with a 1/4" fillet. Sketch shows weld all around. 2.

ITEM NUMBER	ID NUMBER	SYSTEM	INSP DATE	INSP STATUS	INSP LIMITED	GEO REF	RFR	COMMENTS
								Welds between items #7 & the existing beam are 1/8" maximum. Sketch shows 1/4" fillet. After evaluation it was determined that this discrepancy is not service induced. Therefore, the support is acceptable for service per Article IWF-3112 of Section XI of ASME Code. See inspection record for more information.
F01.022.008	1-03-H2A	03	10/08/97	CLR	---	N	N	
F01.022.009	1-03A-H6202	03A	10/14/97	CLR	---	N	N	
F01.022.013	1-51A-H80	51A	07/22/97	CLR	---	N	N	
F01.030.002	1-02A-TR7	01A	09/27/97	REC	---	N	N	1. No washers on load pin. 2. No sight hole in S end of strut. 3. Aux. steam vlv.ID tag glued to strut. 4. N lock nut on strut loose. Civil Engineering review has found this support to be acceptable for service. The discrepancies were determined to be not significant and no root cause investigation is required. See inspection record for more information.
F01.030.004	1-03A-DE015	03A	07/15/97	CLR	---	N	N	
F01.030.008	1-03A-H142	03A	07/15/97	CLR	---	N	N	
F01.030.010	1-03A-H19	03A	07/23/97	REC	---	N	N	Item #5 too long - bears against pin in item #1 & against bolt in item #3. After evaluation it was determined that this discrepancy is not service induced. Therefore, the support is acceptable for service per Article IWF-3112 of Section XI of ASME Code. See inspection record for more information.
F01.030.013	1-03A-H62	03A	07/15/97	REC	---	N	N	Rod item #5 resting on top clam bolt. S existing C6x8.2 E end welded 1/4". Location plan shows E-W pipe, elev. looking S shows N-S. After Civil Engineering evaluation it was determined that this discrepancy is not service induced. Therefore, the support is acceptable for service per Article IWF-3112 of Section XI of ASME Code. See inspection record for more information.
F01.030.014	1-03A-H80	03A	07/23/97	REC	---	N	N	Base plate does not have proper bearing. Holes in concrete under plate appear to be oversized. After evaluation it was determined that this discrepancy is not service induced. Therefore, the support is acceptable for service per Article IWF-3112 of Section XI of ASME Code. See inspection record for more information.
F01.031.004	1-03A-H82	03A	07/23/97	REC	---	N	N	Three base plates do not have proper bearing along W edges. After evaluation it was determined that this discrepancy is not service induced. Therefore, the support is acceptable for service per Article IWF-3112 of Section XI of ASME Code. See inspection record for more information.

ITEM NUMBER	ID NUMBER	SYSTEM	INSP DATE	INSP STATUS	INSP LIMITED	GEO REF	RFR	COMMENTS
F01.031.009	1-14-H6016	14	10/08/97	REC	---	N	N	Center bolt on top clamp loose. Top item #5 - bottom W & top E anchor locations - base plate not bearing. Civil Engineering review has found this support to be acceptable for service. The discrepancies were determined to be not significant and no root cause investigation is required. See inspection record for more information.
F01.032.009	1-14B-DE060	14B	08/20/97	REC	---	N	N	Item #6 out of tolerance; resting on nitrogen line and nuts loose on item #7. Civil Engineering review has found this support to be acceptable for service. The discrepancies were determined to be not significant and no root cause investigation is required. See inspection record for more information.
F01.032.012	1-14B-H25	14B	07/23/97	REC	---	N	N	The spring can did not have a load scale. It did have a red diamond for hot load and the indicator was on the diamond. Note: The cold load and hot load are the same. It was a construction practice to set spring cans on the red diamond for the hot load. Support is acceptable.
F01.040.004	1-LDCA-SUPPORT	51A	11/19/97	CLR	---	N	N	
F01.040.008	1-DIESEL ENG. A		09/02/97	REC	---	N	N	Concrete pier & grout pad cracked numerous locations both sides typical. Civil Engineering review has found this support to be acceptable for service. The discrepancies were determined to be not significant and no root cause investigation is required. See inspection record for more information.
F01.040.009	1-CTK-UST-A	07A	09/19/97	REC	---	N	N	Discrepancies found to numerous to list here. See inspection report for details.
F01.040.013	1-LPI-PU-A	53A	10/12/97	CLR	---	N	N	
F01.040.015	1-LPSW-STR-A	14B	03/25/96	REC	---	N	N	The (2) north support legs has cracked grout. Civil Engineering review has found this support to be acceptable for service. The discrepancy was determined to be not significant and no root cause investigation is required. PAW 4/16/96 This item was originally inspected with Unit 2 during EOC 15. Ref. PIP *G-96-0197
F01.040.022	1-RCSR-COOLER 1A	51B	10/12/97	CLR	---	N	N	
F01.040.022	1-RCSR-COOLER 1A	51B	07/21/97	REC	---	N	N	The bolts in the support legs do not have full thread engagement. The S end bolts have the least with only 2 threads of engagement. After evaluation it was determined that this discrepancy is not service induced. Therefore, the support is acceptable for service per Article IWF-3112 of Section XI of ASME Code. See inspection record for more information.

ITEM NUMBER	ID NUMBER	SYSTEM	INSP DATE	INSP STATUS	INSP LIMITED	GEO REF	RFR	COMMENTS
F01.040.032	1-MAIN-LBL-FTR. A		09/02/97	CLR	---	N	N	
F01.050.001	1-50-H12	50	10/04/97	CLR	---	N	N	
F01.050.002	1-50-H1A	50	09/22/97	CLR	---	N	N	
F01.050.003	1-50-H2A	50	09/22/97	CLR	---	N	N	
F01.050.004	1-50-H3	50	09/22/97	CLR	---	N	N	
F01.050.005	1-50-H3A	50	09/22/97	CLR	---	N	N	
F01.050.006	1-50-H7	50	09/22/97	CLR	---	N	N	
F01.050.007	1-50-H8	50	09/22/97	CLR	---	N	N	
F01.050.008	1-50-H9	50	09/22/97	CLR	---	N	N	
F01.050.009	1-50-H10	50	09/22/97	CLR	---	N	N	
F01.050.011	1-50-H1	50	09/22/97	CLR	---	N	N	
F01.050.012	1-51A-H17A	51A	09/22/97	CLR	---	N	N	
F01.050.013	1-53A-H5A	53A	09/25/97	CLR	---	N	N	
F01.050.014	1-53A-H5B	53A	10/14/97	CLR	---	N	N	
F01.050.015	1-03-H7B	03	09/27/97	CLR	---	N	N	
F01.050.016	1-50-H11	50	09/22/97	CLR	---	N	N	
F01.050.017	1-03-H10A	03	09/21/97	CLR	---	N	N	
F01.050.018	1-53A-H40C	53A	09/23/97	CLR	---	N	N	
F01.050.019	1-53A-H41C	53A	09/23/97	CLR	---	N	N	
F01.050.020	1-57-H10	57	09/24/97	CLR	---	N	N	
F01.050.021	1-57-H11	57	11/23/97	CLR	---	N	N	
F01.050.022	1-50-H13-A	50	09/24/97	REC	---	N	N	ISI Id # indicates system 57 - should be system 50. Addenda ONS1-073 was written to correct the id to 1-50-H13-A. Support is acceptable.
F01.050.023	1-57-H14	57	09/24/97	CLR	---	N	N	
F01.050.024	1-57-H15	57	09/24/97	REC	---	N	N	No oil in reservoir. Civil Engineering review has found this support to be acceptable for service. The discrepancies were determined to be not significant and no root cause investigation is required. See inspection record for more information.
F01.050.025	1-57-H17	57	09/24/97	CLR	---	N	N	
F01.050.026	1-57-H18	57	09/24/97	REC	---	N	N	Oil leaks and cold piston setting out. Civil Engineering review has found this support to be acceptable for service. The discrepancies were determined to be not significant and no root cause investigation is required. See inspection record for more information.
F01.050.027	1-57-H22	57	09/24/97	CLR	---	N	N	
F01.050.028	1-57-H26	57	09/24/97	CLR	---	N	N	

ITEM NUMBER	ID NUMBER	SYSTEM	INSP DATE	INSP STATUS	INSP LIMITED	GEO REF	RFR	COMMENTS
F01.050.029	1-57-H9	57	11/23/97	CLR	---	N	N	
F01.050.030	1-01A-H10B	01A	09/27/97	CLR	---	N	N	
F01.050.031	1-01A-H11A	01A	09/27/97	CLR	---	N	N	
F01.050.032	1-01A-H11B	01A	09/27/97	CLR	---	N	N	
F01.050.033	1-01A-H12A	01A	09/27/97	CLR	---	N	N	
F01.050.034	1-01A-DE005	01A	09/29/97	CLR	---	N	N	
F01.050.035	1-01A-DE006	01A	10/08/97	CLR	---	N	N	
F01.050.036	1-01A-R-2-1	01A	10/15/97	CLR	---	N	N	
F01.050.037	1-01A-R-2-2	01A	09/28/97	CLR	---	N	N	
F01.050.038	1-01A-R12	01A	09/25/97	CLR	---	N	N	
F01.050.039	1-01A-R9-1	01A	09/28/97	CLR	---	N	N	
F01.050.040	1-01A-R9-2	01A	09/28/97	CLR	---	N	N	
F01.050.041	1-01A-R9-3	01A	09/28/97	CLR	---	N	N	
F01.050.042	1-01A-R9-4	01A	09/28/97	CLR	---	N	N	
F01.050.043	1-03-R12	03	09/25/97	CLR	---	N	N	
F01.050.044	1-03-R7	03	09/24/97	REC	---	N	N	No washers are visible N pin. Civil Engineering review has found this support to be acceptable for service. The discrepancies were determined to be not significant and no root cause investigation is required. See inspection record for more information.
F01.050.045	1-03A-SR56	03A	07/15/97	REC	---	N	N	Bottom E cylinder rod nut on S end of cylinder does not have full thread engagement. Civil Engineering review has found this support to be acceptable for service. The discrepancies were determined to be not significant and no root cause investigation is required. See inspection record for more information.
F01.050.046	1-03A-SR57	03A	07/15/97	REC	---	N	N	Oil leak on reservoir. Civil Engineering review has found this support to be acceptable for service. The discrepancies were determined to be not significant and no root cause investigation is required. See inspection record for more information.
F01.050.047	1-03A-SR58	03A	07/15/97	CLR	---	N	N	
F01.050.048	1-03A-SR59	03A	07/15/97	REC	---	N	N	Oil leak E end of reservoir. Civil Engineering review has found this support to be acceptable for service. The discrepancies were determined to be not significant and no root cause investigation is required. See inspection record for more information.
F01.050.049	1-03A-SR50	03A	07/15/97	CLR	---	N	N	
F01.050.050	1-03A-SR63	03A	07/28/97	REC	---	N	N	Reservoir leaking. Civil Engineering review has found this

ITEM NUMBER	ID NUMBER	SYSTEM	INSP DATE	INSP STATUS	INSP LIMITED	GEO REF	RFR	COMMENTS
								support to be acceptable for service. The discrepancies were determined to be not significant and no root cause investigation is required. See inspection record for more information.
F01.050.051	1-03A-SR64	03A	07/23/97	REC	---	N	N	Reservoir leaking slightly. Hanger ID tag has incorrect number. Civil Engineering review has found this support to be acceptable for service. The discrepancies were determined to be not significant and no root cause investigation is required. See inspection record for more information.
F01.050.053	1-01A-H44	01A	09/23/97	REC	---	N	N	Bottom nut on load pin not full thread. Civil Engineering review has found this support to be acceptable for service. The discrepancies were determined to be not significant and no root cause investigation is required. See inspection record for more information.
F01.050.055	1-01A-R2	01A	10/14/97	CLR	---	N	N	
F01.050.056	1-03A-DE058	03A	09/04/97	CLR	---	N	N	
F01.050.057	1-03-H4171	03	09/24/97	REC	---	N	N	Section A-A of sketch shows pipe turning N - actually turns S. Civil Engineering review has found this support to be acceptable for service. The discrepancies were determined to be not significant and no root cause investigation is required. See inspection record for more information.
F01.050.058	1-53B-DE056	53B	07/24/97	CLR	---	N	N	
F01.050.059	1-53B-DE059	53B	07/24/97	CLR	---	N	N	
F01.050.060	1-53B-DE066	53B	07/24/97	CLR	---	N	N	
F01.050.061	1-54A-DE-020	54A	09/07/97	CLR	---	N	N	
F01.050.062	1-54A-DE015	54A	07/24/97	REC	---	N	N	Strut is frozen and will not rotate. After evaluation it was determined that this discrepancy is not service induced. Therefore, the support is acceptable for service per Article IWF-3112 of Section XI of ASME Code. See inspection record for more information.
F01.050.063	1-51A-DE001A	51A	09/04/97	CLR	---	N	N	
F01.050.064	1-53B-DE060	53B	07/21/97	CLR	---	N	N	
F01.050.065	1-53B-DE055	53B	07/28/97	CLR	---	N	N	
F01.050.066	1-53B-DE057	53B	07/28/97	CLR	---	N	N	
F01.050.067	1-51A-H102	51A	07/22/97	CLR	---	N	N	
F01.050.068	1-51A-H97	51A	07/23/97	CLR	---	N	N	
F01.050.069	1-54A-R16	54A	07/23/97	REC	---	N	N	Clamp & bolt loose. Civil Engineering review has found this support to be acceptable for service. The discrepancies were

ITEM NUMBER	ID NUMBER	SYSTEM	INSP DATE	INSP STATUS	INSP LIMITED	GEO REF	RFR	COMMENTS
								determined to be not significant and no root cause investigation is required. See inspection record for more information.
F01.050.070	1-51A-H80	51A	07/22/97	CLR	---	N	N	
F01.050.071	1-51A-H86	51A	07/22/97	CLR	---	N	N	
F01.050.072	1-53A-GPD-H0010	53A	09/25/97	CLR	---	N	N	
F01.050.073	1-03-H6068	03	10/08/97	REC	---	N	N	Base plate not bearing at both top anchors. After evaluation it was determined that this discrepancy is not service induced. Therefore, the support is acceptable for service per Article IWF-3112 of Section XI of ASME Code. See inspection record for more information.
F01.050.074	1-03-H6020	03	09/27/97	CLR	---	N	N	
F01.050.075	1-03-H6070	03	09/27/97	CLR	---	N	N	
F01.050.076	1-03-H6071	03	09/27/97	CLR	---	N	N	
F01.050.077	1-57-NW1Z	57	09/21/97	CLR	---	N	N	
F01.050.078	1-57-H23	57	09/21/97	CLR	---	N	N	
F01.050.079	1-01A-R11	01A	09/23/97	CLR	---	N	N	
F01.050.080	1-01A-R4	01A	09/23/97	CLR	---	N	N	
F01.050.081	1-01A-R5	01A	09/23/97	REC	---	N	N	Welded incorrectly. Civil Engineering review has found this support to be acceptable for service. The discrepancies were determined to be not significant and no root cause investigation is required. See inspection record for more information.
F01.050.082	1-01A-R6	01A	09/24/97	CLR	---	N	N	
F01.050.082	1-01A-R6	01A	09/08/97	REC	---	N	N	H. P. S. is 13/16". This is out of tolerance. Civil Engineering review has found this support to be acceptable for service. The discrepancies were determined to be not significant and no root cause investigation is required. See inspection record for more information.
F01.050.083	1-01A-R7	01A	10/01/97	CLR	---	N	N	
F01.050.084	1-03-R13	03	09/24/97	CLR	---	N	N	
F01.050.085	1-03A-H115	03A	07/15/97	REC	---	N	N	Bottom suppressor is welded between pipe & 4x4 tube steel. After Civil Engineering evaluation it was determined that this discrepancy is not service induced. Therefore, the support is acceptable for service per Article IWF-3112 of Section XI of ASME Code. See inspection record for more information.
F01.050.086	1-03A-H123	03A	10/14/97	CLR	---	N	N	
F01.050.087	1-03A-SR62	03A	07/28/97	CLR	---	N	N	
F01.050.088	1-01A-H43	01A	09/23/97	REC	---	N	N	Bearing out of rod eye. Civil Engineering review has found this

ITEM NUMBER	ID NUMBER	SYSTEM	INSP DATE	INSP STATUS	INSP LIMITED	GEO REF	RFR	COMMENTS
								support to be acceptable for service. The discrepancies were determined to be not significant and no root cause investigation is required. See inspection record for more information.
F01.050.089	1-01A-R11	01A	09/23/97	CLR	---	N	N	
F01.050.090	1-07A-H39	07A	07/15/97	REC	---	N	N	Location is incorrect. After Civil engineering evaluation it was determined that this discrepancy is not service induced. Therefore, the support is acceptable for service per Article IWF-3112 of Section XI of ASME Code. See inspection record for more information.
F01.050.091	1-07A-H40	07A	07/15/97	REC	---	N	N	N. W. anchor on item #6 has 2 abandoned 1/4" anchors. After evaluation it was determined that this discrepancy is not service induced. Therefore, the support is acceptable for service per Article IWF-3112 of Section XI of ASME Code. See inspection record for more information.
F01.050.092	1-07A-H41	07A	07/15/97	CLR	---	N	N	
F01.050.093	1-50-RCPM-S1	50	09/21/97	CLR	---	N	N	
F01.050.094	1-50-RCPM-S2	50	09/21/97	CLR	---	N	N	
F01.050.095	1-50-RCPM-S3	50	09/21/97	CLR	---	N	N	
F01.050.096	1-50-RCPM-S4	50	10/08/97	REC	---	N	N	Load pin washers W pin improperly located - extra washer on E pin. After evaluation it was determined that this discrepancy is not service induced. Therefore, the support is acceptable for service per Article IWF-3112 of Section XI of ASME Code. See inspection record for more information.
F01.050.097	1-50-RCPM-S5	50	09/21/97	CLR	---	N	N	
F01.050.098	1-50-RCPM-S6	50	09/21/97	CLR	---	N	N	
F01.050.099	1-50-RCPM-S7	50	09/25/97	CLR	---	N	N	
F01.050.100	1-50-RCPM-S8	50	09/26/97	CLR	---	N	N	
F01.050.101	1-50-RCPM-S9	50	09/26/97	CLR	---	N	N	
F01.050.102	1-50-RCPM-S10	50	09/26/97	CLR	---	N	N	
F01.050.103	1-50-RCPM-S11	50	09/26/97	REC	---	N	N	Reservoir low on fluid. After evaluation it was determined that this discrepancy is not service induced. Therefore, the support is acceptable for service per Article IWF-3112 of Section XI of ASME Code. See inspection record for more information.
F01.050.104	1-50-RCPM-S12	50	09/26/97	CLR	---	N	N	
G01.001.001	1-RCP-1A1	50	11/10/97	CLR	---	N	N	
G01.001.002	1-RCP-1A2	50	11/05/97	CLR	---	N	N	
G01.001.003	1-RCP-1B1	50	11/10/97	CLR	---	N	N	

DUKE ENERGY CORPORATION
QUALITY ASSURANCE TECHNICAL SERVICES
In-Service Inspection Database Management System
Oconee 1 Inservice Inspection Listing
Interval 3 Outage 2

ITEM NUMBER	ID NUMBER	SYSTEM	INSP DATE	INSP STATUS	INSP LIMITED	GEO REF	RFR	COMMENTS
G01.001.004	1-RCP-1B2	50	11/10/97	CLR	---	N	N	
G02.001.001	1-PDA1-47	50	06/17/97	CLR	---	N	N	
G02.001.001A	1-PDA1-47	50	06/16/97	CLR	---	N	N	
G02.001.002	1-PDA2-47	50	06/17/97	CLR	---	N	N	
G02.001.002A	1-PDA2-47	50	06/17/97	CLR	---	N	N	
G02.001.003	1-PDB1-47	50	06/16/97	CLR	---	N	N	
G02.001.003A	1-PDB1-47	50	06/17/97	CLR	---	N	N	
G02.001.004	1-PDB2-47	50	06/16/97	CLR	---	N	N	
G02.001.004A	1-PDB2-47	50.	06/17/97	CLR	---	N	N	
G09.001.002	1-51A-01-39A	51A	09/05/97	CLR	---	N	N	
G09.001.008	1-53B-02-A33	53B	09/05/97	CLR	---	N	N	
G09.001.014	1LP-004-40	53B	09/04/97	CLR	---	N	N	
G09.001.020	1-53B-06-42K	53B	09/05/97	CLR	---	N	N	
G09.001.026	1-53B-14-5	53B	10/01/97	CLR	---	N	N	
G09.001.032	1LP-103-10A	54A	09/04/97	CLR	81.00%	N	N	Since this is a non-code item, no request for relief is needed.
G09.001.038	1-54A-04-28C	54A	09/09/97	CLR	---	N	N	
G09.001.044	1-54A-04-83C	54A	09/03/97	CLR	---	N	N	
G10.001.007	1-PIA1-12	50	09/28/97	CLR	---	N	N	
G12.001.002	1-51B-10-39HH	51B	09/23/97	CLR	---	N	N	
G12.001.005	1-51B-1-59A	51B	10/09/97	CLR	---	N	N	
G12.001.008	1-51B-2-143A	51B	10/09/97	CLR	---	N	N	
G12.001.016	1-51B-5-33	51B	10/09/97	CLR	---	N	N	

5.2 Limited examinations (i.e., less than 90% of the required examination coverage obtained) identified during Outage 17 are shown below. A copy of the Request for Relief is contained in Section 9.0 of this report

Item Number	***Request for Relief Serial Number***
B01.021.001	95-04
B01.040.001	95-04
B02.040.001	96-02
B03.110.001	98-01
B03.150.001	98-01
B03.150.002	98-01
B03.160.001	ONS-009
B03.160.002	ONS-009
C01.010.001	97-01

6.0 Reportable Indications

Outage 17 had no reportable indications.

7.0 *Personnel, Equipment and Material Certifications*

All personnel who performed or evaluated the results of inservice inspections from December 11, 1995 to December 24, 1997 at Oconee Nuclear Station, Unit 1, were certified in accordance with the requirements of 1989 Edition of ASME Section XI with no addenda. The appropriate certification records for each inspector are on file at Oconee Nuclear Station or copies can be obtained by contacting the Duke Energy's Corporate Office in Charlotte, North Carolina.

Records of periodic calibration of inspection equipment are on file at Oconee Nuclear Station or copies can be obtained by contacting the Duke Energy's Corporate Office in Charlotte, North Carolina.

Records of materials used, (i.e., NDE consumables) are on file at Oconee Nuclear Station or copies can be obtained by contacting the Duke Energy's Corporate Office in Charlotte, North Carolina.

8.0 Corrective Action

No corrective action was required as a result of examinations performed during Outage 17.

9.0 *Reference Documents*

The following reference documents apply to the inservice inspection performed during Outage 17 at Oconee 1.

0-G-96-0197 - This PIP describes problem of equipment being identified as being in Unit 2 instead of Unit 1.

1-O-97-3523 - This PIP describes 1/8" rounded indication being identified during the surface examination of Item Number C03.020.075.

1-O-98-0525 - This PIP describes the problem of an incorrect calibration block being used.

Duke Energy Request for Relief ONS-009

Duke Energy Request for Relief 95-04

Duke Energy Request for Relief 96-02

Duke Energy Request for Relief 97-01

Duke Energy Request for Relief 98-01

General Office
Problem Investigation Process - PIP
Problem Investigation Form

PIP Serial No:	**0-G96-0197**	**LER Serial No:**
MSE Serial No:		**Other Report:**

I. Problem ID

Discovered Time/Date: __:__ 05/15/96 Occurred Time/Date: __:__

Unit(s):

Status at Time Discovered	Unit 1	Unit 2
Mode		
% Power		

Unit Status Remarks:

System(s) Affected: N/A Not Applicable

Affected Equipment

WMS Equipment ID No.	Comp. Code	Manufacturer

Location of Problem - Bldg: Column Line: Elev:

Location Remarks:

Method Used to Discover Problem:
Discovered during review of Unit 2 equipment supports for ISI

Brief Problem Description:
During the process of performing a review of equipment supports in the ISI Plan for Oconee Unit 2, it was noted equipment was listed as being in Unit 2 when in fact the equipment is located in Unit 1 and is shared by Units 1and 2.

Detailed Problem Description:
During the process of performing a review of equipment supports in the ISI Plan for Oconee Unit 2, it was noted that the following equipment was listed as being in Unit 2 when in fact the equipment is located in Unit 1 and is shared by Units 1and 2.

LPSW Pump and Strainer A; SF Cooler A and Pump C.

These pieces of equipment are shown on Oconee Flow diagram OFD-124A-1.1 and OFD-104A-1.1 respectively. The LPSW Strainer A was scheduled to be examined during EOC 15 for Unit 2 and was in fact examined during this outage. Since the equipment is located in Unit 1 it needs to be credited to Unit 1 and not Unit 2. The

remaining pieces of equipment are scheduled to be examined latter on during the ISI interval. No inspections have been missed and no procedural/code requirements have been violated.

This occured during the process of creating the 3rd Interval ISI Plan for Oconee. We had to complete the Units 2 and 3 ISI Plans before June 16, 1994. This work started approx. November of 1993. The amount of time that it takes to originate two ISI Plans is approx. 7 months.

Originated By: RGROUSE Team: KWS8302 Group: QAT Date: 05/20/96

Other Units/Components/Systems/Areas Affected (Y,N,U): N

Industry Plants Affected (Y,N,U): N

Immediate Corrective Actions:

The pieces of equipment that are located in Oconee Unit 1 and are shown in the Unit 2 ISI Plan have been deleted from the Oconee Unit 2 ISI Plan by addenda ONS2-026. They are already shown in the Oconee Unit 1 ISI Plan.

For the LPSW Strainer A that was examined during the Oconee Unit 2 EOC 15 outage will be credited for the Oconee Unit 1 EOC 17 outage that is scheduled for April 10, 1997.

Originated By: RGROUSE Team: KWS8302 Group: QAT Date: 05/20/96

Problem Found While Working with Document No. : OFD-124A-1.1

Immediate Corrective Action Work Request / Work Order No. :

	Indiv	Team	Group	Date:
Problem Identified By:	LCS0597	TER7358	QAT	05/15/96
Problem Entered By:	RGR8304	KWS8302	QAT	05/20/96

II. Screening

Is the Problem Significant? N Action Category: 4

OEP No:

Other Report Nos:

Event Codes: Z . Performance Improvement

General Office
Problem Investigation Process - PIP
Problem Investigation Form

PIP Serial No:	**0-G96-0197**	**LER Serial No:**
MSE Serial No:		**Other Report:**

Screening Remarks:

This PIP meets the criteria for a LSE Category 4 PI PIP.

Originated By: KWSCHMID Team: KWS8302 Group: QAT Date: 05/20/96

Responsible Group for Proposed Resolution(s):
Responsible Group for Overall PIP approval: QAT QA Tech. Services

	Indiv	Team	Group	Date
Screened By:	KWS8302	KWS8302	QAT	05/20/96

III. Operability

Present Operability:

Responsible Group: Status:

Sys/Comp Operable?(Y,N,C,E) :

Required Mode:

Comments:

Indiv	Team	Group	Date

No current Signatures for this section.

Past Operability:

Responsible Group: Status:

Sys/Comp Operable?(Y,N,C,E) :

Required Mode:

Comments:

Indiv	Team	Group	Date

No current Signatures for this section.

IV. Reportability/Investigation

Responsible Group: Status:

General Office
Problem Investigation Process - PIP
Problem Investigation Form

PIP Serial No:	**0-G96-0197**	**LER Serial No:**
MSE Serial No:		**Other Report:**

Problem Reportable(Y,N,E):

Reportable Per:

Comments:

	Indiv	Team	Group	Date
No current Signatures for this section.				

Investigation Report:

Responsible Group: Act Date:

Investigator: Due Date:

Date Due to VP or Sta. Mgr:

Date Regulatory or Agency Rpt Due:

Date Investigation Report Approved:

NRC Cause Codes:

V. Problem Evaluation

No Problem Evaluation information found.

VI. Proposed Resolution

VII. Corrective Actions

No Corrective Actions for this PIP.

VIII. Final and Overall PIP Approval

Responsible Group: QAT Status: Closed

	Indiv	Team	Group	Date
Assigned To:			QAT	05/20/96
Approval Assigned To:	KWS8302	KWS8302	QAT	05/20/96
Approved By:	KWS8302	KWS8302	QAT	05/20/96

General Office
Problem Investigation Process - PIP
Problem Investigation Form

PIP Serial No:	**0-G96-0197**	**LER Serial No:**
MSE Serial No:		**Other Report:**

Closure Document Type Closure Document No

Supplemental Concurrences - These do not affect PIP closure.

Concurrences Associated with External Committments:

	Indiv	Team	Group	Date
Concurred By:				

IX. Attachments

Generic Applicability

Generic Applicability Review Not Required for this PIP.

Environmental

No Environmental for this PIP.

Failure Prevention Investigation

Quality of CA: Quality of Cause: Resp. Group: SRG Status: Open

1) Event Inapp. Action #
Z 001

Description:

Process: CB Process:
Group: SAS Group:
Sub-Group: SAS-QAT Sub-Group:

O and P Failure Mode: O5
HE Failure Mode: MJ6
HE Type: Rule Based
Key Activity: dp

Associated Corrective Actions: None

Comments

	Indiv	Team	Group	Date

General Office
Problem Investigation Process - PIP
Problem Investigation Form

PIP Serial No:	**0-G96-0197**	**LER Serial No:**	
MSE Serial No:		**Other Report:**	

No current Signatures for this section.

Remarks

No Remarks for this PIP

Maintenance Rule

No Maintenance Rule for this PIP

End of the Document for PIP No:	0-G96-0197
The status of this PIP is:	Closed
The duration of this PIP was:	5 days

Oconee Nuclear Station
Problem Investigation Process - PIP
Problem Investigation Form

PIP Serial No:	**1-O97-3523**	**LER Serial No:**
MSE Serial No:		**Other Report:**

I. Problem ID

Discovered Time/Date: 01:00 10/13/97 Occurred Time/Date:

Unit(s): 1

Status at Time Discovered	Unit 1	Unit 2	Unit 3
Mode	NOMODE	N/A	N/A
% Power			

Unit Status Remarks:

System(s) Affected: HPI Other High Pressure Injection Equip.

Affected Equipment

WMS Equipment ID No.	Comp. Code	Manufacturer
	HS	

Location of Problem - Bldg: AB Column Line: 71 & R Elev: 772'7"

Location Remarks:
Located between 1HP-23 & 1HP-97

Method Used to Discover Problem:
visual exam

Brief Problem Description:
1/8" rounded indication in the center of the bottom attachment weld on hanger 1-51-0-436H-SR15.

Detailed Problem Description:
During preparation for the dye penetrant examination on the integral attachment welds on hanger 1-51-0-436H-SR15 it was noted that there was a 1/8" rounded indication on the weld between item #6 (lug) and the 6" pipe. The welds for the attachments are also under sized and arc strikes are on the piping.

Originated By: TJC0182: COLEMAN, TOMMY J Team: RHL8302 Group: MNT Date: 10/13/97

Oconee Nuclear Station
Problem Investigation Process - PIP
Problem Investigation Form

PIP Serial No:	**1-O97-3523**	**LER Serial No:**
MSE Serial No:		**Other Report:**

Other Units/Components/Systems/Areas Affected (Y,N,N):

Industry Plants Affected (Y,N,U): U

Immediate Corrective Actions:

Work Request 97044372 was written to repair hanger 1-51-0-436H-SR15 in accordance with the hanger sketch and specification OS-0027.00-00-0002.

Originated By: TJC0182: COLEMAN, TOMMY J Team: RHL8302 Group: MNT Date: 10/13/97

Problem Found While Working with Document No. :

Immediate Corrective Action Work Request / Work Order No. :

	Indiv	Team	Group	Date:
Problem Identified By:	TJC0182		MNT	10/13/97
Problem Entered By:	TJC0182		MNT	10/13/97

II. Screening

Is the Problem Significant? N Action Category: 4

OEP No:

Other Report Nos:

Event Codes: F3 Equipment Out of Norm

Screening Remarks:
This event has been reviewed by the CST and found to not meet the MSE significance criteria.

Originated By: RSM7315: MATHESON, RICKIE S Team: RTB7310 Group: SRG Date: 10/14/97

Responsible Group for Proposed Resolution(s):
Responsible Group for Overall PIP approval: MNT Maintenance MECH/IAE

	Indiv	Team	Group	Date
Screened By:	RSM7315	RTB7310	SRG	10/14/97

III. Operability

Oconee Nuclear Station
Problem Investigation Process - PIP
Problem Investigation Form

PIP Serial No:	**1-O97-3523**	**LER Serial No:**
MSE Serial No:		**Other Report:**

Present Operability:

Responsible Group: Status:

Sys/Comp Operable?(Y,N,C,E) :

Required Mode:

Comments:

Indiv	Team	Group	Date

No current Signatures for this section.

Past Operability:

Responsible Group: Status:

Sys/Comp Operable?(Y,N,C,E) :

Required Mode:

Comments:

Indiv	Team	Group	Date

No current Signatures for this section.

IV. Reportability/Investigation

Responsible Group: Status:

Problem Reportable(Y,N,E):

Reportable Per:

Comments:

Indiv	Team	Group	Date

No current Signatures for this section.

Investigation Report:

Responsible Group: Act Date:

Oconee Nuclear Station
Problem Investigation Process - PIP
Problem Investigation Form

PIP Serial No:	**1-O97-3523**	**LER Serial No:**
MSE Serial No:		**Other Report:**

Investigator: Due Date:

Date Due to VP or Sta. Mgr:

Date Regulatory or Agency Rpt Due:

Date Investigation Report Approved:

NRC Cause Codes:

V. Problem Evaluation

No Problem Evaluation information found.

VI. Proposed Resolution

VII. Corrective Actions

No Corrective Actions for this PIP.

VIII. Final and Overall PIP Approval

Responsible Group: MNT Status: Closed

	Indiv	Team	Group	Date
Assigned To:			MNT	10/14/97
Approved By:	RHL8302	MAH7315	MNT	10/15/97

Closure Document Type Closure Document No

Supplemental Concurrences - These do not affect PIP closure.

Concurrences Associated with External Committments:

	Indiv	Team	Group	Date
Concurred By:				

IX. Attachments

Generic Applicability

Generic Applicability Review Not Required for this PIP.

PIP Serial No:	**1-O97-3523**	**LER Serial No:**
MSE Serial No:		**Other Report:**

Environmental

No Environmental for this PIP.

Failure Prevention Investigation:

No FPI for this PIP.

Remarks

No Remarks for this PIP

Maintenance Rule

No Maintenance Rule for this PIP

End of the Document for PIP No: 1-O97-3523
The status of this PIP is: Closed
The duration of this PIP was: 2 days

Oconee Nuclear Station
Problem Investigation Process - PIP
Problem Investigation Form

PIP Serial No:	**1-O98-0525**	**LER Serial No:**
MSE Serial No:		**Other Report:**

I. Problem ID

Discovered Time/Date: 02/04/98 Occurred Time/Date:

Unit(s): 1

Status at Time Discovered	Unit 1	Unit 2	Unit 3
Mode	N/A	N/A	N/A
% Power			

Unit Status Remarks:

System(s) Affected: RC Reactor Coolant

Affected Equipment

WMS Equipment ID No.	Comp. Code	Manufacturer

Location of Problem - Bldg: Column Line: Elev:

Location Remarks:

Method Used to Discover Problem:

Review of examination data prior to originating the required Inspection Report.

Brief Problem Description:

Calibration block 40414 was used for the calibration of examination equipment for the nozzle side examination of the Pressurizer nozzle. The Pressurizer nozzle is cladded and the calibration block is not cladded.

Detailed Problem Description:

Calibration block 40414 was used for the calibration of examination equipment for the nozzle side examination of the Pressurizer nozzle. The Pressurizer nozzle is cladded and the calibration block is not cladded. This was discovered during the review of ultrasonic examination data for Item Number B05.130.009 (Weld ID 1-PSL-10). The weld was examined during the EOC 17 outage.

Jim McArdle, NDE Level III, is aware of this situation and is prepared to address this in the problem evaluation and problem resolution.

Originated By: RGR8304: ROUSE, RICHARD G Team: KWS8302 Group: QAT Date: 02/04/98

Oconee Nuclear Station
Problem Investigation Process - PIP
Problem Investigation Form

PIP Serial No:	**1-O98-0525**	**LER Serial No:**
MSE Serial No:		**Other Report:**

Other Units/Components/Systems/Areas Affected (Y,N,U):

Industry Plants Affected (Y,N,U): U

Immediate Corrective Actions:

Problem Found While Working with Document No. :

Immediate Corrective Action Work Request / Work Order No. :

	Indiv	Team	Group	Date:
Problem Identified By:	RGR8304	KWS8302	QAT	02/04/98
Problem Entered By:	RGR8304	KWS8302	QAT	02/04/98

II. Screening

Is the Problem Significant? N Action Category: 3

OEP No:

Other Report Nos:

Event Codes: F8 Testing

Screening Remarks:

This event was reviewed by the CST and does not meet the MSE significance criteria.

Screening Team Members Present: Mike Pruitt (OPS), Rick Stade (CEN), Sue Baldwin (MSE), Kenny McCorkle (MNT/WCG), Henry Lowery (RGC)

Originated By: RWV1470: VASSEY, RAY W Team: RTB7310 Group: SRG Date: 02/04/98

Responsible Group for Proposed Resolution(s):	QAT	QA Tech. Services
Responsible Group for Problem Evaluation:	QAT	QA Tech. Services
Responsible Group for Overall PIP approval:	QAT	QA Tech. Services

	Indiv	Team	Group	Date
Screened By:	RWV1470	RTB7310	SRG	02/04/98

III. Operability

Oconee Nuclear Station
Problem Investigation Process - PIP
Problem Investigation Form

PIP Serial No:	**1-O98-0525**	**LER Serial No:**
MSE Serial No:		**Other Report:**

Present Operability:

Responsible Group: Status:

Sys/Comp Operable?(Y,N,C,E) :

Required Mode:

Comments:

Indiv	Team	Group	Date

No current Signatures for this section.

Past Operability:

Responsible Group: Status:

Sys/Comp Operable?(Y,N,C,E) :

Required Mode:

Comments:

Indiv	Team	Group	Date

No current Signatures for this section.

IV. Reportability/Investigation

Responsible Group: Status:

Problem Reportable(Y,N,E):

Reportable Per:

Comments:

Indiv	Team	Group	Date

No current Signatures for this section.

Investigation Report:

Responsible Group: Act Date:

Oconee Nuclear Station
Problem Investigation Process - PIP
Problem Investigation Form

PIP Serial No:	**1-O98-0525**	**LER Serial No:**
MSE Serial No:		**Other Report:**

Investigator: Due Date:

Date Due to VP or Sta. Mgr:

Date Regulatory or Agency Rpt Due:

Date Investigation Report Approved:

NRC Cause Codes:

V. Problem Evaluation

Responsible Group: QAT Status: Open

System(s) Affected: RC Reactor Coolant

Affected Equipment

WMS Equipment ID No.	Comp. Code	Manufacturer

Event	Cause Cd	Cause Description	Primary	Causing Group(s)

Problem Evaluation:

	Indiv	Team	Group	Date
Accepted By:	KWS8302	KWS8302	QAT	02/09/98
Assigned To:	EBM8304	EBM8304	QAT	02/09/98
Due Date:	03/12/98			

VI. Proposed Resolution

Proposed Resolution From: Resp. Group: QAT Status: Open OEDB Checked: No

	Indiv	Team	Group	Date
Accepted By:	KWS8302	KWS8302	QAT	02/09/98
Assigned To:	EBM8304	EBM8304	QAT	02/09/98
Due Date:	03/12/98			

VII. Corrective Actions

No Corrective Actions for this PIP.

VIII. Final and Overall PIP Approval

Responsible Group: QAT Status: Screened

	Indiv	Team	Group	Date
Assigned To:			QAT	02/04/98

Closure Document Type Closure Document No

Supplemental Concurrences - These do not affect PIP closure.

Concurrences Associated with External Committments:

	Indiv	Team	Group	Date
Concurred By:				

IX. Attachments

Generic Applicability

Generic Applicability Review Not Required for this PIP.

Environmental

No Environmental for this PIP.

Failure Prevention Investigation:

No FPI for this PIP.

Remarks

No Remarks for this PIP

Maintenance Rule

No Maintenance Rule for this PIP

Oconee Nuclear Station
Problem Investigation Process - PIP
Problem Investigation Form

PIP Serial No:	**1-O98-0525**	**LER Serial No:**
MSE Serial No:		**Other Report:**

End of the Document for PIP No: 1-O98-0525
The status of this PIP is: Screened
The duration of this PIP was: 0 days

DUKE POWER COMPANY

Request for Relief From

Inservice Inspection Requirement

Station: **Oconee**

Unit: **1, 2 & 3**

Requesting Department: Nuclear Generation

Reference Code: ASME Section XI, 1989 Edition , no addenda

I. Component for which exemption is requested:

a. Name and Identification Number:

Letdown Cooler Nozzles (Inside Radius Section) for Units 1, 2 & 3 OM-201-3107 (Attachment "A"). The following item numbers are affected:

Oconee 1

Item No.	ID No.
B03.160.001	1-LDCA-IN-V1
B03.160.002	1-LDCA-OUT-V2
B03.160.003	1-LDCB-IN-V1
B03.160.004	1-LDCB-OUT-V2

Oconee 2

Item No.	ID No.
B03.160.001	2-LDCA-INLET-V2
B03.160.002	2-LDCA-OUTLET-V5
B03.160.003	2-LDCB-INLET-V1
B03.160.004	2-LDCB-OUTLET-V2

Oconee 3

Item No.	ID No.
B03.160.001	3-LDCA-IN-V1
B03.160.002	3-LDCA-OUT-V2
B03.160.003	3-LDCB-IN-V1
B03.160.004	3-LDCB-OUT-V2

b. Function:

The Letdown Cooler reduces the temperature of the letdown flow from the Reactor Coolant System to a temperature suitable for demineralization.

c. ASME Section XI Code Class:
Class 1

d. Construction Code and Class (If Applicable):

N/A

e. Valve Category (If Applicable):

N/A

II. Reference Code Requirement that has been determined to be impractical:

Table IWB-2500, Examination Category B-D, Item Number B03.160. Table requires that an inside radius volumetric examination be performed on heat exchanger nozzles.

III. Basis for Requesting Relief:

Due to the size and geometry of the nozzle inside radius on the Letdown Coolers, we have been unable to perform a meaningful (i.e. unable to get sound into the area of interest) volumetric examination.

IV. Alternate Examination:

Perform the volumetric examination on the weld volume, as required by ASME Section XI, Table IWB-2500-1, Examination Category B-D, Item Number B03.150. This will provide adequate Assurance of the welded connection.The alternate proposed inservice testing will provide an acceptable level of quality and safety and ensures the level of public health and safety is not reduced.

V. Implementation Schedule:

Oconee 1

Item No.	RFO
B03.160.001	16
B03.160.002	16
B03.160.003	20
B03.160.004	20

Oconee 2

Item No.	RFO
B03.160.001	15
B03.160.002	15
B03.160.003	20
B03.160.004	20

Oconee 3

Item No.	RFO
B03.160.001	17
B03.160.002	17
B03.160.003	21
B03.160.004	21

Evaluated By: A. J. Hogge Jr Date 5-11-94

Reviewed By: J. Barham Date 5/12/94

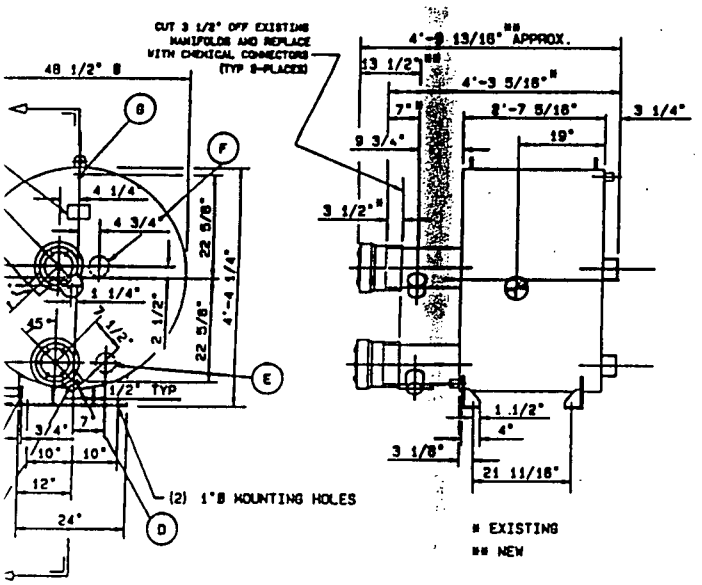

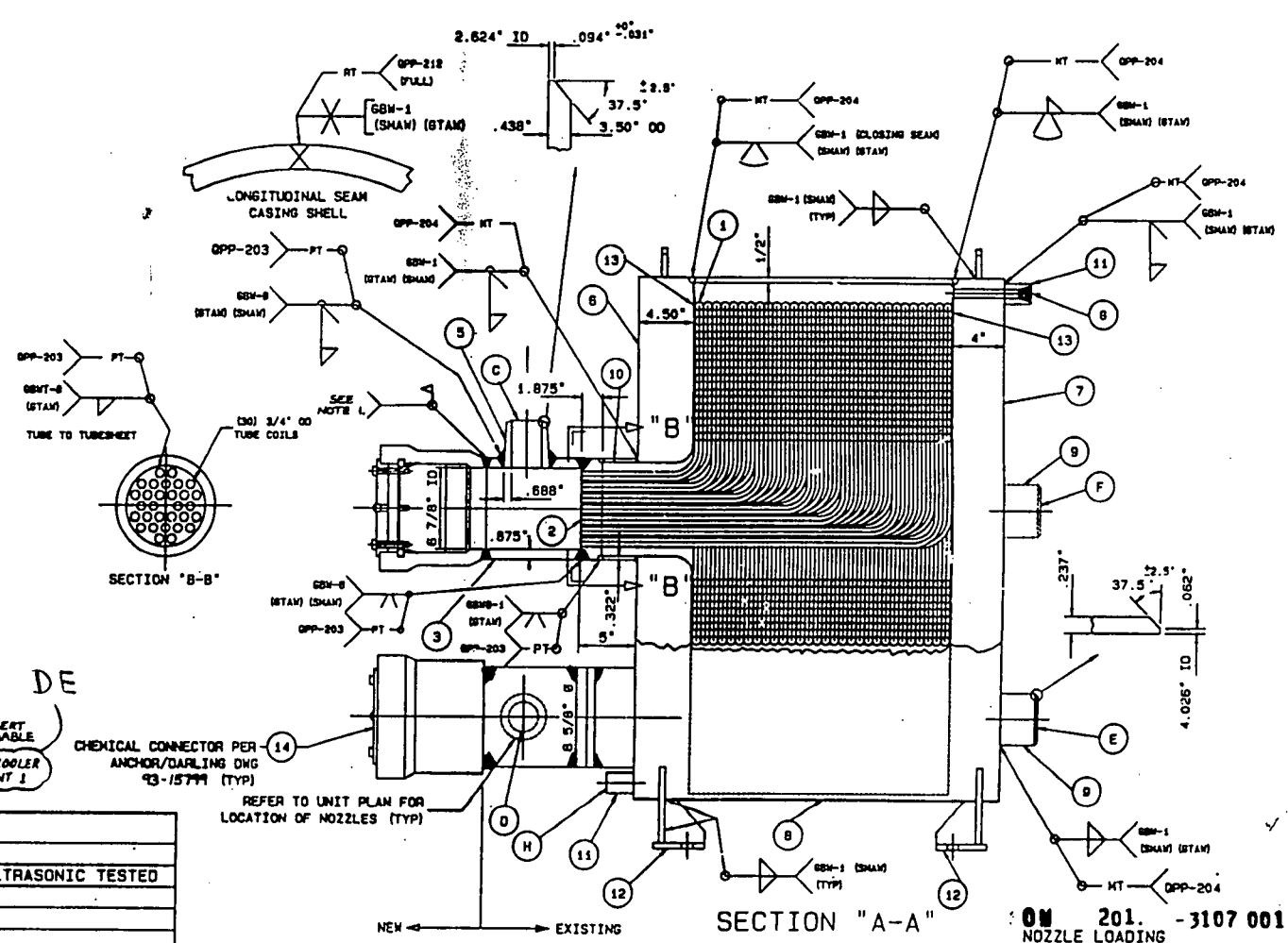

SECTION "B-B"

SECTION "A-A"

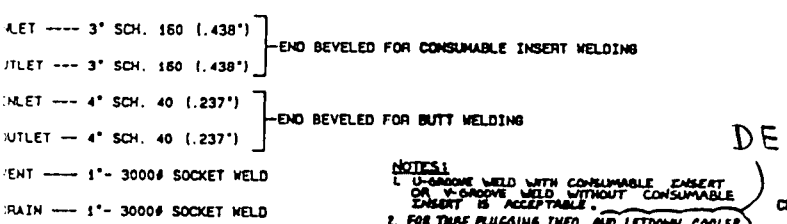

UNIT PLAN

DE

NOTES:
1. U-GROOVE WELD WITH CONSUMABLE INSERT OR V-GROOVE WELD WITHOUT CONSUMABLE INSERT IS ACCEPTABLE.
2. FOR TUBE PLUGGING INFO. AND LETDOWN COOLER DESIGNATION SEE OM-201-3120, ATTACHMENT 1

"NUCLEAR SAFETY RELATED"
Q.A. CONDITION #1

OM 201. -3107 001

MATERIAL LIST

ART NAME	MATERIAL	SPEC.	REMARKS
LS	T-316L S.S.	SA-213	.070 BWG. SML'S, ULTRASONIC TESTED
ET	T-316L S.S.	SA-240	PLATE
E CHANNEL BODY	T-316L S.S.	SA-182	FORGED BAR
NOZZLE	T-316L S.S.	SA-182	FORGED BAR
ASE PLATE	CARB. STEEL	SA-516-70	PLATE
ND PLATE	CARB. STEEL	SA-516-70	PLATE
HELL	CARB. STEEL	SA-516-70	PLATE
OZZLE PIPE	CARB. STEEL	SA-106-B	SEAMLESS PIPE
IPE TO TUBE SHEET	CARB. STEEL	SA-106-B	SEAMLESS PIPE
ELD CPLG	FORGED STEEL	SA-105	
	CARB. STEEL	SA-516-70	PLATE
	T-304 S.S.		
CONNECTOR	MATERIALS PER ANCHOR/DARLING DWG. 93-15799(OM-201-3094)		

ILL POWER SUPPLY CO.
46923-13
4770HC (ORIGINAL JOB NO. FOR COOLERS- 34097HC AND 44773HC) ⚠
.S.M.E. SECT. III, CL-3 (1980), ADDENDUM THRU SUMMER 1980
.S.M.E.
.S.M.E. & CUSTOMER
S.M.E. ("N" STAMP REQ'D)
)HM GRIT BLAST CARBON STEEL
.) PRIME COAT CARBO-ZINC 11 (3) MILS D.F.T.
1) FINISH COAT PHENOLINE 305 (4) MILS D.F.T.
ER DUKE POWER CO. NUCLEAR COATING SPEC. 5001-1, REV 12/1/78

ATTACHMENT A
ONS-009

SPECIFICATION --- OSS-0201.00-00-0004 REV. 1

SUPPORT STRESSES

LOAD CASE	Qx (PSI)	Qy (PSI)	ALLOWABLE (REF Z)
NORMAL OP.			.6Sy=
NORMAL OP. + OBE			.6Sy=
NORMAL OP. + SSE			.8Sy=

NOZZLE LOADING

TUBE SIDE INLET & OUTLET	Fa (LB)	Fsr (LB)	Mt (IN-LB)	Mbr (IN-
NORMAL OP.	842	842	11000	110
NORMAL OP. + OBE	1684	1684	12000	120
NORMAL OP. + SSE	2105	2105	14380	143

SHELL SIDE INLET & OUTLET	Fa (LB)	Fsr (LB)	Mt (IN-LB)	Mbr (IN-
NORMAL OP.	634	634	6420	6420
NORMAL OP. + OBE	1268	1268	12840	1284
NORMAL OP. + SSE	1585	1585	16050	1605

STATION- OCONEE
D.E.FILE #- 83741201.06-00-0002-00
MPS ORD #- N46923-13

ESTIMATED WEIGHT
EMPTY----6560 LBS
FLOODED--8060 LBS

	M.A.W.P.	TEST PRESS	DESIGN TE
SHELL SIDE	200 PSIG	300 PSIG	350°F
TUBE SIDE	2500 PSIG	3750 PSIG	600°F

REV	DESCRIPTION	Q.C.	MADE	CHKD	DATE
A	DE Rev. Per OE-6820 & OE-6840				
STATUS	DD Rev. Per OE-9337, OE-3569 & OE-3606				
	DC REV. PER OE-2583				
	DB REV. PER OE-2898				
A	ADDED				2-26-88
0	ORIGINAL ISSUE	---	---	---	----

CERTIFIED CORRECT
GRAHAM MFG. CO. INC.
E.A. Jankowski

GRAHAM MANUFACTURING CO., INC.
20 FLORENCE AVE. BATAVIA, NEW YORK

MODIFICATION OF EXISTING LETDOWN COOLER (PLUGGABLE DESIG
WITH MECHANICAL JOINT (CHEMICAL CONNECTOR) FOR CHANNEL ACC

QUAL CONTROL APPROVAL GG. DATE 2-15-8

SCALE	MADE	CHKD	APPD	DATE	DWG. NO.
NONE				-88	NU-0-1124-1

DDD-5-9

Duke Power Company
Oconee Nuclear Site
P. O. Box 1439
Seneca, SC 29679

J. W. HAMPTON
Vice President
(803)885-3499 Office
(803)885-3564 Fax

DUKE POWER

October 5, 1995

U.S. Nuclear Regulatory Commission
Attention: Document Control Desk
Washington, DC 20555

Subject: Duke Power Company
Oconee Nuclear Station, Units 1, 2, and 3
Docket Nos. 50-269, -270, and -287
Third Ten Year Inservice Inspection Interval
Request for Relief No. 95-04

Pursuant to 10 CFR 50.55a, section (g) (4) (iii), attached is a Request for Relief from ASME Section XI, 1989 Edition. This request is to allow Duke Power to take credit for limited ultrasonic examinations on certain reactor vessel head welds, reactor vessel head-to-flange welds, steam generator nozzle-to-vessel welds, and steam generator nozzle inside radius welds. During the examinations, the ultrasonic examination coverage did not meet the 90% examination coverage requirements of ASME Section XI. Achievement of greater than 90% examination coverage for the subject welds is impractical due to piping geometry, joint configuration, and interferences. All three Oconee units are being addressed by this Request for Relief per recommendations delineated in NRC Inspection Report 95-05 dated 5/5/95.

If there are any questions or further information is needed you may contact D. A. Nix at (803) 885-3634.

Very truly yours,

J. W. Hampton
Site Vice President

Attachment

xc (w/attch): Mr. L. A. Wiens
Office of Nuclear Reactor Regulation
U. S. Nuclear Regulatory Commission
Washington, DC 20555

xc (w/o attch): Mr. S. D. Ebneter
Regional Administrator, Region II
U. S. Nuclear Regulatory Commission

Mr. P. E. Harmon
Senior NRC Resident Inspector
Oconee Nuclear Station

Mr. Max Batavia
Bureau of Radiological Health
SC Dept. of Health & Environmental Control
2600 Bull St.
Columbia, SC 29201

bxc (w/ attchs):

V. B. Dixon
R. G. Rouse
D. A. Nix

bxc (w/o attchs):

J. O. Barbour
J. E. Burchfield
B. W. Carney
M. B. Chapman
J. C. Shropshire
ELL ECO50
ISI Relief Request File

Duke Power Company

Station Oconee Unit 1, 2 & 3

10-YEAR INTERVAL REQUEST FOR RELIEF NO. 95-04

I. System/Component(s) for Which Relief is Requested:

a. Reactor vessel head welds;

1-RPV-WH5, Item Number B01.021.001
2-RPV-WH5, Item Number B01.021.001,
3-RPV-WH5; Item Number B01.021.001

b. Reactor vessel head-to-flange welds:

1-RPV-WH7, Item Number B01.040.001
2-RPV-WH7, Item Number B01.040.001
3-RPV-WH7, Item Number B01.040.001

c. Steam generator nozzle-to-vessel welds:

1-SGA-WG50-2, Item Number B03.130.001
1-SGA-WG50-1, Item Number B03.130.002
2-SGA-WG50-2, Item Number B03.130.003
2-SGA-WG50-1, Item Number B03.130.004
3-SGA-WG50-2, Item Number B03.130.001
3-SGA-WG50-1; Item Number B03.130.002

d. Steam generator nozzle inside radius welds:

1-SGA-WG50-2, Item Number B03.140.001
1-SGA-WG50-1, Item Number B03.140.002
2-SGA-WG50-2, Item Number B03.140.003
2-SGA-WG50-1, Item Number B03.140.004
3-SGA-WG50-2, Item Number B03.140.001
3-SGA-WG50-1, Item Number B03.140.002

II. Code Requirement:

Section XI Table IWB-2500-1, Examination Category B-A, Pressure Retaining Welds In Reactor Vessel, Figure IWB-2500-3, Note 2 requires essentially 100% of the weld length be examined.

Section XI Table IWB-2500-1, Examination Category B-A, Pressure Retaining Welds In Reactor Vessel, Figure IWB-2500-5, Note 2 requires essentially 100% of the weld length be examined.

Section XI Table IWB-2500-1, Examination Category B-D, Full Penetration Welds Of Nozzles In Vessels - Inspection Program B, Figures IWB-2500-7(a) through IWB-2500-7(d) requires essentially 100% of the nozzle weld and radius be examined.

III. Code Requirement from which Relief is Requested:

Relief is requested from the requirement of examining essentially 100% of the weld length. Due to part geometry and actual physical barriers, obtaining even 90% of the weld length as outlined in Code Case N-460 is not possible.

ASME Section V, Article 4, T-441.3.2 Scanning Requirements, 1989 Edition with no addenda as modified by Code Case N-460.

This Paragraph requires scanning of the examination volume(s) using three angle beams and a straight beam from both sides of the weld. When scanning for reflectors parallel to the weld, the angle beams shall be aimed at right angles to the weld axis, with the search unit(s) manipulated so that the ultrasonic beams pass through the entire volume of weld metal. The adjacent base metal in the examination volume must be completely scanned by two angle beams, but need not be completely scanned by both angle beams from both directions (any combination of two angle beams will satisfy the requirement).

When scanning for reflectors transverse to the weld, the angle beam search units shall be aimed parallel to the axis of longitudinal and circumferential welds. The search unit shall be manipulated so that the ultrasonic beams pass through all of the examination volume.

Scanning shall be done in two directions 180 degrees to each other to the extent possible. Areas blocked by geometric conditions shall be examined from at least one direction.

Code Case N-460 allows credit for full volume coverage if it can be shown that at least 90% of the required volume has been examined.

IV. Basis for Relief:

Item Number B01.021.001 (3RPV-WH5), RPV Head Weld was examined to the maximum extent practical using ultrasonic techniques in accordance with the requirements of ASME Section V, Article 4, 1989 Edition. The additional requirements of Regulatory Guide 1.150, Revision 1, Appendix A were also used in the examination.

Because of geometric conditions, i.e., lifting lugs adjacent to the weld, 81.85% of the near surface volume and 79.85% of the weld and base metal volumes were covered. In order to achieve more coverage of the required volumes the lifting lugs would have to be moved away from the weld area.

Item Number B01.040.001 (3RPV-WH7), RPV Head-to-Flange Weld was examined to the maximum extent practical using ultrasonic techniques in accordance with the requirements of ASME Section V, Article 4, 1989 Edition. The additional requirements of Regulatory Guide 1.150, Revision 1, Appendix A were also used in the examination.

Because of geometric conditions, i.e., single sided access, 63.35% of the near surface volume and 48.55% of the weld and base metal volumes were covered. In order to achieve more coverage of the required volumes, the weld must be at a greater distance from the flange.

Item Numbers B03.130.001 (3-SGA-WG50-2, nozzle weld), B03.130.002 (3-SGA-WG50-1, nozzle weld), B03.140.001 (3-SGA-WG50-2, inside radius) and B03.140.002 (3-SGA-WG50-1, inside radius), Steam Generator A Primary Outlet Nozzle-to-Lower Head Weld were examined to the maximum extent practical using ultrasonic techniques in accordance with the requirements of ASME Section V, Article 4, 1989 Edition.

Because of geometric conditions, i.e., single sided access and support skirt location, 15.6% of the required examination volume was covered. In order to achieve more coverage the support skirt would have to be cut away from the nozzle.

All three units for Oconee are being addressed in this request for relief as addressed in NRC correspondence dated May 5, 1995 concerning NRC Inspection Report No. 50-269/95-05, 50-270/95-05, 50-287/95-05.

V. Alternate Examinations or Testing:

Duke Power Company will continue to perform an ultrasonic examination of Item Numbers B01.021.001, 3RPV-WH5, RPV Head Weld and B01.040.001, 3RPV-WH7, RPV Head-to-Flange Weld to the maximum extent practical in accordance with the requirements of ASME Section V, Article 4, 1989 Edition and Regulatory Guide 1.150, Revision 1, Appendix A.

Duke Power Company will continue to perform an ultrasonic examination of Item Numbers B03.130.002, B03.130.001, B03.140.002 and B03.140.001, Steam Generator A Primary Outlet Nozzle-to-Lower Head Weld and Inside Radius to the maximum extent practical in accordance with the requirements of ASME Section V, Article 4, 1989 Edition.

VI. Justification for the Granting of Relief:

As stated above, Duke Power Company will continue to ultrasonically examine the welds and components (inside radius) to the extent practical within the limits of original design and construction. This will provide reasonable assurance of weld / component integrity. Thus, an acceptable level of quality and safety will have been achieved and public health and safety will not be endangered by allowing relief from the aforementioned Code requirements.

VII. Implementation Schedule:

Unit 3, Refueling Outage 15

Unit 1, Refueling Outages 16 & 17

Unit 2, Refueling Outage 15

Evaluated By: R G Rowe Date 10/2/95

Reviewed By: J C Shropshire Date 10/2/95

WELD LIST

IDENT NO.	PIECE NO.	DIAM.	THICK.
WR1	A1 TO A2	171" I.D.	9.500
WR1A	10 TO A1	171" I.D.	9.500
A1 — WR2	A1 TO A1	N/A	9.500
A1 — WR2A	A1 TO A1	N/A	9.500
A2 — WR2	A2 TO A2	N/A	9.500
A2 - WR2A	A2 TO A2	N/A	9.500
A10-WR2	A10 TO A10	N/A	9.500
A10-WR2A	A10 TO A10	N/A	9.500
WR12	18 TO 8 & 9	48" OD.	12.000
WR12A	18 TO 8 & 9	48"O.D.	12.000
WR12B	18 TO 8 & 9	48"O.D.	12.000
WR12C	18 TO 8 & 9	48"O.D.	12.000
WR13	19 TO 8 & 9	60"OD.	12.000
WR13A	19 TO 8 & 9	60"O.D.	12.000
WR17	9 TO 10	171" I.D.	9.500
WR18	8 TO 9	168" I.D.	12.000
WR19	7 TO 8	171" I.D.	12.000
WR34	A2 TO 36	170" I.D.	5.500
WR35	36 TO 6	143" I.D.	5.375
WR36	36 TO 37	175" I.D.	2.000
WR53	89 TO 17	15.625" O.D.	1.688
WR53A	89 TO 17	15.625" O.D.	1.688
WR54	17 TO 8	25.0"	12.000
WR54A	17 TO 8	25.0"	12.000
WH5	24 TO 23		6.625
WH7	23 TO 22	147" I.D.	6.625

BILL OF MATERIAL

PC. NO	QTY	DESCRIPTION	MATL.
A1	1	LOWER SHELL ASS'Y. UPPER COURSE	SA 533 GR. B
A2	1	LOWER SHELL ASS'Y. LOWER COURSE	SA 533 GR. B
6	1	LOWER HEAD ASS'Y. CAP SECTION	SA 533 GR. B
7	1	REACTOR VESSEL FLANGE	SA 508 CL. 2
8	1	NOZZLE BELT UPPER COURSE	SA 508 CL. 2
9	1	NOZZLE BELT LOWER COURSE	SA 508 CL. 2
10	1	UPPER SHELL ASS'Y. LOWER COURSE	SA 533 GR. B
17	2	CORE FLOOD NOZZLE	SA 508 CL. 2
18	4	INLET NOZZLE	SA 508 CL. 2
19	2	OUTLET NOZZLE	SA 508 CL. 2
22	1	UPPER HEAD FLANGE	SA 508 CL. 2
23	1	UPPER HEAD RING SECTION	SA 508 CL. 2
24	1	UPPER HEAD CAP SECTION	SA 533 GR. B
36	1	LOWER HEAD RING SECTION	SA 508 CL. 2
37	1	REACTOR VESSEL SUPPORT SKIRT —	SA 516 GR. 70
89	2	CORE FLOOD NOZZLE SAFE END	SA 336-65A-F8M

UNCONTROLLED

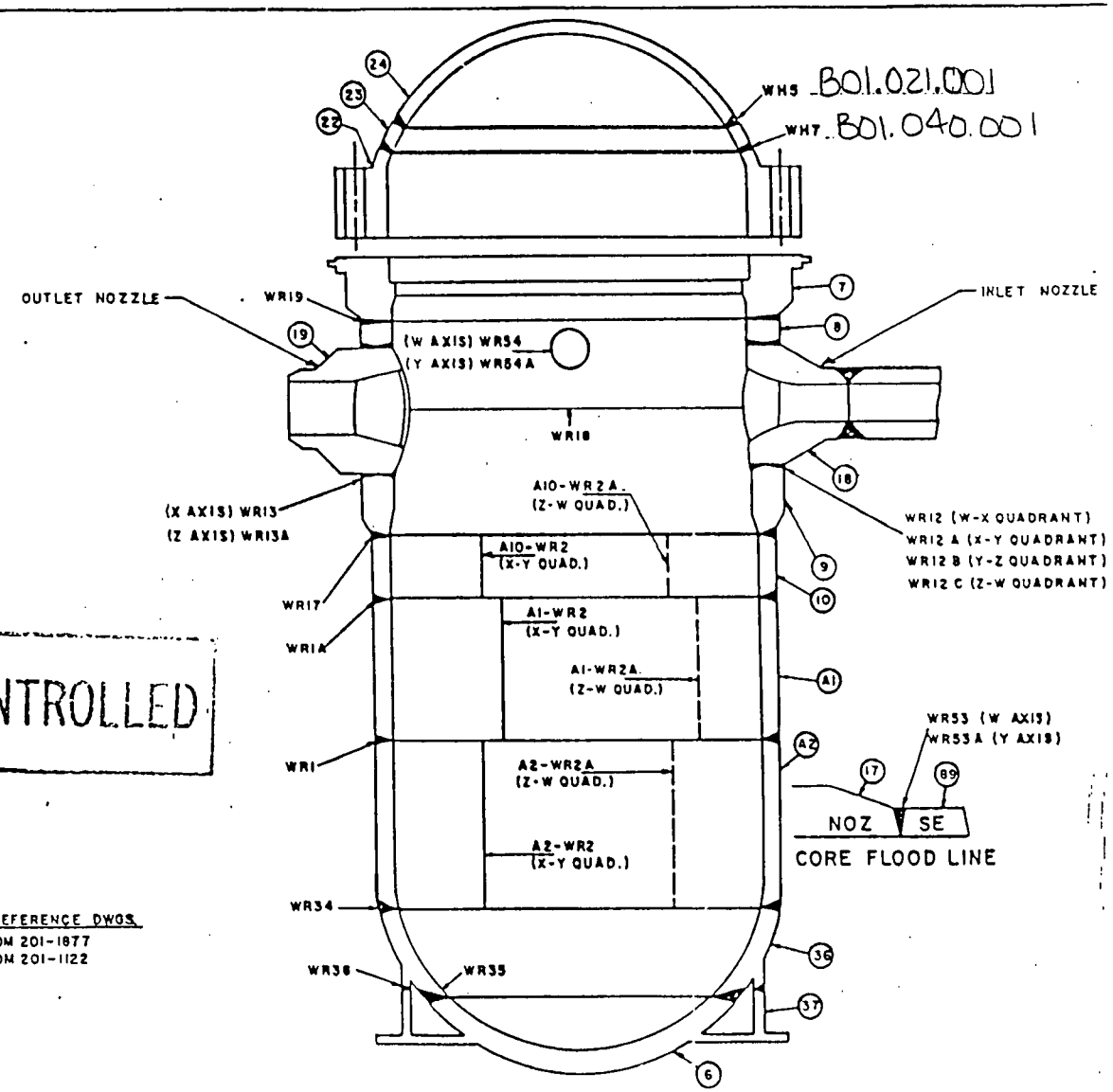

REFERENCE DWGS.
OM 201-1877
OM 201-1122

NOTES:
1. ALL I.D. NUMBERS SHALL BE PRECEDED BY "IRPV-".
2. PIECE NUMBERS ARE SHOWN IN CIRCLES.

NO.	REVISION	DRWN	RVWD	APPD
		DATE	DATE	DATE
1	Add. Ref. Dwgs.			
0	ORIGINAL			

TITLE
REACTOR VESSE
WELD OUTLINE

DWG NO. ISI-OCNI-001

REVISIONS

REVISION NO.	DESCRIPTION	DATE	APPROVAL
1	PLAN. VIEW - RELOCATED LIFTING LUGS 90° CLOCKWISE X'TO/ANS	[illegible]	G. Rand
2	(5B) ADDED THERMOCOUPLE PENETRATIONS (4F) ADDED SECTION C-C RWH/ANS	6-7-68	G. Rand
3	(ZONE C-8) RELOCATED SECT. A-A INDICATION (ZONE I-11) REMOVED REF. TO CONTRACTS 620-0004 & 620-0009. (ZONE D-8, H-2) IN SECT. B-B: EXTENDED VIEW TO INCLUDE MK-152 (WH-38, WH-1), G43 WAS .750.	11/[illegible]/68	RBF
4	(8C) RELOCATED CALLOUT FOR SECT. A-A (8A/8H): DELETED MK-152 & WH-38. (4F) CHGD CONFIG. OF WELD PREP TO SUIT DETAIL DWG. REL/RFH	8/8/69	K Jul
5	(SECTION 'A-A' & 'B-B') MOVED SOURCE & PENETRAMETER OUTSIDE OF CRDM HOUSING & (SECTION 'B-B') FINE GRAIN FILM WAS AA OR EQUIV. 200KV TO 400KV X-RAY WAS TR-192, & ADDED MIN FOCAL DIST 36". ADY/SGS	9/11/70	Bend

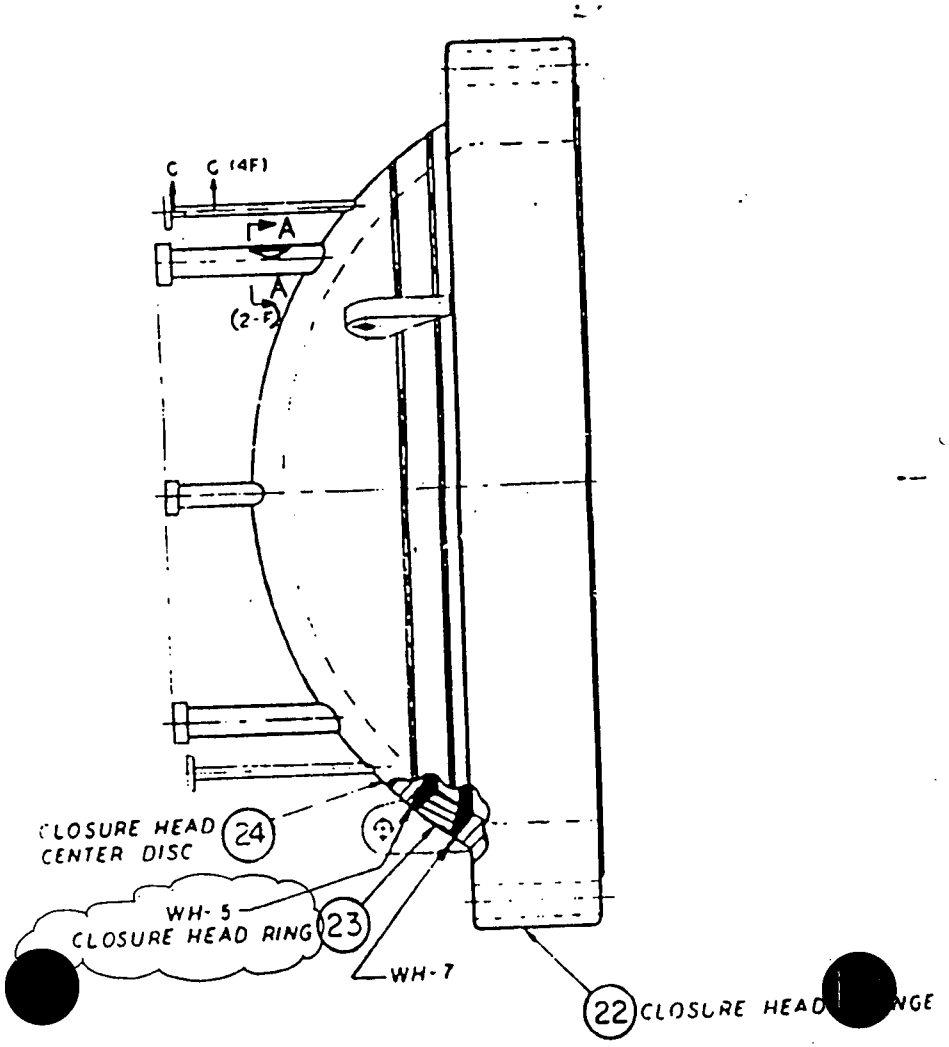

UNCONTROLLED

WELD LIST				BILL OF MATERIAL			
IDENT NO.	PIECE NO.	DIAM.	THICK.	PC. NO.	QTY	DESCRIPTION	MATL.
WG8-1	1 TO 2	138" I.D.	4.188 MIN.	1	1	SHELL SECTION	SA 212 GR. B
WG8-2	2 TO 3	138" I.D.	4.188 MIN.	2	2	SHELL SECTION	SA 212 GR. B
WG8-3	3 TO 2	138" I.D.	4.188 MIN.	3	1	SHELL SECTION	SA 212 GR. B
WG8-4	5 TO 6	138" I.D.	4.188 MIN.	4	1	SHELL SECTION	SA 212 GR. B
WG23-1	14 TO 3	29.00"	6.625 MIN.	5	1	SHELL SECTION	SA 212 GR. B
WG23-2	14 TO 3	29.00"	6.625 MIN.	6	1	SHELL SECTION	SA 212 GR. B
WG25	70 TO 8	48.63"	8.000 MIN.	7	1	LOWER HEAD	SA 302 GR. B
WG50-1	65 TO 7	38.38"	8.000 MIN.	8	1	UPPER HEAD	SA 302 GR. B
WG50-2	65 TO 7	38.38"	8.000 MIN.	14	2	24" STEAM OUTLET NOZZLE	SA 508 CL. 1
WG57	95 TO 7	135" I.D.	N/A	50	1	LOWER TUBE SHEET	SA 508 CL. 2
WG58-1	8 TO 51	119" I.D.	8.000 MIN.	51	1	UPPER TUBE SHEET	SA 508 CL. 2
WG58-2	7 TO 50	119" I.D.	8.000 MIN.	65	2	28" PRIMARY OUTLET NOZZLE	SA 508 CL. 1
WG59	6 TO 50	138" I.D.	6.625 MIN.	70	1	36" PRIMARY INLET NOZZLE	SA 508 CL. 1
WG60	1 TO 51	138" I.D.	6.625 MIN.	95	1	SUPPORT SKIRT TRANSITION RING	SA 302 GR. B

UNCONTROLLED

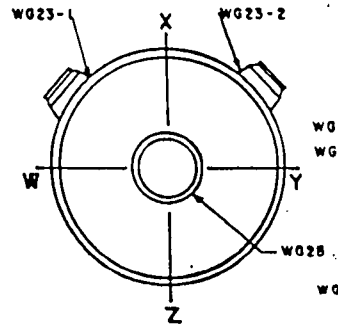

TOP VIEW

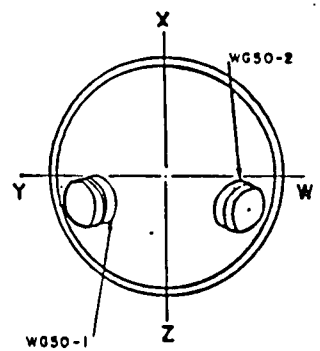

BOTTOM VIEW

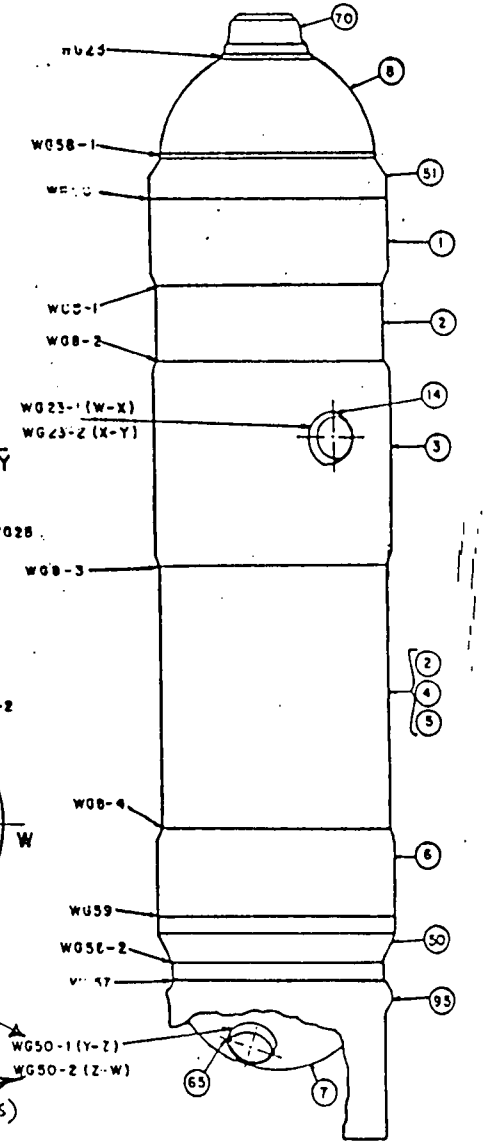

B03.130.002
B03.140.002 (INSIDE RADIUS)

B03.130.001
B03.140.001 (INSIDE RADIUS)

REFERENCE DWGS:
CN 201-1873
OM 201-176

NOTES:

1. ALL I.D. NUMBERS SHALL BE PRECEDED BY "ISGA-".
2. PIECE NUMBERS ARE SHOWN IN CIRCLES.

NO.	REVISION	DRWN DATE	CHKD DATE	APPD DATE
1.	Add Top & Bot Views & Rev. Drawing	[illegible]	JJH [illegible]	JOE [illegible]
0.	ORIGINAL	[illegible]		

TITLE
STEAM GENERATOR "A"
WELD OUTLINE

DWG NO. ISI-OCNI-003 REV. 1

UNCONTROLLED

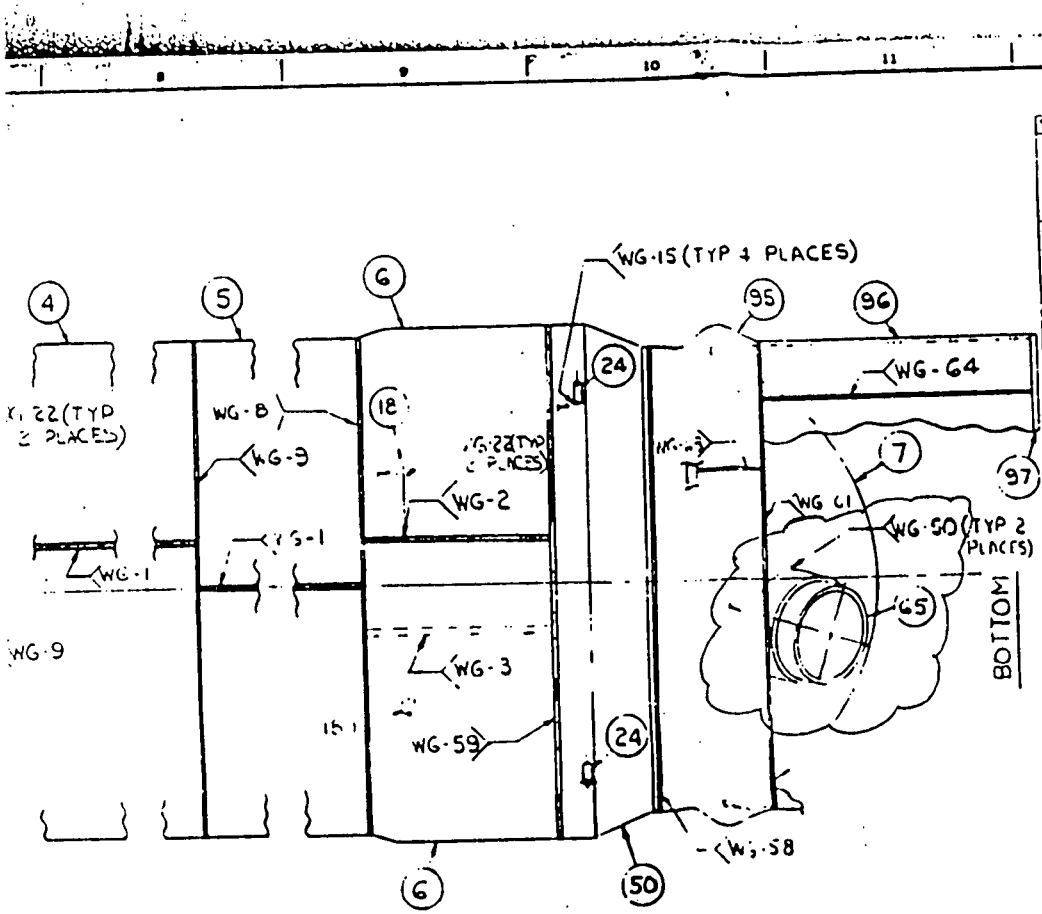

REVISIONS

	DESCRIPTION	DATE	
1	RELOCATED WG-68 ZONE G-10 TO F-7 CHG'D WELD DET ZONE I-1 CHG'D LOC & DET SECTION D-D ADDED DET & CHART ZONE I-8	9/16/67	
2	RELOCATED MK-20, ADDED MK-18 & CHG'D TABLE 'D-D' TO AGREE	1/29/68	
3	ADDED LOWER MK-8 & WELD WG-17 (B-C) AND (B-D) DELETED WELD NUMBERS WG-54 WG-56 WG-57 WG-97 WG-98 & WG-99 (10-1 B-C D) AND FROM TABLES 1.2 D (7-1) AND (8-9-1) CHG'D MIN THK AND PENE FOR WELD WG-68 (7-F)	8/6/68	
4	CHG'D WG-50 FROM SECT 'C-C' TO SECT 'B-B' DRS/TBR	11/18/68	
5	REMOVED CONTRACT NO'S W20-0004-53 & W20-0009-55 AND ADD UNIT #1 & SHEET #1 IN TITLE BLOCK. DELETED WG-17 (B-4) & CHG'D MK-20 TO MK-18 (B-C-9) (SECT 'D-D') DRS/TBR	9/9/68	
6	CHG'D SECT 'E-E' (MK-18) FROM SINGLE WALL TO DOUBLE WALL SHEET & MOVED LOCATION OF SECT 'E-E' FROM (H-10) TO (D-2). ADDED TUBESHEET PLUG X-RAY INFORMATION (H-10). JSE/GD	11/8/68	
7	REMOVED BACKING RING AT WELD WG-60 ZONE (E-2), DELETED WELD WG-29 & SECT. 'A-A' (D-2, B-10) TBR	2/27/69	

NOTES

1. FOR GENERAL NOTES SEE LONGITUDINAL

STEAM GENERATOR

WELD ID

2-SGA-WG50-2
2-SGA-WG50-1

ITEM NOS.

B03.130.001
B03.140.001

B03.130.002
B03.140.002

Duke Power Company
Oconee Nuclear Site
P.O. Box 1439
Seneca, SC 29679

J. W. HAMPTON
Vice President
(864)885-3499 Office
(864)885-3564 Fax

DUKE POWER

February 27, 1996

U.S. Nuclear Regulatory Commission
Attention: Document Control Desk
Washington, DC 20555

Subject: Duke Power Company
Oconee Nuclear Station, Units 1, 2, and 3
Docket Nos. 50-269, -270, and -287
Third Ten Year Inservice Inspection Interval
Request for Relief No. 95-04
Supplemental Information

Per a telephone conference on February 12, 1996, the NRC requested additional information to clarify information provided in Request for Relief 95-04 dated October 5, 1995. Please find attached the additional information in support of the request for relief.

If there are any questions or further information is needed you may contact D. A. Nix at (803) 885-3634.

Very truly yours,

J. W. Hampton

J. W. Hampton
Site Vice President

Attachment

xc (w/attch): Mr. L. A. Wiens
Office of Nuclear Reactor Regulation
U. S. Nuclear Regulatory Commission
Washington, DC 20555

Attn: Mike Anderson
Lockheed of Idaho
2351 North Boulevard
Idaho Falls, ID, 83415-2209

xc(w/o attch): Mr. S. D. Ebneter
Regional Administrator, Region II
U. S. Nuclear Regulatory Commission

Mr. P. E. Harmon
Senior NRC Resident Inspector
Oconee Nuclear Station

Mr. Max Batavia
Bureau of Radiological Health
SC Dept. of Health & Environmental Control
2600 Bull St.
Columbia, SC 29201

bxc (w/ attchs): T. J. Coleman
R. G. Rouse
D. A. Nix

bxc (w/o attchs): J. O. Barbour
J. E. Burchfield
B. W. Carney
M. B. Chapman
J. C. Shropshire
ELL EC050
ISI Relief Request File

Attachment

Questions and Answers

1. Please verify for the welds identified in Part I of the request for relief, that the physical configuration, including interferences, is identical for Units 1, 2, and 3. This request for verification is because technical information is only provided for Unit 3 in the request for relief.

A: For the welds identified in Part I of the request for relief, the physical configuration, including interferences, is identical for Units 1, 2, and 3. This conclusion is based on a combination of drawing reviews and field experience.

2. In Section V of the request for relief, you identify the alternate examinations that you will perform on Unit 3 Reactor Pressure Vessel (RPV) welds. However, since the request for relief is also for the same welds on Units 1 and 2, please confirm that the alternate examinations you have specified in Section V for Unit 3 will also be performed for Units 1 and 2.

A: Duke Power Company will also continue to perform ultrasonic examination of Item Numbers B01.021.001 (RPV Head Weld) and B01.040.001 (RPV Head-to-Flange Weld) for Units 1 and 2, to the maximum extent practical in accordance with the requirements of ASME Section V, Article 4, 1989 Edition, and Regulatory Guide 1.150, Revision 1, Appendix A.

3. In Section V of the request for relief, you identify the alternate examinations that you will perform on Units 1 and 3 Steam Generator A welds, but no mention is made regarding alternate examinations on the similar Unit 2 welds. Do you intend to perform the same alternate examinations on the Unit 2 welds identified in Section I, parts c and d?

A: Due to an administrative oversight, the Unit 2 Steam Generator A welds identified in Section I, parts c and d, were not included in Section V of the request for relief. Therefore, the following statement should be added to Section V of the existing request for relief:

> Duke Power Company will also continue to perform an ultrasonic examination of Item Numbers B03.130.003, B03.130.004, B03.140.003, and B03.140.004 (Steam Generator A Primary Outlet Nozzle-to-Lower Head Weld and Inside Radius), for Unit 2, to the maximum extent

practical in accordance with the requirements of ASME Section V, Article 4, 1989 Edition.

4. In Section IV of the request for relief, you specify the percent coverage for the Unit 3 welds only. No examinations have yet been performed this interval on the corresponding similar Unit 1 and 2 welds which are also identified in this request for relief. Since our evaluation which supports approval of the request for relief is dependent in part on the percent coverage achieved for the welds, it would appear that case by case relief would still be necessary should corresponding welds on Units 1 and 2 receive less coverage than those described for Unit 3.

A: Duke concurs that coverage on corresponding identical Unit 1 and 2 welds should be greater than or equal to the coverages approved for Unit 3 in the request for relief. Accordingly, if the coverages for corresponding identical welds on Unit 1 or 2 are less than those approved for Unit 3, then additional request for relief will be filed on an individual basis for these welds.

UNITED STATES
NUCLEAR REGULATORY COMMISSION
WASHINGTON, D.C. 20555-0001

May 3, 1996

Mr. J. W. Hampton
Vice President, Oconee Site
Duke Power Company
P.O. Box 1439
Seneca, SC 29679

SUBJECT: OCONEE NUCLEAR STATION, UNIT 1 - THIRD TEN-YEAR INTERVAL INSERVICE INSPECTION REQUEST FOR RELIEF NO. 95-04 (TAC NOS. M93944, M93945, AND M93946)

Dear Mr. Hampton:

By letter dated October 5, 1995, you submitted Request for Relief No. 95-04 from certain ASME Code requirements that you determined to be impractical to perform at Oconee Nuclear Station, Units 1, 2, and 3, during the third 10-year interval inservice inspection. Supplemental information was provided in your submittal dated February 27, 1996. Relief was requested from the requirements of Section XI of the ASME Code to perform a volumetric examination of greater than 90 percent of the weld area for the specific welds covered by this request. Performance of the Code-required examination coverage is precluded by component interfaces. To meet the Code requirements, extensive design modifications would be necessary to provide access for examination. We note that in the case of Oconee Units 1 and 2, the percent of coverage obtainable for the subject welds was estimated based on examinations performed on equivalent Oconee Unit 3 components. If the actual examination coverage for Units 1 and 2 is less than this estimate, you must submit a new request for relief based on the actual coverage obtained.

The NRC staff, with technical assistance from its contractor, the Idaho National Engineering Laboratory, has reviewed and evaluated your request and has concluded that certain requirements of the Code are impractical. The staff has determined that the extent of coverage obtained for the specific welds covered by this request provides reasonable assurance of the structural reliability and operational readiness of the reactor pressure vessel welds and steam generator nozzle welds. Therefore, pursuant to 10 CFR 50.55a(g)(6)(i), for Unit 3, relief is granted as requested for Request for Relief 95-04 and, for Units 1 and 2, relief is granted provided that the examination coverage for welds at Units 1 and 2 is as much as that estimated using Unit 3 examinations. The staff's evaluation and conclusions are contained in the enclosed Safety Evaluation. This relief is authorized by law and will not

endanger life or property or the common defense and security, and is otherwise in the public interest, giving due consideration to the burden that could result if the requirements were imposed on your facility.

Sincerely,

Herbert N. Berkow

Herbert N. Berkow, Director
Project Directorate II-2
Division of Reactor Projects - I/II
Office of Nuclear Reactor Regulation

Docket Nos. 50-269, 50-270
and 50-287

Enclosure: Safety Evaluation

cc w/encl: See next page

Mr. J. W. Hampton
Duke Power Company

Oconee Nuclear Station

cc:
Mr. Paul R. Newton
Legal Department (PB05E)
Duke Power Company
422 South Church Street
Charlotte, North Carolina 28242-0001

J. Michael McGarry, III, Esquire
Winston and Strawn
1400 L Street, NW.
Washington, DC 20005

Mr. Robert B. Borsum
B&W Nuclear Technologies
Suite 525
1700 Rockville Pike
Rockville, Maryland 20852-1631

Manager, LIS
NUS Corporation
2650 McCormick Drive, 3rd Floor
Clearwater, Florida 34619-1035

Senior Resident Inspector
U. S. Nuclear Regulatory Commission
Route 2, Box 610
Seneca, South Carolina 29678

Regional Administrator, Region II
U. S. Nuclear Regulatory Commission
101 Marietta Street, NW. Suite 2900
Atlanta, Georgia 30323

Max Batavia, Chief
Bureau of Radiological Health
South Carolina Department of Health
and Environmental Control
2600 Bull Street
Columbia, South Carolina 29201

County Supervisor of Oconee County
Walhalla, South Carolina 29621

Mr. Ed Burchfield
Compliance
Duke Power Company
Oconee Nuclear Site
P. O. Box 1439
Seneca, South Carolina 29679

Ms. Karen E. Long
Assistant Attorney General
North Carolina Department of
Justice
P. O. Box 629
Raleigh, North Carolina 27602

Mr. G. A. Copp
Licensing - EC050
Duke Power Company
526 South Church Street
Charlotte, North Carolina 28242-0001

Dayne H. Brown, Director
Division of Radiation Protection
North Carolina Department of
Environment, Health and
Natural Resources
P. O. Box 27687
Raleigh, North Carolina 27611-7687

UNITED STATES
NUCLEAR REGULATORY COMMISSION
WASHINGTON, D.C. 20555-0001

SAFETY EVALUATION BY THE OFFICE OF NUCLEAR REACTOR REGULATION

OF THE THIRD TEN YEAR INTERVAL INSERVICE INSPECTION PROGRAM PLAN

REQUEST FOR RELIEF NO. 95-04

FOR

DUKE POWER COMPANY

OCONEE NUCLEAR STATION UNITS 1, 2, and 3

DOCKET NOS. 50-269, 50-270, AND 50-287

1.0 INTRODUCTION

The Technical Specifications for Oconee Nuclear Station, Units 1, 2, and 3 state that the inservice inspection of the American Society of Mechanical Engineers (ASME) Code Class 1, 2, and 3 components shall be performed in accordance with Section XI of the ASME Boiler and Pressure Vessel Code and applicable Addenda as required by Title 10 of the Code of Federal Regulations (10 CFR) 50.55a(g), except where specific written relief has been granted by the Commission pursuant to 10 CFR 50.55a(g)(6)(i). Section 50.55a(a)(3) states that alternatives to the requirements of paragraph (g) may be used, when authorized by the NRC, if (i) the proposed alternatives would provide an acceptable level of quality and safety or (ii) compliance with the specified requirements would result in hardship or unusual difficulties without a compensating increase in the level of quality and safety.

Pursuant to 10 CFR 50.55a(g)(4), ASME Code Class 1, 2, and 3 components (including supports) shall meet the requirements, except the design and access provisions and the preservice examination requirements, set forth in the ASME Code, Section XI, "Rules for Inservice Inspection of Nuclear Power Plant Components," to the extent practical within the limitations of design, geometry, and materials of construction of the components. The regulations require that inservice examination of components and system pressure tests conducted during the first 10-year interval and subsequent intervals comply with the requirements in the latest edition and addenda of Section XI of the ASME Code incorporated by reference in 10 CFR 50.55a(b) 12 months prior to the start of the 120-month interval, subject to the limitations and modifications listed therein. The applicable edition of Section XI of the ASME Code for the Oconee Nuclear Station, Units 1, 2, and 3 third 10-year inservice inspection (ISI) interval is the 1989 Edition. The components (including supports) may meet the requirements set forth in subsequent editions and addenda of the ASME Code incorporated by reference in 10 CFR 50.55a(b) subject to the limitations and modifications listed therein and subject to Commission approval.

Pursuant to 10 CFR 50.55a(g)(5), if the licensee determines that conformance with an examination requirement of Section XI of the ASME Code is not practical for its facility, information shall be submitted to the Commission in support of that determination and a request made for relief from the ASME Code requirement. After evaluation of the determination, pursuant to 10 CFR 50.55a(g)(6)(i), the Commission may grant relief and may impose alternative requirements that are determined to be authorized by law, will not endanger life, property, or the common defense and security, and are otherwise in the public interest, giving due consideration to the burden upon the licensee that could result if the requirements were imposed. In a letter dated October 5, 1995, Duke Power Company, submitted to the NRC its Third Ten-Year Interval Inservice Inspection Program Plan Request for Relief No. 95-04 for Oconee Nuclear station, Units 1, 2, and 3. The licensee provided additional information in its letter dated February 27, 1996.

2.0 EVALUATION AND CONCLUSIONS

The staff, with technical assistance from its contractor, the Idaho National Engineering Laboratory (INEL), has evaluated the information provided by the licensee in support of its Third Ten-Year Interval Inservice Inspection Program Plan, Request for Relief No. 95-04 for Oconee Nuclear Station, Units 1, 2, and 3. The licensee provided additional information in its letter dated February 27, 1996.

Based on the information submitted, the staff adopts the contractor's conclusions and recommendations presented in the attached Technical Letter Report. The staff has concluded that performing the Code-required volumetric examinations of the subject areas to the extent required by the Code is impractical for Oconee Nuclear Station, Units 1, 2, and 3. The licensee has proposed to perform the required volumetric examinations on each of the subject welds to the extent practical and the Code-required surface examinations (as applicable). This combination provides reasonable assurance of operational readiness. Therefore, relief is granted for Request for Relief 95-04 (Parts 1 and 2) pursuant to 10 CFR 50.55a(g)(6)(i) for Unit 3 as requested. Relief is also granted for Units 1 and 2 provided that the percentage of coverage obtainable at those units is as much as estimated, based on examinations performed on Unit 3 components. As the coverage on Units 1 and 2 is verified when the examinations are performed and if the actual coverages are less than estimated for Units 1 and 2, the licensee is required to resubmit the request for relief based on actual coverages.

Attachment: Technical Letter Report

Principal Contributor: T. McLellan

Date: May 3, 1996

TECHNICAL LETTER REPORT
ON THE THIRD 10-YEAR INSERVICE INSPECTION INTERVAL
REQUEST FOR RELIEF 95-04
FOR
DUKE POWER COMPANY
OCONEE NUCLEAR STATION, UNITS 1, 2, AND 3
DOCKET NUMBER: 50-269, -270, AND -287

1.0 INTRODUCTION

By letter dated October 5, 1995, Duke Power Company submitted Request for Relief 95-04 for Oconee Nuclear Station, Units 1, 2, and 3. In a letter dated February 27, 1996, the licensee submitted additional information. The Idaho National Engineering Laboratory (INEL) staff has reviewed the request for relief in the following section.

2.0 EVALUATION

The Code of record for Oconee Nuclear Station, Units 1, 2, and 3, third 10-year inservice inspection (ISI) interval, is the 1989 Edition of the *American Society of Mechanical Engineers (ASME) Boiler and Pressure Vessel Code, Section XI*. The information provided by the licensee in support of the request for relief from Code requirements has been evaluated and the basis for disposition is documented below.

While the request for relief is for Units 1, 2, and 3, the actual examinations have not yet been performed on Units 1 and 2. The licensee has determined that the percent of coverage obtainable for Units 1 and 2 is equivalent to that for Unit 3 as the component designs are the same. This coverage should be verified when the examinations are performed. If the actual coverages are less than the estimated coverages, the licensee must resubmit the request for relief.

Request for Relief 95-04 (Part 1 of 2), Examination Category B-A, Item B1.21, Reactor Pressure Vessel Head Welds, Item B1.40, Reactor Pressure Vessel Head-to-Flange Weld

Code Requirement: Table IWB-2500-1, Examination Category B-A, Item B1.21 requires 100% volumetric examination of the accessible portion of all reactor pressure vessel (RPV) circumferential head welds as defined in Figure IWB-2500-3.

Table IWB-2500-1, Examination Category B-A, Item B1.40 requires 100% volumetric and surface examination of the RPV head-to-flange weld as defined in Figure IWB-2500-5.

Licensee's Code Relief Request: The licensee requested relief from performing the volumetric examination to the extent required by the Code for the following examination areas:

Reactor Vessel Head Welds:

1-RPV-WH5, Item Number B01.021.001
2-RPV-WH5, Item Number B01.021.001
3-RPV-WH5, Item Number B01.021.001

Reactor Vessel Head-to-Flange Welds:

1-RPV-WH7, Item Number B01.040.001
2-RPV-WH7, Item Number B01.040.001
3-RPV-WH7, Item Number B01.040.001

Licensee's Basis for Requesting Relief (as stated):

"Item Number B01.021.001 (3-RPV-WH5), RPV Head Weld was examined to the maximum extent practical using ultrasonic techniques in accordance with the requirements of ASME Section V, Article 4, 1989 Edition. The additional requirements of Regulatory Guide 1.150, Revision 1, Appendix A were also used in the examination.

"Because of geometric conditions, i.e., lifting lugs adjacent to the weld, 81.85% of the near surface volume and 79.85% of the weld and base metal volumes were covered. In order to achieve more coverage of required volumes the lifting lugs would have to be moved away from the weld area.

"Item Number B01.040.001 (3-RPV-WH7), RPV Head-to-Flange Weld was examined to the maximum extent practical using ultrasonic techniques in accordance with the requirements of ASME Section V, Article 4, 1989 Edition. The additional requirements of Regulatory Guide 1.150, Revision 1, Appendix A were also used in the examination.

"Because of geometric conditions, i.e. single sided access, 63.35% of the near surface volume and 48.55% of the weld and base metal volumes were covered. In order to achieve more coverage of the required volumes, the weld must be at a greater distance from the flange."

Licensee's Proposed Alternative Examination (as stated):

"Duke Power Company will continue to perform an ultrasonic examination of Item Numbers B01.021.001, 3-RPV-WH5, RPV Head Weld and B01.040.001, 3-RPV-WH7, RPV Head-to-Flange Weld to the maximum extent practical in accordance with the requirements of ASME Section V, Article 4, 1989 Edition and Regulatory Guide 1.150, Revision 1, Appendix A."

Evaluation: The Code requires that the subject reactor pressure vessel welds receive 100% volumetric examination. However, due to the examination area configuration, the limited available scanning surfaces preclude complete ultrasonic coverage. As a result, 100% volumetric examination is impractical. To obtain complete volumetric coverage, design modifications or replacement of the component with one providing for complete examination would be required. Imposition of this requirement would cause a considerable burden for the licensee.

The subject volumetric examinations, when performed to the extent practical, provide approximately 80% coverage of the RPV head circumferential weld and 55% coverage of the RPV head-to-flange weld. Based on the significant percent of coverage obtainable, in combination with the Code-required surface examination of the RPV head-to-flange weld, it can be concluded that significant degradation, if present, will be detected. As a result, reasonable assurance of structural integrity is provided. Therefore, it is recommended that the licensee's request for relief be granted pursuant to 10 CFR 50,55a(g)(6)(i).

Request for Relief 95-04 (Part 2 of 2), Examination Category B-D, Item B3.130, Steam Generator (Primary Side) Nozzle-to-Vessel Welds and Item B3.140, Steam Generator (Primary Side) Nozzle Inside Radius Section

Code Requirement: Table IWB-2500-1, Examination Category B-D, Item B3.130 requires 100% volumetric examination of the steam generator nozzle-to-shell weld as defined by Figure IWB-2500-7.

Table IWB-2500-1, Examination Category B-D, Item B3.140 requires 100% volumetric examination of the steam generator nozzle inner radius section as defined by Figure IWB-2500-7.

Licensee's Code Relief Request: The licensee requested relief from performing the volumetric examination to the extent required by Code for the following examination areas:

Steam generator nozzle-to-vessel welds:

1-SGA-WG50-2, Item Number B03.130.001
1-SGA-WG50-1, Item Number B03.130.002
2-SGA-WG50-2, Item Number B03.130.003
2-SGA-WG50-1, Item Number B03.130.004
3-SGA-WG50-2, Item Number B03.130.001
3-SGA-WG50-1, Item Number B03.130.002

Steam generator nozzle inside radius welds:

1-SGA-WG50-2, Item Number B03.140.001
1-SGA-WG50-1, Item Number B03.140.002
2-SGA-WG50-2, Item Number B03.140.003
2-SGA-WG50-1, Item Number B03.140.004
3-SGA-WG50-2, Item Number B03.140.001
3-SGA-WG50-1, Item Number B03.140.002

Licensee's Basis for Requesting Relief (as stated):

"Item Numbers B03.130.001 (3-SGA-WG50-2, nozzle weld), B03.130.002, (3-SGA-WG50-1, nozzle weld), B03.140.001 (3-SGA-WG50-2, inside radius) and B03.140.002 (3-SGA-WG50-1, inside radius), Steam Generator A Primary Outlet Nozzle-to-Lower Head Weld were examined to the maximum extent practical using ultrasonic techniques in accordance with the requirements of ASME Section V, Article 4, 1989 Edition."

"Because of geometric conditions, i.e., single sided access and support skirt location, 15.6% of the required examination volume was covered. In order to achieve more coverage the support skirt would have to be cut away from the nozzle."

Licensee's Proposed Alternative Examination (as stated):

"Duke Power Company will continue to perform an ultrasonic examination of Item Numbers B03.130.002, B03.130.001, B03.140.002 B03.140.001, B03.130.003, B03.130.004, B03.140.003, and B03.140.004 Steam Generator A Primary Outlet Nozzle-to-Lower Head Weld and Inside Radius to the maximum extent practical in accordance with the requirements of ASME Section V, Article 4, 1989 Edition."

Evaluation: The Code requires that steam generator nozzle-to-shell and nozzle inner radius sections be 100% volumetrically examined during the inspection interval. However, due to the geometry of the examination area and examination interference from the support skirt, complete examination of the subject examination areas is impractical. To obtain complete volumetric coverage, design modifications of the component would be required. Imposition of this requirement would cause a considerable burden for the licensee.

The examinations, when performed to the extent practical, result in an estimated 15.6% coverage of each nozzle-to-shell weld and inner radius section. Based on the percent of coverage that can be obtained for each nozzle and considering the combined coverage achieved when all nozzles are examined (essentially 100% of one nozzle), it can be concluded that significant degradation, if present, will be detected. As a result, reasonable assurance of structural integrity is provided.

Conclusion: Performing the Code-required volumetric examination for the subject nozzle-to-shell and inner radius sections to the extent required by the Code is impractical for Oconee Nuclear Station, Units 1, 2, and 3. Therefore, it is recommended that relief be granted pursuant to 10 CFR 50.55a(g)(6)(i).

3.0 Conclusion:

Performing the Code-required volumetric examinations of the subject areas to the extent required by Code is impractical for Oconee Nuclear Station, Units 1, 2, and 3. The licensee will perform the required volumetric examinations on each of the subject welds to the extent practical. This, in combination with the Code-required surface examinations (as applicable), provides reasonable assurance of operational readiness. Therefore, it is recommended that relief be granted for Request for Relief 95-04 (Parts 1 and 2) pursuant to 10 CFR 50.55a(g)(6)(i). It should be noted that in the case of Units 1 and 2, the licensee has estimated the percent of coverage obtainable. This coverage should be verified when the examinations are performed. If the actual coverages are less than estimated, the licensee must resubmit the request for relief based on actual coverages.

Duke Power Company
Oconee Nuclear Site
P.O. Box 1439
Seneca, SC 29679

J. W. HAMPTON
Vice President
(864)885-3499 Office
(864)885-3564 Fax

DUKE POWER

July 24, 1996

U.S. Nuclear Regulatory Commission
Attention: Document Control Desk
Washington, DC 20555

Subject: Duke Power Company
Oconee Nuclear Station, Units 1, 2, and 3
Docket Nos. 50-269, -270, and -287
Third Ten Year Inservice Inspection Interval
Request for Relief No. 96-02

Pursuant to 10 CFR 50.55a, section (g) (4) (iii), attached is a Request for Relief from ASME Section XI, 1989 Edition. This request is to allow Duke Power to take credit for limited ultrasonic examinations on steam generator primary side tubesheet-to-head welds, letdown heat exchanger primary side nozzle-to-vessel welds, and the steam generator shell circumferential weld. During the examinations on the subject Unit 2 welds, the ultrasonic examination coverage did not meet the 90% examination coverage requirements of ASME Section XI. Achievement of greater than 90% examination coverage for the subject welds is impractical due to piping/vessel geometry, joint configuration, and interferences. All three Oconee units are being addressed by this Request for Relief per recommendations delineated in NRC Inspection Report 95-05 dated May 5, 1995.

If there are any questions or further information is needed you may contact D. A. Nix at (864) 885-3634.

Very truly yours,

J. W. Hampton
Site Vice President

Attachment

xc (w/attch): Mr. D. E. LaBarge, Project Manager
Office of Nuclear Reactor Regulation
U. S. Nuclear Regulatory Commission
Washington, DC 20555

Mr. S. D. Ebneter
Regional Administrator, Region II
U. S. Nuclear Regulatory Commission

xc(w/o attch): Mr. P. E. Harmon
Senior NRC Resident Inspector
Oconee Nuclear Station

Mr. Max Batavia
Bureau of Radiological Health
SC Dept. of Health & Environmental Control
2600 Bull St.
Columbia, SC 29201

bxc (w/ attch): T. J. Coleman
R. G. Rouse
D. A. Nix
J. O. Barbour
ISI Relief Request File

bxc (w/o attch): B. W. Carney
M. B. Chapman
J. C. Shropshire
R. L. Gill EC12R
ELL ECO50

Duke Power Company

Station Oconee Unit 1, 2 & 3

10-YEAR INTERVAL REQUEST FOR RELIEF NO. 96-02

I. System/Component(s) for Which Relief is Requested:

a. Steam Generator (Primary Side) Tubesheet-To-Head Weld

2-SGA-WG58-1, Item Number B02.040.001
2-SGA-WG58-2, Item Number B02.040.002

b. Heat Exchangers (Primary Side) Nozzle-To-Vessel Welds

2-LDCA-INLET-V1, Item Number B03.150.001
2-LDCA-OUTLET-V2, Item Number B03.150.002

c. Pressure Retaining Welds In Pressure Vessels, Shell Circumferential Welds

2-SGA-WG8-3, Item Number C01.010.002

II. Code Requirement:

Figure IWB-2500-6, Examination Category B-B, Pressure Retaining Welds Other Than Reactor Vessel, Note 4 "Includes essentially 100% of the weld length".

Figure IWB-2500-7, Examination Category B-D, Full Penetration Welds Of Nozzles In Vessels, Inspection Program B.

Figure IWC-2500-1, Examination Category C-A, Pressure Retaining Welds In Pressure Vessel, Note 1 "Includes essentially 100% of the weld length".

III. Code Requirement from which Relief is Requested:

Relief is requested from the requirement of examining essentially 100% of the weld length. The applicable code required is ASME Section V, Article 4, T-441.3.2, Scanning Requirements, 1989 Edition with no Addenda as modified by Code Case N-460. Due to part geometry and actual physical

barriers, obtaining at least 90% of the weld length as outlined in Code Case N-460 is not possible with existing ultrasonic techniques.

Code Case N-460 allows credit for full volume coverage if it can be shown that at least 90% of the required volume has been examined.

The specified Code requirements identified in Section 2 of this request require scanning of the examination volume(s) using three angle beams and a straight beam from both sides of the weld. When scanning for reflectors parallel to the weld, the angle beams shall be aimed at right angles to the weld axis, with the search unit(s) manipulated so that the ultrasonic beams pass through the entire volume of weld metal. The adjacent base metal in the examination volume must be completely scanned by both angle beams from both directions (any combination of two angle beams will satisfy the requirement).

When scanning for reflectors transverse to the weld, the angle beam search units shall be aimed parallel to the axis of longitudinal and circumferential welds. The search unit shall be manipulated so that the ultrasonic beams pass through all of the examination volume.

Scanning shall be done in two directions 180 degrees to each other to the extent possible. Areas blocked by geometric conditions shall be examined from at least one direction.

IV. Basis for Relief:

Steam Generator (Primary Side) Tubesheet-To-Head Welds Weld 2-SGA-WG58-1 and 2-SGA-WG58-2 (Item Numbers B02.040.001 and B02.040.002 respectively) were examined to the maximum extent practical using ultrasonic techniques in accordance with the requirements of ASME Section V, Article 4, and ASME Section XI, Appendix I, 1989 Edition. Reference Attachment A for drawing.

Weld 2-SGA-WG58-1 is limited to 72.5% coverage of the required volume because of Upper Tube Sheet geometry, i.e., taper.

Weld 2-SGA-WG58-2 is limited to 71% coverage of the required volume because of Lower Tube Sheet geometry, i.e., taper and support skirt interference.

Heat Exchangers (Primary Side) Nozzle-To-Vessel Welds 2-LDCA-INLET-V1 and 2-LDCA-OUTLET-V2 (Item Numbers B03.150.001 and B03.150.002 respectively) were examined to the maximum extent practical using ultrasonic techniques in accordance with the requirements of ASME Section V, Article 4, and ASME Section XI, Appendix I, 1989 Edition. Reference Attachment B for drawing.

Weld 2-LDCA-INLET-V1 is limited to 26.96% coverage of the required volume because of branch connection interference.

Weld 2-LDCA-OUTLET-V2 is limited to 26.96% coverage of the required volume because of branch connection interference.

Pressure Retaining Welds In Pressure Vessels, Shell Circumferential Weld 2-SGA-WG8-3 (Item Number C01.010.002) was examined to the maximum extent practical using ultrasonic techniques in accordance with the requirements of ASME Section V, Article 4, and ASME Section XI, Appendix I, 1989 Edition. Reference Attachment A for drawing.

This weld is limited to 64.5% coverage of the required volume because of shell geometry, i.e., taper.

All three units are being documented in this request for relief as outlined in NRC correspondence dated May 5, 1995 concerning NRC Inspection Report No. 50-269/95-05, 50-270/95-05, and 50-287.

For welds and components listed in this request for relief, all configurations, including interferences, are the same for Units 1 and 3. If for some reason the actual examination coverage of the welds referenced in this request for relief for Units 1 and 3 are less than those listed for Unit 2, additional requests for relief will be submitted on a case by case basis.

V. Alternate Examinations or Testing:

Duke Power company will continue to perform ultrasonic examination of all welds identified in Section 1 of this request (for all units) to the maximum extent practical, within the limits of original design and construction, in accordance with the requirements of ASME Section V, Article 4, and ASME Section XI, Appendix I, 1989 Edition, and Code Case N-460.

VI. Justification for the Granting of Relief:

Duke Power Company will continue to ultrasonically examine the welds, including inside radii, to the extent practical within the limits of original design and construction. This will provide reasonable assurance of weld/component integrity. Thus, an acceptable level of quality and safety will have been achieved and public health and safety will not be endangered by allowing relief from the aforementioned Code requirements.

VII. Implementation Schedule:

Unit 1, Refueling Outage 16
Unit 2, Refueling Outages 17 and 18
Unit 3, Refueling Outage 16

Evaluated By: _____ Date 6/26/96

Reviewed By _____ Date 6/26/96

Attachment A
Request for Relief
S/N 96-02
Page 1 of 1

WELD LIST

IDENT NO.	PIECE NO.	DIAM.	THICK.
WG8-1	1 TO 2	138" I.D.	4.188 MIN.
WG8-2	2 TO 3	138" I.D.	4.188 MIN.
WG8-3	3 TO 2	138" I.D.	4.188 MIN.
WG8-4	5 TO 6	138" I.D.	4.188 MIN.
WG23-1	14 TO 3	29.00"	6.625 MIN.
WG23-2	14 TO 3	29.00"	6.625 MIN
WG25	70 TO 8	48.63"	8.000 MIN
WG50-1	65 TO 7	38.38"	8.000 MIN
WG50-2	65 TO 7	38.38"	8.000 MIN.
WG57	95 TO 7	135" I.D.	N/A
WG58-1	8 TO 51	119" I.D.	8.000 MIN
WG58-2	7 TO 50	119" I.D.	8.000 MIN.
WG59	6 TO 50	138" I.D.	6.625 MIN.
WG60	1 TO 51	138" I.D.	6.625 MIN.

BILL OF MATERIAL

PC. NO.	QTY	DESCRIPTION	MATL.
1	1	SHELL SECTION	SA 212 GR. B
2	2	SHELL SECTION	SA 212 GR. B
3	1	SHELL SECTION	SA 212 GR. B
4	1	SHELL SECTION	SA 212 GR. B
5	1	SHELL SECTION	SA 212 GR. B
6	1	SHELL SECTION	SA 212 GR. B
7	1	LOWER HEAD	SA 302 GR. B
8	1	UPPER HEAD	SA 302 GR. B
14	2	24 STEAM OUTLET NOZZLE	SA 508 CL. 1
50	1	LOWER TUBE SHEET	SA 508 CL. 2
51	1	UPPER TUBE SHEET	SA 508 CL. 2
65	2	28 PRIMARY OUTLET NOZZLE	SA 508 CL. 1
70	1	36 PRIMARY INLET NOZZLE	SA 508 CL. 1
95	1	SUPPORT SKIRT TRANSITION RING	SA 302 GR. B

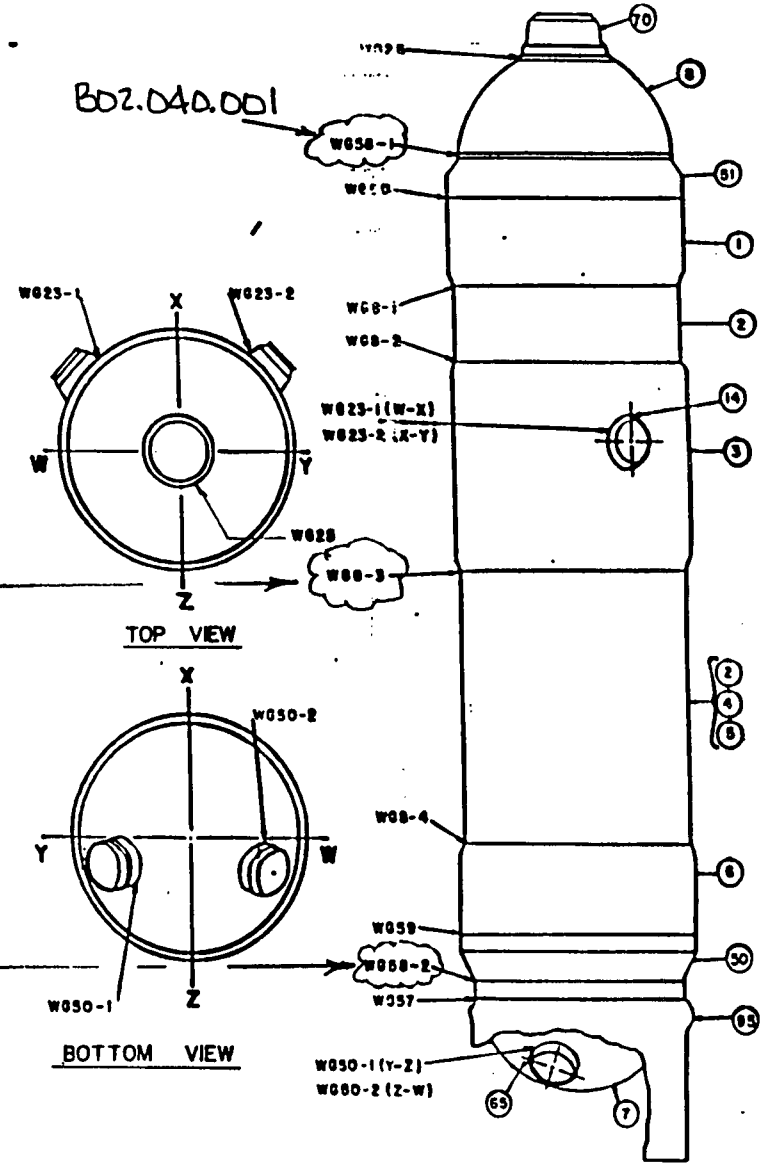

REFERENCE DWGS.
OM 1201-450

NOTES:

1. ALL I.D. NUMBERS SHALL BE PRECEDED BY "25GA"
2. PIECE NUMBERS ARE SHOWN IN CIRCLES

NO.	REVISION	DRWN DATE	RVWD DATE	APPD DATE
1	[illegible]	[illegible]	AJH 9-1-81	TRH [illegible]
0	ORIGINAL	AWS [illegible]	[illegible]	TRH [illegible]

TITLE
STEAM GENERATOR "A"
WELD OUTLINE

DWG NO. ISI-OCN2-003 REV. 1

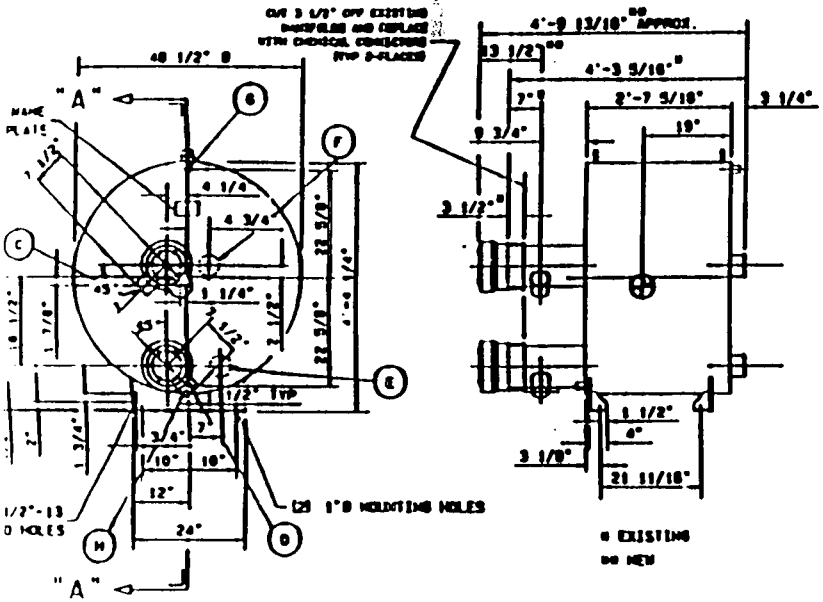

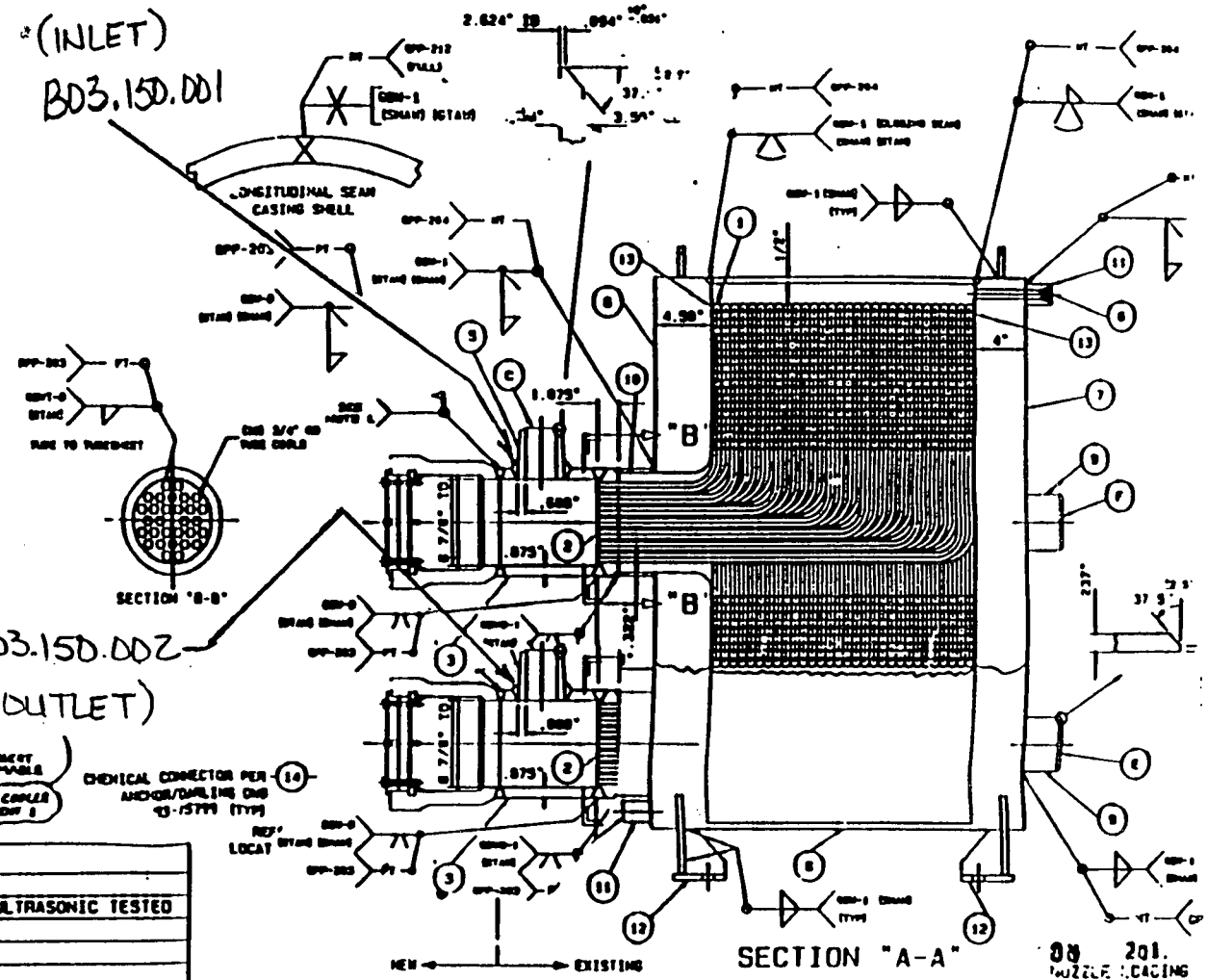

) TUBE SIDE INLET — 3" SCH. 160 (.438") — END BEVELED FOR CONSUMABLE INSERT WELDING
) TUBE SIDE OUTLET — 3" SCH. 160 (.438")
) SHELL SIDE INLET — 4" SCH. 40 (.237") — END BEVELED FOR BUTT WELDING
) SHELL SIDE OUTLET — 4" SCH. 40 (.237")
) SHELL SIDE VENT — 1"- 3000# SOCKET WELD
) SHELL SIDE DRAIN — 1"- 3000# SOCKET WELD

UNIT PLAN

NOTES:
1. U-GROOVE WELD WITH CONSUMABLE INSERT OR V-GROOVE WELD WITHOUT CONSUMABLE INSERT IS ACCEPTABLE.
2. FOR TUBE PLUGGING TOOL AND LETDOWN COOLER DESIGNATION SEE OM-201-3030, ATTACHMENT 8

MATERIAL LIST

NO.	PART NAME	MATERIAL	SPEC.	REMARKS
	TUBE COILS	T-316L S.S.	SA-213	.070 BWG. SML'S, ULTRASONIC TESTED
	TUBE SHEET	T-316L S.S.	SA-240	PLATE
	TUBE SIDE CHANNEL BODY	T-316L S.S.	SA-182	FORGED BAR
	CHANNEL NOZZLE	T-316L S.S.	SA-182	FORGED BAR
	CASING BASE PLATE	CARB. STEEL	SA-516-70	PLATE
	CASING END PLATE	CARB. STEEL	SA-516-70	PLATE
	CASING SHELL	CARB. STEEL	SA-516-70	PLATE
	CASING NOZZLE PIPE	CARB. STEEL	SA-106-B	SEAMLESS PIPE
	CASING PIPE TO TUBE SHEET	CARB. STEEL	SA-106-B	SEAMLESS PIPE
	SOCKET WELD CPLG	FORGED STEEL	SA-105	
	SUPPORTS	CARB. STEEL	SA-516-70	PLATE
	FLOWSEAL	T-304 S.S.		
	CHEMICAL CONNECTOR	MATERIALS PER ANCHOR/DARLING DWG. 93-15799(OM-201-3094)		

MILL POWER SUPPLY CO.
ORDER NO. M46923 13

"NUCLEAR SAFETY RELATED"
Q.A. CONDITION #1

SUPPORT STRESSES

LOAD CASE	Qx (PSI)	Qy (PSI)	ALLOWABLE (REF 2)
NORMAL OP.			.6Sy=
NORMAL OP. + OBE			.6Sy=
NORMAL OP. + SSE			0Sy=

TUBE SIDE INLET & OUTLET	Fa (LB)	Fsr (LB)
NORMAL OP.	842	842
NORMAL OP. + OBE	1684	1684
NORMAL OP. + SSE	2105	2105

SHELL SIDE INLET & OUTLET	Fa (LB)	Fsr (LB)
NORMAL OP.	634	634
NORMAL OP. + OBE	1268	1268
NORMAL OP. + SSE	1585	1585

UNITED STATES
NUCLEAR REGULATORY COMMISSION
WASHINGTON, D.C. 20555-0001

December 18, 1997

Mr. W. R. McCollum
Vice President, Oconee Site
Duke Energy Corporation
P. O. Box 1439
Seneca, SC 29679

SUBJECT: THIRD 10-YEAR INSERVICE INSPECTION INTERVAL REQUEST FOR RELIEF NO. 97-01 PRESSURIZER SPRAY AND STEAM GENERATOR WELDS - OCONEE NUCLEAR STATION, UNITS 1, 2, AND 3 (TAC NOS. M98211, M98212, AND M98213)

Dear Mr. McCollum:

By letter dated March 13, 1997, and supplemental letter dated July 22, 1997, Duke Energy Corporation (Duke) requested relief pursuant to 10 CFR 50.55a(g)(5)(iii) for the Oconee Nuclear Station, Units 1, 2, and 3. The relief from Section XI of the American Society of Mechanical Engineers Boiler and Pressure Vessel Code (Code) would allow Duke to take credit for limited ultrasonic examinations on pressurizer spray nozzle to upper head welds and certain steam generator shell circumferential welds.

The staff, with technical assistance from its contractor, the Idaho National Engineering and Environmental Laboratory (INEEL), has reviewed your submittal. Based on the information provided, the staff has concluded that certain inservice examinations cannot be performed to the extent required by the Code and that the coverage requirements are impractical. Furthermore, reasonable assurance of the structural integrity of the subject components has been provided by the examinations that have been performed. Therefore, relief is granted pursuant to 10 CFR 50.55a(g)(6)(i), provided that the licensee submits relief requests if actual examination coverage of corresponding Unit 1 and Unit 2 welds is less than the area examined on the listed Unit 3 welds. The relief granted is authorized by law and will not endanger life or property or the common defense and security, and is otherwise in the public interest giving due consideration to the burden that could result if the requirement were imposed on the facility.

The staff's evaluation and conclusions are contained in Enclosure 1. Enclosure 2 is the INEEL Technical Letter Report.

Sincerely,

Herbert N. Berkow

Herbert N. Berkow, Director
Project Directorate II-2
Division of Reactor Projects - I/II
Office of Nuclear Reactor Regulation

Docket Nos. 50-269, 50-270, and 50-287

Enclosures: As stated

cc w/encls: See next page

cc:
Mr. Paul R. Newton
Legal Department (PBO5E)
Duke Energy Corporation
422 South Church Street
Charlotte, North Carolina 28242

J. Michael McGarry, III, Esquire
Winston and Strawn
1400 L Street, NW.
Washington, DC 20005

Mr. Robert B. Borsum
Framatome Technologies
Suite 525
1700 Rockville Pike
Rockville, Maryland 20852-1631

Manager, LIS
NUS Corporation
2650 McCormick Drive, 3rd Floor
Clearwater, Florida 34619-1035

Senior Resident Inspector
U. S. Nuclear Regulatory
Commission
7812B Rochester Highway
Seneca, South Carolina 29672

Regional Administrator, Region II
U. S. Nuclear Regulatory Commission
Atlanta Federal Center
61 Forsyth Street, S.W., Suite 23T85
Atlanta, Georgia 30303

Max Batavia, Chief
Bureau of Radiological Health
South Carolina Department of Health
and Environmental Control
2600 Bull Street
Columbia, South Carolina 29201

County Supervisor of Oconee County
Walhalla, South Carolina 29621

Mr. J. E. Burchfield
Compliance Manager
Duke Energy Corporation
Oconee Nuclear Site
P. O. Box 1439
Seneca, South Carolina 29679

Ms. Karen E. Long
Assistant Attorney General
North Carolina Department of
Justice
P. O. Box 629
Raleigh, North Carolina 27602

Mr. G. A. Copp
Licensing - EC05O
Duke Energy Corporation
526 South Church Street
Charlotte, North Carolina 28242-0001

Mr. Richard M. Fry, Director
Division of Radiation Protection
North Carolina Department of
Environment, Health, and
Natural Resources
3825 Barrett Drive
Raleigh, North Carolina 27609-7721

UNITED STATES
NUCLEAR REGULATORY COMMISSION
WASHINGTON, D.C. 20555-0001

SAFETY EVALUATION BY THE OFFICE OF NUCLEAR REACTOR REGULATION

REQUEST FOR RELIEF NO. 97-01

THIRD 10-YEAR INTERVAL INSERVICE INSPECTION PROGRAM PLAN

OCONEE NUCLEAR STATION, UNITS 1, 2, AND 3

DUKE ENERGY CORPORATION

DOCKET NOS. 50-269, 50-270, AND 50-287

1.0 INTRODUCTION

In order to demonstrate the operability of the American Society of Mechanical Engineers (ASME) Boiler and Pressure Vessel Code (Code) Class 1, 2, and 3 components, the Technical Specifications (TS) for Oconee Nuclear Station, Units 1, 2, and 3, state that the inservice inspection (ISI) ASME Code Class 1, 2, and 3 components shall be performed in accordance with Section XI of the ASME Code and applicable addenda as required by Title 10 of the Code of Federal Regulations (10 CFR) 50.55a(g), except where specific written relief has been granted by the Commission pursuant to 10 CFR 50.55a(g)(6)(i). Section 50.55a(a)(3) states that alternatives to the requirements of paragraph (g) may be used, when authorized by the NRC, if (i) the proposed alternatives would provide an acceptable level of quality and safety or (ii) compliance with the specified requirements would result in hardship or unusual difficulty without a compensating increase in the level of quality and safety.

Pursuant to 10 CFR 50.55a(g)(4), ASME Code Class 1, 2, and 3 components (including supports) shall meet the requirements, except the design and access provisions and the pre-service examination requirements, set forth in the ASME Code, Section XI, "Rules for Inservice Inspection of Nuclear Power Plant Components," to the extent practical within the limitations of design, geometry, and materials of construction of the components. The regulations require that inservice examination of components and system pressure tests conducted during the first 10-year interval and subsequent intervals comply with the requirements in the latest edition and addenda of Section XI of the ASME Code incorporated by reference in 10 CFR 50.55a(b) 12 months prior to the start of the 120-month interval, subject to the limitations and modifications listed therein. The applicable edition of Section XI of the ASME Code for the Oconee Nuclear Station, Units 1, 2, and 3, third 10-year ISI interval is the 1989 Edition.

Pursuant to 10 CFR 50.55a(g)(5), if the licensee determines that conformance with an examination requirement of Section XI of the ASME Code is not practical for its facility, information shall be submitted to the Commission in support of that determination and a request made for relief from the ASME Code requirement. After evaluation of the determination, pursuant to 10 CFR 50.55a(g)(6)(i), the Commission may grant relief and may impose

alternative requirements that are determined to be authorized by law, will not endanger life, property, or the common defense and security, and are otherwise in the public interest, giving due consideration to the burden upon the licensee that could result if the requirements were imposed on the facility.

By letter dated March 13, 1997, the Duke Energy Corporation (licensee), submitted requests for relief to ASME Section XI requirements for Oconee Nuclear Station, Units 1, 2, and 3. The licensee provided additional information by letter dated July 22, 1997.

2.0 EVALUATION

The staff, with technical assistance from its contractor, the Idaho National Engineering and Environmental Laboratory (INEEL), has evaluated the information provided by the licensee in support of its Third 10-Year Inservice Inspection Interval Program Plan Request for Relief No. 97-01, Parts 1 and 2, for Oconee Nuclear Station, Units 1, 2, and 3. Based on the information submitted, the staff adopts the contractor's conclusions and recommendations presented in the attached Technical Letter Report (TLR).

Request for Relief No. 97-01 (Part 1): ASME Code, Section XI, Examination Category B-D, Item B3.110, Pressurizer Spray Nozzle-to-Upper Head Welds, requires 100 percent volumetric examination of all Pressurizer nozzle-to-vessel welds as defined by Figure IWC-2500-7. At least 25 percent but not more than 50 percent (credited) of the nozzles shall be examined by the end of the first inspection period, and the remainder by the end of the inspection interval.

Pursuant to 10 CFR 50.55a(g)(5)(iii), the licensee has requested relief from volumetrically examining the following Pressurizer nozzle-to-vessel welds to the extent required by the Code:

Spray Nozzle-to-Upper Head Welds	
1-PZR-WP33-1	(Unit 1)
2-PZR-WP33-1	(Unit 2)
3-PZR-WP33-1	(Unit 3)

The licensee proposed as an alternative to: (as stated)

> The use of radiography as an alternate volumetric examination of the welds referenced in this request is not a viable option. Restrictions to performing radiography are primarily due to inability to access the inside of the steam generator and pressurizer to place film or to position a radiographic source.
>
> Duke Power has examined the welds referenced in this request to the maximum extent possible utilizing the latest in examination techniques and equipment. Duke Power will continue to perform ultrasonic examination of all welds identified in Section 1 of this request (for all Units) to the maximum extent practical, within the limits of original design and construction, in accordance with the requirements of ASME Section V, Article 4, and ASME Section XI, Appendix I, 1989 Edition, and Code Case N-460. This will provide reasonable assurance of weld/component integrity. Thus, an acceptable level of quality and safety will have been achieved, and public health and safety will not be endangered by allowing relief from the aforementioned Code requirements.

The Code requires 100 percent volumetric examination of all Pressurizer nozzle-to-vessel welds. However, as shown in the licensee's submittal, the taper on the nozzle side of the weld restricts scanning and prevents complete volumetric coverage of the subject pressurizer nozzle-to-vessel welds. Therefore, the 100 percent volumetric examination is impractical for these nozzle-to-vessel welds. To meet Code examination requirements, modifications to the nozzles would be necessary to allow complete volumetric coverage. Modifications to this portion of the reactor coolant system would create a considerable burden on the licensee.

The licensee has completed a significant portion (76.6 percent) of the Code-required volumetric examination for Spray Nozzle-to-Upper Head Weld 3-PZR-WP33-1. Therefore, any existing patterns of degradation would have been detected and reasonable assurance of the structural integrity has been provided.

For welds listed in this request for relief, the licensee reports that all configurations, including interferences, are the same for Units 1, 2, and 3. Therefore, relief is also being sought for the corresponding welds on Units 1 and 2. If for some reason the actual examination coverage of the corresponding welds referenced for Units 1 and 2 are less than those listed for Unit 3, the licensee must provide additional requests for relief on a case-by-case basis.

Based on the impracticality of meeting the Code coverage requirements for the subject welds, and the reasonable assurance provided by the examinations that were completed/or will be completed, relief is granted pursuant to 10 CFR 50.55a(g)(6)(i), provided that the licensee submits a relief request for any of the subject welds that have an examination coverage area that is less than the area examined on Unit 3 Spray Nozzle-to-Upper Head Weld 3-PZR-WP-33-1.

Request for Relief No. 97-01 (Part 2): ASME Code, Section XI, Examination Category C-A, Item C1.10, Steam Generator Shell Circumferential Welds, requires a 100 percent volumetric examination of Steam Generator shell circumferential welds as defined by Figure IWC-2500-1. Examinations are limited to welds located at gross structural discontinuities as defined in NB-3213.2. In the case of multiple vessels of similar design, size, and service (such as steam generators, heat exchangers), the required examinations may be limited to one vessel or distributed among the vessels.

Pursuant to 10 CFR 50.55a(g)(5)(iii), the licensee has requested relief from volumetrically examining the following Steam Generator shell circumferential welds to the extent required by the Code:

1-SGB-WG8-1 (Unit 1)	2-SGB-WG8-2 (Unit 2)
1-SGA-WG8-2 (Unit 1)	3-SGA-WG8-1 (Unit 3)
2-SGA-WG8-1 (Unit 2)	3-SGA-WG8-2 (Unit 3)

The licensee proposed as an alternative to: (as stated)

> The use of radiography as an alternate volumetric examination of the welds referenced in this request is not a viable option. Restrictions to performing radiography are primarily due to inability to access the inside of the steam generator and pressurizer to place film or to position a radiographic source.

Duke Power has examined the welds referenced in this request to the maximum extent possible utilizing the latest in examination techniques and equipment. Duke Power will continue to perform ultrasonic examination of all welds identified in Section 1 of this request (for all Units) to the maximum extent practical, within the limits of original design and construction, in accordance with the requirements of ASME Section V, Article 4, and ASME Section XI, Appendix I, 1989 Edition, and Code Case N-460. This will provide reasonable assurance of weld/component integrity. Thus, an acceptable level of quality and safety will have been achieved, and public health and safety will not be endangered by allowing relief from the aforementioned Code requirements.

The Code requires 100 percent volumetric examination of steam generator shell circumferential welds at gross structural discontinuities. As supported by the drawings provided by the licensee, the taper of the shell plate restricts scanning and prevents complete volumetric coverage of the subject steam generator shell welds. Therefore, the 100 percent volumetric examination is impractical for these circumferential shell welds. To meet the Code examination requirement, modifications to the shell plate geometry or taper would be necessary to allow complete volumetric coverage. Imposition of this requirement would create a considerable burden on the licensee.

The licensee has completed approximately 65.4 percent of the Code-required volumetric examination for Unit 3 welds 3-SGA-WG8-1 and 3-SGA-WG8-2. The staff also noted that, in the licensee's supporting documentation (inspection reports) for the subject Unit 3 welds, several Code-rejectable indications were identified. Four (4) planar flaw indications were identified in Weld 3-SGA-WG8-1, and one (1) planar flaw indication was identified in Weld 3-SGA-WG8-2. These indications ranged from 4.5 percent to 9.0 percent through-wall. In the licensee's July 22, 1997, response to the NRC request for additional information, the licensee reported that these indications have not exhibited any change in flaw sizes throughout their monitoring periods (1982/1992), and that both welds have undergone fracture analysis evaluations. It was stated that fracture analysis was performed by B&W (now Framatome) and the analysis indicated that all flaw indications were found to be acceptable in accordance with the ASME Code, Section XI, 1980 Edition through Winter 1980 Addenda, paragraph IWB-3612. Based on this discussion, existing flaws have remained unchanged and any patterns of new degradation would have been detected. Therefore, reasonable assurance of the structural integrity has been provided.

For welds listed in this request for relief, the licensee reports that all configurations, including interferences, are the same for Units 1, 2, and 3. Therefore, relief is also being sought for the corresponding welds on Units 1 and 2. If for some reason the actual examination coverage of the corresponding welds referenced for Units 1 and 2 are less than those listed for Unit 3, the licensee must provide additional requests for relief on a case-by-case basis.

Based on the impracticality of meeting the Code coverage requirements for the subject welds, and the reasonable assurance provided by the examinations that have been completed/or will be completed, relief is granted pursuant to 10 CFR 50.55a(g)(6)(i), provided that the licensee submits a relief request for any of the subject welds that have an examination coverage area that is less than the area examined on Unit 3 welds 3-SGA-WG8-1 and 3-SGA-WG8-2.

3.0 CONCLUSION

The staff has reviewed the licensee's submittal and concludes that certain inservice examinations cannot be performed to the extent required by the ASME Code at Oconee Nuclear Station, Units 1, 2, and 3. For Request for Relief No. 97-01 (designated Parts 1 and 2 above), the licensee has demonstrated that the Code coverage requirements are impractical. Furthermore, reasonable assurance of the structural integrity of the subject components has been provided by the examinations that have been performed. Therefore, relief is granted pursuant to 10 CFR 50.55a(g)(6)(i) for Request for Relief No. 97-01 (Parts 1 and 2), provided that the licensee submits relief requests if actual examination coverage of corresponding Unit 1 and Unit 2 welds is less than the area examined on the listed Unit 3 welds. The relief granted is authorized by law and will not endanger life or property or the common defense and security, and is otherwise in the public interest giving due consideration to the burden that could result if the requirement were imposed on the facility.

Principal Contributor: T. McLellan

Date: December 18, 1997

TECHNICAL LETTER REPORT
THIRD 10-YEAR INTERVAL INSERVICE INSPECTION
REQUEST FOR RELIEF NO. 97-01
FOR
DUKE POWER COMPANY
OCONEE NUCLEAR STATION, UNITS 1, 2, & 3
DOCKET NUMBERS 50-269, 50-270, & 50-287

1.0 INTRODUCTION

By letter dated March 13, 1997, the licensee, Duke Power Company, submitted Request for Relief No. 97-01 for Oconee Nuclear Station, Units 1, 2, and 3. The licensee stated that based on the examinations performed on Unit 3, relief is also requested for the corresponding welds at Units 1 and 2. Following the initial review of this document, additional information regarding the examinations performed at Unit 3 was requested by the Nuclear Regulatory Commission (NRC) in a letter dated June 5, 1997. The licensee responded to the NRC request for additional information in a letter dated July 22, 1997. The Idaho National Engineering and Environmental Laboratory (INEEL) staff has evaluated the licensee's submittals in the following section.

2.0 EVALUATION

The Code of record for the Oconee Nuclear Station, Units 1, 2, and 3, third 10-year inservice inspection (ISI) interval is the 1989 Edition of Section XI of the American Society of Mechanical Engineers (ASME) Boiler and Pressure Vessel Code. The information provided by the licensee in support of the requests for relief has been evaluated and the bases for disposition are documented below.

2.1 Request for Relief No. 97-01 (Part 1), Examination Category B-D, Item B3.110, Pressurizer Spray Nozzle-to-Upper Head Welds

Code Requirement: Examination Category B-D, Item B3.110 requires 100% volumetric examination of all Pressurizer nozzle-to-vessel welds as defined by Figure IWC-2500-7. At least 25% but not more than 50% (credited) of the nozzles shall be examined by the end of the first inspection period, and the remainder by the end of the inspection interval.

Licensee's Code Relief Request: Pursuant to 10 CFR 50.55a(g)(5)(iii), the licensee has requested relief from volumetrically examining the following Pressurizer nozzle-to-vessel welds to the extent required by the Code:

Spray Nozzle-to-Upper Head Welds

1-PZR-WP33-1 (Unit 1)

2-PZR-WP33-1 (Unit 2)

3-PZR-WP33-1 (Unit 3)

Licensee's Basis for Requesting Relief (as stated):

"Pressurizer Nozzle-to-Shell Weld 3-PZR-WP33-1 (Item Number B03.110.005) was examined to the maximum extent practical using ultrasonic techniques in accordance with the requirements of ASME Section V, Article 4, and ASME Section XI, Appendix I, 1989 Edition.

"Due to part geometry, obtaining at least 90% of the weld length as outlined in Code Case N-460 is not possible with existing ultrasonic techniques.

"The weld is limited to 76.6% coverage of the required volume because of the nozzle configuration."

Licensee's Proposed Alternative (as stated):

"The use of radiography as an alternate volumetric examination of the welds referenced in this request is not a viable option. Restrictions to performing radiography are primarily due to inability to access the inside of the steam generator and pressurizer to place film or to position a radiographic source.

"Duke Power has examined the welds referenced in this request to the maximum extent possible utilizing the latest in examination techniques and equipment. Duke Power will continue to perform ultrasonic examination of all welds identified in Section 1 of this request (for all Units) to the maximum extent practical, within the limits of original design and construction, in accordance with the requirements of ASME Section V, Article 4, and ASME Section XI, Appendix I, 1989 Edition, and Code Case N-460. This will provide reasonable assurance of weld/component integrity. Thus, an acceptable level of quality and safety will have been achieved, and public health and safety will not be endangered by allowing relief from the aforementioned Code requirements."

Evaluation: The Code requires 100% volumetric examination of all Pressurizer nozzle-to-vessel welds. However, as shown in the licensee's submittal, the taper on the nozzle side of the weld restricts scanning and prevents complete volumetric coverage of the subject Pressurizer nozzle-to-vessel welds. Therefore, the 100% volumetric examination is impractical for these nozzle-to-vessel welds. To meet Code examination requirements, modifications to the nozzles would be necessary to allow complete volumetric coverage. Modifications to this portion of the reactor coolant system would create a considerable burden on the licensee.

The licensee has completed a significant portion (76.6%) of the Code-required volumetric examination for Spray Nozzle-to-Upper Head Weld 3PZR-WP33-1. Therefore, any existing patterns of degradation would have been detected and reasonable assurance of the structural integrity has been provided.

For welds listed in this request for relief, the licensee reports that all configurations, including interferences, are the same for Units 1, 2, and 3. Therefore, relief is also being sought for the corresponding welds on Units 1 and 2. If for some reason the actual examination coverage of the corresponding welds referenced for Units 1 and 2 are less than those listed for Unit 3, the licensee must provide additional requests for relief on a case by case basis.

Based on the impracticality of meeting the Code coverage requirements for the subject welds, and the reasonable assurance provided by the examinations that were completed/or will be completed, it is recommended that relief be granted pursuant to 10 CFR 50.55a(g)(6)(i).

2.2 Request for Relief No. 97-01 (Part 2), Examination Category C-A, Item C1.10, Steam Generator Shell Circumferential Welds

Code Requirement: Examination Category C-A, Item C1.10 requires a 100% volumetric examination of Steam Generator shell circumferential welds as defined by Figure IWC-2500-1. Examinations are limited to welds located at gross structural discontinuities as defined in NB-3213.2. In the case of multiple vessels of similar design, size, and service (such as steam generators, heat exchangers), the required examinations may be limited to one vessel or distributed among the vessels.

Licensee's Code Relief Request: Pursuant to 10 CFR 50.55a(g)(5)(iii), the licensee has requested relief from volumetrically examining the following Steam Generator shell circumferential welds to the extent required by the Code:

1-SGB-WG8-1 (Unit 1)	2-SGB-WG8-2 (Unit 2)
1-SGA-WG8-2 (Unit 1)	3-SGA-WG8-1 (Unit 3)
2-SGA-WG8-1 (Unit 2)	3-SGA-WG8-2 (Unit 3)

Licensee's Basis for Requesting Relief (as stated):

"Pressure Retaining Welds in Pressure Vessels, circumferential shell Welds 3-SGA-WG8-1 and 3-SGA-WG8-2 (Item Number C01.010.001 and C01.010.002 respectively) were examined to the maximum extent practical using ultrasonic techniques in accordance with the requirements of ASME Section V, Article 4, and ASME Section XI, Appendix I, 1989 Edition. Reference Attachment A[1] for drawing.

"Due to part geometry, obtaining at least 90% of the weld length as outlined in Code Case N-460 is not possible with existing ultrasonic techniques.

"This weld is limited to 65.4% coverage of the required volume because of shell geometry, i.e., taper."

Licensee's Proposed Alternative (as stated):

"The use of radiography as an alternate volumetric examination of the welds referenced in this request is not a viable option. Restrictions to performing radiography are primarily due to inability to access the inside of the steam generator and pressurizer to place film or to position a radiographic source.

"Duke Power has examined the welds referenced in this request to the maximum extent possible utilizing the latest in examination techniques and equipment. Duke Power will continue to perform ultrasonic examination of all welds identified in

[1] Drawings included in the licensee's submittal are not part of this report.

Section 1 of this request (for all Units) to the maximum extent practical, within the limits of original design and construction, in accordance with the requirements of ASME Section V, Article 4, and ASME Section XI, Appendix I, 1989 Edition, and Code Case N-460. This will provide reasonable assurance of weld/component integrity. Thus, an acceptable level of quality and safety will have been achieved, and public health and safety will not be endangered by allowing relief from the aforementioned Code requirements."

Evaluation: The Code requires 100% volumetric examination of Steam Generator shell circumferential welds at gross structural discontinuities. As supported by the drawings provided by the licensee, the taper of the shell plate restricts scanning and prevents complete volumetric coverage of the subject steam generator shell welds. Therefore, the 100% volumetric examination is impractical for these circumferential shell welds. To meet the Code examination requirement, modifications to the shell plate geometry or taper would be necessary to allow complete volumetric coverage. Imposition of this requirement would create a considerable burden on the licensee.

The licensee has completed approximately 65.4% of the Code-required volumetric examination for Unit 3 welds 3-SGA-WG8-1 and 3-SGA-WG8-2. The INEEL staff also noted that, in the licensee's supporting documentation (inspection reports) for the subject Unit 3 welds, several Code-rejectable indications were identified. Four (4) planar flaw indications were identified in Weld 3-SGA-WG8-1, and one (1) planar flaw indication was identified in Weld 3-SGA-WG8-2. These indications ranged from 4.5% to 9.0% through wall. In the licensee's July 22, 1997, response to the NRC request for additional information, the licensee reported that these indications have not exhibited any change in flaw sizes throughout their monitoring periods (1982/1992), and that both welds have undergone fracture analysis evaluations. It was stated that, fracture analysis was performed by B&W (now Framatome) and the analysis indicated that all flaw indications were found to be acceptable per ASME Section XI, 1980 Edition through Winter 1980 Addenda, paragraph IWB-3612. Based on the discussion above, existing flaws have

remained unchanged and any patterns of new degradation would have been detected. Therefore, reasonable assurance of the structural integrity has been provided.

For welds listed in this request for relief, the licensee reports that all configurations, including interferences, are the same for Units 1, 2, and 3. Therefore, relief is also being sought for the corresponding welds on Units 1 and 2. If for some reason the actual examination coverage of the corresponding welds referenced for Units 1 and 2 are less than those listed for Unit 3, the licensee must provide additional requests for relief on a case by case basis.

Based on the impracticality of meeting the Code coverage requirements for the subject welds, and the reasonable assurance provided by the examinations that have been completed/or will be completed, it is recommended that relief be granted pursuant to 10 CFR 50.55a(g)(6)(i).

3.0 CONCLUSION

The INEEL staff has reviewed the licensee's submittal and concludes that certain inservice examinations cannot be performed to the extent required by the Code at Oconee Nuclear Station, Units 1, 2, and 3. For Request for Relief No. 97-01 (Part 1 and Part 2), the licensee has demonstrated that the Code coverage requirements are impractical. Furthermore, reasonable assurance of the structural integrity of the subject components has been provided by the examinations that have been performed. Therefore, it is recommended that relief be granted pursuant to 10 CFR 50.55a(g)(6)(i) for Request for Relief No. 97-01.

Duke Energy Corporation

Station Oconee Unit 1, 2 & 3

10-YEAR INTERVAL REQUEST FOR RELIEF NO. 98-01

Pursuant to 10 CFR 50.55a(g)(5)(iii), Duke Energy has determined that compliance with the specified requirements of ASME Boiler and Pressure Vessel Code, Section XI is not practical for Oconee Nuclear Station. Accordingly, information is being submitted in support of our determination and relief is being sought from the applicable ASME Boiler and Pressure Vessel Code, Section XI requirement(s).

I. System/Component(s) for Which Relief is Requested:

a. Part 1, Pressurizer Surge Nozzle-to-Lower Head Weld

1-PZR-WP15	Item Number B03.110.001
2-PZR-WP15	Item Number B03.110.001
3-PZR-WP15	Item Number B03.110.001

b. Part 2, Letdown Cooler Heat Exchanger Nozzle-to-Vessel Welds

1-LDCA-IN-V2	Item Number B03.150.001
1-LDCA-OUT-V6	Item Number B03.150.002
3-LDCA-IN-V2	Item Number B03.150.001
3-LDCA-OUT-V5	Item Number B03.150.002

For welds listed in this Request for Relief (both Parts 1 and 2), all configurations, including interferences, are the same for Units 1, 2, and 3. Therefore, all three units are being documented in this Request for Relief as described in NRC Inspection Report No. 50-269/95, 50-270/95, 50-287 dated May 5, 1995.

While the examinations have been completed only for Unit 1 at this time, relief is also being sought for Units 2 and 3 for the same welds. If, for

some reason, the actual examination coverages of the welds referenced in this Request for Relief for Units 2 and 3 are less than those listed for Unit 1 in Section IV of this request, additional Requests for Relief will be submitted on a case by case basis.

II. Code Requirement:

ASME Boiler and Pressure Vessel Code, Section XI, 1989 Edition with no Addenda, Examination Category B-D, Items B3.110 and B3.150 requires 100% volumetric examination of all Pressurizer nozzle-to-vessel welds as defined by Figure IWB-2500-7,

ASME Section XI 1989 Edition with no Addenda, Appendix 1, including Supplement 9 as clarified by Code Inquiry 95-11 requires scanning using two different angles when scanning from the outside surface of the component. When scanning for reflectors parallel to the weld, the angle beams shall be aimed at right angles to the weld axis, with the search unit(s) manipulated so that the ultrasonic beams pass through the entire volume of weld metal. The adjacent base metal in the examination volume must be completely scanned by both angle beams from both directions (any combination of two angle beams will satisfy the requirement).

When scanning for reflectors transverse to the weld, the angle beam search units shall be aimed parallel to the axis of longitudinal and circumferential welds. The search unit shall be manipulated so that the ultrasonic beams pass through all of the examination volume. Scanning shall be done in two directions 180 degrees to each other to the extent possible. Areas blocked by geometric conditions shall be examined from at least one direction.

Code Case N-460 allows credit for full volume coverage if it can be shown that at least 90% of the required volume has been examined.

III. Code Requirement from which Relief is Requested:

Relief is requested from the requirement of examining 100% of the ASME Boiler and Pressure Vessel Code, Section XI, 1989 Edition with no Addenda (Code) required volumetric examinations of the Pressurizer Nozzle-to-Head weld and the Letdown Cooler Heat Exchanger Nozzle to Vessel welds described in Section I above.

Due to part geometry, obtaining at least 90% of the weld length as outlined in Code Case N-460 is not possible with existing ultrasonic techniques.

IV. Basis for Relief:

Request for Relief 98-01, Part 1 Examination Category B-D, Item B3.110, Full Penetration Pressurizer Nozzle-to-Vessel Weld

Pressurizer Nozzle-to-Head Weld 1-PZR-WP15 (Item Number B03.110.00) was examined to the maximum extent practical using ultrasonic techniques in accordance with the requirements of ASME Section V, Article 4, and ASME Section XI, Appendix I, 1989 Edition. Reference Attachment A for drawing.

This weld is limited to 68.39% coverage of the required volume because of the nozzle configuration.

Request for Relief 98-01, Part 2, Examination Category B-D, Item B3.150, Full Penetration Pressurizer Nozzle-to-Vessel Welds

Letdown Cooler Heat Exchangers (Primary Side) Nozzle-to-Vessel Welds 1-LDCA-IN-V2 and 1-LDCA-IN-V6 (Item Numbers B03.110.001 and B03.110.002 respectively) were examined to the maximum extent practical using ultrasonic techniques in accordance with the requirements of ASME Section V, Article 4, and ASME Section XI Boiler and Pressure Vessel Code, Appendix I, 1989 Edition. Reference Attachment B for drawing.

These welds are limited to 26.73% coverage of the required volume because of branch connection interferences.

V. Alternate Examinations or Testing:

Request for Relief 98-01, Part 1, Examination Category B-D, Item B3.110. Pressurizer Nozzle-to-Vessel Weld

The use of radiography as an alternate volumetric examination of the Pressurizer weld referenced in this request is not a viable option. Restrictions to performing radiography are primarily due to inability to access the inside of the Pressurizer to place film or to position a radiographic source.

Duke Energy proposes to use the pressure test and VT-2 visual examination to compliment the limited examination coverage. The Code requires (reference Table IWB-2500-1, Item Number B15.20) that a system leakage test be performed after each refueling outage. Additionally a system hydrostatic test (reference Table IWB-2500-1, Item Number B15.20) is required once during each 10 year inspection interval. These tests require a VT-2 visual examination for evidence of leakage. This testing will provide adequate assurance of pressure boundary integrity.

In addition to the above Code required examinations (volumetric and pressure test), there are other activities which provide a high level of confidence that, in the unlikely case that leakage did occur through this weld, it would be detected. Specifically, any leakage from this weld would be detected by monitoring of the Reactor Coolant System (RCS), which is performed once each shift under procedure PT/1,2,3/A/0600/10, "RCS Leakage". This RCS leakage monitoring is required by Technical Specification 3.1.6, "Leakage". The leakage could be detected through several methods. The reactor building air particulate monitor is sensitive to low leak rates; the iodine monitor, gaseous monitor and area monitor are capable of detecting any fission products in the coolant and will make these monitors sensitive to coolant leakage. In addition to the radiation monitors, leakage is also monitored by a level indicator in the reactor building normal sump. Another check would be a loss of level in the Letdown Storage Tank.

Duke Energy has examined the weld referenced in this request to the maximum extent possible utilizing the latest in examination techniques and equipment. Duke Energy will continue to perform ultrasonic examination of all welds identified in Section 1 of this request (for all units) to the maximum extent practical, within the limits of original design and construction, in accordance with the requirements of ASME Section V, Article 4, and ASME Section XI, Appendix I, 1989 Edition, and Code Case N-460. This will provide reasonable assurance of weld/component integrity. Thus, an acceptable level of quality and safety will have been achieved, and public health and safety will not be endangered by allowing relief from the aforementioned Code requirements.

Request for Relief 98-01, Part 2, Examination Category B-D, Item B3.150.Letdown Cooler Heat Exchanger Nozzle-to-Vessel Welds

The use of radiography as an alternate volumetric examination of the Letdown Cooler Heat Exchanger Nozzle-to-Vessel welds is not a viable option. Restrictions to performing radiography are primarily due to inability to access the inside of the Letdown Cooler Heat Exchanger to place film or to position a radiographic source.

Duke Energy proposes to use the pressure test and VT-2 visual examination to compliment the limited examination coverage. The Code requires (reference Table IWB-2500-1, Item Number B15.40) that a system leakage test be performed after each refueling outage. Additionally a system hydrostatic test (reference Table IWB-2500-1, Item Number B15.41) is required once during each 10 year inspection interval. These tests require a VT-2 visual examination for evidence of leakage. This testing will provide adequate assurance of pressure boundary integrity.

In addition to the above Code required examinations (volumetric and pressure test), there are other activities which provide a high level of confidence that, in the unlikely case that leakage did occur through these welds, it would be detected and isolated. Specifically, any leakage from these welds would be detected by monitoring of the Reactor Coolant System (RCS), which is performed once each shift under procedure PT/1,2,3/A/0600/10, "RCS Leakage". This RCS leakage monitoring is required by Technical Specification 3.1.6, "Leakage". The leakage could be detected through several methods. The reactor building air particulate monitor is sensitive to low leak rates; the iodine monitor, gaseous monitor and area monitor are capable of detecting any fission products in the coolant and will make these monitors sensitive to coolant leakage. In

addition to the radiation monitors, leakage is also monitored by a level indicator in the reactor building normal sump. Another check would be a loss of level in the Letdown Storage Tank. In the unlikely case that a leak did occur, these welds would be isolated from the RCS pressure boundary by remotely-operated valves.

VI. Justification for the Granting of Relief

Request for Relief 98-01, Part 1, Examination Category B-D, Item B3.110. Pressurizer Nozzle-to-Vessel Weld

The Code requires 100% volumetric examination of all Pressurizer Nozzle-to-Vessel welds. However, the taper on the nozzle side of the weld restricts scanning and prevents complete volumetric coverage of Pressurizer Nozzle-to-Vessel weld PZR-WP15. Therefore, the 100% volumetric examination is impractical for this nozzle-to-vessel weld. To meet Code examination requirements, modifications to the nozzle would be necessary to allow complete volumetric coverage. Modification to this portion of the reactor coolant system would create a considerable burden on Duke Energy.

Duke Energy obtained 68.39% coverage of Pressurizer Nozzle-to-Vessel weld 1-PZR-WP15. Based on the significant portion of the required volumetric examination that has been completed, any existing pattern of degradation would have been detected. In addition to the Code required volumetric examination; the Pressurizer will be subjected to the Code required VT-2 visual examination after each refueling outage and the 10 year hydrostatic test. Duke Energy believes this provides reasonable assurance of the continued structural integrity of the subject nozzle-to-vessel weld.

Pursuant to 10 CFR 50.55a(g)(6)(i), granting this relief for the Pressurizer Nozzle-to-Vessel weld will provide reasonable assurance of weld/component integrity, and is authorized by law and will not endanger life or property or the common defense and security and is otherwise in the public interest giving due consideration to the burden upon the licensee that could result if the requirements were imposed on the facility.

Request for Relief 98-01, Part 2, Examination Category B-D, Item B3.150.Letdown Cooler Heat Exchanger Nozzle-to-Vessel Welds

The Code requires 100% volumetric examination of all Heat Exchanger Nozzle-to-Vessel welds. However, the location of the Letdown Cooler Heat Exchanger Nozzle-to-Vessel welds prevents obtaining 100% volumetric examination coverage. Therefore, the 100% volumetric examination is impractical. To meet Code examination requirements, modifications to the Letdown Cooler Heat Exchanger Nozzle would be necessary to allow complete volumetric examination coverage. Modifications of this magnitude would create a considerable burden on Duke Energy Corporation.

Duke Energy obtained 26.73% coverage on the Letdown Cooler Heat Exchanger Nozzle-to-Vessel welds, 1LDCA-IN-V2 and 1-LDCA-OUT-V6. It is recognized that this represents a small part of the required Code examination volume. However, in conjunction with the Code required VT-2 visual examination after each refueling outage and the 10 year hydrostatic test; Duke Energy believes this provides reasonable assurance of the continued structural integrity of the subject nozzle-to-vessel welds. In addition to the above code required examinations, RCS leakage monitoring and the capability of providing remote isolation of these welds from RCS pressure boundary provide assurance that in the unlikely case that a leak from these welds did occur, the welds could be promptly isolated and evaluated for corrective action.

Pursuant to 10 CFR 50.55a(g)(6)(i), granting this relief for the Letdown Cooler Heat Exchanger Nozzle-to-Vessel weld will provide reasonable assurance of weld/component integrity, and is authorized by law and will not endanger life of property or the common defense and security and is otherwise in the public interest giving due consideration to the burden upon the licensee that could result if the requirements were imposed on the facility.

VII. Implementation Schedule:

Unit 1, Refueling Outage 17

Unit 2, Refueling Outage 16

Unit 3, Refueling Outage 17

Evaluated By: RC Rouse Date 3/2/98

Reviewed By JO Barbour Date 3/5/98

10.0 Class 1 and 2 Repairs and Replacements

As required by ASME Section XI 1989 Edition, no Addenda, a record (Form NIS-2) of the Class 1 and Class 2 Repairs and Replacements for work performed from December 11, 1995 through December 24, 1997 is provided and is included in this section of the report. The individual work request documents are on file at Oconee Nuclear Station.

Form 401463 (2-95)

FORM NIS-2 OWNER'S REPORT FOR REPAIRS OR REPLACEMENTS
As Required By The Provisions Of The ASME Code Section XI

1. Owner **Duke Power Company**
   Address **526 S. Church Street, Charlotte, NC 28201-1006**

1a. Date 4-4-96

Sheet 1 of 1

2. Plant **Oconee Nuclear Station**
   Address **P.O. Box 1439, Seneca, S.C. 29679**

2a. Unit ☒ 1 ☐ 2 ☐ 3 ☐ Shared (specify Units_____)

3a. Work Order # 95055420
Repair Organization Job #

3. Work Performed By **Duke Power Company**
   Address **526 S. Church Street, Charlotte, NC 28201-1006**
   Type Code Symbol Stamp **N/A** Authorization No. **N/A** Expiration Date **N/A**

3b. NSM or MM # —

4. Identification of System RC Class 1

5. (a) Applicable Construction Code B31.7 19 68 Edition, 6-68 Addenda, — Code Cases
   (b) Applicable Edition of Section XI Utilized for Repairs or Replacements 1989, No Addenda

6. Identification of Components Repaired or Replaced and Replacement Components

	Column 1	Column 2	Column 3	Column 4	Column 5	Col. 6	Column 7	Column 8
	Name of Component	**Name of Manufacturer**	**Manufacturer Serial Number**	**National Board Number**	**Other Identification**	**Year Built**	**Repaired, Replaced, or Replacement**	**ASME Code Stamped (yes or no)**
A	Valve 1RC-66	Dresser	BL-08904	N/A	N/A	N/A	☐ Repaired ☐ Replaced ☒ Replacement	☒ No ☐ Yes
B							☐ Repaired ☐ Replaced ☐ Replacement	☐ No ☐ Yes
C							☐ Repaired ☐ Replaced ☐ Replacement	☐ No ☐ Yes
D							☐ Repaired ☐ Replaced ☐ Replacement	☐ No ☐ Yes
E							☐ Repaired ☐ Replaced ☐ Replacement	☐ No ☐ Yes
F							☐ Repaired ☐ Replaced ☐ Replacement	☐ No ☐ Yes

Form NIS-2 (Back)

NOTE: Supplemental sheets in form of lists, sketches, or drawings may be used, provided (1) size is 8 1/2 in. x 11 in. (2) information in items 1 through 6 on this report is included on each sheet, and (3) each sheet is numbered and the number of sheets is recorded at the top of this form.

7. Description of Work Replaced Main disc and pilot disc in valve 1RC-66

8. Test Conducted: ☐ Hydrostatic ☐ Pneumatic ☑ Nominal Operating Pressure ☐ Other ☐ Exempt

Pressure	2205 psig	Test Temp.	N/A °F
Pressure	_____ psig	Test Temp.	_____ °F
Pressure	_____ psig	Test Temp.	_____ °F

9. Remarks _____

(Applicable Manufacturer's Data Records to be Attached)

CERTIFICATE OF COMPLIANCE

We certify that the statements made in the report are correct and this **repair or replacement** conforms to the rules of the ASME Code, Section XI.

Type Code Symbol Stamp **N/A**

Certificate of Authorization No. **N/A** Expiration Date **N/A**

Signed P Hoolm QC Specialist Date 4-4, 19 96
Owner or Owner's Designee, Title

CERTIFICATE OF INSERVICE INSPECTION

I, the undersigned, holding a valid commission issued by the National Board of Boiler and Pressure Vessel Inspectors and the State or Providence of N. C. and employed by **HSBI and I Company of Hartford Connecticut** have inspected the components described in this Owner's Report during the period 11-26-95 to 4-4-96; and state that to the best of my knowledge and belief, the Owner has performed examinations and taken corrective measures described in this Owner's Report in accordance with the requirements of the ASME Code, Section XI.

By signing this certificate, neither the Inspector nor his employer makes any warranty, expressed or implied, concerning the examinations and corrective measures described in this Owner's Report. Furthermore, neither the Inspector nor his employer shall be liable in any manner for any personal injury or property damage or a loss of any kind arising from or connected with this inspection.

M B Chapman Commissions NC914
Inspector's Signature National Board, State, Providence and Endorsements

Date 4-4, 19 96

Form 401463 (1/95)

FORM NIS-2 OWNER'S REPORT FOR REPAIRS OR REPLACEMENTS
As Required By The Provisions Of The ASME Code Section XI

1. Owner **Duke Power Company**
   Address **526 S. Church Street, Charlotte, NC 28201-1006**

1a. Date 4-1-96

Sheet 1 of 1

2. Plant **Oconee Nuclear Station**
   Address **P.O. Box 1439, Seneca, S.C. 29679**

2a. Unit ☒ 1 ☐ 2 ☐ 3 ☐ Shared (specify Units_____)

3. Work Performed By **Duke Power Company**
   Address **526 S. Church Street, Charlotte, NC 28201-1006**
   Type Code Symbol Stamp **N/A** Authorization No. **N/A** Expiration Date **N/A**

3a. Work Order # 95014040
Repair Organization Job #

3b. NSM or MM # —

4. Identification of System MS Class 2

5. (a) Applicable Construction Code B31.1 19 67 Edition, — Addenda, — Code Cases
   (b) Applicable Edition of Section XI Utilized for Repairs or Replacements 1989, No Addenda

6. Identification of Components Repaired or Replaced and Replacement Components

	Column 1	Column 2	Column 3	Column 4	Column 5	Col. 6	Column 7	Column 8
	Name of Component	Name of Manufacturer	Manufacturer Serial Number	National Board Number	Other Identification	Year Built	Repaired, Replaced, or Replacement	ASME Code Stamped (yes or no)
A	Bolting	T+T Enterprises	N/A	N/A	H. # MI	N/A	☐ Repaired ☐ Replaced ☒ Replacement	☒ No ☐ Yes
B	Bolting	Texas Bolt	N/A	N/A	N/A	N/A	☐ Repaired ☐ Replaced ☒ Replacement	☒ No ☐ Yes
C							☐ Repaired ☐ Replaced ☐ Replacement	☐ No ☐ Yes
D							☐ Repaired ☐ Replaced ☐ Replacement	☐ No ☐ Yes
E							☐ Repaired ☐ Replaced ☐ Replacement	☐ No ☐ Yes
F							☐ Repaired ☐ Replaced ☐ Replacement	☐ No ☐ Yes

Form NIS-2 (Back)

NOTE: Supplemental sheets in form of lists, sketches, or drawings may be used, provided (1) size is 8 1/2 in. x 11 in. (2) information in items 1 through 6 on this report is included on each sheet, and (3) each sheet is numbered and the number of sheets is recorded at the top of this form.

7. Description of Work Replaced Body to Bonnet Bolting in Valve 1MS-155

8. Test Conducted: ☐ Hydrostatic ☐ Pneumatic ☐ Nominal Operating Pressure ☐ Other ☒ Exempt

Pressure _____ psig Test Temp. _____ °F

Pressure _____ psig Test Temp. _____ °F

Pressure _____ psig Test Temp. _____ °F

9. Remarks _____

(Applicable Manufacturer's Data Records to be Attached)

CERTIFICATE OF COMPLIANCE

We certify that the statements made in the report are correct and this **repair or replacement** conforms to the rules of the ASME Code, Section XI.

Type Code Symbol Stamp **N/A**

Certificate of Authorization No. **N/A** Expiration Date **N/A**

Signed [signature] QC Specialist Date 4-1, 1996
Owner or Owner's Designee, Title

CERTIFICATE OF INSERVICE INSPECTION

I, the undersigned, holding a valid commission issued by the National Board of Boiler and Pressure Vessel Inspectors and the State or Providence of N.C. and employed by **HSBI and I Company of Hartford Connecticut** have inspected the components described in this Owner's Report during the period 11-6-95 to 4-1-96; and state that to the best of my knowledge and belief, the Owner has performed examinations and taken corrective measures described in this Owner's Report in accordance with the requirements of the ASME Code, Section XI.

By signing this certificate, neither the Inspector nor his employer makes any warranty, expressed or implied, concerning the examinations and corrective measures described in this Owner's Report. Furthermore, neither the Inspector nor his employer shall be liable in any manner for any personal injury or property damage or a loss of any kind arising from or connected with this inspection.

[signature] Commissions NC914
Inspector's Signature National Board, State, Providence and Endorsements

Date 4-1, 1996

Form 401463 (2-95)

FORM NIS-2 OWNER'S REPORT FOR REPAIRS OR REPLACEMENTS
As Required By The Provisions Of The ASME Code Section XI

1. Owner **Duke Power Company**
   Address **526 S. Church Street, Charlotte, NC 28201-1006**

1a. Date 2-5-96

Sheet 1 of 1

2. Plant **Oconee Nuclear Station**
   Address **P.O. Box 1439, Seneca, S.C. 29679**

2a. Unit ☒ 1 ☐ 2 ☐ 3 ☐ Shared (specify Units_____)

3. Work Performed By **Duke Power Company**
   Address **526 S. Church Street, Charlotte, NC 28201-1006**
   Type Code Symbol Stamp **N/A** Authorization No. **N/A** Expiration Date **N/A**

3a. Work Order # 95052138-01
Repair Organization Job #

3b. NSM or MM # N/A

4. Identification of System RC Class 1

5. (a) Applicable Construction Code B31.7 1968 Edition, 6-68 Addenda, NO Code Cases
   (b) Applicable Edition of Section XI Utilized for Repairs or Replacements 1989, No Addenda

6. Identification of Components Repaired or Replaced and Replacement Components

	Column 1	Column 2	Column 3	Column 4	Column 5	Col. 6	Column 7	Column 8
	Name of Component	Name of Manufacturer	Manufacturer Serial Number	National Board Number	Other Identification	Year Built	Repaired, Replaced, or Replacement	ASME Code Stamped (yes or no)
A	Bolting	TEXAS Bolt	NA	NA	NA	NA	☐ Repaired ☐ Replaced ☒ Replacement	☒ No ☐ Yes
B	Bolting	A+B Engineering	NA	NA	NA	NA	☐ Repaired ☐ Replaced ☒ Replacement	☒ No ☐ Yes
C	Bolting	Westinghouse	N/A	N/A	PT# 4934A79H16	NA	☐ Repaired ☐ Replaced ☒ Replacement	☒ No ☐ Yes
D							☐ Repaired ☐ Replaced ☐ Replacement	☐ No ☐ Yes
E							☐ Repaired ☐ Replaced ☐ Replacement	☐ No ☐ Yes
F							☐ Repaired ☐ Replaced ☐ Replacement	☐ No ☐ Yes

Form NIS-2 (Back)

NOTE: Supplemental sheets in form of lists, sketches, or drawings may be used, provided (1) size is 8 1/2 in. x 11 in. (2) information in items 1 through 6 on this report is included on each sheet, and (3) each sheet is numbered and the number of sheets is recorded at the top of this form.

7. Description of Work (1.) Replaced #1 Seal housing bolts 1A2 RCP

8. Test Conducted: ☐ Hydrostatic ☐ Pneumatic ☐ Nominal Operating Pressure ☐ Other ☑ Exempt

Pressure _____ psig Test Temp. _____ °F

Pressure _____ psig Test Temp. _____ °F

Pressure _____ psig Test Temp. _____ °F

9. Remarks (2.) Replaced bolting on #1 Seal Leak-off line and ~~blind~~ Flange on 1A2 RCP blind CRH 2-5-96

(Applicable Manufacturer's Data Records to be Attached)

CERTIFICATE OF COMPLIANCE

We certify that the statements made in the report are correct and this **repair or replacement** conforms to the rules of the ASME Code, Section XI.

Type Code Symbol Stamp **N/A**

Certificate of Authorization No. **N/A** Expiration Date **N/A**

Signed C R Henson QA Specialist Date 2-5, 19 96
Owner or Owner's Designee, Title

CERTIFICATE OF INSERVICE INSPECTION

I, the undersigned, holding a valid commission issued by the National Board of Boiler and Pressure Vessel Inspectors and the State or Providence of N.C. and employed by **HSBI and I Company of Hartford Connecticut** have inspected the components described in this Owner's Report during the period 11-5-95 to 2-5-96; and state that to the best of my knowledge and belief, the Owner has performed examinations and taken corrective measures described in this Owner's Report in accordance with the requirements of the ASME Code, Section XI.

By signing this certificate, neither the Inspector nor his employer makes any warranty, expressed or implied, concerning the examinations and corrective measures described in this Owner's Report. Furthermore, neither the Inspector nor his employer shall be liable in any manner for any personal injury or property damage or a loss of any kind arising from or connected with this inspection.

M B Chapman Commissions NC914
Inspector's Signature National Board, State, Providence and Endorsements

Date 2-5, 19 96

Form 401463 (1/89)

FORM NIS-2 OWNER'S REPORT FOR REPAIRS OR REPLACEMENTS
As Required By The Provisions Of The ASME Code Section XI

1. Owner **Duke Power Company**
   Address **526 S. Church Street, Charlotte, NC 28201-1006**

1a. Date 2-28-96

Sheet 1 of 1

2. Plant **Oconee Nuclear Station**
   Address **P.O. Box 1439, Seneca, S.C. 29679**

2a. Unit ☒ 1 ☐ 2 ☐ 3 ☐ Shared (specify Units_____)

3. Work Performed By **Duke Power Company**
   Address **526 S. Church Street, Charlotte, NC 28201-1006**
   Type Code Symbol Stamp **N/A** Authorization No. **N/A** Expiration Date **N/A**

3a. Work Order # 95038441-01
Repair Organization Job #

3b. NSM or MM # N/A

4. Identification of System RC Class 1

5. (a) Applicable Construction Code B31.7 1968 Edition, 6-68 Addenda, NO Code Cases
   (b) Applicable Edition of Section XI Utilized for Repairs or Replacements 1989, No Addenda

6. Identification of Components Repaired or Replaced and Replacement Components

	Column 1	Column 2	Column 3	Column 4	Column 5	Col. 6	Column 7	Column 8
	Name of Component	Name of Manufacturer	Manufacturer Serial Number	National Board Number	Other Identification	Year Built	Repaired, Replaced, or Replacement	ASME Code Stamped (yes or no)
A	Bolting	US Bolt	N/A	N/A	N/A	N/A	☐ Repaired ☐ Replaced ☒ Replacement	☒ No ☐ Yes
B	Bolting	TEXAS. Bolt	N/A	N/A	N/A	N/A	☐ Repaired ☐ Replaced ☒ Replacement	☒ No ☐ Yes
C							☐ Repaired ☐ Replaced ☐ Replacement	☐ No ☐ Yes
D							☐ Repaired ☐ Replaced ☐ Replacement	☐ No ☐ Yes
E							☐ Repaired ☐ Replaced ☐ Replacement	☐ No ☐ Yes
F							☐ Repaired ☐ Replaced ☐ Replacement	☐ No ☐ Yes

Form NIS-2 (Back)

NOTE: Supplemental sheets in form of lists, sketches, or drawings may be used, provided (1) size is 8 1/2 in. x 11 in. (2) information in items 1 through 6 on this report is included on each sheet, and (3) each sheet is numbered and the number of sheets is recorded at the top of this form.

7. Description of Work Replaced Body to Bonnet Bolting 1RC-4

8. Test Conducted: ☐ Hydrostatic ☐ Pneumatic ☐ Nominal Operating Pressure ☐ Other ☑ Exempt

Pressure _____ psig Test Temp. _____ °F

Pressure _____ psig Test Temp. _____ °F

Pressure _____ psig Test Temp. _____ °F

9. Remarks _____

(Applicable Manufacturer's Data Records to be Attached)

CERTIFICATE OF COMPLIANCE

We certify that the statements made in the report are correct and this **repair or replacement** conforms to the rules of the ASME Code, Section XI.

Type Code Symbol Stamp **N/A**

Certificate of Authorization No. **N/A** Expiration Date **N/A**

Signed C R Hanson QA Specialist Date 2-28, 19 96
Owner or Owner's Designee, Title

CERTIFICATE OF INSERVICE INSPECTION

I, the undersigned, holding a valid commission issued by the National Board of Boiler and Pressure Vessel Inspectors and the State or Providence of N. C. and employed by **HSBI and I Company of Hartford Connecticut** have inspected the components described in this Owner's Report during the period 11-6-95 to 2-28-96; and state that to the best of my knowledge and belief, the Owner has performed examinations and taken corrective measures described in this Owner's Report in accordance with the requirements of the ASME Code, Section XI.

By signing this certificate, neither the Inspector nor his employer makes any warranty, expressed or implied, concerning the examinations and corrective measures described in this Owner's Report. Furthermore, neither the Inspector nor his employer shall be liable in any manner for any personal injury or property damage or a loss of any kind arising from or connected with this inspection.

M.B. Chapman Commissions NC914
Inspector's Signature National Board, State, Providence and Endorsements

Date 2-28, 1996

Form 401463 (2-95)

FORM NIS-2 OWNER'S REPORT FOR REPAIRS OR REPLACEMENTS
As Required By The Provisions Of The ASME Code Section XI

1. Owner **Duke Power Company**
   Address **526 S. Church Street, Charlotte, NC 28201-1006**

1a. Date 10-10-96

Sheet 1 of 1

2. Plant **Oconee Nuclear Station**
   Address **P.O. Box 1439, Seneca, S.C. 29679**

2a. Unit ☒ 1 ☐ 2 ☐ 3 ☐ Shared (specify Units_____)

3a. Work Order # 96068430-01
Repair Organization Job #

3. Work Performed By **Duke Power Company**
   Address **526 S. Church Street, Charlotte, NC 28201-1006**
   Type Code Symbol Stamp **N/A** Authorization No. **N/A** Expiration Date **N/A**

3b. NSM or MM # —

4. Identification of System LP Class 2

5. (a) Applicable Construction Code B31.7 1968 Edition, 6-68 Addenda, — Code Cases
   (b) Applicable Edition of Section XI Utilized for Repairs or Replacements 1989, No Addenda

6. Identification of Components Repaired or Replaced and Replacement Components

	Column 1	Column 2	Column 3	Column 4	Column 5	Col. 6	Column 7	Column 8
	Name of Component	**Name of Manufacturer**	**Manufacturer Serial Number**	**National Board Number**	**Other Identification**	**Year Built**	**Repaired, Replaced, or Replacement**	**ASME Code Stamped (yes or no)**
A	1LP-61 Valve	Varec	C-67029	N/A	N/A	N/A	☐ Repaired ☐ Replaced ☒ Replacement	☒ No ☐ Yes
B							☐ Repaired ☐ Replaced ☐ Replacement	☐ No ☐ Yes
C							☐ Repaired ☐ Replaced ☐ Replacement	☐ No ☐ Yes
D							☐ Repaired ☐ Replaced ☐ Replacement	☐ No ☐ Yes
E							☐ Repaired ☐ Replaced ☐ Replacement	☐ No ☐ Yes
F							☐ Repaired ☐ Replaced ☐ Replacement	☐ No ☐ Yes

Form NIS-2 (Back)

NOTE: Supplemental sheets in form of lists, sketches, or drawings may be used, provided (1) size is 8 1/2 in. x 11 in. (2) information in items 1 through 6 on this report is included on each sheet, and (3) each sheet is numbered and the number of sheets is recorded at the top of this form.

7. Description of Work Replaced flange bolting on valve 1LP-61

8. Test Conducted: ☐ Hydrostatic ☐ Pneumatic ☐ Nominal Operating Pressure ☐ Other ☒ Exempt

Pressure	_____ psig	Test Temp.	_____ °F
Pressure	_____ psig	Test Temp.	_____ °F
Pressure	_____ psig	Test Temp.	_____ °F

9. Remarks _____

(Applicable Manufacturer's Data Records to be Attached)

CERTIFICATE OF COMPLIANCE

We certify that the statements made in the report are correct and this **repair or replacement** conforms to the rules of the ASME Code, Section XI.

Type Code Symbol Stamp **N/A**

Certificate of Authorization No. **N/A** Expiration Date **N/A**

Signed Atoohs QC Specialist Date 10 - 10, 1996
Owner or Owner's Designee, Title

CERTIFICATE OF INSERVICE INSPECTION

I, the undersigned, holding a valid commission issued by the National Board of Boiler and Pressure Vessel Inspectors and the State or Providence of N.C. and employed by **HSBI and I Company of Hartford Connecticut** have inspected the components described in this Owner's Report during the period 9-3-96 to 10-14-96; and state that to the best of my knowledge and belief, the Owner has performed examinations and taken corrective measures described in this Owner's Report in accordance with the requirements of the ASME Code, Section XI.

By signing this certificate, neither the Inspector nor his employer makes any warranty, expressed or implied, concerning the examinations and corrective measures described in this Owner's Report. Furthermore, neither the Inspector nor his employer shall be liable in any manner for any personal injury or property damage or a loss of any kind arising from or connected with this inspection.

MB Chapman Commissions NC914
Inspector's Signature National Board, State, Providence and Endorsements

Date 10 - 14, 1996

Form 401463 (2-95)

FORM NIS-2 OWNER'S REPORT FOR REPAIRS OR REPLACEMENTS
As Required By The Provisions Of The ASME Code Section XI

1. Owner **Duke Power Company**
   Address **526 S. Church Street, Charlotte, NC 28201-1006**

1a. Date 1-9-96

Sheet 1 of 1

2. Plant **Oconee Nuclear Station**
   Address **P.O. Box 1439, Seneca, S.C. 29679**

2a. Unit ☑ 1 ☐ 2 ☐ 3 ☐ Shared (specify Units_____)

3. Work Performed By **Duke Power Company**
   Address **526 S. Church Street, Charlotte, NC 28201-1006**
   Type Code Symbol Stamp **N/A** Authorization No. **N/A** Expiration Date **N/A**

3a. Work Order # 96095120-01
Repair Organization Job #

3b. NSM or MM # —

4. Identification of System MS Class 2

5. (a) Applicable Construction Code B31.1 19 67 Edition, — Addenda, — Code Cases
   (b) Applicable Edition of Section XI Utilized for Repairs or Replacements 1989, No Addenda

6. Identification of Components Repaired or Replaced and Replacement Components

	Column 1	Column 2	Column 3	Column 4	Column 5	Col. 6	Column 7	Column 8
	Name of Component	Name of Manufacturer	Manufacturer Serial Number	National Board Number	Other Identification	Year Built	Repaired, Replaced, or Replacement	ASME Code Stamped (yes or no)
A	1MS-79 Valve	Crane	Unavailable	N/A	N/A	N/A	☐ Repaired ☐ Replaced ☒ Replacement	☒ No ☐ Yes
B							☐ Repaired ☐ Replaced ☐ Replacement	☐ No ☐ Yes
C							☐ Repaired ☐ Replaced ☐ Replacement	☐ No ☐ Yes
D							☐ Repaired ☐ Replaced ☐ Replacement	☐ No ☐ Yes
E							☐ Repaired ☐ Replaced ☐ Replacement	☐ No ☐ Yes
F							☐ Repaired ☐ Replaced ☐ Replacement	☐ No ☐ Yes

Form NIS-2 (Back)

NOTE: Supplemental sheets in form of lists, sketches, or drawings may be used, provided (1) size is 8 1/2 in. x 11 in. (2) information in items 1 through 6 on this report is included on each sheet, and (3) each sheet is numbered and the number of sheets is recorded at the top of this form.

7. Description of Work Replaced disc in valve 1MS-79

8. Test Conducted: ☐ Hydrostatic ☐ Pneumatic ☐ Nominal Operating Pressure ☐ Other ☒ Exempt

Pressure	_____ psig	Test Temp.	_____ °F
Pressure	_____ psig	Test Temp.	_____ °F
Pressure	_____ psig	Test Temp.	_____ °F

9. Remarks _____

(Applicable Manufacturer's Data Records to be Attached)

CERTIFICATE OF COMPLIANCE

We certify that the statements made in the report are correct and this **repair or replacement** conforms to the rules of the ASME Code, Section XI.

Type Code Symbol Stamp **N/A**

Certificate of Authorization No. **N/A** Expiration Date **N/A**

Signed Photon QC Specialist Date 1-9, 19 96
Owner or Owner's Designee, Title

CERTIFICATE OF INSERVICE INSPECTION

I, the undersigned, holding a valid commission issued by the National Board of Boiler and Pressure Vessel Inspectors and the State or Providence of NC and employed by **HSBI and I Company of Hartford Connecticut** have inspected the components described in this Owner's Report during the period 12-4-96 to 1-9-97; and state that to the best of my knowledge and belief, the Owner has performed examinations and taken corrective measures described in this Owner's Report in accordance with the requirements of the ASME Code, Section XI.

By signing this certificate, neither the Inspector nor his employer makes any warranty, expressed or implied, concerning the examinations and corrective measures described in this Owner's Report. Furthermore, neither the Inspector nor his employer shall be liable in any manner for any personal injury or property damage or a loss of any kind arising from or connected with this inspection.

MS Chapman Commissions NC914
Inspector's Signature National Board, State, Providence and Endorsements

Date 1-9, 19 97

Form 401463

FORM NIS-2 OWNER'S REPORT FOR REPAIRS OR REPLACEMENTS
As Required By The Provisions Of The ASME Code Section XI

1. Owner **Duke Power Company**
   Address **526 S. Church Street, Charlotte, NC 28201-1006**

1a. Date 1-17-96

Sheet 1 of 1

2. Plant **Oconee Nuclear Station**
   Address **P.O. Box 1439, Seneca, S.C. 29679**

2a. Unit ☒ 1 ☐ 2 ☐ 3 ☐ Shared (specify Units_____)

3. Work Performed By **Duke Power Company**
   Address **526 S. Church Street, Charlotte, NC 28201-1006**
   Type Code Symbol Stamp **N/A** Authorization No. **N/A** Expiration Date **N/A**

3a. Work Order # 94053016
Repair Organization Job #

3b. NSM or MM # N/A

4. Identification of System LP Class 2

5. (a) Applicable Construction Code B31.7 19 68 Edition, 6-68 Addenda, N/A Code Cases
   (b) Applicable Edition of Section XI Utilized for Repairs or Replacements 1989, No Addenda

6. Identification of Components Repaired or Replaced and Replacement Components

	Column 1	Column 2	Column 3	Column 4	Column 5	Col. 6	Column 7	Column 8
	Name of Component	Name of Manufacturer	Manufacturer Serial Number	National Board Number	Other Identification	Year Built	Repaired, Replaced, or Replacement	ASME Code Stamped (yes or no)
A	Disc	Crane	N/A	N/A	Ht. # C848 pt. # 152-053-072E	N/A	☐ Repaired ☐ Replaced ☒ Replacement	☒ No ☐ Yes
B	Disc	unavailable	N/A	N/A	N/A	N/A	☐ Repaired ☒ Replaced ☐ Replacement	☒ No ☐ Yes
C							☐ Repaired ☐ Replaced ☐ Replacement	☐ No ☐ Yes
D							☐ Repaired ☐ Replaced ☐ Replacement	☐ No ☐ Yes
E							☐ Repaired ☐ Replaced ☐ Replacement	☐ No ☐ Yes
F							☐ Repaired ☐ Replaced ☐ Replacement	☐ No ☐ Yes

Form NIS-2 (Back)

NOTE: Supplemental sheets in form of lists, sketches, or drawings may be used, provided (1) size is 8 1/2 in. x 11 in. (2) information in items 1 through 6 on this report is included on each sheet, and (3) each sheet is numbered and the number of sheets is recorded at the top of this form.

7. Description of Work Replaced disc in valve 1LP-10

8. Test Conducted: ☐ Hydrostatic ☐ Pneumatic ☐ Nominal Operating Pressure ☐ Other ☒ Exempt

Pressure	_____ psig	Test Temp.	_____ °F
Pressure	_____ psig	Test Temp.	_____ °F
Pressure	_____ psig	Test Temp.	_____ °F

9. Remarks _____

(Applicable Manufacturer's Data Records to be Attached)

CERTIFICATE OF COMPLIANCE

We certify that the statements made in the report are correct and this **repair or replacement** conforms to the rules of the ASME Code, Section XI.

Type Code Symbol Stamp **N/A**

Certificate of Authorization No. **N/A** Expiration Date **N/A**

Signed P Hoohz, QC Specialist Date 1-17, 1996
Owner or Owner's Designee, Title

CERTIFICATE OF INSERVICE INSPECTION

I, the undersigned, holding a valid commission issued by the National Board of Boiler and Pressure Vessel Inspectors and the State or Providence of N.C. and employed by **HSBI and I Company of Hartford Connecticut** have inspected the components described in this Owner's Report during the period 11-14-95 to 1-17-96; and state that to the best of my knowledge and belief, the Owner has performed examinations and taken corrective measures described in this Owner's Report in accordance with the requirements of the ASME Code, Section XI.

By signing this certificate, neither the Inspector nor his employer makes any warranty, expressed or implied, concerning the examinations and corrective measures described in this Owner's Report. Furthermore, neither the Inspector nor his employer shall be liable in any manner for any personal injury or property damage or a loss of any kind arising from or connected with this inspection.

MB Chapman Commissions NC914
Inspector's Signature National Board, State, Providence and Endorsements

Date 1-17, 1996

Form 401463 (2-95)

FORM NIS-2 OWNER'S REPORT FOR REPAIRS OR REPLACEMENTS
As Required By The Provisions Of The ASME Code Section XI

1. Owner **Duke Power Company**
   Address **526 S. Church Street, Charlotte, NC 28201-1006**

1a. Date 1-7-98

Sheet 1 of 1

2. Plant **Oconee Nuclear Station**
   Address **P.O. Box 1439, Seneca, S.C. 29679**

2a. Unit ☑ 1 ☐ 2 ☐ 3 ☐ Shared (specify Units _____)

3a. Work Order # 97083457-02
Repair Organization Job #

3. Work Performed By **Duke Power Company**
   Address **526 S. Church Street, Charlotte, NC 28201-1006**
   Type Code Symbol Stamp **N/A** Authorization No. **N/A** Expiration Date **N/A**

3b. NSM or MM # N/A

4. Identification of System LP Class 2

5. (a) Applicable Construction Code B31.7 19 67 Edition, 7-67 Addenda, NO Code Cases
   (b) Applicable Edition of Section XI Utilized for Repairs or Replacements 1989, No Addenda

6. Identification of Components Repaired or Replaced and Replacement Components

	Column 1	Column 2	Column 3	Column 4	Column 5	Col. 6	Column 7	Column 8
	Name of Component	**Name of Manufacturer**	**Manufacturer Serial Number**	**National Board Number**	**Other Identification**	**Year Built**	**Repaired, Replaced, or Replacement**	**ASME Code Stamped (yes or no)**
A	piping	DPC	N/A	N/A	N/A	1973	☐ Repaired ☐ Replaced ☑ Replacement	☑ No ☐ Yes
B							☐ Repaired ☐ Replaced ☐ Replacement	☐ No ☐ Yes
C							☐ Repaired ☐ Replaced ☐ Replacement	☐ No ☐ Yes
D							☐ Repaired ☐ Replaced ☐ Replacement	☐ No ☐ Yes
E							☐ Repaired ☐ Replaced ☐ Replacement	☐ No ☐ Yes
F							☐ Repaired ☐ Replaced ☐ Replacement	☐ No ☐ Yes

Form 401463 (2-95)

Form NIS-2 (Back)

NOTE: Supplemental sheets in form of lists, sketches, or drawings may be used, provided (1) size is 8 1/2 in. x 11 in. (2) information in items 1 through 6 on this report is included on each sheet, and (3) each sheet is numbered and the number of sheets is recorded at the top of this form.

7. Description of Work Replaced orifice flange bolting upstream of valve 1LP-97

8. Test Conducted: ☐ Hydrostatic ☐ Pneumatic ☐ Nominal Operating Pressure ☐ Other ☒ Exempt

Pressure	_____ psig	Test Temp.	_____ °F
Pressure	_____ psig	Test Temp.	_____ °F
Pressure	_____ psig	Test Temp.	_____ °F

9. Remarks _____

(Applicable Manufacturer's Data Records to be Attached)

CERTIFICATE OF COMPLIANCE

We certify that the statements made in the report are correct and this **repair or replacement** conforms to the rules of the ASME Code, Section XI.

Type Code Symbol Stamp **N/A**

Certificate of Authorization No. **N/A** Expiration Date **N/A**

Signed C.R. Hanson QA SPECIALIST Date 1-7, 19 98
Owner or Owner's Designee, Title

CERTIFICATE OF INSERVICE INSPECTION

I, the undersigned, holding a valid commission issued by the National Board of Boiler and Pressure Vessel Inspectors and the State or Providence of N. C. and employed by **HSBI and I Company of Hartford Connecticut** have inspected the components described in this Owner's Report during the period 12-16-97 to 1-7-98; and state that to the best of my knowledge and belief, the Owner has performed examinations and taken corrective measures described in this Owner's Report in accordance with the requirements of the ASME Code, Section XI.

By signing this certificate, neither the Inspector nor his employer makes any warranty, expressed or implied, concerning the examinations and corrective measures described in this Owner's Report. Furthermore, neither the Inspector nor his employer shall be liable in any manner for any personal injury or property damage or a loss of any kind arising from or connected with this inspection.

M B Chapman Commissions NC 914
Inspector's Signature National Board, State, Providence and Endorsements

Date 1-7, 19 98

Form 401463 (2-95)

FORM NIS-2 OWNER'S REPORT FOR REPAIRS OR REPLACEMENTS
As Required By The Provisions Of The ASME Code Section XI

1. Owner **Duke Power Company**
   Address **526 S. Church Street, Charlotte, NC 28201-1006**

1a. Date 1-8-96

Sheet 1 of 1

2. Plant **Oconee Nuclear Station**
   Address **P.O. Box 1439, Seneca, S.C. 29679**

2a. Unit ☑ 1 ☐ 2 ☐ 3 ☐ Shared (specify Units _____)

3a. Work Order # 95048015-01
Repair Organization Job #

3. Work Performed By **Duke Power Company**
   Address **526 S. Church Street, Charlotte, NC 28201-1006**
   Type Code Symbol Stamp **N/A** Authorization No. **N/A** Expiration Date **N/A**

3b. NSM or MM # N/A

4. Identification of System RC Class 1

5. (a) Applicable Construction Code B31.7 19 68 Edition, 6-68 Addenda, NO Code Cases
   (b) Applicable Edition of Section XI Utilized for Repairs or Replacements 1989, No Addenda

6. Identification of Components Repaired or Replaced and Replacement Components

	Column 1	Column 2	Column 3	Column 4	Column 5	Col. 6	Column 7	Column 8
	Name of Component	Name of Manufacturer	Manufacturer Serial Number	National Board Number	Other Identification	Year Built	Repaired, Replaced, or Replacement	ASME Code Stamped (yes or no)
A	Bolting	General Nuclear	1605, 1850, 1554 1714, 1695, 1788 1568, 1711	N/A	HT-BG37	N/A	☐ Repaired ☐ Replaced ☑ Replacement	☑ No ☐ Yes
B	Segment ring	General Nuclear	N/A	N/A	N/A	N/A	☐ Repaired ☐ Replaced ☑ Replacement	☑ No ☐ Yes
C							☐ Repaired ☐ Replaced ☐ Replacement	☐ No ☐ Yes
D							☐ Repaired ☐ Replaced ☐ Replacement	☐ No ☐ Yes
E							☐ Repaired ☐ Replaced ☐ Replacement	☐ No ☐ Yes
F							☐ Repaired ☐ Replaced ☐ Replacement	☐ No ☐ Yes

Form NIS-2 (Back)

NOTE: Supplemental sheets in form of lists, sketches, or drawings may be used, provided (1) size is 8 1/2 in. x 11 in. (2) information in items 1 through 6 on this report is included on each sheet, and (3) each sheet is numbered and the number of sheets is recorded at the top of this form.

7. Description of Work Replaced bolting CRDM Nozzle #48

8. Test Conducted: ☐ Hydrostatic ☐ Pneumatic ☑ Nominal Operating Pressure ☐ Other ☐ Exempt

Pressure 2200 psig Test Temp. _____ °F

Pressure _____ psig Test Temp. _____ °F

Pressure _____ psig Test Temp. _____ °F

9. Remarks _____

(Applicable Manufacturer's Data Records to be Attached)

CERTIFICATE OF COMPLIANCE

We certify that the statements made in the report are correct and this **repair or replacement** conforms to the rules of the ASME Code, Section XI.

Type Code Symbol Stamp **N/A**

Certificate of Authorization No. **N/A** Expiration Date **N/A**

Signed C R Henson Date 1-8, 19 96
Owner or Owner's Designee, Title

CERTIFICATE OF INSERVICE INSPECTION

I, the undersigned, holding a valid commission issued by the National Board of Boiler and Pressure Vessel Inspectors and the State or Providence of N.C and employed by **HSBI and I Company of Hartford Connecticut** have inspected the components described in this Owner's Report during the period 11-6-95 to 1-15-96; and state that to the best of my knowledge and belief, the Owner has performed examinations and taken corrective measures described in this Owner's Report in accordance with the requirements of the ASME Code, Section XI.

By signing this certificate, neither the Inspector nor his employer makes any warranty, expressed or implied, concerning the examinations and corrective measures described in this Owner's Report. Furthermore, neither the Inspector nor his employer shall be liable in any manner for any personal injury or property damage or a loss of any kind arising from or connected with this inspection.

M.B. Chapman Commissions NC914
Inspector's Signature National Board, State, Providence and Endorsements

Date 1-15, 1996

Form 401463 (2-95)

FORM NIS-2 OWNER'S REPORT FOR REPAIRS OR REPLACEMENTS
As Required By The Provisions Of The ASME Code Section XI

1. Owner **Duke Power Company**
   Address **526 S. Church Street, Charlotte, NC 28201-1006**

1a. Date 1-8-96

Sheet 1 of 1

2. Plant **Oconee Nuclear Station**
   Address **P.O. Box 1439, Seneca, S.C. 29679**

2a. Unit ☑ 1 ☐ 2 ☐ 3 ☐ Shared (specify Units_____)

3a. Work Order # 95048053-01
Repair Organization Job #

3. Work Performed By **Duke Power Company**
   Address **526 S. Church Street, Charlotte, NC 28201-1006**
   Type Code Symbol Stamp **N/A** Authorization No. **N/A** Expiration Date **N/A**

3b. NSM or MM # N/A

4. Identification of System RC Class 1

5. (a) Applicable Construction Code B31.7 19 68 Edition, 6-68 Addenda, NO Code Cases
   (b) Applicable Edition of Section XI Utilized for Repairs or Replacements 1989, No Addenda

6. Identification of Components Repaired or Replaced and Replacement Components

	Column 1	Column 2	Column 3	Column 4	Column 5	Col. 6	Column 7	Column 8
	Name of Component	Name of Manufacturer	Manufacturer Serial Number	National Board Number	Other Identification	Year Built	Repaired, Replaced, or Replacement	ASME Code Stamped (yes or no)
A	Bolting	General Nuclear	1611, 1905, 1547, 1927, 1722, 1556, 1634, 1894	N/A	HT# BG37	N/A	☐ Repaired ☐ Replaced ☑ Replacement	☑ No ☐ Yes
B	Segment Ring	General Nuclear	N/A	N/A	N/A	N/A	☐ Repaired ☐ Replaced ☑ Replacement	☑ No ☐ Yes
C							☐ Repaired ☐ Replaced ☐ Replacement	☐ No ☐ Yes
D							☐ Repaired ☐ Replaced ☐ Replacement	☐ No ☐ Yes
E							☐ Repaired ☐ Replaced ☐ Replacement	☐ No ☐ Yes
F							☐ Repaired ☐ Replaced ☐ Replacement	☐ No ☐ Yes

Form NIS-2 (Back)

NOTE: Supplemental sheets in form of lists, sketches, or drawings may be used, provided (1) size is 8 1/2 in. x 11 in. (2) information in items 1 through 6 on this report is included on each sheet, and (3) each sheet is numbered and the number of sheets is recorded at the top of this form.

7. Description of Work Replaced bolting CRDM nozzle #3

8. Test Conducted: ☐ Hydrostatic ☐ Pneumatic ☑ Nominal Operating Pressure ☐ Other ☐ Exempt

Pressure	2200 psig	Test Temp.	°F
Pressure	psig	Test Temp.	°F
Pressure	psig	Test Temp.	°F

9. Remarks

(Applicable Manufacturer's Data Records to be Attached)

CERTIFICATE OF COMPLIANCE

We certify that the statements made in the report are correct and this **repair or replacement** conforms to the rules of the ASME Code, Section XI.

Type Code Symbol Stamp **N/A**

Certificate of Authorization No. **N/A** Expiration Date **N/A**

Signed C R Hanson Date 1-8, 19 96
Owner or Owner's Designee, Title

CERTIFICATE OF INSERVICE INSPECTION

I, the undersigned, holding a valid commission issued by the National Board of Boiler and Pressure Vessel Inspectors and the State or Providence of N.C. and employed by **HSBI and I Company of Hartford Connecticut** have inspected the components described in this Owner's Report during the period 11-6-95 to 1-15-96; and state that to the best of my knowledge and belief, the Owner has performed examinations and taken corrective measures described in this Owner's Report in accordance with the requirements of the ASME Code, Section XI.

By signing this certificate, neither the Inspector nor his employer makes any warranty, expressed or implied, concerning the examinations and corrective measures described in this Owner's Report. Furthermore, neither the Inspector nor his employer shall be liable in any manner for any personal injury or property damage or a loss of any kind arising from or connected with this inspection.

M.B. Chapman Commissions NC9141
Inspector's Signature National Board, State, Providence and Endorsements

Date 1-15, 1996

Form 401463 (2-95)

FORM NIS-2 OWNER'S REPORT FOR REPAIRS OR REPLACEMENTS
As Required By The Provisions Of The ASME Code Section XI

1. Owner **Duke Power Company**
   Address **526 S. Church Street, Charlotte, NC 28201-1006**

1a. Date 1-8-96

Sheet 1 of 1

2. Plant **Oconee Nuclear Station**
   Address **P.O. Box 1439, Seneca, S.C. 29679**

2a. Unit ☑ 1 ☐ 2 ☐ 3 ☐ Shared (specify Units_____)

3. Work Performed By **Duke Power Company**
   Address **526 S. Church Street, Charlotte, NC 28201-1006**
   Type Code Symbol Stamp **N/A** Authorization No. **N/A** Expiration Date **N/A**

3a. Work Order # 95048055-01
Repair Organization Job #

3b. NSM or MM # N/A

4. Identification of System RC Class 1

5. (a) Applicable Construction Code B31.7 19 68 Edition, 6-68 Addenda, N/A Code Cases
   (b) Applicable Edition of Section XI Utilized for Repairs or Replacements 1989, No Addenda

6. Identification of Components Repaired or Replaced and Replacement Components

	Column 1	Column 2	Column 3	Column 4	Column 5	Col. 6	Column 7	Column 8
	Name of Component	Name of Manufacturer	Manufacturer Serial Number	National Board Number	Other Identification	Year Built	Repaired, Replaced, or Replacement	ASME Code Stamped (yes or no)
A	Bolting	General Nuclear	1564, 1796, 1682 1861, 1671, 1646 1851, 1798	N/A	Ht # BG37	N/A	☐ Repaired ☐ Replaced ☑ Replacement	☑ No ☐ Yes
B	Segment ring	General Nuclear	N/A	N/A	N/A	N/A	☐ Repaired ☐ Replaced ☑ Replacement	☑ No ☐ Yes
C							☐ Repaired ☐ Replaced ☐ Replacement	☐ No ☐ Yes
D							☐ Repaired ☐ Replaced ☐ Replacement	☐ No ☐ Yes
E							☐ Repaired ☐ Replaced ☐ Replacement	☐ No ☐ Yes
F							☐ Repaired ☐ Replaced ☐ Replacement	☐ No ☐ Yes

Form NIS-2 (Back)

NOTE: Supplemental sheets in form of lists, sketches, or drawings may be used, provided (1) size is 8 1/2 in. x 11 in. (2) information in items 1 through 6 on this report is included on each sheet, and (3) each sheet is numbered and the number of sheets is recorded at the top of this form.

7. Description of Work Replaced bolting CRDM Nozzle #56

8. Test Conducted: ☐ Hydrostatic ☐ Pneumatic ☑ Nominal Operating Pressure ☐ Other ☐ Exempt

Pressure	2200 psig	Test Temp.	°F
Pressure	psig	Test Temp.	°F
Pressure	psig	Test Temp.	°F

9. Remarks

(Applicable Manufacturer's Data Records to be Attached)

CERTIFICATE OF COMPLIANCE

We certify that the statements made in the report are correct and this **repair or replacement** conforms to the rules of the ASME Code, Section XI.

Type Code Symbol Stamp **N/A**

Certificate of Authorization No. **N/A** Expiration Date **N/A**

Signed C R Hansen Date 1-8, 19 96
Owner or Owner's Designee, Title

CERTIFICATE OF INSERVICE INSPECTION

I, the undersigned, holding a valid commission issued by the National Board of Boiler and Pressure Vessel Inspectors and the State or Providence of N.C and employed by **HSBI and I Company of Hartford Connecticut** have inspected the components described in this Owner's Report during the period 11-6-95 to 1-15-96; and state that to the best of my knowledge and belief, the Owner has performed examinations and taken corrective measures described in this Owner's Report in accordance with the requirements of the ASME Code, Section XI.

By signing this certificate, neither the Inspector nor his employer makes any warranty, expressed or implied, concerning the examinations and corrective measures described in this Owner's Report. Furthermore, neither the Inspector nor his employer shall be liable in any manner for any personal injury or property damage or a loss of any kind arising from or connected with this inspection.

M G Chapman Commissions NC9141
Inspector's Signature National Board, State, Providence and Endorsements

Date 1-15, 19 96

Form 401463 (2-95)

FORM NIS-2 OWNER'S REPORT FOR REPAIRS OR REPLACEMENTS
As Required By The Provisions Of The ASME Code Section XI

1. Owner **Duke Power Company**
   Address **526 S. Church Street, Charlotte, NC 28201-1006**

1a. Date 1-8-96

Sheet 1 of 1

2. Plant **Oconee Nuclear Station**
   Address **P.O. Box 1439, Seneca, S.C. 29679**

2a. Unit ☒ 1 ☐ 2 ☐ 3 ☐ Shared (specify Units_____)

3. Work Performed By **Duke Power Company**
   Address **526 S. Church Street, Charlotte, NC 28201-1006**
   Type Code Symbol Stamp **N/A** Authorization No. **N/A** Expiration Date **N/A**

3a. Work Order # 95048042-01
Repair Organization Job #

3b. NSM or MM # NA

4. Identification of System RC Class 1

5. (a) Applicable Construction Code B31.7 19 68 Edition, 6-68 Addenda, NO Code Cases
   (b) Applicable Edition of Section XI Utilized for Repairs or Replacements 1989, No Addenda

6. Identification of Components Repaired or Replaced and Replacement Components

	Column 1	Column 2	Column 3	Column 4	Column 5	Col. 6	Column 7	Column 8
	Name of Component	Name of Manufacturer	Manufacturer Serial Number	National Board Number	Other Identification	Year Built	Repaired, Replaced, or Replacement	ASME Code Stamped (yes or no)
A	Bolting	General Nuclear	1579, 1725, 1552, 1661, 1586, 1889, 1655, 1588	N/A	Ht # BG-37	N/A	☐ Repaired ☐ Replaced ☒ Replacement	☒ No ☐ Yes
B	Segment Ring	General Nuclear	N/A	N/A	N/A	N/A	☐ Repaired ☐ Replaced ☒ Replacement	☒ No ☐ Yes
C							☐ Repaired ☐ Replaced ☐ Replacement	☐ No ☐ Yes
D							☐ Repaired ☐ Replaced ☐ Replacement	☐ No ☐ Yes
E							☐ Repaired ☐ Replaced ☐ Replacement	☐ No ☐ Yes
F							☐ Repaired ☐ Replaced ☐ Replacement	☐ No ☐ Yes

Form NIS-2 (Back)

NOTE: Supplemental sheets in form of lists, sketches, or drawings may be used, provided (1) size is 8 1/2 in. x 11 in. (2) information in items 1 through 6 on this report is included on each sheet, and (3) each sheet is numbered and the number of sheets is recorded at the top of this form.

7. Description of Work Replaced bolting CRDM nozzle # 6

8. Test Conducted: ☐ Hydrostatic ☐ Pneumatic ☑ Nominal Operating Pressure ☐ Other ☐ Exempt

Pressure 2200 psig Test Temp. _____ °F

Pressure _____ psig Test Temp. _____ °F

Pressure _____ psig Test Temp. _____ °F

9. Remarks _____

(Applicable Manufacturer's Data Records to be Attached)

CERTIFICATE OF COMPLIANCE

We certify that the statements made in the report are correct and this **repair or replacement** conforms to the rules of the ASME Code, Section XI.

Type Code Symbol Stamp **N/A**

Certificate of Authorization No. **N/A** Expiration Date **N/A**

Signed C.R. Henson Date 1-8, 19 96

Owner or Owner's Designee, Title

CERTIFICATE OF INSERVICE INSPECTION

I, the undersigned, holding a valid commission issued by the National Board of Boiler and Pressure Vessel Inspectors and the State or Providence of N.C. and employed by **HSBI and I Company of Hartford Connecticut** have inspected the components described in this Owner's Report during the period 11-6-95 to 1-15-96; and state that to the best of my knowledge and belief, the Owner has performed examinations and taken corrective measures described in this Owner's Report in accordance with the requirements of the ASME Code, Section XI.

By signing this certificate, neither the Inspector nor his employer makes any warranty, expressed or implied, concerning the examinations and corrective measures described in this Owner's Report. Furthermore, neither the Inspector nor his employer shall be liable in any manner for any personal injury or property damage or a loss of any kind arising from or connected with this inspection.

Inspector's Signature Commissions NC914

National Board, State, Providence and Endorsements

Date 1-15, 1996

Form 401463 (2-95)

FORM NIS-2 OWNER'S REPORT FOR REPAIRS OR REPLACEMENTS
As Required By The Provisions Of The ASME Code Section XI

1. Owner **Duke Power Company**
   Address **526 S. Church Street, Charlotte, NC 28201-1006**

1a. Date 1-8-96

Sheet 1 of 1

2. Plant **Oconee Nuclear Station**
   Address **P.O. Box 1439, Seneca, S.C. 29679**

2a. Unit ☑ 1 ☐ 2 ☐ 3 ☐ Shared (specify Units_____)

3a. Work Order # 95048058-01
Repair Organization Job #

3. Work Performed By **Duke Power Company**
   Address **526 S. Church Street, Charlotte, NC 28201-1006**
   Type Code Symbol Stamp **N/A** Authorization No. **N/A** Expiration Date **N/A**

3b. NSM or MM # N/A

4. Identification of System RC Class 1

5. (a) Applicable Construction Code B31.7 19 68 Edition, 6-68 Addenda, NO Code Cases
   (b) Applicable Edition of Section XI Utilized for Repairs or Replacements 1989, No Addenda

6. Identification of Components Repaired or Replaced and Replacement Components

	Column 1	Column 2	Column 3	Column 4	Column 5	Col. 6	Column 7	Column 8
	Name of Component	Name of Manufacturer	Manufacturer Serial Number	National Board Number	Other Identification	Year Built	Repaired, Replaced, or Replacement	ASME Code Stamped (yes or no)
A	Bolting	General Nuclear	1612, 1651, 1727 1551, 1841, 1934 1596, 1803	N/A	Ht # BG37	N/A	☐ Repaired ☐ Replaced ☑ Replacement	☑ No ☐ Yes
B	Segment Ring	General Nuclear	N/A	N/A	N/A	N/A	☐ Repaired ☐ Replaced ☑ Replacement	☑ No ☐ Yes
C							☐ Repaired ☐ Replaced ☐ Replacement	☐ No ☐ Yes
D							☐ Repaired ☐ Replaced ☐ Replacement	☐ No ☐ Yes
E							☐ Repaired ☐ Replaced ☐ Replacement	☐ No ☐ Yes
F							☐ Repaired ☐ Replaced ☐ Replacement	☐ No ☐ Yes

Form NIS-2 (Back)

NOTE: Supplemental sheets in form of lists, sketches, or drawings may be used, provided (1) size is 8 1/2 in. x 11 in. (2) information in items 1 through 6 on this report is included on each sheet, and (3) each sheet is numbered and the number of sheets is recorded at the top of this form.

7. Description of Work Replaced bolting CRDM nozzle # 49

8. Test Conducted: ☐ Hydrostatic ☐ Pneumatic ☑ Nominal Operating Pressure ☐ Other ☐ Exempt

Pressure	2200 psig	Test Temp.	°F
Pressure	psig	Test Temp.	°F
Pressure	psig	Test Temp.	°F

9. Remarks

(Applicable Manufacturer's Data Records to be Attached)

CERTIFICATE OF COMPLIANCE

We certify that the statements made in the report are correct and this **repair or replacement** conforms to the rules of the ASME Code, Section XI.

Type Code Symbol Stamp **N/A**

Certificate of Authorization No. **N/A** Expiration Date **N/A**

Signed C R Hanson Date 1-8, 19 96
Owner or Owner's Designee, Title

CERTIFICATE OF INSERVICE INSPECTION

I, the undersigned, holding a valid commission issued by the National Board of Boiler and Pressure Vessel Inspectors and the State or Providence of N. C. and employed by **HSBI and I Company of Hartford Connecticut** have inspected the components described in this Owner's Report during the period 11-6-95 to 1-15-96; and state that to the best of my knowledge and belief, the Owner has performed examinations and taken corrective measures described in this Owner's Report in accordance with the requirements of the ASME Code, Section XI.

By signing this certificate, neither the Inspector nor his employer makes any warranty, expressed or implied, concerning the examinations and corrective measures described in this Owner's Report. Furthermore, neither the Inspector nor his employer shall be liable in any manner for any personal injury or property damage or a loss of any kind arising from or connected with this inspection.

M B Chapman Commissions NC 914
Inspector's Signature National Board, State, Providence and Endorsements

Date 1-15, 19 96

Form 401463 (2-95)

FORM NIS-2 OWNER'S REPORT FOR REPAIRS OR REPLACEMENTS
As Required By The Provisions Of The ASME Code Section XI

1. Owner **Duke Power Company**
   Address **526 S. Church Street, Charlotte, NC 28201-1006**

1a. Date 1-8-96

Sheet 1 of 1

2. Plant **Oconee Nuclear Station**
   Address **P.O. Box 1439, Seneca, S.C. 29679**

2a. Unit ☑ 1 ☐ 2 ☐ 3 ☐ Shared (specify Units_____)

3. Work Performed By **Duke Power Company**
   Address **526 S. Church Street, Charlotte, NC 28201-1006**
   Type Code Symbol Stamp **N/A** Authorization No. **N/A** Expiration Date **N/A**

3a. Work Order # 95083904-01
Repair Organization Job #

3b. NSM or MM # N/A

4. Identification of System RC Class 1

5. (a) Applicable Construction Code B31.7 19 68 Edition, 6-68 Addenda, NO Code Cases
   (b) Applicable Edition of Section XI Utilized for Repairs or Replacements 1989, No Addenda

6. Identification of Components Repaired or Replaced and Replacement Components

	Column 1	Column 2	Column 3	Column 4	Column 5	Col. 6	Column 7	Column 8
	Name of Component	Name of Manufacturer	Manufacturer Serial Number	National Board Number	Other Identification	Year Built	Repaired, Replaced, or Replacement	ASME Code Stamped (yes or no)
A	Bolting	General Nuclear	1807, 1823, 1831 1648, 1553, 1616 1555, 1931	N/A	HT # BG37	N/A	☐ Repaired ☐ Replaced ☑ Replacement	☑ No ☐ Yes
B	Segment Ring	General Nuclear	N/A	N/A	N/A	N/A	☐ Repaired ☐ Replaced ☑ Replacement	☑ No ☐ Yes
C							☐ Repaired ☐ Replaced ☐ Replacement	☐ No ☐ Yes
D							☐ Repaired ☐ Replaced ☐ Replacement	☐ No ☐ Yes
E							☐ Repaired ☐ Replaced ☐ Replacement	☐ No ☐ Yes
F							☐ Repaired ☐ Replaced ☐ Replacement	☐ No ☐ Yes

Form NIS-2 (Back)

NOTE: Supplemental sheets in form of lists, sketches, or drawings may be used, provided (1) size is 8 1/2 in. x 11 in. (2) information in items 1 through 6 on this report is included on each sheet, and (3) each sheet is numbered and the number of sheets is recorded at the top of this form.

7. Description of Work Replaced bolting CRDM nozzle # 15

8. Test Conducted: ☐ Hydrostatic ☐ Pneumatic ☑ Nominal Operating Pressure ☐ Other ☐ Exempt

Pressure	2200 psig	Test Temp.	°F
Pressure	psig	Test Temp.	°F
Pressure	psig	Test Temp.	°F

9. Remarks

(Applicable Manufacturer's Data Records to be Attached)

CERTIFICATE OF COMPLIANCE

We certify that the statements made in the report are correct and this **repair or replacement** conforms to the rules of the ASME Code, Section XI.

Type Code Symbol Stamp **N/A**

Certificate of Authorization No. **N/A** Expiration Date **N/A**

Signed C R Hensen Date 1-8, 19 96
Owner or Owner's Designee, Title

CERTIFICATE OF INSERVICE INSPECTION

I, the undersigned, holding a valid commission issued by the National Board of Boiler and Pressure Vessel Inspectors and the State or Providence of N. C. and employed by **HSBI and I Company of Hartford Connecticut** have inspected the components described in this Owner's Report during the period 11-6-95 to 1-15-96; and state that to the best of my knowledge and belief, the Owner has performed examinations and taken corrective measures described in this Owner's Report in accordance with the requirements of the ASME Code, Section XI.

By signing this certificate, neither the Inspector nor his employer makes any warranty, expressed or implied, concerning the examinations and corrective measures described in this Owner's Report. Furthermore, neither the Inspector nor his employer shall be liable in any manner for any personal injury or property damage or a loss of any kind arising from or connected with this inspection.

Inspector's Signature Commissions NC914
National Board, State, Providence and Endorsements

Date 1-15, 1996

Form 401463 (2-95)

FORM NIS-2 OWNER'S REPORT FOR REPAIRS OR REPLACEMENTS
As Required By The Provisions Of The ASME Code Section XI

1. Owner **Duke Power Company**
   Address **526 S. Church Street, Charlotte, NC 28201-1006**

1a. Date 1-8-96

Sheet 1 of 1

2. Plant **Oconee Nuclear Station**
   Address **P.O. Box 1439, Seneca, S.C. 29679**

2a. Unit ☑ 1 ☐ 2 ☐ 3 ☐ Shared (specify Units_____)

3. Work Performed By **Duke Power Company**
   Address **526 S. Church Street, Charlotte, NC 28201-1006**
   Type Code Symbol Stamp **N/A** Authorization No. **N/A** Expiration Date **N/A**

3a. Work Order # 95048047-01
Repair Organization Job #

3b. NSM or MM # N/A

4. Identification of System RC Class 1

5. (a) Applicable Construction Code B31.7 19 68 Edition, 6-68 Addenda, NO Code Cases
   (b) Applicable Edition of Section XI Utilized for Repairs or Replacements 1989, No Addenda

6. Identification of Components Repaired or Replaced and Replacement Components

	Column 1	Column 2	Column 3	Column 4	Column 5	Col. 6	Column 7	Column 8
	Name of Component	Name of Manufacturer	Manufacturer Serial Number	National Board Number	Other Identification	Year Built	Repaired, Replaced, or Replacement	ASME Code Stamped (yes or no)
A	Bolting	General Nuclear	1709, 1885, 1830 1594, 1787, 1891 1916, 1919	N/A	Ht # BG37	N/A	☐ Repaired ☐ Replaced ☑ Replacement	☑ No ☐ Yes
B	Segment Ring	General Nuclear	N/A	N/A	N/A	N/A	☐ Repaired ☐ Replaced ☑ Replacement	☑ No ☐ Yes
C							☐ Repaired ☐ Replaced ☐ Replacement	☐ No ☐ Yes
D							☐ Repaired ☐ Replaced ☐ Replacement	☐ No ☐ Yes
E							☐ Repaired ☐ Replaced ☐ Replacement	☐ No ☐ Yes
F							☐ Repaired ☐ Replaced ☐ Replacement	☐ No ☐ Yes

Form NIS-2 (Back)

NOTE: Supplemental sheets in form of lists, sketches, or drawings may be used, provided (1) size is 8 1/2 in. x 11 in. (2) information in items 1 through 6 on this report is included on each sheet, and (3) each sheet is numbered and the number of sheets is recorded at the top of this form.

7. Description of Work Replaced bolting CRDM nozzle # 65

8. Test Conducted: ☐ Hydrostatic ☐ Pneumatic ☑ Nominal Operating Pressure ☐ Other ☐ Exempt

Pressure	2200 psig	Test Temp.	°F
Pressure	psig	Test Temp.	°F
Pressure	psig	Test Temp.	°F

9. Remarks

(Applicable Manufacturer's Data Records to be Attached)

CERTIFICATE OF COMPLIANCE

We certify that the statements made in the report are correct and this **repair or replacement** conforms to the rules of the ASME Code, Section XI.

Type Code Symbol Stamp **N/A**

Certificate of Authorization No. **N/A** Expiration Date **N/A**

Signed C R Henson Date 1-8, 19 96
Owner or Owner's Designee, Title

CERTIFICATE OF INSERVICE INSPECTION

I, the undersigned, holding a valid commission issued by the National Board of Boiler and Pressure Vessel Inspectors and the State or Providence of N.C. and employed by **HSBI and I Company of Hartford Connecticut** have inspected the components described in this Owner's Report during the period 11-6-95 to 1-11-96; and state that to the best of my knowledge and belief, the Owner has performed examinations and taken corrective measures described in this Owner's Report in accordance with the requirements of the ASME Code, Section XI.

By signing this certificate, neither the Inspector nor his employer makes any warranty, expressed or implied, concerning the examinations and corrective measures described in this Owner's Report. Furthermore, neither the Inspector nor his employer shall be liable in any manner for any personal injury or property damage or a loss of any kind arising from or connected with this inspection.

H B Chapman Commissions NC914
Inspector's Signature National Board, State, Providence and Endorsements

Date 1-11, 1996

Form 401463 (2-95)

FORM NIS-2 OWNER'S REPORT FOR REPAIRS OR REPLACEMENTS
As Required By The Provisions Of The ASME Code Section XI

1. Owner **Duke Power Company**
   Address **526 S. Church Street, Charlotte, NC 28201-1006**

1a. Date 2-11-96

Sheet 2 of 1

2. Plant **Oconee Nuclear Station**
   Address **P.O. Box 1439, Seneca, S.C. 29679**

2a. Unit ☑ 1 ☐ 2 ☐ 3 ☐ Shared (specify Units_____)

3. Work Performed By **Duke Power Company**
   Address **526 S. Church Street, Charlotte, NC 28201-1006**
   Type Code Symbol Stamp **N/A** Authorization No. **N/A** Expiration Date **N/A**

3a. Work Order # 95048057-01
Repair Organization Job #

3b. NSM or MM # N/A

4. Identification of System RC Class 1

5. (a) Applicable Construction Code B31.7 19 68 Edition, 6-68 Addenda, NO Code Cases
   (b) Applicable Edition of Section XI Utilized for Repairs or Replacements 1989, No Addenda

6. Identification of Components Repaired or Replaced and Replacement Components

	Column 1	Column 2	Column 3	Column 4	Column 5	Col. 6	Column 7	Column 8
	Name of Component	Name of Manufacturer	Manufacturer Serial Number	National Board Number	Other Identification	Year Built	Repaired, Replaced, or Replacement	ASME Code Stamped (yes or no)
A	Bolting	General Nuclear	1570, 1898, 1584, 1792, 1638, 1816, 1652, 1736	N/A	HH # BB37	N/A	☐ Repaired ☐ Replaced ☑ Replacement	☑ No ☐ Yes
B	Segment Ring	General Nuclear	N/A	N/A	N/A	N/A	☐ Repaired ☐ Replaced ☑ Replacement	☑ No ☐ Yes
C							☐ Repaired ☐ Replaced ☐ Replacement	☐ No ☐ Yes
D							☐ Repaired ☐ Replaced ☐ Replacement	☐ No ☐ Yes
E							☐ Repaired ☐ Replaced ☐ Replacement	☐ No ☐ Yes
F							☐ Repaired ☐ Replaced ☐ Replacement	☐ No ☐ Yes

Form NIS-2 (Back)

NOTE: Supplemental sheets in form of lists, sketches, or drawings may be used, provided (1) size is 8 1/2 in. x 11 in. (2) information in items 1 through 6 on this report is included on each sheet, and (3) each sheet is numbered and the number of sheets is recorded at the top of this form.

7. Description of Work Replaced bolting CRDM nozzle #4

8. Test Conducted: ☐ Hydrostatic ☐ Pneumatic ☑ Nominal Operating Pressure ☐ Other ☐ Exempt

Pressure	2200 psig	Test Temp.	°F
Pressure	psig	Test Temp.	°F
Pressure	psig	Test Temp.	°F

9. Remarks

(Applicable Manufacturer's Data Records to be Attached)

CERTIFICATE OF COMPLIANCE

We certify that the statements made in the report are correct and this **repair or replacement** conforms to the rules of the ASME Code, Section XI.

Type Code Symbol Stamp **N/A**

Certificate of Authorization No. **N/A** Expiration Date **N/A**

Signed C R Hinson Date 1-11, 19 96
Owner or Owner's Designee, Title

CERTIFICATE OF INSERVICE INSPECTION

I, the undersigned, holding a valid commission issued by the National Board of Boiler and Pressure Vessel Inspectors and the State or Providence of N. C. and employed by **HSBI and I Company of Hartford Connecticut** have inspected the components described in this Owner's Report during the period 11-6-95 to 1-15-96; and state that to the best of my knowledge and belief, the Owner has performed examinations and taken corrective measures described in this Owner's Report in accordance with the requirements of the ASME Code, Section XI.

By signing this certificate, neither the Inspector nor his employer makes any warranty, expressed or implied, concerning the examinations and corrective measures described in this Owner's Report. Furthermore, neither the Inspector nor his employer shall be liable in any manner for any personal injury or property damage or a loss of any kind arising from or connected with this inspection.

M B Chapman Commissions NC914
Inspector's Signature National Board, State, Providence and Endorsements

Date 1-15-96, 1996

Form 401463 (2-95)

FORM NIS-2 OWNER'S REPORT FOR REPAIRS OR REPLACEMENTS
As Required By The Provisions Of The ASME Code Section XI

1. Owner **Duke Power Company**
   Address **526 S. Church Street, Charlotte, NC 28201-1006**

1a. Date 1-11-96

Sheet 1 of 1

2. Plant **Oconee Nuclear Station**
   Address **P.O. Box 1439, Seneca, S.C. 29679**

2a. Unit ☑ 1 ☐ 2 ☐ 3 ☐ Shared (specify Units_____)

3. Work Performed By **Duke Power Company**
   Address **526 S. Church Street, Charlotte, NC 28201-1006**
   Type Code Symbol Stamp **N/A** Authorization No. **N/A** Expiration Date **N/A**

3a. Work Order # 95048059-01
Repair Organization Job #

3b. NSM or MM # N/A

4. Identification of System RC Class 1

5. (a) Applicable Construction Code B31.7 19 68 Edition, 6-68 Addenda, NO Code Cases
   (b) Applicable Edition of Section XI Utilized for Repairs or Replacements 1989, No Addenda

6. Identification of Components Repaired or Replaced and Replacement Components

	Column 1	Column 2	Column 3	Column 4	Column 5	Col. 6	Column 7	Column 8
	Name of Component	Name of Manufacturer	Manufacturer Serial Number	National Board Number	Other Identification	Year Built	Repaired, Replaced, or Replacement	ASME Code Stamped (yes or no)
A	Bolting	General Nuclear	1733, 1550, 1814, 1800, 1525, 1857, 1583, 1621	NA	Ht # BG37	NA	☐ Repaired ☐ Replaced ☑ Replacement	☑ No ☐ Yes
B	Segment ring	General Nuclear	~~7684~~ N/A	NA	N/A	N/A	☐ Repaired ☐ Replaced ☐ Replacement	☑ No ☐ Yes
C							☐ Repaired ☐ Replaced ☐ Replacement	☐ No ☐ Yes
D							☐ Repaired ☐ Replaced ☐ Replacement	☐ No ☐ Yes
E							☐ Repaired ☐ Replaced ☐ Replacement	☐ No ☐ Yes
F							☐ Repaired ☐ Replaced ☐ Replacement	☐ No ☐ Yes

Form NIS-2 (Back)

NOTE: Supplemental sheets in form of lists, sketches, or drawings may be used, provided (1) size is 8 1/2 in. x 11 in. (2) information in items 1 through 6 on this report is included on each sheet, and (3) each sheet is numbered and the number of sheets is recorded at the top of this form.

7. Description of Work Replaced bolting CRDM nozzle # 54

8. Test Conducted: ☐ Hydrostatic ☐ Pneumatic ☑ Nominal Operating Pressure ☐ Other ☐ Exempt

Pressure	2200 psig	Test Temp.	_____ °F
Pressure	_____ psig	Test Temp.	_____ °F
Pressure	_____ psig	Test Temp.	_____ °F

9. Remarks _____

(Applicable Manufacturer's Data Records to be Attached)

CERTIFICATE OF COMPLIANCE

We certify that the statements made in the report are correct and this **repair or replacement** conforms to the rules of the ASME Code, Section XI.

Type Code Symbol Stamp **N/A**

Certificate of Authorization No. **N/A** Expiration Date **N/A**

Signed C R Henson Date 1-11, 19 96
Owner or Owner's Designee, Title

CERTIFICATE OF INSERVICE INSPECTION

I, the undersigned, holding a valid commission issued by the National Board of Boiler and Pressure Vessel Inspectors and the State or Providence of N. C. and employed by **HSBI and I Company of Hartford Connecticut** have inspected the components described in this Owner's Report during the period 11-6-95 to 1-11-96; and state that to the best of my knowledge and belief, the Owner has performed examinations and taken corrective measures described in this Owner's Report in accordance with the requirements of the ASME Code, Section XI.

By signing this certificate, neither the Inspector nor his employer makes any warranty, expressed or implied, concerning the examinations and corrective measures described in this Owner's Report. Furthermore, neither the Inspector nor his employer shall be liable in any manner for any personal injury or property damage or a loss of any kind arising from or connected with this inspection.

M B Chapman Commissions NC914
Inspector's Signature National Board, State, Providence and Endorsements

Date 1-11, 1996

Form 401463 (2-95)

FORM NIS-2 OWNER'S REPORT FOR REPAIRS OR REPLACEMENTS
As Required By The Provisions Of The ASME Code Section XI

1. Owner **Duke Power Company**
   Address **526 S. Church Street, Charlotte, NC 28201-1006**

1a. Date 1-11-96

Sheet 1 of 1

2. Plant **Oconee Nuclear Station**
   Address **P.O. Box 1439, Seneca, S.C. 29679**

2a. Unit ☑ 1 ☐ 2 ☐ 3 ☐ Shared (specify Units_____)

3. Work Performed By **Duke Power Company**
   Address **526 S. Church Street, Charlotte, NC 28201-1006**
   Type Code Symbol Stamp **N/A** Authorization No. **N/A** Expiration Date **N/A**

3a. Work Order # 95087065-01
Repair Organization Job #

3b. NSM or MM # N/A

4. Identification of System RC Class 1

5. (a) Applicable Construction Code B31.7 1968 Edition, 6-88 Addenda, NO Code Cases
   (b) Applicable Edition of Section XI Utilized for Repairs or Replacements 1989, No Addenda

6. Identification of Components Repaired or Replaced and Replacement Components

	Column 1	Column 2	Column 3	Column 4	Column 5	Col. 6	Column 7	Column 8
	Name of Component	Name of Manufacturer	Manufacturer Serial Number	National Board Number	Other Identification	Year Built	Repaired, Replaced, or Replacement	ASME Code Stamped (yes or no)
A	Bolting	General Nuclear	N/A	N/A	N/A	N/A	☐ Repaired ☐ Replaced ☑ Replacement	☑ No ☐ Yes
B	Segment Ring	General Nuclear	N/A	N/A	N/A	N/A	☐ Repaired ☐ Replaced ☑ Replacement	☑ No ☐ Yes
C							☐ Repaired ☐ Replaced ☐ Replacement	☐ No ☐ Yes
D							☐ Repaired ☐ Replaced ☐ Replacement	☐ No ☐ Yes
E							☐ Repaired ☐ Replaced ☐ Replacement	☐ No ☐ Yes
F							☐ Repaired ☐ Replaced ☐ Replacement	☐ No ☐ Yes

Form NIS-2 (Back)

NOTE: Supplemental sheets in form of lists, sketches, or drawings may be used, provided (1) size is 8 1/2 in. x 11 in. (2) information in items 1 through 6 on this report is included on each sheet, and (3) each sheet is numbered and the number of sheets is recorded at the top of this form.

7. Description of Work Replaced bolting CRDM nozzle #66

8. Test Conducted: ☐ Hydrostatic ☐ Pneumatic ☑ Nominal Operating Pressure ☐ Other ☐ Exempt

Pressure	2200 psig	Test Temp.	____ °F
Pressure	____ psig	Test Temp.	____ °F
Pressure	____ psig	Test Temp.	____ °F

9. Remarks

(Applicable Manufacturer's Data Records to be Attached)

CERTIFICATE OF COMPLIANCE

We certify that the statements made in the report are correct and this **repair or replacement** conforms to the rules of the ASME Code, Section XI.

Type Code Symbol Stamp **N/A**

Certificate of Authorization No. **N/A** Expiration Date **N/A**

Signed C.R. Henson Date 1-11, 19 96
Owner or Owner's Designee, Title

CERTIFICATE OF INSERVICE INSPECTION

I, the undersigned, holding a valid commission issued by the National Board of Boiler and Pressure Vessel Inspectors and the State or Providence of N.C. and employed by **HSBI and I Company of Hartford Connecticut** have inspected the components described in this Owner's Report during the period 11-6-95 to 1-11-96 ; and state that to the best of my knowledge and belief, the Owner has performed examinations and taken corrective measures described in this Owner's Report in accordance with the requirements of the ASME Code, Section XI.

By signing this certificate, neither the Inspector nor his employer makes any warranty, expressed or implied, concerning the examinations and corrective measures described in this Owner's Report. Furthermore, neither the Inspector nor his employer shall be liable in any manner for any personal injury or property damage or a loss of any kind arising from or connected with this inspection.

Inspector's Signature Commissions NC914
National Board, State, Providence and Endorsements

Date 1-6, 19 96

Form 401463 (2/95)

FORM NIS-2 OWNER'S REPORT FOR REPAIRS OR REPLACEMENTS
As Required By The Provisions Of The ASME Code Section XI

1. Owner **Duke Power Company**
   Address **526 S. Church Street, Charlotte, NC 28201-1006**

1a. Date 1-11-96

Sheet 1 of 1

2. Plant **Oconee Nuclear Station**
   Address **P.O. Box 1439, Seneca, S.C. 29679**

2a. Unit ☑ 1 ☐ 2 ☐ 3 ☐ Shared (specify Units_____)

3. Work Performed By **Duke Power Company**
   Address **526 S. Church Street, Charlotte, NC 28201-1006**
   Type Code Symbol Stamp **N/A** Authorization No. **N/A** Expiration Date **N/A**

3a. Work Order # 95048045-01
Repair Organization Job #

3b. NSM or MM # N/A

4. Identification of System RC Class 1

5. (a) Applicable Construction Code B31.7 19 68 Edition, 6-68 Addenda, NO Code Cases
   (b) Applicable Edition of Section XI Utilized for Repairs or Replacements 1989, No Addenda

6. Identification of Components Repaired or Replaced and Replacement Components

	Column 1	Column 2	Column 3	Column 4	Column 5	Col. 6	Column 7	Column 8
	Name of Component	Name of Manufacturer	Manufacturer Serial Number	National Board Number	Other Identification	Year Built	Repaired, Replaced, or Replacement	ASME Code Stamped (yes or no)
A	Bolting	General Nuclear	1859, 1693, 1861 1858, 1869, 1862 1867, 1903	N/A	HT# BG37	N/A	☐ Repaired ☐ Replaced ☑ Replacement	☑ No ☐ Yes
B	Segment Ring	General Nuclear	N/A	N/A	N/A	N/A	☐ Repaired ☐ Replaced ☑ Replacement	☐ No ☐ Yes
C							☐ Repaired ☐ Replaced ☐ Replacement	☐ No ☐ Yes
D							☐ Repaired ☐ Replaced ☐ Replacement	☐ No ☐ Yes
E							☐ Repaired ☐ Replaced ☐ Replacement	☐ No ☐ Yes
F							☐ Repaired ☐ Replaced ☐ Replacement	☐ No ☐ Yes

Form NIS-2 (Back)

NOTE: Supplemental sheets in form of lists, sketches, or drawings may be used, provided (1) size is 8 1/2 in. x 11 in. (2) information in items 1 through 6 on this report is included on each sheet, and (3) each sheet is numbered and the number of sheets is recorded at the top of this form.

7. Description of Work Replaced bolting CRDM nozzle # 64

8. Test Conducted: ☐ Hydrostatic ☐ Pneumatic ☑ Nominal Operating Pressure ☐ Other ☐ Exempt

Pressure	2200 psig	Test Temp.	°F
Pressure	psig	Test Temp.	°F
Pressure	psig	Test Temp.	°F

9. Remarks

(Applicable Manufacturer's Data Records to be Attached)

CERTIFICATE OF COMPLIANCE

We certify that the statements made in the report are correct and this **repair or replacement** conforms to the rules of the ASME Code, Section XI.

Type Code Symbol Stamp **N/A**

Certificate of Authorization No. **N/A** Expiration Date **N/A**

Signed C.R. Henson Date 1-11, 19 96
Owner or Owner's Designee, Title

CERTIFICATE OF INSERVICE INSPECTION

I, the undersigned, holding a valid commission issued by the National Board of Boiler and Pressure Vessel Inspectors and the State or Providence of N.C and employed by **HSBI and I Company of Hartford Connecticut** have inspected the components described in this Owner's Report during the period 11-6-95 to 1-11-96; and state that to the best of my knowledge and belief, the Owner has performed examinations and taken corrective measures described in this Owner's Report in accordance with the requirements of the ASME Code, Section XI.

By signing this certificate, neither the Inspector nor his employer makes any warranty, expressed or implied, concerning the examinations and corrective measures described in this Owner's Report. Furthermore, neither the Inspector nor his employer shall be liable in any manner for any personal injury or property damage or a loss of any kind arising from or connected with this inspection.

MB Chapman Commissions NC-914
Inspector's Signature National Board, State, Providence and Endorsements

Date 1-11, 19 96

Form 401463 (2-95)

FORM NIS-2 OWNER'S REPORT FOR REPAIRS OR REPLACEMENTS
As Required By The Provisions Of The ASME Code Section XI

1. Owner **Duke Power Company**
   Address **526 S. Church Street, Charlotte, NC 28201-1006**

1a. Date 1-8-96

Sheet 1 of 1

2. Plant **Oconee Nuclear Station**
   Address **P.O. Box 1439, Seneca, S.C. 29679**

2a. Unit ☒ 1 ☐ 2 ☐ 3 ☐ Shared (specify Units_____)

3a. Work Order # 95048052-01
Repair Organization Job #

3. Work Performed By **Duke Power Company**
   Address **526 S. Church Street, Charlotte, NC 28201-1006**
   Type Code Symbol Stamp **N/A** Authorization No. **N/A** Expiration Date **N/A**

3b. NSM or MM # N/A

4. Identification of System RC Class 1

5. (a) Applicable Construction Code B31.7 19 68 Edition, 6-68 Addenda, NO Code Cases
   (b) Applicable Edition of Section XI Utilized for Repairs or Replacements 1989, No Addenda

6. Identification of Components Repaired or Replaced and Replacement Components

	Column 1	Column 2	Column 3	Column 4	Column 5	Col. 6	Column 7	Column 8
	Name of Component	Name of Manufacturer	Manufacturer Serial Number	National Board Number	Other Identification	Year Built	Repaired, Replaced, or Replacement	ASME Code Stamped (yes or no)
A	Bolting	General Nuclear	1899, 1609, 1687 1568, 1875, 1604 1706, 1688	N/A	N/A	N/A	☐ Repaired ☐ Replaced ☒ Replacement	☒ No ☐ Yes
B	Segment ring	General Nuclear	N/A	N/A	N/A	N/A	☐ Repaired ☐ Replaced ☒ Replacement	☒ No ☐ Yes
C							☐ Repaired ☐ Replaced ☐ Replacement	☐ No ☐ Yes
D							☐ Repaired ☐ Replaced ☐ Replacement	☐ No ☐ Yes
E							☐ Repaired ☐ Replaced ☐ Replacement	☐ No ☐ Yes
F							☐ Repaired ☐ Replaced ☐ Replacement	☐ No ☐ Yes

Form NIS-2 (Back)

NOTE: Supplemental sheets in form of lists, sketches, or drawings may be used, provided (1) size is 8 1/2 in. x 11 in. (2) information in items 1 through 6 on this report is included on each sheet, and (3) each sheet is numbered and the number of sheets is recorded at the top of this form.

7. Description of Work Replaced bolting CRDM nozzle Flange #5

8. Test Conducted: ☐ Hydrostatic ☐ Pneumatic ☑ Nominal Operating Pressure ☐ Other ☐ Exempt

Pressure	2200 psig	Test Temp.	°F
Pressure	psig	Test Temp.	°F
Pressure	psig	Test Temp.	°F

9. Remarks

(Applicable Manufacturer's Data Records to be Attached)

CERTIFICATE OF COMPLIANCE

We certify that the statements made in the report are correct and this **repair or replacement** conforms to the rules of the ASME Code, Section XI.

Type Code Symbol Stamp **N/A**

Certificate of Authorization No. **N/A** Expiration Date **N/A**

Signed Charles R Hudson Date 1-8, 19 96
Owner or Owner's Designee, Title

CERTIFICATE OF INSERVICE INSPECTION

I, the undersigned, holding a valid commission issued by the National Board of Boiler and Pressure Vessel Inspectors and the State or Providence of N.C. and employed by **HSBI and I Company of Hartford Connecticut** have inspected the components described in this Owner's Report during the period 11-6-95 to 1-11-96; and state that to the best of my knowledge and belief, the Owner has performed examinations and taken corrective measures described in this Owner's Report in accordance with the requirements of the ASME Code, Section XI.

By signing this certificate, neither the Inspector nor his employer makes any warranty, expressed or implied, concerning the examinations and corrective measures described in this Owner's Report. Furthermore, neither the Inspector nor his employer shall be liable in any manner for any personal injury or property damage or a loss of any kind arising from or connected with this inspection.

Inspector's Signature Commissions NC914
National Board, State, Providence and Endorsements

Date 1-11, 1996

Form 401463 (2-93)

FORM NIS-2 OWNER'S REPORT FOR REPAIRS OR REPLACEMENTS
As Required By The Provisions Of The ASME Code Section XI

1. Owner **Duke Power Company**
   Address **526 S. Church Street, Charlotte, NC 28201-1006**

1a. Date 1-8-96

Sheet 1 of 1

2. Plant **Oconee Nuclear Station**
   Address **P.O. Box 1439, Seneca, S.C. 29679**

2a. Unit ☑ 1 ☐ 2 ☐ 3 ☐ Shared (specify Units _____)

3a. Work Order # 95083922-01
Repair Organization Job #

3. Work Performed By **Duke Power Company**
   Address **526 S. Church Street, Charlotte, NC 28201-1006**
   Type Code Symbol Stamp **N/A** Authorization No. **N/A** Expiration Date **N/A**

3b. NSM or MM # N/A

4. Identification of System RC Class 1

5. (a) Applicable Construction Code B31.7 1968 Edition, 6-68 Addenda, N/A Code Cases
   (b) Applicable Edition of Section XI Utilized for Repairs or Replacements 1989, No Addenda

6. Identification of Components Repaired or Replaced and Replacement Components

	Column 1	Column 2	Column 3	Column 4	Column 5	Col. 6	Column 7	Column 8
	Name of Component	Name of Manufacturer	Manufacturer Serial Number	National Board Number	Other Identification	Year Built	Repaired, Replaced, or Replacement	ASME Code Stamped (yes or no)
A	Bolting	General Nuclear	1720, 1837, 1822 1572, 1585, 1663 1818, 1866	N/A	Ht # BG37	N/A	☐ Repaired ☐ Replaced ☑ Replacement	☑ No ☐ Yes
B	Segment rings ~~Bolting~~ CRH	General Nuclear	N/A	N/A	N/A	N/A	☐ Repaired ☐ Replaced ☑ Replacement	☑ No ☐ Yes
C							☐ Repaired ☐ Replaced ☐ Replacement	☐ No ☐ Yes
D							☐ Repaired ☐ Replaced ☐ Replacement	☐ No ☐ Yes
E							☐ Repaired ☐ Replaced ☐ Replacement	☐ No ☐ Yes
F							☐ Repaired ☐ Replaced ☐ Replacement	☐ No ☐ Yes

Form NIS-2 (Back)

NOTE: Supplemental sheets in form of lists, sketches, or drawings may be used, provided (1) size is 8 1/2 in. x 11 in. (2) information in items 1 through 6 on this report is included on each sheet, and (3) each sheet is numbered and the number of sheets is recorded at the top of this form.

7. Description of Work Replaced bolting CRDM nozzle #67

8. Test Conducted: ☐ Hydrostatic ☐ Pneumatic ☑ Nominal Operating Pressure ☐ Other ☐ Exempt

Pressure	2200 psig	Test Temp.	°F
Pressure	psig	Test Temp.	°F
Pressure	psig	Test Temp.	°F

9. Remarks

(Applicable Manufacturer's Data Records to be Attached)

CERTIFICATE OF COMPLIANCE

We certify that the statements made in the report are correct and this **repair or replacement** conforms to the rules of the ASME Code, Section XI.

Type Code Symbol Stamp **N/A**

Certificate of Authorization No. **N/A** Expiration Date **N/A**

Signed C R Hensen Date 1-8, 19 96
Owner or Owner's Designee, Title

CERTIFICATE OF INSERVICE INSPECTION

I, the undersigned, holding a valid commission issued by the National Board of Boiler and Pressure Vessel Inspectors and the State or Providence of N.C. and employed by **HSBI and I Company of Hartford Connecticut** have inspected the components described in this Owner's Report during the period 11-6-95 to 1-11-96; and state that to the best of my knowledge and belief, the Owner has performed examinations and taken corrective measures described in this Owner's Report in accordance with the requirements of the ASME Code, Section XI.

By signing this certificate, neither the Inspector nor his employer makes any warranty, expressed or implied, concerning the examinations and corrective measures described in this Owner's Report. Furthermore, neither the Inspector nor his employer shall be liable in any manner for any personal injury or property damage or a loss of any kind arising from or connected with this inspection.

Inspector's Signature Commissions NC914
National Board, State, Providence and Endorsements

Date 1-11, 1996

Form 401463 (2-93)

FORM NIS-2 OWNER'S REPORT FOR REPAIRS OR REPLACEMENTS
As Required By The Provisions Of The ASME Code Section XI

1. Owner **Duke Power Company**
   Address **526 S. Church Street, Charlotte, NC 28201-1006**

1a. Date 1-11-96

Sheet 1 of 1

2. Plant **Oconee Nuclear Station**
   Address **P.O. Box 1439, Seneca, S.C. 29679**

2a. Unit ☑ 1 ☐ 2 ☐ 3 ☐ Shared (specify Units _____)

3. Work Performed By **Duke Power Company**
   Address **526 S. Church Street, Charlotte, NC 28201-1006**
   Type Code Symbol Stamp **N/A** Authorization No. **N/A** Expiration Date **N/A**

3a. Work Order # 95048048-01
Repair Organization Job #

3b. NSM or MM # N/A

4. Identification of System RC Class 1

5. (a) Applicable Construction Code B31.7 1968 Edition, 6-68 Addenda, NO Code Cases
   (b) Applicable Edition of Section XI Utilized for Repairs or Replacements 1989, No Addenda

6. Identification of Components Repaired or Replaced and Replacement Components

	Column 1	Column 2	Column 3	Column 4	Column 5	Col. 6	Column 7	Column 8
	Name of Component	Name of Manufacturer	Manufacturer Serial Number	National Board Number	Other Identification	Year Built	Repaired, Replaced, or Replacement	ASME Code Stamped (yes or no)
A	Bolting	General Nuclear	1546, 1865, 1728, 1793, 1879, 1880, 1657, 1732	NA	HH BG37	N/A	☐ Repaired ☐ Replaced ☑ Replacement	☑ No ☐ Yes
B	Segment ring	General Nuclear	N/A	N/A	N/A	N/A	☐ Repaired ☐ Replaced ☑ Replacement	☑ No ☐ Yes
C							☐ Repaired ☐ Replaced ☐ Replacement	☐ No ☐ Yes
D							☐ Repaired ☐ Replaced ☐ Replacement	☐ No ☐ Yes
E							☐ Repaired ☐ Replaced ☐ Replacement	☐ No ☐ Yes
F							☐ Repaired ☐ Replaced ☐ Replacement	☐ No ☐ Yes

Form NIS-2 (Back)

NOTE: Supplemental sheets in form of lists, sketches, or drawings may be used, provided (1) size is 8 1/2 in. x 11 in. (2) information in items 1 through 6 on this report is included on each sheet, and (3) each sheet is numbered and the number of sheets is recorded at the top of this form.

7. Description of Work Replaced bolting CRDM nozzle # 8

8. Test Conducted: ☐ Hydrostatic ☐ Pneumatic ☑ Nominal Operating Pressure ☐ Other ☐ Exempt

Pressure	2200 psig	Test Temp.	_____ °F
Pressure	_____ psig	Test Temp.	_____ °F
Pressure	_____ psig	Test Temp.	_____ °F

9. Remarks _____

(Applicable Manufacturer's Data Records to be Attached)

CERTIFICATE OF COMPLIANCE

We certify that the statements made in the report are correct and this **repair or replacement** conforms to the rules of the ASME Code, Section XI.

Type Code Symbol Stamp **N/A**

Certificate of Authorization No. **N/A** Expiration Date **N/A**

Signed C.R. Henson Date 1-11-96, 19 96
Owner or Owner's Designee, Title

CERTIFICATE OF INSERVICE INSPECTION

I, the undersigned, holding a valid commission issued by the National Board of Boiler and Pressure Vessel Inspectors and the State or Providence of N.C. and employed by **HSBI and I Company of Hartford Connecticut** have inspected the components described in this Owner's Report during the period 11-6-95 to 1-11-96; and state that to the best of my knowledge and belief, the Owner has performed examinations and taken corrective measures described in this Owner's Report in accordance with the requirements of the ASME Code, Section XI.

By signing this certificate, neither the Inspector nor his employer makes any warranty, expressed or implied, concerning the examinations and corrective measures described in this Owner's Report. Furthermore, neither the Inspector nor his employer shall be liable in any manner for any personal injury or property damage or a loss of any kind arising from or connected with this inspection.

M.B. Chapman Commissions NC914
Inspector's Signature National Board, State, Providence and Endorsements

Date 1-11, 1996

Form 401463 (2-95)

FORM NIS-2 OWNER'S REPORT FOR REPAIRS OR REPLACEMENTS
As Required By The Provisions Of The ASME Code Section XI

1. Owner **Duke Power Company**
   Address **526 S. Church Street, Charlotte, NC 28201-1006**

1a. Date 1-11-96

Sheet 1 of 1

2. Plant **Oconee Nuclear Station**
   Address **P.O. Box 1439, Seneca, S.C. 29679**

2a. Unit ☒ 1 ☐ 2 ☐ 3 ☐ Shared (specify Units_____)

3a. Work Order # 95048056-01
Repair Organization Job #

3. Work Performed By **Duke Power Company**
   Address **526 S. Church Street, Charlotte, NC 28201-1006**
   Type Code Symbol Stamp **N/A** Authorization No. **N/A** Expiration Date **N/A**

3b. NSM or MM # N/A

4. Identification of System RC Class 1

5. (a) Applicable Construction Code B31.7 1968 Edition, 6-68 Addenda, NO Code Cases
   (b) Applicable Edition of Section XI Utilized for Repairs or Replacements 1989, No Addenda

6. Identification of Components Repaired or Replaced and Replacement Components

	Column 1	Column 2	Column 3	Column 4	Column 5	Col. 6	Column 7	Column 8
	Name of Component	Name of Manufacturer	Manufacturer Serial Number	National Board Number	Other Identification	Year Built	Repaired, Replaced, or Replacement	ASME Code Stamped (yes or no)
A	Bolting	General Nuclear	1571, 1863, 1854 1712, 1613, 1825 1719, 1610	N/A	HT # BG37	N/A	☐ Repaired ☐ Replaced ☒ Replacement	☒ No ☐ Yes
B	Segment ring	General Nuclear	N/A	N/A	N/A	N/A	☐ Repaired ☐ Replaced ☒ Replacement	☒ No ☐ Yes
C							☐ Repaired ☐ Replaced ☐ Replacement	☐ No ☐ Yes
D							☐ Repaired ☐ Replaced ☐ Replacement	☐ No ☐ Yes
E							☐ Repaired ☐ Replaced ☐ Replacement	☐ No ☐ Yes
F							☐ Repaired ☐ Replaced ☐ Replacement	☐ No ☐ Yes

Form NIS-2 (Back)

NOTE: Supplemental sheets in form of lists, sketches, or drawings may be used, provided (1) size is 8 1/2 in. x 11 in. (2) information in items 1 through 6 on this report is included on each sheet, and (3) each sheet is numbered and the number of sheets is recorded at the top of this form.

7. Description of Work Replaced bolting CRDM nozzle # 52

8. Test Conducted: ☐ Hydrostatic ☐ Pneumatic ☑ Nominal Operating Pressure ☐ Other ☐ Exempt

Pressure	2200 psig	Test Temp.	°F
Pressure	psig	Test Temp.	°F
Pressure	psig	Test Temp.	°F

9. Remarks

(Applicable Manufacturer's Data Records to be Attached)

CERTIFICATE OF COMPLIANCE

We certify that the statements made in the report are correct and this **repair or replacement** conforms to the rules of the ASME Code, Section XI.

Type Code Symbol Stamp **N/A**

Certificate of Authorization No. **N/A** Expiration Date **N/A**

Signed C R Henson Date 1-11, 19 96
Owner or Owner's Designee, Title

CERTIFICATE OF INSERVICE INSPECTION

I, the undersigned, holding a valid commission issued by the National Board of Boiler and Pressure Vessel Inspectors and the State or Providence of N.C and employed by **HSBI and I Company of Hartford Connecticut** have inspected the components described in this Owner's Report during the period 11-6-95 to 1-11-96; and state that to the best of my knowledge and belief, the Owner has performed examinations and taken corrective measures described in this Owner's Report in accordance with the requirements of the ASME Code, Section XI.

By signing this certificate, neither the Inspector nor his employer makes any warranty, expressed or implied, concerning the examinations and corrective measures described in this Owner's Report. Furthermore, neither the Inspector nor his employer shall be liable in any manner for any personal injury or property damage or a loss of any kind arising from or connected with this inspection.

JMG Chapman Commissions NC914
Inspector's Signature National Board, State, Providence and Endorsements

Date 1-11, 1996

Form 401463 (2-95)

FORM NIS-2 OWNER'S REPORT FOR REPAIRS OR REPLACEMENTS
As Required By The Provisions Of The ASME Code Section XI

1. Owner **Duke Power Company**
   Address **526 S. Church Street, Charlotte, NC 28201-1006**

1a. Date 1-8-96

Sheet 1 of 1

2. Plant **Oconee Nuclear Station**
   Address **P.O. Box 1439, Seneca, S.C. 29679**

2a. Unit ☑ 1 ☐ 2 ☐ 3 ☐ Shared (specify Units_____)

3a. Work Order # 95048054-01
Repair Organization Job #

3. Work Performed By **Duke Power Company**
   Address **526 S. Church Street, Charlotte, NC 28201-1006**
   Type Code Symbol Stamp **N/A** Authorization No. **N/A** Expiration Date **N/A**

3b. NSM or MM # N/A

4. Identification of System RC Class 1

5. (a) Applicable Construction Code B31.7 1968 Edition, 6-68 Addenda, NO Code Cases
   (b) Applicable Edition of Section XI Utilized for Repairs or Replacements 1989, No Addenda

6. Identification of Components Repaired or Replaced and Replacement Components

	Column 1	Column 2	Column 3	Column 4	Column 5	Col. 6	Column 7	Column 8
	Name of Component	Name of Manufacturer	Manufacturer Serial Number	National Board Number	Other Identification	Year Built	Repaired, Replaced, or Replacement	ASME Code Stamped (yes or no)
A	Bolting	General Nuclear	1599, 1876, 1689 1843, 1680, 1910 1886, 1918	N/A	HH BG37	N/A	☐ Repaired ☐ Replaced ☑ Replacement	☑ No ☐ Yes
B	Segment Ring	N/A	N/A	N/A	N/A	N/A	☐ Repaired ☐ Replaced ☑ Replacement	☑ No ☐ Yes
C							☐ Repaired ☐ Replaced ☐ Replacement	☐ No ☐ Yes
D							☐ Repaired ☐ Replaced ☐ Replacement	☐ No ☐ Yes
E							☐ Repaired ☐ Replaced ☐ Replacement	☐ No ☐ Yes
F							☐ Repaired ☐ Replaced ☐ Replacement	☐ No ☐ Yes

Form NIS-2 (Back)

NOTE: Supplemental sheets in form of lists, sketches, or drawings may be used, provided (1) size is 8 1/2 in. x 11 in. (2) information in items 1 through 6 on this report is included on each sheet, and (3) each sheet is numbered and the number of sheets is recorded at the top of this form.

7. Description of Work Replaced bolting CRDM nozzle # 62

8. Test Conducted: ☐ Hydrostatic ☐ Pneumatic ☑ Nominal Operating Pressure ☐ Other ☐ Exempt

Pressure	2200 psig	Test Temp.	°F
Pressure	psig	Test Temp.	°F
Pressure	psig	Test Temp.	°F

9. Remarks

(Applicable Manufacturer's Data Records to be Attached)

CERTIFICATE OF COMPLIANCE

We certify that the statements made in the report are correct and this **repair or replacement** conforms to the rules of the ASME Code, Section XI.

Type Code Symbol Stamp **N/A**

Certificate of Authorization No. **N/A** Expiration Date **N/A**

Signed C R Hansen Date 1-8, 19 96
Owner or Owner's Designee, Title

CERTIFICATE OF INSERVICE INSPECTION

I, the undersigned, holding a valid commission issued by the National Board of Boiler and Pressure Vessel Inspectors and the State or Providence of N. C. and employed by **HSBI and I Company of Hartford Connecticut** have inspected the components described in this Owner's Report during the period 11-6-95 to 1-11-96; and state that to the best of my knowledge and belief, the Owner has performed examinations and taken corrective measures described in this Owner's Report in accordance with the requirements of the ASME Code, Section XI.

By signing this certificate, neither the Inspector nor his employer makes any warranty, expressed or implied, concerning the examinations and corrective measures described in this Owner's Report. Furthermore, neither the Inspector nor his employer shall be liable in any manner for any personal injury or property damage or a loss of any kind arising from or connected with this inspection.

MB Chapman Commissions NC 914
Inspector's Signature National Board, State, Providence and Endorsements

Date 1-11, 1996

Form 401463 (2-95)

FORM NIS-2 OWNER'S REPORT FOR REPAIRS OR REPLACEMENTS
As Required By The Provisions Of The ASME Code Section XI

1. Owner **Duke Power Company**
   Address **526 S. Church Street, Charlotte, NC 28201-1006**

1a. Date 1-8-96

Sheet 1 of 1

2. Plant **Oconee Nuclear Station**
   Address **P.O. Box 1439, Seneca, S.C. 29679**

2a. Unit ☑ 1 ☐ 2 ☐ 3 ☐ Shared (specify Units_____)

3a. Work Order # 95083923-01
Repair Organization Job #

3. Work Performed By **Duke Power Company**
   Address **526 S. Church Street, Charlotte, NC 28201-1006**
   Type Code Symbol Stamp **N/A** Authorization No. **N/A** Expiration Date **N/A**

3b. NSM or MM # N/A

4. Identification of System RC Class 1

5. (a) Applicable Construction Code B31.7 19 68 Edition, 6-68 Addenda, NO Code Cases
   (b) Applicable Edition of Section XI Utilized for Repairs or Replacements 1989, No Addenda

6. Identification of Components Repaired or Replaced and Replacement Components

	Column 1	Column 2	Column 3	Column 4	Column 5	Col. 6	Column 7	Column 8
	Name of Component	Name of Manufacturer	Manufacturer Serial Number	National Board Number	Other Identification	Year Built	Repaired, Replaced, or Replacement	ASME Code Stamped (yes or no)
A	Bolting	General Nuclear	1913, 1702, 1626, 1691, 1710, 1794, 1667, 1887	N/A	HT-BG37	N/A	☐ Repaired ☐ Replaced ☑ Replacement	☑ No ☐ Yes
B	Segment Ring	General Nuclear	N/A	N/A	N/A	N/A	☐ Repaired ☐ Replaced ☑ Replacement	☑ No ☐ Yes
C							☐ Repaired ☐ Replaced ☐ Replacement	☐ No ☐ Yes
D							☐ Repaired ☐ Replaced ☐ Replacement	☐ No ☐ Yes
E							☐ Repaired ☐ Replaced ☐ Replacement	☐ No ☐ Yes
F							☐ Repaired ☐ Replaced ☐ Replacement	☐ No ☐ Yes

Form NIS-2 (Back)

NOTE: Supplemental sheets in form of lists, sketches, or drawings may be used, provided (1) size is 8 1/2 in. x 11 in. (2) information in items 1 through 6 on this report is included on each sheet, and (3) each sheet is numbered and the number of sheets is recorded at the top of this form.

7. Description of Work Replaced bolting CRDM nozzle # 2

8. Test Conducted: ☐ Hydrostatic ☐ Pneumatic ☑ Nominal Operating Pressure ☐ Other ☐ Exempt

Pressure	2200 psig	Test Temp.	°F
Pressure	psig	Test Temp.	°F
Pressure	psig	Test Temp.	°F

9. Remarks

(Applicable Manufacturer's Data Records to be Attached)

CERTIFICATE OF COMPLIANCE

We certify that the statements made in the report are correct and this **repair or replacement** conforms to the rules of the ASME Code, Section XI.

Type Code Symbol Stamp **N/A**

Certificate of Authorization No. **N/A** Expiration Date **N/A**

Signed C R Hensen Date 1-8, 1996
Owner or Owner's Designee, Title

CERTIFICATE OF INSERVICE INSPECTION

I, the undersigned, holding a valid commission issued by the National Board of Boiler and Pressure Vessel Inspectors and the State or Providence of N.C and employed by **HSBI and I Company of Hartford Connecticut** have inspected the components described in this Owner's Report during the period 11-6-95 to 1-11-96; and state that to the best of my knowledge and belief, the Owner has performed examinations and taken corrective measures described in this Owner's Report in accordance with the requirements of the ASME Code, Section XI.

By signing this certificate, neither the Inspector nor his employer makes any warranty, expressed or implied, concerning the examinations and corrective measures described in this Owner's Report. Furthermore, neither the Inspector nor his employer shall be liable in any manner for any personal injury or property damage or a loss of any kind arising from or connected with this inspection.

M B Chapman Commissions NC914
Inspector's Signature National Board, State, Providence and Endorsements

Date 1-11, 1996

Form 401463 (2-95)

FORM NIS-2 OWNER'S REPORT FOR REPAIRS OR REPLACEMENTS
As Required By The Provisions Of The ASME Code Section XI

1. Owner **Duke Power Company**
   Address **526 S. Church Street, Charlotte, NC 28201-1006**

1a. Date 1-8-96

Sheet 1 of 1

2. Plant **Oconee Nuclear Station**
   Address **P.O. Box 1439, Seneca, S.C. 29679**

2a. Unit ☑ 1 ☐ 2 ☐ 3 ☐ Shared (specify Units_____)

3a. Work Order # 9504772/-01
Repair Organization Job #

3. Work Performed By **Duke Power Company**
   Address **526 S. Church Street, Charlotte, NC 28201-1006**
   Type Code Symbol Stamp **N/A** Authorization No. **N/A** Expiration Date **N/A**

3b. NSM or MM # N/A

4. Identification of System RC Class 1

5. (a) Applicable Construction Code B31.7 19 68 Edition, 6-68 Addenda, NO Code Cases
   (b) Applicable Edition of Section XI Utilized for Repairs or Replacements 1989, No Addenda

6. Identification of Components Repaired or Replaced and Replacement Components

	Column 1	Column 2	Column 3	Column 4	Column 5	Col. 6	Column 7	Column 8
	Name of Component	Name of Manufacturer	Manufacturer Serial Number	National Board Number	Other Identification	Year Built	Repaired, Replaced, or Replacement	ASME Code Stamped (yes or no)
A	Bolting	General Nuclear	1561, 1826, 1644 1647, 1698, 1824 1840, 1806	N/A	HT # BG37	N/A	☐ Repaired ☐ Replaced ☑ Replacement	☑ No ☐ Yes
B	Segment Ring	General Nuclear	N/A	N/A	N/A	N/A	☐ Repaired ☐ Replaced ☑ Replacement	☑ No ☐ Yes
C							☐ Repaired ☐ Replaced ☐ Replacement	☐ No ☐ Yes
D							☐ Repaired ☐ Replaced ☐ Replacement	☐ No ☐ Yes
E							☐ Repaired ☐ Replaced ☐ Replacement	☐ No ☐ Yes
F							☐ Repaired ☐ Replaced ☐ Replacement	☐ No ☐ Yes

Form NIS-2 (Back)

NOTE: Supplemental sheets in form of lists, sketches, or drawings may be used, provided (1) size is 8 1/2 in. x 11 in. (2) information in items 1 through 6 on this report is included on each sheet, and (3) each sheet is numbered and the number of sheets is recorded at the top of this form.

7. Description of Work Replaced bolting CRDM nozzle # 58

8. Test Conducted: ☐ Hydrostatic ☐ Pneumatic ☑ Nominal Operating Pressure ☐ Other ☐ Exempt

Pressure	2200 psig	Test Temp.	°F
Pressure	psig	Test Temp.	°F
Pressure	psig	Test Temp.	°F

9. Remarks

(Applicable Manufacturer's Data Records to be Attached)

CERTIFICATE OF COMPLIANCE

We certify that the statements made in the report are correct and this **repair or replacement** conforms to the rules of the ASME Code, Section XI.

Type Code Symbol Stamp **N/A**

Certificate of Authorization No. **N/A** Expiration Date **N/A**

Signed C R Henson Date 1-8, 19 96
Owner or Owner's Designee, Title

CERTIFICATE OF INSERVICE INSPECTION

I, the undersigned, holding a valid commission issued by the National Board of Boiler and Pressure Vessel Inspectors and the State or Providence of N. C. and employed by **HSBI and I Company of Hartford Connecticut** have inspected the components described in this Owner's Report during the period 11-6-95 to 1-11-96; and state that to the best of my knowledge and belief, the Owner has performed examinations and taken corrective measures described in this Owner's Report in accordance with the requirements of the ASME Code, Section XI.

By signing this certificate, neither the Inspector nor his employer makes any warranty, expressed or implied, concerning the examinations and corrective measures described in this Owner's Report. Furthermore, neither the Inspector nor his employer shall be liable in any manner for any personal injury or property damage or a loss of any kind arising from or connected with this inspection.

M B Chapman Commissions NC914
Inspector's Signature National Board, State, Providence and Endorsements

Date 1-11, 19 96

Form 401463 (2-95)

FORM NIS-2 OWNER'S REPORT FOR REPAIRS OR REPLACEMENTS
As Required By The Provisions Of The ASME Code Section XI

1. Owner **Duke Power Company**
   Address **526 S. Church Street, Charlotte, NC 28201-1006**

1a. Date 1-22-96

Sheet 1 of 1

2. Plant **Oconee Nuclear Station**
   Address **P.O. Box 1439, Seneca, S.C. 29679**

2a. Unit ☑ 1 ☐ 2 ☐ 3 ☐ Shared (specify Units_____)

3a. Work Order # 95055899-03
Repair Organization Job #

3. Work Performed By **Duke Power Company**
   Address **526 S. Church Street, Charlotte, NC 28201-1006**
   Type Code Symbol Stamp **N/A** Authorization No. **N/A** Expiration Date **N/A**

3b. NSM or MM # N/A

4. Identification of System RC Class 1

5. (a) Applicable Construction Code ASME III 1969 Edition, NO Addenda, 1332-2, -3, -4; 1339-1 Code Cases
   (b) Applicable Edition of Section XI Utilized for Repairs or Replacements 1989, No Addenda 1336; 1359-1, 1338-3 and 1

6. Identification of Components Repaired or Replaced and Replacement Components

	Column 1	Column 2	Column 3	Column 4	Column 5	Col. 6	Column 7	Column 8
	Name of Component	Name of Manufacturer	Manufacturer Serial Number	National Board Number	Other Identification	Year Built	Repaired, Replaced, or Replacement	ASME Code Stamped (yes or no)
A	Bolting	TEXAS Bolt	N/A	N/A	N/A	N/A	☐ Repaired ☐ Replaced ☑ Replacement	☑ No ☐ Yes
B							☐ Repaired ☐ Replaced ☐ Replacement	☐ No ☐ Yes
C							☐ Repaired ☐ Replaced ☐ Replacement	☐ No ☐ Yes
D							☐ Repaired ☐ Replaced ☐ Replacement	☐ No ☐ Yes
E							☐ Repaired ☐ Replaced ☐ Replacement	☐ No ☐ Yes
F							☐ Repaired ☐ Replaced ☐ Replacement	☐ No ☐ Yes

Form NIS-2 (Back)

NOTE: Supplemental sheets in form of lists, sketches, or drawings may be used, provided (1) size is 8 1/2 in. x 11 in. (2) information in items 1 through 6 on this report is included on each sheet, and (3) each sheet is numbered and the number of sheets is recorded at the top of this form.

7. Description of Work Replaced bolting "B" OTSG Lower Primary Manway

8. Test Conducted: ☐ Hydrostatic ☐ Pneumatic ☐ Nominal Operating Pressure ☐ Other ☑ Exempt

Pressure _____ psig Test Temp. _____ °F

Pressure _____ psig Test Temp. _____ °F

Pressure _____ psig Test Temp. _____ °F

9. Remarks _____

(Applicable Manufacturer's Data Records to be Attached)

CERTIFICATE OF COMPLIANCE

We certify that the statements made in the report are correct and this **repair or replacement** conforms to the rules of the ASME Code, Section XI.

Type Code Symbol Stamp **N/A**

Certificate of Authorization No. **N/A** Expiration Date **N/A**

Signed C.R. Henson QA Specialist Date 1-22, 19 96
Owner or Owner's Designee, Title

CERTIFICATE OF INSERVICE INSPECTION

I, the undersigned, holding a valid commission issued by the National Board of Boiler and Pressure Vessel Inspectors and the State or Providence of N.C. and employed by **HSBI and I Company of Hartford Connecticut** have inspected the components described in this Owner's Report during the period 11-26-95 to 1-22-96; and state that to the best of my knowledge and belief, the Owner has performed examinations and taken corrective measures described in this Owner's Report in accordance with the requirements of the ASME Code, Section XI.

By signing this certificate, neither the Inspector nor his employer makes any warranty, expressed or implied, concerning the examinations and corrective measures described in this Owner's Report. Furthermore, neither the Inspector nor his employer shall be liable in any manner for any personal injury or property damage or a loss of any kind arising from or connected with this inspection.

S M B Chapman Commissions NC914
Inspector's Signature National Board, State, Providence and Endorsements

Date 1-22, 1996

Form 401463 (2-93)

FORM NIS-2 OWNER'S REPORT FOR REPAIRS OR REPLACEMENTS
As Required By The Provisions Of The ASME Code Section XI

1. Owner **Duke Power Company**
   Address **526 S. Church Street, Charlotte, NC 28201-1006**

1a. Date 12-2-95

Sheet 1 of 1

2. Plant **Oconee Nuclear Station**
   Address **P.O. Box 1439, Seneca, S.C. 29679**

2a. Unit ☑ 1 ☐ 2 ☐ 3 ☐ Shared (specify Units _____)

3. Work Performed By **Duke Power Company**
   Address **526 S. Church Street, Charlotte, NC 28201-1006**
   Type Code Symbol Stamp **N/A** Authorization No. **N/A** Expiration Date **N/A**

3a. Work Order # 95068597
Repair Organization Job #

3b. ~~NSM~~ or MM # 8497

4. Identification of System FDW Class 2

5. (a) Applicable Construction Code B31.1 19 95 Edition, 6-67 Addenda, NO Code Cases
   (b) Applicable Edition of Section XI Utilized for Repairs or Replacements 1989, No Addenda

6. Identification of Components Repaired or Replaced and Replacement Components

	Column 1	Column 2	Column 3	Column 4	Column 5	Col. 6	Column 7	Column 8
	Name of Component	Name of Manufacturer	Manufacturer Serial Number	National Board Number	Other Identification	Year Built	Repaired, Replaced, or Replacement	ASME Code Stamped (yes or no)
A	Bolting	N/A	N/A	N/A	N/A	N/A	☐ Repaired ☑ Replaced ☐ Replacement	☑ No ☐ Yes
B	Bolting	Texas Bolt	N/A	N/A	N/A	N/A	☐ Repaired ☐ Replaced ☑ Replacement	☑ No ☐ Yes
C	Bolting	US Bolt	N/A	N/A	N/A	N/A	☐ Repaired ☐ Replaced ☑ Replacement	☑ No ☐ Yes
D	Bolting	B&W	N/A	N/A	N/A	N/A	☐ Repaired ☐ Replaced ☑ Replacement	☑ No ☐ Yes
E							☐ Repaired ☐ Replaced ☐ Replacement	☐ No ☐ Yes
F							☐ Repaired ☐ Replaced ☐ Replacement	☐ No ☐ Yes

Form NIS-2 (Back)

NOTE: Supplemental sheets in form of lists, sketches, or drawings may be used, provided (1) size is 8 1/2 in. x 11 in. (2) information in items 1 through 6 on this report is included on each sheet, and (3) each sheet is numbered and the number of sheets is recorded at the top of this form.

7. Description of Work Replaced bolting 1B OTSG MAIN FDW RISER #32

8. Test Conducted: ☐ Hydrostatic ☐ Pneumatic ☐ Nominal Operating Pressure ☑ Other ☑ Exempt
CRH 1-25-96

Pressure _____ psig Test Temp. _____ °F

Pressure _____ psig Test Temp. _____ °F

Pressure _____ psig Test Temp. _____ °F

9. Remarks _____

(Applicable Manufacturer's Data Records to be Attached)

CERTIFICATE OF COMPLIANCE

We certify that the statements made in the report are correct and this **repair or replacement** conforms to the rules of the ASME Code, Section XI.

Type Code Symbol Stamp **N/A**

Certificate of Authorization No. **N/A** Expiration Date **N/A**

Signed C R Hanson QA Specialist Date 1-25, 19 96
Owner or Owner's Designee, Title

CERTIFICATE OF INSERVICE INSPECTION

I, the undersigned, holding a valid commission issued by the National Board of Boiler and Pressure Vessel Inspectors and the State or Providence of N. C. and employed by **HSBI and I Company of Hartford Connecticut** have inspected the components described in this Owner's Report during the period 11-17-95 to 1-25-96; and state that to the best of my knowledge and belief, the Owner has performed examinations and taken corrective measures described in this Owner's Report in accordance with the requirements of the ASME Code, Section XI.

By signing this certificate, neither the Inspector nor his employer makes any warranty, expressed or implied, concerning the examinations and corrective measures described in this Owner's Report. Furthermore, neither the Inspector nor his employer shall be liable in any manner for any personal injury or property damage or a loss of any kind arising from or connected with this inspection.

M M S Chapman Commissions NC914
Inspector's Signature National Board, State, Providence and Endorsements

Date 1-25, 19 96

Form 401463 (1/96)

FORM NIS-2 OWNER'S REPORT FOR REPAIRS OR REPLACEMENTS
As Required By The Provisions Of The ASME Code Section XI

1. Owner **Duke Power Company**
   Address **526 S. Church Street, Charlotte, NC 28201-1006**

1a. Date 12-3-95

Sheet 1 of 1

2. Plant **Oconee Nuclear Station**
   Address **P.O. Box 1439, Seneca, S.C. 29679**

2a. Unit ☒ 1 ☐ 2 ☐ 3 ☐ Shared (specify Units_____)

3. Work Performed By **Duke Power Company**
   Address **526 S. Church Street, Charlotte, NC 28201-1006**
   Type Code Symbol Stamp **N/A** Authorization No. **N/A** Expiration Date **N/A**

3a. Work Order # 95068596-03
Repair Organization Job #

3b. ~~NSM~~ or MM # 8496

4. Identification of System FDW Class 2

5. (a) Applicable Construction Code B31.1 1967 Edition, 6-67 Addenda, NO Code Cases
   (b) Applicable Edition of Section XI Utilized for Repairs or Replacements 1989, No Addenda

6. Identification of Components Repaired or Replaced and Replacement Components

	Column 1	Column 2	Column 3	Column 4	Column 5	Col. 6	Column 7	Column 8
	Name of Component	Name of Manufacturer	Manufacturer Serial Number	National Board Number	Other Identification	Year Built	Repaired, Replaced, or Replacement	ASME Code Stamped (yes or no)
A	Bolting	N/A	N/A	N/A	N/A	N/A	☐ Repaired ☒ Replaced ☐ Replacement	☒ No ☐ Yes
B	Bolting	Texas Bolt	N/A	N/A	N/A	N/A	☐ Repaired ☐ Replaced ☒ Replacement	☒ No ☐ Yes
C	Bolting	B & W	N/A	N/A	N/A	N/A	☐ Repaired ☐ Replaced ☒ Replacement	☒ No ☐ Yes
D	Bolting	U S Bolt	N/A	N/A	N/A	N/A	☐ Repaired ☐ Replaced ☒ Replacement	☒ No ☐ Yes
E							☐ Repaired ☐ Replaced ☒ Replacement	☐ No ☐ Yes
F							☐ Repaired ☐ Replaced ☐ Replacement	☐ No ☐ Yes

Form NIS-2 (Back)

NOTE: Supplemental sheets in form of lists, sketches, or drawings may be used, provided (1) size is 8 1/2 in. x 11 in. (2) information in items 1 through 6 on this report is included on each sheet, and (3) each sheet is numbered and the number of sheets is recorded at the top of this form.

7. Description of Work Replaced bolting 1B OTSG MAIN FDW RISER #1

8. Test Conducted: ☐ Hydrostatic ☐ Pneumatic ☐ Nominal Operating Pressure ☐ Other ☑ Exempt

Pressure	_____ psig	Test Temp.	_____ °F
Pressure	_____ psig	Test Temp.	_____ °F
Pressure	_____ psig	Test Temp.	_____ °F

9. Remarks _____

(Applicable Manufacturer's Data Records to be Attached)

CERTIFICATE OF COMPLIANCE

We certify that the statements made in the report are correct and this **repair or replacement** conforms to the rules of the ASME Code, Section XI.

Type Code Symbol Stamp **N/A**

Certificate of Authorization No. **N/A** Expiration Date **N/A**

Signed C.R. Henson QA Specialist Date 1-25, 19 96
Owner or Owner's Designee, Title

CERTIFICATE OF INSERVICE INSPECTION

I, the undersigned, holding a valid commission issued by the National Board of Boiler and Pressure Vessel Inspectors and the State or Providence of N.C. and employed by **HSBI and I Company of Hartford Connecticut** have inspected the components described in this Owner's Report during the period 11-17-95 to 1-25-96; and state that to the best of my knowledge and belief, the Owner has performed examinations and taken corrective measures described in this Owner's Report in accordance with the requirements of the ASME Code, Section XI.

By signing this certificate, neither the Inspector nor his employer makes any warranty, expressed or implied, concerning the examinations and corrective measures described in this Owner's Report. Furthermore, neither the Inspector nor his employer shall be liable in any manner for any personal injury or property damage or a loss of any kind arising from or connected with this inspection.

M.G. Chapman Commissions NC914
Inspector's Signature National Board, State, Providence and Endorsements

Date 1-25, 1996

Form 401463 (2-95)

FORM NIS-2 OWNER'S REPORT FOR REPAIRS OR REPLACEMENTS
As Required By The Provisions Of The ASME Code Section XI

1. Owner **Duke Power Company**
   Address **526 S. Church Street, Charlotte, NC 28201-1006**

1a. Date 11-29-96

Sheet 1 of 1

2. Plant **Oconee Nuclear Station**
   Address **P.O. Box 1439, Seneca, S.C. 29679**

2a. Unit ☑ 1 ☐ 2 ☐ 3 ☐ Shared (specify Units_____)

3. Work Performed By **Duke Power Company**
   Address **526 S. Church Street, Charlotte, NC 28201-1006**
   Type Code Symbol Stamp **N/A** Authorization No. **N/A** Expiration Date **N/A**

3a. Work Order # 96081775-01
Repair Organization Job #

3b. NSM or MM # NA

4. Identification of System RC Class 1

5. (a) Applicable Construction Code B31.7 19 68 Edition, 6-68 Addenda, NO Code Cases
   (b) Applicable Edition of Section XI Utilized for Repairs or Replacements 1989, No Addenda

6. Identification of Components Repaired or Replaced and Replacement Components

	Column 1	Column 2	Column 3	Column 4	Column 5	Col. 6	Column 7	Column 8
	Name of Component	**Name of Manufacturer**	**Manufacturer Serial Number**	**National Board Number**	**Other Identification**	**Year Built**	**Repaired, Replaced, or Replacement**	**ASME Code Stamped (yes or no)**
A	CRD CM OF06	DIAMOND POWER	NA	NA	CRDM #10	NA	☐ Repaired ☐ Replaced ☑ Replacement	☑ No ☐ Yes
B							☐ Repaired ☐ Replaced ☐ Replacement	☐ No ☐ Yes
C							☐ Repaired ☐ Replaced ☐ Replacement	☐ No ☐ Yes
D							☐ Repaired ☐ Replaced ☐ Replacement	☐ No ☐ Yes
E							☐ Repaired ☐ Replaced ☐ Replacement	☐ No ☐ Yes
F							☐ Repaired ☐ Replaced ☐ Replacement	☐ No ☐ Yes

Form NIS-2 (Back)

NOTE: Supplemental sheets in form of lists, sketches, or drawings may be used, provided (1) size is 8 1/2 in. x 11 in. (2) information in items 1 through 6 on this report is included on each sheet, and (3) each sheet is numbered and the number of sheets is recorded at the top of this form.

7. Description of Work Replaced hold down bolting CRDM #10

8. Test Conducted: ☐ Hydrostatic ☐ Pneumatic ☐ Nominal Operating Pressure ☐ Other ☑ Exempt

Pressure	_____ psig	Test Temp.	_____ °F
Pressure	_____ psig	Test Temp.	_____ °F
Pressure	_____ psig	Test Temp.	_____ °F

9. Remarks _____

(Applicable Manufacturer's Data Records to be Attached)

CERTIFICATE OF COMPLIANCE

We certify that the statements made in the report are correct and this **repair or replacement** conforms to the rules of the ASME Code, Section XI.

Type Code Symbol Stamp **N/A**

Certificate of Authorization No. **N/A** Expiration Date **N/A**

Signed C.R. Henson QA Specialist Date 11-29, 19 96
Owner or Owner's Designee, Title

CERTIFICATE OF INSERVICE INSPECTION

I, the undersigned, holding a valid commission issued by the National Board of Boiler and Pressure Vessel Inspectors and the State or Providence of NC. and employed by **HSBI and I Company of Hartford Connecticut** have inspected the components described in this Owner's Report during the period 10-28-96 to 12-2-96; and state that to the best of my knowledge and belief, the Owner has performed examinations and taken corrective measures described in this Owner's Report in accordance with the requirements of the ASME Code, Section XI.

By signing this certificate, neither the Inspector nor his employer makes any warranty, expressed or implied, concerning the examinations and corrective measures described in this Owner's Report. Furthermore, neither the Inspector nor his employer shall be liable in any manner for any personal injury or property damage or a loss of any kind arising from or connected with this inspection.

M.B. Chapman Commissions NC 914
Inspector's Signature National Board, State, Providence and Endorsements

Date 12-2, 1996

Form 401463 (2-95)

FORM NIS-2 OWNER'S REPORT FOR REPAIRS OR REPLACEMENTS
As Required By The Provisions Of The ASME Code Section XI

1. Owner **Duke Power Company**
   Address **526 S. Church Street, Charlotte, NC 28201-1006**

1a. Date 11-29-96

Sheet 1 of 1

2. Plant **Oconee Nuclear Station**
   Address **P.O. Box 1439, Seneca, S.C. 29679**

2a. Unit ☒ 1 ☐ 2 ☐ 3 ☐ Shared (specify Units _____)

3. Work Performed By **Duke Power Company**
   Address **526 S. Church Street, Charlotte, NC 28201-1006**
   Type Code Symbol Stamp **N/A** Authorization No. **N/A** Expiration Date **N/A**

3a. Work Order # 96081946-01
Repair Organization Job #

3b. NSM or MM # NA

4. Identification of System RC Class 1

5. (a) Applicable Construction Code B31.7 1968 Edition, 6-68 Addenda, N/A Code Cases
   (b) Applicable Edition of Section XI Utilized for Repairs or Replacements 1989, No Addenda

6. Identification of Components Repaired or Replaced and Replacement Components

	Column 1	Column 2	Column 3	Column 4	Column 5	Col. 6	Column 7	Column 8
	Name of Component	Name of Manufacturer	Manufacturer Serial Number	National Board Number	Other Identification	Year Built	Repaired, Replaced, or Replacement	ASME Code Stamped (yes or no)
A	CRD CM OK05	DIAMOND POWER	N/A	N/A	CRDM # 20	N/A	☐ Repaired ☐ Replaced ☒ Replacement	☒ No ☐ Yes
B							☐ Repaired ☐ Replaced ☐ Replacement	☐ No ☐ Yes
C							☐ Repaired ☐ Replaced ☐ Replacement	☐ No ☐ Yes
D							☐ Repaired ☐ Replaced ☐ Replacement	☐ No ☐ Yes
E							☐ Repaired ☐ Replaced ☐ Replacement	☐ No ☐ Yes
F							☐ Repaired ☐ Replaced ☐ Replacement	☐ No ☐ Yes

Form NIS-2 (Back)

NOTE: Supplemental sheets in form of lists, sketches, or drawings may be used, provided (1) size is 8 1/2 in. x 11 in. (2) information in items 1 through 6 on this report is included on each sheet, and (3) each sheet is numbered and the number of sheets is recorded at the top of this form.

7. Description of Work Replaced CRDM # 20 hold down bolting

8. Test Conducted: ☐ Hydrostatic ☐ Pneumatic ☐ Nominal Operating Pressure ☐ Other ☑ Exempt

Pressure	_____ psig	Test Temp.	_____ °F
Pressure	_____ psig	Test Temp.	_____ °F
Pressure	_____ psig	Test Temp.	_____ °F

9. Remarks _____

(Applicable Manufacturer's Data Records to be Attached)

CERTIFICATE OF COMPLIANCE

We certify that the statements made in the report are correct and this **repair or replacement** conforms to the rules of the ASME Code, Section XI.

Type Code Symbol Stamp **N/A**

Certificate of Authorization No. **N/A** Expiration Date **N/A**

Signed CR Hinson QA Specialist Date 11-29, 19 96
Owner or Owner's Designee, Title

CERTIFICATE OF INSERVICE INSPECTION

I, the undersigned, holding a valid commission issued by the National Board of Boiler and Pressure Vessel Inspectors and the State or Providence of N.C and employed by **HSBI and I Company of Hartford Connecticut** have inspected the components described in this Owner's Report during the period 10-28-96 to 12-2-96; and state that to the best of my knowledge and belief, the Owner has performed examinations and taken corrective measures described in this Owner's Report in accordance with the requirements of the ASME Code, Section XI.

By signing this certificate, neither the Inspector nor his employer makes any warranty, expressed or implied, concerning the examinations and corrective measures described in this Owner's Report. Furthermore, neither the Inspector nor his employer shall be liable in any manner for any personal injury or property damage or a loss of any kind arising from or connected with this inspection.

MB Chapman Commissions NC 914
Inspector's Signature National Board, State, Providence and Endorsements

Date 12-2, 19 96

Form 401463 (2-95)

FORM NIS-2 OWNER'S REPORT FOR REPAIRS OR REPLACEMENTS
As Required By The Provisions Of The ASME Code Section XI

1. Owner **Duke Power Company**
   Address **526 S. Church Street, Charlotte, NC 28201-1006**

1a. Date 11-29-96

Sheet 1 of 1

2. Plant **Oconee Nuclear Station**
   Address **P.O. Box 1439, Seneca, S.C. 29679**

2a. Unit ☑ 1 ☐ 2 ☐ 3 ☐ Shared (specify Units_____)

3. Work Performed By **Duke Power Company**
   Address **526 S. Church Street, Charlotte, NC 28201-1006**
   Type Code Symbol Stamp **N/A** Authorization No. **N/A** Expiration Date **N/A**

3a. Work Order # 96021554-01
Repair Organization Job #

3b. NSM or MM # NA

4. Identification of System RC Class 1

5. (a) Applicable Construction Code B31.7 1968 Edition, 6-68 Addenda, NO Code Cases
   (b) Applicable Edition of Section XI Utilized for Repairs or Replacements 1989, No Addenda

6. Identification of Components Repaired or Replaced and Replacement Components

	Column 1	Column 2	Column 3	Column 4	Column 5	Col. 6	Column 7	Column 8
	Name of Component	Name of Manufacturer	Manufacturer Serial Number	National Board Number	Other Identification	Year Built	Repaired, Replaced, or Replacement	ASME Code Stamped (yes or no)
A	CRD CM OK13	DIAMOND POWER	NA	NA	CRDM #41	NA	☐ Repaired ☐ Replaced ☑ Replacement	☑ No ☐ Yes
B							☐ Repaired ☐ Replaced ☐ Replacement	☐ No ☐ Yes
C							☐ Repaired ☐ Replaced ☐ Replacement	☐ No ☐ Yes
D							☐ Repaired ☐ Replaced ☐ Replacement	☐ No ☐ Yes
E							☐ Repaired ☐ Replaced ☐ Replacement	☐ No ☐ Yes
F							☐ Repaired ☐ Replaced ☐ Replacement	☐ No ☐ Yes

Form NIS-2 (Back)

NOTE: Supplemental sheets in form of lists, sketches, or drawings may be used, provided (1) size is 8 1/2 in. x 11 in. (2) information in items 1 through 6 on this report is included on each sheet, and (3) each sheet is numbered and the number of sheets is recorded at the top of this form.

7. Description of Work Replaced hold down bolting CRDM # 41

8. Test Conducted: ☐ Hydrostatic ☐ Pneumatic ☐ Nominal Operating Pressure ☐ Other ☑ Exempt

Pressure	_____ psig	Test Temp.	_____ °F
Pressure	_____ psig	Test Temp.	_____ °F
Pressure	_____ psig	Test Temp.	_____ °F

9. Remarks _____

(Applicable Manufacturer's Data Records to be Attached)

CERTIFICATE OF COMPLIANCE

We certify that the statements made in the report are correct and this **repair or replacement** conforms to the rules of the ASME Code, Section XI.

Type Code Symbol Stamp **N/A**

Certificate of Authorization No. **N/A** Expiration Date **N/A**

Signed CR Hewson QA Specialist Date 11-29, 19 96
Owner or Owner's Designee, Title

CERTIFICATE OF INSERVICE INSPECTION

I, the undersigned, holding a valid commission issued by the National Board of Boiler and Pressure Vessel Inspectors and the State or Providence of N.C. and employed by **HSBI and I Company of Hartford Connecticut** have inspected the components described in this Owner's Report during the period 10-28-96 to 12-2-96; and state that to the best of my knowledge and belief, the Owner has performed examinations and taken corrective measures described in this Owner's Report in accordance with the requirements of the ASME Code, Section XI.

By signing this certificate, neither the Inspector nor his employer makes any warranty, expressed or implied, concerning the examinations and corrective measures described in this Owner's Report. Furthermore, neither the Inspector nor his employer shall be liable in any manner for any personal injury or property damage or a loss of any kind arising from or connected with this inspection.

MB Chapman Commissions NC914
Inspector's Signature National Board, State, Providence and Endorsements

Date 12-2, 19 96

Form 401463 (2-95)

FORM NIS-2 OWNER'S REPORT FOR REPAIRS OR REPLACEMENTS
As Required By The Provisions Of The ASME Code Section XI

1. Owner **Duke Power Company**
   Address **526 S. Church Street, Charlotte, NC 28201-1006**

1a. Date 12-11-97

Sheet 1 of 1

2. Plant **Oconee Nuclear Station**
   Address **P.O. Box 1439, Seneca, S.C. 29679**

2a. Unit ☒ 1 ☐ 2 ☐ 3 ☐ Shared (specify Units_____)

3. Work Performed By **Duke Power Company**
   Address **526 S. Church Street, Charlotte, NC 28201-1006**
   Type Code Symbol Stamp **N/A** Authorization No. **N/A** Expiration Date **N/A**

3a. Work Order # 97066498
Repair Organization Job #

3b. NSM or MM # —

4. Identification of System LP Class B

5. (a) Applicable Construction Code B31.7 1968 Edition, 6-68 Addenda, — Code Cases
   (b) Applicable Edition of Section XI Utilized for Repairs or Replacements 1989, No Addenda

6. Identification of Components Repaired or Replaced and Replacement Components

	Column 1	Column 2	Column 3	Column 4	Column 5	Col. 6	Column 7	Column 8
	Name of Component	Name of Manufacturer	Manufacturer Serial Number	National Board Number	Other Identification	Year Built	Repaired, Replaced, or Replacement	ASME Code Stamped (yes or no)
A	Valve 1LP-20	Powell	Unavailable	—	—	—	☐ Repaired ☐ Replaced ☒ Replacement	☒ No ☐ Yes
B							☐ Repaired ☐ Replaced ☐ Replacement	☐ No ☐ Yes
C							☐ Repaired ☐ Replaced ☐ Replacement	☐ No ☐ Yes
D							☐ Repaired ☐ Replaced ☐ Replacement	☐ No ☐ Yes
E							☐ Repaired ☐ Replaced ☐ Replacement	☐ No ☐ Yes
F							☐ Repaired ☐ Replaced ☐ Replacement	☐ No ☐ Yes

Form NIS-2 (Back)

NOTE: Supplemental sheets in form of lists, sketches, or drawings may be used, provided (1) size is 8 1/2 in. x 11 in. (2) information in items 1 through 6 on this report is included on each sheet, and (3) each sheet is numbered and the number of sheets is recorded at the top of this form.

7. Description of Work Replaced Body/Bonnet nuts on ILP-20

8. Test Conducted: ☐ Hydrostatic ☐ Pneumatic ☐ Nominal Operating Pressure ☐ Other ☒ Exempt

Pressure _____ psig Test Temp. _____ °F

Pressure _____ psig Test Temp. _____ °F

Pressure _____ psig Test Temp. _____ °F

9. Remarks _____

(Applicable Manufacturer's Data Records to be Attached)

CERTIFICATE OF COMPLIANCE

We certify that the statements made in the report are correct and this **repair or replacement** conforms to the rules of the ASME Code, Section XI.

Type Code Symbol Stamp **N/A**

Certificate of Authorization No. **N/A** Expiration Date **N/A**

Signed Pitsohn QC Specialist Date 12-11, 1997
Owner or Owner's Designee, Title

CERTIFICATE OF INSERVICE INSPECTION

I, the undersigned, holding a valid commission issued by the National Board of Boiler and Pressure Vessel Inspectors and the State or Providence of N. C. and employed by **HSBI and I Company of Hartford Connecticut** have inspected the components described in this Owner's Report during the period 10-12-97 to 12-11-97; and state that to the best of my knowledge and belief, the Owner has performed examinations and taken corrective measures described in this Owner's Report in accordance with the requirements of the ASME Code, Section XI.

By signing this certificate, neither the Inspector nor his employer makes any warranty, expressed or implied, concerning the examinations and corrective measures described in this Owner's Report. Furthermore, neither the Inspector nor his employer shall be liable in any manner for any personal injury or property damage or a loss of any kind arising from or connected with this inspection.

MB Chapman Commissions NC914
Inspector's Signature National Board, State, Providence and Endorsements

Date 12-11, 1997

Form 401463 (2-95)

FORM NIS-2 OWNER'S REPORT FOR REPAIRS OR REPLACEMENTS
As Required By The Provisions Of The ASME Code Section XI

1. Owner **Duke Power Company**
   Address **526 S. Church Street, Charlotte, NC 28201-1006**

1a. Date 1-5-98

Sheet 1 of 1

2. Plant **Oconee Nuclear Station**
   Address **P.O. Box 1439, Seneca, S.C. 29679**

2a. Unit ☑ 1 ☐ 2 ☐ 3 ☐ Shared (specify Units_____)

3a. Work Order # 97083495-01
Repair Organization Job #

3. Work Performed By **Duke Power Company**
   Address **526 S. Church Street, Charlotte, NC 28201-1006**
   Type Code Symbol Stamp **N/A** Authorization No. **N/A** Expiration Date **N/A**

3b. NSM or MM # N/A

4. Identification of System LP Class B

5. (a) Applicable Construction Code B31.7 19 68 Edition, 6-68 Addenda, No Code Cases
   (b) Applicable Edition of Section XI Utilized for Repairs or Replacements 1989, No Addenda

6. Identification of Components Repaired or Replaced and Replacement Components

	Column 1	Column 2	Column 3	Column 4	Column 5	Col. 6	Column 7	Column 8
	Name of Component	Name of Manufacturer	Manufacturer Serial Number	National Board Number	Other Identification	Year Built	Repaired, Replaced, or Replacement	ASME Code Stamped (yes or no)
A	LP-95	ALOYCO WALWORTH	N/A	N/A	model N-2116-SP	N/A	☐ Repaired ☐ Replaced ☑ Replacement	☑ No ☐ Yes
B							☐ Repaired ☐ Replaced ☐ Replacement	☐ No ☐ Yes
C							☐ Repaired ☐ Replaced ☐ Replacement	☐ No ☐ Yes
D							☐ Repaired ☐ Replaced ☐ Replacement	☐ No ☐ Yes
E							☐ Repaired ☐ Replaced ☐ Replacement	☐ No ☐ Yes
F							☐ Repaired ☐ Replaced ☐ Replacement	☐ No ☐ Yes

Form NIS-2 (Back)

NOTE: Supplemental sheets in form of lists, sketches, or drawings may be used, provided (1) size is 8 1/2 in. x 11 in. (2) information in items 1 through 6 on this report is included on each sheet, and (3) each sheet is numbered and the number of sheets is recorded at the top of this form.

7. Description of Work Replaced body to bonnet studs valve 1LP-95

8. Test Conducted: ☐ Hydrostatic ☐ Pneumatic ☐ Nominal Operating Pressure ☐ Other ☑ Exempt

Pressure _____ psig Test Temp. _____ °F

Pressure _____ psig Test Temp. _____ °F

Pressure _____ psig Test Temp. _____ °F

9. Remarks _____

(Applicable Manufacturer's Data Records to be Attached)

CERTIFICATE OF COMPLIANCE

We certify that the statements made in the report are correct and this **repair or replacement** conforms to the rules of the ASME Code, Section XI.

Type Code Symbol Stamp **N/A**

Certificate of Authorization No. **N/A** Expiration Date **N/A**

Signed C R Henson QA SPECIALIST Date 1-6, 19 98
Owner or Owner's Designee, Title

CERTIFICATE OF INSERVICE INSPECTION

I, the undersigned, holding a valid commission issued by the National Board of Boiler and Pressure Vessel Inspectors and the State or Providence of N.C. and employed by **HSBI and I Company of Hartford Connecticut** have inspected the components described in this Owner's Report during the period 12-16-97 to 1-6-98; and state that to the best of my knowledge and belief, the Owner has performed examinations and taken corrective measures described in this Owner's Report in accordance with the requirements of the ASME Code, Section XI.

By signing this certificate, neither the Inspector nor his employer makes any warranty, expressed or implied, concerning the examinations and corrective measures described in this Owner's Report. Furthermore, neither the Inspector nor his employer shall be liable in any manner for any personal injury or property damage or a loss of any kind arising from or connected with this inspection.

M B Chapman Commissions NC914
Inspector's Signature National Board, State, Providence and Endorsements

Date ~~12~~ 1-6, 19 98
MBC 1-6-98

Form 401463 (2-95)

FORM NIS-2 OWNER'S REPORT FOR REPAIRS OR REPLACEMENTS
As Required By The Provisions Of The ASME Code Section XI

1. Owner **Duke Power Company**
   Address **526 S. Church Street, Charlotte, NC 28201-1006**

1a. Date 11-20-97

Sheet 1 of 1

2. Plant **Oconee Nuclear Station**
   Address **P.O. Box 1439, Seneca, S.C. 29679**

2a. Unit ☒ 1 ☐ 2 ☐ 3 ☐ Shared (specify Units_____)

3. Work Performed By **Duke Power Company**
   Address **526 S. Church Street, Charlotte, NC 28201-1006**
   Type Code Symbol Stamp **N/A** Authorization No. **N/A** Expiration Date **N/A**

3a. Work Order # 96036961
Repair Organization Job #

3b. NSM or MM # OE-9114

4. Identification of System CC Class B

5. (a) Applicable Construction Code B31.1 1967 Edition, — Addenda, — Code Cases
   (b) Applicable Edition of Section XI Utilized for Repairs or Replacements 1989, No Addenda

6. Identification of Components Repaired or Replaced and Replacement Components

	Column 1	Column 2	Column 3	Column 4	Column 5	Col. 6	Column 7	Column 8
	Name of Component	Name of Manufacturer	Manufacturer Serial Number	National Board Number	Other Identification	Year Built	Repaired, Replaced, or Replacement	ASME Code Stamped (yes or no)
A	Valve ICC-7	Fisher	60695-1A	294	—	92	☐ Repaired ☒ Replaced ☐ Replacement	☐ No ☒ Yes
B	Valve ICC-7	Tri Centric	93-2381-DIN-09	—	—	94	☐ Repaired ☐ Replaced ☒ Replacement	☒ No ☐ Yes
C							☐ Repaired ☐ Replaced ☐ Replacement	☐ No ☐ Yes
D							☐ Repaired ☐ Replaced ☐ Replacement	☐ No ☐ Yes
E							☐ Repaired ☐ Replaced ☐ Replacement	☐ No ☐ Yes
F							☐ Repaired ☐ Replaced ☐ Replacement	☐ No ☐ Yes

Form NIS-2 (Back)

NOTE: Supplemental sheets in form of lists, sketches, or drawings may be used, provided (1) size is 8 1/2 in. x 11 in. (2) information in items 1 through 6 on this report is included on each sheet, and (3) each sheet is numbered and the number of sheets is recorded at the top of this form.

7. Description of Work Replaced valve ICC-7 and In-line bolting

8. Test Conducted: ☐ Hydrostatic ☐ Pneumatic ☐ Nominal Operating Pressure ☑ Other ☐ Exempt

Pressure _____ psig Test Temp. _____ °F

Pressure _____ psig Test Temp. _____ °F

Pressure _____ psig Test Temp. _____ °F

9. Remarks VT-2 exam was performed and accepted using ASME Code Case N-522

(Applicable Manufacturer's Data Records to be Attached)

CERTIFICATE OF COMPLIANCE

We certify that the statements made in the report are correct and this **repair or replacement** conforms to the rules of the ASME Code, Section XI.

Type Code Symbol Stamp **N/A**

Certificate of Authorization No. **N/A** Expiration Date **N/A**

Signed D S Marron QA Spec Date 11-21, 19 97
Owner or Owner's Designee, Title

CERTIFICATE OF INSERVICE INSPECTION

I, the undersigned, holding a valid commission issued by the National Board of Boiler and Pressure Vessel Inspectors and the State or Providence of N.C. and employed by **HSBI and I Company of Hartford Connecticut** have inspected the components described in this Owner's Report during the period 7-28-97 to 1-6-98; and state that to the best of my knowledge and belief, the Owner has performed examinations and taken corrective measures described in this Owner's Report in accordance with the requirements of the ASME Code, Section XI.

By signing this certificate, neither the Inspector nor his employer makes any warranty, expressed or implied, concerning the examinations and corrective measures described in this Owner's Report. Furthermore, neither the Inspector nor his employer shall be liable in any manner for any personal injury or property damage or a loss of any kind arising from or connected with this inspection.

M B Chapman Commissions NC914
Inspector's Signature National Board, State, Providence and Endorsements

Date 1-6, 19 98

Form 401463 (2-95)

FORM NIS-2 OWNER'S REPORT FOR REPAIRS OR REPLACEMENTS
As Required By The Provisions Of The ASME Code Section XI

1. Owner **Duke Power Company**
   Address **526 S. Church Street, Charlotte, NC 28201-1006**

1a. Date 11-29-96

Sheet 1 of 1

2. Plant **Oconee Nuclear Station**
   Address **P.O. Box 1439, Seneca, S.C. 29679**

2a. Unit ☒ 1 ☐ 2 ☐ 3 ☐ Shared (specify Units_____)

3. Work Performed By **Duke Power Company**
   Address **526 S. Church Street, Charlotte, NC 28201-1006**
   Type Code Symbol Stamp **N/A** Authorization No. **N/A** Expiration Date **N/A**

3a. Work Order # 96081745-01
Repair Organization Job #

3b. NSM or MM # NA

4. Identification of System RC Class 1

5. (a) Applicable Construction Code B31.7 1968 Edition, 6-68 Addenda, NO Code Cases
   (b) Applicable Edition of Section XI Utilized for Repairs or Replacements 1989, No Addenda

6. Identification of Components Repaired or Replaced and Replacement Components

	Column 1	Column 2	Column 3	Column 4	Column 5	Col. 6	Column 7	Column 8
	Name of Component	Name of Manufacturer	Manufacturer Serial Number	National Board Number	Other Identification	Year Built	Repaired, Replaced, or Replacement	ASME Code Stamped (yes or no)
A	CRD CM OEII	DIAMOND POWER	NA	NA	CRDM #51	NA	☐ Repaired ☐ Replaced ☒ Replacement	☒ No ☐ Yes
B							☐ Repaired ☐ Replaced ☐ Replacement	☐ No ☐ Yes
C							☐ Repaired ☐ Replaced ☐ Replacement	☐ No ☐ Yes
D							☐ Repaired ☐ Replaced ☐ Replacement	☐ No ☐ Yes
E							☐ Repaired ☐ Replaced ☐ Replacement	☐ No ☐ Yes
F							☐ Repaired ☐ Replaced ☐ Replacement	☐ No ☐ Yes

Form NIS-2 (Back)

NOTE: Supplemental sheets in form of lists, sketches, or drawings may be used, provided (1) size is 8 1/2 in. x 11 in. (2) information in items 1 through 6 on this report is included on each sheet, and (3) each sheet is numbered and the number of sheets is recorded at the top of this form.

7. Description of Work Replaced hold down bolting CRDM # 51

8. Test Conducted: ☐ Hydrostatic ☐ Pneumatic ☐ Nominal Operating Pressure ☐ Other ☑ Exempt

Pressure	_____ psig	Test Temp.	_____ °F
Pressure	_____ psig	Test Temp.	_____ °F
Pressure	_____ psig	Test Temp.	_____ °F

9. Remarks _____

(Applicable Manufacturer's Data Records to be Attached)

CERTIFICATE OF COMPLIANCE

We certify that the statements made in the report are correct and this **repair or replacement** conforms to the rules of the ASME Code, Section XI.

Type Code Symbol Stamp **N/A**

Certificate of Authorization No. **N/A** Expiration Date **N/A**

Signed CR Henson QA Specialist Date 11-29, 19 96
Owner or Owner's Designee, Title

CERTIFICATE OF INSERVICE INSPECTION

I, the undersigned, holding a valid commission issued by the National Board of Boiler and Pressure Vessel Inspectors and the State or Providence of N. C. and employed by **HSBI and I Company of Hartford Connecticut** have inspected the components described in this Owner's Report during the period 10-28-96 to 12-2-96; and state that to the best of my knowledge and belief, the Owner has performed examinations and taken corrective measures described in this Owner's Report in accordance with the requirements of the ASME Code, Section XI.

By signing this certificate, neither the Inspector nor his employer makes any warranty, expressed or implied, concerning the examinations and corrective measures described in this Owner's Report. Furthermore, neither the Inspector nor his employer shall be liable in any manner for any personal injury or property damage or a loss of any kind arising from or connected with this inspection.

MB Chapman Commissions NC 914
Inspector's Signature National Board, State, Providence and Endorsements

Date 12-2, 19 96

Form 401463 (2-96)

FORM NIS-2 OWNER'S REPORT FOR REPAIRS OR REPLACEMENTS
As Required By The Provisions Of The ASME Code Section XI

1. Owner **Duke Power Company**
   Address **526 S. Church Street, Charlotte, NC 28201-1006**

1a. Date 11-29-96

Sheet 1 of 1

2. Plant **Oconee Nuclear Station**
   Address **P.O. Box 1439, Seneca, S.C. 29679**

2a. Unit ☑ 1 ☐ 2 ☐ 3 ☐ Shared (specify Units_____)

3. Work Performed By **Duke Power Company**
   Address **526 S. Church Street, Charlotte, NC 28201-1006**
   Type Code Symbol Stamp **N/A** Authorization No. **N/A** Expiration Date **N/A**

3a. Work Order # 96081781-01
Repair Organization Job #

3b. NSM or MM # NA

4. Identification of System RC Class 1

5. (a) Applicable Construction Code B31.7 19 68 Edition, 6-68 Addenda, NO Code Cases
   (b) Applicable Edition of Section XI Utilized for Repairs or Replacements 1989, No Addenda

6. Identification of Components Repaired or Replaced and Replacement Components

	Column 1	Column 2	Column 3	Column 4	Column 5	Col. 6	Column 7	Column 8
	Name of Component	**Name of Manufacturer**	**Manufacturer Serial Number**	**National Board Number**	**Other Identification**	**Year Built**	**Repaired, Replaced, or Replacement**	**ASME Code Stamped (yes or no)**
A	CRD CM 0H02	DIAMOND POWER	NA	NA	CRDM #61	NA	☐ Repaired ☐ Replaced ☑ Replacement	☑ No ☐ Yes
B							☐ Repaired ☐ Replaced ☐ Replacement	☐ No ☐ Yes
C							☐ Repaired ☐ Replaced ☐ Replacement	☐ No ☐ Yes
D							☐ Repaired ☐ Replaced ☐ Replacement	☐ No ☐ Yes
E							☐ Repaired ☐ Replaced ☐ Replacement	☐ No ☐ Yes
F							☐ Repaired ☐ Replaced ☐ Replacement	☐ No ☐ Yes

Form 401463 (2-95)

Form NIS-2 (Back)

NOTE: Supplemental sheets in form of lists, sketches, or drawings may be used, provided (1) size is 8 1/2 in. x 11 in. (2) information in items 1 through 6 on this report is included on each sheet, and (3) each sheet is numbered and the number of sheets is recorded at the top of this form.

7. Description of Work Replaced hold down bolting CRDM # 61

8. Test Conducted: ☐ Hydrostatic ☐ Pneumatic ☐ Nominal Operating Pressure ☐ Other ☑ Exempt

Pressure	_____ psig	Test Temp.	_____ °F
Pressure	_____ psig	Test Temp.	_____ °F
Pressure	_____ psig	Test Temp.	_____ °F

9. Remarks _____

(Applicable Manufacturer's Data Records to be Attached)

CERTIFICATE OF COMPLIANCE

We certify that the statements made in the report are correct and this **repair or replacement** conforms to the rules of the ASME Code, Section XI.

Type Code Symbol Stamp **N/A**

Certificate of Authorization No. **N/A** Expiration Date **N/A**

Signed C R Henson QA Specialist Date 11-29, 19 96
Owner or Owner's Designee, Title

CERTIFICATE OF INSERVICE INSPECTION

I, the undersigned, holding a valid commission issued by the National Board of Boiler and Pressure Vessel Inspectors and the State or Providence of N.C. and employed by **HSBI and I Company of Hartford Connecticut** have inspected the components described in this Owner's Report during the period 10-28-96 to 12-2-96; and state that to the best of my knowledge and belief, the Owner has performed examinations and taken corrective measures described in this Owner's Report in accordance with the requirements of the ASME Code, Section XI.

By signing this certificate, neither the Inspector nor his employer makes any warranty, expressed or implied, concerning the examinations and corrective measures described in this Owner's Report. Furthermore, neither the Inspector nor his employer shall be liable in any manner for any personal injury or property damage or a loss of any kind arising from or connected with this inspection.

M B Chapman Commissions NC 914
Inspector's Signature National Board, State, Providence and Endorsements

Date 12-2, 19 96

Form 401463 (1/95)

FORM NIS-2 OWNER'S REPORT FOR REPAIRS OR REPLACEMENTS
As Required By The Provisions Of The ASME Code Section XI

1. Owner **Duke Power Company**
   Address **526 S. Church Street, Charlotte, NC 28201-1006**

1a. Date 11-29-96

Sheet 1 of 1

2. Plant **Oconee Nuclear Station**
   Address **P.O. Box 1439, Seneca, S.C. 29679**

2a. Unit ☒ 1 ☐ 2 ☐ 3 ☐ Shared (specify Units_____)

3. Work Performed By **Duke Power Company**
   Address **526 S. Church Street, Charlotte, NC 28201-1006**
   Type Code Symbol Stamp **N/A** Authorization No. **N/A** Expiration Date **N/A**

3a. Work Order # 9602/562-01
Repair Organization Job #

3b. NSM or MM # NA

4. Identification of System RC Class 1

5. (a) Applicable Construction Code B31.7 1968 Edition, 6-68 Addenda, NO Code Cases
   (b) Applicable Edition of Section XI Utilized for Repairs or Replacements 1989, No Addenda

6. Identification of Components Repaired or Replaced and Replacement Components

	Column 1	Column 2	Column 3	Column 4	Column 5	Col. 6	Column 7	Column 8
	Name of Component	**Name of Manufacturer**	**Manufacturer Serial Number**	**National Board Number**	**Other Identification**	**Year Built**	**Repaired, Replaced, or Replacement**	**ASME Code Stamped (yes or no)**
A	CRD CM 0L02	DIAMOND POWER	NA	NA	NA	NA	☐ Repaired ☐ Replaced ☒ Replacement	☒ No ☐ Yes
B							☐ Repaired ☐ Replaced ☐ Replacement	☐ No ☐ Yes
C							☐ Repaired ☐ Replaced ☐ Replacement	☐ No ☐ Yes
D							☐ Repaired ☐ Replaced ☐ Replacement	☐ No ☐ Yes
E							☐ Repaired ☐ Replaced ☐ Replacement	☐ No ☐ Yes
F							☐ Repaired ☐ Replaced ☐ Replacement	☐ No ☐ Yes

Form NIS-2 (Back)

NOTE: Supplemental sheets in form of lists, sketches, or drawings may be used, provided (1) size is 8 1/2 in. x 11 in. (2) information in items 1 through 6 on this report is included on each sheet, and (3) each sheet is numbered and the number of sheets is recorded at the top of this form.

7. Description of Work Replaced hold down bolting CRDM # 68

8. Test Conducted: ☐ Hydrostatic ☐ Pneumatic ☐ Nominal Operating Pressure ☐ Other ☑ Exempt

Pressure _____ psig Test Temp. _____ °F

Pressure _____ psig Test Temp. _____ °F

Pressure _____ psig Test Temp. _____ °F

9. Remarks _____

(Applicable Manufacturer's Data Records to be Attached)

CERTIFICATE OF COMPLIANCE

We certify that the statements made in the report are correct and this **repair or replacement** conforms to the rules of the ASME Code, Section XI.

Type Code Symbol Stamp **N/A**

Certificate of Authorization No. **N/A** Expiration Date **N/A**

Signed C.R. Hewson QA Specialist Date 11-29, 19 96
Owner or Owner's Designee, Title

CERTIFICATE OF INSERVICE INSPECTION

I, the undersigned, holding a valid commission issued by the National Board of Boiler and Pressure Vessel Inspectors and the State or Providence of N.C. and employed by **HSBI and I Company of Hartford Connecticut** have inspected the components described in this Owner's Report during the period 10-28-96 to 12-2-96; and state that to the best of my knowledge and belief, the Owner has performed examinations and taken corrective measures described in this Owner's Report in accordance with the requirements of the ASME Code, Section XI.

By signing this certificate, neither the Inspector nor his employer makes any warranty, expressed or implied, concerning the examinations and corrective measures described in this Owner's Report. Furthermore, neither the Inspector nor his employer shall be liable in any manner for any personal injury or property damage or a loss of any kind arising from or connected with this inspection.

MB Chapman Commissions NC 914
Inspector's Signature National Board, State, Providence and Endorsements

Date 12-2, 19 96

Form 401463 (1/96)

FORM NIS-2 OWNER'S REPORT FOR REPAIRS OR REPLACEMENTS
As Required By The Provisions Of The ASME Code Section XI

1. Owner **Duke Power Company**
   Address **526 S. Church Street, Charlotte, NC 28201-1006**

1a. Date 11-29-96

Sheet 1 of 1

2. Plant **Oconee Nuclear Station**
   Address **P.O. Box 1439, Seneca, S.C. 29679**

2a. Unit ☑ 1 ☐ 2 ☐ 3 ☐ Shared (specify Units_____)

3. Work Performed By **Duke Power Company**
   Address **526 S. Church Street, Charlotte, NC 28201-1006**
   Type Code Symbol Stamp **N/A** Authorization No. **N/A** Expiration Date **N/A**

3a. Work Order # 96081771-01
Repair Organization Job #

3b. NSM or MM # NA

4. Identification of System RC Class 1

5. (a) Applicable Construction Code B31.7 19 68 Edition, 8-68 Addenda, NO Code Cases
   (b) Applicable Edition of Section XI Utilized for Repairs or Replacements 1989, No Addenda

6. Identification of Components Repaired or Replaced and Replacement Components

	Column 1	Column 2	Column 3	Column 4	Column 5	Col. 6	Column 7	Column 8
	Name of Component	Name of Manufacturer	Manufacturer Serial Number	National Board Number	Other Identification	Year Built	Repaired, Replaced, or Replacement	ASME Code Stamped (yes or no)
A	CRD CM 0004	DIAMOND POWER	NA	NA	NA	NA	☐ Repaired ☐ Replaced ☑ Replacement	☑ No ☐ Yes
B							☐ Repaired ☐ Replaced ☐ Replacement	☐ No ☐ Yes
C							☐ Repaired ☐ Replaced ☐ Replacement	☐ No ☐ Yes
D							☐ Repaired ☐ Replaced ☐ Replacement	☐ No ☐ Yes
E							☐ Repaired ☐ Replaced ☐ Replacement	☐ No ☐ Yes
F							☐ Repaired ☐ Replaced ☐ Replacement	☐ No ☐ Yes

Form NIS-2 (Back)

NOTE: Supplemental sheets in form of lists, sketches, or drawings may be used, provided (1) size is 8 1/2 in. x 11 in. (2) information in items 1 through 6 on this report is included on each sheet, and (3) each sheet is numbered and the number of sheets is recorded at the top of this form.

7. Description of Work Replaced hold down bolting CRDM #46

8. Test Conducted: ☐ Hydrostatic ☐ Pneumatic ☐ Nominal Operating Pressure ☐ Other ☑ Exempt

Pressure _____ psig Test Temp. _____ °F

Pressure _____ psig Test Temp. _____ °F

Pressure _____ psig Test Temp. _____ °F

9. Remarks _____

(Applicable Manufacturer's Data Records to be Attached)

CERTIFICATE OF COMPLIANCE

We certify that the statements made in the report are correct and this **repair or replacement** conforms to the rules of the ASME Code, Section XI.

Type Code Symbol Stamp **N/A**

Certificate of Authorization No. **N/A** Expiration Date **N/A**

Signed CR Hanson QA Specialist Date 11-29, 19 96
Owner or Owner's Designee, Title

CERTIFICATE OF INSERVICE INSPECTION

I, the undersigned, holding a valid commission issued by the National Board of Boiler and Pressure Vessel Inspectors and the State or Providence of N.C and employed by **HSBI and I Company of Hartford Connecticut** have inspected the components described in this Owner's Report during the period 10-28-96 to 12-2-96; and state that to the best of my knowledge and belief, the Owner has performed examinations and taken corrective measures described in this Owner's Report in accordance with the requirements of the ASME Code, Section XI.

By signing this certificate, neither the Inspector nor his employer makes any warranty, expressed or implied, concerning the examinations and corrective measures described in this Owner's Report. Furthermore, neither the Inspector nor his employer shall be liable in any manner for any personal injury or property damage or a loss of any kind arising from or connected with this inspection.

MB Chapman Commissions NC914
Inspector's Signature National Board, State, Providence and Endorsements

Date 12-2, 19 96

Form 401463 (2-95)

FORM NIS-2 OWNER'S REPORT FOR REPAIRS OR REPLACEMENTS
As Required By The Provisions Of The ASME Code Section XI

1. Owner **Duke Power Company**
   Address **526 S. Church Street, Charlotte, NC 28201-1006**

1a. Date 1-18-96

Sheet 1 of 1

2. Plant **Oconee Nuclear Station**
   Address **P.O. Box 1439, Seneca, S.C. 29679**

2a. Unit ☑ 1 ☐ 2 ☐ 3 ☐ Shared (specify Units_____)

3a. Work Order # 95047719
Repair Organization Job #

3. Work Performed By **Duke Power Company**
   Address **526 S. Church Street, Charlotte, NC 28201-1006**
   Type Code Symbol Stamp **N/A** Authorization No. **N/A** Expiration Date **N/A**

3b. NSM or MM # —

4. Identification of System DW Class 2

5. (a) Applicable Construction Code B31.1 19 67 Edition, — Addenda, — Code Cases
   (b) Applicable Edition of Section XI Utilized for Repairs or Replacements 1989, No Addenda

6. Identification of Components Repaired or Replaced and Replacement Components

	Column 1	Column 2	Column 3	Column 4	Column 5	Col. 6	Column 7	Column 8
	Name of Component	Name of Manufacturer	Manufacturer Serial Number	National Board Number	Other Identification	Year Built	Repaired, Replaced, or Replacement	ASME Code Stamped (yes or no)
A	Valve Bonnet	Unavailable	Unavailable	N/A	N/A	N/A	☐ Repaired ☒ Replaced ☐ Replacement	☒ No ☐ Yes
B	Valve Bonnet	ITT Grinnell	86-56484-1-2	N/A	N/A	1986	☐ Repaired ☐ Replaced ☒ Replacement	☒ No ☐ Yes
C							☐ Repaired ☐ Replaced ☐ Replacement	☐ No ☐ Yes
D							☐ Repaired ☐ Replaced ☐ Replacement	☐ No ☐ Yes
E							☐ Repaired ☐ Replaced ☐ Replacement	☐ No ☐ Yes
F							☐ Repaired ☐ Replaced ☐ Replacement	☐ No ☐ Yes

Form NIS-2 (Back)

NOTE: Supplemental sheets in form of lists, sketches, or drawings may be used, provided (1) size is 8 1/2 in. x 11 in. (2) information in items 1 through 6 on this report is included on each sheet, and (3) each sheet is numbered and the number of sheets is recorded at the top of this form.

7. Description of Work Replaced Valve Bonnet 1DW-59

8. Test Conducted: ☐ Hydrostatic ☐ Pneumatic ☐ Nominal Operating Pressure ☐ Other ☐ Exempt

Pressure	_____ psig	Test Temp.	_____ °F
Pressure	_____ psig	Test Temp.	_____ °F
Pressure	_____ psig	Test Temp.	_____ °F

9. Remarks Valve 1DW-59 is a penetration isolation valve. At the most, the penetration performance and ASME Code Case N-522 will suffice for ASME Section XI testing required for this situtation Rich Bolzo (Pressure Testing Engineer) 2-13-96 Reference PIP 1-096-0299 PH 2-15-96

(Applicable Manufacturer's Data Records to be Attached)

CERTIFICATE OF COMPLIANCE

We certify that the statements made in the report are correct and this **repair or replacement** conforms to the rules of the ASME Code, Section XI.

Type Code Symbol Stamp **N/A**

Certificate of Authorization No. **N/A** Expiration Date **N/A**

Signed D. Mason QA Tech Date 2-13, 19 96
Owner or Owner's Designee, Title

CERTIFICATE OF INSERVICE INSPECTION

I, the undersigned, holding a valid commission issued by the National Board of Boiler and Pressure Vessel Inspectors and the State or Providence of N.C. and employed by **HSBI and I Company of Hartford Connecticut** have inspected the components described in this Owner's Report during the period 11-3-95 to 2-21-96; and state that to the best of my knowledge and belief, the Owner has performed examinations and taken corrective measures described in this Owner's Report in accordance with the requirements of the ASME Code, Section XI.

By signing this certificate, neither the Inspector nor his employer makes any warranty, expressed or implied, concerning the examinations and corrective measures described in this Owner's Report. Furthermore, neither the Inspector nor his employer shall be liable in any manner for any personal injury or property damage or a loss of any kind arising from or connected with this inspection.

M.B. Chapman Commissions NC914
Inspector's Signature National Board, State, Providence and Endorsements

Date 2-21, 19 96

Form 401463 (2-95)

FORM NIS-2 OWNER'S REPORT FOR REPAIRS OR REPLACEMENTS
As Required By The Provisions Of The ASME Code Section XI

1a. Date 11-29-96

Sheet 1 of 1

1. Owner **Duke Power Company**
   Address **526 S. Church Street, Charlotte, NC 28201-1006**

2. Plant **Oconee Nuclear Station**
   Address **P.O. Box 1439, Seneca, S.C. 29679**

2a. Unit ☒ 1 ☐ 2 ☐ 3 ☐ Shared (specify Units _____)

3a. Work Order # 96081799-01
Repair Organization Job #

3. Work Performed By **Duke Power Company**
   Address **526 S. Church Street, Charlotte, NC 28201-1006**
   Type Code Symbol Stamp **N/A** Authorization No. **N/A** Expiration Date **N/A**

3b. NSM or MM # NA

4. Identification of System RC Class 1

5. (a) Applicable Construction Code B31.7 1968 Edition, 6-68 Addenda, NO Code Cases
   (b) Applicable Edition of Section XI Utilized for Repairs or Replacements 1989, No Addenda

6. Identification of Components Repaired or Replaced and Replacement Components

	Column 1	Column 2	Column 3	Column 4	Column 5	Col. 6	Column 7	Column 8
	Name of Component	Name of Manufacturer	Manufacturer Serial Number	National Board Number	Other Identification	Year Built	Repaired, Replaced, or Replacement	ASME Code Stamped (yes or no)
A	CRDM CM 0K03	Diamond Power	NA	NA	CRDM #44	NA	☐ Repaired ☐ Replaced ☒ Replacement	☒ No ☐ Yes
B							☐ Repaired ☐ Replaced ☐ Replacement	☐ No ☐ Yes
C							☐ Repaired ☐ Replaced ☐ Replacement	☐ No ☐ Yes
D							☐ Repaired ☐ Replaced ☐ Replacement	☐ No ☐ Yes
E							☐ Repaired ☐ Replaced ☐ Replacement	☐ No ☐ Yes
F							☐ Repaired ☐ Replaced ☐ Replacement	☐ No ☐ Yes

Form NIS-2 (Back)

NOTE: Supplemental sheets in form of lists, sketches, or drawings may be used, provided (1) size is 8 1/2 in. x 11 in. (2) information in items 1 through 6 on this report is included on each sheet, and (3) each sheet is numbered and the number of sheets is recorded at the top of this form.

7. Description of Work Replaced bolting CRDM Flange #44

8. Test Conducted: ☐ Hydrostatic ☐ Pneumatic ☐ Nominal Operating Pressure ☐ Other ☑ Exempt

Pressure _____ psig Test Temp. _____ °F

Pressure _____ psig Test Temp. _____ °F

Pressure _____ psig Test Temp. _____ °F

9. Remarks _____

(Applicable Manufacturer's Data Records to be Attached)

CERTIFICATE OF COMPLIANCE

We certify that the statements made in the report are correct and this **repair or replacement** conforms to the rules of the ASME Code, Section XI.

Type Code Symbol Stamp **N/A**

Certificate of Authorization No. **N/A** Expiration Date **N/A**

Signed Charles R. Henson QA Specialist Date 11-30, 19 96
Owner or Owner's Designee, Title

CERTIFICATE OF INSERVICE INSPECTION

I, the undersigned, holding a valid commission issued by the National Board of Boiler and Pressure Vessel Inspectors and the State or Providence of N.C. and employed by **HSBI and I Company of Hartford Connecticut** have inspected the components described in this Owner's Report during the period 10-28-96 to 12-2-96; and state that to the best of my knowledge and belief, the Owner has performed examinations and taken corrective measures described in this Owner's Report in accordance with the requirements of the ASME Code, Section XI.

By signing this certificate, neither the Inspector nor his employer makes any warranty, expressed or implied, concerning the examinations and corrective measures described in this Owner's Report. Furthermore, neither the Inspector nor his employer shall be liable in any manner for any personal injury or property damage or a loss of any kind arising from or connected with this inspection.

Inspector's Signature Commissions NC914
National Board, State, Providence and Endorsements

Date 12-2, 19 96

Form 401463 (2-95)

FORM NIS-2 OWNER'S REPORT FOR REPAIRS OR REPLACEMENTS
As Required By The Provisions Of The ASME Code Section XI

1. Owner **Duke Power Company**
   Address **526 S. Church Street, Charlotte, NC 28201-1006**

1a. Date 11-29-96

Sheet 1 of 1

2. Plant **Oconee Nuclear Station**
   Address **P.O. Box 1439, Seneca, S.C. 29679**

2a. Unit ☑ 1 ☐ 2 ☐ 3 ☐ Shared (specify Units_____)

3. Work Performed By **Duke Power Company**
   Address **526 S. Church Street, Charlotte, NC 28201-1006**
   Type Code Symbol Stamp **N/A** Authorization No. **N/A** Expiration Date **N/A**

3a. Work Order # 96081947-01
Repair Organization Job #

3b. NSM or MM # NA

4. Identification of System RC Class 1

5. (a) Applicable Construction Code B31.7 19 68 Edition, 6-68 Addenda, NO Code Cases
   (b) Applicable Edition of Section XI Utilized for Repairs or Replacements 1989, No Addenda

6. Identification of Components Repaired or Replaced and Replacement Components

	Column 1	Column 2	Column 3	Column 4	Column 5	Col. 6	Column 7	Column 8
	Name of Component	Name of Manufacturer	Manufacturer Serial Number	National Board Number	Other Identification	Year Built	Repaired, Replaced, or Replacement	ASME Code Stamped (yes or no)
A	CRD CM OKII	DIAMOND POWER	NA	NA	CRDM #17	NA	☐ Repaired ☐ Replaced ☑ Replacement	☑ No ☐ Yes
B							☐ Repaired ☐ Replaced ☐ Replacement	☐ No ☐ Yes
C							☐ Repaired ☐ Replaced ☐ Replacement	☐ No ☐ Yes
D							☐ Repaired ☐ Replaced ☐ Replacement	☐ No ☐ Yes
E							☐ Repaired ☐ Replaced ☐ Replacement	☐ No ☐ Yes
F							☐ Repaired ☐ Replaced ☐ Replacement	☐ No ☐ Yes

Form NIS-2 (Back)

NOTE: Supplemental sheets in form of lists, sketches, or drawings may be used, provided (1) size is 8 1/2 in. x 11 in. (2) information in items 1 through 6 on this report is included on each sheet, and (3) each sheet is numbered and the number of sheets is recorded at the top of this form.

7. Description of Work Replaced bolting CRDM #17

8. Test Conducted: ☐ Hydrostatic ☐ Pneumatic ☐ Nominal Operating Pressure ☐ Other ☑ Exempt

Pressure _____ psig Test Temp. _____ °F

Pressure _____ psig Test Temp. _____ °F

Pressure _____ psig Test Temp. _____ °F

9. Remarks _____

(Applicable Manufacturer's Data Records to be Attached)

CERTIFICATE OF COMPLIANCE

We certify that the statements made in the report are correct and this **repair or replacement** conforms to the rules of the ASME Code, Section XI.

Type Code Symbol Stamp **N/A**

Certificate of Authorization No. **N/A** Expiration Date **N/A**

Signed Charles R Johnson QA Specialist Date 11-29, 19 96
Owner or Owner's Designee, Title

CERTIFICATE OF INSERVICE INSPECTION

I, the undersigned, holding a valid commission issued by the National Board of Boiler and Pressure Vessel Inspectors and the State or Providence of N. C. and employed by **HSBI and I Company of Hartford Connecticut** have inspected the components described in this Owner's Report during the period 10-28-96 to 12-2-96; and state that to the best of my knowledge and belief, the Owner has performed examinations and taken corrective measures described in this Owner's Report in accordance with the requirements of the ASME Code, Section XI.

By signing this certificate, neither the Inspector nor his employer makes any warranty, expressed or implied, concerning the examinations and corrective measures described in this Owner's Report. Furthermore, neither the Inspector nor his employer shall be liable in any manner for any personal injury or property damage or a loss of any kind arising from or connected with this inspection.

MB Chapman Commissions NC914
Inspector's Signature National Board, State, Providence and Endorsements

Date 12-2, 19 96

Form 401463 (2-95)

FORM NIS-2 OWNER'S REPORT FOR REPAIRS OR REPLACEMENTS
As Required By The Provisions Of The ASME Code Section XI

1. Owner **Duke Power Company**
   Address **526 S. Church Street, Charlotte, NC 28201-1006**

1a. Date 11-29-96

Sheet 1 of 1

2. Plant **Oconee Nuclear Station**
   Address **P.O. Box 1439, Seneca, S.C. 29679**

2a. Unit ☑ 1 ☐ 2 ☐ 3 ☐ Shared (specify Units_____)

3. Work Performed By **Duke Power Company**
   Address **526 S. Church Street, Charlotte, NC 28201-1006**
   Type Code Symbol Stamp **N/A** Authorization No. **N/A** Expiration Date **N/A**

3a. Work Order # 9602/564-01
Repair Organization Job #

3b. NSM or MM # NA

4. Identification of System RC Class 1

5. (a) Applicable Construction Code B31.7 1968 Edition, 6-68 Addenda, NO Code Cases
   (b) Applicable Edition of Section XI Utilized for Repairs or Replacements 1989, No Addenda

6. Identification of Components Repaired or Replaced and Replacement Components

	Column 1	Column 2	Column 3	Column 4	Column 5	Col. 6	Column 7	Column 8
	Name of Component	Name of Manufacturer	Manufacturer Serial Number	National Board Number	Other Identification	Year Built	Repaired, Replaced, or Replacement	ASME Code Stamped (yes or no)
A	CRD CM OE05	DIAMOND POWER	NA	NA	CRDM #26	NA	☐ Repaired ☐ Replaced ☑ Replacement	☑ No ☐ Yes
B							☐ Repaired ☐ Replaced ☐ Replacement	☐ No ☐ Yes
C							☐ Repaired ☐ Replaced ☐ Replacement	☐ No ☐ Yes
D							☐ Repaired ☐ Replaced ☐ Replacement	☐ No ☐ Yes
E							☐ Repaired ☐ Replaced ☐ Replacement	☐ No ☐ Yes
F							☐ Repaired ☐ Replaced ☐ Replacement	☐ No ☐ Yes

Form NIS-2 (Back)

NOTE: Supplemental sheets in form of lists, sketches, or drawings may be used, provided (1) size is 8 1/2 in. x 11 in. (2) information in items 1 through 6 on this report is included on each sheet, and (3) each sheet is numbered and the number of sheets is recorded at the top of this form.

7. Description of Work Replaced hold down bolting CRDM # 26

8. Test Conducted: ☐ Hydrostatic ☐ Pneumatic ☐ Nominal Operating Pressure ☐ Other ☒ Exempt

Pressure	_____ psig	Test Temp.	_____ °F
Pressure	_____ psig	Test Temp.	_____ °F
Pressure	_____ psig	Test Temp.	_____ °F

9. Remarks _____

(Applicable Manufacturer's Data Records to be Attached)

CERTIFICATE OF COMPLIANCE

We certify that the statements made in the report are correct and this **repair or replacement** conforms to the rules of the ASME Code, Section XI.

Type Code Symbol Stamp **N/A**

Certificate of Authorization No. **N/A** Expiration Date **N/A**

Signed C R Hanson QC Specialist Date 11-29, 19 96
Owner or Owner's Designee, Title

CERTIFICATE OF INSERVICE INSPECTION

I, the undersigned, holding a valid commission issued by the National Board of Boiler and Pressure Vessel Inspectors and the State or Providence of N.C. and employed by **HSBI and I Company of Hartford Connecticut** have inspected the components described in this Owner's Report during the period 10-25-96 to 12-2-96; and state that to the best of my knowledge and belief, the Owner has performed examinations and taken corrective measures described in this Owner's Report in accordance with the requirements of the ASME Code, Section XI.

By signing this certificate, neither the Inspector nor his employer makes any warranty, expressed or implied, concerning the examinations and corrective measures described in this Owner's Report. Furthermore, neither the Inspector nor his employer shall be liable in any manner for any personal injury or property damage or a loss of any kind arising from or connected with this inspection.

[illegible] Commissions NC 914
Inspector's Signature National Board, State, Providence and Endorsements

Date 12-2, 1996

Form 401463 (2-95)

FORM NIS-2 OWNER'S REPORT FOR REPAIRS OR REPLACEMENTS
As Required By The Provisions Of The ASME Code Section XI

1. Owner **Duke Power Company**
   Address **526 S. Church Street, Charlotte, NC 28201-1006**

1a. Date 2-6-97

Sheet 1 of 1

2. Plant **Oconee Nuclear Station**
   Address **P.O. Box 1439, Seneca, S.C. 29679**

2a. Unit ☒ 1 ☐ 2 ☐ 3 ☐ Shared (specify Units _____)

3a. Work Order # 96084616
Repair Organization Job #

3. Work Performed By **Duke Power Company**
   Address **526 S. Church Street, Charlotte, NC 28201-1006**
   Type Code Symbol Stamp **N/A** Authorization No. **N/A** Expiration Date **N/A**

3b. NSM or MM # ON-9155

4. Identification of System RC Class 1

5. (a) Applicable Construction Code ASME III 1967 Edition, Summer Addenda, NA Code Cases
   (b) Applicable Edition of Section XI Utilized for Repairs or Replacements 1989, No Addenda

6. Identification of Components Repaired or Replaced and Replacement Components

	Column 1	Column 2	Column 3	Column 4	Column 5	Col. 6	Column 7	Column 8
	Name of Component	Name of Manufacturer	Manufacturer Serial Number	National Board Number	Other Identification	Year Built	Repaired, Replaced, or Replacement	ASME Code Stamped (yes or no)
A	1A2 Reactor Coolant Pump	Westinghouse	335	NA	NA	1970	☐ Repaired ☐ Replaced ☒ Replacement	☒ No ☐ Yes
B							☐ Repaired ☐ Replaced ☐ Replacement	☐ No ☐ Yes
C							☐ Repaired ☐ Replaced ☐ Replacement	☐ No ☐ Yes
D							☐ Repaired ☐ Replaced ☐ Replacement	☐ No ☐ Yes
E							☐ Repaired ☐ Replaced ☐ Replacement	☐ No ☐ Yes
F							☐ Repaired ☐ Replaced ☐ Replacement	☐ No ☐ Yes

Form NIS-2 (Back)

NOTE: Supplemental sheets in form of lists, sketches, or drawings may be used, provided (1) size is 8 1/2 in. x 11 in. (2) information in items 1 through 6 on this report is included on each sheet, and (3) each sheet is numbered and the number of sheets is recorded at the top of this form.

7. Description of Work Replaced seal bolting and leak off lines bolting 1A2 RCP

8. Test Conducted: ☐ Hydrostatic ☐ Pneumatic ☐ Nominal Operating Pressure ☐ Other ☑ Exempt

Pressure	_____ psig	Test Temp.	_____ °F
Pressure	_____ psig	Test Temp.	_____ °F
Pressure	_____ psig	Test Temp.	_____ °F

9. Remarks _____

(Applicable Manufacturer's Data Records to be Attached)

CERTIFICATE OF COMPLIANCE

We certify that the statements made in the report are correct and this **repair or replacement** conforms to the rules of the ASME Code, Section XI.

Type Code Symbol Stamp **N/A**

Certificate of Authorization No. **N/A** Expiration Date **N/A**

Signed C R Hansen QA Specialist Date 2-6, 19 97
Owner or Owner's Designee/Title

CERTIFICATE OF INSERVICE INSPECTION

I, the undersigned, holding a valid commission issued by the National Board of Boiler and Pressure Vessel Inspectors and the State or Providence of N.C. and employed by **HSBI and I Company of Hartford Connecticut** have inspected the components described in this Owner's Report during the period 12-19-96 to 3-11-97; and state that to the best of my knowledge and belief, the Owner has performed examinations and taken corrective measures described in this Owner's Report in accordance with the requirements of the ASME Code, Section XI.

By signing this certificate, neither the Inspector nor his employer makes any warranty, expressed or implied, concerning the examinations and corrective measures described in this Owner's Report. Furthermore, neither the Inspector nor his employer shall be liable in any manner for any personal injury or property damage or a loss of any kind arising from or connected with this inspection.

MB Chapman Commissions NC914
Inspector's Signature National Board, State, Providence and Endorsements

Date 3-11, 19 97

Form 401463 (9-96)

FORM NIS-2 OWNER'S REPORT FOR REPAIRS OR REPLACEMENTS
As Required By The Provisions Of The ASME Code Section XI

1. Owner **Duke Power Company**
   Address **526 S. Church Street, Charlotte, NC 28201-1006**

1a. Date 10-14-97

Sheet 1 of 1

2. Plant **Oconee Nuclear Station**
   Address **P.O. Box 1439, Seneca, S.C. 29679**

2a. Unit ☑ 1 ☐ 2 ☐ 3 ☐ Shared (specify Units _____)

3a. Work Order # 97083479-01
Repair Organization Job #

3. Work Performed By **Duke Power Company**
   Address **526 S. Church Street, Charlotte, NC 28201-1006**
   Type Code Symbol Stamp **N/A** Authorization No. **N/A** Expiration Date **N/A**

3b. NSM or MM # N/A

4. Identification of System RC Class 1

5. (a) Applicable Construction Code ASME III 1965 Edition, Summer 67 Addenda, 1332-2, -3, -4, 1339-1, 1336 Code Cases
   (b) Applicable Edition of Section XI Utilized for Repairs or Replacements 1989, No Addenda 1359-1, 1338-3 Alt. 1

6. Identification of Components Repaired or Replaced and Replacement Components

	Column 1	Column 2	Column 3	Column 4	Column 5	Col. 6	Column 7	Column 8
	Name of Component	Name of Manufacturer	Manufacturer Serial Number	National Board Number	Other Identification	Year Built	Repaired, Replaced, or Replacement	ASME Code Stamped (yes or no)
A	IBOSTG Lower primary Hand hole	B&W	N/A	* N-104	RC HX000BLP1	1969	☐ Repaired ☐ Replaced ☑ Replacement	☐ No ☑ Yes
B							☐ Repaired ☐ Replaced ☐ Replacement	☐ No ☐ Yes
C							☐ Repaired ☐ Replaced ☐ Replacement	☐ No ☐ Yes
D							☐ Repaired ☐ Replaced ☐ Replacement	☐ No ☐ Yes
E							☐ Repaired ☐ Replaced ☐ Replacement	☐ No ☐ Yes
F							☐ Repaired ☐ Replaced ☐ Replacement	☐ No ☐ Yes

*BOSTG National Board Number

Form NIS-2 (Back)

NOTE: Supplemental sheets in form of lists, sketches, or drawings may be used, provided (1) size is 8 1/2 in. x 11 in. (2) information in items 1 through 6 on this report is included on each sheet, and (3) each sheet is numbered and the number of sheets is recorded at the top of this form.

7. Description of Work Replaced 1B OTSG Lower primary handhole bolting

8. Test Conducted: ☐ Hydrostatic ☐ Pneumatic ☐ Nominal Operating Pressure ☐ Other ☑ Exempt

Pressure	_____ psig	Test Temp.	_____ °F
Pressure	_____ psig	Test Temp.	_____ °F
Pressure	_____ psig	Test Temp.	_____ °F

9. Remarks _____

(Applicable Manufacturer's Data Records to be Attached)

CERTIFICATE OF COMPLIANCE

We certify that the statements made in the report are correct and this **repair or replacement** conforms to the rules of the ASME Code, Section XI.

Type Code Symbol Stamp **N/A**

Certificate of Authorization No. **N/A** Expiration Date **N/A**

Signed CR Henson QA Specialist Date 10-14, 19 97
Owner or Owner's Designee, Title

CERTIFICATE OF INSERVICE INSPECTION

I, the undersigned, holding a valid commission issued by the National Board of Boiler and Pressure Vessel Inspectors and the State or Providence of N.C. and employed by **HSBI and I Company of Hartford Connecticut** have inspected the components described in this Owner's Report during the period 10-8-97 to 10-15-97; and state that to the best of my knowledge and belief, the Owner has performed examinations and taken corrective measures described in this Owner's Report in accordance with the requirements of the ASME Code, Section XI.

By signing this certificate, neither the Inspector nor his employer makes any warranty, expressed or implied, concerning the examinations and corrective measures described in this Owner's Report. Furthermore, neither the Inspector nor his employer shall be liable in any manner for any personal injury or property damage or a loss of any kind arising from or connected with this inspection.

MB Chapman Commissions NC914
Inspector's Signature National Board, State, Providence and Endorsements

Date 10-15, 19 97

Form 401463 (12-95)

FORM NIS-2 OWNER'S REPORT FOR REPAIRS OR REPLACEMENTS
As Required By The Provisions Of The ASME Code Section XI

1. Owner **Duke Power Company**
   Address **526 S. Church Street, Charlotte, NC 28201-1006**

1a. Date 10-15-95

Sheet 1 of 1

2. Plant **Oconee Nuclear Station**
   Address **P.O. Box 1439, Seneca, S.C. 29679**

2a. Unit ☑ 1 ☐ 2 ☐ 3 ☐ Shared (specify Units_____)

3a. Work Order # 97083480-01
Repair Organization Job #

3. Work Performed By **Duke Power Company**
   Address **526 S. Church Street, Charlotte, NC 28201-1006**
   Type Code Symbol Stamp **N/A** Authorization No. **N/A** Expiration Date **N/A**

3b. NSM or MM # N/A

4. Identification of System RC Class 1

5. (a) Applicable Construction Code ASME III 1965 Edition, Summer 67 Addenda, 1332-2, -3, 4; 1339-1, 1336 Code Cases
   (b) Applicable Edition of Section XI Utilized for Repairs or Replacements 1989, No Addenda 1359-1, 1338-3 Alt. 2

6. Identification of Components Repaired or Replaced and Replacement Components

	Column 1	Column 2	Column 3	Column 4	Column 5	Col. 6	Column 7	Column 8
	Name of Component	Name of Manufacturer	Manufacturer Serial Number	National Board Number	Other Identification	Year Built	Repaired, Replaced, or Replacement	ASME Code Stamped (yes or no)
A	1A OTSG LOWER PRIMARY Hand hole	B&W	N/A	* N-103	RC-HX-000ALP1	1969	☐ Repaired ☐ Replaced ☑ Replacement	☐ No ☑ Yes
B							☐ Repaired ☐ Replaced ☐ Replacement	☐ No ☐ Yes
C							☐ Repaired ☐ Replaced ☐ Replacement	☐ No ☐ Yes
D							☐ Repaired ☐ Replaced ☐ Replacement	☐ No ☐ Yes
E							☐ Repaired ☐ Replaced ☐ Replacement	☐ No ☐ Yes
F							☐ Repaired ☐ Replaced ☐ Replacement	☐ No ☐ Yes

* A OSTG National Board Number

Form NIS-2 (Back)

NOTE: Supplemental sheets in form of lists, sketches, or drawings may be used, provided (1) size is 8 1/2 in. x 11 in. (2) information in items 1 through 6 on this report is included on each sheet, and (3) each sheet is numbered and the number of sheets is recorded at the top of this form.

7. Description of Work Replaced bolting 1A OTSG Lower Primary handhole

8. Test Conducted: ☐ Hydrostatic ☐ Pneumatic ☐ Nominal Operating Pressure ☐ Other ☑ Exempt

Pressure _____ psig Test Temp. _____ °F

Pressure _____ psig Test Temp. _____ °F

Pressure _____ psig Test Temp. _____ °F

9. Remarks _____

(Applicable Manufacturer's Data Records to be Attached)

CERTIFICATE OF COMPLIANCE

We certify that the statements made in the report are correct and this **repair or replacement** conforms to the rules of the ASME Code, Section XI.

Type Code Symbol Stamp **N/A**

Certificate of Authorization No. **N/A** Expiration Date **N/A**

Signed CR Henson QA Specialist Date 10-15, 19 97
Owner or Owner's Designee, Title

CERTIFICATE OF INSERVICE INSPECTION

I, the undersigned, holding a valid commission issued by the National Board of Boiler and Pressure Vessel Inspectors and the State or Providence of N. C. and employed by **HSBI and I Company of Hartford Connecticut** have inspected the components described in this Owner's Report during the period 10-8-97 to 10-15-97; and state that to the best of my knowledge and belief, the Owner has performed examinations and taken corrective measures described in this Owner's Report in accordance with the requirements of the ASME Code, Section XI.

By signing this certificate, neither the Inspector nor his employer makes any warranty, expressed or implied, concerning the examinations and corrective measures described in this Owner's Report. Furthermore, neither the Inspector nor his employer shall be liable in any manner for any personal injury or property damage or a loss of any kind arising from or connected with this inspection.

M. B. Chapman Commissions NC914
Inspector's Signature National Board, State, Providence and Endorsements

Date 10-15, 19 97

Form 401463 (2-95)

FORM NIS-2 OWNER'S REPORT FOR REPAIRS OR REPLACEMENTS
As Required By The Provisions Of The ASME Code Section XI

1. Owner **Duke Power Company**
   Address **526 S. Church Street, Charlotte, NC 28201-1006**

1a. Date 11-20-97

Sheet 1 of 1

2. Plant **Oconee Nuclear Station**
   Address **P.O. Box 1439, Seneca, S.C. 29679**

2a. Unit ☑ 1 ☐ 2 ☐ 3 ☐ Shared (specify Units_____)

3a. Work Order # 9606 2545
Repair Organization Job #

3. Work Performed By **Duke Power Company**
   Address **526 S. Church Street, Charlotte, NC 28201-1006**
   Type Code Symbol Stamp **N/A** Authorization No. **N/A** Expiration Date **N/A**

3b. NSM or (MM #) 9343

4. Identification of System RC Class 1

5. (a) Applicable Construction Code ASME III 19 65 Edition, Summer 67 Addenda, 1332-2,3,4, 1337, 1336, 1357-1 Code Cases
   (b) Applicable Edition of Section XI Utilized for Repairs or Replacements 1989, No Addenda 1338-3 and 1

6. Identification of Components Repaired or Replaced and Replacement Components

	Column 1	Column 2	Column 3	Column 4	Column 5	Col. 6	Column 7	Column 8
	Name of Component	Name of Manufacturer	Manufacturer Serial Number	National Board Number	Other Identification	Year Built	Repaired, Replaced, or Replacement	ASME Code Stamped (yes or no)
A	1A OTSG	Babcock + Wilcox	620-0003-55-1	N-103	RC HX 000A	1969	☑ Repaired ☐ Replaced ☐ Replacement	☐ No ☑ Yes
B							☐ Repaired ☐ Replaced ☐ Replacement	☐ No ☐ Yes
C							☐ Repaired ☐ Replaced ☐ Replacement	☐ No ☐ Yes
D							☐ Repaired ☐ Replaced ☐ Replacement	☐ No ☐ Yes
E							☐ Repaired ☐ Replaced ☐ Replacement	☐ No ☐ Yes
F							☐ Repaired ☐ Replaced ☐ Replacement	☐ No ☐ Yes

Form 401463 (2-95)

Form NIS-2 (Back)

NOTE: Supplemental sheets in form of lists, sketches, or drawings may be used, provided (1) size is 8 1/2 in. x 11 in. (2) information in items 1 through 6 on this report is included on each sheet, and (3) each sheet is numbered and the number of sheets is recorded at the top of this form.

7. Description of Work Stabilized, Plugged, Removed Steam Generator Tubes 1A OTSG

8. Test Conducted: ☐ Hydrostatic ☐ Pneumatic ☐ Nominal Operating Pressure ☐ Other ☒ Exempt

Pressure	_____ psig	Test Temp.	_____ °F
Pressure	_____ psig	Test Temp.	_____ °F
Pressure	_____ psig	Test Temp.	_____ °F

9. Remarks _____

(Applicable Manufacturer's Data Records to be Attached)

CERTIFICATE OF COMPLIANCE

We certify that the statements made in the report are correct and this **repair or replacement** conforms to the rules of the ASME Code, Section XI.

Type Code Symbol Stamp **N/A**

Certificate of Authorization No. **N/A** Expiration Date **N/A**

Signed C.R. Hanson QA Specialist Date 11-21, 19 95
Owner or Owner's Designee, Title

CERTIFICATE OF INSERVICE INSPECTION

I, the undersigned, holding a valid commission issued by the National Board of Boiler and Pressure Vessel Inspectors and the State or Providence of N.C. and employed by **HSBI and I Company of Hartford Connecticut** have inspected the components described in this Owner's Report during the period 9-23-97 to 11-21-97; and state that to the best of my knowledge and belief, the Owner has performed examinations and taken corrective measures described in this Owner's Report in accordance with the requirements of the ASME Code, Section XI.

By signing this certificate, neither the Inspector nor his employer makes any warranty, expressed or implied, concerning the examinations and corrective measures described in this Owner's Report. Furthermore, neither the Inspector nor his employer shall be liable in any manner for any personal injury or property damage or a loss of any kind arising from or connected with this inspection.

M.B. Chapman Commissions NC 914
Inspector's Signature National Board, State, Providence and Endorsements

Date 11-21, 19 97

Form 401465 (2-95)

FORM NIS-2 OWNER'S REPORT FOR REPAIRS OR REPLACEMENTS
As Required By The Provisions Of The ASME Code Section XI

1. Owner **Duke Power Company**
   Address **526 S. Church Street, Charlotte, NC 28201-1006**

1a. Date 11-20-97

Sheet 1 of 1

2. Plant **Oconee Nuclear Station**
   Address **P.O. Box 1439, Seneca, S.C. 29679**

2a. Unit ☒ 1 ☐ 2 ☐ 3 ☐ Shared (specify Units_____)

3. Work Performed By **Duke Power Company**
   Address **526 S. Church Street, Charlotte, NC 28201-1006**
   Type Code Symbol Stamp **N/A** Authorization No. **N/A** Expiration Date **N/A**

3a. Work Order # 96068520
Repair Organization Job #

3b. NSM or MM # OE-9126

4. Identification of System HP Class B

5. (a) Applicable Construction Code B31.7 1968 Edition, 6-68 Addenda, — Code Cases
   (b) Applicable Edition of Section XI Utilized for Repairs or Replacements 1989, No Addenda

6. Identification of Components Repaired or Replaced and Replacement Components

	Column 1	Column 2	Column 3	Column 4	Column 5	Col. 6	Column 7	Column 8
	Name of Component	Name of Manufacturer	Manufacturer Serial Number	National Board Number	Other Identification	Year Built	Repaired, Replaced, or Replacement	ASME Code Stamped (yes or no)
A	Valve 1HP-5	Anchor Darling	V2223-007	—	—	94	☐ Repaired ☐ Replaced ☒ Replacement	☒ No ☐ Yes
B							☐ Repaired ☐ Replaced ☐ Replacement	☐ No ☐ Yes
C							☐ Repaired ☐ Replaced ☐ Replacement	☐ No ☐ Yes
D							☐ Repaired ☐ Replaced ☐ Replacement	☐ No ☐ Yes
E							☐ Repaired ☐ Replaced ☐ Replacement	☐ No ☐ Yes
F							☐ Repaired ☐ Replaced ☐ Replacement	☐ No ☐ Yes

Form 401463 (2-95)

Form NIS-2 (Back)

NOTE: Supplemental sheets in form of lists, sketches, or drawings may be used, provided (1) size is 8 1/2 in. x 11 in. (2) information in items 1 through 6 on this report is included on each sheet, and (3) each sheet is numbered and the number of sheets is recorded at the top of this form.

7. Description of Work Replaced Ball in valve 1HP-5

8. Test Conducted: ☐ Hydrostatic ☐ Pneumatic ☐ Nominal Operating Pressure ☐ Other ☒ Exempt

Pressure _____ psig Test Temp. _____ °F

Pressure _____ psig Test Temp. _____ °F

Pressure _____ psig Test Temp. _____ °F

9. Remarks _____

(Applicable Manufacturer's Data Records to be Attached)

CERTIFICATE OF COMPLIANCE

We certify that the statements made in the report are correct and this **repair or replacement** conforms to the rules of the ASME Code, Section XI.

Type Code Symbol Stamp **N/A**

Certificate of Authorization No. **N/A** Expiration Date **N/A**

Signed [illegible] QC Specialist Date 11-20, 1997
Owner or Owner's Designee, Title

CERTIFICATE OF INSERVICE INSPECTION

I, the undersigned, holding a valid commission issued by the National Board of Boiler and Pressure Vessel Inspectors and the State or Providence of N.C. and employed by **HSBI and I Company of Hartford Connecticut** have inspected the components described in this Owner's Report during the period 10-13-97 to 11-20-97; and state that to the best of my knowledge and belief, the Owner has performed examinations and taken corrective measures described in this Owner's Report in accordance with the requirements of the ASME Code, Section XI.

By signing this certificate, neither the Inspector nor his employer makes any warranty, expressed or implied, concerning the examinations and corrective measures described in this Owner's Report. Furthermore, neither the Inspector nor his employer shall be liable in any manner for any personal injury or property damage or a loss of any kind arising from or connected with this inspection.

[illegible] Commissions NC914
Inspector's Signature National Board, State, Providence and Endorsements

Date 11-20, 1997

Form 401463 (1-95)

FORM NIS-2 OWNER'S REPORT FOR REPAIRS OR REPLACEMENTS
As Required By The Provisions Of The ASME Code Section XI

1. Owner **Duke Power Company**
   Address **526 S. Church Street, Charlotte, NC 28201-1006**

1a. Date 11-21-97

Sheet 1 of 1

2. Plant **Oconee Nuclear Station**
   Address **P.O. Box 1439, Seneca, S.C. 29679**

2a. Unit ☑ 1 ☐ 2 ☐ 3 ☐ Shared (specify Units_____)

3. Work Performed By **Duke Power Company**
   Address **526 S. Church Street, Charlotte, NC 28201-1006**
   Type Code Symbol Stamp **N/A** Authorization No. **N/A** Expiration Date **N/A**

3a. Work Order # 96062546
Repair Organization Job #

3b. NSM or MM # 9344

4. Identification of System RC Class 1

5. (a) Applicable Construction Code ASME III 1965 Edition, Summer 67 Addenda, 1332-2,3,4, 1339-1, 1336 Code Cases
   (b) Applicable Edition of Section XI Utilized for Repairs or Replacements 1989, No Addenda 1359-1, 1338 211-1

6. Identification of Components Repaired or Replaced and Replacement Components

	Column 1	Column 2	Column 3	Column 4	Column 5	Col. 6	Column 7	Column 8
	Name of Component	Name of Manufacturer	Manufacturer Serial Number	National Board Number	Other Identification	Year Built	Repaired, Replaced, or Replacement	ASME Code Stamped (yes or no)
A	1B OTSG	Babcock + Wilcox	620-0003-55-2	N-104	RC HX 000B	1969	☑ Repaired ☐ Replaced ☐ Replacement	☐ No ☑ Yes
B							☐ Repaired ☐ Replaced ☐ Replacement	☐ No ☐ Yes
C							☐ Repaired ☐ Replaced ☐ Replacement	☐ No ☐ Yes
D							☐ Repaired ☐ Replaced ☐ Replacement	☐ No ☐ Yes
E							☐ Repaired ☐ Replaced ☐ Replacement	☐ No ☐ Yes
F							☐ Repaired ☐ Replaced ☐ Replacement	☐ No ☐ Yes

Form NIS-2 (Back)

NOTE: Supplemental sheets in form of lists, sketches, or drawings may be used, provided (1) size is 8 1/2 in. x 11 in. (2) information in items 1 through 6 on this report is included on each sheet, and (3) each sheet is numbered and the number of sheets is recorded at the top of this form.

7. Description of Work Stabilized, rolled, plugged, Removed tubes OTSG 1B

8. Test Conducted: ☐ Hydrostatic ☐ Pneumatic ☐ Nominal Operating Pressure ☐ Other ☑ Exempt

Pressure	_____ psig	Test Temp.	_____ °F
Pressure	_____ psig	Test Temp.	_____ °F
Pressure	_____ psig	Test Temp.	_____ °F

9. Remarks _____

(Applicable Manufacturer's Data Records to be Attached)

CERTIFICATE OF COMPLIANCE

We certify that the statements made in the report are correct and this **repair or replacement** conforms to the rules of the ASME Code, Section XI.

Type Code Symbol Stamp **N/A**

Certificate of Authorization No. **N/A** Expiration Date **N/A**

Signed CR Henson QA Specialist Date 11-21, 19 97
Owner or Owner's Designee, Title

CERTIFICATE OF INSERVICE INSPECTION

I, the undersigned, holding a valid commission issued by the National Board of Boiler and Pressure Vessel Inspectors and the State or Providence of N. C and employed by **HSBI and I Company of Hartford Connecticut** have inspected the components described in this Owner's Report during the period 9-23-97 to 11-21-97; and state that to the best of my knowledge and belief, the Owner has performed examinations and taken corrective measures described in this Owner's Report in accordance with the requirements of the ASME Code, Section XI.

By signing this certificate, neither the Inspector nor his employer makes any warranty, expressed or implied, concerning the examinations and corrective measures described in this Owner's Report. Furthermore, neither the Inspector nor his employer shall be liable in any manner for any personal injury or property damage or a loss of any kind arising from or connected with this inspection.

MB Chapman Commissions NC914
Inspector's Signature National Board, State, Providence and Endorsements

Date 11-21, 19 97

Form 401463 (1/95)

FORM NIS-2 OWNER'S REPORT FOR REPAIRS OR REPLACEMENTS
As Required By The Provisions Of The ASME Code Section XI

1. Owner **Duke Power Company**
   Address **526 S. Church Street, Charlotte, NC 28201-1006**

1a. Date 11-24-97

Sheet 1 of 1

2. Plant **Oconee Nuclear Station**
   Address **P.O. Box 1439, Seneca, S.C. 29679**

2a. Unit ☒ 1 ☐ 2 ☐ 3 ☐ Shared (specify Units_____)

3a. Work Order # 97038362-01
Repair Organization Job #

3. Work Performed By **Duke Power Company**
   Address **526 S. Church Street, Charlotte, NC 28201-1006**
   Type Code Symbol Stamp **N/A** Authorization No. **N/A** Expiration Date **N/A**

3b. NSM or MM # —

4. Identification of System LP Class B

5. (a) Applicable Construction Code B31.7 1968 Edition, 6-68 Addenda, — Code Cases
   (b) Applicable Edition of Section XI Utilized for Repairs or Replacements 1989, No Addenda

6. Identification of Components Repaired or Replaced and Replacement Components

	Column 1	Column 2	Column 3	Column 4	Column 5	Col. 6	Column 7	Column 8
	Name of Component	Name of Manufacturer	Manufacturer Serial Number	National Board Number	Other Identification	Year Built	Repaired, Replaced, or Replacement	ASME Code Stamped (yes or no)
A	Valve 1LP-0003	Crane	Unavailable	—	—	—	☐ Repaired ☐ Replaced ☒ Replacement	☒ No ☐ Yes
B							☐ Repaired ☐ Replaced ☐ Replacement	☐ No ☐ Yes
C							☐ Repaired ☐ Replaced ☐ Replacement	☐ No ☐ Yes
D							☐ Repaired ☐ Replaced ☐ Replacement	☐ No ☐ Yes
E							☐ Repaired ☐ Replaced ☐ Replacement	☐ No ☐ Yes
F							☐ Repaired ☐ Replaced ☐ Replacement	☐ No ☐ Yes

Form NIS-2 (Back)

NOTE: Supplemental sheets in form of lists, sketches, or drawings may be used, provided (1) size is 8 1/2 in. x 11 in. (2) information in items 1 through 6 on this report is included on each sheet, and (3) each sheet is numbered and the number of sheets is recorded at the top of this form.

7. Description of Work Replaced Body/Bonnet stud #9 in ILP-3

8. Test Conducted: ☐ Hydrostatic ☐ Pneumatic ☐ Nominal Operating Pressure ☐ Other ☒ Exempt

Pressure _____ psig Test Temp. _____ °F

Pressure _____ psig Test Temp. _____ °F

Pressure _____ psig Test Temp. _____ °F

9. Remarks _____

(Applicable Manufacturer's Data Records to be Attached)

CERTIFICATE OF COMPLIANCE

We certify that the statements made in the report are correct and this **repair or replacement** conforms to the rules of the ASME Code, Section XI.

Type Code Symbol Stamp **N/A**

Certificate of Authorization No. **N/A** Expiration Date **N/A**

Signed [illegible] QC Specialist Date 11-24, 1997
Owner or Owner's Designee, Title

CERTIFICATE OF INSERVICE INSPECTION

I, the undersigned, holding a valid commission issued by the National Board of Boiler and Pressure Vessel Inspectors and the State or Providence of N.C. and employed by **HSBI and I Company of Hartford Connecticut** have inspected the components described in this Owner's Report during the period 10-13-97 to 11-24-97; and state that to the best of my knowledge and belief, the Owner has performed examinations and taken corrective measures described in this Owner's Report in accordance with the requirements of the ASME Code, Section XI.

By signing this certificate, neither the Inspector nor his employer makes any warranty, expressed or implied, concerning the examinations and corrective measures described in this Owner's Report. Furthermore, neither the Inspector nor his employer shall be liable in any manner for any personal injury or property damage or a loss of any kind arising from or connected with this inspection.

MB Chapman Commissions NC914
Inspector's Signature National Board, State, Providence and Endorsements

Date 11-24, 1997

Form 401463 (2-95)

FORM NIS-2 OWNER'S REPORT FOR REPAIRS OR REPLACEMENTS
As Required By The Provisions Of The ASME Code Section XI

1. Owner **Duke Power Company**
   Address **526 S. Church Street, Charlotte, NC 28201-1006**

1a. Date 11-24-97

Sheet 1 of 1

2. Plant **Oconee Nuclear Station**
   Address **P.O. Box 1439, Seneca, S.C. 29679**

2a. Unit ☑ 1 ☐ 2 ☐ 3 ☐ Shared (specify Units _____)

3a. Work Order # 97052928-02
Repair Organization Job #

3. Work Performed By **Duke Power Company**
   Address **526 S. Church Street, Charlotte, NC 28201-1006**
   Type Code Symbol Stamp **N/A** Authorization No. **N/A** Expiration Date **N/A**

3b. NSM or MM # N/A

4. Identification of System RC Class 1

5. (a) Applicable Construction Code ASME III 19 65 Edition, Summer 67 Addenda, NO Code Cases
   (b) Applicable Edition of Section XI Utilized for Repairs or Replacements 1989, No Addenda

6. Identification of Components Repaired or Replaced and Replacement Components

	Column 1	Column 2	Column 3	Column 4	Column 5	Col. 6	Column 7	Column 8
	Name of Component	Name of Manufacturer	Manufacturer Serial Number	National Board Number	Other Identification	Year Built	Repaired, Replaced, or Replacement	ASME Code Stamped (yes or no)
A	1A1 Reactor Coolant Pump	Westinghouse	N/A	N/A	RC PU 0001	N/A	☐ Repaired ☐ Replaced ☑ Replacement	☑ No ☐ Yes
B							☐ Repaired ☐ Replaced ☐ Replacement	☐ No ☐ Yes
C							☐ Repaired ☐ Replaced ☐ Replacement	☐ No ☐ Yes
D							☐ Repaired ☐ Replaced ☐ Replacement	☐ No ☐ Yes
E							☐ Repaired ☐ Replaced ☐ Replacement	☐ No ☐ Yes
F							☐ Repaired ☐ Replaced ☐ Replacement	☐ No ☐ Yes

Form NIS-2 (Back)

NOTE: Supplemental sheets in form of lists, sketches, or drawings may be used, provided (1) size is 8 1/2 in. x 11 in. (2) information in items 1 through 6 on this report is included on each sheet, and (3) each sheet is numbered and the number of sheets is recorded at the top of this form.

7. Description of Work Replaced main flange bolts 1A1 RCP

8. Test Conducted: ☐ Hydrostatic ☐ Pneumatic ☐ Nominal Operating Pressure ☐ Other ☒ Exempt

Pressure	_____ psig	Test Temp.	_____ °F
Pressure	_____ psig	Test Temp.	_____ °F
Pressure	_____ psig	Test Temp.	_____ °F

9. Remarks _____

(Applicable Manufacturer's Data Records to be Attached)

CERTIFICATE OF COMPLIANCE

We certify that the statements made in the report are correct and this **repair or replacement** conforms to the rules of the ASME Code, Section XI.

Type Code Symbol Stamp **N/A**

Certificate of Authorization No. **N/A** Expiration Date **N/A**

Signed C.R. Henson QA Specialist Date 11-24, 19 97
Owner or Owner's Designee, Title

CERTIFICATE OF INSERVICE INSPECTION

I, the undersigned, holding a valid commission issued by the National Board of Boiler and Pressure Vessel Inspectors and the State or Providence of N.C. and employed by **HSBI and I Company of Hartford Connecticut** have inspected the components described in this Owner's Report during the period 10-18-97 to 11-25-97; and state that to the best of my knowledge and belief, the Owner has performed examinations and taken corrective measures described in this Owner's Report in accordance with the requirements of the ASME Code, Section XI.

By signing this certificate, neither the Inspector nor his employer makes any warranty, expressed or implied, concerning the examinations and corrective measures described in this Owner's Report. Furthermore, neither the Inspector nor his employer shall be liable in any manner for any personal injury or property damage or a loss of any kind arising from or connected with this inspection.

M B Chapman Commissions NC914
Inspector's Signature National Board, State, Providence and Endorsements

Date 11-25, 1997

Form 401463 (2-95)

FORM NIS-2 OWNER'S REPORT FOR REPAIRS OR REPLACEMENTS
As Required By The Provisions Of The ASME Code Section XI

1. Owner **Duke Power Company**
   Address **526 S. Church Street, Charlotte, NC 28201-1006**

1a. Date 12-2-97

Sheet 1 of 1

2. Plant **Oconee Nuclear Station**
   Address **P.O. Box 1439, Seneca, S.C. 29679**

2a. Unit ☑ 1 ☐ 2 ☐ 3 ☐ Shared (specify Units_____)

3a. Work Order # 97013607-01
Repair Organization Job #

3. Work Performed By **Duke Power Company**
   Address **526 S. Church Street, Charlotte, NC 28201-1006**
   Type Code Symbol Stamp **N/A** Authorization No. **N/A** Expiration Date **N/A**

3b. NSM or MM # _____

4. Identification of System RC Class 1

5. (a) Applicable Construction Code B31.7 19 67 Edition, 7-67 Addenda, NO Code Cases
   (b) Applicable Edition of Section XI Utilized for Repairs or Replacements 1989, No Addenda

6. Identification of Components Repaired or Replaced and Replacement Components

	Column 1	Column 2	Column 3	Column 4	Column 5	Col. 6	Column 7	Column 8
	Name of Component	Name of Manufacturer	Manufacturer Serial Number	National Board Number	Other Identification	Year Built	Repaired, Replaced, or Replacement	ASME Code Stamped (yes or no)
A	CRDM #9	N/A	N/A	N/A	CRD CM 0406	N/A	☐ Repaired ☐ Replaced ☑ Replacement	☑ No ☐ Yes
B							☐ Repaired ☐ Replaced ☐ Replacement	☐ No ☐ Yes
C							☐ Repaired ☐ Replaced ☐ Replacement	☐ No ☐ Yes
D							☐ Repaired ☐ Replaced ☐ Replacement	☐ No ☐ Yes
E							☐ Repaired ☐ Replaced ☐ Replacement	☐ No ☐ Yes
F							☐ Repaired ☐ Replaced ☐ Replacement	☐ No ☐ Yes

Form NIS-2 (Back)

NOTE: Supplemental sheets in form of lists, sketches, or drawings may be used, provided (1) size is 8 1/2 in. x 11 in. (2) information in items 1 through 6 on this report is included on each sheet, and (3) each sheet is numbered and the number of sheets is recorded at the top of this form.

7. Description of Work Replaced holdown bolting CRDM # 9

8. Test Conducted: ☐ Hydrostatic ☐ Pneumatic ☐ Nominal Operating Pressure ☐ Other ☒ Exempt

Pressure	_____ psig	Test Temp.	_____ °F
Pressure	_____ psig	Test Temp.	_____ °F
Pressure	_____ psig	Test Temp.	_____ °F

9. Remarks _____

(Applicable Manufacturer's Data Records to be Attached)

CERTIFICATE OF COMPLIANCE

We certify that the statements made in the report are correct and this **repair or replacement** conforms to the rules of the ASME Code, Section XI.

Type Code Symbol Stamp **N/A**

Certificate of Authorization No. **N/A** Expiration Date **N/A**

Signed C.R. Hanson QA Specialist Date 12-2, 19 97
Owner or Owner's Designee, Title

CERTIFICATE OF INSERVICE INSPECTION

I, the undersigned, holding a valid commission issued by the National Board of Boiler and Pressure Vessel Inspectors and the State or Providence of N.C. and employed by **HSBI and I Company of Hartford Connecticut** have inspected the components described in this Owner's Report during the period 10-1-97 to 12-2-97; and state that to the best of my knowledge and belief, the Owner has performed examinations and taken corrective measures described in this Owner's Report in accordance with the requirements of the ASME Code, Section XI.

By signing this certificate, neither the Inspector nor his employer makes any warranty, expressed or implied, concerning the examinations and corrective measures described in this Owner's Report. Furthermore, neither the Inspector nor his employer shall be liable in any manner for any personal injury or property damage or a loss of any kind arising from or connected with this inspection.

MB Chapman Commissions NC914
Inspector's Signature National Board, State, Providence and Endorsements

Date 12-2, 19 97

Form 401463 (2-95)

FORM NIS-2 OWNER'S REPORT FOR REPAIRS OR REPLACEMENTS
As Required By The Provisions Of The ASME Code Section XI

1. Owner **Duke Power Company**
   Address **526 S. Church Street, Charlotte, NC 28201-1006**

1a. Date 12-2-97

Sheet 1 of 1

2. Plant **Oconee Nuclear Station**
   Address **P.O. Box 1439, Seneca, S.C. 29679**

2a. Unit ☒ 1 ☐ 2 ☐ 3 ☐ Shared (specify Units_____)

3. Work Performed By **Duke Power Company**
   Address **526 S. Church Street, Charlotte, NC 28201-1006**
   Type Code Symbol Stamp **N/A** Authorization No. **N/A** Expiration Date **N/A**

3a. Work Order # 97013605-01
Repair Organization Job #

3b. NSM or MM # _____

4. Identification of System RC Class 1

5. (a) Applicable Construction Code B31.7 19 67 Edition, 7-67 Addenda, NO Code Cases
   (b) Applicable Edition of Section XI Utilized for Repairs or Replacements 1989, No Addenda

6. Identification of Components Repaired or Replaced and Replacement Components

	Column 1	Column 2	Column 3	Column 4	Column 5	Col. 6	Column 7	Column 8
	Name of Component	Name of Manufacturer	Manufacturer Serial Number	National Board Number	Other Identification	Year Built	Repaired, Replaced, or Replacement	ASME Code Stamped (yes or no)
A	CRDM 40	N/A	N/A	N/A	CRD CM 0613	N/A	☐ Repaired ☐ Replaced ☒ Replacement	☒ No ☐ Yes
B							☐ Repaired ☐ Replaced ☐ Replacement	☐ No ☐ Yes
C							☐ Repaired ☐ Replaced ☐ Replacement	☐ No ☐ Yes
D							☐ Repaired ☐ Replaced ☐ Replacement	☐ No ☐ Yes
E							☐ Repaired ☐ Replaced ☐ Replacement	☐ No ☐ Yes
F							☐ Repaired ☐ Replaced ☐ Replacement	☐ No ☐ Yes

Form NIS-2 (Back)

NOTE: Supplemental sheets in form of lists, sketches, or drawings may be used, provided (1) size is 8 1/2 in. x 11 in. (2) information in items 1 through 6 on this report is included on each sheet, and (3) each sheet is numbered and the number of sheets is recorded at the top of this form.

7. Description of Work Replaced bolting CRDM #40 flanges

8. Test Conducted: ☐ Hydrostatic ☐ Pneumatic ☐ Nominal Operating Pressure ☐ Other ☑ Exempt

Pressure _____ psig Test Temp. _____ °F

Pressure _____ psig Test Temp. _____ °F

Pressure _____ psig Test Temp. _____ °F

9. Remarks _____

(Applicable Manufacturer's Data Records to be Attached)

CERTIFICATE OF COMPLIANCE

We certify that the statements made in the report are correct and this **repair or replacement** conforms to the rules of the ASME Code, Section XI.

Type Code Symbol Stamp **N/A**

Certificate of Authorization No. **N/A** Expiration Date **N/A**

Signed C.R. Henson QA Specialist Date 12-2, 19 97
Owner or Owner's Designee, Title

CERTIFICATE OF INSERVICE INSPECTION

I, the undersigned, holding a valid commission issued by the National Board of Boiler and Pressure Vessel Inspectors and the State or Providence of N.C and employed by **HSBI and I Company of Hartford Connecticut** have inspected the components described in this Owner's Report during the period 10-1-97 to 12-2-97; and state that to the best of my knowledge and belief, the Owner has performed examinations and taken corrective measures described in this Owner's Report in accordance with the requirements of the ASME Code, Section XI.

By signing this certificate, neither the Inspector nor his employer makes any warranty, expressed or implied, concerning the examinations and corrective measures described in this Owner's Report. Furthermore, neither the Inspector nor his employer shall be liable in any manner for any personal injury or property damage or a loss of any kind arising from or connected with this inspection.

MB Chapman Commissions NC914
Inspector's Signature National Board, State, Providence and Endorsements

Date 12-2, 19 97

Form 401463 (2-95)

FORM NIS-2 OWNER'S REPORT FOR REPAIRS OR REPLACEMENTS
As Required By The Provisions Of The ASME Code Section XI

1. Owner **Duke Power Company**
   Address **526 S. Church Street, Charlotte, NC 28201-1006**

1a. Date 1-8-96

Sheet 1 of 1

2. Plant **Oconee Nuclear Station**
   Address **P.O. Box 1439, Seneca, S.C. 29679**

2a. Unit ☒ 1 ☐ 2 ☐ 3 ☐ Shared (specify Units_____)

3. Work Performed By **Duke Power Company**
   Address **526 S. Church Street, Charlotte, NC 28201-1006**
   Type Code Symbol Stamp **N/A** Authorization No. **N/A** Expiration Date **N/A**

3a. Work Order # 95083910-01
Repair Organization Job #

3b. NSM or MM # N/A

4. Identification of System RC Class 1

5. (a) Applicable Construction Code B31.7 1967 Edition, 6-68 Addenda, NO Code Cases
   (b) Applicable Edition of Section XI Utilized for Repairs or Replacements 1989, No Addenda

6. Identification of Components Repaired or Replaced and Replacement Components

	Column 1	Column 2	Column 3	Column 4	Column 5	Col. 6	Column 7	Column 8
	Name of Component	Name of Manufacturer	Manufacturer Serial Number	National Board Number	Other Identification	Year Built	Repaired, Replaced, or Replacement	ASME Code Stamped (yes or no)
A	Bolting	General Nuclear	1577, 1729, 1844, 1734, 1632, 1878, 1834, 1645	N/A	NT-BG 37	N/A	☐ Repaired ☐ Replaced ☒ Replacement	☒ No ☐ Yes
B	Segment Ring	General Nuclear	N/A	N/A	N/A	N/A	☐ Repaired ☐ Replaced ☒ Replacement	☒ No ☐ Yes
C							☐ Repaired ☐ Replaced ☐ Replacement	☐ No ☐ Yes
D							☐ Repaired ☐ Replaced ☐ Replacement	☐ No ☐ Yes
E							☐ Repaired ☐ Replaced ☐ Replacement	☐ No ☐ Yes
F							☐ Repaired ☐ Replaced ☐ Replacement	☐ No ☐ Yes

Form NIS-2 (Back)

NOTE: Supplemental sheets in form of lists, sketches, or drawings may be used, provided (1) size is 8 1/2 in. x 11 in. (2) information in items 1 through 6 on this report is included on each sheet, and (3) each sheet is numbered and the number of sheets is recorded at the top of this form.

7. Description of Work Replaced bolting CRDM nozzle # 18

8. Test Conducted: ☐ Hydrostatic ☐ Pneumatic ☑ Nominal Operating Pressure ☐ Other ☐ Exempt

Pressure	2200 psig	Test Temp.	°F
Pressure	psig	Test Temp.	°F
Pressure	psig	Test Temp.	°F

9. Remarks

(Applicable Manufacturer's Data Records to be Attached)

CERTIFICATE OF COMPLIANCE

We certify that the statements made in the report are correct and this **repair or replacement** conforms to the rules of the ASME Code, Section XI.

Type Code Symbol Stamp **N/A**

Certificate of Authorization No. **N/A** Expiration Date **N/A**

Signed C R Henson Date 1-8, 1996
Owner or Owner's Designee, Title

CERTIFICATE OF INSERVICE INSPECTION

I, the undersigned, holding a valid commission issued by the National Board of Boiler and Pressure Vessel Inspectors and the State or Providence of N.C. and employed by **HSBI and I Company of Hartford Connecticut** have inspected the components described in this Owner's Report during the period 11-6-95 to 1-15-96; and state that to the best of my knowledge and belief, the Owner has performed examinations and taken corrective measures described in this Owner's Report in accordance with the requirements of the ASME Code, Section XI.

By signing this certificate, neither the Inspector nor his employer makes any warranty, expressed or implied, concerning the examinations and corrective measures described in this Owner's Report. Furthermore, neither the Inspector nor his employer shall be liable in any manner for any personal injury or property damage or a loss of any kind arising from or connected with this inspection.

M B Chapman Commissions NC 914
Inspector's Signature National Board, State, Providence and Endorsements

Date 1-15, 1996

Form 401463 (2-95)

FORM NIS-2 OWNER'S REPORT FOR REPAIRS OR REPLACEMENTS
As Required By The Provisions Of The ASME Code Section XI

1. Owner **Duke Power Company**
   Address **526 S. Church Street, Charlotte, NC 28201-1006**

1a. Date 11-24-97

Sheet 1 of 1

2. Plant **Oconee Nuclear Station**
   Address **P.O. Box 1439, Seneca, S.C. 29679**

2a. Unit ☑ 1 ☐ 2 ☐ 3 ☐ Shared (specify Units_____)

3a. Work Order # 97013608-01
Repair Organization Job #

3. Work Performed By **Duke Power Company**
   Address **526 S. Church Street, Charlotte, NC 28201-1006**
   Type Code Symbol Stamp **N/A** Authorization No. **N/A** Expiration Date **N/A**

3b. NSM or MM # N/A

4. Identification of System RC Class 1

5. (a) Applicable Construction Code B31.7 1967 Edition, 6-68 Addenda, NO Code Cases
   (b) Applicable Edition of Section XI Utilized for Repairs or Replacements 1989, No Addenda

6. Identification of Components Repaired or Replaced and Replacement Components

	Column 1	Column 2	Column 3	Column 4	Column 5	Col. 6	Column 7	Column 8
	Name of Component	Name of Manufacturer	Manufacturer Serial Number	National Board Number	Other Identification	Year Built	Repaired, Replaced, or Replacement	ASME Code Stamped (yes or no)
A	CRDM 19	N/A	N/A	N/A	CRD CM 0m07	N/A	☐ Repaired ☐ Replaced ☑ Replacement	☑ No ☐ Yes
B							☐ Repaired ☐ Replaced ☐ Replacement	☐ No ☐ Yes
C							☐ Repaired ☐ Replaced ☐ Replacement	☐ No ☐ Yes
D							☐ Repaired ☐ Replaced ☐ Replacement	☐ No ☐ Yes
E							☐ Repaired ☐ Replaced ☐ Replacement	☐ No ☐ Yes
F							☐ Repaired ☐ Replaced ☐ Replacement	☐ No ☐ Yes

Form NIS-2 (Back)

NOTE: Supplemental sheets in form of lists, sketches, or drawings may be used, provided (1) size is 8 1/2 in. x 11 in. (2) information in items 1 through 6 on this report is included on each sheet, and (3) each sheet is numbered and the number of sheets is recorded at the top of this form.

7. Description of Work Replaced bolting CRDM #19

8. Test Conducted: ☐ Hydrostatic ☐ Pneumatic ☐ Nominal Operating Pressure ☐ Other ☑ Exempt

Pressure _____ psig Test Temp. _____ °F

Pressure _____ psig Test Temp. _____ °F

Pressure _____ psig Test Temp. _____ °F

9. Remarks _____

(Applicable Manufacturer's Data Records to be Attached)

CERTIFICATE OF COMPLIANCE

We certify that the statements made in the report are correct and this **repair or replacement** conforms to the rules of the ASME Code, Section XI.

Type Code Symbol Stamp **N/A**

Certificate of Authorization No. **N/A** Expiration Date **N/A**

Signed CR Hanson QA Specialist Date 11-24, 19 97
Owner or Owner's Designee, Title

CERTIFICATE OF INSERVICE INSPECTION

I, the undersigned, holding a valid commission issued by the National Board of Boiler and Pressure Vessel Inspectors and the State or Providence of N. C. and employed by **HSBI and I Company of Hartford Connecticut** have inspected the components described in this Owner's Report during the period 10-1-97 to 11-24-97; and state that to the best of my knowledge and belief, the Owner has performed examinations and taken corrective measures described in this Owner's Report in accordance with the requirements of the ASME Code, Section XI.

By signing this certificate, neither the Inspector nor his employer makes any warranty, expressed or implied, concerning the examinations and corrective measures described in this Owner's Report. Furthermore, neither the Inspector nor his employer shall be liable in any manner for any personal injury or property damage or a loss of any kind arising from or connected with this inspection.

MB Chapman Commissions NC914
Inspector's Signature National Board, State, Providence and Endorsements

Date 11-24, 19 97

Form 401463 (2-95)

FORM NIS-2 OWNER'S REPORT FOR REPAIRS OR REPLACEMENTS
As Required By The Provisions Of The ASME Code Section XI

1. Owner **Duke Power Company**
   Address **526 S. Church Street, Charlotte, NC 28201-1006**

1a. Date 11-13-97

Sheet 1 of 1

2. Plant **Oconee Nuclear Station**
   Address **P.O. Box 1439, Seneca, S.C. 29679**

2a. Unit ☑ 1 ☐ 2 ☐ 3 ☐ Shared (specify Units_____)

3. Work Performed By **Duke Power Company**
   Address **526 S. Church Street, Charlotte, NC 28201-1006**
   Type Code Symbol Stamp **N/A** Authorization No. **N/A** Expiration Date **N/A**

3a. Work Order # 97089961-04
Repair Organization Job #

3b. NSM or MM # N/A

4. Identification of System LPS Class 2

5. (a) Applicable Construction Code B31.1 19 67 Edition, 7-67 Addenda, NO Code Cases
   (b) Applicable Edition of Section XI Utilized for Repairs or Replacements 1989, No Addenda

6. Identification of Components Repaired or Replaced and Replacement Components

	Column 1	Column 2	Column 3	Column 4	Column 5	Col. 6	Column 7	Column 8
	Name of Component	Name of Manufacturer	Manufacturer Serial Number	National Board Number	Other Identification	Year Built	Repaired, Replaced, or Replacement	ASME Code Stamped (yes or no)
A	1A2 RCP motor Oil Cooler Inlet and Outlet Flanges	DPC	N/A	N/A	N/A	1973	☐ Repaired ☐ Replaced ☑ Replacement	☑ No ☐ Yes
B							☐ Repaired ☐ Replaced ☐ Replacement	☐ No ☐ Yes
C							☐ Repaired ☐ Replaced ☐ Replacement	☐ No ☐ Yes
D							☐ Repaired ☐ Replaced ☐ Replacement	☐ No ☐ Yes
E							☐ Repaired ☐ Replaced ☐ Replacement	☐ No ☐ Yes
F							☐ Repaired ☐ Replaced ☐ Replacement	☐ No ☐ Yes

Form 401463 (2-95)

Form NIS-2 (Back)

NOTE: Supplemental sheets in form of lists, sketches, or drawings may be used, provided (1) size is 8 1/2 in. x 11 in. (2) information in items 1 through 6 on this report is included on each sheet, and (3) each sheet is numbered and the number of sheets is recorded at the top of this form.

7. Description of Work Replaced bolting 1A2 RCP motor inlet and outlet flanges

8. Test Conducted: ☐ Hydrostatic ☐ Pneumatic ☐ Nominal Operating Pressure ☐ Other ☑ Exempt

Pressure	_____ psig	Test Temp.	_____ °F
Pressure	_____ psig	Test Temp.	_____ °F
Pressure	_____ psig	Test Temp.	_____ °F

9. Remarks _____

(Applicable Manufacturer's Data Records to be Attached)

CERTIFICATE OF COMPLIANCE

We certify that the statements made in the report are correct and this **repair or replacement** conforms to the rules of the ASME Code, Section XI.

Type Code Symbol Stamp **N/A**

Certificate of Authorization No. **N/A** Expiration Date **N/A**

Signed C R Hanson QA Specialist Date 11/13, 19 97
Owner or Owner's Designee, Title

CERTIFICATE OF INSERVICE INSPECTION

I, the undersigned, holding a valid commission issued by the National Board of Boiler and Pressure Vessel Inspectors and the State or Providence of N.C and employed by **HSBI and I Company of Hartford Connecticut** have inspected the components described in this Owner's Report during the period 11-2-97 to 11-13-97; and state that to the best of my knowledge and belief, the Owner has performed examinations and taken corrective measures described in this Owner's Report in accordance with the requirements of the ASME Code, Section XI.

By signing this certificate, neither the Inspector nor his employer makes any warranty, expressed or implied, concerning the examinations and corrective measures described in this Owner's Report. Furthermore, neither the Inspector nor his employer shall be liable in any manner for any personal injury or property damage or a loss of any kind arising from or connected with this inspection.

M B. Chapman Commissions NC914
Inspector's Signature National Board, State, Providence and Endorsements

Date 11-13, 19 97

Form 401463 (2-95)

FORM NIS-2 OWNER'S REPORT FOR REPAIRS OR REPLACEMENTS
As Required By The Provisions Of The ASME Code Section XI

1. Owner **Duke Power Company**
   Address **526 S. Church Street, Charlotte, NC 28201-1006**

1a. Date 11-25-97

Sheet 1 of 1

2. Plant **Oconee Nuclear Station**
   Address **P.O. Box 1439, Seneca, S.C. 29679**

2a. Unit ☒ 1 ☐ 2 ☐ 3 ☐ Shared (specify Units_____)

3. Work Performed By **Duke Power Company**
   Address **526 S. Church Street, Charlotte, NC 28201-1006**
   Type Code Symbol Stamp **N/A** Authorization No. **N/A** Expiration Date **N/A**

3a. Work Order # 97051949-01
Repair Organization Job #

3b. NSM or MM # —

4. Identification of System LP Class B

5. (a) Applicable Construction Code B31.7 1968 Edition, 6-68 Addenda, — Code Cases
   (b) Applicable Edition of Section XI Utilized for Repairs or Replacements 1989, No Addenda

6. Identification of Components Repaired or Replaced and Replacement Components

	Column 1	Column 2	Column 3	Column 4	Column 5	Col. 6	Column 7	Column 8
	Name of Component	Name of Manufacturer	Manufacturer Serial Number	National Board Number	Other Identification	Year Built	Repaired, Replaced, or Replacement	ASME Code Stamped (yes or no)
A	Valve 1LP-60/61	Varec	C67029	N/A	—	N/A	☐ Repaired ☐ Replaced ☒ Replacement	☒ No ☐ Yes
B							☐ Repaired ☐ Replaced ☐ Replacement	☐ No ☐ Yes
C							☐ Repaired ☐ Replaced ☐ Replacement	☐ No ☐ Yes
D							☐ Repaired ☐ Replaced ☐ Replacement	☐ No ☐ Yes
E							☐ Repaired ☐ Replaced ☐ Replacement	☐ No ☐ Yes
F							☐ Repaired ☐ Replaced ☐ Replacement	☐ No ☐ Yes

Form NIS-2 (Back)

NOTE: Supplemental sheets in form of lists, sketches, or drawings may be used, provided (1) size is 8 1/2 in. x 11 in. (2) information in items 1 through 6 on this report is included on each sheet, and (3) each sheet is numbered and the number of sheets is recorded at the top of this form.

7. Description of Work Replaced pressure pallet assembly in ILP-60

8. Test Conducted: ☐ Hydrostatic ☐ Pneumatic ☐ Nominal Operating Pressure ☐ Other ☒ Exempt

Pressure	_____ psig	Test Temp.	_____ °F
Pressure	_____ psig	Test Temp.	_____ °F
Pressure	_____ psig	Test Temp.	_____ °F

9. Remarks _____

(Applicable Manufacturer's Data Records to be Attached)

CERTIFICATE OF COMPLIANCE

We certify that the statements made in the report are correct and this **repair or replacement** conforms to the rules of the ASME Code, Section XI.

Type Code Symbol Stamp **N/A**

Certificate of Authorization No. **N/A** Expiration Date **N/A**

Signed Plant QC Specialist Date 11-25, 1997
Owner or Owner's Designee, Title

CERTIFICATE OF INSERVICE INSPECTION

I, the undersigned, holding a valid commission issued by the National Board of Boiler and Pressure Vessel Inspectors and the State or Providence of N.C. and employed by **HSBI and I Company of Hartford Connecticut** have inspected the components described in this Owner's Report during the period 10-6-97 to 11-25-97; and state that to the best of my knowledge and belief, the Owner has performed examinations and taken corrective measures described in this Owner's Report in accordance with the requirements of the ASME Code, Section XI.

By signing this certificate, neither the Inspector nor his employer makes any warranty, expressed or implied, concerning the examinations and corrective measures described in this Owner's Report. Furthermore, neither the Inspector nor his employer shall be liable in any manner for any personal injury or property damage or a loss of any kind arising from or connected with this inspection.

M. B. Chapman Commissions NC 914
Inspector's Signature National Board, State, Providence and Endorsements

Date 11-25, 1997

Form 401463 (1/95)

FORM NIS-2 OWNER'S REPORT FOR REPAIRS OR REPLACEMENTS
As Required By The Provisions Of The ASME Code Section XI

1. Owner **Duke Power Company**
   Address **526 S. Church Street, Charlotte, NC 28201-1006**

1a. Date 12-4-95

Sheet 1 of 1

2. Plant **Oconee Nuclear Station**
   Address **P.O. Box 1439, Seneca, S.C. 29679**

2a. Unit ☒ 1 ☐ 2 ☐ 3 ☐ Shared (specify Units_____)

3a. Work Order # 95047079
Repair Organization Job #

3. Work Performed By **Duke Power Company**
   Address **526 S. Church Street, Charlotte, NC 28201-1006**
   Type Code Symbol Stamp **N/A** Authorization No. **N/A** Expiration Date **N/A**

3b. NSM or MM # 2873

4. Identification of System MS Class 2

5. (a) Applicable Construction Code ANSI B31.1 19 67 Edition, _____ Addenda, _____ Code Cases
   (b) Applicable Edition of Section XI Utilized for Repairs or Replacements 1989, No Addenda

6. Identification of Components Repaired or Replaced and Replacement Components

	Column 1	Column 2	Column 3	Column 4	Column 5	Col. 6	Column 7	Column 8
	Name of Component	Name of Manufacturer	Manufacturer Serial Number	National Board Number	Other Identification	Year Built	Repaired, Replaced, or Replacement	ASME Code Stamped (yes or no)
A	PIPING	DPC	NA	NA	NA	7/73	☐ Repaired ☐ Replaced ☒ Replacement	☒ No ☐ Yes
B							☐ Repaired ☐ Replaced ☐ Replacement	☐ No ☐ Yes
C							☐ Repaired ☐ Replaced ☐ Replacement	☐ No ☐ Yes
D							☐ Repaired ☐ Replaced ☐ Replacement	☐ No ☐ Yes
E							☐ Repaired ☐ Replaced ☐ Replacement	☐ No ☐ Yes
F							☐ Repaired ☐ Replaced ☐ Replacement	☐ No ☐ Yes

Form 401463 (2-95)

Form NIS-2 (Back)

NOTE: Supplemental sheets in form of lists, sketches, or drawings may be used, provided (1) size is 8 1/2 in. x 11 in. (2) information in items 1 through 6 on this report is included on each sheet, and (3) each sheet is numbered and the number of sheets is recorded at the top of this form.

7. Description of Work Added 2-1/2" BRANCHES TO A 36" MAIN STEAM LINE LOCATIONS ARE @ WELDS 9Z & 10Z

8. Test Conducted: ☐ Hydrostatic ☐ Pneumatic ☐ Nominal Operating Pressure ☒ Other ☐ Exempt

Pressure _____ psig Test Temp. _____ °F

Pressure _____ psig Test Temp. _____ °F

Pressure _____ psig Test Temp. _____ °F

9. Remarks A PRESSURE TEST WAS PERFORMED PER TN BY VISUAL LEAK CHECK.

(Applicable Manufacturer's Data Records to be Attached)

CERTIFICATE OF COMPLIANCE

We certify that the statements made in the report are correct and this **repair or replacement** conforms to the rules of the ASME Code, Section XI.

Type Code Symbol Stamp **N/A**

Certificate of Authorization No. **N/A** Expiration Date **N/A**

Signed D. L. Blubaugh QATS Date 12-4, 19 95
Owner or Owner's Designee, Title

CERTIFICATE OF INSERVICE INSPECTION

I, the undersigned, holding a valid commission issued by the National Board of Boiler and Pressure Vessel Inspectors and the State or Providence of N. C. and employed by **HSBI and I Company of Hartford Connecticut** have inspected the components described in this Owner's Report during the period 10-16-95 to 12-4-95; and state that to the best of my knowledge and belief, the Owner has performed examinations and taken corrective measures described in this Owner's Report in accordance with the requirements of the ASME Code, Section XI.

By signing this certificate, neither the Inspector nor his employer makes any warranty, expressed or implied, concerning the examinations and corrective measures described in this Owner's Report. Furthermore, neither the Inspector nor his employer shall be liable in any manner for any personal injury or property damage or a loss of any kind arising from or connected with this inspection.

Inspector's Signature Commissions NC914
National Board, State, Providence and Endorsements

Date 12-4, 19 95

Form 401463 (2-95)

FORM NIS-2 OWNER'S REPORT FOR REPAIRS OR REPLACEMENTS
As Required By The Provisions Of The ASME Code Section XI

1. Owner **Duke Power Company**
   Address **526 S. Church Street, Charlotte, NC 28201-1006**

1a. Date 10/17/97

Sheet 1 of 1

2. Plant **Oconee Nuclear Station**
   Address **P.O. Box 1439, Seneca, S.C. 29679**

2a. Unit ☒ 1 ☐ 2 ☐ 3 ☐ Shared (specify Units _____)

3a. Work Order # 96074702-01
Repair Organization Job #

3. Work Performed By **Duke Power Company**
   Address **526 S. Church Street, Charlotte, NC 28201-1006**
   Type Code Symbol Stamp **N/A** Authorization No. **N/A** Expiration Date **N/A**

3b. NSM or MM # N/A

4. Identification of System 54B Class B

5. (a) Applicable Construction Code B31.7 1968 Edition, 6-68 Addenda, N/A Code Cases
   (b) Applicable Edition of Section XI Utilized for Repairs or Replacements 1989, No Addenda

6. Identification of Components Repaired or Replaced and Replacement Components

	Column 1	Column 2	Column 3	Column 4	Column 5	Col. 6	Column 7	Column 8
	Name of Component	Name of Manufacturer	Manufacturer Serial Number	National Board Number	Other Identification	Year Built	Repaired, Replaced, or Replacement	ASME Code Stamped (yes or no)
A	SNUBBER ON S/R 1-54B-0-477-49B	ITT-GRINNELL	18783	N/A	N/A	N/A	☐ Repaired ☐ Replaced ☒ Replacement	☒ No ☐ Yes
B							☐ Repaired ☐ Replaced ☐ Replacement	☐ No ☐ Yes
C							☐ Repaired ☐ Replaced ☐ Replacement	☐ No ☐ Yes
D							☐ Repaired ☐ Replaced ☐ Replacement	☐ No ☐ Yes
E							☐ Repaired ☐ Replaced ☐ Replacement	☐ No ☐ Yes
F							☐ Repaired ☐ Replaced ☐ Replacement	☐ No ☐ Yes

Form NIS-2 (Back)

NOTE: Supplemental sheets in form of lists, sketches, or drawings may be used, provided (1) size is 8 1/2 in. x 11 in. (2) information in items 1 through 6 on this report is included on each sheet, and (3) each sheet is numbered and the number of sheets is recorded at the top of this form.

7. Description of Work REMOVED HYDRAULIC SNUBBER, REBUILT/REFURBISHED AND REINSTALLED TO ORIGINAL LOCATION.

8. Test Conducted: ☐ Hydrostatic ☐ Pneumatic ☐ Nominal Operating Pressure ☒ Other ☐ Exempt

Pressure _____ psig Test Temp. _____ °F

Pressure _____ psig Test Temp. _____ °F

Pressure _____ psig Test Temp. _____ °F

9. Remarks FUNCTIONAL TEST PER PROCEDURE SM/O/A/8110/001.

(Applicable Manufacturer's Data Records to be Attached)

CERTIFICATE OF COMPLIANCE

We certify that the statements made in the report are correct and this **repair or replacement** conforms to the rules of the ASME Code, Section XI.

Type Code Symbol Stamp **N/A**

Certificate of Authorization No. **N/A** Expiration Date **N/A**

Signed W McClure Date 10/17, 1997
Owner or Owner's Designee, Title

CERTIFICATE OF INSERVICE INSPECTION

I, the undersigned, holding a valid commission issued by the National Board of Boiler and Pressure Vessel Inspectors and the State or Providence of N.C and employed by **HSBI and I Company of Hartford Connecticut** have inspected the components described in this Owner's Report during the period 10-7-97 to 10-20-97; and state that to the best of my knowledge and belief, the Owner has performed examinations and taken corrective measures described in this Owner's Report in accordance with the requirements of the ASME Code, Section XI.

By signing this certificate, neither the Inspector nor his employer makes any warranty, expressed or implied, concerning the examinations and corrective measures described in this Owner's Report. Furthermore, neither the Inspector nor his employer shall be liable in any manner for any personal injury or property damage or a loss of any kind arising from or connected with this inspection.

MB Chapman Commissions NC914
Inspector's Signature National Board, State, Providence and Endorsements

Date 10-20, 1997

Form 40146[illegible]5)

FORM NIS-2 OWNER'S REPORT FOR REPAIRS OR REPLACEMENTS
As Required By The Provisions Of The ASME Code Section XI

1. Owner **Duke Power Company**
   Address **526 S. Church Street, Charlotte, NC 28201-1006**

1a. Date 10/17/97

Sheet 1 of 1

2. Plant **Oconee Nuclear Station**
   Address **P.O. Box 1439, Seneca, S.C. 29679**

2a. Unit ☒ 1 ☐ 2 ☐ 3 ☐ Shared (specify Units_____)

3. Work Performed By **Duke Power Company**
   Address **526 S. Church Street, Charlotte, NC 28201-1006**
   Type Code Symbol Stamp **N/A** Authorization No. **N/A** Expiration Date **N/A**

3a. Work Order # 96074105-01
Repair Organization Job #

3b. NSM or MM # N/A

4. Identification of System O/A Class B

5. (a) Applicable Construction Code B31.1 19 67 Edition, N/A Addenda, N/A Code Cases
   (b) Applicable Edition of Section XI Utilized for Repairs or Replacements 1989, No Addenda

6. Identification of Components Repaired or Replaced and Replacement Components

	Column 1	Column 2	Column 3	Column 4	Column 5	Col. 6	Column 7	Column 8
	Name of Component	Name of Manufacturer	Manufacturer Serial Number	National Board Number	Other Identification	Year Built	Repaired, Replaced, or Replacement	ASME Code Stamped (yes or no)
A	SNUBBER ON S/R 1-01A-0-550-R14	ITT GRINNELL	22605	N/A	N/A	N/A	☐ Repaired ☐ Replaced ☒ Replacement	☒ No ☐ Yes
B							☐ Repaired ☐ Replaced ☐ Replacement	☐ No ☐ Yes
C							☐ Repaired ☐ Replaced ☐ Replacement	☐ No ☐ Yes
D							☐ Repaired ☐ Replaced ☐ Replacement	☐ No ☐ Yes
E							☐ Repaired ☐ Replaced ☐ Replacement	☐ No ☐ Yes
F							☐ Repaired ☐ Replaced ☐ Replacement	☐ No ☐ Yes

Form NIS-2 (Back)

NOTE: Supplemental sheets in form of lists, sketches, or drawings may be used, provided (1) size is 8 1/2 in. x 11 in. (2) information in items 1 through 6 on this report is included on each sheet, and (3) each sheet is numbered and the number of sheets is recorded at the top of this form.

7. Description of Work REMOVED HYDRAULIC SNUBBER, REBUILT/REFURBISHED AND REINSTALLED TO ORIGINAL LOCATION.

8. Test Conducted: ☐ Hydrostatic ☐ Pneumatic ☐ Nominal Operating Pressure ☒ Other ☐ Exempt

Pressure _____ psig Test Temp. _____ °F

Pressure _____ psig Test Temp. _____ °F

Pressure _____ psig Test Temp. _____ °F

9. Remarks OPERABILITY TESTING PER PROCEDURE SM/O/A/8100/002.

(Applicable Manufacturer's Data Records to be Attached)

CERTIFICATE OF COMPLIANCE

We certify that the statements made in the report are correct and this **repair or replacement** conforms to the rules of the ASME Code, Section XI.

Type Code Symbol Stamp **N/A**

Certificate of Authorization No. **N/A** Expiration Date **N/A**

Signed [signature] Date 10/17, 19 97
Owner or Owner's Designee, Title

CERTIFICATE OF INSERVICE INSPECTION

I, the undersigned, holding a valid commission issued by the National Board of Boiler and Pressure Vessel Inspectors and the State or Providence of N.C. and employed by **HSBI and I Company of Hartford Connecticut** have inspected the components described in this Owner's Report during the period 10-4-97 to 10-20-97; and state that to the best of my knowledge and belief, the Owner has performed examinations and taken corrective measures described in this Owner's Report in accordance with the requirements of the ASME Code, Section XI.

By signing this certificate, neither the Inspector nor his employer makes any warranty, expressed or implied, concerning the examinations and corrective measures described in this Owner's Report. Furthermore, neither the Inspector nor his employer shall be liable in any manner for any personal injury or property damage or a loss of any kind arising from or connected with this inspection.

[signature] Commissions NC2914
Inspector's Signature National Board, State, Providence and Endorsements

Date 10-20, 19 97

Form 401463 (2-95)

FORM NIS-2 OWNER'S REPORT FOR REPAIRS OR REPLACEMENTS
As Required By The Provisions Of The ASME Code Section XI

1a. Date 10/17/97

Sheet 1 of 1

1. Owner **Duke Power Company**
   Address **526 S. Church Street, Charlotte, NC 28201-1006**

2. Plant **Oconee Nuclear Station**
   Address **P.O. Box 1439, Seneca, S.C. 29679**

2a. Unit ☒ 1 ☐ 2 ☐ 3 ☐ Shared (specify Units_____)

3a. Work Order # 96074218-01
Repair Organization Job #

3. Work Performed By **Duke Power Company**
   Address **526 S. Church Street, Charlotte, NC 28201-1006**
   Type Code Symbol Stamp **N/A** Authorization No. **N/A** Expiration Date **N/A**

3b. NSM or MM # N/A

4. Identification of System O1A Class B

5. (a) Applicable Construction Code B31.1 1967 Edition, N/A Addenda, N/A Code Cases
   (b) Applicable Edition of Section XI Utilized for Repairs or Replacements 1989, No Addenda

6. Identification of Components Repaired or Replaced and Replacement Components

	Column 1	Column 2	Column 3	Column 4	Column 5	Col. 6	Column 7	Column 8
	Name of Component	Name of Manufacturer	Manufacturer Serial Number	National Board Number	Other Identification	Year Built	Repaired, Replaced, or Replacement	ASME Code Stamped (yes or no)
A	SNUBBER ON S/R 1-01A-0-550-R15	ITT GRINNELL	22609	N/A	N/A	N/A	☐ Repaired ☐ Replaced ☒ Replacement	☒ No ☐ Yes
B							☐ Repaired ☐ Replaced ☐ Replacement	☐ No ☐ Yes
C							☐ Repaired ☐ Replaced ☐ Replacement	☐ No ☐ Yes
D							☐ Repaired ☐ Replaced ☐ Replacement	☐ No ☐ Yes
E							☐ Repaired ☐ Replaced ☐ Replacement	☐ No ☐ Yes
F							☐ Repaired ☐ Replaced ☐ Replacement	☐ No ☐ Yes

Form NIS-2 (Back)

NOTE: Supplemental sheets in form of lists, sketches, or drawings may be used, provided (1) size is 8 1/2 in. x 11 in. (2) information in items 1 through 6 on this report is included on each sheet, and (3) each sheet is numbered and the number of sheets is recorded at the top of this form.

7. Description of Work REMOVED HYDRAULIC SNUBBER, REBUILT/REFURBISHED AND REINSTALLED TO ORIGINAL LOCATION.

8. Test Conducted: ☐ Hydrostatic ☐ Pneumatic ☐ Nominal Operating Pressure ☒ Other ☐ Exempt

Pressure _____ psig Test Temp. _____ °F

Pressure _____ psig Test Temp. _____ °F

Pressure _____ psig Test Temp. _____ °F

9. Remarks OPERABILITY TESTING PER PROCEDURE SM/0/A/8100/002.

(Applicable Manufacturer's Data Records to be Attached)

CERTIFICATE OF COMPLIANCE

We certify that the statements made in the report are correct and this **repair or replacement** conforms to the rules of the ASME Code, Section XI.

Type Code Symbol Stamp **N/A**

Certificate of Authorization No. **N/A** Expiration Date **N/A**

Signed W McClure Date 10/17, 1997
Owner or Owner's Designee, Title

CERTIFICATE OF INSERVICE INSPECTION

I, the undersigned, holding a valid commission issued by the National Board of Boiler and Pressure Vessel Inspectors and the State or Providence of N.C. and employed by **HSBI and I Company of Hartford Connecticut** have inspected the components described in this Owner's Report during the period 10-2-97 to 10-20-97; and state that to the best of my knowledge and belief, the Owner has performed examinations and taken corrective measures described in this Owner's Report in accordance with the requirements of the ASME Code, Section XI.

By signing this certificate, neither the Inspector nor his employer makes any warranty, expressed or implied, concerning the examinations and corrective measures described in this Owner's Report. Furthermore, neither the Inspector nor his employer shall be liable in any manner for any personal injury or property damage or a loss of any kind arising from or connected with this inspection.

M.B. Chapman Commissions NC914
Inspector's Signature National Board, State, Providence and Endorsements

Date 10-20, 1997

Form 401463 (2-95)

FORM NIS-2 OWNER'S REPORT FOR REPAIRS OR REPLACEMENTS
As Required By The Provisions Of The ASME Code Section XI

1. Owner **Duke Power Company**
   Address **526 S. Church Street, Charlotte, NC 28201-1006**

1a. Date 10/22/97

Sheet 1 of 1

2. Plant **Oconee Nuclear Station**
   Address **P.O. Box 1439, Seneca, S.C. 29679**

2a. Unit ☒ 1 ☐ 2 ☐ 3 ☐ Shared (specify Units_____)

3a. Work Order # 96074700-01
Repair Organization Job #

3. Work Performed By **Duke Power Company**
   Address **526 S. Church Street, Charlotte, NC 28201-1006**
   Type Code Symbol Stamp **N/A** Authorization No. **N/A** Expiration Date **N/A**

3b. NSM or MM # N/A

4. Identification of System 54B Class B

5. (a) Applicable Construction Code B31.7 1968 Edition, 6-68 Addenda, N/A Code Cases
   (b) Applicable Edition of Section XI Utilized for Repairs or Replacements 1989, No Addenda

6. Identification of Components Repaired or Replaced and Replacement Components

	Column 1	Column 2	Column 3	Column 4	Column 5	Col. 6	Column 7	Column 8
	Name of Component	Name of Manufacturer	Manufacturer Serial Number	National Board Number	Other Identification	Year Built	Repaired, Replaced, or Replacement	ASME Code Stamped (yes or no)
A	SNUBBER ON S/R 1-54B-0-477-H9A	ITT GRINNELL	18805	N/A	N/A	N/A	☐ Repaired ☐ Replaced ☒ Replacement	☒ No ☐ Yes
B							☐ Repaired ☐ Replaced ☐ Replacement	☐ No ☐ Yes
C							☐ Repaired ☐ Replaced ☐ Replacement	☐ No ☐ Yes
D							☐ Repaired ☐ Replaced ☐ Replacement	☐ No ☐ Yes
E							☐ Repaired ☐ Replaced ☐ Replacement	☐ No ☐ Yes
F							☐ Repaired ☐ Replaced ☐ Replacement	☐ No ☐ Yes

Form NIS-2 (Back)

NOTE: Supplemental sheets in form of lists, sketches, or drawings may be used, provided (1) size is 8 1/2 in. x 11 in. (2) information in items 1 through 6 on this report is included on each sheet, and (3) each sheet is numbered and the number of sheets is recorded at the top of this form.

7. Description of Work REMOVED HYDRAULIC SNUBBER, REBUILT/REFURBISHED AND REINSTALLED TO ORIGINAL LOCATION.

8. Test Conducted: ☐ Hydrostatic ☐ Pneumatic ☐ Nominal Operating Pressure ☒ Other ☐ Exempt

Pressure _____ psig Test Temp. _____ °F

Pressure _____ psig Test Temp. _____ °F

Pressure _____ psig Test Temp. _____ °F

9. Remarks FUNCTIONAL TESTING PER PROCEDURE SM/O/A/8110/001.

(Applicable Manufacturer's Data Records to be Attached)

CERTIFICATE OF COMPLIANCE

We certify that the statements made in the report are correct and this **repair or replacement** conforms to the rules of the ASME Code, Section XI.

Type Code Symbol Stamp **N/A**

Certificate of Authorization No. **N/A** Expiration Date **N/A**

Signed W McClure Date 10/22, 19 97
Owner or Owner's Designee, Title

CERTIFICATE OF INSERVICE INSPECTION

I, the undersigned, holding a valid commission issued by the National Board of Boiler and Pressure Vessel Inspectors and the State or Providence of N.C. and employed by **HSBI and I Company of Hartford Connecticut** have inspected the components described in this Owner's Report during the period 10-2-97 to 10-22-97; and state that to the best of my knowledge and belief, the Owner has performed examinations and taken corrective measures described in this Owner's Report in accordance with the requirements of the ASME Code, Section XI.

By signing this certificate, neither the Inspector nor his employer makes any warranty, expressed or implied, concerning the examinations and corrective measures described in this Owner's Report. Furthermore, neither the Inspector nor his employer shall be liable in any manner for any personal injury or property damage or a loss of any kind arising from or connected with this inspection.

M B Chapman Commissions NC914
Inspector's Signature National Board, State, Providence and Endorsements

Date 10-22, 19 97

Form 401463 (2-95)

FORM NIS-2 OWNER'S REPORT FOR REPAIRS OR REPLACEMENTS
As Required By The Provisions Of The ASME Code Section XI

1. Owner **Duke Power Company**
   Address **526 S. Church Street, Charlotte, NC 28201-1006**

1a. Date 10/22/97

Sheet 1 of 1

2. Plant **Oconee Nuclear Station**
   Address **P.O. Box 1439, Seneca, S.C. 29679**

2a. Unit ☒ 1 ☐ 2 ☐ 3 ☐ Shared (specify Units _____)

3a. Work Order # 96073437-01
Repair Organization Job #

3. Work Performed By **Duke Power Company**
   Address **526 S. Church Street, Charlotte, NC 28201-1006**
   Type Code Symbol Stamp **N/A** Authorization No. **N/A** Expiration Date **N/A**

3b. NSM or MM # N/A

4. Identification of System O1A Class B

5. (a) Applicable Construction Code B31.1 19 67 Edition, N/A Addenda, N/A Code Cases
   (b) Applicable Edition of Section XI Utilized for Repairs or Replacements 1989, No Addenda

6. Identification of Components Repaired or Replaced and Replacement Components

	Column 1	Column 2	Column 3	Column 4	Column 5	Col. 6	Column 7	Column 8
	Name of Component	Name of Manufacturer	Manufacturer Serial Number	National Board Number	Other Identification	Year Built	Repaired, Replaced, or Replacement	ASME Code Stamped (yes or no)
A	SNUBBER ON S/R 1-01A-0-550-R9(1)	ITT GRINNELL	30203	N/A	N/A	N/A	☐ Repaired ☐ Replaced ☒ Replacement	☒ No ☐ Yes
B							☐ Repaired ☐ Replaced ☐ Replacement	☐ No ☐ Yes
C							☐ Repaired ☐ Replaced ☐ Replacement	☐ No ☐ Yes
D							☐ Repaired ☐ Replaced ☐ Replacement	☐ No ☐ Yes
E							☐ Repaired ☐ Replaced ☐ Replacement	☐ No ☐ Yes
F							☐ Repaired ☐ Replaced ☐ Replacement	☐ No ☐ Yes

Form NIS-2 (Back)

NOTE: Supplemental sheets in form of lists, sketches, or drawings may be used, provided (1) size is 8 1/2 in. x 11 in. (2) information in items 1 through 6 on this report is included on each sheet, and (3) each sheet is numbered and the number of sheets is recorded at the top of this form.

7. Description of Work REMOVED HYDRAULIC SNUBBER, REBUILT/REFURBISHED AND REINSTALLED TO ORIGINAL LOCATION. REPLACED LOAD STUD NUTS(4).

8. Test Conducted: ☐ Hydrostatic ☐ Pneumatic ☐ Nominal Operating Pressure ☒ Other ☐ Exempt

Pressure _____ psig Test Temp. _____ °F

Pressure _____ psig Test Temp. _____ °F

Pressure _____ psig Test Temp. _____ °F

9. Remarks FUNCTIONAL TESTING PER PROCEDURE SM/O/A/8110/001.

(Applicable Manufacturer's Data Records to be Attached)

CERTIFICATE OF COMPLIANCE

We certify that the statements made in the report are correct and this **repair or replacement** conforms to the rules of the ASME Code, Section XI.

Type Code Symbol Stamp **N/A**

Certificate of Authorization No. **N/A** Expiration Date **N/A**

Signed W. McClure Date 10/22, 19 97
Owner or Owner's Designee, Title

CERTIFICATE OF INSERVICE INSPECTION

I, the undersigned, holding a valid commission issued by the National Board of Boiler and Pressure Vessel Inspectors and the State or Providence of N. C. and employed by **HSBI and I Company of Hartford Connecticut** have inspected the components described in this Owner's Report during the period 10-8-97 to 10-22-97; and state that to the best of my knowledge and belief, the Owner has performed examinations and taken corrective measures described in this Owner's Report in accordance with the requirements of the ASME Code, Section XI.

By signing this certificate, neither the Inspector nor his employer makes any warranty, expressed or implied, concerning the examinations and corrective measures described in this Owner's Report. Furthermore, neither the Inspector nor his employer shall be liable in any manner for any personal injury or property damage or a loss of any kind arising from or connected with this inspection.

M.B. Chapman Commissions NC914
Inspector's Signature National Board, State, Providence and Endorsements

Date 10-22, 1997

Form 401463 (2-95)

FORM NIS-2 OWNER'S REPORT FOR REPAIRS OR REPLACEMENTS
As Required By The Provisions Of The ASME Code Section XI

1. Owner **Duke Power Company**
   Address **526 S. Church Street, Charlotte, NC 28201-1006**

1a. Date 10/22/97

Sheet 1 of 1

2. Plant **Oconee Nuclear Station**
   Address **P.O. Box 1439, Seneca, S.C. 29679**

2a. Unit ☒ 1 ☐ 2 ☐ 3 ☐ Shared (specify Units_____)

3a. Work Order # 96073422-01
Repair Organization Job #

3. Work Performed By **Duke Power Company**
   Address **526 S. Church Street, Charlotte, NC 28201-1006**
   Type Code Symbol Stamp **N/A** Authorization No. **N/A** Expiration Date **N/A**

3b. NSM or MM # N/A

4. Identification of System 01A Class B

5. (a) Applicable Construction Code B31.1 19 67 Edition, N/A Addenda, N/A Code Cases
   (b) Applicable Edition of Section XI Utilized for Repairs or Replacements 1989, No Addenda

6. Identification of Components Repaired or Replaced and Replacement Components

	Column 1	Column 2	Column 3	Column 4	Column 5	Col. 6	Column 7	Column 8
	Name of Component	Name of Manufacturer	Manufacturer Serial Number	National Board Number	Other Identification	Year Built	Repaired, Replaced, or Replacement	ASME Code Stamped (yes or no)
A	SNUBBER ON S/R 1-01A-0-550-R2(A)	ITT GRINNELL	16282	N/A	N/A	N/A	☐ Repaired ☐ Replaced ☒ Replacement	☒ No ☐ Yes
B							☐ Repaired ☐ Replaced ☐ Replacement	☐ No ☐ Yes
C							☐ Repaired ☐ Replaced ☐ Replacement	☐ No ☐ Yes
D							☐ Repaired ☐ Replaced ☐ Replacement	☐ No ☐ Yes
E							☐ Repaired ☐ Replaced ☐ Replacement	☐ No ☐ Yes
F							☐ Repaired ☐ Replaced ☐ Replacement	☐ No ☐ Yes

Form NIS-2 (Back)

NOTE: Supplemental sheets in form of lists, sketches, or drawings may be used, provided (1) size is 8 1/2 in. x 11 in. (2) information in items 1 through 6 on this report is included on each sheet, and (3) each sheet is numbered and the number of sheets is recorded at the top of this form. REMOVED HYDRAULIC SNUBBER, REBUILT/REBURBISHED AND REINSTALLED USING NEW LOAD STUD/NUTS TO

7. Description of Work ORIGINAL LOCATION.

8. Test Conducted: ☐ Hydrostatic ☐ Pneumatic ☐ Nominal Operating Pressure ☒ Other ☐ Exempt

Pressure _____ psig Test Temp. _____ °F

Pressure _____ psig Test Temp. _____ °F

Pressure _____ psig Test Temp. _____ °F

9. Remarks FUNCTIONAL TESTING PER PROCEDURE SM/O/A/8110/001.

(Applicable Manufacturer's Data Records to be Attached)

CERTIFICATE OF COMPLIANCE

We certify that the statements made in the report are correct and this **repair or replacement** conforms to the rules of the ASME Code, Section XI.

Type Code Symbol Stamp **N/A**

Certificate of Authorization No. **N/A** Expiration Date **N/A**

Signed W McClure Date 10/22, 1997
Owner or Owner's Designee, Title

CERTIFICATE OF INSERVICE INSPECTION

I, the undersigned, holding a valid commission issued by the National Board of Boiler and Pressure Vessel Inspectors and the State or Providence of N.C. and employed by **HSBI and I Company of Hartford Connecticut** have inspected the components described in this Owner's Report during the period 10-8-97 to 10-22-97; and state that to the best of my knowledge and belief, the Owner has performed examinations and taken corrective measures described in this Owner's Report in accordance with the requirements of the ASME Code, Section XI.

By signing this certificate, neither the Inspector nor his employer makes any warranty, expressed or implied, concerning the examinations and corrective measures described in this Owner's Report. Furthermore, neither the Inspector nor his employer shall be liable in any manner for any personal injury or property damage or a loss of any kind arising from or connected with this inspection.

MB Chapman Commissions NC914
Inspector's Signature National Board, State, Providence and Endorsements

Date 10-22, 1997

Form 401463 (1-95)

FORM NIS-2 OWNER'S REPORT FOR REPAIRS OR REPLACEMENTS
As Required By The Provisions Of The ASME Code Section XI

1. Owner **Duke Power Company**
   Address **526 S. Church Street, Charlotte, NC 28201-1006**

1a. Date 10/22/97
Sheet 1 of 1

2. Plant **Oconee Nuclear Station**
   Address **P.O. Box 1439, Seneca, S.C. 29679**

2a. Unit ☒ 1 ☐ 2 ☐ 3 ☐ Shared (specify Units_____)

3a. Work Order # 97087703-01
Repair Organization Job #

3. Work Performed By **Duke Power Company**
   Address **526 S. Church Street, Charlotte, NC 28201-1006**
   Type Code Symbol Stamp **N/A** Authorization No. **N/A** Expiration Date **N/A**

3b. NSM or MM # N/A

4. Identification of System O1A Class B

5. (a) Applicable Construction Code B31.1 1967 Edition, N/A Addenda, N/A Code Cases
   (b) Applicable Edition of Section XI Utilized for Repairs or Replacements 1989, No Addenda

6. Identification of Components Repaired or Replaced and Replacement Components

	Column 1	Column 2	Column 3	Column 4	Column 5	Col. 6	Column 7	Column 8
	Name of Component	Name of Manufacturer	Manufacturer Serial Number	National Board Number	Other Identification	Year Built	Repaired, Replaced, or Replacement	ASME Code Stamped (yes or no)
A	S/R 1-01A-2-1-0-401A-SR7	DPC	N/A	N/A	N/A	N/A	☒ Repaired ☐ Replaced ☐ Replacement	☒ No ☐ Yes
B							☐ Repaired ☐ Replaced ☐ Replacement	☐ No ☐ Yes
C							☐ Repaired ☐ Replaced ☐ Replacement	☐ No ☐ Yes
D							☐ Repaired ☐ Replaced ☐ Replacement	☐ No ☐ Yes
E							☐ Repaired ☐ Replaced ☐ Replacement	☐ No ☐ Yes
F							☐ Repaired ☐ Replaced ☐ Replacement	☐ No ☐ Yes

Form NIS-2 (Back)

NOTE: Supplemental sheets in form of lists, sketches, or drawings may be used, provided (1) size is 8 1/2 in. x 11 in. (2) information in items 1 through 6 on this report is included on each sheet, and (3) each sheet is numbered and the number of sheets is recorded at the top of this form.

REMOVED REAR BRACKET & ROTATED TO DRAWING REQUIREMENT

7. Description of Work AND WELDED BRACKET IN CORRECT ORIENTATION.

8. Test Conducted: ☐ Hydrostatic ☐ Pneumatic ☐ Nominal Operating Pressure ☐ Other ☒ Exempt

Pressure _____ psig Test Temp. _____ °F

Pressure _____ psig Test Temp. _____ °F

Pressure _____ psig Test Temp. _____ °F

9. Remarks _____

(Applicable Manufacturer's Data Records to be Attached)

CERTIFICATE OF COMPLIANCE

We certify that the statements made in the report are correct and this **repair or replacement** conforms to the rules of the ASME Code, Section XI.

Type Code Symbol Stamp **N/A**

Certificate of Authorization No. **N/A** Expiration Date **N/A**

Signed W M McClure Date 10/22, 19 97
Owner or Owner's Designee, Title

CERTIFICATE OF INSERVICE INSPECTION

I, the undersigned, holding a valid commission issued by the National Board of Boiler and Pressure Vessel Inspectors and the State or Providence of N. C. and employed by **HSBI and I Company of Hartford Connecticut** have inspected the components described in this Owner's Report during the period 10-10-97 to 10-22-97; and state that to the best of my knowledge and belief, the Owner has performed examinations and taken corrective measures described in this Owner's Report in accordance with the requirements of the ASME Code, Section XI.

By signing this certificate, neither the Inspector nor his employer makes any warranty, expressed or implied, concerning the examinations and corrective measures described in this Owner's Report. Furthermore, neither the Inspector nor his employer shall be liable in any manner for any personal injury or property damage or a loss of any kind arising from or connected with this inspection.

M B Chapman Commissions NC914
Inspector's Signature National Board, State, Providence and Endorsements

Date 10-22, 19 97

Form 401463 (1-95)

FORM NIS-2 OWNER'S REPORT FOR REPAIRS OR REPLACEMENTS
As Required By The Provisions Of The ASME Code Section XI

1. Owner **Duke Power Company**
   Address **526 S. Church Street, Charlotte, NC 28201-1006**

1a. Date 10/23/97

Sheet 1 of 1

2. Plant **Oconee Nuclear Station**
   Address **P.O. Box 1439, Seneca, S.C. 29679**

2a. Unit ☒ 1 ☐ 2 ☐ 3 ☐ Shared (specify Units_____)

3a. Work Order # 96074089-01
Repair Organization Job #

3. Work Performed By **Duke Power Company**
   Address **526 S. Church Street, Charlotte, NC 28201-1006**
   Type Code Symbol Stamp **N/A** Authorization No. **N/A** Expiration Date **N/A**

3b. NSM or MM # N/A

4. Identification of System O1A Class B

5. (a) Applicable Construction Code B31.1 1967 Edition, N/A Addenda, N/A Code Cases
   (b) Applicable Edition of Section XI Utilized for Repairs or Replacements 1989, No Addenda

6. Identification of Components Repaired or Replaced and Replacement Components

	Column 1	Column 2	Column 3	Column 4	Column 5	Col. 6	Column 7	Column 8
	Name of Component	Name of Manufacturer	Manufacturer Serial Number	National Board Number	Other Identification	Year Built	Repaired, Replaced, or Replacement	ASME Code Stamped (yes or no)
A	S/R 1-01A-0-550-R9(4) SNUBBER	ITT GRINNELL	18822	N/A	N/A	N/A	☐ Repaired ☐ Replaced ☒ Replacement	☒ No ☐ Yes
B							☐ Repaired ☐ Replaced ☐ Replacement	☐ No ☐ Yes
C							☐ Repaired ☐ Replaced ☐ Replacement	☐ No ☐ Yes
D							☐ Repaired ☐ Replaced ☐ Replacement	☐ No ☐ Yes
E							☐ Repaired ☐ Replaced ☐ Replacement	☐ No ☐ Yes
F							☐ Repaired ☐ Replaced ☐ Replacement	☐ No ☐ Yes

Form 401463 (2-95)

Form NIS-2 (Back)

NOTE: Supplemental sheets in form of lists, sketches, or drawings may be used, provided (1) size is 8 1/2 in. x 11 in. (2) information in items 1 through 6 on this report is included on each sheet, and (3) each sheet is numbered and the number of sheets is recorded at the top of this form.

7. Description of Work REMOVED HYDRAULIC SNUBBER, REBUILT/REFURBISHED AND REINSTALLED TO ORIGINAL LOCATION.

8. Test Conducted: ☐ Hydrostatic ☐ Pneumatic ☐ Nominal Operating Pressure ☒ Other ☐ Exempt

Pressure _____ psig Test Temp. _____ °F

Pressure _____ psig Test Temp. _____ °F

Pressure _____ psig Test Temp. _____ °F

9. Remarks FUNCTIONAL TESTING PER PROCEDURE SM/O/A/8110/001.

(Applicable Manufacturer's Data Records to be Attached)

CERTIFICATE OF COMPLIANCE

We certify that the statements made in the report are correct and this **repair or replacement** conforms to the rules of the ASME Code, Section XI.

Type Code Symbol Stamp **N/A**

Certificate of Authorization No. **N/A** Expiration Date **N/A**

Signed W M C Clure Date 10/23, 19 97
Owner or Owner's Designee, Title

CERTIFICATE OF INSERVICE INSPECTION

I, the undersigned, holding a valid commission issued by the National Board of Boiler and Pressure Vessel Inspectors and the State or Providence of N. C. and employed by **HSBI and I Company of Hartford Connecticut** have inspected the components described in this Owner's Report during the period 10-8-97 to 10-23-97; and state that to the best of my knowledge and belief, the Owner has performed examinations and taken corrective measures described in this Owner's Report in accordance with the requirements of the ASME Code, Section XI.

By signing this certificate, neither the Inspector nor his employer makes any warranty, expressed or implied, concerning the examinations and corrective measures described in this Owner's Report. Furthermore, neither the Inspector nor his employer shall be liable in any manner for any personal injury or property damage or a loss of any kind arising from or connected with this inspection.

M B Chapman Commissions NC 914
Inspector's Signature National Board, State, Providence and Endorsements

Date 10-23, 1994

Form 401463 (2-95)

FORM NIS-2 OWNER'S REPORT FOR REPAIRS OR REPLACEMENTS
As Required By The Provisions Of The ASME Code Section XI

1. Owner **Duke Power Company**
   Address **526 S. Church Street, Charlotte, NC 28201-1006**

1a. Date 10/22/97

Sheet 1 of 1

2. Plant **Oconee Nuclear Station**
   Address **P.O. Box 1439, Seneca, S.C. 29679**

2a. Unit ☒ 1 ☐ 2 ☐ 3 ☐ Shared (specify Units_____)

3a. Work Order # 96073443-01
Repair Organization Job #

3. Work Performed By **Duke Power Company**
   Address **526 S. Church Street, Charlotte, NC 28201-1006**
   Type Code Symbol Stamp **N/A** Authorization No. **N/A** Expiration Date **N/A**

3b. NSM or MM # N/A

4. Identification of System O1A Class B

5. (a) Applicable Construction Code B31.1 1967 Edition, N/A Addenda, N/A Code Cases
   (b) Applicable Edition of Section XI Utilized for Repairs or Replacements 1989, No Addenda

6. Identification of Components Repaired or Replaced and Replacement Components

	Column 1	Column 2	Column 3	Column 4	Column 5	Col. 6	Column 7	Column 8
	Name of Component	Name of Manufacturer	Manufacturer Serial Number	National Board Number	Other Identification	Year Built	Repaired, Replaced, or Replacement	ASME Code Stamped (yes or no)
A	S/R 1-01A-0-550-R9(2) SNUBBER	ITT GRINNELL	18823	N/A	N/A	N/A	☐ Repaired ☒ Replaced ☐ Replacement	☒ No ☐ Yes
B	1-01A-0-550-R9(2) SNUBBER	ITT GRINNELL	33612	N/A	N/A	N/A	☐ Repaired ☐ Replaced ☒ Replacement	☒ No ☐ Yes
C							☐ Repaired ☐ Replaced ☐ Replacement	☐ No ☐ Yes
D							☐ Repaired ☐ Replaced ☐ Replacement	☐ No ☐ Yes
E							☐ Repaired ☐ Replaced ☐ Replacement	☐ No ☐ Yes
F							☐ Repaired ☐ Replaced ☐ Replacement	☐ No ☐ Yes

Form NIS-2 (Back)

NOTE: Supplemental sheets in form of lists, sketches, or drawings may be used, provided (1) size is 8 1/2 in. x 11 in. (2) information in items 1 through 6 on this report is included on each sheet, and (3) each sheet is numbered and the number of sheets is recorded at the top of this form.

7. Description of Work REMOVED EXISTING HYDRAULIC SNUBBER (18823) AND REPLACED WITH NEW HYDRAULIC SNUBBER (33612).

8. Test Conducted: ☐ Hydrostatic ☐ Pneumatic ☐ Nominal Operating Pressure ☒ Other ☐ Exempt

Pressure _____ psig Test Temp. _____ °F

Pressure _____ psig Test Temp. _____ °F

Pressure _____ psig Test Temp. _____ °F

9. Remarks FUNCTIONAL TEST PER PROCEDURE SM/O/A/8110/001.

(Applicable Manufacturer's Data Records to be Attached)

CERTIFICATE OF COMPLIANCE

We certify that the statements made in the report are correct and this **repair or replacement** conforms to the rules of the ASME Code, Section XI.

Type Code Symbol Stamp **N/A**

Certificate of Authorization No. **N/A** Expiration Date **N/A**

Signed W M C Clure Date 10/22, 19 97
Owner or Owner's Designee, Title

CERTIFICATE OF INSERVICE INSPECTION

I, the undersigned, holding a valid commission issued by the National Board of Boiler and Pressure Vessel Inspectors and the State or Providence of N.C. and employed by **HSBI and I Company of Hartford Connecticut** have inspected the components described in this Owner's Report during the period 10-8-97 to 10-22-97; and state that to the best of my knowledge and belief, the Owner has performed examinations and taken corrective measures described in this Owner's Report in accordance with the requirements of the ASME Code, Section XI.

By signing this certificate, neither the Inspector nor his employer makes any warranty, expressed or implied, concerning the examinations and corrective measures described in this Owner's Report. Furthermore, neither the Inspector nor his employer shall be liable in any manner for any personal injury or property damage or a loss of any kind arising from or connected with this inspection.

M.B. Chapman Commissions NC914
Inspector's Signature National Board, State, Providence and Endorsements

Date 10-22, 19 97

Form 401463 (2-95)

FORM NIS-2 OWNER'S REPORT FOR REPAIRS OR REPLACEMENTS
As Required By The Provisions Of The ASME Code Section XI

1a. Date 11/10/97

Sheet 1 of 1

1. Owner **Duke Power Company**
   Address **526 S. Church Street, Charlotte, NC 28201-1006**

2. Plant **Oconee Nuclear Station**
   Address **P.O. Box 1439, Seneca, S.C. 29679**

2a. Unit ☒ 1 ☐ 2 ☐ 3 ☐ Shared (specify Units _____)

3a. Work Order # 96074711-01
Repair Organization Job #

3. Work Performed By **Duke Power Company**
   Address **526 S. Church Street, Charlotte, NC 28201-1006**
   Type Code Symbol Stamp **N/A** Authorization No. **N/A** Expiration Date **N/A**

3b. NSM or MM # N/A

4. Identification of System 57 Class B

5. (a) Applicable Construction Code B31.7 1968 Edition, 6-68 Addenda, N/A Code Cases
   (b) Applicable Edition of Section XI Utilized for Repairs or Replacements 1989, No Addenda

6. Identification of Components Repaired or Replaced and Replacement Components

	Column 1	Column 2	Column 3	Column 4	Column 5	Col. 6	Column 7	Column 8
	Name of Component	Name of Manufacturer	Manufacturer Serial Number	National Board Number	Other Identification	Year Built	Repaired, Replaced, or Replacement	ASME Code Stamped (yes or no)
A	SNUBBER ON S/R 1-57-0-481A-H11	ITT GRINNELL	1881	N/A	N/A	N/A	☐ Repaired ☐ Replaced ☒ Replacement	☒ No ☐ Yes
B							☐ Repaired ☐ Replaced ☐ Replacement	☐ No ☐ Yes
C							☐ Repaired ☐ Replaced ☐ Replacement	☐ No ☐ Yes
D							☐ Repaired ☐ Replaced ☐ Replacement	☐ No ☐ Yes
E							☐ Repaired ☐ Replaced ☐ Replacement	☐ No ☐ Yes
F							☐ Repaired ☐ Replaced ☐ Replacement	☐ No ☐ Yes

Form NIS-2 (Back)

NOTE: Supplemental sheets in form of lists, sketches, or drawings may be used, provided (1) size is 8 1/2 in. x 11 in. (2) information in items 1 through 6 on this report is included on each sheet, and (3) each sheet is numbered and the number of sheets is recorded at the top of this form.

7. Description of Work REMOVED HYDRAULIC SNUBBER, REBUILT/REFURBISHED AND REINSTALLED TO ORIGINAL LOCATION.

8. Test Conducted: ☐ Hydrostatic ☐ Pneumatic ☐ Nominal Operating Pressure ☒ Other ☐ Exempt

Pressure _____ psig Test Temp. _____ °F

Pressure _____ psig Test Temp. _____ °F

Pressure _____ psig Test Temp. _____ °F

9. Remarks FUNCTIONAL TEST PER PROCEDURE SM/O/A/8110/001.

(Applicable Manufacturer's Data Records to be Attached)

CERTIFICATE OF COMPLIANCE

We certify that the statements made in the report are correct and this **repair or replacement** conforms to the rules of the ASME Code, Section XI.

Type Code Symbol Stamp **N/A**

Certificate of Authorization No. **N/A** Expiration Date **N/A**

Signed W McClure Date 11/10, 19 97
Owner or Owner's Designee, Title

CERTIFICATE OF INSERVICE INSPECTION

I, the undersigned, holding a valid commission issued by the National Board of Boiler and Pressure Vessel Inspectors and the State or Providence of N. C. and employed by **HSBI and I Company of Hartford Connecticut** have inspected the components described in this Owner's Report during the period 9-23-97 to 11-10-97; and state that to the best of my knowledge and belief, the Owner has performed examinations and taken corrective measures described in this Owner's Report in accordance with the requirements of the ASME Code, Section XI.

By signing this certificate, neither the Inspector nor his employer makes any warranty, expressed or implied, concerning the examinations and corrective measures described in this Owner's Report. Furthermore, neither the Inspector nor his employer shall be liable in any manner for any personal injury or property damage or a loss of any kind arising from or connected with this inspection.

M.B. Chapman Commissions NC914
Inspector's Signature National Board, State, Providence and Endorsements

Date 11-10, 1997

Form 401463 (2-95)

FORM NIS-2 OWNER'S REPORT FOR REPAIRS OR REPLACEMENTS
As Required By The Provisions Of The ASME Code Section XI

1a. Date 11/10/97

Sheet 1 of 1

1. Owner **Duke Power Company**
   Address **526 S. Church Street, Charlotte, NC 28201-1006**

2. Plant **Oconee Nuclear Station**
   Address **P.O. Box 1439, Seneca, S.C. 29679**

2a. Unit ☒ 1 ☐ 2 ☐ 3 ☐ Shared (specify Units _____)

3a. Work Order # 96074685-01
Repair Organization Job #

3. Work Performed By **Duke Power Company**
   Address **526 S. Church Street, Charlotte, NC 28201-1006**
   Type Code Symbol Stamp **N/A** Authorization No. **N/A** Expiration Date **N/A**

3b. NSM or MM # N/A

4. Identification of System 53A Class B

5. (a) Applicable Construction Code B31.7 1968 Edition, 6-68 Addenda, N/A Code Cases
   (b) Applicable Edition of Section XI Utilized for Repairs or Replacements 1989, No Addenda

6. Identification of Components Repaired or Replaced and Replacement Components

	Column 1	Column 2	Column 3	Column 4	Column 5	Col. 6	Column 7	Column 8
	Name of Component	Name of Manufacturer	Manufacturer Serial Number	National Board Number	Other Identification	Year Built	Repaired, Replaced, or Replacement	ASME Code Stamped (yes or no)
A	SNUBBER ON S/R 479A-H5B 1-53A-0-~~479A-H5B~~ WDM	ITT GRINNELL	18821	N/A	N/A	N/A	☐ Repaired ☐ Replaced ☒ Replacement	☒ No ☐ Yes
B							☐ Repaired ☐ Replaced ☐ Replacement	☐ No ☐ Yes
C							☐ Repaired ☐ Replaced ☐ Replacement	☐ No ☐ Yes
D							☐ Repaired ☐ Replaced ☐ Replacement	☐ No ☐ Yes
E							☐ Repaired ☐ Replaced ☐ Replacement	☐ No ☐ Yes
F							☐ Repaired ☐ Replaced ☐ Replacement	☐ No ☐ Yes

Form NIS-2 (Back)

NOTE: Supplemental sheets in form of lists, sketches, or drawings may be used, provided (1) size is 8 1/2 in. x 11 in. (2) information in items 1 through 6 on this report is included on each sheet, and (3) each sheet is numbered and the number of sheets is recorded at the top of this form.

7. Description of Work REMOVED HYDRAULIC SNUBBER, REBUILT/REFURBISHED, AND REINSTALLED TO ORIGINAL LOCATION.

8. Test Conducted: ☐ Hydrostatic ☐ Pneumatic ☐ Nominal Operating Pressure ☒ Other ☐ Exempt

Pressure _____ psig Test Temp. _____ °F

Pressure _____ psig Test Temp. _____ °F

Pressure _____ psig Test Temp. _____ °F

9. Remarks PERFORMED FUNCTIONAL TESTING PER PROCEDURE SM/O/A/8110/001.

(Applicable Manufacturer's Data Records to be Attached)

CERTIFICATE OF COMPLIANCE

We certify that the statements made in the report are correct and this **repair or replacement** conforms to the rules of the ASME Code, Section XI.

Type Code Symbol Stamp **N/A**

Certificate of Authorization No. **N/A** Expiration Date **N/A**

Signed W M McClure Date 11/10, 1997

Owner or Owner's Designee, Title

CERTIFICATE OF INSERVICE INSPECTION

I, the undersigned, holding a valid commission issued by the National Board of Boiler and Pressure Vessel Inspectors and the State or Providence of N. C. and employed by **HSBI and I Company of Hartford Connecticut** have inspected the components described in this Owner's Report during the period 10-2-97 to 11-10-97; and state that to the best of my knowledge and belief, the Owner has performed examinations and taken corrective measures described in this Owner's Report in accordance with the requirements of the ASME Code, Section XI.

By signing this certificate, neither the Inspector nor his employer makes any warranty, expressed or implied, concerning the examinations and corrective measures described in this Owner's Report. Furthermore, neither the Inspector nor his employer shall be liable in any manner for any personal injury or property damage or a loss of any kind arising from or connected with this inspection.

M B Chapman Commissions NC 914

Inspector's Signature National Board, State, Providence and Endorsements

Date 11-10, 1997

Form 401463 (2-95)

FORM NIS-2 OWNER'S REPORT FOR REPAIRS OR REPLACEMENTS
As Required By The Provisions Of The ASME Code Section XI

1. Owner **Duke Power Company**
   Address **526 S. Church Street, Charlotte, NC 28201-1006**

1a. Date 11/10/97

Sheet 1 of 1

2. Plant **Oconee Nuclear Station**
   Address **P.O. Box 1439, Seneca, S.C. 29679**

2a. Unit ☒ 1 ☐ 2 ☐ 3 ☐ Shared (specify Units _____)

3a. Work Order # 960074703-01
Repair Organization Job #

3. Work Performed By **Duke Power Company**
   Address **526 S. Church Street, Charlotte, NC 28201-1006**
   Type Code Symbol Stamp **N/A** Authorization No. **N/A** Expiration Date **N/A**

3b. NSM or MM # N/A

4. Identification of System 57 Class B

5. (a) Applicable Construction Code B31.7 1968 Edition, 6-68 Addenda, N/A Code Cases
   (b) Applicable Edition of Section XI Utilized for Repairs or Replacements 1989, No Addenda

6. Identification of Components Repaired or Replaced and Replacement Components

	Column 1	Column 2	Column 3	Column 4	Column 5	Col. 6	Column 7	Column 8
	Name of Component	Name of Manufacturer	Manufacturer Serial Number	National Board Number	Other Identification	Year Built	Repaired, Replaced, or Replacement	ASME Code Stamped (yes or no)
A	SNUBBER ON S/R 1-57-0-481A-H6	ITT GRINNELL	18808	N/A	N/A	N/A	☐ Repaired ☐ Replaced ☒ Replacement	☒ No ☐ Yes
B							☐ Repaired ☐ Replaced ☐ Replacement	☐ No ☐ Yes
C							☐ Repaired ☐ Replaced ☐ Replacement	☐ No ☐ Yes
D							☐ Repaired ☐ Replaced ☐ Replacement	☐ No ☐ Yes
E							☐ Repaired ☐ Replaced ☐ Replacement	☐ No ☐ Yes
F							☐ Repaired ☐ Replaced ☐ Replacement	☐ No ☐ Yes

Form NIS-2 (Back)

NOTE: Supplemental sheets in form of lists, sketches, or drawings may be used, provided (1) size is 8 1/2 in. x 11 in. (2) information in items 1 through 6 on this report is included on each sheet, and (3) each sheet is numbered and the number of sheets is recorded at the top of this form.

7. Description of Work REMOVED HYDRAULIC SNUBBER, REBUILT/REFURBISHED, AND REINSTALLED TO ORIGINAL LOCATION.

8. Test Conducted: ☐ Hydrostatic ☐ Pneumatic ☐ Nominal Operating Pressure ☒ Other ☐ Exempt

Pressure _____ psig Test Temp. _____ °F

Pressure _____ psig Test Temp. _____ °F

Pressure _____ psig Test Temp. _____ °F

9. Remarks PERFORMED FUNCTIONAL TESTING PER PROCEDURE SM/O/A/8110/001.

(Applicable Manufacturer's Data Records to be Attached)

CERTIFICATE OF COMPLIANCE

We certify that the statements made in the report are correct and this **repair or replacement** conforms to the rules of the ASME Code, Section XI.

Type Code Symbol Stamp **N/A**

Certificate of Authorization No. **N/A** Expiration Date **N/A**

Signed W McClure Date 11/10, 19 97
Owner or Owner's Designee, Title

CERTIFICATE OF INSERVICE INSPECTION

I, the undersigned, holding a valid commission issued by the National Board of Boiler and Pressure Vessel Inspectors and the State or Providence of N.C. and employed by **HSBI and I Company of Hartford Connecticut** have inspected the components described in this Owner's Report during the period 10-3-97 to 11-10-97; and state that to the best of my knowledge and belief, the Owner has performed examinations and taken corrective measures described in this Owner's Report in accordance with the requirements of the ASME Code, Section XI.

By signing this certificate, neither the Inspector nor his employer makes any warranty, expressed or implied, concerning the examinations and corrective measures described in this Owner's Report. Furthermore, neither the Inspector nor his employer shall be liable in any manner for any personal injury or property damage or a loss of any kind arising from or connected with this inspection.

MB Chapman Commissions NC914
Inspector's Signature National Board, State, Providence and Endorsements

Date 11-10, 1997

Form 401463 (2-95)

FORM NIS-2 OWNER'S REPORT FOR REPAIRS OR REPLACEMENTS
As Required By The Provisions Of The ASME Code Section XI

1. Owner **Duke Power Company**
   Address **526 S. Church Street, Charlotte, NC 28201-1006**

1a. Date 11/18/97

Sheet 1 of 1

2. Plant **Oconee Nuclear Station**
   Address **P.O. Box 1439, Seneca, S.C. 29679**

2a. Unit ☒ 1 ☐ 2 ☐ 3 ☐ Shared (specify Units_____)

3a. Work Order # 97093843-02
Repair Organization Job #

3. Work Performed By **Duke Power Company**
   Address **526 S. Church Street, Charlotte, NC 28201-1006**
   Type Code Symbol Stamp **N/A** Authorization No. **N/A** Expiration Date **N/A**

3b. NSM or MM # N/A

4. Identification of System 51 Class B

5. (a) Applicable Construction Code B31.7 19 68 Edition, 6-68 Addenda, N/A Code Cases
   (b) Applicable Edition of Section XI Utilized for Repairs or Replacements 1989, No Addenda

6. Identification of Components Repaired or Replaced and Replacement Components

	Column 1	Column 2	Column 3	Column 4	Column 5	Col. 6	Column 7	Column 8
	Name of Component	Name of Manufacturer	Manufacturer Serial Number	National Board Number	Other Identification	Year Built	Repaired, Replaced, or Replacement	ASME Code Stamped (yes or no)
A	S/R 1-51-0-436D-SR10	DPC	N/A	N/A	N/A	N/A	☒ Repaired ☐ Replaced ☐ Replacement	☒ No ☐ Yes
B							☐ Repaired ☐ Replaced ☐ Replacement	☐ No ☐ Yes
C							☐ Repaired ☐ Replaced ☐ Replacement	☐ No ☐ Yes
D							☐ Repaired ☐ Replaced ☐ Replacement	☐ No ☐ Yes
E							☐ Repaired ☐ Replaced ☐ Replacement	☐ No ☐ Yes
F							☐ Repaired ☐ Replaced ☐ Replacement	☐ No ☐ Yes

Form NIS-2 (Back)

NOTE: Supplemental sheets in form of lists, sketches, or drawings may be used, provided (1) size is 8 1/2 in. x 11 in. (2) information in items 1 through 6 on this report is included on each sheet, and (3) each sheet is numbered and the number of sheets is recorded at the top of this form.

7. Description of Work WELDED SHIMS IN PLACE TO OBTAIN PROPER BEARING.

8. Test Conducted: ☐ Hydrostatic ☐ Pneumatic ☐ Nominal Operating Pressure ☐ Other ☒ Exempt

Pressure _____ psig Test Temp. _____ °F

Pressure _____ psig Test Temp. _____ °F

Pressure _____ psig Test Temp. _____ °F

9. Remarks _____

(Applicable Manufacturer's Data Records to be Attached)

CERTIFICATE OF COMPLIANCE

We certify that the statements made in the report are correct and this **repair or replacement** conforms to the rules of the ASME Code, Section XI.

Type Code Symbol Stamp **N/A**

Certificate of Authorization No. **N/A** Expiration Date **N/A**

Signed Wm C Clem Date 11/18, 1997

Owner or Owner's Designee, Title

CERTIFICATE OF INSERVICE INSPECTION

I, the undersigned, holding a valid commission issued by the National Board of Boiler and Pressure Vessel Inspectors and the State or Providence of N.C. and employed by **HSBI and I Company of Hartford Connecticut** have inspected the components described in this Owner's Report during the period 11-6-97 to 11-18-97; and state that to the best of my knowledge and belief, the Owner has performed examinations and taken corrective measures described in this Owner's Report in accordance with the requirements of the ASME Code, Section XI.

By signing this certificate, neither the Inspector nor his employer makes any warranty, expressed or implied, concerning the examinations and corrective measures described in this Owner's Report. Furthermore, neither the Inspector nor his employer shall be liable in any manner for any personal injury or property damage or a loss of any kind arising from or connected with this inspection.

MB Chapman Commissions NC917

Inspector's Signature National Board, State, Providence and Endorsements

Date 11-18, 1997

Form 401463 (2-95)

FORM NIS-2 OWNER'S REPORT FOR REPAIRS OR REPLACEMENTS
As Required By The Provisions Of The ASME Code Section XI

1. Owner **Duke Power Company**
   Address **526 S. Church Street, Charlotte, NC 28201-1006**

1a. Date 11/17/97

Sheet 1 of 1

2. Plant **Oconee Nuclear Station**
   Address **P.O. Box 1439, Seneca, S.C. 29679**

2a. Unit ☒ 1 ☐ 2 ☐ 3 ☐ Shared (specify Units_____)

3a. Work Order # 97089279-01
Repair Organization Job #

3. Work Performed By **Duke Power Company**
   Address **526 S. Church Street, Charlotte, NC 28201-1006**
   Type Code Symbol Stamp **N/A** Authorization No. **N/A** Expiration Date **N/A**

3b. NSM or MM # N/A

4. Identification of System 51 Class B

5. (a) Applicable Construction Code B31.7 1968 Edition, 6-68 Addenda, N/A Code Cases
   (b) Applicable Edition of Section XI Utilized for Repairs or Replacements 1989, No Addenda

6. Identification of Components Repaired or Replaced and Replacement Components

	Column 1	Column 2	Column 3	Column 4	Column 5	Col. 6	Column 7	Column 8
	Name of Component	Name of Manufacturer	Manufacturer Serial Number	National Board Number	Other Identification	Year Built	Repaired, Replaced, or Replacement	ASME Code Stamped (yes or no)
A	S/R 1-51-0-436H-SR15	DPC	N/A	N/A	N/A	N/A	☒ Repaired ☐ Replaced ☐ Replacement	☒ No ☐ Yes
B							☐ Repaired ☐ Replaced ☐ Replacement	☐ No ☐ Yes
C							☐ Repaired ☐ Replaced ☐ Replacement	☐ No ☐ Yes
D							☐ Repaired ☐ Replaced ☐ Replacement	☐ No ☐ Yes
E							☐ Repaired ☐ Replaced ☐ Replacement	☐ No ☐ Yes
F							☐ Repaired ☐ Replaced ☐ Replacement	☐ No ☐ Yes

Form NIS-2 (Back)

NOTE: Supplemental sheets in form of lists, sketches, or drawings may be used, provided (1) size is 8 1/2 in. x 11 in. (2) information in items 1 through 6 on this report is included on each sheet, and (3) each sheet is numbered and the number of sheets is recorded at the top of this form.

7. Description of Work MADE REPAIRS TO ATTACHMENT WELDS AND WELDED SHIMS TO OBTAIN PROPER BEARING.

8. Test Conducted: ☐ Hydrostatic ☐ Pneumatic ☐ Nominal Operating Pressure ☐ Other ☒ Exempt

Pressure _____ psig Test Temp. _____ °F

Pressure _____ psig Test Temp. _____ °F

Pressure _____ psig Test Temp. _____ °F

9. Remarks _____

(Applicable Manufacturer's Data Records to be Attached)

CERTIFICATE OF COMPLIANCE

We certify that the statements made in the report are correct and this **repair or replacement** conforms to the rules of the ASME Code, Section XI.

Type Code Symbol Stamp **N/A**

Certificate of Authorization No. **N/A** Expiration Date **N/A**

Signed Wm C Clem Date 11/18, 1997
Owner or Owner's Designee, Title

CERTIFICATE OF INSERVICE INSPECTION

I, the undersigned, holding a valid commission issued by the National Board of Boiler and Pressure Vessel Inspectors and the State or Providence of N. C. and employed by **HSBI and I Company of Hartford Connecticut** have inspected the components described in this Owner's Report during the period 10-27-97 to 11-18-97; and state that to the best of my knowledge and belief, the Owner has performed examinations and taken corrective measures described in this Owner's Report in accordance with the requirements of the ASME Code, Section XI.

By signing this certificate, neither the Inspector nor his employer makes any warranty, expressed or implied, concerning the examinations and corrective measures described in this Owner's Report. Furthermore, neither the Inspector nor his employer shall be liable in any manner for any personal injury or property damage or a loss of any kind arising from or connected with this inspection.

M B Chapman Commissions NC 914
Inspector's Signature National Board, State, Providence and Endorsements

Date 11-18, 1997

Form 401463 (2-95)

FORM NIS-2 OWNER'S REPORT FOR REPAIRS OR REPLACEMENTS
As Required By The Provisions Of The ASME Code Section XI

1a. Date 11/14/97

Sheet 1 of 1

1. Owner **Duke Power Company**
   Address **526 S. Church Street, Charlotte, NC 28201-1006**

2. Plant **Oconee Nuclear Station**
   Address **P.O. Box 1439, Seneca, S.C. 29679**

2a. Unit ☒ 1 ☐ 2 ☐ 3 ☐ Shared (specify Units _____)

3a. Work Order # 96074693-01
Repair Organization Job #

3. Work Performed By **Duke Power Company**
   Address **526 S. Church Street, Charlotte, NC 28201-1006**
   Type Code Symbol Stamp **N/A** Authorization No. **N/A** Expiration Date **N/A**

3b. NSM or MM # N/A

4. Identification of System 53A Class A

5. (a) Applicable Construction Code B31.7 1968 Edition, 6-68 Addenda, N/A Code Cases
   (b) Applicable Edition of Section XI Utilized for Repairs or Replacements 1989, No Addenda

6. Identification of Components Repaired or Replaced and Replacement Components

	Column 1	Column 2	Column 3	Column 4	Column 5	Col. 6	Column 7	Column 8
	Name of Component	Name of Manufacturer	Manufacturer Serial Number	National Board Number	Other Identification	Year Built	Repaired, Replaced, or Replacement	ASME Code Stamped (yes or no)
A	SNUBBER ON S/R 1-53A-0-481A-H40C	ITT GRINNELL	18801	N/A	N/A	N/A	☐ Repaired ☐ Replaced ☒ Replacement	☒ No ☐ Yes
B							☐ Repaired ☐ Replaced ☐ Replacement	☐ No ☐ Yes
C							☐ Repaired ☐ Replaced ☐ Replacement	☐ No ☐ Yes
D							☐ Repaired ☐ Replaced ☐ Replacement	☐ No ☐ Yes
E							☐ Repaired ☐ Replaced ☐ Replacement	☐ No ☐ Yes
F							☐ Repaired ☐ Replaced ☐ Replacement	☐ No ☐ Yes

Form NIS-2 (Back)

NOTE: Supplemental sheets in form of lists, sketches, or drawings may be used, provided (1) size is 8 1/2 in. x 11 in. (2) information in items 1 through 6 on this report is included on each sheet, and (3) each sheet is numbered and the number of sheets is recorded at the top of this form.

7. Description of Work REMOVED HYDRAULIC SNUBBER, REBUILT/REFURBISHED, AND REINSTALLED TO ORIGINAL LOCATION.

8. Test Conducted: ☐ Hydrostatic ☐ Pneumatic ☐ Nominal Operating Pressure ☒ Other ☐ Exempt

Pressure _____ psig Test Temp. _____ °F

Pressure _____ psig Test Temp. _____ °F

Pressure _____ psig Test Temp. _____ °F

9. Remarks PERFORMED FUNCTIONAL TESTING PER PROCEDURE SM/O/A/8110/001.

(Applicable Manufacturer's Data Records to be Attached)

CERTIFICATE OF COMPLIANCE

We certify that the statements made in the report are correct and this **repair or replacement** conforms to the rules of the ASME Code, Section XI.

Type Code Symbol Stamp **N/A**

Certificate of Authorization No. **N/A** Expiration Date **N/A**

Signed W M C Clure Date 11/14, 19 97

Owner or Owner's Designee, Title

CERTIFICATE OF INSERVICE INSPECTION

I, the undersigned, holding a valid commission issued by the National Board of Boiler and Pressure Vessel Inspectors and the State or Providence of N. C. and employed by **HSBI and I Company of Hartford Connecticut** have inspected the components described in this Owner's Report during the period 9-27-97 to 11-17-97; and state that to the best of my knowledge and belief, the Owner has performed examinations and taken corrective measures described in this Owner's Report in accordance with the requirements of the ASME Code, Section XI.

By signing this certificate, neither the Inspector nor his employer makes any warranty, expressed or implied, concerning the examinations and corrective measures described in this Owner's Report. Furthermore, neither the Inspector nor his employer shall be liable in any manner for any personal injury or property damage or a loss of any kind arising from or connected with this inspection.

M B Chapman Commissions NC914

Inspector's Signature National Board, State, Providence and Endorsements

Date 11-17, 19 97

Form 401463 (2-95)

FORM NIS-2 OWNER'S REPORT FOR REPAIRS OR REPLACEMENTS
As Required By The Provisions Of The ASME Code Section XI

1a. Date 2/8/96

Sheet 1 of 1

1. Owner **Duke Power Company**
   Address **526 S. Church Street, Charlotte, NC 28201-1006**

2. Plant **Oconee Nuclear Station**
   Address **P.O. Box 1439, Seneca, S.C. 29679**

2a. Unit ☒ 1 ☐ 2 ☐ 3 ☐ Shared (specify Units _____)

3a. Work Order # 9509 2625-01
Repair Organization Job #

3. Work Performed By **Duke Power Company**
   Address **526 S. Church Street, Charlotte, NC 28201-1006**
   Type Code Symbol Stamp **N/A** Authorization No. **N/A** Expiration Date **N/A**

3b. NSM or MM # N/A

4. Identification of System 14 (LPSW) Class B

5. (a) Applicable Construction Code B31.1 19 67 Edition, — Addenda, — Code Cases
   (b) Applicable Edition of Section XI Utilized for Repairs or Replacements 1989, No Addenda

6. Identification of Components Repaired or Replaced and Replacement Components

	Column 1	Column 2	Column 3	Column 4	Column 5	Col. 6	Column 7	Column 8
	Name of Component	Name of Manufacturer	Manufacturer Serial Number	National Board Number	Other Identification	Year Built	Repaired, Replaced, or Replacement	ASME Code Stamped (yes or no)
A	HANGER 1-14-0-479A-H6	DPC	N/A	N/A	N/A	N/A	☒ Repaired ☐ Replaced ☐ Replacement	☒ No ☐ Yes
B							☐ Repaired ☐ Replaced ☐ Replacement	☐ No ☐ Yes
C							☐ Repaired ☐ Replaced ☐ Replacement	☐ No ☐ Yes
D							☐ Repaired ☐ Replaced ☐ Replacement	☐ No ☐ Yes
E							☐ Repaired ☐ Replaced ☐ Replacement	☐ No ☐ Yes
F							☐ Repaired ☐ Replaced ☐ Replacement	☐ No ☐ Yes

Form NIS-2 (Back)

NOTE: Supplemental sheets in form of lists, sketches, or drawings may be used, provided (1) size is 8 1/2 in. x 11 in. (2) information in items 1 through 6 on this report is included on each sheet, and (3) each sheet is numbered and the number of sheets is recorded at the top of this form.

7. Description of Work WELDED SHIM TO STANCHION (ITEM 1) TO ACHIEVE ACCEPTABLE CLEARANCE.

8. Test Conducted: ☐ Hydrostatic ☐ Pneumatic ☐ Nominal Operating Pressure ☐ Other ☒ Exempt

Pressure _____ psig Test Temp. _____ °F

Pressure _____ psig Test Temp. _____ °F

Pressure _____ psig Test Temp. _____ °F

9. Remarks _____

(Applicable Manufacturer's Data Records to be Attached)

CERTIFICATE OF COMPLIANCE

We certify that the statements made in the report are correct and this **repair or replacement** conforms to the rules of the ASME Code, Section XI.

Type Code Symbol Stamp **N/A**

Certificate of Authorization No. **N/A** Expiration Date **N/A**

Signed WMcClure Date 2/8, 19 96

Owner or Owner's Designee, Title

CERTIFICATE OF INSERVICE INSPECTION

I, the undersigned, holding a valid commission issued by the National Board of Boiler and Pressure Vessel Inspectors and the State or Providence of N.C. and employed by **HSBI and I Company of Hartford Connecticut** have inspected the components described in this Owner's Report during the period 12-1-95 to 2-8-96; and state that to the best of my knowledge and belief, the Owner has performed examinations and taken corrective measures described in this Owner's Report in accordance with the requirements of the ASME Code, Section XI.

By signing this certificate, neither the Inspector nor his employer makes any warranty, expressed or implied, concerning the examinations and corrective measures described in this Owner's Report. Furthermore, neither the Inspector nor his employer shall be liable in any manner for any personal injury or property damage or a loss of any kind arising from or connected with this inspection.

Inspector's Signature Commissions NC914

National Board, State, Providence and Endorsements

Date 2-8, 1996

FORM NIS-2 OWNER'S REPORT FOR REPAIRS OR REPLACEMENTS
As Required By The Provisions Of The ASME Code Section XI

1a. Date 2/7/96

Sheet 1 of 1

1. Owner **Duke Power Company**
   Address **526 S. Church Street, Charlotte, NC 28201-1006**

2. Plant **Oconee Nuclear Station**
   Address **P.O. Box 1439, Seneca, S.C. 29679**

2a. Unit ☒ 1 ☐ 2 ☐ 3 ☐ Shared (specify Units _____)

3a. Work Order # 95057938-01
Repair Organization Job #

3. Work Performed By **Duke Power Company**
   Address **526 S. Church Street, Charlotte, NC 28201-1006**
   Type Code Symbol Stamp **N/A** Authorization No. **N/A** Expiration Date **N/A**

3b. NSM or MM # _____

4. Identification of System OIA (MS) Class B

5. (a) Applicable Construction Code B31.1 1967 Edition, — Addenda, — Code Cases
   (b) Applicable Edition of Section XI Utilized for Repairs or Replacements 1989, No Addenda

6. Identification of Components Repaired or Replaced and Replacement Components

	Column 1	Column 2	Column 3	Column 4	Column 5	Col. 6	Column 7	Column 8
	Name of Component	Name of Manufacturer	Manufacturer Serial Number	National Board Number	Other Identification	Year Built	Repaired, Replaced, or Replacement	ASME Code Stamped (yes or no)
A	HYDRALIC SNUBBER ON HANGER 1-01A-0-481B-H11A	ITT GRINNELL	16290	N/A	N/A	N/A	☐ Repaired ☐ Replaced ☒ Replacement	☒ No ☐ Yes
B							☐ Repaired ☐ Replaced ☐ Replacement	☐ No ☐ Yes
C							☐ Repaired ☐ Replaced ☐ Replacement	☐ No ☐ Yes
D							☐ Repaired ☐ Replaced ☐ Replacement	☐ No ☐ Yes
E							☐ Repaired ☐ Replaced ☐ Replacement	☐ No ☐ Yes
F							☐ Repaired ☐ Replaced ☐ Replacement	☐ No ☐ Yes

Form 401463 (2-95)

Form NIS-2 (Back)

NOTE: Supplemental sheets in form of lists, sketches, or drawings may be used, provided (1) size is 8 1/2 in. x 11 in. (2) information in items 1 through 6 on this report is included on each sheet, and (3) each sheet is numbered and the number of sheets is recorded at the top of this form.

7. Description of Work REMOVED EXISTING RESERVOIR CYLINDER BODY ON SNUBBER AND REPLACED WITH NEW BODY.

8. Test Conducted: ☐ Hydrostatic ☐ Pneumatic ☐ Nominal Operating Pressure ☒ Other ☐ Exempt

Pressure _____ psig Test Temp. _____ °F

Pressure _____ psig Test Temp. _____ °F

Pressure _____ psig Test Temp. _____ °F

9. Remarks FUNCTIONAL TESTING PER MP/0/A/3018/009A.

(Applicable Manufacturer's Data Records to be Attached)

CERTIFICATE OF COMPLIANCE

We certify that the statements made in the report are correct and this **repair or replacement** conforms to the rules of the ASME Code, Section XI.

Type Code Symbol Stamp **N/A**

Certificate of Authorization No. **N/A** Expiration Date **N/A**

Signed Wm McClure Date 2/7, 19 96
Owner or Owner's Designee, Title

CERTIFICATE OF INSERVICE INSPECTION

I, the undersigned, holding a valid commission issued by the National Board of Boiler and Pressure Vessel Inspectors and the State or Providence of N.C. and employed by **HSBI and I Company of Hartford Connecticut** have inspected the components described in this Owner's Report during the period 11-12-95 to 2-8-96; and state that to the best of my knowledge and belief, the Owner has performed examinations and taken corrective measures described in this Owner's Report in accordance with the requirements of the ASME Code, Section XI.

By signing this certificate, neither the Inspector nor his employer makes any warranty, expressed or implied, concerning the examinations and corrective measures described in this Owner's Report. Furthermore, neither the Inspector nor his employer shall be liable in any manner for any personal injury or property damage or a loss of any kind arising from or connected with this inspection.

Inspector's Signature Commissions NC914
National Board, State, Providence and Endorsements

Date 2-8, 1996

Form 401463 (2-95)

FORM NIS-2 OWNER'S REPORT FOR REPAIRS OR REPLACEMENTS
As Required By The Provisions Of The ASME Code Section XI

1. Owner **Duke Power Company**
   Address **526 S. Church Street, Charlotte, NC 28201-1006**

1a. Date 2/6/96

Sheet 1 of 1

2. Plant **Oconee Nuclear Station**
   Address **P.O. Box 1439, Seneca, S.C. 29679**

2a. Unit ☒ 1 ☐ 2 ☐ 3 ☐ Shared (specify Units_____)

3. Work Performed By **Duke Power Company**
   Address **526 S. Church Street, Charlotte, NC 28201-1006**
   Type Code Symbol Stamp **N/A** Authorization No. **N/A** Expiration Date **N/A**

3a. Work Order # 95058250-01
Repair Organization Job #

3b. NSM or MM # N/A

4. Identification of System 50 (RC) Class A

5. (a) Applicable Construction Code B31.7 19 68 Edition, 6-68 Addenda, — Code Cases
   (b) Applicable Edition of Section XI Utilized for Repairs or Replacements 1989, No Addenda

6. Identification of Components Repaired or Replaced and Replacement Components

	Column 1	Column 2	Column 3	Column 4	Column 5	Col. 6	Column 7	Column 8
	Name of Component	Name of Manufacturer	Manufacturer Serial Number	National Board Number	Other Identification	Year Built	Repaired, Replaced, or Replacement	ASME Code Stamped (yes or no)
A	HYDRALIC SNUBBER ON HANGER 1-50-0-481A-H8	ITT GRINNELL	15120	N/A	N/A	N/A	☐ Repaired ☒ Replaced ☐ Replacement	☒ No ☐ Yes
B	HYDRALIC SNUBBER ON HANGER 1-50-0-481A-H8	ITT GRINNELL	18817	N/A	N/A	N/A	☐ Repaired ☐ Replaced ☒ Replacement	☒ No ☐ Yes
C							☐ Repaired ☐ Replaced ☐ Replacement	☐ No ☐ Yes
D							☐ Repaired ☐ Replaced ☐ Replacement	☐ No ☐ Yes
E							☐ Repaired ☐ Replaced ☐ Replacement	☐ No ☐ Yes
F							☐ Repaired ☐ Replaced ☐ Replacement	☐ No ☐ Yes

Form NIS-2 (Back)

NOTE: Supplemental sheets in form of lists, sketches, or drawings may be used, provided (1) size is 8 1/2 in. x 11 in. (2) information in items 1 through 6 on this report is included on each sheet, and (3) each sheet is numbered and the number of sheets is recorded at the top of this form.

7. Description of Work REMOVED/REPLACED SNUBBER SER. # 15120 WITH SNUBBER SER. # 18817.

8. Test Conducted: ☐ Hydrostatic ☐ Pneumatic ☐ Nominal Operating Pressure ☒ Other ☐ Exempt

Pressure _____ psig Test Temp. _____ °F

Pressure _____ psig Test Temp. _____ °F

Pressure _____ psig Test Temp. _____ °F

9. Remarks PERFORMED FUNCTIONAL TESTING PER MP/0/A/3018/009A.

(Applicable Manufacturer's Data Records to be Attached)

CERTIFICATE OF COMPLIANCE

We certify that the statements made in the report are correct and this **repair or replacement** conforms to the rules of the ASME Code, Section XI.

Type Code Symbol Stamp **N/A**

Certificate of Authorization No. **N/A** Expiration Date **N/A**

Signed W M C Clure Date 2/6, 19 96
Owner or Owner's Designee, Title

CERTIFICATE OF INSERVICE INSPECTION

I, the undersigned, holding a valid commission issued by the National Board of Boiler and Pressure Vessel Inspectors and the State or Providence of N. C. and employed by **HSBI and I Company of Hartford Connecticut** have inspected the components described in this Owner's Report during the period 11-15-95 to 2-6-96; and state that to the best of my knowledge and belief, the Owner has performed examinations and taken corrective measures described in this Owner's Report in accordance with the requirements of the ASME Code, Section XI.

By signing this certificate, neither the Inspector nor his employer makes any warranty, expressed or implied, concerning the examinations and corrective measures described in this Owner's Report. Furthermore, neither the Inspector nor his employer shall be liable in any manner for any personal injury or property damage or a loss of any kind arising from or connected with this inspection.

M B Chapman Commissions N0914
Inspector's Signature National Board, State, Providence and Endorsements

Date 2-6, 19 96

Form 401463 (2-96)

FORM NIS-2 OWNER'S REPORT FOR REPAIRS OR REPLACEMENTS
As Required By The Provisions Of The ASME Code Section XI

1. Owner **Duke Power Company**
   Address **526 S. Church Street, Charlotte, NC 28201-1006**

1a. Date 2/5/96

Sheet 1 of 1

2. Plant **Oconee Nuclear Station**
   Address **P.O. Box 1439, Seneca, S.C. 29679**

2a. Unit ☒ 1 ☐ 2 ☐ 3 ☐ Shared (specify Units _____)

3. Work Performed By **Duke Power Company**
   Address **526 S. Church Street, Charlotte, NC 28201-1006**
   Type Code Symbol Stamp **N/A** Authorization No. **N/A** Expiration Date **N/A**

3a. Work Order # 95087129-01
Repair Organization Job #

3b. NSM or MM # N/A

4. Identification of System 50 (RC) Class A

5. (a) Applicable Construction Code B31.7 19 68 Edition, 6-68 Addenda, — Code Cases
   (b) Applicable Edition of Section XI Utilized for Repairs or Replacements 1989, No Addenda

6. Identification of Components Repaired or Replaced and Replacement Components

	Column 1	Column 2	Column 3	Column 4	Column 5	Col. 6	Column 7	Column 8
	Name of Component	Name of Manufacturer	Manufacturer Serial Number	National Board Number	Other Identification	Year Built	Repaired, Replaced, or Replacement	ASME Code Stamped (yes or no)
A	HANGER/HYDRA. SNUBBER 1-50-0-480A-H10	ITT GRINNELL / DPC	SNUBBER SER. # 18791	N/A	N/A	N/A	☒ Repaired ☐ Replaced ☐ Replacement	☒ No ☐ Yes
B							☐ Repaired ☐ Replaced ☐ Replacement	☐ No ☐ Yes
C							☐ Repaired ☐ Replaced ☐ Replacement	☐ No ☐ Yes
D							☐ Repaired ☐ Replaced ☐ Replacement	☐ No ☐ Yes
E							☐ Repaired ☐ Replaced ☐ Replacement	☐ No ☐ Yes
F							☐ Repaired ☐ Replaced ☐ Replacement	☐ No ☐ Yes

Form NIS-2 (Back)

NOTE: Supplemental sheets in form of lists, sketches, or drawings may be used, provided (1) size is 8 1/2 in. x 11 in. (2) information in items 1 through 6 on this report is included on each sheet, and (3) each sheet is numbered and the number of sheets is recorded at the top of this form.

7. Description of Work REBUILT SNUBBER

8. Test Conducted: ☐ Hydrostatic ☐ Pneumatic ☐ Nominal Operating Pressure ☒ Other ☐ Exempt

Pressure _____ psig Test Temp. _____ °F

Pressure _____ psig Test Temp. _____ °F

Pressure _____ psig Test Temp. _____ °F

9. Remarks PERFORMED FUNCTIONAL TESTING PER MP/0/A/3018/009A.

(Applicable Manufacturer's Data Records to be Attached)

CERTIFICATE OF COMPLIANCE

We certify that the statements made in the report are correct and this **repair or replacement** conforms to the rules of the ASME Code, Section XI.

Type Code Symbol Stamp **N/A**

Certificate of Authorization No. **N/A** Expiration Date **N/A**

Signed W M C Clure Date 2/5, 19 96

Owner or Owner's Designee, Title

CERTIFICATE OF INSERVICE INSPECTION

I, the undersigned, holding a valid commission issued by the National Board of Boiler and Pressure Vessel Inspectors and the State or Providence of N. C. and employed by **HSBI and I Company of Hartford Connecticut** have inspected the components described in this Owner's Report during the period 11-19-95 to 2-5-96; and state that to the best of my knowledge and belief, the Owner has performed examinations and taken corrective measures described in this Owner's Report in accordance with the requirements of the ASME Code, Section XI.

By signing this certificate, neither the Inspector nor his employer makes any warranty, expressed or implied, concerning the examinations and corrective measures described in this Owner's Report. Furthermore, neither the Inspector nor his employer shall be liable in any manner for any personal injury or property damage or a loss of any kind arising from or connected with this inspection.

M. B. Chapman Commissions NC 914

Inspector's Signature National Board, State, Providence and Endorsements

Date 2-5, 19 96

Form 401463 (2

FORM NIS-2 OWNER'S REPORT FOR REPAIRS OR REPLACEMENTS
As Required By The Provisions Of The ASME Code Section XI

1. Owner **Duke Power Company**
   Address **526 S. Church Street, Charlotte, NC 28201-1006**

1a. Date 1/30/96

Sheet 1 of 1

2. Plant **Oconee Nuclear Station**
   Address **P.O. Box 1439, Seneca, S.C. 29679**

2a. Unit ☒ 1 ☐ 2 ☐ 3 ☐ Shared (specify Units_____)

3. Work Performed By **Duke Power Company**
   Address **526 S. Church Street, Charlotte, NC 28201-1006**
   Type Code Symbol Stamp **N/A** Authorization No. **N/A** Expiration Date **N/A**

3a. Work Order # 9503 9713-01
Repair Organization Job #

3b. NSM or MM # N/A

4. Identification of System O1A Class B

5. (a) Applicable Construction Code B31.1 1967 Edition, 7 Addenda, _____ Code Cases
   (b) Applicable Edition of Section XI Utilized for Repairs or Replacements 1989, No Addenda

6. Identification of Components Repaired or Replaced and Replacement Components

	Column 1	Column 2	Column 3	Column 4	Column 5	Col. 6	Column 7	Column 8
	Name of Component	Name of Manufacturer	Manufacturer Serial Number	National Board Number	Other Identification	Year Built	Repaired, Replaced, or Replacement	ASME Code Stamped (yes or no)
A	HANGER 1-01A-0-550-R5	DPC	N/A	N/A	N/A	N/A	☐ Repaired ☐ Replaced ☒ Replacement	☒ No ☐ Yes
B							☐ Repaired ☐ Replaced ☐ Replacement	☐ No ☐ Yes
C							☐ Repaired ☐ Replaced ☐ Replacement	☐ No ☐ Yes
D							☐ Repaired ☐ Replaced ☐ Replacement	☐ No ☐ Yes
E							☐ Repaired ☐ Replaced ☐ Replacement	☐ No ☐ Yes
F							☐ Repaired ☐ Replaced ☐ Replacement	☐ No ☐ Yes

Form 401463 (2-95)

Form NIS-2 (Back)

NOTE: Supplemental sheets in form of lists, sketches, or drawings may be used, provided (1) size is 8 1/2 in. x 11 in. (2) information in items 1 through 6 on this report is included on each sheet, and (3) each sheet is numbered and the number of sheets is recorded at the top of this form.

7. Description of Work REPLACED STUD, NUTS & WASHERS WITH NEW MATERIAL.

8. Test Conducted: ☐ Hydrostatic ☐ Pneumatic ☐ Nominal Operating Pressure ☐ Other ☒ Exempt

Pressure	_____ psig	Test Temp.	_____ °F
Pressure	_____ psig	Test Temp.	_____ °F
Pressure	_____ psig	Test Temp.	_____ °F

9. Remarks MATERIAL WAS REPLACED AFTER DAMAGING ORIGINAL IN REMOVAL AND REPLACEMENT OF MECH. SNUBBER.

(Applicable Manufacturer's Data Records to be Attached)

CERTIFICATE OF COMPLIANCE

We certify that the statements made in the report are correct and this **repair or replacement** conforms to the rules of the ASME Code, Section XI.

Type Code Symbol Stamp **N/A**

Certificate of Authorization No. **N/A** Expiration Date **N/A**

Signed WMC Clue Date 1/30, 19 96
Owner or Owner's Designee, Title

CERTIFICATE OF INSERVICE INSPECTION

I, the undersigned, holding a valid commission issued by the National Board of Boiler and Pressure Vessel Inspectors and the State or Providence of N. C. and employed by **HSBI and I Company of Hartford Connecticut** have inspected the components described in this Owner's Report during the period 11-5-95 to 1-30-96; and state that to the best of my knowledge and belief, the Owner has performed examinations and taken corrective measures described in this Owner's Report in accordance with the requirements of the ASME Code, Section XI.

By signing this certificate, neither the Inspector nor his employer makes any warranty, expressed or implied, concerning the examinations and corrective measures described in this Owner's Report. Furthermore, neither the Inspector nor his employer shall be liable in any manner for any personal injury or property damage or a loss of any kind arising from or connected with this inspection.

SMB Chapman Commissions NC914
Inspector's Signature National Board, State, Providence and Endorsements

Date 1-30, 19 96

Form 401463 (2

FORM NIS-2 OWNER'S REPORT FOR REPAIRS OR REPLACEMENTS
As Required By The Provisions Of The ASME Code Section XI

1. Owner **Duke Power Company**
   Address **526 S. Church Street, Charlotte, NC 28201-1006**

1a. Date 2/12/97

Sheet 1 of 1

2. Plant **Oconee Nuclear Station**
   Address **P.O. Box 1439, Seneca, S.C. 29679**

2a. Unit ☒ 1 ☐ 2 ☐ 3 ☐ Shared (specify Units_____)

3. Work Performed By **Duke Power Company**
   Address **526 S. Church Street, Charlotte, NC 28201-1006**
   Type Code Symbol Stamp **N/A** Authorization No. **N/A** Expiration Date **N/A**

3a. Work Order # 97008792-01
Repair Organization Job #

3b. NSM or MM # N/A

4. Identification of System O1A Class B

5. (a) Applicable Construction Code B31.7 19 68 Edition, 6-68 Addenda, N/A Code Cases
   (b) Applicable Edition of Section XI Utilized for Repairs or Replacements 1989, No Addenda

6. Identification of Components Repaired or Replaced and Replacement Components

	Column 1	Column 2	Column 3	Column 4	Column 5	Col. 6	Column 7	Column 8
	Name of Component	Name of Manufacturer	Manufacturer Serial Number	National Board Number	Other Identification	Year Built	Repaired, Replaced, or Replacement	ASME Code Stamped (yes or no)
A	SNUBBER ON S/R 1-01A-0-481B-H11B	ITT GRINNELL	18831	N/A	N/A	N/A	☐ Repaired ☒ Replaced ☐ Replacement	☒ No ☐ Yes
B	SNUBBER ON S/R 1-01A-0-481B-H11B	ITT GRINNELL	30214	N/A	N/A	N/A	☐ Repaired ☐ Replaced ☒ Replacement	☒ No ☐ Yes
C							☐ Repaired ☐ Replaced ☐ Replacement	☐ No ☐ Yes
D							☐ Repaired ☐ Replaced ☐ Replacement	☐ No ☐ Yes
E							☐ Repaired ☐ Replaced ☐ Replacement	☐ No ☐ Yes
F							☐ Repaired ☐ Replaced ☐ Replacement	☐ No ☐ Yes

Form 401463 (2-95)

Form NIS-2 (Back)

NOTE: Supplemental sheets in form of lists, sketches, or drawings may be used, provided (1) size is 8 1/2 in. x 11 in. (2) information in items 1 through 6 on this report is included on each sheet, and (3) each sheet is numbered and the number of sheets is recorded at the top of this form.

7. Description of Work REMOVED EXISTING HYDRA. SNUBBER, SER. NO. 18831, AND INSTALLED HYDRA. SNUBBER SER. NO. 30214 ON S/R 1-01A-0-481B-H11B.

8. Test Conducted: ☐ Hydrostatic ☐ Pneumatic ☐ Nominal Operating Pressure ☒ Other ☐ Exempt

Pressure _____ psig Test Temp. _____ °F

Pressure _____ psig Test Temp. _____ °F

Pressure _____ psig Test Temp. _____ °F

9. Remarks FUNCTIONAL TEST PER SM/O/A/8110/001.

(Applicable Manufacturer's Data Records to be Attached)

CERTIFICATE OF COMPLIANCE

We certify that the statements made in the report are correct and this **repair or replacement** conforms to the rules of the ASME Code, Section XI.

Type Code Symbol Stamp **N/A**

Certificate of Authorization No. **N/A** Expiration Date **N/A**

Signed W McClure Date 2/12, 19 97
Owner or Owner's Designee, Title

CERTIFICATE OF INSERVICE INSPECTION

I, the undersigned, holding a valid commission issued by the National Board of Boiler and Pressure Vessel Inspectors and the State or Providence of N.C. and employed by **HSBI and I Company of Hartford Connecticut** have inspected the components described in this Owner's Report during the period 1-29-97 to 2-13-97; and state that to the best of my knowledge and belief, the Owner has performed examinations and taken corrective measures described in this Owner's Report in accordance with the requirements of the ASME Code, Section XI.

By signing this certificate, neither the Inspector nor his employer makes any warranty, expressed or implied, concerning the examinations and corrective measures described in this Owner's Report. Furthermore, neither the Inspector nor his employer shall be liable in any manner for any personal injury or property damage or a loss of any kind arising from or connected with this inspection.

MB Chapman Commissions WC914
Inspector's Signature National Board, State, Providence and Endorsements

Date 2-13, 19 97

Form 401463 (2

FORM NIS-2 OWNER'S REPORT FOR REPAIRS OR REPLACEMENTS
As Required By The Provisions Of The ASME Code Section XI

1. Owner **Duke Power Company**
   Address **526 S. Church Street, Charlotte, NC 28201-1006**

1a. Date 9/17/97

Sheet 1 of 1

2. Plant **Oconee Nuclear Station**
   Address **P.O. Box 1439, Seneca, S.C. 29679**

2a. Unit ☒ 1 ☐ 2 ☐ 3 ☐ Shared (specify Units_____)

3. Work Performed By **Duke Power Company**
   Address **526 S. Church Street, Charlotte, NC 28201-1006**
   Type Code Symbol Stamp **N/A** Authorization No. **N/A** Expiration Date **N/A**

3a. Work Order # 97050685-01
Repair Organization Job #

3b. NSM or MM # N/A

4. Identification of System 50 Class A

5. (a) Applicable Construction Code B31.7 1968 Edition, 6-68 Addenda, N/A Code Cases
   (b) Applicable Edition of Section XI Utilized for Repairs or Replacements 1989, No Addenda

6. Identification of Components Repaired or Replaced and Replacement Components

	Column 1	Column 2	Column 3	Column 4	Column 5	Col. 6	Column 7	Column 8
	Name of Component	Name of Manufacturer	Manufacturer Serial Number	National Board Number	Other Identification	Year Built	Repaired, Replaced, or Replacement	ASME Code Stamped (yes or no)
A	SNUBBER ON S/R 1-50-0-66A-RCPM-S11	GRINNELL	CYL. SER. # 33L56199	N/A	N/A	N/A	☒ Repaired ☐ Replaced ☐ Replacement	☒ No ☐ Yes
B							☐ Repaired ☐ Replaced ☐ Replacement	☐ No ☐ Yes
C							☐ Repaired ☐ Replaced ☐ Replacement	☐ No ☐ Yes
D							☐ Repaired ☐ Replaced ☐ Replacement	☐ No ☐ Yes
E							☐ Repaired ☐ Replaced ☐ Replacement	☐ No ☐ Yes
F							☐ Repaired ☐ Replaced ☐ Replacement	☐ No ☐ Yes

Form NIS-2 (Back)

NOTE: Supplemental sheets in form of lists, sketches, or drawings may be used, provided (1) size is 8 1/2 in. x 11 in. (2) information in items 1 through 6 on this report is included on each sheet, and (3) each sheet is numbered and the number of sheets is recorded at the top of this form.

7. Description of Work REFURBISHED VALVE BODY AND HARNESS ON HYDRALIC SNUBBER.

8. Test Conducted: ☐ Hydrostatic ☐ Pneumatic ☐ Nominal Operating Pressure ☒ Other ☐ Exempt

Pressure _____ psig Test Temp. _____ °F

Pressure _____ psig Test Temp. _____ °F

Pressure _____ psig Test Temp. _____ °F

9. Remarks OPERABILITY TESTING PER PROCEDURE SM/0/A/8100/002.

(Applicable Manufacturer's Data Records to be Attached)

CERTIFICATE OF COMPLIANCE

We certify that the statements made in the report are correct and this **repair or replacement** conforms to the rules of the ASME Code, Section XI.

Type Code Symbol Stamp **N/A**

Certificate of Authorization No. **N/A** Expiration Date **N/A**

Signed W McClure Date 9/17, 19 97
Owner or Owner's Designee, Title

CERTIFICATE OF INSERVICE INSPECTION

I, the undersigned, holding a valid commission issued by the National Board of Boiler and Pressure Vessel Inspectors and the State or Providence of N.C. and employed by **HSBI and I Company of Hartford Connecticut** have inspected the components described in this Owner's Report during the period 6-17-97 to 9-17-97; and state that to the best of my knowledge and belief, the Owner has performed examinations and taken corrective measures described in this Owner's Report in accordance with the requirements of the ASME Code, Section XI.

By signing this certificate, neither the Inspector nor his employer makes any warranty, expressed or implied, concerning the examinations and corrective measures described in this Owner's Report. Furthermore, neither the Inspector nor his employer shall be liable in any manner for any personal injury or property damage or a loss of any kind arising from or connected with this inspection.

M B Chapman Commissions NC914
Inspector's Signature National Board, State, Providence and Endorsements

Date 9-17, 19 97

Form 401463 (2

FORM NIS-2 OWNER'S REPORT FOR REPAIRS OR REPLACEMENTS
As Required By The Provisions Of The ASME Code Section XI

1. Owner **Duke Power Company**
   Address **526 S. Church Street, Charlotte, NC 28201-1006**

1a. Date 10/20/97

Sheet 1 of 1

2. Plant **Oconee Nuclear Station**
   Address **P.O. Box 1439, Seneca, S.C. 29679**

2a. Unit ☒ 1 ☐ 2 ☐ 3 ☐ Shared (specify Units_____)

3. Work Performed By **Duke Power Company**
   Address **526 S. Church Street, Charlotte, NC 28201-1006**
   Type Code Symbol Stamp **N/A** Authorization No. **N/A** Expiration Date **N/A**

3a. Work Order # 96073434-01
Repair Organization Job #

3b. NSM or MM # N/A

4. Identification of System O1A Class B

5. (a) Applicable Construction Code B31.1 1967 Edition, N/A Addenda, N/A Code Cases
   (b) Applicable Edition of Section XI Utilized for Repairs or Replacements 1989, No Addenda

6. Identification of Components Repaired or Replaced and Replacement Components

	Column 1	Column 2	Column 3	Column 4	Column 5	Col. 6	Column 7	Column 8
	Name of Component	Name of Manufacturer	Manufacturer Serial Number	National Board Number	Other Identification	Year Built	Repaired, Replaced, or Replacement	ASME Code Stamped (yes or no)
A	SNUBBER ON S/R 1-01A-0-550-R2(B)	ITT GRINNELL	16292	N/A	N/A	N/A	☐ Repaired ☐ Replaced ☒ Replacement	☒ No ☐ Yes
B							☐ Repaired ☐ Replaced ☐ Replacement	☐ No ☐ Yes
C							☐ Repaired ☐ Replaced ☐ Replacement	☐ No ☐ Yes
D							☐ Repaired ☐ Replaced ☐ Replacement	☐ No ☐ Yes
E							☐ Repaired ☐ Replaced ☐ Replacement	☐ No ☐ Yes
F							☐ Repaired ☐ Replaced ☐ Replacement	☐ No ☐ Yes

Form 401463 (2-95)

Form NIS-2 (Back)

NOTE: Supplemental sheets in form of lists, sketches, or drawings may be used, provided (1) size is 8 1/2 in. x 11 in. (2) information in items 1 through 6 on this report is included on each sheet, and (3) each sheet is numbered and the number of sheets is recorded at the top of this form.

7. Description of Work REMOVED HYDRAULIC SNUBBER, REBUILT/REFURBISHED AND REPLACED TO ORIGINAL LOCATION.

8. Test Conducted: ☐ Hydrostatic ☐ Pneumatic ☐ Nominal Operating Pressure ☒ Other ☐ Exempt

Pressure _____ psig Test Temp. _____ °F

Pressure _____ psig Test Temp. _____ °F

Pressure _____ psig Test Temp. _____ °F

9. Remarks OPERATIONAL TESTING PER SM/0/A/8110/001.

(Applicable Manufacturer's Data Records to be Attached)

CERTIFICATE OF COMPLIANCE

We certify that the statements made in the report are correct and this **repair or replacement** conforms to the rules of the ASME Code, Section XI.

Type Code Symbol Stamp **N/A**

Certificate of Authorization No. **N/A** Expiration Date **N/A**

Signed W. McClure Date 10/20, 1997

Owner or Owner's Designee, Title

CERTIFICATE OF INSERVICE INSPECTION

I, the undersigned, holding a valid commission issued by the National Board of Boiler and Pressure Vessel Inspectors and the State or Providence of N.C and employed by **HSBI and I Company of Hartford Connecticut** have inspected the components described in this Owner's Report during the period 10-8-97 to 10-20-97; and state that to the best of my knowledge and belief, the Owner has performed examinations and taken corrective measures described in this Owner's Report in accordance with the requirements of the ASME Code, Section XI.

By signing this certificate, neither the Inspector nor his employer makes any warranty, expressed or implied, concerning the examinations and corrective measures described in this Owner's Report. Furthermore, neither the Inspector nor his employer shall be liable in any manner for any personal injury or property damage or a loss of any kind arising from or connected with this inspection.

M.B. Chapman Commissions NC914

Inspector's Signature National Board, State, Providence and Endorsements

Date 10-20, 1997

Form 401463 (2-

FORM NIS-2 OWNER'S REPORT FOR REPAIRS OR REPLACEMENTS
As Required By The Provisions Of The ASME Code Section XI

1. Owner **Duke Power Company**
   Address **526 S. Church Street, Charlotte, NC 28201-1006**

1a. Date 4/17/96

Sheet 1 of 1

2. Plant **Oconee Nuclear Station**
   Address **P.O. Box 1439, Seneca, S.C. 29679**

2a. Unit ☒ 1 ☐ 2 ☐ 3 ☐ Shared (specify Units _____)

3. Work Performed By **Duke Power Company**
   Address **526 S. Church Street, Charlotte, NC 28201-1006**
   Type Code Symbol Stamp **N/A** Authorization No. **N/A** Expiration Date **N/A**

3a. Work Order # 96004486-01
Repair Organization Job #

3b. NSM or MM # N/A

4. Identification of System 54A (BS) Class B

5. (a) Applicable Construction Code B31.1 1968 Edition, 6-68 Addenda, — Code Cases
   (b) Applicable Edition of Section XI Utilized for Repairs or Replacements 1989, No Addenda

6. Identification of Components Repaired or Replaced and Replacement Components

	Column 1	Column 2	Column 3	Column 4	Column 5	Col. 6	Column 7	Column 8
	Name of Component	Name of Manufacturer	Manufacturer Serial Number	National Board Number	Other Identification	Year Built	Repaired, Replaced, or Replacement	ASME Code Stamped (yes or no)
A	HANGER 1-54A-0-439C-DE022	DPC	N/A	N/A	N/A	N/A	☒ Repaired (WM 4/17/96) ☐ Replaced ☒ Replacement	☒ No ☐ Yes
B							☐ Repaired ☐ Replaced ☐ Replacement	☐ No ☐ Yes
C							☐ Repaired ☐ Replaced ☐ Replacement	☐ No ☐ Yes
D							☐ Repaired ☐ Replaced ☐ Replacement	☐ No ☐ Yes
E							☐ Repaired ☐ Replaced ☐ Replacement	☐ No ☐ Yes
F							☐ Repaired ☐ Replaced ☐ Replacement	☐ No ☐ Yes

Form 401463 (2-95)

Form NIS-2 (Back)

NOTE: Supplemental sheets in form of lists, sketches, or drawings may be used, provided (1) size is 8 1/2 in. x 11 in. (2) information in items 1 through 6 on this report is included on each sheet, and (3) each sheet is numbered and the number of sheets is recorded at the top of this form.

7. Description of Work REMOVED EXTENSION ASSEMBLY ROD ON MECHANICAL SUPPRESSOR AND REPLACED WITH NEW ROD.

8. Test Conducted: ☐ Hydrostatic ☐ Pneumatic ☐ Nominal Operating Pressure ☐ Other ☒ Exempt

Pressure _____ psig Test Temp. _____ °F

Pressure _____ psig Test Temp. _____ °F

Pressure _____ psig Test Temp. _____ °F

9. Remarks _____

(Applicable Manufacturer's Data Records to be Attached)

CERTIFICATE OF COMPLIANCE

We certify that the statements made in the report are correct and this **repair or replacement** conforms to the rules of the ASME Code, Section XI.

Type Code Symbol Stamp **N/A**

Certificate of Authorization No. **N/A** Expiration Date **N/A**

Signed W M C Owner or Owner's Designee, Title Date 4/17, 1996

CERTIFICATE OF INSERVICE INSPECTION

I, the undersigned, holding a valid commission issued by the National Board of Boiler and Pressure Vessel Inspectors and the State or Providence of N.C. and employed by **HSBI and I Company of Hartford Connecticut** have inspected the components described in this Owner's Report during the period 3-11-96 to 4-17-96; and state that to the best of my knowledge and belief, the Owner has performed examinations and taken corrective measures described in this Owner's Report in accordance with the requirements of the ASME Code, Section XI.

By signing this certificate, neither the Inspector nor his employer makes any warranty, expressed or implied, concerning the examinations and corrective measures described in this Owner's Report. Furthermore, neither the Inspector nor his employer shall be liable in any manner for any personal injury or property damage or a loss of any kind arising from or connected with this inspection.

M B Chapman Commissions N0914

Inspector's Signature National Board, State, Providence and Endorsements

Date 4-17, 1996

Form 401463 (2-

FORM NIS-2 OWNER'S REPORT FOR REPAIRS OR REPLACEMENTS
As Required By The Provisions Of The ASME Code Section XI

1. Owner **Duke Power Company**
   Address **526 S. Church Street, Charlotte, NC 28201-1006**

1a. Date 2/20/96

Sheet 1 of 1

2. Plant **Oconee Nuclear Station**
   Address **P.O. Box 1439, Seneca, S.C. 29679**

2a. Unit ☒ 1 ☐ 2 ☐ 3 ☐ Shared (specify Units_____)

3. Work Performed By **Duke Power Company**
   Address **526 S. Church Street, Charlotte, NC 28201-1006**
   Type Code Symbol Stamp **N/A** Authorization No. **N/A** Expiration Date **N/A**

3a. Work Order # 95057758-01
Repair Organization Job #

3b. NSM or MM # N/A

4. Identification of System 01A (MS) Class B

5. (a) Applicable Construction Code B31.1 1967 Edition, — Addenda, — Code Cases
   (b) Applicable Edition of Section XI Utilized for Repairs or Replacements 1989, No Addenda

6. Identification of Components Repaired or Replaced and Replacement Components

	Column 1	Column 2	Column 3	Column 4	Column 5	Col. 6	Column 7	Column 8
	Name of Component	Name of Manufacturer	Manufacturer Serial Number	National Board Number	Other Identification	Year Built	Repaired, Replaced, or Replacement	ASME Code Stamped (yes or no)
A	HANGER 1-01A-0-481B-H11B	DPC	N/A	N/A	N/A	N/A	☐ Repaired ☐ Replaced ☒ Replacement	☒ No ☐ Yes
B							☐ Repaired ☐ Replaced ☐ Replacement	☐ No ☐ Yes
C							☐ Repaired ☐ Replaced ☐ Replacement	☐ No ☐ Yes
D							☐ Repaired ☐ Replaced ☐ Replacement	☐ No ☐ Yes
E							☐ Repaired ☐ Replaced ☐ Replacement	☐ No ☐ Yes
F							☐ Repaired ☐ Replaced ☐ Replacement	☐ No ☐ Yes

Form 401463 (2-95)

Form NIS-2 (Back)

NOTE: Supplemental sheets in form of lists, sketches, or drawings may be used, provided (1) size is 8 1/2 in. x 11 in. (2) information in items 1 through 6 on this report is included on each sheet, and (3) each sheet is numbered and the number of sheets is recorded at the top of this form.

7. Description of Work REMOVED EXISTING RESERVOIR CYLINDER BODY ON SNUBBER AND REPLACED WITH NEW BODY.

8. Test Conducted: ☐ Hydrostatic ☐ Pneumatic ☐ Nominal Operating Pressure ☒ Other ☐ Exempt

Pressure	_____ psig	Test Temp.	_____ °F
Pressure	_____ psig	Test Temp.	_____ °F
Pressure	_____ psig	Test Temp.	_____ °F

9. Remarks FUNCTIONAL TESTING PER MP/0/A/3018/009A.

(Applicable Manufacturer's Data Records to be Attached)

CERTIFICATE OF COMPLIANCE

We certify that the statements made in the report are correct and this **repair or replacement** conforms to the rules of the ASME Code, Section XI.

Type Code Symbol Stamp **N/A**

Certificate of Authorization No. **N/A** Expiration Date **N/A**

Signed W T McClure Date 2/20, 19 96
Owner or Owner's Designee, Title

CERTIFICATE OF INSERVICE INSPECTION

I, the undersigned, holding a valid commission issued by the National Board of Boiler and Pressure Vessel Inspectors and the State or Providence of N.C. and employed by **HSBI and I Company of Hartford Connecticut** have inspected the components described in this Owner's Report during the period 11-12-95 to 2-21-96; and state that to the best of my knowledge and belief, the Owner has performed examinations and taken corrective measures described in this Owner's Report in accordance with the requirements of the ASME Code, Section XI.

By signing this certificate, neither the Inspector nor his employer makes any warranty, expressed or implied, concerning the examinations and corrective measures described in this Owner's Report. Furthermore, neither the Inspector nor his employer shall be liable in any manner for any personal injury or property damage or a loss of any kind arising from or connected with this inspection.

M B Chapman Commissions NC 914
Inspector's Signature National Board, State, Providence and Endorsements

Date 2-21, 19 96

Form 401463 (2

FORM NIS-2 OWNER'S REPORT FOR REPAIRS OR REPLACEMENTS
As Required By The Provisions Of The ASME Code Section XI

1. Owner **Duke Power Company**
   Address **526 S. Church Street, Charlotte, NC 28201-1006**

1a. Date 3/12/96

Sheet 1 of 1

2. Plant **Oconee Nuclear Station**
   Address **P.O. Box 1439, Seneca, S.C. 29679**

2a. Unit ☒ 1 ☐ 2 ☐ 3 ☐ Shared (specify Units_____)

3. Work Performed By **Duke Power Company**
   Address **526 S. Church Street, Charlotte, NC 28201-1006**
   Type Code Symbol Stamp **N/A** Authorization No. **N/A** Expiration Date **N/A**

3a. Work Order # 95058273-01
Repair Organization Job #

3b. NSM or MM # N/A

4. Identification of System 53A (CF) Class B

5. (a) Applicable Construction Code B31.7 19 68 Edition, 6-68 Addenda, N/A Code Cases
   (b) Applicable Edition of Section XI Utilized for Repairs or Replacements 1989, No Addenda

6. Identification of Components Repaired or Replaced and Replacement Components

	Column 1	Column 2	Column 3	Column 4	Column 5	Col. 6	Column 7	Column 8
	Name of Component	Name of Manufacturer	Manufacturer Serial Number	National Board Number	Other Identification	Year Built	Repaired, Replaced, or Replacement	ASME Code Stamped (yes or no)
A	HANGER 1-53A-0-479A-H5A	DPC	N/A	N/A	N/A	N/A	☐ Repaired ☐ Replaced ☒ Replacement	☒ No ☐ Yes
B							☐ Repaired ☐ Replaced ☐ Replacement	☐ No ☐ Yes
C							☐ Repaired ☐ Replaced ☐ Replacement	☐ No ☐ Yes
D							☐ Repaired ☐ Replaced ☐ Replacement	☐ No ☐ Yes
E							☐ Repaired ☐ Replaced ☐ Replacement	☐ No ☐ Yes
F							☐ Repaired ☐ Replaced ☐ Replacement	☐ No ☐ Yes

Form 401463 (2-95)

Form NIS-2 (Back)

NOTE: Supplemental sheets in form of lists, sketches, or drawings may be used, provided (1) size is 8 1/2 in. x 11 in. (2) information in items 1 through 6 on this report is included on each sheet, and (3) each sheet is numbered and the number of sheets is recorded at the top of this form.

REMOVED AND REPLACED WITH NEW PARTS THE VALUE ASSEMBLY

7. Description of Work SPRING AND RESERVOIR CYLINDER BODY ON HYDRA. SNUBBER.

8. Test Conducted: ☐ Hydrostatic ☐ Pneumatic ☐ Nominal Operating Pressure ☒ Other ☐ Exempt

Pressure _____ psig Test Temp. _____ °F

Pressure _____ psig Test Temp. _____ °F

Pressure _____ psig Test Temp. _____ °F

9. Remarks PERFORMED FUNCTIONAL TEST PER MP/0/A/3018/009A.

(Applicable Manufacturer's Data Records to be Attached)

CERTIFICATE OF COMPLIANCE

We certify that the statements made in the report are correct and this **repair or replacement** conforms to the rules of the ASME Code, Section XI.

Type Code Symbol Stamp **N/A**

Certificate of Authorization No. **N/A** Expiration Date **N/A**

Signed W McClure Date 3/12, 1996

Owner or Owner's Designee, Title

CERTIFICATE OF INSERVICE INSPECTION

I, the undersigned, holding a valid commission issued by the National Board of Boiler and Pressure Vessel Inspectors and the State or Providence of N.C. and employed by **HSBI and I Company of Hartford Connecticut** have inspected the components described in this Owner's Report during the period 11-12-95 to 3-12-96; and state that to the best of my knowledge and belief, the Owner has performed examinations and taken corrective measures described in this Owner's Report in accordance with the requirements of the ASME Code, Section XI.

By signing this certificate, neither the Inspector nor his employer makes any warranty, expressed or implied, concerning the examinations and corrective measures described in this Owner's Report. Furthermore, neither the Inspector nor his employer shall be liable in any manner for any personal injury or property damage or a loss of any kind arising from or connected with this inspection.

MB Chapman Commissions NC914

Inspector's Signature National Board, State, Providence and Endorsements

Date 3-12, 1996

Form 401463 (2

FORM NIS-2 OWNER'S REPORT FOR REPAIRS OR REPLACEMENTS
As Required By The Provisions Of The ASME Code Section XI

1. Owner **Duke Power Company**
   Address **526 S. Church Street, Charlotte, NC 28201-1006**

1a. Date 3/11/96

Sheet 1 of 1

2. Plant **Oconee Nuclear Station**
   Address **P.O. Box 1439, Seneca, S.C. 29679**

2a. Unit ☒ 1 ☐ 2 ☐ 3 ☐ Shared (specify Units_____)

3. Work Performed By **Duke Power Company**
   Address **526 S. Church Street, Charlotte, NC 28201-1006**
   Type Code Symbol Stamp **N/A** Authorization No. **N/A** Expiration Date **N/A**

3a. Work Order # 95058289-01
Repair Organization Job #

3b. NSM or MM # N/A

4. Identification of System 50 (RC) Class A

5. (a) Applicable Construction Code B31.7 19 68 Edition, 6-68 Addenda, N/A Code Cases
   (b) Applicable Edition of Section XI Utilized for Repairs or Replacements 1989, No Addenda

6. Identification of Components Repaired or Replaced and Replacement Components

	Column 1	Column 2	Column 3	Column 4	Column 5	Col. 6	Column 7	Column 8
	Name of Component	Name of Manufacturer	Manufacturer Serial Number	National Board Number	Other Identification	Year Built	Repaired, Replaced, or Replacement	ASME Code Stamped (yes or no)
A	HYDRA. SNUBBER ON S/R 1-50-0-480A-H11	GRINNELL CORP.	18792	N/A	N/A	N/A	☐ Repaired ☒ Replaced ☐ Replacement	☒ No ☐ Yes
B	HYDRA. SNUBBER ON S/R 1-50-0-480A-H11	GRINNELL CORP.	18807	N/A	N/A	N/A	☐ Repaired ☐ Replaced ☒ Replacement	☒ No ☐ Yes
C							☐ Repaired ☐ Replaced ☐ Replacement	☐ No ☐ Yes
D							☐ Repaired ☐ Replaced ☐ Replacement	☐ No ☐ Yes
E							☐ Repaired ☐ Replaced ☐ Replacement	☐ No ☐ Yes
F							☐ Repaired ☐ Replaced ☐ Replacement	☐ No ☐ Yes

Form 401463 (2-95)

Form NIS-2 (Back)

NOTE: Supplemental sheets in form of lists, sketches, or drawings may be used, provided (1) size is 8 1/2 in. x 11 in. (2) information in items 1 through 6 on this report is included on each sheet, and (3) each sheet is numbered and the number of sheets is recorded at the top of this form.

7. Description of Work REMOVED EXISTING HYDRA. SNUBBER SER. #18792 AND REPLACED WITH HYDRA. SNUBBER SER. #18807.

8. Test Conducted: ☐ Hydrostatic ☐ Pneumatic ☐ Nominal Operating Pressure ☒ Other ☐ Exempt

Pressure _____ psig Test Temp. _____ °F

Pressure _____ psig Test Temp. _____ °F

Pressure _____ psig Test Temp. _____ °F

9. Remarks PERFORMED FUNCTIONAL TESTING PER MP/0/A/3018/009A.

(Applicable Manufacturer's Data Records to be Attached)

CERTIFICATE OF COMPLIANCE

We certify that the statements made in the report are correct and this **repair or replacement** conforms to the rules of the ASME Code, Section XI.

Type Code Symbol Stamp **N/A**

Certificate of Authorization No. **N/A** Expiration Date **N/A**

Signed W M C Clure Date 3/11, 1996

Owner or Owner's Designee, Title

CERTIFICATE OF INSERVICE INSPECTION

I, the undersigned, holding a valid commission issued by the National Board of Boiler and Pressure Vessel Inspectors and the State or Providence of N.C and employed by **HSBI and I Company of Hartford Connecticut** have inspected the components described in this Owner's Report during the period 11-15-95 to 3-11-96; and state that to the best of my knowledge and belief, the Owner has performed examinations and taken corrective measures described in this Owner's Report in accordance with the requirements of the ASME Code, Section XI.

By signing this certificate, neither the Inspector nor his employer makes any warranty, expressed or implied, concerning the examinations and corrective measures described in this Owner's Report. Furthermore, neither the Inspector nor his employer shall be liable in any manner for any personal injury or property damage or a loss of any kind arising from or connected with this inspection.

Inspector's Signature Commissions NC914

National Board, State, Providence and Endorsements

Date 3-11, 1996

Form 401463 (2

FORM NIS-2 OWNER'S REPORT FOR REPAIRS OR REPLACEMENTS
As Required By The Provisions Of The ASME Code Section XI

1. Owner **Duke Power Company**
   Address **526 S. Church Street, Charlotte, NC 28201-1006**

1a. Date 3/7/96

Sheet 1 of 1

2. Plant **Oconee Nuclear Station**
   Address **P.O. Box 1439, Seneca, S.C. 29679**

2a. Unit ☑ 1 ☐ 2 ☐ 3 ☐ Shared (specify Units_____)

3. Work Performed By **Duke Power Company**
   Address **526 S. Church Street, Charlotte, NC 28201-1006**
   Type Code Symbol Stamp **N/A** Authorization No. **N/A** Expiration Date **N/A**

3a. Work Order # 95058180-01
Repair Organization Job #

3b. NSM or MM # N/A

4. Identification of System 50 (RC) Class A

5. (a) Applicable Construction Code B31.7 1968 Edition, 6-68 Addenda, N/A Code Cases
   (b) Applicable Edition of Section XI Utilized for Repairs or Replacements 1989, No Addenda

6. Identification of Components Repaired or Replaced and Replacement Components

	Column 1	Column 2	Column 3	Column 4	Column 5	Col. 6	Column 7	Column 8
	Name of Component	Name of Manufacturer	Manufacturer Serial Number	National Board Number	Other Identification	Year Built	Repaired, Replaced, or Replacement	ASME Code Stamped (yes or no)
A	HYDRA. SNUBBER ON S/R 1-50-0-481A-H1	GRINNELL CORP.	16586	N/A	N/A	N/A	☐ Repaired ☒ Replaced ☐ Replacement	☒ No ☐ Yes
B	HYDRA. SNUBBER ON S/R 1-50-0-481A-H1	GRINNELL CORP.	18787	N/A	N/A	N/A	☐ Repaired ☐ Replaced ☒ Replacement	☒ No ☐ Yes
C							☐ Repaired ☐ Replaced ☐ Replacement	☐ No ☐ Yes
D							☐ Repaired ☐ Replaced ☐ Replacement	☐ No ☐ Yes
E							☐ Repaired ☐ Replaced ☐ Replacement	☐ No ☐ Yes
F							☐ Repaired ☐ Replaced ☐ Replacement	☐ No ☐ Yes

Form 401463 (2-95)

Form NIS-2 (Back)

NOTE: Supplemental sheets in form of lists, sketches, or drawings may be used, provided (1) size is 8 1/2 in. x 11 in. (2) information in items 1 through 6 on this report is included on each sheet, and (3) each sheet is numbered and the number of sheets is recorded at the top of this form.

7. Description of Work REMOVED HYDRA. SNUBBER SER. #16586 AND REPLACED WITH HYDRA. SNUBBER SER: #18787.

8. Test Conducted: ☐ Hydrostatic ☐ Pneumatic ☐ Nominal Operating Pressure ☒ Other ☐ Exempt

Pressure _____ psig Test Temp. _____ °F

Pressure _____ psig Test Temp. _____ °F

Pressure _____ psig Test Temp. _____ °F

9. Remarks PERFORMED FUNCTIONAL TESTING PER MP/0/A/3018/009A.

(Applicable Manufacturer's Data Records to be Attached)

CERTIFICATE OF COMPLIANCE

We certify that the statements made in the report are correct and this **repair or replacement** conforms to the rules of the ASME Code, Section XI.

Type Code Symbol Stamp **N/A**

Certificate of Authorization No. **N/A** Expiration Date **N/A**

Signed William T. McClure Date 3/7, 19 96
Owner or Owner's Designee, Title

CERTIFICATE OF INSERVICE INSPECTION

I, the undersigned, holding a valid commission issued by the National Board of Boiler and Pressure Vessel Inspectors and the State or Providence of N.C. and employed by **HSBI and I Company of Hartford Connecticut** have inspected the components described in this Owner's Report during the period 11-15-95 to 3-11-96; and state that to the best of my knowledge and belief, the Owner has performed examinations and taken corrective measures described in this Owner's Report in accordance with the requirements of the ASME Code, Section XI.

By signing this certificate, neither the Inspector nor his employer makes any warranty, expressed or implied, concerning the examinations and corrective measures described in this Owner's Report. Furthermore, neither the Inspector nor his employer shall be liable in any manner for any personal injury or property damage or a loss of any kind arising from or connected with this inspection.

MB Chapman Commissions NC9141
Inspector's Signature National Board, State, Providence and Endorsements

Date 3-11, 19 96

Form 401463 (

FORM NIS-2 OWNER'S REPORT FOR REPAIRS OR REPLACEMENTS
As Required By The Provisions Of The ASME Code Section XI

1. Owner **Duke Power Company**
   Address **526 S. Church Street, Charlotte, NC 28201-1006**

1a. Date 2/27/96

Sheet 1 of 1

2. Plant **Oconee Nuclear Station**
   Address **P.O. Box 1439, Seneca, S.C. 29679**

2a. Unit ☒ 1 ☐ 2 ☐ 3 ☐ Shared (specify Units_____)

3. Work Performed By **Duke Power Company**
   Address **526 S. Church Street, Charlotte, NC 28201-1006**
   Type Code Symbol Stamp **N/A** Authorization No. **N/A** Expiration Date **N/A**

3a. Work Order # 95058218-01
Repair Organization Job #

3b. NSM or MM # N/A

4. Identification of System 50 (RC) Class A

5. (a) Applicable Construction Code B31.7 1968 Edition, 6-68 Addenda, — Code Cases
   (b) Applicable Edition of Section XI Utilized for Repairs or Replacements 1989, No Addenda

6. Identification of Components Repaired or Replaced and Replacement Components

	Column 1	Column 2	Column 3	Column 4	Column 5	Col. 6	Column 7	Column 8
	Name of Component	Name of Manufacturer	Manufacturer Serial Number	National Board Number	Other Identification	Year Built	Repaired, Replaced, or Replacement	ASME Code Stamped (yes or no)
A	HANGER 1-50-D-479A-H1A	DPC	N/A	N/A	N/A	N/A	☐ Repaired ☐ Replaced ☒ Replacement	☒ No ☐ Yes
B							☐ Repaired ☐ Replaced ☐ Replacement	☐ No ☐ Yes
C							☐ Repaired ☐ Replaced ☐ Replacement	☐ No ☐ Yes
D							☐ Repaired ☐ Replaced ☐ Replacement	☐ No ☐ Yes
E							☐ Repaired ☐ Replaced ☐ Replacement	☐ No ☐ Yes
F							☐ Repaired ☐ Replaced ☐ Replacement	☐ No ☐ Yes

Form 401463 (2-95)

Form NIS-2 (Back)

NOTE: Supplemental sheets in form of lists, sketches, or drawings may be used, provided (1) size is 8 1/2 in. x 11 in. (2) information in items 1 through 6 on this report is included on each sheet, and (3) each sheet is numbered and the number of sheets is recorded at the top of this form.

7. Description of Work REMOVED EXISTING SNUBBER CYLINDER RESERVOIR BODY AND 10" PIPE CLAMP AND REPLACED WITH NEW PARTS.

8. Test Conducted: ☐ Hydrostatic ☐ Pneumatic ☐ Nominal Operating Pressure ☒ Other ☐ Exempt

Pressure _____ psig Test Temp. _____ °F

Pressure _____ psig Test Temp. _____ °F

Pressure _____ psig Test Temp. _____ °F

9. Remarks FUNCTIONAL TEST PER MP/0/A/3018/009A.

(Applicable Manufacturer's Data Records to be Attached)

CERTIFICATE OF COMPLIANCE

We certify that the statements made in the report are correct and this **repair or replacement** conforms to the rules of the ASME Code, Section XI.

Type Code Symbol Stamp **N/A**

Certificate of Authorization No. **N/A** Expiration Date **N/A**

Signed W M C Clure Date 2/27, 19 96

Owner or Owner's Designee, Title

CERTIFICATE OF INSERVICE INSPECTION

I, the undersigned, holding a valid commission issued by the National Board of Boiler and Pressure Vessel Inspectors and the State or Providence of N. C. and employed by **HSBI and I Company of Hartford Connecticut** have inspected the components described in this Owner's Report during the period 11-19-95 to 2-27-96; and state that to the best of my knowledge and belief, the Owner has performed examinations and taken corrective measures described in this Owner's Report in accordance with the requirements of the ASME Code, Section XI.

By signing this certificate, neither the Inspector nor his employer makes any warranty, expressed or implied, concerning the examinations and corrective measures described in this Owner's Report. Furthermore, neither the Inspector nor his employer shall be liable in any manner for any personal injury or property damage or a loss of any kind arising from or connected with this inspection.

M B Chapman Commissions NC914

Inspector's Signature National Board, State, Providence and Endorsements

Date 2-27, 19 96

Form 401463

FORM NIS-2 OWNER'S REPORT FOR REPAIRS OR REPLACEMENTS
As Required By The Provisions Of The ASME Code Section XI

1. Owner **Duke Power Company**
   Address **526 S. Church Street, Charlotte, NC 28201-1006**

1a. Date 2/27/96

Sheet 1 of 1

2. Plant **Oconee Nuclear Station**
   Address **P.O. Box 1439, Seneca, S.C. 29679**

2a. Unit ☒ 1 ☐ 2 ☐ 3 ☐ Shared (specify Units _____)

3. Work Performed By **Duke Power Company**
   Address **526 S. Church Street, Charlotte, NC 28201-1006**
   Type Code Symbol Stamp **N/A** Authorization No. **N/A** Expiration Date **N/A**

3a. Work Order # 95057759-01
Repair Organization Job #

3b. NSM or MM # N/A

4. Identification of System 01A (MS) Class B

5. (a) Applicable Construction Code B31.1 19 67 Edition, — Addenda, — Code Cases
   (b) Applicable Edition of Section XI Utilized for Repairs or Replacements 1989, No Addenda

6. Identification of Components Repaired or Replaced and Replacement Components

	Column 1	Column 2	Column 3	Column 4	Column 5	Col. 6	Column 7	Column 8
	Name of Component	Name of Manufacturer	Manufacturer Serial Number	National Board Number	Other Identification	Year Built	Repaired, Replaced, or Replacement	ASME Code Stamped (yes or no)
A	HANGER 1-01A-0-481B-H12A	DPL	N/A	N/A	N/A	N/A	☐ Repaired ☐ Replaced ☒ Replacement	☒ No ☐ Yes
B							☐ Repaired ☐ Replaced ☐ Replacement	☐ No ☐ Yes
C							☐ Repaired ☐ Replaced ☐ Replacement	☐ No ☐ Yes
D							☐ Repaired ☐ Replaced ☐ Replacement	☐ No ☐ Yes
E							☐ Repaired ☐ Replaced ☐ Replacement	☐ No ☐ Yes
F							☐ Repaired ☐ Replaced ☐ Replacement	☐ No ☐ Yes

Form NIS-2 (Back)

NOTE: Supplemental sheets in form of lists, sketches, or drawings may be used, provided (1) size is 8 1/2 in. x 11 in. (2) information in items 1 through 6 on this report is included on each sheet, and (3) each sheet is numbered and the number of sheets is recorded at the top of this form.

7. Description of Work REMOVED EXISTING RESERVOIR CYLINDER BODY ON SNUBBER AND REPLACED WITH NEW BODY.

8. Test Conducted: ☐ Hydrostatic ☐ Pneumatic ☐ Nominal Operating Pressure ☒ Other ☐ Exempt

Pressure _____ psig Test Temp. _____ °F

Pressure _____ psig Test Temp. _____ °F

Pressure _____ psig Test Temp. _____ °F

9. Remarks FUNCTIONAL TESTING PER MP/0/A/3018/009A.

(Applicable Manufacturer's Data Records to be Attached)

CERTIFICATE OF COMPLIANCE

We certify that the statements made in the report are correct and this **repair or replacement** conforms to the rules of the ASME Code, Section XI.

Type Code Symbol Stamp **N/A**

Certificate of Authorization No. **N/A** Expiration Date **N/A**

Signed W M C Clure Date 2/27, 19 96
Owner or Owner's Designee, Title

CERTIFICATE OF INSERVICE INSPECTION

I, the undersigned, holding a valid commission issued by the National Board of Boiler and Pressure Vessel Inspectors and the State or Providence of N.C and employed by **HSBI and I Company of Hartford Connecticut** have inspected the components described in this Owner's Report during the period 11-12-95 to 2-27-96; and state that to the best of my knowledge and belief, the Owner has performed examinations and taken corrective measures described in this Owner's Report in accordance with the requirements of the ASME Code, Section XI.

By signing this certificate, neither the Inspector nor his employer makes any warranty, expressed or implied, concerning the examinations and corrective measures described in this Owner's Report. Furthermore, neither the Inspector nor his employer shall be liable in any manner for any personal injury or property damage or a loss of any kind arising from or connected with this inspection.

M.B. Chapman Commissions NC914
Inspector's Signature National Board, State, Providence and Endorsements

Date 2-27, 19 96

Form 401463 (2

FORM NIS-2 OWNER'S REPORT FOR REPAIRS OR REPLACEMENTS
As Required By The Provisions Of The ASME Code Section XI

1. Owner **Duke Power Company**
   Address **526 S. Church Street, Charlotte, NC 28201-1006**

1a. Date 2/26/96

Sheet 1 of 1

2. Plant **Oconee Nuclear Station**
   Address **P.O. Box 1439, Seneca, S.C. 29679**

2a. Unit ☒ 1 ☐ 2 ☐ 3 ☐ Shared (specify Units_____)

3. Work Performed By **Duke Power Company**
   Address **526 S. Church Street, Charlotte, NC 28201-1006**
   Type Code Symbol Stamp **N/A** Authorization No. **N/A** Expiration Date **N/A**

3a. Work Order # 95021069-11
Repair Organization Job #

3b. NSM or MM # N/A

4. Identification of System RC Class A

5. (a) Applicable Construction Code B31.7 1968 Edition, 6-68 Addenda, — Code Cases
   (b) Applicable Edition of Section XI Utilized for Repairs or Replacements 1989, No Addenda

6. Identification of Components Repaired or Replaced and Replacement Components

	Column 1	Column 2	Column 3	Column 4	Column 5	Col. 6	Column 7	Column 8
	Name of Component	Name of Manufacturer	Manufacturer Serial Number	National Board Number	Other Identification	Year Built	Repaired, Replaced, or Replacement	ASME Code Stamped (yes or no)
A	HANGER 1-64-479D-H6347	DPC	N/A	N/A	N/A	N/A	☐ Repaired ☐ Replaced ☒ Replacement	☒ No ☐ Yes
B							☐ Repaired ☐ Replaced ☐ Replacement	☐ No ☐ Yes
C							☐ Repaired ☐ Replaced ☐ Replacement	☐ No ☐ Yes
D							☐ Repaired ☐ Replaced ☐ Replacement	☐ No ☐ Yes
E							☐ Repaired ☐ Replaced ☐ Replacement	☐ No ☐ Yes
F							☐ Repaired ☐ Replaced ☐ Replacement	☐ No ☐ Yes

Form 401463 (2-95)

Form NIS-2 (Back)

NOTE: Supplemental sheets in form of lists, sketches, or drawings may be used, provided (1) size is 8 1/2 in. x 11 in. (2) information in items 1 through 6 on this report is included on each sheet, and (3) each sheet is numbered and the number of sheets is recorded at the top of this form.

7. Description of Work INSTALLED NEW A325 BOLTING MATERIAL. SEE REMARKS.

8. Test Conducted: ☐ Hydrostatic ☐ Pneumatic ☐ Nominal Operating Pressure ☐ Other ☒ Exempt

Pressure _____ psig Test Temp. _____ °F

Pressure _____ psig Test Temp. _____ °F

Pressure _____ psig Test Temp. _____ °F

9. Remarks PER SPECIFICATION NEW A-325 BOLTS, NUTS, WASHERS WERE INSTALLED TO REPLACE HANGER. OLD BOLTING MATERIAL WAS DISCARDED.

(Applicable Manufacturer's Data Records to be Attached)

CERTIFICATE OF COMPLIANCE

We certify that the statements made in the report are correct and this **repair or replacement** conforms to the rules of the ASME Code, Section XI.

Type Code Symbol Stamp **N/A**

Certificate of Authorization No. **N/A** Expiration Date **N/A**

Signed W McClure Date 2/26/, 19 96
Owner or Owner's Designee, Title

CERTIFICATE OF INSERVICE INSPECTION

I, the undersigned, holding a valid commission issued by the National Board of Boiler and Pressure Vessel Inspectors and the State or Providence of N.C. and employed by **HSBI and I Company of Hartford Connecticut** have inspected the components described in this Owner's Report during the period 11-30-95 to 2-26-96; and state that to the best of my knowledge and belief, the Owner has performed examinations and taken corrective measures described in this Owner's Report in accordance with the requirements of the ASME Code, Section XI.

By signing this certificate, neither the Inspector nor his employer makes any warranty, expressed or implied, concerning the examinations and corrective measures described in this Owner's Report. Furthermore, neither the Inspector nor his employer shall be liable in any manner for any personal injury or property damage or a loss of any kind arising from or connected with this inspection.

M.B. Chapman Commissions NC914
Inspector's Signature National Board, State, Providence and Endorsements

Date 2-26, 19 96

Form 401463 (a

FORM NIS-2 OWNER'S REPORT FOR REPAIRS OR REPLACEMENTS
As Required By The Provisions Of The ASME Code Section XI

1. Owner **Duke Power Company**
   Address **526 S. Church Street, Charlotte, NC 28201-1006**

1a. Date 3/11/96

Sheet 1 of 1

2. Plant **Oconee Nuclear Station**
   Address **P.O. Box 1439, Seneca, S.C. 29679**

2a. Unit ☒ 1 ☐ 2 ☐ 3 ☐ Shared (specify Units _____)

3. Work Performed By **Duke Power Company**
   Address **526 S. Church Street, Charlotte, NC 28201-1006**
   Type Code Symbol Stamp **N/A** Authorization No. **N/A** Expiration Date **N/A**

3a. Work Order # 9505 8228-01
Repair Organization Job #

3b. NSM or MM # N/A

4. Identification of System 50 (RC) Class A

5. (a) Applicable Construction Code B31.7 19 68 Edition, 6-68 Addenda, N/A Code Cases
   (b) Applicable Edition of Section XI Utilized for Repairs or Replacements 1989, No Addenda

6. Identification of Components Repaired or Replaced and Replacement Components

	Column 1	Column 2	Column 3	Column 4	Column 5	Col. 6	Column 7	Column 8
	Name of Component	Name of Manufacturer	Manufacturer Serial Number	National Board Number	Other Identification	Year Built	Repaired, Replaced, or Replacement	ASME Code Stamped (yes or no)
A	HYDRA. SNUBBER ON S/R 1-50-0-481A-H3	GRINNELL CORP.	18817	N/A	N/A	N/A	☐ Repaired ☒ Replaced ☐ Replacement	☒ No ☐ Yes
B	HYDRA. SNUBBER ON S/R 1-50-0-481A-H3	GRINNELL CORP.	76124910	N/A	N/A	N/A	☐ Repaired ☐ Replaced ☒ Replacement	☒ No ☐ Yes
C							☐ Repaired ☐ Replaced ☐ Replacement	☐ No ☐ Yes
D							☐ Repaired ☐ Replaced ☐ Replacement	☐ No ☐ Yes
E							☐ Repaired ☐ Replaced ☐ Replacement	☐ No ☐ Yes
F							☐ Repaired ☐ Replaced ☐ Replacement	☐ No ☐ Yes

Form 401463 (2-95)

Form NIS-2 (Back)

NOTE: Supplemental sheets in form of lists, sketches, or drawings may be used, provided (1) size is 8 1/2 in. x 11 in. (2) information in items 1 through 6 on this report is included on each sheet, and (3) each sheet is numbered and the number of sheets is recorded at the top of this form.

7. Description of Work REMOVED HYDRA. SNUBBER SER.# 18817 AND REPLACED WITH HYDRA. SNUBBER SER# 7612 4910.

8. Test Conducted: ☐ Hydrostatic ☐ Pneumatic ☐ Nominal Operating Pressure ☒ Other ☐ Exempt

Pressure _____ psig Test Temp. _____ °F

Pressure _____ psig Test Temp. _____ °F

Pressure _____ psig Test Temp. _____ °F

9. Remarks FUNCTIONAL TESTING PER MP/0/A/3018/009A.

(Applicable Manufacturer's Data Records to be Attached)

CERTIFICATE OF COMPLIANCE

We certify that the statements made in the report are correct and this **repair or replacement** conforms to the rules of the ASME Code, Section XI.

Type Code Symbol Stamp **N/A**

Certificate of Authorization No. **N/A** Expiration Date **N/A**

Signed W McClure Date 3/11, 19 96
Owner or Owner's Designee, Title

CERTIFICATE OF INSERVICE INSPECTION

I, the undersigned, holding a valid commission issued by the National Board of Boiler and Pressure Vessel Inspectors and the State or Providence of N.C. and employed by **HSBI and I Company of Hartford Connecticut** have inspected the components described in this Owner's Report during the period 11-15-95 to 3-11-96; and state that to the best of my knowledge and belief, the Owner has performed examinations and taken corrective measures described in this Owner's Report in accordance with the requirements of the ASME Code, Section XI.

By signing this certificate, neither the Inspector nor his employer makes any warranty, expressed or implied, concerning the examinations and corrective measures described in this Owner's Report. Furthermore, neither the Inspector nor his employer shall be liable in any manner for any personal injury or property damage or a loss of any kind arising from or connected with this inspection.

M B Chapman Commissions NC 914
Inspector's Signature National Board, State, Providence and Endorsements

Date 3/11, 1996

Form 401463 (2

FORM NIS-2 OWNER'S REPORT FOR REPAIRS OR REPLACEMENTS
As Required By The Provisions Of The ASME Code Section XI

1. Owner **Duke Power Company**
   Address **526 S. Church Street, Charlotte, NC 28201-1006**

1a. Date 2/20/96

Sheet 1 of 1

2. Plant **Oconee Nuclear Station**
   Address **P.O. Box 1439, Seneca, S.C. 29679**

2a. Unit ☒ 1 ☐ 2 ☐ 3 ☐ Shared (specify Units_____)

3. Work Performed By **Duke Power Company**
   Address **526 S. Church Street, Charlotte, NC 28201-1006**
   Type Code Symbol Stamp **N/A** Authorization No. **N/A** Expiration Date **N/A**

3a. Work Order # 95057957-01
Repair Organization Job #

3b. NSM or MM # N/A

4. Identification of System 03 (FDW) Class B

5. (a) Applicable Construction Code B31.1 19 67 Edition, — Addenda, — Code Cases
   (b) Applicable Edition of Section XI Utilized for Repairs or Replacements 1989, No Addenda

6. Identification of Components Repaired or Replaced and Replacement Components

	Column 1	Column 2	Column 3	Column 4	Column 5	Col. 6	Column 7	Column 8
	Name of Component	Name of Manufacturer	Manufacturer Serial Number	National Board Number	Other Identification	Year Built	Repaired, Replaced, or Replacement	ASME Code Stamped (yes or no)
A	HANGER 1-03-0-480B-H10A	DPC	N/A	N/A	N/A	N/A	☐ Repaired ☐ Replaced ☒ Replacement	☒ No ☐ Yes
B							☐ Repaired ☐ Replaced ☐ Replacement	☐ No ☐ Yes
C							☐ Repaired ☐ Replaced ☐ Replacement	☐ No ☐ Yes
D							☐ Repaired ☐ Replaced ☐ Replacement	☐ No ☐ Yes
E							☐ Repaired ☐ Replaced ☐ Replacement	☐ No ☐ Yes
F							☐ Repaired ☐ Replaced ☐ Replacement	☐ No ☐ Yes

Form 401463 (2-95)

Form NIS-2 (Back)

NOTE: Supplemental sheets in form of lists, sketches, or drawings may be used, provided (1) size is 8 1/2 in. x 11 in. (2) information in items 1 through 6 on this report is included on each sheet, and (3) each sheet is numbered and the number of sheets is recorded at the top of this form.

7. Description of Work REPLACED EXISTING PARTS WITH NEW (SEE REMARKS)

8. Test Conducted: ☐ Hydrostatic ☐ Pneumatic ☐ Nominal Operating Pressure ☒ Other ☐ Exempt

Pressure _____ psig Test Temp. _____ °F

Pressure _____ psig Test Temp. _____ °F

Pressure _____ psig Test Temp. _____ °F

9. Remarks INSTALLED NEW 1" STUD, WASHERS, NUTS, CYLINDER RESERVOIR BODY, RESERVOIR TUBING AND ELBOW. FUNCTIONAL TESTED PER MP/0/A/3018/009A.

(Applicable Manufacturer's Data Records to be Attached)

CERTIFICATE OF COMPLIANCE

We certify that the statements made in the report are correct and this **repair or replacement** conforms to the rules of the ASME Code, Section XI.

Type Code Symbol Stamp **N/A**

Certificate of Authorization No. **N/A** Expiration Date **N/A**

Signed W T McClure Date 2/20, 1996

Owner or Owner's Designee, Title

CERTIFICATE OF INSERVICE INSPECTION

I, the undersigned, holding a valid commission issued by the National Board of Boiler and Pressure Vessel Inspectors and the State or Providence of N.C. and employed by **HSBI and I Company of Hartford Connecticut** have inspected the components described in this Owner's Report during the period 11-19-95 to 2-20-96; and state that to the best of my knowledge and belief, the Owner has performed examinations and taken corrective measures described in this Owner's Report in accordance with the requirements of the ASME Code, Section XI.

By signing this certificate, neither the Inspector nor his employer makes any warranty, expressed or implied, concerning the examinations and corrective measures described in this Owner's Report. Furthermore, neither the Inspector nor his employer shall be liable in any manner for any personal injury or property damage or a loss of any kind arising from or connected with this inspection.

M. B. Chapman Commissions NC-914

Inspector's Signature National Board, State, Providence and Endorsements

Date 2-20, 1996

Form 401463 (2

FORM NIS-2 OWNER'S REPORT FOR REPAIRS OR REPLACEMENTS
As Required By The Provisions Of The ASME Code Section XI

1. Owner **Duke Power Company**
   Address **526 S. Church Street, Charlotte, NC 28201-1006**

1a. Date 2/4/96

Sheet 1 of 1

2. Plant **Oconee Nuclear Station**
   Address **P.O. Box 1439, Seneca, S.C. 29679**

2a. Unit ☒ 1 ☐ 2 ☐ 3 ☐ Shared (specify Units_____)

3. Work Performed By **Duke Power Company**
   Address **526 S. Church Street, Charlotte, NC 28201-1006**
   Type Code Symbol Stamp **N/A** Authorization No. **N/A** Expiration Date **N/A**

3a. Work Order # 9600 4484-01
Repair Organization Job #

3b. NSM or MM # N/A

4. Identification of System 51A (HP) Class B

5. (a) Applicable Construction Code B31.7 19 68 Edition, 6-68 Addenda, N/A Code Cases
   (b) Applicable Edition of Section XI Utilized for Repairs or Replacements 1989, No Addenda

6. Identification of Components Repaired or Replaced and Replacement Components

	Column 1	Column 2	Column 3	Column 4	Column 5	Col. 6	Column 7	Column 8
	Name of Component	Name of Manufacturer	Manufacturer Serial Number	National Board Number	Other Identification	Year Built	Repaired, Replaced, or Replacement	ASME Code Stamped (yes or no)
A	HANGER 1-51A-0-439C-H86	DPC	N/A	N/A	N/A	N/A	☒ Repaired ☐ Replaced ☐ Replacement	☒ No ☐ Yes
B							☐ Repaired ☐ Replaced ☐ Replacement	☐ No ☐ Yes
C							☐ Repaired ☐ Replaced ☐ Replacement	☐ No ☐ Yes
D							☐ Repaired ☐ Replaced ☐ Replacement	☐ No ☐ Yes
E							☐ Repaired ☐ Replaced ☐ Replacement	☐ No ☐ Yes
F							☐ Repaired ☐ Replaced ☐ Replacement	☐ No ☐ Yes

Form NIS-2 (Back)

NOTE: Supplemental sheets in form of lists, sketches, or drawings may be used, provided (1) size is 8 1/2 in. x 11 in. (2) information in items 1 through 6 on this report is included on each sheet, and (3) each sheet is numbered and the number of sheets is recorded at the top of this form.

7. Description of Work READJUSTED COLD PISTON SETTING ON MECH. SNUBBER FROM AS FOUND UNACCEPTABLE SETTING TO CORRECT SETTING.

8. Test Conducted: ☐ Hydrostatic ☐ Pneumatic ☐ Nominal Operating Pressure ☐ Other ☒ Exempt

Pressure _____ psig Test Temp. _____ °F

Pressure _____ psig Test Temp. _____ °F

Pressure _____ psig Test Temp. _____ °F

9. Remarks THIS IS CONSIDERED A "REPAIR" BY DEFINITION OF DPC ASME SEC. XI MANUAL, SEC. E.

(Applicable Manufacturer's Data Records to be Attached)

CERTIFICATE OF COMPLIANCE

We certify that the statements made in the report are correct and this **repair or replacement** conforms to the rules of the ASME Code, Section XI.

Type Code Symbol Stamp **N/A**

Certificate of Authorization No. **N/A** Expiration Date **N/A**

Signed W M McClure Date 2/20, 19 96
Owner or Owner's Designee, Title

CERTIFICATE OF INSERVICE INSPECTION

I, the undersigned, holding a valid commission issued by the National Board of Boiler and Pressure Vessel Inspectors and the State or Providence of NC and employed by **HSBI and I Company of Hartford Connecticut** have inspected the components described in this Owner's Report during the period 2-5-96 to 2-20-96; and state that to the best of my knowledge and belief, the Owner has performed examinations and taken corrective measures described in this Owner's Report in accordance with the requirements of the ASME Code, Section XI.

By signing this certificate, neither the Inspector nor his employer makes any warranty, expressed or implied, concerning the examinations and corrective measures described in this Owner's Report. Furthermore, neither the Inspector nor his employer shall be liable in any manner for any personal injury or property damage or a loss of any kind arising from or connected with this inspection.

MB Chapman Commissions NC 914
Inspector's Signature National Board, State, Providence and Endorsements

Date 2-20, 19 96

Form 401463 (2

FORM NIS-2 OWNER'S REPORT FOR REPAIRS OR REPLACEMENTS
As Required By The Provisions Of The ASME Code Section XI

1. Owner **Duke Power Company**
   Address **526 S. Church Street, Charlotte, NC 28201-1006**

1a. Date 1/8/96

Sheet 1 of 1

2. Plant **Oconee Nuclear Station**
   Address **P.O. Box 1439, Seneca, S.C. 29679**

2a. Unit ☒ 1 ☐ 2 ☐ 3 ☐ Shared (specify Units_____)

3. Work Performed By **Duke Power Company**
   Address **526 S. Church Street, Charlotte, NC 28201-1006**
   Type Code Symbol Stamp **N/A** Authorization No. **N/A** Expiration Date **N/A**

3a. Work Order # 95085386-02
Repair Organization Job #

3b. NSM or MM # N/A

4. Identification of System 51A (HP) Class A

5. (a) Applicable Construction Code B31.7 19 68 Edition, 6-68 Addenda, N/A Code Cases
   (b) Applicable Edition of Section XI Utilized for Repairs or Replacements 1989, No Addenda

6. Identification of Components Repaired or Replaced and Replacement Components

	Column 1	Column 2	Column 3	Column 4	Column 5	Col. 6	Column 7	Column 8
	Name of Component	Name of Manufacturer	Manufacturer Serial Number	National Board Number	Other Identification	Year Built	Repaired, Replaced, or Replacement	ASME Code Stamped (yes or no)
A	PIPE SUPPORT 1-51A-0-479A-H1B	DPC	N/A	N/A	N/A	N/A	☐ Repaired ☐ Replaced ☒ Replacement	☒ No ☐ Yes
B							☐ Repaired ☐ Replaced ☐ Replacement	☐ No ☐ Yes
C							☐ Repaired ☐ Replaced ☐ Replacement	☐ No ☐ Yes
D							☐ Repaired ☐ Replaced ☐ Replacement	☐ No ☐ Yes
E							☐ Repaired ☐ Replaced ☐ Replacement	☐ No ☐ Yes
F							☐ Repaired ☐ Replaced ☐ Replacement	☐ No ☐ Yes

Form 401463 (2-95)

Form NIS-2 (Back)

NOTE: Supplemental sheets in form of lists, sketches, or drawings may be used, provided (1) size is 8 1/2 in. x 11 in. (2) information in items 1 through 6 on this report is included on each sheet, and (3) each sheet is numbered and the number of sheets is recorded at the top of this form.

7. Description of Work REMOVED ITEMS 3 & 4 AND REPLACED WITH NEW MATERIALS.

8. Test Conducted: ☐ Hydrostatic ☐ Pneumatic ☐ Nominal Operating Pressure ☐ Other ☒ Exempt

Pressure _____ psig Test Temp. _____ °F

Pressure _____ psig Test Temp. _____ °F

Pressure _____ psig Test Temp. _____ °F

9. Remarks NEW 5/8" ROD AND JAM NUTS NEEDED TO ACHIEVE CORRECT COLD SETTING.

(Applicable Manufacturer's Data Records to be Attached)

CERTIFICATE OF COMPLIANCE

We certify that the statements made in the report are correct and this **repair or replacement** conforms to the rules of the ASME Code, Section XI.

Type Code Symbol Stamp **N/A**

Certificate of Authorization No. **N/A** Expiration Date **N/A**

Signed Wm C Clue Date 1/8, 19 96

Owner or Owner's Designee, Title

CERTIFICATE OF INSERVICE INSPECTION

I, the undersigned, holding a valid commission issued by the National Board of Boiler and Pressure Vessel Inspectors and the State or Providence of N.C. and employed by **HSBI and I Company of Hartford Connecticut** have inspected the components described in this Owner's Report during the period 11-30-95 to 1-9-96; and state that to the best of my knowledge and belief, the Owner has performed examinations and taken corrective measures described in this Owner's Report in accordance with the requirements of the ASME Code, Section XI.

By signing this certificate, neither the Inspector nor his employer makes any warranty, expressed or implied, concerning the examinations and corrective measures described in this Owner's Report. Furthermore, neither the Inspector nor his employer shall be liable in any manner for any personal injury or property damage or a loss of any kind arising from or connected with this inspection.

M B Chapman Commissions NC914

Inspector's Signature National Board, State, Providence and Endorsements

Date 1-9, 1996

Form 401463 (2

FORM NIS-2 OWNER'S REPORT FOR REPAIRS OR REPLACEMENTS
As Required By The Provisions Of The ASME Code Section XI

1. Owner **Duke Power Company**
   Address **526 S. Church Street, Charlotte, NC 28201-1006**

1a. Date 1/3/96

Sheet 1 of 1

2. Plant **Oconee Nuclear Station**
   Address **P.O. Box 1439, Seneca, S.C. 29679**

2a. Unit ☒ 1 ☐ 2 ☐ 3 ☐ Shared (specify Units_____)

3. Work Performed By **Duke Power Company**
   Address **526 S. Church Street, Charlotte, NC 28201-1006**
   Type Code Symbol Stamp **N/A** Authorization No. **N/A** Expiration Date **N/A**

3a. Work Order # 94053016-14
Repair Organization Job #

3b. NSM or MM # N/A

4. Identification of System LP Class B

5. (a) Applicable Construction Code B31.7 19 68 Edition, 6/68 Addenda, _____ Code Cases
   (b) Applicable Edition of Section XI Utilized for Repairs or Replacements 1989, No Addenda

6. Identification of Components Repaired or Replaced and Replacement Components

	Column 1	Column 2	Column 3	Column 4	Column 5	Col. 6	Column 7	Column 8
	Name of Component	Name of Manufacturer	Manufacturer Serial Number	National Board Number	Other Identification	Year Built	Repaired, Replaced, or Replacement	ASME Code Stamped (yes or no)
A	S/R 1-53B-0-435B-EMO-H55	DPC	N/A	N/A	N/A	N/A	☐ Repaired ☐ Replaced ☒ Replacement	☒ No ☐ Yes
B							☐ Repaired ☐ Replaced ☐ Replacement	☐ No ☐ Yes
C							☐ Repaired ☐ Replaced ☐ Replacement	☐ No ☐ Yes
D							☐ Repaired ☐ Replaced ☐ Replacement	☐ No ☐ Yes
E							☐ Repaired ☐ Replaced ☐ Replacement	☐ No ☐ Yes
F							☐ Repaired ☐ Replaced ☐ Replacement	☐ No ☐ Yes

Form 401463 (2-95)

Form NIS-2 (Back)

NOTE: Supplemental sheets in form of lists, sketches, or drawings may be used, provided (1) size is 8 1/2 in. x 11 in. (2) information in items 1 through 6 on this report is included on each sheet, and (3) each sheet is numbered and the number of sheets is recorded at the top of this form.

7. Description of Work REMOVED ITEMS 7, 8 & 15 AND REPLACED WITH NEW MATERIAL.

8. Test Conducted: ☐ Hydrostatic ☐ Pneumatic ☐ Nominal Operating Pressure ☐ Other ☒ Exempt

Pressure _____ psig Test Temp. _____ °F

Pressure _____ psig Test Temp. _____ °F

Pressure _____ psig Test Temp. _____ °F

9. Remarks _____

(Applicable Manufacturer's Data Records to be Attached)

CERTIFICATE OF COMPLIANCE

We certify that the statements made in the report are correct and this **repair or replacement** conforms to the rules of the ASME Code, Section XI.

Type Code Symbol Stamp **N/A**

Certificate of Authorization No. **N/A** Expiration Date **N/A**

Signed W McClure Date 1/3, 1996

Owner or Owner's Designee, Title

CERTIFICATE OF INSERVICE INSPECTION

I, the undersigned, holding a valid commission issued by the National Board of Boiler and Pressure Vessel Inspectors and the State or Providence of N. C. and employed by **HSBI and I Company of Hartford Connecticut** have inspected the components described in this Owner's Report during the period 11-20-95 to 1-4-96; and state that to the best of my knowledge and belief, the Owner has performed examinations and taken corrective measures described in this Owner's Report in accordance with the requirements of the ASME Code, Section XI.

By signing this certificate, neither the Inspector nor his employer makes any warranty, expressed or implied, concerning the examinations and corrective measures described in this Owner's Report. Furthermore, neither the Inspector nor his employer shall be liable in any manner for any personal injury or property damage or a loss of any kind arising from or connected with this inspection.

M.B. Chapman Commissions NC914

Inspector's Signature National Board, State, Providence and Endorsements

Date 1-4, 1996

Form 401463

FORM NIS-2 OWNER'S REPORT FOR REPAIRS OR REPLACEMENTS
As Required By The Provisions Of The ASME Code Section XI

1. Owner **Duke Power Company**
   Address **526 S. Church Street, Charlotte, NC 28201-1006**

1a. Date 11/14/97

Sheet 1 of 1

2. Plant **Oconee Nuclear Station**
   Address **P.O. Box 1439, Seneca, S.C. 29679**

2a. Unit ☒ 1 ☐ 2 ☐ 3 ☐ Shared (specify Units_____)

3a. Work Order # 96074731-01
Repair Organization Job #

3. Work Performed By **Duke Power Company**
   Address **526 S. Church Street, Charlotte, NC 28201-1006**
   Type Code Symbol Stamp **N/A** Authorization No. **N/A** Expiration Date **N/A**

3b. NSM or MM # N/A

4. Identification of System 57 Class B

5. (a) Applicable Construction Code B31.7 1968 Edition, 6-68 Addenda, N/A Code Cases
   (b) Applicable Edition of Section XI Utilized for Repairs or Replacements 1989, No Addenda

6. Identification of Components Repaired or Replaced and Replacement Components

	Column 1	Column 2	Column 3	Column 4	Column 5	Col. 6	Column 7	Column 8
	Name of Component	Name of Manufacturer	Manufacturer Serial Number	National Board Number	Other Identification	Year Built	Repaired, Replaced, or Replacement	ASME Code Stamped (yes or no)
A	SNUBBER ON S/R 1-57-0-481A-H22	ITT GRINNELL	18599	N/A	N/A	N/A	☐ Repaired ☐ Replaced ☒ Replacement	☒ No ☐ Yes
B							☐ Repaired ☐ Replaced ☐ Replacement	☐ No ☐ Yes
C							☐ Repaired ☐ Replaced ☐ Replacement	☐ No ☐ Yes
D							☐ Repaired ☐ Replaced ☐ Replacement	☐ No ☐ Yes
E							☐ Repaired ☐ Replaced ☐ Replacement	☐ No ☐ Yes
F							☐ Repaired ☐ Replaced ☐ Replacement	☐ No ☐ Yes

Form 401463 (2-95)

Form NIS-2 (Back)

NOTE: Supplemental sheets in form of lists, sketches, or drawings may be used, provided (1) size is 8 1/2 in. x 11 in. (2) information in items 1 through 6 on this report is included on each sheet, and (3) each sheet is numbered and the number of sheets is recorded at the top of this form.

7. Description of Work REMOVED HYDRAULIC SNUBBER, REBUILT/REFURBISHED, AND REINSTALLED TO ORIGINAL LOCATION.

8. Test Conducted: ☐ Hydrostatic ☐ Pneumatic ☐ Nominal Operating Pressure ☒ Other ☐ Exempt

Pressure _____ psig Test Temp. _____ °F

Pressure _____ psig Test Temp. _____ °F

Pressure _____ psig Test Temp. _____ °F

9. Remarks PERFORMED FUNCTIONAL TESTING PER PROCEDURE SM/O/A/8110/001.

(Applicable Manufacturer's Data Records to be Attached)

CERTIFICATE OF COMPLIANCE

We certify that the statements made in the report are correct and this **repair or replacement** conforms to the rules of the ASME Code, Section XI.

Type Code Symbol Stamp **N/A**

Certificate of Authorization No. **N/A** Expiration Date **N/A**

Signed W McClure Date 11/14, 19 97
Owner or Owner's Designee, Title

CERTIFICATE OF INSERVICE INSPECTION

I, the undersigned, holding a valid commission issued by the National Board of Boiler and Pressure Vessel Inspectors and the State or Providence of N.C. and employed by **HSBI and I Company of Hartford Connecticut** have inspected the components described in this Owner's Report during the period 9-29-97 to 11-17-97; and state that to the best of my knowledge and belief, the Owner has performed examinations and taken corrective measures described in this Owner's Report in accordance with the requirements of the ASME Code, Section XI.

By signing this certificate, neither the Inspector nor his employer makes any warranty, expressed or implied, concerning the examinations and corrective measures described in this Owner's Report. Furthermore, neither the Inspector nor his employer shall be liable in any manner for any personal injury or property damage or a loss of any kind arising from or connected with this inspection.

MB Chapman Commissions NC914
Inspector's Signature National Board, State, Providence and Endorsements

Date 11-18 17, 19 97
MBC 11-17-97

Form 40148 (1/95)

FORM NIS-2 OWNER'S REPORT FOR REPAIRS OR REPLACEMENTS
As Required By The Provisions Of The ASME Code Section XI

1. Owner **Duke Power Company**
   Address **526 S. Church Street, Charlotte, NC 28201-1006**

1a. Date 11/14/97

Sheet 1 of 1

2. Plant **Oconee Nuclear Station**
   Address **P.O. Box 1439, Seneca, S.C. 29679**

2a. Unit ☒ 1 ☐ 2 ☐ 3 ☐ Shared (specify Units_____)

3a. Work Order # 96074709-01
Repair Organization Job #

3. Work Performed By **Duke Power Company**
   Address **526 S. Church Street, Charlotte, NC 28201-1006**
   Type Code Symbol Stamp **N/A** Authorization No. **N/A** Expiration Date **N/A**

3b. NSM or MM # N/A

4. Identification of System 57 Class B

5. (a) Applicable Construction Code B31.7 1968 Edition, 6-68 Addenda, N/A Code Cases
   (b) Applicable Edition of Section XI Utilized for Repairs or Replacements 1989, No Addenda

6. Identification of Components Repaired or Replaced and Replacement Components

	Column 1	Column 2	Column 3	Column 4	Column 5	Col. 6	Column 7	Column 8
	Name of Component	Name of Manufacturer	Manufacturer Serial Number	National Board Number	Other Identification	Year Built	Repaired, Replaced, or Replacement	ASME Code Stamped (yes or no)
A	SNUBBER ON S/R 1-57-0-481A-H9	ITT GRINNELL	9931	N/A	N/A	N/A	☐ Repaired ☐ Replaced ☒ Replacement	☒ No ☐ Yes
B							☐ Repaired ☐ Replaced ☐ Replacement	☐ No ☐ Yes
C							☐ Repaired ☐ Replaced ☐ Replacement	☐ No ☐ Yes
D							☐ Repaired ☐ Replaced ☐ Replacement	☐ No ☐ Yes
E							☐ Repaired ☐ Replaced ☐ Replacement	☐ No ☐ Yes
F							☐ Repaired ☐ Replaced ☐ Replacement	☐ No ☐ Yes

Form 401463 (2-95)

Form NIS-2 (Back)

NOTE: Supplemental sheets in form of lists, sketches, or drawings may be used, provided (1) size is 8 1/2 in. x 11 in. (2) information in items 1 through 6 on this report is included on each sheet, and (3) each sheet is numbered and the number of sheets is recorded at the top of this form.

7. Description of Work REMOVED HYDRAULIC SNUBBER, REBUILT/REFURBISHED, AND REINSTALLED TO ORIGINAL LOCATION.

8. Test Conducted: ☐ Hydrostatic ☐ Pneumatic ☐ Nominal Operating Pressure ☒ Other ☐ Exempt

Pressure _____ psig Test Temp. _____ °F

Pressure _____ psig Test Temp. _____ °F

Pressure _____ psig Test Temp. _____ °F

9. Remarks PERFORMED FUNCTIONAL TESTING PER PROCEDURE SM/O/A/8110/001.

(Applicable Manufacturer's Data Records to be Attached)

CERTIFICATE OF COMPLIANCE

We certify that the statements made in the report are correct and this **repair or replacement** conforms to the rules of the ASME Code, Section XI.

Type Code Symbol Stamp **N/A**

Certificate of Authorization No. **N/A** Expiration Date **N/A**

Signed W M McClure Date 11/14, 1997

Owner or Owner's Designee, Title

CERTIFICATE OF INSERVICE INSPECTION

I, the undersigned, holding a valid commission issued by the National Board of Boiler and Pressure Vessel Inspectors and the State or Providence of N.C. and employed by **HSBI and I Company of Hartford Connecticut** have inspected the components described in this Owner's Report during the period 9-23-97 to 11-17-97; and state that to the best of my knowledge and belief, the Owner has performed examinations and taken corrective measures described in this Owner's Report in accordance with the requirements of the ASME Code, Section XI.

By signing this certificate, neither the Inspector nor his employer makes any warranty, expressed or implied, concerning the examinations and corrective measures described in this Owner's Report. Furthermore, neither the Inspector nor his employer shall be liable in any manner for any personal injury or property damage or a loss of any kind arising from or connected with this inspection.

M B Chapman Commissions NC914

Inspector's Signature National Board, State, Providence and Endorsements

Date 11-17, 1997

Form 40146 (5)

FORM NIS-2 OWNER'S REPORT FOR REPAIRS OR REPLACEMENTS
As Required By The Provisions Of The ASME Code Section XI

1. Owner **Duke Power Company**
   Address **526 S. Church Street, Charlotte, NC 28201-1006**

1a. Date 11/14/97

Sheet 1 of 1

2. Plant **Oconee Nuclear Station**
   Address **P.O. Box 1439, Seneca, S.C. 29679**

2a. Unit ☒ 1 ☐ 2 ☐ 3 ☐ Shared (specify Units_____)

3a. Work Order # 96074226-01 (TWTM)
Repair Organization Job #

3. Work Performed By **Duke Power Company**
   Address **526 S. Church Street, Charlotte, NC 28201-1006**
   Type Code Symbol Stamp **N/A** Authorization No. **N/A** Expiration Date **N/A**

3b. NSM or MM # N/A

4. Identification of System 57 Class B

5. (a) Applicable Construction Code B31.7 1968 Edition, 6-68 Addenda, N/A Code Cases
   (b) Applicable Edition of Section XI Utilized for Repairs or Replacements 1989, No Addenda

6. Identification of Components Repaired or Replaced and Replacement Components

	Column 1	Column 2	Column 3	Column 4	Column 5	Col. 6	Column 7	Column 8
	Name of Component	Name of Manufacturer	Manufacturer Serial Number	National Board Number	Other Identification	Year Built	Repaired, Replaced, or Replacement	ASME Code Stamped (yes or no)
A	SNUBBER ON S/R 1-57-0-481A-H18	ITT GRINNELL	18813	N/A	N/A	N/A	☐ Repaired ☐ Replaced ☒ Replacement	☒ No ☐ Yes
B							☐ Repaired ☐ Replaced ☐ Replacement	☐ No ☐ Yes
C							☐ Repaired ☐ Replaced ☐ Replacement	☐ No ☐ Yes
D							☐ Repaired ☐ Replaced ☐ Replacement	☐ No ☐ Yes
E							☐ Repaired ☐ Replaced ☐ Replacement	☐ No ☐ Yes
F							☐ Repaired ☐ Replaced ☐ Replacement	☐ No ☐ Yes

Form 401463 (2-95)

Form NIS-2 (Back)

NOTE: Supplemental sheets in form of lists, sketches, or drawings may be used, provided (1) size is 8 1/2 in. x 11 in. (2) information in items 1 through 6 on this report is included on each sheet, and (3) each sheet is numbered and the number of sheets is recorded at the top of this form.

7. Description of Work REMOVED HYDRAULIC SNUBBER, REBUILT/REFURBISHED, AND REINSTALLED TO ORIGINAL LOCATION.

8. Test Conducted: ☐ Hydrostatic ☐ Pneumatic ☐ Nominal Operating Pressure ☒ Other ☐ Exempt

Pressure _____ psig Test Temp. _____ °F

Pressure _____ psig Test Temp. _____ °F

Pressure _____ psig Test Temp. _____ °F

9. Remarks PERFORMED FUNCTIONAL TESTING PER PROCEDURE SM/O/A/8110/001.

(Applicable Manufacturer's Data Records to be Attached)

CERTIFICATE OF COMPLIANCE

We certify that the statements made in the report are correct and this **repair or replacement** conforms to the rules of the ASME Code, Section XI.

Type Code Symbol Stamp **N/A**

Certificate of Authorization No. **N/A** Expiration Date **N/A**

Signed W McClure Date 11/14, 19 97
Owner or Owner's Designee, Title

CERTIFICATE OF INSERVICE INSPECTION

I, the undersigned, holding a valid commission issued by the National Board of Boiler and Pressure Vessel Inspectors and the State or Providence of N.C. and employed by **HSBI and I Company of Hartford Connecticut** have inspected the components described in this Owner's Report during the period 9-29-97 to 11-17-97; and state that to the best of my knowledge and belief, the Owner has performed examinations and taken corrective measures described in this Owner's Report in accordance with the requirements of the ASME Code, Section XI.

By signing this certificate, neither the Inspector nor his employer makes any warranty, expressed or implied, concerning the examinations and corrective measures described in this Owner's Report. Furthermore, neither the Inspector nor his employer shall be liable in any manner for any personal injury or property damage or a loss of any kind arising from or connected with this inspection.

MB Chapman Commissions NC914
Inspector's Signature National Board, State, Providence and Endorsements

Date 11-17, 19 97

Form 401463 (2-95)

FORM NIS-2 OWNER'S REPORT FOR REPAIRS OR REPLACEMENTS
As Required By The Provisions Of The ASME Code Section XI

1. Owner **Duke Power Company**
   Address **526 S. Church Street, Charlotte, NC 28201-1006**

1a. Date 11/14/97

Sheet 1 of 1

2. Plant **Oconee Nuclear Station**
   Address **P.O. Box 1439, Seneca, S.C. 29679**

2a. Unit ☒ 1 ☐ 2 ☐ 3 ☐ Shared (specify Units_____)

3a. Work Order # 960074665-01
Repair Organization Job #

3. Work Performed By **Duke Power Company**
   Address **526 S. Church Street, Charlotte, NC 28201-1006**
   Type Code Symbol Stamp **N/A** Authorization No. **N/A** Expiration Date **N/A**

3b. NSM or MM # N/A

4. Identification of System 50 Class A

5. (a) Applicable Construction Code B31.7 1968 Edition, 6-68 Addenda, N/A Code Cases
   (b) Applicable Edition of Section XI Utilized for Repairs or Replacements 1989, No Addenda

6. Identification of Components Repaired or Replaced and Replacement Components

	Column 1	Column 2	Column 3	Column 4	Column 5	Col. 6	Column 7	Column 8
	Name of Component	Name of Manufacturer	Manufacturer Serial Number	National Board Number	Other Identification	Year Built	Repaired, Replaced, or Replacement	ASME Code Stamped (yes or no)
A	SNUBBER ON S/R 1-50-0-479A-H12	ITT GRINNELL	18794	N/A	N/A	N/A	☐ Repaired ☐ Replaced ☒ Replacement	☒ No ☐ Yes
B							☐ Repaired ☐ Replaced ☐ Replacement	☐ No ☐ Yes
C							☐ Repaired ☐ Replaced ☐ Replacement	☐ No ☐ Yes
D							☐ Repaired ☐ Replaced ☐ Replacement	☐ No ☐ Yes
E							☐ Repaired ☐ Replaced ☐ Replacement	☐ No ☐ Yes
F							☐ Repaired ☐ Replaced ☐ Replacement	☐ No ☐ Yes

Form NIS-2 (Back)

NOTE: Supplemental sheets in form of lists, sketches, or drawings may be used, provided (1) size is 8 1/2 in. x 11 in. (2) information in items 1 through 6 on this report is included on each sheet, and (3) each sheet is numbered and the number of sheets is recorded at the top of this form.

7. Description of Work REMOVED HYDRAULIC SNUBBER, REBUILT/REFURBISHED, AND REINSTALLED TO ORIGINAL LOCATION.

8. Test Conducted: ☐ Hydrostatic ☐ Pneumatic ☐ Nominal Operating Pressure ☒ Other ☐ Exempt

Pressure _____ psig Test Temp. _____ °F

Pressure _____ psig Test Temp. _____ °F

Pressure _____ psig Test Temp. _____ °F

9. Remarks PERFORMED FUNCTIONAL TESTING PER PROCEDURE SM/O/A/8110/001.

(Applicable Manufacturer's Data Records to be Attached)

CERTIFICATE OF COMPLIANCE

We certify that the statements made in the report are correct and this **repair or replacement** conforms to the rules of the ASME Code, Section XI.

Type Code Symbol Stamp **N/A**

Certificate of Authorization No. **N/A** Expiration Date **N/A**

Signed W McClure Date 11/14, 1997

Owner or Owner's Designee, Title

CERTIFICATE OF INSERVICE INSPECTION

I, the undersigned, holding a valid commission issued by the National Board of Boiler and Pressure Vessel Inspectors and the State or Providence of N. C. and employed by **HSBI and I Company of Hartford Connecticut** have inspected the components described in this Owner's Report during the period 9-29-97 to 11-14-97; and state that to the best of my knowledge and belief, the Owner has performed examinations and taken corrective measures described in this Owner's Report in accordance with the requirements of the ASME Code, Section XI.

By signing this certificate, neither the Inspector nor his employer makes any warranty, expressed or implied, concerning the examinations and corrective measures described in this Owner's Report. Furthermore, neither the Inspector nor his employer shall be liable in any manner for any personal injury or property damage or a loss of any kind arising from or connected with this inspection.

M B Chapman Commissions NC914

Inspector's Signature National Board, State, Providence and Endorsements

Date 11-14, 1997

Form 401463 (2-9

FORM NIS-2 OWNER'S REPORT FOR REPAIRS OR REPLACEMENTS
As Required By The Provisions Of The ASME Code Section XI

1. Owner **Duke Power Company**
   Address **526 S. Church Street, Charlotte, NC 28201-1006**

1a. Date 11/14/97

Sheet 1 of 1

2. Plant **Oconee Nuclear Station**
   Address **P.O. Box 1439, Seneca, S.C. 29679**

2a. Unit ☒ 1 ☐ 2 ☐ 3 ☐ Shared (specify Units_____)

3. Work Performed By **Duke Power Company**
   Address **526 S. Church Street, Charlotte, NC 28201-1006**
   Type Code Symbol Stamp **N/A** Authorization No. **N/A** Expiration Date **N/A**

3a. Work Order # 96074715-01
Repair Organization Job #

3b. NSM or MM # N/A

4. Identification of System 57 Class B

5. (a) Applicable Construction Code B31.7 1968 Edition, 6-68 Addenda, N/A Code Cases
   (b) Applicable Edition of Section XI Utilized for Repairs or Replacements 1989, No Addenda

6. Identification of Components Repaired or Replaced and Replacement Components

	Column 1	Column 2	Column 3	Column 4	Column 5	Col. 6	Column 7	Column 8
	Name of Component	Name of Manufacturer	Manufacturer Serial Number	National Board Number	Other Identification	Year Built	Repaired, Replaced, or Replacement	ASME Code Stamped (yes or no)
A	S/R 1-57-0-481A-H15	ITT GRINNELL	15124	N/A	N/A	N/A	☐ Repaired ☐ Replaced ☒ Replacement	☒ No ☐ Yes
B							☐ Repaired ☐ Replaced ☐ Replacement	☐ No ☐ Yes
C							☐ Repaired ☐ Replaced ☐ Replacement	☐ No ☐ Yes
D							☐ Repaired ☐ Replaced ☐ Replacement	☐ No ☐ Yes
E							☐ Repaired ☐ Replaced ☐ Replacement	☐ No ☐ Yes
F							☐ Repaired ☐ Replaced ☐ Replacement	☐ No ☐ Yes

Form NIS-2 (Back)

NOTE: Supplemental sheets in form of lists, sketches, or drawings may be used, provided (1) size is 8 1/2 in. x 11 in. (2) information in items 1 through 6 on this report is included on each sheet, and (3) each sheet is numbered and the number of sheets is recorded at the top of this form.

7. Description of Work REMOVED HYDRAULIC SNUBBER, REBUILT/REFURBISHED, AND REINSTALLED TO ORIGINAL LOCATION.

8. Test Conducted: ☐ Hydrostatic ☐ Pneumatic ☐ Nominal Operating Pressure ☒ Other ☐ Exempt

Pressure _____ psig Test Temp. _____ °F

Pressure _____ psig Test Temp. _____ °F

Pressure _____ psig Test Temp. _____ °F

9. Remarks PERFORMED FUNCTIONAL TESTING PER PROCEDURE SM/O/A/8110/001.

(Applicable Manufacturer's Data Records to be Attached)

CERTIFICATE OF COMPLIANCE

We certify that the statements made in the report are correct and this **repair or replacement** conforms to the rules of the ASME Code, Section XI.

Type Code Symbol Stamp **N/A**

Certificate of Authorization No. **N/A** Expiration Date **N/A**

Signed WMcClure Date 11/14, 19 97

Owner or Owner's Designee, Title

CERTIFICATE OF INSERVICE INSPECTION

I, the undersigned, holding a valid commission issued by the National Board of Boiler and Pressure Vessel Inspectors and the State or Providence of N.C. and employed by **HSBI and I Company of Hartford Connecticut** have inspected the components described in this Owner's Report during the period 9-23-97 to 11-14-97; and state that to the best of my knowledge and belief, the Owner has performed examinations and taken corrective measures described in this Owner's Report in accordance with the requirements of the ASME Code, Section XI.

By signing this certificate, neither the Inspector nor his employer makes any warranty, expressed or implied, concerning the examinations and corrective measures described in this Owner's Report. Furthermore, neither the Inspector nor his employer shall be liable in any manner for any personal injury or property damage or a loss of any kind arising from or connected with this inspection.

MB Chapman Commissions NC914

Inspector's Signature National Board, State, Providence and Endorsements

Date 11-14, 19 97

Form 40146

FORM NIS-2 OWNER'S REPORT FOR REPAIRS OR REPLACEMENTS
As Required By The Provisions Of The ASME Code Section XI

1. Owner **Duke Power Company**
   Address **526 S. Church Street, Charlotte, NC 28201-1006**

1a. Date 11/18/97

Sheet 1 of 1

2. Plant **Oconee Nuclear Station**
   Address **P.O. Box 1439, Seneca, S.C. 29679**

2a. Unit ☒ 1 ☐ 2 ☐ 3 ☐ Shared (specify Units_____)

3. Work Performed By **Duke Power Company**
   Address **526 S. Church Street, Charlotte, NC 28201-1006**
   Type Code Symbol Stamp **N/A** Authorization No. **N/A** Expiration Date **N/A**

3a. Work Order # 9709 3839-02
Repair Organization Job #

3b. NSM or MM # N/A

4. Identification of System 51 Class B

5. (a) Applicable Construction Code B31.7 19 68 Edition, 6-68 Addenda, N/A Code Cases
   (b) Applicable Edition of Section XI Utilized for Repairs or Replacements 1989, No Addenda

6. Identification of Components Repaired or Replaced and Replacement Components

	Column 1	Column 2	Column 3	Column 4	Column 5	Col. 6	Column 7	Column 8
	Name of Component	Name of Manufacturer	Manufacturer Serial Number	National Board Number	Other Identification	Year Built	Repaired, Replaced, or Replacement	ASME Code Stamped (yes or no)
A	S/R 1-51-0-436D-SR7	DPC	N/A	N/A	N/A	N/A	☒ Repaired ☐ Replaced ☐ Replacement	☒ No ☐ Yes
B							☐ Repaired ☐ Replaced ☐ Replacement	☐ No ☐ Yes
C							☐ Repaired ☐ Replaced ☐ Replacement	☐ No ☐ Yes
D							☐ Repaired ☐ Replaced ☐ Replacement	☐ No ☐ Yes
E							☐ Repaired ☐ Replaced ☐ Replacement	☐ No ☐ Yes
F							☐ Repaired ☐ Replaced ☐ Replacement	☐ No ☐ Yes

Form NIS-2 (Back)

NOTE: Supplemental sheets in form of lists, sketches, or drawings may be used, provided (1) size is 8 1/2 in. x 11 in. (2) information in items 1 through 6 on this report is included on each sheet, and (3) each sheet is numbered and the number of sheets is recorded at the top of this form.

7. Description of Work WELDED SHIMS IN PLACE TO OBTAIN PROPER BEARING.

8. Test Conducted: ☐ Hydrostatic ☐ Pneumatic ☐ Nominal Operating Pressure ☐ Other ☒ Exempt

Pressure _____ psig Test Temp. _____ °F

Pressure _____ psig Test Temp. _____ °F

Pressure _____ psig Test Temp. _____ °F

9. Remarks _____

(Applicable Manufacturer's Data Records to be Attached)

CERTIFICATE OF COMPLIANCE

We certify that the statements made in the report are correct and this **repair or replacement** conforms to the rules of the ASME Code, Section XI.

Type Code Symbol Stamp **N/A**

Certificate of Authorization No. **N/A** Expiration Date **N/A**

Signed W M C Owner or Owner's Designee, Title Date 11/18, 19 97

CERTIFICATE OF INSERVICE INSPECTION

I, the undersigned, holding a valid commission issued by the National Board of Boiler and Pressure Vessel Inspectors and the State or Providence of N.C. and employed by **HSBI and I Company of Hartford Connecticut** have inspected the components described in this Owner's Report during the period 11-6-97 to 11-18-97; and state that to the best of my knowledge and belief, the Owner has performed examinations and taken corrective measures described in this Owner's Report in accordance with the requirements of the ASME Code, Section XI.

By signing this certificate, neither the Inspector nor his employer makes any warranty, expressed or implied, concerning the examinations and corrective measures described in this Owner's Report. Furthermore, neither the Inspector nor his employer shall be liable in any manner for any personal injury or property damage or a loss of any kind arising from or connected with this inspection.

M B. Chapman Commissions NC914

Inspector's Signature National Board, State, Providence and Endorsements

Date 11-18, 1997

Form 401463 (2

FORM NIS-2 OWNER'S REPORT FOR REPAIRS OR REPLACEMENTS
As Required By The Provisions Of The ASME Code Section XI

1. Owner **Duke Power Company**
   Address **526 S. Church Street, Charlotte, NC 28201-1006**

1a. Date 12/2/97

Sheet 1 of 1

2. Plant **Oconee Nuclear Station**
   Address **P.O. Box 1439, Seneca, S.C. 29679**

2a. Unit ☒ 1 ☐ 2 ☐ 3 ☐ Shared (specify Units _____)

3. Work Performed By **Duke Power Company**
   Address **526 S. Church Street, Charlotte, NC 28201-1006**
   Type Code Symbol Stamp **N/A** Authorization No. **N/A** Expiration Date **N/A**

3a. Work Order # 97095694-02
Repair Organization Job #

3b. NSM or MM # N/A

4. Identification of System 14 Class B

5. (a) Applicable Construction Code B31.1 1967 Edition, N/A Addenda, N/A Code Cases
   (b) Applicable Edition of Section XI Utilized for Repairs or Replacements 1989, No Addenda

6. Identification of Components Repaired or Replaced and Replacement Components

	Column 1	Column 2	Column 3	Column 4	Column 5	Col. 6	Column 7	Column 8
	Name of Component	Name of Manufacturer	Manufacturer Serial Number	National Board Number	Other Identification	Year Built	Repaired, Replaced, or Replacement	ASME Code Stamped (yes or no)
A	S/R 1-14-0-480A-H96	DPC	N/A	N/A	N/A	N/A	☒ Repaired ☐ Replaced ☐ Replacement	☒ No ☐ Yes
B							☐ Repaired ☐ Replaced ☐ Replacement	☐ No ☐ Yes
C							☐ Repaired ☐ Replaced ☐ Replacement	☐ No ☐ Yes
D							☐ Repaired ☐ Replaced ☐ Replacement	☐ No ☐ Yes
E							☐ Repaired ☐ Replaced ☐ Replacement	☐ No ☐ Yes
F							☐ Repaired ☐ Replaced ☐ Replacement	☐ No ☐ Yes

Form 401463 (2-95)

Form NIS-2 (Back)

NOTE: Supplemental sheets in form of lists, sketches, or drawings may be used, provided (1) size is 8 1/2 in. x 11 in. (2) information in items 1 through 6 on this report is included on each sheet, and (3) each sheet is numbered and the number of sheets is recorded at the top of this form.

7. Description of Work WELDED SHIM TO BEARING PLATE TO OBTAIN PROPER BEARING.

8. Test Conducted: ☐ Hydrostatic ☐ Pneumatic ☐ Nominal Operating Pressure ☐ Other ☒ Exempt

Pressure _____ psig Test Temp. _____ °F

Pressure _____ psig Test Temp. _____ °F

Pressure _____ psig Test Temp. _____ °F

9. Remarks _____

(Applicable Manufacturer's Data Records to be Attached)

CERTIFICATE OF COMPLIANCE

We certify that the statements made in the report are correct and this **repair or replacement** conforms to the rules of the ASME Code, Section XI.

Type Code Symbol Stamp **N/A**

Certificate of Authorization No. **N/A** Expiration Date **N/A**

Signed WMC Clem Date 12/2, 19 97
Owner or Owner's Designee, Title

CERTIFICATE OF INSERVICE INSPECTION

I, the undersigned, holding a valid commission issued by the National Board of Boiler and Pressure Vessel Inspectors and the State or Providence of N.C and employed by **HSBI and I Company of Hartford Connecticut** have inspected the components described in this Owner's Report during the period 11-12-97 to 12-2-97; and state that to the best of my knowledge and belief, the Owner has performed examinations and taken corrective measures described in this Owner's Report in accordance with the requirements of the ASME Code, Section XI.

By signing this certificate, neither the Inspector nor his employer makes any warranty, expressed or implied, concerning the examinations and corrective measures described in this Owner's Report. Furthermore, neither the Inspector nor his employer shall be liable in any manner for any personal injury or property damage or a loss of any kind arising from or connected with this inspection.

MB Chapman Commissions NC914
Inspector's Signature National Board, State, Providence and Endorsements

Date 12-2, 19 97

Form 401463 (2

FORM NIS-2 OWNER'S REPORT FOR REPAIRS OR REPLACEMENTS
As Required By The Provisions Of The ASME Code Section XI

1. Owner **Duke Power Company**
   Address **526 S. Church Street, Charlotte, NC 28201-1006**

1a. Date 12/1/97

Sheet 1 of ___

2. Plant **Oconee Nuclear Station**
   Address **P.O. Box 1439, Seneca, S.C. 29679**

2a. Unit ☒ 1 ☐ 2 ☐ 3 ☐ Shared (specify Units_____)

3. Work Performed By **Duke Power Company**
   Address **526 S. Church Street, Charlotte, NC 28201-1006**
   Type Code Symbol Stamp **N/A** Authorization No. **N/A** Expiration Date **N/A**

3a. Work Order # 97043951-01
Repair Organization Job #

3b. ~~NSM~~ or MM # 10451

4. Identification of System 53 Class A

5. (a) Applicable Construction Code B31.7 1968 Edition, 6-68 Addenda, N/A Code Cases
   (b) Applicable Edition of Section XI Utilized for Repairs or Replacements 1989, No Addenda

6. Identification of Components Repaired or Replaced and Replacement Components

	Column 1	Column 2	Column 3	Column 4	Column 5	Col. 6	Column 7	Column 8
	Name of Component	Name of Manufacturer	Manufacturer Serial Number	National Board Number	Other Identification	Year Built	Repaired, Replaced, or Replacement	ASME Code Stamped (yes or no)
A	S/R 1-53-0-481A-H40C	DPC	N/A	N/A	N/A	N/A	☐ Repaired ☐ Replaced ☒ Replacement	☒ No ☐ Yes
B							☐ Repaired ☐ Replaced ☐ Replacement	☐ No ☐ Yes
C							☐ Repaired ☐ Replaced ☐ Replacement	☐ No ☐ Yes
D							☐ Repaired ☐ Replaced ☐ Replacement	☐ No ☐ Yes
E							☐ Repaired ☐ Replaced ☐ Replacement	☐ No ☐ Yes
F							☐ Repaired ☐ Replaced ☐ Replacement	☐ No ☐ Yes

Form 401463 (2-95)

Form NIS-2 (Back)

NOTE: Supplemental sheets in form of lists, sketches, or drawings may be used, provided (1) size is 8 1/2 in. x 11 in. (2) information in items 1 through 6 on this report is included on each sheet, and (3) each sheet is numbered and the number of sheets is recorded at the top of this form.

7. Description of Work MODIFIED EXISTING SUPPORT RESTRAINT.

8. Test Conducted: ☐ Hydrostatic ☐ Pneumatic ☐ Nominal Operating Pressure ☐ Other ☒ Exempt

Pressure _____ psig Test Temp. _____ °F

Pressure _____ psig Test Temp. _____ °F

Pressure _____ psig Test Temp. _____ °F

9. Remarks _____

(Applicable Manufacturer's Data Records to be Attached)

CERTIFICATE OF COMPLIANCE

We certify that the statements made in the report are correct and this **repair or replacement** conforms to the rules of the ASME Code, Section XI.

Type Code Symbol Stamp **N/A**

Certificate of Authorization No. **N/A** Expiration Date **N/A**

Signed W McClure Date 12/1, 1997

Owner or Owner's Designee, Title

CERTIFICATE OF INSERVICE INSPECTION

I, the undersigned, holding a valid commission issued by the National Board of Boiler and Pressure Vessel Inspectors and the State or Providence of N. C and employed by **HSBI and I Company of Hartford Connecticut** have inspected the components described in this Owner's Report during the period 10-26-97 to 12-1-97; and state that to the best of my knowledge and belief, the Owner has performed examinations and taken corrective measures described in this Owner's Report in accordance with the requirements of the ASME Code, Section XI.

By signing this certificate, neither the Inspector nor his employer makes any warranty, expressed or implied, concerning the examinations and corrective measures described in this Owner's Report. Furthermore, neither the Inspector nor his employer shall be liable in any manner for any personal injury or property damage or a loss of any kind arising from or connected with this inspection.

MB Chapman Commissions NC914

Inspector's Signature National Board, State, Providence and Endorsements

Date 12-1, 1997

Form 401463 (2-93)

FORM NIS-2 OWNER'S REPORT FOR REPAIRS OR REPLACEMENTS
As Required By The Provisions Of The ASME Code Section XI

1. Owner **Duke Power Company**
   Address **526 S. Church Street, Charlotte, NC 28201-1006**

1a. Date 11/25/97

Sheet 1 of 1

2. Plant **Oconee Nuclear Station**
   Address **P.O. Box 1439, Seneca, S.C. 29679**

2a. Unit [x] 1 [ ] 2 [ ] 3 [ ] Shared (specify Units_____)

3. Work Performed By **Duke Power Company**
   Address **526 S. Church Street, Charlotte, NC 28201-1006**
   Type Code Symbol Stamp **N/A** Authorization No. **N/A** Expiration Date **N/A**

3a. Work Order # 97079201
Repair Organization Job #

3b. ~~NSM~~ or MM # 10793

4. Identification of System 50 Class A

5. (a) Applicable Construction Code B31.7 19 68 Edition, 6-68 Addenda, N/A Code Cases
   (b) Applicable Edition of Section XI Utilized for Repairs or Replacements 1989, No Addenda

6. Identification of Components Repaired or Replaced and Replacement Components

	Column 1	Column 2	Column 3	Column 4	Column 5	Col. 6	Column 7	Column 8
	Name of Component	Name of Manufacturer	Manufacturer Serial Number	National Board Number	Other Identification	Year Built	Repaired, Replaced, or Replacement	ASME Code Stamped (yes or no)
A	SNUBBER ON S/R 1-50-0-66A-RCPM-S7	ITT GRINNELL	17637	N/A	N/A	N/A	[ ] Repaired [x] Replaced [ ] Replacement	[x] No [ ] Yes
B	SNUBBER ON S/R 1-50-0-66A-RCPM-S7	ITT GRINNELL	33964	N/A	N/A	N/A	[ ] Repaired [ ] Replaced [x] Replacement	[x] No [ ] Yes
C	SNUBBER ON S/R 1-50-0-66A-RCPM-S8	ITT GRINNELL	CYL. SER. NO. 33156199	N/A	N/A	N/A	[ ] Repaired [x] Replaced [ ] Replacement	[x] No [ ] Yes
D	SNUBBER ON S/R 1-50-0-66A-RCPM-S8	ITT GRINNELL	33965	N/A	N/A	N/A	[ ] Repaired [ ] Replaced [x] Replacement	[x] No [ ] Yes
E	SNUBBER ON S/R 1-50-0-66A-RCPM-S9	ITT GRINNELL	6799	N/A	N/A	N/A	[ ] Repaired [x] Replaced [ ] Replacement	[x] No [ ] Yes
F	SNUBBER ON S/R 1-50-0-66A-RCPM-S9	ITT GRINNELL	33966	N/A	N/A	N/A	[ ] Repaired [ ] Replaced [x] Replacement	[x] No [ ] Yes

Form NIS-2 (Back)

NOTE: Supplemental sheets in form of lists, sketches, or drawings may be used, provided (1) size is 8 1/2 in. x 11 in. (2) information in items 1 through 6 on this report is included on each sheet, and (3) each sheet is numbered and the number of sheets is recorded at the top of this form.

REPLACED EXISTING GRINNELL HYDRAULIC SNUBBERS WITH REMOTE RESERVOIRS WITH

7. Description of Work NEW GRINNELL HYDRAULIC SNUBBERS WITH PRESURIZED RESERVOIRS MOUNTED TO SNUBBEI

8. Test Conducted: ☐ Hydrostatic ☐ Pneumatic ☐ Nominal Operating Pressure ☒ Other ☐ Exempt

Pressure _____ psig Test Temp. _____ °F

Pressure _____ psig Test Temp. _____ °F

Pressure _____ psig Test Temp. _____ °F

9. Remarks FUNCTIONAL TESTING PER SM/O/A/8110/001.

NOTE: ON S/R's 1-50-0-66A-RCPM-58 AND 1-50-66A-RCPM-59 PIVOT PIN WAS TACK WELDED TO NEW SNUBBER.

(Applicable Manufacturer's Data Records to be Attached)

CERTIFICATE OF COMPLIANCE

We certify that the statements made in the report are correct and this **repair or replacement** conforms to the rules of the ASME Code, Section XI.

Type Code Symbol Stamp **N/A**

Certificate of Authorization No. **N/A** Expiration Date **N/A**

Signed W M C Owner or Owner's Designee, Title Date 11/25, 1997

CERTIFICATE OF INSERVICE INSPECTION

I, the undersigned, holding a valid commission issued by the National Board of Boiler and Pressure Vessel Inspectors and the State or Providence of N.C. and employed by **HSBI and I Company of Hartford Connecticut** have inspected the components described in this Owner's Report during the period 10-17-97 to 11-28-97; and state that to the best of my knowledge and belief, the Owner has performed examinations and taken corrective measures described in this Owner's Report in accordance with the requirements of the ASME Code, Section XI.

By signing this certificate, neither the Inspector nor his employer makes any warranty, expressed or implied, concerning the examinations and corrective measures described in this Owner's Report. Furthermore, neither the Inspector nor his employer shall be liable in any manner for any personal injury or property damage or a loss of any kind arising from or connected with this inspection.

M.B. Chapman Inspector's Signature Commissions NC 914 National Board, State, Providence and Endorsements

Date 11-28, 1997

Form 401463

FORM NIS-2 OWNER'S REPORT FOR REPAIRS OR REPLACEMENTS
As Required By The Provisions Of The ASME Code Section XI

1. Owner **Duke Power Company**
   Address **526 S. Church Street, Charlotte, NC 28201-1006**

1a. Date 11/28/97

Sheet 1 of 1

2. Plant **Oconee Nuclear Station**
   Address **P.O. Box 1439, Seneca, S.C. 29679**

2a. Unit ☒ 1 ☐ 2 ☐ 3 ☐ Shared (specify Units_____)

3. Work Performed By **Duke Power Company**
   Address **526 S. Church Street, Charlotte, NC 28201-1006**
   Type Code Symbol Stamp **N/A** Authorization No. **N/A** Expiration Date **N/A**

3a. Work Order # 9509/616-01
Repair Organization Job #

3b. ~~NSM~~ or MM # 8658

4. Identification of System 51A Class B

5. (a) Applicable Construction Code B31.7 1968 Edition, 6-68 Addenda, N/A Code Cases
   (b) Applicable Edition of Section XI Utilized for Repairs or Replacements 1989, No Addenda

6. Identification of Components Repaired or Replaced and Replacement Components

	Column 1	Column 2	Column 3	Column 4	Column 5	Col. 6	Column 7	Column 8
	Name of Component	Name of Manufacturer	Manufacturer Serial Number	National Board Number	Other Identification	Year Built	Repaired, Replaced, or Replacement	ASME Code Stamped (yes or no)
A	S/R 1-51A-439A-RD-2500	DPC	N/A	N/A	N/A	N/A	☐ Repaired ☐ Replaced ☒ Replacement	☒ No ☐ Yes
B							☐ Repaired ☐ Replaced ☐ Replacement	☐ No ☐ Yes
C							☐ Repaired ☐ Replaced ☐ Replacement	☐ No ☐ Yes
D							☐ Repaired ☐ Replaced ☐ Replacement	☐ No ☐ Yes
E							☐ Repaired ☐ Replaced ☐ Replacement	☐ No ☐ Yes
F							☐ Repaired ☐ Replaced ☐ Replacement	☐ No ☐ Yes

Form 401463 (2-95)

Form NIS-2 (Back)

NOTE: Supplemental sheets in form of lists, sketches, or drawings may be used, provided (1) size is 8 1/2 in. x 11 in. (2) information in items 1 through 6 on this report is included on each sheet, and (3) each sheet is numbered and the number of sheets is recorded at the top of this form.

MODIFIED EXISTING SUPPORT RESTRAINT TO FACILITATE

7. Description of Work ROUTINE MAINTENANCE OF VALVE 1HP-37.

8. Test Conducted: ☐ Hydrostatic ☐ Pneumatic ☐ Nominal Operating Pressure ☐ Other ☒ Exempt

Pressure _____ psig Test Temp. _____ °F

Pressure _____ psig Test Temp. _____ °F

Pressure _____ psig Test Temp. _____ °F

9. Remarks _____

(Applicable Manufacturer's Data Records to be Attached)

CERTIFICATE OF COMPLIANCE

We certify that the statements made in the report are correct and this **repair or replacement** conforms to the rules of the ASME Code, Section XI.

Type Code Symbol Stamp **N/A**

Certificate of Authorization No. **N/A** Expiration Date **N/A**

Signed W McClure Date 11/28, 19 97

Owner or Owner's Designee, Title

CERTIFICATE OF INSERVICE INSPECTION

I, the undersigned, holding a valid commission issued by the National Board of Boiler and Pressure Vessel Inspectors and the State or Providence of N.C. and employed by **HSBI and I Company of Hartford Connecticut** have inspected the components described in this Owner's Report during the period 10-17-97 to 11-28-97; and state that to the best of my knowledge and belief, the Owner has performed examinations and taken corrective measures described in this Owner's Report in accordance with the requirements of the ASME Code, Section XI.

By signing this certificate, neither the Inspector nor his employer makes any warranty, expressed or implied, concerning the examinations and corrective measures described in this Owner's Report. Furthermore, neither the Inspector nor his employer shall be liable in any manner for any personal injury or property damage or a loss of any kind arising from or connected with this inspection.

MB Chapman Commissions NC914

Inspector's Signature National Board, State, Providence and Endorsements

Date 11-28, 1997

Form 401463 (2

FORM NIS-2 OWNER'S REPORT FOR REPAIRS OR REPLACEMENTS
As Required By The Provisions Of The ASME Code Section XI

1. Owner **Duke Power Company**
   Address **526 S. Church Street, Charlotte, NC 28201-1006**

1a. Date 11/28/97

Sheet 1 of 1

2. Plant **Oconee Nuclear Station**
   Address **P.O. Box 1439, Seneca, S.C. 29679**

2a. Unit ☒ 1 ☐ 2 ☐ 3 ☐ Shared (specify Units_____)

3. Work Performed By **Duke Power Company**
   Address **526 S. Church Street, Charlotte, NC 28201-1006**
   Type Code Symbol Stamp **N/A** Authorization No. **N/A** Expiration Date **N/A**

3a. Work Order # 97101509-01
Repair Organization Job #

3b. ~~NSM~~ or MM # 11224

4. Identification of System 57 Class A

5. (a) Applicable Construction Code B31.7 1968 Edition, 6-68 Addenda, N/A Code Cases
   (b) Applicable Edition of Section XI Utilized for Repairs or Replacements 1989, No Addenda

6. Identification of Components Repaired or Replaced and Replacement Components

	Column 1	Column 2	Column 3	Column 4	Column 5	Col. 6	Column 7	Column 8
	Name of Component	Name of Manufacturer	Manufacturer Serial Number	National Board Number	Other Identification	Year Built	Repaired, Replaced, or Replacement	ASME Code Stamped (yes or no)
A	S/R 1-57-0-481A-H17	DPC	N/A	N/A	N/A	N/A	☐ Repaired ☐ Replaced ☒ Replacement	☒ No ☐ Yes
B							☐ Repaired ☐ Replaced ☐ Replacement	☐ No ☐ Yes
C							☐ Repaired ☐ Replaced ☐ Replacement	☐ No ☐ Yes
D							☐ Repaired ☐ Replaced ☐ Replacement	☐ No ☐ Yes
E							☐ Repaired ☐ Replaced ☐ Replacement	☐ No ☐ Yes
F							☐ Repaired ☐ Replaced ☐ Replacement	☐ No ☐ Yes

Form 401463 (2-95)

Form NIS-2 (Back)

NOTE: Supplemental sheets in form of lists, sketches, or drawings may be used, provided (1) size is 8 1/2 in. x 11 in. (2) information in items 1 through 6 on this report is included on each sheet, and (3) each sheet is numbered and the number of sheets is recorded at the top of this form.

7. Description of Work REMOVED SNUBBER, REMOVED REAR BRACKETT, ROTATED BRACKETT 90°, REWELDED AND REINSTALLED SNUBBER.

8. Test Conducted: ☐ Hydrostatic ☐ Pneumatic ☐ Nominal Operating Pressure ☐ Other ☒ Exempt

Pressure _____ psig Test Temp. _____ °F

Pressure _____ psig Test Temp. _____ °F

Pressure _____ psig Test Temp. _____ °F

9. Remarks _____

(Applicable Manufacturer's Data Records to be Attached)

CERTIFICATE OF COMPLIANCE

We certify that the statements made in the report are correct and this **repair or replacement** conforms to the rules of the ASME Code, Section XI.

Type Code Symbol Stamp **N/A**

Certificate of Authorization No. **N/A** Expiration Date **N/A**

Signed W M C Clure Date 11/28, 1997

Owner or Owner's Designee, Title

CERTIFICATE OF INSERVICE INSPECTION

I, the undersigned, holding a valid commission issued by the National Board of Boiler and Pressure Vessel Inspectors and the State or Providence of N.C. and employed by **HSBI and I Company of Hartford Connecticut** have inspected the components described in this Owner's Report during the period 11-25-97 to 11-28-97; and state that to the best of my knowledge and belief, the Owner has performed examinations and taken corrective measures described in this Owner's Report in accordance with the requirements of the ASME Code, Section XI.

By signing this certificate, neither the Inspector nor his employer makes any warranty, expressed or implied, concerning the examinations and corrective measures described in this Owner's Report. Furthermore, neither the Inspector nor his employer shall be liable in any manner for any personal injury or property damage or a loss of any kind arising from or connected with this inspection.

M B Chapman Commissions NC 914

Inspector's Signature National Board, State, Providence and Endorsements

Date 11-28, 1997

Form 401463 (2-9

FORM NIS-2 OWNER'S REPORT FOR REPAIRS OR REPLACEMENTS
As Required By The Provisions Of The ASME Code Section XI

1. Owner **Duke Power Company**
   Address **526 S. Church Street, Charlotte, NC 28201-1006**

1a. Date 11/25/97

Sheet 1 of 1

2. Plant **Oconee Nuclear Station**
   Address **P.O. Box 1439, Seneca, S.C. 29679**

2a. Unit [x] 1 [ ] 2 [ ] 3 [ ] Shared (specify Units_____)

3. Work Performed By **Duke Power Company**
   Address **526 S. Church Street, Charlotte, NC 28201-1006**
   Type Code Symbol Stamp **N/A** Authorization No. **N/A** Expiration Date **N/A**

3a. Work Order # 97079202
Repair Organization Job #

3b. ~~NSM~~ or MM # 10794

4. Identification of System 50 Class A

5. (a) Applicable Construction Code B31.7 19 68 Edition, 6-68 Addenda, N/A Code Cases
   (b) Applicable Edition of Section XI Utilized for Repairs or Replacements 1989, No Addenda

6. Identification of Components Repaired or Replaced and Replacement Components

	Column 1	Column 2	Column 3	Column 4	Column 5	Col. 6	Column 7	Column 8
	Name of Component	Name of Manufacturer	Manufacturer Serial Number	National Board Number	Other Identification	Year Built	Repaired, Replaced, or Replacement	ASME Code Stamped (yes or no)
A	SNUBBER ON S/R 1-50-0-66A-RCPM-S10	ITT GRINNELL	16310	N/A	N/A	N/A	[ ] Repaired [X] Replaced [ ] Replacement	[X] No [ ] Yes
B	SNUBBER ON S/R 1-50-0-66A-RCPM-S10	ITT GRINNELL	33967	N/A	N/A	N/A	[ ] Repaired [ ] Replaced [X] Replacement	[X] No [ ] Yes
C	SNUBBER ON S/R 1-50-0-66A-RCPM-S11	ITT GRINNELL	CYL. SER. NO. 33156199	N/A	N/A	N/A	[ ] Repaired [X] Replaced [ ] Replacement	[X] No [ ] Yes
D	SNUBBER ON S/R 1-50-0-66A-RCPM-S11	ITT GRINNELL	33968	N/A	N/A	N/A	[ ] Repaired [ ] Replaced [X] Replacement	[X] No [ ] Yes
E	SNUBBER ON S/R 1-50-0-66A-RCPM-S12	ITT GRINNELL	17696	N/A	N/A	N/A	[ ] Repaired [X] Replaced [ ] Replacement	[X] No [ ] Yes
F	SNUBBER ON S/R 1-50-0-66A-RCPM-S12	ITT GRINNELL	33969	N/A	N/A	N/A	[ ] Repaired [ ] Replaced [X] Replacement	[X] No [ ] Yes

Form NIS-2 (Back)

NOTE Supplemental sheets in form of lists, sketches, or drawings may be used, provided (1) size is 8 1/2 in. x 11 in. (2) information in items 1 through 6 on this report is included on each sheet, and (3) each sheet is numbered and the number of sheets is recorded at the top of this form.

REPLACED EXISTING GRINNELL HYDRAULIC SNUBBERS WITH REMOTE RESERVOIRS WITH

7. Description of Work NEW GRINNELL HYDRAULIC SNUBBERS WITH PRESURIZED RESERVOIRS MOUNTED TO SNUBBEI

8. Test Conducted: ☐ Hydrostatic ☐ Pneumatic ☐ Nominal Operating Pressure ☒ Other ☐ Exempt

Pressure _____ psig Test Temp. _____ °F

Pressure _____ psig Test Temp. _____ °F

Pressure _____ psig Test Temp. _____ °F

9. Remarks FUNCTIONAL TESTING PER SM/O/A/8110/001.

NOTE: S/R 1-50-0-66A-RCPM-S11 WAS MODIFIED TO ACCEPT NEW SNUBBER.

(Applicable Manufacturer's Data Records to be Attached)

CERTIFICATE OF COMPLIANCE

We certify that the statements made in the report are correct and this **repair or replacement** conforms to the rules of the ASME Code, Section XI.

Type Code Symbol Stamp **N/A**

Certificate of Authorization No. **N/A** Expiration Date **N/A**

Signed W McClure Date 11/25, 1997

Owner or Owner's Designee, Title

CERTIFICATE OF INSERVICE INSPECTION

I, the undersigned, holding a valid commission issued by the National Board of Boiler and Pressure Vessel Inspectors and the State or Providence of N.C. and employed by **HSBI and I Company of Hartford Connecticut** have inspected the components described in this Owner's Report during the period 10-17-97 to 11-25-97; and state that to the best of my knowledge and belief, the Owner has performed examinations and taken corrective measures described in this Owner's Report in accordance with the requirements of the ASME Code, Section XI.

By signing this certificate, neither the Inspector nor his employer makes any warranty, expressed or implied, concerning the examinations and corrective measures described in this Owner's Report. Furthermore, neither the Inspector nor his employer shall be liable in any manner for any personal injury or property damage or a loss of any kind arising from or connected with this inspection.

M B Chapman Commissions NC914

Inspector's Signature National Board, State, Providence and Endorsements

Date 11-25, 1997

Form 401463 (2-9

FORM NIS-2 OWNER'S REPORT FOR REPAIRS OR REPLACEMENTS
As Required By The Provisions Of The ASME Code Section XI

1. Owner **Duke Power Company**
   Address **526 S. Church Street, Charlotte, NC 28201-1006**

1a. Date 11/25/97

Sheet 1 of 1

2. Plant **Oconee Nuclear Station**
   Address **P.O. Box 1439, Seneca, S.C. 29679**

2a. Unit [x] 1 [ ] 2 [ ] 3 [ ] Shared (specify Units_____)

3. Work Performed By **Duke Power Company**
   Address **526 S. Church Street, Charlotte, NC 28201-1006**
   Type Code Symbol Stamp **N/A** Authorization No. **N/A** Expiration Date **N/A**

3a. Work Order # 97078932
Repair Organization Job #

3b. NSM or MM # 10780

4. Identification of System 50 Class A

5. (a) Applicable Construction Code B31.7 19 68 Edition, 6-68 Addenda, N/A Code Cases
   (b) Applicable Edition of Section XI Utilized for Repairs or Replacements 1989, No Addenda

6. Identification of Components Repaired or Replaced and Replacement Components

	Column 1	Column 2	Column 3	Column 4	Column 5	Col. 6	Column 7	Column 8
	Name of Component	Name of Manufacturer	Manufacturer Serial Number	National Board Number	Other Identification	Year Built	Repaired, Replaced, or Replacement	ASME Code Stamped (yes or no)
A	SNUBBER ON S/R 1-50-0-66A-RCPM-S1	ITT GRINNELL	17644	N/A	N/A	N/A	[ ] Repaired [x] Replaced [ ] Replacement	[x] No [ ] Yes
B	SNUBBER ON S/R 1-50-0-66A-RCPM-S1	ITT GRINNELL	33958	N/A	N/A	N/A	[ ] Repaired [ ] Replaced [x] Replacement	[x] No [ ] Yes
C	SNUBBER ON S/R 1-50-0-66A-RCPM-S2	ITT GRINNELL	17594	N/A	N/A	N/A	[ ] Repaired [x] Replaced [ ] Replacement	[x] No [ ] Yes
D	SNUBBER ON S/R 1-50-0-66A-RCPM-S2	ITT GRINNELL	33959	N/A	N/A	N/A	[ ] Repaired [ ] Replaced [x] Replacement	[x] No [ ] Yes
E	SNUBBER ON S/R 1-50-0-66A-RCPM-S3	ITT GRINNELL	17641	N/A	N/A	N/A	[ ] Repaired [x] Replaced [ ] Replacement	[x] No [ ] Yes
F	SNUBBER ON S/R 1-50-0-66A-RCPM-S3	ITT GRINNELL	33960	N/A	N/A	N/A	[ ] Repaired [ ] Replaced [x] Replacement	[x] No [ ] Yes

Form NIS-2 (Back)

NOTE: Supplemental sheets in form of lists, sketches, or drawings may be used, provided (1) size is 8 1/2 in. x 11 in. (2) information in items 1 through 6 on this report is included on each sheet, and (3) each sheet is numbered and the number of sheets is recorded at the top of this form.

REPLACED EXISTING GRINNELL HYDRAULIC SNUBBERS WITH REMOTE RESERVOIRS WITH

7. Description of Work NEW GRINNELL HYDRAULIC SNUBBERS WITH PRESURIZED RESERVOIRS MOUNTED TO SNUBBER

8. Test Conducted: ☐ Hydrostatic ☐ Pneumatic ☐ Nominal Operating Pressure ☒ Other ☐ Exempt

Pressure	_____ psig	Test Temp.	_____ °F
Pressure	_____ psig	Test Temp.	_____ °F
Pressure	_____ psig	Test Temp.	_____ °F

9. Remarks FUNCTIONAL TESTING PER SM/O/A/8110/001.

NOTE: REMOVED/REINSTALLED END BRACKETT IN PROCESS OF INSTALLING NEW SNUBBER ON S/R 1-50-0-66A-RCPM-S2.

(Applicable Manufacturer's Data Records to be Attached)

CERTIFICATE OF COMPLIANCE

We certify that the statements made in the report are correct and this **repair or replacement** conforms to the rules of the ASME Code, Section XI.

Type Code Symbol Stamp **N/A**

Certificate of Authorization No. **N/A** Expiration Date **N/A**

Signed WMcClure Date 11/25, 1997

Owner or Owner's Designee, Title

CERTIFICATE OF INSERVICE INSPECTION

I, the undersigned, holding a valid commission issued by the National Board of Boiler and Pressure Vessel Inspectors and the State or Providence of N.C. and employed by **HSBI and I Company of Hartford Connecticut** have inspected the components described in this Owner's Report during the period 11-6-97 to 11-25-97; and state that to the best of my knowledge and belief, the Owner has performed examinations and taken corrective measures described in this Owner's Report in accordance with the requirements of the ASME Code, Section XI.

By signing this certificate, neither the Inspector nor his employer makes any warranty, expressed or implied, concerning the examinations and corrective measures described in this Owner's Report. Furthermore, neither the Inspector nor his employer shall be liable in any manner for any personal injury or property damage or a loss of any kind arising from or connected with this inspection.

M.B. Chapman Commissions NC 914

Inspector's Signature National Board, State, Providence and Endorsements

Date 11-25, 1997

Form 401463 (2-9

FORM NIS-2 OWNER'S REPORT FOR REPAIRS OR REPLACEMENTS
As Required By The Provisions Of The ASME Code Section XI

1. Owner **Duke Power Company**
   Address **526 S. Church Street, Charlotte, NC 28201-1006**

1a. Date 11/25/97

Sheet 1 of 1

2. Plant **Oconee Nuclear Station**
   Address **P.O. Box 1439, Seneca, S.C. 29679**

2a. Unit ☒ 1 ☐ 2 ☐ 3 ☐ Shared (specify Units_____)

3. Work Performed By **Duke Power Company**
   Address **526 S. Church Street, Charlotte, NC 28201-1006**
   Type Code Symbol Stamp **N/A** Authorization No. **N/A** Expiration Date **N/A**

3a. Work Order # 97079191
Repair Organization Job #

3b. ~~NSM~~ or MM # 10790

4. Identification of System 50 Class A

5. (a) Applicable Construction Code B31.7 19 68 Edition, 6-68 Addenda, N/A Code Cases
   (b) Applicable Edition of Section XI Utilized for Repairs or Replacements 1989, No Addenda

6. Identification of Components Repaired or Replaced and Replacement Components

	Column 1	Column 2	Column 3	Column 4	Column 5	Col. 6	Column 7	Column 8
	Name of Component	Name of Manufacturer	Manufacturer Serial Number	National Board Number	Other Identification	Year Built	Repaired, Replaced, or Replacement	ASME Code Stamped (yes or no)
A	SNUBBER ON S/R 1-50-0-66A-RCPM-S4	ITT GRINNELL	17639	N/A	N/A	N/A	☐ Repaired ☒ Replaced ☐ Replacement	☒ No ☐ Yes
B	SNUBBER ON S/R 1-50-0-66A-RCPM-S4	ITT GRINNELL	33961	N/A	N/A	N/A	☐ Repaired ☐ Replaced ☒ Replacement	☒ No ☐ Yes
C	SNUBBER ON S/R 1-50-0-66A-RCPM-S5	ITT GRINNELL	17640	N/A	N/A	N/A	☐ Repaired ☒ Replaced ☐ Replacement	☒ No ☐ Yes
D	SNUBBER ON S/R 1-50-0-66A-RCPM-S5	ITT GRINNELL	33962	N/A	N/A	N/A	☐ Repaired ☐ Replaced ☒ Replacement	☒ No ☐ Yes
E	SNUBBER ON S/R 1-50-0-66A-RCPM-S6	ITT GRINNELL	BLOCK SER # 76126192	N/A	N/A	N/A	☐ Repaired ☒ Replaced ☐ Replacement	☒ No ☐ Yes
F	1-50-0-66A-RCPM-S6	GRINNELL	33963	N/A	N/A	N/A	☐ Repaired ☐ Replaced ☒ Replacement	☒ No ☐ Yes

Form NIS-2 (Back)

NOTE: Supplemental sheets in form of lists, sketches, or drawings may be used, provided (1) size is 8 1/2 in. x 11 in. (2) information in items 1 through 6 on this report is included on each sheet, and (3) each sheet is numbered and the number of sheets is recorded at the top of this form.

REPLACED EXISTING GRINNELL HYDRAULIC SNUBBERS WITH REMOTE RESERVOIRS WITH

7. Description of Work NEW GRINNELL HYDRAULIC SNUBBERS WITH PRESURIZED RESERVOIRS MOUNTED TO SNUBBER

8. Test Conducted: ☐ Hydrostatic ☐ Pneumatic ☐ Nominal Operating Pressure ☒ Other ☐ Exempt

Pressure _____ psig Test Temp. _____ °F

Pressure _____ psig Test Temp. _____ °F

Pressure _____ psig Test Temp. _____ °F

9. Remarks FUNCTIONAL TESTING PER SM/O/A/8110/001.

(Applicable Manufacturer's Data Records to be Attached)

CERTIFICATE OF COMPLIANCE

We certify that the statements made in the report are correct and this **repair or replacement** conforms to the rules of the ASME Code, Section XI.

Type Code Symbol Stamp **N/A**

Certificate of Authorization No. **N/A** Expiration Date **N/A**

Signed W McClure Date 11/25, 1997

Owner or Owner's Designee, Title

CERTIFICATE OF INSERVICE INSPECTION

I, the undersigned, holding a valid commission issued by the National Board of Boiler and Pressure Vessel Inspectors and the State or Providence of N.C. and employed by **HSBI and I Company of Hartford Connecticut** have inspected the components described in this Owner's Report during the period 11-6-97 to 11-25-97; and state that to the best of my knowledge and belief, the Owner has performed examinations and taken corrective measures described in this Owner's Report in accordance with the requirements of the ASME Code, Section XI.

By signing this certificate, neither the Inspector nor his employer makes any warranty, expressed or implied, concerning the examinations and corrective measures described in this Owner's Report. Furthermore, neither the Inspector nor his employer shall be liable in any manner for any personal injury or property damage or a loss of any kind arising from or connected with this inspection.

M B Chapman Commissions Exp 11/05/97 ~~NC 7441~~ NC914

Inspector's Signature National Board, State, Providence and Endorsements

Date 11-25, 1997

Form 40146

FORM NIS-2 OWNER'S REPORT FOR REPAIRS OR REPLACEMENTS
As Required By The Provisions Of The ASME Code Section XI

WTM

1. Owner **Duke Power Company**
   Address **526 S. Church Street, Charlotte, NC 28201-1006**

1a. Date 12/3/94 7

2. Plant **Oconee Nuclear Station**
   Address **P.O. Box 1439, Seneca, S.C. 29679**

Sheet 1 of 4

PAGE 2 AND 3 are CLASS 3

2a. Unit ☒ 1 ☐ 2 ☐ 3 ☐ Shared (specify Units_____)

3. Work Performed By **Duke Power Company**
   Address **526 S. Church Street, Charlotte, NC 28201-1006**
   Type Code Symbol Stamp **N/A** Authorization No. **N/A** Expiration Date **N/A**

3a. Work Order # 96058584
Repair Organization Job #

3b. NSM or ~~MM~~ # 3008 AM1

4. Identification of System 54A, 67, 53B, 51, 56 Class B

5. (a) Applicable Construction Code B31.7 1968 Edition, 6-68 Addenda, N/A Code Cases
   (b) Applicable Edition of Section XI Utilized for Repairs or Replacements 1989, No Addenda

6. Identification of Components Repaired or Replaced and Replacement Components

	Column 1	Column 2	Column 3	Column 4	Column 5	Col. 6	Column 7	Column 8
	Name of Component S/R's	Name of Manufacturer	Manufacturer Serial Number	National Board Number	Other Identification	Year Built	Repaired, Replaced, or Replacement	ASME Code Stamped (yes or no)
A	1-54A-0-439A-DE023	DPC	N/A	N/A	N/A	N/A	☐ Repaired ☐ Replaced ☒ Replacement	☒ No ☐ Yes
B	1-67-439A-H5351	DPC	N/A	N/A	N/A	N/A	☐ Repaired ☐ Replaced ☒ Replacement	☒ No ☐ Yes
C	1-GH-RBU-7071-03	DPC	N/A	N/A	N/A	N/A	☐ Repaired ☐ Replaced ☒ Replacement	☒ No ☐ Yes
D	1-GH-TRB-7071-03	DPC	N/A	N/A	N/A	N/A	☐ Repaired ☐ Replaced ☒ Replacement	☒ No ☐ Yes
E	1-GH-UV-7071-02	DPC	N/A	N/A	N/A	N/A	☐ Repaired ☐ Replaced ☒ Replacement	☒ No ☐ Yes
F	1-53B-0-435B-DE062	DPC	N/A	N/A	N/A	N/A	☐ Repaired ☐ Replaced ☒ Replacement	☒ No ☐ Yes

WTM

Form NIS-2 (Back)

NOTE: Supplemental sheets in form of lists, sketches, or drawings may be used, provided (1) size is 8 1/2 in. x 11 in. (2) information in items 1 through 6 on this report is included on each sheet, and (3) each sheet is numbered and the number of sheets is recorded at the top of this form.

7. Description of Work MODIFIED EXISTING SUPPORT RESTRAINTS.

8. Test Conducted: ☐ Hydrostatic ☐ Pneumatic ☐ Nominal Operating Pressure ☐ Other ☒ Exempt

Pressure _____ psig Test Temp. _____ °F

Pressure _____ psig Test Temp. _____ °F

Pressure _____ psig Test Temp. _____ °F

9. Remarks _____

(Applicable Manufacturer's Data Records to be Attached)

CERTIFICATE OF COMPLIANCE

We certify that the statements made in the report are correct and this **repair or replacement** conforms to the rules of the ASME Code, Section XI.

Type Code Symbol Stamp **N/A**

Certificate of Authorization No. **N/A** Expiration Date **N/A**

Signed CR Henson QA Specialist Date 12-3, 1997
Owner or Owner's Designee, Title

CERTIFICATE OF INSERVICE INSPECTION

I, the undersigned, holding a valid commission issued by the National Board of Boiler and Pressure Vessel Inspectors and the State or Providence of N.C. and employed by **HSBI and I Company of Hartford Connecticut** have inspected the components described in this Owner's Report during the period 7-7-97 to 12-4-97; and state that to the best of my knowledge and belief, the Owner has performed examinations and taken corrective measures described in this Owner's Report in accordance with the requirements of the ASME Code, Section XI.

By signing this certificate, neither the Inspector nor his employer makes any warranty, expressed or implied, concerning the examinations and corrective measures described in this Owner's Report. Furthermore, neither the Inspector nor his employer shall be liable in any manner for any personal injury or property damage or a loss of any kind arising from or connected with this inspection.

MB Chapman Commissions NC914
Inspector's Signature National Board, State, Providence and Endorsements

Date 12-4, 1997

Form 401463

FORM NIS-2 OWNER'S REPORT FOR REPAIRS OR REPLACEMENTS
As Required By The Provisions Of The ASME Code Section XI

1. Owner **Duke Power Company**
   Address **526 S. Church Street, Charlotte, NC 28201-1006**

1a. Date 12/3/97
Sheet 3 of 4

2. Plant **Oconee Nuclear Station**
   Address **P.O. Box 1439, Seneca, S.C. 29679**

2a. Unit ☒ 1 ☐ 2 ☐ 3 ☐ Shared (specify Units_____)

3. Work Performed By **Duke Power Company**
   Address **526 S. Church Street, Charlotte, NC 28201-1006**
   Type Code Symbol Stamp **N/A** Authorization No. **N/A** Expiration Date **N/A**

3a. Work Order # 96058584
Repair Organization Job #

3b. NSM or ~~MM~~ # 3008 AM1

4. Identification of System ~~56~~ WM, 64 Class B

5. (a) Applicable Construction Code B31.7 1968 Edition, 6-68 Addenda, N/A Code Cases
   (b) Applicable Edition of Section XI Utilized for Repairs or Replacements 1989, No Addenda

6. Identification of Components Repaired or Replaced and Replacement Components

	Column 1	Column 2	Column 3	Column 4	Column 5	Col. 6	Column 7	Column 8
	Name of Component	Name of Manufacturer	Manufacturer Serial Number	National Board Number	Other Identification	Year Built	Repaired, Replaced, or Replacement	ASME Code Stamped (yes or no)
A	S/R 1-64-435K-H5659	DPC	N/A	N/A	N/A	N/A	☐ Repaired ☐ Replaced ☒ Replacement	☒ No ☐ Yes
B							☐ Repaired ☐ Replaced ☐ Replacement	☐ No ☐ Yes
C							☐ Repaired ☐ Replaced ☐ Replacement	☐ No ☐ Yes
D							☐ Repaired ☐ Replaced ☐ Replacement	☐ No ☐ Yes
E							☐ Repaired ☐ Replaced ☐ Replacement	☐ No ☐ Yes
F							☐ Repaired ☐ Replaced ☐ Replacement	☐ No ☐ Yes

Form NIS-2 (Back)

NOTE: Supplemental sheets in form of lists, sketches, or drawings may be used, provided (1) size is 8 1/2 in. x 11 in. (2) information in items 1 through 6 on this report is included on each sheet, and (3) each sheet is numbered and the number of sheets is recorded at the top of this form.

7. Description of Work INSTALLED NEW SUPPORT RESTRAINT

8. Test Conducted: ☐ Hydrostatic ☐ Pneumatic ☐ Nominal Operating Pressure ☐ Other ☒ Exempt

Pressure _____ psig Test Temp. _____ °F

Pressure _____ psig Test Temp. _____ °F

Pressure _____ psig Test Temp. _____ °F

9. Remarks _____

(Applicable Manufacturer's Data Records to be Attached)

CERTIFICATE OF COMPLIANCE

We certify that the statements made in the report are correct and this **repair or replacement** conforms to the rules of the ASME Code, Section XI.

Type Code Symbol Stamp **N/A**

Certificate of Authorization No. **N/A** Expiration Date **N/A**

Signed C.R. Henson QA Specialist Date 12-3, 19 97
Owner or Owner's Designee, Title

CERTIFICATE OF INSERVICE INSPECTION

I, the undersigned, holding a valid commission issued by the National Board of Boiler and Pressure Vessel Inspectors and the State or Providence of N.C. and employed by **HSBI and I Company of Hartford Connecticut** have inspected the components described in this Owner's Report during the period 7-7-97 to 12-4-97; and state that to the best of my knowledge and belief, the Owner has performed examinations and taken corrective measures described in this Owner's Report in accordance with the requirements of the ASME Code, Section XI.

By signing this certificate, neither the Inspector nor his employer makes any warranty, expressed or implied, concerning the examinations and corrective measures described in this Owner's Report. Furthermore, neither the Inspector nor his employer shall be liable in any manner for any personal injury or property damage or a loss of any kind arising from or connected with this inspection.

M.B. Chapman Commissions NC914
Inspector's Signature National Board, State, Providence and Endorsements

Date 12-4, 19 97

Form 401463

FORM NIS-2 OWNER'S REPORT FOR REPAIRS OR REPLACEMENTS
As Required By The Provisions Of The ASME Code Section XI

1. Owner **Duke Power Company**
   Address **526 S. Church Street, Charlotte, NC 28201-1006**

1a. Date 12/4/97

Sheet 1 of 2

2. Plant **Oconee Nuclear Station**
   Address **P.O. Box 1439, Seneca, S.C. 29679**

2a. Unit ☒ 1 ☐ 2 ☐ 3 ☐ Shared (specify Units_____)

3. Work Performed By **Duke Power Company**
   Address **526 S. Church Street, Charlotte, NC 28201-1006**
   Type Code Symbol Stamp **N/A** Authorization No. **N/A** Expiration Date **N/A**

3a. Work Order # 97016760
Repair Organization Job #

3b. NSM or ~~MM~~ # 3008/BM1

4. Identification of System 67 Class B

5. (a) Applicable Construction Code B31.7 1968 Edition, 6-68 Addenda, N/A Code Cases
   (b) Applicable Edition of Section XI Utilized for Repairs or Replacements 1989, No Addenda

6. Identification of Components Repaired or Replaced and Replacement Components

	Column 1	Column 2	Column 3	Column 4	Column 5	Col. 6	Column 7	Column 8
	Name of Component	Name of Manufacturer	Manufacturer Serial Number	National Board Number	Other Identification	Year Built	Repaired, Replaced, or Replacement	ASME Code Stamped (yes or no)
A	S/R's 1-67-438C-H5670	DPC	N/A	N/A	N/A	N/A	☐ Repaired ☐ Replaced ☒ Replacement	☒ No ☐ Yes
B	1-67-438C-H5671	DPC	N/A	N/A	N/A	N/A	☐ Repaired ☐ Replaced ☒ Replacement	☒ No ☐ Yes
C	1-67-438C-H5672	DPC	N/A	N/A	N/A	N/A	☐ Repaired ☐ Replaced ☒ Replacement	☒ No ☐ Yes
D	1-67-438C-H5673	DPC	N/A	N/A	N/A	N/A	☐ Repaired ☐ Replaced ☒ Replacement	☒ No ☐ Yes
E	1-67-438C-H5674	DPC	N/A	N/A	N/A	N/A	☐ Repaired ☐ Replaced ☒ Replacement	☒ No ☐ Yes
F	1-67-438C-H5675	DPC	N/A	N/A	N/A	N/A	☐ Repaired ☐ Replaced ☒ Replacement	☒ No ☐ Yes

Form NIS-2 (Back)

NOTE: Supplemental sheets in form of lists, sketches, or drawings may be used, provided (1) size is 8 1/2 in. x 11 in. (2) information in items 1 through 6 on this report is included on each sheet, and (3) each sheet is numbered and the number of sheets is recorded at the top of this form.

7. Description of Work INSTALLED NEW PIPE SUPPORT RESTRAINTS.

8. Test Conducted: ☐ Hydrostatic ☐ Pneumatic ☐ Nominal Operating Pressure ☐ Other ☒ Exempt

Pressure _____ psig Test Temp. _____ °F

Pressure _____ psig Test Temp. _____ °F

Pressure _____ psig Test Temp. _____ °F

9. Remarks _____

(Applicable Manufacturer's Data Records to be Attached)

CERTIFICATE OF COMPLIANCE

We certify that the statements made in the report are correct and this **repair or replacement** conforms to the rules of the ASME Code, Section XI.

Type Code Symbol Stamp **N/A**

Certificate of Authorization No. **N/A** Expiration Date **N/A**

Signed W McClure Date 12/4, 1997

Owner or Owner's Designee, Title

CERTIFICATE OF INSERVICE INSPECTION

I, the undersigned, holding a valid commission issued by the National Board of Boiler and Pressure Vessel Inspectors and the State or Providence of N. C. and employed by **HSBI and I Company of Hartford Connecticut** have inspected the components described in this Owner's Report during the period 6-30-97 to 12-4-97; and state that to the best of my knowledge and belief, the Owner has performed examinations and taken corrective measures described in this Owner's Report in accordance with the requirements of the ASME Code, Section XI.

By signing this certificate, neither the Inspector nor his employer makes any warranty, expressed or implied, concerning the examinations and corrective measures described in this Owner's Report. Furthermore, neither the Inspector nor his employer shall be liable in any manner for any personal injury or property damage or a loss of any kind arising from or connected with this inspection.

MB Chapman Commissions NC914

Inspector's Signature National Board, State, Providence and Endorsements

Date 12-4, 1997

Form 401463

FORM NIS-2 OWNER'S REPORT FOR REPAIRS OR REPLACEMENTS
As Required By The Provisions Of The ASME Code Section XI

1. Owner **Duke Power Company**
   Address **526 S. Church Street, Charlotte, NC 28201-1006**

1a. Date 12/4/97

Sheet 2 of 2

2. Plant **Oconee Nuclear Station**
   Address **P.O. Box 1439, Seneca, S.C. 29679**

2a. Unit ☒ 1 ☐ 2 ☐ 3 ☐ Shared (specify Units _____)

3. Work Performed By **Duke Power Company**
   Address **526 S. Church Street, Charlotte, NC 28201-1006**
   Type Code Symbol Stamp **N/A** Authorization No. **N/A** Expiration Date **N/A**

3a. Work Order # 97016760
Repair Organization Job #

3b. NSM or ~~MM #~~ 3008/Am 1

4. Identification of System 67 Class B

5. (a) Applicable Construction Code B31.7 1968 Edition, 6-68 Addenda, N/A Code Cases
   (b) Applicable Edition of Section XI Utilized for Repairs or Replacements 1989, No Addenda

6. Identification of Components Repaired or Replaced and Replacement Components

	Column 1	Column 2	Column 3	Column 4	Column 5	Col. 6	Column 7	Column 8
	Name of Component S/R's	Name of Manufacturer	Manufacturer Serial Number	National Board Number	Other Identification	Year Built	Repaired, Replaced, or Replacement	ASME Code Stamped (yes or no)
A	1-67-438C-H5676	DPC	N/A	N/A	N/A	N/A	☐ Repaired ☐ Replaced ☒ Replacement	☒ No ☐ Yes
B	1-67-438C-H5677	DPC	N/A	N/A	N/A	N/A	☐ Repaired ☐ Replaced ☒ Replacement	☒ No ☐ Yes
C	1-67-438C-H5679	DPC	N/A	N/A	N/A	N/A	☐ Repaired ☐ Replaced ☒ Replacement	☒ No ☐ Yes
D	1-67-438C-H5680	DPC	N/A	N/A	N/A	N/A	☐ Repaired ☐ Replaced ☒ Replacement	☒ No ☐ Yes
E	1-67-438C-H5681	DPC	N/A	N/A	N/A	N/A	☐ Repaired ☐ Replaced ☒ Replacement	☒ No ☐ Yes
F							☐ Repaired ☐ Replaced ☐ Replacement	☐ No ☐ Yes

Form 401463 (2-95)

Form NIS-2 (Back)

NOTE: Supplemental sheets in form of lists, sketches, or drawings may be used, provided (1) size is 8 1/2 in. x 11 in. (2) information in items 1 through 6 on this report is included on each sheet, and (3) each sheet is numbered and the number of sheets is recorded at the top of this form.

7. Description of Work INSTALLED NEW PIPE SUPPORT RESTRAINTS.

8. Test Conducted: ☐ Hydrostatic ☐ Pneumatic ☐ Nominal Operating Pressure ☐ Other ☒ Exempt

Pressure _____ psig Test Temp. _____ °F

Pressure _____ psig Test Temp. _____ °F

Pressure _____ psig Test Temp. _____ °F

9. Remarks _____

(Applicable Manufacturer's Data Records to be Attached)

CERTIFICATE OF COMPLIANCE

We certify that the statements made in the report are correct and this **repair or replacement** conforms to the rules of the ASME Code, Section XI.

Type Code Symbol Stamp **N/A**

Certificate of Authorization No. **N/A** Expiration Date **N/A**

Signed W M McClure Date 12/4, 19 97

Owner or Owner's Designee, Title

CERTIFICATE OF INSERVICE INSPECTION

I, the undersigned, holding a valid commission issued by the National Board of Boiler and Pressure Vessel Inspectors and the State or Providence of N. C. and employed by **HSBI and I Company of Hartford Connecticut** have inspected the components described in this Owner's Report during the period 6-30-97 to 12-4-97; and state that to the best of my knowledge and belief, the Owner has performed examinations and taken corrective measures described in this Owner's Report in accordance with the requirements of the ASME Code, Section XI.

By signing this certificate, neither the Inspector nor his employer makes any warranty, expressed or implied, concerning the examinations and corrective measures described in this Owner's Report. Furthermore, neither the Inspector nor his employer shall be liable in any manner for any personal injury or property damage or a loss of any kind arising from or connected with this inspection.

M B Chapman Commissions NC914

Inspector's Signature National Board, State, Providence and Endorsements

Date 12-4, 19 97

Form 4014[illegible])

FORM NIS-2 OWNER'S REPORT FOR REPAIRS OR REPLACEMENTS
As Required By The Provisions Of The ASME Code Section XI

1. Owner **Duke Power Company**
   Address **526 S. Church Street, Charlotte, NC 28201-1006**

1a. Date 12/9/97

Sheet 1 of 1

2. Plant **Oconee Nuclear Station**
   Address **P.O. Box 1439, Seneca, S.C. 29679**

2a. Unit ☒ 1 ☐ 2 ☐ 3 ☐ Shared (specify Units_____)

3. Work Performed By **Duke Power Company**
   Address **526 S. Church Street, Charlotte, NC 28201-1006**
   Type Code Symbol Stamp **N/A** Authorization No. **N/A** Expiration Date **N/A**

3a. Work Order # 96074678-01
Repair Organization Job #

3b. NSM or MM # N/A

4. Identification of System 50 Class A

5. (a) Applicable Construction Code B31.7 1968 Edition, 6-68 Addenda, N/A Code Cases
   (b) Applicable Edition of Section XI Utilized for Repairs or Replacements 1989, No Addenda

6. Identification of Components Repaired or Replaced and Replacement Components

	Column 1	Column 2	Column 3	Column 4	Column 5	Col. 6	Column 7	Column 8
	Name of Component	Name of Manufacturer	Manufacturer Serial Number	National Board Number	Other Identification	Year Built	Repaired, Replaced, or Replacement	ASME Code Stamped (yes or no)
A	SNUBBER ON S/R 1-50-0-481A-NPS-H13A	ITT GRINNELL	18610	N/A	N/A	N/A	☐ Repaired ☐ Replaced ☒ Replacement	☒ No ☐ Yes
B							☐ Repaired ☐ Replaced ☐ Replacement	☐ No ☐ Yes
C							☐ Repaired ☐ Replaced ☐ Replacement	☐ No ☐ Yes
D							☐ Repaired ☐ Replaced ☐ Replacement	☐ No ☐ Yes
E							☐ Repaired ☐ Replaced ☐ Replacement	☐ No ☐ Yes
F							☐ Repaired ☐ Replaced ☐ Replacement	☐ No ☐ Yes

Form NIS-2 (Back)

NOTE: Supplemental sheets in form of lists, sketches, or drawings may be used, provided (1) size is 8 1/2 in. x 11 in. (2) information in items 1 through 6 on this report is included on each sheet, and (3) each sheet is numbered and the number of sheets is recorded at the top of this form.

7. Description of Work REMOVED HYDRAULIC SNUBBER, REBUILT/REFURBISHED, AND REINSTALLED TO ORIGINAL LOCATION.

8. Test Conducted: ☐ Hydrostatic ☐ Pneumatic ☐ Nominal Operating Pressure ☒ Other ☐ Exempt

Pressure _____ psig Test Temp. _____ °F

Pressure _____ psig Test Temp. _____ °F

Pressure _____ psig Test Temp. _____ °F

9. Remarks PERFORMED FUNCTIONAL TESTING PER PROCEDURE SM/O/A/8110/001.

(Applicable Manufacturer's Data Records to be Attached)

CERTIFICATE OF COMPLIANCE

We certify that the statements made in the report are correct and this **repair or replacement** conforms to the rules of the ASME Code, Section XI.

Type Code Symbol Stamp **N/A**

Certificate of Authorization No. **N/A** Expiration Date **N/A**

Signed W McClure Date 12/9, 19 97
Owner or Owner's Designee, Title

CERTIFICATE OF INSERVICE INSPECTION

I, the undersigned, holding a valid commission issued by the National Board of Boiler and Pressure Vessel Inspectors and the State or Providence of N. C. and employed by **HSBI and I Company of Hartford Connecticut** have inspected the components described in this Owner's Report during the period 9-27-97 to 12-9-97; and state that to the best of my knowledge and belief, the Owner has performed examinations and taken corrective measures described in this Owner's Report in accordance with the requirements of the ASME Code, Section XI.

By signing this certificate, neither the Inspector nor his employer makes any warranty, expressed or implied, concerning the examinations and corrective measures described in this Owner's Report. Furthermore, neither the Inspector nor his employer shall be liable in any manner for any personal injury or property damage or a loss of any kind arising from or connected with this inspection.

M.B. Chapman Commissions NC 914
Inspector's Signature National Board, State, Providence and Endorsements

Date 12-9, 19 97

Form 40146

FORM NIS-2 OWNER'S REPORT FOR REPAIRS OR REPLACEMENTS
As Required By The Provisions Of The ASME Code Section XI

1. Owner **Duke Power Company**
   Address **526 S. Church Street, Charlotte, NC 28201-1006**

1a. Date 12/9/97

Sheet 1 of 1

2. Plant **Oconee Nuclear Station**
   Address **P.O. Box 1439, Seneca, S.C. 29679**

2a. Unit ☒ 1 ☐ 2 ☐ 3 ☐ Shared (specify Units_____)

3a. Work Order # 96074725-01
Repair Organization Job #

3. Work Performed By **Duke Power Company**
   Address **526 S. Church Street, Charlotte, NC 28201-1006**
   Type Code Symbol Stamp **N/A** Authorization No. **N/A** Expiration Date **N/A**

3b. NSM or MM # N/A

4. Identification of System 57 Class A

5. (a) Applicable Construction Code B31.7 1968 Edition, 6-68 Addenda, N/A Code Cases
   (b) Applicable Edition of Section XI Utilized for Repairs or Replacements 1989, No Addenda

6. Identification of Components Repaired or Replaced and Replacement Components

	Column 1	Column 2	Column 3	Column 4	Column 5	Col. 6	Column 7	Column 8
	Name of Component	Name of Manufacturer	Manufacturer Serial Number	National Board Number	Other Identification	Year Built	Repaired, Replaced, or Replacement	ASME Code Stamped (yes or no)
A	SNUBBER ON S/R 1-57-0-481A-H14	ITT GRINNELL	15098	N/A	N/A	N/A	☐ Repaired ☐ Replaced ☒ Replacement	☒ No ☐ Yes
B							☐ Repaired ☐ Replaced ☐ Replacement	☐ No ☐ Yes
C							☐ Repaired ☐ Replaced ☐ Replacement	☐ No ☐ Yes
D							☐ Repaired ☐ Replaced ☐ Replacement	☐ No ☐ Yes
E							☐ Repaired ☐ Replaced ☐ Replacement	☐ No ☐ Yes
F							☐ Repaired ☐ Replaced ☐ Replacement	☐ No ☐ Yes

Form 401463 (2-95)

Form NIS-2 (Back)

NOTE: Supplemental sheets in form of lists, sketches, or drawings may be used, provided (1) size is 8 1/2 in. x 11 in. (2) information in items 1 through 6 on this report is included on each sheet, and (3) each sheet is numbered and the number of sheets is recorded at the top of this form.

7. Description of Work REMOVED HYDRAULIC SNUBBER, REBUILT/REFURBISHED, AND REINSTALLED TO ORIGINAL LOCATION.

8. Test Conducted: ☐ Hydrostatic ☐ Pneumatic ☐ Nominal Operating Pressure ☒ Other ☐ Exempt

Pressure _____ psig Test Temp. _____ °F

Pressure _____ psig Test Temp. _____ °F

Pressure _____ psig Test Temp. _____ °F

9. Remarks PERFORMED FUNCTIONAL TESTING PER PROCEDURE SM/O/A/8110/001.

(Applicable Manufacturer's Data Records to be Attached)

CERTIFICATE OF COMPLIANCE

We certify that the statements made in the report are correct and this **repair or replacement** conforms to the rules of the ASME Code, Section XI.

Type Code Symbol Stamp **N/A**

Certificate of Authorization No. **N/A** Expiration Date **N/A**

Signed W M C Clure Date 12/9, 1997

Owner or Owner's Designee, Title

CERTIFICATE OF INSERVICE INSPECTION

I, the undersigned, holding a valid commission issued by the National Board of Boiler and Pressure Vessel Inspectors and the State or Providence of N. C. and employed by **HSBI and I Company of Hartford Connecticut** have inspected the components described in this Owner's Report during the period 9-26-97 to 12-9-97; and state that to the best of my knowledge and belief, the Owner has performed examinations and taken corrective measures described in this Owner's Report in accordance with the requirements of the ASME Code, Section XI.

By signing this certificate, neither the Inspector nor his employer makes any warranty, expressed or implied, concerning the examinations and corrective measures described in this Owner's Report. Furthermore, neither the Inspector nor his employer shall be liable in any manner for any personal injury or property damage or a loss of any kind arising from or connected with this inspection.

M B Chapman Commissions NC 914

Inspector's Signature National Board, State, Providence and Endorsements

Date 12-9, 1997

Form 401463 (2

FORM NIS-2 OWNER'S REPORT FOR REPAIRS OR REPLACEMENTS
As Required By The Provisions Of The ASME Code Section XI

1. Owner **Duke Power Company**
   Address **526 S. Church Street, Charlotte, NC 28201-1006**

1a. Date 11/20/97

Sheet 1 of 1

2. Plant **Oconee Nuclear Station**
   Address **P.O. Box 1439, Seneca, S.C. 29679**

2a. Unit ☒ 1 ☐ 2 ☐ 3 ☐ Shared (specify Units_____)

3a. Work Order # 97066969-01
Repair Organization Job #

3. Work Performed By **Duke Power Company**
   Address **526 S. Church Street, Charlotte, NC 28201-1006**
   Type Code Symbol Stamp **N/A** Authorization No. **N/A** Expiration Date **N/A**

3b. ~~NSM~~ or MM # 10648

4. Identification of System 51 Class B

5. (a) Applicable Construction Code B31.7 1968 Edition, 6-68 Addenda, N/A Code Cases
   (b) Applicable Edition of Section XI Utilized for Repairs or Replacements 1989, No Addenda

6. Identification of Components Repaired or Replaced and Replacement Components

	Column 1	Column 2	Column 3	Column 4	Column 5	Col. 6	Column 7	Column 8
	Name of Component	Name of Manufacturer	Manufacturer Serial Number	National Board Number	Other Identification	Year Built	Repaired, Replaced, or Replacement	ASME Code Stamped (yes or no)
A	S/R 1-51-478E-H6083	DPC	N/A	N/A	N/A	N/A	☐ Repaired ☐ Replaced ☒ Replacement	☒ No ☐ Yes
B							☐ Repaired ☐ Replaced ☐ Replacement	☐ No ☐ Yes
C							☐ Repaired ☐ Replaced ☐ Replacement	☐ No ☐ Yes
D							☐ Repaired ☐ Replaced ☐ Replacement	☐ No ☐ Yes
E							☐ Repaired ☐ Replaced ☐ Replacement	☐ No ☐ Yes
F							☐ Repaired ☐ Replaced ☐ Replacement	☐ No ☐ Yes

Form 401463 (2-95)

Form NIS-2 (Back)

NOTE: Supplemental sheets in form of lists, sketches, or drawings may be used, provided (1) size is 8 1/2 in. x 11 in. (2) information in items 1 through 6 on this report is included on each sheet, and (3) each sheet is numbered and the number of sheets is recorded at the top of this form.

7. Description of Work REMOVED EXISTING HANGER SPRING AND INSTALLED NEW SPRING PER MODIFICATION PACKAGE.

8. Test Conducted: ☐ Hydrostatic ☐ Pneumatic ☐ Nominal Operating Pressure ☐ Other ☒ Exempt

Pressure _____ psig Test Temp. _____ °F

Pressure _____ psig Test Temp. _____ °F

Pressure _____ psig Test Temp. _____ °F

9. Remarks _____

(Applicable Manufacturer's Data Records to be Attached)

CERTIFICATE OF COMPLIANCE

We certify that the statements made in the report are correct and this **repair or replacement** conforms to the rules of the ASME Code, Section XI.

Type Code Symbol Stamp **N/A**

Certificate of Authorization No. **N/A** Expiration Date **N/A**

Signed W McClure Date 11/20, 1997

Owner or Owner's Designee, Title

CERTIFICATE OF INSERVICE INSPECTION

I, the undersigned, holding a valid commission issued by the National Board of Boiler and Pressure Vessel Inspectors and the State or Providence of N.C. and employed by **HSBI and I Company of Hartford Connecticut** have inspected the components described in this Owner's Report during the period 11-22-97 to 12-10-97; and state that to the best of my knowledge and belief, the Owner has performed examinations and taken corrective measures described in this Owner's Report in accordance with the requirements of the ASME Code, Section XI.

By signing this certificate, neither the Inspector nor his employer makes any warranty, expressed or implied, concerning the examinations and corrective measures described in this Owner's Report. Furthermore, neither the Inspector nor his employer shall be liable in any manner for any personal injury or property damage or a loss of any kind arising from or connected with this inspection.

M B Chapman Commissions NC914

Inspector's Signature National Board, State, Providence and Endorsements

Date 12-10, 1997

Form 401463

FORM NIS-2 OWNER'S REPORT FOR REPAIRS OR REPLACEMENTS
As Required By The Provisions Of The ASME Code Section XI

1. Owner **Duke Power Company**
   Address **526 S. Church Street, Charlotte, NC 28201-1006**

1a. Date 12/10/97

Sheet 1 of 1

2. Plant **Oconee Nuclear Station**
   Address **P.O. Box 1439, Seneca, S.C. 29679**

2a. Unit ☒ 1 ☐ 2 ☐ 3 ☐ Shared (specify Units _____)

3. Work Performed By **Duke Power Company**
   Address **526 S. Church Street, Charlotte, NC 28201-1006**
   Type Code Symbol Stamp **N/A** Authorization No. **N/A** Expiration Date **N/A**

3a. Work Order # 97052928-49
Repair Organization Job #

3b. NSM or MM # N/A

4. Identification of System 57 Class A

5. (a) Applicable Construction Code B31.7 1968 Edition, 6-68 Addenda, N/A Code Cases
   (b) Applicable Edition of Section XI Utilized for Repairs or Replacements 1989, No Addenda

6. Identification of Components Repaired or Replaced and Replacement Components

	Column 1	Column 2	Column 3	Column 4	Column 5	Col. 6	Column 7	Column 8
	Name of Component	Name of Manufacturer	Manufacturer Serial Number	National Board Number	Other Identification	Year Built	Repaired, Replaced, or Replacement	ASME Code Stamped (yes or no)
A	S/R 1-57-0-481A-H23	DPC	N/A	N/A	N/A	N/A	☐ Repaired ☐ Replaced ☒ Replacement	☒ No ☐ Yes
B							☐ Repaired ☐ Replaced ☐ Replacement	☐ No ☐ Yes
C							☐ Repaired ☐ Replaced ☐ Replacement	☐ No ☐ Yes
D							☐ Repaired ☐ Replaced ☐ Replacement	☐ No ☐ Yes
E							☐ Repaired ☐ Replaced ☐ Replacement	☐ No ☐ Yes
F							☐ Repaired ☐ Replaced ☐ Replacement	☐ No ☐ Yes

Form 401463 (2-95)

Form NIS-2 (Back)

NOTE: Supplemental sheets in form of lists, sketches, or drawings may be used, provided (1) size is 8 1/2 in. x 11 in. (2) information in items 1 through 6 on this report is included on each sheet, and (3) each sheet is numbered and the number of sheets is recorded at the top of this form.

7. Description of Work INSTALLED NEW PIVOT PIN & WASHERS ON EXISTING SUPPORT/RESTRAIN

8. Test Conducted: ☐ Hydrostatic ☐ Pneumatic ☐ Nominal Operating Pressure ☐ Other ☒ Exempt

Pressure _____ psig Test Temp. _____ °F

Pressure _____ psig Test Temp. _____ °F

Pressure _____ psig Test Temp. _____ °F

9. Remarks _____

(Applicable Manufacturer's Data Records to be Attached)

CERTIFICATE OF COMPLIANCE

We certify that the statements made in the report are correct and this **repair or replacement** conforms to the rules of the ASME Code, Section XI.

Type Code Symbol Stamp **N/A**

Certificate of Authorization No. **N/A** Expiration Date **N/A**

Signed W McClure Date 12/10, 19 97

Owner or Owner's Designee, Title

CERTIFICATE OF INSERVICE INSPECTION

I, the undersigned, holding a valid commission issued by the National Board of Boiler and Pressure Vessel Inspectors and the State or Providence of N.C and employed by **HSBI and I Company of Hartford Connecticut** have inspected the components described in this Owner's Report during the period 11-13-97 to 12-10-97; and state that to the best of my knowledge and belief, the Owner has performed examinations and taken corrective measures described in this Owner's Report in accordance with the requirements of the ASME Code, Section XI.

By signing this certificate, neither the Inspector nor his employer makes any warranty, expressed or implied, concerning the examinations and corrective measures described in this Owner's Report. Furthermore, neither the Inspector nor his employer shall be liable in any manner for any personal injury or property damage or a loss of any kind arising from or connected with this inspection.

MB Chapman Commissions NC 914

Inspector's Signature National Board, State, Providence and Endorsements

Date 12-10, 19 97

Form 401463 (2

FORM NIS-2 OWNER'S REPORT FOR REPAIRS OR REPLACEMENTS
As Required By The Provisions Of The ASME Code Section XI

1. Owner **Duke Power Company**
   Address **526 S. Church Street, Charlotte, NC 28201-1006**

1a. Date 11/14/97

Sheet 1 of Form 1

2. Plant **Oconee Nuclear Station**
   Address **P.O. Box 1439, Seneca, S.C. 29679**

2a. Unit ☒ 1 ☐ 2 ☐ 3 ☐ Shared (specify Units_____)

3. Work Performed By **Duke Power Company**
   Address **526 S. Church Street, Charlotte, NC 28201-1006**
   Type Code Symbol Stamp **N/A** Authorization No. **N/A** Expiration Date **N/A**

3a. Work Order # 96043036-01
Repair Organization Job #

3b. ~~NSM~~ or MM # 9204

4. Identification of System 53B Class B

5. (a) Applicable Construction Code B31.7 1968 Edition, 6-68 Addenda, N/A Code Cases
   (b) Applicable Edition of Section XI Utilized for Repairs or Replacements 1989, No Addenda

6. Identification of Components Repaired or Replaced and Replacement Components

	Column 1	Column 2	Column 3	Column 4	Column 5	Col. 6	Column 7	Column 8
	Name of Component	Name of Manufacturer	Manufacturer Serial Number	National Board Number	Other Identification	Year Built	Repaired, Replaced, or Replacement	ASME Code Stamped (yes or no)
A	S/R 1-53B-5-0-439C-H37	DPC	N/A	N/A	N/A	N/A	☐ Repaired ☐ Replaced ☒ Replacement	☒ No ☐ Yes
B	S/R 1-53B-6-0-439C-H14	DPC	N/A	N/A	N/A	N/A	☐ Repaired ☐ Replaced ☒ Replacement	☒ No ☐ Yes
C	1-53B-0-438C-DE057	DPC	N/A	N/A	N/A	N/A	☐ Repaired ☐ Replaced ☒ Replacement	☒ No ☐ Yes
D	1-53B-6-0-439C-H13	DPC	N/A	N/A	N/A	N/A	☐ Repaired ☐ Replaced ☒ Replacement	☒ No ☐ Yes
E							☐ Repaired ☐ Replaced ☐ Replacement	☐ No ☐ Yes
F							☐ Repaired ☐ Replaced ☐ Replacement	☐ No ☐ Yes

Form 401463 (2-95)

Form NIS-2 (Back)

NOTE: Supplemental sheets in form of lists, sketches, or drawings may be used, provided (1) size is 8 1/2 in. x 11 in. (2) information in items 1 through 6 on this report is included on each sheet, and (3) each sheet is numbered and the number of sheets is recorded at the top of this form.

7. Description of Work MODIFICATION OF EXISTING SUPPORT/RESTRAINTS.

8. Test Conducted: ☐ Hydrostatic ☐ Pneumatic ☐ Nominal Operating Pressure ~~☒~~ wm Other ☒ Exempt

Pressure _____ psig Test Temp. _____ °F

Pressure _____ psig Test Temp. _____ °F

Pressure _____ psig Test Temp. _____ °F

9. Remarks _____

(Applicable Manufacturer's Data Records to be Attached)

CERTIFICATE OF COMPLIANCE

We certify that the statements made in the report are correct and this **repair or replacement** conforms to the rules of the ASME Code, Section XI.

Type Code Symbol Stamp **N/A**

Certificate of Authorization No. **N/A** Expiration Date **N/A**

Signed Wm McClure Date 11/14, 19 97
Owner or Owner's Designee, Title

CERTIFICATE OF INSERVICE INSPECTION

I, the undersigned, holding a valid commission issued by the National Board of Boiler and Pressure Vessel Inspectors and the State or Providence of N.C. and employed by **HSBI and I Company of Hartford Connecticut** have inspected the components described in this Owner's Report during the period 12-6-97 to 12-15-97; and state that to the best of my knowledge and belief, the Owner has performed examinations and taken corrective measures described in this Owner's Report in accordance with the requirements of the ASME Code, Section XI.

By signing this certificate, neither the Inspector nor his employer makes any warranty, expressed or implied, concerning the examinations and corrective measures described in this Owner's Report. Furthermore, neither the Inspector nor his employer shall be liable in any manner for any personal injury or property damage or a loss of any kind arising from or connected with this inspection.

MB Chapman Commissions NC914
Inspector's Signature National Board, State, Providence and Endorsements

Date 12-15, 1997

Form 401463

FORM NIS-2 OWNER'S REPORT FOR REPAIRS OR REPLACEMENTS
As Required By The Provisions Of The ASME Code Section XI

1. Owner **Duke Power Company**
   Address **526 S. Church Street, Charlotte, NC 28201-1006**

1a. Date 12/16/97

Sheet 1 of 1

2. Plant **Oconee Nuclear Station**
   Address **P.O. Box 1439, Seneca, S.C. 29679**

2a. Unit ☒ 1 ☐ 2 ☐ 3 ☐ Shared (specify Units_____)

3. Work Performed By **Duke Power Company**
   Address **526 S. Church Street, Charlotte, NC 28201-1006**
   Type Code Symbol Stamp **N/A** Authorization No. **N/A** Expiration Date **N/A**

3a. Work Order # 96074680-01
Repair Organization Job #

3b. NSM or MM # N/A

4. Identification of System 51A Class A

5. (a) Applicable Construction Code B31.7 1968 Edition, 6-68 Addenda, N/A Code Cases
   (b) Applicable Edition of Section XI Utilized for Repairs or Replacements 1989, No Addenda

6. Identification of Components Repaired or Replaced and Replacement Components

	Column 1	Column 2	Column 3	Column 4	Column 5	Col. 6	Column 7	Column 8
	Name of Component	Name of Manufacturer	Manufacturer Serial Number	National Board Number	Other Identification	Year Built	Repaired, Replaced, or Replacement	ASME Code Stamped (yes or no)
A	S/R 1-51A-0-479A-H17A	DPC	N/A	N/A	N/A	N/A	☐ Repaired ☐ Replaced ☒ Replacement	☒ No ☐ Yes
B							☐ Repaired ☐ Replaced ☐ Replacement	☐ No ☐ Yes
C							☐ Repaired ☐ Replaced ☐ Replacement	☐ No ☐ Yes
D							☐ Repaired ☐ Replaced ☐ Replacement	☐ No ☐ Yes
E							☐ Repaired ☐ Replaced ☐ Replacement	☐ No ☐ Yes
F							☐ Repaired ☐ Replaced ☐ Replacement	☐ No ☐ Yes

Form 401463 (2-95)

Form NIS-2 (Back)

NOTE: Supplemental sheets in form of lists, sketches, or drawings may be used, provided (1) size is 8 1/2 in. x 11 in. (2) information in items 1 through 6 on this report is included on each sheet, and (3) each sheet is numbered and the number of sheets is recorded at the top of this form.

7. Description of Work INSTALLED NEW PIPE HANGER CLAMP ON EXISTING SUPPORT/RESTRAIN

8. Test Conducted: ☐ Hydrostatic ☐ Pneumatic ☐ Nominal Operating Pressure ☐ Other ☒ Exempt

Pressure _____ psig Test Temp. _____ °F

Pressure _____ psig Test Temp. _____ °F

Pressure _____ psig Test Temp. _____ °F

9. Remarks _____

(Applicable Manufacturer's Data Records to be Attached)

CERTIFICATE OF COMPLIANCE

We certify that the statements made in the report are correct and this **repair or replacement** conforms to the rules of the ASME Code, Section XI.

Type Code Symbol Stamp **N/A**

Certificate of Authorization No. **N/A** Expiration Date **N/A**

Signed W M McClure Date 12/16, 1997

Owner or Owner's Designee, Title

CERTIFICATE OF INSERVICE INSPECTION

I, the undersigned, holding a valid commission issued by the National Board of Boiler and Pressure Vessel Inspectors and the State or Providence of N.C. and employed by **HSBI and I Company of Hartford Connecticut** have inspected the components described in this Owner's Report during the period 9-29-97 to 12-16-97; and state that to the best of my knowledge and belief, the Owner has performed examinations and taken corrective measures described in this Owner's Report in accordance with the requirements of the ASME Code, Section XI.

By signing this certificate, neither the Inspector nor his employer makes any warranty, expressed or implied, concerning the examinations and corrective measures described in this Owner's Report. Furthermore, neither the Inspector nor his employer shall be liable in any manner for any personal injury or property damage or a loss of any kind arising from or connected with this inspection.

MB Chapman Commissions NC914

Inspector's Signature National Board, State, Providence and Endorsements

Date 12-16, 1997

Form 401463

FORM NIS-2 OWNER'S REPORT FOR REPAIRS OR REPLACEMENTS
As Required By The Provisions Of The ASME Code Section XI

1. Owner **Duke Power Company**
   Address **526 S. Church Street, Charlotte, NC 28201-1006**

1a. Date 11/20/97

Sheet 1 of 1

2. Plant **Oconee Nuclear Station**
   Address **P.O. Box 1439, Seneca, S.C. 29679**

2a. Unit ☒ 1 ☐ 2 ☐ 3 ☐ Shared (specify Units _____)

3. Work Performed By **Duke Power Company**
   Address **526 S. Church Street, Charlotte, NC 28201-1006**
   Type Code Symbol Stamp **N/A** Authorization No. **N/A** Expiration Date **N/A**

3a. Work Order # 95028432-01
Repair Organization Job #

3b. ~~NSM~~ or MM # 7325

4. Identification of System 51A Class B

5. (a) Applicable Construction Code B31.7 1968 Edition, 6-68 Addenda, N/A Code Cases
   (b) Applicable Edition of Section XI Utilized for Repairs or Replacements 1989, No Addenda

6. Identification of Components Repaired or Replaced and Replacement Components

	Column 1	Column 2	Column 3	Column 4	Column 5	Col. 6	Column 7	Column 8
	Name of Component	Name of Manufacturer	Manufacturer Serial Number	National Board Number	Other Identification	Year Built	Repaired, Replaced, or Replacement	ASME Code Stamped (yes or no)
A	S/R 1-51A-1-0-435C-H63	DPC	N/A	N/A	N/A	N/A	☐ Repaired ☐ Replaced ☒ Replacement	☒ No ☐ Yes
B							☐ Repaired ☐ Replaced ☐ Replacement	☐ No ☐ Yes
C							☐ Repaired ☐ Replaced ☐ Replacement	☐ No ☐ Yes
D							☐ Repaired ☐ Replaced ☐ Replacement	☐ No ☐ Yes
E							☐ Repaired ☐ Replaced ☐ Replacement	☐ No ☐ Yes
F							☐ Repaired ☐ Replaced ☐ Replacement	☐ No ☐ Yes

Form NIS-2 (Back)

NOTE: Supplemental sheets in form of lists, sketches, or drawings may be used, provided (1) size is 8 1/2 in. x 11 in. (2) information in items 1 through 6 on this report is included on each sheet, and (3) each sheet is numbered and the number of sheets is recorded at the top of this form.

7. Description of Work SUPPORT RESTRAINT WAS REMOVED AND REPLACED IN NEW LOCATION TO ACCOMODATE VALVE MODIFICATION.

8. Test Conducted: ☐ Hydrostatic ☐ Pneumatic ☐ Nominal Operating Pressure ☐ Other ☒ Exempt

Pressure _____ psig Test Temp. _____ °F

Pressure _____ psig Test Temp. _____ °F

Pressure _____ psig Test Temp. _____ °F

9. Remarks _____

(Applicable Manufacturer's Data Records to be Attached)

CERTIFICATE OF COMPLIANCE

We certify that the statements made in the report are correct and this **repair or replacement** conforms to the rules of the ASME Code, Section XI.

Type Code Symbol Stamp **N/A**

Certificate of Authorization No. **N/A** Expiration Date **N/A**

Signed Wm Clark Date 11/20, 19 97

Owner or Owner's Designee, Title

CERTIFICATE OF INSERVICE INSPECTION

I, the undersigned, holding a valid commission issued by the National Board of Boiler and Pressure Vessel Inspectors and the State or Providence of N.C. and employed by **HSBI and I Company of Hartford Connecticut** have inspected the components described in this Owner's Report during the period 9-28-97 to 11-20-97; and state that to the best of my knowledge and belief, the Owner has performed examinations and taken corrective measures described in this Owner's Report in accordance with the requirements of the ASME Code, Section XI.

By signing this certificate, neither the Inspector nor his employer makes any warranty, expressed or implied, concerning the examinations and corrective measures described in this Owner's Report. Furthermore, neither the Inspector nor his employer shall be liable in any manner for any personal injury or property damage or a loss of any kind arising from or connected with this inspection.

MB Chapman Commissions NC914

Inspector's Signature National Board, State, Providence and Endorsements

Date 11-20-97, 19_____

Form 4014 [illegible])

FORM NIS-2 OWNER'S REPORT FOR REPAIRS OR REPLACEMENTS
As Required By The Provisions Of The ASME Code Section XI

1. Owner **Duke Power Company**
   Address **526 S. Church Street, Charlotte, NC 28201-1006**

1a. Date 10/31/97

Sheet 1 of 1

2. Plant **Oconee Nuclear Station**
   Address **P.O. Box 1439, Seneca, S.C. 29679**

2a. Unit ☒ 1 ☐ 2 ☐ 3 ☐ Shared (specify Units _____)

3. Work Performed By **Duke Power Company**
   Address **526 S. Church Street, Charlotte, NC 28201-1006**
   Type Code Symbol Stamp **N/A** Authorization No. **N/A** Expiration Date **N/A**

3a. Work Order # 95021042-09
Repair Organization Job #

3b. NSM or MM # N/A

4. Identification of System 53B Class B

5. (a) Applicable Construction Code B31.7 1968 Edition, 6-68 Addenda, N/A Code Cases
   (b) Applicable Edition of Section XI Utilized for Repairs or Replacements 1989, No Addenda

6. Identification of Components Repaired or Replaced and Replacement Components

	Column 1	Column 2	Column 3	Column 4	Column 5	Col. 6	Column 7	Column 8
	Name of Component	Name of Manufacturer	Manufacturer Serial Number	National Board Number	Other Identification	Year Built	Repaired, Replaced, or Replacement	ASME Code Stamped (yes or no)
A	S/R 4-53B-463B-EMO-H60	DPC	N/A	N/A	N/A	N/A	☒ Repaired ☐ Replaced ☐ Replacement	☒ No ☐ Yes
B							☐ Repaired ☐ Replaced ☐ Replacement	☐ No ☐ Yes
C							☐ Repaired ☐ Replaced ☐ Replacement	☐ No ☐ Yes
D							☐ Repaired ☐ Replaced ☐ Replacement	☐ No ☐ Yes
E							☐ Repaired ☐ Replaced ☐ Replacement	☐ No ☐ Yes
F							☐ Repaired ☐ Replaced ☐ Replacement	☐ No ☐ Yes

Form NIS-2 (Back)

NOTE: Supplemental sheets in form of lists, sketches, or drawings may be used, provided (1) size is 8 1/2 in. x 11 in. (2) information in items 1 through 6 on this report is included on each sheet, and (3) each sheet is numbered and the number of sheets is recorded at the top of this form.

7. Description of Work TEMPORARY REMOVAL OF S/R, REINSTALLED MAKING WELD TO PIECE #4 TO #5.

8. Test Conducted: ☐ Hydrostatic ☐ Pneumatic ☐ Nominal Operating Pressure ☐ Other ☒ Exempt

Pressure _____ psig Test Temp. _____ °F

Pressure _____ psig Test Temp. _____ °F

Pressure _____ psig Test Temp. _____ °F

9. Remarks _____

(Applicable Manufacturer's Data Records to be Attached)

CERTIFICATE OF COMPLIANCE

We certify that the statements made in the report are correct and this **repair or replacement** conforms to the rules of the ASME Code, Section XI.

Type Code Symbol Stamp **N/A**

Certificate of Authorization No. **N/A** Expiration Date **N/A**

Signed Wm McClure Date 10/31, 1997
Owner or Owner's Designee, Title

CERTIFICATE OF INSERVICE INSPECTION

I, the undersigned, holding a valid commission issued by the National Board of Boiler and Pressure Vessel Inspectors and the State or Providence of N.C. and employed by **HSBI and I Company of Hartford Connecticut** have inspected the components described in this Owner's Report during the period 10-19-97 to 10-31-97; and state that to the best of my knowledge and belief, the Owner has performed examinations and taken corrective measures described in this Owner's Report in accordance with the requirements of the ASME Code, Section XI.

By signing this certificate, neither the Inspector nor his employer makes any warranty, expressed or implied, concerning the examinations and corrective measures described in this Owner's Report. Furthermore, neither the Inspector nor his employer shall be liable in any manner for any personal injury or property damage or a loss of any kind arising from or connected with this inspection.

MB Chapman Commissions NC914
Inspector's Signature National Board, State, Providence and Endorsements

Date 10-31, 1997

Form 40146 (1/89)

FORM NIS-2 OWNER'S REPORT FOR REPAIRS OR REPLACEMENTS
As Required By The Provisions Of The ASME Code Section XI

1. Owner **Duke Power Company**
   Address **526 S. Church Street, Charlotte, NC 28201-1006**

1a. Date 11/14/97

Sheet 1 of 1

2. Plant **Oconee Nuclear Station**
   Address **P.O. Box 1439, Seneca, S.C. 29679**

2a. Unit ☒ 1 ☐ 2 ☐ 3 ☐ Shared (specify Units _____)

3a. Work Order # 96074721-01
Repair Organization Job #

3. Work Performed By **Duke Power Company**
   Address **526 S. Church Street, Charlotte, NC 28201-1006**
   Type Code Symbol Stamp **N/A** Authorization No. **N/A** Expiration Date **N/A**

3b. NSM or MM # N/A

4. Identification of System 57 Class B

5. (a) Applicable Construction Code B31.7 1968 Edition, 6-68 Addenda, N/A Code Cases
   (b) Applicable Edition of Section XI Utilized for Repairs or Replacements 1989, No Addenda

6. Identification of Components Repaired or Replaced and Replacement Components

	Column 1	Column 2	Column 3	Column 4	Column 5	Col. 6	Column 7	Column 8
	Name of Component	Name of Manufacturer	Manufacturer Serial Number	National Board Number	Other Identification	Year Built	Repaired, Replaced, or Replacement	ASME Code Stamped (yes or no)
A	SNUBBER ON S/R 1-57-481A-H10	ITT GRINNELL	18591	N/A	N/A	N/A	☐ Repaired ☐ Replaced ☒ Replacement	☒ No ☐ Yes
B							☐ Repaired ☐ Replaced ☐ Replacement	☐ No ☐ Yes
C							☐ Repaired ☐ Replaced ☐ Replacement	☐ No ☐ Yes
D							☐ Repaired ☐ Replaced ☐ Replacement	☐ No ☐ Yes
E							☐ Repaired ☐ Replaced ☐ Replacement	☐ No ☐ Yes
F							☐ Repaired ☐ Replaced ☐ Replacement	☐ No ☐ Yes

Form 401463 (2-95)

Form NIS-2 (Back)

NOTE: Supplemental sheets in form of lists, sketches, or drawings may be used, provided (1) size is 8 1/2 in. x 11 in. (2) information in items 1 through 6 on this report is included on each sheet, and (3) each sheet is numbered and the number of sheets is recorded at the top of this form.

7. Description of Work REMOVED HYDRAULIC SNUBBER, REBUILT/REFURBISHED, AND REINSTALLED TO ORIGINAL LOCATION.

8. Test Conducted: ☐ Hydrostatic ☐ Pneumatic ☐ Nominal Operating Pressure ☒ Other ☐ Exempt

Pressure _____ psig Test Temp. _____ °F

Pressure _____ psig Test Temp. _____ °F

Pressure _____ psig Test Temp. _____ °F

9. Remarks PERFORMED FUNCTIONAL TESTING PER PROCEDURE SM/O/A/8110/001.

(Applicable Manufacturer's Data Records to be Attached)

CERTIFICATE OF COMPLIANCE

We certify that the statements made in the report are correct and this **repair or replacement** conforms to the rules of the ASME Code, Section XI.

Type Code Symbol Stamp **N/A**

Certificate of Authorization No. **N/A** Expiration Date **N/A**

Signed W M McClure Date 11/14, 19 97
Owner or Owner's Designee, Title

CERTIFICATE OF INSERVICE INSPECTION

I, the undersigned, holding a valid commission issued by the National Board of Boiler and Pressure Vessel Inspectors and the State or Providence of N.C. and employed by **HSBI and I Company of Hartford Connecticut** have inspected the components described in this Owner's Report during the period 9-27-97 to 11-14-97; and state that to the best of my knowledge and belief, the Owner has performed examinations and taken corrective measures described in this Owner's Report in accordance with the requirements of the ASME Code, Section XI.

By signing this certificate, neither the Inspector nor his employer makes any warranty, expressed or implied, concerning the examinations and corrective measures described in this Owner's Report. Furthermore, neither the Inspector nor his employer shall be liable in any manner for any personal injury or property damage or a loss of any kind arising from or connected with this inspection.

M B Chapman Commissions NC914
Inspector's Signature National Board, State, Providence and Endorsements

Date 11-14, 19 97

Form 401463

FORM NIS-2 OWNER'S REPORT FOR REPAIRS OR REPLACEMENTS
As Required By The Provisions Of The ASME Code Section XI

1. Owner **Duke Power Company**
   Address **526 S. Church Street, Charlotte, NC 28201-1006**

1a. Date 11/14/97

Sheet 1 of 1

2. Plant **Oconee Nuclear Station**
   Address **P.O. Box 1439, Seneca, S.C. 29679**

2a. Unit ☒ 1 ☐ 2 ☐ 3 ☐ Shared (specify Units_____)

3. Work Performed By **Duke Power Company**
   Address **526 S. Church Street, Charlotte, NC 28201-1006**
   Type Code Symbol Stamp **N/A** Authorization No. **N/A** Expiration Date **N/A**

3a. Work Order # 97090355-01
Repair Organization Job #

3b. NSM or MM # N/A

4. Identification of System 51 Class B

5. (a) Applicable Construction Code B31.7 1968 Edition, 6-68 Addenda, N/A Code Cases
   (b) Applicable Edition of Section XI Utilized for Repairs or Replacements 1989, No Addenda

6. Identification of Components Repaired or Replaced and Replacement Components

	Column 1	Column 2	Column 3	Column 4	Column 5	Col. 6	Column 7	Column 8
	Name of Component	Name of Manufacturer	Manufacturer Serial Number	National Board Number	Other Identification	Year Built	Repaired, Replaced, or Replacement	ASME Code Stamped (yes or no)
A	S/R 1-51-0-436-SR3	DPC	N/A	N/A	N/A	N/A	☒ Repaired ☐ Replaced ☐ Replacement	☒ No ☐ Yes
B							☐ Repaired ☐ Replaced ☐ Replacement	☐ No ☐ Yes
C							☐ Repaired ☐ Replaced ☐ Replacement	☐ No ☐ Yes
D							☐ Repaired ☐ Replaced ☐ Replacement	☐ No ☐ Yes
E							☐ Repaired ☐ Replaced ☐ Replacement	☐ No ☐ Yes
F							☐ Repaired ☐ Replaced ☐ Replacement	☐ No ☐ Yes

Form 401463 (2-95)

Form NIS-2 (Back)

NOTE: Supplemental sheets in form of lists, sketches, or drawings may be used, provided (1) size is 8 1/2 in. x 11 in. (2) information in items 1 through 6 on this report is included on each sheet, and (3) each sheet is numbered and the number of sheets is recorded at the top of this form.

7. Description of Work WELDED SHIM TO BASEPLATE FOR PROPER BEARING.

8. Test Conducted: ☐ Hydrostatic ☐ Pneumatic ☐ Nominal Operating Pressure ☐ Other ☒ Exempt

Pressure _____ psig Test Temp. _____ °F

Pressure _____ psig Test Temp. _____ °F

Pressure _____ psig Test Temp. _____ °F

9. Remarks _____

(Applicable Manufacturer's Data Records to be Attached)

CERTIFICATE OF COMPLIANCE

We certify that the statements made in the report are correct and this **repair or replacement** conforms to the rules of the ASME Code, Section XI.

Type Code Symbol Stamp **N/A**

Certificate of Authorization No. **N/A** Expiration Date **N/A**

Signed W McClure Date 11/14, 19 97
Owner or Owner's Designee, Title

CERTIFICATE OF INSERVICE INSPECTION

I, the undersigned, holding a valid commission issued by the National Board of Boiler and Pressure Vessel Inspectors and the State or Providence of N.C. and employed by **HSBI and I Company of Hartford Connecticut** have inspected the components described in this Owner's Report during the period 10-26-97 to 11-14-97; and state that to the best of my knowledge and belief, the Owner has performed examinations and taken corrective measures described in this Owner's Report in accordance with the requirements of the ASME Code, Section XI.

By signing this certificate, neither the Inspector nor his employer makes any warranty, expressed or implied, concerning the examinations and corrective measures described in this Owner's Report. Furthermore, neither the Inspector nor his employer shall be liable in any manner for any personal injury or property damage or a loss of any kind arising from or connected with this inspection.

M B Chapman Commissions NC 914
Inspector's Signature National Board, State, Providence and Endorsements

Date 11-14, 19 97

Form 401463 (2

FORM NIS-2 OWNER'S REPORT FOR REPAIRS OR REPLACEMENTS
As Required By The Provisions Of The ASME Code Section XI

1. Owner **Duke Power Company**
   Address **526 S. Church Street, Charlotte, NC 28201-1006**

1a. Date 10/22/97

Sheet 1 of 1

2. Plant **Oconee Nuclear Station**
   Address **P.O. Box 1439, Seneca, S.C. 29679**

2a. Unit ☒ 1 ☐ 2 ☐ 3 ☐ Shared (specify Units_____)

3. Work Performed By **Duke Power Company**
   Address **526 S. Church Street, Charlotte, NC 28201-1006**
   Type Code Symbol Stamp **N/A** Authorization No. **N/A** Expiration Date **N/A**

3a. Work Order # 97036785-01
Repair Organization Job #

3b. NSM or MM # N/A

4. Identification of System O1A Class B

5. (a) Applicable Construction Code B31.1 1967 Edition, N/A Addenda, N/A Code Cases
   (b) Applicable Edition of Section XI Utilized for Repairs or Replacements 1989, No Addenda

6. Identification of Components Repaired or Replaced and Replacement Components

	Column 1	Column 2	Column 3	Column 4	Column 5	Col. 6	Column 7	Column 8
	Name of Component	Name of Manufacturer	Manufacturer Serial Number	National Board Number	Other Identification	Year Built	Repaired, Replaced, or Replacement	ASME Code Stamped (yes or no)
A	S/R 1-01A-0-550-H11	DPC	N/A	N/A	N/A	N/A	☒ Repaired ☐ Replaced ☒ Replacement	☒ No ☐ Yes
B							☐ Repaired ☐ Replaced ☐ Replacement	☐ No ☐ Yes
C							☐ Repaired ☐ Replaced ☐ Replacement	☐ No ☐ Yes
D							☐ Repaired ☐ Replaced ☐ Replacement	☐ No ☐ Yes
E							☐ Repaired ☐ Replaced ☐ Replacement	☐ No ☐ Yes
F							☐ Repaired ☐ Replaced ☐ Replacement	☐ No ☐ Yes

Form 401463 (2-95)

Form NIS-2 (Back)

NOTE: Supplemental sheets in form of lists, sketches, or drawings may be used, provided (1) size is 8 1/2 in. x 11 in. (2) information in items 1 through 6 on this report is included on each sheet, and (3) each sheet is numbered and the number of sheets is recorded at the top of this form.

7. Description of Work REMOVED EXISTING SPRING CAN/PIPE CLAMPS AND INSTALLED NEW CAN/CLAMPS, WELDED IN PLACE.

8. Test Conducted: ☐ Hydrostatic ☐ Pneumatic ☐ Nominal Operating Pressure ☐ Other ☒ Exempt

Pressure _____ psig Test Temp. _____ °F

Pressure _____ psig Test Temp. _____ °F

Pressure _____ psig Test Temp. _____ °F

9. Remarks _____

(Applicable Manufacturer's Data Records to be Attached)

CERTIFICATE OF COMPLIANCE

We certify that the statements made in the report are correct and this **repair or replacement** conforms to the rules of the ASME Code, Section XI.

Type Code Symbol Stamp **N/A**

Certificate of Authorization No. **N/A** Expiration Date **N/A**

Signed W McClure Date 10/22, 1997

Owner or Owner's Designee, Title

CERTIFICATE OF INSERVICE INSPECTION

I, the undersigned, holding a valid commission issued by the National Board of Boiler and Pressure Vessel Inspectors and the State or Providence of N.C. and employed by **HSBI and I Company of Hartford Connecticut** have inspected the components described in this Owner's Report during the period 10-10-97 to 10-22-97; and state that to the best of my knowledge and belief, the Owner has performed examinations and taken corrective measures described in this Owner's Report in accordance with the requirements of the ASME Code, Section XI.

By signing this certificate, neither the Inspector nor his employer makes any warranty, expressed or implied, concerning the examinations and corrective measures described in this Owner's Report. Furthermore, neither the Inspector nor his employer shall be liable in any manner for any personal injury or property damage or a loss of any kind arising from or connected with this inspection.

MB Chapman Commissions NC 914

Inspector's Signature National Board, State, Providence and Endorsements

Date 10-22, 1997

Form 401463 (8)

FORM NIS-2 OWNER'S REPORT FOR REPAIRS OR REPLACEMENTS
As Required By The Provisions Of The ASME Code Section XI

1. Owner **Duke Power Company**
   Address **526 S. Church Street, Charlotte, NC 28201-1006**

1a. Date 12/2/97

Sheet 1 of 1

2. Plant **Oconee Nuclear Station**
   Address **P.O. Box 1439, Seneca, S.C. 29679**

2a. Unit ☒ 1 ☐ 2 ☐ 3 ☐ Shared (specify Units _____)

3a. Work Order # 97096858-01
Repair Organization Job #

3. Work Performed By **Duke Power Company**
   Address **526 S. Church Street, Charlotte, NC 28201-1006**
   Type Code Symbol Stamp **N/A** Authorization No. **N/A** Expiration Date **N/A**

3b. NSM or MM # N/A

4. Identification of System 50 Class A

5. (a) Applicable Construction Code B31.7 1968 Edition, 6-68 Addenda, N/A Code Cases
   (b) Applicable Edition of Section XI Utilized for Repairs or Replacements 1989, No Addenda

6. Identification of Components Repaired or Replaced and Replacement Components

	Column 1	Column 2	Column 3	Column 4	Column 5	Col. 6	Column 7	Column 8
	Name of Component	Name of Manufacturer	Manufacturer Serial Number	National Board Number	Other Identification	Year Built	Repaired, Replaced, or Replacement	ASME Code Stamped (yes or no)
A	SNUBBER ON S/R 1-50-D-66A-RCPM-S12	ITT GRINNELL	33969	N/A	N/A	N/A	☐ Repaired ☐ Replaced ☒ Replacement	☒ No ☐ Yes
B							☐ Repaired ☐ Replaced ☐ Replacement	☐ No ☐ Yes
C							☐ Repaired ☐ Replaced ☐ Replacement	☐ No ☐ Yes
D							☐ Repaired ☐ Replaced ☐ Replacement	☐ No ☐ Yes
E							☐ Repaired ☐ Replaced ☐ Replacement	☐ No ☐ Yes
F							☐ Repaired ☐ Replaced ☐ Replacement	☐ No ☐ Yes

Form NIS-2 (Back)

NOTE: Supplemental sheets in form of lists, sketches, or drawings may be used, provided (1) size is 8 1/2 in. x 11 in. (2) information in items 1 through 6 on this report is included on each sheet, and (3) each sheet is numbered and the number of sheets is recorded at the top of this form.

7. Description of Work REMOVED HYDRAULIC SNUBBER, REBUILT/REFURBISHED, AND REINSTALLED TO ORIGINAL LOCATION.

8. Test Conducted: ☐ Hydrostatic ☐ Pneumatic ☐ Nominal Operating Pressure ☒ Other ☐ Exempt

Pressure _____ psig Test Temp. _____ °F

Pressure _____ psig Test Temp. _____ °F

Pressure _____ psig Test Temp. _____ °F

9. Remarks PERFORMED FUNCTIONAL TESTING PER PROCEDURE SM/O/A/8110/001.

(Applicable Manufacturer's Data Records to be Attached)

CERTIFICATE OF COMPLIANCE

We certify that the statements made in the report are correct and this **repair or replacement** conforms to the rules of the ASME Code, Section XI.

Type Code Symbol Stamp **N/A**

Certificate of Authorization No. **N/A** Expiration Date **N/A**

Signed W M C Clure Date 12/2, 19 97
Owner or Owner's Designee, Title

CERTIFICATE OF INSERVICE INSPECTION

I, the undersigned, holding a valid commission issued by the National Board of Boiler and Pressure Vessel Inspectors and the State or Providence of N.C. and employed by **HSBI and I Company of Hartford Connecticut** have inspected the components described in this Owner's Report during the period 11-11-97 to 12-2-97; and state that to the best of my knowledge and belief, the Owner has performed examinations and taken corrective measures described in this Owner's Report in accordance with the requirements of the ASME Code, Section XI.

By signing this certificate, neither the Inspector nor his employer makes any warranty, expressed or implied, concerning the examinations and corrective measures described in this Owner's Report. Furthermore, neither the Inspector nor his employer shall be liable in any manner for any personal injury or property damage or a loss of any kind arising from or connected with this inspection.

M B Chapman Commissions NC 914
Inspector's Signature National Board, State, Providence and Endorsements

Date 12-2, 19 97

Form 401463

FORM NIS-2 OWNER'S REPORT FOR REPAIRS OR REPLACEMENTS
As Required By The Provisions Of The ASME Code Section XI

1. Owner **Duke Power Company**
   Address **526 S. Church Street, Charlotte, NC 28201-1006**

1a. Date 10/17/97

Sheet 1 of 1

2. Plant **Oconee Nuclear Station**
   Address **P.O. Box 1439, Seneca, S.C. 29679**

2a. Unit ☒ 1 ☐ 2 ☐ 3 ☐ Shared (specify Units _____)

3. Work Performed By **Duke Power Company**
   Address **526 S. Church Street, Charlotte, NC 28201-1006**
   Type Code Symbol Stamp **N/A** Authorization No. **N/A** Expiration Date **N/A**

3a. Work Order # 97087156-01
Repair Organization Job #

3b. NSM or MM # N/A

4. Identification of System LPS Class 2

5. (a) Applicable Construction Code B31.1 1967 Edition, JULY Addenda, N/A Code Cases
   (b) Applicable Edition of Section XI Utilized for Repairs or Replacements 1989, No Addenda

6. Identification of Components Repaired or Replaced and Replacement Components

	Column 1	Column 2	Column 3	Column 4	Column 5	Col. 6	Column 7	Column 8
	Name of Component	Name of Manufacturer	Manufacturer Serial Number	National Board Number	Other Identification	Year Built	Repaired, Replaced, or Replacement	ASME Code Stamped (yes or no)
A	S/R 1-14B-0-248A-H24A	DPC	N/A	N/A	N/A	N/A	☐ Repaired ☐ Replaced ☒ Replacement	☒ No ☐ Yes
B							☐ Repaired ☐ Replaced ☐ Replacement	☐ No ☐ Yes
C							☐ Repaired ☐ Replaced ☐ Replacement	☐ No ☐ Yes
D							☐ Repaired ☐ Replaced ☐ Replacement	☐ No ☐ Yes
E							☐ Repaired ☐ Replaced ☐ Replacement	☐ No ☐ Yes
F							☐ Repaired ☐ Replaced ☐ Replacement	☐ No ☐ Yes

Form 401463 (2-95)

Form NIS-2 (Back)

NOTE: Supplemental sheets in form of lists, sketches, or drawings may be used, provided (1) size is 8 1/2 in. x 11 in. (2) information in items 1 through 6 on this report is included on each sheet, and (3) each sheet is numbered and the number of sheets is recorded at the top of this form.

7. Description of Work INSTALLED NEW U-BOLT ON EXISTING SUPPORT/RESTRAINT.

8. Test Conducted: ☐ Hydrostatic ☐ Pneumatic ☐ Nominal Operating Pressure ☐ Other ☒ Exempt

Pressure _____ psig Test Temp. _____ °F

Pressure _____ psig Test Temp. _____ °F

Pressure _____ psig Test Temp. _____ °F

9. Remarks _____

(Applicable Manufacturer's Data Records to be Attached)

CERTIFICATE OF COMPLIANCE

We certify that the statements made in the report are correct and this **repair or replacement** conforms to the rules of the ASME Code, Section XI.

Type Code Symbol Stamp **N/A**

Certificate of Authorization No. **N/A** Expiration Date **N/A**

Signed W M C Clure Date 10/21, 19 97
Owner or Owner's Designee, Title

CERTIFICATE OF INSERVICE INSPECTION

I, the undersigned, holding a valid commission issued by the National Board of Boiler and Pressure Vessel Inspectors and the State or Providence of N.C. and employed by **HSBI and I Company of Hartford Connecticut** have inspected the components described in this Owner's Report during the period 10-7-97 to 10-21-97; and state that to the best of my knowledge and belief, the Owner has performed examinations and taken corrective measures described in this Owner's Report in accordance with the requirements of the ASME Code, Section XI.

By signing this certificate, neither the Inspector nor his employer makes any warranty, expressed or implied, concerning the examinations and corrective measures described in this Owner's Report. Furthermore, neither the Inspector nor his employer shall be liable in any manner for any personal injury or property damage or a loss of any kind arising from or connected with this inspection.

M B Chapman Commissions NC914
Inspector's Signature National Board, State, Providence and Endorsements

Date 10-21, 19 97

Form 401463 (2

FORM NIS-2 OWNER'S REPORT FOR REPAIRS OR REPLACEMENTS
As Required By The Provisions Of The ASME Code Section XI

1. Owner **Duke Power Company**
   Address **526 S. Church Street, Charlotte, NC 28201-1006**

1a. Date 10/17/97

Sheet 1 of 1

2. Plant **Oconee Nuclear Station**
   Address **P.O. Box 1439, Seneca, S.C. 29679**

2a. Unit ☒ 1 ☐ 2 ☐ 3 ☐ Shared (specify Units_____)

3. Work Performed By **Duke Power Company**
   Address **526 S. Church Street, Charlotte, NC 28201-1006**
   Type Code Symbol Stamp **N/A** Authorization No. **N/A** Expiration Date **N/A**

3a. Work Order # 97087963-01
Repair Organization Job #

3b. NSM or MM # N/A

4. Identification of System LPS Class 2

5. (a) Applicable Construction Code B31.1 1967 Edition, 7-67 Addenda, N/A Code Cases
   (b) Applicable Edition of Section XI Utilized for Repairs or Replacements 1989, No Addenda

6. Identification of Components Repaired or Replaced and Replacement Components

	Column 1	Column 2	Column 3	Column 4	Column 5	Col. 6	Column 7	Column 8
	Name of Component S/R	Name of Manufacturer	Manufacturer Serial Number	National Board Number	Other Identification	Year Built	Repaired, Replaced, or Replacement	ASME Code Stamped (yes or no)
A	1-14B-0-2480A-H35A	DPC	N/A	N/A	N/A	N/A	☐ Repaired ☐ Replaced ☒ Replacement	☒ No ☐ Yes
B							☐ Repaired ☐ Replaced ☐ Replacement	☐ No ☐ Yes
C							☐ Repaired ☐ Replaced ☐ Replacement	☐ No ☐ Yes
D							☐ Repaired ☐ Replaced ☐ Replacement	☐ No ☐ Yes
E							☐ Repaired ☐ Replaced ☐ Replacement	☐ No ☐ Yes
F							☐ Repaired ☐ Replaced ☐ Replacement	☐ No ☐ Yes

Form NIS-2 (Back)

NOTE: Supplemental sheets in form of lists, sketches, or drawings may be used, provided (1) size is 8 1/2 in. x 11 in. (2) information in items 1 through 6 on this report is included on each sheet, and (3) each sheet is numbered and the number of sheets is recorded at the top of this form.

7. Description of Work INSTALLED NEW U-BOLT ON EXISTING SUPPORT/RESTRAINT.

8. Test Conducted: ☐ Hydrostatic ☐ Pneumatic ☐ Nominal Operating Pressure ☐ Other ☒ Exempt

Pressure _____ psig Test Temp. _____ °F

Pressure _____ psig Test Temp. _____ °F

Pressure _____ psig Test Temp. _____ °F

9. Remarks _____

(Applicable Manufacturer's Data Records to be Attached)

CERTIFICATE OF COMPLIANCE

We certify that the statements made in the report are correct and this **repair or replacement** conforms to the rules of the ASME Code, Section XI.

Type Code Symbol Stamp **N/A**

Certificate of Authorization No. **N/A** Expiration Date **N/A**

Signed [signature] Date 10/17, 1997

Owner or Owner's Designee, Title

CERTIFICATE OF INSERVICE INSPECTION

I, the undersigned, holding a valid commission issued by the National Board of Boiler and Pressure Vessel Inspectors and the State or Providence of N. C. and employed by **HSBI and I Company of Hartford Connecticut** have inspected the components described in this Owner's Report during the period 10-9-97 to 10-21-97; and state that to the best of my knowledge and belief, the Owner has performed examinations and taken corrective measures described in this Owner's Report in accordance with the requirements of the ASME Code, Section XI.

By signing this certificate, neither the Inspector nor his employer makes any warranty, expressed or implied, concerning the examinations and corrective measures described in this Owner's Report. Furthermore, neither the Inspector nor his employer shall be liable in any manner for any personal injury or property damage or a loss of any kind arising from or connected with this inspection.

[signature] Commissions NC914

Inspector's Signature National Board, State, Providence and Endorsements

Date 10-21, 1997

Form 401463 (2

FORM NIS-2 OWNER'S REPORT FOR REPAIRS OR REPLACEMENTS
As Required By The Provisions Of The ASME Code Section XI

1. Owner **Duke Power Company**
   Address **526 S. Church Street, Charlotte, NC 28201-1006**

1a. Date 11-30-95

Sheet 1 of 1

2. Plant **Oconee Nuclear Station**
   Address **P.O. Box 1439, Seneca, S.C. 29679**

2a. Unit ☒ 1 ☐ 2 ☐ 3 ☐ Shared (specify Units_____)

3a. Work Order # 95071688
Repair Organization Job #

3. Work Performed By **Duke Power Company**
   Address **526 S. Church Street, Charlotte, NC 28201-1006**
   Type Code Symbol Stamp **N/A** Authorization No. **N/A** Expiration Date **N/A**

3b. NSM or MM # _____

4. Identification of System LP Class 2

5. (a) Applicable Construction Code ANSI B31.7 19 68 Edition, 6/68 Addenda, _____ Code Cases
   (b) Applicable Edition of Section XI Utilized for Repairs or Replacements 1989, No Addenda

6. Identification of Components Repaired or Replaced and Replacement Components

	Column 1	Column 2	Column 3	Column 4	Column 5	Col. 6	Column 7	Column 8
	Name of Component	Name of Manufacturer	Manufacturer Serial Number	National Board Number	Other Identification	Year Built	Repaired, Replaced, or Replacement	ASME Code Stamped (yes or no)
A	WELD 1-LP-4-42	DPC	NA	NA	NA	7/73	☒ Repaired ☐ Replaced ☐ Replacement	☒ No ☐ Yes
B	WELD 1-LP-4-46	DPC	NA	NA	NA	7/73	☒ Repaired ☐ Replaced ☐ Replacement	☒ No ☐ Yes
C							☐ Repaired ☐ Replaced ☐ Replacement	☐ No ☐ Yes
D							☐ Repaired ☐ Replaced ☐ Replacement	☐ No ☐ Yes
E							☐ Repaired ☐ Replaced ☐ Replacement	☐ No ☐ Yes
F							☐ Repaired ☐ Replaced ☐ Replacement	☐ No ☐ Yes

Form 401463 (2-95)

Form NIS-2 (Back)

NOTE: Supplemental sheets in form of lists, sketches, or drawings may be used, provided (1) size is 8 1/2 in. x 11 in. (2) information in items 1 through 6 on this report is included on each sheet, and (3) each sheet is numbered and the number of sheets is recorded at the top of this form.

7. Description of Work MADE WELD REPAIRS TO WELDS 1-LP-4-42 AND 46 DUE TO BEING FOUND REJECTABLE ON RT.

8. Test Conducted: ☐ Hydrostatic ☐ Pneumatic ☒ Nominal Operating Pressure ☐ Other ☐ Exempt

Pressure _____ psig Test Temp. _____ °F

Pressure _____ psig Test Temp. _____ °F

Pressure _____ psig Test Temp. _____ °F

9. Remarks PERFORMED SYS. LEAKAGE TEST AT SYS. TEMP. AND PRESSURE AND NDE PER ASME CODE CASE N-416-1 IN LIEU OF HYDRO.

(Applicable Manufacturer's Data Records to be Attached)

CERTIFICATE OF COMPLIANCE

We certify that the statements made in the report are correct and this **repair or replacement** conforms to the rules of the ASME Code, Section XI.

Type Code Symbol Stamp **N/A**

Certificate of Authorization No. **N/A** Expiration Date **N/A**

Signed D B Mason Date 1-23, 1996

Owner or Owner's Designee, Title

CERTIFICATE OF INSERVICE INSPECTION

I, the undersigned, holding a valid commission issued by the National Board of Boiler and Pressure Vessel Inspectors and the State or Providence of N. C. and employed by **HSBI and I Company of Hartford Connecticut** have inspected the components described in this Owner's Report during the period 11-10-95 to 1-23-96; and state that to the best of my knowledge and belief, the Owner has performed examinations and taken corrective measures described in this Owner's Report in accordance with the requirements of the ASME Code, Section XI.

By signing this certificate, neither the Inspector nor his employer makes any warranty, expressed or implied, concerning the examinations and corrective measures described in this Owner's Report. Furthermore, neither the Inspector nor his employer shall be liable in any manner for any personal injury or property damage or a loss of any kind arising from or connected with this inspection.

M B Chapman Commissions NC 914

Inspector's Signature National Board, State, Providence and Endorsements

Date 1-23, 1996

Form 401463

FORM NIS-2 OWNER'S REPORT FOR REPAIRS OR REPLACEMENTS
As Required By The Provisions Of The ASME Code Section XI

1. Owner **Duke Power Company**
   Address **526 S. Church Street, Charlotte, NC 28201-1006**

1a. Date 12-18-95

Sheet 1 of 1

2. Plant **Oconee Nuclear Station**
   Address **P.O. Box 1439, Seneca, S.C. 29679**

2a. Unit ☒ 1 ☐ 2 ☐ 3 ☐ Shared (specify Units_____)

3. Work Performed By **Duke Power Company**
   Address **526 S. Church Street, Charlotte, NC 28201-1006**
   Type Code Symbol Stamp **N/A** Authorization No. **N/A** Expiration Date **N/A**

3a. Work Order # 95087090
Repair Organization Job #

3b. NSM or MM # _____

4. Identification of System 51A Class B

5. (a) Applicable Construction Code ASME III 1989 Edition, NA Addenda, _____ Code Cases
   (b) Applicable Edition of Section XI Utilized for Repairs or Replacements 1989, No Addenda

6. Identification of Components Repaired or Replaced and Replacement Components

	Column 1	Column 2	Column 3	Column 4	Column 5	Col. 6	Column 7	Column 8
	Name of Component	Name of Manufacturer	Manufacturer Serial Number	National Board Number	Other Identification	Year Built	Repaired, Replaced, or Replacement	ASME Code Stamped (yes or no)
A	1A LETDOWN COOLER	GRAHAM MFG. CO.	95-18792-1	23288		1995	☒ Repaired ☐ Replaced ☐ Replacement	☐ No ☒ Yes
B							☐ Repaired ☐ Replaced ☐ Replacement	☐ No ☐ Yes
C							☐ Repaired ☐ Replaced ☐ Replacement	☐ No ☐ Yes
D							☐ Repaired ☐ Replaced ☐ Replacement	☐ No ☐ Yes
E							☐ Repaired ☐ Replaced ☐ Replacement	☐ No ☐ Yes
F							☐ Repaired ☐ Replaced ☐ Replacement	☐ No ☐ Yes

Form 401463 (2-95)

Form NIS-2 (Back)

NOTE: Supplemental sheets in form of lists, sketches, or drawings may be used, provided (1) size is 8 1/2 in. x 11 in. (2) information in items 1 through 6 on this report is included on each sheet, and (3) each sheet is numbered and the number of sheets is recorded at the top of this form.

7. Description of Work MADE WELD REPAIR TO VENDOR WELD.

8. Test Conducted: ☐ Hydrostatic ☐ Pneumatic ☐ Nominal Operating Pressure ☐ Other ☒ Exempt

Pressure _____ psig Test Temp. _____ °F

Pressure _____ psig Test Temp. _____ °F

Pressure _____ psig Test Temp. _____ °F

9. Remarks REPAIR WAS NOT A THROUGH WALL REPAIR.

(Applicable Manufacturer's Data Records to be Attached)

CERTIFICATE OF COMPLIANCE

We certify that the statements made in the report are correct and this **repair or replacement** conforms to the rules of the ASME Code, Section XI.

Type Code Symbol Stamp **N/A**

Certificate of Authorization No. **N/A** Expiration Date **N/A**

Signed G. L. Blubaugh Date 1-15, 19 96

Owner or Owner's Designee, Title

CERTIFICATE OF INSERVICE INSPECTION

I, the undersigned, holding a valid commission issued by the National Board of Boiler and Pressure Vessel Inspectors and the State or Providence of N.C. and employed by **HSBI and I Company of Hartford Connecticut** have inspected the components described in this Owner's Report during the period 11-14-95 to 1-17-96; and state that to the best of my knowledge and belief, the Owner has performed examinations and taken corrective measures described in this Owner's Report in accordance with the requirements of the ASME Code, Section XI.

By signing this certificate, neither the Inspector nor his employer makes any warranty, expressed or implied, concerning the examinations and corrective measures described in this Owner's Report. Furthermore, neither the Inspector nor his employer shall be liable in any manner for any personal injury or property damage or a loss of any kind arising from or connected with this inspection.

MRS Chapman Commissions NC914

Inspector's Signature National Board, State, Providence and Endorsements

Date 1-17, 1996

Form 401463 (2

FORM NIS-2 OWNER'S REPORT FOR REPAIRS OR REPLACEMENTS
As Required By The Provisions Of The ASME Code Section XI

1. Owner **Duke Power Company**
   Address **526 S. Church Street, Charlotte, NC 28201-1006**

1a. Date 2-12-97

Sheet 1 of 1

2. Plant **Oconee Nuclear Station**
   Address **P.O. Box 1439, Seneca, S.C. 29679**

2a. Unit ☒ 1 ☐ 2 ☐ 3 ☐ Shared (specify Units_____)

3. Work Performed By **Duke Power Company**
   Address **526 S. Church Street, Charlotte, NC 28201-1006**
   Type Code Symbol Stamp **N/A** Authorization No. **N/A** Expiration Date **N/A**

3a. Work Order # 97011483
Repair Organization Job #

3b. NSM or MM # NA

4. Identification of System LP Class 2

5. (a) Applicable Construction Code ANSI B31.7 19 68 Edition, JUNE Addenda, _____ Code Cases
   (b) Applicable Edition of Section XI Utilized for Repairs or Replacements 1989, No Addenda

6. Identification of Components Repaired or Replaced and Replacement Components

	Column 1	Column 2	Column 3	Column 4	Column 5	Col. 6	Column 7	Column 8
	Name of Component	**Name of Manufacturer**	**Manufacturer Serial Number**	**National Board Number**	**Other Identification**	**Year Built**	**Repaired, Replaced, or Replacement**	**ASME Code Stamped (yes or no)**
A	PIPING	D.P.C.	NA	NA		7/73	☒ Repaired ☐ Replaced ☐ Replacement	☒ No ☐ Yes
B							☐ Repaired ☐ Replaced ☐ Replacement	☐ No ☐ Yes
C							☐ Repaired ☐ Replaced ☐ Replacement	☐ No ☐ Yes
D							☐ Repaired ☐ Replaced ☐ Replacement	☐ No ☐ Yes
E							☐ Repaired ☐ Replaced ☐ Replacement	☐ No ☐ Yes
F							☐ Repaired ☐ Replaced ☐ Replacement	☐ No ☐ Yes

Form 401463 (2-95)

Form NIS-2 (Back)

NOTE: Supplemental sheets in form of lists, sketches, or drawings may be used, provided (1) size is 8 1/2 in. x 11 in. (2) information in items 1 through 6 on this report is included on each sheet, and (3) each sheet is numbered and the number of sheets is recorded at the top of this form.

7. Description of Work ADDED WELD METAL TO EXISTING UNDERSIZED WELD NO. 1-LP-136-27Z.

8. Test Conducted: ☐ Hydrostatic ☐ Pneumatic ☒ Nominal Operating Pressure ☐ Other ☐ Exempt

Pressure	_____ psig	Test Temp.	_____ °F
Pressure	_____ psig	Test Temp.	_____ °F
Pressure	_____ psig	Test Temp.	_____ °F

9. Remarks _____

(Applicable Manufacturer's Data Records to be Attached)

CERTIFICATE OF COMPLIANCE

We certify that the statements made in the report are correct and this **repair or replacement** conforms to the rules of the ASME Code, Section XI.

Type Code Symbol Stamp **N/A**

Certificate of Authorization No. **N/A** Expiration Date **N/A**

Signed [signature] QA TECH. SPEC. Date 2-12, 19 97
Owner or Owner's Designee, Title

CERTIFICATE OF INSERVICE INSPECTION

I, the undersigned, holding a valid commission issued by the National Board of Boiler and Pressure Vessel Inspectors and the State or Providence of N.C and employed by **HSBI and I Company of Hartford Connecticut** have inspected the components described in this Owner's Report during the period 2-6-97 to 2-12-97; and state that to the best of my knowledge and belief, the Owner has performed examinations and taken corrective measures described in this Owner's Report in accordance with the requirements of the ASME Code, Section XI.

By signing this certificate, neither the Inspector nor his employer makes any warranty, expressed or implied, concerning the examinations and corrective measures described in this Owner's Report. Furthermore, neither the Inspector nor his employer shall be liable in any manner for any personal injury or property damage or a loss of any kind arising from or connected with this inspection.

[signature] Commissions NC914
Inspector's Signature National Board, State, Providence and Endorsements

Date 2-12, 1997

Form 4014

FORM NIS-2 OWNER'S REPORT FOR REPAIRS OR REPLACEMENTS
As Required By The Provisions Of The ASME Code Section XI

1. Owner **Duke Power Company**
   Address **526 S. Church Street, Charlotte, NC 28201-1006**

1a. Date 10-20-97

Sheet 1 of 1

2. Plant **Oconee Nuclear Station**
   Address **P.O. Box 1439, Seneca, S.C. 29679**

2a. Unit ☒ 1 ☐ 2 ☐ 3 ☐ Shared (specify Units_____)

3. Work Performed By **Duke Power Company**
   Address **526 S. Church Street, Charlotte, NC 28201-1006**
   Type Code Symbol Stamp **N/A** Authorization No. **N/A** Expiration Date **N/A**

3a. Work Order # 96042934
Repair Organization Job #

3b. NSM or MM # 9205

4. Identification of System LP Class 2

5. (a) Applicable Construction Code ANSI B31.7 19 68 Edition JUNE Addenda, _____ Code Cases
   (b) Applicable Edition of Section XI Utilized for Repairs or Replacements 1989, No Addenda

6. Identification of Components Repaired or Replaced and Replacement Components

	Column 1	Column 2	Column 3	Column 4	Column 5	Col. 6	Column 7	Column 8
	Name of Component	Name of Manufacturer	Manufacturer Serial Number	National Board Number	Other Identification	Year Built	Repaired, Replaced, or Replacement	ASME Code Stamped (yes or no)
A	VLV. 1LP-42	ANCHOR DARLING	EE712-1-5	1984		1997	☐ Repaired ☐ Replaced ☒ Replacement	☐ No ☒ Yes
B	PIPING	D.P.Co.	NA	NA		7/73	☐ Repaired ☐ Replaced ☒ Replacement	☒ No ☐ Yes
C	VLV. 1LP-42	VELAN	NA	NA		NA	☐ Repaired ☒ Replaced ☐ Replacement	☒ No ☐ Yes
D							☐ Repaired ☐ Replaced ☐ Replacement	☐ No ☐ Yes
E							☐ Repaired ☐ Replaced ☐ Replacement	☐ No ☐ Yes
F							☐ Repaired ☐ Replaced ☐ Replacement	☐ No ☐ Yes

Form NIS-2 (Back)

NOTE: Supplemental sheets in form of lists, sketches, or drawings may be used, provided (1) size is 8 1/2 in. x 11 in. (2) information in items 1 through 6 on this report is included on each sheet, and (3) each sheet is numbered and the number of sheets is recorded at the top of this form.

7. Description of Work RELOCATE & REPLACE 1LP-42 WITH A DMV-1089.

8. Test Conducted: ☒ Hydrostatic ☐ Pneumatic ☐ Nominal Operating Pressure ☐ Other ☐ Exempt

Pressure	660 psig	Test Temp.	643 °F
Pressure	_____ psig	Test Temp.	_____ °F
Pressure	_____ psig	Test Temp.	_____ °F

9. Remarks Outlet weld for 1LP-42 received a static head functional test. Inlet weld was Hydrostatically tested.

(Applicable Manufacturer's Data Records to be Attached)

CERTIFICATE OF COMPLIANCE

We certify that the statements made in the report are correct and this **repair or replacement** conforms to the rules of the ASME Code, Section XI.

Type Code Symbol Stamp **N/A**

Certificate of Authorization No. **N/A** Expiration Date **N/A**

Signed E.B. Mason QA Spec Date 12-15, 1997
Owner or Owner's Designee, Title

CERTIFICATE OF INSERVICE INSPECTION

I, the undersigned, holding a valid commission issued by the National Board of Boiler and Pressure Vessel Inspectors and the State or Providence of N.C and employed by **HSBI and I Company of Hartford Connecticut** have inspected the components described in this Owner's Report during the period 8-12-97 to 12-15-97; and state that to the best of my knowledge and belief, the Owner has performed examinations and taken corrective measures described in this Owner's Report in accordance with the requirements of the ASME Code, Section XI.

By signing this certificate, neither the Inspector nor his employer makes any warranty, expressed or implied, concerning the examinations and corrective measures described in this Owner's Report. Furthermore, neither the Inspector nor his employer shall be liable in any manner for any personal injury or property damage or a loss of any kind arising from or connected with this inspection.

M B Chapman Commissions NC914
Inspector's Signature National Board, State, Providence and Endorsements

Date 12-15, 1997

Form 401463 (2)

FORM NIS-2 OWNER'S REPORT FOR REPAIRS OR REPLACEMENTS
As Required By The Provisions Of The ASME Code Section XI

1. Owner **Duke Power Company**
   Address **526 S. Church Street, Charlotte, NC 28201-1006**

1a. Date 10-20-97

Sheet 1 of 1

2. Plant **Oconee Nuclear Station**
   Address **P.O. Box 1439, Seneca, S.C. 29679**

2a. Unit ☒ 1 ☐ 2 ☐ 3 ☐ Shared (specify Units_____)

3a. Work Order # 96043036
Repair Organization Job #

3. Work Performed By **Duke Power Company**
   Address **526 S. Church Street, Charlotte, NC 28201-1006**
   Type Code Symbol Stamp **N/A** Authorization No. **N/A** Expiration Date **N/A**

3b. NSM or MM # 9204

4. Identification of System LP Class 2

5. (a) Applicable Construction Code ANSI B31.7 1968 Edition, JUNE Addenda, _____ Code Cases
   (b) Applicable Edition of Section XI Utilized for Repairs or Replacements 1989, No Addenda

6. Identification of Components Repaired or Replaced and Replacement Components

	Column 1	Column 2	Column 3	Column 4	Column 5	Col. 6	Column 7	Column 8
	Name of Component	Name of Manufacturer	Manufacturer Serial Number	National Board Number	Other Identification	Year Built	Repaired, Replaced, or Replacement	ASME Code Stamped (yes or no)
A	VLV. 1LP-40	ANCHOR DARLING	E2712-1-3	1982		1997	☐ Repaired ☐ Replaced ☒ Replacement	☐ No ☒ Yes
B	VLV. 1LP-40	CRANE	NA	NA		NA	☐ Repaired ☒ Replaced ☐ Replacement	☒ No ☐ Yes
C							☐ Repaired ☐ Replaced ☐ Replacement	☐ No ☐ Yes
D							☐ Repaired ☐ Replaced ☐ Replacement	☐ No ☐ Yes
E							☐ Repaired ☐ Replaced ☐ Replacement	☐ No ☐ Yes
F							☐ Repaired ☐ Replaced ☐ Replacement	☐ No ☐ Yes

Form NIS-2 (Back)

NOTE: Supplemental sheets in form of lists, sketches, or drawings may be used, provided (1) size is 8 1/2 in. x 11 in. (2) information in items 1 through 6 on this report is included on each sheet, and (3) each sheet is numbered and the number of sheets is recorded at the top of this form.

7. Description of Work MOVED & REPLACED 1LP-40 W/ITEM No. DMV-1089.

8. Test Conducted: ☒ Hydrostatic ☐ Pneumatic ☒ Nominal Operating Pressure ☐ Other ☐ Exempt

Pressure	660 psig	Test Temp.	64.3 °F
Pressure	_____ psig	Test Temp.	_____ °F
Pressure	_____ psig	Test Temp.	_____ °F

9. Remarks Inlet weld for 1LP-40 was tested IAW ASME Code Case N416-1.
Outlet weld was Hydrostatically tested

(Applicable Manufacturer's Data Records to be Attached)

CERTIFICATE OF COMPLIANCE

We certify that the statements made in the report are correct and this **repair or replacement** conforms to the rules of the ASME Code, Section XI.

Type Code Symbol Stamp **N/A**

Certificate of Authorization No. **N/A** Expiration Date **N/A**

Signed D.S. Marson QA Spec. Date 12-15, 1997
Owner or Owner's Designee, Title

CERTIFICATE OF INSERVICE INSPECTION

I, the undersigned, holding a valid commission issued by the National Board of Boiler and Pressure Vessel Inspectors and the State or Providence of N.C. and employed by **HSBI and I Company of Hartford Connecticut** have inspected the components described in this Owner's Report during the period 10-6-97 to 12-15-97; and state that to the best of my knowledge and belief, the Owner has performed examinations and taken corrective measures described in this Owner's Report in accordance with the requirements of the ASME Code, Section XI.

By signing this certificate, neither the Inspector nor his employer makes any warranty, expressed or implied, concerning the examinations and corrective measures described in this Owner's Report. Furthermore, neither the Inspector nor his employer shall be liable in any manner for any personal injury or property damage or a loss of any kind arising from or connected with this inspection.

M.B. Chapman Commissions NC914
Inspector's Signature National Board, State, Providence and Endorsements

Date 12-15, 1997

Form 401463 (2-9[illegible])

FORM NIS-2 OWNER'S REPORT FOR REPAIRS OR REPLACEMENTS
As Required By The Provisions Of The ASME Code Section XI

1. Owner **Duke Power Company**
   Address **526 S. Church Street, Charlotte, NC 28201-1006**

1a. Date 11-18-97

Sheet 1 of 1

2. Plant **Oconee Nuclear Station**
   Address **P.O. Box 1439, Seneca, S.C. 29679**

2a. Unit ☒ 1 ☐ 2 ☐ 3 ☐ Shared (specify Units_____)

3a. Work Order # 95028432
Repair Organization Job #

3. Work Performed By **Duke Power Company**
   Address **526 S. Church Street, Charlotte, NC 28201-1006**
   Type Code Symbol Stamp **N/A** Authorization No. **N/A** Expiration Date **N/A**

3b. NSM or MM # 7325

4. Identification of System HP Class 2

5. (a) Applicable Construction Code ANSI B31.7 1968 Edition, JUNE Addenda, _____ Code Cases
   (b) Applicable Edition of Section XI Utilized for Repairs or Replacements 1989, No Addenda

6. Identification of Components Repaired or Replaced and Replacement Components

	Column 1	Column 2	Column 3	Column 4	Column 5	Col. 6	Column 7	Column 8
	Name of Component	Name of Manufacturer	Manufacturer Serial Number	National Board Number	Other Identification	Year Built	Repaired, Replaced, or Replacement	ASME Code Stamped (yes or no)
A	VLV. 1HP-116	ANCHOR DARLING	EZ642-1-3	1929		1996	☐ Repaired ☐ Replaced ☒ Replacement	☐ No ☒ Yes
B	VLV. 1HP-116	VELAN	NA	NA		NA	☐ Repaired ☒ Replaced ☐ Replacement	☒ No ☐ Yes
C	PIPING	D.P.C.	NA	NA		NA	☐ Repaired ☒ Replaced ☐ Replacement	☒ No ☐ Yes
D							☐ Repaired ☐ Replaced ☐ Replacement	☐ No ☐ Yes
E							☐ Repaired ☐ Replaced ☐ Replacement	☐ No ☐ Yes
F							☐ Repaired ☐ Replaced ☐ Replacement	☐ No ☐ Yes

Form NIS-2 (Back)

NOTE: Supplemental sheets in form of lists, sketches, or drawings may be used, provided (1) size is 8 1/2 in. x 11 in. (2) information in items 1 through 6 on this report is included on each sheet, and (3) each sheet is numbered and the number of sheets is recorded at the top of this form.

7. Description of Work REPLACED VLV. 1HP-116 W/A DMW-1074.

8. Test Conducted: ☐ Hydrostatic ☐ Pneumatic ☐ Nominal Operating Pressure ☐ Other ☐ Exempt

Pressure _____ psig Test Temp. _____ °F

Pressure _____ psig Test Temp. _____ °F

Pressure _____ psig Test Temp. _____ °F

9. Remarks Tested IAW ASME Code Case N416-1

(Applicable Manufacturer's Data Records to be Attached)

CERTIFICATE OF COMPLIANCE

We certify that the statements made in the report are correct and this **repair or replacement** conforms to the rules of the ASME Code, Section XI.

Type Code Symbol Stamp **N/A**

Certificate of Authorization No. **N/A** Expiration Date **N/A**

Signed D S Mason QA Spec Date 1-5, 1998

Owner or Owner's Designee, Title

CERTIFICATE OF INSERVICE INSPECTION

I, the undersigned, holding a valid commission issued by the National Board of Boiler and Pressure Vessel Inspectors and the State or Providence of N.C. and employed by **HSBI and I Company of Hartford Connecticut** have inspected the components described in this Owner's Report during the period 5-28-97 to 1-6-98; and state that to the best of my knowledge and belief, the Owner has performed examinations and taken corrective measures described in this Owner's Report in accordance with the requirements of the ASME Code, Section XI.

By signing this certificate, neither the Inspector nor his employer makes any warranty, expressed or implied, concerning the examinations and corrective measures described in this Owner's Report. Furthermore, neither the Inspector nor his employer shall be liable in any manner for any personal injury or property damage or a loss of any kind arising from or connected with this inspection.

M.B. Chapman Commissions NC914

Inspector's Signature National Board, State, Providence and Endorsements

Date 1-6, 1998

Form 401463 (2

FORM NIS-2 OWNER'S REPORT FOR REPAIRS OR REPLACEMENTS
As Required By The Provisions Of The ASME Code Section XI

1. Owner **Duke Power Company**
   Address **526 S. Church Street, Charlotte, NC 28201-1006**

1a. Date 11-17-97

Sheet 1 of 1

2. Plant **Oconee Nuclear Station**
   Address **P.O. Box 1439, Seneca, S.C. 29679**

2a. Unit ☒ 1 ☐ 2 ☐ 3 ☐ Shared (specify Units_____)

3. Work Performed By **Duke Power Company**
   Address **526 S. Church Street, Charlotte, NC 28201-1006**
   Type Code Symbol Stamp **N/A** Authorization No. **N/A** Expiration Date **N/A**

3a. Work Order # 95028311
Repair Organization Job #

3b. NSM or MM # 10257

4. Identification of System LPSW Class 2

5. (a) Applicable Construction Code ANSI B31.1 19 67 Edition, July Addenda, _____ Code Cases
   (b) Applicable Edition of Section XI Utilized for Repairs or Replacements 1989, No Addenda

6. Identification of Components Repaired or Replaced and Replacement Components

	Column 1	Column 2	Column 3	Column 4	Column 5	Col. 6	Column 7	Column 8
	Name of Component	Name of Manufacturer	Manufacturer Serial Number	National Board Number	Other Identification	Year Built	Repaired, Replaced, or Replacement	ASME Code Stamped (yes or no)
A	VLV. 1LPSW-566	BNL	A950301-1-3	NA		11/95	☐ Repaired ☐ Replaced ☒ Replacement	☐ No ☒ Yes
B	VLV. 1LPSW-566	OLD VLV. BODY REMAINS IN SYS. WITH BONNET + INTERNALS REMOVED + BODY CAPPED OFF.					☐ Repaired ☒ Replaced ☐ Replacement	☐ No ☐ Yes N/A
C	PIPING	D.P.Co.	NA	NA		7/73	☐ Repaired ☒ Replaced ☐ Replacement	☒ No ☐ Yes
D							☐ Repaired ☐ Replaced ☐ Replacement	☐ No ☐ Yes
E							☐ Repaired ☐ Replaced ☐ Replacement	☐ No ☐ Yes
F							☐ Repaired ☐ Replaced ☐ Replacement	☐ No ☐ Yes

Form 401463 (2-95)

Form NIS-2 (Back)

NOTE: Supplemental sheets in form of lists, sketches, or drawings may be used, provided (1) size is 8 1/2 in. x 11 in. (2) information in items 1 through 6 on this report is included on each sheet, and (3) each sheet is numbered and the number of sheets is recorded at the top of this form.

7. Description of Work REPLACED 1LPSW-566 W/ITEM No. DMV-1040.

8. Test Conducted: ☒ Hydrostatic ☐ Pneumatic ☒ Nominal Operating Pressure ☐ Other ☐ Exempt

Pressure	125 psig	Test Temp.	653 °F
Pressure	_____ psig	Test Temp.	_____ °F
Pressure	_____ psig	Test Temp.	_____ °F

9. Remarks Downstream welds tested IAW ASME Code Case N416-1
Upstream welds Hydrostatically tested

(Applicable Manufacturer's Data Records to be Attached)

CERTIFICATE OF COMPLIANCE

We certify that the statements made in the report are correct and this **repair or replacement** conforms to the rules of the ASME Code, Section XI.

Type Code Symbol Stamp **N/A**

Certificate of Authorization No. **N/A** Expiration Date **N/A**

Signed E B Mason QA Spec Date 12-4, 1997
Owner or Owner's Designee, Title

CERTIFICATE OF INSERVICE INSPECTION

I, the undersigned, holding a valid commission issued by the National Board of Boiler and Pressure Vessel Inspectors and the State or Providence of N.C. and employed by **HSBI and I Company of Hartford Connecticut** have inspected the components described in this Owner's Report during the period 10-16-97 to 12-8-97; and state that to the best of my knowledge and belief, the Owner has performed examinations and taken corrective measures described in this Owner's Report in accordance with the requirements of the ASME Code, Section XI.

By signing this certificate, neither the Inspector nor his employer makes any warranty, expressed or implied, concerning the examinations and corrective measures described in this Owner's Report. Furthermore, neither the Inspector nor his employer shall be liable in any manner for any personal injury or property damage or a loss of any kind arising from or connected with this inspection.

MB Chapman Commissions NC914
Inspector's Signature National Board, State, Providence and Endorsements

Date 12-8, 1997

Form 401463 (2

FORM NIS-2 OWNER'S REPORT FOR REPAIRS OR REPLACEMENTS
As Required By The Provisions Of The ASME Code Section XI

1. Owner **Duke Power Company**
   Address **526 S. Church Street, Charlotte, NC 28201-1006**

1a. Date 1-8-97

Sheet 1 of 15

2. Plant **Oconee Nuclear Station**
   Address **P.O. Box 1439, Seneca, S.C. 29679**

2a. Unit ☒ 1 ☐ 2 ☐ 3 ☐ Shared (specify Units_____)

3. Work Performed By **Duke Power Company**
   Address **526 S. Church Street, Charlotte, NC 28201-1006**
   Type Code Symbol Stamp **N/A** Authorization No. **N/A** Expiration Date **N/A**

3a. Work Order # 96098219-01
Repair Organization Job #

3b. NSM or MM # NA

4. Identification of System 1A2 RCP MAIN FLANGE Class 1

5. (a) Applicable Construction Code ASME III 1967 Edition, SUMMER Addenda, NA Code Cases
   (b) Applicable Edition of Section XI Utilized for Repairs or Replacements 1989, No Addenda

6. Identification of Components Repaired or Replaced and Replacement Components

	Column 1	Column 2	Column 3	Column 4	Column 5	Col. 6	Column 7	Column 8
	Name of Component	Name of Manufacturer	Manufacturer Serial Number	National Board Number	Other Identification	Year Built	Repaired, Replaced, or Replacement	ASME Code Stamped (yes or no)
A	1A2 RCP MAIN FLANGE	WESTINGHOUSE	335	NA		1970	☒ Repaired ☐ Replaced ☐ Replacement	☒ No ☐ Yes
B							☐ Repaired ☐ Replaced ☐ Replacement	☐ No ☐ Yes
C							☐ Repaired ☐ Replaced ☐ Replacement	☐ No ☐ Yes
D							☐ Repaired ☐ Replaced ☐ Replacement	☐ No ☐ Yes
E							☐ Repaired ☐ Replaced ☐ Replacement	☐ No ☐ Yes
F							☐ Repaired ☐ Replaced ☐ Replacement	☐ No ☐ Yes

Form 401463 (2-95)

Form NIS-2 (Back)

NOTE: Supplemental sheets in form of lists, sketches, or drawings may be used, provided (1) size is 8 1/2 in. x 11 in. (2) information in items 1 through 6 on this report is included on each sheet, and (3) each sheet is numbered and the number of sheets is recorded at the top of this form.

7. Description of Work EXCAVATED & WELD REPAIRED #1A2 RCP MAIN FLANGE.

8. Test Conducted: ☐ Hydrostatic ☐ Pneumatic ☒ Nominal Operating Pressure ☐ Other ☐ Exempt

Pressure	_____ psig	Test Temp.	_____ °F
Pressure	_____ psig	Test Temp.	_____ °F
Pressure	_____ psig	Test Temp.	_____ °F

9. Remarks _____

(Applicable Manufacturer's Data Records to be Attached)

CERTIFICATE OF COMPLIANCE

We certify that the statements made in the report are correct and this **repair or replacement** conforms to the rules of the ASME Code, Section XI.

Type Code Symbol Stamp **N/A**

Certificate of Authorization No. **N/A** Expiration Date **N/A**

Signed D S Mason QA Spec Date 4-30, 1997
Owner or Owner's Designee, Title

CERTIFICATE OF INSERVICE INSPECTION

I, the undersigned, holding a valid commission issued by the National Board of Boiler and Pressure Vessel Inspectors and the State or Providence of N.C. and employed by **HSBI and I Company of Hartford Connecticut** have inspected the components described in this Owner's Report during the period 12-13-96 to 4-30-97; and state that to the best of my knowledge and belief, the Owner has performed examinations and taken corrective measures described in this Owner's Report in accordance with the requirements of the ASME Code, Section XI.

By signing this certificate, neither the Inspector nor his employer makes any warranty, expressed or implied, concerning the examinations and corrective measures described in this Owner's Report. Furthermore, neither the Inspector nor his employer shall be liable in any manner for any personal injury or property damage or a loss of any kind arising from or connected with this inspection.

M B Chapman Commissions NC914
Inspector's Signature National Board, State, Providence and Endorsements

Date 4-30, 1997

Form 401463

FORM NIS-2 OWNER'S REPORT FOR REPAIRS OR REPLACEMENTS
As Required By The Provisions Of The ASME Code Section XI

1. Owner **Duke Power Company**
   Address **526 S. Church Street, Charlotte, NC 28201-1006**

1a. Date 11-11-97

Sheet 1 of 1

2. Plant **Oconee Nuclear Station**
   Address **P.O. Box 1439, Seneca, S.C. 29679**

2a. Unit ☒ 1 ☐ 2 ☐ 3 ☐ Shared (specify Units_____)

3. Work Performed By **Duke Power Company**
   Address **526 S. Church Street, Charlotte, NC 28201-1006**
   Type Code Symbol Stamp **N/A** Authorization No. **N/A** Expiration Date **N/A**

3a. Work Order # 96058567
Repair Organization Job #

3b. NSM or ~~MOD~~ # 9138

4. Identification of System LPS Class 2+3

5. (a) Applicable Construction Code ANSI B31.1 19 67 Edition, JULY Addenda, _____ Code Cases
   (b) Applicable Edition of Section XI Utilized for Repairs or Replacements 1989, No Addenda

6. Identification of Components Repaired or Replaced and Replacement Components

	Column 1	Column 2	Column 3	Column 4	Column 5	Col. 6	Column 7	Column 8
	Name of Component	Name of Manufacturer	Manufacturer Serial Number	National Board Number	Other Identification	Year Built	Repaired, Replaced, or Replacement	ASME Code Stamped (yes or no)
A	VLV. 1LPS-022	B&L INDUSTRY	A950301-1-8	NA		11/95	☐ Repaired ☐ Replaced ☒ Replacement	☐ No ☒ Yes
B	VLV. 1LPS-022	NA	NA	NA		NA	☐ Repaired ☒ Replaced ☐ Replacement	☒ No ☐ Yes
C	PIPING	D.P.C.	NA	NA		7/73	☐ Repaired ☐ Replaced ☒ Replacement	☒ No ☐ Yes
D							☐ Repaired ☐ Replaced ☐ Replacement	☐ No ☐ Yes
E							☐ Repaired ☐ Replaced ☐ Replacement	☐ No ☐ Yes
F							☐ Repaired ☐ Replaced ☐ Replacement	☐ No ☐ Yes

Form 401463 (2-95)

Form NIS-2 (Back)

NOTE: Supplemental sheets in form of lists, sketches, or drawings may be used, provided (1) size is 8 1/2 in. x 11 in. (2) information in items 1 through 6 on this report is included on each sheet, and (3) each sheet is numbered and the number of sheets is recorded at the top of this form.

7. Description of Work REPLACED 1LPSW-22 WITH AN ITEM DMV-1040.

8. Test Conducted: ☐ Hydrostatic ☐ Pneumatic ☒ Nominal Operating Pressure ☐ Other ☐ Exempt

Pressure _____ psig Test Temp. _____ °F

Pressure _____ psig Test Temp. _____ °F

Pressure _____ psig Test Temp. _____ °F

9. Remarks Tested IAW ASME Code Case N416-1

(Applicable Manufacturer's Data Records to be Attached)

CERTIFICATE OF COMPLIANCE

We certify that the statements made in the report are correct and this **repair or replacement** conforms to the rules of the ASME Code, Section XI.

Type Code Symbol Stamp **N/A**

Certificate of Authorization No. **N/A** Expiration Date **N/A**

Signed [signature] QA Spec Date 12-5, 1997
Owner or Owner's Designee, Title

CERTIFICATE OF INSERVICE INSPECTION

I, the undersigned, holding a valid commission issued by the National Board of Boiler and Pressure Vessel Inspectors and the State or Providence of _____ and employed by **HSBI and I Company of Hartford Connecticut** have inspected the components described in this Owner's Report during the period 11-17-97 to 12-8-97; and state that to the best of my knowledge and belief, the Owner has performed examinations and taken corrective measures described in this Owner's Report in accordance with the requirements of the ASME Code, Section XI.

By signing this certificate, neither the Inspector nor his employer makes any warranty, expressed or implied, concerning the examinations and corrective measures described in this Owner's Report. Furthermore, neither the Inspector nor his employer shall be liable in any manner for any personal injury or property damage or a loss of any kind arising from or connected with this inspection.

MB Chapman Commissions NC914
Inspector's Signature National Board, State, Providence and Endorsements

Date 12-8, 1997

Form 401463 (2

FORM NIS-2 OWNER'S REPORT FOR REPAIRS OR REPLACEMENTS
As Required By The Provisions Of The ASME Code Section XI

1. Owner **Duke Power Company**
   Address **526 S. Church Street, Charlotte, NC 28201-1006**

1a. Date 11-11-97

Sheet 1 of 1

2. Plant **Oconee Nuclear Station**
   Address **P.O. Box 1439, Seneca, S.C. 29679**

2a. Unit ☒ 1 ☐ 2 ☐ 3 ☐ Shared (specify Units_____)

3. Work Performed By **Duke Power Company**
   Address **526 S. Church Street, Charlotte, NC 28201-1006**
   Type Code Symbol Stamp **N/A** Authorization No. **N/A** Expiration Date **N/A**

3a. Work Order # 96058566
Repair Organization Job #

3b. NSM or MM # 9136

4. Identification of System LPS Class 2+3

5. (a) Applicable Construction Code ANSI B31.1 19 67 Edition, July Addenda, _____ Code Cases
   (b) Applicable Edition of Section XI Utilized for Repairs or Replacements 1989, No Addenda

6. Identification of Components Repaired or Replaced and Replacement Components

	Column 1	Column 2	Column 3	Column 4	Column 5	Col. 6	Column 7	Column 8
	Name of Component	Name of Manufacturer	Manufacturer Serial Number	National Board Number	Other Identification	Year Built	Repaired, Replaced, or Replacement	ASME Code Stamped (yes or no)
A	VLV. 1LPS-19	B&L INDUSTRY	A950301-1-11	NA		11/95	☐ Repaired ☐ Replaced ☒ Replacement	☐ No ☒ Yes
B	VLV. 1LPS-19	NA	NA	NA		NA	☐ Repaired ☒ Replaced ☐ Replacement	☒ No ☐ Yes
C							☐ Repaired ☐ Replaced ☐ Replacement	☐ No ☐ Yes
D							☐ Repaired ☐ Replaced ☐ Replacement	☐ No ☐ Yes
E							☐ Repaired ☐ Replaced ☐ Replacement	☐ No ☐ Yes
F							☐ Repaired ☐ Replaced ☐ Replacement	☐ No ☐ Yes

Form NIS-2 (Back)

NOTE: Supplemental sheets in form of lists, sketches, or drawings may be used, provided (1) size is 8 1/2 in. x 11 in. (2) information in items 1 through 6 on this report is included on each sheet, and (3) each sheet is numbered and the number of sheets is recorded at the top of this form.

7. Description of Work REPLACED 1LPSW-19 W/ITEM-1040.

8. Test Conducted: ☒ Hydrostatic ☐ Pneumatic ☒ Nominal Operating Pressure ☐ Other ☐ Exempt

Pressure	125 psig	Test Temp.	45.3 °F
Pressure	psig	Test Temp.	°F
Pressure	psig	Test Temp.	°F

9. Remarks Inlet weld was tested IAW ASME Code Case N416-1
Outlet weld was hydrostatically tested

(Applicable Manufacturer's Data Records to be Attached)

CERTIFICATE OF COMPLIANCE

We certify that the statements made in the report are correct and this **repair or replacement** conforms to the rules of the ASME Code, Section XI.

Type Code Symbol Stamp **N/A**

Certificate of Authorization No. **N/A** Expiration Date **N/A**

Signed D S Mason QA Spec Date 12-4, 1997
Owner or Owner's Designee, Title

CERTIFICATE OF INSERVICE INSPECTION

I, the undersigned, holding a valid commission issued by the National Board of Boiler and Pressure Vessel Inspectors and the State or Providence of N. C. and employed by **HSBI and I Company of Hartford Connecticut** have inspected the components described in this Owner's Report during the period 11-17-97 to 12-4-97; and state that to the best of my knowledge and belief, the Owner has performed examinations and taken corrective measures described in this Owner's Report in accordance with the requirements of the ASME Code, Section XI.

By signing this certificate, neither the Inspector nor his employer makes any warranty, expressed or implied, concerning the examinations and corrective measures described in this Owner's Report. Furthermore, neither the Inspector nor his employer shall be liable in any manner for any personal injury or property damage or a loss of any kind arising from or connected with this inspection.

M. B. Chapman Commissions NC 914
Inspector's Signature National Board, State, Providence and Endorsements

Date 12-4, 1997

Form 401463

FORM NIS-2 OWNER'S REPORT FOR REPAIRS OR REPLACEMENTS
As Required By The Provisions Of The ASME Code Section XI

1. Owner **Duke Power Company**
   Address **526 S. Church Street, Charlotte, NC 28201-1006**

1a. Date 6/26/97

Sheet 1 of 1

2. Plant **Oconee Nuclear Station**
   Address **P.O. Box 1439, Seneca, S.C. 29679**

2a. Unit ☒ 1 ☐ 2 ☐ 3 ☐ Shared (specify Units_____)

3. Work Performed By **Duke Power Company**
   Address **526 S. Church Street, Charlotte, NC 28201-1006**
   Type Code Symbol Stamp **N/A** Authorization No. **N/A** Expiration Date **N/A**

3a. Work Order # 97045594
Repair Organization Job #

3b. NSM or MM # _____

4. Identification of System HP Class 2

5. (a) Applicable Construction Code ANSI B31.7 1968 Edition, JUNE Addenda, _____ Code Cases
   (b) Applicable Edition of Section XI Utilized for Repairs or Replacements 1989, No Addenda

6. Identification of Components Repaired or Replaced and Replacement Components

	Column 1	Column 2	Column 3	Column 4	Column 5	Col. 6	Column 7	Column 8
	Name of Component	Name of Manufacturer	Manufacturer Serial Number	National Board Number	Other Identification	Year Built	Repaired, Replaced, or Replacement	ASME Code Stamped (yes or no)
A	PIPING	D.P.CO.	NA	NA		7/73	☐ Repaired ☐ Replaced ☒ Replacement	☒ No ☐ Yes
B	MIN FLOW ORIFICE	INGERSOLL-DRESSER	NA	NA	TYPE CPM-9428	NA	☐ Repaired ☐ Replaced ☒ Replacement	☒ No ☐ Yes
C	MIN FLOW ORIFICE	INGERSOLL-DRESSER	NA	NA	TYPE CPM-9429	NA	☐ Repaired ☐ Replaced ☒ Replacement	☒ No ☐ Yes
D							☐ Repaired ☐ Replaced ☐ Replacement	☐ No ☐ Yes
E							☐ Repaired ☐ Replaced ☐ Replacement	☐ No ☐ Yes
F							☐ Repaired ☐ Replaced ☐ Replacement	☐ No ☐ Yes

Form NIS-2 (Back)

NOTE: Supplemental sheets in form of lists, sketches, or drawings may be used, provided (1) size is 8 1/2 in. x 11 in. (2) information in items 1 through 6 on this report is included on each sheet, and (3) each sheet is numbered and the number of sheets is recorded at the top of this form.

7. Description of Work REPLACED MIN. FLOW ORIFICES FOR 1B HPI PUMP.

8. Test Conducted: ☐ Hydrostatic ☐ Pneumatic ☐ Nominal Operating Pressure ☐ Other ☐ Exempt

Pressure _____ psig Test Temp. _____ °F

Pressure _____ psig Test Temp. _____ °F

Pressure _____ psig Test Temp. _____ °F

9. Remarks Tested IAW ASME Code Case N416-1

(Applicable Manufacturer's Data Records to be Attached)

CERTIFICATE OF COMPLIANCE

We certify that the statements made in the report are correct and this **repair or replacement** conforms to the rules of the ASME Code, Section XI.

Type Code Symbol Stamp **N/A**

Certificate of Authorization No. **N/A** Expiration Date **N/A**

Signed D S Mason QA Spec Date 7-7, 1997
Owner or Owner's Designee, Title

CERTIFICATE OF INSERVICE INSPECTION

I, the undersigned, holding a valid commission issued by the National Board of Boiler and Pressure Vessel Inspectors and the State or Providence of N.C. and employed by **HSBI and I Company of Hartford Connecticut** have inspected the components described in this Owner's Report during the period 6-9-97 to 7-8-97; and state that to the best of my knowledge and belief, the Owner has performed examinations and taken corrective measures described in this Owner's Report in accordance with the requirements of the ASME Code, Section XI.

By signing this certificate, neither the Inspector nor his employer makes any warranty, expressed or implied, concerning the examinations and corrective measures described in this Owner's Report. Furthermore, neither the Inspector nor his employer shall be liable in any manner for any personal injury or property damage or a loss of any kind arising from or connected with this inspection.

M B Chapman Commissions NC914
Inspector's Signature National Board, State, Providence and Endorsements

Date 7-8, 1997

Form 401463

FORM NIS-2 OWNER'S REPORT FOR REPAIRS OR REPLACEMENTS
As Required By The Provisions Of The ASME Code Section XI

1. Owner **Duke Power Company**
   Address **526 S. Church Street, Charlotte, NC 28201-1006**

1a. Date 6/26/97

Sheet 1 of 1

2. Plant **Oconee Nuclear Station**
   Address **P.O. Box 1439, Seneca, S.C. 29679**

2a. Unit ☒ 1 ☐ 2 ☐ 3 ☐ Shared (specify Units _____)

3a. Work Order # 97045591-02
Repair Organization Job #

3. Work Performed By **Duke Power Company**
   Address **526 S. Church Street, Charlotte, NC 28201-1006**
   Type Code Symbol Stamp **N/A** Authorization No. **N/A** Expiration Date **N/A**

3b. NSM or MM # _____

4. Identification of System HP Class 2

5. (a) Applicable Construction Code ANSI B31.1 19 68 Edition, JUNE Addenda, _____ Code Cases
   (b) Applicable Edition of Section XI Utilized for Repairs or Replacements 1989, No Addenda

6. Identification of Components Repaired or Replaced and Replacement Components

	Column 1	Column 2	Column 3	Column 4	Column 5	Col. 6	Column 7	Column 8
	Name of Component	Name of Manufacturer	Manufacturer Serial Number	National Board Number	Other Identification	Year Built	Repaired, Replaced, or Replacement	ASME Code Stamped (yes or no)
A	PIPING	D.P.C.	NA	NA		7/73	☐ Repaired ☐ Replaced ☒ Replacement	☒ No ☐ Yes
B	MIN. FLOW ORIFICE	INGERSOLL-DRESSER	NA	NA	TYPE CPM-9429	NA	☐ Repaired ☐ Replaced ☒ Replacement	☒ No ☐ Yes
C	MIN. FLOW ORIFICE	INGERSOLL-DRESSER	NA	NA	TYPE CPM-9428	NA	☐ Repaired ☐ Replaced ☒ Replacement	☒ No ☐ Yes
D							☐ Repaired ☐ Replaced ☐ Replacement	☐ No ☐ Yes
E							☐ Repaired ☐ Replaced ☐ Replacement	☐ No ☐ Yes
F							☐ Repaired ☐ Replaced ☐ Replacement	☐ No ☐ Yes

Form 401463 (2-95)

Form NIS-2 (Back)

NOTE: Supplemental sheets in form of lists, sketches, or drawings may be used, provided (1) size is 8 1/2 in. x 11 in. (2) information in items 1 through 6 on this report is included on each sheet, and (3) each sheet is numbered and the number of sheets is recorded at the top of this form.

7. Description of Work REPLACED MIN. FLOW ORIFICES FOR 1A HPI PUMP.

8. Test Conducted: ☐ Hydrostatic ☐ Pneumatic ☐ Nominal Operating Pressure ☐ Other ☐ Exempt

Pressure _____ psig Test Temp. _____ °F

Pressure _____ psig Test Temp. _____ °F

Pressure _____ psig Test Temp. _____ °F

9. Remarks Tested IAW ASME Code Case N416-1

(Applicable Manufacturer's Data Records to be Attached)

CERTIFICATE OF COMPLIANCE

We certify that the statements made in the report are correct and this **repair or replacement** conforms to the rules of the ASME Code, Section XI.

Type Code Symbol Stamp **N/A**

Certificate of Authorization No. **N/A** Expiration Date **N/A**

Signed E S Mason QA Spec Date 7-7, 1997
Owner or Owner's Designee, Title

CERTIFICATE OF INSERVICE INSPECTION

I, the undersigned, holding a valid commission issued by the National Board of Boiler and Pressure Vessel Inspectors and the State or Providence of N.C. and employed by **HSBI and I Company of Hartford Connecticut** have inspected the components described in this Owner's Report during the period 6-9-97 to 7-8-97; and state that to the best of my knowledge and belief, the Owner has performed examinations and taken corrective measures described in this Owner's Report in accordance with the requirements of the ASME Code, Section XI.

By signing this certificate, neither the Inspector nor his employer makes any warranty, expressed or implied, concerning the examinations and corrective measures described in this Owner's Report. Furthermore, neither the Inspector nor his employer shall be liable in any manner for any personal injury or property damage or a loss of any kind arising from or connected with this inspection.

M B Chapman Commissions NC914
Inspector's Signature National Board, State, Providence and Endorsements

Date 7-8, 1997

Form 401463

FORM NIS-2 OWNER'S REPORT FOR REPAIRS OR REPLACEMENTS
As Required By The Provisions Of The ASME Code Section XI

1. Owner **Duke Power Company**
   Address **526 S. Church Street, Charlotte, NC 28201-1006**

1a. Date 1-13-98

Sheet 1 of 1

2. Plant **Oconee Nuclear Station**
   Address **P.O. Box 1439, Seneca, S.C. 29679**

2a. Unit ☒ 1 ☐ 2 ☐ 3 ☐ Shared (specify Units_____)

3. Work Performed By **Duke Power Company**
   Address **526 S. Church Street, Charlotte, NC 28201-1006**
   Type Code Symbol Stamp **N/A** Authorization No. **N/A** Expiration Date **N/A**

3a. Work Order # 97087273
Repair Organization Job #

3b. NSM or MM # N/A

4. Identification of System LPS Class 2

5. (a) Applicable Construction Code ANSI B31.1 1967 Edition, July Addenda, _____ Code Cases
   (b) Applicable Edition of Section XI Utilized for Repairs or Replacements 1989, No Addenda

6. Identification of Components Repaired or Replaced and Replacement Components

	Column 1	Column 2	Column 3	Column 4	Column 5	Col. 6	Column 7	Column 8
	Name of Component	Name of Manufacturer	Manufacturer Serial Number	National Board Number	Other Identification	Year Built	Repaired, Replaced, or Replacement	ASME Code Stamped (yes or no)
A	PIPING	D.P.C.	NA	NA		7/73	☐ Repaired ☐ Replaced ☒ Replacement	☒ No ☐ Yes
B							☐ Repaired ☐ Replaced ☐ Replacement	☐ No ☐ Yes
C							☐ Repaired ☐ Replaced ☐ Replacement	☐ No ☐ Yes
D							☐ Repaired ☐ Replaced ☐ Replacement	☐ No ☐ Yes
E							☐ Repaired ☐ Replaced ☐ Replacement	☐ No ☐ Yes
F							☐ Repaired ☐ Replaced ☐ Replacement	☐ No ☐ Yes

Form 401463 (2-95)

Form NIS-2 (Back)

NOTE: Supplemental sheets in form of lists, sketches, or drawings may be used, provided (1) size is 8 1/2 in. x 11 in. (2) information in items 1 through 6 on this report is included on each sheet, and (3) each sheet is numbered and the number of sheets is recorded at the top of this form.

7. Description of Work ROTATED LPSW HDR. FLANGES TO FIT COOLERS.

8. Test Conducted: ☒ Hydrostatic ☐ Pneumatic ☐ Nominal Operating Pressure ☐ Other ☐ Exempt

Pressure	120 psig	Test Temp.	68.0 °F
Pressure	_____ psig	Test Temp.	_____ °F
Pressure	_____ psig	Test Temp.	_____ °F

9. Remarks _____

(Applicable Manufacturer's Data Records to be Attached)

CERTIFICATE OF COMPLIANCE

We certify that the statements made in the report are correct and this **repair or replacement** conforms to the rules of the ASME Code, Section XI.

Type Code Symbol Stamp **N/A**

Certificate of Authorization No. **N/A** Expiration Date **N/A**

Signed D S Mason QA Spec Date 1-13, 1998
Owner or Owner's Designee, Title

CERTIFICATE OF INSERVICE INSPECTION

I, the undersigned, holding a valid commission issued by the National Board of Boiler and Pressure Vessel Inspectors and the State or Providence of N. C. and employed by **HSBI and I Company of Hartford Connecticut** have inspected the components described in this Owner's Report during the period 11-6-97 to 1-13-98; and state that to the best of my knowledge and belief, the Owner has performed examinations and taken corrective measures described in this Owner's Report in accordance with the requirements of the ASME Code, Section XI.

By signing this certificate, neither the Inspector nor his employer makes any warranty, expressed or implied, concerning the examinations and corrective measures described in this Owner's Report. Furthermore, neither the Inspector nor his employer shall be liable in any manner for any personal injury or property damage or a loss of any kind arising from or connected with this inspection.

MB Chapman Commissions NC 914
Inspector's Signature National Board, State, Providence and Endorsements

Date 1-13, 1998

Form 40146

FORM NIS-2 OWNER'S REPORT FOR REPAIRS OR REPLACEMENTS
As Required By The Provisions Of The ASME Code Section XI

1. Owner **Duke Power Company**
   Address **526 S. Church Street, Charlotte, NC 28201-1006**

1a. Date 4-29-97

Sheet 1 of 1

2. Plant **Oconee Nuclear Station**
   Address **P.O. Box 1439, Seneca, S.C. 29679**

2a. Unit ☑ 1 ☐ 2 ☐ 3 ☐ Shared (specify Units_____)

3. Work Performed By **Duke Power Company**
   Address **526 S. Church Street, Charlotte, NC 28201-1006**
   Type Code Symbol Stamp **N/A** Authorization No. **N/A** Expiration Date **N/A**

3a. Work Order # 97029691-01
Repair Organization Job #

3b. NSM or MM # N/A

4. Identification of System LRS Class 2

5. (a) Applicable Construction Code B31.1 19 67 Edition, 7-67 Addenda, NO Code Cases
   (b) Applicable Edition of Section XI Utilized for Repairs or Replacements 1989, No Addenda

6. Identification of Components Repaired or Replaced and Replacement Components

	Column 1	Column 2	Column 3	Column 4	Column 5	Col. 6	Column 7	Column 8
	Name of Component	Name of Manufacturer	Manufacturer Serial Number	National Board Number	Other Identification	Year Built	Repaired, Replaced, or Replacement	ASME Code Stamped (yes or no)
A	Flex Hose ILRSFX0017	PARKER HANNIFIN	MARK 0380327664N	N/A	UTC 887290	1991	☐ Repaired ☐ Replaced ☑ Replacement	☑ No ☐ Yes
B	PIPING	D.P.C.	NA	NA		7/73	☐ Repaired ☐ Replaced ☒ Replacement	☒ No ☐ Yes
C							☐ Repaired ☐ Replaced ☐ Replacement	☐ No ☐ Yes
D							☐ Repaired ☐ Replaced ☐ Replacement	☐ No ☐ Yes
E							☐ Repaired ☐ Replaced ☐ Replacement	☐ No ☐ Yes
F							☐ Repaired ☐ Replaced ☐ Replacement	☐ No ☐ Yes

Form 401463 (2-95)

Form NIS-2 (Back)

NOTE: Supplemental sheets in form of lists, sketches, or drawings may be used, provided (1) size is 8 1/2 in. x 11 in. (2) information in items 1 through 6 on this report is included on each sheet, and (3) each sheet is numbered and the number of sheets is recorded at the top of this form.

7. Description of Work Replaced Flex hose and associated bolting and piping

8. Test Conducted: ☑ Hydrostatic ☐ Pneumatic ☐ Nominal Operating Pressure ☐ Other ☐ Exempt

Pressure	96 psig	Test Temp.	92.5 °F
Pressure	_____ psig	Test Temp.	_____ °F
Pressure	_____ psig	Test Temp.	_____ °F

9. Remarks _____

(Applicable Manufacturer's Data Records to be Attached)

CERTIFICATE OF COMPLIANCE

We certify that the statements made in the report are correct and this **repair or replacement** conforms to the rules of the ASME Code, Section XI.

Type Code Symbol Stamp **N/A**

Certificate of Authorization No. **N/A** Expiration Date **N/A**

Signed D B Mason QA Spec Date 4-30, 1997
Owner or Owner's Designed, Title

CERTIFICATE OF INSERVICE INSPECTION

I, the undersigned, holding a valid commission issued by the National Board of Boiler and Pressure Vessel Inspectors and the State or Providence of N.C. and employed by **HSBI and I Company of Hartford Connecticut** have inspected the components described in this Owner's Report during the period 4-8-97 to 4-30-97; and state that to the best of my knowledge and belief, the Owner has performed examinations and taken corrective measures described in this Owner's Report in accordance with the requirements of the ASME Code, Section XI.

By signing this certificate, neither the Inspector nor his employer makes any warranty, expressed or implied, concerning the examinations and corrective measures described in this Owner's Report. Furthermore, neither the Inspector nor his employer shall be liable in any manner for any personal injury or property damage or a loss of any kind arising from or connected with this inspection.

MB Chapman Commissions NC914
Inspector's Signature National Board, State, Providence and Endorsements

Date 4-30, 1997

Form 401463 (

FORM NIS-2 OWNER'S REPORT FOR REPAIRS OR REPLACEMENTS
As Required By The Provisions Of The ASME Code Section XI

1. Owner **Duke Power Company**
   Address **526 S. Church Street, Charlotte, NC 28201-1006**

1a. Date 1/27/97

Sheet 1 of 1

2. Plant **Oconee Nuclear Station**
   Address **P.O. Box 1439, Seneca, S.C. 29679**

2a. Unit ☒ 1 ☐ 2 ☐ 3 ☐ Shared (specify Units_____)

3. Work Performed By **Duke Power Company**
   Address **526 S. Church Street, Charlotte, NC 28201-1006**
   Type Code Symbol Stamp **N/A** Authorization No. **N/A** Expiration Date **N/A**

3a. Work Order # 97001664-01
Repair Organization Job #

3b. ~~NSM~~ or MM # 9862

4. Identification of System 53A Class B

5. (a) Applicable Construction Code B31.7 19 68 Edition, 68 Addenda, N/A Code Cases
   (b) Applicable Edition of Section XI Utilized for Repairs or Replacements 1989, No Addenda

6. Identification of Components Repaired or Replaced and Replacement Components

	Column 1	Column 2	Column 3	Column 4	Column 5	Col. 6	Column 7	Column 8
	Name of Component	Name of Manufacturer	Manufacturer Serial Number	National Board Number	Other Identification	Year Built	Repaired, Replaced, or Replacement	ASME Code Stamped (yes or no)
A	S/R 1-53A-0-4T8A-H8A	DPC	N/A	N/A	N/A	N/A	☐ Repaired ☐ Replaced ☒ Replacement	☒ No ☐ Yes
B							☐ Repaired ☐ Replaced ☐ Replacement	☐ No ☐ Yes
C							☐ Repaired ☐ Replaced ☐ Replacement	☐ No ☐ Yes
D							☐ Repaired ☐ Replaced ☐ Replacement	☐ No ☐ Yes
E							☐ Repaired ☐ Replaced ☐ Replacement	☐ No ☐ Yes
F							☐ Repaired ☐ Replaced ☐ Replacement	☐ No ☐ Yes

Form 401463 (2-95)

Form NIS-2 (Back)

NOTE: Supplemental sheets in form of lists, sketches, or drawings may be used, provided (1) size is 8 1/2 in. x 11 in. (2) information in items 1 through 6 on this report is included on each sheet, and (3) each sheet is numbered and the number of sheets is recorded at the top of this form.

7. Description of Work REMOVED EXISTING SWAY STRUT ASSEMBLY, ITEM 5, AND REPLACED WITH NEW 220 STRUT, ITEM 6.

8. Test Conducted: ☐ Hydrostatic ☐ Pneumatic ☐ Nominal Operating Pressure ☐ Other ☒ Exempt

Pressure _____ psig Test Temp. _____ °F

Pressure _____ psig Test Temp. _____ °F

Pressure _____ psig Test Temp. _____ °F

9. Remarks _____

(Applicable Manufacturer's Data Records to be Attached)

CERTIFICATE OF COMPLIANCE

We certify that the statements made in the report are correct and this **repair or replacement** conforms to the rules of the ASME Code, Section XI.

Type Code Symbol Stamp **N/A**

Certificate of Authorization No. **N/A** Expiration Date **N/A**

Signed W McClure Date 1/27, 19 96

Owner or Owner's Designee, Title

CERTIFICATE OF INSERVICE INSPECTION

I, the undersigned, holding a valid commission issued by the National Board of Boiler and Pressure Vessel Inspectors and the State or Providence of N.C. and employed by **HSBI and I Company of Hartford Connecticut** have inspected the components described in this Owner's Report during the period 1-16-97 to 1-28-97; and state that to the best of my knowledge and belief, the Owner has performed examinations and taken corrective measures described in this Owner's Report in accordance with the requirements of the ASME Code, Section XI.

By signing this certificate, neither the Inspector nor his employer makes any warranty, expressed or implied, concerning the examinations and corrective measures described in this Owner's Report. Furthermore, neither the Inspector nor his employer shall be liable in any manner for any personal injury or property damage or a loss of any kind arising from or connected with this inspection.

M B Chapman Commissions NC914

Inspector's Signature National Board, State, Providence and Endorsements

Date 1-28, 19 97

Form 401463

FORM NIS-2 OWNER'S REPORT FOR REPAIRS OR REPLACEMENTS
As Required By The Provisions Of The ASME Code Section XI

1. Owner **Duke Power Company**
   Address **526 S. Church Street, Charlotte, NC 28201-1006**

1a. Date 12-2-97

Sheet 1 of 1

2. Plant **Oconee Nuclear Station**
   Address **P.O. Box 1439, Seneca, S.C. 29679**

2a. Unit ☑ 1 ☐ 2 ☐ 3 ☐ Shared (specify Units _____)

3. Work Performed By **Duke Power Company**
   Address **526 S. Church Street, Charlotte, NC 28201-1006**
   Type Code Symbol Stamp **N/A** Authorization No. **N/A** Expiration Date **N/A**

3a. Work Order # 97052928-39
Repair Organization Job #

3b. NSM or MM # _____

4. Identification of System RC Class 1

5. (a) Applicable Construction Code B31.7 1967 Edition, 7-67 Addenda, NO Code Cases
   (b) Applicable Edition of Section XI Utilized for Repairs or Replacements 1989, No Addenda

6. Identification of Components Repaired or Replaced and Replacement Components

	Column 1	Column 2	Column 3	Column 4	Column 5	Col. 6	Column 7	Column 8
	Name of Component	Name of Manufacturer	Manufacturer Serial Number	National Board Number	Other Identification	Year Built	Repaired, Replaced, or Replacement	ASME Code Stamped (yes or no)
A	1A1 RCP	Westinghouse	5618J981G03	N/A	N/A	N/A	☐ Repaired ☐ Replaced ☑ Replacement	☑ No ☐ Yes
B							☐ Repaired ☐ Replaced ☐ Replacement	☐ No ☐ Yes
C							☐ Repaired ☐ Replaced ☐ Replacement	☐ No ☐ Yes
D							☐ Repaired ☐ Replaced ☐ Replacement	☐ No ☐ Yes
E							☐ Repaired ☐ Replaced ☐ Replacement	☐ No ☐ Yes
F							☐ Repaired ☐ Replaced ☐ Replacement	☐ No ☐ Yes

Form NIS-2 (Back)

NOTE: Supplemental sheets in form of lists, sketches, or drawings may be used, provided (1) size is 8 1/2 in. x 11 in. (2) information in items 1 through 6 on this report is included on each sheet, and (3) each sheet is numbered and the number of sheets is recorded at the top of this form.

7. Description of Work Replaced bolting Cooling water outlet flange 1A1 RCP

8. Test Conducted: ☐ Hydrostatic ☐ Pneumatic ☐ Nominal Operating Pressure ☐ Other ☑ Exempt

Pressure	_____ psig	Test Temp.	_____ °F
Pressure	_____ psig	Test Temp.	_____ °F
Pressure	_____ psig	Test Temp.	_____ °F

9. Remarks _____

(Applicable Manufacturer's Data Records to be Attached)

CERTIFICATE OF COMPLIANCE

We certify that the statements made in the report are correct and this **repair or replacement** conforms to the rules of the ASME Code, Section XI.

Type Code Symbol Stamp **N/A**

Certificate of Authorization No. **N/A** Expiration Date **N/A**

Signed C R Hinson QA SPECIALIST Date 1-20, 19 98
Owner or Owner's Designee, Title

CERTIFICATE OF INSERVICE INSPECTION

I, the undersigned, holding a valid commission issued by the National Board of Boiler and Pressure Vessel Inspectors and the State or Providence of N. C. and employed by **HSBI and I Company of Hartford Connecticut** have inspected the components described in this Owner's Report during the period 10-23-97 to 1-20-98; and state that to the best of my knowledge and belief, the Owner has performed examinations and taken corrective measures described in this Owner's Report in accordance with the requirements of the ASME Code, Section XI.

By signing this certificate, neither the Inspector nor his employer makes any warranty, expressed or implied, concerning the examinations and corrective measures described in this Owner's Report. Furthermore, neither the Inspector nor his employer shall be liable in any manner for any personal injury or property damage or a loss of any kind arising from or connected with this inspection.

MB Chapman Commissions NC914
Inspector's Signature National Board, State, Providence and Endorsements

Date 1-20, 1998

Form 401463 (

FORM NIS-2 OWNER'S REPORT FOR REPAIRS OR REPLACEMENTS
As Required By The Provisions Of The ASME Code Section XI

1. Owner **Duke Power Company**
   Address **526 S. Church Street, Charlotte, NC 28201-1006**

1a. Date 11-25-97

Sheet 1 of 1

2. Plant **Oconee Nuclear Station**
   Address **P.O. Box 1439, Seneca, S.C. 29679**

2a. Unit ☒ 1 ☐ 2 ☐ 3 ☐ Shared (specify Units _____)

3. Work Performed By **Duke Power Company**
   Address **526 S. Church Street, Charlotte, NC 28201-1006**
   Type Code Symbol Stamp **N/A** Authorization No. **N/A** Expiration Date **N/A**

3a. Work Order # 96070774-01
Repair Organization Job #

3b. NSM or MM # —

4. Identification of System MS Class B

5. (a) Applicable Construction Code B31.1 1967 Edition, — Addenda, — Code Cases
   (b) Applicable Edition of Section XI Utilized for Repairs or Replacements 1989, No Addenda

6. Identification of Components Repaired or Replaced and Replacement Components

	Column 1	Column 2	Column 3	Column 4	Column 5	Col. 6	Column 7	Column 8
	Name of Component	**Name of Manufacturer**	**Manufacturer Serial Number**	**National Board Number**	**Other Identification**	**Year Built**	**Repaired, Replaced, or Replacement**	**ASME Code Stamped (yes or no)**
A	Valve 1MS-84	Crane	Unavailable	N/A	—	N/A	☐ Repaired ☐ Replaced ☒ Replacement	☒ No ☐ Yes
B							☐ Repaired ☐ Replaced ☐ Replacement	☐ No ☐ Yes
C							☐ Repaired ☐ Replaced ☐ Replacement	☐ No ☐ Yes
D							☐ Repaired ☐ Replaced ☐ Replacement	☐ No ☐ Yes
E							☐ Repaired ☐ Replaced ☐ Replacement	☐ No ☐ Yes
F							☐ Repaired ☐ Replaced ☐ Replacement	☐ No ☐ Yes

Form 401463 (2-95)

Form NIS-2 (Back)

NOTE: Supplemental sheets in form of lists, sketches, or drawings may be used, provided (1) size is 8 1/2 in. x 11 in. (2) information in items 1 through 6 on this report is included on each sheet, and (3) each sheet is numbered and the number of sheets is recorded at the top of this form.

7. Description of Work Replaced disc and bonnet nuts in valve IMS-84

8. Test Conducted: ☐ Hydrostatic ☐ Pneumatic ☐ Nominal Operating Pressure ☐ Other ☒ Exempt

Pressure _____ psig Test Temp. _____ °F

Pressure _____ psig Test Temp. _____ °F

Pressure _____ psig Test Temp. _____ °F

9. Remarks _____

(Applicable Manufacturer's Data Records to be Attached)

CERTIFICATE OF COMPLIANCE

We certify that the statements made in the report are correct and this **repair or replacement** conforms to the rules of the ASME Code, Section XI.

Type Code Symbol Stamp **N/A**

Certificate of Authorization No. **N/A** Expiration Date **N/A**

Signed Atoohs QC Specialist Date 1-14, 1998
Owner or Owner's Designee, Title

CERTIFICATE OF INSERVICE INSPECTION

I, the undersigned, holding a valid commission issued by the National Board of Boiler and Pressure Vessel Inspectors and the State or Providence of N.C. and employed by **HSBI and I Company of Hartford Connecticut** have inspected the components described in this Owner's Report during the period 10-3-97 to 1-15-98; and state that to the best of my knowledge and belief, the Owner has performed examinations and taken corrective measures described in this Owner's Report in accordance with the requirements of the ASME Code, Section XI.

By signing this certificate, neither the Inspector nor his employer makes any warranty, expressed or implied, concerning the examinations and corrective measures described in this Owner's Report. Furthermore, neither the Inspector nor his employer shall be liable in any manner for any personal injury or property damage or a loss of any kind arising from or connected with this inspection.

M.B. Chapman Commissions NC914
Inspector's Signature National Board, State, Providence and Endorsements

Date 1-15, 1998

Form 401463 (2-98)

FORM NIS-2 OWNER'S REPORT FOR REPAIRS OR REPLACEMENTS
As Required By The Provisions Of The ASME Code Section XI

1. Owner **Duke Power Company**
   Address **526 S. Church Street, Charlotte, NC 28201-1006**

1a. Date 1-26-98

Sheet 1 of 1

2. Plant **Oconee Nuclear Station**
   Address **P.O. Box 1439, Seneca, S.C. 29679**

2a. Unit ☒ 1 ☐ 2 ☐ 3 ☐ Shared (specify Units _____)

3. Work Performed By **Duke Power Company**
   Address **526 S. Church Street, Charlotte, NC 28201-1006**
   Type Code Symbol Stamp **N/A** Authorization No. **N/A** Expiration Date **N/A**

3a. Work Order # 97051938-01
Repair Organization Job #

3b. NSM or MM # —

4. Identification of System HP Class 2

5. (a) Applicable Construction Code B31.7 1968 Edition, 6-68 Addenda, — Code Cases
   (b) Applicable Edition of Section XI Utilized for Repairs or Replacements 1989, No Addenda

6. Identification of Components Repaired or Replaced and Replacement Components

	Column 1	Column 2	Column 3	Column 4	Column 5	Col. 6	Column 7	Column 8
	Name of Component	Name of Manufacturer	Manufacturer Serial Number	National Board Number	Other Identification	Year Built	Repaired, Replaced, or Replacement	ASME Code Stamped (yes or no)
A	Valve 1HP-302	Crosby	N67965-00-0002	N/A	N/A	1985	☐ Repaired ☐ Replaced ☒ Replacement	☒ No ☐ Yes
B							☐ Repaired ☐ Replaced ☐ Replacement	☐ No ☐ Yes
C							☐ Repaired ☐ Replaced ☐ Replacement	☐ No ☐ Yes
D							☐ Repaired ☐ Replaced ☐ Replacement	☐ No ☐ Yes
E							☐ Repaired ☐ Replaced ☐ Replacement	☐ No ☐ Yes
F							☐ Repaired ☐ Replaced ☐ Replacement	☐ No ☐ Yes

Form 401463 (2-95)

Form NIS-2 (Back)

NOTE: Supplemental sheets in form of lists, sketches, or drawings may be used, provided (1) size is 8 1/2 in. x 11 in. (2) information in items 1 through 6 on this report is included on each sheet, and (3) each sheet is numbered and the number of sheets is recorded at the top of this form.

7. Description of Work Replaced in-line flange bolting in valve 11HP-302

8. Test Conducted: ☐ Hydrostatic ☐ Pneumatic ☐ Nominal Operating Pressure ☐ Other ☒ Exempt

Pressure _____ psig Test Temp. _____ °F

Pressure _____ psig Test Temp. _____ °F

Pressure _____ psig Test Temp. _____ °F

9. Remarks _____

(Applicable Manufacturer's Data Records to be Attached)

CERTIFICATE OF COMPLIANCE

We certify that the statements made in the report are correct and this **repair or replacement** conforms to the rules of the ASME Code, Section XI.

Type Code Symbol Stamp **N/A**

Certificate of Authorization No. **N/A** Expiration Date **N/A**

Signed A Stoohr QC Specialist Date 1-28, 1998
Owner or Owner's Designee, Title

CERTIFICATE OF INSERVICE INSPECTION

I, the undersigned, holding a valid commission issued by the National Board of Boiler and Pressure Vessel Inspectors and the State or Providence of N.C. and employed by **HSBI and I Company of Hartford Connecticut** have inspected the components described in this Owner's Report during the period 9-28-97 to 1-26-98; and state that to the best of my knowledge and belief, the Owner has performed examinations and taken corrective measures described in this Owner's Report in accordance with the requirements of the ASME Code, Section XI.

By signing this certificate, neither the Inspector nor his employer makes any warranty, expressed or implied, concerning the examinations and corrective measures described in this Owner's Report. Furthermore, neither the Inspector nor his employer shall be liable in any manner for any personal injury or property damage or a loss of any kind arising from or connected with this inspection.

MB Chapman Commissions NC 914
Inspector's Signature National Board, State, Providence and Endorsements

Date 1-26, 1998

Form 401463 (2-9)

FORM NIS-2 OWNER'S REPORT FOR REPAIRS OR REPLACEMENTS
As Required By The Provisions Of The ASME Code Section XI

1. Owner **Duke Power Company**
   Address **526 S. Church Street, Charlotte, NC 28201-1006**

1a. Date 1-26-98

Sheet 1 of 1

2. Plant **Oconee Nuclear Station**
   Address **P.O. Box 1439, Seneca, S.C. 29679**

2a. Unit ☒ 1 ☐ 2 ☐ 3 ☐ Shared (specify Units_____)

3a. Work Order # 97051946-01
Repair Organization Job #

3. Work Performed By **Duke Power Company**
   Address **526 S. Church Street, Charlotte, NC 28201-1006**
   Type Code Symbol Stamp **N/A** Authorization No. **N/A** Expiration Date **N/A**

3b. NSM or MM # —

4. Identification of System HP Class 2

5. (a) Applicable Construction Code B31.7 1968 Edition, 6/68 Addenda, — Code Cases
   (b) Applicable Edition of Section XI Utilized for Repairs or Replacements 1989, No Addenda

6. Identification of Components Repaired or Replaced and Replacement Components

	Column 1	Column 2	Column 3	Column 4	Column 5	Col. 6	Column 7	Column 8
	Name of Component	Name of Manufacturer	Manufacturer Serial Number	National Board Number	Other Identification	Year Built	Repaired, Replaced, or Replacement	ASME Code Stamped (yes or no)
A	Valve 1HP-71	Crosby	N67965-00-0001	N/A	N/A	1985	☐ Repaired ☐ Replaced ☒ Replacement	☒ No ☐ Yes
B							☐ Repaired ☐ Replaced ☐ Replacement	☐ No ☐ Yes
C							☐ Repaired ☐ Replaced ☐ Replacement	☐ No ☐ Yes
D							☐ Repaired ☐ Replaced ☐ Replacement	☐ No ☐ Yes
E							☐ Repaired ☐ Replaced ☐ Replacement	☐ No ☐ Yes
F							☐ Repaired ☐ Replaced ☐ Replacement	☐ No ☐ Yes

Form 401463 (2-95)

Form NIS-2 (Back)

NOTE: Supplemental sheets in form of lists, sketches, or drawings may be used, provided (1) size is 8 1/2 in. x 11 in. (2) information in items 1 through 6 on this report is included on each sheet, and (3) each sheet is numbered and the number of sheets is recorded at the top of this form.

7. Description of Work Replaced in-line flange Nuts on Valve 1HP-71

8. Test Conducted: ☐ Hydrostatic ☐ Pneumatic ☐ Nominal Operating Pressure ☐ Other ☒ Exempt

Pressure _____ psig Test Temp. _____ °F

Pressure _____ psig Test Temp. _____ °F

Pressure _____ psig Test Temp. _____ °F

9. Remarks _____

(Applicable Manufacturer's Data Records to be Attached)

CERTIFICATE OF COMPLIANCE

We certify that the statements made in the report are correct and this **repair or replacement** conforms to the rules of the ASME Code, Section XI.

Type Code Symbol Stamp **N/A**

Certificate of Authorization No. **N/A** Expiration Date **N/A**

Signed Ptoohn QC Specialist Date 1-26, 1998

Owner or Owner's Designee, Title

CERTIFICATE OF INSERVICE INSPECTION

I, the undersigned, holding a valid commission issued by the National Board of Boiler and Pressure Vessel Inspectors and the State or Providence of N. C. and employed by **HSBI and I Company of Hartford Connecticut** have inspected the components described in this Owner's Report during the period 9-29-97 to 1-26-98; and state that to the best of my knowledge and belief, the Owner has performed examinations and taken corrective measures described in this Owner's Report in accordance with the requirements of the ASME Code, Section XI.

By signing this certificate, neither the Inspector nor his employer makes any warranty, expressed or implied, concerning the examinations and corrective measures described in this Owner's Report. Furthermore, neither the Inspector nor his employer shall be liable in any manner for any personal injury or property damage or a loss of any kind arising from or connected with this inspection.

MB Chapman Commissions NC914

Inspector's Signature National Board, State, Providence and Endorsements

Date 1-26, 1998

Form 401463

FORM NIS-2 OWNER'S REPORT FOR REPAIRS OR REPLACEMENTS
As Required By The Provisions Of The ASME Code Section XI

1. Owner **Duke Power Company**
   Address **526 S. Church Street, Charlotte, NC 28201-1006**

1a. Date 1-21-98

Sheet 1 of 1

2. Plant **Oconee Nuclear Station**
   Address **P.O. Box 1439, Seneca, S.C. 29679**

2a. Unit ☒ 1 ☐ 2 ☐ 3 ☐ Shared (specify Units _____)

3. Work Performed By **Duke Power Company**
   Address **526 S. Church Street, Charlotte, NC 28201-1006**
   Type Code Symbol Stamp **N/A** Authorization No. **N/A** Expiration Date **N/A**

3a. Work Order # 97058387-01
Repair Organization Job #

3b. NSM or MM # —

4. Identification of System LP Class 2

5. (a) Applicable Construction Code B31.7 19 68 Edition, 6/68 Addenda, — Code Cases
   (b) Applicable Edition of Section XI Utilized for Repairs or Replacements 1989, No Addenda

6. Identification of Components Repaired or Replaced and Replacement Components

	Column 1	Column 2	Column 3	Column 4	Column 5	Col. 6	Column 7	Column 8
	Name of Component	Name of Manufacturer	Manufacturer Serial Number	National Board Number	Other Identification	Year Built	Repaired, Replaced, or Replacement	ASME Code Stamped (yes or no)
A	Valve 1LP-69	Aloyco	680125 4	N/A	N/A	N/A	☐ Repaired ☐ Replaced ☒ Replacement	☒ No ☐ Yes
B							☐ Repaired ☐ Replaced ☐ Replacement	☐ No ☐ Yes
C							☐ Repaired ☐ Replaced ☐ Replacement	☐ No ☐ Yes
D							☐ Repaired ☐ Replaced ☐ Replacement	☐ No ☐ Yes
E							☐ Repaired ☐ Replaced ☐ Replacement	☐ No ☐ Yes
F							☐ Repaired ☐ Replaced ☐ Replacement	☐ No ☐ Yes

Form NIS-2 (Back)

NOTE: Supplemental sheets in form of lists, sketches, or drawings may be used, provided (1) size is 8 1/2 in. x 11 in. (2) information in items 1 through 6 on this report is included on each sheet, and (3) each sheet is numbered and the number of sheets is recorded at the top of this form.

7. Description of Work Replaced Body/Bonnet Bolting in Valve 1LP-69

8. Test Conducted: ☐ Hydrostatic ☐ Pneumatic ☐ Nominal Operating Pressure ☐ Other ☒ Exempt

Pressure _____ psig Test Temp. _____ °F

Pressure _____ psig Test Temp. _____ °F

Pressure _____ psig Test Temp. _____ °F

9. Remarks _____

(Applicable Manufacturer's Data Records to be Attached)

CERTIFICATE OF COMPLIANCE

We certify that the statements made in the report are correct and this **repair or replacement** conforms to the rules of the ASME Code, Section XI.

Type Code Symbol Stamp **N/A**

Certificate of Authorization No. **N/A** Expiration Date **N/A**

Signed P Hoohs QC Specialist Date 1-21, 1998
Owner or Owner's Designee, Title

CERTIFICATE OF INSERVICE INSPECTION

I, the undersigned, holding a valid commission issued by the National Board of Boiler and Pressure Vessel Inspectors and the State or Providence of N.C. and employed by **HSBI and I Company of Hartford Connecticut** have inspected the components described in this Owner's Report during the period 10-12-98 to 1-22-98; and state that to the best of my knowledge and belief, the Owner has performed examinations and taken corrective measures described in this Owner's Report in accordance with the requirements of the ASME Code, Section XI.

By signing this certificate, neither the Inspector nor his employer makes any warranty, expressed or implied, concerning the examinations and corrective measures described in this Owner's Report. Furthermore, neither the Inspector nor his employer shall be liable in any manner for any personal injury or property damage or a loss of any kind arising from or connected with this inspection.

MB Chapman Commissions N.C 914
Inspector's Signature National Board, State, Providence and Endorsements

Date 1-22, 1998

Form 401463

FORM NIS-2 OWNER'S REPORT FOR REPAIRS OR REPLACEMENTS
As Required By The Provisions Of The ASME Code Section XI

1. Owner **Duke Power Company**
   Address **526 S. Church Street, Charlotte, NC 28201-1006**

1a. Date 11-3-97

Sheet 1 of 1

2. Plant **Oconee Nuclear Station**
   Address **P.O. Box 1439, Seneca, S.C. 29679**

2a. Unit ☐ 1 ☐ 2 ☐ 3 ☐ Shared (specify Units _____)

3. Work Performed By **Duke Power Company**
   Address **526 S. Church Street, Charlotte, NC 28201-1006**
   Type Code Symbol Stamp **N/A** Authorization No. **N/A** Expiration Date **N/A**

3a. Work Order # 95017654
Repair Organization Job #

3b. NSM or MM # 7284

4. Identification of System HP Class 2+3

5. (a) Applicable Construction Code ANSI B31.7 1968 Edition JUNE Addenda, _____ Code Cases
   (b) Applicable Edition of Section XI Utilized for Repairs or Replacements 1989, No Addenda

6. Identification of Components Repaired or Replaced and Replacement Components

	Column 1	Column 2	Column 3	Column 4	Column 5	Col. 6	Column 7	Column 8
	Name of Component	Name of Manufacturer	Manufacturer Serial Number	National Board Number	Other Identification	Year Built	Repaired, Replaced, or Replacement	ASME Code Stamped (yes or no)
A	PIPING	D.P. Co.	NA	NA		7/93	☐ Repaired ☐ Replaced ☒ Replacement	☒ No ☐ Yes
B	VLV. 1HP-146	VELAN	NA	NA		NA	☐ Repaired ☒ Replaced ☐ Replacement	☒ No ☐ Yes
C							☐ Repaired ☐ Replaced ☐ Replacement	☐ No ☐ Yes
D							☐ Repaired ☐ Replaced ☐ Replacement	☐ No ☐ Yes
E							☐ Repaired ☐ Replaced ☐ Replacement	☐ No ☐ Yes
F							☐ Repaired ☐ Replaced ☐ Replacement	☐ No ☐ Yes

Form NIS-2 (Back)

NOTE: Supplemental sheets in form of lists, sketches, or drawings may be used, provided (1) size is 8 1/2 in. x 11 in. (2) information in items 1 through 6 on this report is included on each sheet, and (3) each sheet is numbered and the number of sheets is recorded at the top of this form.

7. Description of Work REPLACED 1 HP-146 W/DMV-851

8. Test Conducted: ☐ Hydrostatic ☐ Pneumatic ☐ Nominal Operating Pressure ☐ Other ☐ Exempt

Pressure _____ psig Test Temp. _____ °F

Pressure _____ psig Test Temp. _____ °F

Pressure _____ psig Test Temp. _____ °F

9. Remarks Tested IAW ASME Code Case N-416-1

(Applicable Manufacturer's Data Records to be Attached)

CERTIFICATE OF COMPLIANCE

We certify that the statements made in the report are correct and this **repair or replacement** conforms to the rules of the ASME Code, Section XI.

Type Code Symbol Stamp **N/A**

Certificate of Authorization No. **N/A** Expiration Date **N/A**

Signed D.S. Mason QA Spec Date 1-14, 1998
Owner or Owner's Designee, Title

CERTIFICATE OF INSERVICE INSPECTION

I, the undersigned, holding a valid commission issued by the National Board of Boiler and Pressure Vessel Inspectors and the State or Providence of N.C. and employed by **HSBI and I Company of Hartford Connecticut** have inspected the components described in this Owner's Report during the period 8-4-97 to 1-14-98; and state that to the best of my knowledge and belief, the Owner has performed examinations and taken corrective measures described in this Owner's Report in accordance with the requirements of the ASME Code, Section XI.

By signing this certificate, neither the Inspector nor his employer makes any warranty, expressed or implied, concerning the examinations and corrective measures described in this Owner's Report. Furthermore, neither the Inspector nor his employer shall be liable in any manner for any personal injury or property damage or a loss of any kind arising from or connected with this inspection.

MB Chapman Commissions NC914
Inspector's Signature National Board, State, Providence and Endorsements

Date 1-14, 1998

Form 401463 (2-9

FORM NIS-2 OWNER'S REPORT FOR REPAIRS OR REPLACEMENTS
As Required By The Provisions Of The ASME Code Section XI

1. Owner **Duke Power Company**
   Address **526 S. Church Street, Charlotte, NC 28201-1006**

1a. Date 12-4-95

Sheet 1 of 1

2. Plant **Oconee Nuclear Station**
   Address **P.O. Box 1439, Seneca, S.C. 29679**

2a. Unit ☒ 1 ☐ 2 ☐ 3 ☐ Shared (specify Units_____)

3a. Work Order # 95047079
Repair Organization Job #

3. Work Performed By **Duke Power Company**
   Address **526 S. Church Street, Charlotte, NC 28201-1006**
   Type Code Symbol Stamp **N/A** Authorization No. **N/A** Expiration Date **N/A**

3b. NSM or MM # 2873

4. Identification of System MS Class 2

5. (a) Applicable Construction Code ANSI B31.1 19 67 Edition, _____ Addenda, _____ Code Cases
   (b) Applicable Edition of Section XI Utilized for Repairs or Replacements 1989, No Addenda

6. Identification of Components Repaired or Replaced and Replacement Components

	Column 1	Column 2	Column 3	Column 4	Column 5	Col. 6	Column 7	Column 8
	Name of Component	Name of Manufacturer	Manufacturer Serial Number	National Board Number	Other Identification	Year Built	Repaired, Replaced, or Replacement	ASME Code Stamped (yes or no)
A	PIPING	DPC	NA	NA	NA	7/73	☐ Repaired ☐ Replaced ☒ Replacement	☒ No ☐ Yes
B							☐ Repaired ☐ Replaced ☐ Replacement	☐ No ☐ Yes
C							☐ Repaired ☐ Replaced ☐ Replacement	☐ No ☐ Yes
D							☐ Repaired ☐ Replaced ☐ Replacement	☐ No ☐ Yes
E							☐ Repaired ☐ Replaced ☐ Replacement	☐ No ☐ Yes
F							☐ Repaired ☐ Replaced ☐ Replacement	☐ No ☐ Yes

Form 401463 (2-95)

Form NIS-2 (Back)

NOTE: Supplemental sheets in form of lists, sketches, or drawings may be used, provided (1) size is 8 1/2 in. x 11 in. (2) information in items 1 through 6 on this report is included on each sheet, and (3) each sheet is numbered and the number of sheets is recorded at the top of this form.

7. Description of Work Added 2-1/2" BRANCHES TO A 36" MAIN STEAM LINE LOCATIONS ARE @ WELDS 9Z & 10Z

8. Test Conducted: ☐ Hydrostatic ☐ Pneumatic ☐ Nominal Operating Pressure ☒ Other ☐ Exempt

Pressure	_____ psig	Test Temp.	_____ °F
Pressure	_____ psig	Test Temp.	_____ °F
Pressure	_____ psig	Test Temp.	_____ °F

9. Remarks A PRESSURE TEST WAS PERFORMED PER TN BY VISUAL LEAK CHECK.

(Applicable Manufacturer's Data Records to be Attached)

CERTIFICATE OF COMPLIANCE

We certify that the statements made in the report are correct and this **repair or replacement** conforms to the rules of the ASME Code, Section XI.

Type Code Symbol Stamp **N/A**

Certificate of Authorization No. **N/A** Expiration Date **N/A**

Signed D. L. Blubaugh QATS Date 12-4, 19 95
Owner or Owner's Designee, Title

CERTIFICATE OF INSERVICE INSPECTION

I, the undersigned, holding a valid commission issued by the National Board of Boiler and Pressure Vessel Inspectors and the State or Providence of N. C. and employed by **HSBI and I Company of Hartford Connecticut** have inspected the components described in this Owner's Report during the period 10-16-95 to 12-4-95; and state that to the best of my knowledge and belief, the Owner has performed examinations and taken corrective measures described in this Owner's Report in accordance with the requirements of the ASME Code, Section XI.

By signing this certificate, neither the Inspector nor his employer makes any warranty, expressed or implied, concerning the examinations and corrective measures described in this Owner's Report. Furthermore, neither the Inspector nor his employer shall be liable in any manner for any personal injury or property damage or a loss of any kind arising from or connected with this inspection.

MB Chapman Commissions NC914
Inspector's Signature National Board, State, Providence and Endorsements

Date 12-4, 19 95

Form 401463 (2-98)

FORM NIS-2 OWNER'S REPORT FOR REPAIRS OR REPLACEMENTS
As Required By The Provisions Of The ASME Code Section XI

1. Owner **Duke Power Company**
   Address **526 S. Church Street, Charlotte, NC 28201-1006**

1a. Date 12-4-97

Sheet 1 of 1

2. Plant **Oconee Nuclear Station**
   Address **P.O. Box 1439, Seneca, S.C. 29679**

2a. Unit ☑ 1 ☐ 2 ☐ 3 ☐ Shared (specify Units_____)

3a. Work Order # 97100699 97016760 97101981 97015061
Repair Organization Job #

3. Work Performed By **Duke Power Company**
   Address **526 S. Church Street, Charlotte, NC 28201-1006**
   Type Code Symbol Stamp **N/A** Authorization No. **N/A** Expiration Date **N/A**

3b. NSM or MM # 13068 BM1

4. Identification of System PR Class 2

5. (a) Applicable Construction Code B31.7 19 69 Edition, 8-69 Addenda, NO Code Cases
   (b) Applicable Edition of Section XI Utilized for Repairs or Replacements 1989, No Addenda

6. Identification of Components Repaired or Replaced and Replacement Components

	Column 1	Column 2	Column 3	Column 4	Column 5	Col. 6	Column 7	Column 8
	Name of Component	Name of Manufacturer	Manufacturer Serial Number	National Board Number	Other Identification	Year Built	Repaired, Replaced, or Replacement	ASME Code Stamped (yes or no)
A	PIPING	DPC	N/A	N/A	N/A	1997	☐ Repaired ☐ Replaced ☑ Replacement	☑ No ☐ Yes
B							☐ Repaired ☐ Replaced ☐ Replacement	☐ No ☐ Yes
C							☐ Repaired ☐ Replaced ☐ Replacement	☐ No ☐ Yes
D							☐ Repaired ☐ Replaced ☐ Replacement	☐ No ☐ Yes
E							☐ Repaired ☐ Replaced ☐ Replacement	☐ No ☐ Yes
F							☐ Repaired ☐ Replaced ☐ Replacement	☐ No ☐ Yes

Form NIS-2 (Back)

NOTE: Supplemental sheets in form of lists, sketches, or drawings may be used, provided (1) size is 8 1/2 in. x 11 in. (2) information in items 1 through 6 on this report is included on each sheet, and (3) each sheet is numbered and the number of sheets is recorded at the top of this form.

7. Description of Work Modified Hydrogen Recombiner piping

8. Test Conducted: ☐ Hydrostatic ☐ Pneumatic ☐ Nominal Operating Pressure ☒ Other ☐ Exempt

Pressure _____ psig Test Temp. _____ °F

Pressure _____ psig Test Temp. _____ °F

Pressure _____ psig Test Temp. _____ °F

9. Remarks Tested per TT/1/A/1600/14

(Applicable Manufacturer's Data Records to be Attached)

CERTIFICATE OF COMPLIANCE

We certify that the statements made in the report are correct and this **repair or replacement** conforms to the rules of the ASME Code, Section XI.

Type Code Symbol Stamp **N/A**

Certificate of Authorization No. **N/A** Expiration Date **N/A**

Signed D S Mason QA Spec Date 12-4, 19 97
Owner or Owner's Designee, Title

CERTIFICATE OF INSERVICE INSPECTION

I, the undersigned, holding a valid commission issued by the National Board of Boiler and Pressure Vessel Inspectors and the State or Providence of N.C. and employed by **HSBI and I Company of Hartford Connecticut** have inspected the components described in this Owner's Report during the period 11-28-97 to 12-4-97; and state that to the best of my knowledge and belief, the Owner has performed examinations and taken corrective measures described in this Owner's Report in accordance with the requirements of the ASME Code, Section XI.

By signing this certificate, neither the Inspector nor his employer makes any warranty, expressed or implied, concerning the examinations and corrective measures described in this Owner's Report. Furthermore, neither the Inspector nor his employer shall be liable in any manner for any personal injury or property damage or a loss of any kind arising from or connected with this inspection.

MB Chapman Commissions NC914
Inspector's Signature National Board, State, Providence and Endorsements

Date 12-4, 19 97

Form 401463

FORM NIS-2 OWNER'S REPORT FOR REPAIRS OR REPLACEMENTS
As Required By The Provisions Of The ASME Code Section XI

1. Owner **Duke Power Company**
   Address **526 S. Church Street, Charlotte, NC 28201-1006**

1a. Date 11-20-97

Sheet 1 of 1

2. Plant **Oconee Nuclear Station**
   Address **P.O. Box 1439, Seneca, S.C. 29679**

2a. Unit ☒ 1 ☐ 2 ☐ 3 ☐ Shared (specify Units_____)

3. Work Performed By **Duke Power Company**
   Address **526 S. Church Street, Charlotte, NC 28201-1006**
   Type Code Symbol Stamp **N/A** Authorization No. **N/A** Expiration Date **N/A**

3a. Work Order # 97066969
Repair Organization Job #

3b. NSM or MM # 10648

4. Identification of System HP Class 2 & 3

5. (a) Applicable Construction Code ASME III 19 74 Edition, SUMMER 75 Addenda, _____ Code Cases
   (b) Applicable Edition of Section XI Utilized for Repairs or Replacements 1989, No Addenda

6. Identification of Components Repaired or Replaced and Replacement Components

	Column 1	Column 2	Column 3	Column 4	Column 5	Col. 6	Column 7	Column 8
	Name of Component	Name of Manufacturer	Manufacturer Serial Number	National Board Number	Other Identification	Year Built	Repaired, Replaced, or Replacement	ASME Code Stamped (yes or no)
A	PIPING	D.P. Co.	NA	NA		7/73	☐ Repaired ☐ Replaced ☒ Replacement	☒ No ☐ Yes
B							☐ Repaired ☐ Replaced ☐ Replacement	☐ No ☐ Yes
C							☐ Repaired ☐ Replaced ☐ Replacement	☐ No ☐ Yes
D							☐ Repaired ☐ Replaced ☐ Replacement	☐ No ☐ Yes
E							☐ Repaired ☐ Replaced ☐ Replacement	☐ No ☐ Yes
F							☐ Repaired ☐ Replaced ☐ Replacement	☐ No ☐ Yes

Form 401463 (2-95)

Form NIS-2 (Back)

NOTE: Supplemental sheets in form of lists, sketches, or drawings may be used, provided (1) size is 8 1/2 in. x 11 in. (2) information in items 1 through 6 on this report is included on each sheet, and (3) each sheet is numbered and the number of sheets is recorded at the top of this form.

7. Description of Work Added 1" THROTTLE VLV. 1HP-507 USING DMV-1079

8. Test Conducted: ☒ Hydrostatic ☐ Pneumatic ☒ Nominal Operating Pressure ☐ Other ☐ Exempt

Pressure	_____ psig	Test Temp.	_____ °F
Pressure	_____ psig	Test Temp.	_____ °F
Pressure	_____ psig	Test Temp.	_____ °F

9. Remarks Tested IAW ASME Code Case N416-1

(Applicable Manufacturer's Data Records to be Attached)

CERTIFICATE OF COMPLIANCE

We certify that the statements made in the report are correct and this **repair or replacement** conforms to the rules of the ASME Code, Section XI.

Type Code Symbol Stamp **N/A**

Certificate of Authorization No. **N/A** Expiration Date **N/A**

Signed D.S. Mason QA Spec Date 12-10, 19 97
Owner or Owner's Designee, Title

CERTIFICATE OF INSERVICE INSPECTION

I, the undersigned, holding a valid commission issued by the National Board of Boiler and Pressure Vessel Inspectors and the State or Providence of N.C. and employed by **HSBI and I Company of Hartford Connecticut** have inspected the components described in this Owner's Report during the period 11-22-97 to 12-10-97; and state that to the best of my knowledge and belief, the Owner has performed examinations and taken corrective measures described in this Owner's Report in accordance with the requirements of the ASME Code, Section XI.

By signing this certificate, neither the Inspector nor his employer makes any warranty, expressed or implied, concerning the examinations and corrective measures described in this Owner's Report. Furthermore, neither the Inspector nor his employer shall be liable in any manner for any personal injury or property damage or a loss of any kind arising from or connected with this inspection.

M B Chapman Commissions NC914
Inspector's Signature National Board, State, Providence and Endorsements

Date 12-10, 1997

Form 401463

FORM NIS-2 OWNER'S REPORT FOR REPAIRS OR REPLACEMENTS
As Required By The Provisions Of The ASME Code Section XI

1. Owner **Duke Power Company**
   Address **526 S. Church Street, Charlotte, NC 28201-1006**

1a. Date 11-3-94

Sheet 1 of 1

2. Plant **Oconee Nuclear Station**
   Address **P.O. Box 1439, Seneca, S.C. 29679**

2a. Unit ☒ 1 ☐ 2 ☐ 3 ☐ Shared (specify Units_____)

3a. Work Order # 95018445
Repair Organization Job #

3. Work Performed By **Duke Power Company**
   Address **526 S. Church Street, Charlotte, NC 28201-1006**
   Type Code Symbol Stamp **N/A** Authorization No. **N/A** Expiration Date **N/A**

3b. NSM or MM # 7312

4. Identification of System HP Class 2

5. (a) Applicable Construction Code ANSI B31.7 1968 Edition, JUNE Addenda, _____ Code Cases
   (b) Applicable Edition of Section XI Utilized for Repairs or Replacements 1989, No Addenda

6. Identification of Components Repaired or Replaced and Replacement Components

	Column 1	Column 2	Column 3	Column 4	Column 5	Col. 6	Column 7	Column 8
	Name of Component	Name of Manufacturer	Manufacturer Serial Number	National Board Number	Other Identification	Year Built	Repaired, Replaced, or Replacement	ASME Code Stamped (yes or no)
A	PIPING	D.P.Co.	NA	NA		4/73	☐ Repaired ☐ Replaced ☒ Replacement	☒ No ☐ Yes
B	VLV. 1HP-144	BORG WARNER	NA	NA		NA	☐ Repaired ☒ Replaced ☐ Replacement	☒ No ☐ Yes
C							☐ Repaired ☐ Replaced ☐ Replacement	☐ No ☐ Yes
D							☐ Repaired ☐ Replaced ☐ Replacement	☐ No ☐ Yes
E							☐ Repaired ☐ Replaced ☐ Replacement	☐ No ☐ Yes
F							☐ Repaired ☐ Replaced ☐ Replacement	☐ No ☐ Yes

Form 401463 (2-95)

Form NIS-2 (Back)

NOTE: Supplemental sheets in form of lists, sketches, or drawings may be used, provided (1) size is 8 1/2 in. x 11 in. (2) information in items 1 through 6 on this report is included on each sheet, and (3) each sheet is numbered and the number of sheets is recorded at the top of this form.

7. Description of Work REPLACED 1HP-144 W/ITEM No. DMV-851

8. Test Conducted: ☐ Hydrostatic ☐ Pneumatic ☐ Nominal Operating Pressure ☐ Other ☐ Exempt

Pressure _____ psig Test Temp. _____ °F

Pressure _____ psig Test Temp. _____ °F

Pressure _____ psig Test Temp. _____ °F

9. Remarks Tested IAW ASME Code Case N416-1

(Applicable Manufacturer's Data Records to be Attached)

CERTIFICATE OF COMPLIANCE

We certify that the statements made in the report are correct and this **repair or replacement** conforms to the rules of the ASME Code, Section XI.

Type Code Symbol Stamp **N/A**

Certificate of Authorization No. **N/A** Expiration Date **N/A**

Signed E J Mason QA Spec Date 1-14, 1998

Owner or Owner's Designee, Title

CERTIFICATE OF INSERVICE INSPECTION

I, the undersigned, holding a valid commission issued by the National Board of Boiler and Pressure Vessel Inspectors and the State or Providence of N.C. and employed by **HSBI and I Company of Hartford Connecticut** have inspected the components described in this Owner's Report during the period 10-1-97 to 1-15-98; and state that to the best of my knowledge and belief, the Owner has performed examinations and taken corrective measures described in this Owner's Report in accordance with the requirements of the ASME Code, Section XI.

By signing this certificate, neither the Inspector nor his employer makes any warranty, expressed or implied, concerning the examinations and corrective measures described in this Owner's Report. Furthermore, neither the Inspector nor his employer shall be liable in any manner for any personal injury or property damage or a loss of any kind arising from or connected with this inspection.

M.B. Chapman Commissions N.C. 914

Inspector's Signature National Board, State, Providence and Endorsements

Date 1-15, 1998

Form 401463

FORM NIS-2 OWNER'S REPORT FOR REPAIRS OR REPLACEMENTS
As Required By The Provisions Of The ASME Code Section XI

1. Owner **Duke Power Company**
   Address **526 S. Church Street, Charlotte, NC 28201-1006**

1a. Date 11-4-97

Sheet 1 of 1

2. Plant **Oconee Nuclear Station**
   Address **P.O. Box 1439, Seneca, S.C. 29679**

2a. Unit ☒ 1 ☐ 2 ☐ 3 ☐ Shared (specify Units_____)

3. Work Performed By **Duke Power Company**
   Address **526 S. Church Street, Charlotte, NC 28201-1006**
   Type Code Symbol Stamp **N/A** Authorization No. **N/A** Expiration Date **N/A**

3a. Work Order # 95018609
Repair Organization Job #

3b. NSM or MM # 7303

4. Identification of System HP Class 2

5. (a) Applicable Construction Code ANSI B31.7 1968 Edition, JUNE Addenda, _____ Code Cases
   (b) Applicable Edition of Section XI Utilized for Repairs or Replacements 1989, No Addenda

6. Identification of Components Repaired or Replaced and Replacement Components

	Column 1	Column 2	Column 3	Column 4	Column 5	Col. 6	Column 7	Column 8
	Name of Component	Name of Manufacturer	Manufacturer Serial Number	National Board Number	Other Identification	Year Built	Repaired, Replaced, or Replacement	ASME Code Stamped (yes or no)
A	PIPING	D.P. Co.	NA	NA		7/73	☐ Repaired ☐ Replaced ☒ Replacement	☒ No ☐ Yes
B	VLV. 1HP-147	KEROTEST	NA	NA		NA	☐ Repaired ☒ Replaced ☐ Replacement	☒ No ☐ Yes
C							☐ Repaired ☐ Replaced ☐ Replacement	☐ No ☐ Yes
D							☐ Repaired ☐ Replaced ☐ Replacement	☐ No ☐ Yes
E							☐ Repaired ☐ Replaced ☐ Replacement	☐ No ☐ Yes
F							☐ Repaired ☐ Replaced ☐ Replacement	☐ No ☐ Yes

Form NIS-2 (Back)

NOTE: Supplemental sheets in form of lists, sketches, or drawings may be used, provided (1) size is 8 1/2 in. x 11 in. (2) information in items 1 through 6 on this report is included on each sheet, and (3) each sheet is numbered and the number of sheets is recorded at the top of this form.

7. Description of Work REPLACED 1HP-147 W/ITEM No. DMV-851

8. Test Conducted: ☐ Hydrostatic ☐ Pneumatic ☐ Nominal Operating Pressure ☐ Other ☐ Exempt

Pressure _____ psig Test Temp. _____ °F

Pressure _____ psig Test Temp. _____ °F

Pressure _____ psig Test Temp. _____ °F

9. Remarks Tested IAW ASME Code Case N416-1

(Applicable Manufacturer's Data Records to be Attached)

CERTIFICATE OF COMPLIANCE

We certify that the statements made in the report are correct and this **repair or replacement** conforms to the rules of the ASME Code, Section XI.

Type Code Symbol Stamp **N/A**

Certificate of Authorization No. **N/A** Expiration Date **N/A**

Signed D.B. Marson QA Spec Date 1-14, 1998
Owner or Owner's Designee, Title

CERTIFICATE OF INSERVICE INSPECTION

I, the undersigned, holding a valid commission issued by the National Board of Boiler and Pressure Vessel Inspectors and the State or Providence of N.C. and employed by **HSBI and I Company of Hartford Connecticut** have inspected the components described in this Owner's Report during the period 9-28-97 to 1-15-98; and state that to the best of my knowledge and belief, the Owner has performed examinations and taken corrective measures described in this Owner's Report in accordance with the requirements of the ASME Code, Section XI.

By signing this certificate, neither the Inspector nor his employer makes any warranty, expressed or implied, concerning the examinations and corrective measures described in this Owner's Report. Furthermore, neither the Inspector nor his employer shall be liable in any manner for any personal injury or property damage or a loss of any kind arising from or connected with this inspection.

M. B. Chapman Commissions NC914
Inspector's Signature National Board, State, Providence and Endorsements

Date 1-15, 1998

Form 401463

FORM NIS-2 OWNER'S REPORT FOR REPAIRS OR REPLACEMENTS
As Required By The Provisions Of The ASME Code Section XI

1. Owner **Duke Power Company**
   Address **526 S. Church Street, Charlotte, NC 28201-1006**

1a. Date 11-4-94
Sheet 1 of 1

2. Plant **Oconee Nuclear Station**
   Address **P.O. Box 1439, Seneca, S.C. 29679**

2a. Unit ☒ 1 ☐ 2 ☐ 3 ☐ Shared (specify Units_____)

3. Work Performed By **Duke Power Company**
   Address **526 S. Church Street, Charlotte, NC 28201-1006**
   Type Code Symbol Stamp **N/A** Authorization No. **N/A** Expiration Date **N/A**

3a. Work Order # 95018437
Repair Organization Job #

3b. NSM or MM # 7308

4. Identification of System HP Class 2

5. (a) Applicable Construction Code ANSI B31.7 1968 Edition JUNE Addenda, _____ Code Cases
   (b) Applicable Edition of Section XI Utilized for Repairs or Replacements 1989, No Addenda

6. Identification of Components Repaired or Replaced and Replacement Components

	Column 1	Column 2	Column 3	Column 4	Column 5	Col. 6	Column 7	Column 8
	Name of Component	Name of Manufacturer	Manufacturer Serial Number	National Board Number	Other Identification	Year Built	Repaired, Replaced, or Replacement	ASME Code Stamped (yes or no)
A	PIPING	D.P. Co.	NA	NA		7/73	☐ Repaired ☐ Replaced ☒ Replacement	☒ No ☐ Yes
B	VLV. 1HP145	BORG WARNER	NA	NA		NA	☐ Repaired ☒ Replaced ☐ Replacement	☒ No ☐ Yes
C							☐ Repaired ☐ Replaced ☐ Replacement	☐ No ☐ Yes
D							☐ Repaired ☐ Replaced ☐ Replacement	☐ No ☐ Yes
E							☐ Repaired ☐ Replaced ☐ Replacement	☐ No ☐ Yes
F							☐ Repaired ☐ Replaced ☐ Replacement	☐ No ☐ Yes

Form 401463 (2-95)

Form NIS-2 (Back)

NOTE: Supplemental sheets in form of lists, sketches, or drawings may be used, provided (1) size is 8 1/2 in. x 11 in. (2) information in items 1 through 6 on this report is included on each sheet, and (3) each sheet is numbered and the number of sheets is recorded at the top of this form.

7. Description of Work REPLACED 1HP-145 W/ITEM No. DMV-851.

8. Test Conducted: ☐ Hydrostatic ☐ Pneumatic ☐ Nominal Operating Pressure ☐ Other ☐ Exempt

Pressure _____ psig Test Temp. _____ °F

Pressure _____ psig Test Temp. _____ °F

Pressure _____ psig Test Temp. _____ °F

9. Remarks Tested IAW ASME Code Case N416-1

(Applicable Manufacturer's Data Records to be Attached)

CERTIFICATE OF COMPLIANCE

We certify that the statements made in the report are correct and this **repair or replacement** conforms to the rules of the ASME Code, Section XI.

Type Code Symbol Stamp **N/A**

Certificate of Authorization No. **N/A** Expiration Date **N/A**

Signed D S Mason QA Spec Date 1-15, 1998
Owner or Owner's Designee, Title

CERTIFICATE OF INSERVICE INSPECTION

I, the undersigned, holding a valid commission issued by the National Board of Boiler and Pressure Vessel Inspectors and the State or Providence of N.C. and employed by **HSBI and I Company of Hartford Connecticut** have inspected the components described in this Owner's Report during the period 8-4-97 to 1-15-98; and state that to the best of my knowledge and belief, the Owner has performed examinations and taken corrective measures described in this Owner's Report in accordance with the requirements of the ASME Code, Section XI.

By signing this certificate, neither the Inspector nor his employer makes any warranty, expressed or implied, concerning the examinations and corrective measures described in this Owner's Report. Furthermore, neither the Inspector nor his employer shall be liable in any manner for any personal injury or property damage or a loss of any kind arising from or connected with this inspection.

MB Chapman Commissions NC914
Inspector's Signature National Board, State, Providence and Endorsements

Date 1-15, 1998

Form 401463

FORM NIS-2 OWNER'S REPORT FOR REPAIRS OR REPLACEMENTS
As Required By The Provisions Of The ASME Code Section XI

1. Owner **Duke Power Company**
   Address **526 S. Church Street, Charlotte, NC 28201-1006**

1a. Date 1-19-98

Sheet 1 of 1

2. Plant **Oconee Nuclear Station**
   Address **P.O. Box 1439, Seneca, S.C. 29679**

2a. Unit ☒ 1 ☐ 2 ☐ 3 ☐ Shared (specify Units_____)

3. Work Performed By **Duke Power Company**
   Address **526 S. Church Street, Charlotte, NC 28201-1006**
   Type Code Symbol Stamp **N/A** Authorization No. **N/A** Expiration Date **N/A**

3a. Work Order # 97097568
Repair Organization Job #

3b. NSM or MM # NA

4. Identification of System LPS Class 2

5. (a) Applicable Construction Code ANSI B31.1 19 67 Edition, July Addenda, _____ Code Cases
   (b) Applicable Edition of Section XI Utilized for Repairs or Replacements 1989, No Addenda

6. Identification of Components Repaired or Replaced and Replacement Components

	Column 1	Column 2	Column 3	Column 4	Column 5	Col. 6	Column 7	Column 8
	Name of Component	Name of Manufacturer	Manufacturer Serial Number	National Board Number	Other Identification	Year Built	Repaired, Replaced, or Replacement	ASME Code Stamped (yes or no)
A	PIPING	D.P.Co.	NA	NA		9/73	☐ Repaired ☐ Replaced ☒ Replacement	☒ No ☐ Yes
B							☐ Repaired ☐ Replaced ☐ Replacement	☐ No ☐ Yes
C							☐ Repaired ☐ Replaced ☐ Replacement	☐ No ☐ Yes
D							☐ Repaired ☐ Replaced ☐ Replacement	☐ No ☐ Yes
E							☐ Repaired ☐ Replaced ☐ Replacement	☐ No ☐ Yes
F							☐ Repaired ☐ Replaced ☐ Replacement	☐ No ☐ Yes

Form 401463 (2-95)

Form NIS-2 (Back)

NOTE: Supplemental sheets in form of lists, sketches, or drawings may be used, provided (1) size is 8 1/2 in. x 11 in. (2) information in items 1 through 6 on this report is included on each sheet, and (3) each sheet is numbered and the number of sheets is recorded at the top of this form.

7. Description of Work CUT LPSW PIPING & FIT TO IAI OIL COOLER.

8. Test Conducted: ☒ Hydrostatic ☐ Pneumatic ☐ Nominal Operating Pressure ☐ Other ☐ Exempt

Pressure	95 psig	Test Temp.	73.2 °F
Pressure	_____ psig	Test Temp.	_____ °F
Pressure	_____ psig	Test Temp.	_____ °F

9. Remarks _____

(Applicable Manufacturer's Data Records to be Attached)

CERTIFICATE OF COMPLIANCE

We certify that the statements made in the report are correct and this **repair or replacement** conforms to the rules of the ASME Code, Section XI.

Type Code Symbol Stamp **N/A**

Certificate of Authorization No. **N/A** Expiration Date **N/A**

Signed DB Mason QA Spec Date 1-20, 1998
Owner or Owner's Designee, Title

CERTIFICATE OF INSERVICE INSPECTION

I, the undersigned, holding a valid commission issued by the National Board of Boiler and Pressure Vessel Inspectors and the State or Providence of N. C. and employed by **HSBI and I Company of Hartford Connecticut** have inspected the components described in this Owner's Report during the period 11-13-97 to 1-20-98; and state that to the best of my knowledge and belief, the Owner has performed examinations and taken corrective measures described in this Owner's Report in accordance with the requirements of the ASME Code, Section XI.

By signing this certificate, neither the Inspector nor his employer makes any warranty, expressed or implied, concerning the examinations and corrective measures described in this Owner's Report. Furthermore, neither the Inspector nor his employer shall be liable in any manner for any personal injury or property damage or a loss of any kind arising from or connected with this inspection.

MB Chapman Commissions NC914
Inspector's Signature National Board, State, Providence and Endorsements

Date 1-20, 1998

Form 4014 [illegible]5)

FORM NIS-2 OWNER'S REPORT FOR REPAIRS OR REPLACEMENTS
As Required By The Provisions Of The ASME Code Section XI

1. Owner **Duke Power Company**
   Address **526 S. Church Street, Charlotte, NC 28201-1006**

1a. Date 1-15-98

Sheet 1 of 1

2. Plant **Oconee Nuclear Station**
   Address **P.O. Box 1439, Seneca, S.C. 29679**

2a. Unit ☒ 1 ☐ 2 ☐ 3 ☐ Shared (specify Units _____)

3. Work Performed By **Duke Power Company**
   Address **526 S. Church Street, Charlotte, NC 28201-1006**
   Type Code Symbol Stamp **N/A** Authorization No. **N/A** Expiration Date **N/A**

3a. Work Order # 96010209
Repair Organization Job #

3b. NSM or MM # _____

4. Identification of System PR Class 2

5. (a) Applicable Construction Code ANSI B31.7 19 68 Edition, JUNE Addenda, _____ Code Cases
   (b) Applicable Edition of Section XI Utilized for Repairs or Replacements 1989, No Addenda

6. Identification of Components Repaired or Replaced and Replacement Components

	Column 1	Column 2	Column 3	Column 4	Column 5	Col. 6	Column 7	Column 8
	Name of Component	Name of Manufacturer	Manufacturer Serial Number	National Board Number	Other Identification	Year Built	Repaired, Replaced, or Replacement	ASME Code Stamped (yes or no)
A	PIPING	D.P.C.	NA	NA		7/73	☐ Repaired ☐ Replaced ☒ Replacement	☒ No ☐ Yes
B							☐ Repaired ☐ Replaced ☐ Replacement	☐ No ☐ Yes
C							☐ Repaired ☐ Replaced ☐ Replacement	☐ No ☐ Yes
D							☐ Repaired ☐ Replaced ☐ Replacement	☐ No ☐ Yes
E							☐ Repaired ☐ Replaced ☐ Replacement	☐ No ☐ Yes
F							☐ Repaired ☐ Replaced ☐ Replacement	☐ No ☐ Yes

Form NIS-2 (Back)

NOTE: Supplemental sheets in form of lists, sketches, or drawings may be used, provided (1) size is 8 1/2 in. x 11 in. (2) information in items 1 through 6 on this report is included on each sheet, and (3) each sheet is numbered and the number of sheets is recorded at the top of this form.

7. Description of Work FABRICATED SPOOL PIECES FOR H2 RECOMBINER.

8. Test Conducted: ☒ Hydrostatic ☐ Pneumatic ☐ Nominal Operating Pressure ☐ Other ☐ Exempt

Pressure	66 psig	Test Temp.	59 °F
Pressure	_____ psig	Test Temp.	_____ °F
Pressure	_____ psig	Test Temp.	_____ °F

9. Remarks _____

(Applicable Manufacturer's Data Records to be Attached)

CERTIFICATE OF COMPLIANCE

We certify that the statements made in the report are correct and this **repair or replacement** conforms to the rules of the ASME Code, Section XI.

Type Code Symbol Stamp **N/A**

Certificate of Authorization No. **N/A** Expiration Date **N/A**

Signed D S Mason QA Spec Date 1-29, 1998
Owner or Owner's Designee, Title

CERTIFICATE OF INSERVICE INSPECTION

I, the undersigned, holding a valid commission issued by the National Board of Boiler and Pressure Vessel Inspectors and the State or Providence of N.C. and employed by **HSBI and I Company of Hartford Connecticut** have inspected the components described in this Owner's Report during the period 2-5-96 to 1-29-98; and state that to the best of my knowledge and belief, the Owner has performed examinations and taken corrective measures described in this Owner's Report in accordance with the requirements of the ASME Code, Section XI.

By signing this certificate, neither the Inspector nor his employer makes any warranty, expressed or implied, concerning the examinations and corrective measures described in this Owner's Report. Furthermore, neither the Inspector nor his employer shall be liable in any manner for any personal injury or property damage or a loss of any kind arising from or connected with this inspection.

MB Chapman Commissions NC-914
Inspector's Signature National Board, State, Providence and Endorsements

Date 1-29, 1998

11.0 *Pressure Testing*

There are two refueling outages scheduled for the first period of the third inspection interval for Duke Energy's Oconee Nuclear Station Unit 1. This section describes Pressure Tests performed during the first period through the 1997 refueling outage (also referred to as EOC-17).

Examination Category	*Test Requirement*	*Total Examinations Required For This Period*	*Total Examinations Credited For This Period*	*(%) Examinations Complete For This Period*
B-E	System Hydrostatic Test (IWB-5222)	0	0	0%
B-P	System Leakage Test (IWB-5221)	2	2	100%
B-P	System Hydrostatic Test (IWB-5222)	0	0	0%
C-H	System Inservice/Functional Test (IWC-5221)	39	39	100%
C-H	System Hydrostatic Test (IWC-5222)	0	0	0%

A detailed description of each Examination Category listed above is located in subsection 11.1 of this report. Results of each Examination Category are located in subsection 11.2 of this report.

11.1 Required Examinations This Outage:

A listing of each VT-2 Visual Examination required for EOC-17 is included in this section.

The information shown below is a field description for the listing format included in this section of the report:

Item No.	=	ASME Section XI Tables IWB-2500-1 (Class 1), IWC-2500-1 (Class 2)
Drawing	=	Number of the Flow Diagram
Rev	=	Revision of Flow Diagram
Test	=	Type of Pressure Test
FCA No.	=	Number of last field change authorization
System Name	=	Name of system subject to pressure test
Req. Insp	=	Type inspection performed, i.e., VT-2
Req. Proc	=	Required inspection procedure
Comments	=	General and/or Detail Description

11.2 Examination Results For This Outage:

The results of each VT-2 Visual Examination required for EOC-17 are included in this section.

The information shown below is a field description for the Class 1 and Class 2 listing format included in this section of the report:

Item Number	=	ASME Section XI Tables IWB-2500-1 (Class 1), IWC-2500-1 (Class 2)
Drawing	=	Number of the Flow Diagram
Examination Date	=	Latest examination date
Status	=	Complete, Partial, Not Tested, or Not Required
Results	=	Clear (No Evidence Of Leakage), Reportable (Evidence Of Leakage - Not Through Wall such as packing leak), Reportable (Evidence Of Through Wall Leakage).

11.3 Reportable Indications:

None

OCONEE UNIT NUMBER 1 - 3rd INTERVAL
CLASS A (CATEGORY B-P) REQUIREMENTS
FOR OUTAGE NUMBER 17

ITEM NO.	DRAWING	REV	TEST	FCA NO.	SYSTEM NAME	REQ. INSP	REQ. PROC	COMMENTS
B15.050.001	SEE COMMENTS	N/A	LEAK	N/A	RC SYSTEM	VT-2	QAL-15	Drawings that make up the Class A Leakage Boundary: OFDL-100A-1.1/2, OFDL-100A-1.2/2, OFDL-100A-1.3/0, OFDL-101A-1.1/1, OFDL-101A-1.4/1, OFDL-101A-1.5/3, OFDL-102A-1.1/2, OFDL-102A-1.2/2, OFDL-102A-1.3/2, OFDL-110A-1.1/2, OFDL-110A-1.4/1, OFDL-127B-1.2/1

OCONEE UNIT NUMBER 1 - 3rd INTERVAL
CLASS B (CATEGORY C-H) REQUIREMENTS
FOR OUTAGE NUMBER 17

ITEM NO.	DRAWING	REV	TEST	FCA NO.	SYSTEM NAME	REQ. INSP	REQ. PROC	COMMENTS
C07.030.001	OFDL-101A-1.1	01	INS/FUN	N/A	HPI SYSTEM	VT-2	QAL-15	Penetrations 6 and 7
C07.030.002	OFDL-101A-1.2	02	INSER	N/A	HPI SYSTEM	VT-2	QAL-15	
C07.030.003	OFDL-101A-1.3	00	INSER	N/A	HPI SYSTEM	VT-2	QAL-15	
C07.030.004	OFDL-101A-1.4	01	INS/FUN	N/A	HPI SYSTEM	VT-2	QAL-15	Penetrations 8, 9, 10, 23 and 52
C07.030.005	OFDL-101A-1.5	03	INSER	ONS1-021	HPI SYSTEM	VT-2	QAL-15	
C07.030.006	OFDL-102A-1.1	02	INS/FUN	N/A	LPI SYSTEM	VT-2	QAL-15	This test shall include VT-2 for Telltale hole of Item No. C02.033.001
C07.030.007	OFDL-102A-1.2	02	INS/FUN	N/A	LPI SYSTEM	VT-2	QAL-15	Penetrations 15 and 16
C07.030.008	OFDL-102A-1.3	02	FUNCT	N/A	LPI SYSTEM	VT-2	QAL-15	Penetration 59
C07.030.009	OFDL-103A-1.1	02	FUNCT	N/A	BS SYSTEM	VT-2	QAL-15	
C07.030.010	OFDL-104A-1.1	02	FUNCT	ONS1-021	SF SYSTEM	VT-2	QAL-15	Penetration 56
C07.030.011	OFDL-104A-1.2	02	INSER	N/A	SF SYSTEM	VT-2	QAL-15	
C07.030.012	OFDL-106E-1.1	00	FUNCT	N/A	DW SYSTEM	VT-2	QAL-15	Penetrations 46, 47 and 55
C07.030.013	OFDL-107A-1.1	01	FUNCT	N/A	CS SYSTEM	VT-2	QAL-15	Penetrations 18 and 38

OCONEE UNIT NUMBER 1 - 3rd INTERVAL
CLASS B (CATEGORY C-H) REQUIREMENTS
FOR OUTAGE NUMBER 17

ITEM NO.	DRAWING	REV	TEST	FCA NO.	SYSTEM NAME	REQ. INSP	REQ. PROC	COMMENTS
C07.030.014	OFDL-107A-1.2	00	FUNCT	N/A	CS SYSTEM	VT-2	QAL-15	Penetration 29
C07.030.015	OFDL-107B-1.1	00	FUNCT	N/A	LWD SYSTEM	VT-2	QAL-15	Penetration 5
C07.030.016	OFDL-107D-1.2	01	FUNCT	N/A	LWD SYSTEM	VT-2	QAL-15	Penetration 40
C07.030.017	OFDL-110A-1.1	02	FUNCT	N/A	CA SYSTEM	VT-2	QAL-15	Penetrations 1, 2 and 58
C07.030.018	OFDL-110A-1.3	02	FUNCT	N/A	CA SYSTEM	VT-2	QAL-15	Penetration 42
C07.030.019	OFDL-110A-1.4	01	FUNCT	N/A	CA SYSTEM	VT-2	QAL-15	
C07.030.020	OFDL-116A-1.1	00	FUNCT	N/A	PR SYSTEM	VT-2	QAL-15	Penetrations 19 and 20
C07.030.021	OFDL-116C-1.1	01	FUNCT	N/A	PR SYSTEM	VT-2	QAL-15	Penetrations 60 and 61
C07.030.022	OFDL-121B-1.3	02	INS/FUN	N/A	FDW SYSTEM	VT-2	QAL-15	Penetrations 25 and 27
C07.030.023	OFDL-121B-1.5	02	FUNCT	N/A	FDW SYSTEM	VT-2	QAL-15	Penetrations 4 and 43
C07.030.024	OFDL-121D-1.1	02	FUNCT	N/A	EFW SYSTEM	VT-2	QAL-15	Penetrations 17 and 50
C07.030.025	OFDL-121D-1.2	02	FUNCT	N/A	EFW SYSTEM	VT-2	QAL-15	
C07.030.026	OFDL-122A-1.1	02	INSER	N/A	MS SYSTEM	VT-2	QAL-15	Penetrations 26 and 28

OCONEE UNIT NUMBER 1 - 3rd INTERVAL
CLASS B (CATEGORY C-H) REQUIREMENTS
FOR OUTAGE NUMBER 17

ITEM NO.	DRAWING	REV	TEST	FCA NO.	SYSTEM NAME	REQ. INSP	REQ. PROC	COMMENTS
C07.030.027	OFDL-122A-1.2	00	INSER	N/A	MS SYSTEM	VT-2	QAL-15	
C07.030.028	OFDL-122A-1.3	00	INSER	N/A	MS SYSTEM	VT-2	QAL-15	
C07.030.029	OFDL-122A-1.4	02	INSER	N/A	MS SYSTEM	VT-2	QAL-15	
C07.030.030	OFDL-122B-1.1	00	INSER	N/A	MS SYSTEM	VT-2	QAL-15	
C07.030.031	OFDL-124B-1.2	01	FUNCT	N/A	LPSW SYSTEM	VT-2	QAL-15	Penetrations 30, 31, 32, 33, 34 and 35
C07.030.032	OFDL-124B-1.4	00	INSER	N/A	LPSW SYSTEM	VT-2	QAL-15	Penetrations 21 and 22
C07.030.033	OFDL-127B-1.2	01	FUNCT	N/A	N SYSTEM	VT-2	QAL-15	Penetrations 39, 49 and 53
C07.030.034	OFDL-137A-1.3	00	FUNCT	N/A	BA SYSTEM	VT-2	QAL-15	Penetration 48
C07.030.035	OFDL-137B-1.2	01	FUNCT	N/A	IA SYSTEM	VT-2	QAL-15	Penetration 41
C07.030.036	OFDL-137E-1.1	02	FUNCT	N/A	LRT SYSTEM	VT-2	QAL-15	Penetrations 45 and 51
C07.030.037	OFDL-144A-1.2	00	FUNCT	N/A	CC SYSTEM	VT-2	QAL-15	Penetrations 3 and 54
C07.030.038	OFDL-144A-1.3	00	FUNCT	N/A	CC SYSTEM	VT-2	QAL-15	Penetration 44
C07.030.039	OFDL-109A-1.1	00	INSER	N/A	HPI SYSTEM	VT-2	QAL-15	

OCONEE UNIT NUMBER 1 - 3rd INTERVAL
CLASS A (CATEGORY B-P) LEAKAGE TEST RESULTS
ITEM NUMBER: B15.050.001

OUTAGE NUMBER	EXAMINATION DATE	STATUS:	RESULTS
EOC # 16	12/07/95	CLEAR	COMPLETE
EOC # 17	12/21/97	CLEAR	COMPLETE
EOC # 18	/ /	N/A	NOT TESTED
EOC # 19	/ /	N/A	NOT TESTED
EOC # 20	/ /	N/A	NOT REQUIRED
EOC # 21	/ /	N/A	NOT TESTED

OCONEE UNIT NUMBER 1 - 3rd INTERVAL
CLASS B (CATEGORY C-H) RESULTS
THROUGH OUTAGE NUMBER 17

		1ST PERIOD			2ND PERIOD			3RD PERIOD		
ITEM NO.	DRAWING	EXAM. DATE	STATUS	RESULTS	EXAM. DATE	STATUS	RESULTS	EXAM. DATE	STATUS	RESULTS
C07.030.001	OFDL-101A-1.1	09/09/97	COMPLETE	CLEAR	/ /	NOT TESTED	N/A	/ /	NOT REQUIRED	N/A
C07.030.002	OFDL-101A-1.2	11/10/97	COMPLETE	CLEAR	/ /	NOT TESTED	N/A	/ /	NOT TESTED	N/A
C07.030.003	OFDL-101A-1.3	12/05/97	COMPLETE	CLEAR	/ /	NOT TESTED	N/A	/ /	NOT REQUIRED	N/A
C07.030.004	OFDL-101A-1.4	12/21/97	COMPLETE	CLEAR	/ /	NOT TESTED	N/A	/ /	NOT REQUIRED	N/A
C07.030.005	OFDL-101A-1.5	12/02/95	COMPLETE	CLEAR	/ /	NOT TESTED	N/A	/ /	NOT REQUIRED	N/A
C07.030.006	OFDL-102A-1.1	12/05/97	COMPLETE	CLEAR	/ /	NOT TESTED	N/A	/ /	NOT TESTED	N/A
C07.030.007	OFDL-102A-1.2	12/05/97	COMPLETE	RECORDABLE	/ /	NOT TESTED	N/A	/ /	NOT TESTED	N/A
C07.030.008	OFDL-102A-1.3	09/08/97	COMPLETE	CLEAR	/ /	NOT TESTED	N/A	/ /	NOT REQUIRED	N/A
C07.030.009	OFDL-103A-1.1	11/14/97	COMPLETE	CLEAR	/ /	NOT TESTED	N/A	/ /	NOT REQUIRED	N/A
C07.030.010	OFDL-104A-1.1	10/04/97	COMPLETE	CLEAR	/ /	NOT TESTED	N/A	/ /	NOT REQUIRED	N/A
C07.030.011	OFDL-104A-1.2	12/05/97	COMPLETE	CLEAR	/ /	NOT TESTED	N/A	/ /	NOT TESTED	N/A
C07.030.012	OFDL-106E-1.1	/ /	COMPLETE	N/A	/ /	NOT TESTED	N/A	/ /	NOT REQUIRED	N/A
C07.030.013	OFDL-107A-1.1	/ /	COMPLETE	N/A	/ /	NOT TESTED	N/A	/ /	NOT REQUIRED	N/A
C07.030.014	OFDL-107A-1.2	/ /	COMPLETE	N/A	/ /	NOT TESTED	N/A	/ /	NOT REQUIRED	N/A

OCONEE UNIT NUMBER 1 - 3rd INTERVAL
CLASS B (CATEGORY C-H) RESULTS
THROUGH OUTAGE NUMBER 17

		1ST PERIOD			2ND PERIOD			3RD PERIOD		
ITEM NO.	DRAWING	EXAM. DATE	STATUS	RESULTS	EXAM. DATE	STATUS	RESULTS	EXAM. DATE	STATUS	RESULTS
C07.030.015	OFDL-107B-1.1	/ /	COMPLETE	N/A	/ /	NOT TESTED	N/A	/ /	NOT REQUIRED	N/A
C07.030.016	OFDL-107D-1.2	/ /	COMPLETE	N/A	/ /	NOT TESTED	N/A	/ /	NOT REQUIRED	N/A
C07.030.017	OFDL-110A-1.1	12/21/97	COMPLETE	CLEAR	/ /	NOT TESTED	N/A	/ /	NOT REQUIRED	N/A
C07.030.018	OFDL-110A-1.3	/ /	COMPLETE	N/A	/ /	NOT TESTED	N/A	/ /	NOT REQUIRED	N/A
C07.030.019	OFDL-110A-1.4	/ /	COMPLETE	N/A	/ /	NOT TESTED	N/A	/ /	NOT REQUIRED	N/A
C07.030.020	OFDL-116A-1.1	/ /	COMPLETE	N/A	/ /	NOT TESTED	N/A	/ /	NOT REQUIRED	N/A
C07.030.021	OFDL-116C-1.1	/ /	COMPLETE	N/A	/ /	NOT TESTED	N/A	/ /	NOT REQUIRED	N/A
C07.030.022	OFDL-121B-1.3	12/21/97	COMPLETE	CLEAR	/ /	NOT TESTED	N/A	/ /	NOT REQUIRED	N/A
C07.030.023	OFDL-121B-1.5	12/21/97	COMPLETE	CLEAR	/ /	NOT TESTED	N/A	/ /	NOT REQUIRED	N/A
C07.030.024	OFDL-121D-1.1	12/21/97	COMPLETE	CLEAR	/ /	NOT TESTED	N/A	/ /	NOT REQUIRED	N/A
C07.030.025	OFDL-121D-1.2	12/21/97	COMPLETE	CLEAR	/ /	NOT TESTED	N/A	/ /	NOT REQUIRED	N/A
C07.030.026	OFDL-122A-1.1	12/21/97	COMPLETE	CLEAR	/ /	NOT TESTED	N/A	/ /	NOT REQUIRED	N/A
C07.030.027	OFDL-122A-1.2	07/22/97	COMPLETE	CLEAR	/ /	NOT TESTED	N/A	/ /	NOT REQUIRED	N/A
C07.030.028	OFDL-122A-1.3	07/22/97	COMPLETE	CLEAR	/ /	NOT TESTED	N/A	/ /	NOT REQUIRED	N/A

OCONEE UNIT NUMBER 1 - 3rd INTERVAL
CLASS B (CATEGORY C-H) RESULTS
THROUGH OUTAGE NUMBER 17

		1ST PERIOD			2ND PERIOD			3RD PERIOD		
ITEM NO.	DRAWING	EXAM. DATE	STATUS	RESULTS	EXAM. DATE	STATUS	RESULTS	EXAM. DATE	STATUS	RESULTS
C07.030.029	OFDL-122A-1.4	07/22/97	COMPLETE	CLEAR	/ /	NOT TESTED	N/A	/ /	NOT REQUIRED	N/A
C07.030.030	OFDL-122B-1.1	07/22/97	COMPLETE	CLEAR	/ /	NOT TESTED	N/A	/ /	NOT REQUIRED	N/A
C07.030.031	OFDL-124B-1.2	06/17/97	COMPLETE	CLEAR	/ /	NOT TESTED	N/A	/ /	NOT REQUIRED	N/A
C07.030.032	OFDL-124B-1.4	06/17/97	COMPLETE	CLEAR	/ /	NOT TESTED	N/A	/ /	NOT REQUIRED	N/A
C07.030.033	OFDL-127B-1.2	09/08/97	COMPLETE	CLEAR	/ /	NOT TESTED	N/A	/ /	NOT REQUIRED	N/A
C07.030.034	OFDL-137A-1.3	/ /	COMPLETE	N/A	/ /	NOT TESTED	N/A	/ /	NOT REQUIRED	N/A
C07.030.035	OFDL-137B-1.2	/ /	COMPLETE	N/A	/ /	NOT TESTED	N/A	/ /	NOT REQUIRED	N/A
C07.030.036	OFDL-137E-1.1	/ /	COMPLETE	N/A	/ /	NOT TESTED	N/A	/ /	NOT REQUIRED	N/A
C07.030.037	OFDL-144A-1.2	/ /	COMPLETE	N/A	/ /	NOT TESTED	N/A	/ /	NOT REQUIRED	N/A
C07.030.038	OFDL-144A-1.3	/ /	COMPLETE	N/A	/ /	NOT TESTED	N/A	/ /	NOT REQUIRED	N/A
C07.030.039	OFDL-109A-1.1	10/03/97	COMPLETE	CLEAR	/ /	NOT TESTED	N/A	/ /	NOT REQUIRED	N/A