Group A

FOIA/PA NO: 2015-0275

RECORDS BEING RELEASED IN THEIR ENTIRETY

SONGS UFHA NRC Amendment for Section 1
SONGS UFHA NRC Amendment for Section 2
SONGS UFHA NRC Amendment for Section 3
SONGS UFHA NRC Amendment for Section 4
SONGS UFHA NRC Amendment for Section 5
SONGS UFHA NRC Amendment for Section 6
SONGS UFHA NRC Amendment for Section 7.1
SONGS UFHA NRC Amendment for Section 7.2
SONGS UFHA NRC Amendment for Section 7.3
SONGS UFHA NRC Amendment for Section 7.4
SONGS UFHA NRC Amendment for Section 7.5
SONGS UFHA NRC Amendment for Section 7.6
SONGS UFHA NRC Amendment for Section 7.7
SONGS UFHA NRC Amendment for Section 7.8
SONGS UDHA NRC Amendment for Section 7.9
SONGS UFHA NRC Amendment for Section 7.10
SONGS UFHA NRC Amendment for Section 7.11
SONGS UFHA NRC Amendment for Section 7.12
SONGS UFHA NRC Amendment for Section 7.13
SONGS UFHA NRC Amendment for Section 7.14
SONGS UFHA NRC Amendment for Section 7.15
SONGS UFHA NRC Amendment for Section 7.16
SONGS UFHA NRC Amendment for Section 7.17
SONGS UFHA NRC Amendment for Section 7.18
SONGS UFHA NRC Amendment for Section 7.19
SONGS UFHA NRC Amendment for Appendix A
SONGS UFHA NRC Amendment for Appendix B
SONGS UFHA NRC Amendment for Appendix C
SONGS UFHA NRC Amendment for Appendix D

EXECUTIVE SUMMARY

SONGS 1 was permanently shut down on November 30, 1992 , defueled as of March 6, 1993 and plant-related systems and buildings are decommissioned as of December 2008. Therefore, since the plant is no longer licensed to operate, the 10CFR50.71(e) requirement to periodically update UFHA information no longer applies. The purpose of the SONGS 1 Fire Protection Program is no longer to assure safe shutdown and protect the core. The intent of the Program is now to protect the spent fuel in the Independent Spent Fuel Storage Installation (ISFSI). Current information on the SONGS 1 Fire Protection Program is found in the governing Station Procedures and the applicable design documents for SONGS 1. As part of Revision 15 to the UFHA, information pertaining to the Unit 1 Fire Protection Program was either removed from the UFHA or relocated to the SONGS 1 Defueled Safety Analysis Report (DSAR).

The SONGS 2 and 3 Updated Fire Hazards Analysis is required to be updated periodically to comply with the requirements of 10CFR50.71. The results of this Updated Fire Hazards Analysis (UFHA) may be summarized as follows:

- The UFHA does not mitigate any conclusions drawn in the original reports regarding the plant's capability for safe shutdown in the event of a fire.
- Most of the plant areas are characterized by low intensity fires of short duration.
- The Design Basis Fire (DBF) evaluation indicates that the assumption of the achievement of flashover conditions in the majority of the plant areas is excessively conservative.
- Fire in the majority of safe shutdown related fire areas/zones would not involve all components and cable within the fire areas/zones because of spatial arrangement. The only damage likely to be realized would be to a component directly engulfed by flame.
- A review of the San Onofre design indicates that plant design features will minimize the consequences of a major fire.

A review of the UFHA was performed in 2000 and 2001 in order to:

- Ensure the accuracy of the information within the UFHA,
- Ensure that the 10 CFR 50.54(f) review requirements were met,
- Make minor enhancements to the UFHA to improve fire protection program effectiveness and efficiency, and
- Remove information relative to Unit 1, which is decommissioned.

The review was performed in varying levels of depth, based upon the significance of the UFHA section and the level of confidence in the accuracy of the information. The reviews determined that, in general, the UFHA was accurate and reflected the current SONGS fire protection program. In addition to the reviews for accuracy, several generic UFHA enhancements were made in order to streamline the configuration control of program documentation. This included the removal of detailed combustible loading values from Section 7.0 for each plant fire area/zone, and the categorization of combustible loading as either minimal, low, moderate, or high. In addition, detailed information regarding post-fire safe shutdown equipment and the effects of fire for each fire area/zone was removed.

1. INTRODUCTION

1.1 STATUS

The Updated Fire Hazards Analysis for San Onofre Nuclear Generating Station has been prepared to reflect the current status of the fire protection program at SONGS Units 2 and 3.

NOTE: SONGS 1 information in the UFHA is no longer being maintained current due to the plant shutdown condition. The majority of SONGS 1 information has been removed from the UFHA. All references in this document to SONGS 1 fire protection program features and requirements should be regarded as historical information (see Executive Summary).

1.2 SCOPE

This UFHA contains the following subject areas:

Section 2.0 Program Administration - discusses the fire protection organization, procedures, fire department, and training program at SONGS.

Section 3.0 Features - describes systems, equipment, and design features pertaining to fire protection at SONGS.

Section 4.0 Methodology - outlines the methods used to perform the UFHA.

Section 5.0 Matrix Explanatory Notes - explains the content of a fire area matrix sheet and how it is generated.

Section 6.0 SONGS 1 Detailed Fire Hazards Analysis - includes a written fire analysis for the three remaining fire areas/zones and now evaluates the ISFSI and potential for impact to SONGS 2/3. (NOTE: The original Unit-1 plant information has been removed)

Section 7.0 SONGS 2 and 3 Detailed Fire Hazards Analysis - includes a fire matrix for each area/zone and written fire analysis for fire areas/zones containing safety related or safe shutdown equipment.

Section 8.0 Fire Area/Zone Drawings.

Section 9.0 References - includes the references used to perform this UFHA. (NOTE: This information has been moved to Design Bases documents)

Appendix A SONGS 1 Shutdown System Description. (NOTE: This section has been removed)

Appendix B SONGS 2 and 3 Shutdown System Description.

Appendix C SONGS 1 Design Basis Table - includes BTP 9.5.1, Appendix A commitments and 10CFR50, Appendix R commitments. (NOTE: This section has been moved to the Unit 1 DSAR)

Appendix D SONGS 2 and 3 Design Basis Table - includes BTP 9.5.1, Appendix A commitments and 10CFR50 Appendix R commitments.

1.3 UPDATE CHANGES

Recent changes which have been incorporated into this report for SONGS 2 and 3 include:

- Redesignation of fire areas and zones to clarify station fire area and zone boundaries.

- Update of the Program Administration, Section 2.0, to reflect the current station organization.

- Addition of a Fire Analysis Matrix to the Updated Fire Hazards Analysis (FHA) for each area/zone. The matrix has been developed to assist SCE engineers to quickly assess the impact of any design changes on the FHA. The completed matrix serves as a summary of the area/zone fire analysis. Explanatory notes for the Fire Analysis Matrix are included as Section 5.0 of this report.

- Calculation of the cable insulation combustible load using the conservative assumption that each cable tray is 25% full by volume for Units 2 and 3. For cable trays which currently carry a fill greater than 25%, the exact volume fill of each tray was used to calculate the tray's combustible load contribution.

- Addition of the maximum permissible fire loading for each zone.

- Addition of fire area and zone features drawings, emergency lighting drawings, and drawings indicating those barriers covered by Licensee Controlled Specifications.

- Addition of information with respect to compliance with Sections III.G, III.J, III.L, and III.O to Appendix R to address NRC guidance provided in Generic Letter 86-10.

2. PROGRAM ADMINISTRATION

2.1 STATION FIRE PROTECTION ORGANIZATION

To implement the fire protection program at San Onofre Nuclear Generation Station, an organization exists which assigns administrative and functional responsibilities for fire protection. The ultimate responsibility for the operational fire protection plan is vested in the Chief Nuclear Officer & Senior Vice President of the Southern California Edison Company. The responsibility for implementation of the program is delegated to the Senior Director, Engineering and Technical Services, the Vice President and Plant Manager, the Director, Nuclear Regulatory Affairs and the Director, Nuclear Oversight & Assessment with appropriate delegation to their organizations.

Station Order SO123-FP-1, FIRE PROTECTION, provides programmatic direction for the SONGS Fire Protection Program, specific responsibilities, and program ownership. SO123-FP-1 Fire Protection Organization Chart is shown in the UFHA as Figure 2.0-1. SONGS management fire protection responsibilties are summarized below.

2.1.1 STATION MANAGER / PLANT MANAGER

The Station Manager reports to the Chief Nuclear Officer & Senior Vice President and is responsible for the administration of Maintenance, Operations, and Work Control responsibilities for fire protection.

The Station Manager and the Plant Manager responsibilities principally include line oversight of power plant operations. The Chief Nuclear Officer (CNO) may delegate the station manager and/or a plant manager to oversee additional station line divisions and departments. The CNO may delegate to qualified individuals other management responsibilities for the specific areas of site operations (see UFSAR Section 13.1 and Figure 13.1-2). These individuals title may include vice president, director, and/or manager.

2.1.2 DIRECTOR OF OPERATIONS

The Director of Operations reports to the Plant Manager, SONGS. The Director of Operations, through the Shift Manager, is responsible for the safe operations of Units 2 & 3. This responsibility includes operational control of fire protection systems, other plant systems which require change of status in the event of fire, and a surveillance program for the fire protection systems under Operations Department cognizance. The Manager of Operations is also responsible for safe operation of the Independent Spent Fuel Storage Installation (ISFSI).

Shift Manager

a. The Shift Manager is responsible for designating an Operations Fire Technical Advisor to the Fire Department Incident Commander (IC). This Fire Technical Advisor is responsible for coordination between the Incident Commander and Shift Manager in all matters concerning the effects of fire, smoke, heat, and fire suppressants on plant Safe

Shutdown capability, advising the Incident Commander of plant operations which may affect fire fighting efforts, and advising the Shift Manager of fire fighting efforts which may affect plant.

2.1.3 DIRECTOR, MAINTENANCE AND CONSTRUCTION SERVICES

The Director of Maintenance and Construction Services, reports to the Plant Manager, SONGS and is responsible for the development, implementation and administration of the fire protection equipment surveillance program for surveillances under the jurisdiction of the Maintenance and Construction Services Division. The manager is also responsible for timely repair and restoration of the fire protection system components inside the Protected Area (PA) found to be deficient. The Director is also responsible for the site housekeeping program.

2.1.4 DIRECTOR, WORK CONTROL

The Director of Work Control reports to the Station Manager via the Plant Manager and is responsible for the overall planning, scheduling, coordination and execution of fire protection work activities inside the PA.

2.1.5 MANAGER, SITE EMERGENCY PREPAREDNESS

The Manager, Site Emergency Preparedness (SEP) reports to the Vice President, Chief Nuclear Officer via the Director of Site Support and is responsible for the Fire Department and the Fire Protection Services group. The Manager ensures that an adequate manual fire fighting capability is available and that compensatory measures are properly implemented in accordance with the Licensee Controlled Specifications.

Manager, Fire Protection Services

The Manager, Fire Protection Services reports to the Manager, Site Emergency Preparedness and is responsible for all San Onofre Fire Department emergency responses, Site Pre-Fire Plan implementation and fire protection equipment surveillance and inspections, and the Fire Department drills development, planning scheduling, and the administration of the Fire Department Training program.

a. Developing, implementing and administering the fire protection equipment surveillance program for surveillances under jurisdiction of SEP Division, and implementation of QA program provision within their area of cognizance.

b. Ensuring fire protection system surveillances performed by other Site Divisions are tracked through the Fire Protection impairment process.

c. Overall administration of San Onofre Fire Department.

d. Establishing the required compensatory measures in accordance with Licensee Controlled Specifications and other administrative controls.

e. Testing/Maintaining fire protection equipment outside the Protected Area.

f. Maintaining records of fire protection equipment impairments and ensuring prompt return to service.

g. Maintaining Site Pre Fire-Plans.

h. Implementing and maintaining Fire Protection Information Systems program by reviewing and approving fire protection system and equipment impairments on-line.

i. Developing, implementing, and administering programs to train all appropriate coordinators, and inspectors, in the Fire Protection Program.

j. Implementing the transient combustible control and fire safety inspection program within the Protected Area.

k. The Manager, Fire Protection Services/designee functions as the Incident Commander during all incidents requiring active mitigation by the Fire Department.

l. Initiating, maintaining and enforcing Fire Department procedures and Standard Operational Guidelines (SOGs).

m. Establishing and implementing the Incident Command System (ICS) as published by the California State Board of Fire Services accredited by the California State Fire Marshal as the basis for incident scene management.

n. Performing surveillances and preventative maintenance on selected Plant and Owner Controlled Area fire protection systems under jurisdiction of the Fire Department, and manual firefighting.

o. Administering the controls of fire protection impairments and compensatory measures for Units 2 & 3 plant barrier breaches in accordance with licensee commitment requirements.

FIRE DEPARTMENT

a. The San Onofre Fire Department reports to the Manager, Fire Protection Services and consists of professionally trained, full-time personnel whose primary responsibility is fighting fires at San Onofre Nuclear Generation Station.

b. Monitoring and responding to Protected Area and Owner Controlled Area fire alarms. This function is shared with Operations for Protected Area fire alarms.

c. This San Onofre Fire Department is registered with the State of California and provides full-time shift coverage. A minimum of five fire fighters are on duty per shift.

d. San Onofre Fire Department also performs surveillances, plant safety inspections, and acts as first responders to fire, medical and hazardous material emergencies.

2.1.6 MANAGER, ENGINEERING PROGRAMS

The Manager of Engineering Programs, reports to the Senior Director, Engineering and Technical Services and has overall responsibility for the Fire Protection Program management and the Fire Protection Component Maintenance/Systems Engineering functions. These responsibilities have been delegated to the Supervisor, Fire Protection Engineering through the Manager, I&C-Computer-Electical Engineering.

Supervisor, Fire Protection Engineering (FPE)

The Supervisor, Fire Protection Engineering reports indirectly to the Manager of Engineering Programs. The Supervisor, Fire Protection Engineering is a qualified engineer responsible for the overall coordination of organizations involved in fire protection activities including formulation and implementation of the Site Fire Protection Program designed to minimize the likelihood and consequences of fire accidents.

Supervisor, Fire Protection Engineering responsibilities include:

a. Performing Fire Protection Program Manager responsibilities.

b. Ensuring that plant changes are reviewed and implemented consistent with Fire Protection Program Licensing/Design Bases requirements.

c. Developing, implementing, and administering controls for Units 2 & 3 plant barrier breaches in accordance with licensee commitment requirements.

d. Providing engineering support for plant fire protection systems and related equipment.

e. Coordinating implementation of the site Insurance Program.

f. Supervising engineering personnel who perform or assist in performing functions defined above.

2.1.7 MANAGER, DESIGN ENGINEERING

The Manager, Design Engineering reports to the Senior Director, Engineering and Technical Services and is responsible for maintaining 10CFR50, Appendix R/Fire Protection design bases documentation and generating design changes for fire protection equipment/systems. The Appendix R analysis are maintained by the post-fire safe shutdown engineer within Design Engineering Electrical /Controls organization and the fire protection documentation/analysis and UFHA are maintained by an engineer within the Design Engineering Mechanical/Nuclear organization. (See Section 2.2.1).

2.1.8 DIRECTOR, SITE SUPPORT

The Director of Site Support reports to the Vice President, Chief Nuclear Officer and is responsible for maintaining fire protection systems outside the PA, the seismically qualified fire pump(s) and the emergency fire fighting vehicles.

2.1.9 DIRECTOR, NUCLEAR TRAINING

The Director, Nuclear Training reports to the Plant Manager is responsible for the general training of station personnel with respect to a fire. (See 2.4.2).

2.1.10 DIRECTOR, NUCLEAR REGULATORY AFFAIRS

The Director, Nuclear Regulatory Affairs reports to the Chief Nuclear Officer and is responsible for maintaining licensing basis fire protection documentation, including the UFHA, the Licensee Controlled Specifications (LCS), and the Unit 1 Defueled Safety Analysis Report.

2.1.11 DIRECTOR, NUCLEAR OVERSIGHT DIVISION

The Director, Nuclear Oversight Division reports to the Chief Nuclear Officer and is responsible to provide oversight of the of the Fire Protection program by conducting audits and assessments.

2.2 PROCEDURES

Station Order SO123-FP-1, FIRE PROTECTION, provides programmatic direction for the SONGS Fire Protection Program, specific responsibilities, and program ownership. The implementation of the Fire Protection Program is accomplished by written procedures. These procedures are divided into the following groups: fire protection administrative procedures, fire protection system surveillance procedures, and fire department procedures.

In addition to the written procedures, a Fire Prevention Manual that provides general instructions for the prevention and control of fire is issued to station personnel. This manual was compiled by the Corporate Fire Prevention Committee in 1956 and is revised and updated as required. Additionally, administrative controls are identified which ensure that design changes to the plant do not adversely impact the Fire Protection Program.

2.2.1 ADMINISTRATIVE PROCEDURES

The objective of Fire Protection Program plan is to establish the fire protection policy for the protection of structures, systems, and components important to safety at the San Onofre Nuclear Generating Station (SONGS). This is achieved using the defense-in-depth concept which employs echelons of safety measures to attain the required high degree of safety. This defense-in-depth approach, when applied to achieving the objective of the station fire protection program, includes (1) preventing fires, (2) handling fire emergencies, and (3) maintaining program integrity.

Administrative procedures used to formally implement the Fire Protection Program Plan include the following:

- Fire Protection Procedure, Control of Ignition Sources and Flame Permit Process.

  This procedure identifies the responsibility and actions to be taken to minimize fire hazards of work involving ignition sources at SONGS.

- Fire Protection Procedure, Control of Combustibles and Transient Fire Loads

  This procedure identifies the actions necessary to minimize the potential of a fire in areas containing safety-related equipment or cabling through administrative control of combustibles and transient fire loads.

- Fire Protection Impairment

  This procedure identifies the actions to minimize the effect of an unanticipated or anticipated impairment on the Station Fire Protection system, component or fire rated assembly. This procedure ensures that adequate documentation and controls are established and that appropriate compensatory measures are taken. This procedure also includes guidelines for processing the impairment.

- Site Station Housekeeping and Cleanness Control Program

  This station order defines the policies and responsibilities for Station housekeeping and cleanness controls.

- Fire Protection Design Control Program, 90049

  The primary purpose of the Fire Protection Design Control Program is to provide a systematic method of ensuring that procedure and design changes prepared for SONGS 2 and 3 meet the fire protection requirements adopted by SCE. The main element of the Program is the Fire Protection Checklist and Engineering Guidelines. This document contains Design Guidelines to be used in the design process to review the conformance of design changes with fire protection requirements to identify potential design deficiencies, or 10CFR50 Appendix R or fire protection drawing changes. Other elements of the program provide the design engineer with an introduction to the fire protection design criteria, fire protection documentation and the interface with the non engineering organizations. The use of the Fire Protection Checklist which references 90049 is mandated by design related procedures. 90049 is maintained by the Manager, Design Engineering.

2.2.2 SURVEILLANCE PROCEDURES

Fire protection equipment is inspected and tested as detailed in General Procedures, Fire Protection Administrative Controls, and in various Site Emergency Preparedness, Maintenance, Security, and Operations Procedures. SONGS 1 surveillance requirements were relocated from the SONGS 1 Technical Specifications to Unit 1 Fire Protection Administrative Controls upon implementation of the SONGS 1 Permanently Defueled Technical Specifications (PDTS) in February 1994. Surveillances are performed by Site Emergency Preparedness, Maintenance, Security, and Operations. Corrective maintenance is performed when required.

2.2.3 FIRE DEPARTMENT PROCEDURES

Procedures governing the Fire Department activities are as follows:

- Fire Protection Procedure, Fire Department Fire Fighting Response Procedures

  This procedure identifies the actions to be taken in accordance with the Fire Protection Plan and the applicable Pre-Fire plans in the event of a fire.

- Fire Protection Procedure, Fire Department Training Program

  The objectives of the Fire Department Training Program are the following:

  Comply with the requirements of the Licensee Controlled Specifications, licensing commitments, and NRC Regulations.

  Train Fire Department personnel to recognize plant specific fire hazards and follow the procedures and tactics needed to assure life/property safety.

- Fire Protection Procedure, Fire Department Drills.

  This procedure identifies the requirements for testing, evaluating, and documenting fire drills.

- Fire Protection Procedure, Seismic Fire Pumper Operations

  This procedure identifies the actions to be taken to operate the seismically-qualified fire pumper unit and seicmic water supply for fire fighting situations following an earthquake.

2.3 FIRE DEPARTMENT

2.3.1 FIRE DEPARTMENT

The San Onofre Fire Department, is a professionally trained, full-time fire department whose primary responsibility is fighting fires at San Onofre. A minimum of five certified fire fighters are on duty per shift. The Manager, Fire Protection Services functions as the Fire Department Chief and his authority is passed on to the on-shift Captain, in the event of his absence. During fire emergencies Operations, Health Physics and Security will respond with technical advisors to support the Fire Department Chief in assessing plant operations, radiological condition and security provisions respectively.

2.3.2 MUTUAL AID AGREEMENT

The San Onofre Nuclear Generating Station is situated on an 84-acre site on the Pacific Coast, about 2.5 miles south of the Orange/San Diego County Line.

The site is on the U.S. Marine Corps Base at Camp Pendleton. Although the station is designed to be self-sufficient with respect to fire fighting activities, a mutual fire fighting assistance agreement has been executed with the Camp Pendleton Marine Corps Base. Additionally, as part of the San Diego County Fire Mutual Aid Agreement, SONGS Fire Department has access to county-wide firefighting resources. SONGS firefighting personnel will not be reduced to less than 5 persons in the fire department due to Mutual Aid Agreement activities.

Communications with the Camp Pendleton Fire Department is provided by redundant and diverse communications systems.

2.4 TRAINING

2.4.1 FIRE DEPARTMENT TRAINING

Fire Department training consists of skills, techniques, and strategies in firefighting and emergency medical technician, heavy rescue, auto extrication, hazardous materials, rescue, and fire protection systems. Training also includes the use of new equipment, procedures, methods and hazards.

The fire department coordinates drills that incorporate the expertise of the Camp Pendleton Fire Department, Health Physics, Security, Operations, Maintenance, and other site organizations.

2.4.2 GENERAL EMPLOYEE TRAINING

Employees receive instructions on their proper response to a fire. They are taught when to attempt to extinguish a fire or when to leave the area immediately and call the Fire Department.

2.5 DRILLS

Practice drills are conducted under the control of a Fire Captain, as delegated by the Fire Chief. These drills are conducted at a safe pace, with emphasis on effectiveness rather than speed. These drills are conducted periodically in conjunction with those organizations also having responsibilities during emergency events.

2.6 QUALITY ASSURANCE

The Quality Assurance Program assures that the requirements for design, procurement, installation, testing, and administrative controls for the Fire Protection Plan are satisfied. The Quality Assurance Program is under the management control of the Nuclear Oversight Division (NOD). This control consists of (1) formulating, verifying, and updating the Fire Protection QA program that is acceptable to the Manager of Engineering Programs, and (2) verifying the effectiveness of the Fire Protection QA plan through review, surveillance, and audits.

The Quality Assurance Program for the station is covered in the Topical Quality Assurance Manual. Chapter 8-A of the Topical Quality Assurance Manual, "Quality Assurance Program Requirements for the Fire Protection Program, SONGS 1, 2, and 3," describes the Quality Assurance Program provisions which apply to the Fire Protection Program for safety-related areas, and establishes the responsibilities for the implementation of the program.

2.7 NUCLEAR ELECTRIC INSURANCE LIMITED

The requirements of the "property loss" insurer, Nuclear Electric Insurance Limited (NEIL), are an integral part of the station's Fire Protection Program. Frequent routine inspections of the plant are performed by members of this organization. As a minimum, an NEIL inspector witnesses a station fire department drill annually.

2.8 FIRE PROTECTION AUDITS

Fire Protection audits are carried out in accordance with SONGS 2/3 UFSAR Section 17.2.18 (Topical Report).

Fire Protection Organization

March 2009

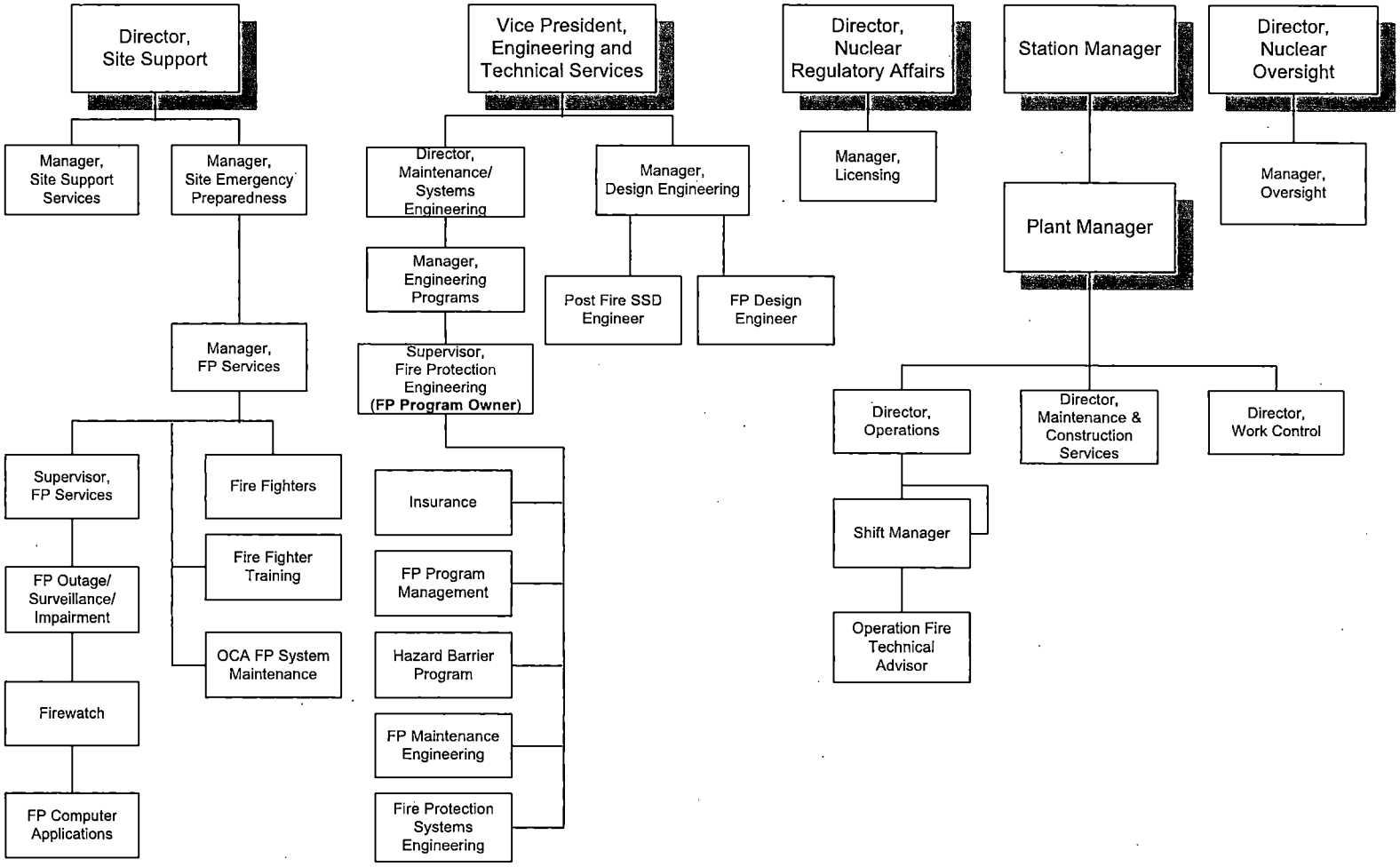

UFHA 2/3-2.0-1 REVISION 5

3. FEATURES

SONGS 1, 2 and 3 have several protection systems designed to detect, contain, and suppress fires. The maximum fire protection is provided at locations containing critical functions. These fire protection measures are described in this section.

NOTE: This section formerly discussed Unit 1 fire protection features. Refer to the Unit 1 DSAR for discussion of Unit 1 fire protection features.

3.1 ACTIVE FIRE PROTECTION FEATURES

3.1.1 WATER SUPPRESSION SYSTEMS

3.1.1.1 Water Supply

3.1.1.1.1 Water Supply - SONGS 1

The Unit 1 firewater pumps are no longer in service. The Unit 1 reservoir has been removed from service and decommissioned.

The Unit 1 firewater system is supplied by the Unit 2 and 3 firewater system. An eight-inch diameter intertie allows the SONGS 1 water system to utilize water from the SONGS 2 and 3 water system at all times. The SONGS 2 and 3 jockey pumps are normally used to maintain the SONGS 1 yard main pressure. A connection to the South Coast Water District – Joint Regional Water Supply System (SCWD-JRWSS) pipeline is used to replenish the SONGS 2/3 firewater tanks.

In the event of a loss of the intertie, the Unit 1 firewater system can be pressurized by either SONGS Fire Engine pumps, or a skid mounted pump from a hose connected to either a Unit 2/3 hydrant or a SCWD-JRWSS supplied hydrant to supply water for Unit 1 fire suppression activities.

3.1.1.1.2 Water Supply - SONGS 2 and 3

The plant fire protection water supply system is capable of supplying rated flow with one fire pump out of service. The fire protection water supply system is rated to simultaneously supply the maximum flow for any single automatic sprinkler system or water spray system and 500 gpm for fire hoses.

Water for fire protection service is supplied by two 375,000 gallon service and fire water storage tanks with 300,000 gallons of each tank is reserved for fire protection below the elevated service water pump suction nozzle. A connection to the South Coast Water District – Joint Regional Water Supply System (SCWD-JRWSS) pipeline is used to replenish the SONGS 2/3 firewater tanks.

Backup firefighting water sources are available from either SONGS2/3 High Flow Make UP Demineralizer (HFMUD) storage tanks located on the bluff above Unit 3 (discussed below) or directly from the SCWD-JRWSS supplied hydrants located on site. The seismically=qualified backup water source is described in section 3.3.1.

Two 1,500 gpm automatic motor driven fire pumps and one 2,500 gpm automatic diesel engine driven fire pump draw suction from the service and fire water tanks. Two 60 gpm jockey pumps automatically maintain yard main pressure.

The fire protection water supply system is kept continuously full and pressurized by either one of two jockey pumps to minimize the on-off use of the fire protection water pumps. If the pressure drops below a certain level (e.g., if a sprinkler system responds to a fire), one, or possibly both, electric motor driven pumps will start. If the pressure drops further, the diesel engine driven fire protection water pump will start. The diesel engine driven pump is automatically available if normal power is lost.

In accordance with NFPA 20-1974, alarms and indications (e.g., pump running, driver availability and failure to start) are provided in the control room (See Appendix D, Design Basis Table, SONGS 2 and 3).

Operating failure of the jockey pumps is detected by a decrease in system pressure without a fire alarm and by an alarm initiated by an electric motor driven fire protection water pump start. Failure of the electric motor driven pump (P-221) to start is detected by a decrease in system pressure to the automatic starting point of the other electric motor driven pump (P-222) and its associated "pump running" alarm. Failure of the electric motor driven pump (P-222) to start is detected by a decrease in system pressure to the automatic starting point of the diesel engine driven pump (P-220) and by its associated "pump running" alarm. Failure of the diesel driven pump is not postulated to occur following the failure of the two electric motor driven fire pumps. Fuses are provided in the diesel driven pump control circuits to ensure that a fire-induced electrical fault in the control cabling will not impact the automatic starting of the pump on a low pressure signal.

The fire protection water supply yard main is looped. The loop is cross-connected and contains a number of post indicator valves, allowing it to be sectionalized to isolate any nonserviceable lines. Hydrants are installed at a maximum of 300-foot intervals which will ensure adequate coverage of plant areas by fire truck hoses. All branch fire protection mains penetrate buildings below grade. Penetrations are of a flexible design for earthquake protection. Branch lines can be isolated through post indicator valves located on the underground fire main. The positions of these valves are administratively controlled.

The yard fire main loops for Unit 1 and that for Units 2 and 3 are interconnected by an intertie pipeline which contains sectional control and check valves. Failure of the yard main due to leaks

or rupture would be detected by an increased frequency of electric motor driven fire pump operation without a fire alarm, caused by the loss of pressure in the fire protection water supply.

Firewater from the Fire Protection System is credited for makeup to Diesel Generator Cooling Water, Component Cooling Water, and the Condensate Storage Tank. The main components credited for Appendix R fire water makeup capability are the diesel-driven fire pump and either one of the fire water storage tanks.

A backup firewater connection is installed near the Unit 3 Tank Building. Backup firewater from the High Flow Makeup Demineralizer tanks is available to be supplied through an 8" connection. Backup pumping capability is available via either one of the SONGS Fire Engines, or by connection to a skid mounted pump. Water may then be pumped directly into the firewater main via an 8" connection located near the Unit 3 Tank Building. This backup pumping arrangement alone does not meet the design flow requirements for the largest demand system. The Licensee Controlled Specifications allow for temporary operation of the system in a degraded mode provided compensatory measures are in place.

3.1.1.2 Automatic Suppression Systems - SONGS 1 - See Unit 1 DSAR

3.1.1.3 Automatic Suppression Systems - SONGS 2 and 3

3.1.1.3A Automatic Wet Pipe Sprinklers - SONGS 2 and 3

Automatic wet pipe sprinklers are used where area coverage is desired. They are hydraulically designed in accordance with NFPA 13-1975. Specific fire areas where wet pipe sprinklers are employed are described in Section 7.0 of the Updated Fire Hazards Analysis.

Wet pipe sprinkler system operation is initiated on a rise in ambient temperature to the melting point of fusible links on automatic sprinklers, thus permitting the water flow. Flow of water through the system initiates a remote alarm on the fire alarm system. Wet pipe sprinkler system operation is terminated manually by shutting a local gate valve at the alarm check valve or by closing a post indicator valve.

3.1.1.3B Water Spray Systems - SONGS 2 and 3

Water spray systems, hydraulically designed in accordance with NFPA 15-1973, are provided as described in Section 7.0 of the Updated Fire Hazards Analysis. They are generally used in fire areas where application of water spray directly to the hazard is preferred. Water spray system operation is initiated by a fire detection device. The spray systems for the charcoal filters are manually actuated upon high temperature alarm conditions.

Upon initiation, a tripping device is actuated to open the deluge valve, thus supplying water under pressure to the open spray nozzles. Actuation of a water spray system also initiates a local alarm and registers remotely an alarm condition on the fire alarm system.

Manual release of the deluge valve tripping device also initiates local and remote alarms. System operation is terminated by manually shutting a local gate valve at the deluge valve or a post indicator valve.

3.1.1.3C Automatic Pre-Action Sprinklers - SONGS 2 and 3

Automatic pre-action sprinklers are used in areas where the inadvertent application of a water spray could damage equipment. Pre-action sprinklers, hydraulically calculated in accordance with NFPA 13-1975, are provided as discussed in Section 7.0 of the Updated Fire Hazards Analysis.

Pre-action sprinkler system operation is initiated by a fire detection device. This sensor detects a fire and releases a tripping device to open the pre-action valve, thus supplying water under pressure to fill and pressurize the system. Actuation of the detection system also initiates a local alarm, and registers the alarm condition on the fire alarm system independently of water flow into the system. Fire detectors which actuate the pre-action sprinkler systems alarm in the Control Room and the ESO office. Pre-action sprinklers will start spraying after melting of fusible link upon further rise of ambient temperature. System operation is terminated by manually shutting a local valve at the pre-action valve or a post indicator valve. Water flow alarms are not provided for pre-action sprinkler systems (See Appendix D, Section E).

3.1.2 GASEOUS SUPPRESSION SYSTEMS

3.1.2.1 Carbon Dioxide Systems - SONGS 2 and 3

Carbon dioxide systems are used where the application of water would be inappropriate. A low-pressure carbon dioxide system, designed in accordance with NFPA 12-1973, is provided for total flooding or local application. Areas where this type of suppression is employed are discussed in Section 7.0 of the Updated Fire Hazards Analysis.

Low-pressure carbon dioxide system operation is initiated by a rapid rise in ambient temperature or attainment of a fixed high temperature. A thermostat electric heat-responsive device initiates the following automatic operating sequence:

1. A local alarm is sounded, and initiates an alarm in the main control room.

2. The master and selector valves are opened to discharge carbon dioxide to the hazard area.

Upon completion of the timed discharge cycle, the timer de-energizes circuits to shut the selector valve. The alarm condition is maintained until the system relay is reset manually. The selector valve may also be operated manually to activate the system if additional quantities of carbon dioxide are required to extinguish the fire. The storage capacity of the system is adequate to supply the fire protection and main generator gas purging functions.

3.1.2.1.1 Halon 1301 Systems - SONGS 1 - Section removed

3.1.2.1.2 Halon 1301 System - SONGS 2 and 3

Halon 1301 fire suppression systems for total flooding are designed in accordance with NFPA 12A-1973 and are provided as discussed in Section 7.0 of the Updated Fire Hazards Analysis.

Halon 1301 system operation in the computer rooms is initiated by a rapid rise in ambient temperature or attainment of fixed high temperature. A thermostat type electric heat-responsive device shuts all dampers, energizes a pre-discharge alarm, and, after a delay, trips the release valve assembly in the control head of the storage cylinder to discharge the total capacity of the agent storage cylinders.

Halon 1301 system operation in the telecommunications center is initiated by the activation of a cross-zoned ionization detection system. Upon receipt of an alarm from one ionization detector, an HVAC unit shutdown in the room with the air handling units, shutting of all dampers, and a predischarge alarm occurs. Upon receipt of an alarm from a cross-zoned ionization detector and after a delay, the release valve assembly in the control head of the storage cylinder trips to discharge the total capacity of the agent storage cylinders.

Halon 1301 system operation in the Radiochemistry Counting Room is initiated by the activation of a cross-zoned fire detection system. Upon receipt of an alarm from a cross-zoned fire detector and after a delay, the release valve assembly in the control head of the storage cylinder trips to discharge the total capacity of the agent storage cylinders.

A 5% Halon 1301 concentration for a period of 10 minutes is achieved in the areas to be protected. A primary and reserve system provide for two separate discharges in any protected area. An independent early warning detection alarm system, which alarms on the fire alarm system, is provided. Alarms are also provided in the control room for detection prealarm, Halon discharge, and Halon system malfunctions. A concentration level of 5% Halon 1301 in the computer room and telecommunications center is not considered toxic by NFPA 12A-1973. In addition, a total flooding Halon 1301 system actuated by ionization and photoelectric smoke detection is provided for the protection of the Radiochemistry Counting Room.

3.1.3 DETECTION AND ALARM SYSTEMS

3.1.3.1 <u>Detection and Alarm Systems - SONGS 1 - See Unit 1 DSAR</u>

3.1.3.2 <u>Detection and Alarm Systems - SONGS 2 and 3</u>

Fire and smoke detection and alarm are accomplished by locating ionization (I), photoelectric (PE), ultraviolet (UV), and infrared (IR) devices in areas where the potential of fire exists. This

system is designed using the guidelines of NFPA 72D-1975 and NFPA 72E-1974 (See Appendix D, Design Basis Table, SONGS 2 and 3).

The fire and smoke detection systems include a supervisory circuit that indicates the failure of individual circuits and detectors.

Smoke stratification has been considered in the design of the detection systems as specified in NFPA 72E-1974 section 4.4.5.

In some areas, the fire detection system is interlocked with the ventilation system fans for smoke control. Paragraph 3.1.4B of this section addresses ventilation.

Incoming fire protection system (FPS) alarms activated individually or in groups, provide audible and visual annunciation in the control room and the ESO office. A monitor cathode ray tube (CRT) is provided in the control room and the ESO office for the receipt and trend evaluation of incoming FPS alarms. The CRT alarm messages indicate the area of the plant that initiated the alarm, and if an automatic fire extinguisher system is in operation. FPS alarms are also indicated on local fire zone indicating panels as well as on printers located in the control room area and the ESO office. During maintenance testing, alarms are provided in the ESO office only.

3.1.4 AUTOMATIC SMOKE CONTROL

3.1.4.1 Automatic Smoke Control - SONGS 1 - See Unit 1 DSAR

3.1.4.2 Automatic Smoke Control - SONGS 2 and 3

Several fire detection zones are interlocked with HVAC fans for smoke control. Table in the Fire Protection Design Basis Document lists areas which have fire detectors interlocked with HVAC fans.

The control room recirculation ductwork is provided with smoke detection capability which automatically places the control room in the smoke removal mode.

3.2 PASSIVE FIRE PROTECTION FEATURES

3.2.1 FIRE BARRIERS

3.2.1.1 Fire Barriers - SONGS 1 - See Unit 1 DSAR

3.2.1.2 Fire Barriers - SONGS 2 and 3

The specific design intent is to arrange redundant safety-related components in distinct areas separated by fire barriers to prevent the spread of fire to adjacent areas. Where ventilation

systems penetrate these barriers, fire dampers with an appropriate fire rating is generally provided. Where a damper is not provided in a barrier which separates redundant equipment for safe shutdown, an evaluation has been performed to demonstrate the adequacy of the barrier. Cable tray, conduit, HVAC duct, and piping penetration seals in fire barriers meet the acceptance criteria of ASTM E119-73, including a hose stream test (See Appendix D, Design Basis Table, SONGS 2 and 3 as exceptions). Plaster walls having 3/4-inch vermiculite plaster on each face and 6-inch metal studs are considered to be of 2-hour rated construction following a successful fire test at RAMTECH Laboratories, Inc., on February 21, 1980, which was witnessed by NRC representatives.

A penetration seal evaluation program has been performed which assessed the qualification of the fire barrier penetration seals. The program has evaluated the testing basis for the seal installation details which depict the preapproved configurations. Where a fire rated seal in a Licensee Controlled Specification barrier was not represented by a test, the fire test was supplemented by an 86-10 boundary evaluation to demonstrate the adequacy of the seal. Fire areas which have corresponding 86-10 evaluations are identified in the detailed fire hazards analyses contained in Section 7.0. Not all penetration seals provide a minimum fire rating equal to the rating of the barrier.

Rated fire doors have been provided in rated fire area boundaries except for reasons such as overriding nuclear safety or security concerns which preclude the use of fire rated doors. An evaluation of the use of nonrated doors has concluded that a fire will not breach the nonrated door. Doors in fire area/zone boundaries which are not fire rated are identified in Section 7.0. Fire rated doors which have been modified for security purposes or have had their labels removed have been evaluated.

Hollow metal doors and frames in the plant, except the containment personnel hatch and watertight doors, are constructed identically using standard methods of construction and have appropriate UL listing. Appropriate UL Listings for each fire door are listed in the respective fire door schedules.

Fire dampers have been specified and constructed to meet the requirements of NFPA 90A-1975. Ductwork which penetrates 3 hour rated walls has been provided with 3 hour rated fire doors/dampers. Other fire dampers in the plant have a rating of 1-1/2 hours, in accordance with NFPA 90A-1975.

Structural members are fireproofed, where required, as follows.

- Columns will have 1-3/8-inch thick gypsum plaster over self-furring metal lath applied to 3/4-inch channels. This represents a 3-hour fire rating.

- Primary members framing to columns will have 1-1/2-inch thick direct-to-steel, gypsum plaster fireproofing, representing a 3-hour fire rating.

- Other framing members will have 1-inch thick direct-to-steel, gypsum plaster fireproofing, representing a 2-hour fire rating.

(Notes: 1. Structural elements used as construction aids or supports for piping, equipment, and "Q" deck are not considered structural members and are not fireproofed. 2. Fire proofing is not installed on the inside annulus of tube steel supports. Industry testing supports that external fire proofing provides adequate protection.)

3.2.1.3 Technical Specification Barriers - SONGS 1 - Section Removed

3.2.1.4 Licensee Controlled Specification Barriers - SONGS 2 and 3

Fire rated assemblies required to be operable per the Units 2 and 3 Licensee Controlled Specifications are shown on the Licensee Controlled Specification Barrier drawings in Section 8.0.

When cabling necessary for redundant safe shutdown system operation is enclosed in a material which effectively constitutes a 1-hour rated fire barrier, these raceway fire barriers are controlled by Licensee Controlled Specification. These barriers are summarized in the fire hazards analysis provided in Section 7.0 and are identified on engineering drawings.

3.2.2 REACTOR COOLANT PUMP LUBE OIL COLLECTION SYSTEM

3.2.2.1 Reactor Coolant Lube Oil Collection System - SONGS 1 - Section Removed

3.2.2.2 Reactor Coolant Pump Lube Oil Collection System - SONGS 2 and 3

A reactor coolant pump (RCP) lube oil collection system, designed to 10CFR50, Appendix R, Section III.0 criteria, is provided to divert oil leaks to isolated containers so that leaking oil is prevented from coming into contact with high temperature components and becoming a fire hazard. The system is designed to ensure that it will not structurally fail and unacceptably interact with safety-related structures, systems, and components.

3.2.3 LIGHTNING PROTECTION UNITS 2 AND 3

A lightning protection system is provided to minimize the consequences of a lightning strike affecting safety related equipment. Lightning protection is provided by the use of lightning rods with associated grounding cable which will minimize the possibility of damage due to lightning strikes on buildings/enclosures housing safety related equipment. This system was installed/designed utilizing criteria described in NFPA 78, "Lightning Protection Code" and U.L. 96A, "Installation Requirements-Master Labeled Lightning Protection Systems." Surge arresters are provided at specific locations to protect high voltage equipment associated with the electrical distribution system by limiting surge voltages by discharging or passing surge current.

3.3 MANUAL FIRE PROTECTION FEATURES

3.3.1 MOBILE FIRE APPARATUS

3.3.1.1 Mobile Fire Apparatus - SONGS 2 and 3

The San Onofre Fire Department operates two 2008 Pierce-Arrow fire trucks each with an engine-driven water pump rated at 2000 gpm. The pumper (E2011) carries 500 gallons of water and 100 gallons of Class A & B foam. The aerial truck (T2071) is provided as a second unit and is equipped with a 75-ft hydraulically-operated ladder, 300 gallons of water, and 50 gallons of A & B foam. Both fire engines were built and are equipped to meet the requirements of NFPA 1901, Mobile Fire Apparatus. Combined, the two fire trucks carry hose and equipment equivalent of an NFPA 24 hose house.

Additionally, SONGS fire truck capabilities are enhanced by two firefighting foam trailers (2085, 2086) with a foam concentrate capacity of 660 gallons each.

3.3.1.2 Post-Seismic Firefighting Apparatus- SONGS 2 and 3

To meet the necessary system functional requirements, one self-powered fire pump is provided mounted on a tractor unit. The fire pump is capable of delivering 250 gpm at a discharge pressure between 150 and 250 psi. A demineralized water storage tank, with a capacity of approximately 150,000 gallons of water (retired Unit1 auxiliary feedwater tank), was modified to meet Unit 2/3 Seismic Category I standards and facilitate connection to a seismically-qualified firewater pump. The minimum requirement for post-seismic firefighting activities is 18,000 gallons (2-75 GPM hose streams for two hours). The seismic qualification of the pumpers is maintained by either seismic restraints or by establishing a 15-foot exclusion area from potential interactions with structures/objects.

3.3.2 STANDPIPES, FIRE HOSE STATIONS, AND HYDRANTS

3.3.2.1 Standpipes, Fire Hose Stations, and Hydrants - SONGS 1 - See Unit 1 DSAR

3.3.2.2 Standpipes, Fire Hose Stations, and Hydrants - SONGS 2 and 3

Standpipes are installed within or adjacent to stair towers and other points in normally accessible areas in plant buildings. 4-inch standpipes are provided for multiple hose connections and 2-1/2-inch standpipes are provided for single hose connections. The standpipe hose connections are equipped with 1-1/2-inch hose valves and 75 or 100 feet of 1-1/2-inch woven-jacketed, rubber-lined hose. Adjustable spray nozzles, suitable for use on electric fires, are provided at hose stations where electrical equipment is present. Wet standpipes, with 2-1/2-inch capped hose connections, are provided within the radwaste and control buildings.
Selected existing standpipes in the containment, penetration area, fuel handling building, control building, and radwaste building are designed to Seismic Category I requirements to provide

manual fire fighting capability following a safe shutdown earthquake (SSE). These selected standpipes are located in the areas where external suppression cannot reach equipment necessary for safe shutdown. Isolation valves are provided to manually isolate the upgraded standpipes from the normal non-Seismic Category I supply headers and other non-Seismic Category I lines normally served by the headers. Valved hose connections are provided on the upgraded standpipes to receive water supplied from the Seismic Category I water tank –and seismically-qualified firewater pump.

Fire hydrants are of the cast iron, wet-barrel type, with 6-inch slip-on connections, and break-off-type risers pumper connections are installed on fire hydrants at key locations around the power block. The hydrants are installed with a maximum interval of 300 feet along the yard main.

Outside SONGS 2/3 Protected Area, South Coast Water District – Joint Regional Water Supply System (SCWD-JRWSS) pipeline is connected to several above-ground hydrants (cast iron, wet-barel type, with 6-inch slip-on connections, and break-off-type risers pumper connections) at key locations around the site. They provide a partial backup to SONGS 2/3 fire pumps and fire water storage tanks.

3.3.3 PORTABLE EXTINGUISHERS

3.3.3.1 Portable Extinguishers - SONGS 1 - See Unit 1 DSAR

3.3.3.2 Portable Extinguishers - SONGS 2 and 3

Portable fire extinguishers for manual extinguishing of fires are provided throughout the plant in accordance with the recommendations of NFPA 10-1975 (See Appendix D, Design Basis Table, SONGS 2 and 3). Extinguisher locations shown on the feature drawings are approximate. The actual number of extinguishers identified per fire area is accurate.

3.3.4 MANUAL SMOKE REMOVAL

3.3.4.1 Manual Smoke Removal - SONGS 1 - Section Removed

3.3.4.2 Manual Smoke Removal - SONGS 2 and 3

Appendix A to BTP 9.5-1 requires that the ventilation systems provide 300 cfm per 200 square feet (1.5 cfm/ft^2) for smoke removal. A combination of fixed ventilation systems supplemented as required by portable smoke removal fans is utilized (see Appendix D, Section D.4.g, General Guidance for Plant Projection, Ventilation Section). The portable fans are set up in series with specified lengths of ducting in between to ensure the smoke is removed from the fire area through unaffected areas to an exterior location. The six portable smoke removal fans are each rated at 5,000 cubic feet per minute. In all cases, this combination of fixed and portable fan systems meets the requirements of 1.5 cfm/ft^2. Smoke removal provisions are highlighted in this

Updated FHA in Section 7.0. Specific smoke removal plans identifying quantities of portable fans and ducting are provided for each fire area in the SONGS 2 and 3 Pre-Fire Plans.

3.4 EMERGENCY LIGHTING

3.4.1 EMERGENCY LIGHTING - SONGS 1 - SECTION REMOVED

3.4.2 EMERGENCY LIGHTING - SONGS 2 AND 3

Emergency Lighting is provided to illuminate components requiring local operation within eight hours to attain safe shutdown, as well as to illuminate access and egress routes in the event normal lighting is lost. Outside the main control room area, emergency lighting is provided by fixed 8-hour battery pack units, utilizing two 6-watt bulbs. Within the main control room area, emergency lighting is provided by the installed main control room essential lighting fixtures. These fixtures can be supplied from either Train A or Train B diesel backed A.C. power. The transfer method between Trains A and B diesel backed AC power is manual. (See Appendix D, Design Basis Table, SONGS 2 and 3).

Emergency lighting drawings are included in Section 8.0 which show location of emergency lights, approximate direction of illumination and the safe shutdown access and egress routes.

3.5 COMMUNICATIONS

3.5.1 COMMUNICATIONS - SONGS 1 - SEE UNIT 1 DSAR

3.5.2 COMMUNICATIONS - SONGS 2 AND 3

The communication systems include internal (in-plant) and external (out-of-plant) communications designed to provide convenient and effective operational communications among various plant locations, and between the plant and locations external to the plant. Various communications systems are provided in the plant to ensure reliable communication during plant startup, operation, shutdown, and maintenance under normal and emergency conditions. The design bases of these systems are:

- The communication system provided includes the 800 MHz UHF, Private Automatic Exchange (PAX) and the sound-powered phones. Sound-powered phones are utilized for communication between operators during safe shutdown. Phone jacks are provided at specific plant locations when continuous operator actions need to be coordinated with the Control Room or Evacuation Shutdown Panel. Offsite communication is established by utilizing the 800 MHz UHF and/or PAX system. The 800 MHz UHF and PAX system will also be utilized by the plant fire department at specific staging areas to communicate to offsite and the Control Room or the Evacuation Shutdown Panel from the staging areas in the

event of Control Room evacuation. The 800 MHz UHF system is powered from multiple power sources. It requires power for signal keying and signal broadcast. For signal keying, each unit's UHF equipment is powered from Fire Detection Power Distribution Panel of the same unit. For signal broadcast, it is powered from Computer Equipment Power Distribution Panel. Fire Detection Power Distribution Panel of each unit is powered from Train B Class 1E power source, which can be aligned to receive power from Units 2 or 3. The breakers feeding Fire Detection Power Distribution Panels trip on SIAS. The Computer Equipment Power Distribution Panel of each unit is powered from a Non-Class 1E UPS 120/208 VAC distribution panel of that unit, which is backed by a 90 minute battery. The Non-Class 1E distribution panel of each unit can be aligned to receive power from a Train A Class 1E source. The breakers feeding these Non-Class 1E sources from Train A Class 1E also trip on SIAS. The PAX system is battery backed (See Appendix D, Design Basis Table, SONGS 2 and 3).

- Public and private telephone systems and a VHF radio system to the U.S. Marine Corps at Camp Pendleton are provided to permit plant-to-offsite communication on a continuous basis in support of mutual aid agreements. A VHF Radio System also allows communication with Life-Flight in medical emergencies. These systems are not required to operate subsequent to a design basis accident (DBA).

The plant has a microwave multiplex to the SCE and SDG&E dispatching centers. Alternate systems are provided from the station to the SCE dispatcher.

The emergency evacuation alarm system is designed to warn personnel to evacuate the exclusion area in the event of a DBA. The emergency evacuation alarm system is designed to remain functional subsequent to a design basis earthquake in all seismically qualified buildings. The turbine building utilizes the plant paging system speakers to function as emergency evacuation alarms.

The communication sytems are provided with diverse power source. The main equipment cabinets and power supplies are located in separate areas to minimize losses from fire.

The communication systems conform with applicable local codes, standards, ordinances, and Federal Communications Commission regulations.

3.6 SONGS 2 & 3 HVAC & DETECTOR INTERLOCKS

Each computer room is supplied with smoke isolation dampers to isolate supply and return air in case of a fire. A smoke detector or Halon System activation will shut the dampers. Smoke detectors control the normal supply and return dampers to the computer rooms. These detectors control the smoke isolation dampers and provide an alarm at the HVAC control panel and station annunciator panel in the control room, however, they do not provide early warning functions for

the Halon system. See Table C-7 in Fire Protection System Design Basis Document DBD-SO23-590 for list of SONGS 2 and 3 HVAC & Detector Interlocks.

4. METHODOLOGY

4.1 METHODOLOGY FOR DETAILED FIRE HAZARDS ANALYSIS IN SECTIONS 7.0

The fire hazards analyses, presented in Section 7.0 reflect the combustible loading, fire protection system, and boundary construction for each fire area/zone.

The analyses in Section 7.0 consist of a fire analysis matrix for each fire area or zone (see Section 5.0 for details). Where safety related systems or systems required for safe shutdown are located in the fire area or zone, a detailed fire hazard analysis has been prepared.

The ability to achieve safe shutdown has been assessed on a fire area basis, and can include multiple fire zones. For multiple zone fire areas, a summary of site shutdown capability and 10CFR50 Appendix R Compliance on a Fire Area Basis is discussed in the Conclusions Section of the first zone of the sequence. The remaining zones reference the Conclusions discussion of the first fire zone.

4.1.1 FORMAT OF THE DETAILED FIRE HAZARDS ANALYSIS

Fire Analysis Matrix - This is a tabular summary of important information contained in the text for each fire area or zone. See Section 5.0 for the matrix explanatory notes.

Location - This section lists the building in which the area/zone is located, the floor elevation, figure number where the area or zone is found, floor area of the area or zone in square feet, and the title of the area or zone.

Combustible Material - This section lists the combustion loading category minimal, low, medium, high. See Paragraph 4.1.3.2, Analysis Methods, for a detailed explanation of the calculation of the values contained in this part of the report.

Design Basis Fire - This section contains relative information affecting the postulated worst case fire which could occur in the fire area/zone.

Fire Protection Equipment - This section lists elements of the fire protection system within the fire area or zone. The equipment listed under the same section of the original Fire Hazards Analysis was updated to reflect fire protection equipment added to the area or zone as a result of plant commitments.

Construction - This section contains a description of the wall, floor, and ceiling construction, door openings, fixed openings, and penetrations in the fire area/zone.

Licensee Controlled Specification Barriers - This section discusses the barriers requiring surveillance per Licensee Controlled Specifications and summarizes any raceway fire barriers required for separation of functionally redundant components.

Conclusion - This section summarizes the pertinent fire protection, construction, and design features affecting safe shutdown capability.

4.1.2 DEFINITIONS

Design Basis Fire — A design basis fire is a theoretical event that postulates the complete combustion of all fixed (in-situ) fuel in a compartment and considers the total heat released under these conditions. An actual fire always involves varying amounts of incomplete combustion and, therefore, yields a lower total heat release to the compartment; thus, an actual fire is less severe than a design basis fire.

For fire areas which credit spatial separation per 10CFR50, Appendix R, complete combustion is not postulated. Reference Appendix D for specific requirements and exceptions.

Exposure Fire — An exposure fire is a fire in a given area that involves either in situ or transient combustibles and is external to any structures, systems, or components located in or adjacent to that same area. The effects of such fire (e.g., smoke, heat, or ignition) can adversely affect those structures, systems, or components important to safety. Thus, a fire involving one train of safe shutdown equipment may constitute an exposure fire for the redundant train located in the same area, and a fire involving combustibles other than either redundant train may constitute an exposure fire to both redundant trains located in the same area.

Fire Area — A fire area is that portion of a building or plant that is separated from other areas by fire rated walls, floors, ceilings, or bounded by barriers evaluated to prevent propagation of fire.

In the Fire Hazards Analysis, fire areas have been created outside plant buildings. The boundaries for these exterior fire areas are not fire rated walls, floors, or ceilings. The boundaries are fences or discontinuities in buildings; ceilings do not exist, and floors are concrete at grade, paving material, or gravel. This is acceptable for the following reasons:

- major flammable liquid hazards are curbed;
- outer perimeter fencing is located such that exposure fires outside the fencing will not affect safety related or safe shutdown equipment; and
- smoke and heat will dissipate into the atmosphere minimizing the possibility of damage to adjacent equipment.

Fire Zone — A fire zone is that portion of a fire area that is best analyzed separately as a zone within a fire area due to its unique combustible loading or fire characteristics. A fire zone is a subset of a fire area.

Heavy Concrete — The term "heavy concrete" refers to a substantial concrete structure (wall, ceiling, or floor) which, although not specifically assigned a fire resistance rating, can be considered to offer a significant measure of fire protection. Unsealed penetrations in heavy concrete structures have been considered in the fire hazards analyses in Section 7.0.

4.1.3 ANALYSIS METHODS

The approach and analysis methods used for each section of the fire hazards analysis are shown below:

4.1.3.1 Location

This section lists the title of the building or plant area in which the fire area/zone is located, the floor elevation, the title of the fire area/zone, and the floor area of the fire area or zone. This information is obtained from the structural, general arrangement, and architectural drawings. For information, the figure number on which the fire area/zone is shown is also provided.

4.1.3.2 Combustible Material

The combustibles in each fire zone are determined by a detailed review of drawings and equipment specifications, as well as a physical survey of the plant. Combustible material is typically categorized by type as Oil and grease, Class A, Charcoal, Plastics, Cable insulation, Miscellaneous, or Miscellaneous gases. Class A combustibles, for the purpose of this analysis, include wood based products and cloth, but do not include plastics.

In-Situ Combustible Loading, 90035CT, tracks the permanent combustibles in UFHA Fire Zones within the SONGS 2/3 Protected Area and is maintained using an electronic database, NCDB-MEL.

Combustible gases are considered as potential combustibles under the Miscellaneous gases category. Combustible gases are typically categorized as bulk storage, bottled storage, and piped gas systems.

- Bulk storage, as used in this document, is considered to be a single storage tank in excess of 250 cubic feet. There is no bulk storage of gases within enclosed plant structures.

- Bottled storage, as used in this document, consists of additional bottles stored at or near a manifold for use in the near future. Gas bottles connected to a manifold are not considered as storage for this analysis. Where multiple bottles are stored in a location, only the contents of one bottle is considered as a combustible, unless the bottles are valved to a common manifold.

- Piped gas systems are not considered in this document, since the only gas system (hydrogen) is run in seal-welded piping and is adequately supported. In Units 2 and 3 this system is routed in the Turbine and Auxiliary Radwaste Buildings.

Flammable liquids stored in cabinets in accordance with NFPA 30 are not included in the in-situ combustible loading computations. Procedures govern the control of flammable liquids and flammable liquid cabinets.

Small amounts of combustible materials in the plant are not tracked in the overall in-situ combustible loading computations, such as:

- Site telephones, along with their associated installation hardware, are mounted throughout Units 2 and 3. Small amounts of Class A combustible materials are associated with each installation (wood and plastic). The amount of combustible material associated with these installations is insignificant compared to the conservative margin inherent to the combustible loading evaluation. Therefore, telephone installations are not captured in the overall in-situ combustible fire loading computations for each fire zone.

- Miscellaneous combustible materials such as the following are not considered in the analysis:

  - Lamicoid information tags, placards, and signs,
  - Styrofoam inside unistruts left over from initial construction located outside containment,
  - Embedded expansion joint material within the structural elements of Containment and other buildings (isolated or sealed).
  - Paint that is used to coat various equipment and structural elements of buildings,
  - Plastic trash receptacles and the contained trash, and
  - General office equipment (i.e., computers, monitors, printers, etc.)
  - Fiberglass Extinguisher cabinets
  - Additional similar exclusions addressed in 90035CT, In-Situ Combustible Loading

Due to the conservative method that was used to estimate the combustible loading in the fire areas, a considerable margin was introduced relative to the actual combustible loading versus the documented combustible loading. The limited amount of combustible material typically associated with these miscellaneous materials is considered inconsequential when compared the margin inherent to the analysis. As a result, these miscellaneous materials are regarded as incidental additions to the combustible loading analysis.

4.1.3.2.1 Methodology for Cable Tray Combustible Loading

The purpose for performing this calculation is to determine the quantity of combustible cable insulation in each fire area or zone and the heat which could be released upon complete combustion of that insulation.

The cable trays are first categorized by fire area or zone using the electrical raceway drawings. At the same time, the size and actual length presented in the electrical raceway schedule are compared and verified with the drawings.

In cases where the actual length of the cable tray is not listed in the electrical raceway schedule, the length from the drawing listed in the electrical raceway schedule is used.

The percent fill for Units 2 and 3 is conservatively as 25% for assumed cable trays that are filled with cable up to 25% by volume. For cable trays that are more than 25% full, the actual percent fill is used. The percent fill for each cable tray is taken from the electrical raceway schedule.

To calculate the cable tray volume, multiply the tray size (depth x width), by the actual length, then multiply this product by the percentage fill. The tray size is inches x inches and the actual length as feet, hence the units of the calculated volume are inches squared-feet.

The cable insulation weights for Units 2 and 3 are calculated by multiplying the calculated volume by a mean unit weight of 0.33 pounds per inches squared-foot. To calculate the heat released by the combustion of the insulation in each cable tray, multiply the insulation weight by an average caloric value of 12,250 Btu per pound of insulation.

Where cable trays are protected with a nominal 1-hour or greater fire rated barrier, the quantity of cable insulated in jacketing is included in the amount of combustibles in the analysis and matrix, but is not included in the heat release or fire loading. Cable routed in conduit is not considered as a combustible, and is not included in the amount of combustibles in the analysis.

The majority of cables in the yard areas are located in underground duct banks and are not considered in the amount of combustibles analyzed since they do not represent an external fire hazard. Limited numbers of cable trays are located at higher elevations in the yard area. These are not added to the amount of combustibles analyzed for the yard area since they are physically located outside, and do not expose safety related/safe shutdown equipment.

The small diameter telecommunication cables which are not bundled and not located in cable trays are excluded from the amount of combustibles analyzed because of the insignificant fire hazard expected due to the limited amount of cable insulation.

4.1.3.2.1 Categorization of Combustible Loading Values

The following categories for in-situ combustible loading are used at SONGS:

Minimal - From 0 up to and including 13,000 Btu/ft^2

Low - From 13,000 Btu/ft^2 up to and including 80,000 Btu/ft^2

Medium - From 80,000 Btu/ft^2 up to and including 160,000 Btu/ft^2

High - Greater than 160,000 Btu/ft^2

Theses categories are based upon engineering judgment, although precedent for categorization of combustible loading is provided in the NFPA Handbook, Sixteenth Edition, Section 7, Chapter 9, British Fire Loading Studies, as discussed in the NFPA Handbook, which categorize building occupancies as either low, moderate, or high. The values used by the British for average combustible loading within an area are low (up to 100,000 Btu/ft^2), moderate (greater than 100,000 Btu/ft^2, less than 2000,000 Btu/ft^2) and higher (greater than 200,000 Btu/ft^2 and less than 400,000 Btu/ft^2)

While the values used at SONGS are not in exact alignment with those provided in the NFPA Handbook, they are considered conservative and reasonable. The values also consider actual maximum permissible fire loadings defined at SONGS. Although changes to plant combustible loading are evaluated and documented using the configuration control process, providing major categories with limits consistent with existing MPFL values will provide increased attention when potential combustible loading changes may result a change in category (i.e., adding in-situ combustible loading to an area increases the loading from "medium" to "high").

NOTE: Only the combustible loading category (minimal, low, medium, or high) is included within Section 7 of the UFHA for each fire area/zone.

4.1.3.3 Design Basis Fire

The design basis fire is used to analyze the requirements for the fire resistance of the barriers defining the fire area/zone boundary. The design basis fire postulates the complete combustion of in-situ combustibles within the fire area/zone; assuming that no manual or automatic fire fighting action has been initiated.

Characterization of Design Basis Fire and use of fire severity/fire load relationship to determine fire resistance requirements of the barriers is based on the concept of confinement of fire as

described in NFPA Fire Protection Handbook, sixteenth edition, section 7 chapter 9. It is recognized that this concept has limitations and inaccuracies for predicting severity of a fire in various plant locations. However, this concept generically estimates a conservative value of the probable maximum fire severity that can be used for fire barrier resistance requirements.

The design basis fire is characterized by the following three parameters:

- Fire Loading Category

The amount of each combustible is multiplied by its heat of combustion yielding the heat released. Typical heats of combustion are listed in Table 4-1. The total heat released (Btu) from the combustible material in the fire area/zone is divided by the floor area (square feet) yielding the fire loading for the fire area/zone. Fire Loading Category is based on the In-Situ Combustible Loading 90035CT, a module within SONGS NCDB-MEL electronic database that tracks permanent combustibles in UFHA Fire Zones within the SONGS 2/3 Protected Area.

- Maximum Permissible Fire Loading

The maximum permissible fire loading (MPFL), defines the maximum fire loading, including both in-situ and transient combustibles, an area/zone can contain before the theoretical fire duration and heat output exceed that for which the barriers (and their appurtenances) are capable of containing. Where the barriers and penetrations of a fire area/zone are fire rated then the MPFL is chosen so as not to exceed the lowest fire resistance rating of the barriers. Non-rated barriers (including heavy concrete walls) as well as non-rated and non-qualified penetrations are normally considered having maximum permissible fire rating value of ten minutes. A fire associated with this level of combustible poses a minimal threat to a barrier and would not be expected to propagate beyond the barrier. In certain cases, the maximum permissible fire loading may exceed the minimum rating of a barrier in an area or exceed ten minutes if the barrier (or penetration) is non-rated. Where this occurs, other features in the area such as fire protection systems (detection and suppression) or room configuration were considered and an individual maximum permissible fire loading was developed for that area/zone.

The maximum permissible fire loading is based upon the estimated fire severity from Table 4-2, Standard Time Temperature Curve from Table 4-3 and Figure 4-1, which are from Section 7-9 of the sixteenth edition of the NFPA Fire Protection Handbook. The Maximum Permissible Fire Loading values are maintained as a combustible loading limit within the 90035CT electronic database.

- Fire Duration

The Fire Duration value represents Equivalent Fire Severity duration from the Standard Time-Temperature Curve. It should be noted that this value is not the expected actual fire duration, since actual fire duration is dependant upon type and quantity of combustible materials, ventilation, combustible storage, environmental condition, and many other factors. The purpose

of calculating Equivalent Fire Severity Duration (also referred to as "Fire Duration") is to determine Fire Rating requirement of barriers confining the combustibles located in a fire area. Walls, structures, and penetration seals are assigned a fire resistance rating based on tests conducted using the standard time-temperature curve (ASTM E-119) (Table 4-3 and Figure 4-1). Since the fire barrier's ability to withstand the design basis fire is based on the E-119 curve, the duration a fire will burn before theoretically breaching the barrier must also be based on the E-119 curve. To calculate the fire resistance requirement of the barrier, divide the fire loading in the area or zone by 80,000 Btu/sq.ft.hr. 80,000 Btu/sq.ft.hr. conversion factor is extrapolated from Table 4-2, which represents the correlation between Heat Potential and Equivalent Fire Severity for up to 3 hours. Fire Loading Category (Minimal, Low, Medium, or High) encompasses Fire Duration with a conservative assigned Category. As such, it is calculated and maintained in the 90035CT electronic database.

4.1.3.4 Fire Protection Equipment

This section lists the elements of the fire protection system available to combat a fire within the fire area/zone. The information is obtained from a review of the original Fire Hazards Analysis, plant drawings, and a physical survey of the plant.

4.1.3.5 Construction

This section contains a description of the fire area/zone construction and includes the following:

- Wall, floor, and ceiling construction (material, thickness, and rating).
- Door construction (rating and adjacent fire area/zone communication).
- Description of fixed openings (type and adjacent fire area/zone communication).
- Description of penetrations (types, ratings of sealed penetrations, and adjacent fire area/zone communication of open penetrations).

This information is obtained from a review of the plant drawings and a physical survey of the plant.

4.1.3.6 Equipment Required for Safe Shutdown (NOTE: This information has been removed from the UFHA)

4.1.3.7 Safety-Related Equipment Not Required for Safe Shutdown

This section has been deleted. The building summary for each building in Section 7.0 of the UFHA identifies which fire zones contain safety related equipment or cables.

4.1.3.8 Consequences of Design Basis Fire (SONGS 2/3) (NOTE: This information has been removed from the UFHA)

4.1.3.9 Conclusions

This section summarizes the information provided in the text and discusses interrelation of fire protection features, analysis results, safe shutdown capability, and 10CFR50 Appendix R compliance of the fire area/zone under consideration. For fire areas containing multiple fire zones, 10CFR50 Appendix R Compliance is discussed in the Conclusions for the first fire zone within the fire area.

The following factors are considered in this discussion:

- Consequences of suppression/detection system actuation.
- Consequences of the loss of safe shutdown and safety-related equipment in the fire area/zone, and available equipment/systems to assure the ability to achieve safe shutdown.
- Ventilation system function/smoke removal.
- Possibility of propagation of the fire beyond the boundaries of the fire area/zone. Possibility of the loss of additional systems which could affect the ability to safely shutdown the plant.

4.1.4 EVALUATION OF POTENTIAL RADIOLOGICAL RELEASES

The UFSAR for SONGS 2 and 3 addressed potential radiological release from accidents other than fire. These radiological releases are potentially greater in magnitude than those of fire. Radiological releases resulting from the design basis fire should not exceed the site boundary limits imposed by 10CFR100.

Table 4-1

TABLE OF COMBUSTIBLE CHARACTERISTICS
(Examples from 90035CT Appendix-A)

Material	Unit	Heat of Combustion Btu/Unit	Converstion Factor
Lube oil	gal	132,800	7.40 lb/gal
Transformer oil	gal	143,000	7.48 lb/gal
Gases			
Acetylene	cf	1,451	0.068 lb/cf
Hydrogen	cf	319	0.0052 lb/cf

Table 4-1

TABLE OF COMBUSTIBLE CHARACTERISTICS
(Examples from 90035CT Appendix-A)

Material	Unit	Heat of Combustion Btu/Unit	Converstion Factor
Propane	cf	2,480	0.1175 lb/cf
Methane	lbs	23,902	0.024 lb/cf
Snubber oil	gal	116,440	8.95 lb/gal
Diesel fuel	gal	148,600	7.43 lb/gal
Gasoline	lbs	20,764	6.15 lb/gal
Paint	lbs	20,000	7.86 lb/gal
Solvent	lbs	13,250	6.60 lb/gal
Acetone	lbs	13,250	6.60 lb/gal
EHC fluid	lbs	16,000	7.00 lb/gal
Methanol	lbs	9,758	6.68 lb/gal
Grease	gal	155,040	7.04 lb/gal
Resins (42% - 48% water)	lbs	140	-
Rubber	lbs	19,400	94.00 lb/cf
Electric cable insulation (Unit 2/3)	lbs	12,250	0.33 lb/in.^{2}ft
Charcoal	lbs	12,920	0.33 lb/cf
Plastics	lbs	12,000	-
Respirators (neoprene)	lbs	9,000	-
PVC	lbs	7,730	-
Battery cases (polyethylene)	lbs	20,000	-
Plastic bags (polyethylene)	lbs	20,000	-
Carpet	lbs	14,800 Btu/ft^2	.96 lb/ft^2
Nylon	lbs	19,400	-
Leather	lbs	8,613	-
Monoethanolamine (ETA)	gal	54,068	8.3 lb/gal
Wood	lbs	8,000	
Wood	Cf	290,400	
Plank 2 in. x 10 in.	L.F.	40,320	
Plank 2 in. x 12 in.	L.F.	48,400	
Plank 2 in. x 4 in.	L.F.	16,160	
Wood pallet	pallet	520,000	
Plywood			
1/2 in. x 4 ft. x 8 ft.	sheet	387,200	
3/4 in. x 4 ft. x 8 ft.	sheet	580,800	
1 in. x 4 ft. x 8 ft.	sheet	774,400	
Paper	lbs	7,800	

Table 4-1

TABLE OF COMBUSTIBLE CHARACTERISTICS
(Examples from 90035CT Appendix-A)

Material	Unit	Heat of Combustion Btu/Unit	Converstion Factor
Cloth (rags)	lbs	7,800	
Clothing	gal	45,000	
Desk (wooden)	desk	6,480,000	
Files (filled)	file	8,000,000	
Ladder 6 ft	ladder	320,000	
Tape (cloth)	lbs	7,800	
Trash (compacted)	gal	60,480	
Trash (compacted)	Cf	452,400	
Cardboard	lbs	7,200	

Table 4-2

Estimated Fire Severity*

Heat Potential BTU/SQ.FT	Equivalent Fire Severity**
40,000	½ hour
80,000	1 hour
120,000	1½ hour
160,000	2 hours
200,000	2½ hours
240,000	3 hours

* Reference NFPA Fire Protection Handbook, Sixteenth Edition, page 7-111 and Table 7-9B
** These values represent Equivalent Fire Severity approximately equivalent to that of test under Standard Time-Temperature Curve. These values have been used, as guidance, to determine fire resistance required of the barriers and structural components.

Table 4-3

Standard Time-Temperature Curve Values*

Time HR:MIN	Temperature °F	Time HR:MIN	Temperature °F	Time HR:MIN	Temperature °F
0:00	68	0:55	1681	1:50	1835
0:05	1000	1:00	1700	1:55	1843
0:10	1300	1:05	1718	2:00	1850
0:15	1399	1:10	1735	2:10	1862
0:20	1462	1:15	1750	2:20	1875

Table 4-3

Standard Time-Temperature Curve Values*

Time HR:MIN	Temperature °F	Time HR:MIN	Temperature °F	Time HR:MIN	Temperature °F
0:25	1510	1:20	1765	2:30	1888
0:30	1550	1:25	1779	2:40	1900
0:35	1584	1:30	1792	2:50	1912
0:40	1613	1:35	1804	3:00	1925
0:45	1638	1:40	1815		
0:50	1661	1:45	1826		

* Reference: NFPA 251, 1985

5. MATRIX EXPLANATORY NOTES

This section explains the use of abbreviations and information provided in the fire area/zone matrix. For detailed definitions of the terms used in this section, see Section 4.0, Methodology.

5.1 FIRE AREA/ZONE

Each fire area/zone is given a unique alphanumeric designator, an explanation of which is included in Table 5-1.

5.2 AREA

The floor area of the fire area/zone is listed on the matrix.

5.3 DESCRIPTION

A brief description of the fire area/zone is provided.

5.4 COMBUSTIBLES (DELETED)

Permanent combustibles within the SONGS Protected Area are not tracked in the UFHA. Statrting with UFHA Revision 15, permanent combustibibles are tracked by electroninc database in accordance with 90035CT, In-Situ Combustible Loading. For each fire area/zone, the resulting combustible loading is represented in the UFHA as a Fire Loading Category (discussed below).

5.5 DESIGN BASIS FIRE

The parameters that characterize the fire are listed in this section of the matrix such as the fire loading category and the maximum permissible fire loading.

5.5.1 FIRE LOADING CATEGORY

The fire loading is calculated automatically by the Combustible Loading Modele of the NCDB-MEL electronic database program, or equivalent method. The program multiplies the quantity of in-situ combustibles entered by the proper heats of combustion. The heat release values are totaled and then divided by the floor area of the fire area/zone to yield the fire loading. The fire loading valve (BTU/ft^2) is then converted to a category (minimal, low, medium or high), as defined in Section 4.1.3.2.2.

5.5.2 FIRE LOADING - MAXIMUM PERMISSIBLE

The maximum permissible fire loading defines the maximum fire loading which may be contained in the area without exceeding the lowest fire rating of the barriers or penetrations of the fire area/zone.

The difference between the maximum permissible fire loading and the fire loading reflects the maximum amount of transient combustibles which may be allowed in the fire area/zone. The transient combustibles are controlled by an administrative procedure.

5.5.3 FIRE DURATION (DELETED)

5.6 FIRE PROTECTION (AVAILABLE)

The fire suppression and detection available in the fire area/zone is listed in tabular form in this section of the matrix.

5.6.1 SUPPRESSION

The type of fixed suppression, if any, in the fire area or zone is noted. Suppression systems are area/zone wide unless noted as local.

5.6.2 HOSE STATIONS

The number of hose stations in the fire area or zone is noted. Hose station(s) available outside the fire area or zone are also noted.

5.6.3 PORTABLE EXTINGUISHERS

The presence of portable fire extinguishers is provided (Yes or No). Extinguishers available in adjacent areas/zones are also noted (adjacent).

5.6.4 DETECTORS

The type of fire detection, if any, is indicated. Detection listed is area/zone wide unless noted as local.

5.7 FIRE RESISTANCE RATING

5.7.1 WALLS, FLOOR, OR CEILING/ROOF

The actual fire resistance rating of the construction of the walls, floor, and ceilings is listed. The walls, floor, and ceiling are assigned a number that indicates the fire resistance rating, or either HC to indicate heavy concrete construction, CB to denote concrete block construction, or NR to denote metal siding or other nonrated construction. The fire areas/zones adjacent to the walls may be listed. As an illustration, HC/fire area or zone (i.e., HC/containment) indicates that the wall shared between the fire area or zone and the containment is of nonrated heavy concrete construction.

5.7.2 PENETRATIONS

Penetrations are assigned a letter designation reflecting the type of penetration (see the Penetration Seal Legend below). Where the penetration has a fire resistance rating greater than or equal to the penetrated structure, only a single letter is listed. When a penetration has a fire resistance rating less than the penetrated structure, a separate designation is used as indicated below. If the penetration in rated barriers (Licensee Controlled Specification and non Licensee Controlled Specification fire area/zone barriers) is unsealed, the type of penetrating item is denoted with an "N". Selected penetrations have been identified in Licensee Controlled Specification barriers which are not rated consistent with the penetrated structure or which due to their construction are not rateable. These seals have been evaluated for the specific application and found to be qualified to prevent the propagation of a fire past the specific barrier. These penetrations are designated with a "Q".

Penetration Seal Legend

C - Cable penetration with a rating greater than or equal to the penetrated structure

P - Piping penetration with a rating greater than or equal to the penetrated structure

D - Ductwork penetration with a damper whose rating exceeds or is at least commensurate with the penetrated structure. (See Note below)

QC - Cable penetration with a rating less than the penetrated structure or whose construction does not support a rating and has been evaluated to be acceptable for the specific application

QP - Piping penetration with a rating less than the penetrated structure or whose construction does not support a rating and has been evaluated to be acceptable for the specific application

QD - Ductwork penetration with a damper with a rating less than the penetrated structure or whose construction does not support a rating and has been evaluated to be acceptable for the specific application.

ND - Ductwork penetration that does not contain a fire damper

NP - Unsealed piping penetration

NC - Unsealed cabling penetration

NOTE: 1½ hour rated dampers are installed in 2 hour rated barriers, which is in accordance with NFPA 90A, "Installation of Air Conditioning and Ventilation Systems."

5.7.3 FIXED OPENINGS

Penetrations such as hatches, open stairwells, and openings in walls, floors, or ceilings are listed as fixed openings in the rated fire barriers. The following abbreviations are used:

Fixed Openings Legend

OS - Open stairwell or ladder
OP - Opening
OD - Open doorway
CH - Concrete hatch
OH - Open or grated hatch
MH - Metal hatch
SG - Seismic gap
M - Manhole
LV - Louver

The fire areas or zones with which the fixed opening communicates is also listed. As an illustration, OH/Fire Area I.D. (i.e., OH/2C), indicates an open hatch that communicates with the fire zone identified (2-PE-30-2C).

5.7.4 DOORS

The doors that serve the area or zone are listed using the following form: UL listing/to area or zone number (I.D.) or door construction/to area or zone number (I.D.). The following abbreviations are used for UL listings and door construction:

Door Legend

NR - Nonrated door
L - Nonrated, bullet-resistant door
A - UL Class A fire door (3-hour fire resistance rating)
B - UL Class B fire door (1-1/2-hour fire resistance rating)
C - UL Class C fire door (3/4-hour fire resistance rating)
E - UL Class E fire door (3/4-hour fire resistance rating)
W - Watertight door - nonrated
X - UL CLass A equivalent fire door

5.8 SAFE SHUTDOWN SYSTEMS

Systems to be used for the safe shutdown of the plant are listed on the Fire Analysis Matrix. The layout of this equipment was verified by a thorough review of the general arrangement, composite piping, duct layout drawings, and onsite inspection. Cable and Raceway circuit

schedules and databases were used in conjunction with raceway drawings to identify safe shutdown component cable routings. The safe shutdown systems residing partly or entirely within each fire area or zone, which may be lost or impaired by a fire in that area/zone, are noted on the Fire Area Matrix.

SONGS 2 and 3 safe shutdown systems are subdivided into the following categories:

- Equipment
- Valves
- Cable

The entries in this section of the Fire Analysis Matrix are made by entering in the appropriate column on the matrix, the letter or number identifier for the train(s) of the safe shutdown system(s) present in the fire area/zone.

5.8.1 SAFE SHUTDOWN SYSTEMS - SONGS 1 (DELETED)

5.8.2 SAFE SHUTDOWN SYSTEMS - SONGS 2 AND 3

Trains are designated by the letters A, B, C, D, and X, which coordinate with the electrical power supply to the component. Mechanical components which are not associated with an electrical power supply are designated by the letter N.

The following symbols are used in the matrices:

A/B	Component or cable associated with Train A and B power supplies
#	System with equipment valves or cables for Trains A, B, C and X
##	System with equipment valves or cables for Trains A, B, C, D and X

Additional symbols used in a fire area or zone matrix will be defined on the matrix page itself.

Alternative Shutdown equipment is denoted with an asterisk. When normal shutdown equipment of the same train as alternative shutdown equipment occurs for a given matrix category, both cases are indicated (e.g., A, A*).

Where safe shutdown cables have been wrapped with a material that constitutes a 1-hour fire barrier, the train identifier is shown as a lower case letter. When cables of the same train as the wrapped cables occur for a given matrix category, both cases are indicated (e.g., A,a).

When cables required to ensure Alternative Shutdown capability are wrapped, the equipment is marked in lower case with an asterisk (e.g., a*).

The "Summary" line in the matrix is used to indicate which trains of each type of component (e.g., equipment, valves, etc.) of the safe shutdown systems (hot standby and cold shutdown) are present in the area or zone. Entries in this line of the matrix are made by inserting, in the appropriate column, the train(s) of each type of component present.

For fire areas which consist of multiple zones, the matrix identifies only those components and cables which are located in the zone itself.

5.9 ESSENTIAL ELECTRIC SYSTEMS

Equipment associated with essential electrical power systems, AC or DC, is listed in this part of the matrix.

Each of the essential electric power systems are subdivided into the following categories:

- Equipment
- Cables
- Motor control centers or switchgear

Entries in this section of the fire analysis matrix are made by entering, in the appropriate column on the matrix, the division(s) of the categories of essential electric power and control system(s) present in the fire area/zone.

5.9.1 ESSENTIAL ELECTRIC POWER - SONGS 1 (DELETED)

5.9.2 ESSENTIAL ELECTRIC POWER - SONGS 2 AND 3

The routing of essential power for Units 2 and 3 is listed using the following code to indicate the source supplying the power:

A - Train A essential circuitry
B - Train B essential circuitry
C - Train C essential circuitry
D - Train D essential circuitry
X - Train X essential circuitry

Alternative Shutdown equipment is denoted with an asterisk. When normal shutdown equipment of the same train as alternative shutdown equipment occurs for a given matrix category, both cases are indicated (e.g., A, A*). Where essential power cables have been wrapped with material which constitutes a 1-hour fire resistant wrap, the train identifier is shown as a lower case letter.

5.10 ALTERNATE OR DEDICATED SHUTDOWN SYSTEM CREDITED - SONGS 1 (DELETED)

5.11 ASSOCIATED CIRCUITS OF CONCERN

The presence of associated circuits/equipment (high/low pressure interface and spurious operation) in a fire zone is indicated by a "yes" under the appropriate category heading.

Table 5-1

FIRE AREA/ZONE DESCRIPTIONS (Sheet 1 of 13)

Legend:

AC - Auxiliary Control Building
AR - Auxiliary Radwaste Building
CO - Containment Building
CT - Electrical Cable Tunnel
DG - Diesel Generator Building
FH - Fuel Handling Building
PE - Penetration Building
SE - Safety Equipment Building
TB - Turbine Building
TK - Tank Building
YD - Yard Area

Fire Area Numbering Explanation

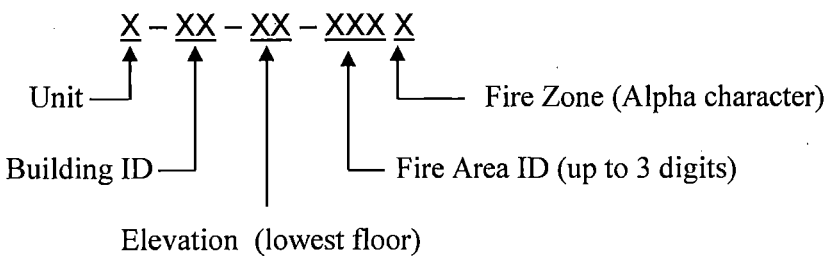

Table 5-1

FIRE AREA/ZONE DESCRIPTIONS

Fire Area/Zone	Description	Room #
	Unit 1 / North Industrial Area	
1-YD-20-400A	ISFISI Area	-
1-YD-14-400B	CommonSite Facilities Area	-
1-YD-14-400C	Unit 1 Industrial Area	-
	Unit 2 and Unit 2/3 Common Fire Areas/Zones	
2-CO-15-1A	Generator Room #2	106
2-CO-15-1B	Generator Room #1	102
2-CO-15-1C	Containment Area Quadrant 1,2,3 & 4	103, 104, 105, 108, 202, 203, 204, 205, 302, 303, 304, 305, 206
2-CO-63-1D	Operator Floor	402, 403, 404, 405
2-PE-9-2A	Piping Area	110, 113
2-PE-(-18)-2B	Piping Area	111, 030, 031
2-PE-30-2C	Piping Area	207, 208, 210, 212, 213, 214, 211
2-PE-30-2D	Piping Area	209
2-PE-45-3A	Electrical Penetration Area	306
2-PE-63-3B	Electrical Penetration Area/Personnel Monitor Area	406, 407, 408, 409, 410, 411
2-AC-9-5	Cable Spreading Room	111A
3-AC-9-6	Cable Spreading Room	111B
3-AC-9-7	Cable Riser Gallery	112
2-AC-9-8	Lighting Switchgear Room	114
2-AC-9-9	Emergency Chiller Room	115
2-AC-9-10	Normal Chiller Room	116
2-AC-9-11	Emergency Chiller Room	117
2-AC-9-12	HVAC Room	107
2-AC-9-13	Lighting Switchgear Room	108
2-AC-9-14	Cable Riser Gallery	110
2-AC-9-15	Staircase	109
2-AC-9-16	Corridor	101, 102, 103, 104, 105, 118, 239
2-AC-9-17	Relay Room	106
2-AC-9-18	Elevator/Elevator Machine Room	502, 241
2-AC-9-19	Staircase	113

Table 5-1

FIRE AREA/ZONE DESCRIPTIONS

Fire Area/Zone	Description	Room #
2-AC-30-20A	Control Room/Cabinet Areas	202, 203, 206, 207, 208, 209, 213, 214, 215, 216, 217, 226, 227, 228, 229, 230, 231, 237, 240, 244, 245, 246
3-AC-30-20B	Computer Room	220
2-AC-30-20C	Computer Room	232
2-AC-39-20D	Tech Support Center/Mezzanine	238, 248, 249A, 251, 252, 250
2-AC-30-20E	Lobby	201, 204, 205, 207A
3-AC-30-21	Cable Riser Gallery	224
2-AC-30-22	Corridor/Stair	221, 223, 314, 447
2-AC-30-23	Fan Room	219
2-AC-30-24	Staircase	222, 242, 313, 435, 501
2-AC-30-25	Number not used	-
2-AC-30-26	Fan Room	233
2-AC-30-27	Corridor/Stair	234, 235, 304, 424
2-AC-30-28	Cable Riser Gallery	236
2-AC-50-29A	50FT SWGR Corridors – East	303B, 303C, 303D, 312
2-AC-50-29B	50FT SWGR Corridors – West	301, 303A-E, 312
3-AC-50-30	HVAC Room 3B	309C
3-AC-50-31	HVAC Room 3A	309D
3-AC-50-32	Cable Riser Gallery	315
3-AC-50-33	Cable Riser Gallery	315B
3-AC-50-34	Switchgear Room 3B	302B
2-AC-50-35	Switchgear Room 2B	302A
2-AC-50-36	Cable Riser Gallery	305A
2-AC-50-37	Cable Riser Gallery	305
2-AC-50-38	HVAC Room 2A	309A
2-AC-50-39	HVAC Room 2B	309B
2-AC-50-40	Switchgear Room 2A	308A
2-AC-50-41	Distribution Room	307A
2-AC-50-42	Battery Room	306A
2-AC-50-43	Evacuation Room	311
2-AC-50-44	Distribution Room 2B	310D
2-AC-50-45	Distribution Room 2D	310C
2-AC-50-46	Distribution Room 2C	310B
2-AC-50-47	Distribution Room 2A	310A
2-AC-50-48	Battery Room 2A	306E
2-AC-50-49	Battery Room 2C	306D
2-AC-50-50	Battery Room 2D	306C

Table 5-1

FIRE AREA/ZONE DESCRIPTIONS

Fire Area/Zone	Description	Room #
2-AC-50-51	Battery Room 2B	306B
3-AC-50-52	Battery Room 3B	306J
3-AC-50-53	Battery Room 3D	306H
3-AC-50-54	Battery Room 3C	306G
3-AC-50-55	Battery Room 3A	306F
3-AC-50-56	Distribution Room 3A	310E
3-AC-50-57	Distribution Room 3C	310F
3-AC-50-58	Distribution Room 3D	310G
3-AC-50-59	Distribution Room 3B	310H
3-AC-50-60	Switchgear Room 3A	308B
3-AC-50-61	Battery Room	306K
3-AC-50-62	Distribution Room	307B
2-AC-70-63	Cable Riser Gallery	423
2-AC-70-64	Health Physics and Access Control Area	401, 403, 404, 407, 408, 409, 410, 411, 413, 414, 415, 417, 418, 419, 420, 421, 422, 424, 426, 427, 428, 430, 431, 435, 436, 441, 442, 443, 444, 445, 446, 450, 452, 453, 454, 456, 458, 459, 460, 406, 405, 412, 416, 425, 429, 440, 451, 462
3-AC-70-65	Cable Riser Gallery	449
2-AC-70-66	HVAC Duct Shaft	448
2-AC-70-67	HVAC Duct Shaft	402
2-AC-70-68	Duct Shaft	-
2-AC-70-69	Duct Shaft	-
2-AC-70-175	Telecommunication Center	461
2-AC-85-70	Switchgear Room	503
2-AC-85-71	Switchgear Room	504
2-AC-85-180	Former 85Ft Communications Battery Room	506
2-AC-85-72	Fan Room	505
2-AR-9-73	Primary Plant Make-up Tk. Room	127A
2-AR-9-74	Tank Rooms	125A&B, 126A&B
3-AR-9-75	Primary Plant Make-up Tk. Room	127B

Table 5-1

FIRE AREA/ZONE DESCRIPTIONS

Fire Area/Zone	Description	Room #
2-AR-9-76	Corridor & Rooms	103A, 123, 107E, 124, 128, 103D, 103C, 107D, 115A&B, 114A&B, 107F, 103F, 121A&B, 103G, 103H, 116A&B, 117 113, 103J, 112, 107P, 103K, 108A&B, 109, 107Q, 107N, 107M, 103L, 107L, 119A&B, 118, 103M, 103B, 104A&B, 107K, 103E
2-AR-9-77	Staircase	102, 202, 302, 524
3-AR-9-78A	Boric Acid Make-up Pump Rm.	105C
3-AR-9-78B	Boric Acid Make-up Pump Rm.	105D
3-AR-9-79	Number not used	-
2-AR-9-80	Chem. Waste Tk. Rm.	110
2-AR-9-81	Radwaste Primary Tk. Rm.	111A-D
2-AR-9-82	Misc. Waste Evap. Cond. Monitor Tk. Rm.	120A&B
2-AR-9-83	Conc. Boric Acid Tk. Rm	122
2-AR-9-84A	Boric Acid Make-up Pump Rm.	105B
2-AR-9-84B	Boric Acid Make-up Pump Rm.	105A
2-AR-9-85	Number not used	-
2-AR-9-86	Staircase	101, 201, 301, 401, 502
2-AR-9-87	Charging Pump Rm.	106A, 107A
2-AR-9-88	Charging Pump Rm.	106B, 107B
2-AR-9-89	Charging Pump Rm.	106C, 107C
2-AR-9-90	Elevator	129, 221, 343, 420, 526, 601
3-AR-9-91	Charging Pump Rm.	106D, 107G
3-AR-9-92	Charging Pump Rm.	106E, 107H
3-AR-9-93	Charging Pump Rm.	106F, 107J
2-AR-24-94	Corridor & Rooms	211A&B, 218A-H, 208A-D, 203A-D, 217A, 217B, 216, 213, 214, 206A-H, 212A&B, 204A&B, 219, 220, 210A&B
3-AR-24-95	Duct Shaft Rm.	222B
3-AR-24-96	Boric Acid Make-up Tk. Area.	205B, 207C, 207D, 340B
2-AR-24-97	Number not used	-
2-AR-24-98	Boric Acid Make-up Tk. Area	205A, 207A, 207B, 340A
2-AR-24-99	Duct Shaft Rm.	222A, 344A, 421A
2-AR-24-100	Letdown Ht. Exch. Rm.	209A

Table 5-1

FIRE AREA/ZONE DESCRIPTIONS

Fire Area/Zone	Description	Room #
3-AR-24-101	Letdown Ht. Exch. Rm.	209B
2-AR-37-102A	Corridor & Rms.	335A&B, 336, 338, 339, 319A&B, 320, 321,322, 308A-D, 309A-C, 331, 305A-Z, 313, 332, 317A-C, 303, 334, 305AA-JJ, 325, 326, 327, 328A&B, 329, 330, 310A&B, 312A&B, 337, 318, 315, 323, 324, 412, 413
2-AR-24-102B	Equipment Rm.	215
3-AR-37-103	Number not used	304B
3-AR-37-104	Pipe Rm.	345B
2-AR-37-105	Pipe Rm.	345A
2-AR-37-106	Number not used	-
2-AR-37-107	Tank Rooms	304A&B, 306A&B 307A, 311A, 314A&B 316A
2-AR-37-108	Rad. Pipe Chase	341A
3-AR-37-109	Tank Rooms	306C&D, 307B, 311B, 314C&D, 316B, 333A&B
3-AR-37-110	Rad. Pipe Chase	341B
2-AR-50-111A	Corridor & Rooms	402, 403A-R, 404A&B, 406A&B, 407A&B, 408, 409, 410A&B, 411, 414-418
2-AR-50-111B	Elec. Equip. & Raceway Area	405A&B
3-AR-50-112	Number not used	-
3-AR-50-113	Number not used	-
2-AR-50-114	Number not used	-
3-AR-50-115	Number not used	-
2-AR-63-116	Corridor & Rooms	501, 503, 504A&B, 509A&B, 508, 510, 505B, 513, 507A&B, 512, 516, 505C-N, 517, 518A&B, 515, 519A&B, 525A&B, 520A&B, 521, 522, 523, 514
3-AR-63-117	Duct Shaft Room	527B
3-AR-63-118	Cable Tray Gallery	506B
2-AR-63-119	Cable Tray Gallery	506A
2-AR-63-120	Duct Shaft Room	527A

Table 5-1

FIRE AREA/ZONE DESCRIPTIONS

Fire Area/Zone	Description	Room #
2-AR-63-121	Tank Rooms	511A-F
2-AR-68-178A	Personnel Facility & Corridor	611, 612, 613, 614, 615, 616, 617, 618, 619, 620, 621, 622, 623, 624, 625, 626, 627, 628, 631, 632
2-AR-68-178B	Hot & Cold Dry Cleaning Area	629, 630
2-FH-17-122	Fuel Pump Room	107
2-FH-17-123	Spent Fuel Pool/Oper. Flr.	106, 206, 207, 208, 306, 307, 308, 406, 407, 408, 409
2-FH-15-124	Staircase	101, 201, 301, 401, 501
2-FH-15-125	Storage Room	102, 103
2-FH-30-126	Heat Exch. Room	209
2-FH-30-127	Tool Decontamination Room	202
2-FH-30-128	Vestibule	203
2-FH-30-129	Dumbwaiter	205, 305, 405
2-FH-30-174A	Railroad Bay	-
2-FH-30-174B	Canopy Area/Truck Bay	-
2-FH-45-130	A/C Room No. 2	309
2-FH-45-131	Vestibule	303
2-FH-45-132	A/C Room No. 1	302, 402
2-FH-45-133	Number not used	-
2-FH-63-134	Vestibule	403
2-SE-(-5)-135A	Piping Rm/Heat Exch Rm.	009, 010, 011, 012, 013, 014, 022, 023, 024, 025, 026
2-SE-(-5)-135B	Train B CCW Pump Room	006
2-SE-(-5)-135C	Spare CCW Pump Room	007
2-SE-(-5)-135D	Train A CCW Pump Room	008
2-SE-(-15)-136	Staircase/A/C Room	017, 001
2-SE-(-15)-137A	Safety Related Pump Room	002
2-SE-(-15)-137B	Safety Related Pump Room	015
2-SE-(-15)-137C	Safety Related Pump Room	005
2-SE-(-15)-138	Heat Exch. Rm.	003, 016, 028
2-SE-(-15)-139	Heat Exch. Rm.	004, 018, 029
2-SE-8-140A	Surge Tk. Rm.	020
2-SE-8-140B	Chem. Storage Rm.	019
2-SE-8-141	Surge Tk. Rm.	021
2-SE-30-142A	Electrical Tunnel	103, 203, 204
2-CT-(-2)-142B	Electrical Cable Tunnel	-
2-CT-16-142C	Cable Shaft	104

Table 5-1

FIRE AREA/ZONE DESCRIPTIONS

Fire Area/Zone	Description	Room #
2-SE-30-143	Elevator	108, 303
2-SE-30-144	Staircase	107
2-SE-30-145A	Main Stm. Valve Area	101, 110, 111, 102
2-SE-25-145B	AFW Stm. Trench	-
2-SE-50-146	Roof SE Building	-
2-TB-9-147	Number not used	-
2-TB-7-148A	Turbine Building	T2-101, T2-105, T2-107, T2-108, T2-109, T2-204, T2-205, T2-301, T2-201, T2-206,
2-TB-7-148B	Access Road	T2-102, T3-102
2-TB-9-148C	Pump/Ht. Exch. Area	-
2-TB-34-148D	Access Grating	T2-202, T2-302, T3-203, T3-302
2-TB-(-9)-148E	Unit 2/3 Saltwater Clg Pipe Tunnel	-
2-TB-9-148F	Unit 2 Saltwater Pump Room	T2-106
2-TB-8-148G	Corridor	027
2-TB-30-148H	Full Flow Condensate Polisher Demineralizer Area	-
2-TB-7-149	Main Lube Oil Building	T2-103
2-TB-7-150	Elevator Shaft	T2-104, T2-303
2-TB-7-151	Number not used	-
2-TB-7-152	Number not used	-
2-TB-30-153	Switchgear Rm.	T2-203
2-TB-72-154A	Turbine Gen. & Condenser	-
2-TB-72-154B	Accessway	-
2-DG-30-155	Diesel Generator Rm. B	106, 107, 108, 204, 206
2-DG-30-156	Staircase	101, 102
2-DG-30-157	Staircase	105, 205
2-DG-30-158	Diesel Generator Rm. A	102, 103, 104, 202, 203
2-DG-20-159	Diesel Fuel Transfer Pump Rm. A	-
2-DG-20-160	Diesel Fuel Transfer Pump Rm. B	-
2-TK-30-161A	AFW Pump Rm.	-
2-TK-(-2)-161B	AFW Pipe Tunnel	-
2-TK-18-161C	AFW Pump Rm. Cable Vault	-
2-TK-25-161D	AFW Pump Rm. Manhole	-
2-TK-25-161E	AFW Pump Rm. Manhole	-
2-TK-30-162	Nuclear Service Wtr. Storage Tk.	-
2-TK-30-163	Refuel Wtr. Storage Tk.	-

Table 5-1

FIRE AREA/ZONE DESCRIPTIONS

Fire Area/Zone	Description	Room #
2-TK-30-164	Condensate Storage Tk.	-
2-TK-30-165	Condensate Storage Tk.	-
2-TK-30-166	Refueling Wtr. Storage Tk.	-
2-CO-15-167	Elevator Shaft and Machine Room	107, 502
2-CO-15-168	Staircase	101, 201, 301,401, 501
2-AC-(-5)-169	Emergency Chilled Wtr. Pipe Tunnel	-
2-SE-(-12)-170	Emergency Recirc. Tunnel	-
2-SE-30-171	H.P. Instrument Calibration Rm.	104, 105, 106, 109
2-SE-70-172	Access Corridor	202
2-SE-30-173	Number not used	-
2-FH-30-174A	Railroad Bay	-
2-FH-30-174B	Canopy Area	-
2-AC-70-175	Communications Room	461
2-SE-(-2)-176	Cable Tunnel Access Room	-
2-AR-68-178A	Personnel Facility Area	-
2-AR-68-178B	Hot and Cold Dry Clean Area	-
2-AC-85-180	Communications Battery Room	506
2-YD-30-200A	Unit 2 Yard Area	-
2-YD-30-200B	Unit 3 Yard Area	-
2-YD-80-300	South Yard Facility	-
3-CO-15-1A	Generator Room #2	106
3-CO-15-1B	Generator Room #1	102
3-CO-15-1C	Containment Area Quadrant 1,2,3 & 4	103, 104, 105, 108, 202, 203, 204, 205, 302, 303, 304, 305, 206
3-CO-63-1D	Operator Floor	402, 403, 404, 405
3-PE-9-2A	Piping Area	110, 113
3-PE-(-18)-2B	Piping Area	111
3-PE-30-2C	Piping Area	207, 208, 210, 212, 213, 214
3-PE-30-2D	Piping Area	209
3-PE-45-3A	Electrical Penetration Area	-
3-PE-63-3B	Electrical Penetration Area/ Personnel Monitor Area	407, 408, 410, 411
3-FH-17-122	Fuel Pump Room	107
3-FH-17-123	Spent Fuel Pool/Oper. Flr.	105, 207, 306, 307, 406, 407, 408, 409
3-FH-15-124	Staircase	101, 201, 301, 401, 501
3-FH-15-125	Storage Room	102, 103
3-FH-30-126	Heat Exch. Room	209

Table 5-1

FIRE AREA/ZONE DESCRIPTIONS

Fire Area/Zone	Description	Room #
3-FH-30-127	Tool Decontamination Room	202
3-FH-30-128	Vestibule	203
3-FH-30-129	Dumbwaiter	205, 305, 405
3-FH-45-130	A/C Room No. 2	309
3-FH-45-131	Vestibule	303
3-FH-45-132	A/C Room No. 1	302, 402
3-FH-45-133	Number Not Used	
3-FH-63-134	Vestibule	403
3-SE-(-5)-135A	Piping Rm/Heat Exch Rm.	009, 010, 011, 012, 013, 014, 022, 023, 024, 025, 026
3-SE-(-5)-135B	Train B CCW Pump Room	006
3-SE-(-5)-135C	Spare CCW Pump Room	007
3-SE-(-5)-135D	Train A CCW Pump Room	008
3-SE-(-15)-136	Staircase/A/C Room	017, 001
3-SE-(-15)-137A	Safety Related Pump Room	002
3-SE-(-15)-137B	Safety Related Pump Room	015
3-SE-(-15)-137C	Safety Related Pump Room	005
3-SE-(-15)-138	Heat Exch. Rm.	003, 016, 028
3-SE-(-15)-139	Heat Exch. Rm.	004, 018, 029
3-SE-8-140A	Surge Tk. Rm.	020
3-SE-8-140B	Chem. Storage Rm.	019
3-SE-8-141	Surge Tk. Rm.	021
3-SE-30-142A	Electrical Tunnel	103, 203, 204
3-CT-(-2)-142B	Electrical Cable Tunnel	-
3-CT-16-142C	Cable Shaft	104
3-SE-30-143	Number not used	-
3-SE-30-144	Number not used	-
3-SE-30-145A	Main Stm. Valve Area	101, 110, 111, 102
3-SE-25-145B	AFW Stm. Trench	-
3-SE-50-146	Roof SE Building	-
3-TB-9-147	Number Not Used	-
3-TB-7-148A	Turbine Building	T3-101, T3-105, T3-107, T3-108, T3-109, T3-204, T3-205, T3-301, T3-201, T3-206, 112
3-TB-9-148C	Pump/Ht. Exch. Area	-
3-TB-9-148F	Unit 3 Saltwater Pump Room	T3-106
3-TB-8-148G	Corridor	027

Table 5-1

FIRE AREA/ZONE DESCRIPTIONS

Fire Area/Zone	Description	Room #
3-TB-30-148H	Full Flow Condensate Polisher Demineralizer Area	-
3-TB-7-149	Main Lube Oil Building	T3-103
3-TB-7-150	Elevator Shaft	T3-104, T3-303
3-TB-7-151	Number not used	-
3-TB-7-152	Number Not Used	-
3-TB-30-153	Switchgear Rm.	T3-203
3-TB-72-154A	Turbine Gen. & Condenser	-
3-DG-30-155	Diesel Generator Rm. B	106, 107, 108, 204, 206
3-DG-30-156	Staircase	101, 201
3-DG-30-157	Staircase	105, 205
3-DG-30-158	Diesel Generator Rm. A	102, 103, 104, 202, 203
3-DG-20-159	Diesel Fuel Transfer Pump Rm. A	-
3-DG-20-160	Diesel Fuel Transfer Pump Rm. B	-
3-TK-30-161A	AFW Pump Rm.	-
3-TK-(-2)-161B	AFW Pipe Tunnel	-
3-TK-18-161C	AFW Pump Room Cable Vault	-
3-TK-25-161D	AFW Pump Room Manhole	-
3-TK-25-161E	AFW Pump Room Manhole	-
3-TK-30-162	Number not used	-
3-TK-30-163	Refuel Wtr. Storage Tk.	-
3-TK-30-164	Condensate Storage Tk.	-
3-TK-30-165	Condensate Storage Tk.	-
3-TK-30-166	Refueling Wtr. Storage Tk.	-
3-CO-15-167	Elevator Shaft and Machine Room	107, 502
3-CO-15-168	Staircase	101, 201, 301, 401, 501
3-AC-(-5)-169	Number not used	-
3-SE-(-12)-170	Emergency Recirc. Tunnel	-
3-SE-30-171	Number not used	-
3-SE-70-172	Number not used	-
3-SE-30-173	Alarm Station – Room 112	112
3-FH-30-174	Railroad Bay	-
3-SE-(-2)-176	Cable Tunnel Access Room	-

6 SONGS ISFSI AND UNIT 1 AREA

NOTE

SONGS Unit 1 Industial Area is the location of the decommissioned Unit 1 nuclear power plant. SONGS Independent Spent Fuel Storage Installation (ISFSI) houses the dry-cask storage of spent fuel for Units 1, 2, & 3.

SONGS 1 was permanently shut down on November 30, 1992 , defueled as of March 6, 1993 and plant-related systems and buildings are decommissioned as of December 2008. Therefore, since the plant is no longer licensed to operate, the 10CFR50.71(e) requirement to periodically update UFHA information no longer applies. Original description of SONGS Section 6 of the UFHA, Detailed Fire Hazards Analysis - SONGS Unit 1, was removed as part of Revision 15.

SONGS 2/3 UHFA Section 6 will address the ISFSI Area and other Unit 1 Industial Areas that are used to support site maintenance and constrution.

Refer to the SONGS Unit 1 Defueled Safety Analysis Report for pertinent information related to the SONGS 1 Fire Protection Program. Unit 1 DSAR and evaluations will remain applicable to Unit 1 Spent Fuel, ISFSI, and the remaining Unit 1 original structures.

The purpose of the SONGS 1 Fire Protection Program is no longer to assure safe shutdown and protect the core. The intent of the Program is now to protect the spent fuel in the Independent Spent Fuel Storage Installation (ISFSI). Current information on the SONGS 1 Fire Protection Program is found in the governing Station Procedures and the applicable design documents for SONGS 1. As part of Revision 15 to the UFHA, information pertaining to the Unit 1 Fire Protection Program was either removed from the UFHA or relocated to the SONGS 1 Defueled Safety Analysis Report (DSAR).

6.0 DETAILED FIRE HAZARDS ANALYSIS - SONGS ISFSI AND UNIT 1 AREA

The Analysis Section for San Onofre Nuclear Generating Station ISFSI and Unit 1 Area is divided into the following subsections by plant yard areas:

1 YD - Unit 1, ISFSI Area
1 YD - Unit 1, Common Site Facilities Area
1 YD - Unit 1, Unit 1 Industrial Area

The Unit 1 Area (1-YD-20-400) is an exposed fire area bounded by the Units 2/3 Protected area (2-YD-30-200A) to the south, the seawall to the west, the northern perimeter fence and the eastern industrial area fence. Three fire zones exist within the Fire Area:

- ISFSI Area (1-YD-20-400A) is the fenced security area containing stored canisters of spent fuel; this storage area will expand as future ISFSI pads are placed in service.
- Common Site Facilities Area (1-YD-14-400B) is the south end of Unit 1 Area contains Cask Support Facility, ISFSI cask transporter vehicle, Site sewage treatment plant, , DWST (retired Unit 1 AFW Tank) and trailer-mounted seismic pumper unit (preferred location: an seismic exclusion zone in vicinity of DWST).
- Unit 1 Industrial Area (1-YD-14-400C) is remaining portions of the Unit 1 Area not included above. As major SONGS2/3 projects progress, many of the industrail temporay structures and equipment in this area will be added and removed as needed.

This fire area contains no Unit 2/3 safety related or safe shutdown equipment. The ISFSI (Independent Spent Fuel Storage Installation) however, will house dry spent fuel storage canisters from the Unit 1 Spent Fuel Pool and Units 2/3 Spent Fuel Pools. The ISFSI area will be expanded as fuel is loaded from Units 1, 2 and 3.

The types of fire protection equipment available in this area consist of the following:

- Portable extinguishers
- Wet pipe sprinkler systems (in permanent, occupied structures/trailers)
- Fire Hydrants

The firefighting water supply is primarily from the Units 2 and 3 Fire Water system. A seismic backup water supply will be available from the Demineralized Water Storage Tank (DWST, retired U1 AFW Tank) located in Unit 1 Area. Municipal water is supplied from the South Coast Water District pipeline to on-site hydrants outside Unit-1 area and can be pumped through the Unit 1 firemain (or in hoses) to provide another backup source. Fire protection features and building construction in the Unit 1 Area have been provided based on NEIL Property Loss Prevention Standards and engineering judgment.

The structures within Fire Area 1-YD-20-400 will house varying degrees of hazards and combustible loadings as projects and ISFSI expansion progresses. The fire area borders only Fire Area 2-YD-30-200, but because of substantial distance between the hazards in the Unit 1 area and the configuration of the Safe Shutdown equipment in underground locations in 2-YD-30-200, a fire that adversely affects Units 2 and 3 is not credible. Because of the large area of Fire Zones 1-YD-14-400B and -400C, the localized/ transient nature of the hazards and the lack of physical walls bounding the fire zones, a Maximum Permissible Fire Loading and Fixed Loading categories are not defined. Similarly, the ISFSI Area 1-YD-14-400A, an open yard with no permanent combustibles and administrative controls to limited transient combustibles has no defined Maximum Permissible Fire Loading or Fixed Loading category.

SONGS-specific 10CFR72.212 Evaluation (SCE calculation DCS-001) demonstrates that the fire hazards within the ISFSI facility and the limited transient combustibles allowed within Fire Zone 1-YD-20-400A will not adversely impact the storage of spent fuel within the ISFSI beyond what has been previously evaluated and approved by the NRC. The NRC Certificate of Compliance No. 1029 for ISFSI storage system was issued based upon NRC SER and Transnuclear's AHUHOMS FSAR ANUH-01.0150. Those analyses evaluated the effect of a 300

gallon diesel fuel fire and also considered the effects of fires during the on-site transport of spent fuel to the ISFSI Area.

Separation between Unit 1 Fire Zones and Unit 2/3 Yard Zones and other U2/3 Fire Zones is based on the distance, fencing, requirement that security barriers are maintained clear of obstructions (thus combustibles), and lack of direct pathway between Unit 1 and Unit 2 yard areas.

FIRE AREA/ZONE	CONTAINS SAFE SHUTDOWN EQUIPMENT/CABLES	CONTAINS SAFETY RELATED EQUIPMENT/CABLES	FIGURE NO.
1-YD-20-400A	No	No	8-26C
1-YD-14-400B	No	No	8-26C
1-YD-14-400C	No	No	8-26C

6.1 FIRE AREA/ZONE 1-YD-20-400A

6.1.1 LOCATION

Unit 1 Yard - El. 20'-0" - ISFSI Area - - Fig. 8-26C

Fire Loading
Fire loading category - See Note 1.
Maximum permissible fire loading - See Note 1 and 2.

Note 1: The concrete ISFSI modules and the steel spent fuel canisters are non-combustible. In-situ combustible loadings are minimized in the vicinity of dry-cask modules. See the ISFSI 10CFR 72.212 Evaluation for limits and basis of combustibles in the ISFSI area.

Note 2: An administrative Combustible Control Zone has been established in the ISFSI Area. This zone will limit the amount and duration that transient combustibles are allowed within 20 feet of in-use dry-cask modules. In addition, the administrative controls will routinely inspect for transient combustibles above the administratively controlled limits, and compensatory measures are taken, if required.

6.1.2 DESIGN BASIS FIRE

The design basis fire is postulated to be a fire that would involve vehicle fuel, oil, hydraulic fluid, plastic, and miscellaneous combustibles associated the cask transporter and crane used to move a fuel canister into the ISFSI concrete module.

The maximum credible fire in this zone is limited by administrative controls restricting combustible loading during canister transport operations to the equivalent of 300 gallons of

diesel fuel in accordance with dry-cask FSAR (Transnuclear AHUN-01.0150). During other times, the impact of transient combustibles will be limited by the large surface area, the localized nature, and spacing of the minimal combustible loading.

Similarly, fires resulting from transient combustibles in other outdoor locations will not impact the ISFSI Zone due to distance, limited intervening combustible and open atmosphere. Occupant buildings within the Unit-1 Area and adjacent to ISFSI pad are protected with sprinkler fire suppression systems.

6.1.3 FIRE PROTECTION EQUIPMENT

Manual fire fighting equipment is available from outside this zone. Hose stream coverage is available from the yard hydrants supplied by U2/3 fire pumps. In addition, a seismic fire pump unit and water tank is available as a backup to fight fires on-site.

6.1.4 CONSTRUCTION

The zone consists of the eastern portion of the Unit 1 yard area enclosed by the concrete wall to the east and security fencing to north, west and south.

The concrete wall to the east is non-rated and approximately 1-foot thick; the wall provides a partial barrier to combustibles transported along the north access roadway. Significant distance exists between ISFSI area, 2-YD-30-200A and the other Unit 2/3 zones. The ISFSI area is open to the atmosphere (no roof). For detailed information pertaining to 2/3 fire areas/zones, which communicate with the 2/3 yard, refer to figure 8-26A and the Section 7.0 discussion of the fire areas/zones in question.

6.1.5 LICENSEE CONTROLLED SPECIFICATION BARRIERS

For Unit 2/3 area/zone LCS barriers requiring surveillance per LCS 3.7.104 refer to the latest revisions of Figure 8-1 through 8-26, Sheet 3.

See Unit 1 DSAR for further details on Unit 1 barriers within the remaining structures and original Unit 1 fire zones.

6.1.6 CONCLUSION

The Unit 1 ISFSI Area is open to the atmosphere. Therefore, unlimited ventilation is provided to disperse heat and combustion by-products.

The concrete ISFSI modules and the steel spent fuel canisters are non-combustible. A Combustible Control Zone has been established in the ISFSI Area and limits the combustibles allowed within 20 feet of in-use dry-cask modules. Administrative controls restrict combustible loading to the equivalent of 300 gallons of diesel fuel at all times, including canister transport operations.

The SONGS 10CFR72.212 Evaluation demonstrates that the fire hazards from the ISFSI facility, itself, and the limited transient combustibles allowed within Fire Zone 1-YD-20-400A will not adversely impact the storage of spent fuel within the ISFSI beyond what has been previously evaluated and approved by the NRC. That evaluation also considers the affects of fire during the on-site transport of spent fuel to the ISFSI.

The barriers (distance and localized loading) for the Unit 1 fire zones which communicate with the Unit 2/3 Yard Area have been evaluated and found to be adequate to prevent propagation of a Unit 1 yard fire into 2/3 zones containing safe shutdown equipment.

6.1.7 FIRE AREA 1-YD-20-400A APPENDIX R COMPLIANCE

Fire event within the ISFSI Area will not impact SONGS 2/3 operation nor required plant shutdown. There is no 2/3 Safe Shutdown equipment in the Unit 1 Area.

Unit 2/3 Safe shutdown capability will be provided by utilizing Train A or B systems within Unit 2/3 areas. Physically separated functionally redundant components will be utilized in conjunction with operator action on manual or disabled components to achieve safe shutdown.

The barriers (distance and localized loading) for the Unit 1 fire zones which communicate with the Unit 2/3 Yard Area have been evaluated and found to be adequate to prevent propagation of a Unit 1 yard fire into 2/3 zones containing safe shutdown equipment. Existing evaluation of Unit 2/3 Yard Area bounds the hazards a Unit 1 fire would pose to Unit 2/3 SDD equipment.

6.2 FIRE AREA/ZONE 1-YD-14-400B

6.2.1 LOCATION

Unit 1 Yard - El. 14'-0" – COMMON SITE FACILITIES - - Fig. 8-26C

Fire Loading
Fire loading category - See Note 1.
Maximum permissible fire loading - See Note 1

Note 1: Because of the large area of Unit 1 Fire Zones the localized/ transient nature of the hazards and the lack of physical walls bounding the fire zones, a Maximum Permissible Fire Loading and Fixed Loading categories are not defined.

6.2.2 DESIGN BASIS FIRE

Design basis fire for this industial yard area will be localized equipment, indivdual transfomer, temporary structure/trailer and/or a vehicle.

6.2.3 FIRE PROTECTION EQUIPMENT

Manual fire fighting equipment is available within this zone. Hose stream coverage is available from the yard hydrants supplied by U2/3 fire pumps. In addition, a seismic fire pump unit and water tank is available to fight fires in this yard area. Occupant buildings still "in-use" have sprinkler systems for fire suppression; See Unit 1 DSAR for further details.

6.2.4 CONSTRUCTION

The zone consists of the southern portion of the Unit 1 yard area enclosed by the concrete seawall to west, U2/3 protected area fence/berm-wall to the south, security fencing and Security Building to east, and intervening space the north.

Open area exists between this area and 2-YD-30-200A and the other Unit 2/3 zones. The Common Site Facilities area is open to the atmosphere (no roof). Unit 1 original structures remaining in place is underground piping, Sewage treatment plant and DWST (See Figure 8-26C and drawing U1-C-0209); this zone has reacheds its final configuration and will house temporary structures as needed to support site industrial work.

For detailed information pertaining to U2/3 fire areas/zones, which communicate with the yard, refer to figure 8-26A and the Section 7.0 discussion of the fire areas/zones in question.

6.2.5 LICENSEE CONTROLLED SPECIFICATION BARRIERS

For Unit 2/3 area/zone LCS barriers requiring surveillance per LCS 3.7.104 refer to the latest revisions of Figure 8-1 through 8-26, Sheet 3.

6.2.6 CONCLUSION

The Unit 1 COMMON SITE FACILITIES Area is open to the atmosphere. Therefore, unlimited ventilation is provided to disperse heat and combustion by-products.

The barriers (distance and localized loading) for the Unit 1 fire zones, which communicate with the Unit 2/3 Yard Area, have been evaluated and found to be adequate to prevent propagation of a Unit 1 yard fire into 2/3 zones containing safe shutdown equipment.

6.2.7 FIRE AREA 1-YD-14-400B APPENDIX R COMPLIANCE

Fire event with the Common Site Facilities Area will not impact SONGS 2/3 operation nor required plant shutdown. There is no 2/3 Safe Shutdown equipment in the Unit 1 Area.

Unit 2/3 Safe shutdown capability will be provided by utilizing Train A or B systems within Unit 2/3 areas. Physically separated functionally redundant components will be utilized in conjunction with operator action on manual or disabled components to achieve safe shutdown.

The barriers (distance and localized loading) for the Unit 1 fire zones which communicate with the Unit 2/3 Yard Area have been evaluated and found to be adequate to prevent propagation of a Unit 1 yard fire into 2/3 zones containing safe shutdown equipment. Existing evaluation of Unit 2/3 Yard Area bounds the hazards a Unit 1 fire would pose to Unit 2/3 SDD equipment.

6.3 FIRE AREA/ZONE 1-YD-14-400C

6.3.1 LOCATION

Unit 1 Yard - El. 14'-0" – Unit 1 Industrial Area - - Fig. 8-26C

Fire Loading

Fire loading category - See Note 1.
Maximum permissible fire loading - See Note 1

Note 1: : Because of the large area of Unit 1 Fire Zones the localized/ transient nature of the hazards and the lack of physical walls bounding the fire zones, a Maximum Permissible Fire Loading and Fixed Loading categories are not defined.

6.3.2 DESIGN BASIS FIRE

Design basis fire for this industrial yard area will be localized equipment, individual transformer, temporary structure/trailer and/or a vehicle.

6.3.3 FIRE PROTECTION EQUIPMENT

Manual fire fighting equipment is available within this zone. Hose stream coverage is available from the yard hydrants supplied by U2/3 fire pumps. In addition, a seismic fire pump unit and water tank is available to fight fires in this yard area. Occupant buildings still "in-use" have sprinkler systems for fire suppression; See Unit 1 DSAR for further details.

6.3.4 CONSTRUCTION

The zone consists of the west portion of the Unit 1 Yard Area and is enclosed by the concrete seawall to the west, Owner-Controlled Area fence/PMF-wall to the north, ISFSI fencing to the east, and open intervening space to the south.

Open area exists between this area, 2-YD-30-200A and the other Unit 2/3 zones. Much of Unit 1 Industrial Area is open to the atmosphere (no roof). At this time,
Unit 1 original structures remaining in place is underground piping and the below grade portion of the intake structure (See Figure 8-26C and drawing U1-C-0209); this zone has reached its final configuration and will house temporary structures as needed to support site industrial work.

For detailed information pertaining to U2/3 fire areas/zones, which communicate with the yard, refer to Figure 8-26A and the Section 7.0 discussion of the fire areas/zones in question.

6.3.5 LICENSEE CONTROLLED SPECIFICATION BARRIERS

For Unit 2/3 area/zone LCS barriers requiring surveillance per LCS 3.7.104 refer to the latest revisions of Figure 8-1 through 8-26, Sheet 3.

6.3.6 CONCLUSION

The Unit 1 yard area is open to the atmosphere. Therefore, unlimited ventilation is provided to disperse heat and combustion by-products.

The barriers (distance and localized loading) for the Unit 1 fire zones which communicate with the Unit 2/3 Yard Area have been evaluated and found to be adequate to prevent propagation of a Unit 1 yard fire into 2/3 zones containing safe shutdown equipment.

6.3.7 FIRE AREA 1-YD-14-400C APPENDIX R COMPLIANCE

Fire event within the SONGS Unit 1 Industrial Area will not impact SONGS 2/3 operation nor required plant shutdown.

Unit 2/3 Safe shutdown capability will be provided by utilizing Train A or B systems within Unit 2/3 areas. Physically separated functionally redundant components will be utilized in conjunction with operator action on manual or disabled components to achieve safe shutdown.

The barriers (distance and localized loading) for the Unit 1 fire zones which communicate with the Unit 2/3 Yard Area have been evaluated and found to be adequate to prevent propagation of a Unit 1 yard fire into 2/3 zones containing safe shutdown equipment. Existing evaluation of Unit 2/3 Yard Area bounds the hazards a Unit 1 fire would pose to Unit 2/3 SDD equipment.

7. DETAILED FIRE HAZARD ANALYSIS

The Analysis Section for San Onofre Nuclear Generating Station Units 2 and 3 is divided into the following subsections by plant area/building:

7.1 2 CO - Unit 2, Containment Building
7.2 2 PE - Unit 2, Penetration Building
7.3 2 SE - Unit 2, Safety Equipment Building
7.4 2 FH - Unit 2, Fuel Handling Building
7.5 2 TB - Unit 2, Turbine Building
7.6 2 CT - Unit 2, Cable Tunnels
7.7 2 DG - Unit 2, Diesel Generator Building
7.8 2 TK - Unit 2, Tank Building
7.9 AC - Unit 2/3, Auxiliary Control Building
7.10 AR - Unit 2/3, Auxiliary Radwaste Building
7.11 YD - Unit 2/3, Yard Area
7.12 3 CO - Unit 3, Containment Building
7.13 3 PE - Unit 3, Penetration Building
7.14 3 SE - Unit 3, Safety Equipment Building
7.15 3 FH - Unit 3, Fuel Handling Building
7.16 3 TB - Unit 3, Turbine Building
7.17 3 CT - Unit 3, Cable Tunnels
7.18 3 DG - Unit 3, Diesel Generator Building
7.19 3 TK - Unit 3, Tank Building

At the beginning of each subsection, an overview of the building indicates the safe shutdown systems or safe shutdown auxiliary support systems which are partially or entirely contained within the building, as well as the available types of fire protection/detection equipment. Following the overview, an index denotes which of the fire areas/zones within the building contain safe shutdown equipment/cables or safety related equipment/cables. The first page of each fire zone analysis is a matrix. If the fire zone contains safe shutdown equipment/cables, additional detail analysis of the fire zone immediately follows. Page numbering for zone matrix and detail analysis pages follows the format of "Building" - "Zone unique identifier" - "sequence number".

7.1 UNIT 2 CONTAINMENT BUILDING

The Unit 2 Containment Building is a reinforced concrete structure which houses the reactor, the steam generators, the reactor coolant pumps, the reactor coolant system and other required support systems. The building is divided into three (3) fire areas. The barrier, penetration and door ratings are noted in the matrices.

The Containment Building contains part of or all of the following systems, which can be used for, or support, safe shutdown and cooldown:

- Essential Electric System
- Reactor Coolant
- Shutdown Cooling
- Chemical and Volume Control
- Main Steam
- HVAC

The types of fire protection/detection equipment in or near the building consist of the following:

- Portable extinguishers.
- A seismic standpipe system with manual hose stations.
- Smoke and fixed temperature rate of rise heat detectors.
- Manual water spray systems are provided for the charcoal filter units. Heat sensors installed in the filters provide control room alarm on high temperature.
- Semi-automatic water spray systems are provided for the reactor coolant pumps.
- Reactor coolant pump lube oil collection system.

Fire Area/Zone	Contains Safe Shutdown Equipment/ Cables	Contains Safety-Related Equipment/Cables	Figure No.
2-CO-15-1A	Yes	Yes	8-1, 8-2, 8-3 8-4
2-CO-15-1B	Yes	Yes	8-1, 8-2, 8-3 8-4
2-CO-15-1C	Yes	Yes	8-1, 8-2, 8-3
2-CO-63-1D	Yes	Yes	8-4
2-CO-15-167	No	No	8-1, 8-2, 8-3 8-4
2-CO-15-168	No	No	8-1, 8-2, 8-3 8-4

7.1.1 FIRE AREA/ZONE 2-CO-15-1A

FIRE AREA/ZONE: 2-CO-15-1A

AREA: 1335 sq. ft. DESCRIPTION: GENERATOR ROOM #2

DESIGN BASIS FIRE

Fire Loading Category:	Low
Fire Loading - Max Permiss:	80,000.0 Btu's/sq.ft.

FIRE PROTECTION (AVAILABLE)

Suppression (type)	semi-automatic water spray for RC pumps
Hose Stations	none, (1) seismic available in 2-CO-15-1C
Portable Extinguishers	none, adjacent
Detectors (type)	heat detectors for reactor coolant pumps

FIRE RESISTANCE RATING

Walls	HC
Floor, Ceiling, Roof	HC
Penetrations	none
Fixed Openings	OP/1C
Doors	none

HOT STANDBY SYSTEMS	Equipment	Valves	Cable
Reactor Coolant	N,B		A,B,B*
Reactor Protection System			
Shutdown Cooling			
Chemical and Volume Control			
Main Feedwater			
Main Steam			
HVAC			
Auxiliary Feedwater			
Engineered Safety Feature			
Component Cooling Water			
Saltwater Cooling Water			
Emergency Chilled Water			
Diesel Generator Systems			

COLD SHUTDOWN SYSTEMS	Equipment	Valves	Cable
Shutdown Cooling			
CCW (To SDC)			
HVAC			
Summary (Hot and Cold)	N,B		A,B,B*

ESSENTIAL ELECTRIC SYSTEMS	Equipment	MCC and Switchgear	Cable
220 KV (AC)			
4160 V (AC)			
480 V (AC)			
120 V (AC)			
125 V (DC)			
Electric Panels			
Summary			

ASSOCIATED CIRCUITS OF CONCERN

H/I Pressure Interface	NO
Spurious Operation	YES

FIRE AREA/ZONE 2-CO-15-1A

7.1.1.1 Location

Containment Building - El. 15'-0" - Generator Room #2 - 1335 square feet - Figs. 8-1, 8-2, 8-3, 8-4

7.1.1.2 Fire Loading

Fire loading category - Low
Maximum permissible fire loading - 80,000 Btu/sq. ft. (Note 1)

Note 1:The maximum permissible fire loading is based on an evenly distributed loading of combustible materials.

Note 2: Structural expansion material is embedded and sealed in concrete floors at walls and columns (Details in structural drawings 23108, 23120, 23199 Sheet 1, 23000 Sheets 1,2,3,4)

7.1.1.3 Design Basis Fire

The design basis fire is postulated to be a fire that would involve mostly cable insulation, oil normally contained within the two reactor coolant pumps and their associated surge capacitors located in the zone.

Transient fire loads in this area are not credible when the plant is at power, and fixed hazards within containment, which pose an exposure threat to equipment, components, or circuits required for safe shutdown (i.e., reactor coolant pumps), are provided with fixed semi-automatic water suppression systems and automatic detection capability.

The design basis fire is conservatively based on the simultaneous total combustion of all exposed combustibles in the zone.

7.1.1.4 Fire Protection Equipment

The zone contains a semi-automatic water spray system, with fixed temperature rate of rise detection, over the reactor coolant pumps. The heat detectors alarm in the control room. No hose stations or portable extinguishers are located within the zone. However, manual fire fighting equipment is available in adjacent zone 2-CO-15-1C.

7.1.1.5 Construction

The zone boundaries are heavy concrete with an approximate thickness of 48 inches. An open walkway allows access to the zone from adjacent zone 2-CO-15-1C. There are no fire dampers in the ventilation duct penetrations.

7.1.1.6 Licensee Controlled Specification Barriers

For definition of the barriers requiring surveillance per LCS 3.7.104, refer to the latest revisions of Figures 8-1, 8-2, 8-3, and 8-4, sheet 3/4.

FIRE AREA/ZONE 2-CO-15-1A

7.1.1.7 Conclusions

The fixed temperature rate of rise heat detectors are expected to detect the fire in its initial stages of growth, and alarm in the control room. A fire water main containment isolation valve will then be opened by a remote manual switch in the control room, and water will flow automatically to the correct water spray system to control and extinguish the fire.

Reactor coolant pumps are provided with a lube oil collection system designed to collect oil and prevent it from coming into contact with high temperature components. The system is designed to ensure that it will not structurally fail and unacceptably interact with safety related structures, systems, or components.

Portable extinguishers and hose stations located in adjacent zone 2-CO-15-1C provide suppression capability.

In the event the normal purge and/or mini-purge systems are damaged by fire, the smoke associated with such a fire will naturally rise and collect in the upper portions of the containment dome. This would enable the fire department to access and mitigate the fire without being unduly hampered by smoke.

The substantial construction of the heavy concrete walls is sufficient to prevent the propagation of a fire beyond the boundaries of the fire zone.

7.1.1.8 Fire Area 2-CO-15-1 Appendix R Compliance

Safe shutdown capability will be provided by utilizing Train A and B systems. Functionally redundant components protected from fire damage will be utilized in conjunction with operator action on manual or disabled components to achieve safe shutdown.

One train of systems necessary to achieve hot standby and cold shutdown has been evaluated to remain available for safe shutdown in accordance with 10CFR50, Appendix R, III.G.1 and III.G.2.d. A deviation from the requirements of 10CFR50, Appendix R, III.G.2.d has been accepted for cables and equipment not consistent with the 20 foot separation with no intervening combustibles rule. The fire detection and suppression systems in this area/zone were evaluated and shown to provide a level of protection equivalent to the requirements of the applicable sections of Appendix R.

7.1.2 FIRE AREA/ZONE 2-CO-15-1B

FIRE AREA/ZONE: 2-CO-15-1B

AREA: 1399 sq. ft. DESCRIPTION: GENERATOR ROOM #1

DESIGN BASIS FIRE

Fire Loading Category:	Low
Fire Loading - Max Permiss:	80,000.0 Btu's/sq.ft.

FIRE PROTECTION (AVAILABLE)

Suppression (type)	semi-automatic water spray for RC pumps
Hose Stations	none, (1) seismic available in 2-CO-15-1C
Portable Extinguishers	none, adjacent
Detectors (type)	heat detectors for reactor coolant pumps

FIRE RESISTANCE RATING

Walls	HC
Floor, Ceiling, Roof	HC
Penetrations	none
Fixed Openings	OP/1C
Doors	none

HOT STANDBY SYSTEMS	Equipment	Valves	Cable
Reactor Coolant	N,A,B		B*,A*,A,B
Reactor Protection System			
Shutdown Cooling			
Chemical and Volume Control			
Main Feedwater			
Main Steam			
HVAC			
Auxiliary Feedwater			
Engineered Safety Feature			
Component Cooling Water			
Saltwater Cooling Water			
Emergency Chilled Water			
Diesel Generator Systems			

COLD SHUTDOWN SYSTEMS	Equipment	Valves	Cable
Shutdown Cooling			
CCW (To SDC)			
HVAC			
Summary (Hot and Cold)	N,A,B		B*,A*,A,B

ESSENTIAL ELECTRIC SYSTEMS	Equipment	MCC and Switchgear	Cable
220 KV (AC)			
4160 V (AC)			
480 V (AC)			
120 V (AC)			
125 V (DC)			
Electric Panels			A,B
Summary			A,B

ASSOCIATED CIRCUITS OF CONCERN

H/I Pressure Interface	NO
Spurious Operation	YES

FIRE AREA/ZONE 2-CO-15-1B

7.1.2.1 Location

Containment Building - El. 15'-0" - Generator Room #1 - 1399 square feet - Figs. 8-1, 8-2, 8-3, 8-4

7.1.2.2 Fire Loading

Fire loading category - Low
Maximum permissible fire loading - 80,000 Btu/sq. ft. (Note 1)

Note 1: The maximum permissible fire loading is based on an evenly distributed loading of combustible materials.

Note 2: Structural expansion material is embedded and sealed in concrete floors at walls and columns (Details in structural drawings 23108, 23120, 23199 Sheet 1, 23000 Sheets 1,2,3,4)

7.1.2.3 Design Basis Fire

The design basis fire is postulated to be a fire that would involve mostly cable insulation, oil normally contained within the two reactor coolant pumps and their associated surge capacitors located in the zone.

Transient fire loads in this area are not credible when the plant is at power, and fixed hazards within containment, which pose an exposure threat to equipment, components, or circuits required for safe shutdown (i.e., reactor coolant pumps), are provided with fixed semi-automatic water suppression systems and automatic detection capability.

The design basis fire is conservatively based on the simultaneous total combustion of all exposed combustibles in the zone.

7.1.2.4 Fire Protection Equipment

The zone contains a semi-automatic water spray system, with fixed temperature rate of rise detection, over the reactor coolant pumps. The heat detectors alarm in the control room. No hose stations or portable extinguishers are located within the zone. However, manual fire fighting equipment is available in adjacent zone 2-CO-15-1C.

7.1.2.5 Construction

The zone boundaries are heavy concrete with an approximate thickness of 48 inches. An open walkway allows access to the zone from adjacent zone 2-CO-15-1C. There are no fire dampers in the ventilation duct penetrations.

7.1.2.6 Licensee Controlled Specification Barriers

For definition of the barriers requiring surveillance per LCS 3.7.104, refer to the latest revisions of Figures 8-1, 8-2, 8-3, and 8-4, sheet 3/4.

7.1.2.7 Conclusions

The fixed temperature rate of rise heat detectors are expected to detect the fire in its initial stages of growth, and alarm in the control room. A fire water main containment isolation valve will then be opened by a remote manual switch in the control room, and water will flow automatically to the correct water spray system to control and extinguish the fire.

Reactor coolant pumps are provided with a lube oil collection system designed to collect oil and prevent it from coming into contact with high temperature components. The system is designed to ensure that it will not structurally fail and unacceptably interact with safety related structures, systems, or components.

Portable extinguishers and hose stations located in adjacent zone 2-CO-15-1C provide suppression capability.

In the event the normal purge and/or mini-purge systems are damaged by fire, the smoke associated with such a fire would naturally rise and collect in the upper portions of the containment dome. This would enable the fire department to access and mitigate the fire without being unduly hampered by smoke.

The substantial construction of the heavy concrete walls is sufficient to prevent the propagation of a fire beyond the boundaries of the fire zone.

Appendix R compliance for fire area 2-CO-15-1 is discussed in fire zone 2-CO-15-1A.

7.1.3 FIRE AREA/ZONE 2-CO-15-1C

FIRE AREA/ZONE: 2-CO-15-1C

AREA: 11903 sq. ft. DESCRIPTION: CONTAINMENT AREA QUADRANTS 1,2,3,4

DESIGN BASIS FIRE

Fire Loading Category:	Low
Fire Loading - Max Permiss:	80,000.0 Btu's/sq.ft.

FIRE PROTECTION (AVAILABLE)

Suppression (type)	manual water spray system for charcoal
Hose Stations	(9) seismic
Portable Extinguishers	yes
Detectors (type)	partial ionization, charcoal temp. detector

FIRE RESISTANCE RATING

Walls	HC
Floor, Ceiling, Roof	HC
Penetrations	none
Fixed Openings	OP/1D
Doors	(3)B/2-CO-15-167, (3)B/2-CO-15-168

HOT STANDBY SYSTEMS	Equipment	Valves	Cable
Reactor Coolant	N		A,A*,B,B*,C,D
Reactor Protection System			
Shutdown Cooling		A,B	A,B
Chemical and Volume Control			A,B
Main Feedwater			
Main Steam			A,A*,B,C,D
HVAC			A,B
Auxiliary Feedwater			
Engineered Safety Feature			
Component Cooling Water			
Saltwater Cooling Water			
Emergency Chilled Water			
Diesel Generator Systems			

COLD SHUTDOWN SYSTEMS	Equipment	Valves	Cable
Shutdown Cooling			A,B
CCW (To SDC)			
HVAC			
Summary (Hot and Cold)	N	A,B	A,A*,B,B*,C,D

ESSENTIAL ELECTRIC SYSTEMS	Equipment	MCC and Switchgear	Cable
220 KV (AC)			
4160 V (AC)			
480 V (AC)			
120 V (AC)			
125 V (DC)			
Electric Panels			A,B
Summary			A,B

ASSOCIATED CIRCUITS OF CONCERN

H/I Pressure Interface	YES
Spurious Operation	YES

FIRE AREA/ZONE 2-CO-15-1C

7.1.3.1 Location

Containment Building - El. 15'-0" - Containment Area Quadrants 1, 2, 3, 4 - 11,903 square feet - Figures 8-1, 8-2, 8-3

7.1.3.2 Fire Loading

Fire loading category - Low
Maximum permissible fire loading - 80,000 Btu/sq. ft. (Note 1)

Note 1:The maximum permissible fire loading is based on an evenly distributed loading of combustible materials.

Note 2: Structural expansion material is embedded and sealed in concrete floors at walls and columns (Details in structural drawings 23108, 23120, 23199 Sheet 1, 23000 Sheets 1,2,3,4)

7.1.3.3 Design Basis Fire

The design basis fire is postulated to be a fire that would involve mostly cable insulation and charcoal.

Transient fire loads in this area are not credible when the plant is at power, and fixed hazards within containment which pose an exposure threat to equipment, components or circuits required for safe shutdown (i.e., reactor coolant pumps) are provided with fixed semi-automatic water suppression systems and automatic detection capability.

The fire loading is conservatively based on the simultaneous total combustion of all exposed combustibles in the zone. Due to the total enclosure of the charcoal within the charcoal filters of the recirculation unit and the physical separation of the redundant trains of cabling, the maximum credible fire will involve either charcoal or one train of cabling.

7.1.3.4 Fire Protection Equipment

A manual water spray system is provided for the charcoal filters of the recirculation filtration unit. A temperature detector is installed within the filtration units to alarm the control room on high temperature. Manual fire fighting equipment is available within the zone. Ionization smoke detectors provide an early warning alarm in the control room.

7.1.3.5 Construction

The zone boundaries are heavy concrete with an approximate thickness of 48 inches. Three 1-1/2 hour doors separate the area from the stairwell (2-CO-15-168). Three 1-1/2 hour rated doors open to the elevator (2-CO-15-167).

7.1.3.6 Licensee Controlled Specification Barriers

For definition of the barriers requiring surveillance per LCS 3.7.104, refer to the latest revisions of Figures 8-1, 8-2, and 8-3, sheet 3/4.

7.1.3.7 Conclusions

Fixed combustibles within the zone are limited to cable and charcoal which is entirely contained within the recirculation unit charcoal filter.

In the event of a fire in the charcoal filter, the temperature detector installed in the filters is expected to alarm high temperature in the control room. The operator will open the motor operated valve to pressurize the water spray system. At the same time, the operator will send personnel inside the containment to position the charcoal filter OS&Y valve to initiate flow and extinguish the fire.

The high voltage ionization detectors provided at the 30' and 45' containment levels are expected to detect the products of combustion due to a cable fire and alert the control room.

The design basis fire is insufficient to breach the barriers defining the zone/fire area.

In the event the normal purge and/or mini-purge systems are damaged by fire, the smoke associated with such a fire would naturally rise and collect in the upper portions of the containment dome. This would enable the fire department to access and mitigate the fire without being unduly hampered by smoke.

Appendix R compliance for fire area 2-CO-15-1 is discussed in fire zone 2-CO-15-1A.

7.1.4 FIRE AREA/ZONE 2-CO-63-1D

FIRE AREA/ZONE: 2-CO-63-1D

AREA: 14185 sq. ft. DESCRIPTION: OPERATING FLOOR

DESIGN BASIS FIRE

Fire Loading Category:	Low
Fire Loading - Max Permiss:	80,000.0 Btu's/sq.ft.

FIRE PROTECTION (AVAILABLE)

Suppression (type)	none
Hose Stations	(3) seismic
Portable Extinguishers	yes
Detectors (type)	ionization

FIRE RESISTANCE RATING

Walls	HC
Floor, Ceiling, Roof	HC
Penetrations	none
Fixed Openings	OP/1C
Doors	B/2-CO-15-167, B/2-CO-15-168

HOT STANDBY SYSTEMS	Equipment	Valves	Cable
Reactor Coolant			A,B,B*,C
Reactor Protection System			
Shutdown Cooling		A,B	A,B
Chemical and Volume Control			A,B
Main Feedwater			
Main Steam			A*,B,C
HVAC	A,B		A,B
Auxiliary Feedwater			
Engineered Safety Feature			
Component Cooling Water			
Saltwater Cooling Water			
Emergency Chilled Water			
Diesel Generator Systems			

COLD SHUTDOWN SYSTEMS	Equipment	Valves	Cable
Shutdown Cooling			A,B
CCW (To SDC)			
HVAC			
Summary (Hot and Cold)	A,B	A,B	A,A*,B,B*,C

ESSENTIAL ELECTRIC SYSTEMS	Equipment	MCC and Switchgear	Cable
220 KV (AC)			
4160 V (AC)			
480 V (AC)			
120 V (AC)			
125 V (DC)			
Electric Panels			A,B
Summary			A,B

ASSOCIATED CIRCUITS OF CONCERN

H/I Pressure Interface	YES
Spurious Operation	YES

FIRE AREA/ZONE 2-CO-63-1D

7.1.4.1 Location

Containment Building - El. 63'-6" - Operating Floor - 14,185 square feet - Figure 8-4

7.1.4.2 Fire Loading

Fire loading category - Low
Maximum permissible fire loading - 80,000 Btu/sq. ft. (Note 1)

Note 1:The maximum permissible fire loading is based on an evenly distributed loading of combustible materials.

Note 2: Structural expansion material is embedded and sealed in concrete floors at walls and columns (Details in structural drawings 23108, 23120, 23199 Sheet 1, 23000 Sheets 1,2,3,4)

7.1.4.3 Design Basis Fire

The design basis fire is postulated to be a fire that would involve mostly cable insulation. Transient fire loads in this area are not credible when the plant is at power.

The design basis fire is conservatively based on the simultaneous combustion of all exposed combustibles in the zone.

7.1.4.4 Fire Protection Equipment

Manual fire fighting equipment is available within the zone. Ionization smoke detectors, located within the zone, provide early warning alarm in the control room.

7.1.4.5 Construction

The zone boundaries are heavy concrete with an approximate thickness of 48 inches. The zone communicates with the stairwell (2-CO-15-168) and the elevator (2-CO-15-167) through 1-1/2 hour rated doors.

7.1.4.6 Licensee Controlled Specification Barriers

For definition of the barriers requiring surveillance per LCS 3.7.104, refer to the latest revision of Figure 8-4, sheet 3/4.

7.1.4.7 Conclusions

The ionization detectors are expected to detect the products of combustion of an incipient fire and alert the control room.

The design basis fire is insufficient to breach the barriers defining the zone/fire area.

The normal ventilation system will effectively remove the smoke generated by the design basis fire. In the event the normal purge and/or mini-purge systems are damaged by fire, the smoke associated with such a fire would naturally rise and collect in the upper portions of the containment dome. This would enable the fire department to access and mitigate the fire without being unduly hampered by smoke.

Appendix R compliance for fire area 2-CO-15-1 is discussed in fire zone 2-CO-15-1A.

7.1.5 FIRE AREA/ZONE 2-CO-15-167

FIRE AREA/ZONE: 2-CO-15-167

AREA: 64 sq. ft. DESCRIPTION: ELEVATOR SHAFT AND MACHINE ROOM

DESIGN BASIS FIRE

Fire Loading Category:	Minimal
Fire Loading - Max Permiss:	160,000.0 Btu's/sq.ft.

FIRE PROTECTION (AVAILABLE)

Suppression (type)	none
Hose Stations	none, seismic in 2-CO-15-1C & 2-CO-63-1D
Portable Extinguishers	yes, adjacent
Detectors (type)	photoelectric in machine room

FIRE RESISTANCE RATING

Walls	2hr
Floor, Ceiling, Roof	HC
Penetrations	none
Fixed Openings	none
Doors	(3)B/2-CO-15-1C, B/2-CO-63-1D,X/2-CO-15-168

HOT STANDBY SYSTEMS	Equipment	Valves	Cable
Reactor Coolant			
Reactor Protection System			
Shutdown Cooling			
Chemical and Volume Control			
Main Feedwater			
Main Steam			
HVAC			
Auxiliary Feedwater			
Engineered Safety Feature			
Component Cooling Water			
Saltwater Cooling Water			
Emergency Chilled Water			
Diesel Generator Systems			

COLD SHUTDOWN SYSTEMS	Equipment	Valves	Cable
Shutdown Cooling			
CCW (To SDC)			
HVAC			
Summary (Hot and Cold)			

ESSENTIAL ELECTRIC SYSTEMS	Equipment	MCC and Switchgear	Cable
220 KV (AC)			
4160 V (AC)			
480 V (AC)			
120 V (AC)			
125 V (DC)			
Electric Panels			
Summary			

ASSOCIATED CIRCUITS OF CONCERN

H/I Pressure Interface	NO
Spurious Operation	NO

7.1.6 FIRE AREA/ZONE 2-CO-15-168

FIRE AREA/ZONE: 2-CO-15-168

AREA: 136 sq. ft. DESCRIPTION: STAIRCASE

DESIGN BASIS FIRE

Fire Loading Category:	Minimal
Fire Loading - Max Permiss:	160,000.0 Btu's/sq.ft.

FIRE PROTECTION (AVAILABLE)

Suppression (type)	none
Hose Stations	none, seismic in 2-CO-15-1C & 2-CO-63-1D
Portable Extinguishers	none, adjacent
Detectors (type)	none

FIRE RESISTANCE RATING

Walls	2hr
Floor, Ceiling, Roof	HC
Penetrations	C
Fixed Openings	none
Doors	(3)B/2-CO-15-1C, B/2-CO-63-1D,X/2-CO-15-167

HOT STANDBY SYSTEMS	Equipment	Valves	Cable
Reactor Coolant			
Reactor Protection System			
Shutdown Cooling			
Chemical and Volume Control			
Main Feedwater			
Main Steam			
HVAC			
Auxiliary Feedwater			
Engineered Safety Feature			
Component Cooling Water			
Saltwater Cooling Water			
Emergency Chilled Water			
Diesel Generator Systems			

COLD SHUTDOWN SYSTEMS	Equipment	Valves	Cable
Shutdown Cooling			
CCW (To SDC)			
HVAC			
Summary (Hot and Cold)			

ESSENTIAL ELECTRIC SYSTEMS	Equipment	MCC and Switchgear	Cable
220 KV (AC)			
4160 V (AC)			
480 V (AC)			
120 V (AC)			
125 V (DC)			
Electric Panels			
Summary			

ASSOCIATED CIRCUITS OF CONCERN

H/I Pressure Interface	NO
Spurious Operation	NO

7. DETAILED FIRE HAZARD ANALYSIS

7.2. UNIT 2 PENETRATION BUILDING

The Unit 2 Penetration Building is a reinforced concrete structure that contains piping and electrical penetration areas. The Penetration Building is divided into two (2) fire areas. The barrier, penetration and door ratings are noted in the matrices.

The Penetration Building contains part of or all of the following systems, which can be used for, or support, safe shutdown and cooldown:

- Reactor Coolant
- Shutdown Cooling
- Chemical and Volume Control
- Main Steam
- HVAC
- Component Cooling Water
- Emergency Chilled Water
- Diesel Generator Systems
- Essential Electrical Systems

The types of fire protection/detection equipment available in or near this building consist of the following:

- Portable extinguishers
- Smoke detectors
- A seismic standpipe system with manual hose stations
- Manual water spray stems are provided for the charcoal filter units. Heat sensors installed in the units provide control room alarm on high temperature.

Fire Area/Zone	Contains Safe Shutdown Equipment/Cables	Contains Safety-Related Equipment/Cables	Figure No.
2-PE-9-2A	Yes	Yes	8-1
2-PE-(-18)-2B	Yes	Yes	8-1, 8-15
2-PE-30-2C	Yes	Yes	8-2
2-PE-30-2D	Yes	Yes	8-2
2-PE-45-3A	Yes	Yes	8-3
2-PE-63-3B	Yes	Yes	8-4

7.2.1 FIRE AREA/ZONE 2-PE-9-2A

FIRE AREA/ZONE: 2-PE-9-2A

AREA: 7468 sq. ft. DESCRIPTION: PIPING AREA

DESIGN BASIS FIRE

Fire Loading Category:	Minimal
Fire Loading - Max Permiss:	40,000.0 Btu's/sq.ft.

FIRE PROTECTION (AVAILABLE)

Suppression (type)	none
Hose Stations	none, (1) in 2-AR-9-76
Portable Extinguishers	yes
Detectors (type)	ionization

FIRE RESISTANCE RATING

Walls	HC/containment, 2B, 73, 148G, 3hr/others
Floor, Ceiling, Roof	HC/2C floor grade, others 2hr
Penetrations	D, C, P, SG, ND/2C, QP/73, QP/94
Fixed Openings	OP/2B, MH/2C, OS/2C, OH/2C, OD/2B
Doors	W/2-TB-8-148G, A/2-AR-9-76, A/2-FH-15-124, A/2-FH-17-122

HOT STANDBY SYSTEMS	Equipment	Valves	Cable
Reactor Coolant			
Reactor Protection System			
Shutdown Cooling			
Chemical and Volume Control			B
Main Feedwater			
Main Steam			B
HVAC			
Auxiliary Feedwater			
Engineered Safety Feature			
Component Cooling Water			A,B
Saltwater Cooling Water			
Emergency Chilled Water			
Diesel Generator Systems			

COLD SHUTDOWN SYSTEMS	Equipment	Valves	Cable
Shutdown Cooling		N	A,B
CCW (To SDC)			
HVAC			
Summary (Hot and Cold)		N	A,B

ESSENTIAL ELECTRIC SYSTEMS	Equipment	MCC and Switchgear	Cable
220 KV (AC)			
4160 V (AC)			
480 V (AC)			
120 V (AC)			
125 V (DC)			
Electric Panels			A,B,X
Summary			A,B,X

ASSOCIATED CIRCUITS OF CONCERN

H/I Pressure Interface	NO
Spurious Operation	YES

FIRE AREA/ZONE 2-PE-9-2A

7.2.1.1 Location

Penetration Building - El. 9'-0" - Piping Area - 7468 square feet - Figure 8-1

7.2.1.2 Fire Loading

Fire loading category - Minimal
Maximum permissible fire loading - 40,000 Btu/sq. ft. (Note 1)

Note 1:The maximum permissible fire loading is based on an evenly distributed loading of combustible materials.

7.2.1.3 Design Basis Fire

The design basis fire is postulated to be a fire that would involve mostly hydraulic fluid, rubber, and Class A combustibles.

The design basis fire is conservatively based on the simultaneous total combustion of all combustibles in the zone.

7.2.1.4 Fire Protection Equipment

Manual fire fighting equipment is available within the zone or in adjacent area 2-AR-9-76. Ionization smoke detectors, located within the zone, provide early warning alarm in the control room.

7.2.1.5 Construction

Heavy concrete walls separate this zone from containment. The walls adjoining zones 2-PE-(-18)-2B, 2-AR-9-73, and 2-TB-8-148G are nonrated heavy concrete. The remainder of the zone walls are reinforced concrete with a 3 hour rating. The ceiling construction is 2 hour rated except to zone 2C. An open stairwell leads to zone 2-PE-30-2C above. The floor to grade is nonrated heavy concrete construction. Two 3 hour rated doors communicate with the fuel handling building (2-FH-17-122 and 2-FH-15-124). The area is separated from the auxiliary radwaste building (2-AR-9-76) by a 3 hour rated door. A watertight door separates the area from adjacent zone 2-TB-8-148G. The zone communicates with adjacent zone 2-PE-(-18)-2B through a gate and an opening (at the south end of the penetration building) in the barrier between the two zones. There is a qualified penetration seal between this zone and 2-AR-9-73. The barrier between these two areas is part of a double wall configuration. The qualified seal is on the 2-AR-9-73 side of the double wall and the 2A side unsealed.

7.2.1.6 Licensee Controlled Specification Barriers

For definition of the barriers requiring surveillance per LCS 3.7.104, refer to the latest revision of Figure 8-1, sheet 3.

7.2.1.7 Conclusions

The ionization detection system is expected to detect the products of combustion from an incipient fire and alert the control room for prompt response by the fire department. The available portable equipment is adequate to extinguish the fire.

The fire boundaries between 2-PE-9-2A and 2-TB-8-148G, 2-AR-24-94, 2-AR-9-73, and 2-FH-30-128 were evaluated. The fire boundaries and associated fire protection features were found to be adequate to prevent the propagation of fire beyond the fire boundaries.

The design basis fire is insufficient to breach the barriers defining the zone/fire area.

7.2.1.8 Fire Area 2-PE-(-18)-2 Appendix R Compliance

Safe shutdown capability will be provided by utilizing Train A systems. Functionally redundant components protected from fire damage will be utilized in conjunction with operator action on manual or disabled components to achieve safe shutdown.

One train of systems necessary to achieve hot standby and cold shutdown has been evaluated to remain available for safe shutdown in accordance with 10CFR50, Appendix R, III.G.1 and III.G.2.a.

7.2.2 FIRE AREA/ZONE 2-PE-(-18)-2B

FIRE AREA/ZONE: 2-PE-(-18)-2B

AREA: 3418 sq. ft. DESCRIPTION: PIPING AREA

DESIGN BASIS FIRE

Fire Loading Category:	Minimal
Fire Loading - Max Permiss:	40,000.0 Btu's/sq.ft.

FIRE PROTECTION (AVAILABLE)

Suppression (type)	none
Hose Stations	none
Portable Extinguishers	yes
Detectors (type)	ionization

FIRE RESISTANCE RATING

Walls	3hr/94, 148G, others HC
Floor, Ceiling, Roof	2hr/ceiling, HC/floor
Penetrations	SG, P
Fixed Openings	OD/2A, OP/2A, OP/136, OP/137C, MH/135A
Doors	W/2-TB-8-148G

HOT STANDBY SYSTEMS	Equipment	Valves	Cable
Reactor Coolant			
Reactor Protection System			
Shutdown Cooling			
Chemical and Volume Control			B
Main Feedwater			
Main Steam			B
HVAC			
Auxiliary Feedwater			
Engineered Safety Feature			
Component Cooling Water			A
Saltwater Cooling Water			
Emergency Chilled Water			
Diesel Generator Systems			

COLD SHUTDOWN SYSTEMS	Equipment	Valves	Cable
Shutdown Cooling		A	A,B
CCW (To SDC)			
HVAC			
Summary (Hot and Cold)		A	A,B

ESSENTIAL ELECTRIC SYSTEMS	Equipment	MCC and Switchgear	Cable
220 KV (AC)			
4160 V (AC)			
480 V (AC)			
120 V (AC)			
125 V (DC)			
Electric Panels			A,B,X
Summary			A,B,X

ASSOCIATED CIRCUITS OF CONCERN

H/I Pressure Interface	NO
Spurious Operation	YES

FIRE AREA/ZONE 2-PE-(-18)-2B

7.2.2.1 Location

Penetration Building - El. (-18'-0") - Piping Area - 3418 square feet - Figs. 8-1, 8-15

7.2.2.2 Fire Loading

Fire loading category - Minimal
Maximum permissible fire loading - 40,000 Btu/sq. ft. (Note 1)

Note 1:The maximum permissible fire loading is based on an evenly distributed loading of combustible materials.

7.2.2.3 Design Basis Fire

A fire is not expected to occur in this area during normal operation. The maximum credible fire is postulated to involve transient combustible materials.

7.2.2.4 Fire Protection Equipment

Manual fire fighting equipment is available within the zone. Ionization smoke detectors, located within the zone, provide early warning alarm in the control room.

7.2.2.5 Construction

The walls defining the zone are nonrated reinforced concrete construction with an approximate thickness of 24 inches except the walls adjoining area 2-AR-24-94 which are 3 hour rated. The zone communicates with adjacent zone 2-PE-9-2A through a gate and an opening (at the west end of the penetration building) in the barrier separating the two zones. The ceiling is 2 hour rated concrete construction. The floor to grade is nonrated heavy concrete construction. A nonrated watertight door opens to adjacent zone 2-TB-8-148G. There are no ventilation duct penetrations. The wall between the zone and 2-SE-(-5)-135A is part of a double wall configuration. Penetrations through the wall are sealed on the 135A side and unsealed on the 2B side of the double wall.

7.2.2.6 Licensee Controlled Specification Barriers

For definition of the barriers requiring surveillance per LCS 3.7.104, refer to the latest revisions of Figures 8-1 and 8-15, sheet 3.

7.2.2.7 Conclusions

The ionization detection system is expected to detect the products of combustion from an incipient fire and alert the control room for prompt response by the fire department. The available portable equipment is adequate to extinguish the fire.

The lack of fire loading and the substantial construction of the heavy concrete walls preclude the propagation of a transient combustible fire beyond the boundaries defining the zone.

The fire boundary between 2-PE-(-18)-2B and 2-SE-(-5)-135A was evaluated. The boundaries and associated fire protection features were found to be adequate to prevent the propagation of fire between the fire areas.

The design basis fire is insufficient to breach the barriers defining the zone/fire area.

Appendix R compliance for fire area 2-PE-(-18)-2 is discussed in fire zone 2-PE-9-2A.

7.2.3 FIRE AREA/ZONE 2-PE-30-2C

FIRE AREA/ZONE: 2-PE-30-2C

AREA: 5556 sq. ft. DESCRIPTION: PIPING AREA

DESIGN BASIS FIRE

Fire Loading Category:	Minimal
Fire Loading - Max Permiss:	40,000.0 Btu's/sq.ft.

FIRE PROTECTION (AVAILABLE)

Suppression (type)	manual water spray system for charcoal
Hose Stations	none
Portable Extinguishers	yes
Detectors (type)	ionization, temp. det. for charcoal

FIRE RESISTANCE RATING

Walls	HC/containment, 2D, 73, others 3hr
Floor, Ceiling, Roof	2hr, HC/2A
Penetrations	D, P, C, ND/2A, SG, QP/73
Fixed Openings	MH/2A, OH/2A, OS/2A, OD/2D
Doors	A/2-AC-30-28, A/2-FH-30-126, A/2-FH-30-128

HOT STANDBY SYSTEMS	Equipment	Valves	Cable
Reactor Coolant			
Reactor Protection System			
Shutdown Cooling			
Chemical and Volume Control		B	A,B
Main Feedwater			
Main Steam		A	A,B
HVAC			
Auxiliary Feedwater			
Engineered Safety Feature			
Component Cooling Water		A,B,X	A,B,X
Saltwater Cooling Water			
Emergency Chilled Water			
Diesel Generator Systems			

COLD SHUTDOWN SYSTEMS	Equipment	Valves	Cable
Shutdown Cooling		A,B	A,B
CCW (To SDC)			
HVAC			
Summary (Hot and Cold)		A,B,X	A,B,X

ESSENTIAL ELECTRIC SYSTEMS	Equipment	MCC and Switchgear	Cable
220 KV (AC)			
4160 V (AC)			
480 V (AC)			
120 V (AC)			
125 V (DC)			
Electric Panels			A,B,C,D,X
Summary			A,B,C,D,X

ASSOCIATED CIRCUITS OF CONCERN

H/I Pressure Interface	YES
Spurious Operation	YES

FIRE AREA/ZONE 2-PE-30-2C

7.2.3.1 Location

Penetration Building - El. 30'-0" - Piping Area - 5556 square feet - Figure 8-2

7.2.3.2 Fire Loading

Fire loading category - Minimal
Maximum permissible fire loading - 40,000 Btu/sq. ft. (Note 1)

Note 1:The maximum permissible loading is based on an evenly distributed loading of combustible materials.

7.2.3.3 Design Basis Fire

The design basis fire is postulated to be a fire that would involve mostly Class A combustibles, plastic, rubber, charcoal, and hydraulic fluid.

The design basis fire is conservatively based on the simultaneous total combustion of all combustibles in the zone.

7.2.3.4 Fire Protection Equipment

A manual water spray system is provided for the charcoal filter. In addition, manual fire fighting equipment is available within the zone. A temperature detector is installed within the filter units to alarm the control room on high temperature. Ionization smoke detectors, located within the zone, provide early warning alarm in the control room.

7.2.3.5 Construction

The walls of the zone to adjacent fire areas are reinforced concrete with a 3 hour rating. The wall to 2-AR-9-73 is part of a double wall and the penetration building side is nonrated on this elevation. The penetrations through the double wall are sealed on the 2-AR-9-73 side of the wall and unsealed on the 2C side. A heavy concrete wall, with an approximate thickness of 4 feet, separates this area from containment. A nonrated heavy concrete wall also separates this zone from 2-PE-30-2D. The floor and ceiling are 2 hour rated except for the floor to zone 2-PE-9-2A is heavy concrete. Two 3 hour rated doors communicate with the fuel handling building (2-FH-30-126 and 2-FH-30-128). The zone communicates with the auxiliary control building (2-AC-30-28) through a 3 hour rated door.

7.2.3.6 Licensee Controlled Specification Barriers

For definition of the barriers requiring surveillance per LCS 3.7.104, refer to the latest revision of Figure 8-2, sheet 3.

7.2.3.7 Conclusions

In the event of a fire in the charcoal filters, the temperature detector, installed within the filter, is expected to alarm high temperature in the control room. Manual operation of the deluge valve will provide water spray directly on the charcoal filters to extinguish the fire.

The ionization detection system is expected to detect the products of combustion from an incipient fire outside the charcoal filter and alert the control room for prompt response by the fire department. The available portable equipment is adequate to extinguish the fire.

The fire boundaries between fire areas 2-PE-30-2C and 2-AR-9-73, 2-FH-30-128 and 2-FH-45-131 were evaluated. The fire boundaries and associated fire protection features were found to be adequate to prevent the propagation of fire beyond the fire boundaries.

The design basis fire is insufficient to breach the barriers defining the zone/fire area.

Appendix R compliance for fire area 2-PE-(-18)-2 is discussed in fire zone 2-PE-9-2A.

7.2.4 FIRE AREA/ZONE 2-PE-30-2D

FIRE AREA/ZONE: 2-PE-30-2D

AREA: 805 sq. ft. DESCRIPTION: PIPING AREA

DESIGN BASIS FIRE

Fire Loading Category:	Minimal
Fire Loading - Max Permiss:	40,000.0 Btu's/sq.ft.

FIRE PROTECTION (AVAILABLE)

Suppression (type)	none
Hose Stations	none
Portable Extinguishers	yes, adjacent
Detectors (type)	ionization

FIRE RESISTANCE RATING

Walls	HC
Floor, Ceiling, Roof	2hr
Penetrations	P, C, SG
Fixed Openings	OD/2C
Doors	none

HOT STANDBY SYSTEMS	Equipment	Valves	Cable
Reactor Coolant			
Reactor Protection System			
Shutdown Cooling			
Chemical and Volume Control		A,B,N	A,B
Main Feedwater			
Main Steam		B	B
HVAC			
Auxiliary Feedwater			
Engineered Safety Feature			
Component Cooling Water			A
Saltwater Cooling Water			
Emergency Chilled Water			
Diesel Generator Systems			

COLD SHUTDOWN SYSTEMS	Equipment	Valves	Cable
Shutdown Cooling		A,B	A,B
CCW (To SDC)			
HVAC			
Summary (Hot and Cold)		A,B,N	A,B

ESSENTIAL ELECTRIC SYSTEMS	Equipment	MCC and Switchgear	Cable
220 KV (AC)			
4160 V (AC)			
480 V (AC)			
120 V (AC)			
125 V (DC)			
Electric Panels			A,B,C,X
Summary			A,B,C,X

ASSOCIATED CIRCUITS OF CONCERN

H/I Pressure Interface	YES
Spurious Operation	YES

FIRE AREA/ZONE 2-PE-30-2D

7.2.4.1 Location

Penetration Building - El. 30'-0" - Piping Area - 805 square feet - Figure 8-2

Fire loading category - Minimal
Maximum permissible fire loading - 40,000 Btu/sq. ft. (Note 1)

Note 1:The maximum permissible fire loading is based on an evenly distributed loading of combustible materials.

7.2.4.2 Design Basis Fire

A fire is not expected to occur in this area during normal operation. The maximum credible fire is postulated to involve transient combustible materials.

Fire Protection Equipment

Manual fire fighting equipment is available within the zone and in adjacent zone 2-PE-30-2C. Ionization smoke detectors, located within the zone, provide early warning alarm in the control room.

7.2.4.3 Construction

The walls defining the zone are nonrated reinforced concrete construction with an approximate thickness of 18 inches. The ceiling and floor are 2 hour rated. The zone is accessed through two open doorways from adjacent zone 2-PE-30-2C.

7.2.4.4 Licensee Controlled Specification Barriers

For definition of the barriers requiring surveillance per LCS 3.7.104, refer to the latest revisions of Figure 8-2, sheet 3.

7.2.4.5 Conclusions

The ionization detection system is expected to detect the products of combustion from an incipient fire and alert the control room for prompt response by the fire department. The available portable equipment is adequate to extinguish a transient combustible fire.

The fire barrier between 2-PE-30-2D and 2-AR-24-94 was evaluated. The boundary and associated fire protection features were found to be adequate to prevent the propagation of fire between the fire areas. The design basis fire is insufficient to breach the barriers defining the zone/fire area.

Appendix R compliance for fire area 2-PE-(-18)-2 is discussed in fire zone 2-PE-9-2A.

7.2.5 FIRE AREA/ZONE 2-PE-45-3A

FIRE AREA/ZONE: 2-PE-45-3A

AREA: 6415 sq. ft. DESCRIPTION: ELECTRICAL PENETRATION AREA

DESIGN BASIS FIRE

Fire Loading Category:	Low
Fire Loading - Max Permiss:	160,000.0 Btu's/sq.ft.

FIRE PROTECTION (AVAILABLE)

Suppression (type)	none
Hose Stations	(2) seismic
Portable Extinguishers	yes
Detectors (type)	ionization

FIRE RESISTANCE RATING

Walls	HC/containment, 3hr/others
Floor, Ceiling, Roof	2hr
Penetrations	D, P, C
Fixed Openings	MH/3B, CH/3B, SG
Doors	L/2-SE-50-146, A/2-AC-50-37, A/2-FH-45-130, A/2-FH-45-131

HOT STANDBY SYSTEMS	Equipment	Valves	Cable
Reactor Coolant	A*		A,B,D,A*
Reactor Protection System			
Shutdown Cooling			A
Chemical and Volume Control			A,B
Main Feedwater			
Main Steam	A*		A,D,A*
HVAC			A
Auxiliary Feedwater			
Engineered Safety Feature			
Component Cooling Water			A,X
Saltwater Cooling Water			
Emergency Chilled Water			A
Diesel Generator Systems			A

COLD SHUTDOWN SYSTEMS	Equipment	Valves	Cable
Shutdown Cooling			A,B
CCW (To SDC)			
HVAC			
Summary (Hot and Cold)	A*		A,A*,B,D,X

ESSENTIAL ELECTRIC SYSTEMS	Equipment	MCC and Switchgear	Cable
220 KV (AC)			X
4160 V (AC)			A
480 V (AC)	A*		A
120 V (AC)	A*,X*		A
125 V (DC)			
Electric Panels	A*		A,A*,B,D,D*,X
Summary	A*,X*		A,A*,B,D,D*,X

ASSOCIATED CIRCUITS OF CONCERN

H/I Pressure Interface	YES
Spurious Operation	YES

FIRE AREA/ZONE 2-PE-45-3A

7.2.5.1 Location

Penetration Building - El. 45'-0" - Electrical Penetration Area - 6415 square feet - Figure 8-3

7.2.5.2 Fire Loading

Fire loading category - Low
Maximum permissible fire loading - 160,000 Btu/sq. ft. (Note 1)

Note 1:The maximum permissible fire loading is based on an evenly distributed loading of combustible materials.

7.2.5.3 Design Basis Fire

The design basis fire is postulated to be a fire that would involve mostly cable insulation.

The design basis fire is conservatively based on the simultaneous total combustion of all combustibles in the zone.

7.2.5.4 Fire Protection Equipment

Manual fire fighting equipment is available in the zone. Ionization smoke detectors, located within the zone, provide early warning alarm in the control room.

7.2.5.5 Construction

The exterior walls of the zone are 3 hour rated reinforced concrete. The wall separating the area from containment is nonrated reinforced concrete construction with an approximate thickness of 4 feet. The floor is 2 hour rated. The ceiling is 2 hour rated with the exception of the metal hatches covering the tendon access opening to the electrical penetration area (2-PE-63-3B). These metal hatches and their support framing are protected by 2 hour rated material. The zone communicates with the fuel handling building (2-FH-45-130 and 2-FH-45-131) and the auxiliary control building (2-AC-50-37) through 3 hour rated doors. A bullet-resistant door opens to the roof of the safety equipment building (2-SE-50-146). A concrete hatch of similar thickness as the ceiling communicates with the elevation above (2-PE-63-3B) and is located in the center of the fire zone.

7.2.5.6 Licensee Controlled Specification Barriers

For definition of the barriers requiring surveillance per LCS 3.7.104, refer to Figure 8-3, sheet 3.

7.2.5.7 Conclusions

The ionization detection system is expected to detect the products of combustion from an incipient fire and alert the control room for prompt response by the fire department. The available portable equipment is adequate to extinguish the fire.

The normal ventilation system will effectively remove the smoke generated by the design basis fire until the fire dampers operate. Portable smoke exhaust fans may then be used to vent smoke from the zone.

The substantial construction of the zone ceiling has been evaluated to be sufficient to prevent the propogation of a fire beyond the zone boundary.

The barrier between 2-PE-45-3A and 2-PE-63-3B, 2-FH-63-134 and 2-FH-45-131 were evaluated. The fire boundaries and associated fire protection features were found to be adequate to prevent the propagation of fire beyond the fire boundaries.

The design basis fire is insufficient to breach the barriers defining the zone/fire area.

7.2.5.8 Fire Area/Zone 2-PE-45-3A Appendix R Compliance

Safe shutdown capability will be provided by utilizing Train B systems. Functionally redundant components protected from fire damage will be utilized in conjunction with operator action on manual or disabled components to achieve safe shutdown.

One train of systems necessary to achieve hot standby and cold shutdown has been evaluated to remain available for safe shutdown in accordance with 10CFR50, Appendix R III.G.2.a. A deviation from the requirements of 10CFR50 Appendix R, III.G.2.a has been accepted for the use of 2-hour barriers in lieu of 3-hour barriers to separate redundant safe shutdown trains. The fire detection and suppression systems in this area/zone were evaluated and shown to provide a level of protection equivalent to the requirements of Appendix R.

7.2.6 FIRE AREA/ZONE 2-PE-63-3B

FIRE AREA/ZONE: 2-PE-63-3B

AREA: 6415 sq. ft. DESCRIPTION: ELECT. PEN. AREA/PERSONNEL MON. AREA

DESIGN BASIS FIRE

Fire Loading Category:	Medium
Fire Loading - Max Permiss:	160,000.0 Btu's/sq.ft.

FIRE PROTECTION (AVAILABLE)

Suppression (type)	none
Hose Stations	(2) seismic
Portable Extinguishers	yes
Detectors (type)	ionization

FIRE RESISTANCE RATING

Walls	HC/containment, 2hr/178A, 3hr/others
Floor, Ceiling, Roof	2hr
Penetrations	P, C, D
Fixed Openings	MH/3A, CH/3A, SG
Doors	A/2-AC-70-63, A/2-AR-63-116, A/2-FH-63-134, A/2-FH-17-123, A/2-AR-68-178A

HOT STANDBY SYSTEMS	Equipment	Valves	Cable
Reactor Coolant			A,B,C,B*
Reactor Protection System			
Shutdown Cooling			B
Chemical and Volume Control			A,B
Main Feedwater			
Main Steam			B,C
HVAC			B
Auxiliary Feedwater			
Engineered Safety Feature			
Component Cooling Water			B
Saltwater Cooling Water			
Emergency Chilled Water			B
Diesel Generator Systems			

COLD SHUTDOWN SYSTEMS	Equipment	Valves	Cable
Shutdown Cooling			A,B
CCW (To SDC)			
HVAC			
Summary (Hot and Cold)			A,B,C,B*

ESSENTIAL ELECTRIC SYSTEMS	Equipment	MCC and Switchgear	Cable
220 KV (AC)			X
4160 V (AC)			B
480 V (AC)			
120 V (AC)			
125 V (DC)			
Electric Panels			A,B,B*,C,X
Summary			A,B,B*,C,X

ASSOCIATED CIRCUITS OF CONCERN

H/I Pressure Interface	YES
Spurious Operation	YES

FIRE AREA/ZONE 2-PE-63-3B

7.2.6.1 Location

Penetration Building - El. 63'-6" - Electrical Penetration Area/Personnel Monitor Area - 6415 square feet - Figure 8-4

7.2.6.2 Fire Loading

Fire loading category - Medium
Maximum permissible fire loading - 160,000 Btu/sq. ft. (Note 1)

Note 1:The maximum permissible loading is based on an evenly distributed loading of combustible materials.

7.2.6.3 Design Basis Fire

The design basis fire is postulated to be a fire that would involve mostly alcohol, plastic, rubber, cable insulation and Class A combustibles.

The design basis fire is conservatively based on the simultaneous total combustion of all combustibles in the zone.

7.2.6.4 Fire Protection Equipment

Manual fire fighting equipment is available within the zone. Ionization smoke detectors, located throughout the zone, provide early warning alarm in the control room.

7.2.6.5 Construction

The south, east, and west walls are 3 hour rated. The wall adjoining area 2-AR-68-178A is 2 hour rated. The wall separating the zone from containment is nonrated reinforced concrete construction with an approximate thickness of 4 feet. The floor is 2 hour rated with the exception of the metal hatches covering the tendon access opening to the electrical penetration area below (2-PE-45-3A). These metal hatches and their support framing are protected by 2 hour rated material. A concrete hatch of similar thickness as the floor communicates with the elevation below (2-PE-45-3A) and is located in the center of the fire zone.

Five 3 hour rated doors communicate with the auxiliary control building (2-AC-70-63), the auxiliary radwaste building (2-AR-63-116 and 2-AR-68-178A), and the fuel handling building (2-FH-63-134 and 2-FH-17-123).

7.2.6.6 Licensee Controlled Specification Barriers

For definition of the barriers requiring surveillance per LCS 3.7.104, refer to the latest revision of Figure 8-4, sheet 3.

7.2.6.7 Conclusions

The ionization detection system is expected to detect the products of combustion from an incipient fire and alert the control room for prompt response by the fire department. The available portable equipment is adequate to extinguish the fire.

The normal ventilation system will effectively remove the smoke generated by the design basis fire until the fire dampers operate. Portable smoke exhaust fans may then be used to vent smoke from the area.

The barriers between 2-PE-63-3B and 2-PE-45-3A, 2-AR-68-178A and 2-FH-63-134 were evaluated. The fire boundaries and associated fire protection features were found to be adequate to prevent the propagation of fire beyond the fire boundaries.

The substantial construction of the zone floor has been evaluated to be sufficient to prevent the propogation of a fire beyond the fire zone boundary.

The design basis fire is insufficient to breach the barriers defining the zone/fire area.

Fire Area/Zone 2-PE-63-3B Appendix R Compliance

Safe shutdown capability will be provided by utilizing Train A systems. Functionally redundant components protected from fire damage will be utilized in conjunction with operator action on manual or disabled components to achieve safe shutdown.

One train of systems necessary to achieve hot standby and cold shutdown has been evaluated to remain available for safe shutdown in accordance with 10CFR50, Appendix R, III.G.2.a. A deviation from the requirements of 10CFR50 Appendix R, III.G.2.a has been accepted for the use of 2-hour equivalent fire barriers in lieu of 3-hour barriers to separate redundant safe shutdown trains. The fire detection and suppression systems in this area/zone were evaluated and shown to provide a level of protection equivalent to the requirements of the applicable sections of Appendix R.

7. DETAILED FIRE HAZARD ANALYSIS

7.3 UNIT 2 SAFETY EQUIPMENT BUILDING

The Unit 2 Safety Equipment Building is a reinforced concrete structure that contains safety-related pump rooms and electrical tunnel areas. The Safety Equipment Building is divided into sixteen (16) fire areas. The barrier, penetration and door ratings are noted on the matrices.

The Safety Equipment Building contains part of or all of the following systems, which can be used for, or support, safe shutdown and cooldown:

- Main Feedwater
- Shutdown Cooling
- Auxiliary Feedwater
- Component Cooling Water
- Saltwater Cooling
- HVAC
- Emergency Chilled Water
- Diesel Generator Systems
- Main Steam
- Essential Electric Systems
- Engineered Safety Feature

The types of fire protection/detection equipment available in or near this building consists of the following:

- Portable extinguishers.

- Smoke and fixed temperature rate of rise heat detectors.

- A standpipe system with manual hose stations.

- A fixed water spray system is provided to protect the electrical tunnel. The detectors used to automatically operate the spray system will be fixed temperature rate of rise heat detectors.

- Wet pipe sprinkler systems.

Fire Area/Zone	Contains Safe Shutdown Related Equipment/ Cables	Contains Safety Related Equipment/Cables	Figure No.
2-SE-(-5)-135A	Yes	Yes	8-15, 8-16
2-SE-(-5)-135B	Yes	Yes	8-15
2-SE-(-5)-135C	Yes	Yes	8-15
2-SE-(-5)-135D	Yes	Yes	8-15
2-SE-(-15)-136	Yes	Yes	8-15, 8-16
2-SE-(-15)-137A	Yes	Yes	8-15
2-SE-(-15)-137B	Yes	Yes	8-15
2-SE-(-15)-137C	Yes	Yes	8-15
2-SE-(-15)-138	Yes	Yes	8-15, 8-16
2-SE-(-15)-139	Yes	Yes	8-15, 8-16
2-SE-8-140A	Yes	Yes	8-16
2-SE-8-140B	Yes	Yes	8-16
2-SE-8-141	Yes	Yes	8-16
2-SE-30-142A	Yes	Yes	8-17, 8-18
2-SE-30-143	No	No	8-17, 8-18
2-SE-30-144	No	No	8-17, 8-18
2-SE-30-145A	Yes	Yes	8-17
2-SE-25-145B	No	No	8-17, 8-26
2-SE-50-146	No	No	8-18
2-SE-(-12)-170	Yes	Yes	8-1, 8-15
2-SE-30-171	No	No	8-17
2-SE-70-172	No	No	8-18
2-SE-(-2)-176	No	No	8-16

7.3.1 FIRE AREA/ZONE: 2-SE-(-5)-135A

FIRE AREA/ZONE: 2-SE-(-5)-135A

AREA: 7285 sq. ft. DESCRIPTION: PIPING RM/HEAT EXCH RM.

DESIGN BASIS FIRE

Fire Loading Category:	Minimal
Fire Loading - Max Permiss:	13,000 Btu's/sq.ft.

FIRE PROTECTION (AVAILABLE)

Suppression (type)	none @ (-5'-3"), wet pipe system @ 8'-0"
Hose Stations	(1) @ (-5"-3"), (1) @ 8'-0"
Portable Extinguishers	yes
Detectors (type)	none

FIRE RESISTANCE RATING

Walls	HC/141, others 3hr
Floor, Ceiling, Roof	2hr, HC/floor grade
Penetrations	P, C, D, NP/141, QC/148G, QP/135B, 136
Fixed Openings	MH/135B, 135C, 135D, 2B
Doors	(2)W/2-TB-8-148G, W/2-TB-7-148A, W/2-SE-,(-15)-136, W/2-SE-(-5)-135B, 135C, 135D

HOT STANDBY SYSTEMS	Equipment	Valves	Cable
Reactor Coolant			
Reactor Protection System			
Shutdown Cooling			
Chemical and Volume Control			
Main Feedwater			
Main Steam			
HVAC			
Auxiliary Feedwater			
Engineered Safety Feature			
Component Cooling Water	N	A,B	A,B,b
Saltwater Cooling Water			
Emergency Chilled Water			
Diesel Generator Systems			

COLD SHUTDOWN SYSTEMS	Equipment	Valves	Cable
Shutdown Cooling			
CCW (To SDC)			
HVAC			
Summary (Hot and Cold)	N	A,B	A,B,b

ESSENTIAL ELECTRIC SYSTEMS	Equipment	MCC and Switchgear	Cable
220 KV (AC)			
4160 V (AC)	A/B		A,B
480 V (AC)			
120 V (AC)			
125 V (DC)			
Electric Panels			A,B
Summary			A,B

ASSOCIATED CIRCUITS OF CONCERN

H/I Pressure Interface	NO
Spurious Operation	YES

FIRE AREA/ZONE 2-SE-(-5)-135A

7.3.1.1 Location

Safety Equipment Building - El. (-5'-3") - Piping Room/Heat Exchanger Room - 7285 square feet - Figs. 8-15, 8-16

7.3.1.2 Fire Loading

Fire loading category - Minimal
Maximum permissible fire loading - 13,000Btu/sq. ft. (Note 1)

Note 1:The maximum permissible fire loading is based on an evenly distributed loading of combustible materials.

7.3.1.3 Design Basis Fire

The design basis fire is postulated to be a fire that would involve mostly rubber, plastic, and cable insulation. The design basis fire is conservatively based on the simultaneous total combustion of all combustibles in the zone.

7.3.1.4 Fire Protection Equipment

The zone contains an automatic wet pipe sprinkler system at el. 8' 0". Manual fire fighting equipment is available at el. 8'-0" and el. (-5'-3").

7.3.1.5 Construction

The barriers are three hour rated reinforced concrete except for the barrier to 2-SE-8-141 which is heavy concrete, nonrated construction, with an approximate thickness of 20". The ceiling and floor to other fire areas/zones are 2 hour rated. The barriers between 2-SE-(-5)-135A and 2-PE-(-18)-2B is part of a double wall configuration. The penetrations are sealed on the 135A side of the double wall and are unsealed on the 2B side. The floor to grade is nonrated heavy concrete construction. At the (-5'-3") elevation, three watertight doors communicate with the pump rooms (2-SE-(-5)-135B, 2-SE-(-5)-135C, and 2-SE-(-5)-135D). At the 8'-0" elevation, three watertight doors separate the zone from the turbine building (2-TB-7-148A and 2-TB-8-148G), and one watertight door communicates with the adjacent A/C room (2-SE-(-15)-136). Watertight hatches in the floor at elevation 8'-0" communicate with the pump rooms below. The duct penetrations are provided with 3 hour rated fire dampers.

FIRE AREA/ZONE 2-SE-(-5)-135A

7.3.1.6 Licensee Controlled Specification Barriers

For definition of the barriers requiring surveillance per LCS 3.7.104, refer to the latest revisions of Figures 8-15 and 8-16, sheet 3.

Cable for the following systems is wrapped:
Component Cooling Water - Train B

7.3.1.7 Conclusions

Portable smoke removal fans may be used to remove smoke generated by the design basis fire.

The fire boundaries between 2-SE-(-5)-135A and 2-SE-(-5)-135B, 2-SE-(-5)-135D, 2-SE-(-15)-136, 2-SE-8-141, 2-TB-8-148G, 2-PE-(-18)-2B and 2-TB-7-148A were evaluated. The fire boundaries and associated fire protection features were found to be adequate to prevent the propagation of fire beyond the fire boundaries. The low fire loading and the substantial construction of the barriers and nonrated doors preclude the propagation of the design basis fire beyond the boundaries defining the zone.

7.3.1.8 Fire Area 2-SE-(-5)-135 Appendix R Compliance

Safe shutdown capability will be provided by utilizing Train A or B systems. Functionally redundant components protected from fire damage will be utilized in conjunction with operator action on manual or disabled components to achieve safe shutdown.

One train of systems necessary to achieve hot standby and cold shutdown has been evaluated to remain available for safe shutdown in accordance with 10CFR50, Appendix R, III.G.1 and III.G.2.b and c. A deviation from the requirements of 10CFR50 Appendix R, III.G.2 has been accepted for fire area 2-135 where redundant safe shutdown equipment is located, but area wide fire detection and suppression systems are not installed. The barriers between zones within this area have been upgraded to 3 hours (walls) or 2 hours (floor and ceilings). The fire detection and suppression systems in this area/zone were evaluated and shown to provide a level of protection equivalent to the requirements of the applicable sections of Appendix R.

7.3.2 FIRE AREA/ZONE: 2-SE-(-5)-135B

FIRE AREA/ZONE: **2-SE-(-5)-135B**

AREA: **700 sq. ft.** DESCRIPTION: **TRAIN B CCW PUMP ROOM**

DESIGN BASIS FIRE

Fire Loading Category:	**Minimal**
Fire Loading - Max Permiss:	**40,000.0 Btu's/sq.ft.**

FIRE PROTECTION (AVAILABLE)

Suppression (type)	**None**
Hose Stations	**none, (1) in 2-SE-(-5)135A**
Portable Extinguishers	**none, adjacent**
Detectors (type)	**Ionization**

FIRE RESISTANCE RATING

Walls	**3hr**
Floor, Ceiling, Roof	**2hr,HC/floor grade**
Penetrations	**C,P, QP/135C, QP/135A**
Fixed Openings	**MH/135A**
Doors	**W/2-SE-(-5)-135A**

HOT STANDBY SYSTEMS	Equipment	Valves	Cable
Reactor Coolant			
Reactor Protection System			
Shutdown Cooling			
Chemical and Volume Control			
Main Feedwater			
Main Steam			
HVAC			
Auxiliary Feedwater			
Engineered Safety Feature			
Component Cooling Water	**B**	**B**	**A,B**
Saltwater Cooling Water			
Emergency Chilled Water			
Diesel Generator Systems			

COLD SHUTDOWN SYSTEMS	Equipment	Valves	Cable
Shutdown Cooling			
CCW (To SDC)			
HVAC			
Summary (Hot and Cold)	**B**	**B**	**A,B**

ESSENTIAL ELECTRIC SYSTEMS	Equipment	MCC and Switchgear	Cable
220 KV (AC)			
4160 V (AC)			
480 V (AC)			
120 V (AC)			
125 V (DC)			
Electric Panels			**A,B**
Summary			**A,B**

ASSOCIATED CIRCUITS OF CONCERN

H/I Pressure Interface	**NO**
Spurious Operation	**YES**

FIRE AREA/ZONE 2-SE-(-5)-135B

7.3.2.1 Location

Safety Equipment Building - El. (-5'-3") - Train B CCW Pump Room - 700 square feet - Figure 8-15

7.3.2.2 Fire Loading

Fire loading category - Minimal
Maximum permissible fire loading - 40,000 Btu/sq. ft. (Note 1)

Note 1:The maximum permissible fire loading is based on an evenly distributed loading of combustible materials.

7.3.2.3 Design Basis Fire

The design basis fire is postulated to be a fire that would involve mostly oil.

The design basis fire is conservatively based on the simultaneous total combustion of all combustibles in the zone.

7.3.2.4 Fire Protection Equipment

There is no fire fighting equipment in the zone. Manual fire fighting equipment is available in adjacent zone 2-SE-(-5)-135A. An ionization smoke detector provides early warning alarm in the control room.

7.3.2.5 Construction

All walls of the zone are reinforced concrete with a 3 hour rating. The ceiling and floor to other fire areas/zones are 2 hour rated. The floor to grade is nonrated heavy concrete construction. A watertight door allows access to the zone from 2-SE-(-5)-135A. A watertight hatch in the ceiling communicates with the piping rooms above (2-SE-(-5)-135A). There are no ventilation duct penetrations.

7.3.2.6 Licensee Controlled Specification Barriers

For definition of the barriers requiring surveillance per LCS 3.7.104, refer to the latest revision of Figure 8-15, sheet 3.

7.3.2.7 Conclusions

The ionization detector is expected to detect the products of combustion from an incipient fire and alert the control room for prompt response by the fire department. The available portable equipment is adequate to extinguish the fire.

Portable smoke exhaust fans may be used to remove smoke generated by the design basis fire.

The fire boundaries between 2-SE-(-15)-135B and 2-SE-(-5)-135A and 2-SE-(-5)-135C were evaluated. The fire boundaries and associated fire protection features were found to be adequate to prevent the propagation of fire beyond the fire boundaries. The low fire loading and the substantial construction of the barriers and watertight door preclude the propagation of the design basis fire beyond the boundaries defining the zone.

A deviation from the requirements of 10CFR50 Appendix R, III.G.2 has been accepted for fire area 2-135 where redundant safe shutdown equipment is located, but area wide fire detection and suppression systems are not installed. The barriers between zones within this area have been upgraded to 3 hours (walls) or 2 hours (floors and ceilings). The fire detection and suppression systems in this area/zone were evaluated and shown to provide a level of protection equivalent to the requirements of Appendix R.

Appendix R compliance for fire area 2-SE-(-5)-135 is discussed in fire zone 2-SE-(-5)-135A.

7.3.3 FIRE AREA/ZONE: 2-SE-(-5)-135C

FIRE AREA/ZONE: 2-SE-(-5)-135C

AREA: 700 sq. ft. DESCRIPTION: SPARE CCW PUMP ROOM

DESIGN BASIS FIRE

Fire Loading Category:	Minimal
Fire Loading - Max Permiss:	40,000.0 Btu's/sq.ft.

FIRE PROTECTION (AVAILABLE)

Suppression (type)	None
Hose Stations	none, (1) in 2-SE-(-5)135A
Portable Extinguishers	none, adjacent
Detectors (type)	Ionization

FIRE RESISTANCE RATING

Walls	3hr
Floor, Ceiling, Roof	2hr, HC/floor grade
Penetrations	P, C, QP/135B, QP/135D, QP/137C
Fixed Openings	MH/135A
Doors	W/2-SE-(-5)-135A

HOT STANDBY SYSTEMS	Equipment	Valves	Cable
Reactor Coolant			
Reactor Protection System			
Shutdown Cooling			
Chemical and Volume Control			
Main Feedwater			
Main Steam			
HVAC			
Auxiliary Feedwater			
Engineered Safety Feature			
Component Cooling Water	A/B	A	A,B
Saltwater Cooling Water			
Emergency Chilled Water			
Diesel Generator Systems			

COLD SHUTDOWN SYSTEMS	Equipment	Valves	Cable
Shutdown Cooling			
CCW (To SDC)			
HVAC			
Summary (Hot and Cold)	A/B	A	A,B

ESSENTIAL ELECTRIC SYSTEMS	Equipment	MCC and Switchgear	Cable
220 KV (AC)			
4160 V (AC)			
480 V (AC)			
120 V (AC)			
125 V (DC)			
Electric Panels			A,B
Summary			A,B

ASSOCIATED CIRCUITS OF CONCERN

H/I Pressure Interface	NO
Spurious Operation	YES

FIRE AREA/ZONE 2-SE-(-5)-135C

7.3.3.1 Location

Safety Equipment Building - El. (-5'-3") - Spare CCW Pump Room - 700 square feet - Figure 8-15

7.3.3.2 Fire Loading

Fire loading category - Minimal
Maximum permissible fire loading - 40,000 Btu/sq. ft. (Note 1)

Note 1:The maximum permissible fire loading is based on an evenly distributed loading of combustible materials.

7.3.3.3 Design Basis Fire

The design basis fire is postulated to be a fire that would involve mostly oil.

The design basis fire is conservatively based on the simultaneous total combustion of all combustibles in the zone.

7.3.3.4 Fire Protection Equipment

There is no fire fighting equipment in the zone. Manual fire fighting equipment is available in adjacent zone 2-SE-(-5)-135A. An ionization smoke detector provides early warning alarm in the control room.

7.3.3.5 Construction

The walls defining the zone are 3 hour rated reinforced concrete with an approximate thickness of 20 inches. The ceiling and floor to other fire areas/zones are 2 hour rated. The floor to grade is nonrated heavy concrete construction. A watertight door allows access to the area from the piping room (2-SE-(-5)-135A). A watertight hatch in the ceiling communicates with the piping rooms above (2-SE-(-5)-135A).

7.3.3.6 Licensee Controlled Specification Barriers

For definition of the barriers requiring surveillance per LCS 3.7.104, refer to the latest revision of Figure 8-15, sheet 3.

7.3.3.7 Conclusions

The ionization detector is expected to detect the products of combustion from an incipient fire and alert the control room for prompt response by the fire department. The available portable equipment is adequate to extinguish the fire.

Portable exhaust fans may be used to remove smoke generated by the design basis fire.

The fire boundaries between 2-SE-(-5)-135C and 2-SE-(-5)-135B, 2-SE-(-5)-135D and 2-SE-(-15)-137C were evaluated. The fire boundaries and associated fire protection features were found to be adequate to prevent the propagation of fire beyond the fire boundaries. The low fire loading and the substantial construction of the barriers and watertight door preclude the propagation of the design basis fire beyond the boundaries of the zone.

A deviation from the requirements of 10CFR50 Appendix R, III.G.2 has been accepted for fire area 2-135 where redundant safe shutdown equipment is located, but area wide fire detection and suppression systems are not installed. The barriers between zones within this fire area have been upgraded to 3 hours (walls) or 2 hours (floor and ceilings). The fire detection and suppression systems in this area/zone were evaluated and shown to provide a level of protection equivalent to the requirements of the applicable sections of Appendix R.

Appendix R compliance for fire area 2-SE-(-5)-135 is discussed in fire zone 2-SE-(-5)-135A.

7.3.4 FIRE AREA/ZONE: 2-SE-(-5)-135D

FIRE AREA/ZONE: 2-SE-(-5)-135D

AREA: 600 sq. ft. DESCRIPTION: TRAIN A CCW PUMP ROOM

DESIGN BASIS FIRE

Fire Loading Category:	Minimal
Fire Loading - Max Permiss:	40,000.0 Btu's/sq.ft.

FIRE PROTECTION (AVAILABLE)

Suppression (type)	None
Hose Stations	none, (1) in 2-SE-(-5)135A
Portable Extinguishers	none, adjacent
Detectors (type)	Ionization

FIRE RESISTANCE RATING

Walls	3hr
Floor, Ceiling, Roof	2hr/ceiling, HC/floor
Penetrations	P, C, QP/135C
Fixed Openings	MH/135A
Doors	W/2-SE-(-5)-135A

HOT STANDBY SYSTEMS	Equipment	Valves	Cable
Reactor Coolant			
Reactor Protection System			
Shutdown Cooling			
Chemical and Volume Control			
Main Feedwater			
Main Steam			
HVAC			
Auxiliary Feedwater			
Engineered Safety Feature			
Component Cooling Water	A		A
Saltwater Cooling Water			
Emergency Chilled Water			
Diesel Generator Systems			

COLD SHUTDOWN SYSTEMS	Equipment	Valves	Cable
Shutdown Cooling			
CCW (To SDC)			
HVAC			
Summary (Hot and Cold)	A		A

ESSENTIAL ELECTRIC SYSTEMS	Equipment	MCC and Switchgear	Cable
220 KV (AC)			
4160 V (AC)			
480 V (AC)			
120 V (AC)			
125 V (DC)			
Electric Panels			A
Summary			A

ASSOCIATED CIRCUITS OF CONCERN

H/I Pressure Interface	NO
Spurious Operation	YES

FIRE AREA/ZONE 2-SE-(-5)-135D

7.3.4.1 Location

Safety Equipment Building - El. (-5'-3") - Train A CCW Pump Room - 600 square feet - Figure 8-15

7.3.4.2 Fire Loading

Fire loading category - Minimal
Maximum permissible fire loading - 40,000 Btu/sq. ft. (Note 1)

Note 1:The maximum permissible fire loading is based on an evenly distributed loading of combustible materials.

7.3.4.3 Design Basis Fire

The design basis fire is postulated to be a fire that would involve mostly oil.

The design basis fire is conservatively based on the simultaneous total combustion of all combustibles in the zone.

7.3.4.4 Fire Protection Equipment

There is no fire fighting equipment in the zone. Manual fire fighting equipment is available in adjacent zone 2-SE-(-5)-135A. An ionization smoke detector, located within the zone, provides early warning alarm in the control room.

7.3.4.5 Construction

All walls of the zone are reinforced concrete with a 3 hour rating. The ceiling is 2 hour rated. The floor to grade is nonrated heavy concrete construction. A watertight door allows access to the area from the piping room (2-SE-(-5)-135A). A watertight hatch in the ceiling communicates with the piping rooms above (2-SE-(-5)-135A).

7.3.4.6 Licensee Controlled Specification Barriers

For definition of the barriers requiring surveillance per LCS 3.7.104, refer to the latest revision of Figure 8-15, sheet 3.

7.3.4.7 Conclusions

The ionization detector is expected to detect the products of combustion from an incipient fire and alert the control room for prompt response by the fire department. The available portable equipment is adequate to extinguish the fire.

Portable smoke exhaust fans may be used to remove smoke generated by the design basis fire.

The fire boundaries between 2-SE-(-5)-135D and 2-SE-(-5)-135A and 2-SE-(-5)-135C were evaluated. The fire boundaries and associated fire protection features were found to be adequate to prevent the propagation of fire beyond the fire boundaries. The low fire loading and the substantial construction of the barriers and watertight door preclude the propagation of the design basis fire beyond the boundaries of the zone.

A deviation from the requirements of 10CFR50 Appendix R, III.G.2 has been accepted for fire area 2-135 where redundant safe shutdown equipment is located, but area wide fire detection and suppression systems are not installed. The barriers between zones within this fire area have been upgraded to 3 hours (walls) or 2 hours (floor and ceiling). The fire detection and suppression systems in this area/zone were evaluated and shown to provide a level of protection equivalent to the requirements of Appendix R.

Appendix R compliance for fire area 2-SE-(-5)-135 is discussed in fire zone 2-SE-(-5)-135A.

7.3.5 FIRE AREA/ZONE: 2-SE-(-15)-136

FIRE AREA/ZONE: 2-SE-(-15)-136

AREA: 1860 sq. ft. DESCRIPTION: STAIRCASE/A/C ROOM

DESIGN BASIS FIRE

Fire Loading Category:	Minima
Fire Loading - Max Permiss:	13,000.0 Btu's/sq.ft.

FIRE PROTECTION (AVAILABLE)

Suppression (type)	wet pipe sprinklers @ el. 8'-0
Hose Stations	(1) @ 8'-0
Portable Extinguishers	Yes
Detectors (type)	ionization @ 8'-0

FIRE RESISTANCE RATING

Walls	HC/2B,138,139,140A,140B, others 3hr
Floor, Ceiling, Roof	2hr, HC/floor grade
Penetrations	P,C,D,NC/140B, QC/139, NP/SEE TEXT, QP/SEE TEXT
Fixed Openings	OP/2B,CH/137A,137B
Doors	W/137A,137B,137C,138,139,W/140A,141,135A, (2)W/2-TB-7-148A

HOT STANDBY SYSTEMS	Equipment	Valves	Cable
Reactor Coolant			
Reactor Protection System			
Shutdown Cooling			
Chemical and Volume Control			
Main Feedwater			
Main Steam			
HVAC			
Auxiliary Feedwater			
Engineered Safety Feature			
Component Cooling Water		N	A,B
Saltwater Cooling Water			
Emergency Chilled Water			
Diesel Generator Systems			A,B

COLD SHUTDOWN SYSTEMS	Equipment	Valves	Cable
Shutdown Cooling		A,B	A,a,B
CCW (To SDC)		A,B	A,B
HVAC			a,B
Summary (Hot and Cold)		A,B,N	A,a,B

ESSENTIAL ELECTRIC SYSTEMS	Equipment	MCC and Switchgear	Cable
220 KV (AC)			
4160 V (AC)			
480 V (AC)			
120 V (AC)			
125 V (DC)			
Electric Panels			A,B,X
Summary			A,B,X

ASSOCIATED CIRCUITS OF CONCERN

H/I Pressure Interface	NO
Spurious Operation	YES

FIRE AREA/ZONE 2-SE-(-15)-136

7.3.5.1 Location

Safety Equipment Building - El. (-15'-0") - Staircase/A.C. Room - 1860 square feet - Figs. 8-15, 8-16

7.3.5.2 Fire Loading

Fire loading category - Minimal
Maximum permissible fire loading - 13,000 Btu/sq. ft. (Note 1)

Note 1:The maximum permissible fire loading is based on an evenly distributed loading of combustible materials.

7.3.5.3 Design Basis Fire

The design basis fire is postulated to be a fire that would involve mostly cable, plastic, rubber, and Class A combustibles.

The design basis fire is conservatively based on the simultaneous total combustion of all combustibles in the area.

7.3.5.4 Fire Protection Equipment

The area contains an automatic wet pipe sprinkler system at el. 8'-0". Manual fire fighting equipment is available in the area at the 8'-0" elevation. Ionization smoke detectors, located within the area, provide early warning alarm in the control room.

7.3.5.5 Construction

The area consists of two levels connected by an open stairwell. The walls of this area adjoining the rooms 2-SE-(-15)-138, 2-SE-(-15)-139, 2-SE-8-140B and 2-SE-8-140A are nonrated reinforced concrete construction with an approximate thickness of 20 inches. The barrier to 2-PE-(-18)-2B has an open blockout for pipes and is nonrated. The remainder of the area walls are 3 hour rated reinforced concrete. The ceiling and floor to other fire areas/zones are 2 hour rated. The floor to grade is nonrated heavy concrete construction. Concrete hatches in the floor of the area at elevation 8'-0" communicate with the pump rooms (2-SE-(-15)-137A and 2-SE-(-15)-137B) below. Watertight doors separate the area from the surge tank rooms (2-SE-8-141 and 2-SE-8-140A), the heat exchanger rooms (2-SE-(-15)-138 and 2-SE-(-15)-139), the piping room (2-SE-(-5)-135A) and the turbine building (2-TB-7-148A). Ventilation duct penetrations in 3 hour rated walls are provided with 3 hour rated dampers. Other ventilation duct penetrations are provided with 1-1/2 hour rated fire dampers. The seals in Licensee Controlled specification barriers which are not rated consistent with the barrier or whose construction does not support a rating or are unsealed are NP/138, 139, 140A, 140B, QP/135A, 137C, 139, 141 and 161B.

7.3.5.6 Licensee Controlled Specification Barriers

For definition of the barriers requiring surveillance per LCS 3.7.104, refer to the latest revisions of Figures 8-15 and 8-16, sheet 3.

Cable for the following systems is wrapped:

HVAC - Train A
SDC - Train A

7.3.5.7 Conclusions

The ionization detectors are expected to detect the products of combustion from an incipient fire for prompt response by the fire department. Portable equipment, available in the area, is adequate to extinguish the fire. In the event the fire achieves sufficient intensity, the wet pipe sprinkler system will actuate automatically to control and extinguish the fire.

The normal ventilation system will effectively remove the smoke generated by the design basis fire until the fire dampers operate. Portable smoke exhaust fans may then be used to vent smoke from the area.

The fire boundaries between fire area 2-SE-(-15)-136 and 2-SE-(-5)-135A, 2-SE-(-15)-137C, 2-SE-(-15)-139, 2-SE-8-140A, 2-SE-8-140B, 2-SE-8-141, 2-TB-7-148A and 2-TK-(-2)-161B were evaluated. The fire boundaries and associated fire protection features were found to be adequate to prevent the propagation of fire beyond the fire boundaries. The low fire loading and the substantial construction of the barriers and nonrated doors preclude the propagation of the design basis fire beyond the boundaries defining the area.

7.3.5.8 Fire Area 2-SE-(-15)-136 Appendix R Compliance

Safe shutdown capability will be provided by utilizing Train A systems. Functionally redundant components protected from fire damage will be utilized in conjunction with operator action on manual or disabled components to achieve safe shutdown.

One train of systems necessary to achieve hot standby and cold shutdown has been evaluated to remain available for safe shutdown in accordance with 10CFR50, Appendix R, III.G.1 and III.G.2.c. The fire detection and suppression systems in this area/zone were evaluated and shown to provide a level of protection equivalent to the requirements of Appendix R.

7.3.6 FIRE AREA/ZONE: 2-SE-(-15)-137A

FIRE AREA/ZONE: 2-SE-(-15)-137A

AREA: 1210 sq. ft. DESCRIPTION: SAFETY RELATED PUMP ROOM

DESIGN BASIS FIRE

Fire Loading Category:	Minimal
Fire Loading - Max Permiss:	40,000.0 Btu's/sq.ft.

FIRE PROTECTION (AVAILABLE)

Suppression (type)	None
Hose Stations	none, (1) 2-SE-(-15)-136
Portable Extinguishers	none, adjacent
Detectors (type)	Ionization

FIRE RESISTANCE RATING

Walls	HC/137B, others 3hr
Floor, Ceiling, Roof	2hr/ceiling, HC/floor
Penetrations	P,C, QP/137C
Fixed Openings	CH/136
Doors	W/2-SE-(-15)-136

HOT STANDBY SYSTEMS	Equipment	Valves	Cable
Reactor Coolant			
Reactor Protection System			
Shutdown Cooling			
Chemical and Volume Control			
Main Feedwater			
Main Steam			
HVAC			
Auxiliary Feedwater			
Engineered Safety Feature			
Component Cooling Water			
Saltwater Cooling Water			
Emergency Chilled Water			
Diesel Generator Systems			

COLD SHUTDOWN SYSTEMS	Equipment	Valves	Cable
Shutdown Cooling	B	A,B,N	AB
CCW (To SDC)			
HVAC	B		B
Summary (Hot and Cold)	B	A,B,N	A,B

ESSENTIAL ELECTRIC SYSTEMS	Equipment	MCC and Switchgear	Cable
220 KV (AC)			
4160 V (AC)			
480 V (AC)			
120 V (AC)			
125 V (DC)			
Electric Panels			A,B
Summary			A,B

ASSOCIATED CIRCUITS OF CONCERN

H/I Pressure Interface	NO
Spurious Operation	YES

FIRE AREA/ZONE 2-SE-(-15)-137A

7.3.6.1 Location

Safety Equipment Building - El. (-15'-0") - Safety Related Pump Room - 1210 square feet - Figure 8-15

7.3.6.2 Fire Loading

Fire loading category - Minimal
Maximum permissible fire loading - 40,000 Btu/sq. ft. (Note 1)

Note 1:The maximum permissible fire loading is based on an evenly distributed loading of combustible materials.

7.3.6.3 Design Basis Fire

The design basis fire is postulated to be a fire that would involve mostly cable and oil.

The design basis fire is conservatively based on the simultaneous total combustion of all combustibles in the zone.

7.3.6.4 Fire Protection Equipment

There is no fire fighting equipment in the zone. Manual fire fighting equipment is available in adjacent area 2-SE-(-15)-136. An ionization detector, located within the zone, provides early warning alarm in the control room.

7.3.6.5 Construction

The walls of the zone are reinforced concrete with a 3 hour rating except the wall adjoining zone 2-SE-(-15)-137B, which is nonrated reinforced concrete construction with an approximate thickness of 20 inches. The ceiling is 2 hour rated. The floor to grade is nonrated heavy concrete construction. A nonrated watertight door allows access to the zone from the stairwell (2-SE-(-15)-136).

7.3.6.6 Licensee Controlled Specification Barriers

For definition of the barriers requiring surveillance per LCS 3.7.104, refer to the latest revision of Figure 8-15, sheet 3.

(Note: 2-SE-(-15)-137A and 2-SE-(-15)-137B are analyzed as a single area. 2-SE-(-15)-137C is suitably separated from these zones and is analyzed independently.)

7.3.6.7 Conclusions

The ionization detection system is expected to detect the products of combustion from an incipient fire and alert the control room for prompt response by the fire department. The available portable equipment is adequate to extinguish the fire.

Portable smoke exhaust fans may be used to remove smoke generated by the design basis fire.

The fire boundary between 2-SE-(-15)-137A and 2-SE-(-15)-137C was evaluated. The fire boundaries and associated fire protection features were found to be adequate to prevent the propagation of fire beyond the fire boundaries. The low fire loading and the substantial construction of the barriers and nonrated door preclude the propagation of the design basis fire beyond the boundaries defining the zone.

7.3.6.8 Fire Area 2-SE-(-15)-137A/B Appendix R Compliance

Safe shutdown capability will be provided by utilizing Train A systems. Functionally redundant components protected from fire damage will be utilized in conjunction with operator action on manual or disabled components to achieve safe shutdown.

One train of systems necessary to achieve hot standby and cold shutdown has been evaluated to remain available for safe shutdown in accordance with 10CFR50, Appendix R, III.G.1 and III.G.2.a. A deviation from the requirements of 10CFR50 Appendix R, III.G.2.a has been accepted for concrete walls not having a 3 hour rating between the Train A Safety Related Pump Room 2-SE-(-15)-137C and the Safety Related Pump Rooms 2-SE-(-15)-137A and 2-SE-(-15)-137B, and between the Safety Related Pump Room 2-SE-(-15)-137A, -137B and -137C and fire area 2-SE-(-15)-136. The barriers between pump room 137C and 137A, and 137C and 136 have been upgraded to 3 hours.

7.3.7 FIRE AREA/ZONE: 2-SE-(-15)-137B

FIRE AREA/ZONE: 2-SE-(-15)-137B

AREA: 336 sq. ft. DESCRIPTION: SAFETY RELATED PUMP ROOM

DESIGN BASIS FIRE

Fire Loading Category:	Minimal
Fire Loading - Max Permiss:	40,000.0 Btu's/sq.ft.

FIRE PROTECTION (AVAILABLE)

Suppression (type)	None
Hose Stations	none, (1) 2-SE-(-15)-136
Portable Extinguishers	none, adjacent
Detectors (type)	Ionization

FIRE RESISTANCE RATING

Walls	HC/137A, others 3hr
Floor, Ceiling, Roof	2hr/ceiling, HC/floor
Penetrations	P, Cameron
Fixed Openings	CH/136
Doors	W/2-SE-(-15)-136

HOT STANDBY SYSTEMS	Equipment	Valves	Cable
Reactor Coolant			
Reactor Protection System			
Shutdown Cooling			
Chemical and Volume Control			
Main Feedwater			
Main Steam			
HVAC			
Auxiliary Feedwater			
Engineered Safety Feature			
Component Cooling Water			
Saltwater Cooling Water			
Emergency Chilled Water			
Diesel Generator Systems			

COLD SHUTDOWN SYSTEMS	Equipment	Valves	Cable
Shutdown Cooling			
CCW (To SDC)			
HVAC			
Summary (Hot and Cold)			

ESSENTIAL ELECTRIC SYSTEMS	Equipment	MCC and Switchgear	Cable
220 KV (AC)			
4160 V (AC)			
480 V (AC)			
120 V (AC)			
125 V (DC)			
Electric Panels			B
Summary			B

ASSOCIATED CIRCUITS OF CONCERN

H/I Pressure Interface	NO
Spurious Operation	YES

FIRE AREA/ZONE 2-SE-(-15)-137B

7.3.7.1 Location

Safety Equipment Building - El. (-15'-0") - Safety Related Pump Room - 336 square feet - Figure 8-15

7.3.7.2 Fire Loading

Fire loading category - Minimal
Maximum permissible fire loading - 40,000 Btu/sq. ft. (Note 1)

Note 1:The maximum permissible fire loading is based on an evenly distributed loading of combustible materials.

7.3.7.3 Design Basis Fire

The design basis fire is postulated to be a fire that would involve mostly oil.

The design basis fire is conservatively based on the simultaneous total combustion of all combustibles in the zone.

7.3.7.4 Fire Protection Equipment

There is no fire fighting equipment in the zone. Manual fire fighting equipment is available in adjacent area 2-SE-(-15)-136. An ionization smoke detector, located within the zone, provides early warning alarm in the control room.

7.3.7.5 Construction

The walls of the zone are reinforced concrete with a 3 hour rating. The north wall adjoining 2-SE-(-15)-137A is nonrated reinforced concrete construction with an approximate thickness of 20 inches. The ceiling is 2 hour rated. The floor to grade is nonrated heavy concrete construction. A nonrated watertight door allows access to the zone from the stairwell (2-SE-(-15)-136).

7.3.7.6 Licensee Controlled Specification Barriers

For definition of the barriers requiring surveillance per LCS 3.7.104, refer to the latest revision of Figure 8-15, sheet 3.

FIRE AREA/ZONE 2-SE-(-15)-137B

7.3.7.7 Conclusions

The ionization detection system is expected to detect the products of combustion from an incipient fire and alert the control room for prompt response by the fire department. The available portable equipment is adequate to extinguish the fire.

The low fire loading and the substantial construction of the heavy concrete walls and nonrated door preclude the propagation of the design basis fire beyond the boundaries defining the zone.

A deviation from the requirements of 10CFR50 Appendix R, III.G.2.a has been accepted for concrete walls not having a 3 hour rating between the Train A Safety Related Pump Rooms 2-SE-(-15)-137A and 2-SE-(-15)-137B and between the Safety Related Pump Room 2-SE-(-15)-137A, -137B and -137C and fire area 2-SE-(-15)-136. The barriers between pump room 137C and 137A, and 137C and 136 have been upgraded to 3 hours.

Appendix R compliance for fire area 2-SE-(-15)-137A/B is discussed in fire zone 2-SE-(-15)-137A.

7.3.8 FIRE AREA/ZONE: 2-SE-(-15)-137C

FIRE AREA/ZONE: 2-SE-(-15)-137C

AREA: 920 sq. ft. DESCRIPTION: SAFETY RELATED PUMP ROOM

DESIGN BASIS FIRE

Fire Loading Category:	Minimal
Fire Loading - Max Permiss:	40,000.0 Btu's/sq.ft.

FIRE PROTECTION (AVAILABLE)

Suppression (type)	none
Hose Stations	none, (1) in 2-SE-(15)-136
Portable Extinguishers	none, adjacent
Detectors (type)	ionization

FIRE RESISTANCE RATING

Walls	HC/2B, others 3hr
Floor, Ceiling, Roof	2hr/ceiling, HC/floor
Penetrations	C, P, QP/135C, QP/136, QP/137A
Fixed Openings	CH/140A, OP/2B
Doors	W/2-SE-(-15)-136

HOT STANDBY SYSTEMS	Equipment	Valves	Cable
Reactor Coolant			
Reactor Protection System			
Shutdown Cooling			
Chemical and Volume Control			
Main Feedwater			
Main Steam			
HVAC			
Auxiliary Feedwater			
Engineered Safety Feature			
Component Cooling Water			
Saltwater Cooling Water			
Emergency Chilled Water			
Diesel Generator Systems			

COLD SHUTDOWN SYSTEMS	Equipment	Valves	Cable
Shutdown Cooling	A,N	B,N	A,B
CCW (To SDC)			
HVAC	A		A
Summary (Hot and Cold)	A,N	B,N	A,B

ESSENTIAL ELECTRIC SYSTEMS	Equipment	MCC and Switchgear	Cable
220 KV (AC)			
4160 V (AC)			
480 V (AC)			
120 V (AC)			
125 V (DC)			
Electric Panels			A,B
Summary			A,B

ASSOCIATED CIRCUITS OF CONCERN

H/I Pressure Interface	NO
Spurious Operation	NO

FIRE AREA/ZONE 2-SE-(-15)-137C

7.3.8.1 Location

Safety Equipment Building - El. (-15'-0") - Safety Related Pump Room - 920 square feet - Figure 8-15

7.3.8.2 Fire Loading

Fire loading category - Minimal
Maximum permissible fire loading - 40,000 Btu/sq. ft. (Note 1)

Note 1:The maximum permissible fire loading is based on an evenly distributed loading of combustible materials.

7.3.8.3 Design Basis Fire

The design basis fire is postulated to be a fire that would involve mostly oil.

The design basis fire is conservatively based on the simultaneous total combustion of all combustibles in the zone.

7.3.8.4 Fire Protection Equipment

There is no fire fighting equipment in the zone. Manual fire fighting equipment is available in adjacent area 2-SE-(-15)-136. One ionization smoke detector, located within the zone, provides early warning alarm in the control room.

7.3.8.5 Construction

The walls of the zone are reinforced concrete with a 3 hour rating. The wall adjoining zone 2-PE-(-18)-2B is nonrated reinforced concrete construction with an open blockout for pipes. The ceiling is 2 hour rated. The floor to grade is nonrated heavy concrete construction. A nonrated watertight door allows access to the zone from the stairwell (2-SE-(-15)-136).

7.3.8.6 Licensee Controlled Specification Barriers

For definition of the barriers requiring surveillance per LCS 3.7.104, refer to the latest revision of Figure 8-15, sheet 3.

(Note: 2-SE-(-15)-137A and 2-SE-(-15)-137B are analyzed as a single area. 2-SE-(-15)-137C is suitably separated from these zones and is analyzed independently.)

FIRE AREA/ZONE 2-SE-(-15)-137C

7.3.8.7 Conclusions

The ionization detection system is expected to detect the products of combustion from an incipient fire and alert the control room for prompt response by the fire department. The available portable equipment is adequate to extinguish the fire.

Portable smoke exhaust fans may be used to remove smoke generated by the design basis fire.

The low fire loading and the substantial construction of the barriers and nonrated door preclude the propagation of the design basis fire beyond the boundaries defining the zone.

The fire boundaries between 2-SE-(-15)-137C and 2-SE-(-15)-135C, 2-SE-(-15)-136, 2-SE-(-15)-137A and 2-SE-8-140A were evaluated. The fire boundaries and associated fire protection features were found to be adequate to prevent the propagation of fire beyond the fire boundaries.

7.3.8.8 Fire Area/Zone 2-SE-(-15)-137C Appendix R Compliance

Safe shutdown capability will be provided by utilizing Train B systems. Functionally redundant components protected from fire damage will be utilized in conjunction with operator action on manual or disabled components to achieve safe shutdown.

One train of systems necessary to achieve hot standby and cold shutdown has been evaluated to remain available for safe shutdown in accordance with 10CFR50, Appendix R, III.G.1 and III.G.2.a. A deviation from the requirements of 10CFR50 Appendix R, III.G.2.a has been accepted for concrete walls not having a 3-hour rating between the Train A Safety Related Pump Room (2-SE-(-15)-137C) and the Train B Safety Related Pump Room (2-SE-(-15)-137A), between the Piping Tunnel (2-PE-(-18)-2B) and Train A Safety Related Pump Room (2-SE-(-15)-137C) and between the Train A Safety Related Pump Room (2-SE-(-15)-137C) and fire area 2-SE-(-15)-136. The barriers between pump room 137C and 137A, and 137C and 136 have been upgraded to 3 hours.

7.3.9 FIRE AREA/ZONE: 2-SE-(-15)-138

FIRE AREA/ZONE: 2-SE-(-15)-138

AREA: 360 sq. ft. DESCRIPTION: HEAT EXCH. ROOM

DESIGN BASIS FIRE

Fire Loading Category:	Minimal
Fire Loading - Max Permiss:	13,000.0 Btu's/sq.ft.

FIRE PROTECTION (AVAILABLE)

Suppression (type)	none
Hose Stations	none, (1) 2-SE-(-15)-136 @ 8'
Portable Extinguishers	none, adjacent
Detectors (type)	none

FIRE RESISTANCE RATING

Walls	HC/136, others 3hr
Floor, Ceiling, Roof	2hr/ceiling, HC/floor
Penetrations	P, NP/136, QP/161B, QP/139
Fixed Openings	CH/145A
Doors	W/2-SE-(-15)-136 (at el. 8'-0")

HOT STANDBY SYSTEMS	Equipment	Valves	Cable
Reactor Coolant			
Reactor Protection System			
Shutdown Cooling			
Chemical and Volume Control			
Main Feedwater			
Main Steam			
HVAC			
Auxiliary Feedwater			
Engineered Safety Feature			
Component Cooling Water			
Saltwater Cooling Water			
Emergency Chilled Water			
Diesel Generator Systems			

COLD SHUTDOWN SYSTEMS	Equipment	Valves	Cable
Shutdown Cooling	B,N	B	A,B
CCW (To SDC)			
HVAC			
Summary (Hot and Cold)	B,N	B	A,B

ESSENTIAL ELECTRIC SYSTEMS	Equipment	MCC and Switchgear	Cable
220 KV (AC)			
4160 V (AC)			
480 V (AC)			
120 V (AC)			
125 V (DC)			
Electric Panels			A,B,X
Summary			A,B,X

ASSOCIATED CIRCUITS OF CONCERN

H/I Pressure Interface	NO
Spurious Operation	NO

FIRE AREA/ZONE 2-SE-(-15)-138

7.3.9.1 Location

Safety Equipment Building - El. (-15'-0") - Heat Exchanger Room - 360 square feet - Figs. 8-15, 8-16

7.3.9.2 Fire Loading

Fire loading category - Minimal
Maximum permissible fire loading - 13,000 Btu/sq. ft. (Note 1)

Note 1:The maximum permissible fire loading is based on an evenly distributed loading of combustible materials.

7.3.9.3 Design Basis Fire

A fire is not expected to occur in this area during normal operation. The maximum credible fire is postulated to involve transient combustible materials.

7.3.9.4 Fire Protection Equipment

There is no fire fighting equipment in the area. Manual fire fighting equipment is available in adjacent area 2-SE-(-15)-136. No fire detection equipment is provided within the area.

7.3.9.5 Construction

The barriers are 3 hour rated reinforced concrete except for the barrier to 2-SE-(-15)-136, which is nonrated reinforced concrete with an approximate thickness of 18 inches. The north wall is part of a double wall configuration which was evaluated. The ceiling is 2 hour rated concrete construction. The floor to grade is nonrated heavy concrete construction. Watertight doors communicate with the A/C room (2-SE-(-15)-136).

7.3.9.6 Licensee Controlled Specification Barriers

For definition of the barriers requiring surveillance per LCS 3.7.104, refer to the latest revisions of Figures 8-15 and 8-16, sheet 3.

FIRE AREA/ZONE 2-SE-(-15)-138

7.3.9.7 Conclusions

Portable smoke exhaust fans may be used to remove smoke generated by the design basis fire. The fire boundaries between fire area 2-SE-(-15)-138 and 2-SE-(-15)-139, 2-SE-30-145A and 2-TK-(-2)-161B were evaluated. The fire boundaries and associated fire protection features were found to be adequate to prevent the propagation of fire beyond the fire boundaries. The low fire loading and the substantial construction of the barriers and nonrated doors preclude the propagation of the design basis fire beyond the boundaries defining the area.

7.3.9.8 Fire Area 2-SE-(-15)-138 Appendix R Compliance

Safe shutdown capability will be provided by utilizing Train A systems. Functionally redundant components protected from fire damage will be utilized in conjunction with operator action on manual or disabled components to achieve safe shutdown.

One train of systems necessary to achieve hot standby and cold shutdown conditions independent of the subject fire area will be free of fire damage. Therefore, this fire area complies with the criteria of 10CFR50, Appendix R, III.G.1.

7.3.10 FIRE AREA/ZONE: 2-SE-(-15)-139

FIRE AREA/ZONE: 2-SE-(-15)-139

AREA: 360 sq. ft. DESCRIPTION: HEAT EXCH. ROOM

DESIGN BASIS FIRE

Fire Loading Category:	Minimal
Fire Loading - Max Permiss:	13,000.0 Btu's/sq.ft.

FIRE PROTECTION (AVAILABLE)

Suppression (type)	None
Hose Stations	none, (1) 2-SE-(-15)-136 @ 8'
Portable Extinguishers	none, adjacent
Detectors (type)	None

FIRE RESISTANCE RATING

Walls	HC/136, others 3hr
Floor, Ceiling, Roof	2hr/ceiling, HC/floor
Penetrations	P, C, QP/136, QP/138, QC/136, NP/136
Fixed Openings	CH/145A
Doors	W/2-SE-(-15)-136 (at el. 8'-0")

HOT STANDBY SYSTEMS	Equipment	Valves	Cable
Reactor Coolant			
Reactor Protection System			
Shutdown Cooling			
Chemical and Volume Control			
Main Feedwater			
Main Steam			
HVAC			
Auxiliary Feedwater			
Engineered Safety Feature			
Component Cooling Water			
Saltwater Cooling Water			
Emergency Chilled Water			
Diesel Generator Systems			

COLD SHUTDOWN SYSTEMS	Equipment	Valves	Cable
Shutdown Cooling	A,N	A,B	A,B
CCW (To SDC)			
HVAC			
Summary (Hot and Cold)	A,N	A,B	A,B

ESSENTIAL ELECTRIC SYSTEMS	Equipment	MCC and Switchgear	Cable
220 KV (AC)			
4160 V (AC)			
480 V (AC)			
120 V (AC)			
125 V (DC)			
Electric Panels			A,B,X
Summary			A,B,X

ASSOCIATED CIRCUITS OF CONCERN

H/I Pressure Interface	NO
Spurious Operation	NO

FIRE AREA/ZONE 2-SE-(-15)-139

7.3.10.1 Location

Safety Equipment Building - El. (-15'-0") - Heat Exchanger Room - 360 square feet - Figs. 8-15, 8-16

7.3.10.2 Fire Loading

Fire loading category - Minimal
Maximum permissible fire loading - 13,000 Btu/sq. ft. (Note 1)

Note 1:The maximum permissible fire loading is based on an evenly distributed loading of combustible materials.

7.3.10.3 Design Basis Fire

A fire is not expected to occur in this area during normal operation. The maximum credible fire is postulated to involve transient combustible materials.

7.3.10.4 Fire Protection Equipment

There is no fire fighting equipment in the area. Manual fire fighting equipment is available in adjacent area 2-SE-(-15)-136. No fire detection equipment is provided within the area.
Construction

The barriers are 3 hour rated reinforced concrete except for the barrier to 2-SE-(-15)-136 which is nonrated reinforced concrete with an approximate thickness of 18 inches. The ceiling is 2 hour rated. The floor to grade is nonrated heavy concrete construction. A watertight door allows access to the zone from the A/C room (2-SE-(-15)-136).

7.3.10.5 Licensee Controlled Specification Barriers

For definition of the barriers requiring surveillance per LCS 3.7.104, refer to the latest revisions of Figures 8-15 and 8-16, sheet 3.

7.3.10.6 Conclusions

Portable smoke exhaust fans may be used to remove smoke generated by the design basis fire.

The fire boundaries between fire area 2-SE-(-15)-139 and 2-SE-(-15)-136, 2-SE-(-15)-138 and 2-SE-30-145A were evaluated. The fire boundaries and associated fire protection features were found to be adequate to prevent the propagation of fire beyond the fire boundaries. The low fire loading and the substantial construction of the barriers and nonrated door preclude the propagation of the design basis fire beyond the boundaries defining the area.

7.3.10.7 Fire Area 2-SE-(-15)-139 Appendix R Compliance

Safe shutdown capability will be provided by utilizing Train B systems. Functionally redundant components protected from fire damage will be utilized in conjunction with operator action on manual or disabled components to achieve safe shutdown.

One train of systems necessary to achieve hot standby and cold shutdown conditions independent of the subject fire area will be free of fire damage. Therefore, this fire area complies with the criteria of 10CFR50, Appendix R, III.G.1.

7.3.11 FIRE AREA/ZONE: 2-SE-8-140A

FIRE AREA/ZONE: 2-SE-8-140A

AREA: 400 sq. ft. DESCRIPTION: SURGE TK. RM.

DESIGN BASIS FIRE

Fire Loading Category:	Minimal
Fire Loading - Max Permiss:	13,000.0 Btu's/sq.ft.

FIRE PROTECTION (AVAILABLE)

Suppression (type)	none
Hose Stations	none, (1) in 2-SE-(-15)-136
Portable Extinguishers	none, adjacent
Detectors (type)	none

FIRE RESISTANCE RATING

Walls	east, south 3hr, others HC
Floor, Ceiling, Roof	2hr
Penetrations	P, NP/136
Fixed Openings	OP/140B, CH/137C
Doors	W/2-SE-(-15)-136

HOT STANDBY SYSTEMS	Equipment	Valves	Cable
Reactor Coolant			
Reactor Protection System			
Shutdown Cooling			
Chemical and Volume Control			
Main Feedwater			
Main Steam			
HVAC			
Auxiliary Feedwater			
Engineered Safety Feature			
Component Cooling Water	B	B	A,B
Saltwater Cooling Water			
Emergency Chilled Water			
Diesel Generator Systems			

COLD SHUTDOWN SYSTEMS	Equipment	Valves	Cable
Shutdown Cooling			A
CCW (To SDC)			
HVAC			
Summary (Hot and Cold)	B	B	A,B

ESSENTIAL ELECTRIC SYSTEMS	Equipment	MCC and Switchgear	Cable
220 KV (AC)			
4160 V (AC)			
480 V (AC)			
120 V (AC)			
125 V (DC)			
Electric Panels			A,B,X
Summary			A,B,X

ASSOCIATED CIRCUITS OF CONCERN

H/I Pressure Interface	NO
Spurious Operation	YES

FIRE AREA/ZONE 2-SE-8-140A

7.3.11.1 Location

Safety Equipment Building - El. 8'-0" - Surge Tank Room - 400 square feet - Figure 8-16

7.3.11.2 Fire Loading

Fire loading category - Minimal
Maximum permissible fire loading - 13,000 Btu/sq. ft. (Note 1)

Note 1:The maximum permissible fire loading is based on an evenly distributed loading of combustible materials.

7.3.11.3 Design Basis Fire

A fire is not expected to occur in this area during normal operation. The maximum credible fire is postulated to involve transient combustible materials.

7.3.11.4 Fire Protection Equipment

There is no fire fighting equipment in the zone. Manual fire fighting equipment is available in adjacent area 2-SE-(-15)-136. No fire detection equipment is provided within the zone.

7.3.11.5 Construction

The east and south walls are reinforced concrete with a 3 hour rating. The west and north walls are nonrated reinforced concrete construction with an approximate thickness of 12 inches. The north wall, adjoining the chemical storage tank room (2-SE-8-140B), is 3'6" high. The ceiling and floor are 2 hour rated. One nonrated watertight door allows access to the zone from the A/C room (2-SE-(-15)-136). There are no ventilation duct penetrations.

7.3.11.6 Licensee Controlled Specification Barriers

For definition of the barriers requiring surveillance per LCS 3.7.104, refer to the latest revisions of Figure 8-16, sheet 3.

7.3.11.7 Conclusions

Portable smoke exhaust fans may be used to remove smoke generated by the design basis fire.

The fire boundaries between fire area 2-SE-8-140A and 2-SE-(-15)-136 and 2-SE-(-15)-137C were evaluated. The fire boundaries and associated fire protection features were found to be adequate to prevent the propagation of fire beyond the fire boundaries. The low fire loading and the substantial construction of the heavy concrete walls and nonrated door preclude the propagation of the design basis fire beyond the boundaries defining the area.

7.3.11.8 Fire Area 2-SE-8-140 Appendix R Compliance

Safe shutdown capability will be provided by utilizing Train B systems. Functionally redundant components protected from fire damage will be utilized in conjunction with operator action on manual or disabled components to achieve safe shutdown.

One train of systems necessary to achieve hot standby and cold shutdown conditions independent of the subject fire area will be free of fire damage. Therefore, this fire area complies with the criteria of 10CFR50, Appendix R, III.G.1.

7.3.12 FIRE AREA/ZONE: 2-SE-8-140B

FIRE AREA/ZONE: 2-SE-8-140B

AREA: 320 sq. ft. DESCRIPTION: CHEM. STORAGE RM.

DESIGN BASIS FIRE

Fire Loading Category:	Minimal
Fire Loading - Max Permiss:	13,000.0 Btu's/sq.ft.

FIRE PROTECTION (AVAILABLE)

Suppression (type)	None
Hose Stations	none, (1) in 2-SE-(-15)-136
Portable Extinguishers	none, adjacent
Detectors (type)	Ionization

FIRE RESISTANCE RATING

Walls	north and east 3hr, others HC
Floor, Ceiling, Roof	2hr
Penetrations	P, NP/136, NC/136
Fixed Openings	OP/140A
Doors	None

HOT STANDBY SYSTEMS	Equipment	Valves	Cable
Reactor Coolant			
Reactor Protection System			
Shutdown Cooling			
Chemical and Volume Control			
Main Feedwater			
Main Steam			
HVAC			
Auxiliary Feedwater			
Engineered Safety Feature			
Component Cooling Water			
Saltwater Cooling Water			
Emergency Chilled Water			
Diesel Generator Systems			

COLD SHUTDOWN SYSTEMS	Equipment	Valves	Cable
Shutdown Cooling			
CCW (To SDC)			
HVAC			A
Summary (Hot and Cold)			A

ESSENTIAL ELECTRIC SYSTEMS	Equipment	MCC and Switchgear	Cable
220 KV (AC)			
4160 V (AC)			
480 V (AC)			
120 V (AC)			
125 V (DC)			
Electric Panels			A,B
Summary			A,B

ASSOCIATED CIRCUITS OF CONCERN

H/I Pressure Interface	NO
Spurious Operation	NO

FIRE AREA/ZONE 2-SE-8-140B

7.3.12.1 Location

Safety Equipment Building - El. 8'-0" - Chemical Storage Room - 320 square feet - Figure 8-16

7.3.12.2 Fire Loading

Fire loading category - Minimal
Maximum permissible fire loading - 13,000 Btu/sq. ft. (Note 1)

Note 1:The maximum permissible fire loading is based on an evenly distributed loading of combustible materials.

7.3.12.3 Design Basis Fire

A fire is not expected to occur in this area during normal operation. The maximum credible fire is postulated to involve transient combustible materials.

7.3.12.4 Fire Protection Equipment

There is no fire fighting equipment in the zone. Manual fire fighting equipment is available in adjacent area 2-SE-(-15)-136. An ionization smoke detector, located within the zone, provides early warning alarm in the control room.

7.3.12.5 Construction

The north and east walls are reinforced concrete with a 3 hour rating. The west wall is nonrated reinforced concrete construction with an approximate thickness of 12 inches. The south wall, adjoining the surge tank room (2-SE-8-140A), is 3'-6" high. The ceiling and floor are 2 hour rated.

7.3.12.6 Licensee Controlled Specification Barriers

For definition of the barriers requiring surveillance per LCS 3.7.104, refer to the latest revision of Figure 8-16, sheet 3.

7.3.12.7 Conclusions

The ionization detector is expected to detect the products of combustion from an incipient fire and alert the control room for prompt response by the fire department. The available portable equipment is adequate to extinguish the fire.

Portable smoke exhaust fans may be used to remove smoke generated by the design basis fire.

The fire boundaries between 2-SE-8-140B and 2-SE-(-15)-136 were evaluated. The fire boundaries and associated fire protection features were found to be adequate to prevent the propagation of fire beyond the fire boundaries. The low fire loading the substantial construction of the heavy concrete walls and nonrated door preclude the propogation of the design basis fire beyond the boundaries defining the area.

Appendix R compliance for fire area 2-SE-8-140 is discussed in fire zone 2-SE-8-140A.

7.3.13 FIRE AREA/ZONE: 2-SE-8-141

FIRE AREA/ZONE: 2-SE-8-141

AREA: 300 sq. ft. DESCRIPTION: SURGE TK. RM.

DESIGN BASIS FIRE

Fire Loading Category:	Minimal
Fire Loading - Max Permiss:	13,000.0 Btu's/sq.ft.

FIRE PROTECTION (AVAILABLE)

Suppression (type)	None
Hose Stations	none, (1) in 2-SE-(-15)-136
Portable Extinguishers	none, adjacent
Detectors (type)	None

FIRE RESISTANCE RATING

Walls	HC/135A, others 3hr
Floor, Ceiling, Roof	2hr
Penetrations	P, C, NP/135A, QP/136
Fixed Openings	None
Doors	W/2-SE-(-15)-136

HOT STANDBY SYSTEMS	Equipment	Valves	Cable
Reactor Coolant			
Reactor Protection System			
Shutdown Cooling			
Chemical and Volume Control			
Main Feedwater			
Main Steam			
HVAC			
Auxiliary Feedwater			
Engineered Safety Feature			
Component Cooling Water	A	A	A,B
Saltwater Cooling Water			
Emergency Chilled Water			
Diesel Generator Systems			

COLD SHUTDOWN SYSTEMS	Equipment	Valves	Cable
Shutdown Cooling			A
CCW (To SDC)			
HVAC			
Summary (Hot and Cold)	A	A	A,B

ESSENTIAL ELECTRIC SYSTEMS	Equipment	MCC and Switchgear	Cable
220 KV (AC)			
4160 V (AC)			
480 V (AC)			
120 V (AC)			
125 V (DC)			
Electric Panels			A,X
Summary			A,X

ASSOCIATED CIRCUITS OF CONCERN

H/I Pressure Interface	NO
Spurious Operation	YES

FIRE AREA/ZONE 2-SE-8-141

7.3.13.1 Location

Safety Equipment Building - El. 8'-0" - Surge Tank Room - 300 square feet - Figure 8-16

7.3.13.2 Fire Loading

Fire loading category - Minimal
Maximum permissible fire loading - 13,000 Btu/sq. ft. (Note 1)

Note 1:The maximum permissible fire loading is based on an evenly distributed loading of combustible materials.

7.3.13.3 Design Basis Fire

The design basis fire is postulated to be a fire that would involve mostly cable insulation.

The design basis fire is conservatively based on the simultaneous total combustion of all combustibles in the zone.

7.3.13.4 Fire Protection Equipment

There is no fire fighting equipment in the area. Manual fire fighting equipment is available in adjacent area 2-SE-(-15)-136. No fire detection equipment is provided within the area.

7.3.13.5 Construction

The walls are reinforced concrete and are 3 hour rated with the exception of the south wall which is nonrated reinforced concrete construction with an approximate thickness of 1 foot. The ceiling and floor are 2 hour rated. A nonrated watertight door allows access to the area from the A/C room (2-SE-(-15)-136).

7.3.13.6 Licensee Controlled Specification Barriers

For definition of the barriers requiring surveillance per LCS 3.7.104, refer to the latest revision of Figure 8-16, sheet 3.

7.3.13.7 Conclusions

Portable exhaust fans may be used to remove smoke generated by the design basis fire.

The fire boundaries between fire area 2-SE-8-141 and 2-SE-(-5)-135A and 2-SE-(-15)-136 were evaluated. The fire boundaries and associated fire protection features were found to be adequate to prevent the propagation of fire beyond the fire boundaries. The low fire loading and the substantial construction of the barriers and nonrated door preclude the propagation of the design basis fire beyond the boundaries defining the area.

7.3.13.8 Fire Area 2-SE-8-141 Appendix R Compliance

Safe shutdown capability will be provided by utilizing Train B systems. Functionally redundant components protected from fire damage will be utilized in conjunction with operator action on manual or disabled components to achieve safe shutdown.

One train of systems necessary to achieve hot standby and cold shutdown conditions independent of the subject fire area will be free of fire damage. Therefore, this fire area complies with the criteria of 10CFR50, Appendix R, III.G.1.

7.3.14 FIRE AREA/ZONE: 2-SE-30-142A

FIRE AREA/ZONE: 2-SE-30-142A

AREA: 6634 sq. ft. DESCRIPTION: ELECTRICAL TUNNEL

DESIGN BASIS FIRE

Fire Loading Category:	Medium
Fire Loading - Max Permiss:	160,000.0 Btu's/sq.ft.

FIRE PROTECTION (AVAILABLE)

Suppression (type)	water spray system
Hose Stations	none, (1) in 2-AC-30-28, (1) in 2-AC-30-27
Portable Extinguishers	Yes
Detectors (type)	ionization, heat detectors

FIRE RESISTANCE RATING

Walls	3hr, HC/146, NR/142B
Floor, Ceiling, Roof	2hr
Penetrations	C,P
Fixed Openings	OP/142B, louvers/exterior
Doors	X/2-AC-30-28, A/2-AC-70-63

HOT STANDBY SYSTEMS	Equipment	Valves	Cable
Reactor Coolant			
Reactor Protection System			
Shutdown Cooling			
Chemical and Volume Control			
Main Feedwater			A,B
Main Steam			A,B,A*
HVAC			a,B
Auxiliary Feedwater			A,a,B,C
Engineered Safety Feature			A,B,C,D
Component Cooling Water			A,a,B
Saltwater Cooling Water			
Emergency Chilled Water			
Diesel Generator Systems			B

COLD SHUTDOWN SYSTEMS	Equipment	Valves	Cable
Shutdown Cooling			A,a,B
CCW (To SDC)			A,B
HVAC			A,B
Summary (Hot and Cold)			A,A*,a,B,C,D

ESSENTIAL ELECTRIC SYSTEMS	Equipment	MCC and Switchgear	Cable
220 KV (AC)			X
4160 V (AC)			A,B
480 V (AC)			B
120 V (AC)			
125 V (DC)			
Electric Panels			A,A*,B,X
Summary			A,A*,B,X

ASSOCIATED CIRCUITS OF CONCERN

H/I Pressure Interface	NO
Spurious Operation	YES

FIRE AREA/ZONE 2-SE-30-142A

7.3.14.1 Location

Safety Equipment Building - El. 30'-0" - Electrical Tunnel - 6634 square feet - Figs. 8-17, 8-18

7.3.14.2 Fire Loading

Fire loading category - Medium
Maximum permissible fire loading - 160,000 Btu/sq. ft. (Note 1)

Note 1:The maximum permissible fire loading is based on an evenly distributed loading of combustible materials. Cable tray fill should be limited below 25% such that the maximum permissible fire loading is not exceeded.

7.3.14.3 Design Basis Fire

The design basis fire is postulated to be a fire that would involve mostly cable insulation.

The design basis fire is conservatively based on the simultaneous total combustion of all combustibles in the zone.

7.3.14.4 Fire Protection Equipment

The zone contains an automatic water spray system with fixed temperature rate of rise heat detectors. Actuation by the heat detectors results in control room annunciation. Manual fire fighting equipment is available within the zone and from the auxiliary control building (2-AC-30-28 and 2-AC-30-27). Ionization smoke detectors, located within the zone, provide early warning alarm in the control room.

7.3.14.5 Construction

The walls defining the zone are reinforced concrete and are 3 hour rated except the walls of the riser adjoining 2-SE-50-146 which are nonrated heavy concrete, and the boundary adjoining 2-CT-(-2)-142B which is nonrated. The roof and floor are 2 hour rated. A 3 hour rated door communicates with the auxiliary control building (2-AC-70-63). A 3 hour UL equivalent door also communicates with the auxiliary control building (2-AC-30-28). The zone is open to the cable tunnel (2-CT-(-2)-142B). Exhaust louvers penetrate the exterior walls. Interior ventilation duct penetrations are provided with 3 hour rated fire dampers.

7.3.14.6 Licensee Controlled Specification Barriers

For definition of the barriers requiring surveillance per LCS 3.7.104, refer to the latest revisions of Figures 8-17 and 8-18, sheet 3.

Cable for the following systems is wrapped in fire zone 2-142A:

Shutdown Cooling - Train A
Component Cooling Water - Train A
Auxiliary Feedwater - Train A
HVAC - Train A

7.3.14.7 Conclusions

The ionization detection system is expected to detect the products of combustion from an incipient fire and alert the control room for prompt response by the fire department. Portable suppression is available. The water spray system may also be actuated from one of the manual pull stations located throughout the zone.

In the event the fire achieves sufficient intensity, the fixed temperature rate of rise heat detectors should actuate the water spray system automatically. Actuation by the heat detectors is alarmed locally and in the control room. The water spray system should control and suppress the fire until the Fire department arrives and completes the extinguishment with portable equipment.

Should the water spray system fail to actuate, the available portable equipment is adequate to extinguish the fire.

The normal ventilation system will effectively remove the smoke generated by the design basis fire. Portable smoke exhaust fans may be used if additional smoke removal capability is required.

The fire barriers between 2-SE-30-142A and 2-SE-30-146 and 2-AC-30-28 were evaluated. The fire boundary and associated fire protection features were found to be adequate to prevent the propagation of fire beyond the fire boundary.

The design basis fire is insufficient to breach the barriers defining the zone/fire area.

7.3.14.8 Fire Area 2-CT-(-2)-142 Appendix R Compliance

Safe shutdown capability will be provided by utilizing Train A or Train B systems as available for a fire in zones 142A and 142B, and Train B systems for a fire in zone 142C. For fires in 142A or 142B, Train A equipment is utilized for shutdown except for localized areas where Train A equipment is

not protected. In these localized areas, there is adequate separation between the Train A and Train B equipment and cabling to ensure that the Train B equipment will be available. Train A CCW, HVAC, SDC, and AFW system cables routed in zone 2-142A or 2-142B are wrapped and will remain available. Train A DG system may be damaged by a fire in zone 2-142C. Functionally redundant components protected from fire damage will be utilized in conjunction with operator action on manual or disabled components to achieve safe shutdown.

One train of systems necessary to achieve hot standby and cold shutdown has been evaluated to remain available for safe shutdown in accordance with 10CFR50, Appendix R, Sections III.G.1 and III.G.2.a, b, and c. A deviation from the requirements of 10CFR50, Appendix R, Section III.G.2 has been accepted for fire zones 2-SE-30-142A and 2-CT-(-2)-142B to the extent it requires the separation of redundant safe shutdown trains by 1 hour rated barriers with detection and suppression. The fire detection and suppression systems in this area/zone were evaluated and shown to provide a level of protection equivalent to the requirements of Appendix R.

7.3.15 FIRE AREA/ZONE: 2-SE-30-143

FIRE AREA/ZONE: 2-SE-30-143

AREA: 78 sq. ft. DESCRIPTION: ELEVATOR SHAFT

DESIGN BASIS FIRE

Fire Loading Category:	Low
Fire Loading - Max Permiss:	160,000.0 Btu's/sq.ft.

FIRE PROTECTION (AVAILABLE)

Suppression (type)	none
Hose Stations	none
Portable Extinguishers	yes
Detectors (type)	ionization in elev. machine room

FIRE RESISTANCE RATING

Walls	142A/3hr, others 2hr
Floor, Ceiling, Roof	2hr
Penetrations	C
Fixed Openings	louvers, OP/176
Doors	B/2-SE-30-171, B/2-SE-70-172, X/2-SE-30-144

HOT STANDBY SYSTEMS	Equipment	Valves	Cable
Reactor Coolant			
Reactor Protection System			
Shutdown Cooling			
Chemical and Volume Control			
Main Feedwater			
Main Steam			
HVAC			
Auxiliary Feedwater			
Engineered Safety Feature			
Component Cooling Water			
Saltwater Cooling Water			
Emergency Chilled Water			
Diesel Generator Systems			

COLD SHUTDOWN SYSTEMS	Equipment	Valves	Cable
Shutdown Cooling			
CCW (To SDC)			
HVAC			
Summary (Hot and Cold)			

ESSENTIAL ELECTRIC SYSTEMS	Equipment	MCC and Switchgear	Cable
220 KV (AC)			
4160 V (AC)			
480 V (AC)			
120 V (AC)			
125 V (DC)			
Electric Panels			
Summary			

ASSOCIATED CIRCUITS OF CONCERN

H/I Pressure Interface	NO
Spurious Operation	NO

7.3.16 FIRE AREA/ZONE: 2-SE-30-144

FIRE AREA/ZONE: 2-SE-30-144

AREA: 140 sq. ft. DESCRIPTION: STAIRCASE

DESIGN BASIS FIRE

Fire Loading Category:	Minimal
Fire Loading - Max Permiss:	13,000.0 Btu's/sq.ft.

FIRE PROTECTION (AVAILABLE)

Suppression (type)	none
Hose Stations	none
Portable Extinguishers	none
Detectors (type)	none

FIRE RESISTANCE RATING

Walls	north and 142B/3hr, others 2hr
Floor, Ceiling, Roof	2hr
Penetrations	C
Fixed Openings	OP/171, MH/176, MH/roof
Doors	B/2-SE-(30)-171, B/2-SE-70-172,X /2-SE-30-143

HOT STANDBY SYSTEMS	Equipment	Valves	Cable
Reactor Coolant			
Reactor Protection System			
Shutdown Cooling			
Chemical and Volume Control			
Main Feedwater			
Main Steam			
HVAC			
Auxiliary Feedwater			
Engineered Safety Feature			
Component Cooling Water			
Saltwater Cooling Water			
Emergency Chilled Water			
Diesel Generator Systems			

COLD SHUTDOWN SYSTEMS	Equipment	Valves	Cable
Shutdown Cooling			
CCW (To SDC)			
HVAC			
Summary (Hot and Cold)			

ESSENTIAL ELECTRIC SYSTEMS	Equipment	MCC and Switchgear	Cable
220 KV (AC)			
4160 V (AC)			
480 V (AC)			
120 V (AC)			
125 V (DC)			
Electric Panels			
Summary			

ASSOCIATED CIRCUITS OF CONCERN

H/I Pressure Interface	NO
Spurious Operation	NO

7.3.17 FIRE AREA/ZONE: 2-SE-30-145A

FIRE AREA/ZONE: 2-SE-30-145A

AREA: 4576 sq. ft. DESCRIPTION: WTR. CTRL. RM./EQUIP.ACC. RM.

DESIGN BASIS FIRE

Fire Loading Category:	Low
Fire Loading - Max Permiss:	40,000 Btu's/sq.ft.

FIRE PROTECTION (AVAILABLE)

Suppression (type)	None
Hose Stations	None
Portable Extinguishers	None
Detectors (type)	ionization (local)

FIRE RESISTANCE RATING

Walls	3hr/142A,2C,3A, 2hr/143, NR/145B, 146, HC/others
Floor, Ceiling, Roof	2hr floor, partial roof, HC/floor grade
Penetrations	C,P
Fixed Openings	CH/138,139, MH/tendon acc.gallery, OP/146
Doors	None

HOT STANDBY SYSTEMS	Equipment	Valves	Cable
Reactor Coolant			
Reactor Protection System			
Shutdown Cooling			
Chemical and Volume Control			
Main Feedwater		A,B,N	A,B
Main Steam		A,B,N	A*,A,B
HVAC			
Auxiliary Feedwater		A,B	A,B
Engineered Safety Feature			
Component Cooling Water			
Saltwater Cooling Water			
Emergency Chilled Water			
Diesel Generator Systems			

COLD SHUTDOWN SYSTEMS	Equipment	Valves	Cable
Shutdown Cooling			
CCW (To SDC)			
HVAC			
Summary (Hot and Cold)		A,B,N	A*,A,B

ESSENTIAL ELECTRIC SYSTEMS	Equipment	MCC and Switchgear	Cable
220 KV (AC)			
4160 V (AC)			
480 V (AC)			
120 V (AC)			
125 V (DC)			
Electric Panels			A*,A,B,X
Summary			A*,A,B,X

ASSOCIATED CIRCUITS OF CONCERN

H/I Pressure Interface	NO
Spurious Operation	YES

FIRE AREA/ZONE 2-SE-30-145A

7.3.17.1 Location

Safety Equipment Building - El. 30'-0" - Water Control Room/Equipment Access Room - 4576 square feet - Figure 8-17

7.3.17.2 Fire Loading

Fire loading category - Low
Maximum permissible fire loading - 40,000 Btu/sq. ft. (Note 1)

Note 1:The maximum permissible fire loading is based on an evenly distributed loading of combustible materials. .

7.3.17.3 Design Basis Fire

The design basis fire is postulated to be a fire that would involve mostly hydraulic fluid in the valve actuators.

The design basis fire is conservatively based on the simultaneous total combustion of all combustibles in the zone.

7.3.17.4 Fire Protection Equipment

There is no fire fighting equipment located within the zone. Ionization smoke detectors provide early warning alarm in the control room. Manual suppression capabilities available from hydrants in the yard.

7.3.17.5 Construction

The zone is comprised of the 30'-0" elevation of the roof of the safety equipment building. The south and west walls, which separate the area from the adjacent electrical tunnel 2-SE-30-142A, 2-PE-30-2C, and 2-PE-45-3A, are reinforced concrete with a 3 hour rating. The portion of the north wall adjoining the elevator shaft (2-SE-30-143) is 2 hour rated. The floor is 2 hour rated with removable hatches to the heat exchanger rooms (2-SE-(-15)-138 and 2-SE-(-15)-139) below. The floor to grade is heavy concrete construction. A partial heavy concrete roof and heavy concrete missile shields are provided to protect the main steam isolation valves.

7.3.17.6 Licensee Controlled Specification Barriers

For definition of the barriers requiring surveillance per LCS 3.7.104, refer to the latest revision of Figure 8-17, sheet 3.

7.3.17.7 Conclusions

The ionization detectors are expected to detect the products of combustion from an incipient fire and alert the control room for prompt response by the fire department. The available portable equipment is adequate to extinguish the fire.

The fire boundaries between 2-SE-30-145A and 2-SE-(-15)-138, 2-SE-(-15)-139 and 2-SE-30-143 were evaluated. The fire boundaries and associated fire protection features were found to be adequate to prevent the propagation of fire beyond the fire boundaries. The design basis fire is insufficient to breach the barriers separating the zone from adjacent areas containing safe shutdown equipment.

7.3.17.8 Fire Area 2-SE-25-145 Appendix R Compliance

Safe shutdown capability will be provided by utilizing Train A systems. Functionally redundant components protected from fire damage will be utilized in conjunction with operator action on manual or disabled components to achieve safe shutdown.

One train of systems necessary to achieve hot standby and cold shutdown conditions independent of the subject fire area will be free of fire damage. Therefore, this fire area complies with the criteria of 10CFR50, Appendix R, III.G.1.

7.3.18 FIRE AREA/ZONE: 2-SE-25-145B

FIRE AREA/ZONE: 2-SE-25-145B

AREA: 343 sq. ft. DESCRIPTION: AFW STEAM TRENCH

DESIGN BASIS FIRE

Fire Loading Category:	Minimal
Fire Loading - Max Permiss:	13,000.0 Btu's/sq.ft.

FIRE PROTECTION (AVAILABLE)

Suppression (type)	None
Hose Stations	None
Portable Extinguishers	None
Detectors (type)	None

FIRE RESISTANCE RATING

Walls	NR/145A, others HC
Floor, Ceiling, Roof	2hr floor to 161B, 142B, HC/floor grade
Penetrations	NP/161A
Fixed Openings	roof grating
Doors	None

HOT STANDBY SYSTEMS	Equipment	Valves	Cable
Reactor Coolant			
Reactor Protection System			
Shutdown Cooling			
Chemical and Volume Control			
Main Feedwater			
Main Steam			
HVAC			
Auxiliary Feedwater			
Engineered Safety Feature			
Component Cooling Water			
Saltwater Cooling Water			
Emergency Chilled Water			
Diesel Generator Systems			

COLD SHUTDOWN SYSTEMS	Equipment	Valves	Cable
Shutdown Cooling			
CCW (To SDC)			
HVAC			
Summary (Hot and Cold)			

ESSENTIAL ELECTRIC SYSTEMS	Equipment	MCC and Switchgear	Cable
220 KV (AC)			
4160 V (AC)			
480 V (AC)			
120 V (AC)			
125 V (DC)			
Electric Panels			
Summary			

ASSOCIATED CIRCUITS OF CONCERN

H/I Pressure Interface	NO
Spurious Operation	NO

7.3.19 FIRE AREA/ZONE: 2-SE-50-146

FIRE AREA/ZONE: 2-SE-30-146

AREA: 6476 sq. ft. DESCRIPTION: ROOF SE BUILDING

DESIGN BASIS FIRE

Fire Loading Category:	Minimal
Fire Loading - Max Permiss:	13,000.0 Btu's/sq.ft.

FIRE PROTECTION (AVAILABLE)

Suppression (type)	None
Hose Stations	None
Portable Extinguishers	None
Detectors (type)	None

FIRE RESISTANCE RATING

Walls	3hr/36,37,3A, HC/142A, NR/145A, 148A
Floor, Ceiling, Roof	2hr/floor
Penetrations	NC/142A
Fixed Openings	OP/145A
Doors	L/2-PE-45-3A

HOT STANDBY SYSTEMS	Equipment	Valves	Cable
Reactor Coolant			
Reactor Protection System			
Shutdown Cooling			
Chemical and Volume Control			
Main Feedwater			
Main Steam			
HVAC			
Auxiliary Feedwater			
Engineered Safety Feature			
Component Cooling Water			
Saltwater Cooling Water			
Emergency Chilled Water			
Diesel Generator Systems			

COLD SHUTDOWN SYSTEMS	Equipment	Valves	Cable
Shutdown Cooling			
CCW (To SDC)			
HVAC			
Summary (Hot and Cold)			

ESSENTIAL ELECTRIC SYSTEMS	Equipment	MCC and Switchgear	Cable
220 KV (AC)			
4160 V (AC)			
480 V (AC)			
120 V (AC)			
125 V (DC)			
Electric Panels			
Summary			

ASSOCIATED CIRCUITS OF CONCERN

H/I Pressure Interface	NO
Spurious Operation	NO

7.3.20 FIRE AREA/ZONE: 2-SE-(-12)-170

FIRE AREA/ZONE: 2-SE-(-12)-170

AREA: 4834 sq. ft. DESCRIPTION: EMERGENCY RECIRC. TUNNEL

DESIGN BASIS FIRE

Fire Loading Category:	Minimal
Fire Loading - Max Permiss:	13,000.0 Btu's/sq.ft.

FIRE PROTECTION (AVAILABLE)

Suppression (type)	None
Hose Stations	None
Portable Extinguishers	None
Detectors (type)	None

FIRE RESISTANCE RATING

Walls	west 3hr, others HC
Floor, Ceiling, Roof	2hr/HCfloor
Penetrations	PC
Fixed Openings	None
Doors	(3)W/tendon access gallery

HOT STANDBY SYSTEMS	Equipment	Valves	Cable
Reactor Coolant			
Reactor Protection System			
Shutdown Cooling			
Chemical and Volume Control			
Main Feedwater			
Main Steam			
HVAC			
Auxiliary Feedwater			
Engineered Safety Feature			
Component Cooling Water			
Saltwater Cooling Water			
Emergency Chilled Water			
Diesel Generator Systems			

COLD SHUTDOWN SYSTEMS	Equipment	Valves	Cable
Shutdown Cooling			
CCW (To SDC)			
HVAC			
Summary (Hot and Cold)			

ESSENTIAL ELECTRIC SYSTEMS	Equipment	MCC and Switchgear	Cable
220 KV (AC)			
4160 V (AC)			
480 V (AC)			
120 V (AC)			
125 V (DC)			
Electric Panels			A,B
Summary			A,B

ASSOCIATED CIRCUITS OF CONCERN

H/I Pressure Interface	NO
Spurious Operation	NO

FIRE AREA/ZONE 2-SE-(-12)-170

7.3.20.1 Location

Safety Equipment Building - El. (-12'-0") - Emergency Recirc. Tunnel - 4834 square feet - Figs. 8-1, 8-15

7.3.20.2 Fire Loading

Fire loading category - Minimal
Maximum permissible fire loading - 13,000 Btu/sq. ft. (Note 1)

Note 1:The maximum permissible fire loading is based on an evenly distributed loading of combustible materials.

7.3.20.3 Design Basis Fire

A design basis fire is not expected to occur in this area during normal operation. The maximum credible fire is postulated to involve transient combustible material.

7.3.20.4 Fire Protection Equipment

There is no fire fighting or fire detection equipment located within the area.

7.3.20.5 Construction

The west wall of the area is 3 hour rated. The remainder of the walls are heavy concrete with an approximate thickness of 36 inches. The ceiling is 2 hour rated heavy concrete. Redundant safe shutdown system valves, located in the isolation valve rooms, are separated by a full height heavy concrete wall, which runs the entire length of the room east of the tendon access gallery. Each valve room is separated from the tendon access gallery by a nonrated watertight door. A nonrated watertight door also provides access to the emergency recirculation piping tunnel, west of the tendon access gallery.

7.3.20.6 Licensee Controlled Specification Barriers

For definition of the barriers requiring surveillance per LCS 3.7.104, refer to the latest revisions of Figures 8-1 and 8-15, sheet 3.

7.3.20.7 Conclusions

The lack of fire loading, the lack of access, and the substantial construction of the heavy concrete walls precludes the possibility of a significant fire.

7.3.20.8 Fire Area 2-SE-(-12)-170 Appendix R Compliance

Safe shutdown capability will be provided by utilizing Train A systems. Functionally redundant components protected from fire damage will be utilized in conjunction with operator action on manual or disabled components to achieve safe shutdown.

One train of systems necessary to achieve hot standby and cold shutdown conditions independent of the subject fire area will be free of fire damage. Therefore, this fire area complies with the criteria of 10CFR50, Appendix R, III.G.1.

7.3.21 FIRE AREA/ZONE: 2-SE-30-171

FIRE AREA/ZONE: 2-SE-30-171

AREA: 961 sq. ft. DESCRIPTION: HP Instrument Calibration RM.

DESIGN BASIS FIRE

Fire Loading Category:	Minimal
Fire Loading - Max Permiss:	13,000.0 Btu's/sq.ft.

FIRE PROTECTION (AVAILABLE)

Suppression (type)	None
Hose Stations	None
Portable Extinguishers	Yes
Detectors (type)	heat detectors

FIRE RESISTANCE RATING

Walls	3hr/142B, 2hr/143, 144, others NR
Floor, Ceiling, Roof	2hr
Penetrations	P,C, ND/exterior
Fixed Openings	OP/144
Doors	B/2-SE-30-144, B/2 SE-30-143,X/exterior, A/exterior

HOT STANDBY SYSTEMS	Equipment	Valves	Cable
Reactor Coolant			
Reactor Protection System			
Shutdown Cooling			
Chemical and Volume Control			
Main Feedwater			
Main Steam			
HVAC			
Auxiliary Feedwater			
Engineered Safety Feature			
Component Cooling Water			
Saltwater Cooling Water			
Emergency Chilled Water			
Diesel Generator Systems			

COLD SHUTDOWN SYSTEMS	Equipment	Valves	Cable
Shutdown Cooling			
CCW (To SDC)			
HVAC			
Summary (Hot and Cold)			

ESSENTIAL ELECTRIC SYSTEMS	Equipment	MCC and Switchgear	Cable
220 KV (AC)			
4160 V (AC)			
480 V (AC)			
120 V (AC)			
125 V (DC)			
Electric Panels			
Summary			

ASSOCIATED CIRCUITS OF CONCERN

H/I Pressure Interface	NO
Spurious Operation	NO

7.3.22 FIRE AREA/ZONE: 2-SE-70-172

FIRE AREA/ZONE: 2-SE-70-172

AREA: 1584 sq. ft. DESCRIPTION: ACCESS CORRIDOR

DESIGN BASIS FIRE

Fire Loading Category:	Minimal
Fire Loading - Max Permiss:	160,000.0 Btu's/sq.ft.

FIRE PROTECTION (AVAILABLE)

Suppression (type)	None
Hose Stations	None
Portable Extinguishers	none, adjacent
Detectors (type)	None

FIRE RESISTANCE RATING3

Walls	2hr/143, 144, others HC
Floor, Ceiling, Roof	floor 2hr, roof/HC
Penetrations	Cameron
Fixed Openings	louvers/exterior, SG
Doors	A/2-AC-70-64, B/2 SE-30-144, B/2 SE-30-143

HOT STANDBY SYSTEMS	Equipment	Valves	Cable
Reactor Coolant			
Reactor Protection System			
Shutdown Cooling			
Chemical and Volume Control			
Main Feedwater			
Main Steam			
HVAC			
Auxiliary Feedwater			
Engineered Safety Feature			
Component Cooling Water			
Saltwater Cooling Water			
Emergency Chilled Water			
Diesel Generator Systems			

COLD SHUTDOWN SYSTEMS	Equipment	Valves	Cable
Shutdown Cooling			
CCW (To SDC)			
HVAC			
Summary (Hot and Cold)			

ESSENTIAL ELECTRIC SYSTEMS	Equipment	MCC and Switchgear	Cable
220 KV (AC)			
4160 V (AC)			
480 V (AC)			
120 V (AC)			
125 V (DC)			
Electric Panels			
Summary			

ASSOCIATED CIRCUITS OF CONCERN

H/I Pressure Interface	NO
Spurious Operation	NO

7.3.23 FIRE AREA/ZONE: 2-SE-(-2)-176

FIRE AREA/ZONE: 2-SE-(-2)-176

AREA: 660 sq. ft. DESCRIPTION: CABLE TUNNEL ACCESS ROOM

DESIGN BASIS FIRE

Fire Loading Category:	Minimal
Fire Loading - Max Permiss:	13,000.0 Btu's/sq.ft.

FIRE PROTECTION (AVAILABLE)

Suppression (type)	None
Hose Stations	None
Portable Extinguishers	none, adjacent
Detectors (type)	None

FIRE RESISTANCE RATING3

Walls	3hr/142B, others HC
Floor, Ceiling, Roof	2hr, HC/floor
Penetrations	C, NP/161B
Fixed Openings	MH/144, OP/143
Doors	B2-CT-(-2)-142B

HOT STANDBY SYSTEMS	Equipment	Valves	Cable
Reactor Coolant			
Reactor Protection System			
Shutdown Cooling			
Chemical and Volume Control			
Main Feedwater			
Main Steam			
HVAC			
Auxiliary Feedwater			
Engineered Safety Feature			
Component Cooling Water			
Saltwater Cooling Water			
Emergency Chilled Water			
Diesel Generator Systems			

COLD SHUTDOWN SYSTEMS	Equipment	Valves	Cable
Shutdown Cooling			
CCW (To SDC)			
HVAC			
Summary (Hot and Cold)			

ESSENTIAL ELECTRIC SYSTEMS	Equipment	MCC and Switchgear	Cable
220 KV (AC)			
4160 V (AC)			
480 V (AC)			
120 V (AC)			
125 V (DC)			
Electric Panels			
Summary			

ASSOCIATED CIRCUITS OF CONCERN

H/I Pressure Interface	NO
Spurious Operation	NO

7. DETAILED FIRE HAZARD ANALYSIS

7.4 UNIT 2 FUEL HANDLING BUILDING

The Unit 2 Fuel Handling Building is a reinforced concrete structure which houses the fuel handling systems and the spent fuel pool. The Fuel Handling Building is divided into thirteen (13) fire areas. The barrier penetration and door fire ratings are noted in the matrices.

The Fuel Handling Building contains part of or all of the following systems, which can be used for, or support, safe shutdown and cooldown:

- Component Cooling Water
- Electrical Panels

The type of fire protection/detection equipment available in or near this building consists of the following:

- Portable extinguishers.
- Manual water spray systems are provided for charcoal filter units. Heat sensors, installed in the filters, alarm on high temperature.
- Smoke and infrared detectors.
- A standpipe system with manual hose stations.

Fire Area/Zone	Contains Safe Shutdown Equipment/Cables	Contains Safety-Related Equipment/Cables	Figure No.
2-FH-17-122	No	Yes	8-19
2-FH-17-123	Yes	Yes	8-19, 8-20
2-FH-15-124	No	No	8-19, 8-20
2-FH-15-125	No	Yes	8-19, 8-20
2-FH-30-126	Yes	Yes	8-19
2-FH-30-127	No	Yes	8-19
2-FH-30-128	No	No	8-19
2-FH-30-129	No	No	8-19, 8-20
2-FH-45-130	Yes	Yes	8-20
2-FH-45-131	No	No	8-20
2-FH-45-132	Yes	Yes	8-20
2-FH-63-134	No	No	8-20
2-FH-30-174A	No	No	8-19

7.4.1 FIRE AREA/ZONE 2-FH-17-122

FIRE AREA/ZONE: 2-FH-17-122

AREA: 671 sq. ft. DESCRIPTION: FUEL PUMP RM.

DESIGN BASIS FIRE

Fire Loading Category:	Minimal
Fire Loading - Max Permiss:	40,000.0 Btu's/sq.ft.

FIRE PROTECTION (AVAILABLE)

Suppression (type)	none
Hose Stations	none
Portable Extinguishers	none, adjacent
Detectors (type)	ionization

FIRE RESISTANCE RATING

Walls	3hr
Floor, Ceiling, Roof	2hr/ceiling, HC/floor
Penetrations	C, P, D
Fixed Openings	MH/126
Doors	A/2-PE-9-2A

HOT STANDBY SYSTEMS	Equipment	Valves	Cable
Reactor Coolant			
Reactor Protection System			
Shutdown Cooling			
Chemical and Volume Control			
Main Feedwater			
Main Steam			
HVAC			
Auxiliary Feedwater			
Engineered Safety Feature			
Component Cooling Water			
Saltwater Cooling Water			
Emergency Chilled Water			
Diesel Generator Systems			

COLD SHUTDOWN SYSTEMS	Equipment	Valves	Cable
Shutdown Cooling			
CCW (To SDC)			
HVAC			
Summary (Hot and Cold)			

ESSENTIAL ELECTRIC SYSTEMS	Equipment	MCC and Switchgear	Cable
220 KV (AC)			
4160 V (AC)			
480 V (AC)			
120 V (AC)			
125 V (DC)			
Electric Panels			
Summary			

ASSOCIATED CIRCUITS OF CONCERN

H/I Pressure Interface	NO
Spurious Operation	NO

FIRE AREA/ZONE 2-FH-17-122

7.4.1.1 Location

Fuel Handling Building - El. 17'-6' - Fuel Pump Room - 671 square feet - Figure 8-19

7.4.1.2 Fire Loading

Fire loading category - Minimal
Maximum permissible fire loading - 40,000 Btu/sq. ft. (Note 1)

Note 1:The maximum permissible loading is based on an evenly distributed loading of combustible materials.

7.4.1.3 Design Basis Fire

The design basis fire is postulated to be a fire that would mostly involve oil.

The design basis fire is conservatively based on the simultaneous total combustion of all combustibles in the area.

7.4.1.4 Fire Protection Equipment

There is no fire fighting equipment in the area. Manual fire fighting equipment is available in adjacent zone 2-PE-9-2A. Ionization smoke detectors, located in the area, provide early warning alarm in the control room.

7.4.1.5 Construction

The walls defining the area are 3 hour rated. The ceiling is 2 hour rated heavy concrete construction. The floor to grade is nonrated heavy concrete construction. One 3 hour rated door separates the area from the penetration building (2-PE-9-2A). Ventilation duct penetrations are provided with 3 hour rated dampers.

7.4.1.6 Safe Shutdown Equipment

None

7.4.1.7 Licensee Controlled Specification Barriers

For definition of the barriers requiring surveillance per LCS 3.7.104, refer to the latest revision of Figure 8-19, sheet 3.

7.4.1.8 Conclusions

The ionization detection system is expected to detect the products of combustion from the incipient fire and alert the control room for prompt response by the fire department. The available portable equipment is adequate to extinguish the fire.

The normal ventilation system will effectively remove the smoke generated by the design basis fire until the fire dampers operate. Portable smoke exhaust fans may then be used to vent smoke from the area.

The design basis fire is insufficient to breach the barriers defining the zone/fire area.

7.4.1.9 Fire Area 2-FH-17-122 Appendix R Compliance

Safe shutdown capability will be provided by utilizing Train A or Train B systems. No safe shutdown systems will be disabled by a fire in this area.

One train of systems necessary to achieve hot standby and cold shutdown conditions independent of the subject fire area will be free of fire damage. Therefore, this fire area complies with the criteria of 10CFR50, Appendix R, III.G.1.

7.4.2 FIRE AREA/ZONE 2-FH-17-123

FIRE AREA/ZONE: 2-FH-17-123

AREA: 5717 sq. ft. DESCRIPTION: SPENT FUEL POOL/OPER. FLOOR

DESIGN BASIS FIRE

Fire Loading Category:	Minimal
Fire Loading - Max Permiss:	40,000.0 Btu's/sq.ft.

FIRE PROTECTION (AVAILABLE)

Suppression (type)	none
Hose Stations	(2) @ el. 63'-0"
Portable Extinguishers	yes
Detectors (type)	infrared

FIRE RESISTANCE RATING

Walls	3hr
Floor, Ceiling, Roof	2hr, HC/floor grade
Penetrations	D, C, P, ND/exterior
Fixed Openings	CH/174A, MH/174A
Doors	A/2-PE-63-3B

HOT STANDBY SYSTEMS	Equipment	Valves	Cable
Reactor Coolant			
Reactor Protection System			
Shutdown Cooling			
Chemical and Volume Control			
Main Feedwater			
Main Steam			
HVAC			
Auxiliary Feedwater			
Engineered Safety Feature			
Component Cooling Water			
Saltwater Cooling Water			
Emergency Chilled Water			
Diesel Generator Systems			

COLD SHUTDOWN SYSTEMS	Equipment	Valves	Cable
Shutdown Cooling			
CCW (To SDC)			
HVAC			
Summary (Hot and Cold)			

ESSENTIAL ELECTRIC SYSTEMS	Equipment	MCC and Switchgear	Cable
220 KV (AC)			
4160 V (AC)			
480 V (AC)			
120 V (AC)			
125 V (DC)			
Electric Panels			B,X
Summary			B,X

ASSOCIATED CIRCUITS OF CONCERN

H/I Pressure Interface	NO
Spurious Operation	NO

FIRE AREA/ZONE 2-FH-17-123

7.4.2.1 Location

Fuel Handling Building - El. 17'-6" - Spent Fuel Pool/Operating Floor - 5717 square feet - Figs. 8-19, 8-20

7.4.2.2 Fire Loading

Fire loading category - Minimal
Maximum permissible fire loading - 40,000 Btu/sq. ft. (Note 1)

Note 1:The maximum permissible fire loading is based on an evenly distributed loading of combustible materials.

7.4.2.3 Design Basis Fire

The design basis fire is postulated to be a fire that would involve mostly Class A combustibles, rubber, and cable.

The design basis fire is conservatively based on the simultaneous total combustion of all combustibles in the area.

7.4.2.4 Fire Protection Equipment

Manual fire fighting equipment is available in the area. Infrared detectors provide early warning alarm in the control room.

7.4.2.5 Construction

The walls of the area are 3 hour rated. The ceiling is 2 hour rated concrete construction. The floor to other fire areas/zones is 2 hour rated. The floor to grade is nonrated heavy concrete construction. A 3 hour rated door separates the area from the penetration building (2-PE-63-3B). Ventilation duct penetrations to adjacent areas are provided with 3 hour rated fire dampers.

7.4.2.6 Licensee Controlled Specification Barriers

For definition of the barriers requiring surveillance per LCS 3.7.104, refer to the latest revisions of Figures 8-19 and 8-20, sheet 3.

7.4.2.7 Conclusions

The infrared detection system is expected to detect the fire within the initial stages of growth and alert the control room for prompt response by the fire department. The available portable equipment is adequate to extinguish the fire.

The normal ventilation system will effectively remove the smoke generated by the design basis fire. Portable smoke exhaust fans may then be used to vent smoke from the area.

The design basis fire is insufficient to breach the barriers defining the zone/fire area.

7.4.2.8 Fire Area 2-FH-17-123 Appendix R Compliance

Safe shutdown capability will be provided by utilizing Train A systems. Functionally redundant components protected from fire damage will be utilized to achieve safe shutdown.

One train of systems necessary to achieve hot standby and cold shutdown conditions independent of the subject fire area will be free of fire damage. Therefore, this fire area complies with the criteria of 10CFR50, Appendix R, III.G.1.

7.4.3 FIRE AREA/ZONE 2-FH-15-124

FIRE AREA/ZONE: 2-FH-15-124

AREA: 197 sq. ft. DESCRIPTION: STAIRCASE

DESIGN BASIS FIRE

Fire Loading Category:	Minimal
Fire Loading - Max Permiss:	160,000.0 Btu's/sq.ft.

FIRE PROTECTION (AVAILABLE)

Suppression (type)	none
Hose Stations	none
Portable Extinguishers	none
Detectors (type)	none

FIRE RESISTANCE RATING

Walls	3hr/2A, south, others 2hr
Floor, Ceiling, Roof	2hr/ceiling, HC/floor
Penetrations	C, P
Fixed Openings	none
Doors	A/2-PE-9-2A, B/2-FH-15-125, B/2-FH-30-128, B/2-FH-45-131, B/2-FH-63-134, NR/exterior

HOT STANDBY SYSTEMS	Equipment	Valves	Cable
Reactor Coolant			
Reactor Protection System			
Shutdown Cooling			
Chemical and Volume Control			
Main Feedwater			
Main Steam			
HVAC			
Auxiliary Feedwater			
Engineered Safety Feature			
Component Cooling Water			
Saltwater Cooling Water			
Emergency Chilled Water			
Diesel Generator Systems			

COLD SHUTDOWN SYSTEMS	Equipment	Valves	Cable
Shutdown Cooling			
CCW (To SDC)			
HVAC			
Summary (Hot and Cold)			

ESSENTIAL ELECTRIC SYSTEMS	Equipment	MCC and Switchgear	Cable
220 KV (AC)			
4160 V (AC)			
480 V (AC)			
120 V (AC)			
125 V (DC)			
Electric Panels			
Summary			

ASSOCIATED CIRCUITS OF CONCERN

H/I Pressure Interface	NO
Spurious Operation	NO

7.4.4 FIRE AREA/ZONE: 2-FH-15-125

FIRE AREA/ZONE: 2-FH-15-125

AREA: 847 sq. ft. DESCRIPTION: STORAGE RM 102 + 103

DESIGN BASIS FIRE

Fire Loading Category:	Minimal
Fire Loading - Max Permiss:	160,000.0 Btu's/sq.ft.

FIRE PROTECTION (AVAILABLE)

Suppression (type)	none
Hose Stations	none
Portable Extinguishers	yes
Detectors (type)	none

FIRE RESISTANCE RATING

Walls	3hr/123, 142C, 2hr/124, HC/exterior
Floor, Ceiling, Roof	2hr/ceiling, HC/floor
Penetrations	D, C
Fixed Openings	none
Doors	B/2-FH-15-124

HOT STANDBY SYSTEMS	Equipment	Valves	Cable
Reactor Coolant			
Reactor Protection System			
Shutdown Cooling			
Chemical and Volume Control			
Main Feedwater			
Main Steam			
HVAC			
Auxiliary Feedwater			
Engineered Safety Feature			
Component Cooling Water			
Saltwater Cooling Water			
Emergency Chilled Water			
Diesel Generator Systems			

COLD SHUTDOWN SYSTEMS	Equipment	Valves	Cable
Shutdown Cooling			
CCW (To SDC)			
HVAC			
Summary (Hot and Cold)			

ESSENTIAL ELECTRIC SYSTEMS	Equipment	MCC and Switchgear	Cable
220 KV (AC)			
4160 V (AC)			
480 V (AC)			
120 V (AC)			
125 V (DC)			
Electric Panels			
Summary			

ASSOCIATED CIRCUITS OF CONCERN

H/I Pressure Interface	NO
Spurious Operation	NO

FIRE AREA/ZONE 2-FH-15-125

7.4.4.1 Location

Fuel Handling Building - El. 15'-0" - Storage Rooms 102 and 103 - 847 square feet - Figure 8-19.

7.4.4.2 Fire Loading

Fire loading category - Minimal
Maximum permissible fire loading - 160,000 Btu/sq. ft. (Note 1)

Note 1:The maximum permissible fire loading is based on an evenly distributed loading of combustible materials.

7.4.4.3 Design Basis Fire

The design basis fire is postulated to be a fire that would involve mostly Class A combustible materials.

The design basis fire is conservatively based on the simultaneous combustion of all combustibles in the area.

7.4.4.4 Fire Protection Equipment

Manual fire fighting equipment is available within the area. No fire detection equipment is provided within the area.

7.4.4.5 Construction

The east wall of the area, which separates the area from the cable shaft (2-CT-16-142C), is 3 hour rated. The portions of the area walls adjoining the penetration building and the spent fuel pool (2-FH-17-123) are 3 hour rated. The walls separating the area from the staircase (2-FH-15-124) are 2 hour rated. Exterior walls are nonrated heavy concrete construction. The ceiling is 2 hour rated concrete construction. The floor to grade is nonrated heavy concrete construction. The area communicates with the staircase through a 1-1/2 hour rated door. Ventilation duct penetrations are provided with 1-1/2 hour rated fire dampers.

7.4.4.6 Licensee Controlled Specification Barriers

For definition of the barriers requiring surveillance per LCS 3.7.104, refer to the latest revision of Figure 8-19, sheet 3.

7.4.4.7 Conclusions

The available portable equipment is adequate to extinguish the fire.

The normal ventilation system will effectively remove the smoke generated by the design basis fire until the fire dampers operate. Portable smoke exhaust fans may then be used to vent smoke from the area.

The design basis fire is insufficient to breach the barriers defining the zone/fire area.

7.4.4.8 Fire Area 2-FH-15-125 Appendix R Compliance

Safe shutdown capability will be provided by utilizing Train A or Train B systems. No safe shutdown systems will be disabled by a fire in this area.

One train of systems necessary to achieve hot standby and cold shutdown conditions independent of the subject fire area will be free of fire damage. Therefore, this fire area complies with the criteria of 10CFR50, Appendix R, III.G.1.

7.4.5 FIRE AREA/ZONE: 2-FH-30-126

FIRE AREA/ZONE: 2-FH-30-126

AREA: 671 sq. ft. DESCRIPTION: HEAT EXCHANGER RM.

DESIGN BASIS FIRE

Fire Loading Category:	Minimal
Fire Loading - Max Permiss:	13,000.0 Btu's/sq.ft.

FIRE PROTECTION (AVAILABLE)

Suppression (type)	none
Hose Stations	none
Portable Extinguishers	none, adjacent
Detectors (type)	none

FIRE RESISTANCE RATING

Walls	3hr
Floor, Ceiling, Roof	2hr
Penetrations	P, C, D
Fixed Openings	MH/122
Doors	A/2-PE-30-2C

HOT STANDBY SYSTEMS	Equipment	Valves	Cable
Reactor Coolant			
Reactor Protection System			
Shutdown Cooling			
Chemical and Volume Control			
Main Feedwater			
Main Steam			
HVAC			
Auxiliary Feedwater			
Engineered Safety Feature			
Component Cooling Water		N	
Saltwater Cooling Water			
Emergency Chilled Water			
Diesel Generator Systems			

COLD SHUTDOWN SYSTEMS	Equipment	Valves	Cable
Shutdown Cooling			
CCW (To SDC)			
HVAC			
Summary (Hot and Cold)		N	

ESSENTIAL ELECTRIC SYSTEMS	Equipment	MCC and Switchgear	Cable
220 KV (AC)			
4160 V (AC)			
480 V (AC)			
120 V (AC)			
125 V (DC)			
Electric Panels			
Summary			

ASSOCIATED CIRCUITS OF CONCERN

H/I Pressure Interface	NO
Spurious Operation	NO

FIRE AREA/ZONE 2-FH-30-126

7.4.5.1 Location

Fuel Handling Building - El. 30'-0" - Heat Exchanger Room - 671 square feet - Figure 8-19

7.4.5.2 Fire Loading

Fire loading category - Minimal
Maximum permissible fire loading - 13,000 Btu/sq. ft. (Note 1)

Note 1:The maximum permissible fire loading is based on an evenly distributed loading of combustible materials.

7.4.5.3 Design Basis Fire

A fire is not expected to occur in this area during normal operation. The maximum credible fire is postulated to involve transient combustible materials.

7.4.5.4 Fire Protection Equipment

There is no fire fighting or fire detection equipment within the area. Manual fire fighting equipment is available in adjacent zone 2-PE-30-2C.

7.4.5.5 Construction

The walls defining the area are 3 hour rated reinforced concrete construction. The floor and ceiling are 2 hour rated. A 3 hour rated door separates the area from the penetration building (2-PE-30-2C). Ventilation duct penetrations are provided with 3 hour rated fire dampers.

7.4.5.6 Licensee Controlled Specification Barriers

For definition of the barriers requiring surveillance per LCS-3.7.104, refer to the latest revision of Figure 8-19, sheet 3.

7.4.5.7 Conclusions

The normal ventilation system will effectively remove the smoke generated by the design basis fire until the fire dampers operate. Portable smoke exhaust fans may then be used to vent smoke from the area.

The design basis fire is insufficient to breach the barriers defining the zone/fire area.

7.4.5.8 Fire Area 2-FH-30-126 Appendix R Compliance

Safe shutdown capability will be provided by utilizing Train A or Train B systems. No safe shutdown systems will be disabled by a fire in this area.

One train of systems necessary to achieve hot standby and cold shutdown conditions independent of the subject fire area will be free of fire damage. Therefore, this fire area complies with the criteria of 10CFR50, Appendix R, III.G.1.

7.4.6 FIRE AREA/ZONE: 2-FH-30-127

FIRE AREA/ZONE: 2-FH-30-127

AREA: 972 sq. ft. DESCRIPTION: TOOL DECON. RM.

DESIGN BASIS FIRE

Fire Loading Category:	Low
Fire Loading - Max Permiss:	160,000.0 Btu's/sq.ft.

FIRE PROTECTION (AVAILABLE)

Suppression (type)	none
Hose Stations	none
Portable Extinguishers	yes
Detectors (type)	none

FIRE RESISTANCE RATING

Walls	3hr/123, 2hr/128, 124, HC/exterior
Floor, Ceiling, Roof	2hr
Penetrations	D, C, P
Fixed Openings	none
Doors	A/2-FH-30-128, NR/exterior

HOT STANDBY SYSTEMS	Equipment	Valves	Cable
Reactor Coolant			
Reactor Protection System			
Shutdown Cooling			
Chemical and Volume Control			
Main Feedwater			
Main Steam			
HVAC			
Auxiliary Feedwater			
Engineered Safety Feature			
Component Cooling Water			
Saltwater Cooling Water			
Emergency Chilled Water			
Diesel Generator Systems			

COLD SHUTDOWN SYSTEMS	Equipment	Valves	Cable
Shutdown Cooling			
CCW (To SDC)			
HVAC			
Summary (Hot and Cold)			

ESSENTIAL ELECTRIC SYSTEMS	Equipment	MCC and Switchgear	Cable
220 KV (AC)			
4160 V (AC)			
480 V (AC)			
120 V (AC)			
125 V (DC)			
Electric Panels			
Summary			

ASSOCIATED CIRCUITS OF CONCERN

H/I Pressure Interface	NO
Spurious Operation	NO

FIRE AREA/ZONE 2-FH-30-127

7.4.6.1 Location

Fuel Handling Building - El. 30'-0" - Tool Decontamination Room - 972 square feet - Figure 8-19

7.4.6.2 Fire Loading

Fire loading category - Low
Maximum permissible fire loading - 160,000 Btu/sq. ft. (Note 1)

Note 1:The maximum permissible loading is based on an evenly distributed loading of combustible materials.

7.4.6.3 Design Basis Fire

The design basis fire is postulated to be a fire that would involve mostly Class A combustibles, rubber, and plastic.

The design basis fire is conservatively based on the simultaneous total combustion of all combustibles in the area.

7.4.6.4 Fire Protection Equipment

Manual fire fighting equipment is available within the area. No fire detection equipment is provided.

7.4.6.5 Construction

The south wall separating the area from adjacent area 2-FH-17-123 is 3 hour rated. The remainder of the area's interior walls, as well as the floor and ceiling, are 2 hour rated. Exterior walls are nonrated concrete construction with an approximate thickness of 18 inches. The exterior door is nonrated. A 3 hour rated door separates the area from the vestibule (2-FH-30-128). Ventilation duct penetrations in the floor and ceiling are provided with 1-1/2 hour rated fire dampers.

7.4.6.6 Licensee Controlled Specification Barriers

For definition of the barriers requiring surveillance per LCS 3.7.104, refer to the latest revision of Figure 8-19, sheet 3.

7.4.6.7 Conclusions

The available portable equipment is adequate to extinguish the fire.

The normal ventilation system will effectively remove the smoke generated by the design basis fire until the fire dampers operate. Smoke may then be cleared by opening the exterior door, or through the use of portable smoke exhaust fans.

The design basis fire is insufficient to breach the barriers defining the zone/fire area.

7.4.6.8 Fire Area 2-FH-30-127 Appendix R Compliance

Safe shutdown capability will be provided by utilizing Train A or Train B systems. No safe shutdown systems will be disabled by a fire in this area.

One train of systems necessary to achieve hot standby and cold shutdown conditions independent of the subject fire area will be free of fire damage. Therefore, this fire area complies with the criteria of 10CFR50, Appendix R, III.G.1.

7.4.7 FIRE AREA/ZONE: 2-FH-30-128

FIRE AREA/ZONE: 2-FH-30-128

AREA: 90 sq. ft. DESCRIPTION: VESTIBULE 203

DESIGN BASIS FIRE

Fire Loading Category:	Minimal
Fire Loading - Max Permiss:	13,000.0 Btu's/sq.ft.

FIRE PROTECTION (AVAILABLE)

Suppression (type)	none
Hose Stations	none
Portable Extinguishers	none, adjacent
Detectors (type)	none

FIRE RESISTANCE RATING

Walls	3hr/2C, 142C, 2hr/others
Floor, Ceiling, Roof	2hr
Penetrations	P, C
Fixed Openings	MH/129
Doors	B/2-FH-15-124, A/2-PE-30-2C, A/2-FH-30-, 127, NR/exterior, B/2-FH-30-129

HOT STANDBY SYSTEMS	Equipment	Valves	Cable
Reactor Coolant			
Reactor Protection System			
Shutdown Cooling			
Chemical and Volume Control			
Main Feedwater			
Main Steam			
HVAC			
Auxiliary Feedwater			
Engineered Safety Feature			
Component Cooling Water			
Saltwater Cooling Water			
Emergency Chilled Water			
Diesel Generator Systems			

COLD SHUTDOWN SYSTEMS	Equipment	Valves	Cable
Shutdown Cooling			
CCW (To SDC)			
HVAC			
Summary (Hot and Cold)			

ESSENTIAL ELECTRIC SYSTEMS	Equipment	MCC and Switchgear	Cable
220 KV (AC)			
4160 V (AC)			
480 V (AC)			
120 V (AC)			
125 V (DC)			
Electric Panels			
Summary			

ASSOCIATED CIRCUITS OF CONCERN

H/I Pressure Interface	NO
Spurious Operation	NO

7.4.8 FIRE AREA/ZONE: 2-FH-30-129

FIRE AREA/ZONE: 2-FH-30-129

AREA: 14 sq. ft. DESCRIPTION: DUMBWAITER

DESIGN BASIS FIRE

Fire Loading Category:	Minimal
Fire Loading - Max Permiss:	13,000.0 Btu's/sq.ft.

FIRE PROTECTION (AVAILABLE)

Suppression (type)	none
Hose Stations	none
Portable Extinguishers	none
Detectors (type)	none

FIRE RESISTANCE RATING

Walls	3hr/west, south, others 2hr
Floor, Ceiling, Roof	2hr
Penetrations	none
Fixed Openings	MH/128, 134
Doors	B/2-FH-30-128, B/2-FH-63-134

HOT STANDBY SYSTEMS	Equipment	Valves	Cable
Reactor Coolant			
Reactor Protection System			
Shutdown Cooling			
Chemical and Volume Control			
Main Feedwater			
Main Steam			
HVAC			
Auxiliary Feedwater			
Engineered Safety Feature			
Component Cooling Water			
Saltwater Cooling Water			
Emergency Chilled Water			
Diesel Generator Systems			

COLD SHUTDOWN SYSTEMS	Equipment	Valves	Cable
Shutdown Cooling			
CCW (To SDC)			
HVAC			
Summary (Hot and Cold)			

ESSENTIAL ELECTRIC SYSTEMS	Equipment	MCC and Switchgear	Cable
220 KV (AC)			
4160 V (AC)			
480 V (AC)			
120 V (AC)			
125 V (DC)			
Electric Panels			
Summary			

ASSOCIATED CIRCUITS OF CONCERN

H/I Pressure Interface	NO
Spurious Operation	NO

7.4.9 FIRE AREA/ZONE: 2-FH-45-130

FIRE AREA/ZONE: 2-FH-45-130

AREA: 875 sq. ft. DESCRIPTION: A/C RM. NO. 2

DESIGN BASIS FIRE

Fire Loading Category:	Medium
Fire Loading - Max Permiss:	160,000.0 Btu's/sq.ft.

FIRE PROTECTION (AVAILABLE)

Suppression (type)	manual water spray for charcoal
Hose Stations	none
Portable Extinguishers	yes, adjacent
Detectors (type)	ionization, temp. detectors for charcoal

FIRE RESISTANCE RATING

Walls	3hr
Floor, Ceiling, Roof	2hr
Penetrations	P, D, C
Fixed Openings	none
Doors	A/2-PE-45-3A

HOT STANDBY SYSTEMS	Equipment	Valves	Cable
Reactor Coolant			
Reactor Protection System			
Shutdown Cooling			
Chemical and Volume Control			
Main Feedwater			
Main Steam			
HVAC			
Auxiliary Feedwater			
Engineered Safety Feature			
Component Cooling Water			
Saltwater Cooling Water			
Emergency Chilled Water			
Diesel Generator Systems			

COLD SHUTDOWN SYSTEMS	Equipment	Valves	Cable
Shutdown Cooling			
CCW (To SDC)			
HVAC			
Summary (Hot and Cold)			

ESSENTIAL ELECTRIC SYSTEMS	Equipment	MCC and Switchgear	Cable
220 KV (AC)			
4160 V (AC)			
480 V (AC)			
120 V (AC)			
125 V (DC)			
Electric Panels			A
Summary			A

ASSOCIATED CIRCUITS OF CONCERN

H/I Pressure Interface	NO
Spurious Operation	NO

FIRE AREA/ZONE 2-FH-45-130

7.4.9.1 Location

Fuel Handling Building - El. 45'-0" - A/C Room No. 2 - 875 square feet - Figure 8-20

7.4.9.2 Fire Loading

Fire loading category - Medium
Maximum permissible fire loading - 160,000 Btu/sq. ft. (Note 1)

Note 1:The maximum permissible loading is based on an evenly distributed loading of combustible materials.

7.4.9.3 Design Basis Fire

The design basis fire is postulated to be a fire that would involve mostly charcoal and cable insulation.

The design basis fire is conservatively based on the simultaneous total combustion of all combustibles in the area.

7.4.9.4 Fire Protection Equipment

A manual water spray system is provided for the charcoal filters in the area. A temperature detector is located in the charcoal filter to alarm filter high temperature conditions in the control room. Manual fire fighting equipment is available in the area and in adjacent zone 2-PE-45-3A. An ionization smoke detector provides early warning alarm in the control room.

7.4.9.5 Construction

The walls defining the area are 3 hour rated reinforced concrete construction. The ceiling and floor are 2 hour rated. One 3 hour rated door separates the area from the penetration building (2-PE-45-3A). Ventilation duct penetrations are provided with 3 hour rated dampers.

7.4.9.6 Licensee Controlled Specification Barriers

For definition of the barriers requiring surveillance per LCS 3.7.104, refer to the latest revision of Figure 8-20, sheet 3.

7.4.9.7 Conclusions

In the event of a charcoal fire, the temperature detector installed in the filters is expected to provide control room alarm on high temperature. The operator will then send personnel into the area to manually operate the charcoal filter water spray system to control and extinguish the fire.

In the event of a transient fire in the area, the ionization detector is expected to detect the fire and alert the control room.

The design basis fire is insufficient to breach the barriers defining the zone/fire area.

Normal ventilation will effectively remove the smoke from the area until the fire dampers operate. Portable smoke exhaust fans may then be used to vent smoke from the area.

7.4.9.8 Fire Area 2-FH-45-130 Appendix R Compliance

Safe shutdown capability will be provided by utilizing Train B systems. Functionally redundant components protected from fire damage will be utilized to achieve safe shutdown.

One train of systems necessary to achieve hot standby and cold shutdown conditions independent of the subject fire area will be free of fire damage. Therefore, this fire area complies with the criteria of 10CFR50, Appendix R, III.G.1.

7.4.10 FIRE AREA/ZONE: **2-FH-45-131**

FIRE AREA/ZONE: 2-FH-45-131

AREA: 34 sq. ft. DESCRIPTION: VESTIBULE 303

DESIGN BASIS FIRE

Fire Loading Category:	Minimal
Fire Loading - Max Permiss:	160,000.0 Btu's/sq.ft.

FIRE PROTECTION (AVAILABLE)

Suppression (type)	none
Hose Stations	none
Portable Extinguishers	none, adjacent
Detectors (type)	none

FIRE RESISTANCE RATING

Walls	3hr/3A, others 2hr
Floor, Ceiling, Roof	2hr
Penetrations	C
Fixed Openings	none
Doors	B/2-FH-15-124, B/2-FH-45-132, A/2-PE-45-3A

HOT STANDBY SYSTEMS	Equipment	Valves	Cable
Reactor Coolant			
Reactor Protection System			
Shutdown Cooling			
Chemical and Volume Control			
Main Feedwater			
Main Steam			
HVAC			
Auxiliary Feedwater			
Engineered Safety Feature			
Component Cooling Water			
Saltwater Cooling Water			
Emergency Chilled Water			
Diesel Generator Systems			

COLD SHUTDOWN SYSTEMS	Equipment	Valves	Cable
Shutdown Cooling			
CCW (To SDC)			
HVAC			
Summary (Hot and Cold)			

ESSENTIAL ELECTRIC SYSTEMS	Equipment	MCC and Switchgear	Cable
220 KV (AC)			
4160 V (AC)			
480 V (AC)			
120 V (AC)			
125 V (DC)			
Electric Panels			
Summary			

ASSOCIATED CIRCUITS OF CONCERN

H/I Pressure Interface	NO
Spurious Operation	NO

7.4.11 FIRE AREA/ZONE: 2-FH-45-132

FIRE AREA/ZONE: 2-FH-45-132

AREA: 743 sq. ft. DESCRIPTION: A/C RM. NO. 1

DESIGN BASIS FIRE

Fire Loading Category:	High
Fire Loading - Max Permiss:	(SEE TEXT)

FIRE PROTECTION (AVAILABLE)

Suppression (type)	manual water spray for charcoal
Hose Stations	none
Portable Extinguishers	yes
Detectors (type)	ionization, temp. detector for charcoal

FIRE RESISTANCE RATING

Walls	3hr/3A, 123, 142C, others 2hr
Floor, Ceiling, Roof	2hr
Penetrations	P, C, D
Fixed Openings	none
Doors	B/2-FH-45-131

HOT STANDBY SYSTEMS	Equipment	Valves	Cable
Reactor Coolant			
Reactor Protection System			
Shutdown Cooling			
Chemical and Volume Control			
Main Feedwater			
Main Steam			
HVAC			
Auxiliary Feedwater			
Engineered Safety Feature			
Component Cooling Water			
Saltwater Cooling Water			
Emergency Chilled Water			
Diesel Generator Systems			

COLD SHUTDOWN SYSTEMS	Equipment	Valves	Cable
Shutdown Cooling			
CCW (To SDC)			
HVAC			
Summary (Hot and Cold)			

ESSENTIAL ELECTRIC SYSTEMS	Equipment	MCC and Switchgear	Cable
220 KV (AC)			
4160 V (AC)			
480 V (AC)			
120 V (AC)			
125 V (DC)			
Electric Panels			B
Summary			B

ASSOCIATED CIRCUITS OF CONCERN

H/I Pressure Interface	NO
Spurious Operation	NO

FIRE AREA/ZONE 2-FH-45-132

7.4.11.1 Location

Fuel Handling Building - El. 45'-0" - A/C Room No. 1 - 743 square feet - Figure 8-20

7.4.11.2 Fire Loading

Fire loading category - High
Maximum permissible fire loading - 160,000 Btu/sq. ft. (Notes 1 and 2)
Note 1:The maximum permissible loading is based on an evenly distributed loading of combustible materials.

Note 2:The maximum permissible fire loading is based on the reduced fuel contribution of the charcoal, which is entirely contained within the charcoal filters.
Design Basis Fire

The design basis fire is postulated to be a fire that would involve mostly charcoal.

The design basis fire is conservatively based on the simultaneous total combustion of all combustibles in the area.

7.4.11.3 Fire Protection Equipment

A manual water spray system is provided for the charcoal filters in the area. A temperature detector is located in the charcoal filter to alarm filter high temperature conditions in the control room. Manual fire fighting equipment is available within the area. One ionization smoke detector provides early warning alarm in the control room.

7.4.11.4 Construction

The wall to 2-FH-17-123, 2-CT-16-142C and 2-PE-45-3A are 3 hour rated. The remaining walls are 2 hour rated. The ceiling and floor are 2 hour rated. A 1-1/2 hour rated door allows access to the area from the vestibule (2-FH-45-131). Ventilation duct penetrations in 3 hour rated walls are provided with 3 hour rated fire dampers. Ventilation penetrations in the floor are provided with 1-1/2 hour rated fire dampers.

7.4.11.5 Licensee Controlled Specification Barriers

For definition of the barriers requiring surveillance per LCS 3.7.104, refer to the latest revision of Figure 8-20, sheet 3.

7.4.11.6 Conclusions

In the event of a charcoal fire, the temperature detector installed in the filters is expected to provide control room alarm on high temperature. The operator will then send personnel into the area to manually operate the charcoal filter water spray system to control and extinguish the fire.

In the event of a transient fire in the area, the ionization detector is expected to detect the fire and alert the control room.

The normal ventilation system will effectively remove the smoke from the area until the fire dampers operate. Portable smoke exhaust fans may then be used to vent smoke from the area.

The design basis fire is insufficient to breach the barriers defining the zone/fire area.

7.4.11.7 Fire Area 2-FH-45-132 Appendix R Compliance

Safe shutdown capability will be provided by utilizing Train A systems. Functionally redundant components protected from fire damage will be utilized to achieve safe shutdown.

One train of systems necessary to achieve hot standby and cold shutdown conditions independent of the subject fire area will be free of fire damage. Therefore, this fire area complies with the criteria of 10CFR50, Appendix R, III.G.1.

7.4.12 FIRE AREA/ZONE: 2-FH-63-134

FIRE AREA/ZONE: 2-FH-63-134

AREA: 34 sq. ft. DESCRIPTION: VESTIBULE 403

DESIGN BASIS FIRE

Fire Loading Category:	Minimal
Fire Loading - Max Permiss:	13,000.0 Btu's/sq.ft.

FIRE PROTECTION (AVAILABLE)

Suppression (type)	none
Hose Stations	none
Portable Extinguishers	none, adjacent
Detectors (type)	none

FIRE RESISTANCE RATING

Walls	3hr/3B, others 2hr
Floor, Ceiling, Roof	2hr
Penetrations	C
Fixed Openings	MH/129
Doors	B/2-FH-15-124, NR/roof, A/2-PE-63-3B, B/2-FH-30-129

HOT STANDBY SYSTEMS	Equipment	Valves	Cable
Reactor Coolant			
Reactor Protection System			
Shutdown Cooling			
Chemical and Volume Control			
Main Feedwater			
Main Steam			
HVAC			
Auxiliary Feedwater			
Engineered Safety Feature			
Component Cooling Water			
Saltwater Cooling Water			
Emergency Chilled Water			
Diesel Generator Systems			

COLD SHUTDOWN SYSTEMS	Equipment	Valves	Cable
Shutdown Cooling			
CCW (To SDC)			
HVAC			
Summary (Hot and Cold)			

ESSENTIAL ELECTRIC SYSTEMS	Equipment	MCC and Switchgear	Cable
220 KV (AC)			
4160 V (AC)			
480 V (AC)			
120 V (AC)			
125 V (DC)			
Electric Panels			
Summary			

ASSOCIATED CIRCUITS OF CONCERN

H/I Pressure Interface	NO
Spurious Operation	NO

FIRE AREA/ZONE 2-FH-63-134

7.4.12.1 Location

Fuel Handling Building - El. 63'-6" - Vestibule 403
34 square feet - Figure 8-20

7.4.12.2 Fire Loading

Fire loading category - Minimal
Maximum permissible fire loading - 13,000 Btu/sq. ft. (Note 1)

Note 1:The maximum permissible fire loading is based on an evenly distributed loading of combustible materials.

7.4.12.3 Design Basis Fire

A fire is not expected to occur in this area during normal operation. The maximum credible fire is postulated to involve transient combustible materials.

7.4.12.4 Fire Protection Equipment

There is no fire suppression or detection equipment in the area. Manual fire fighting equipment is available in adjacent zone 2-PE-63-3B.

7.4.12.5 Construction

The floor, ceiling, and walls of the area are 2 hour rated except the wall to 2-PE-63-3B which is 3 hour rated. A 1-1/2 hour rated metal hatch connects the area to the dumbwaiter, 2-FH-30-129. A 3 hour rated fire door communicates with the electrical penetration/personnel monitor area, 2-PE-63-3B. A 1-1/2 hour rated door communicates with the staircase, 2-FH-15-124. A non-rated door communicates with the roof.

7.4.12.6 Licensee Controlled Specification Barriers

For definition of the barriers requiring surveillance per LCS 3.7.104, refer to the latest revision of Figure 8-20, sheet 3.

7.4.12.7 Conclusions

There is no suppression or detection in the fire area. Portable extinguishers are available in zone 2-PE-63-3B. The floor, ceiling, and walls are 2 hour rated. These fire protection and construction features are adequate to mitigate the consequences of fire.

FIRE AREA/ZONE 2-FH-63-134

The fire boundary between 2-FH-63-134 and 2-PE-63-3B and 2-PE-45-3A was evaluated. The boundaries and associated fire protection features were found to be adequate to prevent the propagation of fire between the fire areas.

The design basis fire is insufficient to breach the barriers defining the zone/fire area.

7.4.12.8 Fire Area 2-FH-63-134 Appendix R Compliance

Safe shutdown capability will be provided by utilizing Train A or Train B systems. Functionally redundant components protected from fire damage will be utilized to achieve safe shutdown.

One train of systems necessary to achieve hot standby and cold shutdown conditions independent of the subject fire area will be free of fire damage. Therefore, this fire area complies with the criteria of 10CFR50, Appendix R, III.G.1.

7.4.13 FIRE AREA/ZONE: 2-FH-30-174A

FIRE AREA/ZONE: 2-FH-30-174A

AREA: 3165 sq. ft. DESCRIPTION: RAILROAD BAY

DESIGN BASIS FIRE

Fire Loading Category:	Minimal
Fire Loading - Max Permiss:	160,000.0 Btu's/sq.ft.

FIRE PROTECTION (AVAILABLE)

Suppression (type)	wet pipe sprinklers
Hose Stations	none
Portable Extinguishers	none
Detectors (type)	none

FIRE RESISTANCE RATING

Walls	west/3hr, east/HC,north, 174B/NR
Floor, Ceiling, Roof	2hr
Penetrations	C
Fixed Openings	MH/123, CH/123
Doors	none

HOT STANDBY SYSTEMS	Equipment	Valves	Cable
Reactor Coolant			
Reactor Protection System			
Shutdown Cooling			
Chemical and Volume Control			
Main Feedwater			
Main Steam			
HVAC			
Auxiliary Feedwater			
Engineered Safety Feature			
Component Cooling Water			
Saltwater Cooling Water			
Emergency Chilled Water			
Diesel Generator Systems			

COLD SHUTDOWN SYSTEMS	Equipment	Valves	Cable
Shutdown Cooling			
CCW (To SDC)			
HVAC			
Summary (Hot and Cold)			

ESSENTIAL ELECTRIC SYSTEMS	Equipment	MCC and Switchgear	Cable
220 KV (AC)			
4160 V (AC)			
480 V (AC)			
120 V (AC)			
125 V (DC)			
Electric Panels			
Summary			

ASSOCIATED CIRCUITS OF CONCERN

H/I Pressure Interface	NO
Spurious Operation	NO

7. DETAILED FIRE HAZARD ANALYSIS

7.5 UNIT 2 TURBINE BUILDING

The Unit 2 Turbine Building is a reinforced concrete structure adjacent to the Safety Equipment Building and the Auxiliary Control Building. The Turbine Building is divided into five (5) fire areas. The barrier, penetration and door ratings are noted in the matrices.

The Turbine Building contains part of or all of the following systems, which can be used for, or support, safe shutdown and cooldown:

- Chemical and Volume Control
- HVAC
- Saltwater Cooling
- Shutdown Cooling
- Essential Electrical
- Component Cooling Water

The types of fire protection/detection equipment available in or near this building consists of the following:

- Portable extinguishers.
- Automatic water spray systems provide fire suppression to the following hazard areas; feedwater pumps, feedwater turbines, lube oil conditioner,hydrogen oil seal unit, lube oil room and hydrogen gas control cubicle. Heat detectors are provided to actuate fire suppression systems for the hazard areas above.
- Smoke and fixed temperature rate of rise heat detectors.
- Wet-pipe sprinkler systems provide fire suppression to feedwater pump/turbine lube oil purifiers"..
- Carbon dioxide suppression to protect the turbine generator bearings.
- A standpipe system with manual hose stations.

Fire Area/Zone	Contains Safe Shutdown Equipment/Cables	Contains Safety-Related Equipment/Cables	Figure No.
2-TB-7-148A	Yes	Yes	8-21, 8-22, 8-23
2-TB-7-148B	Yes	Yes	8-21
2-TB-9-148C	Yes	Yes	8-21
2-TB-34-148D	Yes	No	8-22
2-TB-(-9)-148E	Yes	Yes	8-21, 8-37
2-TB-9-148F	Yes	Yes	8-21
2-TB-8-148G	Yes	Yes	8-1, 8-16, 8-21
2-TB-30-148H	No	No	8-22, 8-23, 8-24
2-TB-7-149	No	No	8-21, 8-22
2-TB-7-150	No	No	8-21, 8-22, 8-23
2-TB-30-153	Yes	No	8-22
2-TB-72-154A	No	No	8-24
2-TB-72-154B	No	No	8-24

7.5.1 FIRE AREA/ZONE 2-TB-7-148A

FIRE AREA/ZONE: 2-TB-7-148A

AREA: 47626 sq. ft. DESCRIPTION: TURBINE BLDG.

DESIGN BASIS FIRE

Fire Loading Category:	Low
Fire Loading - Max Permiss:	80,000.0 Btu's/sq.ft.

FIRE PROTECTION (AVAILABLE)

Suppression (type)	water spray, wet-pipe sprinkler systems locally
Hose Stations	(12)
Portable Extinguishers	yes
Detectors (type)	ionization, local heat detectors

FIRE RESISTANCE RATING3

Walls	(see text)
Floor, Ceiling, Roof	2hr/153, 149, HC/154A, 148E, grade
Penetrations	ND/153
Fixed Openings	OD/148G, MH/148E, MH/153, metal shroud/154A
Doors	(2)A/2-149, B/2-153, (2)B/2-150, (2)X/2-148C, (3)NR/2-148H, (4)NR/ext, W/2-136, W/2-135A

HOT STANDBY SYSTEMS	Equipment	Valves	Cable
Reactor Coolant			
Reactor Protection System			
Shutdown Cooling			
Chemical and Volume Control			
Main Feedwater			
Main Steam			
HVAC			
Auxiliary Feedwater			
Engineered Safety Feature			
Component Cooling Water			
Saltwater Cooling Water			
Emergency Chilled Water			
Diesel Generator Systems			

COLD SHUTDOWN SYSTEMS	Equipment	Valves	Cable
Shutdown Cooling			
CCW (To SDC)			
HVAC			
Summary (Hot and Cold)			

ESSENTIAL ELECTRIC SYSTEMS	Equipment	MCC and Switchgear	Cable
220 KV (AC)			X
4160 V (AC)			
480 V (AC)			
120 V (AC)			
125 V (DC)			
Electric Panels			A,B,C,D,X
Summary			A,B,C,D,X

ASSOCIATED CIRCUITS OF CONCERN

H/I Pressure Interface	NO
Spurious Operation	YES

FIRE AREA/ZONE 2-TB-7-148A

7.5.1.1 Location

Turbine Building - El. 7'-0" - Unit 2
47626 square feet

7.5.1.2 Fire Loading

Fire loading category - Low
Maximum permissible fire loading - 80,000 Btu/sq. ft. (Note 1)

Note 1:The maximum permissible fire loading is based on an evenly distributed loading of combustible materials.

7.5.1.3 Design Basis Fire

The design basis fire is postulated to be a fire that would involve mostly cable insulation, charcoal, plastic, miscellaneous combustibles, and oil.

The design basis fire is conservatively based on the simultaneous total combustion of all combustibles in the zone.

7.5.1.4 Fire Protection Equipment

The zone contains an automatic local water spray and wet pipe sprinkler systems for the feedpump oil and generator seal oil systems. Manual fire fighting equipment is available within the zone. Hose streams are available from yard hydrants or portable equipment. Local heat detectors provide water spray actuation. Ionization smoke detectors, located throughout the zone, provide early warning alarm in the control room.

7.5.1.5 Construction

A 3 hour rated wall separates the zone from 2-TB-7-149, 2-SE-(-5)-135A, 2-SE-(-5)-136, 2-SE-30-142A, 2-CT-(-2)-142B and 2-TB-9-148C. The zone is separated from the elevator shaft, 2-TB-7-150, by a 2 hour rated wall. The walls between this zone and area 2-TB-30-153 are 1 hour rated. The remaining barriers are nonrated. The floor and ceiling are 2 hour rated concrete construction except to 2-TB-(-9)-148E, 2-TB-72-154A and grade which are nonrated heavy concrete. An open doorway communicates with the corridor, 2-TB-8-148G.

A metal hatch connects the zone to the Unit 2/3 saltwater cooling pipe tunnel, 2-TB-(-9)-148E. Nonrated ductwork penetrations exist in the zone. A 3 hour rated door communicates with the main lube oil building, 2-TB-7-149. The elevator shaft, 2-TB-7-150, and the switchgear room, 2-TB-30-153, are separated from the zone by 1-1/2 hour rated doors. Two UL Class A equivalent doors separate the zone from the pump/heat exchanger area, 2-TB-9-148C. Nonrated

doors connect the zone to the full flow condensate polisher demineralizer area, 2-TB-30-148H, and the exterior. Watertight doors communicate to 2-SE-(-15)-136 and 2-SE-(-5)-135A.

7.5.1.6 Licensee Controlled Specification Barriers

For definition of the barriers requiring surveillance per LCS 3.7.104, refer to the latest revision of Figure 8-21, Sheet 3.

7.5.1.7 Conclusions

Manual suppression, wet-pipe sprinkler and local water spray capability is provided in the fire zone. Ionization and local heat detectors are available.

The fire boundary between 2-TB-7-148A and 2-TB-7-149 (floor/ceiling) was evaluated. The boundaries and associated fire protection features were found to be adequate to prevent the propagation of fire between the fire areas.

The design basis fire is insufficient to breach the barriers defining the zone/fire area.

7.5.1.8 Fire Area 2-TB-(-9)-148 Fire Area Compliance

Safe shutdown capability will be provided by utilizing Train B systems for Units 2 and 3. Functionally redundant components protected from fire damage will be utilized in conjunction with operator action on manual or disabled components to achieve safe shutdown.

One train of systems necessary to achieve hot standby and cold shutdown has been evaluated to remain available for safe shutdown of Units 2 and 3 in accordance with 10CFR50, Appendix R, III.G.1 and III.G.2.b and c. A deviation from the requirements of 10CFR50 Appendix R, III.G.2 has been accepted for (1) redundant safe shutdown equipment in zones 2-TB-9-148F and 3-TB-9-148F separated by greater than 20 feet with limited intervening combustibles and partial detection, and (2) for lack of area-wide suppression and detection in the Turbine Building fire area 148.

7.5.2 FIRE AREA/ZONE 2-TB-7-148B

FIRE AREA/ZONE: 2-TB-7-148B

AREA: 4520 sq. ft. DESCRIPTION: UNIT 2/3 ACCESS ROAD

DESIGN BASIS FIRE

Fire Loading Category:	Low
Fire Loading - Max Permiss:	160,000.0 Btu's/sq.ft.

FIRE PROTECTION (AVAILABLE)

Suppression (type)	wet pipe sprinklers
Hose Stations	none, (1) in 2-TB-9-148C
Portable Extinguishers	none, adjacent
Detectors (type)	none

FIRE RESISTANCE RATING3

Walls	east 3hr, west HC, north & south NR
Floor, Ceiling, Roof	HC
Penetrations	NP/148C, NP/148F
Fixed Openings	MH/148D, OP/148C
Doors	L/2-TB-9-148F, L/3-TB-9-148F, NR/2-TB-9,148C, A/2-AC-9-16, NR/3-TB-9-148C, NR/2-AC-9-8, 13

HOT STANDBY SYSTEMS	Equipment	Valves	Cable
Reactor Coolant			
Reactor Protection System			
Shutdown Cooling			
Chemical and Volume Control			
Main Feedwater			
Main Steam			
HVAC			
Auxiliary Feedwater			
Engineered Safety Feature			
Component Cooling Water			
Saltwater Cooling Water			
Emergency Chilled Water			
Diesel Generator Systems			

COLD SHUTDOWN SYSTEMS	Equipment	Valves	Cable
Shutdown Cooling			
CCW (To SDC)			
HVAC			
Summary (Hot and Cold)			

ESSENTIAL ELECTRIC SYSTEMS	Equipment	MCC and Switchgear	Cable
220 KV (AC)			X
4160 V (AC)			
480 V (AC)			
120 V (AC)			
125 V (DC)			
Electric Panels			A,B,C,D
Summary			A,B,C,D,X

ASSOCIATED CIRCUITS OF CONCERN

H/I Pressure Interface	NO
Spurious Operation	YES

FIRE AREA/ZONE 2-TB-7-148B

7.5.2.1 Location

Unit 2/3 Access Road - El. 7'-0"
4520 square feet

7.5.2.2 Fire Loading

Fire loading category - Low
Maximum permissible fire loading - 160,000 Btu/sq. ft. (Note 1)

Note 1:The maximum permissible fire loading is based on an evenly distributed loading of combustible materials.

7.5.2.3 Design Basis Fire

The design basis fire is postulated to be a fire that would involve mostly cable insulation.

The design basis fire is conservatively based on the simultaneous total combustion of all combustibles in the zone.

7.5.2.4 Fire Protection Equipment

The zone contains an automatic wet pipe sprinkler system. Manual fire fighting equipment is available in the adjacent zone 2-TB-9-148C.

7.5.2.5 Construction

The zone has a 3 hour rated east wall and a heavy concrete west wall and floor and ceiling. There are no physical barriers to the north and south. The zone is separated from 2-TB-34-148D by a metal hatch. There is an opening to the pump/heat exchanger area, 2-TB-9-148C. Rated, nonrated, and bullet resistant doors separate the zone from adjacent areas and zones.

7.5.2.6 Licensee Controlled Specification Barriers

For definition of the barriers requiring surveillance per LCS 3.7.104, refer to the latest revision of Figure 8-24, Sheet 3.

7.5.2.7 Conclusions

A deviation from the requirements of 10CFR50 Appendix R, III.G.2 has been accepted for lack of area-wide suppression and detection in the Turbine Building fire area 148.

Appendix R compliance for fire area 2-TB-(-9)-148 is discussed in fire zone 2-TB-7-148A.

7.5.3 FIRE AREA/ZONE 2-TB-9-148C

FIRE AREA/ZONE: 2-TB-9-148C

AREA: 6841 sq. ft. DESCRIPTION: PUMP/HT. EXCH. AREA

DESIGN BASIS FIRE

Fire Loading Category:	Minimal
Fire Loading - Max Permiss:	13,000.0 Btu's/sq.ft.

FIRE PROTECTION (AVAILABLE)

Suppression (type)	none
Hose Stations	(1)
Portable Extinguishers	yes
Detectors (type)	none

FIRE RESISTANCE RATING3

Walls	3hr/148A, others HC
Floor, Ceiling, Roof	NR no roof
Penetrations	NP/149
Fixed Openings	OP/exterior, OP/149
Doors	NR/2-TB-7,148B, L/2-TB-9-148F, A/2-TB-7-149, (2) X/2-TB-7-148A

HOT STANDBY SYSTEMS	Equipment	Valves	Cable
Reactor Coolant			
Reactor Protection System			
Shutdown Cooling			
Chemical and Volume Control			
Main Feedwater			
Main Steam			
HVAC			
Auxiliary Feedwater			
Engineered Safety Feature			
Component Cooling Water			
Saltwater Cooling Water			
Emergency Chilled Water			
Diesel Generator Systems			

COLD SHUTDOWN SYSTEMS	Equipment	Valves	Cable
Shutdown Cooling			
CCW (To SDC)			
HVAC			
Summary (Hot and Cold)			

ESSENTIAL ELECTRIC SYSTEMS	Equipment	MCC and Switchgear	Cable
220 KV (AC)			
4160 V (AC)			
480 V (AC)			
120 V (AC)			
125 V (DC)			
Electric Panels			A
Summary			A

ASSOCIATED CIRCUITS OF CONCERN

H/I Pressure Interface	NO
Spurious Operation	NO

FIRE AREA/ZONE 2-TB-9-148C

7.5.3.1 Location

Intake Structure - El. 9'-0" - Unit 2 Circulation Water Pump/Heat Exchanger Area - 6841 square feet - Figure 8-21

7.5.3.2 Fire Loading

Fire loading - Minimal
Maximum permissible fire loading - 13,000 Btu/sq. ft. (Note 1)

Note 1:The maximum permissible fire loading is based on an evenly distributed loading of combustible materials.

7.5.3.3 Design Basis Fire

The design basis fire is postulated to be a fire that would involve mostly cable insulation.

The design basis fire is conservatively based on the simultaneous total combustion of all combustibles in the zone.

7.5.3.4 Fire Protection Equipment

Manual fire fighting equipment is available within the zone. No fire detection equipment is provided within the zone.

7.5.3.5 Construction

The zone is not enclosed. A 3 hour rated reinforced concrete wall separates the area from the turbine building (2-TB-7-148A). The zone is separated from the adjacent saltwater cooling pump room (2-TB-9-148F) and main lube oil building (2-TB-7-149) by heavy concrete walls. A nonrated door communicates with the access road (2-TB-7-148B). A bullet-resistant door opens to the saltwater cooling pump room. A 3 hour rated door separates the area from the main lube oil building. Two UL Class A equivalent doors separate the zone from zone 2-148A.

Licensee Controlled Specification Barriers

For definition of the barriers requiring surveillance per LCS 3.7.104, refer to the latest revision of Figure 8-21, Sheet 3.

7.5.3.6 Conclusions

Manual suppression capability is provided in the fire zone. Heavy concrete walls and rated, nonrated, and bullet-resistant doors separate the zone from adjacent safety related zones.

FIRE AREA/ZONE 2-TB-9-148C

The design basis fire is insufficient to breach the barriers defining the zone/fire area.

A deviation from the requirements of 10CFR50 Appendix R, III.G.2 has been accepted for lack of area-wide suppression and detection in the Turbine Building fire area 148.

Appendix R compliance for fire area 2-TB-(-9)-148 is discussed in fire zone 2-TB-7-148A.

7.5.4 FIRE AREA/ZONE 2-TB-34-148D

FIRE AREA/ZONE: 2-TB-34-148D

AREA: 4520 sq. ft. DESCRIPTION: UNIT 2/3 ACCESS BRIDGE

DESIGN BASIS FIRE

Fire Loading Category:	Minimal
Fire Loading - Max Permiss:	13,000.0 Btu's/sq.ft.

FIRE PROTECTION (AVAILABLE)

Suppression (type)	none
Hose Stations	none , (2) in 2-TB-7-148A, (2) in 3-TB-7-148A
Portable Extinguishers	none
Detectors (type)	none

FIRE RESISTANCE RATING3

Walls	east 3hr, west, north, south NR
Floor, Ceiling, Roof	HC
Penetrations	D, C, P, NP/148B
Fixed Openings	MH/148B, OP/148A (U2 & U3), OP/exterior
Doors	(2)A/2-AC-30-20E, NR/2-AC-30-27, NR/2-AC-30-22

HOT STANDBY SYSTEMS	Equipment	Valves	Cable
Reactor Coolant			
Reactor Protection System			
Shutdown Cooling			
Chemical and Volume Control			
Main Feedwater			
Main Steam			
HVAC			
Auxiliary Feedwater			
Engineered Safety Feature			
Component Cooling Water			
Saltwater Cooling Water			
Emergency Chilled Water			
Diesel Generator Systems			

COLD SHUTDOWN SYSTEMS	Equipment	Valves	Cable
Shutdown Cooling			
CCW (To SDC)			
HVAC			
Summary (Hot and Cold)			

ESSENTIAL ELECTRIC SYSTEMS	Equipment	MCC and Switchgear	Cable
220 KV (AC)			
4160 V (AC)			
480 V (AC)			
120 V (AC)			
125 V (DC)			
Electric Panels			X
Summary			X

ASSOCIATED CIRCUITS OF CONCERN

H/I Pressure Interface	NO
Spurious Operation	NO

FIRE AREA/ZONE 2-TB-34-148D

7.5.4.1 Location

Unit 2/3 Access Bridge - El. 34'-0"
4520 square feet

7.5.4.2 Fire Loading

Fire loading category - Minimal
Maximum permissible fire loading - 13,000 Btu/sq. ft. (Note 1)

Note 1:The maximum permissible fire loading is based on an evenly distributed loading of combustible materials.

7.5.4.3 Design Basis Fire

The design basis fire is postulated to be a fire that would involve mostly cable insulation.

The design basis fire is conservatively based on the simultaneous total combustion of all combustibles in the zone.

7.5.4.4 Fire Protection Equipment

The zone contains no suppression or detection. Manual fire fighting equipment is available in the adjacent zones 2-TB-7-148A and 3-TB-7-148A.

7.5.4.5 Construction

The zone is bounded on the east by a 3 hour rated reinforced concrete wall, the west by a nonrated wall, and above and below by a heavy concrete floor/ceiling. There are no physical barriers to the north and south. A metal hatch exists to the access road, 2-TB-7-148B. Three hour rated and non-rated doors communicate to adjacent areas as indicated in the matrix.

7.5.4.6 Licensee Controlled Specification Barriers

For definition of the barriers requiring surveillance per LCS 3.7.104, refer to the latest revision of Figure 8-22, Sheet 3.

7.5.4.7 Conclusions

Manual suppression capability is not provided in the fire zone but is available in fire zones 2-TB-7-148A and 3-TB-7-148A. Detection is not provided in the zone.

FIRE AREA/ZONE 2-TB-34-148D

The design basis fire is insufficient to breach the barriers defining the zone/fire area.

A deviation from the requirements of 10CFR50 Appendix R, III.G.2 has been accepted for lack of area-wide suppression and detection in the Turbine Building fire area 148.
Appendix R compliance for fire area 2-TB-(-9)-148 is discussed in fire zone 2-TB-7-148A.

7.5.5 FIRE AREA/ZONE 2-TB-(-9)-148E

FIRE AREA/ZONE: 2-TB-(-9)148E

AREA: 9470 sq. ft. DESCRIPTION: UNIT 2/3 SALTWATER CLG PIPE TUNNEL

DESIGN BASIS FIRE

Fire Loading Category:	Minimal
Fire Loading - Max Permiss:	160,000.0 Btu's/sq.ft.

FIRE PROTECTION (AVAILABLE)

Suppression (type)	wet pipe sprinklers
Hose Stations	none , (1) in 2-TB-7-148A, (1) in 3-TB-7-148A
Portable Extinguishers	none, adjacent
Detectors (type)	ionization

FIRE RESISTANCE RATING3

Walls	east 3hr, others HC
Floor, Ceiling, Roof	HC
Penetrations	C, P
Fixed Openings	OP/148F (U2 & U3), MH/148A (U2 & U3)
Doors	none

HOT STANDBY SYSTEMS	Equipment	Valves	Cable
Reactor Coolant			
Reactor Protection System			
Shutdown Cooling			
Chemical and Volume Control			
Main Feedwater			
Main Steam			
HVAC			A,b
Auxiliary Feedwater			
Engineered Safety Feature			
Component Cooling Water			
Saltwater Cooling Water			A,B,b
Emergency Chilled Water			
Diesel Generator Systems			

COLD SHUTDOWN SYSTEMS	Equipment	Valves	Cable
Shutdown Cooling			
CCW (To SDC)			
HVAC			
Summary (Hot and Cold)			A,B,b

ESSENTIAL ELECTRIC SYSTEMS	Equipment	MCC and Switchgear	Cable
220 KV (AC)			
4160 V (AC)			b
480 V (AC)			
120 V (AC)			
125 V (DC)			
Electric Panels			A,B
Summary			A,B,b

ASSOCIATED CIRCUITS OF CONCERN

H/I Pressure Interface	NO
Spurious Operation	NO

FIRE AREA/ZONE 2-TB-(-9)-148E

7.5.5.1 Location

Intake Structure - El. (-9'-0") - Unit 2/3 Saltwater Cooling Pipe Tunnel - 9470 square feet - Figure 8-21, 8-37

7.5.5.2 Fire Loading

Fire loading category - Minimal
Maximum permissible fire loading - 160,000 Btu/sq. ft. (Note 1)

Note 1:The maximum permissible fire loading is based on an evenly distributed loading of combustible materials.

7.5.5.3 Design Basis Fire

The design basis fire is postulated to be a fire that would involve mostly cable insulation.

The design basis fire is conservatively based on the simultaneous combustion of all combustibles in the zone.

7.5.5.4 Fire Protection Equipment

The area contains an automatic wet pipe sprinkler system. Manual fire fighting equipment is available in adjacent zones 2-TB-7-148A and 3-TB-7-148A. Ionization smoke detectors, located throughout the zone, provide early warning alarm in the control room.

7.5.5.5 Construction

The east wall of the zone, separating the area from the auxiliary control and safety equipment buildings, is 3 hour rated. The remainder of the zone walls, as well as the floor and ceiling, are heavy concrete construction. The zone communicates with adjacent zones 2-TB-7-148A and 3-TB-7-148A through access hatches at El. 7'-0". The zone communicates with adjacent saltwater cooling pump rooms (2-TB-9-148F and 3-TB-9-148F) through unsealed pipe penetrations. There are no ventilation duct penetrations.

7.5.5.6 Licensee Controlled Specification Barriers

For definition of the barriers requiring surveillance per LCS 3.7.104, refer to the latest revisions of Figures 8-21 and 8-37, Sheet 3.

Power cable for the following systems is wrapped:

4160 Volt: Train B
Saltwater Cooling Water: Train B
HVAC: Train B

7.5.5.7 Conclusions

Smoke may be vented from the area by opening the access hatch at El. 7'-0" of the turbine building. Portable smoke exhaust fans may be used if additional smoke removal capability is required.

The low fire loading and the substantial construction of the heavy concrete walls preclude the propagation of the design basis fire beyond the boundaries defining the area.

The ionization detection system is expected to detect the products of combustion from an incipient fire and alert the control room. The available portable equipment available in adjacent zones is adequate to extinguish the fire. In the event the fire achieves sufficient intensity, the wet pipe sprinkler system will actuate automatically to control and extinguish the fire.

A deviation from the requirements of 10CFR50 Appendix R, III.G.2 has been accepted for lack of area-wide suppression and detection in the Turbine Building fire area 148.

Appendix R compliance for fire area 2-TB-(-9)-148 is discussed in fire zone 2-TB-7-148A.

7.5.6 FIRE AREA/ZONE 2-TB-9-148F

FIRE AREA/ZONE: 2-TB-9-148F

AREA: 3520 sq. ft. DESCRIPTION: UNIT 2 SALTWATER PUMP ROOM

DESIGN BASIS FIRE

Fire Loading Category:	Minimal
Fire Loading - Max Permiss:	160,000.0 Btu's/sq.ft.

FIRE PROTECTION (AVAILABLE)

Suppression (type)	wet pipe sprinklers
Hose Stations	none
Portable Extinguishers	yes
Detectors (type)	ionization

FIRE RESISTANCE RATING3

Walls	HC
Floor, Ceiling, Roof	HC
Penetrations	C, P
Fixed Openings	OP/148E, CH/exterior, OP/exterior
Doors	L/2-TB-9-148C, L/2-TB-7-148B

HOT STANDBY SYSTEMS	Equipment	Valves	Cable
Reactor Coolant			
Reactor Protection System			
Shutdown Cooling			
Chemical and Volume Control			
Main Feedwater			
Main Steam			
HVAC	A,B		A,B
Auxiliary Feedwater			
Engineered Safety Feature			
Component Cooling Water			
Saltwater Cooling Water	A,B	A,B,X	A,B,b
Emergency Chilled Water			
Diesel Generator Systems			

COLD SHUTDOWN SYSTEMS	Equipment	Valves	Cable
Shutdown Cooling			
CCW (To SDC)			
HVAC			
Summary (Hot and Cold)	A,B	A,B,X	A,B

ESSENTIAL ELECTRIC SYSTEMS	Equipment	MCC and Switchgear	Cable
220 KV (AC)			
4160 V (AC)			
480 V (AC)			
120 V (AC)			
125 V (DC)			
Electric Panels			A,B
Summary			A,B

ASSOCIATED CIRCUITS OF CONCERN

H/I Pressure Interface	NO
Spurious Operation	NO

FIRE AREA/ZONE 2-TB-9-148F

7.5.6.1 Location

Intake Structure - El. 9'-0" - Unit 2 Salt Water Cooling Pump Room - 3250 square feet - Figure 8-21

7.5.6.2 Fire Loading

Fire loading category - Minimal
Maximum permissible fire loading - 160,000 Btu/sq. ft. (Note 1)

Note 1:The maximum permissible fire loading is based on an evenly distributed loading of combustible materials

7.5.6.3 Design Basis Fire

The design basis fire is postulated to be a fire that would involve mostly cable insulation and oil.

The design basis fire is conservatively based on the simultaneous total combustion of all combustibles in the zone.

7.5.6.4 Fire Protection Equipment

The zone contains an automatic wet pipe sprinkler system. Manual fire fighting equipment is available within the zone. Hose streams are available from yard hydrants or portable equipment. Ionization smoke detectors, located throughout the zone, provide early warning alarm in the control room.

7.5.6.5 Construction

The walls defining the zone are nonrated reinforced concrete construction with an approximate thickness of 12 inches. The ceiling and floor are also heavy concrete construction. Two bullet-resistant doors separate the zone from adjacent zones 2-TB-9-148C and 2-TB-7-148B. The zone communicates with the adjacent saltwater cooling pipe tunnel (2-TB-(-9)-148E) through an unsealed piping penetration.

7.5.6.6 Licensee Controlled Specification Barriers

For definition of the barriers requiring surveillance per LCS 3.7.104, refer to the latest revisions of Figure 8-21, Sheet 3.

7.5.6.7 Conclusions

Smoke generated by the design basis fire will be vented to the outside through the louvers in the exterior wall of the zone. Portable smoke exhaust fans may be used if additional smoke removal capability is required.

The low fire loading and the substantial construction of the heavy concrete walls and nonrated doors preclude the propagation of the design fire beyond the boundaries defining the zone.

The ionization detection system is expected to detect the products of combustion from an incipient fire and alert the control room. The available portable equipment is adequate to extinguish the fire. In the event the fire achieves sufficient intensity, the wet pipe sprinkler system will actuate automatically to control and extinguish the fire.

A deviation from the requirements of 10CFR50 Appendix R, III.G.2 has been accepted for (1) redundant safe shutdown equipment in zones 2-TB-9-148F and 3-TB-9-148F separated by greater than 20 feet with limited intervening combustibles and partial detection, and (2) for lack of area-wide suppression and detection in the Turbine Building fire area 148.

Appendix R compliance for fire area 2-TB-(-9)-148 is discussed in fire zone 2-TB-7-148A.

7.5.7 FIRE AREA/ZONE 2-TB-8-148G

FIRE AREA/ZONE: 2-TB-8-148G

AREA: 1150 sq. ft. DESCRIPTION: CORRIDOR

DESIGN BASIS FIRE

Fire Loading Category:	Minimal
Fire Loading - Max Permiss:	13,000.0 Btu's/sq.ft.

FIRE PROTECTION (AVAILABLE)

Suppression (type)	none
Hose Stations	none
Portable Extinguishers	none
Detectors (type)	none

FIRE RESISTANCE RATING3

Walls	3hr/2B, 14,82,135A, HC/others
Floor, Ceiling, Roof	2hr
Penetrations	QC/135A, QP/82, C, P
Fixed Openings	OD/148A
Doors	(2)W/2-SE-(5)-135A, W/2-PE-9-2A, W/2-PE-(-18)-2B

HOT STANDBY SYSTEMS	Equipment	Valves	Cable
Reactor Coolant			
Reactor Protection System			
Shutdown Cooling			B
Chemical and Volume Control			
Main Feedwater			
Main Steam			
HVAC			
Auxiliary Feedwater			
Engineered Safety Feature			
Component Cooling Water			A
Saltwater Cooling Water			
Emergency Chilled Water			
Diesel Generator Systems			

COLD SHUTDOWN SYSTEMS	Equipment	Valves	Cable
Shutdown Cooling			A,B
CCW (To SDC)			
HVAC			
Summary (Hot and Cold)			A,B

ESSENTIAL ELECTRIC SYSTEMS	Equipment	MCC and Switchgear	Cable
220 KV (AC)			
4160 V (AC)			
480 V (AC)			
120 V (AC)			
125 V (DC)			
Electric Panels			A,B,X
Summary			A,B,X

ASSOCIATED CIRCUITS OF CONCERN

H/I Pressure Interface	NO
Spurious Operation	YES

FIRE AREA/ZONE 2-TB-8-148G

7.5.7.1 Location

Turbine Building - El. 8'-0" - Corridor
1150 square feet

7.5.7.2 Fire Loading

Fire loading category - Minimal
Maximum permissible fire loading - 13,000 Btu/sq. ft. (Note 1)

Note 1:The maximum permissible fire loading is based on an evenly distributed loading of combustible materials.

7.5.7.3 Design Basis Fire

A fire is not expected to occur in this area during normal operation. The maximum credible fire is postulated to involve transient combustibles.

7.5.7.4 Fire Protection Equipment

None

7.5.7.5 Construction

The south wall of the zone (to areas 2-AC-9-14 and 2-AR-9-82) is 3 hour rated reinforced concrete as is the wall to 2-SE-(-5)-135A. The other walls are heavy concrete construction. The floor and ceiling are 2 hour rated with the exception of the floor to grade which is nonrated heavy concrete construction. An open doorway exists into the turbine building, 2-TB-7-148A. Nonrated watertight doors separate the zone from adjacent areas.

7.5.7.6 Licensee Controlled Specification Barriers

For definition of the barriers requiring surveillance per LCS 3.7.104, refer to the latest revision of Figure 8-21, Sheet 3.

7.5.7.7 Conclusions

No suppression or detection is provided in the zone. Heavy concrete walls Separate the zone from adjacent fire areas/zones.

The fire area boundaries between 2-TB-8-148G and 2-PE-9-2A, 2-AR-9-82, and 2-SE-(-15)-135A were evaluated. The fire boundaries and associated fire protection features were found to be adequate to prevent the propagation of fire beyond the fire boundaries.

FIRE AREA/ZONE 2-TB-8-148G

The design basis fire is insufficient to breach the barriers defining the zone/fire area.

A deviation from the requirements of 10CFR50 Appendix R, III.G.2 has been accepted for lack of area-wide suppression and detection in the Turbine Building fire area 148.

Appendix R compliance for fire area 2-TB-(-9)-148 is discussed in fire zone 2-TB-7-148A.

7.5.8 FIRE AREA/ZONE 2-TB-30-148H

FIRE AREA/ZONE: 2-TB-30-148H

AREA: 9000 sq. ft. DESCRIPTION: FFCPD AREA

DESIGN BASIS FIRE

Fire Loading Category:	Low
Fire Loading - Max Permiss:	40,000.0 Btu's/sq.ft.

FIRE PROTECTION (AVAILABLE)

Suppression (type)	none
Hose Stations	(4)
Portable Extinguishers	yes
Detectors (type)	ionization, heat

FIRE RESISTANCE RATING3

Walls	1hr/153, others/NR
Floor, Ceiling, Roof	NR
Penetrations	none
Fixed Openings	OP/exterior
Doors	(3)NR/2-TB-7-148A, NR/2-TB-30-153

HOT STANDBY SYSTEMS	Equipment	Valves	Cable
Reactor Coolant			
Reactor Protection System			
Shutdown Cooling			
Chemical and Volume Control			
Main Feedwater			
Main Steam			
HVAC			
Auxiliary Feedwater			
Engineered Safety Feature			
Component Cooling Water			
Saltwater Cooling Water			
Emergency Chilled Water			
Diesel Generator Systems			

COLD SHUTDOWN SYSTEMS	Equipment	Valves	Cable
Shutdown Cooling			
CCW (To SDC)			
HVAC			
Summary (Hot and Cold)			

ESSENTIAL ELECTRIC SYSTEMS	Equipment	MCC and Switchgear	Cable
220 KV (AC)			
4160 V (AC)			
480 V (AC)			
120 V (AC)			
125 V (DC)			
Electric Panels			
Summary			

ASSOCIATED CIRCUITS OF CONCERN

H/I Pressure Interface	NO
Spurious Operation	NO

7.5.9 FIRE AREA/ZONE 2-TB-7-149

FIRE AREA/ZONE: 2-TB-7-149

AREA: 1554 sq. ft. DESCRIPTION: MAIN LUBE OIL BUILDING

DESIGN BASIS FIRE

Fire Loading Category:	High
Fire Loading - Max Permiss:	2,666.441.0 Btu's/sq.ft.

FIRE PROTECTION (AVAILABLE)

Suppression (type)	water spray system, wet pipe sprinklers
Hose Stations	none, (1) in 2-tb-7-148A
Portable Extinguishers	yes
Detectors (type)	ionization, heat detectors

FIRE RESISTANCE RATING3

Walls	HC/148C, others 3hr
Floor, Ceiling, Roof	HC/floor, 2hr/ceiling
Penetrations	P, C, D, NP/148C
Fixed Openings	louvers, OP/148C
Doors	(2)A/2-TB-7-148A, A/2-TB-9-148C

HOT STANDBY SYSTEMS	Equipment	Valves	Cable
Reactor Coolant			
Reactor Protection System			
Shutdown Cooling			
Chemical and Volume Control			
Main Feedwater			
Main Steam			
HVAC			
Auxiliary Feedwater			
Engineered Safety Feature			
Component Cooling Water			
Saltwater Cooling Water			
Emergency Chilled Water			
Diesel Generator Systems			

COLD SHUTDOWN SYSTEMS	Equipment	Valves	Cable
Shutdown Cooling			
CCW (To SDC)			
HVAC			
Summary (Hot and Cold)			

ESSENTIAL ELECTRIC SYSTEMS	Equipment	MCC and Switchgear	Cable
220 KV (AC)			
4160 V (AC)			
480 V (AC)			
120 V (AC)			
125 V (DC)			
Electric Panels			
Summary			

ASSOCIATED CIRCUITS OF CONCERN

H/I Pressure Interface	NO
Spurious Operation	NO

7.5.10 FIRE AREA/ZONE 2-TB-7-150

FIRE AREA/ZONE: 2-TB-7-150

AREA: 500 sq. ft. DESCRIPTION: ELEVATOR SHAFT

DESIGN BASIS FIRE

Fire Loading Category:	Minimal
Fire Loading - Max Permiss:	13,000.0 Btu's/sq.ft.

FIRE PROTECTION (AVAILABLE)

Suppression (type)	none
Hose Stations	none, (1) in adjacent zone each floor
Portable Extinguishers	yes, adjacent
Detectors (type)	ionization, in elev. machine room

FIRE RESISTANCE RATING3

Walls	2hr
Floor, Ceiling, Roof	HC
Penetrations	none
Fixed Openings	louver
Doors	(2)B/2-TB-7-148A, NR/exterior

HOT STANDBY SYSTEMS	Equipment	Valves	Cable
Reactor Coolant			
Reactor Protection System			
Shutdown Cooling			
Chemical and Volume Control			
Main Feedwater			
Main Steam			
HVAC			
Auxiliary Feedwater			
Engineered Safety Feature			
Component Cooling Water			
Saltwater Cooling Water			
Emergency Chilled Water			
Diesel Generator Systems			

COLD SHUTDOWN SYSTEMS	Equipment	Valves	Cable
Shutdown Cooling			
CCW (To SDC)			
HVAC			
Summary (Hot and Cold)			

ESSENTIAL ELECTRIC SYSTEMS	Equipment	MCC and Switchgear	Cable
220 KV (AC)			
4160 V (AC)			
480 V (AC)			
120 V (AC)			
125 V (DC)			
Electric Panels			
Summary			

ASSOCIATED CIRCUITS OF CONCERN

H/I Pressure Interface	NO
Spurious Operation	NO

7.5.11 FIRE AREA/ZONE 2-TB-30-153

FIRE AREA/ZONE: 2-TB-30-153

AREA: 4176 sq. ft. DESCRIPTION: SWITCHGEAR ROOM

DESIGN BASIS FIRE

Fire Loading Category:	Low
Fire Loading - Max Permiss:	40,000.0 Btu's/sq.ft.

FIRE PROTECTION (AVAILABLE)

Suppression (type)	none
Hose Stations	none, (1) in 2-TB-7-148A
Portable Extinguishers	yes, adjacent
Detectors (type)	ionization

FIRE RESISTANCE RATING3

Walls	3hr/142B, 1hr/others
Floor, Ceiling, Roof	2hr
Penetrations	D, C, P, ND/148A
Fixed Openings	louvers, MH/148A
Doors	B/2-TB-7-148A, NR/exterior, NR/2-TB-30-148H

HOT STANDBY SYSTEMS	Equipment	Valves	Cable
Reactor Coolant			
Reactor Protection System			
Shutdown Cooling			
Chemical and Volume Control			
Main Feedwater			
Main Steam			
HVAC			
Auxiliary Feedwater			
Engineered Safety Feature			
Component Cooling Water			
Saltwater Cooling Water			
Emergency Chilled Water			
Diesel Generator Systems			

COLD SHUTDOWN SYSTEMS	Equipment	Valves	Cable
Shutdown Cooling			
CCW (To SDC)			
HVAC			
Summary (Hot and Cold)			

ESSENTIAL ELECTRIC SYSTEMS	Equipment	MCC and Switchgear	Cable
220 KV (AC)			X
4160 V (AC)			
480 V (AC)			
120 V (AC)			
125 V (DC)			
Electric Panels			X
Summary			X

ASSOCIATED CIRCUITS OF CONCERN

H/I Pressure Interface	NO
Spurious Operation	NO

FIRE AREA/ZONE 2-TB-30-153

7.5.11.1 Location

Turbine Building - El. 30'-0" - Unit 2 Switchgear Room
4176 square feet

7.5.11.2 Fire Loading

Fire loading category - Low
Maximum permissible fire loading - 40,000 Btu/sq. ft. (Note 1)

Note 1:The maximum permissible fire loading is based on an evenly distributed loading of combustible materials.

7.5.11.3 Design Basis Fire

The design basis fire is postulated to be a fire that would involve mostly cable insulation. The design basis fire is conservatively based on the simultaneous total combustion of all combustibles in the fire area.

7.5.11.4 Fire Protection Equipment

The fire area contains no automatic suppression systems or hose stations and a minimum of one portable extinguisher. Ionization detectors are located in the area to provide early warning alarm to the control room. Yard hydrants and portable extinguishers in adjacent areas are also available to provide fire fighting capability.

7.5.11.5 Construction

The east area boundary is a 3 hour rated wall where it interfaces with 2-CT(-2)-142B. Other walls have one hour ratings. The floor and ceiling have a two hour rating. There are nonrated penetrations and dampers leading to adjacent areas. Two nonrated doors separate the area from the yard and the FFCPD area. A 1-1/2 hour rated door separates the area from zone 148A.

7.5.11.6 Licensee Controlled Specification Barriers

For definition of the barriers requiring surveillance per LCS 3.7.104, refer to the latest revisions of Figure 8-22, Sheet 3.

7.5.11.7 Conclusions

The ionization detectors are expected to detect the products of combustion from an incipient fire and alert the control room for prompt action by the fire department. The available portable equipment is adequate to extinguish the fire. These fire protection features will adequately mitigate the consequences of the fire and confine it to the subject fire area.

FIRE AREA/ZONE 2-TB-30-153

The design basis fire is insufficient to breach the barriers defining the area.

7.5.11.8 Fire Area 2-TB-30-153 Appendix R Compliance

Safe shutdown capability in the subject fire area will be provided utilizing Train A systems. Functionally redundant components protected from fire damage will be utilized to achieve safe shutdown.

One train of systems necessary to achieve hot standby and cold shutdown conditions independent of the subject fire area will be free of fire damage. Therefore, this fire area complies with the criteria of 10CFR50, Appendix R, Section III.G.1.

7.5.12 FIRE AREA/ZONE 2-TB-72-154A

FIRE AREA/ZONE: 2-TB-72-154A

AREA: 49680 sq. ft. DESCRIPTION: TURBINE GENERATOR DECK

DESIGN BASIS FIRE

Fire Loading Category:	Minimal
Fire Loading - Max Permiss:	13,000.0 Btu's/sq.ft.

FIRE PROTECTION (AVAILABLE)

Suppression (type)	CO2 for generator bearings
Hose Stations	(4)
Portable Extinguishers	yes
Detectors (type)	local heat detectors

FIRE RESISTANCE RATING3

Walls	none
Floor, Ceiling, Roof	HC, no roof
Penetrations	NC/148A, NP/148A
Fixed Openings	MH/148A, metal shroud/148A
Doors	none

HOT STANDBY SYSTEMS	Equipment	Valves	Cable
Reactor Coolant			
Reactor Protection System			
Shutdown Cooling			
Chemical and Volume Control			
Main Feedwater			
Main Steam			
HVAC			
Auxiliary Feedwater			
Engineered Safety Feature			
Component Cooling Water			
Saltwater Cooling Water			
Emergency Chilled Water			
Diesel Generator Systems			

COLD SHUTDOWN SYSTEMS	Equipment	Valves	Cable
Shutdown Cooling			
CCW (To SDC)			
HVAC			
Summary (Hot and Cold)			

ESSENTIAL ELECTRIC SYSTEMS	Equipment	MCC and Switchgear	Cable
220 KV (AC)			
4160 V (AC)			
480 V (AC)			
120 V (AC)			
125 V (DC)			
Electric Panels			
Summary			

ASSOCIATED CIRCUITS OF CONCERN

H/I Pressure Interface	NO
Spurious Operation	NO

7.5.13 FIRE AREA/ZONE 2-TB-72-154B

FIRE AREA/ZONE: 2-TB-72-154B

AREA: 4520 sq. ft. DESCRIPTION: ACCESS BRIDGE

DESIGN BASIS FIRE

Fire Loading Category:	Minimal
Fire Loading - Max Permiss:	13,000.0 Btu's/sq.ft.

FIRE PROTECTION (AVAILABLE)

Suppression (type)	none
Hose Stations	none
Portable Extinguishers	none, adjacent
Detectors (type)	none

FIRE RESISTANCE RATING3 none

Walls	3hr/east, others none
Floor, Ceiling, Roof	HC, no roof
Penetrations	D
Fixed Openings	none
Doors	NR/2-AC-70-64

HOT STANDBY SYSTEMS	Equipment	Valves	Cable
Reactor Coolant			
Reactor Protection System			
Shutdown Cooling			
Chemical and Volume Control			
Main Feedwater			
Main Steam			
HVAC			
Auxiliary Feedwater			
Engineered Safety Feature			
Component Cooling Water			
Saltwater Cooling Water			
Emergency Chilled Water			
Diesel Generator Systems			

COLD SHUTDOWN SYSTEMS	Equipment	Valves	Cable
Shutdown Cooling			
CCW (To SDC)			
HVAC			
Summary (Hot and Cold)			

ESSENTIAL ELECTRIC SYSTEMS	Equipment	MCC and Switchgear	Cable
220 KV (AC)			
4160 V (AC)			
480 V (AC)			
120 V (AC)			
125 V (DC)			
Electric Panels			
Summary			

ASSOCIATED CIRCUITS OF CONCERN

H/I Pressure Interface	NO
Spurious Operation	NO

7. DETAILED FIRE HAZARD ANALYSIS

7.6 UNIT 2 CABLE TUNNELS

The Unit 2 Cable Tunnel fire area (a portion of which is in the Safety Equipment building) contains part of or all of the following systems, which can be used for, or support, safe shutdown and cooldown:

- Shutdown Cooling
- Auxiliary Feedwater
- Component Cooling Water
- Saltwater Cooling Water
- Essential Electric Systems
- Diesel Generator
- Main Feedwater
- Main Steam
- HVAC
- Engineered Safety Feature
- Emergency Chilled Water

The barrier, penetration and door ratings are noted in the matrices.

The types of protection/detection equipment available in or near the tunnels consist of the following:

- Portable extinguishers.
- Smoke and fixed temperature rate of rise heat detectors.
- Fixed water spray systems. The detectors used to automatically operate the spray systems will be fixed temperature rate of rise heat detectors.
- Hose streams from yard hydrants or portable equipment.

Fire Area/Zone	Contains Safe Shutdown Equipment/Cables	Contains Safety-Related Equipment/Cables	Figure No.
2-CT-(-2)-142B	Yes	Yes	8-17, 8-25
2-CT-16-142C	Yes	Yes	8-1, 8-2, 8-3, 8-4, 8-19, 8-20, 8-25

7.6.1 FIRE AREA/ZONE 2-CT-(-2)-142B

FIRE AREA/ZONE: 2-CT-(-2)-142B

AREA: 7253 sq. ft. DESCRIPTION: ELECTRICAL CABLE TUNNEL

DESIGN BASIS FIRE

Fire Loading Category:	Medium
Fire Loading - Max Permiss:	160,000.0 Btu's/sq.ft.

FIRE PROTECTION (AVAILABLE)

Suppression (type)	water spray system
Hose Stations	none, hydrants on yard main
Portable Extinguishers	yes
Detectors (type)	ionization, heat detectors

FIRE RESISTANCE RATING

Walls	HC/137A, 136, NR/142A, 142C, others 3hr
Floor, Ceiling, Roof	2hr/See Text, HC/floor grade
Penetrations	QD, C, SG, NC/200A
Fixed Openings	OP/142A, OP/142C, M/exterior
Doors	B/2-SE-(-2)-176

HOT STANDBY SYSTEMS	Equipment	Valves	Cable
Reactor Coolant			
Reactor Protection System			
Shutdown Cooling			
Chemical and Volume Control			
Main Feedwater			
Main Steam			A,B
HVAC			a,B
Auxiliary Feedwater			a,A,B,C
Engineered Safety Feature			A,B,C,D
Component Cooling Water			
Saltwater Cooling Water			
Emergency Chilled Water			
Diesel Generator Systems			A,B

COLD SHUTDOWN SYSTEMS	Equipment	Valves	Cable
Shutdown Cooling			
CCW (To SDC)			
HVAC			
Summary (Hot and Cold)			a,A,B,C,D

ESSENTIAL ELECTRIC SYSTEMS	Equipment	MCC and Switchgear	Cable
220 KV (AC)			X
4160 V (AC)			A,B
480 V (AC)			A,B
120 V (AC)			
125 V (DC)			
Electric Panels			A,B,X
Summary			A,B,X

ASSOCIATED CIRCUITS OF CONCERN

H/I Pressure Interface	NO
Spurious Operation	YES

FIRE AREA/ZONE 2-CT-(-2)-142B

7.6.1.1 Location

Cable Tunnel - El. (-2'-6") - Electrical Cable Tunnel - 7253 square feet - Figures 8-17, 8-25

7.6.1.2 Fire Loading

Fire loading category - Medium
Maximum permissible fire loading - 160,000 Btu/sq. ft. (Note 1)

Note 1:The maximum permissible fire loading is based on an evenly distributed loading.

7.6.1.3 Design Basis Fire

The design basis fire is postulated to be a fire that would involve mostly cable insulation.

The design basis fire is conservatively based on the simultaneous total combustion of all combustibles in the zone.

7.6.1.4 Fire Protection Equipment

The zone contains an automatic water spray system, with fixed temperature rate of rise actuation. Actuation by the heat detectors results in control room annunciation. Manual fire fighting equipment is available within the zone. In addition, hose streams are available from yard hydrants or portable equipment. Ionization smoke detectors, located throughout the zone, provide early warning alarm in the control room.

7.6.1.5 Construction

The walls defining the zone are reinforced concrete with a 3 hour rating except for the walls adjoining areas 2-SE-(-15)-136 and 2-SE-(-15)-137A. The walls to these two areas are part of a double wall configuration. The walls on the 2-SE-(15)-136 and 2-SE-(-15)-137A side (of the double wall) are 3 hour rated so in essence 3 hour separation is provided between the electrical cable tunnel and these two areas. The walls to Zone 2-161C, D&E are also part of a double wall configuration. The wall on the 2-142B side is 3-hour rated and the other wall is non-rated heavy concrete. There is a 1-1/2 hour fire rated damper which interfaces with 2-161C. Two manholes approximately 10' x 6'-6" (2-161D&E), and a cable vault approximately 17' x 8' (2-161C) comprise this interface. The ceiling and floor to other fire area/zones are 2 hour rated. The ceiling has nonrated cable penetrations to the Unit Auxiliary and Reserve Auxiliary transformer, termination enclosures in the Yard Area (2-YD-30-200A) above. The floor to grade is nonrated heavy concrete construction. The zone is open to the safety equipment building electrical tunnel (2-SE-30-142A), and to the cable shaft (2-CT-16-142C) which are zones of the same fire area. Four covered manholes provide access to the cable tunnel at ground level from the exterior. A 1 1/2 hour rated fire door is provided to fire area 2-SE-(-2)-176.

7.6.1.6 Licensee Controlled Specification Barriers

For definition of the barriers requiring surveillance per LCS 3.7.104, refer to the latest revisions of Figures 8-17 and 8-25, sheet 3.

Cable for the following systems is wrapped:

Auxiliary Feedwater - Train A
HVAC - Train A

7.6.1.7 Conclusions

The ionization detection system is expected to detect the products of combustion from an incipient fire and alert the control room for prompt response by the fire department. Portable suppression is available. The water spray system may also be actuated from one of the manual pull stations located throughout the zone.

In the event the fire achieves sufficient intensity, the fixed temperature rate of rise heat detectors should actuate the water spray system automatically. Actuation by the heat detectors is alarmed in the control room. The water spray system should control and suppress the fire until the fire department arrives and completes the extinguishment with portable equipment.

Should the water spray system fail to actuate, the available portable equipment is adequate to extinguish the fire.

The fire barriers for fire areas/zones that communicate with the Electrical Tunnel along with the fire protection features have been evaluated and found to be adequate to prevent propagation of fire between fire areas.

A deviation from the requirements of 10CFR50, Appendix R, Section III.G.2 has been accepted for fire area 2-142 to the extent it requires the separation of redundant safe shutdown trains by 20 foot separation with no intervening combustibles and by 1 hour rated barriers with detection and suppression. The fire detection and suppression systems in this area/zone were evaluated and shown to provide a level of protection equivalent to the requirements of Appendix R.

Appendix R compliance for fire area 2-CT-(-2)-142 is discussed in fire zone 2-SE-30-142A.

7.6.2 FIRE AREA/ZONE 2-CT-16-142C

FIRE AREA/ZONE: 2-CT-16-142C

AREA: 150 sq. ft. DESCRIPTION: CABLE SHAFT

DESIGN BASIS FIRE

Fire Loading Category:	High
Fire Loading - Max Permiss:	(SEE TEXT)

FIRE PROTECTION (AVAILABLE)

Suppression (type)	water spray
Hose Stations	none, hydrants on yard main
Portable Extinguishers	none, adjacent
Detectors (type)	ionization, heat detectors

FIRE RESISTANCE RATING

Walls	NR/142B, others 3hr
Floor, Ceiling, Roof	2hr/ceiling, HC/floor
Penetrations	C, P
Fixed Openings	OP/142B
Doors	none

HOT STANDBY SYSTEMS	Equipment	Valves	Cable
Reactor Coolant			
Reactor Protection System			
Shutdown Cooling			
Chemical and Volume Control			
Main Feedwater			
Main Steam			
HVAC			
Auxiliary Feedwater			
Engineered Safety Feature			
Component Cooling Water			
Saltwater Cooling Water			
Emergency Chilled Water			
Diesel Generator Systems			A

COLD SHUTDOWN SYSTEMS	Equipment	Valves	Cable
Shutdown Cooling			
CCW (To SDC)			
HVAC			
Summary (Hot and Cold)			A

ESSENTIAL ELECTRIC SYSTEMS	Equipment	MCC and Switchgear	Cable
220 KV (AC)			X
4160 V (AC)			A,B
480 V (AC)			A
120 V (AC)			
125 V (DC)			
Electric Panels			A
Summary			A,B,X

ASSOCIATED CIRCUITS OF CONCERN

H/I Pressure Interface	NO
Spurious Operation	YES

FIRE AREA/ZONE 2-CT-16-142C

7.6.2.1 Location

Cable Tunnel - El. 16'-6" - Cable Shaft - 150 square feet - Figures 8-1, 8-2, 8-3, 8-4, 8-19, 8-20, 8-25.

7.6.2.2 Fire Loading

Fire loading category - High (Note 2)
Maximum permissible fire loading - 160,000 Btu/sq. ft. (Note 1)

Note 1:The maximum permissible fire loading is based on an evenly distributed loading of combustible materials.

Note 2:The fire loading for this zone is distorted because this zone is a vertical cable chase with a very small floor area relative to its height.

7.6.2.3 Design Basis Fire

The design basis fire is postulated to be a fire that would involve mostly cable insulation and plastic (i.e., chemgrate).

The design basis fire is conservatively based on the simultaneous total combustion of all combustibles in the zone.

7.6.2.4 Fire Protection Equipment

The zone contains an automatic water spray system with fixed temperature rate of rise actuation. Actuation by the heat detectors results in control room annunciation. Manual fire fighting equipment is available in adjacent zone 2-CT-(-2)-142B. In addition, hose streams are available from yard hydrants or portable equipment. An ionization smoke detector, located at the top of the cable shaft, provides early warning alarm in the control room.

7.6.2.5 Construction

The walls are 3 hour rated reinforced concrete construction. The zone is open to zone 2-CT-(-2)-142B and is nonrated. The ceiling is 2 hour rated concrete construction. The floor to grade is nonrated heavy concrete construction. Cable fire stops are provided for the vertical cable trays.

Licensee Controlled Specification Barriers

For definition of the barriers requiring surveillance per LCS 3.7.104, refer to the latest revisions of Figures 8-1, 8-2, 8-3, 8-4, 8-19, 8-20, and 8-25, sheet 3.

7.6.2.6 Conclusions

The ionization detection system is expected to detect the products of combustion from an incipient fire and alert the control room for prompt response by the fire department. Portable suppression is available.

In the event the fire achieves sufficient intensity, the fixed temperature rate of rise heat detectors should actuate the water spray system automatically. Actuation by the heat detectors is alarmed in the control room. The water spray system should control and suppress the fire until the fire department arrives and completes the extinguishment with portable equipment.

Should the water spray system fail to actuate, the available portable equipment is adequate to extinguish the fire.

A deviation from the requirements of 10CFR50, Appendix R has been accepted for fire area 2-142 to the extent it requires the separation of redundant safe shutdown trains by 20 foot separation with no intervening combustibles and 1 hour rated barriers with detection and suppression. The fire detection and suppression systems in this area/zone were evaluated and shown to provide a level of protection equivalent to the requirements of Appendix R.

Appendix R compliance for fire area 2-CT-(-2)-142 is discussed in fire zone 2-SE-30-142A.

7. DETAILED FIRE HAZARD ANALYSIS

7.7 UNIT 2 DIESEL GENERATOR BUILDING

The Unit 2 Diesel Generator building is a reinforced concrete structure which contains the diesel generators, fuel oil storage day tanks and support equipment. The Diesel Generator Building is divided into six (6) fire areas. The barrier, penetration and door ratings are noted in the matrices.

The Diesel Generator Building contains part of or all of the following systems:

- Diesel Generator Systems
- Essential Electric Systems

The type of fire protection/detection equipment available in or near this building consists of the following:

- Portable extinguishers.
- Pre-action sprinkler systems are provided to protect the diesel generator systems.
- Smoke and infrared detectors.
- Standpipe system with manual hose stations.

Fire Area/Zone	Contains Safe Shutdown Equipment/Cables	Contains Safety-Related Equipment/Cables	Figure No.
2-DG-30-155	Yes	Yes	8-26
2-DG-30-156	No	No	8-26
2-DG-30-157	Yes	No	8-26
2-DG-30-158	Yes	Yes	8-26
2-DG-20-159	Yes	Yes	8-26
2-DG-20-160	Yes	Yes	8-26

7.7.1 FIRE AREA/ZONE: 2-DG-30-155

FIRE AREA/ZONE: 2-DG-30-155

AREA: 2128 sq. ft. DESCRIPTION: DIESEL GENERATOR RM. B

DESIGN BASIS FIRE

Fire Loading Category:	Medium
Fire Loading - Max Permiss:	160,000.0 Btu's/sq.ft.

FIRE PROTECTION (AVAILABLE)

Suppression (type)	automatic pre-action sprinkler sys.
Hose Stations	(2) hydrants on fire main
Portable Extinguishers	none, adjacent
Detectors (type)	infrared, ionization

FIRE RESISTANCE RATING

Walls	3hr/156, 157, 158, HC/160, exterior
Floor, Ceiling, Roof	2hr/ceiling, HC/floor
Penetrations	NC/exterior, NP/exterior
Fixed Openings	OP/exterior, louvers/exterior
Doors	(2) A/2-DG-30-157, (2) A/2-DG-30-156

HOT STANDBY SYSTEMS	Equipment	Valves	Cable
Reactor Coolant			
Reactor Protection System			
Shutdown Cooling			
Chemical and Volume Control			
Main Feedwater			
Main Steam			
HVAC			
Auxiliary Feedwater			
Engineered Safety Feature			
Component Cooling Water			
Saltwater Cooling Water			
Emergency Chilled Water			
Diesel Generator Systems	B,N	B	B

COLD SHUTDOWN SYSTEMS	Equipment	Valves	Cable
Shutdown Cooling			
CCW (To SDC)			
HVAC			
Summary (Hot and Cold)	B,N	B	B

ESSENTIAL ELECTRIC SYSTEMS	Equipment	MCC and Switchgear	Cable
220 KV (AC)			
4160 V (AC)			B
480 V (AC)		B	B
120 V (AC)	B		
125 V (DC)			
Electric Panels	B		B
Summary	B	B	B

ASSOCIATED CIRCUITS OF CONCERN

H/I Pressure Interface	NO
Spurious Operation	YES

FIRE AREA/ZONE 2-DG-30-155

7.7.1.1 Location

Diesel Generator Building - El. 30'-0" - Diesel Generator Room B - 2128 square feet - Figure 8-26

7.7.1.2 Fire Loading

Fire loading category - Medium
Maximum permissible fire loading - 160,000 Btu/sq. ft. (Note 1)

Note 1:The maximum permissible loading is based on an evenly distributed loading of combustible materials.

7.7.1.3 Design Basis Fire

The design basis fire is postulated to be a fire that would involve mostly diesel fuel and lube oil.

The design basis fire is conservatively based on the simultaneous total combustion of all combustibles in the area.

7.7.1.4 Fire Protection Equipment

The area contains an automatic pre-action sprinkler system with infrared detector actuation. Actuation of the infrared detectors results in local and control room annunciation. Manual fire fighting equipment is available within the area and outside the east and west entrances to the building. Ionization smoke detectors, located in the area, provide early warning alarm in the control room.

7.7.1.5 Construction

The north wall adjoining area 2-DG-30-158 is 3 hour rated reinforced concrete construction. The walls separating the area from the stairwells (2-DG-30-156 and 2-DG-30-157) are also 3 hour rated. The area's exterior walls are nonrated reinforced concrete with an approximate thickness of 3 feet. The ceiling is 2 hour rated. The floor to grade is nonrated heavy concrete construction. Two 3 hour rated doors open to the stairwells (2-DG-30-156 and 2-DG-30-157). Louvered ventilation openings communicate with the exterior.

7.7.1.6 Licensee Controlled Specification Barriers

For definition of the barriers requiring surveillance per LCS 3.7.104, refer to the latest revision of Figure 8-26, sheet 3.

7.7.1.7 Conclusions

The ionization and infrared detectors are expected to detect the fire in its initial stages of growth and alert the control room for prompt response by the fire department. The activation of the infrared detectors releases a tripping device to open the pre-action valve, allowing water to pressurize the sprinkler system. Sprinkler flow is initiated when further rise in ambient temperature causes the fusible links on the closed sprinkler heads to melt.

The design basis fire is insufficient to breach the fire barriers which separate the area from adjacent areas.

7.7.1.8 Fire Area 2-DG-30-155 Appendix R Compliance

Safe shutdown capability will be provided by utilizing Train A systems. Functionally redundant components protected from fire damage will be utilized in conjunction with operator action on manual or disabled components to achieve safe shutdown.

One train of systems necessary to achieve hot standby and cold shutdown conditions independent of the subject fire area will be free of fire damage. Therefore, this fire area complies with the criteria of 10CFR50, Appendix R, III.G.1.

7.7.2 FIRE AREA/ZONE: 2-DG-30-156

FIRE AREA/ZONE: 2-DG-30-156

AREA: 220 sq. ft. DESCRIPTION: STAIRCASE

DESIGN BASIS FIRE

Fire Loading Category:	Minimal
Fire Loading - Max Permiss:	160,000.0 Btu's/sq.ft.

FIRE PROTECTION (AVAILABLE)

Suppression (type)	none
Hose Stations	none
Portable Extinguishers	yes, adjacent
Detectors (type)	none

FIRE RESISTANCE RATING

Walls	3hr/155,158, HC/exterior
Floor, Ceiling, Roof	2hr/ceiling, HC/floor
Penetrations	C
Fixed Openings	MH/158
Doors	X/exterior, (2) A/2-DG-30-155, (2) A/2-DG-30-158

HOT STANDBY SYSTEMS	Equipment	Valves	Cable
Reactor Coolant			
Reactor Protection System			
Shutdown Cooling			
Chemical and Volume Control			
Main Feedwater			
Main Steam			
HVAC			
Auxiliary Feedwater			
Engineered Safety Feature			
Component Cooling Water			
Saltwater Cooling Water			
Emergency Chilled Water			
Diesel Generator Systems			

COLD SHUTDOWN SYSTEMS	Equipment	Valves	Cable
Shutdown Cooling			
CCW (To SDC)			
HVAC			
Summary (Hot and Cold)			

ESSENTIAL ELECTRIC SYSTEMS	Equipment	MCC and Switchgear	Cable
220 KV (AC)			
4160 V (AC)			
480 V (AC)			
120 V (AC)			
125 V (DC)			
Electric Panels			
Summary			

ASSOCIATED CIRCUITS OF CONCERN

H/I Pressure Interface	NO
Spurious Operation	NO

7.7.3 FIRE AREA/ZONE: 2-DG-30-157

FIRE AREA/ZONE: 2-DG-30-157

AREA: 220 sq. ft. DESCRIPTION: STAIRCASE

DESIGN BASIS FIRE

Fire Loading Category:	Minimal
Fire Loading - Max Permiss:	160,000.0 Btu's/sq.ft.

FIRE PROTECTION (AVAILABLE)

Suppression (type)	none
Hose Stations	none
Portable Extinguishers	yes, adjacent
Detectors (type)	none

FIRE RESISTANCE RATING

Walls	3hr/155,158, HC/exterior
Floor, Ceiling, Roof	2hr/ceiling, HC/floor
Penetrations	C
Fixed Openings	none
Doors	X/exterior, (2)A/2-DG-30-155, (2)A/2-DG-30-158

HOT STANDBY SYSTEMS	Equipment	Valves	Cable
Reactor Coolant			
Reactor Protection System			
Shutdown Cooling			
Chemical and Volume Control			
Main Feedwater			
Main Steam			
HVAC			
Auxiliary Feedwater			
Engineered Safety Feature			
Component Cooling Water			
Saltwater Cooling Water			
Emergency Chilled Water			
Diesel Generator Systems			

COLD SHUTDOWN SYSTEMS	Equipment	Valves	Cable
Shutdown Cooling			
CCW (To SDC)			
HVAC			
Summary (Hot and Cold)			

ESSENTIAL ELECTRIC SYSTEMS	Equipment	MCC and Switchgear	Cable
220 KV (AC)			
4160 V (AC)			
480 V (AC)			
120 V (AC)			
125 V (DC)			
Electric Panels			
Summary			

ASSOCIATED CIRCUITS OF CONCERN

H/I Pressure Interface	NO
Spurious Operation	NO

FIRE AREA/ZONE 2-DG-30-157

7.7.3.1 Location

Diesel Generator Building - El. 30'-6" - Staircase
220 square feet - Figure 8-26

7.7.3.2 Fire Loading

Fire loading category - Minimal
Maximum permissible fire loading - 160,000 Btu/sq. ft. (Note 1)

Note 1:The maximum permissible fire loading is based on an evenly distributed loading of combustible materials.

7.7.3.3 Design Basis Fire

A fire is not expected to occur in this area during normal operation. The maximum credible fire is postulated to involve transient combustible materials.

7.7.3.4 Fire Protection Equipment

The area does not contain detection, but does contain portable extinguishers which will adequately mitigate the consequences of fire. In addition, portable extinguishers and yard hydrants are available outside the fire area.

7.7.3.5 Construction

The walls to 2-DG-30-155 and 2-DG-30-158 are 3 hour rated. The exterior walls and roof are of heavy concrete construction. Cable penetrations with a rating greater than or equal to the penetrated structure exist in the area. A UL Class A equivalent door communicates with the exterior. The ceiling is 2 hour rated. The floor to grade is nonrated heavy concrete construction. Three-hour rated fire doors communicate with the diesel generator room B, 2-DG-30-155, and the diesel generator room A, 2-DG-30-158. The floor and ceiling are rated for 2 hours.

7.7.3.6 Licensee Controlled Specification Barriers

For definition of the barriers requiring surveillance per LCS 3.7.104, refer to the latest revision of Figure 8-26, sheet 3.

7.7.3.7 Conclusions

The area has no detection. Portable extinguishers are available and are adequate to mitigate the consequences of fire.

7.7.3.8 Fire Area 2-DG-30-157 Appendix R Compliance

Safe shutdown capability will be provided utilizing Train A systems. Functionally redundant components protected from fire damage will be utilized to achieve safe shutdown.

One train of systems necessary to achieve hot standby and cold shutdown conditions independent of the subject fire area will be free of fire damage. Therefore, this fire area complies with the criteria of 10CFR50, Appendix R, III.G.1.

7.7.4 FIRE AREA/ZONE: 2-DG-30-158

FIRE AREA/ZONE: 2-DG-30-158

AREA: 2128 sq. ft. DESCRIPTION: DIESEL GENERATOR RM. A

DESIGN BASIS FIRE

Fire Loading Category:	Medium
Fire Loading - Max Permiss:	160,000.0 Btu's/sq.ft.

FIRE PROTECTION (AVAILABLE)

Suppression (type)	automatic pre-action sprinkler sys.
Hose Stations	(2) hydrants on fire main
Portable Extinguishers	none, adjacent
Detectors (type)	infrared, ionization

FIRE RESISTANCE RATING

Walls	3hr/155, 156, 157, HC/159, exterior
Floor, Ceiling, Roof	2hr/ceiling, HC/floor
Penetrations	NC/exterior, NP/exterior
Fixed Openings	OP/exterior, louvers/exterior, MH/156
Doors	(2)A/2-DG-30-157, (2)A/2-DG-30-156

HOT STANDBY SYSTEMS	Equipment	Valves	Cable
Reactor Coolant			
Reactor Protection System			
Shutdown Cooling			
Chemical and Volume Control			
Main Feedwater			
Main Steam			
HVAC			
Auxiliary Feedwater			
Engineered Safety Feature			
Component Cooling Water			
Saltwater Cooling Water			
Emergency Chilled Water			
Diesel Generator Systems	A,N	A,A*	A

COLD SHUTDOWN SYSTEMS	Equipment	Valves	Cable
Shutdown Cooling			
CCW (To SDC)			
HVAC			
Summary (Hot and Cold)	A,N	A,A*	A

ESSENTIAL ELECTRIC SYSTEMS	Equipment	MCC and Switchgear	Cable
220 KV (AC)			
4160 V (AC)			A
480 V (AC)		A	A
120 V (AC)	A		
125 V (DC)			
Electric Panels	A		A
Summary	A	A	A

ASSOCIATED CIRCUITS OF CONCERN

H/I Pressure Interface	NO
Spurious Operation	YES

FIRE AREA/ZONE 2-DG-30-158

7.7.4.1 Location

Diesel Generator Building - El. 30'-0" - Diesel Generator Room A - 2128 square feet - Figure 8-26

7.7.4.2 Fire Loading

Fire loading category - Medium
Maximum permissible fire loading - 160,000 Btu/sq. ft. (Note 1)

Note 1:The maximum permissible loading is based on an evenly distributed loading of combustible materials.

7.7.4.3 Design Basis Fire

The design basis fire is postulated to be a fire that would involve mostly diesel fuel and lube oil.

The design basis fire is conservatively based on the simultaneous total combustion of all combustibles in the area.

7.7.4.4 Fire Protection Equipment

The area contains an automatic pre-action sprinkler system with infrared detector actuation. Actuation of the infrared detectors results in local and control room annunciation. Manual fire fighting equipment is available within the area or outside the east and west entrances to the building. Ionization smoke detectors, located in the area, provide early warning alarm in the control room.

7.7.4.5 Construction

The south wall, adjoining area 2-DG-30-155, is 3 hour rated reinforced concrete construction. The walls separating the area from the stairwells (2-DG-30-156 and 2-DG-30-157) are also 3 hour rated. There is a non-rated metal personnel acess hatch which interfaces with 2-DG-30-156. The area's exterior walls are nonrated reinforced concrete with an approximate thickness of 3 feet. The ceiling is 2 hour rated. The floor to grade is nonrated heavy concrete construction. Two 3 hour rated doors open to each of the adjoining stairwells (2-DG-30-156 and 2-DG-30-157). Louvered ventilation openings communicate with the exterior.

7.7.4.6 Licensee Controlled Specification Barriers

For definition of the barriers requiring surveillance per LCS 3.7.104, refer to the latest revision of Figure 8-26, sheet 3.

7.7.4.7 Conclusions

The ionization and infrared detectors are expected to detect the fire in its initial stages of growth and alert the control room for prompt response by the fire department. The activation of the infrared detectors releases a tripping device to open the pre-action valve, allowing water to pressurize the sprinkler system. Sprinkler flow is initiated when further rise in ambient temperature causes the fusible links on the closed sprinkler heads to melt.

The design basis fire is insufficient to breach the fire barriers which separate the area from adjacent areas.

The fire area boundary between 2-DG-30-158 and 2-DG-30-156 was evaluated. The fire boundaries and associated fire protection features were found to be adequate to prevent the propagation of fire beyond the fire boundaries. Based on the 3 hour construction of the area boundaries including the doors, no unsealed penetrations, and the limited fire hazards, in conjunction with the fire protection features of the East staircase and its adjacent fire areas, the fire area boundaries, including the non-rated metal hatch, are considered adequate.

7.7.4.8 Fire Area 2-DG-30-158 Appendix R Compliance

Safe shutdown capability will be provided by utilizing Train B systems. Functionally redundant components protected from fire damage will be utilized in conjunction with operator action on manual or disabled components to achieve safe shutdown.

One train of systems necessary to achieve hot standby and cold shutdown conditions independent of the subject fire area will be free of fire damage. Therefore, this fire area complies with the criteria of 10CFR50, Appendix R, III.G.1.

7.7.5 FIRE AREA/ZONE: 2-DG-20-159

FIRE AREA/ZONE: 2-DG-20-159

AREA: 364 sq. ft. DESCRIPTION: DIESEL FUEL TRANSFER PUMP RM. A

DESIGN BASIS FIRE

Fire Loading Category:	Minimal
Fire Loading - Max Permiss:	13,000.0 Btu's/sq.ft.

FIRE PROTECTION (AVAILABLE)

Suppression (type)	none
Hose Stations	hydrants on fire main
Portable Extinguishers	yes, adjacent
Detectors (type)	none

FIRE RESISTANCE RATING

Walls	west 3hr, others HC
Floor, Ceiling, Roof	2hr/ceiling, HC/floor
Penetrations	P, C, NP/exterior
Fixed Openings	CH/exterior, OH/exterior, MH/exterior
Doors	none

HOT STANDBY SYSTEMS	Equipment	Valves	Cable
Reactor Coolant			
Reactor Protection System			
Shutdown Cooling			
Chemical and Volume Control			
Main Feedwater			
Main Steam			
HVAC			
Auxiliary Feedwater			
Engineered Safety Feature			
Component Cooling Water			
Saltwater Cooling Water			
Emergency Chilled Water			
Diesel Generator Systems	A,N		A

COLD SHUTDOWN SYSTEMS	Equipment	Valves	Cable
Shutdown Cooling			
CCW (To SDC)			
HVAC			
Summary (Hot and Cold)	A,N		A

ESSENTIAL ELECTRIC SYSTEMS	Equipment	MCC and Switchgear	Cable
220 KV (AC)			
4160 V (AC)			
480 V (AC)			
120 V (AC)			
125 V (DC)			
Electric Panels			
Summary			

ASSOCIATED CIRCUITS OF CONCERN

H/I Pressure Interface	NO
Spurious Operation	NO

FIRE AREA/ZONE 2-DG-20-159

7.7.5.1 Location

Outside Diesel Generator Building - El. 20'-0" - Diesel Fuel Transfer Pump Room A - 364 square feet - Figure 8-26

7.7.5.2 Fire Loading

Fire loading category - Minimal
Maximum permissible fire loading - 13,000 Btu/sq. ft.

Note: Diesel Fuel Storage Tank is located directly below the transfer pump room and is not postulated to contribute to the design basis fire.

7.7.5.3 Design Basis Fire

A fire is not expected to occur in this area during normal operation. The maximum credible fire is postulated to involve transient combustible materials.

7.7.5.4 Fire Protection Equipment

There is no fire fighting or fire detection equipment in the area. Manual fire fighting equipment is available outside the west entrance to the diesel generator building. Hose streams are available from yard hydrants or portable equipment.

7.7.5.5 Construction

The area is entirely below ground. The west wall, which separates the area from the redundant fuel transfer pump room, is reinforced concrete with a 3 hour rating. The north, south, and east walls are reinforced concrete construction with an approximate thickness of 18 inches. The ceiling is 2 hour rated. The floor to grade is nonrated heavy concrete construction. The area is accessed through hatches at ground level.

7.7.5.6 Licensee Controlled Specification Barriers

For definition of the barriers requiring surveillance per LCS 3.7.104, refer to the latest revision of Figure 8-26, sheet 3.

7.7.5.7 Conclusions

The design basis fire is insufficient to breach the fire barriers which separate the area from adjacent areas.

7.7.5.8 Fire Area 2-DG-20-159 Appendix R Compliance

Safe shutdown capability will be provided by utilizing Train B systems. Functionally redundant components protected from fire damage will be utilized in conjunction with operator action on manual or disabled components to achieve safe shutdown.

One train of systems necessary to achieve hot standby and cold shutdown conditions independent of the subject fire area will be free of fire damage. Therefore, this fire area complies with the criteria of 10CFR50, Appendix R, III.G.1.

7.7.6 FIRE AREA/ZONE: 2-DG-20-160

FIRE AREA/ZONE: 2-DG-20-160

AREA: 405 sq. ft. DESCRIPTION: DIESEL FUEL TRANSFER PUMP RM. B

DESIGN BASIS FIRE

Fire Loading Category:	Minimal
Fire Loading - Max Permiss:	13,000.0 Btu's/sq.ft.

FIRE PROTECTION (AVAILABLE)

Suppression (type)	none
Hose Stations	hydrants on fire main
Portable Extinguishers	yes, adjacent
Detectors (type)	none

FIRE RESISTANCE RATING

Walls	east 3hr, others HC
Floor, Ceiling, Roof	2hr/ceiling, HC/floor
Penetrations	P, C, NP/exterior
Fixed Openings	CH/exterior, OH/exterior, MH/exterior
Doors	none

HOT STANDBY SYSTEMS	Equipment	Valves	Cable
Reactor Coolant			
Reactor Protection System			
Shutdown Cooling			
Chemical and Volume Control			
Main Feedwater			
Main Steam			
HVAC			
Auxiliary Feedwater			
Engineered Safety Feature			
Component Cooling Water			
Saltwater Cooling Water			
Emergency Chilled Water			
Diesel Generator Systems	B,N		B

COLD SHUTDOWN SYSTEMS	Equipment	Valves	Cable
Shutdown Cooling			
CCW (To SDC)			
HVAC			
Summary (Hot and Cold)	B,N		B

ESSENTIAL ELECTRIC SYSTEMS	Equipment	MCC and Switchgear	Cable
220 KV (AC)			
4160 V (AC)			
480 V (AC)			
120 V (AC)			
125 V (DC)			
Electric Panels			
Summary			

ASSOCIATED CIRCUITS OF CONCERN

H/I Pressure Interface	NO
Spurious Operation	NO

FIRE AREA/ZONE 2-DG-20-160

7.7.6.1 Location

Outside Diesel Generator Building - El. 20'-0" - Diesel Fuel Transfer Pump Room B - 405 square feet - Figure 8-26

7.7.6.2 Fire Loading

Fire loading category - Minimal
Maximum permissible fire loading - 13,000 Btu/sq. ft.

Note: Diesel Fuel Storage Tank is located directly below the transfer pump room and is not postulated to contribute to the design basis fire.

7.7.6.3 Design Basis Fire

A fire is not expected to occur in this area during normal operation. The maximum credible fire is postulated to involve transient combustible materials.

7.7.6.4 Fire Protection Equipment

There is no fire fighting or fire detection equipment in the area. Manual portable equipment is available outside the west entrance to the diesel generator building. Hose streams are available from yard hydrants or portable equipment.

7.7.6.5 Construction

The area is entirely below ground. The east wall, which separates the area from the redundant fuel transfer pump room, is reinforced concrete with a 3 hour rating. The north, south, and west walls are reinforced concrete construction with an approximate thickness of 18 inches. The ceiling is 2 hour rated. The area is accessed through hatches at ground level.

7.7.6.6 Licensee Controlled Specification Barriers

For definition of the barriers requiring surveillance per LCS 3.7.104, refer to the latest revision of Figure 8-26, sheet 3.

7.7.6.7 Conclusions

The design basis fire is insufficient to breach the fire barriers which separate the area from adjacent areas.

7.7.6.8 Fire Area 2-DG-20-160 Appendix R Compliance

Safe shutdown capability will be provided by utilizing Train A systems. Functionally redundant components protected from fire damage will be utilized in conjunction with operator action on manual or disabled components to achieve safe shutdown.

One train of systems necessary to achieve hot standby and cold shutdown conditions independent of the subject fire area will be free of fire damage. Therefore, this fire area complies with the criteria of 10CFR50, Appendix R, III.G.1.

7. DETAILED FIRE HAZARD ANALYSIS

7.8 UNIT 2 TANK BUILDING

The Unit 2 Tank Building is a separate building which houses auxiliary feedwater pumps, nuclear service water storage and surge tank, refueling water storage tanks and the condensate storage tanks. The Tank Building is divided into six (6) fire areas. Each of these fire areas is separated from the others by fire resistant and heavy concrete barriers.

The Tank Building contains part of or all of the following systems, which can be used for, or support, safe shutdown and cooldown:

- Auxiliary Feedwater
- Emergency Chilled Water
- Main Steam
- Electrical Panels
- Engineered Safety Features
- Chemical and Volume Control

The types of fire protection/detection equipment available in or near this building consists of the following:

- Portable extinguishers.
- A pre-action sprinkler system is provided to protect the auxiliary feedwater pumps.
- Deluge systems are provided to protect auxiliary feedwater pumps P-504 and P-140.
- Smoke, infrared, and fixed temperature rate of rise heat detectors.
- Hose streams from yard hydrants or portable equip

Fire Area/Zone	Contains Safe Shutdown Equipment/Cables	Contains Safety-Related Equipment/Cables	Figure No.
2-TK-30-161A	Yes	Yes	8-26
2-TK-(-2)-161B	Yes	Yes	8-1, 8-2, 8-16, 8-26
2-TK-30-161C	Yes	Yes	8-26
2-TK-25-161D	Yes	Yes	8-26
2-TK-25-161E	Yes	Yes	8-26
2-TK-30-162	No	No	8-26
2-TK-30-163	Yes	Yes	8-26
2-TK-30-164	Yes	Yes	8-26
2-TK-30-165	Yes	No	8-26
2-TK-30-166	Yes	Yes	8-26

7.8.1 FIRE AREA/ZONE: **2-TK-(-2)-161B**

FIRE AREA/ZONE: 2-TK-(2)-161B

AREA: 2506 sq. ft. DESCRIPTION: AFW PIPE TUNNEL

DESIGN BASIS FIRE

Fire Loading Category:	Minimal
Fire Loading - Max Permiss:	13,000.0 Btu's/sq.ft.

FIRE PROTECTION (AVAILABLE)

Suppression (type)	none
Hose Stations	none
Portable Extinguishers	none, adjacent
Detectors (type)	none

FIRE RESISTANCE RATING

Walls	3hr/136,137A,138,142B,others HC
Floor, Ceiling, Roof	2hr/142B,143,145B,171,176,HC/161A/grade
Penetrations	SG/P,C/NP/176,QP/138
Fixed Openings	OH/161A
Doors	none

HOT STANDBY SYSTEMS	Equipment	Valves	Cable
Reactor Coolant			
Reactor Protection System			
Shutdown Cooling			
Chemical and Volume Control			
Main Feedwater			
Main Steam		A,B	A,B
HVAC			
Auxiliary Feedwater	A,B,N	A,B	a,A,B
Engineered Safety Feature			
Component Cooling Water			
Saltwater Cooling Water			
Emergency Chilled Water			
Diesel Generator Systems			

COLD SHUTDOWN SYSTEMS	Equipment	Valves	Cable
Shutdown Cooling			
CCW (To SDC)			
HVAC			
Summary (Hot and Cold)	A,B,N	A,B	a,A,B

ESSENTIAL ELECTRIC SYSTEMS	Equipment	MCC and Switchgear	Cable
220 KV (AC)			
4160 V (AC)			
480 V (AC)			
120 V (AC)			
125 V (DC)			
Electric Panels			A,B
Summary			A,B

ASSOCIATED CIRCUITS OF CONCERN

H/I Pressure Interface	NO
Spurious Operation	NO

FIRE AREA/ZONE 2-TK-(-2)-161B

7.8.1.1 Location

Tank Building - El. (-2'-6") - Auxiliary Feedwater Pipe Tunnel - 2506 square feet - Figs. 8-1, 8-2, 8-16, 8-26

7.8.1.2 Fire Loading

Fire loading category - Minimal
Maximum permissible fire loading - 13,000 Btu/sq. ft.

7.8.1.3 Design Basis Fire

A fire is not expected to occur during normal operations. The maximum credible fire is postulated to involve transient combustible materials.

7.8.1.4 Fire Protection Equipment

No fire fighting or fire detection equipment is provided within the zone. Manual fire fighting equipment is available in adjacent zone 2-TK-30-161A.

7.8.1.5 Construction

The walls separating the zone from 2-CT-(-2)-142B, 2-SE-(-15)-136, 2-SE-(-15)-137A, and 2-SE-(-15)-138 (single wall section), are three hour rated heavy concrete barriers. The walls to 2-TK-30-161A, 2-SE-(-2)-176, 2-SE-(-15)-138 (double wall section), as well as to the exterior are nonrated heavy concrete barriers, approximately 18 inches thick. The wall to containment is also nonrated heavy concrete but is approximately 4 feet thick. The floor and ceiling barriers are two hour rated except those that go to the exterior which are nonrated heavy concrete. The zone is open to the auxiliary feedwater pump room (2-TK-30-161A).

7.8.1.6 Licensee Controlled Specification Barriers

For definition of the barriers requiring surveillance per LCS 3.7.104, refer to the latest revisions of Figures 8-1, 8-2, 8-16, and 8-26, sheet 3.

Cable for the following system is wrapped:
Auxiliary Feedwater - Train A (2HV-4730).

7.8.1.7 Conclusions

The fire boundaries between 2-TK-(-2)-161B and 2-SE-(-15)-138 and 2-SE-(-2)-176 were evaluated. The fire boundaries and associated fire protection features were found to be adequate to prevent the propagation of fire beyond the fire boundaries.

FIRE AREA/ZONE 2-TK-(-2)-161B

The design basis fire is insufficient to breach the barriers defining the zone/fire area.

A deviation from the requirements of 10CFR50 Appendix R, III.G.2.c has been requested for one hour wrap without automatic suppression and detection in zone 2-TK-(-2)-161B. The fire detection and suppression systems in this zone were evaluated and shown to provide a level of protection equivalent to the requirements of the applicable sections of Appendix R.

Appendix R compliance for fire area 2-TK-(-2)-161 is discussed in fire zone 2-TK-30-161A.

7.8.2 FIRE AREA/ZONE: 2-TK-18-161C

FIRE AREA/ZONE: 2-TK-30-161C

AREA: 85 sq. ft. DESCRIPTION: AFW PUMP ROOM CABLE VAULT

DESIGN BASIS FIRE

Fire Loading Category:	Low
Fire Loading - Max Permiss:	80,000.0 Btu's/sq.ft.

FIRE PROTECTION (AVAILABLE)

Suppression (type)	NONE
Hose Stations	NONE
Portable Extinguishers	none, adjacent
Detectors (type)	NONE

FIRE RESISTANCE RATING

Walls	3HR/142B HC/OTHERS
Floor, Ceiling, Roof	HC/FLOOR
Penetrations	QD, C
Fixed Openings	OH
Doors	none

HOT STANDBY SYSTEMS	Equipment	Valves	Cable
Reactor Coolant			
Reactor Protection System			
Shutdown Cooling			
Chemical and Volume Control			
Main Feedwater			
Main Steam			
HVAC			
Auxiliary Feedwater			A,B
Engineered Safety Feature			
Component Cooling Water			
Saltwater Cooling Water			
Emergency Chilled Water			
Diesel Generator Systems			

COLD SHUTDOWN SYSTEMS	Equipment	Valves	Cable
Shutdown Cooling			
CCW (To SDC)			
HVAC			
Summary (Hot and Cold)			A,B

ESSENTIAL ELECTRIC SYSTEMS	Equipment	MCC and Switchgear	Cable
220 KV (AC)			
4160 V (AC)			
480 V (AC)			
120 V (AC)			
125 V (DC)			
Electric Panels			A,B
Summary			A,B

ASSOCIATED CIRCUITS OF CONCERN

H/I Pressure Interface	NO
Spurious Operation	NO

FIRE AREA/ZONE: 2-TK-18-161C

7.8.2.1 Location

Tank Building - El. 18'-0" - Auxiliary Feedwater Pump Room cable vault - 85 square feet - Fig. 8-26

7.8.2.2 Fire Loading

Fire loading category - Low
Maximum permissible fire loading - 80,000 Btu/sq. ft. (Note 1)

Note 1:The maximum permissible fire loading is based on an evenly distributed loading of combustible materials.

7.8.2.3 Design Basis Fire

The design basis fire is postulated to be a fire that would involve mostly cable insulation.

7.8.2.4 Fire Protection Equipment

Manual fire fighting equipment is available within fire zone 2-161A.

7.8.2.5 Construction

The floor, and three walls are nonrated reinforced concrete construction with an approximate thickness of 2 feet. The 2-142B side is 3-hour rated, the 2-161C side is heavy concrete. A 1-1/2 hour rated fire damper interfaces with 2-142B. The area has a double wall interface with 2-142B on the south. The ceiling is open to 2-161A.

7.8.2.6 Licensee Controlled Specification Barriers

For definition of the barriers requiring surveillance per LCS 3.7.104, refer to the latest revision of Figure 8-26, sheet 3.

7.8.2.7 Conclusions

The fire area boundaries between 2-TK-18-161C and 2-CT-(-2)-142B was evaluated. The fire boundaries and associated fire protection features were found to be adequate to prevent the propagation of fire beyond the fire boundaries.

The design basis fire is insufficient to breach the barriers defining the zone/fire area.

Appendix R compliance for fire area 2-TK-(-2)-161 is discussed in fire zone 2-TK-30-161A.

7.8.3 FIRE AREA/ZONE: 2-TK-25-161D

FIRE AREA/ZONE: 2-TK-30-161D

AREA: 50 sq. ft. DESCRIPTION: AFW PUMP ROOM MANHOLE

DESIGN BASIS FIRE

Fire Loading Category:	Minimal
Fire Loading - Max Permiss:	80,000.0 Btu's/sq.ft.

FIRE PROTECTION (AVAILABLE)

Suppression (type)	NONE
Hose Stations	NONE
Portable Extinguishers	NONE, ADJACENT
Detectors (type)	NONE

FIRE RESISTANCE RATING

Walls	3HR/142B, HC/OTHERS
Floor, Ceiling, Roof	HC/FLOOR, CEILING MH/CEILING
Penetrations	C
Fixed Openings	MH
Doors	N/A

HOT STANDBY SYSTEMS	Equipment	Valves	Cable
Reactor Coolant			
Reactor Protection System			
Shutdown Cooling			
Chemical and Volume Control			
Main Feedwater			
Main Steam			
HVAC			B
Auxiliary Feedwater			B
Engineered Safety Feature			B,D
Component Cooling Water			
Saltwater Cooling Water			
Emergency Chilled Water			
Diesel Generator Systems			

COLD SHUTDOWN SYSTEMS	Equipment	Valves	Cable
Shutdown Cooling			
CCW (To SDC)			
HVAC			
Summary (Hot and Cold)			B,D

ESSENTIAL ELECTRIC SYSTEMS	Equipment	MCC and Switchgear	Cable
220 KV (AC)			
4160 V (AC)			
480 V (AC)			
120 V (AC)			
125 V (DC)			
Electric Panels			B,D
Summary			B,D

ASSOCIATED CIRCUITS OF CONCERN

H/I Pressure Interface	NO
Spurious Operation	NO

FIRE AREA/ZONE: 2-TK-25-161D

7.8.3.1 Location

Tank Building - El. 25'-0" - Auxiliary Feedwater Pump Room Manhole - 50 square feet - Fig. 8-26

7.8.3.2 Fire Loading

Fire loading category - Minimal
Maximum permissible fire loading - 80,000 Btu/sq. ft. (Note 1)

Note 1:The maximum permissible fire loading is based on an evenly distributed loading of combustible materials.

7.8.3.3 Design Basis Fire

The design basis fire is postulated to be a fire that would involve mostly cable insulation.

7.8.3.4 Fire Protection Equipment

Manual fire fighting equipment is available within fire zone 2-161A.

7.8.3.5 Construction

The floor, ceiling, and three walls are nonrated reinforced concrete construction with an approximate thickness of 2 feet. The 2-142B side is 3-hour rated, the 2-161D side is heavy concrete. The area has a double wall interface with 2-142B on the south. A three foot diameter steel manhole cover provides access from zone 2-161A.

7.8.3.6 Licensee Controlled Specification Barriers

For definition of the barriers requiring surveillance per LCS 3.7.104, refer to the latest revision of Figure 8-26, sheet 3.

7.8.3.7 Conclusions

The fire area boundaries between 2-TK-25-161D and 2-CT-(-2)-142B was evaluated. The fire boundaries and associated fire protection features were found to be adequate to prevent the propagation of fire beyond the fire boundaries.

The design basis fire is insufficient to breach the barriers defining the zone/fire area.

Appendix R compliance for fire area 2-TK-(-2)-161 is discussed in fire zone 2-TK-30-161A.

7.8.4 FIRE AREA/ZONE: 2-TK-25-161E

FIRE AREA/ZONE: 2-TK-30-161E

AREA: 70 sq. ft. DESCRIPTION: AFW PUMP ROOM MANHOLE

DESIGN BASIS FIRE

Fire Loading Category:	Minimal
Fire Loading - Max Permiss:	80,000.0 Btu's/sq.ft.

FIRE PROTECTION (AVAILABLE)

Suppression (type)	NONE
Hose Stations	NONE
Portable Extinguishers	NONE, ADJACENT
Detectors (type)	NONE

FIRE RESISTANCE RATING

Walls	3HR/142B, HC/OTHERS
Floor, Ceiling, Roof	HC/FLOOR, CEILING MH/CEILING
Penetrations	C
Fixed Openings	MH
Doors	N/A

HOT STANDBY SYSTEMS	Equipment	Valves	Cable
Reactor Coolant			
Reactor Protection System			
Shutdown Cooling			
Chemical and Volume Control			
Main Feedwater			
Main Steam			
HVAC			A
Auxiliary Feedwater			A,C
Engineered Safety Feature			A,C
Component Cooling Water			
Saltwater Cooling Water			
Emergency Chilled Water			
Diesel Generator Systems			

COLD SHUTDOWN SYSTEMS	Equipment	Valves	Cable
Shutdown Cooling			
CCW (To SDC)			
HVAC			
Summary (Hot and Cold)			A,C

ESSENTIAL ELECTRIC SYSTEMS	Equipment	MCC and Switchgear	Cable
220 KV (AC)			
4160 V (AC)			
480 V (AC)			
120 V (AC)			
125 V (DC)			
Electric Panels			A,C
Summary			A,C

ASSOCIATED CIRCUITS OF CONCERN

H/I Pressure Interface	NO
Spurious Operation	NO

FIRE AREA/ZONE: 2-TK-25-161E

7.8.4.1 Location

Tank Building - El. 18'-0" - Auxiliary Feedwater Pump Room Manhole - 70 square feet - Fig. 8-26

7.8.4.2 Fire Loading

Fire loading category - Minimal
Maximum permissible fire loading - 80,000 Btu/sq. ft. (Note 1)

Note 1:The maximum permissible fire loading is based on an evenly distributed loading of combustible materials.

7.8.4.3 Design Basis Fire

The design basis fire is postulated to be a fire that would involve mostly cable insulation.

7.8.4.4 Fire Protection Equipment

Manual fire fighting equipment is available within fire zone 2-161A.

7.8.4.5 Construction

The floor, and three walls are nonrated reinforced concrete construction with an approximate thickness of 2 feet. The 2-142B side is 3-hour rated, the 2-161E side is heavy concrete. The area has a double wall interface with 2-142B on the south. The ceiling is open to 2-161A.

7.8.4.6 Licensee Controlled Specification Barriers

For definition of the barriers requiring surveillance per LCS 3.7.104, refer to the latest revision of Figure 8-26, sheet 3.

7.8.4.7 Conclusions

The fire area boundaries between 2-TK-25-161E and 2-CT-(-2)-142B was evaluated. The fire boundaries and associated fire protection features were found to be adequate to prevent the propagation of fire beyond the fire boundaries.

Appendix R compliance for fire area 2-TK-(-2)-161 is discussed in fire zone 2-TK-30-161A.

7.8.5 FIRE AREA/ZONE: 2-TK-30-161A

FIRE AREA/ZONE: 2-TK-30-161A

AREA: 1725 sq. ft. DESCRIPTION: AFW PUMP ROOM

DESIGN BASIS FIRE

Fire Loading Category:	Low
Fire Loading - Max Permiss:	160,000.0 Btu's/sq.ft.

FIRE PROTECTION (AVAILABLE)

Suppression (type)	Pre-action sprinkler, deluge P-504, P-140
Hose Stations	none, hydrant on yard main
Portable Extinguishers	Yes
Detectors (type)	Infrared, ionization, local heat detectors

FIRE RESISTANCE RATING

Walls	HC
Floor, Ceiling, Roof	HC
Penetrations	NP/166, 145B, 162, ND/162, NC/162, 163
Fixed Openings	LV/162, OP/exterior, OH/161B
Doors	(2) NR/exterior

HOT STANDBY SYSTEMS	Equipment	Valves	Cable
Reactor Coolant			
Reactor Protection System			
Shutdown Cooling			
Chemical and Volume Control			
Main Feedwater			
Main Steam			
HVAC	A,B		A,B
Auxiliary Feedwater	A,B,C,N	A,B,C,N	A,B,C
Engineered Safety Feature			A,B,C,D
Component Cooling Water			
Saltwater Cooling Water			
Emergency Chilled Water			
Diesel Generator Systems			

COLD SHUTDOWN SYSTEMS	Equipment	Valves	Cable
Shutdown Cooling			
CCW (To SDC)			
HVAC			
Summary (Hot and Cold)	A,B,C,N	A,B,C,N	A,B,C,D

ESSENTIAL ELECTRIC SYSTEMS	Equipment	MCC and Switchgear	Cable
220 KV (AC)			
4160 V (AC)			
480 V (AC)			
120 V (AC)			
125 V (DC)			
Electric Panels	A,B,C		A,B,C
Summary	A,B,C		A,B,C

ASSOCIATED CIRCUITS OF CONCERN

H/I Pressure Interface	NO
Spurious Operation	YES

FIRE AREA/ZONE 2-TK-30-161A

7.8.5.1 Location

Tank Building - El. 30'-0" - Auxiliary Feedwater Pump Room - 1725 square feet - Figure 8-26

7.8.5.2 Fire Loading

Fire loading category - Low
Maximum permissible fire loading - 160,000 Btu/sq. ft. (Note 1)

Note 1:The maximum permissible fire loading is based on an evenly distributed loading of combustible materials.

7.8.5.3 Design Basis Fire

The design basis fire is postulated to be a fire that would involve mostly cable insulation and oil.

The design basis fire is conservatively based on the simultaneous total combustion of all combustibles in the zone.

7.8.5.4 Fire Protection Equipment

The zone contains an automatic pre-action sprinkler system, with infrared flame detector actuation. Water spray systems, with fixed temperature rate of rise actuation, are provided for auxiliary feedwater pumps P-504 and P-140. Actuation by the heat detectors or the infrared detectors results in control room annunciation. Manual fire fighting equipment is available within the zone. An ionization smoke detector, located in the zone, provides early warning alarm in the control room.

7.8.5.5 Construction

The floor, ceiling and walls are nonrated reinforced concrete construction with an approximate thickness of 2 feet. A partial height fire partition separates auxiliary feedwater pumps P-504 and P-141. Two nonrated doors open to the exterior. The area has a double wall interface with 2-142B on the south. Two manholes and a cable vault (fire zones 161C, D, & E) comprise the interface. The 2-142B is 3-hour rated, the 2-161C, D, & E sides are are heavy concrete.

7.8.5.6 Licensee Controlled Specification Barriers

For definition of the barriers requiring surveillance per LCS 3.7.104, refer to the latest revision of Figure 8-26, sheet 3.

7.8.5.7 Conclusions

The ionization and infrared detectors are expected to detect the fire in its initial stages of growth and alert the control room for prompt response by the fire department. The fire department then enters the pump room and extinguishes the fire with portable equipment or manually actuates the water spray systems as needed to protect safe shutdown equipment. The activation of the infrared detectors releases a tripping device to open the pre-action valve, allowing water to pressurize the sprinkler system. Sprinkler flow is initiated when the further rise in ambient temperature causes the fusible links on the closed sprinkler heads to melt. Water spray systems with fixed temperature rate of rise actuation are installed locally over Pumps P-504 and P-140 to prevent propagation of a pump fire to involve more than one auxiliary feedwater pump. Pump P-141 is protected by a partial height concrete fire partition, which protects it from redundant pumps.

The closed gravity feed lube oil system is installed in this zone to provide adequate lubrication of the auxiliary feedwater pump motor bearings in the event steam supply line to pump P-140 driver breaks. This system consists of an oil supply tank located on the roof for each motor to Train A and B pumps, fusible link oil release valves, and a gravity drain tank by each motor. A rise in ambient temperature above 212°F will cause the fusible link valves to open. Following this, combustible oil will be fed through the pump bearings and to a collection tank at the total rate of 2.68 gpm. The maximum amount of the oil introduced into the room is 120 gallons. This amount of oil will increase fire loading in the room by approximately 9240 BTU/sq. ft. A metal shroud is provided around the turbine driven AFW pump lube oil system, in order to protect the adjacent pumps from oil spray, which could create a fire hazard in the event of a lube oil line break.

The smoke generated by the design basis fire will be vented through the openings in the exterior wall. Portable smoke exhaust fans may be used if additional smoke removal capability is required.

The design basis fire is insufficient to breach the barriers defining the zone/fire area.

7.8.5.8 Fire Area 2-TK-(-2)-161 Appendix R Compliance

Safe shutdown capability will be provided by utilizing Train A or B systems. Safe shutdown analysis demonstrates that Train A or B AFW systems may be disabled by fire. At least one of the trains will remain available due to the separation of safe shutdown components and the fire protection features provided in the area. Functionally redundant components will remain available and will be utilized in conjunction with operator action on manual or disabled components to achieve safe shutdown.

FIRE AREA/ZONE 2-TK-30-161A

One train of systems necessary to achieve hot standby and cold shutdown for a fire in area 2-161 has been evaluated to remain available for safe shutdown in accordance with 10CFR50, Appendix R, III.G.1 and III.G.2.b and c. A deviation from the requirements of 10CFR50 Appendix R, III.G.2.b has been requested for intervening combustibles between the auxiliary feedwater pumps and valves in zone 2-TK-30-161A. A deviation from the requirements of 10CFR50 Appendix R, III.G.2.c has been requested for one hour wrap without automatic suppression and detection in zone 2-TK-(-2)-161B. The fire detection and suppression systems in these areas/zones were evaluated and shown to provide a level of protection equivalent to the requirements of the applicable sections of Appendix R.

7.8.6 FIRE AREA/ZONE: 2-TK-30-162

FIRE AREA/ZONE: 2-TK-30-162

AREA: 452 sq. ft. DESCRIPTION: NUCLEAR SERVICE WATER STORAGE TANK

DESIGN BASIS FIRE

Fire Loading Category:	Minimal
Fire Loading - Max Permiss:	13,000.0 Btu's/sq.ft.

FIRE PROTECTION (AVAILABLE)

Suppression (type)	NONE
Hose Stations	NONE, hydrant on yard main
Portable Extinguishers	NONE, adjacent
Detectors (type)	NONE

FIRE RESISTANCE RATING

Walls	HC
Floor, Ceiling, Roof	floor HC, no roof
Penetrations	NC/161A, NP/161A, ND/161A
Fixed Openings	LV/161
Doors	NONE

HOT STANDBY SYSTEMS	Equipment	Valves	Cable
Reactor Coolant			
Reactor Protection System			
Shutdown Cooling			
Chemical and Volume Control			
Main Feedwater			
Main Steam			
HVAC			
Auxiliary Feedwater			
Engineered Safety Feature			
Component Cooling Water			
Saltwater Cooling Water			
Emergency Chilled Water			
Diesel Generator Systems			

COLD SHUTDOWN SYSTEMS	Equipment	Valves	Cable
Shutdown Cooling			
CCW (To SDC)			
HVAC			
Summary (Hot and Cold)			

ESSENTIAL ELECTRIC SYSTEMS	Equipment	MCC and Switchgear	Cable
220 KV (AC)			
4160 V (AC)			
480 V (AC)			
120 V (AC)			
125 V (DC)			
Electric Panels			
Summary			

ASSOCIATED CIRCUITS OF CONCERN

H/I Pressure Interface	NO
Spurious Operation	NO

7.8.7 FIRE AREA/ZONE: 2-TK-30-163

FIRE AREA/ZONE: 2-TK-30-163

AREA: 1087 sq. ft. DESCRIPTION: REFUEL WTR. STORAGE TK.

DESIGN BASIS FIRE

Fire Loading Category:	Minimal
Fire Loading - Max Permiss:	13,000.0 Btu's/sq.ft.

FIRE PROTECTION (AVAILABLE)

Suppression (type)	none
Hose Stations	none, hydrant on yard main
Portable Extinguishers	none
Detectors (type)	none

FIRE RESISTANCE RATING

Walls	HC
Floor, Ceiling, Roof	floor HC, no roof
Penetrations	P, C, NC/164, NC/161A
Fixed Openings	none
Doors	none

HOT STANDBY SYSTEMS	Equipment	Valves	Cable
Reactor Coolant			
Reactor Protection System			
Shutdown Cooling			
Chemical and Volume Control	N		
Main Feedwater			
Main Steam			
HVAC			
Auxiliary Feedwater		N	A,B
Engineered Safety Feature			
Component Cooling Water			
Saltwater Cooling Water			
Emergency Chilled Water			
Diesel Generator Systems			

COLD SHUTDOWN SYSTEMS	Equipment	Valves	Cable
Shutdown Cooling			
CCW (To SDC)			
HVAC			
Summary (Hot and Cold)	N	N	A,B

ESSENTIAL ELECTRIC SYSTEMS	Equipment	MCC and Switchgear	Cable
220 KV (AC)			
4160 V (AC)			
480 V (AC)			
120 V (AC)			
125 V (DC)			
Electric Panels			
Summary			

ASSOCIATED CIRCUITS OF CONCERN

H/I Pressure Interface	NO
Spurious Operation	NO

FIRE AREA/ZONE 2-TK-30-163

7.8.7.1 Location

Tank Building - El. 30'-0" - Refueling Water Storage Tank - 1087 square feet - Figure 8-26

7.8.7.2 Fire Loading

Fire loading category - Minimal
Maximum permissible fire loading - 13,000 Btu/sq. ft. (Note 1)
Note 1:The maximum permissible fire loading is based on an evenly distributed loading of combustible materials.

7.8.7.3 Design Basis Fire

The design basis fire is postulated to be a fire that would involve mostly cable insulation.

The design basis fire is conservatively based on the simultaneous total combustion of all combustibles in the area.

7.8.7.4 Fire Protection Equipment

There is no fire fighting or fire detection equipment within the area. Manual hose streams are available from yard hydrants or portable equipment.

7.8.7.5 Construction

The walls defining the area are nonrated reinforced concrete construction with an approximate thickness of 2 feet. The floor is heavy concrete construction.
No roof is provided.

7.8.7.6 Licensee Controlled Specification Barriers

For definition of the barriers requiring surveillance per LCS 3.7.104, refer to the latest revision of Figure 8-26, sheet 3.

7.8.7.7 Conclusions

The available portable equipment is adequate to extinguish the fire.

The low fire loading and the substantial construction of the barriers preclude the propagation of the design basis fire beyond the boundaries defining the area.

Spatial separation and the heavy concrete walls provide an adequate fire barrier for protection from the hazards of the oil-filled transformers, which are located within 50 feet of the exterior walls.

FIRE AREA/ZONE 2-TK-30-163

7.8.7.8 Fire Area 2-TK-30-163 Appendix R Compliance

Safe shutdown capability will be provided by utilizing Train A or B systems. Functionally redundant components protected from fire damage will be utilized in conjunction with operator action on manual or disabled components to achieve safe shutdown.

One train of systems necessary to achieve hot standby and cold shutdown conditions independent of the subject fire area will be free of fire damage. Therefore, this fire area complies with the criteria of 10CFR50, Appendix R, III.G.1.

7.8.8 FIRE AREA/ZONE: 2-TK-30-164

FIRE AREA/ZONE: 2-TK-30-164

AREA: 743 sq. ft. DESCRIPTION: CONDENSATE STORAGE TK.

DESIGN BASIS FIRE

Fire Loading Category:	Minimal
Fire Loading - Max Permiss:	13,000.0 Btu's/sq.ft.

FIRE PROTECTION (AVAILABLE)

Suppression (type)	none
Hose Stations	none, hydrant on yard main
Portable Extinguishers	none
Detectors (type)	none

FIRE RESISTANCE RATING

Walls	HC
Floor, Ceiling, Roof	HC
Penetrations	P, C, NC/163, NP/exterior
Fixed Openings	OP/200 A (10" Drain Line)
Doors	NR/exterior

HOT STANDBY SYSTEMS	Equipment	Valves	Cable
Reactor Coolant			
Reactor Protection System			
Shutdown Cooling			
Chemical and Volume Control			
Main Feedwater			
Main Steam			
HVAC			
Auxiliary Feedwater	N	N	A,B
Engineered Safety Feature			
Component Cooling Water			
Saltwater Cooling Water			
Emergency Chilled Water			
Diesel Generator Systems			

COLD SHUTDOWN SYSTEMS	Equipment	Valves	Cable
Shutdown Cooling			
CCW (To SDC)			
HVAC			
Summary (Hot and Cold)	N	N	A,B

ESSENTIAL ELECTRIC SYSTEMS	Equipment	MCC and Switchgear	Cable
220 KV (AC)			
4160 V (AC)			
480 V (AC)			
120 V (AC)			
125 V (DC)			
Electric Panels			
Summary			

ASSOCIATED CIRCUITS OF CONCERN

H/I Pressure Interface	NO
Spurious Operation	NO

FIRE AREA/ZONE 2-TK-30-164

7.8.8.1 Location

Tank Building - El. 30'-0" - Condensate Storage Tank - 743 square feet - Figure 8-26

7.8.8.2 Fire Loading

Fire loading category - Minimal
Maximum permissible fire loading - 13,000 Btu/sq. ft. (Note 1)

Note 1:The maximum permissible fire loading is based on an evenly distributed loading of combustible materials.

7.8.8.3 Design Basis Fire

The design basis fire is postulated to be a fire that would involve mostly cable insulation.

The design basis fire is conservatively based on the simultaneous total combustion of all combustibles in the area.

7.8.8.4 Fire Protection Equipment

There is no fire fighting or fire detection equipment within the area. Manual hose streams are available from yard hydrants or portable equipment.

7.8.8.5 Construction

The walls are nonrated reinforced concrete construction with an approximate thickness of 2 feet. The floor and ceiling are heavy concrete. The exterior door is nonrated. There is a 10" drain line located approximtely two feet from grade elevation on the East wall.

7.8.8.6 Licensee Controlled Specification Barriers

For definition of the barriers requiring surveillance per LCS 3.7.104, refer to the latest revision of Figure 8-26, sheet 3.

7.8.8.7 Conclusions

The available portable equipment is adequate to extinguish the fire.

The low fire loading and the substantial construction of the heavy concrete walls and nonrated doors preclude the propagation of the design basis fire beyond the boundaries defining the area.

Spatial separation and the heavy concrete walls provide an adequate fire barrier for protection from the hazards of the oil-filled transformers, which are located within 50 feet of the exterior walls.

FIRE AREA/ZONE 2-TK-30-164

7.8.8.8 Fire Area 2-TK-30-164 Appendix R Compliance

Safe shutdown capability will be provided by utilizing Train A or B systems. Functionally redundant components protected from fire damage will be utilized in conjunction with operator action on manual or disabled components to achieve safe shutdown.

One train of systems necessary to achieve hot standby and cold shutdown conditions independent of the subject fire area will be free of fire damage. Therefore, this fire area complies with the criteria of 10CRF50, Appendix R, III.G.1.

7.8.9 FIRE AREA/ZONE: 2-TK-30-165

FIRE AREA/ZONE: 2-TK-30-165

AREA: 1002 sq. ft. DESCRIPTION: CONDENSATE STORAGE TK.

DESIGN BASIS FIRE

Fire Loading Category:	Minimal
Fire Loading - Max Permiss:	13,000.0 Btu's/sq.ft.

FIRE PROTECTION (AVAILABLE)

Suppression (type)	none
Hose Stations	none, hydrant on yard main
Portable Extinguishers	none
Detectors (type)	none

FIRE RESISTANCE RATING

Walls	HC
Floor, Ceiling, Roof	no roof, HC
Penetrations	C, P, NP/Exterior
Fixed Openings	OP/200 A (10" drain line)
Doors	none

HOT STANDBY SYSTEMS	Equipment	Valves	Cable
Reactor Coolant			
Reactor Protection System			
Shutdown Cooling			
Chemical and Volume Control			
Main Feedwater			
Main Steam			
HVAC			
Auxiliary Feedwater	N		
Engineered Safety Feature			
Component Cooling Water			
Saltwater Cooling Water			
Emergency Chilled Water			
Diesel Generator Systems			

COLD SHUTDOWN SYSTEMS	Equipment	Valves	Cable
Shutdown Cooling			
CCW (To SDC)			
HVAC			
Summary (Hot and Cold)	N		

ESSENTIAL ELECTRIC SYSTEMS	Equipment	MCC and Switchgear	Cable
220 KV (AC)			
4160 V (AC)			
480 V (AC)			
120 V (AC)			
125 V (DC)			
Electric Panels			
Summary			

ASSOCIATED CIRCUITS OF CONCERN

H/I Pressure Interface	NO
Spurious Operation	NO

FIRE AREA/ZONE 2-TK-30-165

7.8.9.1 Location

Tank Building - El. 30'-0" - Condensate Storage Tank - 1002 square feet - Figure 8-26

7.8.9.2 Fire Loading

Fire loading category - Minimal
Maximum permissible fire loading - 13,000 Btu/sq. ft. (Note 1)

Note 1:The maximum permissible fire loading is based on an evenly distributed loading of combustible materials.

7.8.9.3 Design Basis Fire

The design basis fire is postulated to be a fire that would involve mostly cable insulation.

The design basis fire is conservatively based on the simultaneous total combustion of all combustibles in the area.

7.8.9.4 Fire Protection Equipment

There is no fire fighting or fire detection equipment within the area. Manual hose streams are available from yard hydrants or portable equipment.

7.8.9.5 Construction

The area walls are nonrated reinforced concrete. The floor is heavy concrete. No roof is provided. There is a 10" drain line located approximately 20 feet from grade elevation on the West wall.

7.8.9.6 Licensee Controlled Specification Barriers

For definition of the barriers requiring surveillance per LCS 3.7.104, refer to the latest revision of Figure 8-26, sheet 3.

7.8.9.7 Conclusions

The available portable equipment is adequate to extinguish the fire.

The low fire loading and the substantial construction of the heavy concrete walls preclude the propagation of the design basis fire beyond the boundaries defining the area.

Spatial separation and the 3 hour west wall provide an adequate fire barrier for protection from the hazards of the oil-filled transformers, which are located within 50 feet of the exterior walls.

FIRE AREA/ZONE 2-TK-30-165

7.8.9.8 Fire Area 2-TK-30-165 Appendix R Compliance

One train of systems necessary to achieve hot standby and cold shutdown conditions independent of the subject fire area will be free of fire damage. Therefore, this fire area complies with the criteria of 10CFR50, Appendix R, III.G.1.

7.8.10 FIRE AREA/ZONE: 2-TK-30-166

FIRE AREA/ZONE: 2-TK-30-166

AREA: 1091 sq. ft. DESCRIPTION: REFUELING WTR. STORAGE TK.

DESIGN BASIS FIRE

Fire Loading Category:	Minimal
Fire Loading - Max Permiss:	13,000.0 Btu's/sq.ft.

FIRE PROTECTION (AVAILABLE)

Suppression (type)	none
Hose Stations	none, hydrant on yard main
Portable Extinguishers	none
Detectors (type)	none

FIRE RESISTANCE RATING

Walls	HC
Floor, Ceiling, Roof	floor HC, no roof
Penetrations	P, C, NP/161A
Fixed Openings	none
Doors	none

HOT STANDBY SYSTEMS	Equipment	Valves	Cable
Reactor Coolant			
Reactor Protection System			
Shutdown Cooling			
Chemical and Volume Control	N		
Main Feedwater			
Main Steam			
HVAC			
Auxiliary Feedwater		A,B	A,B
Engineered Safety Feature			A,B,C,D
Component Cooling Water			
Saltwater Cooling Water			
Emergency Chilled Water			
Diesel Generator Systems			

COLD SHUTDOWN SYSTEMS	Equipment	Valves	Cable
Shutdown Cooling			
CCW (To SDC)			
HVAC			
Summary (Hot and Cold)	N	A,B	A,B,C,D

ESSENTIAL ELECTRIC SYSTEMS	Equipment	MCC and Switchgear	Cable
220 KV (AC)			
4160 V (AC)			
480 V (AC)			
120 V (AC)			
125 V (DC)			
Electric Panels			A,B
Summary			A,B

ASSOCIATED CIRCUITS OF CONCERN

H/I Pressure Interface	NO
Spurious Operation	YES

FIRE AREA/ZONE 2-TK-30-166

7.8.10.1 Location

Tank Building - El. 30'-0" - Refueling Water Storage Tank - 1091 square feet - Figure 8-26

7.8.10.2 Fire Loading

Fire loading category - Minimal
Maximum permissible fire loading - 13,000 Btu/sq. ft. (Note 1)

Note 1:The maximum permissible fire loading is based on an evenly distributed loading of combustible materials.

7.8.10.3 Design Basis Fire

The design basis fire is postulated to be a fire that would involve mostly cable insulation.

The design basis fire is conservatively based on the simultaneous total combustion of all combustibles in the area.

7.8.10.4 Fire Protection Equipment

There is no fire fighting or fire detection equipment within the area. Manual hose streams are available from yard hydrants or portable equipment.

7.8.10.5 Construction

The walls of the area are nonrated reinforced concrete with an approximate thickness of 2 feet. The floor is heavy concrete. No roof is provided.

7.8.10.6 Licensee Controlled Specification Barriers

For definition of the barriers requiring surveillance per LCS 3.7.104, refer to the latest revision of Figure 8-26, sheet 3.

7.8.10.7 Conclusions

The available portable equipment is adequate to extinguish the fire.

The low fire loading and the substantial construction of the barriers preclude the propagation of the design basis fire beyond the boundaries defining the area.

FIRE AREA/ZONE 2-TK-30-166

7.8.10.8 Fire Area 2-TK-30-166 Appendix R Compliance

Safe shutdown capability will be provided by utilizing Train A systems. Functionally redundant components protected from fire damage will be utilized in conjunction with operator action on manual or disabled components to achieve safe shutdown.
One train of systems necessary to achieve hot standby and cold shutdown conditions independent of the subject fire area will be free of fire damage. Therefore, this fire area complies with the criteria of 10CFR50, Appendix R, III.G.1.

7. DETAILED FIRE HAZARD ANALYSIS

7.9 CONTROL BUILDING SUMMARY

The Auxiliary Control Building is a reinforced concrete structure which contains the following essential areas:

- Battery rooms
- Cable spreading rooms
- Cable riser galleries
- Control room complex
- Emergency chiller rooms
- HVAC rooms

The Control Building is divided into seventy-five (75) fire area/zones. The barrier penetration and doors ratings are noted in the matrices.

The Auxiliary Control Building has part of or all of the following systems, which can be used for, or support, safe shutdown and cooldown:

- Reactor Coolant
- Reactor Protection System
- Shutdown Cooling
- Chemical & Volume Control
- Main Feedwater
- Main Steam
- Auxiliary Feedwater
- Engineered Safety Feature
- Component Cooling Water
- Saltwater Cooling Water
- Emergency Chilled Water
- Diesel Generator Systems
- HVAC
- Essential Electric Systems

The types of fire protection/detection equipment in or near the building consist of the following:

- Portable extinguishers.

- A standpipe system with manual hose stations.

- Smoke and fixed temperature rate of rise heat detectors.

- Fixed water spray systems are provided to protect cable spreading rooms and cable riser galleries. The detectors used in the areas to automatically operate the

spray systems will be fixed temperature rate of rise heat detectors. Smoke detectors are used for early warning alarm only.

- Manual water spray systems are provided for charcoal filter units. Heat sensors, installed in the filters, alarm high temperature.

- Halon 1301 systems are provided to protect the Unit 2 and Unit 3 computer rooms. Fixed temperature rate of rise heat detectors are provided for actuation. Smoke detectors are used for early warning alarm only.

- Halon 1301 systems are provided to protect the Radio-Chemical Counting Room and Tele-Comm room. Ionization and photoelectric detectors are utilized to actuate the halon system and provide early warning alarm.

- Wet pipe sprinkler systems.

Fire Area/Zone	Contains Safe Shutdown Equipment/Cables	Contains Safety-Related Equipment/Cables	Figure No.
2-AC-9-5	Yes	Yes	8-5
3-AC-9-6	Yes	Yes	8-5
3-AC-9-7	Yes	Yes	8-5
2-AC-9-8	No	No	8-5
2-AC-9-9	Yes	Yes	8-5
2-AC-9-10	No	Yes	8-5
2-AC-9-11	Yes	Yes	8-5
2-AC-9-12	Yes	Yes	8-5
2-AC-9-13	Yes	Yes	8-5
2-AC-9-14	Yes	Yes	8-5
2-AC-9-15	No	No	8-5
2-AC-9-16	Yes	Yes	8-5
2-AC-9-17	Yes	No	8-5
2-AC-9-18	No	No	8-5, 8-6, 8-7, 8-8, 8-9
2-AC-9-19	No	No	8-5
2-AC-30-20A	Yes	Yes	8-6
3-AC-30-20B	Yes	No	8-6
2-AC-30-20C	Yes	Yes	8-6
2-AC-39-20D	No	No	8-6
2-AC-30-20E	Yes	Yes	8-6
3-AC-30-21	Yes	Yes	8-6
2-AC-30-22	Yes	Yes	8-6, 8-7, 8-8
2-AC-30-23	Yes	Yes	8-6
2-AC-30-24	No	No	8-6, 8-7, 8-8, 8-9
2-AC-30-26	Yes	Yes	8-6
2-AC-30-27	Yes	Yes	8-6, 8-7, 8-8
2-AC-30-28	Yes	Yes	8-6
2-AC-50-29A	Yes	Yes	8-7
2-AC-50-29B	Yes	Yes	8-7
3-AC-50-30	Yes	Yes	8-7
3-AC-50-31	Yes	Yes	8-7
3-AC-50-32	Yes	Yes	8-7
3-AC-50-33	Yes	Yes	8-7
3-AC-50-34	Yes	Yes	8-7
2-AC-50-35	Yes	Yes	8-7
2-AC-50-36	Yes	Yes	8-7
2-AC-50-37	Yes	Yes	8-7
2-AC-50-38	Yes	Yes	8-7
2-AC-50-39	Yes	Yes	8-7
2-AC-50-40	Yes	Yes	8-7
2-AC-50-41	Yes	No	8-7
2-AC-50-42	Yes	No	8-7

Fire Area/Zone	Contains Safe Shutdown Equipment/Cables	Contains Safety-Related Equipment/Cables	Figure No.
2-AC-50-43	Yes	Yes	8-7
2-AC-50-44	Yes	Yes	8-7
2-AC-50-45	Yes	Yes	8-7
2-AC-50-46	Yes	Yes	8-7
2-AC-50-47	Yes	Yes	8-7
2-AC-50-48	Yes	Yes	8-7
2-AC-50-49	Yes	Yes	8-7
2-AC-50-50	Yes	Yes	8-7
2-AC-50-51	Yes	Yes	8-7
3-AC-50-52	Yes	Yes	8-7
3-AC-50-53	Yes	Yes	8-7
3-AC-50-54	Yes	Yes	8-7
3-AC-50-55	Yes	Yes	8-7
3-AC-50-56	Yes	Yes	8-7
3-AC-50-57	Yes	Yes	8-7
3-AC-50-58	Yes	Yes	8-7
3-AC-50-59	Yes	Yes	8-7
3-AC-50-60	Yes	Yes	8-7
3-AC-50-61	Yes	No	8-7
3-AC-50-62	Yes	Yes	8-7
2-AC-70-63	Yes	Yes	8-8
2-AC-70-64	Yes	Yes	8-8
3-AC-70-65	Yes	Yes	8-8
2-AC-70-66	No	No	8-8
2-AC-70-67	No	No	8-8
2-AC-70-68	No	No	8-8
2-AC-70-69	No	Yes	8-8
2-AC-85-70	Yes	No	8-9
2-AC-85-71	Yes	No	8-9
2-AC-85-72	No	Yes	8-9
2-AC-(-5)-169	Yes	Yes	8-5, 8-10
2-AC-70-175	No	No	8-8
2-AC-85-180	No	No	8-9

7.9.1 FIRE AREA/ZONE: 2-AC-9-5

FIRE AREA/ZONE: 2-AC-9-5

AREA: 6252 sq. ft. DESCRIPTION: CABLE SPREADING ROOM

DESIGN BASIS FIRE

Fire Loading Category:	Medium
Fire Loading - Max Permiss:	160,000.0 Btu's/sq.ft.

FIRE PROTECTION (AVAILABLE)

Suppression (type)	water spray system
Hose Stations	(1)
Portable Extinguishers	yes
Detectors (type)	ionization, heat detectors

FIRE RESISTANCE RATING

Walls	east 3hr, others 2hr
Floor, Ceiling, Roof	ceiling 2hr, HC/floor to 169, grade
Penetrations	D, C, P, ND/169
Fixed Openings	M/169
Doors	A/2-AC-9-16, A/2-AC-9-17, B/3-AC-9-6, (3) B/2-AC-9-14

HOT STANDBY SYSTEMS	Equipment	Valves	Cable
Reactor Coolant			A,B,C,D
Reactor Protection System			A,B,C,D
Shutdown Cooling			A,B
Chemical and Volume Control			A,B
Main Feedwater			A,B
Main Steam			A,B,C,D
HVAC			A,B
Auxiliary Feedwater			A,B,C
Engineered Safety Feature			A,B,C,D
Component Cooling Water			A,B,X
Saltwater Cooling Water			A,B
Emergency Chilled Water			A,B
Diesel Generator Systems			A,B

COLD SHUTDOWN SYSTEMS	Equipment	Valves	Cable
Shutdown Cooling			A,B
CCW (To SDC)			A,B
HVAC			A,B
Summary (Hot and Cold)			A,B,C,D,X

ESSENTIAL ELECTRIC SYSTEMS	Equipment	MCC and Switchgear	Cable
220 KV (AC)			X
4160 V (AC)			A,B
480 V (AC)			A,B
120 V (AC)			
125 V (DC)			
Electric Panels			A,B,C,D,X
Summary			A,B,C,D,X

ASSOCIATED CIRCUITS OF CONCERN

H/I Pressure Interface	YES
Spurious Operation	YES

FIRE AREA/ZONE 2-AC-9-5

7.9.1.1 Location

Auxiliary Control Building - El. 9'-0" - Cable Spreading Room - 6252 square feet - Fig. 8-5

7.9.1.2 Fire Loading

Fire loading category - Medium
Maximum permissible fire loading - 160,000 Btu/sq. ft. (Note 1)

Note 1:The maximum permissible fire loading is based on an evenly distributed loading of combustible materials. Majority of cable tray fill should be limited below 25% such that the maximum permissible fire loading is not exceeded.

7.9.1.3 Design Basis Fire

The design basis fire is postulated to be a fire that would involve mostly cable insulation. The design basis fire is conservatively based on the simultaneous total combustion of all combustibles in the area.

7.9.1.4 Fire Protection Equipment

The area contains an automatic water spray system with fixed temperature rate of rise actuation. Actuation by the heat detectors results in control room annunciation. Manual fire fighting equipment is available within the area. Ionization smoke detectors, located throughout the area, provide early warning alarm in the control room.

7.9.1.5 Construction

The east wall of the area is reinforced concrete with a 3 hour rating. The area is separated from adjacent stairwell (2-AC-9-15) by 2 hour rated concrete walls. The remainder of the walls are 2 hour rated plaster partitions. Support columns are protected by vermiculite fireproofing. The floor to 2-AC-(-5)-169 is nonrated heavy concrete construction as is the floor to grade. The ceiling is 2 hour rated. The area communicates with adjacent cable riser gallery (2-AC-9-14) through three 1-1/2 hour rated doors. Three hour rated double doors communicate with the corridor (2-AC-9-16) and the relay room (2-AC-9-17). One 1-1/2 hour rated door separates the area from the Unit 3 cable spreading room (3-AC-9-6). A 28" diameter manhole cover allows access to the emergency chilled water pipe tunnel (2-AC-(-5)-169). The ventilation duct penetration to the emergency chilled water tunnel is not provided with a fire damper. The remainder of the ventilation duct penetrations are provided with 1-1/2 hour rated fire dampers.

7.9.1.6 Licensee Controlled Specification Barriers

For definition of the barriers requiring surveillance per LCS 3.7.104, refer to the latest revision of Figure 8-5, sheet 3.

7.9.1.7 Conclusions

The ionization detection system is expected to detect the products of combustion from an incipient fire, and alert the control room for prompt response by the fire department. The fire department then enters the cable spreading room and extinguishes the fire with portable equipment, or actuates the water spray system from the manual station located outside the cable spreading room. In the event the fire achieves sufficient intensity, the fixed temperature rate of rise heat detectors will actuate the water spray system automatically. Actuation by the heat detectors is alarmed in the control room. The water spray system will control and suppress the fire until the fire department arrives and completes the extinguishment with portable equipment. Should the automatic water spray system fail to actuate, the available portable equipment is adequate to extinguish the fire.

The normal ventilation system will effectively remove the smoke generated by the design basis fire until the fire dampers operate. Portable exhaust fans may then be used to vent smoke from the area.

All the Appendix R fire boundaries in fire area 2-AC-9-5 were evaluated except those to 2-AR-9-82, 2-AR-9-76, 2-AR-24-102B and 2-AR-9-81 which are 3 hour rated. The fire boundaries and associated fire protection features were found to be adequate to prevent the propagation of fire beyond the fire boundaries.

The design basis fire is insufficient to breach the area's rated barriers.
A nonrated manhole cover and an undampered ventilation duct penetration communicate with the emergency chilled water pipe tunnel (2-AC-(-5)-169) below. Propagation of the fire through the small openings in the manhole cover is not anticipated as a result of the design basis fire. Propagation through the undampered duct penetration is postulated. Should this occur, the loss of the redundant component cooling water and emergency chilled water piping in the pipe tunnel is not anticipated, as there are no components in the area which could be adversely affected by a fire.

7.9.1.8 Fire Area 2-AC-9-5 Appendix R Compliance

Analysis for this fire area/zone has shown that equipment impaired may require control room evacuation in order to achieve safe shutdown. Shutdown for a fire in this area will be credited using alternative shutdown equipment and procedures. Operator action may be required to isolate selected Train A equipment from the control room, and operate the equipment either manually or from alternative shutdown stations. Operator actions may be required to provide CCW make-up from the Fire Water System. Fire damage may also require evacuation of the control room for Unit 3.

One train of systems necessary to achieve hot standby and cold shutdown conditions has been evaluated to remain available for safe shutdown due to alternative shutdown capabilities provided in accordance with 10CFR50, Appendix R, III.G.3 and III.L. The fire detection and suppression systems in this area/zone were evaluated and shown to provide a level of protection equivalent to the requirements of the applicable sections of Appendix R.

7.9.2 FIRE AREA/ZONE: 3-AC-9-6

FIRE AREA/ZONE: 3-AC-9-6

AREA: 6129 sq. ft. DESCRIPTION: CABLE SPREADING ROOM

DESIGN BASIS FIRE

Fire Loading Category:	High
Fire Loading - Max Permiss:	(SEE TEXT)

FIRE PROTECTION (AVAILABLE)

Suppression (type)	water spray system
Hose Stations	(1)
Portable Extinguishers	yes
Detectors (type)	ionization, heat detectors

FIRE RESISTANCE RATING

Walls	east 3hr, others 2hr
Floor, Ceiling, Roof	2hr/ceiling, HC/floor
Penetrations	D, C, P
Fixed Openings	none
Doors	B/2-AC-9-5, A/2-AC-9-17, (3)B/3-AC-9-7, A/2-AC-9-16

HOT STANDBY SYSTEMS	Equipment	Valves	Cable
Reactor Coolant			A,B,C,D
Reactor Protection System			A,B,C,D
Shutdown Cooling			A,B
Chemical and Volume Control			A,B
Main Feedwater			A,B
Main Steam			A,B,C,D
HVAC			A,B
Auxiliary Feedwater			A,B,C
Engineered Safety Feature			A,B,C,D
Component Cooling Water			A,B,X
Saltwater Cooling Water			A,B
Emergency Chilled Water			A,B
Diesel Generator Systems			A,B

COLD SHUTDOWN SYSTEMS	Equipment	Valves	Cable
Shutdown Cooling			A,B
CCW (To SDC)			A,B
HVAC			A,B
Summary (Hot and Cold)			A,B,C,D,X

ESSENTIAL ELECTRIC SYSTEMS	Equipment	MCC and Switchgear	Cable
220 KV (AC)			X
4160 V (AC)			A,B
480 V (AC)			A,B
120 V (AC)			
125 V (DC)			
Electric Panels			A,B,C,D,X
Summary			A,B,C,D,X

ASSOCIATED CIRCUITS OF CONCERN

H/I Pressure Interface	YES
Spurious Operation	YES

FIRE AREA/ZONE 3-AC-9-6

7.9.2.1 Location

Auxiliary Control Building - El 9'-0" - Cable Spreading Room - 6129 square feet - Fig. 8-5

7.9.2.2 Fire Loading

Fire loading category - High
Maximum permissible fire loading - 160,000 Btu/sq. ft. (Notes 1, 2)

Note 1:The maximum permissible fire loading is based on an evenly distributed loading of combustible materials. Majority of cable tray fill should be limited below 25% such that the maximum permissible fire loading is not exceeded.

Note 2:The combustible loading within this fire zone consists primarily of cable insulation. The cables are mostly IEEE-383 qualified. In addition, the cable trays are protected with an automatic water spray. As discussed in the following sections, the combustible loading is considered acceptable based upon the fire protection features in the area.

7.9.2.3 Design Basis Fire

The design basis fire is postulated to be a fire that would involve mostly cable insulation. The design basis fire is conservatively based on the simultaneous total combustion of all combustibles in the area.

7.9.2.4 Fire Protection Equipment

The area contains an automatic water spray system with fixed temperature rate of rise actuation. Actuation by the heat detectors results in control room annunciation. Manual fire fighting equipment is available within the area. Ionization smoke detectors, located throughout the area, provide early warning alarm in the control room.

7.9.2.5 Construction

The east wall of the area is reinforced concrete with a 3 hour rating. The area is separated from adjacent stairwell (2-AC-9-19) by 2 hour rated concrete walls. The remainder of the walls are 2 hour rated plaster partitions. Support columns are protected by vermiculite fireproofing. The floor is heavy concrete and the ceiling is 2 hour rated. The area communicates with adjacent cable riser gallery (3-AC-9-7) through three 1-1/2 hour rated doors. Three-hour rated doors communicate with the corridor (2-AC-9-16) and the relay room (2-AC-9-17). One 1-1/2 hour rated door separates the area from the Unit 2 cable spreading room (2-AC-9-5). Ventilation duct penetrations are provided with 1-1/2 hour rated fire dampers.

7.9.2.6 Licensee Controlled Specification Barriers

For definition of the barriers requiring surveillance per LCS 3.7.104, refer to the latest revision of Figure 8-5, sheet 3.

7.9.2.7 Conclusions

The ionization detection system is expected to detect the products of combustion from an incipient fire, and alert the control room for prompt response by the fire department. The fire department then enters the cable spreading room and extinguishes the fire with portable equipment, or actuates the water spray system from the manual station located outside the cable spreading room. In the event the fire achieves sufficient intensity, the fixed temperature rate of rise heat detectors will actuate the water spray system automatically. Actuation of the water spray system is alarmed in the control room. The water spray system will control and suppress the fire until the fire department arrives and completes the extinguishment with portable equipment.

Should the automatic water spray system fail to actuate, the available portable equipment is adequate to extinguish the fire.

The normal ventilation system will effectively remove the smoke generated by the design basis fire until the fire dampers operate. Portable exhaust fans may then be used to vent smoke from the area.

All Appendix R fire area boundaries in 3-AC-9-6 were evaluated except 2-AR-9-81 which is 3 hour rated. The fire boundaries and associated fire protection features were found to be adequate to prevent the propagation of fire beyond the fire boundaries. The design basis fire will not breach the barriers defining the fire area.

7.9.2.8 Fire Area 3-AC-9-6 Appendix R Compliance

Analysis for this fire area/zone has shown that equipment impaired may require control room evacuation in order to achieve safe shutdown. Shutdown for a fire in this area will be credited using alternative shutdown equipment and procedures. Operator actions may be required to provide CCW make-up from the Fire Water System. Fire damage may also require evacuation of the Control Room for Unit 2.

One train of systems necessary to achieve hot standby and cold shutdown conditions has been evaluated to remain available for safe shutdown due to alternative shutdown capabilities provided in accordance with 10CFR50, Appendix R, III.G.3 and III.L. The fire detection and suppression systems in this area provide a level of protection equivalent to the requirements of the applicable sections of Appendix R.

7.9.3 FIRE AREA/ZONE: 3-AC-9-7

FIRE AREA/ZONE: 3-AC-9-7

AREA: 2390 sq. ft. DESCRIPTION: CABLE RISER GALLERY

DESIGN BASIS FIRE

Fire Loading Category:	High
Fire Loading - Max Permiss:	(SEE TEXT)

FIRE PROTECTION (AVAILABLE)

Suppression (type)	water spray system
Hose Stations	(1)
Portable Extinguishers	yes
Detectors (type)	ionization, heat detectors

FIRE RESISTANCE RATING

Walls	north 2hr, others 3hr
Floor, Ceiling, Roof	ceiling 2hr, HC/floor to 169, grade
Penetrations	D, C, P, ND/169, QP/21, 32,33
Fixed Openings	M/169
Doors	(3) B/3-AC-9-6, B/2-AC-9-8

HOT STANDBY SYSTEMS	Equipment	Valves	Cable
Reactor Coolant			A,B,C,D
Reactor Protection System			A,B,C,D
Shutdown Cooling			A,B
Chemical and Volume Control			A,B
Main Feedwater			A,B
Main Steam			A,B,C,D
HVAC			a*,A,B
Auxiliary Feedwater			A,B,C
Engineered Safety Feature			A,B,C,D
Component Cooling Water			A,B,X
Saltwater Cooling Water			a*,A,B
Emergency Chilled Water			a*,A,B
Diesel Generator Systems			A,B

COLD SHUTDOWN SYSTEMS	Equipment	Valves	Cable
Shutdown Cooling			A,B
CCW (To SDC)			A,B
HVAC			A,B
Summary (Hot and Cold)			a*, A,B,C,D,X

ESSENTIAL ELECTRIC SYSTEMS	Equipment	MCC and Switchgear	Cable
220 KV (AC)			X
4160 V (AC)			A,B
480 V (AC)			A,B
120 V (AC)			
125 V (DC)			
Electric Panels			A,B,C,D,X
Summary			A,B,C,D,X

ASSOCIATED CIRCUITS OF CONCERN

H/I Pressure Interface	YES
Spurious Operation	YES

FIRE AREA/ZONE 3-AC-9-7

7.9.3.1 Location

Auxiliary Control Building - El 9'-0" - Cable Riser Gallery - 2390 square feet - Fig. 8-5

7.9.3.2 Fire Loading

Fire loading category - High
Maximum permissible fire loading - 160,000 Btu/sq. ft. (Notes 1, 2)

Note 1:The maximum permissible fire loading is based on an evenly distributed loading of combustible materials.

Note 2:The combustible loading within this fire zone consists primarily of cable insulation. The cables are mostly IEEE-383 qualified. In addition, the cable trays are protected with an automatic water spray. As discussed in the following sections, the combustible loading is considered acceptable based upon the fire protection features in the area.

7.9.3.3 Design Basis Fire

The design basis fire is postulated to be a fire that would involve mostly cable insulation. The design basis fire is conservatively based on the simultaneous total combustion of all combustibles in the area.

7.9.3.4 Fire Protection Equipment

The area contains an automatic water spray system with fixed temperature rate of rise actuation. Actuation by the heat detectors results in control room annunciation. Manual fire fighting equipment is available within the area. Ionization smoke detectors, located throughout the area, provide early warning alarm in the control room.

7.9.3.5 Construction

The east, west, and south walls of the area are reinforced concrete with a 3 hour rating. The north wall is a 2 hour rated plaster partition. Support columns are protected by vermiculite fireproofing. The floor adjacent to 2-AC-(-5)-169 is nonrated heavy concrete construction as is the floor to grade. The ceiling is 2 hour rated. The area communicates with the adjacent cable spreading room (3-AC-9-6) through three 1-1/2 hour rated doors. One 1-1/2 hour rated door separates the area from the lighting switchgear room (2-AC-9-8). A 28" diameter manhole cover allows access to the emergency chilled water pipe tunnel (2-AC-(-5)-169). The ventilation duct penetration to the emergency chilled water pipe tunnel is not provided with a fire damper. The remainder of the ventilation duct penetrations are provided with 1-1/2 hour rated fire dampers.

Four 8 inch drains discharge into the room from the upper cable riser rooms at elevation 30 feet (3-AC-30-21) and 50 feet (3-AC-50-32 and 3-AC-50-33). Spring loaded check valves installed at the ends of the drain lines preclude communication of fumes/air between this room and the upper rooms in the event of a fire.

7.9.3.6 Licensee Controlled Specification Barriers

For definition of the barriers requiring surveillance per LCS 3.7.104, refer to the latest revision of Figure 8-5, sheet 3/4.

Cable for the following systems is wrapped:

Saltwater Pump Room HVAC - Train A
Emergency Chilled Water System - Train A
Saltwater Cooling System - Train A

7.9.3.7 Conclusions

The ionization detection system is expected to detect the products of combustion from an incipient fire and alert the control room for prompt response by the fire department. The fire department then enters the cable riser gallery and extinguishes the fire with portable equipment, or actuates the water spray system from the manual station located outside the cable riser gallery. In the event the fire achieves sufficient intensity, the fixed temperature rate of rise heat detectors will actuate the water spray system automatically. Actuation by the heat detectors is alarmed in the control room. The water spray system will control and suppress the fire until the fire department arrives and completes the extinguishment with portable equipment. Should the automatic water spray system fail to actuate, the available portable equipment is adequate to extinguish the fire.

The normal ventilation system will effectively remove the smoke generated by the design basis fire until the fire dampers operate. Portable smoke exhaust fans may then be used to vent smoke from the area.

A nonrated manhole cover and an undampered ventilation duct penetration communicate with the emergency chilled water pipe tunnel (2-AC-(-5)-169) below. Propagation of the fire through the small openings in the manhole cover is not anticipated as a result of the design basis fire. Propagation through the undampered duct penetration is postulated. However, should this occur, there are no components in the area which could be adversely affected by a fire.

The fire boundaries between 3-AC-9-7 and 3-AC-9-6, 2-AC-9-8, 2-AC-9-19, 3-AC-30-21 and 2-AC-(-5)-169 were evaluated. The boundaries and associated fire protection features were found to be adequate to prevent the propagation of fire between the fire areas. The design basis fire is insufficient to breach the barriers defining the zone/fire area.

FIRE AREA/ZONE 3-AC-9-7

7.9.3.8 Fire Area 3-AC-9-7 Appendix R Compliance

Analysis for this fire area/zone has shown that equipment impaired may require control room evacuation in order to achieve safe shutdown. Shutdown for a fire in this area will be credited using alternative shutdown equipment and procedures. Operator action may be required to isolate selected Train A equipment from the control room, and operate the equipment either manually or from alternative shutdown stations. Operator actions may be required to provide CCW make-up from the Fire Water System.

One train of systems necessary to achieve hot standby and cold shutdown conditions has been evaluated to remain available for safe shutdown due to alternative shutdown capabilities provided in accordance with 10CFR50, Appendix R, III.G.3 and III.L. Raceway fire barrier protection with suppression and detection is provided for required alternative shutdown cables. The fire detection and suppression systems in this area provide a level of protection equivalent to the requirements of Appendix R.

7.9.4 FIRE AREA/ZONE: 2-AC-9-8

FIRE AREA/ZONE: 2-AC-9-8

AREA: 348 sq. ft. DESCRIPTION: LIGHTING SWITCHGEAR ROOM

DESIGN BASIS FIRE

Fire Loading Category:	Low
Fire Loading - Max Permiss:	160,000.0 Btu's/sq.ft.

FIRE PROTECTION (AVAILABLE)

Suppression (type)	none
Hose Stations	none, (1) in 2-AC-9-16
Portable Extinguishers	none, adjacent
Detectors (type)	ionization

FIRE RESISTANCE RATING

Walls	west 3hr, others 2hr
Floor, Ceiling, Roof	2hr/ceiling, floor to 169, HC/grade
Penetrations	D, C, P
Fixed Openings	none
Doors	B/3-AC-9-7, A/2-AC-9-16, NR/2-TB-7-148B

HOT STANDBY SYSTEMS	Equipment	Valves	Cable
Reactor Coolant			
Reactor Protection System			
Shutdown Cooling			
Chemical and Volume Control			
Main Feedwater			
Main Steam			
HVAC			
Auxiliary Feedwater			
Engineered Safety Feature			
Component Cooling Water			
Saltwater Cooling Water			
Emergency Chilled Water			
Diesel Generator Systems			

COLD SHUTDOWN SYSTEMS	Equipment	Valves	Cable
Shutdown Cooling			
CCW (To SDC)			
HVAC			
Summary (Hot and Cold)			

ESSENTIAL ELECTRIC SYSTEMS	Equipment	MCC and Switchgear	Cable
220 KV (AC)			
4160 V (AC)			
480 V (AC)			
120 V (AC)			
125 V (DC)			
Electric Panels			
Summary			

ASSOCIATED CIRCUITS OF CONCERN

H/I Pressure Interface	NO
Spurious Operation	NO

7.9.5 FIRE AREA/ZONE: 2-AC-9-9

FIRE AREA/ZONE: 2-AC-9-9

AREA: 559 sq. ft. DESCRIPTION: EMERGENCY CHILLER ROOM

DESIGN BASIS FIRE

Fire Loading Category:	Minimal
Fire Loading - Max Permiss:	160,000.0 Btu's/sq.ft.

FIRE PROTECTION (AVAILABLE)

Suppression (type)	none
Hose Stations	none, (1) in 2-AC-9-16
Portable Extinguishers	none, adjacent
Detectors (type)	ionization

FIRE RESISTANCE RATING

Walls	west 3hr, others 2hr
Floor, Ceiling, Roof	2hr/ceiling, floor to 169, HC/grade
Penetrations	D, C, P
Fixed Openings	none
Doors	A/2-AC-9-16, A/2-AC-9-10

HOT STANDBY SYSTEMS	Equipment	Valves	Cable
Reactor Coolant			
Reactor Protection System			
Shutdown Cooling			
Chemical and Volume Control			
Main Feedwater			
Main Steam			
HVAC			
Auxiliary Feedwater			
Engineered Safety Feature			
Component Cooling Water			
Saltwater Cooling Water			
Emergency Chilled Water	A	A	A
Diesel Generator Systems			

COLD SHUTDOWN SYSTEMS	Equipment	Valves	Cable
Shutdown Cooling			
CCW (To SDC)			
HVAC			
Summary (Hot and Cold)	A	A	A

ESSENTIAL ELECTRIC SYSTEMS	Equipment	MCC and Switchgear	Cable
220 KV (AC)			
4160 V (AC)			
480 V (AC)			
120 V (AC)			
125 V (DC)			
Electric Panels	A		A
Summary	A		A

ASSOCIATED CIRCUITS OF CONCERN

H/I Pressure Interface	NO
Spurious Operation	NO

FIRE AREA/ZONE 2-AC-9-9

7.9.5.1 Location

Auxiliary Control Building - El. 9'-0" - Emergency Chiller Room - 559 square feet - Fig. 8-5

7.9.5.2 Fire Loading

Fire loading category - Minimal
Maximum permissible fire loading - 160,000 Btu/sq. ft. (Note 1)

Note 1:The maximum permissible loading is based on an evenly distributed loading of combustible materials.

7.9.5.3 Design Basis Fire

The design basis fire is postulated to be a fire that would involve mostly oil and cable insulation. The design basis fire is conservatively based on the simultaneous total combustion of all combustibles in the area.

7.9.5.4 Fire Protection Equipment

There is no fire fighting equipment in the area. Manual fire fighting equipment is available in adjacent area 2-AC-9-16. Ionization smoke detectors, located within the area, provide early warning alarm in the control room.

7.9.5.5 Construction

The north and east walls of the area are 2 hour rated metal framed plaster walls. The west wall is reinforced concrete with a 3 hour rating. The south wall, as well as the ceiling is 2 hour rated. The floor is heavy concrete construction. A 3 hour rated double door communicates with the corridor (2-AC-9-16). The area is separated from the normal chiller room (2-AC-9-10) by a 3 hour rated door. Ventilation duct penetrations in 2 hour rated walls are provided with 1-1/2 hour rated fire dampers. Ventilation penetrations in the west wall are provided with 3 hour rated fire dampers.

7.9.5.6 Licensee Controlled Specification Barriers

For definition of the barriers requiring surveillance per LCS 3.7.104, refer to the latest revision of Figure 8-5, sheet 3.

7.9.5.7 Conclusions

The ionization detection system is expected to detect the products of combustion from an incipient fire, and alert the control room for prompt response by the fire department. The available portable equipment is adequate to extinguish the fire.

The normal ventilation system will effectively vent the smoke generated by the design basis fire until the operation of the fire dampers. Portable smoke exhaust fans may then be used to vent smoke from the area.

Air flow through Train A and Train B ductwork for the emergency chiller rooms will be cut off when the damper installed in the ductwork of each train operates. The emergency chiller room HVAC system is not required for safe shutdown.

The fire boundaries between 2-AC-9-9 and 2-AC-9-10, 2-AC-9-8, 2-AC-30-23, and 2-AC-(-5)-169 were evaluated. The boundaries and associated fire protection features were found to be adequate to prevent the propagation of fire between the fire areas. The design basis fire is insufficient to breach the boundaries defining the area.

7.9.5.8 Fire Area 2-AC-9-9 Appendix R Compliance

Safe shutdown capability will be provided by utilizing Train B systems. Functionally redundant components protected from fire damage will be utilized to achieve safe shutdown.

One train of systems necessary to achieve hot standby and cold shutdown conditions independent of the subject fire area will be free of fire damage. Therefore, this fire area complies with the criteria of 10CFR50, Appendix R, III.G.1.

7.9.6 FIRE AREA/ZONE: 2-AC-9-10

FIRE AREA/ZONE: 2-AC-9-10

AREA: 920 sq. ft. DESCRIPTION: NORMAL CHILLER ROOM

DESIGN BASIS FIRE

Fire Loading Category:	Minimal
Fire Loading - Max Permiss:	160,000.0 Btu's/sq.ft.

FIRE PROTECTION (AVAILABLE)

Suppression (type)	none
Hose Stations	none, (1) in-2-AC-9-16
Portable Extinguishers	none, adjacent
Detectors (type)	none

FIRE RESISTANCE RATING

Walls	west 3hr, others 2hr
Floor, Ceiling, Roof	2hr/ceiling, floor to 169, HC/floor grade
Penetrations	D, C, P
Fixed Openings	none
Doors	(2) A/2-AC-9-16, A/2-AC-9-11, A/2-AC-9-9

HOT STANDBY SYSTEMS	Equipment	Valves	Cable
Reactor Coolant			
Reactor Protection System			
Shutdown Cooling			
Chemical and Volume Control			
Main Feedwater			
Main Steam			
HVAC			
Auxiliary Feedwater			
Engineered Safety Feature			
Component Cooling Water			
Saltwater Cooling Water			
Emergency Chilled Water			
Diesel Generator Systems			

COLD SHUTDOWN SYSTEMS	Equipment	Valves	Cable
Shutdown Cooling			
CCW (To SDC)			
HVAC			
Summary (Hot and Cold)			

ESSENTIAL ELECTRIC SYSTEMS	Equipment	MCC and Switchgear	Cable
220 KV (AC)			
4160 V (AC)			
480 V (AC)			
120 V (AC)			
125 V (DC)			
Electric Panels			
Summary			

ASSOCIATED CIRCUITS OF CONCERN

H/I Pressure Interface	NO
Spurious Operation	NO

FIRE AREA/ZONE 2-AC-9-10

7.9.6.1 Location

Auxiliary Control Building - El. 9'-0" - Normal Chiller Room - 920 square feet - Fig. 8-5

7.9.6.2 Fire Loading

Fire loading category - Minimal
Maximum permissible fire loading - 160,000 Btu/sq. ft. (Note 1)

Note 1:The maximum permissible loading is based on an evenly distributed loading of combustible materials.

7.9.6.3 Design Basis Fire

The design basis fire is postulated to be a fire that would involve mostly oil and cable insulation. The design basis fire is conservatively based on the simultaneous total combustion of all combustibles in the area.

7.9.6.4 Fire Protection Equipment

There is no fire fighting equipment within the area. Manual fire fighting equipment is available in adjacent area 2-AC-9-16. No fire detection equipment is provided within the area.

7.9.6.5 Construction

The north, east, and south walls of the area are 2 hour rated plaster partitions. The west wall is reinforced concrete with a 3 hour rating. The floor to 2-AC-(-5)-169 and the ceiling are 2 hour rated. The floor to grade is heavy concrete construction. The single support column is protected by vermiculite fireproofing. The area communicates with the corridor (2-AC-9-16) through a 3 hour rated door and a 3 hour rated double door. Two 3 hour rated doors separate the area from the emergency chiller rooms (2-AC-9-9 and 2-AC-9-11). Ventilation duct penetrations in 2 hour rated walls are provided with 1-1/2 hour rated fire dampers. Ventilation duct penetrations in the west wall are provided with 3 hour rated fire dampers.

7.9.6.6 Licensee Controlled Specification Barriers

For definition of the barriers requiring surveillance per LCS 3.7.104, refer to the latest revision of Figure 8-5, sheet 3.

7.9.6.7 Conclusions

The available portable equipment is adequate to extinguish the fire.

The normal ventilation system will effectively remove smoke generated by the design basis fire until closure of the dampers. Portable smoke exhaust fans may then be used to vent smoke from the area.

The design basis fire is insufficient to breach the barriers defining the area.

Appendix R fire area boundaries in 2-AC-9-10 with the exception of 2-TB-7-148B were evaluated. The fire boundaries and associated fire protection features were found to be adequate to prevent the propagation of fire beyond the fire boundaries.

7.9.6.8 Fire Area 2-AC-9-10 Appendix R Compliance

Safe shutdown capability will be provided by utilizing Train A or B. Safe shutdown analysis demonstrates that no safe shutdown systems will be damaged by fire in this area. Functionally redundant components protected from fire damage will be utilized to achieve safe shutdown.

One train of systems necessary to achieve hot standby and cold shutdown conditions independent of the subject fire area will be free of fire damage. Therefore, this fire area complies with the criteria of 10CFR50, Appendix R, III.G.1.

7.9.7 FIRE AREA/ZONE: 2-AC-9-11

FIRE AREA/ZONE: 2-AC-9-11

AREA: 570 sq. ft. DESCRIPTION: EMERGENCY CHILLER ROOM

DESIGN BASIS FIRE

Fire Loading Category:	Minimal
Fire Loading - Max Permiss:	160,000.0 Btu's/sq.ft.

FIRE PROTECTION (AVAILABLE)

Suppression (type)	none
Hose Stations	none, (1) in-2-AC-9-16
Portable Extinguishers	none, adjacent
Detectors (type)	ionization

FIRE RESISTANCE RATING

Walls	west 3hr, others 2hr
Floor, Ceiling, Roof	2hr/ceiling, floor to 169, HC/grade
Penetrations	D, C, P
Fixed Openings	none
Doors	A/2-AC-9-16, A/2-AC-9-10

HOT STANDBY SYSTEMS	Equipment	Valves	Cable
Reactor Coolant			
Reactor Protection System			
Shutdown Cooling			
Chemical and Volume Control			
Main Feedwater			
Main Steam			
HVAC			
Auxiliary Feedwater			
Engineered Safety Feature			
Component Cooling Water			
Saltwater Cooling Water			
Emergency Chilled Water	B	B	B
Diesel Generator Systems			

COLD SHUTDOWN SYSTEMS	Equipment	Valves	Cable
Shutdown Cooling			
CCW (To SDC)			
HVAC			
Summary (Hot and Cold)	B	B	B

ESSENTIAL ELECTRIC SYSTEMS	Equipment	MCC and Switchgear	Cable
220 KV (AC)			X
4160 V (AC)			
480 V (AC)			
120 V (AC)			
125 V (DC)			
Electric Panels	B		B
Summary	B		B,X

ASSOCIATED CIRCUITS OF CONCERN

H/I Pressure Interface	NO
Spurious Operation	NO

FIRE AREA/ZONE 2-AC-9-11

7.9.7.1 Location

Auxiliary Control Building - El. 9'-0" - Emergency Chiller room - 570 square feet - Fig. 8-5

7.9.7.2 Fire Loading

Fire loading category - Minimal
Maximum permissible fire loading - 160,000 Btu/sq. ft. (Note 1)

Note 1:The maximum permissible loading is based on an evenly distributed loading of combustible materials.

7.9.7.3 Design Basis Fire

The design basis fire is postulated to be a fire that would involve mostly oil and cable insulation.

The design basis fire is conservatively based on the simultaneous total combustion of all combustibles in the area.

7.9.7.4 Fire Protection Equipment

There is no fire fighting equipment within the area. Manual fire fighting equipment is available in adjacent area 2-AC-9-16. Ionization smoke detectors, located within the area, provide early warning alarm in the control room.

7.9.7.5 Construction

The west wall of the area is reinforced concrete with a 3 hour rating. The walls separating the area from the elevator (2-AC-9-18) are 2 hour rated concrete construction. The remaining walls are 2 hour rated metal framed plaster partitions. The single support column is protected by vermiculite fireproofing. The floor to 2-AC-(-5)-169 and the ceiling are 2 hour rated. The floor to grade is nonrated heavy concrete construction. The area communicates with the corridor (2-AC-9-16) through a 3 hour rated double door. A 3 hour rated door separates the area from the normal chiller room (2-AC-9-10). Ventilation duct penetrations in 2 hour rated walls are provided with 1-1/2 hour rated fire dampers. Ventilation duct penetrations in the west wall are provided with 3 hour rated fire dampers.

7.9.7.6 Licensee Controlled Specification Barriers

For definition of the barriers requiring surveillance per LCS 3.7.104, refer to the latest revision of Figure 8-5, sheet 3.

7.9.7.7 Conclusions

The ionization detection system is expected to detect the products of combustion from an incipient fire, and alert the control room for prompt response by the fire department. The available portable equipment is adequate to extinguish the fire.

The normal ventilation system will effectively vent the smoke generated by the design basis fire until closure of the fire dampers. Portable smoke exhaust fans may then be used to vent the smoke from the area.

The fire boundaries between 2-AC-9-11 and 2-AC-9-18, 2-AC-30-24, 2-AC-9-10, 2-AC-(-5)-169, 2-AC-30-20A, and 2-AC-30-20E were evaluated. The boundaries and associated fire protection features were found to be adequate to prevent the propagation of fire between the fire areas. The design basis fire is insufficient to breach the barriers defining the area.

7.9.7.8 Fire Area 2-AC-9-11 Appendix R Compliance

Safe shutdown capability will be provided by utilizing Train A systems. Functionally redundant components protected from fire damage will be utilized to achieve safe shutdown.

One train of systems necessary to achieve hot standby and cold shutdown conditions independent of the subject fire area will be free of fire damage. Therefore, this fire area complies with the criteria of 10CFR50, Appendix R, III.G.1.

7.9.8 FIRE AREA/ZONE: 2-AC-9-12

FIRE AREA/ZONE: 2-AC-90-12

AREA: 1687 sq. ft. DESCRIPTION: HVAC ROOM

DESIGN BASIS FIRE

Fire Loading Category:	Minimal
Fire Loading - Max Permiss:	13,000.0 Btu's/sq.ft.

FIRE PROTECTION (AVAILABLE)

Suppression (type)	none
Hose Stations	none, (1) in-2-AC-9-16
Portable Extinguishers	none, adjacent
Detectors (type)	none

FIRE RESISTANCE RATING

Walls	west 3hr, others 2hr
Floor, Ceiling, Roof	ceiling 2hr/HC/floor grade/169
Penetrations	D, C, P, ND/169
Fixed Openings	M/169
Doors	(2) A/2-AC-9-16

HOT STANDBY SYSTEMS	Equipment	Valves	Cable
Reactor Coolant			
Reactor Protection System			
Shutdown Cooling			
Chemical and Volume Control			
Main Feedwater			
Main Steam			
HVAC	A,B		A,B
Auxiliary Feedwater			
Engineered Safety Feature			
Component Cooling Water			
Saltwater Cooling Water			
Emergency Chilled Water			
Diesel Generator Systems			

COLD SHUTDOWN SYSTEMS	Equipment	Valves	Cable
Shutdown Cooling			
CCW (To SDC)			
HVAC			
Summary (Hot and Cold)	A,B		A,B

ESSENTIAL ELECTRIC SYSTEMS	Equipment	MCC and Switchgear	Cable
220 KV (AC)			
4160 V (AC)			
480 V (AC)			
120 V (AC)			
125 V (DC)			
Electric Panels			
Summary			

ASSOCIATED CIRCUITS OF CONCERN

H/I Pressure Interface	NO
Spurious Operation	NO

FIRE AREA/ZONE 2-AC-9-12

7.9.8.1 Location

Auxiliary Control Building - El. 9'-0" - HVAC Room - 1687 square feet - Fig. 8-5

7.9.8.2 Fire Loading

Fire loading category - Minimal
Maximum permissible fire loading - 13,000 Btu/sq. ft. (Note 1)

Note 1:The maximum permissible fire loading is based on an evenly distributed loading of combustible materials.

7.9.8.3 Design Basis Fire

The design basis fire is postulated to be a fire that would involve mostly oil.

The design basis fire is conservatively based on the simultaneous total combustion of all combustibles in the area.

7.9.8.4 Fire Protection Equipment

There is no fire fighting or fire detection equipment located within the area. Manual fire fighting equipment is available in adjacent area 2-AC-9-16.

7.9.8.5 Construction

The west wall of the area is reinforced concrete with a 3 hour rating. The remainder of the area walls is of 2 hour rated plaster construction. The floor is heavy concrete construction. The ceiling is 2 hour rated. The floor to 2-AC-(-5)-169 is of nonrated heavy concrete construction. Two three hour rated doors allow access to the area from the corridor (2-AC-9-16). A 28" diameter manhole cover opens to the emergency chilled water pipe tunnel (2-AC-(-5)-169) below. The ventilation duct penetration to the emergency chilled water pipe tunnel below is not provided with a fire damper. Ventilation penetrations in the west wall are provided with 3 hour rated fire dampers. Ventilation duct penetrations in 2 hour rated walls are provided with 1-1/2 hour rated fire dampers.

7.9.8.6 Licensee Controlled Specification Barriers

For definition of the barriers requiring surveillance per LCS 3.7.104, refer to the latest revision of Figure 8-5, sheet 3.

7.9.8.7 Conclusions

The available portable equipment is adequate to extinguish the fire.

The design basis fire is insufficient to breach the barriers defining the area.

Appendix R fire boundaries of fire area 2-AC-9-12 were evaluated except 2-TB-7-148B which is 3 hour rated. The fire boundaries and associated fire protection features were found to be adequate to prevent the propagation of fire beyond the fire boundaries.

7.9.8.8 Fire Area 2-AC-9-12 Appendix R Compliance

Safe shutdown capability will be provided by utilizing Train A systems. Functionally redundant components protected from fire damage will be utilized in conjunction with operator action on manual or disabled components to achieve safe shutdown.

One train of systems necessary to achieve hot standby and cold shutdown conditions independent of the subject fire area will be free of fire damage. Therefore, this fire area complies with the criteria of 10CFR50, Appendix R, III.G.1.

7.9.9 FIRE AREA/ZONE: 2-AC-9-13

FIRE AREA/ZONE: 2-AC-9-13

AREA: 348 sq. ft. DESCRIPTION: LIGHTING SWITCHGEAR ROOM

DESIGN BASIS FIRE

Fire Loading Category:	Low
Fire Loading - Max Permiss:	160,000.0 Btu's/sq.ft.

FIRE PROTECTION (AVAILABLE)

Suppression (type)	none
Hose Stations	none, (1) in-2-AC-9-16
Portable Extinguishers	none, adjacent
Detectors (type)	ionization

FIRE RESISTANCE RATING

Walls	west 3hr, others 2hr
Floor, Ceiling, Roof	2hr/ceiling, floor to 169, HC/grade
Penetrations	D, C, P
Fixed Openings	none
Doors	B/2-AC-9-14, A/2-AC-9-16, NR/2-TB-7-148B

HOT STANDBY SYSTEMS	Equipment	Valves	Cable
Reactor Coolant			
Reactor Protection System			
Shutdown Cooling			
Chemical and Volume Control			
Main Feedwater			
Main Steam			
HVAC			
Auxiliary Feedwater			
Engineered Safety Feature			
Component Cooling Water			
Saltwater Cooling Water			
Emergency Chilled Water			
Diesel Generator Systems			

COLD SHUTDOWN SYSTEMS	Equipment	Valves	Cable
Shutdown Cooling			
CCW (To SDC)			
HVAC			
Summary (Hot and Cold)			

ESSENTIAL ELECTRIC SYSTEMS	Equipment	MCC and Switchgear	Cable
220 KV (AC)			
4160 V (AC)			
480 V (AC)			
120 V (AC)			
125 V (DC)			
Electric Panels			B
Summary			B

ASSOCIATED CIRCUITS OF CONCERN

H/I Pressure Interface	NO
Spurious Operation	NO

FIRE AREA/ZONE 2-AC-9-13

7.9.9.1 Location

Auxiliary Control Building - El. 9'-0" - Lighting Switchgear Room - 348 square feet - Fig. 8-5.

7.9.9.2 Fire Loading

Fire loading category - Minimal
Maximum permissible fire loading - 160,000 Btu/sq. ft. (Note 1)

Note 1:The maximum permissible fire loading is based on an evenly distributed loading of combustible materials.

7.9.9.3 Design Basis Fire

The design basis fire is postulated to be a fire that would involve mostly oil, grease, rubber mats, and cable insulation. The design basis fire is conservatively based on the simultaneous total combustion of all combustibles in the zone.

7.9.9.4 Fire Protection Equipment

The area contains no fire suppression equipment, either fixed or portable. Manual fire fighting equipment is available in adjacent area 2-AC-9-16. The area contains ionization detection to provide early warning alarm to the control room.

7.9.9.5 Construction

The west wall of the area is 3 hour rated. Others, including the ceiling are 2 hour rated. The floor to grade is nonrated heavy concrete construction. The area contains rated doors, dampers, piping and cabling penetrations which communicate with other areas. The door to 2-TB-7-148B is non-rated.

7.9.9.6 Licensee Controlled Specification Barriers

For definition of the barriers requiring surveillance per LCS 3.7.104, refer to the latest revision of Figure 8-5, sheet 3.

7.9.9.7 Conclusions

The ionization detectors are expected to detect the products of combustion from an incipient fire and alert the control room for prompt action by the fire department. The fire department will use available equipment in the adjacent zone to extinguish the fire.

The normal ventilation system will effectively remove smoke generated by the design basis fire until the dampers operate. Portable smoke exhaust fans may then be used to vent smoke from the area.

Appendix R fire area boundaries in 2-AC-9-13 were evaluated. The fire boundaries and associated fire protection features were found to be adequate to prevent the propagation of fire beyond the fire boundaries. The design basis fire is insufficient to breach the barriers defining the zone/fire area.

7.9.9.8 Fire Area 2-AC-9-13 Appendix R Compliance

Safe shutdown capability will be provided by utilizing Train A systems. Functionally redundant components protected from fire damage will be utilized to achieve safe shutdown.

One train of systems necessary to achieve hot standby and cold shutdown conditions independent of the subject fire area will be free of fire damage. Therefore, this fire area complies with the criteria of 10CFR50, Appendix R, III.G.1.

7.9.10 FIRE AREA/ZONE: 2-AC-9-14

FIRE AREA/ZONE: 2-AC-9-14

AREA: 2390 sq. ft. DESCRIPTION: CABLE RISER GALLERY

DESIGN BASIS FIRE

Fire Loading Category:	Medium
Fire Loading - Max Permiss:	160,000.0 Btu's/sq.ft.

FIRE PROTECTION (AVAILABLE)

Suppression (type)	water spray system
Hose Stations	(1)
Portable Extinguishers	yes
Detectors (type)	ionization, heat detectors

FIRE RESISTANCE RATING

Walls	south 2hr, others 3hr
Floor, Ceiling, Roof	2hr/ceiling, floor to 169; HC/grade
Penetrations	D, C, P, QP/28, 36, 37
Fixed Openings	none
Doors	(3)B/2-AC-9-5, B/2-AC-9-13

HOT STANDBY SYSTEMS	Equipment	Valves	Cable
Reactor Coolant			A,B,C,D
Reactor Protection System			A,B,C,D
Shutdown Cooling			A,B
Chemical and Volume Control			A,B
Main Feedwater			A,B
Main Steam			A,B,C,D
HVAC			a*,A,B
Auxiliary Feedwater			A,B,C
Engineered Safety Feature			A,B,C,D
Component Cooling Water			A,B,X
Saltwater Cooling Water			a*,A,B
Emergency Chilled Water			A,B
Diesel Generator Systems			A,B

COLD SHUTDOWN SYSTEMS	Equipment	Valves	Cable
Shutdown Cooling			A,B
CCW (To SDC)			A,B
HVAC			A,B
Summary (Hot and Cold)			a*,A,B,C,D,X

ESSENTIAL ELECTRIC SYSTEMS	Equipment	MCC and Switchgear	Cable
220 KV (AC)			X
4160 V (AC)			A,B
480 V (AC)			A,B
120 V (AC)			A
125 V (DC)			
Electric Panels			A,B,C,D,X
Summary			A,B,C,D,X

ASSOCIATED CIRCUITS OF CONCERN

H/I Pressure Interface	YES
Spurious Operation	YES

FIRE AREA/ZONE 2-AC-9-14

7.9.10.1 Location

Auxiliary Control Building - El. 9'-0" - Cable Riser Gallery - 2390 square feet - Fig. 8-5

7.9.10.2 Fire Loading

Fire loading category - Medium
Maximum permissible fire loading - 160,000 Btu/sq. ft. (Note 1)

Note 1:The maximum permissible fire loading is based on an evenly distributed loading of combustible materials.

7.9.10.3 Design Basis Fire

The design basis fire is postulated to be a fire that would involve mostly cable insulation.

The design basis fire is conservatively based on the simultaneous total combustion of all combustibles in the area.

7.9.10.4 Fire Protection Equipment

The area contains an automatic water spray system with fixed temperature rate of rise actuation. Actuation by the heat detectors results in control room annunciation. Manual fire fighting equipment is available within the area. Ionization smoke detectors, located throughout the area, provide early warning alarm in the control room.

7.9.10.5 Construction

The east, west, and north walls of the area are reinforced concrete with a 3 hour rating. The south wall is 2 hour rated plaster construction. Support columns are protected by vermiculite fireproofing. The floor to 2-AC-(-5)-169 and the ceiling are 2 hour rated. The floor to grade is nonrated heavy concrete construction. The area communicates with the adjacent cable spreading room (2-AC-9-5) through three 1-1/2 hour rated doors. A 1-1/2 hour rated door separates the area from the lighting switchgear room (2-AC-9-13). Ventilation duct penetrations are provided with 1-1/2 hour rated fire dampers. Four 8 inch drains discharge into the room from the upper cable riser rooms at elevation 30 feet (2-AC-30-28) and 50 feet (2-AC-50-36 and 2-AC-50-37). Spring loaded check valves installed at the ends of the drain lines preclude communication of fumes/air between this room and the upper rooms in the event of a fire.

7.9.10.6 Licensee Controlled Specification Barriers

For definition of the barriers requiring surveillance per LCS 3.7.104, refer to the latest revision of Figure 8-5, sheet 3.

Cable for the following systems is wrapped:

Saltwater Cooling System - Train A
Saltwater Pump Room HVAC System - Train A

7.9.10.7 Conclusions

The ionization detection system is expected to detect the products of combustion from an incipient fire and alert the control room for prompt response by the fire department. The fire department then enters the cable riser gallery and extinguishes the fire with portable equipment, or actuates the water spray system from the manual station located outside the cable riser gallery. In the event the fire achieves sufficient intensity, the fixed temperature rate of rise heat detectors will actuate the water spray system automatically. Actuation by the heat detectors is alarmed in the control room. The water spray system will control and suppress the fire until the fire department arrives and completes the extinguishment with portable equipment. Should the automatic water spray system fail to actuate, the available portable equipment is adequate to extinguish the fire.

The normal ventilation system will effectively remove the smoke generated by the design basis fire until the fire dampers operate. Portable smoke exhaust fans may then be used to vent smoke from the area.

The fire boundaries between 2-AC-9-14 and 2-AC-9-5, 2-AC-9-13, 2-AC-9-15, 2-AC-30-28 and 2-AC-(-5)-169 were evaluated. The boundaries and associated fire protection features were found to be adequate to prevent the propagation of fire between the fire areas. The design basis fire is not sufficient to breach the barriers defining the fire area.

7.9.10.8 Fire Area 2-AC-9-14 Appendix R Compliance

Analysis for this fire area/zone has shown that equipment impaired may require control room evacuation in order to achieve safe shutdown. Shutdown for a fire in this area will be credited using alternative shutdown equipment and procedures. Operator action may be required to isolate selected Train A equipment from the control room, and operate the equipment either manually or from alternative shutdown stations. Operator actions may be required to provide CCW make-up from the Fire Water System.

One train of systems necessary to achieve hot standby and cold shutdown conditions has been evaluated to remain available for safe shutdown due to alternative shutdown capabilities provided in accordance with 10CFR50, Appendix R, III.G.3 and III.L. Raceway fire barrier protection with suppression and detection is provided for required alternative shutdown cables. The fire detection and suppression systems in this area provide a level of protection equivalent to the requirements of Appendix R.

7.9.11 FIRE AREA/ZONE: 2-AC-9-15

FIRE AREA/ZONE: 2-AC-9-15

AREA: 171 sq. ft. DESCRIPTION: STAIRCASE

DESIGN BASIS FIRE

Fire Loading Category:	Minimal
Fire Loading - Max Permiss:	160,000.0 Btu's/sq.ft.

FIRE PROTECTION (AVAILABLE)

Suppression (type)	none
Hose Stations	none, (1) in 2-AC-9-16
Portable Extinguishers	none, adjacent
Detectors (type)	none

FIRE RESISTANCE RATING

Walls	2hr
Floor, Ceiling, Roof	2hr/ceiling, HC/grade
Penetrations	C, P
Fixed Openings	none
Doors	B/2-AC-9-16, B/2-AC-30-27

HOT STANDBY SYSTEMS	Equipment	Valves	Cable
Reactor Coolant			
Reactor Protection System			
Shutdown Cooling			
Chemical and Volume Control			
Main Feedwater			
Main Steam			
HVAC			
Auxiliary Feedwater			
Engineered Safety Feature			
Component Cooling Water			
Saltwater Cooling Water			
Emergency Chilled Water			
Diesel Generator Systems			

COLD SHUTDOWN SYSTEMS	Equipment	Valves	Cable
Shutdown Cooling			
CCW (To SDC)			
HVAC			
Summary (Hot and Cold)			

ESSENTIAL ELECTRIC SYSTEMS	Equipment	MCC and Switchgear	Cable
220 KV (AC)			
4160 V (AC)			
480 V (AC)			
120 V (AC)			
125 V (DC)			
Electric Panels			
Summary			

ASSOCIATED CIRCUITS OF CONCERN

H/I Pressure Interface	NO
Spurious Operation	NO

7.9.12 FIRE AREA/ZONE: 2-AC-9-16

FIRE AREA/ZONE: 2-AC-9-16

AREA: 2461 sq. ft. DESCRIPTION: CORRIDOR

DESIGN BASIS FIRE

Fire Loading Category:	Low
Fire Loading - Max Permiss:	160,000.0 Btu's/sq.ft.

FIRE PROTECTION (AVAILABLE)

Suppression (type)	wet pipe sprinklers
Hose Stations	(3)
Portable Extinguishers	yes
Detectors (type)	ionization

FIRE RESISTANCE RATING

Walls	3hr/148B, others 2hr
Floor, Ceiling, Roof	2hr/ceiling, floor to 169, HC/grade
Penetrations	D, C, P
Fixed Openings	none
Doors	A/8, 13,9,11,5,6,10,12,148B, B/2-AC-9-15, B/2-AC-9-19, B/2-AC-9-18, B/2-AC-30-20A

HOT STANDBY SYSTEMS	Equipment	Valves	Cable
Reactor Coolant			B
Reactor Protection System			
Shutdown Cooling			B
Chemical and Volume Control			
Main Feedwater			
Main Steam			B
HVAC			A,B
Auxiliary Feedwater			
Engineered Safety Feature			
Component Cooling Water			
Saltwater Cooling Water			
Emergency Chilled Water			a,A,B
Diesel Generator Systems			

COLD SHUTDOWN SYSTEMS	Equipment	Valves	Cable
Shutdown Cooling			
CCW (To SDC)			
HVAC			
Summary (Hot and Cold)			a,A,B

ESSENTIAL ELECTRIC SYSTEMS	Equipment	MCC and Switchgear	Cable
220 KV (AC)			X
4160 V (AC)			
480 V (AC)			
120 V (AC)			
125 V (DC)			
Electric Panels			A,B
Summary			A,B,X

ASSOCIATED CIRCUITS OF CONCERN

H/I Pressure Interface	YES
Spurious Operation	YES

FIRE AREA/ZONE 2-AC-9-16

7.9.12.1 Location

Auxiliary Control Building - El. 9'-0" - Corridor - 2461 square feet - Fig. 8-5

7.9.12.2 Fire Loading

Fire loading category - Low
Maximum permissible fire loading - 160,000 Btu/sq. ft. (Note 1)

Note 1:The maximum permissible loading is based on an evenly distributed loading of combustible materials.

7.9.12.3 Design Basis Fire

The design basis fire is postulated to be a fire that would involve mostly cable insulation, Class A combustibles, hydrogen, and plastic. The design basis fire is conservatively based on the simultaneous total combustion of all combustibles in the area.

7.9.12.4 Fire Protection Equipment

The area contains an automatic wet pipe sprinkler system. Manual fire fighting equipment is available within the area. Ionization smoke detectors, located throughout the area, provide early warning alarm in the control room.

7.9.12.5 Construction

The north, south, and east walls of the area are 2 hour rated metal framed plaster. The portion of the west wall adjoining the turbine building (2-TB-7-148B) is 3 hour rated reinforced concrete construction. The remainder of the west wall is metal framed plaster with a 2 hour rating. The floor to 2-AC-(-5)-169 and the ceiling are 2 hour rated. The floor to grade is heavy concrete construction. The area communicates with the lighting switchgear rooms (2-AC-9-8 and 2-AC-9-13), the emergency chiller rooms (2-AC-9-9 and 2-AC-9-11), the cable spreading rooms (2-AC-9-5 and 3-AC-9-6), the normal chiller room (2-AC-9-10), and the HVAC room (2-AC-9-12) through 3 hour rated doors. Two 1-1/2 hour doors communicate with the stairways (2-AC-9-15 and 2-AC-9-19) and a 1-1/2 hour door communicates with the foreman's office (2-AC-30-20A) from the pipe chase. A 3 hour rated double bulletproof door in the west wall separates the area from the turbine building (2-TB-7-148B). The elevator door is 1-1/2 hour rated.

Ventilation duct penetrations in 2 hour rated walls are provided with 1-1/2 hour rated fire dampers. Ventilation duct penetrations in 3 hour rated walls are provided with 3 hour rated fire dampers.

7.9.12.6 Licensee Controlled Specification Barriers

For definition of the barriers requiring surveillance per LCS 3.7.104, refer to the latest revision of Figure 8-5, sheet 3.

Cable for the following systems are wrapped:

Emergency Chilled Water System - Units 2/3 Train A

7.9.12.7 Conclusions

The ionization detection system is expected to detect the products of combustion from an incipient fire and alert the control room for prompt response by the fire department. The available portable equipment is adequate to extinguish the fire. In the event the fire achieves sufficient intensity, the automatic wet pipe sprinkler system will actuate to control and extinguish the fire.

Portable smoke exhaust fans may be used to remove smoke from the fire area.

The fire boundaries between 2-AC-9-16 and 2-AC-9-5, 3-AC-9-6, 2-AC-9-8, 2-AC-9-10, 2-AC-9-12, 2-AC-9-13, 2-AC-9-15, 2-AC-9-17, 2-AC-9-18, 2-AC-9-19, 2-AC-30-20B, 2-AC-30-20C, 2-AC-30-20E, 2-AC-30-22, 2-AC-30-23, 2-AC-30-24, 2-AC-(-5)-169, 2-AC-70-64 and 2-AC-30-27 were evaluated. The boundaries and associated fire protection features were found to be adequate to prevent the propagation of fire between the fire areas. The design basis fire is insufficient to breach the barriers defining the area.

Fire Area 2-AC-9-16 Appendix R Compliance

Safe shutdown capability will be provided by utilizing Train A systems. Functionally redundant components protected from fire damage will be utilized in conjunction with operator action on manual or disabled components to achieve safe shutdown.

One train of systems necessary to achieve hot standby and cold shutdown conditions has been evaluated to remain available for safe shutdown in accordance with 10CFR50, Appendix R, III.G.1 and III.G.2.c. The fire detection and suppression systems in this area/zone were evaluated and shown to provide a level of protection equivalent to the requirements of Appendix R.

7.9.13 FIRE AREA/ZONE: 2-AC-9-17

FIRE AREA/ZONE: 2-AC-9-17

AREA: 1292 sq. ft. DESCRIPTION: RELAY ROOM

DESIGN BASIS FIRE

Fire Loading Category:	Low
Fire Loading - Max Permiss:	160,000.0 Btu's/sq.ft.

FIRE PROTECTION (AVAILABLE)

Suppression (type)	none
Hose Stations	none, (1) in 2-AC-9-16
Portable Extinguishers	none, adjacent
Detectors (type)	ionization

FIRE RESISTANCE RATING

Walls	2hr
Floor, Ceiling, Roof	2hr/ceiling, floor to 169, HC/grade
Penetrations	D, C, P
Fixed Openings	none
Doors	A/2-AC-9-5, A/3-AC-9-6

HOT STANDBY SYSTEMS	Equipment	Valves	Cable
Reactor Coolant			
Reactor Protection System			
Shutdown Cooling			
Chemical and Volume Control			
Main Feedwater			
Main Steam			
HVAC			
Auxiliary Feedwater			
Engineered Safety Feature			
Component Cooling Water			X
Saltwater Cooling Water			
Emergency Chilled Water			
Diesel Generator Systems			

COLD SHUTDOWN SYSTEMS	Equipment	Valves	Cable
Shutdown Cooling			
CCW (To SDC)			
HVAC			
Summary (Hot and Cold)			X

ESSENTIAL ELECTRIC SYSTEMS	Equipment	MCC and Switchgear	Cable
220 KV (AC)			X
4160 V (AC)			
480 V (AC)			
120 V (AC)			
125 V (DC)			
Electric Panels			A,B
Summary			A,B,X

ASSOCIATED CIRCUITS OF CONCERN

H/I Pressure Interface	NO
Spurious Operation	YES

FIRE AREA/ZONE 2-AC-9-17

7.9.13.1 Location

Auxiliary Control Building - El. 9'-0" - Relay Room - 1292 square feet

7.9.13.2 Fire Loading

Fire loading category - Low
Maximum permissible fire loading - 160,000 Btu/sq. ft. (Note 1)

Note 1:The maximum permissible fire loading is based on an evenly distributed loading of combustible materials.

7.9.13.3 Design Basis Fire

The design basis fire is postulated to be a fire that would involve mostly cable insulation and Class A combustibles. The design basis fire is conservatively based on the simultaneous total combustion of all combustibles in the zone.

7.9.13.4 Fire Protection Equipment

The area contains no fire suppression equipment either fixed or portable. Ionization detectors are located in the area to provide early warning alarm to the control room. Portable manual equipment is available in adjacent areas.

7.9.13.5 Construction

All four walls, the floor to 2-AC-(-5)-169 and the ceiling are 2 hour rated. The floor to grade is heavy concrete construction. The zone contains rated doors, dampers, cabling and piping penetrations that communicate with other areas.

7.9.13.6 Licensee Controlled Specification Barriers

For definition of the barriers requiring surveillance per LCS 3.7.104, refer to the latest revision of Figure 8-5, sheet 3.

7.9.13.7 Conclusions

The ionization detectors are expected to detect the products of combustion from an incipient fire and alert the control room for prompt action by the fire department. The fire department shall use the hose station and portable equipment from the adjacent area to extinguish the fire.

The normal ventilation system will effectively remove smoke generated by the design basis fire until the fire dampers operate. Portable smoke exhaust fans may then be used to vent smoke from the area.

Appendix R fire area boundaries in 2-AC-9-17 were evaluated. The fire boundaries and associated fire protection features were found to be adequate to prevent the propagation of fire beyond the fire boundaries. The design basis fire is insufficient to breach the barriers defining the zone/fire area.

7.9.13.8 Fire Area 2-AC-9-17 Appendix R Compliance

Safe shutdown capability will be provided by utilizing Train A systems. Functionally redundant components protected from fire damage will be utilized in conjunction with operator action on manual or disabled components to achieve safe shutdown.

One train of systems necessary to achieve hot standby and cold shutdown conditions independent of the subject fire area will be free of fire damage. Therefore, this fire area complies with the criteria of 10CFR50, Appendix R, III.G.1.

7.9.14 FIRE AREA/ZONE: 2-AC-9-18

FIRE AREA/ZONE: 2-AC-9-18

AREA: 114 sq. ft. DESCRIPTION: ELEVATOR

DESIGN BASIS FIRE

Fire Loading Category:	Low
Fire Loading - Max Permiss:	160,000.0 Btu's/sq.ft.

FIRE PROTECTION (AVAILABLE)

Suppression (type)	none
Hose Stations	none, (1) adjacent area each floor
Portable Extinguishers	yes, adjacent
Detectors (type)	ionization at el. 85' only

FIRE RESISTANCE RATING

Walls	2hr
Floor, Ceiling, Roof	2hr/ceiling, HC/grade
Penetrations	C
Fixed Openings	none
Doors	B/2-AC-9-16, B/2-AC-30-20E, B/2-AC-50-29B, B/2-AC-70-64, B/2-AC-30-24

HOT STANDBY SYSTEMS	Equipment	Valves	Cable
Reactor Coolant			
Reactor Protection System			
Shutdown Cooling			
Chemical and Volume Control			
Main Feedwater			
Main Steam			
HVAC			
Auxiliary Feedwater			
Engineered Safety Feature			
Component Cooling Water			
Saltwater Cooling Water			
Emergency Chilled Water			
Diesel Generator Systems			

COLD SHUTDOWN SYSTEMS	Equipment	Valves	Cable
Shutdown Cooling			
CCW (To SDC)			
HVAC			
Summary (Hot and Cold)			

ESSENTIAL ELECTRIC SYSTEMS	Equipment	MCC and Switchgear	Cable
220 KV (AC)			
4160 V (AC)			
480 V (AC)			
120 V (AC)			
125 V (DC)			
Electric Panels			
Summary			

ASSOCIATED CIRCUITS OF CONCERN

H/I Pressure Interface	NO
Spurious Operation	NO

7.9.15 FIRE AREA/ZONE: 2-AC-9-19

FIRE AREA/ZONE: 2-AC-9-19

AREA: 171 sq. ft. DESCRIPTION: STAIRCASE

DESIGN BASIS FIRE

Fire Loading Category:	Minimal
Fire Loading - Max Permiss:	13,000.0 Btu's/sq.ft.

FIRE PROTECTION (AVAILABLE)

Suppression (type)	*none*
Hose Stations	none, (1) in 2-AC-9-16
Portable Extinguishers	none, adjacent
Detectors (type)	none

FIRE RESISTANCE RATING

Walls	2hr
Floor, Ceiling, Roof	2hr/ceiling, HC/grade
Penetrations	C, P
Fixed Openings	none
Doors	B/2-AC-9-16, B/2-AC-30-22

HOT STANDBY SYSTEMS	Equipment	Valves	Cable
Reactor Coolant			
Reactor Protection System			
Shutdown Cooling			
Chemical and Volume Control			
Main Feedwater			
Main Steam			
HVAC			
Auxiliary Feedwater			
Engineered Safety Feature			
Component Cooling Water			
Saltwater Cooling Water			
Emergency Chilled Water			
Diesel Generator Systems			

COLD SHUTDOWN SYSTEMS	Equipment	Valves	Cable
Shutdown Cooling			
CCW (To SDC)			
HVAC			
Summary (Hot and Cold)			

ESSENTIAL ELECTRIC SYSTEMS	Equipment	MCC and Switchgear	Cable
220 KV (AC)			
4160 V (AC)			
480 V (AC)			
120 V (AC)			
125 V (DC)			
Electric Panels			
Summary			

ASSOCIATED CIRCUITS OF CONCERN

H/I Pressure Interface	NO
Spurious Operation	NO

7.9.16 FIRE AREA/ZONE: 2-AC-30-20A

FIRE AREA/ZONE: 2-AC-30-20A

AREA: 13490 sq. ft. DESCRIPTION: CONTROL ROOM/CABINET AREAS

DESIGN BASIS FIRE

Fire Loading Category:	Low
Fire Loading - Max Permiss:	40,000.0 Btu's/sq.ft.

FIRE PROTECTION (AVAILABLE)

Suppression (type)	none
Hose Stations	none, (1) in areas 2-AC-30-28 and 3-AC-30-21
Portable Extinguishers	yes
Detectors (type)	ionization (local), heat detectors (local)

FIRE RESISTANCE RATING

Walls	SEE TEXT
Floor, Ceiling, Roof	2hr
Penetrations	D, C, P, ND/20B, 20C, 20D, 20E
Fixed Openings	none
Doors	A/20B, 20C, (3)A/20E, A/3-AC-30-21, A/2-AC-30-28, B/2-AC-9-16

HOT STANDBY SYSTEMS	Equipment	Valves	Cable
Reactor Coolant	A,B,C,D		A,B,C,D
Reactor Protection System			A,B,C,D
Shutdown Cooling			A,B
Chemical and Volume Control			A,B
Main Feedwater			A,B
Main Steam	A,B,C,D		A,B,C,D
HVAC	A,B		A,B
Auxiliary Feedwater	A,B		A,B,C
Engineered Safety Feature	A,B,C,D		A,B,C,D
Component Cooling Water			A,B,X
Saltwater Cooling Water			A.B
Emergency Chilled Water	A,B		A,B
Diesel Generator Systems			A,B

COLD SHUTDOWN SYSTEMS	Equipment	Valves	Cable
Shutdown Cooling	A,B		A,B
CCW (To SDC)			A,B
HVAC			A,B
Summary (Hot and Cold)	A,B,C,D		A,B,C,D,X

ESSENTIAL ELECTRIC SYSTEMS	Equipment	MCC and Switchgear	Cable
220 KV (AC)			X
4160 V (AC)			A,B
480 V (AC)			A,B
120 V (AC)			
125 V (DC)			
Electric Panels	A,B,A/B,C,D,X		A,B,C,D,X
Summary	A,B,A/B,C,D,X		A,B,C,D,X

ASSOCIATED CIRCUITS OF CONCERN

H/I Pressure Interface	YES
Spurious Operation	YES

FIRE AREA/ZONE 2-AC-30-20A

7.9.16.1 Location

Auxiliary Control Building - El. 30'-0" - Control Room/Cabinet Area - 13,490 square feet - Fig. 8-6

7.9.16.2 Fire Loading

Fire loading category - Low
Maximum permissible fire loading - 40,000 Btu/sq. ft. (Note 1)

Note 1:The maximum permissible fire loading is based on an evenly distributed loading with combustible materials and completion of the suggested modifications.

7.9.16.3 Design Basis Fire

The design basis fire is postulated to be a fire that would involve mostly cable insulation, plastic, miscellaneous, and Class A combustibles. The design basis fire is conservatively based on the simultaneous total combustion of all combustibles in the zone.

7.9.16.4 Fire Protection Equipment

Manual fire fighting equipment is available within the zone. Ionization smoke detectors are located in the back panel area, foreman's office, instrument repair room, the women's locker room, turbine lab and within Class 1E control room cabinets essential to safe shutdown which contain more than one redundant train and where separate compartments are not provided for each train. Fixed temperature rate of rise heat detectors are located in the support areas, including the watch engineer's office, foreman's office, the instrument repair room, turbine lab and the kitchen. All detectors provide early warning alarm.

7.9.16.5 Construction

The east wall of the zone is reinforced concrete with a 3 hour rating. The portion of the west wall to 2-TB-30-148D is 3 hour rated reinforced concrete. The zone is separated from the lobby (2-AC-30-20E) by plaster partitions (1 hour rated) and bullet-resistant wire glass (nonrated). The barriers to other zones within the fire area are 1 hour rated plaster partitions or nonrated. A 2 hour rated concrete wall separates the area from the stairwell (2-AC-30-24). The remainder of the zone walls to adjacent fire areas are 2 hour rated concrete, or metal framed plaster construction. The floor and ceiling are 2 hour rated. Support columns are protected by vermiculite fireproofing. The technical support center (2-AC-39-20D), located on the mezzanine level of the control room, is separated from the zone by 1 hour rated walls and nonrated bulletproof glass.

FIRE AREA/ZONE 2-AC-30-20A

The mezzanine is accessed through two stairwells (2-AC-30-24 and 2-AC-30-20E). The zone communicates with the cable riser galleries (2-AC-30-28 and 3-AC-30-21) and the pipe chase (2-AC-9-16) through 3 hour rated doors. The adjacent computer rooms (2-AC-30-20C and 3-AC-30-20B) are separated from the zone by three 3 hour rated doors.

7.9.16.6 Licensee Controlled Specification Barriers

For definition of the barriers requiring surveillance per LCS 3.7.104, refer to the latest revision of Figure 8-6, sheet 3.

7.9.16.7 Conclusions

The zone is constantly manned; therefore, any fire in the control panel area or the support areas will be detected in its early stages. Additional early warning alarm is provided by fixed temperature rate of rise heat detectors and ionization smoke detectors installed in the support areas. Portable extinguishers are available within the zone. Additional suppression capability is available through the use of the manual fire fighting equipment in adjacent fire areas/zones.

Carpet installed within the control room complex has been tested per the criteria as identified in Appendix D, Section D.

Nonrated bulletproof glass to 2-AC-39-20D and 2-AC-30-20E, provided for security reasons, will provide an effective smoke and heat barrier.

The control room ventilation system exhaust is equipped with smoke detection capability, which automatically places the control room ventilation in the smoke removal mode when smoke is detected within the control room boundary.

Automatic venting of the control room is provided. Portable smoke exhaust fans are also available, if required. In the event of a fire in an adjacent computer room (3-AC-30-20B, 2-AC-30-2C), the ventilation system for the computer rooms will be isolated and bypassed. Ventilation flow to the control room will not be affected.

Manual fire suppression equipment is provided throughout the fire zone. Fire detection equipment is provided in the control room complex to provide early warning alarm to the site fire department. In addition, the control room is constantly manned by operations personnel such that fire conditions can be identified in the early stages and corrective actions can be immediately initiated. The fire protection features provided will adequately mitigate the consequences of the fire and confine it to the subject fire area.

FIRE AREA/ZONE 2-AC-30-20A

The fire boundaries between 2-AC-30-20A and 2-AC-30-23, 2-AC-30-24, 2-AC-9-15, 2-AC-9-19, 2-AC-50-42, 2-AC-50-61, 2-AC-50-62, 2-AC-30-27, 2-AC-30-22, 2-AC-9-5, 3-AC-9-6, 2-AC-9-17, 2-AC-9-12, 2-AC-9-11, and 2-AC-9-10 were evaluated. The boundaries and associated fire protection features were found to be adequate to prevent the propagation of fire between the fire areas. The design basis fire is insufficient to breach the barriers defining the zone/fire area.

7.9.16.8 Fire Area 2-AC-30-20 Appendix R Compliance

Analysis for this fire area/zone has shown that equipment impaired may require control room evacuation in order to achieve safe shutdown. Shutdown for a fire in this area will be credited using alternative shutdown equipment and procedures. Operator actions may be required to provide CCW make-up from the Fire Water System.

One train of systems necessary to achieve hot standby and cold shutdown has been evaluated to remain available for safe shutdown in accordance with 10CFR50, Appendix R, III.G.3 and III.L. A deviation from the requirements of 10CFR50 Appendix R, III.G.3 has been accepted for the installation of a fixed fire suppression system in the control room. The fire detection and suppression systems in this zone provide a level of protection equivalent to the requirements of Appendix R.

7.9.17 FIRE AREA/ZONE: 3-AC-30-20B

FIRE AREA/ZONE: 2-AC-30-20B

AREA: 1104 sq. ft. DESCRIPTION: COMPUTER ROOM

DESIGN BASIS FIRE

Fire Loading Category:	Low
Fire Loading - Max Permiss:	80,000.0 Btu's/sq.ft.

FIRE PROTECTION (AVAILABLE)

Suppression (type)	halon
Hose Stations	none
Portable Extinguishers	none, adjacent
Detectors (type)	ionization, heat detectors

FIRE RESISTANCE RATING

Walls	1hr/20A, 2hr/others
Floor, Ceiling, Roof	2hr
Penetrations	C, P, D, ND/20A
Fixed Openings	none
Doors	A/2-AC-30-20A

HOT STANDBY SYSTEMS	Equipment	Valves	Cable
Reactor Coolant			A,B
Reactor Protection System			
Shutdown Cooling			
Chemical and Volume Control			A,B
Main Feedwater			
Main Steam			
HVAC	A		
Auxiliary Feedwater			
Engineered Safety Feature			
Component Cooling Water			
Saltwater Cooling Water			
Emergency Chilled Water			
Diesel Generator Systems			

COLD SHUTDOWN SYSTEMS	Equipment	Valves	Cable
Shutdown Cooling			
CCW (To SDC)			
HVAC			
Summary (Hot and Cold)	A		A,B

ESSENTIAL ELECTRIC SYSTEMS	Equipment	MCC and Switchgear	Cable
220 KV (AC)			X
4160 V (AC)			
480 V (AC)			
120 V (AC)			
125 V (DC)			
Electric Panels			A,B,C,D,X
Summary			A,B,C,D,X

ASSOCIATED CIRCUITS OF CONCERN

H/I Pressure Interface	NO
Spurious Operation	YES

FIRE AREA/ZONE 3-AC-30-20B

7.9.17.1 Location

Auxiliary Control Building - El. 30'-0" - Computer Room 3 - 1104 square feet - Fig. 8-6

7.9.17.2 Fire Loading

Fire loading category - Low
Maximum permissible fire loading - 80,000 BTU's/sq. ft. (Note 1)

Note 1:The maximum permissible fire loading is based on an evenly distributed loading of combustible materials.

7.9.17.3 Design Basis Fire

The design basis fire is postulated to be a fire that would involve mostly Class A combustibles and cable insulation. The design basis fire is conservatively based on the simultaneous total combustion of all combustibles in the zone.

7.9.17.4 Fire Protection Equipment

Manual fire fighting equipment is available within the area. One fixed temperature rate of rise heat detector and ionization detectors, located in the area, provide early warning alarm in the control room. A halon suppression system is also provided in the zone.

7.9.17.5 Construction

The walls of the area adjoining 2-AC-30-20A are 1 hour rated while the remaining walls and floors are 2 hour rated. The zone is separated from the control room by a three-hour rated door. Ventilation duct penetrations through barriers rated for 2 hours are provided with rated dampers. Ventilation ducts penetrating 1 hour rated barriers do not have dampers (zone boundaries only).

7.9.17.6 Licensee Controlled Specification Barriers

For definition of the barriers requiring surveillance per LCS 3.7.104, refer to the latest revision of Figure 8-6, sheet 3.

7.9.17.7 Conclusions

The ionization and fixed temperature rate of rise heat detectors will detect the fire within the first few minutes of the growth period of the fire and alert the control room for prompt action by the fire department. Portable extinguishers are available in zone 2-AC-30-20A. In addition, a halon suppression system is installed in the zone.

FIRE AREA/ZONE 3-AC-30-20B

The normal ventilation system will effectively remove smoke from the area until the fire dampers operate. Portable smoke exhaust fans may then be used to vent smoke from the area.

The Appendix R fire area boundaries in 2-AC-30-20B were evaluated. The fire boundaries and associated fire protection features were found to be adequate to prevent the propagation of fire beyond the fire boundaries. The design basis fire is insufficient to breach the barriers defining the zone/fire area.

Appendix R compliance for fire area 2-AC-30-20 is discussed in fire zone 2-AC-30-20A.

7.9.18 FIRE AREA/ZONE: 2-AC-30-20C

FIRE AREA/ZONE: 2-AC-30-20C

AREA: 1104 sq. ft. DESCRIPTION: COMPUTER ROOM

DESIGN BASIS FIRE

Fire Loading Category:	Low
Fire Loading - Max Permiss:	80,000.0 Btu's/sq.ft.

FIRE PROTECTION (AVAILABLE)

Suppression (type)	halon
Hose Stations	none
Portable Extinguishers	*none, adjacent*
Detectors (type)	ionization, heat detectors

FIRE RESISTANCE RATING

Walls	1hr/20A, 2hr/others
Floor, Ceiling, Roof	2hr
Penetrations	P,C, ND/20A
Fixed Openings	none
Doors	A/2-AC-30-20A

HOT STANDBY SYSTEMS	Equipment	Valves	Cable
Reactor Coolant			A,B
Reactor Protection System			
Shutdown Cooling			
Chemical and Volume Control			A,B
Main Feedwater			
Main Steam			
HVAC	B		A,B
Auxiliary Feedwater			
Engineered Safety Feature			
Component Cooling Water			
Saltwater Cooling Water			
Emergency Chilled Water			
Diesel Generator Systems			

COLD SHUTDOWN SYSTEMS	Equipment	Valves	Cable
Shutdown Cooling			
CCW (To SDC)			
HVAC			
Summary (Hot and Cold)	B		A,B

ESSENTIAL ELECTRIC SYSTEMS	Equipment	MCC and Switchgear	Cable
220 KV (AC)			X
4160 V (AC)			
480 V (AC)			
120 V (AC)			
125 V (DC)			
Electric Panels			A,B,C,D,X
Summary			A,B,C,D,X

ASSOCIATED CIRCUITS OF CONCERN

H/I Pressure Interface	NO
Spurious Operation	YES

FIRE AREA/ZONE 2-AC-30-20C

7.9.18.1 Location

Auxiliary Control Building - El. 30' 0"
Computer Room 2 - 1104 square feet - Fig. 8-6

7.9.18.2 Fire Loading

Fire loading category - Low
Maximum permissible fire loading - 80,000 Btu/sq. ft. (Note 1)

Note 1:The maximum permissible fire loading is based on an evenly distributed loading of combustible materials.

7.9.18.3 Design Basis Fire

The design basis fire is postulated to be a fire that would involve mostly cable insulation and Class A combustibles. The design basis fire is conservatively based on the simultaneous total combustion of all combustibles in the area.

7.9.18.4 Fire Protection Equipment

Manual fire fighting equipment is available in adjacent zone 2-AC-30-20A. Ionization and fixed temperature rate of rise heat detectors, located in the area, provide early warning alarm in the control room.

7.9.18.5 Construction

The walls of the zone adjoining 2-AC-30-20A are 1 hour rated and the remaining walls, floors and ceiling are 2 hour rated. A 3 hour rated door communicates with the control room. There are ventilation duct penetrations to 2-AC-30-20A which do not have dampers.

7.9.18.6 Licensee Controlled Specification Barriers

For definition of the barriers requiring surveillance per LCS 3.7.104, refer to the latest revision of Figure 8-6, sheet 3.

7.9.18.7 Conclusions

The fixed temperature rate of rise heat detector and ionization detectors are expected to detect the fire within the first few minutes of the growth period of the fire, and alert the control room for prompt action by the fire department. Portable extinguishers are available in zone 2-AC-30-20A. A halon suppression is also provided in the zone.

FIRE AREA/ZONE 2-AC-30-20C

Appendix R fire area boundaries in 2-AC-30-20C were evaluated. The fire boundaries and associated fire protection features were found to be adequate to prevent the propagation of fire beyond the fire boundaries. The design basis fire is insufficient to breach the barriers defining the zone/fire area.

Appendix R compliance for fire area 2-AC-30-20 is discussed in fire zone 2-AC-30-20A.

7.9.19 FIRE AREA/ZONE: 2-AC-39-20D

FIRE AREA/ZONE: 2-AC-39-20D

AREA: 1246 sq. ft. DESCRIPTION: TECH. SUPPORT / MEZZANINE

DESIGN BASIS FIRE

Fire Loading Category:	Low
Fire Loading - Max Permiss:	40,000.0 Btu's/sq.ft.

FIRE PROTECTION (AVAILABLE)

Suppression (type)	none
Hose Stations	(1)
Portable Extinguishers	yes
Detectors (type)	ionization, heat detectors

FIRE RESISTANCE RATING

Walls	east NR, 2hr/18, 24, others 1hr
Floor, Ceiling, Roof	2hr
Penetrations	ND/20A
Fixed Openings	none
Doors	A/2-AC-30-24, A/2-AC-30-20E

HOT STANDBY SYSTEMS	Equipment	Valves	Cable
Reactor Coolant			
Reactor Protection System			
Shutdown Cooling			
Chemical and Volume Control			
Main Feedwater			
Main Steam			
HVAC			
Auxiliary Feedwater			
Engineered Safety Feature			
Component Cooling Water			
Saltwater Cooling Water			
Emergency Chilled Water			
Diesel Generator Systems			

COLD SHUTDOWN SYSTEMS	Equipment	Valves	Cable
Shutdown Cooling			
CCW (To SDC)			
HVAC			
Summary (Hot and Cold)			

ESSENTIAL ELECTRIC SYSTEMS	Equipment	MCC and Switchgear	Cable
220 KV (AC)			
4160 V (AC)			
480 V (AC)			
120 V (AC)			
125 V (DC)			
Electric Panels			
Summary			

ASSOCIATED CIRCUITS OF CONCERN

H/I Pressure Interface	NO
Spurious Operation	NO

7.9.20 FIRE AREA/ZONE: 2-AC-30-20E

FIRE AREA/ZONE: 2-AC-30-20E

AREA: 1541 sq. ft. DESCRIPTION: LOBBY

DESIGN BASIS FIRE

Fire Loading Category:	Minimal
Fire Loading - Max Permiss:	13,000.0 Btu's/sq.ft.

FIRE PROTECTION (AVAILABLE)

Suppression (type)	none
Hose Stations	(1)
Portable Extinguishers	yes
Detectors (type)	heat detector

FIRE RESISTANCE RATING

Walls	3hr/west, 2hr/16,18,24 NR/20A (east), others 1hr
Floor, Ceiling, Roof	2hr
Penetrations	C,D,ND/20A
Fixed Openings	none
Doors	(3)A/2-AC-30-20A, B/24, 18, (2) A/2-TB-34-148D, A/2-AC-39-20D

HOT STANDBY SYSTEMS	Equipment	Valves	Cable
Reactor Coolant			
Reactor Protection System			
Shutdown Cooling			
Chemical and Volume Control			
Main Feedwater			
Main Steam			
HVAC			A
Auxiliary Feedwater			
Engineered Safety Feature			
Component Cooling Water			
Saltwater Cooling Water			
Emergency Chilled Water			A
Diesel Generator Systems			

COLD SHUTDOWN SYSTEMS	Equipment	Valves	Cable
Shutdown Cooling			
CCW (To SDC)			
HVAC			
Summary (Hot and Cold)			A

ESSENTIAL ELECTRIC SYSTEMS	Equipment	MCC and Switchgear	Cable
220 KV (AC)			
4160 V (AC)			
480 V (AC)			
120 V (AC)			
125 V (DC)			
Electric Panels			A,B
Summary			A,B

ASSOCIATED CIRCUITS OF CONCERN

H/I Pressure Interface	NO
Spurious Operation	NO

FIRE AREA/ZONE 2-AC-30-20E

7.9.20.1 Location

Auxiliary Control Building - El. 30'0" - Lobby - 1541 square feet - Fig. 8-6

7.9.20.2 Fire Loading

Fire loading category - Minimal
Maximum permissible fire loading - 13,000 Btu/sq. ft. (Note 1)

Note 1:The maximum permissible fire loading is based on an evenly distributed loading of combustible materials.

7.9.20.3 Design Basis Fire

The design basis fire is postulated to be a fire that would involve mostly plastic and Class A combustibles.

The design basis fire is conservatively based on the simultaneous total combustion of all combustibles in the area.

7.9.20.4 Fire Protection Equipment

Manual fire fighting equipment is available within the area. One fixed temperature rate of rise heat detector, located in the area, provides early warning alarm in the control room.

7.9.20.5 Construction

The west wall of the area is reinforced concrete with a 3 hour rating. The walls surrounding the elevator (2-AC-9-18) and stair (2-AC-30-24) are 2 hour rated reinforced concrete. The walls separating the area from the pipe chase (2-AC-9-16) are 2 hour rated metal framed plaster construction. The wall adjoining the control room is a plaster partition with bullet-resistant wire glass. The remainder of the area walls are 1 hour rated metal framed plaster. The floor and ceiling are 2 hour rated. Two 3 hour fire rated doors installed in the concrete opening form the separation from the turbine building (2-TB-34-148D). A 1 1/2 hour door communicates with the stairway (2-AC-30-24) and to the elevator (2-AC-9-18). Three 3 hour doors communicate with the control room to the technical support center at the mezzanine level (2-AC-39-20D).

7.9.20.6 Licensee Controlled Specification Barriers

For definition of the barriers requiring surveillance per LCS 3.7.104, refer to the latest revision of Figure 8-6, sheet 3.

7.9.20.7 Conclusions

The fixed temperature rate of rise heat detector is expected to detect the fire within the first few minutes of the growth period of the fire, and alert the control room for prompt action by the fire department. The available portable equipment is adequate to extinguish the fire.

The normal ventilation system will effectively remove smoke from the area until the fire dampers operate. Portable smoke exhaust fans may then be used to vent smoke from the area.

Fire area boundaries of 2-AC-30-20E were evaluated with the exception of 2-TB-34-148D which is 3 hour rated. The fire boundaries and associated fire protection features were found to be adequate to prevent the propagation of fire beyond the fire boundaries. The bullet-resistant glass, provided for security purposes, will provide a smoke and heat barrier. The design basis fire will not propagate beyond the boundaries defining the zone.

Appendix R compliance for fire area 2-AC-30-20 is discussed in fire zone 2-AC-30-20A.

7.9.21 FIRE AREA/ZONE: 3-AC-30-21

FIRE AREA/ZONE: 2-AC-30-21

AREA: 2276 sq. ft. DESCRIPTION: CABLE RISER GALLERY

DESIGN BASIS FIRE

Fire Loading Category:	Medium
Fire Loading - Max Permiss:	160,000.0 Btu's/sq.ft.

FIRE PROTECTION (AVAILABLE)

Suppression (type)	water spray system
Hose Stations	(1)
Portable Extinguishers	*yes*
Detectors (type)	ionization, heat detectors

FIRE RESISTANCE RATING

Walls	north 2hr, others 3hr
Floor, Ceiling, Roof	2hr
Penetrations	D, P, C, QP/7
Fixed Openings	none
Doors	X/3-SE-30-142A, A/3-PE-30-2C, A/2-AC-30-20A, B/2-AC-30-22

HOT STANDBY SYSTEMS	Equipment	Valves	Cable
Reactor Coolant			A,B,C,D
Reactor Protection System			A,B,C,D
Shutdown Cooling			A,B
Chemical and Volume Control			A,B
Main Feedwater			A,B
Main Steam			A,B,C,D
HVAC			a*,A,B
Auxiliary Feedwater			a*,A,B,C
Engineered Safety Feature			A,B,C,D
Component Cooling Water			a*,A,B,X
Saltwater Cooling Water			a*,A,B
Emergency Chilled Water			a*,A,B
Diesel Generator Systems			A,B

COLD SHUTDOWN SYSTEMS	Equipment	Valves	Cable
Shutdown Cooling			a*,A,B
CCW (To SDC)			A,B
HVAC			a*,A,B
Summary (Hot and Cold)			a*,A,B,C,D,X

ESSENTIAL ELECTRIC SYSTEMS	Equipment	MCC and Switchgear	Cable
220 KV (AC)			X
4160 V (AC)			A,B
480 V (AC)			A,B
120 V (AC)			
125 V (DC)			
Electric Panels			A,B,C,D,X
Summary			A,B,C,D,X

ASSOCIATED CIRCUITS OF CONCERN

H/I Pressure Interface	YES
Spurious Operation	YES

FIRE AREA/ZONE 3-AC-30-21

7.9.21.1 Location

Auxiliary Control Building - El. 30'-0" - Cable Riser Gallery - 2276 square feet - Fig. 8-6

7.9.21.2 Fire Loading

Fire loading category - Medium
Maximum permissible fire loading - 160,000 Btu/sq. ft. (Note 1)

Note 1:The maximum permissible fire loading is based on an evenly distributed loading of combustible materials.

7.9.21.3 Design Basis Fire

The design basis fire is postulated to be a fire that would involve mostly cable insulation. The design basis fire is conservatively based on the simultaneous total combustion of all combustibles in the area.

7.9.21.4 Fire Protection Equipment

The area contains an automatic water spray system with fixed temperature rate of rise actuation. Actuation by the heat detectors results in control room annunciation. Manual fire fighting equipment is available within the area. Ionization smoke detectors, located throughout the area, provide early warning alarm in the control room.

7.9.21.5 Construction

The east, west, and south walls are reinforced concrete with a 3 hour rating. The west half of the north wall is concrete, the east half is metal framed plaster; both walls have a 2 hour rating. The floor and ceiling are 2 hour rated. The area communicates with the penetration building piping area (3-PE-30-2C) through a 3 hour rated door in the south wall. A 3 hour UL equivalent door communicates with the safety equipment building electrical tunnel (3-SE-30-142A). One 3 hour door separates the area from the control room (2-AC-30-20A). A 1 hour rated door separates the area from the corridor (2-AC-30-22). Ventilation duct penetrations in 2 hour rated walls are provided with 1-1/2 hour rated fire dampers. No ventilation ducts penetrate 3 hour rated walls. Two drain lines discharge to the lower cable riser gallery (3-AC-9-7). Spring loaded check valves preclude the communication of fumes/air between this room and the lower riser gallery.

7.9.21.6 Licensee Controlled Specification Barriers

For definition of the barriers requiring surveillance per LCS 3.7.104, refer to the latest revision of Figure 8-6, sheet 3.

Cable for the following systems is wrapped:

HVAC - Train A
Shutdown Cooling System - Train A
Auxiliary Feedwater System - Train A
Component Cooling Water System - Train A
Saltwater Cooling System - Train A
Emergency Chilled Water System - Train A
Component Cooling Water Pump Room HVAC System - Train A

7.9.21.7 Conclusions

The ionization detection system is expected to detect the products of combustion from an incipient fire and alert the control room for prompt response by the fire department. The fire department then enters the cable riser gallery and extinguishes the fire with portable equipment, or actuates the water spray system from the manual station located outside the cable riser gallery.

In the event the fire achieves sufficient intensity, the fixed temperature rate of rise heat detectors will actuate the water spray system automatically. Actuation of the water spray system is alarmed in the control room. The water spray system will control and suppress the fire until the fire department arrives and completes the extinguishment with portable equipment.

Should the automatic water spray system fail to actuate, the available portable equipment is adequate to extinguish the fire.

The normal ventilation system will effectively remove the smoke generated by the design basis fire until the fire dampers operate. Portable smoke exhaust fans may then be used to vent smoke from the area.

The fire boundaries between 3-AC-30-21 and 2-AC-30-22, 3-AC-9-7 and 2-AC-9-8 were evaluated. The boundaries and associated fire protection features were found to be adequate to prevent the propagation of fire between the fire areas. The design basis fire is insufficient to breach the barriers defining the fire area.

7.9.21.8 Fire Area 3-AC-30-21 Appendix R Compliance

Analysis for this fire area/zone has shown that equipment impaired may require control room evacuation in order to achieve safe shutdown. Shutdown for a fire in this area will be credited using alternative shutdown equipment and procedures. Operator action may be required to isolate selected Train A equipment from the control room and operate the equipment either manually or from alternative shutdown stations. Operator actions may be required to provide CCW make-up from the Fire Water System.

FIRE AREA/ZONE 3-AC-30-21

One train of systems necessary to achieve hot standby and cold shutdown conditions has been evaluated to remain available for safe shutdown due to alternative shutdown capabilities provided in accordance with 10CFR50, Appendix R, III.G.3 and III.L. Raceway fire barrier protection with suppression and detection is provided for required alternative shutdown cables. The fire detection and suppression systems in this area provide a level of protection equivalent to the requirements of Appendix R.

7.9.22 FIRE AREA/ZONE: 2-AC-30-22

FIRE AREA/ZONE: 2-AC-30-22

AREA: 582 sq. ft. DESCRIPTION: CORRIDOR/STAIR

DESIGN BASIS FIRE

Fire Loading Category:	Minimal
Fire Loading - Max Permiss:	13,000.0 Btu's/sq.ft.

FIRE PROTECTION (AVAILABLE)

Suppression (type)	none
Hose Stations	(1)
Portable Extinguishers	yes
Detectors (type)	none

FIRE RESISTANCE RATING

Walls	3hr/148D, others 2hr
Floor, Ceiling, Roof	2hr
Penetrations	D,P,C
Fixed Openings	none
Doors	NR/2-TB-34-148D, B/3-AC-30-21, A/23, B/29, 19, 64

HOT STANDBY SYSTEMS	Equipment	Valves	Cable
Reactor Coolant			B
Reactor Protection System			
Shutdown Cooling			
Chemical and Volume Control			B
Main Feedwater			
Main Steam			
HVAC			
Auxiliary Feedwater			
Engineered Safety Feature			
Component Cooling Water			
Saltwater Cooling Water			
Emergency Chilled Water			A
Diesel Generator Systems			

COLD SHUTDOWN SYSTEMS	Equipment	Valves	Cable
Shutdown Cooling			
CCW (To SDC)			
HVAC			
Summary (Hot and Cold)			A,B*

ESSENTIAL ELECTRIC SYSTEMS	Equipment	MCC and Switchgear	Cable
220 KV (AC)			X
4160 V (AC)			
480 V (AC)			
120 V (AC)			
125 V (DC)			
Electric Panels	A/B		A,B,X
Summary	A/B		A,B,X

ASSOCIATED CIRCUITS OF CONCERN

H/I Pressure Interface	NO
Spurious Operation	NO

FIRE AREA/ZONE 2-AC-30-22

7.9.22.1 Location

Auxiliary Control Building - El. 30'-0" - Corridor/Stair - 582 square feet - Fig. 8-6

7.9.22.2 Fire Loading

Fire loading category - Minimal
Maximum permissible fire loading - 13,000 Btu/sq. ft. (Note 1)

Note 1:The maximum permissible loading is based on an evenly distributed loading of combustible materials.

7.9.22.3 Design Basis Fire

The design basis fire is postulated to be a fire that would involve mostly plastic and cable insulation.

The design basis fire is conservatively based on the simultaneous total combustion of all combustibles in the area.

7.9.22.4 Fire Protection Equipment

Manual fire fighting equipment is available within the area. No fire detection equipment is provided within the area.

7.9.22.5 Construction

The north and west walls of the area are constructed of reinforced concrete. The west wall adjoining zone 2-TB-34-148D has a 3 hour fire rating; at other elevations, the wall is 2 hour rated. The north wall has a 2 hour rating. The east and south walls are 2 hour rated metal framed plaster walls. The floor and ceiling are 2 hour rated. A non-rated double door communicates with the turbine building (2-TB-34-148D). The area communicates with the fan room (2-AC-30-23) through a 3 hour rated door, the cable riser gallery (3-AC-30-21), the 50' elevation lobby (2-AC-50-29B), and the 70' elevation corridor (2-AC-70-64) through 1-1/2 hour rated doors. The area is not ventilated. All ventilation duct penetrations passing through the area are provided with 1-1/2 hour rated fire dampers. One 1-1/2 hour door communicates to 2-AC-9-19.

7.9.22.6 Licensee Controlled Specification Barriers

For definition of the barriers requiring surveillance per LCS 3.7.104, refer to the latest revisions of Figures 8-6, 8-7, and 8-8, sheet 3.

7.9.22.7 Conclusions

Airflow through train A and train B ductwork for the emergency chiller rooms will be cut off when the fire damper installed in the ductwork of each train operates. The emergency chiller room HVAC system is not required for safe shutdown. Adequate cooling is available to support emergency chiller operation during shutdown.

Portable smoke exhaust fans may be used in venting smoke from the area.

All the Appendix R fire area boundaries in 2-AC-30-22 were evaluated. The fire boundaries and associated fire protection features were found to be adequate to prevent the propagation of fire beyond the fire boundaries. The design basis fire is insufficient to breach the barriers defining the zone/fire area.

7.9.22.8 Fire Area 2-AC-30-22 Appendix R Compliance

Safe shutdown capability will be provided by utilizing Train B systems. Functionally redundant components protected from fire damage will be utilized to achieve safe shutdown.

One train of systems necessary to achieve hot standby and cold shutdown conditions independent of the subject fire area will be free of fire damage. Therefore, this fire area complies with the criteria of 10CFR50, Appendix R, III.G.1.

7.9.23 FIRE AREA/ZONE: 2-AC-30-23

FIRE AREA/ZONE: 2-AC-30-23

AREA: 1059 sq. ft. DESCRIPTION: FAN ROOM

DESIGN BASIS FIRE

Fire Loading Category:	High
Fire Loading - Max Permiss:	(SEE TEXT)

FIRE PROTECTION (AVAILABLE)

Suppression (type)	manual water spray system for charcoal
Hose Stations	none, (1) in 2-AC-30-22
Portable Extinguishers	none, adjacent
Detectors (type)	ionization, temp. det. & heat det. for char.

FIRE RESISTANCE RATING

Walls	west 3hr, others 2hr
Floor, Ceiling, Roof	2hr
Penetrations	C, D, P
Fixed Openings	none
Doors	A/2-AC-30-22

HOT STANDBY SYSTEMS	Equipment	Valves	Cable
Reactor Coolant			B
Reactor Protection System			
Shutdown Cooling			
Chemical and Volume Control			B
Main Feedwater			
Main Steam			
HVAC	A		A
Auxiliary Feedwater			
Engineered Safety Feature			
Component Cooling Water			
Saltwater Cooling Water			
Emergency Chilled Water		A	A
Diesel Generator Systems			

COLD SHUTDOWN SYSTEMS	Equipment	Valves	Cable
Shutdown Cooling			
CCW (To SDC)			
HVAC			
Summary (Hot and Cold)	A	A	A,B

ESSENTIAL ELECTRIC SYSTEMS	Equipment	MCC and Switchgear	Cable
220 KV (AC)			
4160 V (AC)			
480 V (AC)			
120 V (AC)			
125 V (DC)			
Electric Panels			A,B,X
Summary			A,B,X

ASSOCIATED CIRCUITS OF CONCERN

H/I Pressure Interface	NO
Spurious Operation	NO

FIRE AREA/ZONE 2-AC-30-23

7.9.23.1 Location

Auxiliary Control Building - El. 30'-0" - Fan Room - 1059 square feet - Fig. 8-6

7.9.23.2 Fire Loading

Fire loading category - High
Maximum permissible fire loading - 160,000 Btu/sq. ft. (Note 1)

Note 1:The maximum permissible fire loading is based on the reduced fuel contribution of the charcoal, which is entirely contained within the charcoal filters.

7.9.23.3 Design Basis Fire

The design basis fire is postulated to be a fire that would involve mostly cable insulation and charcoal.

The design basis fire is conservatively based on the simultaneous total combustion of all combustibles in the area.

7.9.23.4 Fire Protection Equipment

A manual water spray system is provided for the charcoal filters. No hose stations or portable extinguishers are provided within the area. Manual fire fighting equipment is available in adjacent area 2-AC-30-22. A temperature detector is provided to alarm the charcoal filter high temperature condition in the control room. In addition, fixed temperature rate of rise heat detectors are provided over the charcoal filters. An ionization detector is provided for detection of fire in the remainder of the area. The heat detectors and the ionization detector provide early warning alarm in the control room.

7.9.23.5 Construction

The west wall of the area is reinforced concrete with a 3 hour rating. The south wall is also concrete, but with a 2 hour rating. The north and east walls are 2 hour rated metal framed plaster construction. The support column is protected by vermiculite fireproofing. The floor and ceiling are 2 hour rated. One 3 hour rated door communicates with the corridor (2-AC-30-22). All ventilation duct penetrations are provided with 1-1/2 hour rated fire dampers.

7.9.23.6 Licensee Controlled Specification Barriers

For definition of the barriers requiring surveillance per LCS 3.7.104, refer to the latest revision of Figure 8-6, sheet 3.

7.9.23.7 Conclusions

In the event of a fire in the charcoal filter, the temperature detectors installed within the charcoal filters are expected to alarm the high temperature condition into the control room. Fixed temperature thermal rate of rise heat detectors, installed locally over the charcoal filters, provide secondary control room alarm of a charcoal fire. Manual operation of the deluge valve by an operator in response to the high temperature alarm will provide water spray directly on the charcoal filters to extinguish the fire.

In the event of a fire outside of the charcoal filters, the ionization detection system is expected to detect the products of combustion from an incipient fire and alert the control room for prompt fire department response. The available portable equipment is adequate to extinguish the fire.

The normal ventilation system will effectively remove smoke from the area until the fire dampers operate. Portable smoke exhaust fans may then be used to vent smoke from the area.

The majority of the fire load within the area is due to charcoal entirely contained within the filters of the emergency air conditioning units and does not pose a direct threat to the barriers defining the area. Additionally, heat detectors and a manual water spray system are provided. The design basis fire will not propagate beyond the boundaries defining the area.

Fire area boundaries in 2-AC-30-23 were evaluated with the exception of 2-TB-34-148D which is 3 hour rated. The fire boundaries and associated fire protection features were found to be adequate to prevent the propagation of fire beyond the fire boundaries. The design basis fire is insufficient to breach the barriers defining the zone/fire area.

7.9.23.8 Fire Area 2-AC-30-23 Appendix R Compliance

Safe shutdown capability will be provided by utilizing Train B systems. Functionally redundant components protected from fire damage will be utilized to achieve safe shutdown.

One train of systems necessary to achieve hot standby and cold shutdown conditions independent of the subject fire area will be free of fire damage. Therefore, this fire area complies with the criteria of 10CFR50, Appendix R, III.G.1.

7.9.24 FIRE AREA/ZONE: 2-AC-30-24

FIRE AREA/ZONE: 2-AC-30-24

AREA: 150 sq. ft. DESCRIPTION: STAIRCASE

DESIGN BASIS FIRE

Fire Loading Category:	Minimal
Fire Loading - Max Permiss:	160,000.0 Btu's/sq.ft.

FIRE PROTECTION (AVAILABLE)

Suppression (type)	none
Hose Stations	none, (1) adjacent zone each floor
Portable Extinguishers	none, adjacent
Detectors (type)	none

FIRE RESISTANCE RATING

Walls	2hr
Floor, Ceiling, Roof	2hr
Penetrations	C,P
Fixed Openings	none
Doors	B/2-AC-30-20E, B/2-AC-50-29B, B/2-AC-70-64, A/2-AC-39-20D, L/exterior

HOT STANDBY SYSTEMS	Equipment	Valves	Cable
Reactor Coolant			
Reactor Protection System			
Shutdown Cooling			
Chemical and Volume Control			
Main Feedwater			
Main Steam			
HVAC			
Auxiliary Feedwater			
Engineered Safety Feature			
Component Cooling Water			
Saltwater Cooling Water			
Emergency Chilled Water			
Diesel Generator Systems			

COLD SHUTDOWN SYSTEMS	Equipment	Valves	Cable
Shutdown Cooling			
CCW (To SDC)			
HVAC			
Summary (Hot and Cold)			

ESSENTIAL ELECTRIC SYSTEMS	Equipment	MCC and Switchgear	Cable
220 KV (AC)			
4160 V (AC)			
480 V (AC)			
120 V (AC)			
125 V (DC)			
Electric Panels			A,B
Summary			A,B

ASSOCIATED CIRCUITS OF CONCERN

H/I Pressure Interface	NO
Spurious Operation	NO

7.9.25 FIRE AREA/ZONE: 2-AC-30-26

FIRE AREA/ZONE: 2-AC-30-26

AREA: 1371 sq. ft. DESCRIPTION: FAN ROOM

DESIGN BASIS FIRE

Fire Loading Category:	High
Fire Loading - Max Permiss:	(SEE TEXT)

FIRE PROTECTION (AVAILABLE)

Suppression (type)	man water spray for char., area wetpipe sys
Hose Stations	none, (1) in 2-AC-30-27
Portable Extinguishers	none, adjacent
Detectors (type)	ionization, temp. det. & heat det. for char.

FIRE RESISTANCE RATING

Walls	west 3hr, others 2hr
Floor, Ceiling, Roof	2hr
Penetrations	D, C, P
Fixed Openings	none
Doors	A/2-AC-30-27

HOT STANDBY SYSTEMS	Equipment	Valves	Cable
Reactor Coolant			
Reactor Protection System			
Shutdown Cooling			
Chemical and Volume Control			B
Main Feedwater			
Main Steam			
HVAC	A,B	A,B	A,B
Auxiliary Feedwater			
Engineered Safety Feature			
Component Cooling Water			
Saltwater Cooling Water			
Emergency Chilled Water		B	A,B
Diesel Generator Systems			

COLD SHUTDOWN SYSTEMS	Equipment	Valves	Cable
Shutdown Cooling			
CCW (To SDC)			
HVAC			
Summary (Hot and Cold)	A,B	A,B	A,B

ESSENTIAL ELECTRIC SYSTEMS	Equipment	MCC and Switchgear	Cable
220 KV (AC)			
4160 V (AC)			
480 V (AC)			
120 V (AC)			
125 V (DC)			
Electric Panels			A,B,X
Summary			A,B,X

ASSOCIATED CIRCUITS OF CONCERN

H/I Pressure Interface	NO
Spurious Operation	NO

FIRE AREA/ZONE 2-AC-30-26

7.9.25.1 Location

Auxiliary Control Building - El. 30'-0" - Fan Room - 1371 square feet - Fig. 8-6

7.9.25.2 Fire Loading

Fire loading category - High
Maximum permissible fire loading - 160,000 Btu/sq. ft. (Note 1)

Note 1:The maximum permissible fire loading is based on the reduced fuel contribution of the charcoal, which is entirely contained within the charcoal filters.

7.9.25.3 Design Basis Fire

The design basis fire is postulated to be a fire that would involve mostly cable insulation and charcoal.

The design basis fire is conservatively based on the simultaneous total combustion of all combustibles in the area.

7.9.25.4 Fire Protection Equipment

A manual deluge system is provided for the charcoal filters. An automatic wet pipe sprinkler system is provided for protection of the remainder of the area. No hose stations or portable extinguishers are available within the area. Manual fire fighting equipment is available in adjacent area 2-AC-30-27. A temperature detector is provided to alarm charcoal filter high temperature condition in the control room. In addition, fixed temperature rate of rise heat detectors are installed over the charcoal filters. An ionization detector is provided for detector coverage of the remainder of the area. The heat detectors and the ionization detector provide early warning alarm in the control room.

7.9.25.5 Construction

The west wall of the area is reinforced concrete with a 3 hour rating. The north wall is also concrete but with a 2 hour rating. The south and east walls are 2 hour rated metal framed plaster construction. The support column is protected by vermiculite fireproofing. The floor and ceiling have a 2 hour rating. A 3 hour rated double door communicates with the corridor (area 2-AC-30-27). The ventilation duct penetrations in 2 hour rated walls are provided with 1-1/2 hour rated fire dampers. Ventilation duct penetrations in 3 hour rated walls are provided with 3 hour dampers.

7.9.25.6 Licensee Controlled Specification Barriers

For definition of the barriers requiring surveillance per LCS 3.7.104, refer to the latest revision of Figure 8-6, sheet 3.

7.9.25.7 Conclusions

In the event of a fire in the charcoal filter, the temperature detectors installed within the charcoal filters are expected to alarm the high temperature condition in the control room. Fixed temperature rate of rise heat detectors, installed locally over the charcoal filters, provide secondary control room alarm of a charcoal fire. Manual operation of the deluge valve by an operator responding to the high temperature alarm will provide water spray directly on the charcoal filters to control and extinguish the fire.

In the event of a fire outside of the charcoal filters, the ionization detection system is expected to detect the products of combustion from an incipient fire and alert the control room for prompt fire department response. The fire department then enters the fan room and extinguishes the fire with portable equipment. The available portable equipment is adequate to extinguish the fire. Should the fire achieve sufficient intensity, the automatic wet pipe sprinklers are expected to actuate and extinguish the fire.

The normal ventilation system will effectively remove smoke from the area until the fire dampers operate. Portable smoke exhaust fans may then be used to vent smoke from the area.

The majority of the fire load within the area is due to charcoal entirely contained within the filters of the emergency air conditioning units and does not pose a direct threat to the barriers defining the area. Additionally, heat detectors and a manual water spray system and a wet pipe sprinkler system are provided.

The fire boundaries between 2-AC-30-26 and 2-AC-30-27, 2-AC-30-20C and 2-AC-9-12 were evaluated. The boundaries and associated fire protection features were found to be adequate to prevent the propagation of fire between the fire areas. The design basis fire is insufficient to breach the barriers defining the zone/fire area.

7.9.25.8 Fire Area 2-AC-30-26 Appendix R Compliance

Analysis for this fire area/zone has shown that equipment impaired may require control room evacuation in order to achieve safe shutdown. Safe shutdown capability will be provided by utilizing alternative shutdown equipment and systems. Functionally redundant components protected from fire damage will be utilized in conjunction with operator action on manual or disabled components to achieve safe shutdown.

FIRE AREA/ZONE 2-AC-30-26

One train of systems necessary to achieve hot standby and cold shutdown conditions has been evaluated to remain available for safe shutdown due to alternative shutdown capabilities provided in accordance with 10CFR50, Appendix R, III.G.3 and III.L. The fire detection and suppression systems in this area provide a level of protection equivalent to the requirements of the applicable sections of Appendix R.

7.9.26 FIRE AREA/ZONE: 2-AC-30-27

FIRE AREA/ZONE: 2-AC-30-27

AREA: 582 sq. ft. DESCRIPTION: CORRIDOR/STAIR

DESIGN BASIS FIRE

Fire Loading Category:	Minimal
Fire Loading - Max Permiss:	160,000.0 Btu's/sq.f

FIRE PROTECTION (AVAILABLE)

Suppression (type)	wet pipe sprinklers
Hose Station	(1)
Portable Extinguishers	yes
Detectors (type)	none

FIRE RESISTANCE RATING

Walls	3hr/148D 2hr/others
Floor, Ceiling, Roof	2hr
Penetrations	D, C, P
Fixed Openings	none
Doors	A26, B/64, 29, 15, 28, NR/2-TB-34-148D

HOT STANDBY SYSTEMS	Equipment	Valves	Cable
Reactor Coolant			
Reactor Protection System			
Shutdown Cooling			
Chemical and Volume Control			B
Main Feedwater			
Main Steam			
HVAC			A,B
Auxiliary Feedwater			
Engineered Safety Feature			
Component Cooling Water			
Saltwater Cooling Water			
Emergency Chilled Water			A,B
Diesel Generator Systems			

COLD SHUTDOWN SYSTEMS	Equipment	Valves	Cable
Shutdown Cooling			
CCW (To SDC)			
HVAC			
Summary (Hot and Cold)			A,B

ESSENTIAL ELECTRIC SYSTEMS	Equipment	MCC and Switchgear	Cable
220 KV (AC)			X
4160 V (AC)			
480 V (AC)			
120 V (AC)			
125 V (DC)			
Electric Panels	A/B		A,B,X
Summary	A/B		A,B,X

ASSOCIATED CIRCUITS OF CONCERN

H/I Pressure Interface	NO
Spurious Operation	NO

FIRE AREA/ZONE 2-AC-30-27

7.9.26.1 Location

Auxiliary Control Building - El. 30'-0" - Corridor/Stair - 582 square feet - Fig. 8-6

7.9.26.2 Fire Loading

Fire loading category - Minimal
Maximum permissible fire loading - 160,000 Btu/sq. ft. (Note 1)

Note 1:The maximum permissible fire loading is based on an evenly distributed loading of combustible materials.

7.9.26.3 Design Basis Fire

The design basis fire is postulated to be a fire that would involve mostly cable insulation.

The design basis fire is conservatively based on the simultaneous total combustion of all combustibles in the area.

7.9.26.4 Fire Protection Equipment

An automatic wet pipe sprinkler system is provided for the corridor area. In addition, manual fire fighting equipment is available within the area.

7.9.26.5 Construction

The south and west walls are reinforced concrete construction. The west wall adjoining 2-TB-34-148D is 3 hour rated. The south wall is 2 hour rated. The east and north walls are 2 hour rated metal framed plaster walls. The floor and ceiling are 2 hour rated. A non-rated double door separates the area from the turbine building (2-TB-34-148D). The zone communicates with the fan room (2-AC-30-26) through a 3 hour rated door and the staircase (2-AC-9-15), the cable riser gallery (2-AC-30-28), the 50' elevation lobby (2-AC-50-29B), and the 70' elevation corridor (2-AC-70-64) through 1-1/2 hour rated doors. Ventilation ducts passing through the area are provided with 1-1/2 hour rated fire dampers.

7.9.26.6 Licensee Controlled Specification Barriers

For definition of the barriers requiring surveillance per LCS 3.7.104, refer to the latest revision of Figures 8-6, 8-7, and 8-8, sheet 3.

7.9.26.7 Conclusions

Portable smoke exhaust fans may be effective in venting smoke from the area.
Appendix R fire area boundaries in 2-AC-30-27 were evaluated. The fire boundaries and associated fire protection features were found to be adequate to prevent the propagation of fire beyond the fire boundaries. The design basis fire is insufficient to breach the barriers defining the area.

7.9.26.8 Fire Area 2-AC-30-27 Appendix R Compliance

Safe shutdown capability will be provided by utilizing Train B systems. Functionally redundant components protected from fire damage will be utilized in conjunction with operator action on manual or disabled components to achieve safe shutdown.

One train of systems necessary to achieve hot standby and cold shutdown conditions independent of the subject fire area will be free of fire damage. Therefore, this fire area complies with the criteria of 10CFR50, Appendix R, III.G.1.

7.9.27 FIRE AREA/ZONE: 2-AC-30-28

FIRE AREA/ZONE: 2-AC-30-28

AREA: 2276 sq. ft. DESCRIPTION: CABLE RISER GALLERY

DESIGN BASIS FIRE

Fire Loading Category:	Medium
Fire Loading - Max Permiss:	160,000.0 Btu's/sq.f

FIRE PROTECTION (AVAILABLE)

Suppression (type)	*water spray system*
Hose Stations	(1)
Portable Extinguishers	yes
Detectors (type)	ionization, heat detectors

FIRE RESISTANCE RATING

Walls	south 2hr, others 3hr
Floor, Ceiling, Roof	2hr
Penetrations	D, C, P, QP/14
Fixed Openings	none
Doors	X/2-SE-30-142A, A/2-PE-30-2C, A/2-AC-30-20A, B/2-AC-30-27

HOT STANDBY SYSTEMS	Equipment	Valves	Cable
Reactor Coolant			A,B,C,D
Reactor Protection System			A,B,C,D
Shutdown Cooling			A,B
Chemical and Volume Control			A,B
Main Feedwater			A,B
Main Steam			A,B,C,D
HVAC			a*,A,B
Auxiliary Feedwater			a*,A,B,C
Engineered Safety Feature			A,B,C,D
Component Cooling Water			a*,A,B,X
Saltwater Cooling Water			a*,A,B
Emergency Chilled Water			A,B
Diesel Generator Systems			A,B

COLD SHUTDOWN SYSTEMS	Equipment	Valves	Cable
Shutdown Cooling			a*,A,B
CCW (To SDC)			A,B
HVAC			a*,A,B
Summary (Hot and Cold)			a*,A,B,C,D,X

ESSENTIAL ELECTRIC SYSTEMS	Equipment	MCC and Switchgear	Cable
220 KV (AC)			X
4160 V (AC)			A,B
480 V (AC)			A,B
120 V (AC)			
125 V (DC)			
Electric Panels			A,B,C,D,X
Summary			A,B,C,D,X

ASSOCIATED CIRCUITS OF CONCERN

H/I Pressure Interface	YES
Spurious Operation	YES

FIRE AREA/ZONE 2-AC-30-28

7.9.27.1 Location

Auxiliary Control Building - El. 30'-0" - Cable Riser Gallery - 2276 square feet - Fig. 8-6

7.9.27.2 Fire Loading

Fire loading category - Medium
Maximum permissible fire loading - 160,000 Btu/sq. ft. (Note 1)

Note 1:The maximum permissible loading is based on an evenly distributed loading of combustible materials.

7.9.27.3 Design Basis Fire

The design basis fire is postulated to be a fire that would involve mostly cable insulation. The design basis fire is conservatively based on the simultaneous total combustion of all combustibles in the area.

7.9.27.4 Fire Protection Equipment

The area contains an automatic water spray system with fixed temperature rate of rise actuation. Actuation by the heat detectors results in control room annunciation. Manual fire fighting equipment is available within the area. Ionization detectors, located throughout the area, provide early warning alarm in the control room.

7.9.27.5 Construction

The east, west, and north walls are reinforced concrete with a 3 hour rating. The west half of the south wall is concrete, the east half of the south wall is metal framed plaster; both walls have a 2 hour rating. The floor and ceiling are 2 hour rated. The area communicates with the penetration building (2-PE-30-2C) through a 3 hour rated door. A 3 hour UL equivalent door opens to the safety equipment building (2-SE-30-142A) and a 1-1/2 hour rated door separates the area from the corridor/stair (2-AC-30-27). One 3 hour door separates the area from the control room (2-AC-30-20A). Ventilation duct penetrations in 2 hour rated walls are provided with 1-1/2 hour rated fire dampers. No ventilation ducts penetrate 3 hour rated walls. Two drain lines discharge to the lower cable riser gallery (2-AC-9-14). Spring loaded check valves preclude the communication of fumes/air between that room and the lower riser gallery.

7.9.27.6 Licensee Controlled Specification Barriers

For definition of the barriers requiring surveillance per LCS 3.7.104, refer to the latest revision of Figure 8-6, sheet 3/4.

Cable for the following systems is wrapped:

HVAC - Train A
- Shutdown Cooling System - Train A
- Auxiliary Feedwater System - Train A
- Component Cooling Water System - Train A
- Saltwater Cooling System - Train A

7.9.27.7 Conclusions

The ionization detection system is expected to detect the products of combustion from an incipient fire and alert the control room for prompt response by the fire department. The fire department then enters the cable riser gallery and extinguishes the fire with portable equipment, or actuates the water spray system from the manual station located outside the cable riser gallery.

In the event the fire achieves sufficient intensity, the fixed temperature rate of rise heat detectors will actuate the water spray system automatically. Actuation of the water spray system is alarmed in the control room. The water spray system will control and suppress the fire until the fire department arrives and completes the extinguishment with portable equipment.

Should the automatic water spray system fail to actuate, the available portable extinguishers and hose stations are adequate to extinguish the fire.

The normal ventilation system will effectively remove the smoke generated by the design basis fire until the fire dampers operate. Portable smoke exhaust fans may then be used to vent smoke from the area.

The fire boundaries between 2-AC-30-28 and 2-AC-30-27, 2-AC-9-14, 2-SE-30-142A and 2-AC-9-13 were evaluated. The boundaries and associated fire protection features were found to be adequate to prevent the propagation of fire between the fire areas. The design basis fire is insufficient to breach the barriers defining the zone/fire area.

7.9.27.8 Fire Area 2-AC-30-28 Appendix R Compliance

Analysis for this fire area/zone has shown that equipment impaired may require control room evacuation in order to achieve safe shutdown. Shutdown for a fire in this area will be credited using alternative shutdown equipment and procedures. Operator action may be required to isolate selected Train A equipment from the control room and operate the equipment either manually or from alternative shutdown stations. Operator actions may be required to provide CCW make-up from the Fire Water System.

FIRE AREA/ZONE 2-AC-30-28

One train of systems necessary to achieve hot standby and cold shutdown conditions has been evaluated to remain available for safe shutdown due to alternative shutdown capabilities provided in accordance with 10CFR50, Appendix R, III.G.3 and III.L. Raceway fire barrier protection with suppression and detection is provided for required alternative shutdown cables. The fire detection and suppression systems in this area provide a level of protection equivalent to the requirements of the applicable sections of Appendix R.

7.9.28 FIRE AREA/ZONE: 2-AC-50-29A

FIRE AREA/ZONE: 2-AC-50-29A

AREA: 1886 sq. ft. DESCRIPTION: 50FT SWGR CORRIDORS -EAST

DESIGN BASIS FIRE

Fire Loading Category:	Low
Fire Loading - Max Permiss:	160,000.0 Btu's/sq.f

FIRE PROTECTION (AVAILABLE)

Suppression (type)	wet pipe sprinklers
Hose Stations	(2)
Portable Extinguishers	Yes
Detectors (type)	Ionization

FIRE RESISTANCE RATING

Walls	3hr/111B, 116, others 2hr
Floor, Ceiling, Roof	2hr
Penetrations	D, C, P
Fixed Openings	None
Doors	see text

HOT STANDBY SYSTEMS	Equipment	Valves	Cable
Reactor Coolant			A, C
Reactor Protection System			
Shutdown Cooling			A
Chemical and Volume Control			A
Main Feedwater			
Main Steam			A,,C
HVAC			A,,a,b
Auxiliary Feedwater			A
Engineered Safety Feature			A,,C
Component Cooling Water			
Saltwater Cooling Water			
Emergency Chilled Water			A
Diesel Generator Systems			A

COLD SHUTDOWN SYSTEMS	Equipment	Valves	Cable
Shutdown Cooling			A
CCW (To SDC)			
HVAC			
Summary (Hot and Cold)	A,B		a,A,b,C

ESSENTIAL ELECTRIC SYSTEMS	Equipment	MCC and Switchgear	Cable
220 KV (AC)			X
4160 V (AC)			A
480 V (AC)			A
120 V (AC)			A, C
125 V (DC)			A, b,C
Electric Panels			A,C,X
Summary			A,b,C,X

ASSOCIATED CIRCUITS OF CONCERN

H/I Pressure Interface	YES
Spurious Operation	YES

FIRE AREA/ZONE 2-AC-50-29A

7.9.28.1 Location

Auxiliary Control Building - El. 50'-0" – SWGR CORRIDORS – EAST – 1886 square feet - Fig. 8-7. This fire zone is a subset of the existing Fire Area 2-AC-50-29, Lobby/Motor Control Room.

7.9.28.2 Fire Loading

Fire loading category – Low
Maximum permissible fire loading - 160,000 Btu/sq. ft. (Note 1)

Note 1:The maximum permissible loading is based on an evenly distributed loading of combustible materials.

7.9.28.3 Design Basis Fire

The design basis fire is postulated to be a fire that would involve mostly cable insulation and a minor amount of paper.

The design basis fire is conservatively based on the simultaneous total combustion of all combustibles in the area.

7.9.28.4 Fire Protection Equipment

The zone contains a wet pipe sprinkler system for area-wide suppression coverage. Manual fire fighting equipment is available within the zone. Ionization smoke detectors, located in the zone, provide early warning alarm in the control room.

7.9.28.5 Construction

The east wall of the corridor that is common with the building's perimeter walls are 3-hour fire rated. The rest of the walls are 2 hour fire rated, as are the floor and ceiling. The doors opening to the switchgear rooms (2-AC-50-40, 3-AC-50-60), the battery rooms (2-AC-50-48, 2-AC-50-49, 3-AC-50-54, and 3-AC-50-55), the distribution rooms (2-AC-50-45, 2-AC-50-46, 2-AC-50-47, 3-AC-50-56, 3-AC-50-57, 3-AC-50-58), and to the HVAC rooms (2-AC-50-39 and 3-AC-50-30) are 3-hour fire rated. The three doors separating the East Corridors from the West Corridors (2-AC-50-29A and 2-AC-50-29B) and air-transfer grill fire dampers above the doors are 3-hour rated. Ventilation duct penetrations in 2 hour rated walls are provided with 1-1/2 hour rated fire dampers.

7.9.28.6 Licensee Controlled Specification Barriers

For definition of the barriers requiring surveillance per LCS 3.7.104, refer to the latest revision of Figure 8-7, sheet 3.

7.9.28.7 Conclusions

The ionization detection system is expected to detect the products of combustion from an incipient fire, and alert the control room for prompt response by the fire department. The available portable equipment is adequate to extinguish the fire. In the event the fire achieves sufficient intensity, the automatic wet pipe sprinkler system is expected to actuate and extinguish the fire.

The fire boundaries between this zone, 2-AC-50-29A and 3-AC-30-20B, 2-AC-30-20A, 3-AC-50-61, 2-AC-30-20C, 2-AC-30-20E, 2-AC-50-42, and 2-AC-70-64 were evaluated. The boundaries and associated fire protection features were found to be adequate to prevent the propagation of fire between the fire areas. The suppression and detection provided and the heavy construction of barriers will adequately mitigate the consequences of fire and will confine it to the subject fire area.

7.9.28.8 Fire Zone 2-AC-50-29A Appendix R Compliance

Safe shutdown capability for Fire Area 2-AC-50-29 will be provided by utilizing Train A or B systems. In Fire Zone 2-AC-50-29A s afe shutdown analysis demonstrates that either Train A systems of both units may be damaged by fire, but due to physical separation from fire zone 2-AC-50-29B at least Train-B for each unit will remain available. Functionally redundant components protected from fire damage will be utilized in conjunction with operator action on manual or disabled components to achieve safe shutdown.

One train of systems necessary to achieve hot standby and cold shutdown has been evaluated to remain available for safe shutdown in accordance with 10CFR50, Appendix R, Sections III.G.1 and III.G.2.b and c. A deviation from the requirements of Section III.G.2 for the entire Fire Area 2-AC-50-29 (both -29A and -29B) has been accepted to the extent it requires the separation of redundant safe shutdown cables and equipment by 20 feet free of intervening combustibles, and complete area-wide detection. The fire detection and suppression systems in this area/zone were evaluated and shown to provide a level of protection equivalent to the requirements of Appendix R. The 3-hour fire rated walls/doors in corridors 303B, 303C and 303D provide additional passive protection and separation between opposite trains of 1E electrical cables; however, some SSD cabling relies on the physical separation and an area-wide fire suppression system credited in the NRC-approved deviation.

7.9.29 FIRE AREA/ZONE: 2-AC-50-29B

FIRE AREA/ZONE: 2-AC-50-29B

AREA: 3742.8 sq. ft. DESCRIPTION: 50FT SWGR CORRIDORS -WEST

DESIGN BASIS FIRE

Fire Loading Category:	Low
Fire Loading - Max Permiss:	160,000.0 Btu's/sq.f

FIRE PROTECTION (AVAILABLE)

Suppression (type)	wet pipe sprinklers
Hose Stations	(3)
Portable Extinguishers	Yes
Detectors (type)	Ionization

FIRE RESISTANCE RATING

Walls	3hr/ 148D, others 2hr
Floor, Ceiling, Roof	2hr
Penetrations	D, C, P
Fixed Openings	None
Doors	see text

HOT STANDBY SYSTEMS	Equipment	Valves	Cable
Reactor Coolant			A,B,B*,C,D
Reactor Protection System			
Shutdown Cooling			B
Chemical and Volume Control			B
Main Feedwater			
Main Steam			B,D
HVAC	A,B		A,B,a,b
Auxiliary Feedwater			B
Engineered Safety Feature			B,D
Component Cooling Water			B
Saltwater Cooling Water			B
Emergency Chilled Water			B
Diesel Generator Systems			B

COLD SHUTDOWN SYSTEMS	Equipment	Valves	Cable
Shutdown Cooling			B
CCW (To SDC)			
HVAC			
Summary (Hot and Cold)	A,B		a,A,b,B,B*,C,D

ESSENTIAL ELECTRIC SYSTEMS	Equipment	MCC and Switchgear	Cable
220 KV (AC)			X
4160 V (AC)			B
480 V (AC)			B
120 V (AC)			B,D
125 V (DC)			A, b,B,D
Electric Panels			B,D,X
Summary			A,b,B,D,X

ASSOCIATED CIRCUITS OF CONCERN

H/I Pressure Interface	YES
Spurious Operation	YES

FIRE AREA/ZONE 2-AC-50-29B

7.9.29.1 Location

Auxiliary Control Building - El. 50'-0" – 50FT SWGR CORRIDORS – WEST – 3742.8 square feet - Fig. 8-7. This fire zone is a subset of the existing Fire Area 2-AC-50-29, Lobby/Motor Control Room.

7.9.29.2 Fire Loading

Fire loading category – Low
Maximum permissible fire loading - 160,000 Btu/sq. ft. (Note 1)

Note 1:The maximum permissible loading is based on an evenly distributed loading of combustible materials.

7.9.29.3 Design Basis Fire

The design basis fire is postulated to be a fire that would involve mostly cable insulation and paper (safe shutdown manuals and drawings). The design basis fire is conservatively based on the simultaneous total combustion of all combustibles in the area.

7.9.29.4 Fire Protection Equipment

The area contains a wet pipe sprinkler system for area-wide suppression coverage. Manual fire fighting equipment is available within the area. Ionization smoke detectors, located in the area, provide early warning alarm in the control room.

7.9.29.5 Construction

The east and west walls of the corridor that are common with the building's perimeter walls are 3-hour fire rated. The rest of the walls are 2 hour fire rated, as are the floor and ceiling. The doors opening to the switchgear rooms (2-AC-50-35, 3-AC-50-34), the battery rooms (2-AC-50-42, 2-AC-50-50, 2-AC-50-51, 3-AC-50-61, 3-AC-50-52, and 3-AC-50-53), the distribution rooms (2-AC-50-41, 2-AC-50-44, 3-AC-50-59, and 3-AC-50-62), and to the evacuation room (2-AC-50-43) are 3-hour fire rated. The doors separating the area from the cable riser galleries (2-AC-50-36 and 3-AC-50-33) and from the stairways (2-AC-30-22, 2-AC-30-24, and 2-AC-30-27) are 1-1/2 hour rated. The door to the elevator is 1-1/2 hour rated. The three doors separating the East Corridors from the West Corridors (2-AC-50-29A and 2-AC-50-29B) and air-transfer grill fire dampers above the doors are 3-hour rated. Ventilation duct penetrations in 2-hour rated walls are provided with 1-1/2 hour rated fire dampers. Ventilation duct penetrations in the 3 hour rated sections of the west wall are provided with 3-hour rated fire dampers.

FIRE AREA/ZONE 2-AC-50-29B

7.9.29.6 Licensee Controlled Specification Barriers

For definition of the barriers requiring surveillance per LCS 3.7.104, refer to the latest revision of Figure 8-7, sheet 3.

Cable for the following systems are wrapped:

125V (DC) - Train B
HVAC - Train A
HVAC - Train B

7.9.29.7 Conclusions

The ionization detection system is expected to detect the products of combustion from an incipient fire, and alert the control room for prompt response by the fire department. The available portable equipment is adequate to extinguish the fire. In the event the fire achieves sufficient intensity, the automatic wet pipe sprinkler system is expected to actuate and extinguish the fire.

The fire boundaries between 2-AC-50-29B and 3-AC-30-20B, 2-AC-9-18, 2-AC-30-20A, 3-AC-50-61, 2-AC-30-24, 2-AC-30-20C, 2-AC-30-20E, 2-AC-30-22, 2-AC-30-27, 2-AC-50-42, 3-AC-50-53, 3-AC-50-62, and 2-AC-70-64 were evaluated. The boundaries and associated fire protection features were found to be adequate to prevent the propagation of fire between the fire areas. The suppression and detection provided and the heavy construction of barriers will adequately mitigate the consequences of fire and will confine it to the subject fire area.

7.9.29.8 Fire Zone 2-AC-50-29B Appendix R Compliance

Safe shutdown capability for Fire Area 2-AC-50-29 will be provided by utilizing Train A or B systems. Safe shutdown analysis for Fire Zone 2-AC-50-29B demonstrates that either Train A or Train B systems of both units may be damaged by fire, but due to physical separation at least one train for each unit will remain available. Functionally redundant components protected from fire damage will be utilized in conjunction with operator action on manual or disabled components to achieve safe shutdown.

One train of systems necessary to achieve hot standby and cold shutdown has been evaluated to remain available for safe shutdown in accordance with 10CFR50, Appendix R, Sections III.G.1 and III.G.2.b and c. A deviation from the requirements of Section III.G.2 for the entire Fire Area 2-AC-50-29 (both -29A and -29B) has been accepted to the extent it requires the separation of redundant safe shutdown cables and equipment by 20 feet free of intervening combustibles, and complete area-wide detection. The fire detection and suppression systems in this area/zone were evaluated and shown to provide a level of protection equivalent to the requirements of Appendix R. The 1-hour fire barrier protecting the 125V DC cables and emergency HVAC cables, and the 3-hour fire rated walls/doors in corridors 303B, 303C and 303D provide additional passive protection and separation between opposite trains of 1E electrical cables; however, some SSD cabling relies on the physical separation and an area-wide fire suppression system credited in the NRC-approved deviation.

7.9.30 FIRE AREA/ZONE: 3-AC-50-30

FIRE AREA/ZONE: 3-AC-50-30

AREA: 288 sq. ft. DESCRIPTION: HVAC ROOM 3B

DESIGN BASIS FIRE

Fire Loading Category:	Low
Fire Loading - Max Permiss:	160,000.0 Btu's/sq.f

FIRE PROTECTION (AVAILABLE)

Suppression (type)	wet pipe sprinklers
Hose Stations	none, (1) in 2-AC-50-29A
Portable Extinguishers	none, adjacent
Detectors (type)	heat detectors

FIRE RESISTANCE RATING

Walls	east 3hr, others 2hr
Floor, Ceiling, Roof	2hr
Penetrations	P, C, D
Fixed Openings	None
Doors	A/2-AC-50-29A, A/3-AC-50-31

HOT STANDBY SYSTEMS	Equipment	Valves	Cable
Reactor Coolant			
Reactor Protection System			
Shutdown Cooling			
Chemical and Volume Control			
Main Feedwater			
Main Steam			
HVAC	B		a,B
Auxiliary Feedwater			
Engineered Safety Feature			
Component Cooling Water			
Saltwater Cooling Water			
Emergency Chilled Water			a,A
Diesel Generator Systems			

COLD SHUTDOWN SYSTEMS	Equipment	Valves	Cable
Shutdown Cooling			
CCW (To SDC)			
HVAC			
Summary (Hot and Cold)	B		a,A,B

ESSENTIAL ELECTRIC SYSTEMS	Equipment	MCC and Switchgear	Cable
220 KV (AC)			X
4160 V (AC)			a,A,B
480 V (AC)			
120 V (AC)			
125 V (DC)			
Electric Panels			a,A,B,X
Summary			a,A,B,X

ASSOCIATED CIRCUITS OF CONCERN

H/I Pressure Interface	NO
Spurious Operation	YES

FIRE AREA/ZONE 3-AC-50-30

7.9.30.1 Location

Auxiliary Control Building - El. 50'-0" - HVAC Room 3B - 288 square feet - Fig. 8-7

7.9.30.2 Fire Loading

Fire loading category - Low
Maximum permissible fire loading - 160,000 Btu/sq. ft. (Note 1)
Note 1:The maximum permissible fire loading is based on an evenly distributed loading of combustible materials.

7.9.30.3 Design Basis Fire

The design basis fire is postulated to be a fire that would involve mostly cable insulation. The design basis fire is conservatively based on the simultaneous total combustion of all combustibles in the area.

7.9.30.4 Fire Protection Equipment

The area contains an automatic wet pipe sprinkler system. Manual fire fighting equipment is available in adjacent area 2-AC-50-29A. One fixed temperature rate of rise heat detector, located within the area, provides early warning alarm in the control room.

7.9.30.5 Construction

The east wall is 3 hour fire rated thick concrete construction. The north, west, and south walls, as well as the floor and ceiling of the area, are 2 hour fire rated. A 3 hour rated door opens to HVAC Room 3A (3-AC-50-31). A second 3 hour rated door communicates with the corridor (2-AC-50-29A). All ventilation duct penetrations in 2 hour rated walls are provided with 1-1/2 hour rated fire dampers. There are no ventilation duct penetrations in 3 hour rated walls.

7.9.30.6 Licensee Controlled Specification Barriers

Cable for the following systems is wrapped:

4160V - Train A
Emergency Cooling Water - Train A
HVAC - Train A
Reactor Coolant System - Train A (SOE)
EP - Train A

For definition of the barriers requiring surveillance per LCS 3.7.104, refer to the latest revision of Figure 8-7, sheet 3.

7.9.30.7 Conclusions

The fixed temperature rate of rise heat detector is expected to detect the fire in the first few minutes of the fire's growth period and alert the control room for prompt response by the fire department. The available portable equipment is adequate to extinguish the fire. In the event the fire achieves sufficient intensity, the wet pipe sprinklers will actuate automatically to extinguish the fire.

The normal ventilation system will effectively remove smoke generated by the design basis fire until the fire dampers operate. Portable smoke exhaust fans may then be used to vent smoke from the area.

The fire boundaries between 3-AC-50-30 and 2-AC-70-64 were evaluated. The boundaries and associated fire protection features were found to be adequate to prevent the propagation of fire between the fire areas. The design basis fire is insufficient to breach the barriers defining the zone/fire area.

7.9.30.8 Fire Area 3-AC-50-30 Appendix R Compliance

Safe shutdown capability will be provided by utilizing Train A systems. Essential Train A cabling is wrapped to prevent damage. Functionally redundant components protected from fire damage will be utilized in conjunction with operator action on manual or disabled components to achieve safe shutdown.

One train of systems necessary to achieve hot standby and cold shutdown conditions has been evaluated to remain available for safe shutdown in accordance with 10CFR50, Appendix R, III.G.1 and III.G.2.c. The fire detection and suppression systems in this area/zone were evaluated and shown to provide a level of protection equivalent to the requirements of Appendix R.

7.9.31 FIRE AREA/ZONE: 3-AC-50-31

FIRE AREA/ZONE: 3-AC-50-31

AREA: 352 sq. ft. DESCRIPTION: HVAC ROOM 3A

DESIGN BASIS FIRE

Fire Loading Category:	Low
Fire Loading - Max Permiss:	160,000.0 Btu's/sq.f

FIRE PROTECTION (AVAILABLE)

Suppression (type)	wet pipe sprinklers
Hose Stations	none
Portable Extinguishers	none, adjacent
Detectors (type)	heat detector

FIRE RESISTANCE RATING

Walls	east 3hr, others 2hr
Floor, Ceiling, Roof	2hr
Penetrations	D, C, P
Fixed Openings	none
Doors	A/3-AC-50-30, B/3-AC-50-32

HOT STANDBY SYSTEMS	Equipment	Valves	Cable
Reactor Coolant			
Reactor Protection System			
Shutdown Cooling			
Chemical and Volume Control			
Main Feedwater			
Main Steam			
HVAC	A		A,b,B
Auxiliary Feedwater			
Engineered Safety Feature			
Component Cooling Water			
Saltwater Cooling Water			
Emergency Chilled Water			
Diesel Generator Systems			

COLD SHUTDOWN SYSTEMS	Equipment	Valves	Cable
Shutdown Cooling			
CCW (To SDC)			
HVAC			
Summary (Hot and Cold)	A		A,b,B

ESSENTIAL ELECTRIC SYSTEMS	Equipment	MCC and Switchgear	Cable
220 KV (AC)			X
4160 V (AC)			B
480 V (AC)			
120 V (AC)			
125 V (DC)			
Electric Panels			A*,A,B,X
Summary			A*,A,B,X

ASSOCIATED CIRCUITS OF CONCERN

H/I Pressure Interface	NO
Spurious Operation	YES

FIRE AREA/ZONE 3-AC-50-31

7.9.31.1 Location

Auxiliary Control Building - El. 50'-0" - HVAC Room 3A - 352 square feet - Fig. 8-7

7.9.31.2 Fire Loading

Fire loading category - Low
Maximum permissible fire loading - 160,000 Btu/sq. ft. (Note 1)

Note 1:The maximum permissible fire loading is based on an evenly distributed loading of combustible materials.

7.9.31.3 Design Basis Fire

The design basis fire is postulated to be a fire that would involve mostly cable insulation. The design basis fire is conservatively based on the simultaneous total combustion of all combustibles in the area.

7.9.31.4 Fire Protection Equipment

The area contains an automatic wet pipe sprinkler system. Manual fire fighting equipment is available in 2-AC-50-29A and 3-AC-50-32. One fixed temperature rate of rise heat detector, located within the area, provides early warning alarm in the control room.

7.9.31.5 Construction

The east wall is 3 hour fire rated thick concrete construction. The north, south, and west walls, as well as the ceiling and floor of the area, are 2 hour fire rated. A 3 hour rated door opens to HVAC room 3B (3-AC-50-30). A 1-1/2 hour fire rated door separates the area from the cable riser gallery (3-AC-50-32). All ventilation duct penetrations in 2 hour rated walls are provided with 1-1/2 hour rated fire dampers. There are no ventilation duct penetrations in 3 hour rated walls.

7.9.31.6 Licensee Controlled Specification Barriers

For definition of the barriers requiring surveillance per LCS 3.7.104, refer to the latest revision of Figure 8-7, sheet 3.

Cable for the following system is wrapped:

HVAC - Train B

7.9.31.7 Conclusions

The fixed temperature rate of rise heat detector is expected to detect the fire within the first few minutes of the fire's growth period and alert the control room for prompt response by the fire department. The available portable equipment is adequate to extinguish the fire. In the event the fire reaches sufficient intensity, the automatic wet pipe sprinkler system will actuate and extinguish the fire.

The normal ventilation system will effectively remove smoke generated by the design basis fire until the fire dampers operate. Portable smoke exhaust fans may then be used to vent smoke from the area.

The fire boundary between 3-AC-50-31 and 2-AC-70-64 was evaluated. The boundaries and associated fire protection features were found to be adequate to prevent the propagation of fire between the fire areas.

The design basis fire is insufficient to breach the barriers defining the zone/fire area.
Fire Area 3-AC-50-31 Appendix R Compliance

Safe shutdown capability will be provided by utilizing Train B systems. Functionally redundant components protected from fire damage will be utilized in conjunction with operator action on manual or disabled components to achieve safe shutdown.

One train of systems necessary to achieve hot standby and cold shutdown conditions has been evaluated to remain available for safe shutdown in accordance with 10CFR50, Appendix R, III.G.1 and III.G.2.c. The fire detection and suppression systems in this area/zone were evaluated and shown to provide a level of protection equivalent to the requirements of Appendix R.

7.9.32 FIRE AREA/ZONE: 3-AC-50-32

FIRE AREA/ZONE: 3-AC-50-32

AREA: 1458 sq. ft. DESCRIPTION: CABLE RISER GALLERY

DESIGN BASIS FIRE

Fire Loading Category:	Medium
Fire Loading - Max Permiss:	160,000.0 Btu's/sq.f

FIRE PROTECTION (AVAILABLE)

Suppression (type)	water spray system
Hose Stations	(1)
Portable Extinguishers	yes
Detectors (type)	ionization, heat detectors

FIRE RESISTANCE RATING

Walls	east and south 3hr, others 2hr
Floor, Ceiling, Roof	2hr
Penetrations	D, C, P, QP/7
Fixed Openings	None
Doors	B/3-AC-50-31, (2)B/3-AC-50-60, A/3-AC-50-33, A/3-PE-45-3A

HOT STANDBY SYSTEMS	Equipment	Valves	Cable
Reactor Coolant			A,A*B,b,C,D
Reactor Protection System			B,D
Shutdown Cooling			A,B
Chemical and Volume Control			A,B
Main Feedwater			
Main Steam			A,A*,b,B,C,D
HVAC			A,B,b
Auxiliary Feedwater			A,B
Engineered Safety Feature			A,C,D
Component Cooling Water			A,B,X
Saltwater Cooling Water			A
Emergency Chilled Water			A
Diesel Generator Systems			A

COLD SHUTDOWN SYSTEMS	Equipment	Valves	Cable
Shutdown Cooling			A,B
CCW (To SDC)			
HVAC			A
Summary (Hot and Cold)			A*A,b,B,C,D,X

ESSENTIAL ELECTRIC SYSTEMS	Equipment	MCC and Switchgear	Cable
220 KV (AC)			X
4160 V (AC)			A,B
480 V (AC)			A
120 V (AC)			
125 V (DC)			
Electric Panels			A*A,b,B,C,D,X
Summary			A*A,b,B,C,D,X

ASSOCIATED CIRCUITS OF CONCERN

H/I Pressure Interface	YES
Spurious Operation	YES

FIRE AREA/ZONE 3-AC-50-32

7.9.32.1 Location

Auxiliary Control Building - El. 50'-0" - Cable Riser Gallery - 1458 square feet - Fig. 8-7

7.9.32.2 Fire Loading

Fire loading category - Medium
Maximum permissible fire loading - 160,000 Btu/sq. ft. (Note 1)

Note 1:The maximum permissible fire loading is based on an evenly distributed loading of combustible materials.

7.9.32.3 Design Basis Fire

The design basis fire is postulated to be a fire that would involve mostly cable insulation.

The design basis fire is conservatively based on the simultaneous total combustion of all combustibles in the area.

7.9.32.4 Fire Protection Equipment

The area contains an automatic water spray system, with fixed temperature rate of rise actuation. Actuation by the heat detectors results in control room annunciation. Manual fire fighting equipment is available within the area. Ionization detectors, located throughout the area, provide early warning alarm in the control room.
Construction

The south and east walls of the area are 3 hour rated thick concrete construction. The north and west walls, as well as the floor and ceiling of the area, are 2 hour rated. A 3 hour rated door communicates with the cable riser gallery (3-AC-50-33). Two 1-1/2 hour rated doors separate the area from Switchgear Room 3A (3-AC-50-60). The area communicates with HVAC Room 3A (3-AC-50-31) through a 1-1/2 hour rated door. A 3 hour rated door opens to the stairway leading to the 45' elevation of the penetration building (3-PE-45-3A). Ventilation duct penetrations in 2 hour rated walls are provided with 1-1/2 hour rated fire dampers. There are no ventilation penetrations in 3 hour rated walls. Two drain lines discharge to the lower cable riser gallery (3-AC-9-7). Spring loaded check valves preclude the communication of fumes/air between this room and the lower riser gallery.

7.9.32.5 Licensee Controlled Specification Barriers

For definition of the barriers requiring surveillance per LCS 3.7.104, refer to the latest revision of Figure 8-7, sheet 3.

Cable for the following systems is wrapped:

Reactor Coolant System - Train B
Main Steam System - Train B
HVAC - Train B
Electrical Panels - Train B

7.9.32.6 Conclusions

The ionization system is expected to detect the products of combustion from an incipient fire and alert the control room for prompt response by the fire department. The fire department then enters the cable riser gallery and extinguishes the fire with portable equipment or actuates the water spray system from the manual station located outside the cable riser gallery. In the event the fire achieves sufficient intensity, the fixed temperature rate of rise heat detectors will actuate the water spray system automatically. Actuation of the water spray system is alarmed in the control room. The water spray system will control and suppress the fire until the fire department arrives to complete the extinguishment with portable equipment.

Should the automatic water spray system fail to actuate, the portable equipment available in the area is adequate to extinguish the fire.

The normal ventilation system will effectively remove the smoke generated by the design basis fire until the fire dampers operate. Portable smoke exhaust fans may then be used to vent smoke from the area.

The fire boundaries between 3-AC-50-32 and 3-AC-50-62 were evaluated. The boundaries and associated fire protection features were found to be adequate to prevent the propagation of fire between the fire areas. The design basis fire is insufficient to breach the barriers defining the area.

7.9.32.7 Fire Area 3-AC-50-32 Appendix R Compliance

Safe shutdown capability will be provided by utilizing Train B systems. Safe shutdown analyses demonstrate that Train A systems may be damaged by a fire. Functionally redundant components protected from fire damage will be utilized in conjunction with operator action on manual or disabled components to achieve safe shutdown.

One train of systems necessary to achieve hot standby and cold shutdown conditions has been evaluated to remain available for safe shutdown in accordance with 10CFR50, Appendix R, III.G.1 and III.G.2.c. The fire detection and suppression systems in this area/zone were evaluated and shown to provide a level of protection equivalent to the requirements of Appendix R.

7.9.33 FIRE AREA/ZONE: 3-AC-50-33

FIRE AREA/ZONE: 3-AC-50-33

AREA: 795 sq. ft. DESCRIPTION: CABLE RISER GALLERY

DESIGN BASIS FIRE

Fire Loading Category:	Medium
Fire Loading - Max Permiss:	160,000.0 Btu's/sq.f

FIRE PROTECTION (AVAILABLE)

Suppression (type)	water spray system
Hose Stations	none, (1) in 2-AC-50-29B
Portable Extinguishers	yes
Detectors (type)	ionization, heat detectors

FIRE RESISTANCE RATING

Walls	west and south exterior 3hr, other 2hr
Floor, Ceiling, Roof	2hr
Penetrations	D, C, P, QP/7
Fixed Openings	none
Doors	A/3-AC-50-32, B/2-AC-50-29B, B/3-AC-50-34

HOT STANDBY SYSTEMS	Equipment	Valves	Cable
Reactor Coolant			A,B,B*,D
Reactor Protection System			
Shutdown Cooling			B
Chemical and Volume Control			A,B
Main Feedwater			
Main Steam			B,D
HVAC			B
Auxiliary Feedwater			B
Engineered Safety Feature			B,D
Component Cooling Water			A,B
Saltwater Cooling Water			a,B,A
Emergency Chilled Water			B
Diesel Generator Systems			B

COLD SHUTDOWN SYSTEMS	Equipment	Valves	Cable
Shutdown Cooling			A,B
CCW (To SDC)			
HVAC	A		B
Summary (Hot and Cold)			a,A,B,B*,D

ESSENTIAL ELECTRIC SYSTEMS	Equipment	MCC and Switchgear	Cable
220 KV (AC)			X
4160 V (AC)			B
480 V (AC)			B
120 V (AC)			
125 V (DC)			
Electric Panels			A,B,D,X
Summary			A,B,D,X

ASSOCIATED CIRCUITS OF CONCERN

H/I Pressure Interface	YES
Spurious Operation	YES

FIRE AREA/ZONE 3-AC-50-33

7.9.33.1 Location

Auxiliary Control Building - El. 50'-0" - Cable Riser Gallery - 795 square feet - Fig. 8-7

7.9.33.2 Fire Loading

Fire loading category - Medium
Maximum permissible fire loading - 160,000 Btu/sq. ft. (Note 1)

Note 1:The maximum permissible fire loading is based on an evenly distributed loading of combustible materials.

7.9.33.3 Design Basis Fire

The design basis fire is postulated to be a fire that would involve mostly cable insulation.

The design basis fire is conservatively based on the simultaneous total combustion of all combustibles in the area.

7.9.33.4 Fire Protection Equipment

The area contains an automatic water spray system with fixed temperature rate of rise actuation. Actuation by the heat detectors results in control room annunciation. Manual fire fighting equipment is available within the area and in adjacent area 2-AC-50-29B. One ionization smoke detector, located in the area, provides early warning alarm in the control room.

7.9.33.5 Construction

The west and south exterior walls of the area are 3 hour rated thick concrete construction. The interior walls, as well as the floor and ceiling, are 2 hour rated. One 3 hour rated door communicates with cable riser gallery 3-AC-50-32. The area is separated from the corridor (2-AC-50-29B) and Switchgear Room 3B (3-AC-50-34) by 1-1/2 hour rated doors. Ventilation duct penetrations in 2 hour rated walls are provided with 1-1/2 hour rated fire dampers. There are no ventilation duct penetrations in 3 hour rated walls. Two drain lines discharge to the lower cable riser gallery (3-AC-9-7). Spring loaded check valves preclude the communication of fumes/air between this room and the lower riser gallery.

7.9.33.6 Licensee Controlled Specification Barriers

For definition of the barriers requiring surveillance per LCS 3.7.104, refer to the latest revision of Figure 8-7, sheet 3.

Cable for the following system is wrapped:

Saltwater Cooling System: Train A

7.9.33.7 Conclusions

The ionization detection system is expected to detect the products of combustion from an incipient fire and alert the control room for prompt response by the fire department. The fire department then enters the cable riser gallery and extinguishes the fire with portable equipment or manually actuates the water spray system from the manual station located outside the cable riser gallery. In the event the fire achieves sufficient intensity, the fixed temperature rate of rise heat detectors will actuate the water spray system automatically. Actuation of the water spray system is alarmed in the control room. The water spray system will control and suppress the fire until the brigade arrives to complete the extinguishment with portable equipment.

Should the automatic water spray system fail to actuate, the available portable equipment is adequate to extinguish the fire.

The normal ventilation system will effectively remove the smoke generated by the design basis fire until the fire dampers operate. Portable smoke exhaust fans may then be used to vent smoke from the area.

The fire boundaries between 3-AC-50-33 and 2-AC-30-22, 3-AC-50-62, and 2-AC-70-175 were evaluated. The boundaries and associated fire protection features were found to be adequate to prevent the propagation of fire between the fire areas. The design basis fire is insufficient to breach the barriers defining the area.

7.9.33.8 Fire Area 3-AC-50-33 Appendix R Compliance

Safe shutdown capability will be provided by utilizing Train A systems. Safe shutdown analysis demonstrates that Train B systems may be damaged by fire. Functionally redundant components protected from fire damage will be utilized in conjunction with operator action on manual or disabled components to achieve safe shutdown.

One train of systems necessary to achieve hot standby and cold shutdown has been evaluated to remain available for safe shutdown in accordance with 10CFR50, Appendix R, III.G.1 and III.G.2.c. The fire detection and suppression systems in this area/zone were evaluated and shown to provide a level of protection equivalent to the requirements of the applicable sections of Appendix R.

7.9.34 FIRE AREA/ZONE: 3-AC-50-34

FIRE AREA/ZONE: 3-AC-50-34

AREA: 1544 sq. ft. DESCRIPTION: SWITCHGEAR ROOM 3B

DESIGN BASIS FIRE

Fire Loading Category:	Low
Fire Loading - Max Permiss:	160,000.0 Btu's/sq.f

FIRE PROTECTION (AVAILABLE)

Suppression (type)	none
Hose Stations	none, (1) in 2-AC-50-29B
Portable Extinguishers	yes, adjacent
Detectors (type)	ionization

FIRE RESISTANCE RATING

Walls	3hr/west, 2hr others
Floor, Ceiling, Roof	2hr
Penetrations	C, D
Fixed Openings	none
Doors	B/3-AC-50-33, (2)A/2-AC-50-29B

HOT STANDBY SYSTEMS	Equipment	Valves	Cable
Reactor Coolant	A,B*		A,B,B*
Reactor Protection System			
Shutdown Cooling			B
Chemical and Volume Control			A,B
Main Feedwater			
Main Steam			B
HVAC	B		B
Auxiliary Feedwater			B
Engineered Safety Feature			B
Component Cooling Water			A,B
Saltwater Cooling Water			B
Emergency Chilled Water			B
Diesel Generator Systems			B

COLD SHUTDOWN SYSTEMS	Equipment	Valves	Cable
Shutdown Cooling			A,B
CCW (To SDC)			
HVAC			B
Summary (Hot and Cold)	A/B*,B		A,B,B*

ESSENTIAL ELECTRIC SYSTEMS	Equipment	MCC and Switchgear	Cable
220 KV (AC)			X
4160 V (AC)	B	B	B
480 V (AC)		B	B
120 V (AC)	B		B,D
125 V (DC)			B,D
Electric Panels	B		A,B,X
Summary	B	B	A,B,D,X

ASSOCIATED CIRCUITS OF CONCERN

H/I Pressure Interface	YES
Spurious Operation	YES

FIRE AREA/ZONE 3-AC-50-34

7.9.34.1 Location

Auxiliary Control Building - El. 50'-0" - Switchgear Room 3B - 1544 square feet - Fig. 8-7

7.9.34.2 Fire Loading

Fire loading category - Low
Maximum permissible fire loading - 160,000 Btu/sq. ft. (Note 1)

Note 1:The maximum permissible loading is based on an evenly distributed loading of combustible materials.

7.9.34.3 Design Basis Fire

The design basis fire is postulated to be a fire that would involve mostly cable insulation. The design basis fire is conservatively based on the simultaneous total combustion of all combustibles in the area.

7.9.34.4 Fire Protection Equipment

Manual fire fighting equipment is available within the area and in adjacent area 2-AC-50-29B. Ionization smoke detectors, located within the area, provide early warning alarm in the control room.

7.9.34.5 Construction

The west wall of the area is 3 hour rated thick concrete construction. The north, east, and south walls are 2 hour rated, as are the floor and ceiling. The area communicates with the corridor (2-AC-50-29B) through two 3 hour rated doors. One 1-1/2 hour rated door separates the area from the cable riser gallery (3-AC-50-33). Support columns are protected by vermiculite fire-proofing. All ventilation duct penetrations are provided with 1-1/2 hour rated fire dampers.

7.9.34.6 Licensee Controlled Specification Barriers

For definition of the barriers requiring surveillance per LCS 3.7.104, refer to the latest revision of Figure 8-7, sheet 3.

7.9.34.7 Conclusions

The ionization detectors are expected to detect the products of combustion from an incipient fire and alert the control room for prompt action by the fire department. The available portable equipment is adequate to extinguish the fire.

The normal ventilation system will effectively remove smoke generated by the design basis fire until the fire dampers operate. Portable smoke exhaust fans may then be used to vent smoke from the area.

Air flow through Train A and Train B ductwork supporting the emergency chiller rooms will be cut off when the fire damper installed in the ductwork of each train operates.

The fire boundaries between 3-AC-50-34 and 2-AC-70-64, 2-AC-30-23, and 2-AC-30-22 were evaluated. The boundaries and associated fire protection features were found to be adequate to prevent the propagation of fire between the fire areas. The design basis fire is insufficient to breach the barriers defining the area.

7.9.34.8 Fire Area 3-AC-50-34 Appendix R Compliance

Safe shutdown capability will be provided by utilizing Train A systems. Functionally redundant components protected from fire damage will be utilized in conjunction with operator action on manual or disabled components to achieve safe shutdown.

One train of systems necessary to achieve hot standby and cold shutdown conditions independent of the subject fire area will be free of fire damage. Therefore, this fire area complies with the criteria of 10CFR50, Appendix R, III.G.1.

7.9.35 FIRE AREA/ZONE: 2-AC-50-35

FIRE AREA/ZONE: 2-AC-50-35

AREA: 1544 sq. ft. DESCRIPTION: SWITCHGEAR ROOM 2B

DESIGN BASIS FIRE

Fire Loading Category:	Low
Fire Loading - Max Permiss:	160,000.0 Btu's/sq.f

FIRE PROTECTION (AVAILABLE)

Suppression (type)	none
Hose Stations	none, (1) in 2-AC-50-29B
Portable Extinguishers	yes, adjacent
Detectors (type)	ionization

FIRE RESISTANCE RATING

Walls	west 3hr, others 2hr
Floor, Ceiling, Roof	2hr
Penetrations	C, D
Fixed Openings	none
Doors	(2)A/2-AC-50-29B, B/2-AC-50-36

HOT STANDBY SYSTEMS	Equipment	Valves	Cable
Reactor Coolant	A/B*		B,B*
Reactor Protection System			
Shutdown Cooling			B
Chemical and Volume Control			A,B
Main Feedwater			
Main Steam			B
HVAC	B		B
Auxiliary Feedwater			B
Engineered Safety Feature			B
Component Cooling Water			A,B
Saltwater Cooling Water			B
Emergency Chilled Water			B
Diesel Generator Systems			B

COLD SHUTDOWN SYSTEMS	Equipment	Valves	Cable
Shutdown Cooling			A,B
CCW (To SDC)			
HVAC			B
Summary (Hot and Cold)	A/B*,B		A,B,B*

ESSENTIAL ELECTRIC SYSTEMS	Equipment	MCC and Switchgear	Cable
220 KV (AC)			X
4160 V (AC)		B	B
480 V (AC)	B	B	B
120 V (AC)	B		B,D
125 V (DC)			B,D
Electric Panels	B		A,B,X
Summary	B	B	A,B,D,X

ASSOCIATED CIRCUITS OF CONCERN

H/I Pressure Interface	YES
Spurious Operation	YES

FIRE AREA/ZONE 2-AC-50-35

7.9.35.1 Location

Auxiliary Control Building - El. 50'-0" - Switchgear Room 2B - 1544 square feet - Fig. 8-7

7.9.35.2 Fire Loading

Fire loading category - Low
Maximum permissible fire loading - 160,000 Btu/sq. ft. (Note 1)

Note 1:The maximum permissible loading is based on an evenly distributed loading of combustible materials.

7.9.35.3 Design Basis Fire

The design basis fire is postulated to be a fire that would involve mostly cable insulation. The design basis fire is conservatively based on the simultaneous total combustion of all combustibles in the area.

7.9.35.4 Fire Protection Equipment

Manual fire fighting equipment is available in the area and in adjacent area 2-AC-50-29B. Ionization smoke detectors, located within the area, provide early warning alarm in the control room.

7.9.35.5 Construction

The west wall of the area is 3 hour rated thick concrete construction. The north, east, and south walls are 2 hour rated, as are the floor and ceiling of the area. Two 3 hour rated doors communicate with the corridor (2-AC-50-29B). A 1-1/2 hour rated door separates the area from the cable riser gallery (2-AC-50-36). Support columns are protected by vermiculite fireproofing. All ventilation duct penetrations are provided with 1-1/2 hour rated fire dampers.

7.9.35.6 Licensee Controlled Specification Barriers

For definition of the barriers requiring surveillance per LCS 3.7.104, refer to the latest revision of Figure 8-7, sheet 3.

7.9.35.7 Conclusions

The ionization detectors are expected to detect the products of combustion from an incipient fire and alert the control room for prompt action by the fire department. The available portable equipment is adequate to extinguish the fire.

The normal ventilation system will effectively remove smoke generated by the design basis fire until the fire dampers operate. Portable smoke exhaust fans may then be used to vent smoke from the area.

The fire boundaries between 2-AC-50-35 and 2-AC-70-64 and 2-AC-30-27 were evaluated. The boundaries and associated fire protection features were found to be adequate to prevent the propagation of fire between the fire areas. The design basis fire is insufficient to breach the barriers defining the area.

7.9.35.8 Fire Area 2-AC-50-35 Appendix R Compliance

Safe shutdown capability will be provided by utilizing Train A systems. Functionally redundant components protected from fire damage will be utilized in conjunction with operator action on manual or disabled components to achieve safe shutdown.

One train of systems necessary to achieve hot standby and cold shutdown conditions independent of the subject fire area will be free of fire damage. Therefore, this fire area complies with the criteria of 10CFR50, Appendix R, III.G.1.

7.9.36 FIRE AREA/ZONE: 2-AC-50-36

FIRE AREA/ZONE: 2-AC-50-36

AREA: 855 sq. ft. DESCRIPTION: CABLE RISER GALLERY

DESIGN BASIS FIRE

Fire Loading Category:	Medium
Fire Loading - Max Permiss:	160,000.0 Btu's/sq.f

FIRE PROTECTION (AVAILABLE)

Suppression (type)	water spray system
Hose Stations	none, (1) in 2-AC-50-29B
Portable Extinguishers	yes
Detectors (type)	ionization, heat detectors

FIRE RESISTANCE RATING

Walls	north to 2-SE-50-146 and west 3hr, and north/east to 2-AC-50-37 and others 2hr
Floor, Ceiling, Roof	2hr
Penetrations	D, C, P, QP/14
Fixed Openings	none
Doors	(2)A/2-AC-50-37, B/2-AC-50-35, B/2-AC-50-29B

HOT STANDBY SYSTEMS	Equipment	Valves	Cable
Reactor Coolant			A,B,B*,D
Reactor Protection System			
Shutdown Cooling			B
Chemical and Volume Control			A,B
Main Feedwater			
Main Steam			B,D
HVAC		A,B	a,A,B
Auxiliary Feedwater			B
Engineered Safety Feature			B,D
Component Cooling Water			A,B
Saltwater Cooling Water			a,B
Emergency Chilled Water			B
Diesel Generator Systems			B

COLD SHUTDOWN SYSTEMS	Equipment	Valves	Cable
Shutdown Cooling			A,B
CCW (To SDC)			
HVAC			B
Summary (Hot and Cold)		A,B	a,A,B,B*,D

ESSENTIAL ELECTRIC SYSTEMS	Equipment	MCC and Switchgear	Cable
220 KV (AC)			X
4160 V (AC)			B
480 V (AC)			B
120 V (AC)			
125 V (DC)			
Electric Panels			A,B,D,X
Summary			A,B,D,X

ASSOCIATED CIRCUITS OF CONCERN

H/I Pressure Interface	YES
Spurious Operation	YES

FIRE AREA/ZONE 2-AC-50-36

7.9.36.1 Location

Auxiliary Control Building - El. 50'-0" - Cable Riser Gallery - 855 square feet - Fig. 8-7

7.9.36.2 Fire Loading

Fire loading category - Medium
Maximum permissible fire loading - 160,000 Btu/sq. ft. (Note 1)

Note 1:The maximum permissible fire loading is based on an evenly distributed loading of combustible materials.

7.9.36.3 Design Basis Fire

The design basis fire is postulated to be a fire that would involve mostly cable insulation. The design basis fire is conservatively based on the simultaneous total combustion of all combustibles in the area.

7.9.36.4 Fire Protection Equipment

The area contains an automatic water spray system with fixed temperature rate of rise actuation. Actuation by the heat detectors results in control room annunciation. Manual fire fighting equipment is available in the area and in adjacent area 2-AC-50-29B. An ionization smoke detector, located in the area, provides early warning alarm in the control room.

7.9.36.5 Construction

The exterior walls of the area are 3 hour rated thick concrete construction. The interior walls, as well as the floor and ceiling, are 2 hour rated. Two 3 hour rated doors communicate with cable riser gallery 2-AC-50-37. The area is separated from the corridor (2-AC-50-29B) and Switchgear Room 2B (2-AC-50-35) by 1-1/2 hour rated doors. Ventilation duct penetrations in 2 hour rated walls have 1-1/2 hour rated fire dampers. There are no ventilation duct penetrations in 3 hour rated walls. Two drain lines discharge to the lower cable riser gallery (2-AC-9-14). Spring loaded check valves preclude the communication of fumes/air between this room and the lower riser gallery.

7.9.36.6 Licensee Controlled Specification Barriers

For definition of the barriers requiring surveillance per LCS 3.7.104, refer to the latest revision of Figure 8-7, sheet 3.

Cable for the following systems is wrapped:

HVAC - Train A
Saltwater Cooling - Train A

7.9.36.7 Conclusions

The ionization system is expected to detect the products of combustion from an incipient fire and alert the control room for prompt response by the fire department. The fire department then enters the cable riser gallery and extinguishes the fire with portable equipment or actuates the water spray system from the manual station located outside the cable riser gallery. In the event the fire achieves sufficient intensity, the fixed temperature rate of rise heat detectors will actuate the water spray system automatically. Actuation of the water spray system is alarmed in the control room. The water spray system will control and suppress the fire until the fire department arrives to complete the extinguishment with portable equipment.

Should the automatic water spray system fail to actuate, the available portable equipment is adequate to extinguish the fire.

The normal ventilation system will effectively remove the smoke generated by the design basis fire until the fire dampers operate. Portable smoke exhaust fans may then be used to vent smoke from the area.

The fire boundaries between 2-AC-50-36 and 2-AC-50-27 and 2-AC-70-64 were evaluated. The boundaries and associated fire protection features were found to be adequate to prevent the propagation of fire between the fire areas. The design basis fire is insufficient to breach the barriers defining the area.

7.9.36.8 Fire Area 2-AC-50-36 Appendix R Compliance

Safe shutdown capability will be provided by utilizing Train A systems. Safe shutdown analysis demonstrates that all Train B systems may be damaged by fire. Functionally redundant components protected from fire damage will be utilized in conjunction with operator action on manual or disabled components to achieve safe shutdown.

One train of systems necessary to achieve hot standby and cold shutdown has been evaluated to remain available for safe shutdown in accordance with 10CFR50, Appendix R, III.G.1 and III.G.2.c. The fire detection and suppression systems in this area/zone were evaluated and shown to provide a level of protection equivalent to the requirements of the applicable sections of Appendix R.

7.9.37 FIRE AREA/ZONE: 2-AC-50-37

FIRE AREA/ZONE: 2-AC-50-37

AREA: 1566 sq. ft. DESCRIPTION: CABLE RISER GALLERY

DESIGN BASIS FIRE

Fire Loading Category:	Medium
Fire Loading - Max Permiss:	160,000.0 Btu's/sq.f

FIRE PROTECTION (AVAILABLE)

Suppression (type)	water spray system
Hose Stations	(1)
Portable Extinguishers	yes
Detectors (type)	ionization, heat detector

FIRE RESISTANCE RATING

Walls	north and east 3hr, others 2hr
Floor, Ceiling, Roof	2hr
Penetrations	D, C, P, QP/14
Fixed Openings	none
Doors	(2)B/2-AC-50-40, B/2-AC-50-38, A/2-PE-45-3A, (2) A/2-AC-50-36

HOT STANDBY SYSTEMS	Equipment	Valves	Cable
Reactor Coolant			A,A*,b,B,C,D
Reactor Protection System			B,D
Shutdown Cooling			A,B
Chemical and Volume Control			A,b,B
Main Feedwater			
Main Steam			A,A*,b,B,C,D
HVAC			A,b,B
Auxiliary Feedwater			A,B,b
Engineered Safety Feature			A,C,D
Component Cooling Water			A,B,X
Saltwater Cooling Water			A
Emergency Chilled Water			A,b
Diesel Generator Systems			A

COLD SHUTDOWN SYSTEMS	Equipment	Valves	Cable
Shutdown Cooling			A,B
CCW (To SDC)			
HVAC			A
Summary (Hot and Cold)			A,A*,b,B,C,D,X

ESSENTIAL ELECTRIC SYSTEMS	Equipment	MCC and Switchgear	Cable
220 KV (AC)			X
4160 V (AC)			A,B
480 V (AC)			A
120 V (AC)			
125 V (DC)			
Electric Panels			A,B,b,C,D,X
Summary			A,B,b,C,D,X

ASSOCIATED CIRCUITS OF CONCERN

H/I Pressure Interface	YES
Spurious Operation	YES

FIRE AREA/ZONE 2-AC-50-37

7.9.37.1 Location

Auxiliary Control Building - El. 50'-0" - Cable Riser Gallery - 1566 square feet - Fig. 8-7

7.9.37.2 Fire Loading

Fire loading category - Medium
Maximum permissible fire loading - 160,000 Btu/sq. ft. (Note 1)

Note 1:The maximum permissible fire loading is based on an evenly distributed loading of combustible materials.

7.9.37.3 Design Basis Fire

The design basis fire is postulated to be a fire that would involve mostly cable insulation. The design basis fire is conservatively based on the simultaneous total combustion of all combustibles in the area.

7.9.37.4 Fire Protection Equipment

The area contains an automatic water spray system with fixed temperature rate of rise actuation. Actuation by the heat detectors results in control room annunciation. Manual fire fighting equipment is available within the area. Ionization smoke detectors, located within the area, provide early warning alarm in the control room.

7.9.37.5 Construction

The north and east walls of the area are 3 hour rated thick concrete construction. The south and west walls, as well as the floor and ceiling of the area, are 2 hour rated. Two 3 hour rated doors communicate with cable riser gallery 2-AC-50-36. Two 1-1/2 hour rated doors separate the area from switchgear room 2A (2-AC-50-40). The area communicates with HVAC Room 2A (2-AC-50-38) through a 1-1/2 hour rated door. A 3 hour rated door opens to the stairway leading to the 45' elevation of the penetration building (2-PE-45-3A). Ventilation duct penetrations in 2 hour rated walls are provided with 1-1/2 hour rated fire dampers. There are no ventilation penetrations in 3 hour rated walls. Two drain lines discharge to the lower cable riser gallery (2-AC-9-14). Spring loaded check valves preclude the communication of fumes/air between the room and the lower riser gallery.

7.9.37.6 Licensee Controlled Specification Barriers

For definition of the barriers requiring surveillance per LCS 3.7.104, refer to the latest revision of Figure 8-7, sheet 3.

7.9.37.7 Cable for the following systems is wrapped:

Chemical and Volume Control System - Train B
Reactor Coolant System - Train B
Main Steam System - Train B
HVAC - Train B
Emergency Chilled Water - Train B
Auxiliary Feedwater - Train B
Electric Panels - Train B

7.9.37.8 Conclusions

The ionization system is expected to detect the products of combustion from an incipient fire and alert the control room for prompt response by the fire department. The fire department then enters the cable riser gallery and extinguishes the fire with portable equipment or actuates the water spray system from the manual station located outside the cable riser gallery. In the event the fire achieves sufficient intensity, the fixed temperature rate of rise heat detectors will actuate the water spray system automatically. Actuation of the water spray system is alarmed in the control room. The water spray system will control and suppress the fire until the fire department arrives to complete the extinguishment with portable equipment.

Should the automatic water spray system fail to actuate, the available portable equipment is adequate to extinguish the fire. The normal ventilation system will effectively remove the smoke generated by the design basis fire until the fire dampers operate. Portable smoke exhaust fans may then be used to vent smoke from the area.

The fire boundaries between 2-AC-50-37 and 2-AC-70-64 were evaluated. The boundaries and associated fire protection features were found to be adequate to prevent the propagation of fire between the fire areas. The design basis fire is insufficient to propagate beyond the boundaries defining the fire area.

7.9.37.9 Fire Area 2-AC-50-37 Appendix R Compliance

Safe shutdown capability will be provided by utilizing Train B systems. Safe shutdown analyses demonstrate that Train A systems may be damaged by a fire. Functionally redundant components protected from fire damage will be utilized in conjunction with operator action on manual or disabled components to achieve safe shutdown.

One train of systems necessary to achieve hot standby and cold shutdown conditions has been evaluated to remain available for safe shutdown in accordance with 10CFR50, Appendix R, III.G.1 and III.G.2.c. The fire detection and suppression systems in this area/zone were evaluated and shown to provide a level of protection equivalent to the requirements of Appendix R.

7.9.38 FIRE AREA/ZONE: 2-AC-50-38

FIRE AREA/ZONE: 2-AC-50-38

AREA: 352 sq. ft. DESCRIPTION: HVAC RM. 2A

DESIGN BASIS FIRE

Fire Loading Category:	Low
Fire Loading - Max Permiss:	160,000.0 Btu's/sq.f

FIRE PROTECTION (AVAILABLE)

Suppression (type)	wet pipe sprinklers
Hose Stations	none
Portable Extinguishers	none, adjacent
Detectors (type)	heat detector

FIRE RESISTANCE RATING

Walls	east 3hr, others 2hr
Floor, Ceiling, Roof	2hr
Penetrations	D, C, P
Fixed Openings	none
Doors	A/2-AC-50-39, B/2-AC-50-37

HOT STANDBY SYSTEMS	Equipment	Valves	Cable
Reactor Coolant			
Reactor Protection System			
Shutdown Cooling			
Chemical and Volume Control			
Main Feedwater			
Main Steam			
HVAC	A		A,b,B
Auxiliary Feedwater			
Engineered Safety Feature			
Component Cooling Water			
Saltwater Cooling Water			
Emergency Chilled Water			
Diesel Generator Systems			

COLD SHUTDOWN SYSTEMS	Equipment	Valves	Cable
Shutdown Cooling			
CCW (To SDC)			
HVAC			
Summary (Hot and Cold)	A		A,b,B

ESSENTIAL ELECTRIC SYSTEMS	Equipment	MCC and Switchgear	Cable
220 KV (AC)			X
4160 V (AC)			B
480 V (AC)			
120 V (AC)			
125 V (DC)			
Electric Panels			A*,B,X
Summary			A*,B,X

ASSOCIATED CIRCUITS OF CONCERN

H/I Pressure Interface	NO
Spurious Operation	YES

FIRE AREA/ZONE 2-AC-50-38

7.9.38.1 Location

Auxiliary Control Building - El. 50'-0" - HVAC Room 2A - 352 square feet - Fig. 8-7

7.9.38.2 Fire Loading

Fire loading category - Low
Maximum permissible fire loading - 160,000 Btu/sq. ft. (Note 1)

Note 1:The maximum permissible fire loading is based on an evenly distributed loading of combustible materials.

7.9.38.3 Design Basis Fire

The design basis fire is postulated to be a fire that would involve mostly cable insulation.

The design basis fire is conservatively based on the simultaneous total combustion of all combustibles in the area.

7.9.38.4 Fire Protection Equipment

The area contains an automatic wet pipe sprinkler system. Manual fire fighting equipment is available in the area and in adjacent area 2-AC-50-37. One fixed temperature rate of rise heat detector, located within the area, provides early warning alarm in the control room.

7.9.38.5 Construction

The east wall is 3 hour rated thick concrete construction. The north, south, and west walls, as well as the floor and ceiling of the area, are 2 hour rated. A 3 hour rated door opens to HVAC Room 2B (2-AC-50-39). A 1-1/2 hour rated door separates the area from the cable riser gallery (2-AC-50-37). Ventilation duct penetrations in 2 hour rated walls are provided with 1-1/2 hour rated fire dampers. There are no ventilation duct penetrations in 3 hour rated walls.

7.9.38.6 Licensee Controlled Specification Barriers

For definition of the barriers requiring surveillance per LCS 3.7.104, refer to the latest revision of Figure 8-7, sheet 3.

Cable for the following system is wrapped:

HVAC - Train B

7.9.38.7 Conclusions

The fixed temperature rate of rise detector is expected to detect the fire in the first few minutes of the fire's growth period and alert the control room for prompt response by the fire department. The available portable equipment is adequate to extinguish the fire. In the event the fire reaches sufficient intensity, the automatic wet pipe sprinkler system will actuate and extinguish the fire.

The normal ventilation system will effectively remove smoke generated by the design basis fire until the fire dampers operate. Portable smoke exhaust fans may then be used to vent smoke from the area.

The fire boundary between 2-AC-50-38 and 2-AC-70-64 was evaluated. The boundaries and associated fire protection features were found to be adequate to prevent the propagation of fire between the fire areas. The design basis fire is insufficient to breach the barriers defining the area.

7.9.38.8 Fire Area 2-AC-50-38 Appendix R Compliance

Safe shutdown capability will be provided by utilizing Train B systems. Functionally redundant components protected from fire damage will be utilized in conjunction with operator action on manual or disabled components to achieve safe shutdown.

One train of systems necessary to achieve hot standby and cold shutdown conditions has been evaluated to remain available for safe shutdown in accordance with 10CFR50, Appendix R, III.G.1 and III.G.2.c. The fire detection and suppression systems in this area/zone were evaluated and shown to provide a level of protection equivalent to the requirements of Appendix R.

7.9.39 FIRE AREA/ZONE: 2-AC-50-39

FIRE AREA/ZONE: 2-AC-50-39

AREA: 288 sq. ft. DESCRIPTION: HVAC ROOM 2B

DESIGN BASIS FIRE

Fire Loading Category:	Low
Fire Loading - Max Permiss:	160,000.0 Btu's/sq.f

FIRE PROTECTION (AVAILABLE)

Suppression (type)	wet pipe sprinklers
Hose Stations	none, (1) in 2-AC-50-29A
Portable Extinguishers	none, adjacent
Detectors (type)	heat detector

FIRE RESISTANCE RATING

Walls	east 3hr, others 2hr
Floor, Ceiling, Roof	2hr
Penetrations	D, C, P
Fixed Openings	none
Doors	A/2-AC-50-38, A/2-AC-50-29A

HOT STANDBY SYSTEMS	Equipment	Valves	Cable
Reactor Coolant			
Reactor Protection System			
Shutdown Cooling			
Chemical and Volume Control			
Main Feedwater			
Main Steam			
HVAC	B		a,B
Auxiliary Feedwater			
Engineered Safety Feature			
Component Cooling Water			
Saltwater Cooling Water			
Emergency Chilled Water			a,A
Diesel Generator Systems			A

COLD SHUTDOWN SYSTEMS	Equipment	Valves	Cable
Shutdown Cooling			
CCW (To SDC)			
HVAC			
Summary (Hot and Cold)	B		a,A,B

ESSENTIAL ELECTRIC SYSTEMS	Equipment	MCC and Switchgear	Cable
220 KV (AC)			X
4160 V (AC)			a,A,B
480 V (AC)			
120 V (AC)			
125 V (DC)			
Electric Panels			a,A,A*,B,X
Summary			a,A,A*,B,X

ASSOCIATED CIRCUITS OF CONCERN

H/I Pressure Interface	NO
Spurious Operation	YES

FIRE AREA/ZONE 2-AC-50-39

7.9.39.1 Location

Auxiliary Control Building - El. 50'-0" - HVAC Room 2B - 288 square feet - Fig. 8-7

7.9.39.2 Fire Loading

Fire loading category - Low
Maximum permissible fire loading - 160,000 Btu/sq. ft. (Note 1)

Note 1:The maximum permissible fire loading is based on an evenly distributed loading of combustible materials.

7.9.39.3 Design Basis Fire

The design basis fire is postulated to be a fire that would involve mostly cable insulation. The design basis fire is conservatively based on the simultaneous total combustion of all combustibles in the area.

7.9.39.4 Fire Protection Equipment

The area contains an automatic wet pipe sprinkler system. Manual fire fighting equipment is available in adjacent area 2-AC-50-29A. One fixed temperature rate of rise heat detector, located within the area, provides early warning alarm in the control room.

7.9.39.5 Construction

The east wall is 3 hour rated thick concrete construction. The north, south, and west walls, as well as the ceiling and floor of the area, are 2 hour rated. One 3 hour rated door opens to HVAC Room 2A (2-AC-50-38). A 3 hour rated door separates the area from the corridor (2-AC-50-29A). Ventilation duct penetrations in 2 hour rated walls are provided with 1-1/2 hour rated fire dampers. There are no ventilation duct penetrations in 3 hour rated walls.

7.9.39.6 Licensee Controlled Specification Barriers

For definition of the barriers requiring surveillance per LCS 3.7.104, refer to the latest revision of Figure 8-7, sheet 3.

Cables for the following systems are wrapped:

4160V - Train A
ECW - Train A
EP - Train A
HVAC - Train A
RCS - Train A (SOE)

7.9.39.7 Conclusions

The fixed temperature rate of rise heat detector is expected to detect the fire in the first few minutes of the fire's growth period and alert the control room for prompt response by the fire department. The available portable equipment is adequate to extinguish the fire. In the event the fire achieves sufficient intensity, the wet pipe sprinklers will actuate automatically to extinguish the fire.

The normal ventilation system will effectively remove smoke generated by the design basis fire until the fire dampers operate. Portable smoke exhaust fans may then be used to vent smoke from the area.

The fire boundary between 2-AC-50-39 and 2-AC-70-64 was evaluated. The boundaries and associated fire protection features were found to be adequate to prevent the propagation of fire between the fire areas. The design basis fire is insufficient to breach the barriers defining the area.

7.9.39.8 Fire Area 2-AC-50-39 Appendix R Compliance

Safe shutdown capability will be provided by utilizing Train A systems. Essential Train A cabling is wrapped with a one hour rated fire barrier to prevent damage. Functionally redundant components protected from fire damage will be utilized in conjunction with operator action on manual or disabled components to achieve safe shutdown.

One train of systems necessary to achieve hot standby and cold shutdown conditions has been evaluated to remain available for safe shutdown in accordance with 10CFR50, Appendix R, III.G.1 and III.G.2.c. The fire detection and suppression systems in this area/zone were evaluated and shown to provide a level of protection equivalent to the requirements of the applicable sections of Appendix R.

7.9.40 FIRE AREA/ZONE: 2-AC-50-40

FIRE AREA/ZONE: 2-AC-50-40

AREA: 1900 sq. ft. DESCRIPTION: SWITCHGEAR ROOM 2A

DESIGN BASIS FIRE

Fire Loading Category:	Low
Fire Loading - Max Permiss:	160,000.0 Btu's/sq.f

FIRE PROTECTION (AVAILABLE)

Suppression (type)	none
Hose Stations	none, (1) in 2-AC-50-29A
Portable Extinguishers	yes, adjacent
Detectors (type)	ionization

FIRE RESISTANCE RATING

Walls	2hr
Floor, Ceiling, Roof	2hr
Penetrations	C, D
Fixed Openings	none
Doors	(2)B/2-AC-50-37, A/2-AC-50-29A

HOT STANDBY SYSTEMS	Equipment	Valves	Cable
Reactor Coolant	A/B*,X*		A,C,B,B*
Reactor Protection System			
Shutdown Cooling			A
Chemical and Volume Control			A,B
Main Feedwater			
Main Steam			A,C
HVAC	A		A
Auxiliary Feedwater			A
Engineered Safety Feature			A,C
Component Cooling Water			A,B
Saltwater Cooling Water			A
Emergency Chilled Water			A
Diesel Generator Systems			A

COLD SHUTDOWN SYSTEMS	Equipment	Valves	Cable
Shutdown Cooling			A,B
CCW (To SDC)			
HVAC			A
Summary (Hot and Cold)	A,A/B*,X*		A,B,B*,C

ESSENTIAL ELECTRIC SYSTEMS	Equipment	MCC and Switchgear	Cable
220 KV (AC)			X
4160 V (AC)		A	A
480 V (AC)	A	A	A
120 V (AC)	A		A,C
125 V (DC)			A,C
Electric Panels	A		A,A*,B,C,X
Summary	A	A	A,A*,B,C,X

ASSOCIATED CIRCUITS OF CONCERN

H/I Pressure Interface	YES
Spurious Operation	YES

FIRE AREA/ZONE 2-AC-50-40

7.9.40.1 Location

Auxiliary Control Building - El. 50'-0" - Switchgear Room 2A - 1900 square feet - Fig. 8-7

7.9.40.2 Fire Loading

Fire loading category - Low
Maximum permissible fire loading - 160,000 Btu/sq. ft. (Note 1)

Note 1:The maximum permissible loading is based on an evenly distributed loading of combustible materials.

7.9.40.3 Design Basis Fire

The design basis fire is postulated to be a fire that would involve mostly cable insulation and plastic.

The design basis fire is conservatively based on the simultaneous total combustion of all combustibles in the area.

7.9.40.4 Fire Protection Equipment

Manual fire fighting equipment is available within the area and in adjacent area 2-AC-50-29A. Ionization smoke detectors, located within the area, provide early warning alarm in the control room.

7.9.40.5 Construction

The barriers defining the area are 2 hour rated, as are the floor and ceiling. Two 1-1/2 hour rated doors communicate with the cable riser gallery (2-AC-50-37). A 3 hour rated door separates the area from the corridor (2-AC-50-29A). A 1-1/2 hour rated panel, located in the southwest corner of the west wall, leads to an emergency shower in Battery Room 306A (2-AC-50-42). Support columns are protected by vermiculite fireproofing. Ventilation duct penetrations are provided with 1-1/2 hour rated fire dampers.

7.9.40.6 Licensee Controlled Specification Barriers

For definition of the barriers requiring surveillance per LCS 3.7.104, refer to the latest revision of Figure 8-7, sheet 3.

7.9.40.7 Conclusions

Ionization detectors are provided and are expected to detect the products of combustion from an incipient fire and alert the control room for prompt action by the fire department. The available portable suppression equipment is adequate to extinguish the fire.

The normal ventilation system will effectively remove smoke generated by the design basis fire until the fire dampers operate. Portable smoke exhaust fans may then be used to vent smoke from the area.

The fire boundaries between 2-AC-50-40 and 2-AC-50-42, 2-AC-30-20C, and 2-AC-70-64 were evaluated. The boundaries and associated fire protection features were found to be adequate to prevent the propagation of fire between the fire areas. The design basis fire is insufficient to breach the barriers defining the area.

7.9.40.8 Fire Area 2-AC-50-40 Appendix R Compliance

Safe shutdown capability will be provided by utilizing Train B systems. Functionally redundant components protected from fire damage will be utilized in conjunction with operator action on manual or disabled components to achieve safe shutdown.

One train of systems necessary to achieve hot standby and cold shutdown conditions independent of the subject fire area will be free of fire damage. Therefore, this fire area complies with the criteria of 10CFR50, Appendix R, III.G.1.

7.9.41 FIRE AREA/ZONE: 2-AC-50-41

FIRE AREA/ZONE: 2-AC-50-41

AREA: 242 sq. ft. DESCRIPTION: DISTRIBUTION ROOM

DESIGN BASIS FIRE

Fire Loading Category:	Low
Fire Loading - Max Permiss:	160,000.0 Btu's/sq.f

FIRE PROTECTION (AVAILABLE)

Suppression (type)	none
Hose Stations	none, (1) in 2-AC-50-29B
Portable Extinguishers	none, adjacent
Detectors (type)	ionization

FIRE RESISTANCE RATING

Walls	2hr
Floor, Ceiling, Roof	2hr
Penetrations	C, D
Fixed Openings	none
Doors	A/2-AC-50-29B

HOT STANDBY SYSTEMS	Equipment	Valves	Cable
Reactor Coolant			
Reactor Protection System			
Shutdown Cooling			
Chemical and Volume Control			
Main Feedwater			
Main Steam			
HVAC			
Auxiliary Feedwater			
Engineered Safety Feature			
Component Cooling Water			
Saltwater Cooling Water			
Emergency Chilled Water			
Diesel Generator Systems			

COLD SHUTDOWN SYSTEMS	Equipment	Valves	Cable
Shutdown Cooling			
CCW (To SDC)			
HVAC			
Summary (Hot and Cold)			

ESSENTIAL ELECTRIC SYSTEMS	Equipment	MCC and Switchgear	Cable
220 KV (AC)			
4160 V (AC)			
480 V (AC)			
120 V (AC)			
125 V (DC)			
Electric Panels			X
Summary			X

ASSOCIATED CIRCUITS OF CONCERN

H/I Pressure Interface	NO
Spurious Operation	YES

FIRE AREA/ZONE 2-AC-50-41

7.9.41.1 Location

Auxiliary Control Building - El. 50' - 0" - Distribution Room
242 square feet

7.9.41.2 Fire Loading

Fire loading category - Low
Maximum permissible fire loading - 160,000 Btu/sq. ft. (Note 1)

Note 1:The maximum permissible fire loading is based on an evenly distributed loading of combustible materials.

7.9.41.3 Design Basis Fire

The design basis fire is postulated to be a fire that would involve mostly cable insulation. The design basis fire is conservatively based on the simultaneous total combustion of all combustibles in the zone.

7.9.41.4 Fire Protection Equipment

Portable extinguishers and hose stations are available in area 2-AC-50-29B. An ionization detector, located in the area, provides early warning alarm in the control room.

7.9.41.5 Construction

The walls, ceiling and floor of this area are 2 hour rated. A 3 hour rated door communicates with area 2-AC-50-29B. Ventilation duct penetrations are provided with 1-1/2 hour rated dampers.

Licensee Controlled Specification Barriers

For definition of the barriers requiring surveillance per LCS 3.7.104, refer to the latest revision of Figure 8-7, Sheet 3.

7.9.41.6 Conclusions

The ionization detector is expected to detect the products of combustion from an incipient fire and alert the control room for prompt response by the fire department.

The fire boundaries between 2-AC-50-41 and 2-AC-50-42, 2-AC-30-27, 2-AC-70-64, and 2-AC-30-20C were evaluated. The boundaries and associated fire protection features were found to be adequate to prevent the propagation of fire between the fire areas.

FIRE AREA/ZONE 2-AC-50-41

The design basis fire is insufficient to breach the barriers defining the zone/fire area.

7.9.41.7 Fire Area 2-AC-50-41 Appendix R Compliance

Safe shutdown capability will be provided by utilizing Train B systems. Functionally redundant components protected from fire damage will be utilized in conjunction with operator action on manual or disabled components to achieve safe shutdown.

One train of systems necessary to achieve hot standby and cold shutdown conditions independent of the subject fire area will be free of fire damage. Therefore, this fire area complies with the criteria of 10CFR50, Appendix R, III.G.1.

7.9.42 FIRE AREA/ZONE: 2-AC-50-42

FIRE AREA/ZONE: 2-AC-50-42

AREA: 315 sq. ft. DESCRIPTION: DISTRIBUTION ROOM

DESIGN BASIS FIRE

Fire Loading Category:	Low
Fire Loading - Max Permiss:	160,000.0 Btu's/sq.f

FIRE PROTECTION (AVAILABLE)

Suppression (type)	none
Hose Stations	none, (1) in 2-AC-50-29B
Portable Extinguishers	none, adjacent
Detectors (type)	ionization, hydrogen sensor

FIRE RESISTANCE RATING

Walls	2hr
Floor, Ceiling, Roof	2hr
Penetrations	C, D
Fixed Openings	none
Doors	A/2-AC-50-29B

HOT STANDBY SYSTEMS	Equipment	Valves	Cable
Reactor Coolant			
Reactor Protection System			
Shutdown Cooling			
Chemical and Volume Control			
Main Feedwater			
Main Steam			
HVAC	A,B		
Auxiliary Feedwater			
Engineered Safety Feature			
Component Cooling Water			
Saltwater Cooling Water			
Emergency Chilled Water			
Diesel Generator Systems			

COLD SHUTDOWN SYSTEMS	Equipment	Valves	Cable
Shutdown Cooling			
CCW (To SDC)			
HVAC			
Summary (Hot and Cold)	A,B		

ESSENTIAL ELECTRIC SYSTEMS	Equipment	MCC and Switchgear	Cable
220 KV (AC)			
4160 V (AC)			
480 V (AC)			
120 V (AC)			
125 V (DC)			
Electric Panels			
Summary			

ASSOCIATED CIRCUITS OF CONCERN

H/I Pressure Interface	NO
Spurious Operation	NO

FIRE AREA/ZONE 2-AC-50-42

7.9.42.1 Location

Auxiliary Control Building - El. 50'-0" - Battery Room - 315 square feet - Fig. 8-7

7.9.42.2 Fire Loading

Fire loading category - Low
Maximum permissible fire loading - 160,000 Btu/sq. ft. (Note 1)

Note 1:The maximum permissible fire loading is based on an evenly distributed loading of combustible materials.

7.9.42.3 Design Basis Fire

The design basis fire is postulated to be a fire that would involve mostly plastics. The design basis fire is conservatively based on the simultaneous total combustion of all combustibles in the area.

7.9.42.4 Fire Protection Equipment

Ionization detection and hydrogen sensing exists in the area which provide early warning alarm in the Control Room. There is no suppression in the area, but there is manual fire fighting equipment in adjacent area 2-AC-50-29B. These fire fighting and detection features will adequately mitigate the consequences of fire.

7.9.42.5 Construction

The walls, floor, and ceiling defining the area are 2 hour rated. A 3 hour fire rated door communicates with area 2-AC-50-29B. Ventilation duct penetrations are provided with 1-1/2 hour rated fire dampers.

7.9.42.6 Licensee Controlled Specification Barriers

For definition of the barriers requiring surveillance per LCS 3.7.104, refer to the latest revision of Figure 8-7, sheet 3.

7.9.42.7 Conclusions

The ionization detection system is expected to detect the products of combustion from an incipient fire and alert the control room for prompt response by the fire department. Manual suppression equipment is available in the adjacent area 2-AC-50-29B. These fire protection features will adequately mitigate the consequences of the fire and confine it to the subject fire area.

FIRE AREA/ZONE 2-AC-50-42

Fire area boundaries in 2-AC-50-42 were evaluated. The fire boundaries and associated fire protection features were found to be adequate to prevent the propagation of fire beyond the fire boundaries. The design basis fire is insufficient to breach the barriers defining the zone/fire area.

7.9.42.8 Fire Area 2-AC-50-42 Appendix R Compliance

Safe shutdown capability will be provided by utilizing Train B systems. Functionally redundant components protected from fire damage will be utilized in conjunction with operator action on manual or disabled components to achieve safe shutdown.

One train of systems necessary to achieve hot standby and cold shutdown conditions independent of the subject fire area will be free of fire damage. Therefore, this fire area complies with the criteria of 10CFR50, Appendix R, III.G.1.

7.9.43 FIRE AREA/ZONE: 2-AC-50-43

FIRE AREA/ZONE: 2-AC-50-43

AREA: 297 sq. ft. DESCRIPTION: EVACUATION ROOM

DESIGN BASIS FIRE

Fire Loading Category:	Minimal
Fire Loading - Max Permiss:	160,000.0 Btu's/sq.f

FIRE PROTECTION (AVAILABLE)

Suppression (type)	None
Hose Stations	none, (1) in 2-AC-50-29B
Portable Extinguishers	none, adjacent
Detectors (type)	Ionization

FIRE RESISTANCE RATING

Walls	2hr
Floor, Ceiling, Roof	2hr
Penetrations	C, P
Fixed Openings	None
Doors	(2)A/2-AC-50-29B

HOT STANDBY SYSTEMS	Equipment	Valves	Cable
Reactor Coolant	B*		A,B,B*,C,D
Reactor Protection System			
Shutdown Cooling			A,B
Chemical and Volume Control			A,B
Main Feedwater			
Main Steam	C,D		A,B,C,D
HVAC	B		
Auxiliary Feedwater			
Engineered Safety Feature			
Component Cooling Water			
Saltwater Cooling Water			
Emergency Chilled Water			A,B
Diesel Generator Systems			

COLD SHUTDOWN SYSTEMS	Equipment	Valves	Cable
Shutdown Cooling			
CCW (To SDC)			
HVAC			
Summary (Hot and Cold)	B,C,D,B*		A,B,B*,C,D

ESSENTIAL ELECTRIC SYSTEMS	Equipment	MCC and Switchgear	Cable
220 KV (AC)			
4160 V (AC)			
480 V (AC)			
120 V (AC)			
125 V (DC)			
Electric Panels	A*,B*,C*,D*		A,B,C,D,X
Summary	A*,B*,C*,D*		A,B,C,D,X

ASSOCIATED CIRCUITS OF CONCERN

H/I Pressure Interface	YES
Spurious Operation	YES

FIRE AREA/ZONE 2-AC-50-43

7.9.43.1 Location

Auxiliary Control Building - El. 50'-0" - Evacuation Room - 297 square feet - Fig. 8-7

7.9.43.2 Fire Loading

Fire loading category - Minimal
Maximum permissible fire loading - 160,000 Btu/sq. ft. (Note 1)

Note 1:The maximum permissible fire loading is based on an evenly distributed loading of Class A combustible materials.

7.9.43.3 Design Basis Fire

The design basis fire is postulated to be a slow burning fire that would involve mostly Class A combustibles. The design basis fire is conservatively based on the simultaneous total combustion of all combustibles in the area.

7.9.43.4 Fire Protection Equipment

There is no fire fighting equipment in the area. Manual fire fighting equipment is available in adjacent area 2-AC-50-29B. One ionization smoke detector, located within the area, provides early warning alarm in the control room.

7.9.43.5 Construction

The barriers defining the area are 2 hour rated, as are the floor and ceiling. Two 3 hour rated doors communicate with the corridor (2-AC-50-29B). Ventilation duct penetrations are provided with 1-1/2 hour rated fire dampers.

7.9.43.6 Licensee Controlled Specification Barriers

For definition of the barriers requiring surveillance per LCS 3.7.104, refer to the latest revision of Figure 8-7, sheet 3.

7.9.43.7 Conclusions

The ionization detection is expected to detect the products of combustion from an incipient fire and alert the control room for prompt response by the fire department. The available portable equipment is adequate to extinguish the fire. The design basis fire is insufficient to breach the barriers defining the area.

FIRE AREA/ZONE 2-AC-50-43

The fire boundaries between 2-AC-50-43 and 2-AC-70-64, and 2-AC-30-20E were evaluated. The boundaries and associated fire protection features were found to be adequate to prevent the propagation of fire between the fire areas. The design basis fire is insufficient to breach the barriers defining the zone/fire area.

7.9.43.8 Fire Area 2-AC-50-43 Appendix R Compliance

Safe shutdown capability will be provided by utilizing Train A systems. Functionally redundant components protected from fire damage will be utilized in conjunction with operator action on manual or disabled components to achieve safe shutdown.

One train of systems necessary to achieve hot standby and cold shutdown conditions independent of the subject fire area will be free of fire damage. Therefore, this fire area complies with the criteria of 10CFR50, Appendix R, III.G.1.

7.9.44 FIRE AREA/ZONE: 2-AC-50-44

FIRE AREA/ZONE: 2-AC-50-44

AREA: 252 sq. ft. DESCRIPTION: DISTRIBUTION ROOM 2B

DESIGN BASIS FIRE

Fire Loading Category:	Low
Fire Loading - Max Permiss:	160,000.0 Btu's/sq.f

FIRE PROTECTION (AVAILABLE)

Suppression (type)	none
Hose Stations	none, (1) in 2-AC-50-29B
Portable Extinguishers	none, adjacent
Detectors (type)	ionization

FIRE RESISTANCE RATING

Walls	2hr
Floor, Ceiling, Roof	2hr
Penetrations	D, C
Fixed Openings	none
Doors	A/2-AC-50-29B

HOT STANDBY SYSTEMS	Equipment	Valves	Cable
Reactor Coolant			B
Reactor Protection System			
Shutdown Cooling			
Chemical and Volume Control			
Main Feedwater			
Main Steam			B
HVAC	B		
Auxiliary Feedwater			B
Engineered Safety Feature			B
Component Cooling Water			
Saltwater Cooling Water			
Emergency Chilled Water			
Diesel Generator Systems			

COLD SHUTDOWN SYSTEMS	Equipment	Valves	Cable
Shutdown Cooling			B
CCW (To SDC)			
HVAC			
Summary (Hot and Cold)	B		B

ESSENTIAL ELECTRIC SYSTEMS	Equipment	MCC and Switchgear	Cable
220 KV (AC)			
4160 V (AC)			B
480 V (AC)			B
120 V (AC)	B		B,D
125 V (DC)	B		B,D
Electric Panels			B
Summary	B		B,D

ASSOCIATED CIRCUITS OF CONCERN

H/I Pressure Interface	NO
Spurious Operation	YES

FIRE AREA/ZONE 2-AC-50-44

7.9.44.1 Location

Auxiliary Control Building - El. 50'-0" - Distribution Room 2B - 252 square feet - Fig 8-7

7.9.44.2 Fire Loading

Fire loading category - Low
Maximum permissible fire loading - 160,000 Btu/sq. ft. (Note 1)

Note 1:The maximum permissible loading is based on an evenly distributed loading of combustible materials.

7.9.44.3 Design Basis Fire

The design basis fire is postulated to be a fire that would involve mostly cable insulation.

The design basis fire is conservatively based on the simultaneous total combustion of all combustibles in the area.

7.9.44.4 Fire Protection Equipment

There is no fire fighting equipment in the area. Manual fire fighting equipment is available in adjacent area 2-AC-50-29B. One ionization smoke detector, located within the area, provides early warning alarm in the control room.

7.9.44.5 Construction

The walls defining the area are 2 hour rated, as are the floors and ceilings. The support column is protected by vermiculite fireproofing. One 3 hour rated door separates the area from the corridor (2-AC-50-29B). Ventilation duct penetrations are provided with 1-1/2 hour rated fire dampers.

7.9.44.6 Licensee Controlled Specification Barriers

For definition of the barriers requiring surveillance per LCS 3.7.104, refer to the latest revision of Figure 8-7, sheet 3.

7.9.44.7 Conclusions

Ionization detectors are provided and are expected to detect products of combustion from an incipient fire and alert the control room for prompt response by the fire department. Portable suppression equipment is available and is adequate to extinguish the fire.

The normal ventilation system will effectively remove smoke generated by the design basis fire until the fire dampers operate. Portable smoke exhaust fans may then be used to vent smoke from the area.
AC-44-2

The fire boundary between 2-AC-50-44 and 2-AC-70-64 was evaluated. The boundaries and associated fire protection features were found to be adequate to prevent the propagation of fire between the fire areas. The design basis fire is insufficient to breach the barriers defining the area.

7.9.44.8 Fire Area 2-AC-50-44 Appendix R Compliance

Safe shutdown capability will be provided by utilizing Train A systems. Functionally redundant components protected from fire damage will be utilized in conjunction with operator action on manual or disabled components to achieve safe shutdown.

One train of systems necessary to achieve hot standby and cold shutdown conditions independent of the subject fire area will be free of fire damage. Therefore, this fire area complies with the criteria of 10CFR50, Appendix R, III.G.1.

7.9.45 FIRE AREA/ZONE: 2-AC-50-45

FIRE AREA/ZONE: 2-AC-50-45

AREA: 252 sq. ft. DESCRIPTION: DISTRIBUTION ROOM 2D

DESIGN BASIS FIRE

Fire Loading Category:	Low
Fire Loading - Max Permiss:	160,000.0 Btu's/sq.f

FIRE PROTECTION (AVAILABLE)

Suppression (type)	none
Hose Stations	none, (1) in 2-AC-50-29A
Portable Extinguishers	none, adjacent
Detectors (type)	ionization

FIRE RESISTANCE RATING

Walls	2hr
Floor, Ceiling, Roof	2hr
Penetrations	D, C
Fixed Openings	none
Doors	A/2-AC-50-29A

HOT STANDBY SYSTEMS	Equipment	Valves	Cable
Reactor Coolant			D
Reactor Protection System			
Shutdown Cooling			
Chemical and Volume Control			
Main Feedwater			
Main Steam			D
HVAC	B		
Auxiliary Feedwater			
Engineered Safety Feature			D
Component Cooling Water			
Saltwater Cooling Water			
Emergency Chilled Water			
Diesel Generator Systems			

COLD SHUTDOWN SYSTEMS	Equipment	Valves	Cable
Shutdown Cooling			
CCW (To SDC)			
HVAC			
Summary (Hot and Cold)	B		D

ESSENTIAL ELECTRIC SYSTEMS	Equipment	MCC and Switchgear	Cable
220 KV (AC)			
4160 V (AC)			
480 V (AC)	D		
120 V (AC)	D		D
125 V (DC)	D		D
Electric Panels			D
Summary	D		D

ASSOCIATED CIRCUITS OF CONCERN

H/I Pressure Interface	YES
Spurious Operation	YES

FIRE AREA/ZONE 2-AC-50-45

7.9.45.1 Location

Auxiliary Control building - El. 50'-0" - Distribution Room 2D - 252 square feet - Fig. 8-7

Fire Loading
Fire loading category - Low
Maximum permissible fire loading - 160,000 Btu/sq. ft. (Note 1)

Note 1:The maximum permissible loading is based on an evenly distributed loading of combustible materials.

7.9.45.2 Design Basis Fire

The design basis fire is postulated to be a fire that would involve mostly cable insulation. The design basis fire is conservatively based on the simultaneous total combustion of all combustibles in the area.

7.9.45.3 Fire Protection Equipment

There is no fire fighting equipment in the area. Manual fire fighting equipment is available in adjacent area 2-AC-50-29A. One ionization detector, located within the area, provides early warning alarm in the control room.

7.9.45.4 Construction

The walls defining the area are 2 hour rated, as are the floor and ceiling. A 3 hour rated door opens to the corridor (2-AC-50-29A). The support column is protected by a vermiculite fireproofing. Ventilation duct penetrations are provided with 1-1/2 hour rated fire dampers.

7.9.45.5 Licensee Controlled Specification Barriers

For definition of the barriers requiring surveillance per LCS 3.7.104, refer to the latest revision of Figure 8-7, sheet 3.

7.9.45.6 Conclusions

The ionization detection system is expected to detect the products of combustion from an incipient fire and alert the control room. The available portable suppression equipment is adequate to extinguish the fire.

The normal ventilation system will effectively remove smoke generated by the design basis fire until the fire dampers operate. Portable smoke exhaust fans may then be used to vent smoke from the area.

FIRE AREA/ZONE 2-AC-50-45

The fire boundary between 2-AC-50-45 and 2-AC-70-64 was evaluated. The boundaries and associated fire protection features were found to be adequate to prevent the propagation of fire between the fire areas. The design basis fire is insufficient to breach the barriers defining the area.

7.9.45.7 Fire Area 2-AC-50-45 Appendix R Compliance

Safe shutdown capability will be provided by utilizing Train A systems. Functionally redundant components protected from fire damage will be utilized in conjunction with operator action on manual or disabled components to achieve safe shutdown.

One train of systems necessary to achieve hot standby and cold shutdown conditions independent of the subject fire area will be free of fire damage. Therefore, this fire area complies with the criteria of 10CFR50, Appendix R, III.G.1.

7.9.46 FIRE AREA/ZONE: 2-AC-50-46

FIRE AREA/ZONE: 2-AC-50-46

AREA: 252 sq. ft. DESCRIPTION: DISTRIBUTION ROOM 2C

DESIGN BASIS FIRE

Fire Loading Category:	Low
Fire Loading - Max Permiss:	160,000.0 Btu's/sq.f

FIRE PROTECTION (AVAILABLE)

Suppression (type)	none
Hose Stations	none, (1) in 2-AC-50-29A
Portable Extinguishers	none, adjacent
Detectors (type)	ionization

FIRE RESISTANCE RATING

Walls	2hr
Floor, Ceiling, Roof	2hr
Penetrations	C, D
Fixed Openings	none
Doors	A/2-AC-50-29A

HOT STANDBY SYSTEMS	Equipment	Valves	Cable
Reactor Coolant			C
Reactor Protection System			
Shutdown Cooling			
Chemical and Volume Control			
Main Feedwater			
Main Steam			C
HVAC	A		
Auxiliary Feedwater			
Engineered Safety Feature			C
Component Cooling Water			
Saltwater Cooling Water			
Emergency Chilled Water			
Diesel Generator Systems			

COLD SHUTDOWN SYSTEMS	Equipment	Valves	Cable
Shutdown Cooling			
CCW (To SDC)			
HVAC			
Summary (Hot and Cold)	A		C

ESSENTIAL ELECTRIC SYSTEMS	Equipment	MCC and Switchgear	Cable
220 KV (AC)			
4160 V (AC)			
480 V (AC)	C		
120 V (AC)	C		C
125 V (DC)	C		C
Electric Panels			C
Summary	C		C

ASSOCIATED CIRCUITS OF CONCERN

H/I Pressure Interface	YES
Spurious Operation	NO

FIRE AREA/ZONE 2-AC-50-46

7.9.46.1 Location

Auxiliary Control Building - El. 50'-0" - Distribution Room 2C - 252 square feet - Fig 8-7

7.9.46.2 Fire Loading

Fire loading category - Low
Maximum permissible fire loading - 160,000 Btu/sq. ft. (Note 1)

Note 1:The maximum permissible loading is based on an evenly distributed loading of combustible materials.

7.9.46.3 Design Basis Fire

The design basis fire is postulated to be a fire that would involve mostly cable insulation.

The design basis fire is conservatively based on the simultaneous total combustion of all combustibles in the area.

7.9.46.4 Fire Protection Equipment

There is no fire fighting equipment in the area. Manual fire fighting equipment is available in adjacent area 2-AC-50-29A. One ionization smoke detector, located within the area, provides early warning alarm in the control room.

7.9.46.5 Construction

The walls defining the area are 2 hour rated, as are the floor and ceiling. A 3 hour rated door separates the area from the corridor (2-AC-50-29A). Ventilation duct penetrations are provided with 1-1/2 hour rated fire dampers.

7.9.46.6 Licensee Controlled Specification Barriers

For definition of the barriers requiring surveillance per LCS 3.7.104, refer to the latest revision of Figure 8-7, sheet 3.

7.9.46.7 Conclusions

The ionization detection system is expected to detect the products of combustion from an incipient fire and alert the control room for prompt response by the fire department. The available portable suppression equipment is adequate to extinguish the fire.

The normal ventilation system will effectively remove smoke generated by the design basis fire until the fire dampers operate. Portable smoke exhaust fans may then be used to vent smoke from the area.

The fire boundary between 2-AC-50-46 and 2-AC-70-64 was evaluated. The boundaries and associated fire protection features were found to be adequate to prevent the propagation of fire between the fire areas. The design basis fire is insufficient to breach the barriers defining the area.

7.9.46.8 Fire Area 2-AC-50-46 Appendix R Compliance

Safe shutdown capability will be provided by utilizing Train B systems. Functionally redundant components protected from fire damage will be utilized to achieve safe shutdown.

One train of systems necessary to achieve hot standby and cold shutdown conditions independent of the subject fire area will be free of fire damage. Therefore, this fire area complies with the criteria of 10CFR50, Appendix R, III.G.1.

7.9.47 FIRE AREA/ZONE: 2-AC-50-47

FIRE AREA/ZONE: 2-AC-50-47

AREA: 252 sq. ft. DESCRIPTION: DISTRIBUTION ROOM 2A

DESIGN BASIS FIRE

Fire Loading Category:	Low
Fire Loading - Max Permiss:	160,000.0 Btu's/sq.f

FIRE PROTECTION (AVAILABLE)

Suppression (type)	none
Hose Stations	none, (1) in 2-AC-50-29A
Portable Extinguishers	none, adjacent
Detectors (type)	ionization

FIRE RESISTANCE RATING

Walls	2hr
Floor, Ceiling, Roof	2hr
Penetrations	C, D
Fixed Openings	none
Doors	A/2-AC-50-29A

HOT STANDBY SYSTEMS	Equipment	Valves	Cable
Reactor Coolant			A
Reactor Protection System			
Shutdown Cooling			
Chemical and Volume Control			
Main Feedwater			
Main Steam			A
HVAC	A		A
Auxiliary Feedwater			A
Engineered Safety Feature			A
Component Cooling Water			
Saltwater Cooling Water			
Emergency Chilled Water			
Diesel Generator Systems			

COLD SHUTDOWN SYSTEMS	Equipment	Valves	Cable
Shutdown Cooling			A
CCW (To SDC)			
HVAC			
Summary (Hot and Cold)	A		A

ESSENTIAL ELECTRIC SYSTEMS	Equipment	MCC and Switchgear	Cable
220 KV (AC)			
4160 V (AC)			A
480 V (AC)			A
120 V (AC)	A		A,C
125 V (DC)	A		A,C
Electric Panels			A
Summary	A		A,C

ASSOCIATED CIRCUITS OF CONCERN

H/I Pressure Interface	NO
Spurious Operation	YES

FIRE AREA/ZONE 2-AC-50-47

7.9.47.1 Location

Auxiliary Control Building - El. 50'-0" - Distribution Room 2A - 252 square feet - Fig. 8-7

7.9.47.2 Fire Loading

Fire loading category - Low
Maximum permissible fire loading - 160,000 Btu/sq. ft. (Note 1)

Note 1:The maximum permissible loading is based on an evenly distributed loading of combustible materials.

7.9.47.3 Design Basis Fire

The design basis fire is postulated to be a fire that would involve mostly cable insulation.

The design basis fire is conservatively based on the simultaneous total combustion of all combustibles in the area.

7.9.47.4 Fire Protection Equipment

There is no fire fighting equipment in the area. Manual fire fighting equipment is available in adjacent area 2-AC-50-29A. One ionization smoke detector, located within the area, provides early warning alarm in the control room.

7.9.47.5 Construction

The walls defining the area are 2 hour rated, as are the floor and ceiling. A 3 hour rated door separates the area from the corridor (2-AC-50-29A). Ventilation duct penetrations are provided with 1-1/2 hour rated fire dampers.

7.9.47.6 Licensee Controlled Specification Barriers

For definition of the barriers requiring surveillance per LCS 3.7.104, refer to the latest revision of Figure 8-7, sheet 3.

7.9.47.7 Conclusions

The ionization detection system is expected to detect the products of combustion from an incipient fire and alert the control room for prompt response by the fire department. The available portable equipment is adequate to extinguish the fire.

The normal ventilation system will effectively remove smoke generated by the design basis fire until the fire dampers operate. Portable smoke exhaust fans may then be used to vent smoke from the area.

The fire boundary between 2-AC-50-47 and 2-AC-70-64 was evaluated. The boundaries and associated fire protection features were found to be adequate to prevent the propagation of fire between the fire areas. The design basis fire is insufficient to breach the barriers defining the area.

7.9.47.8 Fire Area 2-AC-50-47 Appendix R Compliance

Safe shutdown capability will be provided utilizing Train B systems. Functionally redundant components protected from fire damage will be utilized in conjunction with operator action on manual or disabled components to achieve safe shutdown.

One train of systems necessary to achieve hot standby and cold shutdown conditions independent of the subject fire area will be free of fire damage. Therefore, this fire area complies with the criteria of 10CFR50, Appendix R, III.G.1.

7.9.48 FIRE AREA/ZONE: 2-AC-50-48

FIRE AREA/ZONE: 2-AC-50-48

AREA: 173 sq. ft. DESCRIPTION: BATTERY ROOM 2A

DESIGN BASIS FIRE

Fire Loading Category:	Medium
Fire Loading - Max Permiss:	160,000.0 Btu's/sq.f

FIRE PROTECTION (AVAILABLE)

Suppression (type)	none
Hose Stations	none, (1) in 2-AC-50-29A
Portable Extinguishers	none, adjacent
Detectors (type)	ionization, hydrogen sensor

FIRE RESISTANCE RATING

Walls	2hr
Floor, Ceiling, Roof	2hr
Penetrations	C, D
Fixed Openings	none
Doors	A/2-AC-50-29A

HOT STANDBY SYSTEMS	Equipment	Valves	Cable
Reactor Coolant			
Reactor Protection System			
Shutdown Cooling			
Chemical and Volume Control			
Main Feedwater			
Main Steam			
HVAC			A
Auxiliary Feedwater			
Engineered Safety Feature			
Component Cooling Water			
Saltwater Cooling Water			
Emergency Chilled Water			
Diesel Generator Systems			

COLD SHUTDOWN SYSTEMS	Equipment	Valves	Cable
Shutdown Cooling			
CCW (To SDC)			
HVAC			
Summary (Hot and Cold)			A

ESSENTIAL ELECTRIC SYSTEMS	Equipment	MCC and Switchgear	Cable
220 KV (AC)			
4160 V (AC)			
480 V (AC)			A
120 V (AC)			
125 V (DC)	A		A
Electric Panels			A
Summary	A		A

ASSOCIATED CIRCUITS OF CONCERN

H/I Pressure Interface	NO
Spurious Operation	NO

FIRE AREA/ZONE 2-AC-50-48

7.9.48.1 Location

Auxiliary Control Building - El. 50'-0" - Battery Room 2A - 173 square feet - Fig. 8-7

7.9.48.2 Fire Loading

Fire loading category - Medium
Maximum permissible fire loading - 160,000 Btu/sq. ft. (Note 1)

Note 1:The maximum permissible loading is based on an evenly distributed loading of combustible materials.

7.9.48.3 Design Basis Fire

The design basis fire is postulated to be a fire that would involve mostly plastic battery cases and rubber mats. The design basis fire is conservatively based on the simultaneous total combustion of all combustibles in the area.

7.9.48.4 Fire Protection Equipment

There is no fire fighting equipment in the area. Manual fire fighting equipment is available in adjacent area 2-AC-50-29A. One ionization smoke detector and a hydrogen sensor, located within the area, provide early warning alarm in the control room.

7.9.48.5 Construction

The walls defining the area are 2 hour rated, as are the floor and ceiling. A 3 hour rated door separates the area from the corridor (2-AC-50-29A). Ventilation duct penetrations are provided with 1-1/2 hour rated fire dampers.

7.9.48.6 Licensee Controlled Specification Barriers

For definition of the barriers requiring surveillance per LCS 3.7.104, refer to the latest revision of Figure 8-7, sheet 3.

7.9.48.7 Conclusions

The ionization detection system is expected to detect the products of combustion from an incipient fire and alert the control room for prompt response by the fire department. The available portable equipment is adequate to extinguish the fire.

The normal ventilation system will effectively remove smoke generated by the design basis fire until the fire dampers operate. Portable smoke exhaust fans may then be used to vent smoke from the area.

The fire boundary between 2-AC-50-48 and 2-AC-70-64 was evaluated. The boundaries and associated fire protection features were found to be adequate to prevent the propagation of fire between the fire areas. The design basis fire is insufficient to breach the barriers defining the area.

7.9.48.8 Fire Area 2-AC-50-48 Appendix R Compliance

Safe shutdown capability will be provided by utilizing Train B systems. Functionally redundant components protected from fire damage will be utilized to achieve safe shutdown.

One train of systems necessary to achieve hot standby and cold shutdown conditions independent of the subject fire area will be free of fire damage. Therefore, this fire area complies with the criteria of 10CFR50, Appendix R, III.G.1.

7.9.49 FIRE AREA/ZONE: 2-AC-50-49

FIRE AREA/ZONE: 2-AC-50-49

AREA: 219 sq. ft. DESCRIPTION: BATTERY ROOM 2C

DESIGN BASIS FIRE

Fire Loading Category:	Medium
Fire Loading - Max Permiss:	160,000.0 Btu's/sq.f

FIRE PROTECTION (AVAILABLE)

Suppression (type)	none
Hose Stations	none, (1) in 2-AC-50-29A
Portable Extinguishers	none, adjacent
Detectors (type)	ionization, hydrogen sensor

FIRE RESISTANCE RATING

Walls	2hr
Floor, Ceiling, Roof	2hr
Penetrations	D, C
Fixed Openings	none
Doors	A/2-AC-50-29A

HOT STANDBY SYSTEMS	Equipment	Valves	Cable
Reactor Coolant			
Reactor Protection System			
Shutdown Cooling			
Chemical and Volume Control			
Main Feedwater			
Main Steam			
HVAC			
Auxiliary Feedwater			
Engineered Safety Feature			
Component Cooling Water			
Saltwater Cooling Water			
Emergency Chilled Water			
Diesel Generator Systems			

COLD SHUTDOWN SYSTEMS	Equipment	Valves	Cable
Shutdown Cooling			
CCW (To SDC)			
HVAC			
Summary (Hot and Cold)			

ESSENTIAL ELECTRIC SYSTEMS	Equipment	MCC and Switchgear	Cable
220 KV (AC)			
4160 V (AC)			
480 V (AC)			
120 V (AC)			
125 V (DC)	C		C
Electric Panels			A
Summary	C		A,C

ASSOCIATED CIRCUITS OF CONCERN

H/I Pressure Interface	NO
Spurious Operation	NO

FIRE AREA/ZONE 2-AC-50-49

7.9.49.1 Location

Auxiliary Control Building - El. 50'-0" - Battery Room 2C - 219 square feet -Fig. 8-7

Fire Loading

Fire loading category - Medium
Maximum permissible fire loading - 160,000 Btu/sq. ft. (Note 1)

Note 1:The maximum permissible loading is based on an evenly distributed loading of combustible materials.

7.9.49.2 Design Basis Fire

The design basis fire is postulated to be a fire that would involve mostly plastic battery cases and rubber mats. The design basis fire is conservatively based on the simultaneous total combustion of all combustibles in the area.

7.9.49.3 Fire Protection Equipment

There is no fire fighting equipment in the area. Manual fire fighting equipment is available in adjacent area 2-AC-50-29A. One ionization smoke detector and a hydrogen sensor, located within the area, provide early warning alarm in the control room.

7.9.49.4 Construction

The north, south, east, and west walls are 2 hour rated, as are the floor and ceiling. A 3 hour rated door separates the area from the corridor (2-AC-50-29A). Ventilation duct penetrations are provided with 1-1/2 hour rated fire dampers.

7.9.49.5 Licensee Controlled Specification Barriers

For definition of the barriers requiring surveillance per LCS 3.7.104, refer to the latest revision of Figure 8-7, sheet 3.

7.9.49.6 Conclusions

The ionization detection system is expected to detect the products of combustion from an incipient fire and alert the control room for prompt response by the fire department. The available portable suppression equipment is adequate to extinguish the fire.

The normal ventilation system will effectively remove smoke generated by the design basis fire until the fire dampers operate. Portable smoke exhaust fans may then be used to vent smoke from the area.

The fire boundary between 2-AC-50-49 and 2-AC-70-64 was evaluated. The boundaries and associated fire protection features were found to be adequate to prevent the propagation of fire between the fire areas. The design basis fire is insufficient to breach the barriers defining the area.

7.9.49.7 Fire Area 2-AC-50-49 Appendix R Compliance

Safe shutdown capability will be provided utilizing Train B systems. Functionally redundant components protected from fire damage will be utilized to achieve safe shutdown.

One train of systems necessary to achieve hot standby and cold shutdown conditions independent of the subject fire area will be free of fire damage. Therefore, this fire area complies with the criteria of 10CFR50, Appendix R, III.G.1.

7.9.50 FIRE AREA/ZONE: 2-AC-50-50

FIRE AREA/ZONE: 2-AC-50-50

AREA: 219 sq. ft. DESCRIPTION: BATTERY ROOM 2D

DESIGN BASIS FIRE

Fire Loading Category:	Medium
Fire Loading - Max Permiss:	160,000.0 Btu's/sq.f

FIRE PROTECTION (AVAILABLE)

Suppression (type)	none
Hose Stations	none, (1) in 2-AC-50-29B
Portable Extinguishers	none, adjacent
Detectors (type)	ionization, hydrogen sensor

FIRE RESISTANCE RATING

Walls	2hr
Floor, Ceiling, Roof	2hr
Penetrations	C, D
Fixed Openings	none
Doors	A/2-AC-50-29B

HOT STANDBY SYSTEMS	Equipment	Valves	Cable
Reactor Coolant			
Reactor Protection System			
Shutdown Cooling			
Chemical and Volume Control			
Main Feedwater			
Main Steam			
HVAC			
Auxiliary Feedwater			
Engineered Safety Feature			
Component Cooling Water			
Saltwater Cooling Water			
Emergency Chilled Water			
Diesel Generator Systems			

COLD SHUTDOWN SYSTEMS	Equipment	Valves	Cable
Shutdown Cooling			
CCW (To SDC)			
HVAC			
Summary (Hot and Cold)			

ESSENTIAL ELECTRIC SYSTEMS	Equipment	MCC and Switchgear	Cable
220 KV (AC)			
4160 V (AC)			
480 V (AC)			
120 V (AC)			
125 V (DC)	D		D
Electric Panels			B
Summary	D		B,D

ASSOCIATED CIRCUITS OF CONCERN

H/I Pressure Interface	NO
Spurious Operation	NO

FIRE AREA/ZONE 2-AC-50-50

7.9.50.1 Location

Auxiliary Control Building - El. 50'-0" - Battery Room 2D - 219 square feet - Fig. 8-7

7.9.50.2 Fire Loading

Fire loading category - Medium
Maximum permissible fire loading - 160,000 Btu/sq. ft. (Note 1)

Note 1:The maximum permissible loading is based on an evenly distributed loading of combustible materials.

7.9.50.3 Design Basis Fire

The design basis fire is postulated to be a fire that would involve mostly plastic battery cases and rubber mats. The design basis fire is conservatively based on the simultaneous total combustion of all combustibles in the area.

7.9.50.4 Fire Protection Equipment

There is no fire fighting equipment in the area. Manual fire fighting equipment is available in adjacent area 2-AC-50-29B. One ionization smoke detector and a hydrogen sensor, located within the area, provide early warning alarm in the control room.

7.9.50.5 Construction

The walls defining the area are 2 hour rated, as are the floor and ceiling. A 3 hour rated door opens to the corridor (2-AC-50-29B). The support column in the north wall is protected by vermiculite fireproofing. Ventilation duct penetrations are provided with 1-1/2 hour rated fire dampers.

7.9.50.6 Licensee Controlled Specification Barriers

For definition of the barriers requiring surveillance per LCS 3.7.104, refer to the latest revision of Figure 8-7, sheet 3.

7.9.50.7 Conclusions

The ionization detection system is expected to detect the products of combustion from an incipient fire and alert the control room for prompt response by the fire department. The available portable suppression equipment is adequate to extinguish the fire.

The normal ventilation system will effectively remove smoke generated by the design basis fire until the fire dampers operate. Portable smoke exhaust fans may then be used to vent smoke from the area.

The fire boundary between 2-AC-50-50 and 2-AC-70-64 was evaluated. The boundaries and associated fire protection features were found to be adequate to prevent the propagation of fire between the fire areas. The design basis fire is insufficient to breach the barriers defining the area.

7.9.50.8 Fire Area 2-AC-50-50 Appendix R Compliance

Safe shutdown capability will be provided utilizing Train A systems. Functionally redundant components protected from fire damage will be utilized to achieve safe shutdown.

One train of systems necessary to achieve hot standby and cold shutdown conditions independent of the subject fire area will be free of fire damage. Therefore, this fire area complies with the criteria of 10CFR50, Appendix R, III.G.1.

7.9.51 FIRE AREA/ZONE: 2-AC-50-51

FIRE AREA/ZONE: 2-AC-50-51

AREA: 173 sq. ft. DESCRIPTION: BATTERY ROOM 2B

DESIGN BASIS FIRE

Fire Loading Category:	Medium
Fire Loading - Max Permiss:	160,000.0 Btu's/sq.f

FIRE PROTECTION (AVAILABLE)

Suppression (type)	none
Hose Stations	none, (1) in 2-AC-50-29B
Portable Extinguishers	none, adjacent
Detectors (type)	ionization, hydrogen sensor

FIRE RESISTANCE RATING

Walls	2hr
Floor, Ceiling, Roof	2hr
Penetrations	C, D
Fixed Openings	none
Doors	A/2-AC-50-29B

HOT STANDBY SYSTEMS	Equipment	Valves	Cable
Reactor Coolant			
Reactor Protection System			
Shutdown Cooling			
Chemical and Volume Control			
Main Feedwater			
Main Steam			
HVAC			
Auxiliary Feedwater			
Engineered Safety Feature			
Component Cooling Water			
Saltwater Cooling Water			
Emergency Chilled Water			
Diesel Generator Systems			

COLD SHUTDOWN SYSTEMS	Equipment	Valves	Cable
Shutdown Cooling			
CCW (To SDC)			
HVAC			
Summary (Hot and Cold)			

ESSENTIAL ELECTRIC SYSTEMS	Equipment	MCC and Switchgear	Cable
220 KV (AC)			
4160 V (AC)			
480 V (AC)			
120 V (AC)			
125 V (DC)	B		B
Electric Panels			B
Summary			B

ASSOCIATED CIRCUITS OF CONCERN

H/I Pressure Interface	NO
Spurious Operation	NO

FIRE AREA/ZONE 2-AC-50-51

7.9.51.1 Location

Auxiliary Control Building - El. 50'-0" - Battery Room 2B - 173 square feet - Fig. 8-7

7.9.51.2 Fire Loading

Fire loading category - Medium
Maximum permissible fire loading - 160,000 Btu/sq. ft. (Note 1)

Note 1:The maximum permissible loading is based on an evenly distributed loading of combustible materials.

7.9.51.3 Design Basis Fire

The design basis fire is postulated to be a fire that would involve plastic battery cases and rubber mats.

The design basis fire is conservatively based on the simultaneous total combustion of all combustibles in the area.

7.9.51.4 Fire Protection Equipment

There is no fire fighting equipment in the area. Manual fire fighting equipment is available in adjacent area 2-AC-50-29B. One ionization smoke detector and a hydrogen sensor, located within the area, provide early warning alarm in the control room.

7.9.51.5 Construction

The north, south, east, and west walls are 2 hour rated, as are the floor and ceiling. A 3 hour rated door communicates with the corridor (2-AC-50-29B). Ventilation duct penetrations are provided with 1-1/2 hour rated fire dampers.

7.9.51.6 Licensee Controlled Specification Barriers

For definition of the barriers requiring surveillance per LCS 3.7.104, refer to the latest revision of Figure 8-7, sheet 3.

7.9.51.7 Conclusions

The ionization detection system is expected to detect the products of combustion from an incipient fire and alert the control room for prompt response by the fire department. The available portable suppression equipment is adequate to extinguish the fire.

The normal ventilation system will effectively remove smoke generated by the design basis fire until the fire dampers operate. Portable smoke exhaust fans may then be used to vent smoke from the area.

The fire boundaries between 2-AC-50-51 and 2-AC-70-64, and 2-AC-30-20E were evaluated. The boundaries and associated fire protection features were found to be adequate to prevent the propagation of fire between the fire areas. The design basis fire is insufficient to breach the barriers defining the area.

7.9.51.8 Fire Area 2-AC-50-51 Appendix R Compliance

Safe shutdown capability will be provided utilizing Train A systems. Functionally redundant components protected from fire damage will be utilized to achieve safe shutdown.

One train of systems necessary to achieve hot standby and cold shutdown conditions independent of the subject fire area will be free of fire damage. Therefore, this fire area complies with the criteria of 10CFR50, Appendix R, III.G.1.

7.9.52 FIRE AREA/ZONE: 3-AC-50-52

FIRE AREA/ZONE: 3-AC-50-52

AREA: 173 sq. ft. DESCRIPTION: BATTERY ROOM 3B

DESIGN BASIS FIRE

Fire Loading Category:	Medium
Fire Loading - Max Permiss:	160,000.0 Btu's/sq.f

FIRE PROTECTION (AVAILABLE)

Suppression (type)	none
Hose Stations	none, (1) in 2-AC-50-29B
Portable Extinguishers	none, adjacent
Detectors (type)	ionization, hydrogen sensor

FIRE RESISTANCE RATING

Walls	2hr
Floor, Ceiling, Roof	2hr
Penetrations	D, C
Fixed Openings	none
Doors	A/2-AC-50-29B

HOT STANDBY SYSTEMS	Equipment	Valves	Cable
Reactor Coolant			D
Reactor Protection System			
Shutdown Cooling			
Chemical and Volume Control			
Main Feedwater			
Main Steam			D
HVAC			
Auxiliary Feedwater			
Engineered Safety Feature			
Component Cooling Water			
Saltwater Cooling Water			
Emergency Chilled Water			
Diesel Generator Systems			

COLD SHUTDOWN SYSTEMS	Equipment	Valves	Cable
Shutdown Cooling			
CCW (To SDC)			
HVAC			
Summary (Hot and Cold)			D

ESSENTIAL ELECTRIC SYSTEMS	Equipment	MCC and Switchgear	Cable
220 KV (AC)			
4160 V (AC)			
480 V (AC)			
120 V (AC)			
125 V (DC)	B		B
Electric Panels			B
Summary	B		B

ASSOCIATED CIRCUITS OF CONCERN

H/I Pressure Interface	NO
Spurious Operation	NO

FIRE AREA/ZONE 3-AC-50-52

7.9.52.1 Location

Auxiliary Control Building - El. 50'-0" - Battery Room 3B - 173 square feet - Fig. 8-7

7.9.52.2 Fire Loading

Fire loading category - Medium
Maximum permissible fire loading - 160,000 Btu/sq. ft. (Note 1)

Note 1:The maximum permissible loading is based on an evenly distributed loading of combustible materials.

7.9.52.3 Design Basis Fire

The design basis fire is postulated to be a fire that would involve mostly plastic battery cases and rubber mats. The design basis fire is conservatively based on the simultaneous total combustion of all combustibles in the area.

7.9.52.4 Fire Protection Equipment

There is no fire fighting equipment in the area. Manual fire fighting equipment is available in adjacent area 2-AC-50-29B. One ionization smoke detector and a hydrogen sensor, located within the area, provide early warning alarm in the control room.

7.9.52.5 Construction

The north, south, east, and west walls are 2 hour rated, as are the floor and ceiling. A 3 hour rated door communicates with the corridor (2-AC-50-29B). Ventilation duct penetrations are provided with 1-1/2 hour rated fire dampers.

7.9.52.6 Licensee Controlled Specification Barriers

For definition of the barriers requiring surveillance per LCS 3.7.104, refer to the latest revision of Figure 8-7, sheet 3.

7.9.52.7 Conclusions

The ionization detection system is expected to detect the products of combustion from an incipient fire and alert the control room for prompt response by the fire department. The available portable suppression equipment is adequate to extinguish the fire.

The normal ventilation system will effectively remove smoke generated by the design basis fire until the fire dampers operate. Portable smoke exhaust fans may then be used to vent smoke from the area.

The fire boundaries between 3-AC-50-52 and 2-AC-50-53, 2-AC-9-18, and 2-AC-70-64 were evaluated. The boundaries and associated fire protection features were found to be adequate to prevent the propagation of fire between the fire areas. The design basis fire is insufficient to breach the barriers defining the area.

7.9.52.8 Fire Area 3-AC-50-52 Appendix R Compliance

Safe shutdown capability will be provided utilizing Train A systems. Functionally redundant components protected from fire damage will be utilized in conjunction with operator action on manual or disabled components to achieve safe shutdown.

One train of systems necessary to achieve hot standby and cold shutdown conditions independent of the subject fire area will be free of fire damage. Therefore, this fire area complies with the criteria of 10CFR50, Appendix R, III.G.1.

7.9.53 FIRE AREA/ZONE: 3-AC-50-53

FIRE AREA/ZONE: 3-AC-50-53

AREA: 219 sq. ft. DESCRIPTION: BATTERY ROOM 3D

DESIGN BASIS FIRE

Fire Loading Category:	Medium
Fire Loading - Max Permiss:	160,000.0 Btu's/sq.f

FIRE PROTECTION (AVAILABLE)

Suppression (type)	none
Hose Stations	none, (1) in 2-AC-50-29B
Portable Extinguishers	none, adjacent
Detectors (type)	ionization, hydrogen sensor

FIRE RESISTANCE RATING

Walls	2hr
Floor, Ceiling, Roof	2hr
Penetrations	D, C
Fixed Openings	none
Doors	A/2-AC-50-29B

HOT STANDBY SYSTEMS	Equipment	Valves	Cable
Reactor Coolant			A,B,C
Reactor Protection System			
Shutdown Cooling			
Chemical and Volume Control			A,B
Main Feedwater			
Main Steam			C
HVAC			
Auxiliary Feedwater			
Engineered Safety Feature			
Component Cooling Water			
Saltwater Cooling Water			
Emergency Chilled Water			
Diesel Generator Systems			

COLD SHUTDOWN SYSTEMS	Equipment	Valves	Cable
Shutdown Cooling			
CCW (To SDC)			
HVAC			
Summary (Hot and Cold)			A,B,C

ESSENTIAL ELECTRIC SYSTEMS	Equipment	MCC and Switchgear	Cable
220 KV (AC)			
4160 V (AC)			
480 V (AC)			
120 V (AC)			
125 V (DC)	D		D
Electric Panels			B
Summary	D		B,D

ASSOCIATED CIRCUITS OF CONCERN

H/I Pressure Interface	YES
Spurious Operation	YES

FIRE AREA/ZONE 3-AC-50-53

7.9.53.1 Location

Auxiliary Control Building - El. 50'-0" - Battery Room 3D - 219 square feet - Fig. 8-7

7.9.53.2 Fire Loading

Fire loading category - Medium
Maximum permissible fire loading - 160,000 Btu/sq. ft. (Note 1)

Note 1:The maximum permissible loading is based on an evenly distributed loading of combustible materials.

7.9.53.3 Design Basis Fire

The design basis fire is postulated to be a fire that would involve plastic battery cases and rubber mats.

The design basis fire is conservatively based on the simultaneous total combustion of all combustibles in the area.

7.9.53.4 Fire Protection Equipment

There is no fire fighting equipment in the area. Manual fire fighting equipment is available in adjacent area 2-AC-50-29B. One ionization smoke detector and a hydrogen sensor, located within the area, provide early warning alarm in the control room.

7.9.53.5 Construction

The walls defining the area are 2 hour rated, as are the floor and ceiling. A 3 hour rated door opens to the corridor (2-AC-50-29B). The support column is protected by vermiculite fireproofing. Ventilation duct penetrations are provided with 1-1/2 hour rated fire dampers.

7.9.53.6 Licensee Controlled Specification Barriers

For definition of the barriers requiring surveillance per LCS 3.7.104, refer to the latest revision of Figure 8-7, sheet 3.

7.9.53.7 Conclusions

The ionization detection system is expected to detect the products of combustion from an incipient fire and alert the control room for prompt response by the fire department. The available portable suppression equipment is adequate to extinguish the fire.

The normal ventilation system will effectively remove smoke generated by the design basis fire until the fire dampers operate. Portable smoke exhaust fans may then be used to vent smoke from the area.

Fire area boundaries in 3-AC-50-53 were evaluated. The fire area boundaries and associated fire protection features were found to be adequate to prevent the propagation of fire beyond the fire boundaries. The design basis fire is insufficient to breach the barriers defining the area.

7.9.53.8 Fire Area 3-AC-50-53 Appendix R Compliance

Safe shutdown capability will be provided utilizing Train A systems. Functionally redundant components protected from fire damage will be utilized to achieve safe shutdown.

One train of systems necessary to achieve hot standby and cold shutdown conditions independent of the subject fire area will be free of fire damage. Therefore, this fire area complies with the criteria of 10CFR50, Appendix R, III.G.1.

7.9.54 FIRE AREA/ZONE: 3-AC-50-54

FIRE AREA/ZONE: 3-AC-50-54

AREA: 219 sq. ft. DESCRIPTION: BATTERY ROOM 3C

DESIGN BASIS FIRE

Fire Loading Category:	Medium
Fire Loading - Max Permiss:	160,000.0 Btu's/sq.f

FIRE PROTECTION (AVAILABLE)

Suppression (type)	none
Hose Stations	none, (1) in 2-AC-50-29A
Portable Extinguishers	none, adjacent
Detectors (type)	ionization, hydrogen sensor

FIRE RESISTANCE RATING

Walls	2hr
Floor, Ceiling, Roof	2hr
Penetrations	D, C
Fixed Openings	none
Doors	A/2-AC-50-29A

HOT STANDBY SYSTEMS	Equipment	Valves	Cable
Reactor Coolant			
Reactor Protection System			
Shutdown Cooling			
Chemical and Volume Control			
Main Feedwater			
Main Steam			
HVAC			
Auxiliary Feedwater			
Engineered Safety Feature			
Component Cooling Water			
Saltwater Cooling Water			
Emergency Chilled Water			
Diesel Generator Systems			

COLD SHUTDOWN SYSTEMS	Equipment	Valves	Cable
Shutdown Cooling			
CCW (To SDC)			
HVAC			
Summary (Hot and Cold)			

ESSENTIAL ELECTRIC SYSTEMS	Equipment	MCC and Switchgear	Cable
220 KV (AC)			
4160 V (AC)			
480 V (AC)			
120 V (AC)			
125 V (DC)	C		C
Electric Panels			A
Summary	C		A,C

ASSOCIATED CIRCUITS OF CONCERN

H/l Pressure Interface	YES
Spurious Operation	NO

FIRE AREA/ZONE 3-AC-50-54

7.9.54.1 Location

Auxiliary Control Building - El. 50'-0" - Battery Room 3C - 219 square feet - Fig. 8-7

7.9.54.2 Fire Loading

Fire loading category - Medium
Maximum permissible fire loading - 160,000 Btu/sq. ft. (Note 1)

Note 1:The maximum permissible loading is based on an evenly distributed loading of combustible materials.

7.9.54.3 Design Basis Fire

The design basis fire is postulated to be a fire that would involve mostly plastic battery cases and rubber mats. The design basis fire is conservatively based on the simultaneous total combustion of all combustibles in the area.

7.9.54.4 Fire Protection Equipment

There is no fire fighting equipment in the area. Manual fire fighting equipment is available in adjacent area 2-AC-50-29A. One ionization smoke detector and a hydrogen sensor, located within the area, provide early warning alarm in the control room.

7.9.54.5 Construction

The walls defining the area are 2 hour rated, as are the floor and ceiling. A 3 hour rated door communicates with the corridor (2-AC-50-29A). Ventilation duct penetrations are provided with 1-1/2 hour rated fire dampers.

7.9.54.6 Licensee Controlled Specification Barriers

For definition of the barriers requiring surveillance per LCS 3.7.104, refer to the latest revision of Figure 8-7, sheet 3.

7.9.54.7 Conclusions

The ionization detection system is expected to detect the products of combustion from an incipient fire and alert the control room for prompt response by the fire department. The available portable suppression equipment is adequate to extinguish the fire.

The normal ventilation system will effectively remove smoke generated by the design basis fire until the fire dampers operate. Portable smoke exhaust fans may then be used to vent smoke from the area.

The fire boundaries between 3-AC-50-54 and 2-AC-70-64 and 3-AC-50-53 were evaluated. The boundaries and associated fire protection features were found to be adequate to prevent the propagation of fire between the fire areas. The design basis fire is insufficient to breach the barriers defining the area.

7.9.54.8 Fire Area 3-AC-50-54 Appendix R Compliance

Safe shutdown capability will be provided utilizing Train B systems. Functionally redundant components protected from fire damage will be utilized to achieve safe shutdown.

One train of systems necessary to achieve hot standby and cold shutdown conditions independent of the subject fire area will be free of fire damage. Therefore, this fire area complies with the criteria of 10CFR50, Appendix R, III.G.1.

7.9.55 FIRE AREA/ZONE: 3-AC-50-55

FIRE AREA/ZONE: 3-AC-50-55

AREA: 173 sq. ft. DESCRIPTION: BATTERY ROOM 3A

DESIGN BASIS FIRE

Fire Loading Category:	Medium
Fire Loading - Max Permiss:	160,000.0 Btu's/sq.f

FIRE PROTECTION (AVAILABLE)

Suppression (type)	none
Hose Stations	none, (1) in 2-AC-50-29A
Portable Extinguishers	none, adjacent
Detectors (type)	ionization, hydrogen sensor

FIRE RESISTANCE RATING

Walls	2hr
Floor, Ceiling, Roof	2hr
Penetrations	C, D
Fixed Openings	none
Doors	A/2-AC-50-29A

HOT STANDBY SYSTEMS	Equipment	Valves	Cable
Reactor Coolant			A
Reactor Protection System			
Shutdown Cooling			A
Chemical and Volume Control			
Main Feedwater			
Main Steam			A
HVAC			A
Auxiliary Feedwater			
Engineered Safety Feature			
Component Cooling Water			
Saltwater Cooling Water			
Emergency Chilled Water			A
Diesel Generator Systems			

COLD SHUTDOWN SYSTEMS	Equipment	Valves	Cable
Shutdown Cooling			
CCW (To SDC)			
HVAC			
Summary (Hot and Cold)			A

ESSENTIAL ELECTRIC SYSTEMS	Equipment	MCC and Switchgear	Cable
220 KV (AC)			
4160 V (AC)			
480 V (AC)			A
120 V (AC)			
125 V (DC)	A		A
Electric Panels			A
Summary	A		A

ASSOCIATED CIRCUITS OF CONCERN

H/I Pressure Interface	YES
Spurious Operation	YES

FIRE AREA/ZONE 3-AC-50-55

7.9.55.1 Location

Auxiliary Control Building - El. 50'-0" - Battery Room 3A - 173 square feet - Fig. 8-7

7.9.55.2 Fire Loading

Fire loading category - Medium
Maximum permissible fire loading - 160,000 Btu/sq. ft. (Note 1)

Note 1:The maximum permissible loading is based on an evenly distributed loading of combustible materials.

7.9.55.3 Design Basis Fire

The design basis fire is postulated to be a fire that would involve mostly plastic battery cases and rubber mats. The design basis fire is conservatively based on the simultaneous total combustion of all combustibles in the area.

7.9.55.4 Fire Protection Equipment

There is no fire fighting equipment in the area. Manual fire fighting equipment is available in adjacent area 2-AC-50-29A. One ionization smoke detector and a hydrogen sensor, located within the area, provide early warning alarm in the control room.

7.9.55.5 Construction

The north, south, east, and west walls are 2 hour rated, as are the floor and ceiling. A 3 hour rated door communicates with the corridor (2-AC-50-29A). Ventilation duct penetrations are provided with 1-1/2 hour rated fire dampers.

7.9.55.6 Licensee Controlled Specification Barriers

For definition of the barriers requiring surveillance per LCS 3.7.104, refer to the latest revision of Figure 8-7, sheet 3.

7.9.55.7 Conclusions

The ionization detection system is expected to detect the products of combustion from an incipient fire and alert the control room for prompt response by the fire department. The available portable equipment is adequate to extinguish the fire.

The normal ventilation system will effectively remove smoke generated by the design basis fire until the fire dampers operate. Portable smoke exhaust fans may then be used to vent smoke from the area.

The fire boundary between 3-AC-50-55 and 2-AC-70-64 was evaluated. The boundaries and associated fire protection features were found to be adequate to prevent the propagation of fire between the fire areas. The design basis fire is insufficient to breach the barriers defining the area.

7.9.55.8 Fire Area 3-AC-50-55 Appendix R Compliance

Safe shutdown capability will be provided by utilizing Train B systems. Functionally redundant components protected from fire damage will be utilized in conjunction with operator action on manual or disabled components to achieve safe shutdown.

One train of systems necessary to achieve hot standby and cold shutdown conditions independent of the subject fire area will be free of fire damage. Therefore, this fire area complies with the criteria of 10CFR50, Appendix R, III.G.1.

7.9.56 FIRE AREA/ZONE: 3-AC-50-56

FIRE AREA/ZONE: 3-AC-50-56

AREA: 252 sq. ft. DESCRIPTION: DISTRIBUTION ROOM 3A

DESIGN BASIS FIRE

Fire Loading Category:	Low
Fire Loading - Max Permiss:	160,000.0 Btu's/sq.f

FIRE PROTECTION (AVAILABLE)

Suppression (type)	none
Hose Stations	none, (1) in 2-AC-50-29A
Portable Extinguishers	none, adjacent
Detectors (type)	ionization

FIRE RESISTANCE RATING

Walls	2hr
Floor, Ceiling, Roof	2hr
Penetrations	C, D
Fixed Openings	none
Doors	A/2-AC-50-29A

HOT STANDBY SYSTEMS	Equipment	Valves	Cable
Reactor Coolant			A
Reactor Protection System			
Shutdown Cooling			A
Chemical and Volume Control			
Main Feedwater			
Main Steam			A
HVAC	A		A
Auxiliary Feedwater			A
Engineered Safety Feature			A
Component Cooling Water			
Saltwater Cooling Water			
Emergency Chilled Water			A
Diesel Generator Systems			

COLD SHUTDOWN SYSTEMS	Equipment	Valves	Cable
Shutdown Cooling			A
CCW (To SDC)			
HVAC			
Summary (Hot and Cold)	A		A

ESSENTIAL ELECTRIC SYSTEMS	Equipment	MCC and Switchgear	Cable
220 KV (AC)			
4160 V (AC)			A
480 V (AC)			A
120 V (AC)	A		A,C
125 V (DC)	A		A,C
Electric Panels			A
Summary	A		A,C

ASSOCIATED CIRCUITS OF CONCERN

H/I Pressure Interface	YES
Spurious Operation	YES

FIRE AREA/ZONE 3-AC-50-56

7.9.56.1 Location

Auxiliary Control Building - El. 50'-0" - Distribution Room 3A - 252 square feet - Fig. 8-7

7.9.56.2 Fire Loading

Fire loading category - Low
Maximum permissible fire loading - 160,000 Btu/sq. ft. (Note 1)
Note 1:The maximum permissible loading is based on an evenly distributed loading of combustible materials.

7.9.56.3 Design Basis Fire

The design basis fire is postulated to be a fire that would involve mostly cable insulation. The design basis fire is conservatively based on the simultaneous total combustion of all combustibles in the area.

7.9.56.4 Fire Protection Equipment

There is no fire fighting equipment in the area. Manual fire fighting equipment is available in adjacent area 2-AC-50-29A. One ionization smoke detector, located within the area, provides early warning alarm in the control room.

7.9.56.5 Construction

The walls defining the area are 2 hour rated, as are the floor and ceiling. A 3 hour rated door separates the area from the corridor (2-AC-50-29A). Ventilation duct penetrations are provided with 1-1/2 hour rated fire dampers.

7.9.56.6 Licensee Controlled Specification Barriers

For definition of the barriers requiring surveillance per LCS 3.7.104, refer to the latest revision of Figure 8-7, sheet 3.

7.9.56.7 Conclusions

The ionization detection system is expected to detect the products of combustion from an incipient fire and alert the control room. The available portable equipment is adequate to extinguish the fire.

The normal ventilation system will effectively remove smoke generated by the design basis fire until the fire dampers operate. Portable smoke exhaust fans may then be used to vent smoke from the area.

FIRE AREA/ZONE 3-AC-50-56

The fire boundary between 3-AC-50-56 and 3-AC-70-64 was evaluated. The boundaries and associated fire protection features were found to be adequate to prevent the propagation of fire between the fire areas. The design basis fire is insufficient to breach the barriers defining the area.

7.9.56.8 Fire Area 3-AC-50-56 Appendix R Compliance

Safe shutdown capability will be provided utilizing Train B systems. Functionally redundant components protected from fire damage will be utilized in conjunction with operator action on manual or disabled components to achieve safe shutdown.

One train of systems necessary to achieve hot standby and cold shutdown conditions independent of the subject fire area will be free of fire damage. Therefore, this fire area complies with the criteria of 10CFR50, Appendix R, III.G.1.

7.9.57 FIRE AREA/ZONE: 3-AC-50-57

FIRE AREA/ZONE: 3-AC-50-57

AREA: 252 sq. ft. DESCRIPTION: DISTRIBUTION ROOM 3C

DESIGN BASIS FIRE

Fire Loading Category:	Low
Fire Loading - Max Permiss:	160,000.0 Btu's/sq.f

FIRE PROTECTION (AVAILABLE)

Suppression (type)	None
Hose Stations	none, (1) in 2-AC-50-29A
Portable Extinguishers	*none, adjacent*
Detectors (type)	ionization

FIRE RESISTANCE RATING

Walls	2hr
Floor, Ceiling, Roof	2hr
Penetrations	C, D
Fixed Openings	None
Doors	A/2-AC-50-29A

HOT STANDBY SYSTEMS	Equipment	Valves	Cable
Reactor Coolant			C
Reactor Protection System			
Shutdown Cooling			
Chemical and Volume Control			
Main Feedwater			
Main Steam			C
HVAC	A		
Auxiliary Feedwater			
Engineered Safety Feature			C
Component Cooling Water			
Saltwater Cooling Water			
Emergency Chilled Water			
Diesel Generator Systems			

COLD SHUTDOWN SYSTEMS	Equipment	Valves	Cable
Shutdown Cooling			
CCW (To SDC)			
HVAC			
Summary (Hot and Cold)	A		C

ESSENTIAL ELECTRIC SYSTEMS	Equipment	MCC and Switchgear	Cable
220 KV (AC)			
4160 V (AC)			
480 V (AC)	C		
120 V (AC)	C		C
125 V (DC)	C		C
Electric Panels			C
Summary	C		C

ASSOCIATED CIRCUITS OF CONCERN

H/I Pressure Interface	YES
Spurious Operation	NO

FIRE AREA/ZONE 3-AC-50-57

7.9.57.1 Location

Auxiliary Control Building - El. 50'-0" - Distribution Room 3C - 252 square feet - Figure 8-7

7.9.57.2 Fire Loading

Fire loading category - Low
Maximum permissible fire loading - 160,000 Btu/sq. ft. (Note 1)

Note 1:The maximum permissible loading is based on an evenly distributed loading of combustible materials.

7.9.57.3 Design Basis Fire

The design basis fire is postulated to be a fire that would involve mostly cable insulation.

The design basis fire is conservatively based on the simultaneous total combustion of all combustibles in the area.

7.9.57.4 Fire Protection Equipment

There is no fire fighting equipment in the area. Manual fire fighting equipment is available in adjacent area 2-AC-50-29A. One ionization smoke detector, located within the area, provides early warning alarm in the control room.

7.9.57.5 Construction

The walls defining the area are 2 hour rated, as are the floor and ceiling. A 3 hour rated door separates the area from the corridor (2-AC-50-29A). Ventilation duct penetrations are provided with 1-1/2 hour rated fire dampers.

7.9.57.6 Licensee Controlled Specification Barriers

For definition of the barriers requiring surveillance per LCS 3.7.104, refer to the latest revision of Figure 8-7, sheet 3.

7.9.57.7 Conclusions

The ionization detection system is expected to detect the products of combustion from an incipient fire and alert the control room for prompt response by the fire department. The available portable suppression equipment is adequate to extinguish the fire.

The normal ventilation system will effectively remove smoke generated by the design basis fire until the fire dampers operate. Portable smoke exhaust fans may then be used to vent smoke from the area.

The fire boundary between 3-AC-50-57 and 2-AC-70-64 was evaluated. The boundaries and associated fire protection features were found to be adequate to prevent the propagation of fire between the fire areas. The design basis fire is insufficient to breach the barriers defining the area.

7.9.57.8 Fire Area 3-AC-50-57 Appendix R Compliance

Safe shutdown capability will be provided by utilizing Train B systems. Functionally redundant components protected from fire damage will be utilized to achieve safe shutdown.

One train of systems necessary to achieve hot standby and cold shutdown conditions independent of the subject fire area will be free of fire damage. Therefore, this fire area complies with the criteria of 10CFR50, Appendix R, III.G.1.

7.9.58 FIRE AREA/ZONE: 3-AC-50-58

FIRE AREA/ZONE: 3-AC-50-58

AREA: 252 sq. ft. DESCRIPTION: DISTRIBUTION ROOM 3D

DESIGN BASIS FIRE

Fire Loading Category:	Low
Fire Loading - Max Permiss:	160,000.0 Btu's/sq.f

FIRE PROTECTION (AVAILABLE)

Suppression (type)	none
Hose Stations	none, (1) in 2-AC-50-29A
Portable Extinguishers	none, adjacent
Detectors (type)	ionization

FIRE RESISTANCE RATING

Walls	2hr
Floor, Ceiling, Roof	2hr
Penetrations	C, D
Fixed Openings	none
Doors	A/2-AC-50-29A

HOT STANDBY SYSTEMS	Equipment	Valves	Cable
Reactor Coolant			A,B,C,D
Reactor Protection System			
Shutdown Cooling			
Chemical and Volume Control			
Main Feedwater			
Main Steam			C,D
HVAC	B		
Auxiliary Feedwater			
Engineered Safety Feature			D
Component Cooling Water			
Saltwater Cooling Water			
Emergency Chilled Water			
Diesel Generator Systems			

COLD SHUTDOWN SYSTEMS	Equipment	Valves	Cable
Shutdown Cooling			
CCW (To SDC)			
HVAC			
Summary (Hot and Cold)	B		A,B,C,D

ESSENTIAL ELECTRIC SYSTEMS	Equipment	MCC and Switchgear	Cable
220 KV (AC)			
4160 V (AC)			
480 V (AC)	D		
120 V (AC)	D		D
125 V (DC)	D		D
Electric Panels			D
Summary	D		D

ASSOCIATED CIRCUITS OF CONCERN

H/I Pressure Interface	YES
Spurious Operation	YES

FIRE AREA/ZONE 3-AC-50-58

7.9.58.1 Location

Auxiliary Control Building - El. 50'-0" - Distribution Room 3D - 252 square feet - Figure 8-7

7.9.58.2 Fire Loading

Fire loading category - Low
Maximum permissible fire loading - 160,000 Btu/sq. ft. (Note 1)

Note 1:The maximum permissible loading is based on an evenly distributed loading of combustible materials.

7.9.58.3 Design Basis Fire

The design basis fire is postulated to be a fire that would involve mostly cable insulation.

The design basis fire is conservatively based on the simultaneous total combustion of all combustibles in the area.

7.9.58.4 Fire Protection Equipment

There is no fire fighting equipment in the area. Manual fire fighting equipment is available in adjacent area 2-AC-50-29A. One ionization detector, located within the area, provides early warning alarm in the control room.

7.9.58.5 Construction

The walls defining the area are 2 hour rated, as are the floor and ceiling. A 3 hour rated door opens to the corridor (2-AC-50-29A). The support column is protected by vermiculite fireproofing. Ventilation duct penetrations are provided with 1-1/2 hour rated fire dampers.

7.9.58.6 Licensee Controlled Specification Barriers

For definition of the barriers requiring surveillance per LCS 3.7.104, refer to the latest revision of Figure 8-7, sheet 3.

7.9.58.7 Conclusions

The ionization detection system is expected to detect the products of combustion from an incipient fire and alert the control room for prompt response by the fire department. The available portable suppression equipment is adequate to extinguish the fire.

The normal ventilation system will effectively remove smoke generated by the design basis fire until the fire dampers operate. Portable smoke exhaust fans may then be used to vent smoke from the area.

The fire boundaries between 3-AC-50-58 and 3-AC-50-53, and 2-AC-70-64 were evaluated. The boundaries and associated fire protection features were found to be adequate to prevent the propagation of fire between the fire areas. The design basis fire is insufficient to breach the barriers defining the area.

7.9.58.8 Fire Area 3-AC-50-58 Appendix R Compliance

Safe shutdown capability will be provided by utilizing Train A systems. Functionally redundant components protected from fire damage will be utilized in conjunction with operator action on manual or disabled components to achieve safe shutdown.

One train of systems necessary to achieve hot standby and cold shutdown conditions independent of the subject fire area will be free of fire damage. Therefore, this fire area complies with the criteria of 10CFR50, Appendix R, III.G.1.

7.9.59 FIRE AREA/ZONE: 3-AC-50-59

FIRE AREA/ZONE: 3-AC-50-59

AREA: 252 sq. ft. DESCRIPTION: DISTRIBUTION ROOM 3B

DESIGN BASIS FIRE

Fire Loading Category:	Low
Fire Loading - Max Permiss:	160,000.0 Btu's/sq.f

FIRE PROTECTION (AVAILABLE)

Suppression (type)	none
Hose Stations	none, (1) in 2-AC-50-29B
Portable Extinguishers	none, adjacent
Detectors (type)	ionization

FIRE RESISTANCE RATING

Walls	2hr
Floor, Ceiling, Roof	2hr
Penetrations	C, D
Fixed Openings	none
Doors	A/2-AC-50-29B

HOT STANDBY SYSTEMS	Equipment	Valves	Cable
Reactor Coolant			B,D
Reactor Protection System			
Shutdown Cooling			
Chemical and Volume Control			
Main Feedwater			
Main Steam			B,D
HVAC	B		
Auxiliary Feedwater			B
Engineered Safety Feature			B
Component Cooling Water			
Saltwater Cooling Water			
Emergency Chilled Water			
Diesel Generator Systems			

COLD SHUTDOWN SYSTEMS	Equipment	Valves	Cable
Shutdown Cooling			B
CCW (To SDC)			
HVAC			
Summary (Hot and Cold)	B		B,D

ESSENTIAL ELECTRIC SYSTEMS	Equipment	MCC and Switchgear	Cable
220 KV (AC)			
4160 V (AC)			B
480 V (AC)			B
120 V (AC)	B		B,D
125 V (DC)	B		B,D
Electric Panels			B,D
Summary	B		B,D

ASSOCIATED CIRCUITS OF CONCERN

H/I Pressure Interface	NO
Spurious Operation	YES

FIRE AREA/ZONE 3-AC-50-59

7.9.59.1 Location

Auxiliary Control Building - El. 50'-0" - Distribution Room 3B - 252 square feet - Figure 8-7

7.9.59.2 Fire Loading

Fire loading category - Low
Maximum permissible fire loading - 160,000 Btu/sq. ft. (Note 1)

Note 1:The maximum permissible loading is based on an evenly distributed loading of combustible materials.

7.9.59.3 Design Basis Fire

The design basis fire is postulated to be a fire that would involve mostly cable insulation.

The design basis fire is conservatively based on the simultaneous total combustion of all combustibles in the area.

7.9.59.4 Fire Protection Equipment

There is no fire fighting equipment in the area. Manual fire fighting equipment is available in adjacent area 2-AC-50-29B. One ionization smoke detector, located within the area, provides early warning alarm in the control room.

7.9.59.5 Construction

The walls defining the area are 2 hour rated, as are the floors and ceilings. The support column is protected by vermiculite fireproofing. One 3 hour rated door separates the area from the corridor (2-AC-50-29B). Ventilation duct penetrations are provided with 1-1/2 hour rated fire dampers.

7.9.59.6 Licensee Controlled Specification Barriers

For definition of the barriers requiring surveillance per LCS 3.7.104, refer to the latest revision of Figure 8-7, sheet 3.

7.9.59.7 Conclusions

Ionization detectors are provided and are expected to detect products of combustion from an incipient fire and alert the control room for prompt response by the fire department. Portable suppression equipment is available and is adequate to extinguish the fire.

The normal ventilation system will effectively remove smoke generated by the design basis fire until the fire dampers operate. Portable smoke exhaust fans may then be used to vent smoke from the area.

The fire boundaries between 3-AC-50-59 and 3-AC-50-53, 2-AC-30-24 and 2-AC-70-64 were evaluated. The boundaries and associated fire protection features were found to be adequate to prevent the propagation of fire between the fire areas. The design basis fire is insufficient to breach the barriers defining the area.

7.9.59.8 Fire Area 3-AC-50-59 Appendix R Compliance

Safe shutdown capability will be provided by utilizing Train A systems. Functionally redundant components protected from fire damage will be utilized in conjunction with operator action on manual or disabled components to achieve safe shutdown.

One train of systems necessary to achieve hot standby and cold shutdown conditions independent of the subject fire area will be free of fire damage. Therefore, this fire area complies with the criteria of 10CFR50, Appendix R, III.G.1.

7.9.60 FIRE AREA/ZONE: 3-AC-50-60

FIRE AREA/ZONE: 3-AC-50-60

AREA: 1900 sq. ft. DESCRIPTION: SWITCHGEAR ROOM 3A

DESIGN BASIS FIRE

Fire Loading Category:	Medium
Fire Loading - Max Permiss:	160,000.0 Btu's/sq.f

FIRE PROTECTION (AVAILABLE)

Suppression (type)	none
Hose Stations	none, (1) in 2-AC-50-29A
Portable Extinguishers	yes, adjacent
Detectors (type)	ionization

FIRE RESISTANCE RATING

Walls	2hr
Floor, Ceiling, Roof	2hr
Penetrations	D, C, P
Fixed Openings	none
Doors	A/2-AC-50-29A, (2)B/3-AC-50-32

HOT STANDBY SYSTEMS	Equipment	Valves	Cable
Reactor Coolant	A/B*,X*		A,B,B*,C
Reactor Protection System			
Shutdown Cooling			A
Chemical and Volume Control			A,B
Main Feedwater			
Main Steam			A,C
HVAC	A		A
Auxiliary Feedwater			A
Engineered Safety Feature			A,C
Component Cooling Water			A,B
Saltwater Cooling Water			A
Emergency Chilled Water			A
Diesel Generator Systems			A

COLD SHUTDOWN SYSTEMS	Equipment	Valves	Cable
Shutdown Cooling			A,B
CCW (To SDC)			
HVAC			A
Summary (Hot and Cold)	A,A/B*,X*		A,B,B*,C

ESSENTIAL ELECTRIC SYSTEMS	Equipment	MCC and Switchgear	Cable
220 KV (AC)			X
4160 V (AC)	A	A	A
480 V (AC)		A	A
120 V (AC)	A		A,C
125 V (DC)			A,C
Electric Panels	A		A,A*,B,C,X
Summary	A	A	A,A*,B,C,X

ASSOCIATED CIRCUITS OF CONCERN

H/I Pressure Interface	YES
Spurious Operation	YES

FIRE AREA/ZONE 3-AC-50-60

7.9.60.1 Location

Auxiliary Control Building - El. 50'-0" - Switchgear Room 3A - 1900 square feet - Figure 8-7

7.9.60.2 Fire Loading

Fire loading category - Medium
Maximum permissible fire loading - 160,000 Btu/sq. ft. (Note 1)

Note 1:The maximum permissible loading is based on an evenly distributed loading of combustible materials.

7.9.60.3 Design Basis Fire

The design basis fire is postulated to be a fire that would involve mostly cable insulation. The design basis fire is conservatively based on the simultaneous total combustion of all combustibles in the area.

7.9.60.4 Fire Protection Equipment

Manual fire fighting equipment is available within the area and in adjacent area 2-AC-50-29A. Ionization smoke detectors, located within the area, provide early warning alarm in the control room.

7.9.60.5 Construction

The barriers defining the area are 2 hour rated, as are the floor and ceiling. Two 1-1/2 hour rated doors separate the area from the cable riser gallery (3-AC-50-32). A 3 hour rated door communicates with the corridor (2-AC-50-29A). A 1-1/2 hour rated panel, located in the northwest corner of the west wall, leads to an emergency shower in Battery Room 306K (3-AC-50-61). Support columns are protected by vermiculite fireproofing. Ventilation duct penetrations are provided with 1-1/2 hour rated fire dampers.

7.9.60.6 Licensee Controlled Specification Barriers

For definition of the barriers requiring surveillance per LCS 3.7.104, refer to the latest revision of Figure 8-7, sheet 3.

7.9.60.7 Conclusions

Ionization detectors are provided and are expected to detect the products of combustion from an incipient fire and alert the control room for prompt response by the fire department. The available portable suppression equipment is adequate to extinguish the fire.

The normal ventilation system will effectively remove smoke generated by the design basis fire until the fire dampers operate. Portable smoke exhaust fans may then be used to vent smoke from the area.

The fire boundaries between 3-AC-50-60 and 3-AC-50-61, 3-AC-50-62, 2-AC-70-64, and 2-AC-30-20B were evaluated. The boundaries and associated fire protection features were found to be adequate to prevent the propagation of fire between the fire areas. The design basis fire is insufficient to breach the barriers defining the area.

7.9.60.8 Fire Area 3-AC-50-60 Appendix R Compliance

Safe shutdown capability will be provided by utilizing Train B systems. Functionally redundant components protected from fire damage will be utilized in conjunction with operator action on manual or disabled components to achieve safe shutdown.

One train of systems necessary to achieve hot standby and cold shutdown conditions independent of the subject fire area will be free of fire damage. Therefore, this fire area complies with the criteria of 10CFR50, Appendix R, III.G.1.

7.9.61 FIRE AREA/ZONE: 3-AC-50-61

FIRE AREA/ZONE: 3-AC-50-61

AREA: 315 sq. ft. DESCRIPTION: BATTERY ROOM

DESIGN BASIS FIRE

Fire Loading Category:	Low
Fire Loading - Max Permiss:	160,000.0 Btu's/sq.f

FIRE PROTECTION (AVAILABLE)

Suppression (type)	none
Hose Stations	none, (1) in 2-AC-50-29B
Portable Extinguishers	none, adjacent
Detectors (type)	ionization, hydrogen sensor

FIRE RESISTANCE RATING

Walls	2hr
Floor, Ceiling, Roof	2hr
Penetrations	C, D
Fixed Openings	none
Doors	A/2-AC-50-29B

HOT STANDBY SYSTEMS	Equipment	Valves	Cable
Reactor Coolant			
Reactor Protection System			
Shutdown Cooling			
Chemical and Volume Control			
Main Feedwater			
Main Steam			
HVAC	A,B		
Auxiliary Feedwater			
Engineered Safety Feature			
Component Cooling Water			
Saltwater Cooling Water			
Emergency Chilled Water			
Diesel Generator Systems			

COLD SHUTDOWN SYSTEMS	Equipment	Valves	Cable
Shutdown Cooling			
CCW (To SDC)			
HVAC			
Summary (Hot and Cold)	A,B		

ESSENTIAL ELECTRIC SYSTEMS	Equipment	MCC and Switchgear	Cable
220 KV (AC)			
4160 V (AC)			
480 V (AC)			
120 V (AC)			
125 V (DC)			
Electric Panels			
Summary			

ASSOCIATED CIRCUITS OF CONCERN

H/I Pressure Interface	NO
Spurious Operation	YES

FIRE AREA/ZONE 3-AC-50-61

7.9.61.1 Location

Auxiliary Control Building - El. 50'-0" - Battery Room
315 square feet - Figure 8-7

7.9.61.2 Fire Loading

Fire loading category - Low
Maximum permissible fire loading - 160,000 Btu/sq. ft. (Note 1)

Note 1: The maximum permissible fire loading is based on an evenly distributed loading of combustible materials.

7.9.61.3 Design Basis Fire

The design basis fire is postulated to be a fire that would involve mostly plastics and rubber mats.

The design basis fire is conservatively based on the simultaneous total combustion of all combustibles in the zone.

7.9.61.4 Fire Protection Equipment

Manual fire fighting equipment is available in adjacent area 2-AC-50-29B. Ionization detector and hydrogen sensing located in the area provide early warning alarm in the Control Room.

7.9.61.5 Construction

The floor, ceiling, and walls of the area are 2 hour rated. Ventilation duct penetrations are provided with 1-1/2 hour rated fire dampers. A 3 hour rated door communicates with area 2-AC-50-29B.

7.9.61.6 Licensee Controlled Specification Barriers

For definition of the barriers requiring surveillance per LCS 3.7.104, refer to the latest revision of Figure 8-7, sheet 4.

7.9.61.7 Conclusions

The ionization detection system is expected to detect the products of combustion from an incipient fire and alert the control room for prompt response by the fire department. Manual suppression equipment is available in the adjacent area 2-AC-50-29B. These fire protection features will adequately mitigate the consequences of the fire and confine it to the subject fire area.

FIRE AREA/ZONE 3-AC-50-61

All fire area boundaries in 3-AC-50-61 were evaluated. The fire boundaries and associated fire protection features were found to be adequate to prevent the propagation of fire beyond the fire boundaries. The design basis fire is insufficient to breach the barriers defining the zone/fire area.

7.9.61.8 Fire Area 3-AC-50-61 Appendix R Compliance

Safe shutdown capability will be provided by utilizing Train B systems. Functionally redundant components protected from fire damage will be utilized in conjunction with operator action on manual or disabled components to achieve safe shutdown.

One train of systems necessary to achieve hot standby and cold shutdown conditions independent of the subject fire area will be free of fire damage. Therefore, this fire area complies with the criteria of 10CFR50, Appendix R, III.G.1.

7.9.62 FIRE AREA/ZONE: 3-AC-50-62

FIRE AREA/ZONE: 3-AC-50-62

AREA: 242 sq. ft. DESCRIPTION: DISTRIBUTION ROOM

DESIGN BASIS FIRE

Fire Loading Category:	Low
Fire Loading - Max Permiss:	160,000.0 Btu's/sq.ft.

FIRE PROTECTION (AVAILABLE)

Suppression (type)	none
Hose Stations	none, (1) in 2-AC-50-29B
Portable Extinguishers	none, adjacent
Detectors (type)	ionization

FIRE RESISTANCE RATING

Walls	2hr
Floor, Ceiling, Roof	2hr
Penetrations	C, D, P
Fixed Openings	none
Doors	A/2-AC-50-29B

HOT STANDBY SYSTEMS	Equipment	Valves	Cable
Reactor Coolant			D
Reactor Protection System			
Shutdown Cooling			
Chemical and Volume Control			
Main Feedwater			
Main Steam			D
HVAC			
Auxiliary Feedwater			
Engineered Safety Feature			D
Component Cooling Water			
Saltwater Cooling Water			
Emergency Chilled Water			
Diesel Generator Systems			

COLD SHUTDOWN SYSTEMS	Equipment	Valves	Cable
Shutdown Cooling			
CCW (To SDC)			
HVAC			
Summary (Hot and Cold)			D

ESSENTIAL ELECTRIC SYSTEMS	Equipment	MCC and Switchgear	Cable
220 KV (AC)			
4160 V (AC)			
480 V (AC)			
120 V (AC)			
125 V (DC)			
Electric Panels			A,B,D,X
Summary			A,B,D,X

ASSOCIATED CIRCUITS OF CONCERN

H/I Pressure Interface	YES
Spurious Operation	YES

FIRE AREA/ZONE 3-AC-50-62

7.9.62.1 Location

Auxiliary Control Building - El. 50'-0" - Distribution Room
242 square feet

7.9.62.2 Fire Loading

Fire loading category - Low
Maximum permissible fire loading - 160,000 Btu/sq. ft. (Note 1)

Note 1: The maximum permissible fire loading is based on an evenly distributed loading of combustible materials.

7.9.62.3 Design Basis Fire

The design basis fire is postulated to be a fire that would involve mostly cable insulation.

The design basis fire is conservatively based on simultaneous total combustion of all combustibles in the zone.

7.9.62.4 Fire Protection Equipment

The zone contains no fire suppression equipment, either fixed or portable. Manual fire fighting equipment is available in adjacent area 2-AC-50-29B. Ionization detectors are located in the zone to provide early warning alarm to the control room.

7.9.62.5 Construction

The walls, the floor and ceiling are 2 hour rated. The zone contains a 3 hour rated door and 1-1/2 rated dampers, cabling and piping penetrations communicating with adjacent areas.

7.9.62.6 Licensee Controlled Specification Barriers

For definition of the barriers requiring surveillance per LCS 3.7.104, refer to the latest revision of Figure 8-7, sheet 3.

7.9.62.7 Conclusions

The ionization detectors are expected to detect the products of combustion from an incipient fire and alert the control room for prompt action by the fire department. The fire department will use the hose station and portable equipment from the adjacent zone to extinguish the fire.

The normal ventilation system will effectively remove smoke generated by the design basis fire until the fire dampers operate. Portable smoke exhaust fans may then be used to vent smoke from the area.

Fire area boundaries in 3-AC-50-62 were evaluated. The fire boundaries and associated fire protection features were found to be adequate to prevent the propagation of fire beyond the fire area boundaries.

7.9.62.8 Fire Area 3-AC-50-62 Appendix R Compliance

Safe shutdown capability will be provided by utilizing Train B systems. Functionally redundant components protected from fire damage will be utilized in conjunction with operator action on manual or disabled components to achieve safe shutdown.

One train of systems necessary to achieve hot standby and cold shutdown conditions independent of the subject fire area will be free of fire damage. Therefore, this fire area complies with the criteria of 10CFR50, Appendix R, III.G.1.

7.9.63 FIRE AREA/ZONE: 2-AC-70-63

FIRE AREA/ZONE: 2-AC-70-63

AREA: 1560 sq. ft. DESCRIPTION: CABLE RISER GALLERY

DESIGN BASIS FIRE

Fire Loading Category:	Low
Fire Loading - Max Permiss:	160,000.0 Btu's/sq.ft.

FIRE PROTECTION (AVAILABLE)

Suppression (type)	water spray system
Hose Stations	(1)
Portable Extinguishers	yes
Detectors (type)	ionization, heat detectors

FIRE RESISTANCE RATING

Walls	north and east 3hr, others 2hr
Floor, Ceiling, Roof	2hr/floor, 70 HC/roof
Penetrations	D, C, P, ND/roof
Fixed Openings	none
Doors	A/2-PE-63-3B, A/2-SE-30-142A, B/2-AC-70-64

HOT STANDBY SYSTEMS	Equipment	Valves	Cable
Reactor Coolant			A,B,B*,C
Reactor Protection System			
Shutdown Cooling			B
Chemical and Volume Control			A,B
Main Feedwater			
Main Steam			B,C
HVAC			B
Auxiliary Feedwater			B
Engineered Safety Feature			
Component Cooling Water			A,B,X
Saltwater Cooling Water			
Emergency Chilled Water			B
Diesel Generator Systems			

COLD SHUTDOWN SYSTEMS	Equipment	Valves	Cable
Shutdown Cooling			A,B
CCW (To SDC)			
HVAC			
Summary (Hot and Cold)			A,B,B*,C,X

ESSENTIAL ELECTRIC SYSTEMS	Equipment	MCC and Switchgear	Cable
220 KV (AC)			X
4160 V (AC)			B
480 V (AC)			
120 V (AC)			
125 V (DC)			
Electric Panels			A,B,C,X
Summary			A,B,C,X

ASSOCIATED CIRCUITS OF CONCERN

H/I Pressure Interface	YES
Spurious Operation	YES

FIRE AREA/ZONE 2-AC-70-63

7.9.63.1 Location

Auxiliary Control Building - El. 70'-0" - Cable Riser Gallery - 1560 square feet - Figure 8-8

7.9.63.2 Fire Loading

Fire loading category - Low
Maximum permissible fire loading - 160,000 Btu/sq. ft. (Note 1)

Note 1:The maximum permissible loading is based on an evenly distributed loading of combustible materials.

7.9.63.3 Design Basis Fire

The design basis fire is postulated to be a fire that would involve mostly cable insulation.

The design basis fire is conservatively based on the simultaneous total combustion of all combustibles in the area.

7.9.63.4 Fire Protection Equipment

The area contains an automatic water spray system with fixed temperature rate of rise actuation. Actuation by the heat detectors results in control room annunciation. In addition, manual fire fighting equipment is available within the area. Ionization smoke detectors, located within the area, provide early warning alarm in the control room.

7.9.63.5 Construction

The north and east walls of the area are 3 hour rated thick concrete construction. The south and west walls are 2 hour rated, as are the floor and ceiling except the portion to the roof which is nonrated heavy concrete. A 1-1/2 hour rated door opens to the corridor (2-AC-70-64). The area communicates with the penetration building (2-PE-63-3B) and the safety equipment building (2-SE-30-142A) through 3 hour rated doors. The ventilation duct penetrations in 2 hour rated walls have 1-1/2 hour rated fire dampers. Ventilation duct penetrations in 3 hour rated walls are provided with 3 hour rated fire dampers. The ventilation duct to the roof has no damper.

7.9.63.6 Licensee Controlled Specification Barriers

For definition of the barriers requiring surveillance per LCS 3.7.104, refer to the latest revision of Figure 8-8, sheet 3.

7.9.63.7 Conclusions

The ionization detection system is expected to detect the products of combustion from an incipient fire and alert the control room for prompt response by the fire department. The fire department then enters the cable riser gallery and extinguishes the fire with portable equipment, or actuates the water spray system from the manual station located outside the cable riser gallery.

In the event the fire reaches sufficient intensity, the fixed temperature rate of rise heat detectors will actuate the water spray system automatically. Actuation of the heat detectors is alarmed in the control room. The water spray system will control and suppress the fire until the fire department arrives and completes the extinguishment with portable equipment.

The normal ventilation system will effectively remove the smoke generated by the design basis fire until the fire dampers operate. Portable smoke exhaust fans may then be used to vent smoke from the area.

The fire boundaries between 2-AC-70-63 and 2-AC-70-64, 2-AC-30-27, and 2-AC-85-70 were evaluated. The boundaries and associated fire protection features were found to be adequate to prevent the propagation of fire between the fire areas. The design basis fire is insufficient to breach the barriers defining the fire area.

7.9.63.8 Fire Area 3-AC-70-63 Appendix R Compliance

Safe shutdown capability will be provided by utilizing Train A systems. Safe shutdown analysis demonstrates that Train B systems may be damaged by fire. Functionally redundant components protected from fire damage will be utilized in conjunction with operator action on manual or disabled components to achieve safe shutdown.

One train of systems necessary to achieve hot standby and cold shutdown conditions independent of the subject fire area will be free of fire damage. Therefore, this fire area complies with the criteria of 10CFR50, Appendix R, III.G.1.

7.9.64 FIRE AREA/ZONE: 2-AC-70-64

FIRE AREA/ZONE: 2-AC-70-64

AREA: 17323 sq. ft. DESCRIPTION: HEALTH PHYSICS AND ACCESS CONTROL AREA

DESIGN BASIS FIRE

Fire Loading Category:	Low
Fire Loading - Max Permiss:	160,000.0 Btu's/sq.ft.

FIRE PROTECTION (AVAILABLE)

Suppression (type)	wet pipe sprinklers locally
Hose Stations	(5)
Portable Extinguishers	yes
Detectors (type)	local ionization, photoelectric, heat

FIRE RESISTANCE RATING

Walls	ext. 3hr, NR to ext. north side, int. 2hr
Floor, Ceiling, Roof	2hr
Penetrations	C, D, P, MH(B)/66,67,68,69
Fixed Openings	LV/ext.
Doors	see text

HOT STANDBY SYSTEMS	Equipment	Valves	Cable
Reactor Coolant			
Reactor Protection System			
Shutdown Cooling			
Chemical and Volume Control			
Main Feedwater			
Main Steam			
HVAC			
Auxiliary Feedwater			
Engineered Safety Feature			
Component Cooling Water			
Saltwater Cooling Water			
Emergency Chilled Water			
Diesel Generator Systems			

COLD SHUTDOWN SYSTEMS	Equipment	Valves	Cable
Shutdown Cooling			
CCW (To SDC)			
HVAC			
Summary (Hot and Cold)			

ESSENTIAL ELECTRIC SYSTEMS	Equipment	MCC and Switchgear	Cable
220 KV (AC)			
4160 V (AC)			
480 V (AC)			
120 V (AC)			
125 V (DC)			
Electric Panels			A
Summary			A

ASSOCIATED CIRCUITS OF CONCERN

H/I Pressure Interface	NO
Spurious Operation	YES

FIRE AREA/ZONE 2-AC-70-64

7.9.64.1 Location

Auxiliary Control Building - El. 70'-0" - Health Physics and Access Control Area - 17323 square feet - Figure 8-8

7.9.64.2 Fire Loading

Fire loading category - Low (Note 2)
Maximum permissible fire loading - 160,000 Btu/sq. ft. (Note 1)

Note 1:The maximum permissible loading is based on an evenly distributed loading of combustible materials.

Note 2:Flammable liquids within the area are stored in metal cabinets of equivalent construction to 1 hour rated cabinets.

7.9.64.3 Design Basis Fire

The design basis fire is postulated to be a fire that would involve mostly Class A combustibles, rubber, plastic, acetylene and cable insulation. The design basis fire is conservatively based on the simultaneous total combustion of all combustibles in the area.

7.9.64.4 Fire Protection Equipment

A local wet pipe sprinkler system is also located in the corridor area to provide additional protection from exposure fires. Manual fire fighting equipment is available within the area. In addition, a total flooding halon system actuated by ionization and photoelectric smoke detectors is provided for the protection of the radiochemistry counting room. Ionization smoke detectors are located above the false ceiling (within the concealed space) in the vicinity of the safety related cabling and ductwork (northwest section of the corridor). Fixed rate of rise heat detectors and ionization smoke detectors are also provided for local coverage of other hazard areas within the area. Detectors provide early warning alarm in the control room.

7.9.64.5 Construction

The walls separating the area from the adjacent stairwells (2-AC-30-27, 2-AC-30-24, and 2-AC-30-22), the duct shafts (2-AC-70-69, 2-AC-70-68, 2-AC-70-67 and 2-AC-70-66), the cable riser galleries (2-AC-70-63 and 3-AC-70-65), and the telecommunications center (2-AC-70-175) are 2 hour rated. The floor and roof of the area are also 2 hour rated. The exterior area walls are 3 hour rated except on the north side where louvers are located in the wall of the Operation Support Center.

Four 1-1/2 hour rated doors open to the stairwells (2-AC-30-22, 2-AC-30-27, 2-AC-30-24), and cable riser gallery (2-AC-70-63). A nonrated door communicates with the turbine building (2-TB-72-154B). The elevator door is 1-1/2 hour rated. The remainder of the doors from the area are 3 hour rated.

7.9.64.6 Licensee Controlled Specification Barriers

For definition of the barriers requiring surveillance per LCS 3.7.104, refer to the latest revision of Figure 8-8, sheet 3.

7.9.64.7 Conclusions

Safety related cabling and ductwork for the battery room exhaust fans is routed in conduit above the ceiling. Wet pipe sprinklers, installed above and below the ceiling, and local ionization detectors above the ceilings are provided to protect the safety related system cable from possible exposure hazards. Loss of the battery room exhaust fan cabling is not expected. Loss of airflow through redundant battery room exhaust systems ductwork is expected when the design basis fire causes the fire dampers to operate. The system is not required for safe shutdown.

Components located in the Radiation Chemical Lab are designed for collecting samples and testing for radioactivity. The sampling system is normally closed and may be isolated by valves located outside the lab.

Normal ventilation systems or portable smoke exhaust fans may be used to remove smoke generated by the design basis fire.

Appendix R fire area boundaries in 2-AC-70-64 were evaluated, with the exception of the barriers to 2-SE-70-172 and 2-AR-63-116 which are 3 hour rated. The boundaries and associated fire protection features were found to be adequate to prevent the propagation of fire between fire areas. The design basis fire is insufficient to breach the barriers defining the zone/fire area.
Fire Area 3-AC-70-64 Appendix R Compliance

Safe shutdown capability will be provided by utilizing Train A systems. Functionally redundant components protected from fire damage will be utilized in conjunction with operator action on manual or disabled components to achieve safe shutdown.

One train of systems necessary to achieve hot standby and cold shutdown conditions independent of the subject fire area will be free of fire damage. Therefore, this fire area complies with the criteria of 10CFR50, Appendix R, III.G.1.

7.9.65 FIRE AREA/ZONE: 3-AC-70-65

FIRE AREA/ZONE: 3-AC-70-65

AREA: 1690sq. ft. DESCRIPTION: CABLE RISER GALLERY

DESIGN BASIS FIRE

Fire Loading Category:	Medium
Fire Loading - Max Permiss:	160,000.0 Btu's/sq.ft.

FIRE PROTECTION (AVAILABLE)

Suppression (type)	water spray system
Hose Stations	(1)
Portable Extinguishers	yes
Detectors (type)	ionization, heat detectors

FIRE RESISTANCE RATING

Walls	north and west 2hr, others 3hr
Floor, Ceiling, Roof	2hr
Penetrations	D, C, P
Fixed Openings	none
Doors	A/3-PE-63-3B, A/2-AC-70-64, A/3-SE-30-142A, B/2-AC-70-175

HOT STANDBY SYSTEMS	Equipment	Valves	Cable
Reactor Coolant			A,B,B*,C
Reactor Protection System			
Shutdown Cooling			B
Chemical and Volume Control			A,B
Main Feedwater			
Main Steam			B,C
HVAC			B
Auxiliary Feedwater			B
Engineered Safety Feature			
Component Cooling Water			A,B,X
Saltwater Cooling Water			
Emergency Chilled Water			B
Diesel Generator Systems			

COLD SHUTDOWN SYSTEMS	Equipment	Valves	Cable
Shutdown Cooling			A,B
CCW (To SDC)			
HVAC			
Summary (Hot and Cold)			A,B,B*,C,X

ESSENTIAL ELECTRIC SYSTEMS	Equipment	MCC and Switchgear	Cable
220 KV (AC)			X
4160 V (AC)			B
480 V (AC)			
120 V (AC)			
125 V (DC)			
Electric Panels			B,C,X
Summary			B,C,X

ASSOCIATED CIRCUITS OF CONCERN

H/I Pressure Interface	YES
Spurious Operation	YES

FIRE AREA/ZONE 3-AC-70-65

7.9.65.1 Location

Auxiliary Control Building - El. 70'-0" - Cable Riser Gallery - 1690 square feet - Figure 8-8

7.9.65.2 Fire Loading

Fire loading category - Medium
Maximum permissible fire loading - 160,000 Btu/sq. ft. (Note 1)

Note 1:The maximum permissible loading is based on an evenly distributed loading of combustible materials.

7.9.65.3 Design Basis Fire

The design basis fire is postulated to be a fire that would involve mostly cable insulation.

The design basis fire is conservatively based on the simultaneous total combustion of all combustibles in the area.

7.9.65.4 Fire Protection Equipment

The area contains an automatic water spray system with fixed temperature rate of rise actuation. Actuation by the heat detectors results in control room annunciation. Manual fire fighting equipment is available within the area. Ionization smoke detectors, located throughout the area, provide early warning alarm in the control room.

7.9.65.5 Construction

The south and east walls of the area are 3 hour rated thick concrete construction. The north and west walls are 2 hour rated, as are the floor and ceiling. The area communicates with the corridor (2-AC-70-64), the penetration building (3-PE-63-3B), and the safety equipment building (3-SE-30-142A) through 3 hour rated doors. A 1-1/2 hour rated door separates the area from the telecommunications center (2-AC-70-175). Ventilation duct penetrations in 2 hour rated walls are provided with 1-1/2 hour rated fire dampers. Ventilation duct penetrations in 3 hour rated walls are provided with 3 hour rated fire dampers.

7.9.65.6 Licensee Controlled Specification Barriers

For definition of the barriers requiring surveillance per LCS 3.7.104, refer to the latest revision of Figure 8-8, sheet 3.

7.9.65.7 Conclusions

The ionization detection system is expected to detect the products of combustion from an incipient fire and alert the control room for prompt response by the fire department. The fire department then enters the cable riser gallery and extinguishes the fire with portable equipment, or actuates the water spray system from the manual station located outside the cable riser gallery. In the event the fire reaches sufficient intensity, the fixed temperature rate of rise heat detectors will actuate the water spray system automatically. Actuation of the heat detectors is alarmed in the control room. The water spray system will control and suppress the fire until the fire department arrives and completes the extinguishment with portable equipment. Should the water spray system fail to actuate, the available portable equipment is adequate to extinguish the fire.

The normal ventilation system will effectively remove the smoke generated by the design basis fire until the fire dampers operate. Portable smoke exhaust fans may then be used to vent smoke from the area.

The fire boundaries between 3-AC-70-65 and 2-AC-70-64, 2-AC-30-22, 2-AC-70-175, 2-AC-85-180 and 2-AC-85-71 were evaluated. The boundaries and associated fire protection features were found to be adequate to prevent the propagation of fire between the fire areas. The design basis fire is insufficient to breach the barriers defining the zone/fire area.

7.9.65.8 Fire Area 3-AC-70-65 Appendix R Compliance

Safe shutdown capability will be provided by utilizing Train A systems. Safe shutdown analysis demonstrates that the Train B systems may be damaged by fire. Functionally redundant components protected from fire damage will be utilized in conjunction with operator action on manual or disabled components to achieve safe shutdown.

One train of systems necessary to achieve hot standby and cold shutdown conditions independent of the subject fire area will be free of fire damage. Therefore, this fire area complies with the criteria of 10CFR50, Appendix R, III.G.1.

7.9.66 FIRE AREA/ZONE: 2-AC-70-66

FIRE AREA/ZONE: 2-AC-70-66

AREA: 40 sq. ft. DESCRIPTION: HVAC DUCT SHAFT

DESIGN BASIS FIRE

Fire Loading Category:	Minimal
Fire Loading - Max Permiss:	160,000.0 Btu's/sq.ft.

FIRE PROTECTION (AVAILABLE)

Suppression (type)	none
Hose Stations	none
Portable Extinguishers	none
Detectors (type)	none

FIRE RESISTANCE RATING

Walls	2hr
Floor, Ceiling, Roof	2hr/floor, 71 HC/roof
Penetrations	D, ND/roof, MH(B)/64
Fixed Openings	none
Doors	none

HOT STANDBY SYSTEMS	Equipment	Valves	Cable
Reactor Coolant			
Reactor Protection System			
Shutdown Cooling			
Chemical and Volume Control			
Main Feedwater			
Main Steam			
HVAC			
Auxiliary Feedwater			
Engineered Safety Feature			
Component Cooling Water			
Saltwater Cooling Water			
Emergency Chilled Water			
Diesel Generator Systems			

COLD SHUTDOWN SYSTEMS	Equipment	Valves	Cable
Shutdown Cooling			
CCW (To SDC)			
HVAC			
Summary (Hot and Cold)			

ESSENTIAL ELECTRIC SYSTEMS	Equipment	MCC and Switchgear	Cable
220 KV (AC)			
4160 V (AC)			
480 V (AC)			
120 V (AC)			
125 V (DC)			
Electric Panels			
Summary			

ASSOCIATED CIRCUITS OF CONCERN

H/I Pressure Interface	NO
Spurious Operation	NO

7.9.67 FIRE AREA/ZONE: 2-AC-70-67

FIRE AREA/ZONE: 2-AC-70-67

AREA: 40 sq. ft. DESCRIPTION: HVAC DUCT SHAFT

DESIGN BASIS FIRE

Fire Loading Category:	Minimal
Fire Loading - Max Permiss:	160,000.0 Btu's/sq.ft.

FIRE PROTECTION (AVAILABLE)

Suppression (type)	none
Hose Stations	none
Portable Extinguishers	none
Detectors (type)	none

FIRE RESISTANCE RATING

Walls	2hr
Floor, Ceiling, Roof	2hr/floor, HC/roof
Penetrations	D, ND/roof, MH(B)/64
Fixed Openings	none
Doors	none

HOT STANDBY SYSTEMS	Equipment	Valves	Cable
Reactor Coolant			
Reactor Protection System			
Shutdown Cooling			
Chemical and Volume Control			
Main Feedwater			
Main Steam			
HVAC			
Auxiliary Feedwater			
Engineered Safety Feature			
Component Cooling Water			
Saltwater Cooling Water			
Emergency Chilled Water			
Diesel Generator Systems			

COLD SHUTDOWN SYSTEMS	Equipment	Valves	Cable
Shutdown Cooling			
CCW (To SDC)			
HVAC			
Summary (Hot and Cold)			

ESSENTIAL ELECTRIC SYSTEMS	Equipment	MCC and Switchgear	Cable
220 KV (AC)			
4160 V (AC)			
480 V (AC)			
120 V (AC)			
125 V (DC)			
Electric Panels			
Summary			

ASSOCIATED CIRCUITS OF CONCERN

H/I Pressure Interface	NO
Spurious Operation	NO

7.9.68 FIRE AREA/ZONE: 2-AC-70-68

FIRE AREA/ZONE: 2-AC-70-68

AREA: 32 sq. ft. DESCRIPTION: DUCT SHAFT

DESIGN BASIS FIRE

Fire Loading Category:	Minimal
Fire Loading - Max Permiss:	160,000.0 Btu's/sq.ft.

FIRE PROTECTION (AVAILABLE)

Suppression (type)	none
Hose Stations	none
Portable Extinguishers	none
Detectors (type)	none

FIRE RESISTANCE RATING

Walls	2hr
Floor, Ceiling, Roof	2hr/floor, HC/roof
Penetrations	D, ND/roof, MH(B)/64
Fixed Openings	none
Doors	none

HOT STANDBY SYSTEMS	Equipment	Valves	Cable
Reactor Coolant			
Reactor Protection System			
Shutdown Cooling			
Chemical and Volume Control			
Main Feedwater			
Main Steam			
HVAC			
Auxiliary Feedwater			
Engineered Safety Feature			
Component Cooling Water			
Saltwater Cooling Water			
Emergency Chilled Water			
Diesel Generator Systems			

COLD SHUTDOWN SYSTEMS	Equipment	Valves	Cable
Shutdown Cooling			
CCW (To SDC)			
HVAC			
Summary (Hot and Cold)			

ESSENTIAL ELECTRIC SYSTEMS	Equipment	MCC and Switchgear	Cable
220 KV (AC)			
4160 V (AC)			
480 V (AC)			
120 V (AC)			
125 V (DC)			
Electric Panels			
Summary			

ASSOCIATED CIRCUITS OF CONCERN

H/I Pressure Interface	NO
Spurious Operation	NO

7.9.69 FIRE AREA/ZONE: 2-AC-70-69

FIRE AREA/ZONE: 2-AC-70-69

AREA: 20 sq. ft. DESCRIPTION: DUCT SHAFT

DESIGN BASIS FIRE

Fire Loading Category:	Minimal
Fire Loading - Max Permiss:	160,000.0 Btu's/sq.ft.

FIRE PROTECTION (AVAILABLE)

Suppression (type)	none
Hose Stations	none
Portable Extinguishers	none
Detectors (type)	none

FIRE RESISTANCE RATING

Walls	2hr
Floor, Ceiling, Roof	2hr
Penetrations	D, MH(B)/64
Fixed Openings	none
Doors	none

HOT STANDBY SYSTEMS	Equipment	Valves	Cable
Reactor Coolant			
Reactor Protection System			
Shutdown Cooling			
Chemical and Volume Control			
Main Feedwater			
Main Steam			
HVAC			
Auxiliary Feedwater			
Engineered Safety Feature			
Component Cooling Water			
Saltwater Cooling Water			
Emergency Chilled Water			
Diesel Generator Systems			

COLD SHUTDOWN SYSTEMS	Equipment	Valves	Cable
Shutdown Cooling			
CCW (To SDC)			
HVAC			
Summary (Hot and Cold)			

ESSENTIAL ELECTRIC SYSTEMS	Equipment	MCC and Switchgear	Cable
220 KV (AC)			
4160 V (AC)			
480 V (AC)			
120 V (AC)			
125 V (DC)			
Electric Panels			
Summary			

ASSOCIATED CIRCUITS OF CONCERN

H/I Pressure Interface	NO
Spurious Operation	NO

FIRE AREA/ZONE 2-AC-70-69

7.9.69.1 Location

Auxiliary Control Bldg. - El. 70'-0" - Duct Shaft - 20 square feet - Figure 8-8

7.9.69.2 Fire Loading

Fire loading category - Minimal
Maximum permissible fire loading - 160,000 Btu/sq. ft. (Note 1)

Note 1:The maximum permissible fire loading is based on an evenly distributed loading of combustible materials.

7.9.69.3 Design Basis Fire

A fire is not postulated to occur in the area during normal operation. The maximum credible fire is postulated to involve transient combustible materials.

7.9.69.4 Fire Protection Equipment

There is no fire fighting or fire detection equipment in the area.

7.9.69.5 Construction

The walls defining the area are full height 2 hour rated walls.

7.9.69.6 Licensee Controlled Specification Barriers

For definition of the barriers requiring surveillance per LCS 3.7.104, refer to the latest revision of Figure 8-8, sheet 3.

7.9.69.7 Conclusions

There are minimal combustibles and no suppression or detection in the area. The fire boundary between 2-AC-70-69 and 2-AC-50-53 was evaluated. The boundaries and associated fire protection features were found to be adequate to prevent the propagation of fire between the fire areas. The design basis fire is insufficient to breach the barriers defining the zone/fire area.

7.9.69.8 Fire Area 2-AC-70-69 Appendix R Compliance

One train of systems necessary to achieve hot standby and cold shutdown conditions independent of the subject fire area will be free of fire damage. Therefore, this fire area complies with the criteria of 10CFR50, Appendix R, III.G.1.

7.9.70 FIRE AREA/ZONE: 2-AC-85-70

FIRE AREA/ZONE: 2-AC-85-70

AREA: 2600 sq. ft. DESCRIPTION: SWITCHGEAR ROOM

DESIGN BASIS FIRE

Fire Loading Category:	Low
Fire Loading - Max Permiss:	160,000.0 Btu's/sq.ft.

FIRE PROTECTION (AVAILABLE)

Suppression (type)	none
Hose Stations	none, (1) on outside wall
Portable Extinguishers	yes
Detectors (type)	ionization

FIRE RESISTANCE RATING

Walls	3hr/3B, others NR
Floor, Ceiling, Roof	floor 2hr, NR roof
Penetrations	C, NC/exterior
Fixed Openings	louvers
Doors	(2)X/exterior

HOT STANDBY SYSTEMS	Equipment	Valves	Cable
Reactor Coolant			
Reactor Protection System			
Shutdown Cooling			
Chemical and Volume Control			
Main Feedwater			
Main Steam			
HVAC			
Auxiliary Feedwater			
Engineered Safety Feature			
Component Cooling Water			
Saltwater Cooling Water			
Emergency Chilled Water			
Diesel Generator Systems			

COLD SHUTDOWN SYSTEMS	Equipment	Valves	Cable
Shutdown Cooling			
CCW (To SDC)			
HVAC			
Summary (Hot and Cold)			

ESSENTIAL ELECTRIC SYSTEMS	Equipment	MCC and Switchgear	Cable
220 KV (AC)			X
4160 V (AC)			
480 V (AC)			
120 V (AC)			
125 V (DC)			
Electric Panels			
Summary			X

ASSOCIATED CIRCUITS OF CONCERN

H/I Pressure Interface	NO
Spurious Operation	NO

FIRE AREA/ZONE 2-AC-85-70

7.9.70.1 Location

Auxiliary Control Building - El. 85'-11" - Switchgear Room
2600 square feet - Figure 8-9

7.9.70.2 Fire Loading

Fire loading category - Low
Maximum permissible fire loading - 160,000 Btu/sq. ft. (Note 1)

Note 1:The maximum permissible fire loading is based on an evenly distributed loading of combustible materials.

7.9.70.3 Design Basis Fire

The design basis fire is postulated to be a fire that would involve mostly cable insulation. The design basis fire is conservatively based on the simultaneous total combustion of all combustibles in the area.

7.9.70.4 Fire Protection Equipment

The area contains ionization detectors which provide early warning in the control room. Manual fire fighting equipment is available in the area.

7.9.70.5 Construction

The walls defining the area are nonrated metal siding on concrete curb or parapet except the wall adjoining zone 2-PE-63-3B which is 3 hour rated. The floor is 2 hour rated and the roof is nonrated. The fire area has louvered fixed openings. Two UL Class A equivalent fire doors communicate to the exterior.

7.9.70.6 Licensee Controlled Specification Barriers

For definition of the barriers requiring surveillance per LCS 3.7.104, refer to the latest revision of Figure 8-9, sheet 1.

7.9.70.7 Conclusions

The ionization detection system is expected to detect the products of combustion from an incipient fire and alert the control room for prompt response by the fire department. The available manual suppression equipment is adequate to extinguish the fire.

FIRE AREA/ZONE 2-AC-85-70

The fire area boundary between 2-AC-85-70 and 2-AC-70-63 and 2-AC-70-64 was evaluated. The fire boundaries and associated fire protection features were found to be adequate to prevent the propagation of fire beyond the fire boundaries. The design basis fire is insufficient to breach the barriers defining the zone/fire area.

7.9.70.8 Fire Area 2-AC-85-70 Appendix R Compliance

Safe shutdown capability will be provided by utilizing Train A or Train B systems. Functionally redundant components protected from fire damage will be utilized to achieve safe shutdown.

One train of systems necessary to achieve hot standby and cold shutdown conditions independent of the subject fire area will be free of fire damage. Therefore, this fire area complies with the criteria of 10CFR50, Appendix R, III.G.1.

7.9.71 FIRE AREA/ZONE: 2-AC-85-71

FIRE AREA/ZONE: 2-AC-85-71

AREA: 2074 sq. ft. DESCRIPTION: SWITCHGEAR ROOM

DESIGN BASIS FIRE

Fire Loading Category:	Low
Fire Loading - Max Permiss:	160,000.0 Btu's/sq.ft.

FIRE PROTECTION (AVAILABLE)

Suppression (type)	none
Hose Stations	none, (1) on outside wall
Portable Extinguishers	yes
Detectors (type)	ionization

FIRE RESISTANCE RATING

Walls	3hr/3B, others NR
Floor, Ceiling, Roof	floor 2hr, roof NR
Penetrations	D, C, NC/exterior
Fixed Openings	louvers
Doors	(2)X/exterior

HOT STANDBY SYSTEMS	Equipment	Valves	Cable
Reactor Coolant			
Reactor Protection System			
Shutdown Cooling			
Chemical and Volume Control			
Main Feedwater			
Main Steam			
HVAC			
Auxiliary Feedwater			
Engineered Safety Feature			
Component Cooling Water			
Saltwater Cooling Water			
Emergency Chilled Water			
Diesel Generator Systems			

COLD SHUTDOWN SYSTEMS	Equipment	Valves	Cable
Shutdown Cooling			
CCW (To SDC)			
HVAC			
Summary (Hot and Cold)			

ESSENTIAL ELECTRIC SYSTEMS	Equipment	MCC and Switchgear	Cable
220 KV (AC)			X
4160 V (AC)			
480 V (AC)			
120 V (AC)			
125 V (DC)			
Electric Panels			X
Summary			X

ASSOCIATED CIRCUITS OF CONCERN

H/I Pressure Interface	NO
Spurious Operation	NO

FIRE AREA/ZONE 2-AC-85-71

7.9.71.1 Location

Auxiliary Control Building - El. 85'-11" - Switchgear Room
2074 square feet - Figure 8-9

7.9.71.2 Fire Loading

Fire loading category - Low
Maximum permissible fire loading - 160,000 Btu/sq. ft. (Note 1)

Note 1:The maximum permissible fire loading is based on an evenly distributed loading of combustible materials.

7.9.71.3 Design Basis Fire

The design basis fire would involve mostly cable insulation. The design basis fire is conservatively based on the simultaneous total combustion of all combustibles in the area.

7.9.71.4 Fire Protection Equipment

The area contains ionization detectors which provide early warning in the control room. Manual fire fighting equipment is available in the area.

7.9.71.5 Construction

The walls defining the area are nonrated metal siding on concrete curb or parapet except the wall adjoining 3-PE-63-3B which is 3 hour rated. The floor is 2 hour rated and the roof is nonrated. The fire area has louvered fixed openings. Two UL Class A equivalent fire doors communicate to the exterior.

7.9.71.6 Licensee Controlled Specification Barriers

For definition of the barriers requiring surveillance per LCS 3.7.104, refer to the latest revision of Figure 8-9, sheet 1.

7.9.71.7 Conclusions

The ionization detection system is expected to detect the products of combustion from an incipient fire and alert the control room for prompt response by the fire department. The available manual suppression equipment is adequate to extinguish the fire.

FIRE AREA/ZONE 2-AC-85-71

The fire area boundaries between 2-AC-85-71 and 3-AC-70-65 and 2-AC-70-64 were evaluated. The fire boundaries and associated fire protection features were found to be adequate to prevent the propagation of fire beyond the fire boundaries. The design basis fire is insufficient to breach the barriers defining the zone/fire area.

7.9.71.8 Fire Area 2-AC-85-71 Appendix R Compliance

Safe shutdown capability will be provided by utilizing Train A or Train B systems. Functionally redundant components protected from fire damage will be utilized to achieve safe shutdown.

One train of systems necessary to achieve hot standby and cold shutdown conditions independent of the subject fire area will be free of fire damage. Therefore, this fire area complies with the criteria of 10CFR50, Appendix R, III.G.1.

7.9.72 FIRE AREA/ZONE: 2-AC-85-72

FIRE AREA/ZONE: 2-AC-85-72

AREA: 170 sq. ft. DESCRIPTION: FAN ROOM

DESIGN BASIS FIRE

Fire Loading Category:	Minimal
Fire Loading - Max Permiss:	160,000.0 Btu's/sq.ft.

FIRE PROTECTION (AVAILABLE)

Suppression (type)	none
Hose Stations	none, (1) outside 2-AC-85-70
Portable Extinguishers	none
Detectors (type)	none

FIRE RESISTANCE RATING

Walls	exterior/1hr, 2hr/18, 24
Floor, Ceiling, Roof	2hr floor, HC/roof
Penetrations	C, D
Fixed Openings	louvers
Doors	NR/exterior

HOT STANDBY SYSTEMS	Equipment	Valves	Cable
Reactor Coolant			
Reactor Protection System			
Shutdown Cooling			
Chemical and Volume Control			
Main Feedwater			
Main Steam			
HVAC			
Auxiliary Feedwater			
Engineered Safety Feature			
Component Cooling Water			
Saltwater Cooling Water			
Emergency Chilled Water			
Diesel Generator Systems			

COLD SHUTDOWN SYSTEMS	Equipment	Valves	Cable
Shutdown Cooling			
CCW (To SDC)			
HVAC			
Summary (Hot and Cold)			

ESSENTIAL ELECTRIC SYSTEMS	Equipment	MCC and Switchgear	Cable
220 KV (AC)			
4160 V (AC)			
480 V (AC)			
120 V (AC)			
125 V (DC)			
Electric Panels			
Summary			

ASSOCIATED CIRCUITS OF CONCERN

H/I Pressure Interface	NO
Spurious Operation	NO

FIRE AREA/ZONE 2-AC-85-72

7.9.72.1 Location

Auxiliary Control Building - El. 85'-0" - Fan Room - 170 square feet - Figure 8-9

7.9.72.2 Fire Loading

Fire loading category - Minimal
Maximum permissible fire loading - 160,000 BTU/sq. ft. (Note 1)

Note 1:The maximum permissible combustible loading is based on an evenly distributed loading of combustible materials.
Design Basis Fire

A fire is not postulated to occur in this area during normal operation. The maximum credible fire is postulated to involve transient combustible materials.

7.9.72.3 Fire Protection Equipment

One hose station is available outside of area 2-AC-85-70. No fire detection equipment is provided within the area.

7.9.72.4 Construction

The walls defining the area are 10" thick concrete construction. The exterior walls are 1 hour rated; the walls adjoining 2-AC-9-18, 2-AC-30-24 are 2 hour rated. The floor is 2 hour rated. Exhaust louvers penetrate the east wall of the area. Full height 8" thick concrete barriers separate the redundant battery room exhaust fans. The ventilation duct penetrations through the floor are provided with 1-1/2 hour rated fire dampers.

7.9.72.5 Licensee Controlled Specification Barriers

For definition of the barriers requiring surveillance per LCS 3.7.104, refer to the latest revision of Figure 8-9, sheet 3.

7.9.72.6 Consequences of Design Basis Fire

None

7.9.72.7 Conclusions

There are no fire detectors in the area. A hose station is available outside fire area 2-AC-85-70.

FIRE AREA/ZONE 2-AC-85-72

The fire area boundaries between 2-AC-85-72 and 2-AC-9-18, 2-AC-30-24 and 2-AC-70-64 were evaluated. The fire boundaries and associated fire protection features were found to be adequate to prevent the propagation of fire beyond the fire boundaries. The design basis fire is insufficient to breach the barriers defining the zone/fire area.

7.9.72.8 Fire Area 2-AC-85-72 Appendix R Compliance

Safe shutdown capability will be provided by utilizing either Train A or Train B systems. Safe shutdown analysis demonstrates that no safe shutdown systems will be damaged by a fire in this area.

One train of systems necessary to achieve hot standby and cold shutdown conditions independent of the subject fire area will be free of fire damage. Therefore, this fire area complies with the criteria of 10CFR50, Appendix R, III.G.1.

7.9.73 FIRE AREA/ZONE: **2-AC-(-15)-169**

FIRE AREA/ZONE: 2-AC-(-5)-169

AREA: 3121 sq. ft. DESCRIPTION: EMERG. CHILL. WTR. PIPE TUNNEL

DESIGN BASIS FIRE

Fire Loading Category:	Minimal
Fire Loading - Max Permiss:	13,000.0 Btu's/sq.ft.

FIRE PROTECTION (AVAILABLE)

Suppression (type)	none
Hose Stations	none
Portable Extinguishers	none
Detectors (type)	none

FIRE RESISTANCE RATING

Walls	3hr/135A, HC/others
Floor, Ceiling, Roof	HC to 5, 7, 12, grade 2hr/others, roof
Penetrations	ND/5, ND/7, ND/12
Fixed Openings	M/5, M/7, M/12, M/76
Doors	none

HOT STANDBY SYSTEMS	Equipment	Valves	Cable
Reactor Coolant			
Reactor Protection System			
Shutdown Cooling			
Chemical and Volume Control			
Main Feedwater			
Main Steam			
HVAC			
Auxiliary Feedwater			
Engineered Safety Feature			
Component Cooling Water			
Saltwater Cooling Water			
Emergency Chilled Water			
Diesel Generator Systems			

COLD SHUTDOWN SYSTEMS	Equipment	Valves	Cable
Shutdown Cooling			
CCW (To SDC)			
HVAC			
Summary (Hot and Cold)			

ESSENTIAL ELECTRIC SYSTEMS	Equipment	MCC and Switchgear	Cable
220 KV (AC)			
4160 V (AC)			
480 V (AC)			
120 V (AC)			
125 V (DC)			
Electric Panels			B
Summary			B

ASSOCIATED CIRCUITS OF CONCERN

H/I Pressure Interface	NO
Spurious Operation	NO

FIRE AREA/ZONE 2-AC-(-5)-169

7.9.73.1 Location

Auxiliary Control Building - El. (-5'-0") - Emergency Chilled Water Pipe Tunnel - 3121 square feet - Figures 8-5, 8-10

7.9.73.2 Fire Loading

Fire loading category - Minimal
Maximum permissible fire loading - 13,000 Btu/sq. ft.

7.9.73.3 Design Basis Fire

A fire is not expected to occur in this area during normal operation. The maximum credible fire is postulated to involve transient combustible materials.

7.9.73.4 Fire Protection Equipment

There is no fire fighting or fire detection equipment in the area.

7.9.73.5 Construction

The walls defining the area are nonrated reinforced concrete construction with a minimum thickness of 18", except the walls adjoining 2-SE-(-5)-135A, 3-SE-(-5)-135A which are 3 hour rated. The ceiling and floor are 2 hour rated heavy concrete construction with the exception of three 28" manhole covers and 3 ducts without dampers, which communicate with the Unit 2 HVAC room (2-AC-9-12), the Unit 2 cable spreading room (2-AC-9-5), and the Unit 3 cable riser gallery (3-AC-9-7). The floor to grade is nonrated heavy concrete construction. The boundary which communicates to 2-AR-9-76 also has a metal hatch.

7.9.73.6 Licensee Controlled Specification Barriers

For definition of the barriers requiring surveillance per LCS 3.7.104, refer to the latest revisions of Figures 8-5 and 8-10, sheet 3.

7.9.73.7 Conclusions

The design basis fire is insufficient to breach the area's rated barriers. A nonrated manhole cover separates the area from cable spreading room 2-AC-9-5, HVAC room 2-AC-9-12, and cable riser gallery 3-AC-9-7 above. Propagation of the fire through the small openings in the manhole cover is not anticipated as a result of the design basis fire.

FIRE AREA/ZONE 2-AC-(-5)-169

The fire boundaries between area 2-AC-(-5)-169 and the fire areas which interface with the ceiling of the pipe tunnel were evaluated. The fire boundaries and associated fire protection features were found to be adequate to prevent the propagation of fire beyond the fire boundaries. The design basis fire is insufficient to breach the barriers defining the zone/fire area.

7.9.73.8 Fire Area 2-AC-(-5)-169 Appendix R Compliance

Safe shutdown capabilities will be provided by utilizing Train A systems. Functionally redundant components protected from fire damage will be utilized in conjunction with operator action on manual or disabled components to achieve safe shutdown.

One train of systems necessary to achieve hot standby and cold shutdown conditions independent of the subject fire area will be free of fire damage. Therefore, this fire area complies with the criteria of 10CFR50, Appendix R, III.G.1.

7.9.74 FIRE AREA/ZONE: 2-AC-70-175

FIRE AREA/ZONE: 2-AC-70-175

AREA: 760 sq. ft. DESCRIPTION: COMMUNICATIONS ROOM

DESIGN BASIS FIRE

Fire Loading Category:	Low
Fire Loading - Max Permiss:	160,000.0 Btu's/sq.ft.

FIRE PROTECTION (AVAILABLE)

Suppression (type)	halon
Hose Stations	none
Portable Extinguishers	none
Detectors (type)	ionization

FIRE RESISTANCE RATING

Walls	north and east 2hr, others 3hr
Floor, Ceiling, Roof	2hr
Penetrations	C, P, D
Fixed Openings	none
Doors	B/3-AC-70-65

HOT STANDBY SYSTEMS	Equipment	Valves	Cable
Reactor Coolant			
Reactor Protection System			
Shutdown Cooling			
Chemical and Volume Control			
Main Feedwater			
Main Steam			
HVAC			
Auxiliary Feedwater			
Engineered Safety Feature			
Component Cooling Water			
Saltwater Cooling Water			
Emergency Chilled Water			
Diesel Generator Systems			

COLD SHUTDOWN SYSTEMS	Equipment	Valves	Cable
Shutdown Cooling			
CCW (To SDC)			
HVAC			
Summary (Hot and Cold)			

ESSENTIAL ELECTRIC SYSTEMS	Equipment	MCC and Switchgear	Cable
220 KV (AC)			
4160 V (AC)			
480 V (AC)			
120 V (AC)			
125 V (DC)			
Electric Panels			
Summary			

ASSOCIATED CIRCUITS OF CONCERN

H/I Pressure Interface	NO
Spurious Operation	NO

7.9.75 FIRE AREA/ZONE: 2-AC-85-180

FIRE AREA/ZONE: 2-AC-85-180

AREA: 144 sq. ft. DESCRIPTION: Former 85ft COMMUNICATIONS BATTERY ROOM 506

DESIGN BASIS FIRE

Fire Loading Category:	Low
Fire Loading - Max Permiss:	160,000.0 Btu's/sq.ft.

FIRE PROTECTION (AVAILABLE)

Suppression (type)	none
Hose Stations	none
Portable Extinguishers	none, adjacent
Detectors (type)	ionization,

FIRE RESISTANCE RATING

Walls	NR
Floor, Ceiling, Roof	2hr/floor, NR/roof
Penetrations	C, P, ND/exterior
Fixed Openings	none
Doors	A/exterior

HOT STANDBY SYSTEMS	Equipment	Valves	Cable
Reactor Coolant			
Reactor Protection System			
Shutdown Cooling			
Chemical and Volume Control			
Main Feedwater			
Main Steam			
HVAC			
Auxiliary Feedwater			
Engineered Safety Feature			
Component Cooling Water			
Saltwater Cooling Water			
Emergency Chilled Water			
Diesel Generator Systems			

COLD SHUTDOWN SYSTEMS	Equipment	Valves	Cable
Shutdown Cooling			
CCW (To SDC)			
HVAC			
Summary (Hot and Cold)			

ESSENTIAL ELECTRIC SYSTEMS	Equipment	MCC and Switchgear	Cable
220 KV (AC)			
4160 V (AC)			
480 V (AC)			
120 V (AC)			
125 V (DC)			
Electric Panels			
Summary			

ASSOCIATED CIRCUITS OF CONCERN

H/I Pressure Interface	NO
Spurious Operation	NO

7. DETAILED FIRE HAZARD ANALYSIS

7.10 AUXILIARY RADWASTE BUILDING

The Auxiliary Radwaste Building is a reinforced concrete structure which contains the chemical and volume control and radwaste processing systems. The Auxiliary Radwaste Building is divided into forty-one (41) fire areas. The barrier penetration and door ratings are noted in the matrices.

The Auxiliary Radwaste Building contains part or all of the following systems, which can be used for, or support, safe shutdown and cooldown:

- Chemical and Volume Control
- HVAC
- Main Steam
- Component Cooling Water
- Essential Electric Systems
- Shutdown Cooling
- Reactor Protection System

The types of fire protection/detection equipment available in or near this building consists of the following:

- Portable extinguishers.
- Fixed water spray systems are provided to protect riser galleries. Fixed temperature rate of rise heat detectors are used to operate the water spray system automatically.
- Wet pipe sprinklers.
- Smoke and fixed temperature rate of rise heat detectors.
- A standpipe system with manual hose stations

Fire Area/Zone	Contains Safe Shutdown Equipment/Cables	Contains Safety-Related Equipment/Cables	Figure No.
2-AR-9-73	Yes	Yes	8-10, 8-11, 8-12, 8-13
2-AR-9-74	No	No	8-10, 8-11
3-AR-9-75	Yes	Yes	8-10, 8-11, 8-12, 8-13
2-AR-9-76	Yes	Yes	8-10
2-AR-9-77	No	No	8-10, 8-11, 8-12, 8-13, 8-14
3-AR-9-78A	Yes	Yes	8-10
3-AR-9-78B	Yes	Yes	8-10
2-AR-9-80	No	No	8-10
2-AR-9-81	No	No	8-10, 8-11
2-AR-9-82	Yes	Yes	8-10, 8-11
2-AR-9-83	Yes	No	8-10

Fire Area/Zone	Contains Safe Shutdown Equipment/Cables	Contains Safety-Related Equipment/Cables	Figure No.
2-AR-9-84A	Yes	Yes	8-10
2-AR-9-84B	Yes	Yes	8-10
2-AR-9-86	No	No	8-10, 8-11, 8-12, 8-13, 8-14
2-AR-9-87	Yes	Yes	8-10
2-AR-9-88	Yes	Yes	8-10
2-AR-9-89	Yes	Yes	8-10
2-AR-9-90	No	No	8-10, 8-11, 8-12, 8-13, 8-14
3-AR-9-91	Yes	Yes	8-10
3-AR-9-92	Yes	Yes	8-10
3-AR-9-93	Yes	Yes	8-10
2-AR-24-94	Yes	Yes	8-1, 8-11, 8-27
3-AR-24-95	Yes	Yes	8-11, 8-12, 8-13
3-AR-24-96	Yes	Yes	8-11, 8-12, 8-13
2-AR-24-98	Yes	Yes	8-11, 8-12, 8-13
2-AR-24-99	Yes	Yes	8-11, 8-12, 8-13
2-AR-24-100	Yes	Yes	8-11
3-AR-24-101	Yes	Yes	8-11
2-AR-37-102A	Yes	Yes	8-12, 8-13
2-AR-24-102B	Yes	Yes	8-11
3-AR-37-104	No	No	8-12
2-AR-37-105	No	No	8-12
2-AR-37-107	No	No	8-12, 8-13
2-AR-37-108	No	No	8-12, 8-13
3-AR-37-109	No	No	8-12, 8-13
3-AR-37-110	No	No	8-12, 8-13
2-AR-50-111A	Yes	Yes	8-13
2-AR-50-111B	Yes	No	8-13
2-AR-63-116	Yes	No	8-14
3-AR-63-117	Yes	Yes	8-14
3-AR-63-118	Yes	Yes	8-14
2-AR-63-119	Yes	Yes	8-14
2-AR-63-120	Yes	Yes	8-14
2-AR-63-121	No	No	8-14
2-AR-68-178A	No	No	8-14
2-AR-68-178B	No	No	8-14, 8-14A

7.10.1 FIRE AREA/ZONE: 2-AR-9-73

FIRE AREA/ZONE: 2-AR-9-73

AREA: 906 sq. ft. DESCRIPTION: PRIMARY PLANT MAKE-UP TK. ROOM

DESIGN BASIS FIRE

Fire Loading Category:	Minimal
Fire Loading - Max Permiss:	13,000.0 Btu's/sq.ft.

FIRE PROTECTION (AVAILABLE)

Suppression (type)	none
Hose Stations	none, (1) in 2-AR-37-102A
Portable Extinguishers	none
Detectors (type)	none

FIRE RESISTANCE RATING

Walls	north, west and 102A 3hr, others HC
Floor, Ceiling, Roof	2hr/ceiling.HC/floor
Penetrations	P, C, D, QP/2A
Fixed Openings	none
Doors	A/2-AR-9-86, L/exterior

HOT STANDBY SYSTEMS	Equipment	Valves	Cable
Reactor Coolant			
Reactor Protection System			
Shutdown Cooling			
Chemical and Volume Control			
Main Feedwater			
Main Steam			
HVAC			
Auxiliary Feedwater			
Engineered Safety Feature			
Component Cooling Water	A,B,N	A,B	A,B
Saltwater Cooling Water			
Emergency Chilled Water			
Diesel Generator Systems			

COLD SHUTDOWN SYSTEMS	Equipment	Valves	Cable
Shutdown Cooling			
CCW (To SDC)			
HVAC			
Summary (Hot and Cold)	A,B,N	A,B	A,B

ESSENTIAL ELECTRIC SYSTEMS	Equipment	MCC and Switchgear	Cable
220 KV (AC)			
4160 V (AC)			
480 V (AC)			
120 V (AC)			
125 V (DC)			
Electric Panels			
Summary			

ASSOCIATED CIRCUITS OF CONCERN

H/I Pressure Interface	NO
Spurious Operation	NO

FIRE AREA/ZONE 2-AR-9-73

7.10.1.1 Location

Auxiliary Radwaste Building - El. 9'-0" - Primary Plant Make-up Tk. Room - 906 Square feet - Figure 8-10

7.10.1.2 Fire Loading

Fire loading category - Minimal
Maximum permissible fire loading - 13,000 Btu/sq. ft. (Note 1)

Note 1:The maximum permissible fire loading is based on an evenly distributed loading of combustible materials.

7.10.1.3 Design Basis Fire

The design basis fire is postulated to be a fire that would involve mostly oil.

The design basis fire is conservatively based on the simultaneous total combustion of all combustibles in the zone.

7.10.1.4 Fire Protection Equipment

There is no fire fighting equipment in the area. Manual fire fighting equipment is available in adjacent area 2-AR-37-102A & Yard 2-YD-30-200A.

7.10.1.5 Construction

The walls which border the area are reinforced concrete with a 3 hour rating. The door entering 2-AR-9-86 is a Class A fire door rated for 3 hours, the door exiting to the yard area is non rated. The floor to grade is non-rated heavy concrete construction. The ceiling to 2-AR-68-178A is 2 hour rated. (For exterior walls and doors, see IMPELL Calc. 0310-189-C007 for acceptability)

7.10.1.6 Licensee Controlled Specification Barriers

For definition of the barriers requiring surveillance per LCS 3.7.104, refer to the latest revision of Figure 8-12, Sheet 3.

7.10.1.7 Conclusions

FIRE AREA/ZONE 2-AR-9-73

7.10.1.8 Fire Area 2-AR-9-73 Appendix R Compliance

Safe shutdown capability will be provided by utilizing Train A or Train B systems.

Safe shutdown capability will be provided by an operator action to align the diesel driven fire water pump with the CCW surge tank to provide CCW make-up water from the fire water system.

Both Train A & B CCW make-up pumps are located adjacent to the safety related PPMS tank in this area. Fire Protection features for safe shutdown equipment in this area are not required since redundant makeup capability to the CCW system using the CCW surge tanks is credited for a fire.

One Train of systems necessary to achieve hot standby and cold shutdown conditions independent of the subject fire area will be free of fire damage. Therefore this fire area complies with the criteria of 10CFR50, Appendix R, III.G.1.

7.10.2 FIRE AREA/ZONE: 2-AR-9-74

FIRE AREA/ZONE: 2-AR-9-74

AREA: 2534 sq. ft. DESCRIPTION: TANK ROOMS

DESIGN BASIS FIRE

Fire Loading Category:	Minimal
Fire Loading - Max Permiss:	13,000.0 Btu's/sq.ft.

FIRE PROTECTION (AVAILABLE)

Suppression (type)	none
Hose Stations	none, (1) in-2-AR-37-102A
Portable Extinguishers	none
Detectors (type)	none

FIRE RESISTANCE RATING

Walls	3hr/76,94, others HC
Floor, Ceiling, Roof	2hr/ceiling HC/floor
Penetrations	P, C, D
Fixed Openings	CH/102A
Doors	none

HOT STANDBY SYSTEMS	Equipment	Valves	Cable
Reactor Coolant			
Reactor Protection System			
Shutdown Cooling			
Chemical and Volume Control			
Main Feedwater			
Main Steam			
HVAC			
Auxiliary Feedwater			
Engineered Safety Feature			
Component Cooling Water			
Saltwater Cooling Water			
Emergency Chilled Water			
Diesel Generator Systems			

COLD SHUTDOWN SYSTEMS	Equipment	Valves	Cable
Shutdown Cooling			
CCW (To SDC)			
HVAC			
Summary (Hot and Cold)			

ESSENTIAL ELECTRIC SYSTEMS	Equipment	MCC and Switchgear	Cable
220 KV (AC)			
4160 V (AC)			
480 V (AC)			
120 V (AC)			
125 V (DC)			
Electric Panels			
Summary			

ASSOCIATED CIRCUITS OF CONCERN

H/I Pressure Interface	NO
Spurious Operation	NO

7.10.3 FIRE AREA/ZONE: 3-AR-9-75

FIRE AREA/ZONE: 3-AR-9-75

AREA: 906 sq. ft. DESCRIPTION: PRIMARY PLANT MAKE-UP TK. ROOM

DESIGN BASIS FIRE

Fire Loading Category:	Minimal
Fire Loading - Max Permiss:	13,000.0 Btu's/sq.ft.

FIRE PROTECTION (AVAILABLE)

Suppression (type)	none
Hose Stations	none, (1) in-2-AR-37-102A
Portable Extinguishers	none
Detectors (type)	none

FIRE RESISTANCE RATING

Walls	west, south, and 102A 3hr, others HC
Floor, Ceiling, Roof	2hr ceiling/floor
Penetrations	P, C, D, QP/2A
Fixed Openings	none
Doors	A/2-AR-9-77, L/exterior

HOT STANDBY SYSTEMS	Equipment	Valves	Cable
Reactor Coolant			
Reactor Protection System			
Shutdown Cooling			
Chemical and Volume Control			
Main Feedwater			
Main Steam			
HVAC			
Auxiliary Feedwater			
Engineered Safety Feature			
Component Cooling Water	A,B,N	A,B	A,B
Saltwater Cooling Water			
Emergency Chilled Water			
Diesel Generator Systems			

COLD SHUTDOWN SYSTEMS	Equipment	Valves	Cable
Shutdown Cooling			
CCW (To SDC)			
HVAC			
Summary (Hot and Cold)	A,B,N	A,B	A,B

ESSENTIAL ELECTRIC SYSTEMS	Equipment	MCC and Switchgear	Cable
220 KV (AC)			
4160 V (AC)			
480 V (AC)			
120 V (AC)			
125 V (DC)			
Electric Panels			
Summary			

ASSOCIATED CIRCUITS OF CONCERN

H/I Pressure Interface	NO
Spurious Operation	NO

FIRE AREA/ZONE 3-AR-9-75

7.10.3.1 Location

Auxiliary Radwaste Building - El. 9'-0"
- Primary Plant Make-up Tk. Room - 906 sq. ft. - Fig. 8-10

7.10.3.2 Fire Loading

Fire loading category - Minimal
Maximum permissible fire loading - 13,000 Btu/sq. ft. (Note 1)

Note 1:The maximum permissible loading is based on an evenly distributed loading of combustible materials.

7.10.3.3 Design Basis Fire

The design basis fire is postulated to be a fire that would involve mostly oil.

The design basis fire is conservatively based on the simultaneous total combustion of all combustibles in the zone.

7.10.3.4 Fire Protection Equipment

There is no fire fighting equipment in the area. Manual fire fighting equipment is available in adjacent area 2-AR-37-102A and Yard 2-YD-30-200B.

7.10.3.5 Construction

The walls which border the area are reinforced concrete with a 3 hour rating. The door entering 2-AR-9-77 is a Class A fire door rated for 3 hours, the door exiting to the yard area is non rated. The floor to grade is non rated heavy concrete construction. The ceiling to 2-AR-68-178A is 2 hour rated.

7.10.3.6 Licensee Controlled Specification Barriers

For definition of the barriers requiring surveillance per LCS 3.7.104, refer to the latest revision of Figure 8-12, Sheet 3.

7.10.3.7 Conclusions

7.10.3.8 Fire Area 3-AR-9-75 Appendix R Compliance

Safe shutdown capability will be provided by utilizing Train A or Train B Systems.

Safe shutdown capability will be provided by an operator action to align the diesel driven fire water pump with the CCW surge tank to provide CCW make-up water from the Fire Water System.

Both Train A and Train B CCW make up pumps are located adjacent to the safety related PPMS Tank in this area. Fire protection features for safe shutdown equipment in this area are not required since redundant makeup capability to the CCW system using the CCW surge tanks is credited for a fire.

One Train of systems necessary to achieve hot standby and cold shutdown conditions independent of the subject fire area will be free of fire damage. Therefore, this fire area complies with the criteria of 10CFR50, Appendix R, III.G.1.

7.10.4 FIRE AREA/ZONE: 2-AR-9-76

FIRE AREA/ZONE: 2-AR-9-76

AREA: 24076 sq. ft. DESCRIPTION: CORRIDORS & ROOMS

DESIGN BASIS FIRE

Fire Loading Category:	Minimal
Fire Loading - Max Permiss:	13,000.0 Btu's/sq.ft.

FIRE PROTECTION (AVAILABLE)

Suppression (type)	none
Hose Stations	(4)
Portable Extinguishers	yes
Detectors (type)	none

FIRE RESISTANCE RATING

Walls	to other bldgs 3hr, w/in Radwaste bldg. 3hr 2hr, HC
Floor, Ceiling, Roof	2hr ceiling, floor to 169, HC/grade
Penetrations	C,P, SEE TEXT
Fixed Openings	CH/94, MH/169, OP/80
Doors	A/2-PE-9-2A, A/3-PE-9-2A, B/90,77, 86, W/84A, 84B, 78A, 78B, 87, 88,89,91,92,93

HOT STANDBY SYSTEMS	Equipment	Valves	Cable
Reactor Coolant			
Reactor Protection System			
Shutdown Cooling			
Chemical and Volume Control		B	A,B
Main Feedwater			
Main Steam			
HVAC			A,B
Auxiliary Feedwater			
Engineered Safety Feature			
Component Cooling Water			
Saltwater Cooling Water			
Emergency Chilled Water			
Diesel Generator Systems			

COLD SHUTDOWN SYSTEMS	Equipment	Valves	Cable
Shutdown Cooling			
CCW (To SDC)			
HVAC			
Summary (Hot and Cold)		B	A,B

ESSENTIAL ELECTRIC SYSTEMS	Equipment	MCC and Switchgear	Cable
220 KV (AC)			
4160 V (AC)			
480 V (AC)			
120 V (AC)			
125 V (DC)			
Electric Panels			A,B,X
Summary			A,B,X

ASSOCIATED CIRCUITS OF CONCERN

H/I Pressure Interface	NO
Spurious Operation	YES

FIRE AREA/ZONE 2-AR-9-76

7.10.4.1 Location

Auxiliary Radwaste Building - El. 9'-0" - Corridor and Rooms - 24,076 square feet - Fig. 8-10

7.10.4.2 Fire Loading

Fire loading category - Minimal
Maximum permissible fire loading - 13,000 Btu/sq. ft. (Note 1)

Note 1:The maximum permissible loading is based on an evenly distributed loading of combustible materials.

7.10.4.3 Design Basis Fire

The design basis fire is postulated to be a fire that would involve mostly cable insulation.

The design basis fire is conservatively based on the simultaneous total combustion of all combustibles in the area.

7.10.4.4 Fire Protection Equipment

Manual fire fighting equipment is available within the area. No fire detection equipment is provided in the area.

7.10.4.5 Construction

The barriers of this area to fire areas in adjacent building are reinforced concrete with 3 hour ratings. Within the Radwaste Building the walls to areas 2-AR-9-73, -74, -75 are also 3 hour rated. The ceiling is 2 hour rated concrete construction. The floor to grade is nonrated heavy concrete construction. The following areas within the Radwaste Building which border this area have 2 hour ratings, 2-AR-9-77, -78, -86 and -90. The remaining areas are of nonrated heavy reinforced concrete construction having an approximate thickness of 12 inches. The area communicates with the Unit 2 and Unit 3 penetration buildings (2-PE-9-2A and 3-PE-9-2A) through 3 hour rated doors. Two 1-1/2 hour rated doors open to the stairwells (2-AR-9-77 and 2-AR-9-86). Nonrated watertight doors separate the area from the boric acid makeup tank pump rooms (2-AR-9-84A, 2-AR-9-84B, 3-AR-9-78A, 3-AR-9-78B), and the charging pump rooms (2-AR-9-87, 2-AR-9-88, 2-AR-9-89, 3-AR-9-91, 3-AR-9-92, 3-AR-9-93). The elevator door is 1-1/2 hour rated. The seals in Licensee Controlled Specification barriers which are not rated consistent with the barrier or whose construction does not support a rating or are unsealed are: NP/91, 92, 89, 87, 83, 81, 82, 88, 93; QP/87, 81; QC/87 and 93. Ventilation ducts without dampers are installed in the barriers between this area and the following areas; 3-AR-9-78A and -78B, 2-AR-9-80, 2-AR-9-81, 2-AR-9-82, 2-AR-9-83, 2-AR-9-84A and -84B, 2-AR-9-88, 2-AR-9-89, 3-AR-9-91, 3-AR-9-92.

7.10.4.6 Licensee Controlled Specification Barriers

For definition of the barriers requiring surveillance per LCS 3.7.104, refer to the latest revision of Figure 8-10, sheet 3.

7.10.4.7 Conclusions

The normal ventilation system will effectively remove the smoke generated by the design basis fire until the fire dampers operate. Portable smoke exhaust fans may then be used to vent smoke from the area.

The low fire loading and the substantial construction of the barriers and nonrated doors preclude the propagation of the design basis fire beyond the boundaries defining the area.

The fire boundaries between 2-AR-9-76 and 2-AC-(-5)-169, 2-AR-9-86, 2-AR-9-87, 3-AR-9-93, 2-AR-24-94, and 3-AR-24-95, 2-AR-24-99 were evaluated. The boundaries and associated fire protection features were found to be adequate to prevent the propagation of a fire beyond the fire boundaries.

7.10.4.8 Fire Area 2-AR-9-76 Appendix R Compliance

Safe shutdown capability will be provided by utilizing Train A systems. Functionally redundant components protected from fire damage will be utilized in conjunction with operator action on manual or disabled components to achieve safe shutdown.

One train of systems necessary to achieve hot standby and cold shutdown has been evaluated to remain available for safe shutdown in accordance with 10CFR50, Appendix R, III.G.1 and III.G.2.b. A deviation from the requirements of 10CFR50 Appendix R, III.G.2.b has been accepted for redundant safe shutdown cables with less than 20 foot separation without detection and suppression.

7.10.5 FIRE AREA/ZONE: 2-AR-9-77

FIRE AREA/ZONE: 2-AR-9-77

AREA: 128 sq. ft. DESCRIPTION: STAIRCASE

DESIGN BASIS FIRE

Fire Loading Category:	Minimal
Fire Loading - Max Permiss:	160,000.0 Btu's/sq.ft.

FIRE PROTECTION (AVAILABLE)

Suppression (type)	none
Hose Stations	none, (1) in adjacent area on each floor
Portable Extinguishers	none, adjacent
Detectors (type)	none

FIRE RESISTANCE RATING

Walls	south and 75/ 3hr, others 2hr
Floor, Ceiling, Roof	2hr, HC/floor grade
Penetrations	C, P
Fixed Openings	none
Doors	A/3-PE-63-3B, A/3-AR-9-75, B/76, 94, 102A, 111A, 116

HOT STANDBY SYSTEMS	Equipment	Valves	Cable
Reactor Coolant			
Reactor Protection System			
Shutdown Cooling			
Chemical and Volume Control			
Main Feedwater			
Main Steam			
HVAC			
Auxiliary Feedwater			
Engineered Safety Feature			
Component Cooling Water			
Saltwater Cooling Water			
Emergency Chilled Water			
Diesel Generator Systems			

COLD SHUTDOWN SYSTEMS	Equipment	Valves	Cable
Shutdown Cooling			
CCW (To SDC)			
HVAC			
Summary (Hot and Cold)			

ESSENTIAL ELECTRIC SYSTEMS	Equipment	MCC and Switchgear	Cable
220 KV (AC)			
4160 V (AC)			
480 V (AC)			
120 V (AC)			
125 V (DC)			
Electric Panels			
Summary			

ASSOCIATED CIRCUITS OF CONCERN

H/I Pressure Interface	NO
Spurious Operation	NO

7.10.6 FIRE AREA/ZONE: 3-AR-9-78A

FIRE AREA/ZONE: 3-AR-9-78A

AREA: 54 sq. ft. DESCRIPTION: BORIC ACID MAKE-UP PUMP RM.

DESIGN BASIS FIRE

Fire Loading Category:	Minimal
Fire Loading - Max Permiss:	13,000.0 Btu's/sq.ft.

FIRE PROTECTION (AVAILABLE)

Suppression (type)	none
Hose Stations	none, (1) in 2-AR-9-76
Portable Extinguishers	none, adjacent
Detectors (type)	none

FIRE RESISTANCE RATING

Walls	south 3hr, others HC
Floor, Ceiling, Roof	2hr ceiling, HC/floor
Penetrations	P, C, ND/76, NP/78B, NC/78B
Fixed Openings	none
Doors	W/2-AR-9-76

HOT STANDBY SYSTEMS	Equipment	Valves	Cable
Reactor Coolant			
Reactor Protection System			
Shutdown Cooling			
Chemical and Volume Control	A,N	A	A,B
Main Feedwater			
Main Steam			
HVAC	A		A
Auxiliary Feedwater			
Engineered Safety Feature			
Component Cooling Water			
Saltwater Cooling Water			
Emergency Chilled Water			
Diesel Generator Systems			

COLD SHUTDOWN SYSTEMS	Equipment	Valves	Cable
Shutdown Cooling			
CCW (To SDC)			
HVAC			
Summary (Hot and Cold)	A,N	A	A,B

ESSENTIAL ELECTRIC SYSTEMS	Equipment	MCC and Switchgear	Cable
220 KV (AC)			
4160 V (AC)			
480 V (AC)			
120 V (AC)			
125 V (DC)			
Electric Panels			A,X
Summary			A,X

ASSOCIATED CIRCUITS OF CONCERN

H/I Pressure Interface	NO
Spurious Operation	YES

FIRE AREA/ZONE 3-AR-9-78A

7.10.6.1 Location

Auxiliary Radwaste Building - El. 9'-0" - Boric Acid Make-up Pump Room - 54 square feet - Fig. 8-10

7.10.6.2 Fire Loading

Fire loading category - Minimal
Maximum permissible fire loading - 13,000 Btu/sq. ft. (Note 1)

Note 1:The maximum permissible loading is based on an evenly distributed loading of combustible materials.

7.10.6.3 Design Basis Fire

The design basis fire is postulated to be a fire that would involve mostly oil.

The design basis fire is conservatively based on the simultaneous total combustion of all combustibles in the zone.

7.10.6.4 Fire Protection Equipment

There is no fire fighting or fire detection equipment within the zone. Manual fire fighting equipment is available in adjacent area 2-AR-9-76.

7.10.6.5 Construction

The south wall of the zone is reinforced concrete with a 3 hour rating. The remaining walls are nonrated reinforced concrete construction with an approximate thickness of 12 inches. The ceiling is 2 hour rated. The floor is heavy concrete construction. A watertight door allows access to the zone from the corridor (2-AR-9-76). The ventilation duct penetrations are not provided with fire dampers.

7.10.6.6 Licensee Controlled Specification Barriers

For definition of the barriers requiring surveillance per LCS 3.7.104, refer to the latest revision of Figure 8-10, sheet 3.

7.10.6.7 Conclusions

The normal ventilation system will effectively remove the smoke generated by the design basis fire. Portable smoke exhaust fans may then be used to vent smoke from the fire area.

The fire area/zone boundaries were evaluated. The design basis fire is insufficient to breach the barriers defining the zone/fire area.

7.10.6.8 Fire Area 3-AR-9-78 Appendix R Compliance

Safe shutdown capability will be provided by utilizing Train B systems. Functionally redundant components protected from fire damage will be utilized in conjunction with operator action on manual or disabled components to achieve safe shutdown.

One train of systems necessary to achieve hot standby and cold shutdown has been evaluated to remain available for safe shutdown in accordance with 10CFR50, Appendix R, III.G.1 and III.G.2.b. A deviation from the requirements of 10CFR50 Appendix R, III.G.2.b has been accepted for redundant safe shutdown cables and equipment not separated by 20 feet free of intervening combustibles without suppression and detection.

7.10.7 FIRE AREA/ZONE: 3-AR-9-78B

FIRE AREA/ZONE: 3-AR-9-78B

AREA: 54 sq. ft. DESCRIPTION: BORIC ACID MAKE-UP PUMP RM.

DESIGN BASIS FIRE

Fire Loading Category:	Minimal
Fire Loading - Max Permiss:	13,000.0 Btu's/sq.ft.

FIRE PROTECTION (AVAILABLE)

Suppression (type)	none
Hose Stations	none, (1) in 2-AR-9-76
Portable Extinguishers	none, adjacent
Detectors (type)	none

FIRE RESISTANCE RATING

Walls	south 3hr, west 2hr, north and east HC
Floor, Ceiling, Roof	2hr/ceiling, HC/floor
Penetrations	C, P, NP/78A, NC/78A, ND/76
Fixed Openings	none
Doors	W/2-AR-9-76

HOT STANDBY SYSTEMS	Equipment	Valves	Cable
Reactor Coolant			
Reactor Protection System			
Shutdown Cooling			
Chemical and Volume Control	A,N		A,B
Main Feedwater			
Main Steam			
HVAC	A		A,B
Auxiliary Feedwater			
Engineered Safety Feature			
Component Cooling Water			
Saltwater Cooling Water			
Emergency Chilled Water			
Diesel Generator Systems			

COLD SHUTDOWN SYSTEMS	Equipment	Valves	Cable
Shutdown Cooling			
CCW (To SDC)			
HVAC			
Summary (Hot and Cold)	A,N		A,B

ESSENTIAL ELECTRIC SYSTEMS	Equipment	MCC and Switchgear	Cable
220 KV (AC)			
4160 V (AC)			
480 V (AC)			
120 V (AC)			
125 V (DC)			
Electric Panels			A,B,X
Summary			A,B,X

ASSOCIATED CIRCUITS OF CONCERN

H/I Pressure Interface	NO
Spurious Operation	YES

FIRE AREA/ZONE 3-AR-9-78B

7.10.7.1 Location

Auxiliary Radwaste Building - El. 9'-0" - Boric Acid Make-up Pump Room - 54 square feet - Fig. 8-10

7.10.7.2 Fire Loading

Fire loading category - Minimal
Maximum permissible fire loading - 13,000 Btu/sq. ft. (Note 1)

Note 1:The maximum permissible fire loading is based on an evenly distributed loading of combustible materials.

7.10.7.3 Design Basis Fire

The design basis fire is postulated to be a fire that would involve mostly oil.

The design basis fire is conservatively based on the simultaneous total combustion of all combustibles in the zone.

7.10.7.4 Fire Protection Equipment

There is no fire fighting or fire detection equipment in the zone. Manual fire fighting equipment is available in adjacent area 2-AR-9-76.

7.10.7.5 Construction

The south wall of the zone is reinforced concrete with a 3 hour rating. The west wall is 2 hour rated. The north and east walls are nonrated reinforced concrete construction with an approximate thickness of 12 inches. The ceiling is 2 hour rated. The floor is heavy concrete construction. A watertight door allows access to the zone from the corridor (2-AR-9-76). The ventilation duct penetrations are not provided with fire dampers.

7.10.7.6 Licensee Controlled Specification Barriers

For definition of the barriers requiring surveillance per LCS 3.7.104, refer to the latest revision of Figure 8-10, sheet 3.

7.10.7.7 Consequences of Design Basis Fire

The design basis fire has been evaluated on a fire area basis, consistent with 10CFR50 Appendix R and NRC guidance. The consequences of a design basis fire on safe shutdown systems for this fire zone are provided in fire area/zone 3-AR-9-78A.

FIRE AREA/ZONE 3-AR-9-78B

7.10.7.8 Conclusions

The normal ventilation system will effectively remove the smoke generated by the design basis fire. Portable smoke exhaust fans may be used to vent smoke from the area.

The fire area/zone boundaries were evaluated. The design basis fire is insufficient to breach the barriers defining the zone/fire area.

Appendix R compliance for fire area 3-AR-9-78 is discussed in fire zone 3-AR-9-78A.

7.10.8 FIRE AREA/ZONE: 2-AR-9-80

FIRE AREA/ZONE: 2-AR-9-80

AREA: 302 sq. ft. DESCRIPTION: CHEM. WASTE TK. RM.

DESIGN BASIS FIRE

Fire Loading Category:	Minimal
Fire Loading - Max Permiss:	13,000.0 Btu's/sq.ft.

FIRE PROTECTION (AVAILABLE)

Suppression (type)	none
Hose Stations	none
Portable Extinguishers	none
Detectors (type)	none

FIRE RESISTANCE RATING

Walls	south 3hr, 78B 2hr, others HC
Floor, Ceiling, Roof	2hr/ceiling, HC/floor
Penetrations	P, C, ND/76, NP/76
Fixed Openings	CH/96
Doors	none

HOT STANDBY SYSTEMS	Equipment	Valves	Cable
Reactor Coolant			
Reactor Protection System			
Shutdown Cooling			
Chemical and Volume Control			
Main Feedwater			
Main Steam			
HVAC			
Auxiliary Feedwater			
Engineered Safety Feature			
Component Cooling Water			
Saltwater Cooling Water			
Emergency Chilled Water			
Diesel Generator Systems			

COLD SHUTDOWN SYSTEMS	Equipment	Valves	Cable
Shutdown Cooling			
CCW (To SDC)			
HVAC			
Summary (Hot and Cold)			

ESSENTIAL ELECTRIC SYSTEMS	Equipment	MCC and Switchgear	Cable
220 KV (AC)			
4160 V (AC)			
480 V (AC)			
120 V (AC)			
125 V (DC)			
Electric Panels			
Summary			

ASSOCIATED CIRCUITS OF CONCERN

H/I Pressure Interface	NO
Spurious Operation	NO

7.10.9 FIRE AREA/ZONE: 2-AR-9-81

FIRE AREA/ZONE: 2-AR-9-81

AREA: 2067 sq. ft. DESCRIPTION: RADWASTE PRIMARY TK. RM.

DESIGN BASIS FIRE

Fire Loading Category:	Minimal
Fire Loading - Max Permiss:	13,000.0 Btu's/sq.ft.

FIRE PROTECTION (AVAILABLE)

Suppression (type)	none
Hose Stations	none
Portable Extinguishers	none
Detectors (type)	none

FIRE RESISTANCE RATING

Walls	west, 2A, 148G, 2C, others HC
Floor, Ceiling, Roof	2hr/ceiling, floor to 76, HC/floor grade
Penetrations	P, C, NP/76, ND/76
Fixed Openings	CH/102A
Doors	none

HOT STANDBY SYSTEMS	Equipment	Valves	Cable
Reactor Coolant			
Reactor Protection System			
Shutdown Cooling			
Chemical and Volume Control			
Main Feedwater			
Main Steam			
HVAC			
Auxiliary Feedwater			
Engineered Safety Feature			
Component Cooling Water			
Saltwater Cooling Water			
Emergency Chilled Water			
Diesel Generator Systems			

COLD SHUTDOWN SYSTEMS	Equipment	Valves	Cable
Shutdown Cooling			
CCW (To SDC)			
HVAC			
Summary (Hot and Cold)			

ESSENTIAL ELECTRIC SYSTEMS	Equipment	MCC and Switchgear	Cable
220 KV (AC)			
4160 V (AC)			
480 V (AC)			
120 V (AC)			
125 V (DC)			
Electric Panels			
Summary			

ASSOCIATED CIRCUITS OF CONCERN

H/I Pressure Interface	NO
Spurious Operation	NO

7.10.10 FIRE AREA/ZONE: 2-AR-9-82

FIRE AREA/ZONE: 2-AR-9-82

AREA: 1971 sq. ft. DESCRIPTION: MISC. WASTE EVAP. COND. MONITOR TK. RM.

DESIGN BASIS FIRE

Fire Loading Category:	Minimal
Fire Loading - Max Permiss:	13,000.0 Btu's/sq.ft.

FIRE PROTECTION (AVAILABLE)

Suppression (type)	none
Hose Stations	none
Portable Extinguishers	none
Detectors (type)	none

FIRE RESISTANCE RATING

Walls	west, 2A, 148G, 2C 3hr, others HC
Floor, Ceiling, Roof	2hr/ceiling, HC/floor
Penetrations	P, C, NP/76, ND/76, NP/102B, NC/83, QP/148G, ND/83
Fixed Openings	CH/102A
Doors	none

HOT STANDBY SYSTEMS	Equipment	Valves	Cable
Reactor Coolant			
Reactor Protection System			
Shutdown Cooling			
Chemical and Volume Control			
Main Feedwater			
Main Steam			
HVAC			
Auxiliary Feedwater			
Engineered Safety Feature			
Component Cooling Water			
Saltwater Cooling Water			
Emergency Chilled Water			
Diesel Generator Systems			

COLD SHUTDOWN SYSTEMS	Equipment	Valves	Cable
Shutdown Cooling			
CCW (To SDC)			
HVAC			
Summary (Hot and Cold)			

ESSENTIAL ELECTRIC SYSTEMS	Equipment	MCC and Switchgear	Cable
220 KV (AC)			
4160 V (AC)			
480 V (AC)			
120 V (AC)			
125 V (DC)			
Electric Panels			B
Summary			B

ASSOCIATED CIRCUITS OF CONCERN

H/I Pressure Interface	NO
Spurious Operation	NO

FIRE AREA/ZONE 2-AR-9-82

7.10.10.1 Location

Auxiliary Radwaste Building - El. 9'-0" - Misc Waste Evap. Cond. Monitor Tk. Rm. - 1971 square feet - Fig. 8-10, 8-11

7.10.10.2 Category

Fire loading category - Minimal
Maximum permissible fire loading - 13,000 Btu/sq. ft.

7.10.10.3 Design Basis Fire

A fire is not expected to occur in this area during manual operation. The maximum credible fire is postulated to involve transient combustible material.

7.10.10.4 Fire Protection Equipment

There is no fire fighting equipment in this area.

7.10.10.5 Construction

The north and west walls of this area are 3 hour rated, the other walls are nonrated heavy concrete. The ceiling is 2 hour rated. The floor is heavy concrete construction. A nonrated concrete hatch connects to adjacent area 2-AR-37-102. In addition, a ventilation duct with a nonrated damper and a nonrated piping penetration connect to fire area 2-AR-9-76.

7.10.10.6 Licensee Controlled Specification Barriers

For definition of the barriers requiring surveillance per LCS 3.7.104, refer to the latest revision of Figure 8-10, sheet 3.

7.10.10.7 Conclusions

Portable smoke exhaust fans may then be used to vent smoke from the fire area.

The fire area/zone boundaries were evaluated. The design basis fire is insufficient to breach the barriers defining the zone/fire area.

7.10.10.8 Fire Area 2-AR-9-82 Appendix R Compliance

Safe shutdown capability will be provided by utilizing Train A systems. Functionally redundant components protected from fire damage will be utilized in conjunction with operator action on manual or disabled components to achieve safe shutdown.

FIRE AREA/ZONE 2-AR-9-82

One train of systems necessary to achieve hot standby and cold shutdown conditions independent of the subject fire area will be free of fire damage. Therefore, this fire area complies with the criteria of 10CFR50, Appendix R, III.G.1.

7.10.11 FIRE AREA/ZONE: 2-AR-9-83

FIRE AREA/ZONE: 2-AR-9-83

AREA: 302 sq. ft. DESCRIPTION: CONC. BORIC ACID TK. RM.

DESIGN BASIS FIRE

Fire Loading Category:	Minimal
Fire Loading - Max Permiss:	13,000.0 Btu's/sq.ft.

FIRE PROTECTION (AVAILABLE)

Suppression (type)	none
Hose Stations	none, (1) in 2-AR-24-94
Portable Extinguishers	none
Detectors (type)	none

FIRE RESISTANCE RATING

Walls	north 3hr, 84B/2hr, others HC
Floor, Ceiling, Roof	2hr ceiling, HC/floor
Penetrations	P, C, NP/76, ND/76, NC/82
Fixed Openings	CH/98
Doors	none

HOT STANDBY SYSTEMS	Equipment	Valves	Cable
Reactor Coolant			
Reactor Protection System			
Shutdown Cooling			
Chemical and Volume Control			A
Main Feedwater			
Main Steam			
HVAC			
Auxiliary Feedwater			
Engineered Safety Feature			
Component Cooling Water			
Saltwater Cooling Water			
Emergency Chilled Water			
Diesel Generator Systems			

COLD SHUTDOWN SYSTEMS	Equipment	Valves	Cable
Shutdown Cooling			
CCW (To SDC)			
HVAC			
Summary (Hot and Cold)			A

ESSENTIAL ELECTRIC SYSTEMS	Equipment	MCC and Switchgear	Cable
220 KV (AC)			
4160 V (AC)			
480 V (AC)			
120 V (AC)			
125 V (DC)			
Electric Panels			X
Summary			X

ASSOCIATED CIRCUITS OF CONCERN

H/I Pressure Interface	NO
Spurious Operation	YES

FIRE AREA/ZONE 2-AR-9-83

7.10.11.1 Location

Auxiliary Radwaste Building - El. 9'-0" - Concentrated Boric Acid Tank Room - 302 square feet - Fig. 8-10

7.10.11.2 Fire Loading

Fire loading category - Minimal
Maximum permissible fire loading - 13,000 Btu/sq. ft. (Note 1)

Note 1:The maximum permissible fire loading is based on an evenly distributed loading of combustible materials.

7.10.11.3 Design Basis Fire

A fire is not expected to occur in this area during normal operation. The maximum credible fire is postulated to involve transient combustible materials.

7.10.11.4 Fire Protection Equipment

There is no fire fighting or fire detection equipment in the area. Manual fire fighting equipment is available in area 2-AR-24-94.

7.10.11.5 Construction

The north wall of the area is reinforced concrete with a 3 hour rating. The wall to 2-AR-9-84B is 2 hour rated. The remaining walls are nonrated heavy concrete construction with an approximate thickness of 24 inches. The ceiling is 2 hour rated. The floor is heavy concrete construction. The area is accessed by ladder from a concrete hatch in area 2-AR-24-98 above. The ventilation duct penetration is fitted with an airtight seal but no fire damper is provided.

7.10.11.6 Licensee Controlled Specification Barriers

For definition of the barriers requiring surveillance per LCS 3.7.104, refer to the latest revisions of Figures 8-10 and 8-11, sheet 3.

7.10.11.7 Conclusions

Normal ventilation will effectively remove smoke generated by the design basis fire. Portable smoke exhaust fans may then be used to vent smoke from the fire area.

The fire area/zone boundaries were evaluated. The low fire loading and the substantial construction of the barriers preclude the propagation of the design basis fire beyond the boundaries defining the area.

7.10.11.8 Fire Area 2-AR-9-83 Appendix R Compliance

Safe shutdown capability will be provided by utilizing Train B systems. Functionally redundant components protected from fire damage will be utilized in conjunction with operator action on manual or disabled components to achieve safe shutdown.

One train of systems necessary to achieve hot standby and cold shutdown conditions independent of the subject fire area will be free of fire damage. Therefore, this fire area complies with the criteria of 10CFR50, Appendix R, III.G.1.

7.10.12 FIRE AREA/ZONE: 2-AR-9-84A

FIRE AREA/ZONE: 2-AR-9-84A

AREA: 54 sq. ft. DESCRIPTION: BORIC ACID MAKE-UP PUMP RM.

DESIGN BASIS FIRE

Fire Loading Category:	Minimal
Fire Loading - Max Permiss:	13,000.0 Btu's/sq.ft.

FIRE PROTECTION (AVAILABLE)

Suppression (type)	none
Hose Stations	none, (1) in 2-AR-9-76
Portable Extinguishers	none, adjacent
Detectors (type)	none

FIRE RESISTANCE RATING

Walls	north 3hr, others HC
Floor, Ceiling, Roof	2hr ceiling, HC/floor
Penetrations	P, C, ND/76, NP/84B
Fixed Openings	none
Doors	W/2-AR-9-76

HOT STANDBY SYSTEMS	Equipment	Valves	Cable
Reactor Coolant			
Reactor Protection System			
Shutdown Cooling			
Chemical and Volume Control	A,N	A	A,B
Main Feedwater			
Main Steam			
HVAC	A		A
Auxiliary Feedwater			
Engineered Safety Feature			
Component Cooling Water			
Saltwater Cooling Water			
Emergency Chilled Water			
Diesel Generator Systems			

COLD SHUTDOWN SYSTEMS	Equipment	Valves	Cable
Shutdown Cooling			
CCW (To SDC)			
HVAC			
Summary (Hot and Cold)	A,N	A	A,B

ESSENTIAL ELECTRIC SYSTEMS	Equipment	MCC and Switchgear	Cable
220 KV (AC)			
4160 V (AC)			
480 V (AC)			
120 V (AC)			
125 V (DC)			
Electric Panels			A,X
Summary			A,X

ASSOCIATED CIRCUITS OF CONCERN

H/I Pressure Interface	NO
Spurious Operation	YES

FIRE AREA/ZONE 2-AR-9-84A

7.10.12.1 Location

Auxiliary Radwaste Building - El. 9'-0" - Boric Acid Make-Up Pump Room - 54 square feet - Fig. 8-10

7.10.12.2 Fire Loading

Fire loading category - Minimal
Maximum permissible fire loading - 13,000 Btu/sq. ft. (Note 1)

Note 1:The maximum permissible fire loading is based on an evenly distributed loading of combustible materials.

7.10.12.3 Design Basis Fire

The design basis fire is postulated to be a fire that would involve mostly oil.

The design basis fire is conservatively based on the simultaneous total combustion of all combustibles in the zone.

7.10.12.4 Fire Protection Equipment

There is no fire fighting or fire detection equipment available in the zone. Manual fire fighting equipment is available in adjacent area 2-AR-9-76.

7.10.12.5 Construction

The north wall of the zone is reinforced concrete with a 3 hour rating. The remaining walls are nonrated reinforced concrete with an approximate thickness of 24 inches. The ceiling is 2 hour rated. The floor is heavy concrete construction. A watertight door allows access to the zone from the corridor (2-AR-9-76). The ventilation duct penetrations are not provided with fire dampers.

7.10.12.6 Licensee Controlled Specification Barriers

For definition of the barriers requiring surveillance per LCS 3.7.104, refer to the latest revision of Figure 8-10, sheet 3.

7.10.12.7 Conclusions

The normal ventilation system will effectively remove the smoke generated by the design basis fire. Portable smoke exhaust fans may be used to vent smoke from the fire area.

FIRE AREA/ZONE 2-AR-9-84A

The fire area/zone boundaries were evaluated. The low fire loading and the substantial construction of the heavy concrete walls and nonrated door preclude the propagation of the design basis fire beyond the boundaries defining the zone.

7.10.12.8 Fire Area 2-AR-9-84 Appendix R Compliance

Safe shutdown capability will be provided by utilizing Train B systems. Functionally redundant components protected from fire damage will be utilized in conjunction with operator action on manual or disabled components to achieve safe shutdown.

One train of systems necessary to achieve hot standby and cold shutdown has been evaluated to remain available for safe shutdown in accordance with 10CFR50, Appendix R, III.G.1 and III.G.2.b. A deviation from the requirements of 10CFR50 Appendix R, III.G.2.b has been accepted for redundant cables with less than 20 foot separation without suppression and detection.

7.10.13 FIRE AREA/ZONE: 2-AR-9-84B

FIRE AREA/ZONE: 2-AR-9-84B

AREA: 54 sq. ft. DESCRIPTION: BORIC ACID MAKE-UP PUMP RM.

DESIGN BASIS FIRE

Fire Loading Category:	Minimal
Fire Loading - Max Permiss:	13,000.0 Btu's/sq.ft.

FIRE PROTECTION (AVAILABLE)

Suppression (type)	none
Hose Stations	none, (1) in 2-AR-9-76
Portable Extinguishers	none, adjacent
Detectors (type)	none

FIRE RESISTANCE RATING

Walls	north 3hr, west 2hr, others HC
Floor, Ceiling, Roof	2hr/ceiling, HC/floor
Penetrations	C, P, ND/76, NP/84A
Fixed Openings	none
Doors	W/2-AR-9-76

HOT STANDBY SYSTEMS	Equipment	Valves	Cable
Reactor Coolant			
Reactor Protection System			
Shutdown Cooling			
Chemical and Volume Control	A,N		A,B
Main Feedwater			
Main Steam			
HVAC	A		A,B
Auxiliary Feedwater			
Engineered Safety Feature			
Component Cooling Water			
Saltwater Cooling Water			
Emergency Chilled Water			
Diesel Generator Systems			

COLD SHUTDOWN SYSTEMS	Equipment	Valves	Cable
Shutdown Cooling			
CCW (To SDC)			
HVAC			
Summary (Hot and Cold)	A,N		A,B

ESSENTIAL ELECTRIC SYSTEMS	Equipment	MCC and Switchgear	Cable
220 KV (AC)			
4160 V (AC)			
480 V (AC)			
120 V (AC)			
125 V (DC)			
Electric Panels			A,B,X
Summary			A,B,X

ASSOCIATED CIRCUITS OF CONCERN

H/I Pressure Interface	NO
Spurious Operation	YES

FIRE AREA/ZONE 2-AR-9-84B

7.10.13.1 Location

Auxiliary Radwaste Building - El. 9'-0" - Boric Acid Make-Up Pump Room - 54 square feet - Fig. 8-10

7.10.13.2 Fire Loading

Fire loading category - Minimal
Maximum permissible fire loading - 13,000 Btu/sq. ft. (Note 1)

Note 1:The maximum permissible fire loading is based on an evenly distributed loading of combustible materials.

7.10.13.3 Design Basis Fire

The design basis fire is postulated to be a fire that would involve mostly oil.

The design basis fire is conservatively based on the simultaneous total combustion of all combustibles in the zone.

7.10.13.4 Fire Protection Equipment

There is no fire fighting or fire detection equipment available within the zone. Manual fire fighting equipment is available in adjacent area 2-AR-9-76.

7.10.13.5 Construction

The north wall of the zone is reinforced concrete with a 3 hour rating. The west wall is 2 hour rated. The remaining walls are nonrated reinforced concrete construction with an approximate thickness of 24 inches. The ceiling is 2 hour rated. The floor is heavy concrete construction. A watertight door allows access to the zone from the corridor (2-AR-9-76). The ventilation duct penetrations are not provided with fire dampers.

7.10.13.6 Licensee Controlled Specification Barriers

For definition of the barriers requiring surveillance per LCS 3.7.104, refer to the latest revision of Figure 8-10, sheet 3.

7.10.13.7 Conclusions

The normal ventilation system will effectively remove the smoke generated by the design basis fire. Portable smoke exhaust fans may be used to vent smoke from the fire area.

FIRE AREA/ZONE 2-AR-9-84B

The fire area/zone boundaries were evaluated. The low fire loading and the substantial construction of the heavy concrete walls and nonrated door preclude the propagation of the design basis fire beyond the boundaries defining the zone.

Appendix R compliance for fire area 2-AR-9-84 is discussed in fire zone 2-AR-9-84A.

7.10.14 FIRE AREA/ZONE: 2-AR-9-86

FIRE AREA/ZONE: 2-AR-9-86

AREA: 128 sq. ft. DESCRIPTION: STAIRCASE

DESIGN BASIS FIRE

Fire Loading Category:	Minimal
Fire Loading - Max Permiss:	160,000.0 Btu's/sq.ft.

FIRE PROTECTION (AVAILABLE)

Suppression (type)	none
Hose Stations	none, (1) in adjacent area each floor
Portable Extinguishers	none, adjacent
Detectors (type)	none

FIRE RESISTANCE RATING

Walls	north and 73/3hr, others 2hr
Floor, Ceiling, Roof	2hr ceiling, 76, HC/floor grade
Penetrations	C, P
Fixed Openings	none
Doors	B/2-AR-9-76, B/2-AR-24-94, B/2-AR-37-102A, B/2-AR-50-111A, B/2-AR-63-116, A/2-AR-9-73

HOT STANDBY SYSTEMS	Equipment	Valves	Cable
Reactor Coolant			
Reactor Protection System			
Shutdown Cooling			
Chemical and Volume Control			
Main Feedwater			
Main Steam			
HVAC			
Auxiliary Feedwater			
Engineered Safety Feature			
Component Cooling Water			
Saltwater Cooling Water			
Emergency Chilled Water			
Diesel Generator Systems			

COLD SHUTDOWN SYSTEMS	Equipment	Valves	Cable
Shutdown Cooling			
CCW (To SDC)			
HVAC			
Summary (Hot and Cold)			

ESSENTIAL ELECTRIC SYSTEMS	Equipment	MCC and Switchgear	Cable
220 KV (AC)			
4160 V (AC)			
480 V (AC)			
120 V (AC)			
125 V (DC)			
Electric Panels			
Summary			

ASSOCIATED CIRCUITS OF CONCERN

H/I Pressure Interface	NO
Spurious Operation	NO

7.10.15 FIRE AREA/ZONE: 2-AR-9-87

FIRE AREA/ZONE: 2-AR-9-87

AREA: 299 sq. ft. DESCRIPTION: CHARGING PUMP RM.

DESIGN BASIS FIRE

Fire Loading Category:	Minimal
Fire Loading - Max Permiss:	40,000.0 Btu's/sq.ft.

FIRE PROTECTION (AVAILABLE)

Suppression (type)	none
Hose Stations	none, (1) in 2-AR-9-76
Portable Extinguishers	none, adjacent
Detectors (type)	ionization

FIRE RESISTANCE RATING

Walls	south 3hr, others HC
Floor, Ceiling, Roof	2hr/ceiling, HC/floor
Penetrations	P, C, D, NP/76, QC/76
Fixed Openings	none
Doors	W/2-AR-9-76

HOT STANDBY SYSTEMS	Equipment	Valves	Cable
Reactor Coolant			
Reactor Protection System			
Shutdown Cooling			
Chemical and Volume Control	A	N	A,B
Main Feedwater			
Main Steam			
HVAC	A		A
Auxiliary Feedwater			
Engineered Safety Feature			
Component Cooling Water			
Saltwater Cooling Water			
Emergency Chilled Water			
Diesel Generator Systems			

COLD SHUTDOWN SYSTEMS	Equipment	Valves	Cable
Shutdown Cooling			
CCW (To SDC)			
HVAC			
Summary (Hot and Cold)	A	N	A,B

ESSENTIAL ELECTRIC SYSTEMS	Equipment	MCC and Switchgear	Cable
220 KV (AC)			
4160 V (AC)			
480 V (AC)			
120 V (AC)			
125 V (DC)			
Electric Panels			A,B
Summary			A,B

ASSOCIATED CIRCUITS OF CONCERN

H/I Pressure Interface	NO
Spurious Operation	NO

FIRE AREA/ZONE 2-AR-9-87

7.10.15.1 Location

Auxiliary Radwaste Building - El. 9'-0" - Charging Pump Room - 299 square feet - Fig. 8-10

7.10.15.2 Fire Loading

Fire loading category - Minimal
Maximum permissible fire loading - 40,000 Btu/sq. ft. (Note 1)

Note 1:The maximum permissible fire loading is based on an evenly distributed loading of combustible materials.

7.10.15.3 Design Basis Fire

The design basis fire is postulated to be a fire that would involve mostly oil.

The design basis fire is conservatively based on the simultaneous total combustion of all combustibles in the area.

7.10.15.4 Fire Protection Equipment

There is no fire fighting equipment within the area. Manual fire fighting equipment is available in adjacent area 2-AR-9-76. One ionization smoke detector, located within the area, provides early warning alarm in the control room.

7.10.15.5 Construction

The south wall of the area is reinforced concrete with a 3 hour rating. The east wall is 18-inch thick concrete and concrete block construction. The east, north and west walls are nonrated heavy reinforced concrete with an approximate thickness of 24 inches. The ceiling is 2 hour rated. The floor is heavy concrete construction. A watertight door allows access to the area from the corridor (2-AR-9-76). Ventilation duct penetrations are provided with 3 hour rated fire dampers.

7.10.15.6 Licensee Controlled Specification Barriers

For definition of the barriers requiring surveillance per LCS 3.7.104, refer to the latest revision of Figure 8-10, sheet 3.

7.10.15.7 Conclusions

The ionization detector is expected to detect the products of combustion from an incipient fire and alert the control room for prompt response by the fire department. The available portable equipment is adequate to extinguish the fire.

The normal ventilation system will effectively remove the smoke generated by the design basis fire until the fire dampers operate. Portable smoke exhaust fans then may be used to vent smoke from the area.

The fire boundaries between 2-AR-9-87 and 2-AR-9-76 and 2-AR-24-94 were evaluated. The fire boundary and associated fire protection features were found to be adequate to prevent the propagation of fire beyond the fire boundaries. The low fire loading and the substantial construction of the barriers and nonrated door preclude the propagation of the design basis fire beyond the boundaries defining the area.

7.10.15.8 Fire Area 2-AR-9-87 Appendix R Compliance

Safe shutdown capability will be provided by utilizing Train B systems. Functionally redundant components protected from fire damage will be utilized in conjunction with operator action on manual or damaged components to achieve safe shutdown.

One train of systems necessary to achieve hot standby and cold shutdown conditions independent of the subject fire area will be free of fire damage. Therefore, this fire area complies with the criteria of 10CFR50, Appendix R, III.G.1.

7.10.16 FIRE AREA/ZONE: 2-AR-9-88

FIRE AREA/ZONE: 2-AR-9-88

AREA: 299 sq. ft. DESCRIPTION: CHARGING PUMP RM.

DESIGN BASIS FIRE

Fire Loading Category:	Minimal
Fire Loading - Max Permiss:	40,000.0 Btu's/sq.ft.

FIRE PROTECTION (AVAILABLE)

Suppression (type)	none
Hose Stations	none, (1) in 2-AR-9-76
Portable Extinguishers	none, adjacent
Detectors (type)	ionization

FIRE RESISTANCE RATING

Walls	north and south 3hr, others HC
Floor, Ceiling, Roof	2hr/ceiling, HC/floor
Penetrations	C, P, NP/76, ND/76, NC/76
Fixed Openings	none
Doors	W/2-AR-9-76

HOT STANDBY SYSTEMS	Equipment	Valves	Cable
Reactor Coolant			
Reactor Protection System			
Shutdown Cooling			
Chemical and Volume Control	A,B		A,B
Main Feedwater			
Main Steam			
HVAC	A,B		A,B
Auxiliary Feedwater			
Engineered Safety Feature			
Component Cooling Water			
Saltwater Cooling Water			
Emergency Chilled Water			
Diesel Generator Systems			

COLD SHUTDOWN SYSTEMS	Equipment	Valves	Cable
Shutdown Cooling			
CCW (To SDC)			
HVAC			
Summary (Hot and Cold)	A,B,A/B		A,B

ESSENTIAL ELECTRIC SYSTEMS	Equipment	MCC and Switchgear	Cable
220 KV (AC)			
4160 V (AC)			
480 V (AC)	A/B		
120 V (AC)			
125 V (DC)			
Electric Panels			B
Summary	A/B		B

ASSOCIATED CIRCUITS OF CONCERN

H/I Pressure Interface	NO
Spurious Operation	NO

FIRE AREA/ZONE 2-AR-9-88

7.10.16.1 Location

Auxiliary Radwaste Building - El. 9'-0" - Charging Pump Room - 299 square feet - Fig. 8-10

7.10.16.2 Fire Loading

Fire loading category - Minimal
Maximum permissible fire loading - 40,000 Btu/sq. ft. (Note 1)

Note 1:The maximum permissible fire loading is based on an evenly distributed loading of combustible materials.

7.10.16.3 Design Basis Fire

The design basis fire is postulated to be a fire that would involve mostly oil.

The design basis fire is conservatively based on the simultaneous total combustion of all combustibles in the area.

7.10.16.4 Fire Protection Equipment

There is no fire fighting equipment within the area. Manual fire fighting equipment is available in adjacent area 2-AR-9-76. One ionization smoke detector, located within the area, provides early warning alarm in the control room.

7.10.16.5 Construction

The north and south walls are 3 hour rated reinforced concrete. The west wall is nonrated reinforced concrete construction with an approximate thickness of 24 inches. The east wall is 18-inch thick nonrated concrete and concrete block construction. The ceiling is 2 hour rated. The floor is heavy concrete construction. A nonrated watertight door allows access to the area from the corridor (2-AR-9-76). The ventilation duct penetrations are not provided with fire dampers.

7.10.16.6 Licensee Controlled Specification Barriers

For definition of the barriers requiring surveillance per LCS 3.7.104, refer to the latest revision of Figure 8-10, sheet 3.

7.10.16.7 Conclusions

The ionization detector is expected to detect the products of combustion from an incipient fire and alert the control room for prompt response by the fire department. The available portable equipment is adequate to extinguish the fire.

The normal ventilation system will effectively remove the smoke generated by the design basis fire. Portable smoke exhaust fans may then be used to vent smoke from the fire area.

The fire area/zone boundaries were evaluated. The low fire loading and the substantial construction of the heavy concrete walls and nonrated door preclude the propagation of the design basis fire beyond the boundaries defining the area.

7.10.16.8 Fire Area 2-AR-9-88 Appendix R Compliance

Safe shutdown capability will be provided by utilizing Train A systems. Functionally redundant components protected from fire damage will be utilized in conjunction with operator action on manual or disabled components to achieve safe shutdown.

One train of systems necessary to achieve hot standby and cold shutdown conditions independent of the subject fire area will be free of fire damage. Therefore, this fire area complies with the criteria of 10CFR50, Appendix R, III.G.1.

7.10.17 FIRE AREA/ZONE: 2-AR-9-89

FIRE AREA/ZONE: 2-AR-9-89

AREA: 299 sq. ft. DESCRIPTION: CHARGING PUMP RM.

DESIGN BASIS FIRE

Fire Loading Category:	Minimal
Fire Loading - Max Permiss:	40,000.0 Btu's/sq.ft.

FIRE PROTECTION (AVAILABLE)

Suppression (type)	none
Hose Stations	none, (1) in 2-AR-9-76
Portable Extinguishers	none, adjacent
Detectors (type)	ionization

FIRE RESISTANCE RATING

Walls	north 3hr, others HC
Floor, Ceiling, Roof	2hr/ceiling, HC/floor
Penetrations	C, P, ND/76, NP/76, NC/76
Fixed Openings	none
Doors	W/2-AR-9-76

HOT STANDBY SYSTEMS	Equipment	Valves	Cable
Reactor Coolant			
Reactor Protection System			
Shutdown Cooling			
Chemical and Volume Control	B		B
Main Feedwater			
Main Steam			
HVAC	B		B
Auxiliary Feedwater			
Engineered Safety Feature			
Component Cooling Water			
Saltwater Cooling Water			
Emergency Chilled Water			
Diesel Generator Systems			

COLD SHUTDOWN SYSTEMS	Equipment	Valves	Cable
Shutdown Cooling			
CCW (To SDC)			
HVAC			
Summary (Hot and Cold)	B		B

ESSENTIAL ELECTRIC SYSTEMS	Equipment	MCC and Switchgear	Cable
220 KV (AC)			
4160 V (AC)			
480 V (AC)			
120 V (AC)			
125 V (DC)			
Electric Panels			B
Summary			B

ASSOCIATED CIRCUITS OF CONCERN

H/I Pressure Interface	NO
Spurious Operation	NO

FIRE AREA/ZONE 2-AR-9-89

7.10.17.1 Location

Auxiliary Radwaste Building - El. 9'-0" - Charging Pump Room - 299 square feet - Fig. 8-10

7.10.17.2 Fire Loading

Fire loading category - Minimal
Maximum permissible fire loading - 40,000 Btu/sq. ft. (Note 1)

Note 1:The maximum permissible fire loading is based on an evenly distributed loading of combustible materials.

7.10.17.3 Design Basis Fire

The design basis fire is postulated to be a fire that would involve mostly oil.

The design basis fire is conservatively based on the simultaneous total combustion of all combustibles in the area.

7.10.17.4 Fire Protection Equipment

There is no fire fighting equipment within the area. Manual fire fighting equipment is available in adjacent area 2-AR-9-76. One ionization smoke detector, located within the area, provides early warning alarm in the control room.

7.10.17.5 Construction

The north wall is 3 hour rated reinforced concrete. The south and west walls of the area are nonrated reinforced concrete with an approximate thickness of 24 inches. The east wall is 18-inch thick nonrated concrete and concrete block construction. The ceiling is 2 hour rated. The floor is heavy concrete construction. A nonrated watertight door allows access to the area from the corridor (2-AR-9-76). Ventilation duct penetrations are not provided with fire dampers.

7.10.17.6 Licensee Controlled Specification Barriers

For definition of the barriers requiring surveillance per LCS 3.7.104, refer to the latest revision of Figure 8-10, sheet 3.

7.10.17.7 Conclusions

The ionization detector is expected to detect the products of combustion from an incipient fire and alert the control room for prompt response by the fire department. The available portable equipment is adequate to extinguish the fire.

The normal ventilation system will effectively remove the smoke generated by the design basis fire. Portable smoke removal exhaust fans may then be used to vent smoke from the fire area.

The fire area/zone boundaries were evaluated. The low fire loading and the substantial construction of the heavy concrete walls and nonrated door preclude the propagation of the design basis fire beyond the boundaries defining the area.

7.10.17.8 Fire Area 2-AR-9-89 Appendix R Compliance

Safe shutdown capability will be provided by utilizing Train A systems. Functionally redundant components protected from fire damage will be utilized in conjunction with operator action on manual or disabled components to achieve safe shutdown.

One train of systems necessary to achieve hot standby and cold shutdown conditions independent of the subject fire area will be free of fire damage. Therefore, this fire area complies with the criteria of 10CFR50, Appendix R, III.G.1.

7.10.18 FIRE AREA/ZONE: 2-AR-9-90

FIRE AREA/ZONE: 2-AR-9-90

AREA: 100 sq. ft. DESCRIPTION: ELEVATOR

DESIGN BASIS FIRE

Fire Loading Category:	Minimal
Fire Loading - Max Permiss:	160,000.0 Btu's/sq.ft.

FIRE PROTECTION (AVAILABLE)

Suppression (type)	none
Hose Stations	none, (1) in adjacent zone each floor
Portable Extinguishers	yes, adjacent
Detectors (type)	ionization in elev. machine room

FIRE RESISTANCE RATING

Walls	3hr/121, 2hrs/other interior, HC/exterior
Floor, Ceiling, Roof	HC
Penetrations	NC/exterior, NC/102A
Fixed Openings	louver/exterior
Doors	B/2-AR-9-76, B/2-AR-24-94, B/2-AR-37-102A, B/2-AR-50-111A, B/2-AR-63-116, NR/exterior

HOT STANDBY SYSTEMS	Equipment	Valves	Cable
Reactor Coolant			
Reactor Protection System			
Shutdown Cooling			
Chemical and Volume Control			
Main Feedwater			
Main Steam			
HVAC			
Auxiliary Feedwater			
Engineered Safety Feature			
Component Cooling Water			
Saltwater Cooling Water			
Emergency Chilled Water			
Diesel Generator Systems			

COLD SHUTDOWN SYSTEMS	Equipment	Valves	Cable
Shutdown Cooling			
CCW (To SDC)			
HVAC			
Summary (Hot and Cold)			

ESSENTIAL ELECTRIC SYSTEMS	Equipment	MCC and Switchgear	Cable
220 KV (AC)			
4160 V (AC)			
480 V (AC)			
120 V (AC)			
125 V (DC)			
Electric Panels			
Summary			

ASSOCIATED CIRCUITS OF CONCERN

H/I Pressure Interface	NO
Spurious Operation	NO

7.10.19 FIRE AREA/ZONE: 3-AR-9-91

FIRE AREA/ZONE: 3-AR-9-91

AREA: 299 sq. ft. DESCRIPTION: CHARGING PUMP RM.

DESIGN BASIS FIRE

Fire Loading Category:	Minimal
Fire Loading - Max Permiss:	40,000.0 Btu's/sq.ft.

FIRE PROTECTION (AVAILABLE)

Suppression (type)	none
Hose Stations	none, (1) in 2-AR-9-76
Portable Extinguishers	none, adjacent
Detectors (type)	ionization

FIRE RESISTANCE RATING

Walls	south 3hr, others HC
Floor, Ceiling, Roof	2hr/ceiling, HC/floor
Penetrations	C, P, ND/76, NP/76
Fixed Openings	none
Doors	W/2-AR-9-76

HOT STANDBY SYSTEMS	Equipment	Valves	Cable
Reactor Coolant			
Reactor Protection System			
Shutdown Cooling			
Chemical and Volume Control	B		B
Main Feedwater			
Main Steam			
HVAC	B		B
Auxiliary Feedwater			
Engineered Safety Feature			
Component Cooling Water			
Saltwater Cooling Water			
Emergency Chilled Water			
Diesel Generator Systems			

COLD SHUTDOWN SYSTEMS	Equipment	Valves	Cable
Shutdown Cooling			
CCW (To SDC)			
HVAC			
Summary (Hot and Cold)	B		B

ESSENTIAL ELECTRIC SYSTEMS	Equipment	MCC and Switchgear	Cable
220 KV (AC)			
4160 V (AC)			
480 V (AC)			
120 V (AC)			
125 V (DC)			
Electric Panels			B
Summary			B

ASSOCIATED CIRCUITS OF CONCERN

H/I Pressure Interface	NO
Spurious Operation	NO

FIRE AREA/ZONE 3-AR-9-91

7.10.19.1 Location

Auxiliary Radwaste Building - El. 9'-0" - Charging Pump Room - 299 square feet - Fig. 8-10

7.10.19.2 Fire Loading

Fire loading category - Minimal
Maximum permissible fire loading - 40,000 Btu/sq. ft. (Note 1)

Note 1:The maximum permissible fire loading is based on an evenly distributed loading of combustible materials.

7.10.19.3 Design Basis Fire

The design basis fire is postulated to be a fire that would involve mostly oil.

The design basis fire is conservatively based on the simultaneous total combustion of all combustibles in the area.

7.10.19.4 Fire Protection Equipment

There is no fire fighting equipment within the area. Manual fire fighting equipment is available in adjacent area 2-AR-9-76. One ionization smoke detector, located within the area, provides early warning alarm in the control room.

7.10.19.5 Construction

The south wall is 3 hour rated reinforced concrete. The north and west walls of the area are nonrated reinforced concrete with an approximate thickness of 24 inches. The east wall is 18-inch thick nonrated concrete and concrete block construction. The ceiling is 2 hour rated. The floor is heavy concrete construction. A nonrated watertight door allows access to the area from the corridor (2-AR-9-76). Ventilation duct penetrations are not provided with fire dampers.

7.10.19.6 Licensee Controlled Specification Barriers

For definition of the barriers requiring surveillance per LCS 3.7.104, refer to the latest revision of Figure 8-10, sheet 3.

7.10.19.7 Conclusions

The ionization detector is expected to detect the products of combustion from an incipient fire and alert the control room for prompt response by the fire department. The available portable equipment is adequate to extinguish the fire.

The normal ventilation system will effectively remove the smoke generated by the design basis fire. Portable smoke exhaust fans may then be used to vent smoke from the fire area.

The fire area/zone boundaries were evaluated. The low fire loading and the substantial construction of the heavy concrete walls and nonrated door preclude the propagation of the design basis fire beyond the boundaries defining the area.

7.10.19.8 Fire Area 3-AR-9-91 Appendix R Compliance

Safe shutdown capability will be provided by utilizing Train A systems. Functionally redundant components protected from fire damage will be utilized in conjunction with operator action on manual or disabled components to achieve safe shutdown.

One train of systems necessary to achieve hot standby and cold shutdown conditions independent of the subject fire area will be free of fire damage. Therefore, this fire area complies with the criteria of 10CFR50, Appendix R, III.G.1.

7.10.20 FIRE AREA/ZONE: 3-AR-9-92

FIRE AREA/ZONE: 3-AR-9-92

AREA: 299 sq. ft. DESCRIPTION: CHARGING PUMP RM.

DESIGN BASIS FIRE

Fire Loading Category:	Minimal
Fire Loading - Max Permiss:	40,000.0 Btu's/sq.ft.

FIRE PROTECTION (AVAILABLE)

Suppression (type)	none
Hose Stations	none, (1) in 2-AR-9-76
Portable Extinguishers	none, adjacent
Detectors (type)	ionization

FIRE RESISTANCE RATING

Walls	south and north 3hr, others HC
Floor, Ceiling, Roof	2hr/ceiling, HC/floor
Penetrations	C, P, NP/76, ND/76
Fixed Openings	none
Doors	W/2-AR-9-76

HOT STANDBY SYSTEMS	Equipment	Valves	Cable
Reactor Coolant			
Reactor Protection System			
Shutdown Cooling			
Chemical and Volume Control	A,B		A,B
Main Feedwater			
Main Steam			
HVAC	A,B		A,B
Auxiliary Feedwater			
Engineered Safety Feature			
Component Cooling Water			
Saltwater Cooling Water			
Emergency Chilled Water			
Diesel Generator Systems			

COLD SHUTDOWN SYSTEMS	Equipment	Valves	Cable
Shutdown Cooling			
CCW (To SDC)			
HVAC			
Summary (Hot and Cold)	A,B,A/B		A,B

ESSENTIAL ELECTRIC SYSTEMS	Equipment	MCC and Switchgear	Cable
220 KV (AC)			
4160 V (AC)			
480 V (AC)	A/B		
120 V (AC)			
125 V (DC)			
Electric Panels			B
Summary	A/B		B

ASSOCIATED CIRCUITS OF CONCERN

H/I Pressure Interface	NO
Spurious Operation	NO

FIRE AREA/ZONE 3-AR-9-92

7.10.20.1 Location

Auxiliary Radwaste Building - El. 9'-0" - Charging Pump Room - 299 square feet - Fig. 8-10

7.10.20.2 Fire Loading

Fire loading category - Minimal
Maximum permissible fire loading - 40,000 Btu/sq. ft. (Note 1)

Note 1:The maximum permissible fire loading is based on an evenly distributed loading of combustible materials.

7.10.20.3 Design Basis Fire

The design basis fire is postulated to be a fire that would involve mostly oil.

The design basis fire is conservatively based on the simultaneous total combustion of all combustibles in the area.

7.10.20.4 Fire Protection Equipment

There is no fire fighting equipment within the area. Manual fire fighting equipment is available in adjacent area 2-AR-9-76. One ionization smoke detector, located within the area, provides early warning alarm in the control room.

7.10.20.5 Construction

The north and south walls are 3 hour rated reinforced concrete. The west wall is nonrated reinforced concrete with an approximate thickness of 24 inches. The east wall is 18-inch thick nonrated concrete and concrete block construction. The ceiling is 2 hour rated. The floor is heavy concrete construction. A nonrated watertight door allows access to the area from the corridor (2-AR-9-76). Ventilation duct penetrations are not provided with fire dampers.

7.10.20.6 Licensee Controlled Specification Barriers

For definition of the barriers requiring surveillance per LCS 3.7.104, refer to the latest revision of Figure 8-10, sheet 3.

7.10.20.7 Conclusions

The ionization detector is expected to detect the products of combustion from an incipient fire and alert the control room for prompt response by the fire department. The available portable equipment is adequate to extinguish the fire.

The normal ventilation system will effectively remove the smoke generated by the design basis fire. Portable smoke exhaust fans may then be used to vent smoke from the fire area.
The fire area/zone boundaries were evaluated. The low fire loading and the substantial construction of the heavy concrete walls and nonrated door preclude the propagation of the design basis fire beyond the boundaries defining the area.

7.10.20.8 Fire Area 3-AR-9-92 Appendix R Compliance

Safe shutdown capability will be provided by utilizing Train A systems. Functionally redundant components protected from fire damage will be utilized in conjunction with operator action on manual or disabled components to achieve safe shutdown.

One train of systems necessary to achieve hot standby and cold shutdown conditions independent of the subject fire area will be free of fire damage. Therefore, this fire area complies with the criteria of 10CFR50, Appendix R, III.G.1.

7.10.21 FIRE AREA/ZONE: 3-AR-9-93

FIRE AREA/ZONE: 3-AR-9-93

AREA: 299 sq. ft. DESCRIPTION: CHARGING PUMP ROOM

DESIGN BASIS FIRE

Fire Loading Category:	Minimal
Fire Loading - Max Permiss:	40,000.0 Btu's/sq.ft.

FIRE PROTECTION (AVAILABLE)

Suppression (type)	none
Hose Stations	none, (1) in 2-AR-9-76
Portable Extinguishers	*none, adjacent*
Detectors (type)	ionization

FIRE RESISTANCE RATING

Walls	north 3hr, others HC
Floor, Ceiling, Roof	2hr/ceiling, HC/floor
Penetrations	P, C, D, NP/76, QC/76
Fixed Openings	none
Doors	W/2-AR-9-76

HOT STANDBY SYSTEMS	Equipment	Valves	Cable
Reactor Coolant			
Reactor Protection System			
Shutdown Cooling			
Chemical and Volume Control	A	N	A,B
Main Feedwater			
Main Steam			
HVAC	A		A,B
Auxiliary Feedwater			
Engineered Safety Feature			
Component Cooling Water			
Saltwater Cooling Water			
Emergency Chilled Water			
Diesel Generator Systems			

COLD SHUTDOWN SYSTEMS	Equipment	Valves	Cable
Shutdown Cooling			
CCW (To SDC)			
HVAC			
Summary (Hot and Cold)	A	N	A,B

ESSENTIAL ELECTRIC SYSTEMS	Equipment	MCC and Switchgear	Cable
220 KV (AC)			
4160 V (AC)			
480 V (AC)			
120 V (AC)			
125 V (DC)			
Electric Panels			A,B
Summary			A,B

ASSOCIATED CIRCUITS OF CONCERN

H/I Pressure Interface	NO
Spurious Operation	NO

FIRE AREA/ZONE 3-AR-9-93

7.10.21.1 Location

Auxiliary Radwaste Building - El. 9'-0" - Charging Pump Room - 299 square feet - Fig. 8-10

7.10.21.2 Fire Loading

Fire loading category - Minimal
Maximum permissible fire loading - 40,000 Btu/sq. ft. (Note 1)

Note 1:The maximum permissible fire loading is based on an evenly distributed loading of combustible materials.

7.10.21.3 Design Basis Fire

The design basis fire is postulated to be a fire that would involve mostly oil.

The design basis fire is conservatively based on the simultaneous total combustion of all combustibles in the area.

7.10.21.4 Fire Protection Equipment

There is no fire fighting equipment within the area. Manual fire fighting equipment is available in adjacent area 2-AR-9-76. One ionization smoke detector, located within the area, provides early warning alarm in the control room.

7.10.21.5 Construction

The north wall of the area is 3 hour rated reinforced concrete. The south and west walls are nonrated heavy reinforced concrete with an approximate thickness of 24 inches. The east wall is nonrated 18-inch thick concrete and concrete block construction. The ceiling is 2 hour rated. The floor is heavy concrete construction. A watertight door allows access to the area from the corridor (2-AR-9-76). Ventilation duct penetrations are provided with 3 hour rated fire dampers.

7.10.21.6 Licensee Controlled Specification Barriers

For definition of the barriers requiring surveillance per LCS 3.7.104, refer to the latest revision of Figure 8-10, sheet 3.

7.10.21.7 Conclusions

The ionization detector is expected to detect the products of combustion from an incipient fire and alert the control room for prompt response by the fire department. The available portable equipment is adequate to extinguish the fire.

The normal ventilation system will effectively remove the smoke generated by the design basis fire until the fire dampers operate. Portable smoke exhaust fans then may be used to vent smoke from the area.

The fire boundaries between 3-AR-9-93 and 2-AR-9-76 and 2-AR-24-94 were evaluated. The fire boundary and associated fire protection features were found to be adequate to prevent the propagation of fire beyond the fire boundaries. The low fire loading and the substantial construction of the barriers and nonrated door preclude the propagation of the design basis fire beyond the boundaries defining the area.

7.10.21.8 Fire Area 3-AR-9-93 Appendix R Compliance

Safe shutdown capability will be provided by utilizing Train B systems. Functionally redundant components protected from fire damage will be utilized in conjunction with operator action on manual or disabled components to achieve safe shutdown.

One train of systems necessary to achieve hot standby and cold shutdown has been evaluated to remain available for safe shutdown in accordance with 10CFR50, Appendix R, III.G.1.

7.10.22 FIRE AREA/ZONE: 2-AR-24-94

FIRE AREA/ZONE: 2-AR-24-94

AREA: 14801 sq. ft. DESCRIPTION: CORRIDOR & ROOMS

DESIGN BASIS FIRE

Fire Loading Category:	Minimal
Fire Loading - Max Permiss:	13,000.0 Btu's/sq.ft.

FIRE PROTECTION (AVAILABLE)

Suppression (type)	none
Hose Stations	(3)
Portable Extinguishers	yes
Detectors (type)	none

FIRE RESISTANCE RATING

Walls	HC/Containment, 3hr/other bldgs. HC/other rooms
Floor, Ceiling, Roof	2hr
Penetrations	C, P, D, SG, SEE TEXT
Fixed Openings	CH/76, CH/102A, OD/96, OD/98
Doors	B/77,86,90,95,96,98,99

HOT STANDBY SYSTEMS	Equipment	Valves	Cable
Reactor Coolant			
Reactor Protection System			
Shutdown Cooling			
Chemical and Volume Control			A,B
Main Feedwater			
Main Steam			B
HVAC			A,B
Auxiliary Feedwater			
Engineered Safety Feature			
Component Cooling Water		X	X
Saltwater Cooling Water			
Emergency Chilled Water			
Diesel Generator Systems			

COLD SHUTDOWN SYSTEMS	Equipment	Valves	Cable
Shutdown Cooling			B
CCW (To SDC)			
HVAC			
Summary (Hot and Cold)		X	A,B,X

ESSENTIAL ELECTRIC SYSTEMS	Equipment	MCC and Switchgear	Cable
220 KV (AC)			
4160 V (AC)			
480 V (AC)			
120 V (AC)			
125 V (DC)			
Electric Panels			A,B,X
Summary			A,B,X

ASSOCIATED CIRCUITS OF CONCERN

H/I Pressure Interface	NO
Spurious Operation	YES

FIRE AREA/ZONE 2-AR-24-94

7.10.22.1 Location

Auxiliary Radwaste Building - El. 24'-0" - Corridor and Rooms - 14801 square feet - Figs. 8-1, 8-11, 8-27

7.10.22.2 Fire Loading

Fire loading category - Minimal
Maximum permissible fire loading - 13,000 Btu/sq. ft. (Note 1)

Note 1:The maximum permissible fire loading is based on an evenly distributed loading of combustible materials.

7.10.22.3 Design Basis Fire

A fire is not expected to occur in this area during normal operation. The maximum credible fire is postulated to involve transient combustible materials.

7.10.22.4 Fire Protection Equipment

Manual fire fighting equipment is available within the area. No fire detection equipment is provided.

7.10.22.5 Construction

Within the Radwaste Building the walls to 2-AR-9-73, -74, and -75 are reinforced concrete with 3 hour rating. The walls to 2-AR-9-77, -86, -90 and 2-AR-24-95, -96, -98, -99 are 2 hour rated concrete. The remaining walls to 2-AR-9-81, -82, 2-AR-24-100, -101 and -102B are nonrated heavy concrete. The walls separating the area from the penetration buildings (2-PE-9-2A and 3-PE-9-2A) are 3 hour rated. The walls separating the area from the containment building walls (2-CO-9-1C and 3-CO-9-1C) are heavy concrete with an approximate thickness of 48 inches. The floor and ceiling are 2 hour rated. The zone communicates with the stairwells (2-AR-9-86 and 2-AR-9-77) and the duct shaft rooms (3-AR-24-95 and 2-AR-24-99) through 1-1/2 hour rated doors. The zone communicates with the boric acid makeup tank areas (3-AR-24-96 and 3-AR-24-98) through an open doorway to each tank area. The elevator door is 1-1/2 hour rated. Duct penetrations to the letdown heat exchanger rooms (2-AR-24-100 and 3-AR-24-101) are not provided with fire dampers. The remainder of the ventilation duct penetrations are provided with 3 hour rated dampers. The seals in Licensee Controlled Specification barriers which are not rated consistent with the barrier or whose construction does not support a rating or are unsealed are NP/100, NP/101, QP/2A (Unit 2) and QP/2A (Unit 3).

7.10.22.6 Licensee Controlled Specification Barriers

For definition of the barriers requiring surveillance per LCS 3.7.104, refer to the latest revisions of Figures 8-1, 8-11, and 8-27, sheet 3.

7.10.22.7 Conclusions

Portable smoke exhaust fans may be used to vent smoke from the fire area.

The fire barriers between 2-AR-24-94 and 2-PE-9-2A, 2-PE-30-2C, 2-PE-30-2D, 3-PE-9-2A, 3-PE-30-2C, 3-PE-30-2D, and 2-AR-9-76 were evaluated. The fire boundaries and associated fire protection features were found to be adequate to prevent the propagation of fire beyond the fire boundaries. The low fire loading and the substantial construction of the barriers preclude the propagation of the design basis fire beyond the boundaries defining the area.

7.10.22.8 Fire Area 2-AR-24-94 Appendix R Compliance

Safe shutdown capability will be provided by utilizing Train A systems. Functionally redundant components protected from fire damage will be utilized in conjunction with operator action on manual or disabled components to achieve safe shutdown.

One train of systems necessary to achieve hot standby and cold shutdown has been evaluated to remain available for safe shutdown in accordance with 10CFR50, Appendix R, III.G.1 and III.G.2.b. A deviation from the requirements of 10CFR50 Appendix R, III.G.2.b has been accepted for redundant safe shutdown cables and equipment with less than 20 foot separation without suppression and detection.

7.10.23 FIRE AREA/ZONE: 3-AR-24-95

FIRE AREA/ZONE: 3-AR-24-95

AREA: 96 sq. ft. DESCRIPTION: DUCT SHAFT ROOM

DESIGN BASIS FIRE

Fire Loading Category:	Minimal
Fire Loading - Max Permiss:	160,000.0 Btu's/sq.ft.

FIRE PROTECTION (AVAILABLE)

Suppression (type)	none
Hose Stations	none, (1) in 2-AR-24-94
Portable Extinguishers	none
Detectors (type)	none

FIRE RESISTANCE RATING

Walls	south 3hr, others 2hr
Floor, Ceiling, Roof	2hr
Penetrations	P, C, D
Fixed Openings	none
Doors	B/2-AR-24-94, B/2-AR-37-102A, B/2-AR-50-111A

HOT STANDBY SYSTEMS	Equipment	Valves	Cable
Reactor Coolant			
Reactor Protection System			
Shutdown Cooling			
Chemical and Volume Control			A,B
Main Feedwater			
Main Steam			
HVAC			A
Auxiliary Feedwater			
Engineered Safety Feature			
Component Cooling Water			
Saltwater Cooling Water			
Emergency Chilled Water			
Diesel Generator Systems			

COLD SHUTDOWN SYSTEMS	Equipment	Valves	Cable
Shutdown Cooling			
CCW (To SDC)			
HVAC			
Summary (Hot and Cold)			A,B

ESSENTIAL ELECTRIC SYSTEMS	Equipment	MCC and Switchgear	Cable
220 KV (AC)			
4160 V (AC)			
480 V (AC)			
120 V (AC)			
125 V (DC)			
Electric Panels			A
Summary			A

ASSOCIATED CIRCUITS OF CONCERN

H/I Pressure Interface	NO
Spurious Operation	YES

FIRE AREA/ZONE 3-AR-24-95

7.10.23.1 Location

Auxiliary Radwaste Building - El. 24'-0" - Duct Shaft Room - 96 square feet - Fig. 8-11, 8-12, 8-13

7.10.23.2 Fire Loading

Fire loading category - Minimal
Maximum permissible fire loading - 160,000 Btu/sq. ft. (Note 1)

Note 1:The maximum permissible fire loading is based on an evenly distributed loading of combustible materials.

7.10.23.3 Design Basis Fire

A fire is not expected to occur in this area during normal operation. The maximum credible fire is postulated to involve transient combustible materials.

7.10.23.4 Fire Protection Equipment

There is no fire protection or fire detection equipment in the area. Manual fire fighting equipment is available in adjacent areas 2-AR-24-94, 2-AR-37-102A, and 2-AR-50-111A.

7.10.23.5 Construction

The south wall of the area is reinforced concrete with a 3 hour rating. The north, east, and west walls are 2 hour rated concrete construction. The floor and ceiling are 2 hour rated. At each elevation, 1-1/2 hour doors separate the area from the adjacent corridors (2-AR-24-94, 2-AR-37-102A, and 2-AR-50-111A). Ventilation duct penetrations are provided with 1-1/2 hour rated fire dampers.

7.10.23.6 Licensee Controlled Specification Barriers

For definition of the barriers requiring surveillance per LCS 3.7.104, refer to the latest revisions of Figures 8-11, 8-12, and 8-13, sheet 3.

7.10.23.7 Conclusions

Portable smoke exhaust fans may be used to remove smoke generated by the design basis fire. Portable smoke exhaust fans may then be utilized to vent smoke from the fire area.

The fire boundaries between 3-AR-24-95 and 2-AR-24-94, 2-AR-9-76, 2-AR-9-77 and 2-AR-50-111A were evaluated. The boundaries and associated fire protection features were

found to be adequate to prevent the propagation of fire between the fire areas. The design basis fire is insufficient to breach the barriers defining the fire area.

7.10.23.8 Fire Area 3-AR-24-95 Appendix R Compliance

Safe shutdown capacity will be provided by utilizing Train B systems. Functionally redundant components protected from fire damage will be utilized in conjunction with operator action on manual or disabled components to achieve safe shutdown.

One train of systems necessary to achieve hot standby and cold shutdown conditions independent of the subject fire area will be free of fire damage. Therefore, this fire area complies with the criteria of 10CFR50, Appendix R, III.G.1.

7.10.24 FIRE AREA/ZONE: 3-AR-24-96

FIRE AREA/ZONE: 3-AR-24-96

AREA: 491 sq. ft. DESCRIPTION: BORIC ACID MAKE-UP TK. ROOM

DESIGN BASIS FIRE

Fire Loading Category:	Minimal
Fire Loading - Max Permiss:	13,000.0 Btu's/sq.ft.

FIRE PROTECTION (AVAILABLE)

Suppression (type)	none
Hose Stations	none, (1) in 2-AR-24-94
Portable Extinguishers	none
Detectors (type)	none

FIRE RESISTANCE RATING

Walls	south 3hr, others 2hr
Floor, Ceiling, Roof	2hr
Penetrations	P, C, D
Fixed Openings	CH/80, OD/94
Doors	B/2-AR-37-102A, B/2-AR-50-111A

HOT STANDBY SYSTEMS	Equipment	Valves	Cable
Reactor Coolant			
Reactor Protection System			
Shutdown Cooling			
Chemical and Volume Control	N	A,B	A,B
Main Feedwater			
Main Steam			
HVAC			B
Auxiliary Feedwater			
Engineered Safety Feature			
Component Cooling Water			
Saltwater Cooling Water			
Emergency Chilled Water			
Diesel Generator Systems			

COLD SHUTDOWN SYSTEMS	Equipment	Valves	Cable
Shutdown Cooling			
CCW (To SDC)			
HVAC			
Summary (Hot and Cold)	N	A,B	A,B

ESSENTIAL ELECTRIC SYSTEMS	Equipment	MCC and Switchgear	Cable
220 KV (AC)			
4160 V (AC)			
480 V (AC)			
120 V (AC)			
125 V (DC)			
Electric Panels			A,B
Summary			A,B

ASSOCIATED CIRCUITS OF CONCERN

H/I Pressure Interface	NO
Spurious Operation	YES

FIRE AREA/ZONE 3-AR-24-96

7.10.24.1 Location

Auxiliary Radwaste Building - El. 24'-0" - Boric Acid Make-Up Tank Room - 491 square feet - Fig. 8-11, 8-12, 8-13

7.10.24.2 Fire Loading

Fire loading category - Minimal
Maximum permissible fire loading - 13,000 Btu/sq. ft. (Note 1)

Note 1:The maximum permissible fire loading is based on an evenly distributed loading of combustible materials.

7.10.24.3 Design Basis Fire

A fire is not expected to occur in this area during normal operation. The maximum credible fire is postulated to involve transient combustible materials.

7.10.24.4 Fire Protection Equipment

There is no fire protection or fire detection equipment in this area. Manual fire fighting equipment is available in adjacent area 2-AR-24-94.

7.10.24.5 Construction

The south wall is reinforced concrete with a 3 hour rating The east, west, and north walls are 2 hour rated, as are the ceiling and floor. At elevations
37'-0" and 50'-0", 1-1/2 hour rated doors separate the area from the corridors (2-AR-37-102A and 2-AR-50-111A). At elevation 24'-0", the area communicates with corridor 2-AR-24-94 through an open doorway. Ventilation duct penetrations are provided with 1-1/2 hour rated fire dampers. A hatch in the floor allows access to the chemical waste tank room (2-AR-9-80) below.

7.10.24.6 Licensee Controlled Specification Barriers

For definition of the barriers requiring surveillance per LCS 3.7.104, refer to the latest revisions of Figures 8-11, 8-12, and 8-13, sheet 3.

7.10.24.7 Conclusions

Portable smoke exhaust fans may be used to remove smoke generated by the design basis fire.

The design basis fire will be insufficient to breach the boundaries defining the area.

7.10.24.8 Fire Area 3-AR-24-96 Appendix R Compliance

Safe shutdown capability will be provided by utilizing Train A systems. Functionally redundant components protected from fire damage will be utilized in conjunction with operator action on manual or disabled components to achieve safe shutdown.

One train of systems necessary to achieve hot standby and cold shutdown conditions independent of the subject fire area will be free of fire damage. Therefore, this fire area complies with the criteria of 10CFR50, Appendix R, III.G.1.

7.10.25 FIRE AREA/ZONE: 2-AR-24-98

FIRE AREA/ZONE: 2-AR-24-98

AREA: 491 sq. ft. DESCRIPTION: BORIC ACID MAKE-UP TK. ROOM

DESIGN BASIS FIRE

Fire Loading Category:	Minimal
Fire Loading - Max Permiss:	13,000.0 Btu's/sq.ft.

FIRE PROTECTION (AVAILABLE)

Suppression (type)	none
Hose Stations	none, (1) in 2-AR-24-94
Portable Extinguishers	none
Detectors (type)	none

FIRE RESISTANCE RATING

Walls	north 3hr, others 2hr
Floor, Ceiling, Roof	2hr
Penetrations	P, C, D
Fixed Openings	CH/83, OD/94
Doors	B/2-AR-37-102A, B/2-AR-50-111A

HOT STANDBY SYSTEMS	Equipment	Valves	Cable
Reactor Coolant			
Reactor Protection System			
Shutdown Cooling			
Chemical and Volume Control	N	A,B	A,B
Main Feedwater			
Main Steam			
HVAC			B
Auxiliary Feedwater			
Engineered Safety Feature			
Component Cooling Water			B
Saltwater Cooling Water			
Emergency Chilled Water			
Diesel Generator Systems			

COLD SHUTDOWN SYSTEMS	Equipment	Valves	Cable
Shutdown Cooling			
CCW (To SDC)			
HVAC			
Summary (Hot and Cold)	N	A,B	A,B

ESSENTIAL ELECTRIC SYSTEMS	Equipment	MCC and Switchgear	Cable
220 KV (AC)			
4160 V (AC)			
480 V (AC)			
120 V (AC)			
125 V (DC)			
Electric Panels			A,B,X
Summary			A,B,X

ASSOCIATED CIRCUITS OF CONCERN

H/I Pressure Interface	NO
Spurious Operation	YES

FIRE AREA/ZONE 2-AR-24-98

7.10.25.1 Location

Auxiliary Radwaste Building - El. 24'-0" - Boric Acid Make-Up Tank Room - 491 square feet - Fig. 8-11, 8-12, 8-13

7.10.25.2 Fire Loading

Fire loading category - Minimal
Maximum permissible fire loading - 13,000 Btu/sq. ft. (Note 1)

Note 1:The maximum permissible fire loading is based on an evenly distributed loading of combustible materials.

7.10.25.3 Design Basis Fire

A fire is not expected to occur in this area during normal operation. The maximum credible fire is postulated to involve transient combustible materials.

Fire Protection Equipment
There is no fire protection or fire detection equipment in this area. Manual fire fighting equipment is available in adjacent area 2-AR-24-94.

7.10.25.4 Construction

The north wall is reinforced concrete with a 3 hour rating. The east, west, and south walls are 2 hour rated, as are the ceiling and floor. At elevations 37'-0" and 50'-0" 1-1/2 hour rated doors separate the area from the corridors (2-AR-37-102A and 2-AR-50-111A). At elevation 24'-0", the area communicates with corridor 2-AR-24-94 through an open doorway. Ventilation duct penetrations are provided with 1-1/2 hour rated fire dampers. A hatch in the floor allows access to the concentrated boric acid tank room (2-AR-9-83) below.

7.10.25.5 Licensee Controlled Specification Barriers

For definition of the barriers requiring surveillance per LCS 3.7.104, refer to the latest revisions of Figures 8-11, 8-12, and 8-13, sheet 3.

7.10.25.6 Conclusions

Portable smoke exhaust fans may be used to remove smoke generated by the design basis fire.

The design basis fire will be insufficient to breach the barriers defining the area.

FIRE AREA/ZONE 2-AR-24-98

7.10.25.7 Fire Area 2-AR-24-98 Appendix R Compliance

Safe shutdown capability will be provided by utilizing Train A systems. Functionally redundant components protected from fire damage will be utilized in conjunction with operator action on manual or disabled components to achieve safe shutdown.

One train of systems necessary to achieve hot standby and cold shutdown conditions independent of the subject fire area will be free of fire damage. Therefore, this fire area complies with the criteria of 10CFR50, Appendix R, III.G.1.

7.10.26 FIRE AREA/ZONE: 2-AR-24-99

FIRE AREA/ZONE: 2-AR-24-99

AREA: 96 sq. ft. DESCRIPTION: DUCT SHAFT ROOM

DESIGN BASIS FIRE

Fire Loading Category:	Minimal
Fire Loading - Max Permiss:	160,000.0 Btu's/sq.ft.

FIRE PROTECTION (AVAILABLE)

Suppression (type)	none
Hose Stations	none (1) available on each floor
Portable Extinguishers	none
Detectors (type)	none

FIRE RESISTANCE RATING

Walls	north 3hr, others 2hr
Floor, Ceiling, Roof	2hr
Penetrations	P, C, D
Fixed Openings	none
Doors	B/2-AR-24-94, B/2-AR-37-102A, B/2-AR-50-111A

HOT STANDBY SYSTEMS	Equipment	Valves	Cable
Reactor Coolant			
Reactor Protection System			
Shutdown Cooling			
Chemical and Volume Control			A,B
Main Feedwater			
Main Steam			
HVAC			A
Auxiliary Feedwater			
Engineered Safety Feature			
Component Cooling Water			A
Saltwater Cooling Water			
Emergency Chilled Water			
Diesel Generator Systems			

COLD SHUTDOWN SYSTEMS	Equipment	Valves	Cable
Shutdown Cooling			
CCW (To SDC)			
HVAC			
Summary (Hot and Cold)			A,B

ESSENTIAL ELECTRIC SYSTEMS	Equipment	MCC and Switchgear	Cable
220 KV (AC)			
4160 V (AC)			
480 V (AC)			
120 V (AC)			
125 V (DC)			
Electric Panels			A
Summary			A

ASSOCIATED CIRCUITS OF CONCERN

H/I Pressure Interface	NO
Spurious Operation	YES

FIRE AREA/ZONE 2-AR-24-99

7.10.26.1 Location

Auxiliary Radwaste Building - El. 24'-0" - Duct Shaft Room - 96 square feet - Fig. 8-11, 8-12, 8-13

7.10.26.2 Fire Loading

Fire loading category - Minimal
Maximum permissible fire loading - 160,000 Btu/sq. ft. (Note 1)

Note 1:The maximum permissible fire loading is based on an evenly distributed loading of combustible materials.

7.10.26.3 Design Basis Fire

A fire is not expected to occur in this area during normal operation. The maximum credible fire is postulated to involve transient combustible materials.

7.10.26.4 Fire Protection Equipment

There is no fire protection or fire detection equipment in this area. Manual fire fighting equipment is available in adjacent areas 2-AR-24-94, 2-AR-37-102A, and 2-AR-50-111A.

7.10.26.5 Construction

The north wall of the area is reinforced concrete with a 3 hour rating. The south, east, and west walls are 2 hour rated concrete construction. The floor and ceiling are 2 hour rated. At each elevation, 1-1/2 hour doors separate the area from the adjacent corridors (2-AR-24-94, 2-AR-37-102A, and 2-AR-50-111A). Ventilation duct penetrations are provided with 1-1/2 hour rated fire dampers.

7.10.26.6 Licensee Controlled Specification Barriers

For definition of the barriers requiring surveillance per LCS 3.7.104, refer to the latest revisions of Figures 8-11, 8-12, and 8-13, sheet 3.

7.10.26.7 Conclusions

Portable smoke exhaust fans may be used to remove smoke generated by the design basis fire.

The fire boundaries between 2-AR-24-99 and 2-AR-9-76, 2-AR-9-86, 2-AR-24-94 and 2-AR-50-111A were evaluated. The boundaries and associated fire protection features were found to be adequate to prevent the propagation of fire between the fire areas. The design basis fire is insufficient to breach the barriers defining the fire area.

7.10.26.8 Fire Area 2-AR-24-99 Appendix R Compliance

Safe shutdown capability will be provided by utilizing Train B systems. Functionally redundant components protected from fire damage will be utilized in conjunction with operator action on manual or disabled components to achieve safe shutdown.

One train of systems necessary to achieve hot standby and cold shutdown conditions independent of the subject fire area will be free of fire damage. Therefore, this fire area complies with the criteria of 10CFR50, Appendix R, III.G.1.

7.10.27 FIRE AREA/ZONE: 2-AR-24-100

FIRE AREA/ZONE: 2-AR-24-100

AREA: 202 sq. ft. DESCRIPTION: LETDOWN HT. EXCH. RM.

DESIGN BASIS FIRE

Fire Loading Category:	Minimal
Fire Loading - Max Permiss:	13,000.0 Btu's/sq.ft.

FIRE PROTECTION (AVAILABLE)

Suppression (type)	none
Hose Stations	none,(1)2-AR-24-94
Portable Extinguishers	none
Detectors (type)	none

FIRE RESISTANCE RATING

Walls	HC
Floor, Ceiling, Roof	2hr
Penetrations	P, C, ND/94, NP/94
Fixed Openings	none
Doors	none

HOT STANDBY SYSTEMS	Equipment	Valves	Cable
Reactor Coolant			
Reactor Protection System			
Shutdown Cooling			
Chemical and Volume Control			A,B
Main Feedwater			
Main Steam			
HVAC			B
Auxiliary Feedwater			
Engineered Safety Feature			
Component Cooling Water			
Saltwater Cooling Water			
Emergency Chilled Water			
Diesel Generator Systems			

COLD SHUTDOWN SYSTEMS	Equipment	Valves	Cable
Shutdown Cooling			
CCW (To SDC)			
HVAC			
Summary (Hot and Cold)			B

ESSENTIAL ELECTRIC SYSTEMS	Equipment	MCC and Switchgear	Cable
220 KV (AC)			
4160 V (AC)			
480 V (AC)			
120 V (AC)			
125 V (DC)			
Electric Panels			B
Summary			B

ASSOCIATED CIRCUITS OF CONCERN

H/I Pressure Interface	NO
Spurious Operation	NO

FIRE AREA/ZONE 2-AR-24-100

7.10.27.1 Location

Auxiliary Radwaste Building - El. 24'-0" - Letdown Heat Exchanger Room - 202 square feet - Fig. 8-11

7.10.27.2 Fire Loading

Fire loading category - Minimal
Maximum permissible fire loading - 13,000 Btu/sq. ft. (Note 1)

Note 1:The maximum permissible fire loading is based on an evenly distributed loading of combustible materials.

7.10.27.3 Design Basis Fire

A fire is not expected to occur in this area during normal operation. The maximum credible fire is postulated to involve transient combustible materials.

Fire Protection Equipment

There is no fire protection or fire detection equipment in this area. Manual fire fighting equipment is available in adjacent area 2-AR-24-94.

7.10.27.4 Construction

The north, south, and west walls are heavy concrete, with an approximate thickness of 24 inches. The east wall is 2-1/2 foot thick concrete and concrete block construction. The floor and ceiling are 2 hour rated. There are no doors to this area; access is through removal of the masonry blocks. The ventilation duct penetrations are not provided with fire dampers.

7.10.27.5 Licensee Controlled Specification Barriers

For definition of the barriers requiring surveillance per LCS 3.7.104, refer to the latest revision of Figure 8-11, sheet 3.

7.10.27.6 Conclusions

Normal ventilation will effectively remove smoke generated by the design basis fire. Portable smoke exhaust fans may then be used to vent smoke from the fire area.

The design basis fire is postulated to involve transient combustibles.

The fire area/zone boundaries were evaluated. The design basis fire is insufficient to breach the barriers defining the fire area.

FIRE AREA/ZONE 2-AR-24-100

7.10.27.7 Fire Area 2-AR-24-100 Appendix R Compliance

Safe shutdown capability will be provided by utilizing Train A systems. Functionally redundant components protected from fire damage will be utilized in conjunction with operator action on manual or disabled components to achieve safe shutdown.

One train of systems necessary to achieve hot standby and cold shutdown conditions independent of the subject fire area will be free of fire damage. Therefore, this fire area complies with the criteria of 10CFR50, Appendix R, III.G.1.

7.10.28 FIRE AREA/ZONE: 3-AR-24-101

FIRE AREA/ZONE: 3-AR-24-101

AREA: 202 sq. ft. DESCRIPTION: LETDOWN HT. EXCH. RM.

DESIGN BASIS FIRE

Fire Loading Category:	Minimal
Fire Loading - Max Permiss:	13,000.0 Btu's/sq.ft.

FIRE PROTECTION (AVAILABLE)

Suppression (type)	none
Hose Stations	none, (1) 2-AR-24-94
Portable Extinguishers	none
Detectors (type)	none

FIRE RESISTANCE RATING

Walls	HC
Floor, Ceiling, Roof	2hr
Penetrations	P, C, ND/94, NP/94
Fixed Openings	none
Doors	none

HOT STANDBY SYSTEMS	Equipment	Valves	Cable
Reactor Coolant			
Reactor Protection System			
Shutdown Cooling			
Chemical and Volume Control			A,B
Main Feedwater			
Main Steam			
HVAC			B
Auxiliary Feedwater			
Engineered Safety Feature			
Component Cooling Water			
Saltwater Cooling Water			
Emergency Chilled Water			
Diesel Generator Systems			

COLD SHUTDOWN SYSTEMS	Equipment	Valves	Cable
Shutdown Cooling			
CCW (To SDC)			
HVAC			
Summary (Hot and Cold)			B

ESSENTIAL ELECTRIC SYSTEMS	Equipment	MCC and Switchgear	Cable
220 KV (AC)			
4160 V (AC)			
480 V (AC)			
120 V (AC)			
125 V (DC)			
Electric Panels			B
Summary			B

ASSOCIATED CIRCUITS OF CONCERN

H/I Pressure Interface	NO
Spurious Operation	NO

FIRE AREA/ZONE 3-AR-24-101

7.10.28.1 Location

Auxiliary Radwaste Building - El. 24'-0" - Letdown Heat Exchanger Room - 202 square feet - Fig. 8-11

7.10.28.2 Fire Loading

Fire loading category - Minimal
Maximum permissible fire loading - 13,000 Btu/sq. ft. (Note 1)

Note 1:The maximum permissible fire loading is based on an evenly distributed loading of combustible materials.
Design Basis Fire

A fire is not expected to occur in this area during normal operation. The maximum credible fire is postulated to involve transient combustible materials.

7.10.28.3 Fire Protection Equipment

There is no fire protection or fire detection equipment in this area. Manual fire fighting equipment is available in adjacent area 2-AR-24-94.

7.10.28.4 Construction

The north, south, and west walls are heavy concrete, with an approximate thickness of 24 inches. The east wall is 2-1/2 foot thick concrete and concrete block construction. The floor and ceiling are 2 hour rated. There are no doors to this area; access is through removal of the masonry blocks. The ventilation duct penetrations are not provided with fire dampers.

7.10.28.5 Licensee Controlled Specification Barriers

For definition of the barriers requiring surveillance per LCS 3.7.104, refer to the latest revision of Figure 8-11, sheet 3.

7.10.28.6 Conclusions

Normal ventilation will effectively remove smoke generated by the design basis fire. Portable smoke exhaust fans may then be used to vent smoke from the fire area.

The design basis fire is postulated to involve transient combustibles.

The fire area/zone boundaries were evaluated. The design basis fire is insufficient to breach the barriers defining the fire area.

FIRE AREA/ZONE 3-AR-24-101

7.10.28.7 Fire Area 3-AR-24-101 Appendix R Compliance

Safe shutdown capability will be provided by utilizing Train A systems. Functionally redundant components protected from fire damage will be utilized in conjunction with operator action on manual or damaged components to achieve safe shutdown.

One train of systems necessary to achieve hot standby and cold shutdown conditions independent of the subject fire area will be free of fire damage. Therefore, this fire area complies with the criteria of 10CFR50, Appendix R, III.G.1.

7.10.29 FIRE AREA/ZONE: 2-AR-37-102A

FIRE AREA/ZONE: 2-AR-37-102A

AREA: 23071 sq. ft. DESCRIPTION: CORRIDOR & RMS.

DESIGN BASIS FIRE

Fire Loading Category:	Low
Fire Loading - Max Permiss:	40,000.0 Btu's/sq.ft.

FIRE PROTECTION (AVAILABLE)

Suppression (type)	wet pipe sprinklers in rooms 339, 337, 336
Hose Stations	(4)
Portable Extinguishers	yes
Detectors (type)	ionization partial, heat detectors partial

FIRE RESISTANCE RATING

Walls	to other Bldgs, 73,75,107,109,111A/3hr, NR/102B, HC/2-AR-50-111A (Room 412 & 413)
Floor, Ceiling, Roof	2hr, NR/102B
Penetrations	P, C, D, ND/102B, NP/exterior
Fixed Openings	CH/74,81,82,94,102B,111A,116, MH-111A, ND/111A, NC/111A
Doors	A/3-AR-37-104, A/2-AR-37-105, B/2-AR-9-90, 2-AR-50-111A, NR/exterior, B/others

HOT STANDBY SYSTEMS	Equipment	Valves	Cable
Reactor Coolant			
Reactor Protection System	A,B,C,D		A,B,C,D
Shutdown Cooling			
Chemical and Volume Control		B	A,B
Main Feedwater			
Main Steam			
HVAC			
Auxiliary Feedwater			
Engineered Safety Feature			
Component Cooling Water			X
Saltwater Cooling Water			
Emergency Chilled Water			
Diesel Generator Systems			

COLD SHUTDOWN SYSTEMS	Equipment	Valves	Cable
Shutdown Cooling			
CCW (To SDC)			
HVAC			
Summary (Hot and Cold)	A,B,C,D	B	A,B,C,D,X

ESSENTIAL ELECTRIC SYSTEMS	Equipment	MCC and Switchgear	Cable
220 KV (AC)			
4160 V (AC)			
480 V (AC)			
120 V (AC)			
125 V (DC)			
Electric Panels	A,B,C,D		A,B,C,D,X
Summary	A,B,C,D		A,B,C,D,X

ASSOCIATED CIRCUITS OF CONCERN

H/I Pressure Interface	NO
Spurious Operation	YES

FIRE AREA/ZONE 2-AR-37-102A

7.10.29.1 Location

Auxiliary Radwaste Building - El. 37'-0" - Corridor and Rooms - 23,071 square feet - Fig. 8-12

7.10.29.2 Fire Loading

Fire loading category - Low
Maximum permissible fire loading - 40,000 Btu/sq. ft. (Note 1)

Note 1:The maximum permissible fire loading is based on an evenly distributed loading of combustible materials.

7.10.29.3 Design Basis Fire

The design basis fire is postulated to be a fire that would involve mostly oil, flammable liquid, cable insulation and Class A combustibles.

The design basis fire is conservatively based on the simultaneous total combustion of all combustibles in the area.

7.10.29.4 Fire Protection Equipment

The zone contains an automatic wet pipe sprinkler system covering the drum storage, reusable clothing, and the loading dock areas. Manual fire fighting equipment is available within the zone. Fixed temperature rate of rise heat detectors or ionization smoke detectors are located in hazard and storage areas to provide early warning alarm in the control room.

7.10.29.5 Construction

The walls of the area which border other buildings are reinforced concrete with a 3 hour rating. The walls separating the area from the tank rooms (2-AR-37-107 and 3-AR-37-109) and the makeup storage tank rooms (2-AR-9-73 and 3-AR-9-75) are also 3 hour rated. Other interior areas are separated by nonrated or 2 hour rated concrete walls. The floor and ceiling are 2 hour rated. The elevator door is 1-1/2 hour rated. Two 3 hour rated doors communicate with the pipe rooms (2-AR-37-105 and 3-AR-37-104). Ventilation duct penetration to 102A (room 412/413) is not provided with a fire damper. There are open penetrations in the walls from room 412 & 413 to fire area 2-AR-50-111A.

The walls separating room 412 & 413 from 2-AR-50-111A are nonrated. The door from 413 to 2-AR-50-111A is 1-1/2 hour rated.

FIRE AREA/ZONE 2-AR-37-102A

A nonrated roll-up door opens to the exterior from the loading dock. All other doors are 1-1/2 hour rated. Ventilation duct penetrations to adjacent fire areas are provided with 1-1/2 hour fire dampers. The ventilation duct penetration to adjacent area 2-AR-24-102B is not provided with a fire damper.

7.10.29.6 Licensee Controlled Specification Barriers

For definition of the barriers requiring surveillance per LCS 3.7.104, refer to the latest revision of Figure 8-12, sheet 3.

7.10.29.7 Conclusions

Ionization detectors and fixed temperature rate of rise heat detectors are installed locally to cover hazard and storage areas. The installed detectors are expected to detect the fire in its initial stages of growth and alert the control room for prompt response by the fire department. The available portable equipment is adequate to extinguish the fire.

In the event of a fire in the loading dock, reusable clothing, or drum storage areas, the wet pipe sprinklers will actuate automatically to control and extinguish the fire.

The normal ventilation system will effectively remove the smoke generated by the design basis fire until the fire dampers operate. Portable smoke exhaust fans may then be used to vent smoke from the fire area.

The barriers between 2-AR-37-102A and 2-AR-50-111A were evaluated. The boundaries and their associated fire protection features were found to be adequate to prevent the propagation of fire between fire areas.

The design basis fire is insufficient to breach the barriers defining the zone/fire area.

7.10.29.8 Fire Area 2-AR-37-102 Appendix R Compliance

Safe shutdown capability will be provided by utilizing Train B systems. Functionally redundant components protected from fire damage will be utilized in conjunction with operator action on manual or disabled components to achieve safe shutdown.

One train of systems necessary to achieve hot standby and cold shutdown conditions independent of the subject fire area will be free of fire damage. Therefore, this fire area complies with the criteria of 10CFR50, Appendix R, III.G.1.

7.10.30 FIRE AREA/ZONE: 2-AR-24-102B

FIRE AREA/ZONE: 2-AR-24-102B

AREA: 896 sq. ft. DESCRIPTION: EQUIPMENT ROOM

DESIGN BASIS FIRE

Fire Loading Category:	Minimal
Fire Loading - Max Permiss:	40,000.0 Btu's/sq.ft.

FIRE PROTECTION (AVAILABLE)

Suppression (type)	none
Hose Stations	none
Portable Extinguishers	yes
Detectors (type)	ionization

FIRE RESISTANCE RATING

Walls	west 3hr, others HC or NR
Floor, Ceiling, Roof	2hr floor, ceiling NR
Penetrations	P, C, ND/102A, NP/82
Fixed Openings	CH/102A
Doors	B/2-AR-37-102A

HOT STANDBY SYSTEMS	Equipment	Valves	Cable
Reactor Coolant			
Reactor Protection System			
Shutdown Cooling			
Chemical and Volume Control			
Main Feedwater			
Main Steam			
HVAC			
Auxiliary Feedwater			
Engineered Safety Feature			
Component Cooling Water			
Saltwater Cooling Water			
Emergency Chilled Water			
Diesel Generator Systems			

COLD SHUTDOWN SYSTEMS	Equipment	Valves	Cable
Shutdown Cooling			
CCW (To SDC)			
HVAC			
Summary (Hot and Cold)			

ESSENTIAL ELECTRIC SYSTEMS	Equipment	MCC and Switchgear	Cable
220 KV (AC)			
4160 V (AC)			
480 V (AC)			
120 V (AC)			
125 V (DC)			
Electric Panels			B
Summary			B

ASSOCIATED CIRCUITS OF CONCERN

H/I Pressure Interface	NO
Spurious Operation	YES

FIRE AREA/ZONE 2-AR-24-102B

7.10.30.1 Location

Auxiliary Radwaste Building - El. 24'-0" - Equipment Room - 896 square feet

7.10.30.2 Fire Loading

Fire loading category - Minimal
Maximum permissible fire loading - 40,000 Btu/sq. ft. (Note 1)

Note 1: The maximum permissible fire loading is based on an evenly distributed loading of combustible materials.

7.10.30.3 Design Basis Fire

The design basis fire would involve mostly cable insulation and Class A combustibles. The design basis fire is conservatively based on the simultaneous total combustion of all combustibles in the zone.

7.10.30.4 Fire Protection Equipment

The zone contains no automatic suppression or hose stations. Manual fire fighting equipment is available in the zone. Ionization smoke detectors are located in the zone to provide early warning alarm to the control room.

7.10.30.5 Construction

The west wall of the zone is 3 hour rated. The stair wall communicating with 2-AR-37-102A is nonrated as is the ceiling to 102A. All others are of nonrated heavy concrete construction. The floor is 2 hour rated. The zone contains ductwork without dampers, a concrete hatch and a rated fire door which all communicate with 2-AR-37-102A.

7.10.30.6 Licensee Controlled Specification Barriers

For definition of the barriers requiring surveillance per LCS 3.7.104, refer to the latest revision of Figure 8-11, sheet 3.

7.10.30.7 Conclusions

The ionization detectors are expected to detect the products of combustion from an incipient fire and alert the control room for prompt action by the fire department. The available portable equipment is adequate to extinguish the fire.

FIRE AREA/ZONE 2-AR-24-102B

Portable smoke exhaust fans may be used to vent smoke from the fire area.

The fire area/zone boundaries were evaluated. The design basis fire is insufficient to breach the barriers defining the zone/fire area.

Appendix R compliance for fire area 2-AR-24-102 is discussed in fire zone 2-AR-24-102A.

7.10.31 FIRE AREA/ZONE 3-AR-37-104

FIRE AREA/ZONE: 3-AR-37-104

AREA: 144 sq. ft. DESCRIPTION: PIPE RM.

DESIGN BASIS FIRE

Fire Loading Category:	Minimal
Fire Loading - Max Permiss:	160,000.0 Btu's/sq.ft.

FIRE PROTECTION (AVAILABLE)

Suppression (type)	none
Hose Stations	none
Portable Extinguishers	none, adjacent
Detectors (type)	none

FIRE RESISTANCE RATING

Walls	south 3hr, others 2hr
Floor, Ceiling, Roof	2hr
Penetrations	P, C
Fixed Openings	none
Doors	A/2-AR-37-102A

HOT STANDBY SYSTEMS	Equipment	Valves	Cable
Reactor Coolant			
Reactor Protection System			
Shutdown Cooling			
Chemical and Volume Control			
Main Feedwater			
Main Steam			
HVAC			
Auxiliary Feedwater			
Engineered Safety Feature			
Component Cooling Water			
Saltwater Cooling Water			
Emergency Chilled Water			
Diesel Generator Systems			

COLD SHUTDOWN SYSTEMS	Equipment	Valves	Cable
Shutdown Cooling			
CCW (To SDC)			
HVAC			
Summary (Hot and Cold)			

ESSENTIAL ELECTRIC SYSTEMS	Equipment	MCC and Switchgear	Cable
220 KV (AC)			
4160 V (AC)			
480 V (AC)			
120 V (AC)			
125 V (DC)			
Electric Panels			
Summary			

ASSOCIATED CIRCUITS OF CONCERN

H/I Pressure Interface	NO
Spurious Operation	NO

7.10.32 FIRE AREA/ZONE 2-AR-37-105

FIRE AREA/ZONE: 2-AR-37-105

AREA: 144 sq. ft. DESCRIPTION: PIPE RM.

DESIGN BASIS FIRE

Fire Loading Category:	Minimal
Fire Loading - Max Permiss:	160,000.0 Btu's/sq.ft.

FIRE PROTECTION (AVAILABLE)

Suppression (type)	none
Hose Stations	none
Portable Extinguishers	*none, adjacent*
Detectors (type)	none

FIRE RESISTANCE RATING

Walls	north 3hr, others 2hr
Floor, Ceiling, Roof	2hr
Penetrations	P, C
Fixed Openings	none
Doors	A/2-AR-37-102A

HOT STANDBY SYSTEMS	Equipment	Valves	Cable
Reactor Coolant			
Reactor Protection System			
Shutdown Cooling			
Chemical and Volume Control			
Main Feedwater			
Main Steam			
HVAC			
Auxiliary Feedwater			
Engineered Safety Feature			
Component Cooling Water			
Saltwater Cooling Water			
Emergency Chilled Water			
Diesel Generator Systems			

COLD SHUTDOWN SYSTEMS	Equipment	Valves	Cable
Shutdown Cooling			
CCW (To SDC)			
HVAC			
Summary (Hot and Cold)			

ESSENTIAL ELECTRIC SYSTEMS	Equipment	MCC and Switchgear	Cable
220 KV (AC)			
4160 V (AC)			
480 V (AC)			
120 V (AC)			
125 V (DC)			
Electric Panels			
Summary			

ASSOCIATED CIRCUITS OF CONCERN

H/I Pressure Interface	NO
Spurious Operation	NO

7.10.33 FIRE AREA/ZONE 2-AR-37-107

FIRE AREA/ZONE: 2-AR-37-107

AREA: 1599 sq. ft. DESCRIPTION: TANK ROOMS

DESIGN BASIS FIRE

Fire Loading Category:	Minimal
Fire Loading - Max Permiss:	13,000.0 Btu's/sq.ft.

FIRE PROTECTION (AVAILABLE)

Suppression (type)	none
Hose Stations	none
Portable Extinguishers	none
Detectors (type)	none

FIRE RESISTANCE RATING

Walls	3hr
Floor, Ceiling, Roof	2hr
Penetrations	C, P
Fixed Openings	CH/116
Doors	none

HOT STANDBY SYSTEMS	Equipment	Valves	Cable
Reactor Coolant			
Reactor Protection System			
Shutdown Cooling			
Chemical and Volume Control	N		
Main Feedwater			
Main Steam			
HVAC			
Auxiliary Feedwater			
Engineered Safety Feature			
Component Cooling Water			
Saltwater Cooling Water			
Emergency Chilled Water			
Diesel Generator Systems			

COLD SHUTDOWN SYSTEMS	Equipment	Valves	Cable
Shutdown Cooling			
CCW (To SDC)			
HVAC			
Summary (Hot and Cold)	N		

ESSENTIAL ELECTRIC SYSTEMS	Equipment	MCC and Switchgear	Cable
220 KV (AC)			
4160 V (AC)			
480 V (AC)			
120 V (AC)			
125 V (DC)			
Electric Panels			
Summary			

ASSOCIATED CIRCUITS OF CONCERN

H/I Pressure Interface	NO
Spurious Operation	NO

7.10.34 FIRE AREA/ZONE 2-AR-37-108

FIRE AREA/ZONE: 2-AR-37-108

AREA: 51 sq. ft. DESCRIPTION: RADIOACTIVE PIPE CHASE

DESIGN BASIS FIRE

Fire Loading Category:	Minimal
Fire Loading - Max Permiss:	160,000.0 Btu's/sq.ft.

FIRE PROTECTION (AVAILABLE)

Suppression (type)	none
Hose Stations	none, (1) 2-AR-37-102A
Portable Extinguishers	none, adjacent
Detectors (type)	none

FIRE RESISTANCE RATING

Walls	east 3hr, others 2hr
Floor, Ceiling, Roof	2hr
Penetrations	C, P
Fixed Openings	none
Doors	B/2-AR-37-102A, B/2-AR-50-111A

HOT STANDBY SYSTEMS	Equipment	Valves	Cable
Reactor Coolant			
Reactor Protection System			
Shutdown Cooling			
Chemical and Volume Control			
Main Feedwater			
Main Steam			
HVAC			
Auxiliary Feedwater			
Engineered Safety Feature			
Component Cooling Water			
Saltwater Cooling Water			
Emergency Chilled Water			
Diesel Generator Systems			

COLD SHUTDOWN SYSTEMS	Equipment	Valves	Cable
Shutdown Cooling			
CCW (To SDC)			
HVAC			
Summary (Hot and Cold)			

ESSENTIAL ELECTRIC SYSTEMS	Equipment	MCC and Switchgear	Cable
220 KV (AC)			
4160 V (AC)			
480 V (AC)			
120 V (AC)			
125 V (DC)			
Electric Panels			
Summary			

ASSOCIATED CIRCUITS OF CONCERN

H/I Pressure Interface	NO
Spurious Operation	NO

7.10.35 FIRE AREA/ZONE 3-AR-37-109

FIRE AREA/ZONE: 3-AR-37-109

AREA: 1599 sq. ft. DESCRIPTION: TANK ROOMS

DESIGN BASIS FIRE

Fire Loading Category:	Minimal
Fire Loading - Max Permiss:	13,000.0 Btu's/sq.ft.

FIRE PROTECTION (AVAILABLE)

Suppression (type)	none
Hose Stations	none
Portable Extinguishers	none
Detectors (type)	none

FIRE RESISTANCE RATING

Walls	3hr
Floor, Ceiling, Roof	2hr
Penetrations	C, P
Fixed Openings	CH/116
Doors	none

HOT STANDBY SYSTEMS	Equipment	Valves	Cable
Reactor Coolant			
Reactor Protection System			
Shutdown Cooling			
Chemical and Volume Control	N		
Main Feedwater			
Main Steam			
HVAC			
Auxiliary Feedwater			
Engineered Safety Feature			
Component Cooling Water			
Saltwater Cooling Water			
Emergency Chilled Water			
Diesel Generator Systems			

COLD SHUTDOWN SYSTEMS	Equipment	Valves	Cable
Shutdown Cooling			
CCW (To SDC)			
HVAC			
Summary (Hot and Cold)	N		

ESSENTIAL ELECTRIC SYSTEMS	Equipment	MCC and Switchgear	Cable
220 KV (AC)			
4160 V (AC)			
480 V (AC)			
120 V (AC)			
125 V (DC)			
Electric Panels			
Summary			

ASSOCIATED CIRCUITS OF CONCERN

H/I Pressure Interface	NO
Spurious Operation	NO

7.10.36 FIRE AREA/ZONE 3-AR-37-110

FIRE AREA/ZONE: 3-AR-37-110

AREA: 51 sq. ft. DESCRIPTION: RADIOACTIVE PIPE CHASE

DESIGN BASIS FIRE

Fire Loading Category:	Minimal
Fire Loading - Max Permiss:	160,000.0 Btu's/sq.ft.

FIRE PROTECTION (AVAILABLE)

Suppression (type)	none
Hose Stations	none
Portable Extinguishers	none, adjacent
Detectors (type)	none

FIRE RESISTANCE RATING

Walls	3hr/109, others 2hr
Floor, Ceiling, Roof	2hr
Penetrations	C, P
Fixed Openings	none
Doors	B/2-AR-37-102A

HOT STANDBY SYSTEMS	Equipment	Valves	Cable
Reactor Coolant			
Reactor Protection System			
Shutdown Cooling			
Chemical and Volume Control			
Main Feedwater			
Main Steam			
HVAC			
Auxiliary Feedwater			
Engineered Safety Feature			
Component Cooling Water			
Saltwater Cooling Water			
Emergency Chilled Water			
Diesel Generator Systems			

COLD SHUTDOWN SYSTEMS	Equipment	Valves	Cable
Shutdown Cooling			
CCW (To SDC)			
HVAC			
Summary (Hot and Cold)			

ESSENTIAL ELECTRIC SYSTEMS	Equipment	MCC and Switchgear	Cable
220 KV (AC)			
4160 V (AC)			
480 V (AC)			
120 V (AC)			
125 V (DC)			
Electric Panels			
Summary			

ASSOCIATED CIRCUITS OF CONCERN

H/I Pressure Interface	NO
Spurious Operation	NO

7.10.37 FIRE AREA/ZONE: 2-AR-50-111A

FIRE AREA/ZONE: 2-AR-50-111A

AREA: 19015 sq. ft. DESCRIPTION: CORRIDOR & ROOMS

DESIGN BASIS FIRE

Fire Loading Category:	Minimal
Fire Loading - Max Permiss:	13,000.0 Btu's/sq.ft.

FIRE PROTECTION (AVAILABLE)

Suppression (type)	none
Hose Stations	(3)
Portable Extinguishers	yes
Detectors (type)	ionization (local)

FIRE RESISTANCE RATING

Walls	3hr/3A, 73, 102A, 75, 107, 109, HC/102A (Room 412 & 413), NR/111B, 2hr/others
Floor, Ceiling, Roof	2hr
Penetrations	C, D
Fixed Openings	OD/111B, CH/102A, 116, louvers/111B, MH/102A, ND/102A, NC/102A
Doors	B/90/86/77/95,99,98,96,110,108, 102A, NR/111B

HOT STANDBY SYSTEMS	Equipment	Valves	Cable
Reactor Coolant			
Reactor Protection System			
Shutdown Cooling			
Chemical and Volume Control			A,B
Main Feedwater			
Main Steam			
HVAC			
Auxiliary Feedwater			
Engineered Safety Feature			
Component Cooling Water			A,B,X
Saltwater Cooling Water			
Emergency Chilled Water			
Diesel Generator Systems			

COLD SHUTDOWN SYSTEMS	Equipment	Valves	Cable
Shutdown Cooling			
CCW (To SDC)			
HVAC			
Summary (Hot and Cold)			A,B,X

ESSENTIAL ELECTRIC SYSTEMS	Equipment	MCC and Switchgear	Cable
220 KV (AC)			
4160 V (AC)			
480 V (AC)			
120 V (AC)			
125 V (DC)			
Electric Panels			A,X
Summary			A,X

ASSOCIATED CIRCUITS OF CONCERN

H/I Pressure Interface	NO
Spurious Operation	YES

FIRE AREA/ZONE 2-AR-50-111A

7.10.37.1 Location

Auxiliary Radwaste Building - El. 50'-0" - Corridor and Rooms - 19,015 sq. ft.

7.10.37.2 Fire Loading

Fire loading category - Minimal
Maximum permissible fire loading - 13,000 Btu/sq. ft. (Note 1)

Note 1:The maximum permissible fire loading is based on an evenly distributed loading of combustible materials.

7.10.37.3 Design Basis Fire

The design basis fire would involve mostly plastics, Class A and miscellaneous combustibles. The design basis fire is conservatively based on the simultaneous total combustion of all combustibles in the zone.

7.10.37.4 Fire Protection Equipment

The zone contains no automatic suppression systems. Manual fire fighting equipment such as hose stations and portable extinguishers are available in the zone. Local ionization smoke detectors are located in the zone to provide early warning alarm to the control room.

7.10.37.5 Construction

The walls communicating with areas 2-AR-37-107, -109, -73, -75, and -102A except for 102A to room 412 & 413 which are heavy concrete are 3 hour rated. The west wall of the zone is nonrated. All others, including the floor and ceiling are 2 hour rated. There is an open doorway into the Electrical Equipment and Raceway area, 2-AR-50-111B, a concrete hatch into 2-AR-37-102A and 2-AR-63-116 and louvers into 2-AR-50-111B. Doors communicating to other fire areas are 1½ hour rated. The door to -111B is nonrated. Ventilation duct penetration to 102A (room 412/413) is not provided with a fire damper. There are open penetrations in the walls to room 412/413 fire area 2-AR-37-102A.

7.10.37.6 Licensee Controlled Specification Barrier

For definition of the barriers requiring surveillance per LCS 3.7.104, refer to the latest revision of Figure 8-13, sheet 3.

7.10.37.7 Conclusions

The local ionization detectors are expected to detect the products of combustion from an incipient fire and alert the control room for prompt action by the fire department. The available manual fire fighting equipment is adequate to extinguish the fire.

The normal ventilation system will effectively remove smoke generated by the design basis fire until the fire dampers operate. Portable smoke exhaust fans may then be used to vent smoke from the area.

The design basis fire is insufficient to breach the barriers defining the zone/fire area.

The barriers between 2-AR-50-111A and 3-AR-63-118 and 2-AR-37-102A and 2-AR-63-119 were evaluated. The boundaries and their associated fire protection features were found to be adequate to prevent the propagation of fire between fire areas.

7.10.37.8 Fire Area 2-AR-50-111 Appendix R Compliance

Safe shutdown capability will be provided by utilizing Train B systems. Functionally redundant components protected from fire damage will be utilized in conjunction with operator action on manual or disabled components to achieve safe shutdown. Operator actions may be required to provide CCW make-up from the Fire Water System.

One train of systems necessary to achieve hot standby and cold shutdown conditions independent of the subject fire area will be free of fire damage. Therefore, this fire area complies with the criteria of 10CFR50, Appendix R, III.G.1.

7.10.38 FIRE AREA/ZONE 2-AR-50-111B

FIRE AREA/ZONE: 2-AR-50-111B

AREA: 2409 sq. ft. DESCRIPTION: ELEC EQUIP & RACEWAY AREA

DESIGN BASIS FIRE

Fire Loading Category:	Low
Fire Loading - Max Permiss:	80,000.0 Btu's/sq.ft.

FIRE PROTECTION (AVAILABLE)

Suppression (type)	none
Hose Stations	none
Portable Extinguishers	none, adjacent
Detectors (type)	ionization

FIRE RESISTANCE RATING

Walls	east NR, others 3hr
Floor, Ceiling, Roof	2hr
Penetrations	C
Fixed Openings	OD/111A, louvers/111A
Doors	NR/111A

HOT STANDBY SYSTEMS	Equipment	Valves	Cable
Reactor Coolant			
Reactor Protection System			
Shutdown Cooling			
Chemical and Volume Control			
Main Feedwater			
Main Steam			
HVAC			
Auxiliary Feedwater			
Engineered Safety Feature			
Component Cooling Water			
Saltwater Cooling Water			
Emergency Chilled Water			
Diesel Generator Systems			

COLD SHUTDOWN SYSTEMS	Equipment	Valves	Cable
Shutdown Cooling			
CCW (To SDC)			
HVAC			
Summary (Hot and Cold)			

ESSENTIAL ELECTRIC SYSTEMS	Equipment	MCC and Switchgear	Cable
220 KV (AC)			
4160 V (AC)			
480 V (AC)			
120 V (AC)			
125 V (DC)			
Electric Panels			X
Summary			X

ASSOCIATED CIRCUITS OF CONCERN

H/I Pressure Interface	NO
Spurious Operation	YES

FIRE AREA/ZONE 2-AR-50-111B

7.10.38.1 Location

Auxiliary Radwaste Building - El. 50'-0" - Electrical Equipment and Raceway Area - 2409 sq. ft.

7.10.38.2 Fire Loading

Fire loading category - Low
Maximum permissible fire loading - 80,000 Btu/sq. ft. (Note 1)

Note 1:The maximum permissible fire loading is based on an evenly distributed loading of combustible materials.

7.10.38.3 Design Basis Fire

The design basis fire would involve mostly cable insulation. The design basis fire is conservatively based on the simultaneous total combustion of all combustibles in the zone.

7.10.38.4 Fire Protection Equipment

The zone contains no automatic suppression systems or hose stations. There are portable extinguishers within the zone and adjacent zone. Ionization smoke detectors are located in the zone to provide early warning alarm to the control room.

7.10.38.5 Construction

The east wall of the zone is of non-rated concrete construction approximately 18 inches thick. All other walls are 3 hour rated. The floor and ceiling are 2 hour rated. There is an open doorway, louvers and a non-rated door communicating with zone 2-AR-50-111A.

7.10.38.6 Licensee Controlled Specification Barriers

For definition of the barriers requiring surveillance per LCS 3.7.104, refer to the latest revision of Figure 8-14, sheet 3.

7.10.38.7 Conclusions

The ionization detectors are expected to detect the products of combustion from an incipient fire and alert the control room for prompt action by the fire department. The available portable equipment is adequate to extinguish the fire.

The fire barriers between 2-AR-50-111B and 3-AR-63-118 and 2-AR-63-119 were evaluated. The barriers and associated fire protection features were found to be adequate to prevent the propagation of fire beyond the area boundaries. The design basis fire is insufficient to breach the barriers defining the zone/fire area.

Appendix R compliance for fire area 2-AR-50-111 is discussed in fire zone 2-AR-50-111A.

7.10.39 FIRE AREA/ZONE: 2-AR-63-116

FIRE AREA/ZONE: 2-AR-63-116

AREA: 21388 sq. ft. DESCRIPTION: CORRIDOR & ROOMS

DESIGN BASIS FIRE

Fire Loading Category:	Low
Fire Loading - Max Permiss:	40,000.0 Btu's/sq.ft.

FIRE PROTECTION (AVAILABLE)

Suppression (type)	none
Hose Stations	(3)
Portable Extinguishers	yes
Detectors (type)	ioinization, heat detectors partial coverage

FIRE RESISTANCE RATING

Walls	east, west 3B and 121/3hr, others 2hr
Floor, Ceiling, Roof	2hr
Penetrations	D, C, P
Fixed Openings	CH/111A, 107, 109
Doors	A/2-PE-63-3B,A/3-PE-63-3B, (2)A/2-AC-70-,64A, B/2-AR-9-90, B/119, 120,86,77,117,118

HOT STANDBY SYSTEMS	Equipment	Valves	Cable
Reactor Coolant			
Reactor Protection System			
Shutdown Cooling			
Chemical and Volume Control			A,B
Main Feedwater			
Main Steam			
HVAC			
Auxiliary Feedwater			
Engineered Safety Feature			
Component Cooling Water			A,B,X
Saltwater Cooling Water			
Emergency Chilled Water			
Diesel Generator Systems			

COLD SHUTDOWN SYSTEMS	Equipment	Valves	Cable
Shutdown Cooling			
CCW (To SDC)			
HVAC			
Summary (Hot and Cold)			A,B,X

ESSENTIAL ELECTRIC SYSTEMS	Equipment	MCC and Switchgear	Cable
220 KV (AC)			X
4160 V (AC)			
480 V (AC)			
120 V (AC)			
125 V (DC)			
Electric Panels			B,X
Summary			B,X

ASSOCIATED CIRCUITS OF CONCERN

H/I Pressure Interface	NO
Spurious Operation	YES

FIRE AREA/ZONE 2-AR-63-116

7.10.39.1 Location

Auxiliary Radwaste Building - El. 63'-6" - Corridor and Rooms
21388 square feet

7.10.39.2 Fire Loading

Fire loading category - Low
Maximum permissible fire loading - 40,000 Btu/sq. ft. (Note 1)

Note 1: The maximum permissible fire loading is based on an evenly distributed loading of combustible materials.

7.10.39.3 Design Basis Fire

The design basis fire would involve mostly oil, grease, cable insulation, Class A combustibles, plastics and other miscellaneous combustibles. The design basis fire is conservatively based on the simultaneous total combustion of all combustibles in the zone.

7.10.39.4 Fire Protection Equipment

The zone contains no automatic suppression systems. Manual fire fighting equipment such as hose stations and portable extinguishers are available in the zone. Local ionization smoke detectors and heat detectors located in the zone provide early warning alarm to the control room.

7.10.39.5 Construction

The east and west exterior building walls defining the zone are 3 hour rated as is the wall around 2-AR-63-121. Other walls, including the floor and ceiling, are 2 hour rated. Concrete hatches provide access to adjoining zones 2-AR-50-111A, 2-AR-37-107 and -109. All fire doors leading outside of this zone have a minimum of 1½ hour ratings.

7.10.39.6 Licensee Controlled Specification Barriers

For definition of the barriers requiring surveillance per LCS 3.7.104, refer to the latest revision of Figure 8-14, sheet 3.

7.10.39.7 Conclusions

The ionization detectors are expected to detect the products of combustion from an incipient fire and alert the control room for prompt action by the fire department. Fixed temperature rate of rise detectors also provide early warning alarm to the control room. The available hose stations and portable equipment are adequate to extinguish the fire.

7.10.40 FIRE AREA/ZONE: 3-AR-63-117

FIRE AREA/ZONE: 3-AR-63-117

AREA: 96 sq. ft. DESCRIPTION: DUCT SHAFT ROOM

DESIGN BASIS FIRE

Fire Loading Category:	Minimal
Fire Loading - Max Permiss:	160,000.0 Btu's/sq.ft.

FIRE PROTECTION (AVAILABLE)

Suppression (type)	none
Hose Stations	none, (1) 2-AR-63-116
Portable Extinguishers	none, adjacent
Detectors (type)	none

FIRE RESISTANCE RATING

Walls	south 3hr, others 2hr
Floor, Ceiling, Roof	2hr/floor, HC/roof
Penetrations	C, D, ND/roof
Fixed Openings	none
Doors	B/2-AR-63-116

HOT STANDBY SYSTEMS	Equipment	Valves	Cable
Reactor Coolant			
Reactor Protection System			
Shutdown Cooling			
Chemical and Volume Control			A,B
Main Feedwater			
Main Steam			
HVAC			A
Auxiliary Feedwater			
Engineered Safety Feature			
Component Cooling Water			
Saltwater Cooling Water			
Emergency Chilled Water			
Diesel Generator Systems			

COLD SHUTDOWN SYSTEMS	Equipment	Valves	Cable
Shutdown Cooling			
CCW (To SDC)			
HVAC			
Summary (Hot and Cold)			A,B

ESSENTIAL ELECTRIC SYSTEMS	Equipment	MCC and Switchgear	Cable
220 KV (AC)			
4160 V (AC)			
480 V (AC)			
120 V (AC)			
125 V (DC)			
Electric Panels			A
Summary			A

ASSOCIATED CIRCUITS OF CONCERN

H/I Pressure Interface	NO
Spurious Operation	NO

FIRE AREA/ZONE 3-AR-63-117

7.10.40.1 Location

Auxiliary Radwaste Building - El. 63'-6" - Duct Shaft Room - 96 square feet - Fig. 8-14

7.10.40.2 Fire Loading

Fire loading category - Minimal
Maximum permissible fire loading - 160,000 Btu/sq. ft. (Note 1)

Note 1:The maximum permissible fire loading is based on an evenly distributed loading of combustible materials.

7.10.40.3 Design Basis Fire

A fire is not expected to occur in this area during normal operation. The maximum credible fire is postulated to involve transient combustible materials.

7.10.40.4 Fire Protection Equipment

There is no fire protection or fire detection equipment in this area. Manual fire fighting equipment is available in adjacent area 2-AR-63-116.
Construction

The south wall is reinforced concrete with a 3 hour rating. The north, east, and west walls are 2 hour rated, as is the floor. The ceiling is nonrated reinforced concrete. One 1-1/2 hour rated door allows access to the area from the corridor (2-AR-63-116). Ventilation duct penetrations are provided with 1-1/2 hour rated fire dampers.

7.10.40.5 Licensee Controlled Specification Barriers

For definition of the barriers requiring surveillance per LCS 3.7.104, refer to the latest revision of Figure 8-14, sheet 3.

7.10.40.6 Conclusions

Portable smoke exhaust fans may be used to remove smoke generated by the design basis fire. Portable smoke exhaust fans may then be used to vent smoke from the fire area.

The fire boundaries between 3-AR-63-117, 2-AR-9-77 and 2-AR-63-116 were evaluated. The boundaries and associated fire protection features were found to be adequate to prevent the propagation of fire between the fire areas. The design basis fire is insufficient to breach the fire barriers defining the area.

FIRE AREA/ZONE 3-AR-63-117

7.10.40.7 Fire Area 3-AR-63-117 Appendix R Compliance

Safe shutdown capability will be provided by utilizing Train B systems. Functionally redundant components protected from fire damage will be utilized in conjunction with operator action on manual or disabled components to achieve safe shutdown.

One train of systems necessary to achieve hot standby and cold shutdown conditions independent of the subject fire area will be free of fire damage. Therefore, this fire area complies with the criteria of 10CFR50, Appendix R, III.G.1.

7.10.41 FIRE AREA/ZONE: 3-AR-63-118

FIRE AREA/ZONE: 3-AR-63-118

AREA: 560 sq. ft. DESCRIPTION: CABLE TRAY GALLERY

DESIGN BASIS FIRE

Fire Loading Category:	Medium
Fire Loading - Max Permiss:	160,000.0 Btu's/sq.ft.

FIRE PROTECTION (AVAILABLE)

Suppression (type)	water spray system
Hose Stations	none
Portable Extinguishers	yes, adjacent
Detectors (type)	ionization, heat detectors

FIRE RESISTANCE RATING

Walls	south and west 3hr, others 2hr
Floor, Ceiling, Roof	2hr
Penetrations	C, P, D
Fixed Openings	none
Doors	B/2-AR-63-116

HOT STANDBY SYSTEMS	Equipment	Valves	Cable
Reactor Coolant			
Reactor Protection System			
Shutdown Cooling			
Chemical and Volume Control			A,B,b
Main Feedwater			
Main Steam			
HVAC			A,B,b
Auxiliary Feedwater			
Engineered Safety Feature			
Component Cooling Water			A,B,X
Saltwater Cooling Water			
Emergency Chilled Water			
Diesel Generator Systems			

COLD SHUTDOWN SYSTEMS	Equipment	Valves	Cable
Shutdown Cooling			
CCW (To SDC)			
HVAC			
Summary (Hot and Cold)			A,B,b,X

ESSENTIAL ELECTRIC SYSTEMS	Equipment	MCC and Switchgear	Cable
220 KV (AC)			X
4160 V (AC)			
480 V (AC)			
120 V (AC)			
125 V (DC)			
Electric Panels			A,B,X
Summary			A,B,X

ASSOCIATED CIRCUITS OF CONCERN

H/I Pressure Interface	NO
Spurious Operation	YES

FIRE AREA/ZONE 3-AR-63-118

7.10.41.1 Location

Auxiliary Radwaste Building - El. 63'-6" - Cable Tray Gallery - 560 square feet - Fig. 8-14

7.10.41.2 Fire Loading

Fire loading category - Medium
Maximum permissible fire loading - 160,000 Btu/sq. ft. (Note 1)

Note 1:The maximum permissible fire loading is based on an evenly distributed loading of combustible materials.

7.10.41.3 Design Basis Fire

The design basis fire is postulated to be a fire that would involve mostly cable insulation.

The design basis fire is conservatively based on the simultaneous total combustion of all combustibles in the area.

7.10.41.4 Fire Protection Equipment

The area contains an automatic water spray system with fixed temperature rate of rise actuation. Actuation by the heat detectors results in control room annunciation. Manual fire fighting equipment is available in the area and in adjacent area 2-AR-63-116. Ionization smoke detectors, located in the area, provide early warning alarm in the control room.

7.10.41.5 Construction

The south and west walls of the area are 3 hour rated reinforced concrete construction. The north and east walls are 2 hour rated, as are the ceiling and floor. One 1-1/2 hour rated door opens to the corridor (2-AR-63-116). Ventilation duct penetrations are provided with 1-1/2 hour rated fire dampers.

7.10.41.6 Licensee Controlled Specification Barriers

For definition of the barriers requiring surveillance per LCS 3.7.104, refer to the latest revision of Figure 8-14, sheet 3.

Cable for the following systems is wrapped:

Chemical & Volume Control - Train B
HVAC (Charging Pump Rooms) - Train B

7.10.41.7 Conclusions

The ionization detectors are expected to detect the products of combustion from an incipient fire and alert the control room for prompt response by the fire department. The available portable equipment is adequate to extinguish the fire. In the event the fire achieves sufficient intensity, the water spray system will actuate automatically to control and extinguish the fire.

The normal ventilation system will effectively remove the smoke generated by the design basis fire until the fire dampers operate. Portable smoke exhaust fans may then be used to vent smoke from the area.

The fire boundaries between 3-AR-63-118 and 2-AR-63-116, 2-AR-50-111A and 2-AR-50-111B were evaluated. The boundaries and associated fire protection features were found to be adequate to prevent the propagation of fire between the fire areas. The design basis fire is insufficient to breach the barriers defining the zone/fire area.

7.10.41.8 Fire Area 3-AR-63-118 Appendix R Compliance

Safe shutdown capability will be provided by utilizing Train B systems. Functionally redundant components protected from fire damage will be utilized in conjunction with operator action on manual or disabled components to achieve safe shutdown.

One train of systems necessary to achieve hot standby and cold shutdown conditions has been evaluated to remain available for safe shutdown in accordance with 10CFR50, Appendix R III.G.1 and III.G.2.c. The fire detection and suppression systems in this area/zone were evaluated and shown to provide a level of protection equivalent to the requirements of Appendix R.

FIRE AREA/ZONE 2-AR-63-116

The normal ventilation system will effectively remove smoke generated by the design basis fire until the fire dampers operate. Portable smoke exhaust fans may then be used to vent smoke from the area.
The design basis fire is insufficient to breach the barriers defining the zone/fire area.

The barriers between 2-AR-63-116 and 3-AR-63-117 and 3-AR-63-118, 2-AR-63-119 and 2-AR-63-120 were evaluated. The boundaries and their associated fire protection features were found to be adequate to prevent the propagation of fire between fire areas.

7.10.39.8 Fire Area 2-AR-63-116 Appendix R Compliance

Safe shutdown capability will be provided by utilizing Train A systems. Functionally redundant components protected from fire damage will be utilized in conjunction with operator action on manual or disabled components to achieve safe shutdown.

One train of systems necessary to achieve hot standby and cold shutdown conditions independent of the subject fire area will be free of fire damage. Therefore, this fire area complies with the criteria of 10CFR50, Appendix R, III.G.1.

7.10.42 FIRE AREA/ZONE: 2-AR-63-119

FIRE AREA/ZONE: 2-AR-63-119

AREA: 560 sq. ft. DESCRIPTION: CABLE TRAY GALLERY

DESIGN BASIS FIRE

Fire Loading Category:	Medium
Fire Loading - Max Permiss:	160,000.0 Btu's/sq.ft.

FIRE PROTECTION (AVAILABLE)

Suppression (type)	water spray system
Hose Stations	none
Portable Extinguishers	yes, adjacent
Detectors (type)	ionization, heat detectors

FIRE RESISTANCE RATING

Walls	north and west 3hr, others 2hr
Floor, Ceiling, Roof	2hr
Penetrations	C, P, D
Fixed Openings	none
Doors	B/2-AR-63-116

HOT STANDBY SYSTEMS	Equipment	Valves	Cable
Reactor Coolant			
Reactor Protection System			
Shutdown Cooling			
Chemical and Volume Control			A,B,b
Main Feedwater			
Main Steam			
HVAC			A,B,b
Auxiliary Feedwater			
Engineered Safety Feature			
Component Cooling Water			A,B,X
Saltwater Cooling Water			
Emergency Chilled Water			
Diesel Generator Systems			

COLD SHUTDOWN SYSTEMS	Equipment	Valves	Cable
Shutdown Cooling			
CCW (To SDC)			
HVAC			
Summary (Hot and Cold)			A,B,b,X

ESSENTIAL ELECTRIC SYSTEMS	Equipment	MCC and Switchgear	Cable
220 KV (AC)			X
4160 V (AC)			
480 V (AC)			
120 V (AC)			
125 V (DC)			
Electric Panels			A,B,X
Summary			A,B,X

ASSOCIATED CIRCUITS OF CONCERN

H/I Pressure Interface	NO
Spurious Operation	YES

FIRE AREA/ZONE 2-AR-63-119

7.10.42.1 Location

Auxiliary Radwaste Building - El. 63'-6" - Cable Tray Gallery - 560 square feet - Fig. 8-14

7.10.42.2 Fire Loading

Fire loading category - Medium
Maximum permissible fire loading - 160,000 Btu/sq. ft. (Note 1)

Note 1:The maximum permissible fire loading is based on an evenly distributed loading of combustible materials.

7.10.42.3 Design Basis Fire

The design basis fire is postulated to be a fire that would involve mostly cable insulation.

The design basis fire is conservatively based on the simultaneous total combustion of all combustibles in the area.

7.10.42.4 Fire Protection Equipment

The area contains an automatic water spray system with fixed temperature rate of rise actuation. Manual fire fighting equipment is available within the area and in adjacent area 2-AR-63-116. Ionization smoke detectors, located in the area, provide early warning alarm in the control room.

7.10.42.5 Construction

The north and west walls of the area are 3 hour rated reinforced concrete construction. The south and east walls are 2 hour rated, as are the ceiling and floor. One 1-1/2 hour rated door opens to the corridor (2-AR-63-116). Ventilation duct penetrations are provided with 1-1/2 hour rated fire dampers.

7.10.42.6 Licensee Controlled Specification Barriers

For definition of the barriers requiring surveillance per LCS 3.7.104, refer to the latest revision of Figure 8-14, sheet 3.

Cable for the following systems is wrapped:

Chemical & Volume Control - Train B
HVAC (Charging Pump Rooms) - Train B

7.10.42.7 Conclusions

The ionization detectors are expected to detect the products of combustion from an incipient fire and alert the control room for prompt response by the fire department. Portable equipment, available in the area and adjacent areas, is adequate to extinguish the fire. In the event the fire achieves sufficient intensity, the water spray system will actuate automatically to control and extinguish the fire.

The normal ventilation system will effectively remove the smoke generated by the design basis fire until the fire dampers operate. Portable smoke exhaust fans may then be used to vent smoke from the area.

The fire boundaries between 2-AR-63-119 and 2-AR-63-116, 2-AR-50-111A and 2-AR-50-111B were evaluated. The boundaries and associated fire protection features were found to be adequate to prevent the propagation of fire between the fire areas. The design basis fire is insufficient to breach the barriers defining the zone/fire area.

7.10.42.8 Fire Area 2-AR-63-119 Appendix R Compliance

Safe shutdown capability will be provided by utilizing Train B systems. Some CVCS and HVAC cables in the area have been wrapped. Functionally redundant components protected from fire damage will be utilized in conjunction with operator action on manual or disabled components to achieve safe shutdown.

One train of systems necessary to achieve hot standby and cold shutdown conditions independent of the subject fire area will be free of fire damage. Therefore, this fire area complies with the criteria of 10CFR50, Appendix R, III.G.1 and III.G.2.c. The fire detection and suppression systems in this area/zone were evaluated and shown to provide a level of protection equivalent to the requirements of the applicable sections of Appendix R.

7.10.43 FIRE AREA/ZONE: 2-AR-63-120

FIRE AREA/ZONE: 2-AR-63-120

AREA: 96 sq. ft. DESCRIPTION: DUCT SHAFT ROOM

DESIGN BASIS FIRE

Fire Loading Category:	Minimal
Fire Loading - Max Permiss:	160,000.0 Btu's/sq.ft.

FIRE PROTECTION (AVAILABLE)

Suppression (type)	none
Hose Stations	none, (1) 2-AR-63-116
Portable Extinguishers	none, adjacent
Detectors (type)	none

FIRE RESISTANCE RATING

Walls	north 3hr, others 2hr
Floor, Ceiling, Roof	2hr floor, HC roof
Penetrations	C, D, ND/roof
Fixed Openings	none
Doors	B/2-AR-63-116

HOT STANDBY SYSTEMS	Equipment	Valves	Cable
Reactor Coolant			
Reactor Protection System			
Shutdown Cooling			
Chemical and Volume Control			A,B
Main Feedwater			
Main Steam			
HVAC			A
Auxiliary Feedwater			
Engineered Safety Feature			
Component Cooling Water			A
Saltwater Cooling Water			
Emergency Chilled Water			
Diesel Generator Systems			

COLD SHUTDOWN SYSTEMS	Equipment	Valves	Cable
Shutdown Cooling			
CCW (To SDC)			
HVAC			
Summary (Hot and Cold)			A,B

ESSENTIAL ELECTRIC SYSTEMS	Equipment	MCC and Switchgear	Cable
220 KV (AC)			
4160 V (AC)			
480 V (AC)			
120 V (AC)			
125 V (DC)			
Electric Panels			A
Summary			A

ASSOCIATED CIRCUITS OF CONCERN

H/I Pressure Interface	NO
Spurious Operation	NO

FIRE AREA/ZONE 2-AR-63-120

7.10.43.1 Location

Auxiliary Radwaste Building - El. 63'-6" - Duct Shaft Room - 96 square feet - Fig. 8-14

7.10.43.2 Fire Loading

Fire loading category - Minimal
Maximum permissible fire loading - 160,000 Btu/sq. ft. (Note 1)

Note 1:The maximum permissible fire loading is based on an evenly distributed loading of combustible materials.

7.10.43.3 Design Basis Fire

A fire is not expected to occur in this area during normal operation. The maximum credible fire is postulated to involve transient combustible materials.

7.10.43.4 Fire Protection Equipment

There is no fire fighting or fire detection equipment within the area. Manual fire fighting equipment is available in adjacent area 2-AR-63-116.

7.10.43.5 Construction

The north wall of the area is 3 hour rated reinforced concrete construction. The south, east, and west walls are 2 hour rated, as is the floor. The ceiling is also constructed of heavy reinforced concrete but is not rated. One 1-1/2 hour rated door opens to the corridor (2-AR-63-116). There is no supplied ventilation. The ventilation duct penetrations are provided with 1-1/2 hour rated fire dampers.

7.10.43.6 Licensee Controlled Specification Barriers

For definition of the barriers requiring surveillance per LCS 3.7.104, refer to the latest revision of Figure 8-14, sheet 3.

7.10.43.7 Conclusions

Portable smoke exhaust fans may be used to remove smoke generated by the design basis fire.

The fire boundaries between 2-AR-63-120, 2-AR-63-116 and 2-AR-9-86 were evaluated. The boundaries and associated fire protection features were found to be adequate to prevent the propagation of fire between the fire areas. The design basis fire is insufficient to breach the fire barriers defining the area.

FIRE AREA/ZONE 2-AR-63-120

7.10.43.8 Fire Area 2-AR-63-120 Appendix R Compliance

Safe shutdown capability will be provided by utilizing Train B systems. Functionally redundant components protected from fire damage will be utilized in conjunction with operator action on manual or disabled components to achieve safe shutdown.

One train of systems necessary to achieve hot standby and cold shutdown conditions independent of the subject fire area will be free of fire damage. Therefore, this fire area complies with the criteria of 10CFR50, Appendix R, III.G.1.

7.10.44 FIRE AREA/ZONE: 2-AR-63-121

FIRE AREA/ZONE: 2-AR-63-121

AREA: 831 sq. ft. DESCRIPTION: TANK ROOMS

DESIGN BASIS FIRE

Fire Loading Category:	Minimal
Fire Loading - Max Permiss:	160,000.0 Btu's/sq.ft.

FIRE PROTECTION (AVAILABLE)

Suppression (type)	none
Hose Stations	none
Portable Extinguishers	none
Detectors (type)	none

FIRE RESISTANCE RATING

Walls	3hr
Floor, Ceiling, Roof	2hr
Penetrations	P
Fixed Openings	CH/roof
Doors	none

HOT STANDBY SYSTEMS	Equipment	Valves	Cable
Reactor Coolant			
Reactor Protection System			
Shutdown Cooling			
Chemical and Volume Control			
Main Feedwater			
Main Steam			
HVAC			
Auxiliary Feedwater			
Engineered Safety Feature			
Component Cooling Water			
Saltwater Cooling Water			
Emergency Chilled Water			
Diesel Generator Systems			

COLD SHUTDOWN SYSTEMS	Equipment	Valves	Cable
Shutdown Cooling			
CCW (To SDC)			
HVAC			
Summary (Hot and Cold)			

ESSENTIAL ELECTRIC SYSTEMS	Equipment	MCC and Switchgear	Cable
220 KV (AC)			
4160 V (AC)			
480 V (AC)			
120 V (AC)			
125 V (DC)			
Electric Panels			
Summary			

ASSOCIATED CIRCUITS OF CONCERN

H/I Pressure Interface	NO
Spurious Operation	NO

7.10.45 FIRE AREA/ZONE: 2-AR-68-178A

FIRE AREA/ZONE: 2-AR-68-178A

AREA: 9080 sq. ft. DESCRIPTION: PERSONNEL FACILITY AREA

DESIGN BASIS FIRE

Fire Loading Category:	Low
Fire Loading - Max Permiss:	160,000.0 Btu's/sq.ft.

FIRE PROTECTION (AVAILABLE)

Suppression (type)	wet pipe sprinkler rm 624, 625, 626, 627, 628
Hose Stations	2
Portable Extinguishers	yes
Detectors (type)	ionization, heat

FIRE RESISTANCE RATING

Walls	3hr/123, 116, 2hr/2-3B, 3-3B, 178B, NR/ext.
Floor, Ceiling, Roof	2hr floor, NR roof
Penetrations	none
Fixed Openings	C,P
Doors	(2) A/2-PE-63-3B, (2) A/3-PE-63-3B,(4) B/2-AR-68-178B

HOT STANDBY SYSTEMS	Equipment	Valves	Cable
Reactor Coolant			
Reactor Protection System			
Shutdown Cooling			
Chemical and Volume Control			
Main Feedwater			
Main Steam			
HVAC			
Auxiliary Feedwater			
Engineered Safety Feature			
Component Cooling Water			
Saltwater Cooling Water			
Emergency Chilled Water			
Diesel Generator Systems			

COLD SHUTDOWN SYSTEMS	Equipment	Valves	Cable
Shutdown Cooling			
CCW (To SDC)			
HVAC			
Summary (Hot and Cold)			

ESSENTIAL ELECTRIC SYSTEMS	Equipment	MCC and Switchgear	Cable
220 KV (AC)			
4160 V (AC)			
480 V (AC)			
120 V (AC)			
125 V (DC)			
Electric Panels			
Summary			

ASSOCIATED CIRCUITS OF CONCERN

H/I Pressure Interface	NO
Spurious Operation	NO

7.10.46 FIRE AREA/ZONE: 2-AR-68-178B

FIRE AREA/ZONE: 2-AR-68-178B

AREA: 1465 sq. ft. DESCRIPTION: HOT AND COLD DRY CLEAN AREA

DESIGN BASIS FIRE

Fire Loading Category:	Low
Fire Loading - Max Permiss:	160,000.0 Btu's/sq.ft.

FIRE PROTECTION (AVAILABLE)

Suppression (type)	wet pipe sprinkler, rm 629, 630
Hose Stations	none
Portable Extinguishers	yes
Detectors (type)	none

FIRE RESISTANCE RATING

Walls	2hr/178A, 3hr/3-123, NR/ext
Floor, Ceiling, Roof	2hr floor, NR roof
Penetrations	C,P
Fixed Openings	none
Doors	(4)B/2-AR-68-178A, (1)B/EXTERIOR

HOT STANDBY SYSTEMS	Equipment	Valves	Cable
Reactor Coolant			
Reactor Protection System			
Shutdown Cooling			
Chemical and Volume Control			
Main Feedwater			
Main Steam			
HVAC			
Auxiliary Feedwater			
Engineered Safety Feature			
Component Cooling Water			
Saltwater Cooling Water			
Emergency Chilled Water			
Diesel Generator Systems			

COLD SHUTDOWN SYSTEMS	Equipment	Valves	Cable
Shutdown Cooling			
CCW (To SDC)			
HVAC			
Summary (Hot and Cold)			

ESSENTIAL ELECTRIC SYSTEMS	Equipment	MCC and Switchgear	Cable
220 KV (AC)			
4160 V (AC)			
480 V (AC)			
120 V (AC)			
125 V (DC)			
Electric Panels			
Summary			

ASSOCIATED CIRCUITS OF CONCERN

H/I Pressure Interface	NO
Spurious Operation	NO

7. DETAILED FIRE HAZARD ANALYSIS

7.11 UNITS 2/3 YARD AREA

A) Inside the Protected Area

The Units 2/3 yard area (2-YD-30-200) is an exposed fire area bounded by the protected area fence. Most walls of the fire areas/zones which communicate with the yard area are heavy concrete, some of which are 2 or 3 hour rated. The fire area is divided into two (2) fire zones:

2-YD-30-200A - Unit 2 Yard Zone
2-YD-30-200B - Unit 3 Yard Zone

The yard area includes roof of Auxiliary Control, Radwaste, and Penetration Buildings.

The yard area contains a portion of the following systems, which can be used for, or support, safe shutdown and cooldown:

- Auxiliary Feedwater
- Emergency Chilled Water
- Diesel Generator
- Main Steam System
- Essential Electric Systems

The types of fire protection/detection equipment available in or near this fire area consist of the following:

- Portable extinguishers
- Ultraviolet, thermal, and ionization fire detectors
- Underground fire water main with hydrants
- Fixed water spray systems
- Wet pipe water sprinkler systems
- Halon System

B) Outside the Protected Area

The South Yard Facility yard area (2-YD-80-300) is an exposed fire area bounded by the property line to the south and west, the service road to the east and the facility control fence to the north. No boundaries communicate with any other fire area. The following facilities are located in the fire area:

- Shops Building
- Hazardous Material Pad
- Multi-Purpose Handling Facility (MPHF)

This fire area contains no safety related or safe shutdown equipment.

UNITS 2/3 YARD AREA

The types of fire protection/detection equipment available in this area consist of the following:

- Portable extinguishers
- Wet pipe sprinkler systems
- Pre-action sprinkler system
- Halon system
- Ionization and linear beam fire detection
- Fire hydrants

Because the fire area does not contain safety related or safe shutdown equipment, the fire protection/detection equipment identified above may not meet the specific requirements of BTP 9.5-1, Appendix A. Fire protection features have been provided based on NEIL Property Loss Prevention Standards and engineering judgement. It should also be noted that the fire protection features noted in section 3.0 do not apply to this fire area. The fire alarm and suppression systems are not tied into the fire protection features provided within the Protected Area.

This fire area is utilized for the staging of low level contaminated waste and contains work areas for maintenance of contaminated equipment. A calculation has been performed to verify that radiological releases resulting from the potential fire would not exceed the site boundary limits.

The buildings within Fire Area 2-YD-80-300 house varying degrees of hazards and combustible loading. The fire area does not border any other fire areas. Thus, a fire in the South Yard Facility will have no impact on plant safety related or safe shutdown equipment. Because of the large area of 2-YD-80-300, the transient nature of the significant hazards, and the lack of physical walls bounding the fire area, Maximum Permissible Fire Loading and Fixed Fire Loading are not identified. Fixed fire suppression systems were provided based on occupancy classifications as defined in NFPA 13. The occupancy classification for the Multi-Purpose Handling Facility (MPHF) and shops building is "ordinary hazard, group 2". The hazardous materials pad and mixed waste processing facility (inside South Yard Facility (SYF) Shops Building) are considered an "extra hazard" occupancies. Combustible hazards added to these areas should be assessed as to the fire protection systems ability to control the increased hazard.

FIRE AREA/ZONE	CONTAINS SAFE SHUTDOWN EQUIPMENT/CABLES	CONTAINS SAFETY RELATED EQUIPMENT/CABLES	FIGURE NO.
2-YD-30-200A	Yes	Yes	8-26A
2-YD-30-200B	Yes	Yes	8-26A
2-YD-80-300	No	No	8-26B

7.11.1 FIRE AREA/ZONE: 2-YD-30-200A

FIRE AREA/ZONE: 2-YD-30-200A

AREA: 170000 sq. ft. DESCRIPTION: YARD AREA UNIT 2

DESIGN BASIS FIRE

Fire Loading Category:
Fire Loading - Max Permiss: (SEE TEXT)

FIRE PROTECTION (AVAILABLE)

Suppression (type)	water spray, wet pipe, halon/See Text
Hose Stations	hydrants in yard
Portable Extinguishers	yes
Detectors (type)	thermal/Lube Oil Tank Area, ionization/STA trailer

FIRE RESISTANCE RATING

Walls	HC, 1hr/153, 2hr/128, 150, 3hr/See Text
Floor, Ceiling, Roof	no roof, ground, 2hr/159, 160, NR/145B
Penetrations	P, C, D, NP, NC, ND, NC/142B
Fixed Openings	CH/159,160, louvers/142A,M/142B,OP/148C,148D,148F
Doors	L/73, NR/102A, NR/127, NR/128, (2)NR/148A, NR/153,X/157,X/156, (2)NR/161A, NR/164, A/171, X/171

HOT STANDBY SYSTEMS	Equipment	Valves	Cable
Reactor Coolant			
Reactor Protection System			
Shutdown Cooling			
Chemical and Volume Control			
Main Feedwater			
Main Steam			A,B
HVAC			
Auxiliary Feedwater	N	N	A,B
Engineered Safety Feature			
Component Cooling Water			
Saltwater Cooling Water			
Emergency Chilled Water			
Diesel Generator Systems			A,B

COLD SHUTDOWN SYSTEMS	Equipment	Valves	Cable
Shutdown Cooling			
CCW (To SDC)			
HVAC			
Summary (Hot and Cold)	N	N	A,B

ESSENTIAL ELECTRIC SYSTEMS	Equipment	MCC and Switchgear	Cable
220 KV (AC)	X		X
4160 V (AC)			A,B
480 V (AC)			A,B
120 V (AC)			
125 V (DC)			
Electric Panels			A,B
Summary	X		A,B,X

ASSOCIATED CIRCUITS OF CONCERN

H/I Pressure Interface	NO
Spurious Operation	YES

FIRE AREA/ZONE 2-YD-30-200A

7.11.1.1 Location

Yard - El. 30'-0" - Yard Area - 170,000 square feet - Fig. 8-26A
Fire Loading

Fire loading category - See Note 1.
Maximum permissible fire loading - See Note 1

Note 1:In-situ combustible loadings in the Yard Area are localized and removed from the vicinity of safe shutdown equipment in the area. The Yard area encompasses large, open areas along with several structures. Areas with high localized combustible loadings are provided with suppression, detection, containment fire protection features, as needed or are adequately isolated. In addition, administrative controls are instituted which routinely inspect for excessive transient combustibles above the administratively controlled limits, and compensatory measures are taken, if required.

Note 2:Combustible Control Zones have been established throughout the yard area. These zones, which limit the combustibles allowed within 20 feet of a given wall, are shown in Section 8.0 on the Licensee Controlled Specification Barrier drawings.

Note 3:52,925 lbs added to miscellaneous Class A Combustibles for outage control center (7.3 lb/ft^2) per NFPA Fire Protection Handbook Table 7-9C, 16th Edition. 52,925 lbs were added under wood in FPS to document the miscellaneous combustibles.

7.11.1.2 Design Basis Fire

The design basis fire is postulated to be a fire that would involve oil, paints, solvents, Class A combustibles, plastic, and miscellaneous combustibles.

The maximum credible fire in this zone is limited by the large surface area and the localized nature and spacing of the combustible loading. The design basis fire is expected to be limited to a fire in the vicinity of one of the following hazards: main transformers, auxiliary transformers, lube oil dispensing area, or at the dirty and clean lube oil storage tanks. Limited size fires resulting from transient combustibles can occur at other locations.

7.11.1.3 Fire Protection Equipment

Thermal detectors are located over the clean and dirty lube oil tanks. Detector actuation results in control room and E.S.O. office annunciation and actuation of an automatic water spray system, providing local coverage for the lube oil tanks.

Wet pipe sprinkler systems are located over the occupant buildings in the yard area. These are charged, fusible link systems. A halon system is installed in building B-67.

Manual fire fighting equipment is available within the zone. In addition, hose stream coverage is available from the yard hydrants. Seismic fire pumps and water tank units are also available for fire suppression activities in this yard area.

Station transformers are provided with curbs to limit possible spread of transformer oil. Spare transformers are also provided with curbs.

7.11.1.4 Construction

The zone consists of the Unit 2 portion of the Unit 2/3 yard area enclosed by the protected area fence. A 1 hour rated wall exists between the 2-YD-30-200A, and 2-TB-30-153. 2 hour rated barriers separate 2-YD-30-200A from 2-FH-30-128, 2-CT-(-2)-142B, and 2-TB-7-150. 3 hour walls separate 2-YD-30-200A from 2-PE-30-2C, 2-AR-37-102A, 2-CT-16-142C, and 2-TB-7-149. Non-rated walls exist between 2-YD-30-200A and the remaining zones. Nonrated cable penetrations exist in the barrier separating the Yard Area from fire area/zone 2-CT-(-2)-142B. The yard area is open to the atmosphere (no roof). For detailed information pertaining to fire areas/zones which communicate with the yard, refer to figure 8-26A and the Section 7.0 discussion of the fire areas/zones in question.

7.11.1.5 Licensee Controlled Specification Barriers

For area/zone barriers requiring surveillance per LCS 3.7.104 refer to the latest revisions of Figure 8-1 through 8-26, Sheet 3.

7.11.1.6 Conclusion

The Unit 2 yard area is open to the atmosphere. Therefore, unlimited ventilation is provided to disperse heat and combustion by-products.

Sources of high combustible loadings in the area are provided with detection, suppression, or flammable/combustible material containment features to minimize their effect. Combustible Control Zones have been established at certain location in the yard area. These zones, which limit the combustibles allowed within 20 feet of a given wall or ensure that a continuous path of combustibles does not exist between duct banks and/or manholes containing redundant safety shutdown cables are shown in Section 8.0 on the Licensee Controlled Specification Barrier drawings.

The barriers for fire zones which communicate with the yard have been evaluated and found to be adequate to prevent propagation of a yard fire into those adjacent zones containing redundant safe shutdown equipment.

7.11.1.7 Fire Area 2-YD-30-200 Appendix R Compliance

Safe shutdown capability will be provided by utilizing Train A or B systems. Physically separated functionally redundant components will be utilized in conjunction with operator action on manual or disabled components to achieve safe shutdown.

One train of systems necessary to achieve hot standby and cold shutdown has been evaluated to remain available for safe shutdown in accordance with 10CFR50, Appendix R sections III.G.1 and III.G.2. A deviation from Appendix R, Section III.G.2 has been approved by the NRC for separation of redundant cabling in yard area manholes.

7.11.2 FIRE AREA/ZONE: 2-YD-30-200B

FIRE AREA/ZONE: 2-YD-30-200B

AREA: 197416 sq. ft. DESCRIPTION: YARD AREA UNIT 3

DESIGN BASIS FIRE

Fire Loading Category:	
Fire Loading - Max Permiss:	(SEE TEXT)

FIRE PROTECTION (AVAILABLE)

Suppression (type)	SPRINKLERS/SERVICES BLDG
Hose Stations	hydrants in yard
Portable Extinguishers	yes
Detectors (type)	VARIOUS IN OFFICES

FIRE RESISTANCE RATING

Walls	HC, 1hr/153 2hr/128, 150, 173, 3hr/See Text
Floor, Ceiling, Roof	no roof, ground, 2hr/159, 160, NR/145B
Penetrations	P, C, D, NP, NC, ND, NC/142B
Fixed Openings	CH, louvers, M, OP, OH, MH/See Text
Doors	L/24, 75; NR/102A, 127, 128, 153, 164; (2)NR/148A, 161A; X/156, 157; A/171; X171

HOT STANDBY SYSTEMS	Equipment	Valves	Cable
Reactor Coolant			
Reactor Protection System			
Shutdown Cooling			
Chemical and Volume Control			
Main Feedwater			
Main Steam			A,B
HVAC			
Auxiliary Feedwater	N	N	A,B
Engineered Safety Feature			
Component Cooling Water			
Saltwater Cooling Water			
Emergency Chilled Water			
Diesel Generator Systems			A,B

COLD SHUTDOWN SYSTEMS	Equipment	Valves	Cable
Shutdown Cooling			
CCW (To SDC)			
HVAC			
Summary (Hot and Cold)	N	N	A,B

ESSENTIAL ELECTRIC SYSTEMS	Equipment	MCC and Switchgear	Cable
220 KV (AC)	X		X
4160 V (AC)			A,B
480 V (AC)			A,B
120 V (AC)			
125 V (DC)			
Electric Panels			A,B
Summary	X		A,B,X

ASSOCIATED CIRCUITS OF CONCERN

H/I Pressure Interface	NO
Spurious Operation	YES

FIRE AREA/ZONE 2-YD-30-200B

7.11.2.1 Location

Yard - El. 30'-0" - Yard Area - 197,416 sq ft - Fig. 8-26A.

Fire loading category - See Note 1
Maximum permissible fire loading - See Note 1

Note 1:In-situ combustible loadings are localized and removed from the vicinity of safe shutdown equipment in the area. The Yard area encompasses large, open areas along with several structures. Areas with high localized combustible loadings are provided with suppression, detection, containment fire protection features, as needed, or are adequately isolated. In addition, administrative controls are instituted which routinely inspect for excessive transient combustibles above the administratively controlled limits, and compensatory measures are taken, if required.

Note 2:Combustible Control Zones have been established throughout the yard area. These zones, which limit the combustibles allowed within 20 feet of a given wall, are shown in Section 8.0 on the Licensee Controlled Specification Barrier drawings.

7.11.2.2 Design Basis Fire

The design basis fire is postulated to be a fire that would involve oil, paints, solvents, Class A combustibles and miscellaneous combustibles.

The maximum credible fire in this zone is limited by the large surface area and the localized nature and spacing of the combustible loading. The design basis fire is expected to be limited to a fire in the vicinity of one of the following hazards: main transformers, auxiliary transformers or lube oil dispensing area. Limited size fires resulting from transient combustibles can occur at other locations.

7.11.2.3 Fire Protection Equipment

Sprinklers are provided for services bldg. Remote alarms are indicated at ESO office via ADT.

Manual fire fighting equipment is available within the zone. In addition, hose stream coverage is available from the yard hydrants. Seismic fire pumps and water tank units are also available for fire suppression activities in the yard area.

Station transformers are provided with curbs to limit possible spread of transformer oil.

7.11.2.4 Construction

The zone consists of the Unit 3 portion the Unit 2/3 yard area enclosed by the protected area fence. A 1 hour rated wall exists between 2-YD-30-200B and 3-TB-30-153. 2 hour rated barriers separate 2-YD-30-200B from 3-FH-30-128, 3-CT-(-2)-142B, 3-TB-7-150, and 3-SE-30-173. 3 hour walls separate 2-YD-30-200B from 3-PE-30-2C, 3-AR-37-102A, 3-CT-16-142C, and 3-TB-7-149. Nonrated cable penetrations exist in the barrier separating the Yard Area from fire area/zone 3-CT-(-2)-142B. Non-rated walls exist between 2-YD-30-200B and the remaining zones. The yard area is open to the atmosphere (no roof). For detailed information pertaining to zones which communicate with the yard, refer to figure 8-26A and the Section 7.0 discussion of the zone in question.

7.11.2.5 Licensee Controlled Specification Barriers

For area/zone barriers requiring surveillance per LCS 3.7.104 refer to the latest revisions of Figure 8-1 through 8-26, Sheet 3.

7.11.2.6 Conclusions

The Unit 3 yard area is open to the atmosphere. Therefore, unlimited ventilation is provided to dispense heat and combustion by-products.

Sources of high combustible loadings in the area are provided with detection, suppression, or flammable/combustible material containment features to minimize their effect.

Combustible Control Zones have been established throughout the yard area. These zones, which limit the combustibles allowed within 20 feet of a given wall or ensure that a continuous path of combustibles does not exist between duct banks and/or manholes containing redundant safe shutdown cables are shown in Section 8.0 on the Licensee Controlled Specification Barrier drawings.

The barriers for fire zones which communicate with the yard which contain safe shutdown components have been evaluated and found to be adequate to prevent propagation of a yard fire into the zone.

Appendix R compliance for fire area 2-YD-30-200 is discussed in fire zone 2-YD-30-200A.

7.11.3 FIRE AREA/ZONE: 2-YD-80-300

FIRE AREA/ZONE: 2-YD-80-300

AREA: 0 sq. ft. DESCRIPTION: SOUTH YARD FACILITY

DESIGN BASIS FIRE

Fire Loading Category:
Fire Loading - Max Permiss: 80,000.0 Btu's/sq.ft.

FIRE PROTECTION (AVAILABLE)

Suppression (type)	wet pipe, pre action, halon
Hose Stations	none
Portable Extinguishers	yes
Detectors (type)	ionization, linear beam

FIRE RESISTANCE RATING

Walls	NR
Floor, Ceiling, Roof	NRr
Penetrations	NR
Fixed Openings	OP
Doors	NR

HOT STANDBY SYSTEMS	Equipment	Valves	Cable
Reactor Coolant			
Reactor Protection System			
Shutdown Cooling			
Chemical and Volume Control			
Main Feedwater			
Main Steam			
HVAC			
Auxiliary Feedwater			
Engineered Safety Feature			
Component Cooling Water			
Saltwater Cooling Water			
Emergency Chilled Water			
Diesel Generator Systems			

COLD SHUTDOWN SYSTEMS	Equipment	Valves	Cable
Shutdown Cooling			
CCW (To SDC)			
HVAC			
Summary (Hot and Cold)			

ESSENTIAL ELECTRIC SYSTEMS	Equipment	MCC and Switchgear	Cable
220 KV (AC)			
4160 V (AC)			
480 V (AC)			
120 V (AC)			
125 V (DC)			
Electric Panels			
Summary			

ASSOCIATED CIRCUITS OF CONCERN

H/I Pressure Interface	NO
Spurious Operation	NO

7. DETAILED FIRE HAZARD ANALYSIS

7.12 UNIT 3 CONTAINMENT BUILDING

The Unit 3 containment building is a reinforced concrete structure which houses the reactor, the steam generators, the reactor coolant pumps, the reactor coolant system, and other required support systems. The building is divided into three (3) fire areas. The barrier, penetration and door ratings are noted in the matrices.

The containment building contains part of or all of the following systems, which can be used for, or support, safe shutdown and cooldown:

- Essential Electric System
- Reactor Coolant
- Shutdown Cooling
- Chemical and Volume Control
- Main Steam
- HVAC

The types of fire protection/detection equipment in or near the building consist of the following:

- Portable extinguishers.
- A seismic standpipe system with manual hose stations.
- Smoke and fixed temperature rate of rise heat detectors.
- Manual water spray systems are provided for the charcoal filter units. Heat sensors installed in the filters provide control room alarm on high temperature.
- Semi-automatic water spray systems are provided for the reactor coolant pumps.
- Reactor coolant pump lube oil collection system.

Fire Area/Zone	Contains Safe Shutdown Equipment/Cables	Contains Safety-Related Equipment/Cables	Figure No.
3-CO-15-1A	Yes	Yes	8-27, 8-28, 8-29, 8-30
3-CO-15-1B	Yes	Yes	8-27, 8-28, 8-29, 8-30
3-CO-15-1C	Yes	Yes	8-27, 8-28, 8-29
3-CO-63-1D	Yes	Yes	8-30
3-CO-15-167	No	No	8-27, 8-28, 8-29, 8-30
3-CO-15-168	No	No	8-27, 8-28, 8-29, 8-30

7.12.1 FIRE AREA/ZONE: 3-CO-15-1A

FIRE AREA/ZONE: 3-CO-15-1A

AREA: 1335 sq. ft. DESCRIPTION: GENERATOR ROOM #2

DESIGN BASIS FIRE

Fire Loading Category:	Low
Fire Loading - Max Permiss:	80,000.0 Btu's/sq.ft.

FIRE PROTECTION (AVAILABLE)

Suppression (type)	semiautomatic water sys for RC pumps
Hose Stations	none, (1)seismic available in 3-CO-15-1C
Portable Extinguishers	none, adjacent
Detectors (type)	heat detectors for reactor coolant pumps

FIRE RESISTANCE RATING

Walls	HC
Floor, Ceiling, Roof	HC
Penetrations	none
Fixed Openings	OP/1C
Doors	none

HOT STANDBY SYSTEMS	Equipment	Valves	Cable
Reactor Coolant	N,B		A,B,B*
Reactor Protection System			
Shutdown Cooling			
Chemical and Volume Control			
Main Feedwater			
Main Steam			
HVAC			
Auxiliary Feedwater			
Engineered Safety Feature			
Component Cooling Water			
Saltwater Cooling Water			
Emergency Chilled Water			
Diesel Generator Systems			

COLD SHUTDOWN SYSTEMS	Equipment	Valves	Cable
Shutdown Cooling			
CCW (To SDC)			
HVAC			
Summary (Hot and Cold)	N,B		A,B,B*

ESSENTIAL ELECTRIC SYSTEMS	Equipment	MCC and Switchgear	Cable
220 KV (AC)			
4160 V (AC)			
480 V (AC)			
120 V (AC)			
125 V (DC)			
Electric Panels			
Summary			

ASSOCIATED CIRCUITS OF CONCERN

H/I Pressure Interface	NO
Spurious Operation	YES

FIRE AREA/ZONE 3-CO-15-1A

7.12.1.1 Location

Containment Building - El. 15'-0" - Generator Room #2 - 1335 square feet - Figures 8-27, 8-28, 8-29, 8-30

7.12.1.2 Fire Loading

Fire loading category - Low
Maximum permissible fire loading - 80,000 Btu/sq. ft. (Note 1)

Note 1:The maximum permissible fire loading is based on an evenly distributed loading of combustible materials.

Note 2: Structural expansion material is embedded and sealed in concrete floors at walls and columns (Details in structural drawings 23108, 23120, 23199 Sheet 1, 23000 Sheets 1,2,3,4).

7.12.1.3 Design Basis Fire

The design basis fire is postulated to be a fire that would involve mostly cable insulation, oil normally contained within the two reactor coolant pumps and their associated surge capacitors located in the zone, or plastic.

Transient fire loads in this area are not credible when the plant is at power, and fixed hazards within containment which pose an exposure threat to equipment, components or circuits required for safe shutdown (i.e., reactor coolant pumps) are provided with fixed semi-automatic water suppression systems and automatic detection capability.

The design basis fire is conservatively based on the simultaneous total combustion of all exposed combustibles in the zone.

7.12.1.4 Fire Protection Equipment

The zone contains a semi-automatic water spray system, with fixed temperature rate of rise detection, over the reactor coolant pumps. The heat detectors alarm in the control room. No hose stations or portable extinguishers are located within the zone. However, manual fire fighting equipment is available in adjacent zone 3-CO-15-1C.

7.12.1.5 Construction

The zone boundaries are heavy concrete with an approximate thickness of 48 inches. An open walkway allows access to the zone from adjacent zone 3-CO-15-1C. There are no fire dampers in the ventilation duct penetrations.

7.12.1.6 Licensee Controlled Specification Barriers

For definition of the barriers requiring surveillance per LCS 3.7.104, refer to the latest revisions of Figures 8-27, 8-28, 8-29, and 8-30, sheet 3/4.

FIRE AREA/ZONE 3-CO-15-1A

7.12.1.7 Conclusions

The fixed temperature rate of rise heat detectors are expected to detect the fire in its initial stages of growth, and alarm in the control room. A fire water main containment isolation valve will then be opened by a remote manual switch in the control room, and water will flow automatically to the correct water spray system to control and extinguish the fire.

Reactor coolant pumps are provided with a lube oil collection system designed to collect oil and prevent it from coming into contact with high temperature components. The system is designed to ensure that it will not structurally fail and unacceptably interact with safety related structures, systems or components.

Portable extinguishers and hose stations located in adjacent zone 3-CO-15-1C provide suppression capability.

In the event the normal purge and/or mini-purge systems are damaged by fire, the smoke associated with such a fire would naturally rise and collect in the upper portions of the containment dome. This would enable the fire department to access and mitigate the fire without being unduly hampered by smoke.

The substantial construction of the heavy concrete walls is sufficient to prevent the propagation of a fire beyond the boundaries of the fire zone.

7.12.1.8 Fire Area 3-CO-15-1 Appendix R Compliance

Safe shutdown for a fire in Fire Area 2-CO-15-1 will be provided by utilizing Train A or B systems. Functionally redundant components protected from fire damage will be utilized in conjunction with operator action on manual or disabled components to achieve safe shutdown.

One train of systems necessary to achieve hot standby and cold shutdown has been evaluated to remain available for safe shutdown in accordance with 10CFR50, Appendix R, III.G.1 and III.G.2.d. A deviation from the requirements of 10CFR50 Appendix R, III.G.2.d has been accepted for cables and equipment not consistent with the 20 foot separation with no intervening combustibles rule. The fire detection and suppression systems in this area/zone were evaluated and shown to provide a level of protection equivalent to the requirements of the applicable sections of Appendix R.

7.12.2 FIRE AREA/ZONE: 3-CO-15-1B

FIRE AREA/ZONE: 3-CO-15-1B

AREA: 1399 sq. ft. DESCRIPTION: GENERATOR ROOM #1

DESIGN BASIS FIRE

Fire Loading Category:	Low
Fire Loading - Max Permiss:	80,000.0 Btu's/sq.ft.

FIRE PROTECTION (AVAILABLE)

Suppression (type)	semiautomatic water sys for RC pumps
Hose Stations	none, (1)seismic available in 3-CO-15-1C
Portable Extinguishers	none, adjacent
Detectors (type)	heat detectors for reactor coolant pumps

FIRE RESISTANCE RATING

Walls	HC
Floor, Ceiling, Roof	HC
Penetrations	none
Fixed Openings	OP/1C
Doors	none

HOT STANDBY SYSTEMS	Equipment	Valves	Cable
Reactor Coolant	N,A,B		A*,B*,A,B
Reactor Protection System			
Shutdown Cooling			
Chemical and Volume Control			
Main Feedwater			
Main Steam			
HVAC			
Auxiliary Feedwater			
Engineered Safety Feature			
Component Cooling Water			
Saltwater Cooling Water			
Emergency Chilled Water			
Diesel Generator Systems			

COLD SHUTDOWN SYSTEMS	Equipment	Valves	Cable
Shutdown Cooling			
CCW (To SDC)			
HVAC			
Summary (Hot and Cold)	N,A,B		A*,B*,A,B

ESSENTIAL ELECTRIC SYSTEMS	Equipment	MCC and Switchgear	Cable
220 KV (AC)			
4160 V (AC)			
480 V (AC)			
120 V (AC)			
125 V (DC)			
Electric Panels			A,B
Summary			A,B

ASSOCIATED CIRCUITS OF CONCERN

H/I Pressure Interface	NO
Spurious Operation	YES

FIRE AREA/ZONE 3-CO-15-1B

7.12.2.1 Location

Containment Building - El. 17'-2" - Generator Room #1 - 1399 square feet - Figures 8-27, 8-28, 8-29, 8-30

7.12.2.2 Fire Loading

Fire loading category - Low
Maximum permissible fire loading - 80,000 Btu/sq. ft.

Note 1:The maximum permissible fire loading is based on an evenly distributed loading of combustible materials.

Note 2: Structural expansion material is embedded and sealed in concrete floors at walls and columns (Details in structural drawings 23108, 23120, 23199 Sheet 1, 23000 Sheets 1,2,3,4).

7.12.2.3 Design Basis Fire

The design basis fire is postulated to be a fire that would involve mostly cable insulation, oil normally contained within the two reactor coolant pumps and their associated surge capacitors, or plastic.

Transient fire loads in this area are not credible when the plant is at power, and fixed hazards within containment which pose an exposure threat to equipment, components or circuits required for safe shutdown (i.e., reactor coolant pumps) are provided with fixed semi-automatic water suppression systems and automatic detection capability.

The design basis fire is conservatively based on the simultaneous total combustion of all exposed combustibles in the zone.

7.12.2.4 Fire Protection Equipment

The zone contains a semi-automatic water spray system, with fixed temperature rate of rise detection, over the reactor coolant pumps. The heat detectors alarm in the control room. No hose stations or portable extinguishers are located within the zone. However, manual fire fighting equipment is available in adjacent zone 3-CO-15-1C.

7.12.2.5 Construction

The zone boundaries are heavy concrete with an approximate thickness of 48 inches. An open walkway allows access to the zone from adjacent zone 3-CO-15-1C. There are no fire dampers in the ventilation duct penetrations.

7.12.2.6 Licensee Controlled Specification Barriers

For definition of the barriers requiring surveillance per LCS 3.7.104, refer to the latest revisions of Figures 8-27, 8-28, 8-29, and 8-30, sheet 3/4.

7.12.2.7 Conclusions

The fixed temperature rate of rise heat detectors are expected to detect the fire in its initial stages of growth, and alarm in the control room. A fire water main containment isolation valve will then be opened by a remote manual switch in the control room, and water will flow automatically to the correct water spray system to control and extinguish the fire.

Reactor coolant pumps are provided with a lube oil collection system designed to collect oil and prevent it from coming into contact with high temperature components. The system is designed to ensure that it will not structurally fail and unacceptably interact with safety related structures, systems or components.

Portable extinguishers and hose stations located in adjacent zone 3-CO-15-1C provide suppression capability.

In the event the normal purge and/or mini-purge systems are damaged by fire, the smoke associated with such a fire would naturally rise and collect in the upper portions of the containment dome. This would enable the fire department to access and mitigate the fire without being unduly hampered by smoke.

The substantial construction of the heavy concrete walls is sufficient to prevent the propagation of a fire beyond the boundaries of the fire zone.

Appendix R compliance for fire area 3-CO-15-1 is discussed in fire zone 3-CO-15-1A.

7.12.3 FIRE AREA/ZONE: 3-CO-15-1C

FIRE AREA/ZONE: 3-CO-15-1C

AREA: 11903 sq. ft. DESCRIPTION: CONTAINMENT AREA QUADRANTS 1,2,3,4

DESIGN BASIS FIRE

Fire Loading Category:	Low
Fire Loading - Max Permiss:	80,000.0 Btu's/sq.ft.

FIRE PROTECTION (AVAILABLE)

Suppression (type)	manual water spray sys for charcoal
Hose Stations	(9) seismic
Portable Extinguishers	yes
Detectors (type)	ionization (partial), temp. detector for char

FIRE RESISTANCE RATING

Walls	HC
Floor, Ceiling, Roof	HC
Penetrations	none
Fixed Openings	OP/1D
Doors	(3) B/3-CO-15-167, (3)B/3-CO-15-168

HOT STANDBY SYSTEMS	Equipment	Valves	Cable
Reactor Coolant	N		A,A*, B,B*, C,D
Reactor Protection System			
Shutdown Cooling		B,A	B,A
Chemical and Volume Control			A,B
Main Feedwater			
Main Steam			A,A*, B,C,D
HVAC			A,B
Auxiliary Feedwater			
Engineered Safety Feature			
Component Cooling Water			
Saltwater Cooling Water			
Emergency Chilled Water			
Diesel Generator Systems			

COLD SHUTDOWN SYSTEMS	Equipment	Valves	Cable
Shutdown Cooling			A,B
CCW (To SDC)			
HVAC			
Summary (Hot and Cold)	N	B,A	A,A*, B,B*, C,D

ESSENTIAL ELECTRIC SYSTEMS	Equipment	MCC and Switchgear	Cable
220 KV (AC)			
4160 V (AC)			
480 V (AC)			
120 V (AC)			
125 V (DC)			
Electric Panels			A,B
Summary			A,B

ASSOCIATED CIRCUITS OF CONCERN

H/I Pressure Interface	YES
Spurious Operation	YES

FIRE AREA/ZONE 3-CO-15-1C

7.12.3.1 Location

Containment Building - El. 17'-2" - Containment Area Quadrants 1, 2, 3, 4 - 11,903 square feet - Figures 8-27, 8-28, 8-29

7.12.3.2 Fire Loading

Fire loading category - Low
Maximum permissible fire loading - 80,000 Btu/sq. ft. (Note 1)

Note 1:The maximum permissible fire loading is based on an evenly distributed loading of combustible materials.

Note 2: Structural expansion material is embedded and sealed in concrete floors at walls and columns (Details in structural drawings 23108, 23120, 23199 Sheet 1, 23000 Sheets 1,2,3,4).

7.12.3.3 Design Basis Fire

The design basis fire is postulated to be a fire that would involve mostly cable insulation and charcoal.

Transient fire loads in this area are not credible when the plant is at power, and fixed hazards within containment which pose an exposure threat to equipment, components or circuits required for safe shutdown (i.e., reactor coolant pumps) are provided with fixed semi-automatic water suppression systems and automatic detection capability.

The fire loading is conservatively based on the simultaneous total combustion of all exposed combustibles in the zone. Due to the total enclosure of the charcoal within the charcoal filters of the recirculation unit and the physical separation of the redundant trains of cabling, the maximum credible fire will involve either charcoal or one train of cabling.

7.12.3.4 Fire Protection Equipment

A manual water spray system is provided for the charcoal filters of the recirculation filtration unit. A temperature detector is installed within the filtration units to alarm the control room on high temperature. Manual fire fighting equipment is available within the zone. Ionization smoke detectors provide an early warning alarm in the control room.

7.12.3.5 Construction

The zone boundaries are heavy concrete with an approximate thickness of 48 inches. Three 1-1/2 hour doors separate the area from the stairwell (3-CO-15-168). Three 1-1/2 hour rated doors open to the elevator (3-CO-15-167).

7.12.3.6 Licensee Controlled Specification Barriers

For definition of the barriers requiring surveillance per LCS 3.7.104, refer to the latest revisions of Figures 8-27, 8-28 and 8-29, sheet 3/4.

7.12.3.7 Conclusions

Fixed combustibles within the zone are limited to cable and charcoal which is entirely contained within the recirculation unit charcoal filter.

In the event of a fire in the charcoal filter, the temperature detector installed in the filters is expected to alarm high temperature in the control room. The operator will open the motor operated valve to pressurize the water spray system. At the same time, the operator will send personnel inside the containment to position the charcoal filter OS&Y valve to initiate flow and extinguish the fire.

The design basis fire is insufficient to breach the barriers defining the zone/fire area.

The high voltage ionization detectors provided at the 30' and 45' containment levels are expected to detect the products of combustion due to a cable fire and alert the control room.

In the event the normal purge and/or mini-purge systems are damaged by fire, the smoke associated with such a fire would naturally rise and collect in the upper portions of the containment dome. This would enable the fire department to access and mitigate the fire without being unduly hampered by smoke.

Appendix R compliance for fire area 3-CO-15-1 is discussed in fire zone 3-CO-15-1A.

7.12.4 FIRE AREA/ZONE: 3-CO-63-1D

FIRE AREA/ZONE: 3-CO-63-1D

AREA: 14185 sq. ft. DESCRIPTION: OPERATING FLOOR

DESIGN BASIS FIRE

Fire Loading Category:	Low
Fire Loading - Max Permiss:	80,000.0 Btu's/sq.ft.

FIRE PROTECTION (AVAILABLE)

Suppression (type)	none
Hose Stations	(3) seismic
Portable Extinguishers	yes
Detectors (type)	ionization

FIRE RESISTANCE RATING

Walls	HC
Floor, Ceiling, Roof	HC
Penetrations	none
Fixed Openings	OP/1C
Doors	B/3-CO-15-167, B3-CO-15-168

HOT STANDBY SYSTEMS	Equipment	Valves	Cable
Reactor Coolant			B*, A,B,C
Reactor Protection System			
Shutdown Cooling		A,B	A,B
Chemical and Volume Control			A,B
Main Feedwater			
Main Steam			A*,B,C
HVAC	A,B		A,B
Auxiliary Feedwater			
Engineered Safety Feature			
Component Cooling Water			
Saltwater Cooling Water			
Emergency Chilled Water			
Diesel Generator Systems			

COLD SHUTDOWN SYSTEMS	Equipment	Valves	Cable
Shutdown Cooling			A,B
CCW (To SDC)			
HVAC			
Summary (Hot and Cold)	A,B	A,B	A,A*,B,B*,C

ESSENTIAL ELECTRIC SYSTEMS	Equipment	MCC and Switchgear	Cable
220 KV (AC)			
4160 V (AC)			
480 V (AC)			
120 V (AC)			
125 V (DC)			
Electric Panels			A,B
Summary			A,B

ASSOCIATED CIRCUITS OF CONCERN

H/I Pressure Interface	YES
Spurious Operation	YES

FIRE AREA/ZONE 3-CO-63-1D

7.12.4.1 Location

Containment Building - El. 63'-6" - Operating Floor - 14,185 square feet - Figure 8-30

7.12.4.2 Fire Loading

Fire loading category - Low
Maximum permissible fire loading - 80,000 BTU's/sq. ft. (Note 1)

Note 1:The maximum permissible fire loading is based on an evenly distributed loading of combustible materials.

Note 2: Structural expansion material is embedded and sealed in concrete floors at walls and columns (Details in structural drawings 23108, 23120, 23199 Sheet 1, 23000 Sheets 1,2,3,4).

7.12.4.3 Design Basis Fire

The design basis fire is postulated to be a fire that would involve mostly cable insulation, oil and grease, and plastic. Transient fire loads in this area are not credible when the plant is at power.

The design basis fire is conservatively based on the simultaneous combustion of all exposed combustibles in the zone.

7.12.4.4 Fire Protection Equipment

Manual fire fighting equipment is available within the zone. Ionization smoke detectors, located within the zone, provide early warning alarm in the control room.

7.12.4.5 Construction

The zone boundaries are heavy concrete with an approximate thickness of 48 inches. The zone communicates with the stairwell (3-CO-15-168) and the elevator (3-CO-15-167) through 1-1/2 hour rated doors.

7.12.4.6 Licensee Controlled Specification Barriers

For definition of the barriers requiring surveillance per LCS 3.7.104, refer to the latest revision of Figure 8-30, sheet 3.

7.12.4.7 Conclusions

The ionization detectors are expected to detect the products of combustion of an incipient fire and alert the control room.

The design basis fire is insufficient to breach the barriers defining the zone/fire area.
In the event the normal purge and/or mini-purge systems are damaged by fire, the smoke associated with such a fire would naturally rise and collect in the upper portions of the containment dome. This would enable the fire department to access and mitigate the fire without being unduly hampered by smoke.

The low fire loading and the substantial construction of the heavy concrete walls and floor preclude the propagation of the fire beyond the boundaries defining the fire zone.

Appendix R compliance for fire area 3-CO-15-1 is discussed in fire zone 3-CO-15-1A.

7.12.5 FIRE AREA/ZONE: 3-CO-15-167

FIRE AREA/ZONE: 3-CO-15-167

AREA: 64 sq. ft. DESCRIPTION: ELEVATOR SHAFT

DESIGN BASIS FIRE

Fire Loading Category:	Minimal
Fire Loading - Max Permiss:	160,000.0 Btu's/sq.ft.

FIRE PROTECTION (AVAILABLE)

Suppression (type)	none
Hose Stations	none, seismic in 3-CO-15-1C & 3-CO-63-1D
Portable Extinguishers	yes, adjacent
Detectors (type)	ionization in machine room

FIRE RESISTANCE RATING

Walls	2hr
Floor, Ceiling, Roof	HC
Penetrations	none
Fixed Openings	none
Doors	(3)B/3-CO-15-1C,B/3-CO-63-1D,X/3-CO-15-168

HOT STANDBY SYSTEMS	Equipment	Valves	Cable
Reactor Coolant			
Reactor Protection System			
Shutdown Cooling			
Chemical and Volume Control			
Main Feedwater			
Main Steam			
HVAC			
Auxiliary Feedwater			
Engineered Safety Feature			
Component Cooling Water			
Saltwater Cooling Water			
Emergency Chilled Water			
Diesel Generator Systems			

COLD SHUTDOWN SYSTEMS	Equipment	Valves	Cable
Shutdown Cooling			
CCW (To SDC)			
HVAC			
Summary (Hot and Cold)			

ESSENTIAL ELECTRIC SYSTEMS	Equipment	MCC and Switchgear	Cable
220 KV (AC)			
4160 V (AC)			
480 V (AC)			
120 V (AC)			
125 V (DC)			
Electric Panels			
Summary			

ASSOCIATED CIRCUITS OF CONCERN

H/I Pressure Interface	NO
Spurious Operation	NO

7.12.6 FIRE AREA/ZONE: 3-CO-15-168

FIRE AREA/ZONE: 3-CO-15-168

AREA: 136 sq. ft. DESCRIPTION: STAIRCASE

DESIGN BASIS FIRE

Fire Loading Category:	Minimal
Fire Loading - Max Permiss:	160,000.0 Btu's/sq.ft.

FIRE PROTECTION (AVAILABLE)

Suppression (type)	none
Hose Stations	none, seismic in 3-CO-15-1C & 3-CO-63-1D
Portable Extinguishers	yes, adjacent
Detectors (type)	none

FIRE RESISTANCE RATING

Walls	2hr
Floor, Ceiling, Roof	HC
Penetrations	C
Fixed Openings	none
Doors	(3)B/3-CO-15-1C,B/3-CO-63-1D,X/3-CO-15-167

HOT STANDBY SYSTEMS	Equipment	Valves	Cable
Reactor Coolant			
Reactor Protection System			
Shutdown Cooling			
Chemical and Volume Control			
Main Feedwater			
Main Steam			
HVAC			
Auxiliary Feedwater			
Engineered Safety Feature			
Component Cooling Water			
Saltwater Cooling Water			
Emergency Chilled Water			
Diesel Generator Systems			

COLD SHUTDOWN SYSTEMS	Equipment	Valves	Cable
Shutdown Cooling			
CCW (To SDC)			
HVAC			
Summary (Hot and Cold)			

ESSENTIAL ELECTRIC SYSTEMS	Equipment	MCC and Switchgear	Cable
220 KV (AC)			
4160 V (AC)			
480 V (AC)			
120 V (AC)			
125 V (DC)			
Electric Panels			
Summary			

ASSOCIATED CIRCUITS OF CONCERN

H/I Pressure Interface	NO
Spurious Operation	NO

7. DETAILED FIRE HAZARD ANALYSIS

7.13 UNIT 3 PENETRATION BUILDING

The Unit 3 Penetration Building is a reinforced concrete structure that contains piping and electrical penetration areas. The barrier, penetration and door ratings are noted in the matrices. The Penetration Building is divided into two (2) fire areas.

The Penetration Building contains part of or all of the following systems, which can be used for, or support, safe shutdown and cooldown:

- Reactor Coolant
- Shutdown Cooling
- Chemical and Volume Control
- Main Steam
- HVAC
- Component Cooling Water
- Emergency Chilled Water
- Diesel Generator Systems
- Essential Electric Systems

The types of protection/detection equipment available in or near this building consists of the following:

- Portable extinguishers.
- Smoke detectors.
- A seismic standpipe system with manual hose stations.
- Manual water spray systems are provided for the charcoal filter units. Heat sensors, installed in the units, provide control room alarm on high temperature.

Fire Area/Zone	Contains Safe Shutdown Equipment/Cables	Contains Safety-Related Equipment/Cables	Figure No.
3-PE-9-2A	Yes	Yes	8-27
3-PE-(-18)-2B	Yes	Yes	8-27, 8-31
3-PE-30-2C	Yes	Yes	8-28
3-PE-30-2D	Yes	Yes	8-28
3-PE-45-3A	Yes	Yes	8-29
3-PE-63-3B	Yes	Yes	8-30

7.13.1 FIRE AREA/ZONE: 3-PE-9-2A

FIRE AREA/ZONE: 3-PE-9-2A

AREA: 7738 sq. ft. DESCRIPTION: PIPING AREA

DESIGN BASIS FIRE

Fire Loading Category:	Minimal
Fire Loading - Max Permiss:	40,000.0 Btu's/sq.ft.

FIRE PROTECTION (AVAILABLE)

Suppression (type)	none
Hose Stations	none, (1) in 2-AR-9-76
Portable Extinguishers	yes
Detectors (type)	ionization

FIRE RESISTANCE RATING

Walls	HC/containment, 75, 2B, 3hr/others
Floor, Ceiling, Roof	HC/floor grade 2C, others/2hr
Penetrations	D, C, P, SG, ND/2C, QP/94, QP/75
Fixed Openings	OP/2B, MH/2C, OH/2C, OS/2C, OD/2B
Doors	W/3-TB-8-148G, A/2-AR-9-76,A/3-FH-15-124,A/3-FH-17-122

HOT STANDBY SYSTEMS	Equipment	Valves	Cable
Reactor Coolant			
Reactor Protection System			
Shutdown Cooling			
Chemical and Volume Control			B
Main Feedwater			
Main Steam			B
HVAC			
Auxiliary Feedwater			
Engineered Safety Feature			
Component Cooling Water			A,B
Saltwater Cooling Water			
Emergency Chilled Water			
Diesel Generator Systems			

COLD SHUTDOWN SYSTEMS	Equipment	Valves	Cable
Shutdown Cooling		N	A,B
CCW (To SDC)			
HVAC			
Summary (Hot and Cold)		N	A,B

ESSENTIAL ELECTRIC SYSTEMS	Equipment	MCC and Switchgear	Cable
220 KV (AC)			
4160 V (AC)			
480 V (AC)			
120 V (AC)			
125 V (DC)			
Electric Panels			A,B,X
Summary			A,B,X

ASSOCIATED CIRCUITS OF CONCERN

H/I Pressure Interface	NO
Spurious Operation	YES

FIRE AREA/ZONE 3-PE-9-2A

7.13.1.1 Location

Penetration Building - El. 9'-0" - Piping Area - 7738 square feet - Figures 8-27

7.13.1.2 Fire Loading

Fire loading category - Minimal
Maximum permissible fire loading - 40,000 Btu/sq. ft. (Note 1)

Note 1:The maximum permissible fire loading is based on an evenly distributed loading of combustible materials.

7.13.1.3 Design Basis Fire

The design basis fire is postulated to be a fire that would involve mostly hydraulic fluid, rubber, and Class A combustibles.

The design basis fire is conservatively based on the simultaneous total combustion of all combustibles in the zone.

7.13.1.4 Fire Protection Equipment

Manual fire fighting equipment is available within the zone or in adjacent area 2-AR-9-76. Ionization smoke detectors, located within the zone, provide early warning alarm in the control room.

7.13.1.5 Construction

Heavy concrete walls separates this zone from containment. The walls adjoining 3-PE-(-18)-2B and 3-AR-9-75 are nonrated heavy concrete. The remainder of the zone walls are 3 hour rated. The ceiling to 3-PE-30-2C is nonrated heavy concrete construction. The remainder of the ceiling is 2 hour rated. An open stairwell leads to zone 3-PE-30-2C above. The floor to grade is nonrated heavy concrete construction. Two 3 hour rated doors communicate with the fuel handling building (3-FH-17-122 and 3-FH-15-124). The area is separated from the the auxiliary radwaste building (2-AR-9-76) by a 3 hour rated door. A watertight door opens to adjacent zone 3-TB-8-148G. The zone communicates with adjacent zone 3-PE-(-18)-2B through a gate and an opening (at the west end of the penetration building) in the barrier between the two zones. There is a qualified penetration seal between this zone and 3-AR-9-75. The barrier between these two areas is part of a double wall configuration. The qualified seal is on the 3-AR-9-75 side of the double wall and the 2A side is unsealed.

7.13.1.6 Licensee Controlled Specification Barriers

For definition of the barriers requiring surveillance per LCS 3.7.104, refer to the latest revision of Figure 8-27, sheet 3.

7.13.1.7 Conclusions

The ionization detection system is expected to detect the products of combustion from an incipient fire and alert the control room for prompt response by the fire department. The available portable equipment is adequate to extinguish the fire.

The fire boundaries between 3-PE-9-2A and 3-AR-9-75, 2-AR-24-94, 3-TB-8-148G, and 3-FH-30-128 have been evaluated. The fire boundaries and associated fire protection features were found to be adequate to prevent the propagation of the fire beyond the fire boundaries.

7.13.1.8 Fire Area 3-PE-(-18)-2 Appendix R Compliance

Safe shutdown capability for a fire in Fire Area 3-PE-(-18)-2 will be provided by utilizing Train A systems. Functionally redundant components protected from fire damage will be utilized in conjunction with operator action on manual or disabled components to achieve safe shutdown.

One train of systems necessary to achieve hot standby and cold shutdown has been evaluated to remain available for safe shutdown in accordance with 10CFR50, Appendix R, III.G.1 and III.G.2.a.

7.13.2 FIRE AREA/ZONE: 3-PE-(-18)-2B

FIRE AREA/ZONE: 3-PE-(-18)-2B

AREA: 3418 sq. ft. DESCRIPTION: PIPING AREA

DESIGN BASIS FIRE

Fire Loading Category:	Minimal
Fire Loading - Max Permiss:	40,000.0 Btu's/sq.ft.

FIRE PROTECTION (AVAILABLE)

Suppression (type)	None
Hose Stations	None
Portable Extinguishers	Yes
Detectors (type)	ionization

FIRE RESISTANCE RATING

Walls	3hr/94, HC/others
Floor, Ceiling, Roof	2hr/ceiling, HC/floor
Penetrations	P, C, SG
Fixed Openings	OD/2A, OP/2A, OP/136, OP/137C, MH/135A
Doors	None

HOT STANDBY SYSTEMS	Equipment	Valves	Cable
Reactor Coolant			
Reactor Protection System			
Shutdown Cooling			
Chemical and Volume Control			B
Main Feedwater			
Main Steam			B
HVAC			
Auxiliary Feedwater			
Engineered Safety Feature			
Component Cooling Water			A
Saltwater Cooling Water			
Emergency Chilled Water			
Diesel Generator Systems			

COLD SHUTDOWN SYSTEMS	Equipment	Valves	Cable
Shutdown Cooling		A	A,B
CCW (To SDC)			
HVAC			
Summary (Hot and Cold)		A	A,B

ESSENTIAL ELECTRIC SYSTEMS	Equipment	MCC and Switchgear	Cable
220 KV (AC)			
4160 V (AC)			
480 V (AC)			
120 V (AC)			
125 V (DC)			
Electric Panels			A,B,X
Summary			A,B,X

ASSOCIATED CIRCUITS OF CONCERN

H/I Pressure Interface	NO
Spurious Operation	YES

FIRE AREA/ZONE 3-PE-(-18)-2B

7.13.2.1 Location

Penetration Building - El. (-18'-0") - Piping Area - 3418 square feet - Figures 8-27, 8-31

7.13.2.2 Fire Loading

Fire loading category - Minimal
Maximum permissible fire loading - 40,000 Btu/sq. ft. (Note 1)

Note 1:The maximum permissible fire loading is based on an evenly distributed loading of combustible materials.

7.13.2.3 Design Basis Fire

A fire is not expected to occur in this area during normal operation. The maximum credible fire is postulated to involve transient combustible materials.

7.13.2.4 Fire Protection Equipment

Manual fire fighting equipment is available within the zone. Ionization smoke detectors, located within the zone, provide early warning alarm in the control room.

7.13.2.5 Construction

The walls defining the zone are nonrated reinforced concrete construction with an approximate thickness of 24 inches except for the barrier to 2-AR-24-94 which is 3 hour rated. The ceiling is 2 hour rated. The floor to grade is nonrated heavy concrete construction. The zone communicates with adjacent zone 3-PE-9-2A through a gate and an opening (at the west end of the penetration building) in the barrier separating the two zones. There are no ventilation duct penetrations. The wall between the zone and 3-SE-(-5)-135A is part of a double wall configuration. Penetrations between the zone and 3-SE-(-5)-135A are sealed on the 135A side of the double wall and are unsealed on the 2B side.

7.13.2.6 Licensee Controlled Specification Barriers

For definition of the barriers requiring surveillance per LCS 3.7.104, refer to the latest revisions of Figures 8-27 and 8-31, sheet 3.

7.13.2.7 Conclusions

Ionization detection is available and provides early alarm in the control room. Portable suppression equipment is available in the zone.

FIRE AREA/ZONE 3-PE-(-18)-2B

The minimal fire loading and the substantial construction of the heavy concrete walls preclude the propagation of a transient combustible fire beyond the boundaries defining the zone.

The fire boundaries between 3-PE-(-18)-2B and 3-SE-(-5)-135A, 3-SE-(-15)-136 and 3-SE-(-15)-137C and 3-TB-8-148G were evaluated. The fire boundaries and associated fire protection features were found to be adequate to prevent the propagation of fire beyond the fire boundaries.

The design basis fire is insufficient to breach the barriers defining the zone/fire area.

Appendix R compliance for fire area 3-PE-(-18)-2 is discussed in fire zone 3-PE-9-2A.

7.13.3 FIRE AREA/ZONE: 3-PE-30-2C

FIRE AREA/ZONE: 3-PE-30-2C

AREA: 5556 sq. ft. DESCRIPTION: PIPING AREA

DESIGN BASIS FIRE

Fire Loading Category:	Minimal
Fire Loading - Max Permiss:	40,000.0 Btu's/sq.ft.

FIRE PROTECTION (AVAILABLE)

Suppression (type)	manual water spray for charcoal
Hose Stations	none
Portable Extinguishers	yes
Detectors (type)	ionization

FIRE RESISTANCE RATING

Walls	HC/containment, 2D, 75, 3hr/others
Floor, Ceiling, Roof	2hr, HC/2A
Penetrations	D, P, C, SG, ND/2A, QP/75
Fixed Openings	MH/2A, OH/2A, OS/2A, OD/2D
Doors	A/3-AC-30-21, A/3-FH-30-126, A/3-FH-30-128

HOT STANDBY SYSTEMS	Equipment	Valves	Cable
Reactor Coolant			
Reactor Protection System			
Shutdown Cooling			
Chemical and Volume Control		B	A,B
Main Feedwater			
Main Steam		A	A,B
HVAC			
Auxiliary Feedwater			
Engineered Safety Feature			
Component Cooling Water		A,B,X	A,B,X
Saltwater Cooling Water			
Emergency Chilled Water			
Diesel Generator Systems			

COLD SHUTDOWN SYSTEMS	Equipment	Valves	Cable
Shutdown Cooling		A,B	A,B
CCW (To SDC)			
HVAC			
Summary (Hot and Cold)		A,B,X	A,B,X

ESSENTIAL ELECTRIC SYSTEMS	Equipment	MCC and Switchgear	Cable
220 KV (AC)			
4160 V (AC)			
480 V (AC)			
120 V (AC)			
125 V (DC)			
Electric Panels			A,B,C,D,X
Summary			A,B,C,D,X

ASSOCIATED CIRCUITS OF CONCERN

H/I Pressure Interface	YES
Spurious Operation	YES

FIRE AREA/ZONE 3-PE-30-2C

7.13.3.1 Location

Penetration Building - El. 30'-0" - Piping Area - 5556 square feet - Figures 8-28

7.13.3.2 Fire Loading

Fire loading category - Minimal
Maximum permissible fire loading - 40,000 Btu/sq. ft. (Note 1)

Note 1:The maximum permissible loading is based on an evenly distributed loading of combustible materials.

7.13.3.3 Design Basis Fire

The design basis fire is postulated to be a fire that would involve mostly Class A combustibles, plastic, rubber, hydraulic fluid, and charcoal.

The design basis fire is conservatively based on the simultaneous total combustion of all combustibles in the zone.

7.13.3.4 Fire Protection Equipment

A manual water spray system is provided for the charcoal filter. In addition, manual fire fighting equipment is available within the zone. A temperature detector is installed within the filter units to alarm the control room on high temperature. Ionization smoke detectors, located within the zone, provide early warning alarm in the control room.

7.13.3.5 Construction

The walls of the zone to adjacent fire areas are reinforced concrete with a 3 hour rating. The wall to 3-AR-9-75 is part of a double wall configuration and the penetration building side is nonrated on this elevation. The penetration through the wall is sealed on the 3-AR-9-75 side of the double wall and is unsealed on the 2C side. A heavy concrete wall with an approximate thickness of 48 inches, separates this area from containment. A nonrated heavy concrete wall also separates this zone from 3-PE-30-2D. The ceiling is 2 hour rated. The floor from 3-PE-30-2C to 3-PE-9-2A is nonrated but floors to other fire areas are 2 hour rated. An open stairwell leads to zone 3-PE-9-2A below. Two 3 hour rated doors communicate with the fuel handling building (3-FH-30-126 and 3-FH-30-128). The zone communicates with the auxiliary control building (3-AC-30-21) through a 3 hour rated door.

7.13.3.6 Licensee Controlled Specification Barriers

For definition of the barriers requiring surveillance per LCS 3.7.104, refer to the latest revision of Figure 8-28, sheet 3.

7.13.3.7 Conclusions

In the event of a fire in the charcoal filters, the temperature detector installed within the filter is expected to alarm high temperature in the control room. Manual operation of the deluge valve will provide water spray directly on the charcoal filters to extinguish the fire.

The ionization detection system is expected to detect the products of combustion from an incipient fire outside the charcoal filters and alert the control room for prompt response by the fire department. The available portable equipment is adequate to extinguish the fire.

The fire boundaries between 3-PE-30-2C and 3-AR-9-75, 3-FH-45-131, 2-AR-24-94, and 3-FH-30-128 have been evaluated. The fire boundaries and associated fire protection features were found to be adequate to prevent the propagation of fire beyond the fire boundaries.

The design basis fire is insufficient to breach the barriers defining the zone/fire area.

Appendix R compliance for fire area 3-PE-(-18)-2 is discussed in fire zone 3-PE-9-2A.

7.13.4 FIRE AREA/ZONE: 3-PE-30-2D

FIRE AREA/ZONE: 3-PE-30-2D

AREA: 805 sq. ft. DESCRIPTION: PIPING AREA

DESIGN BASIS FIRE

Fire Loading Category:	Minimal
Fire Loading - Max Permiss:	40,000.0 Btu's/sq.ft.

FIRE PROTECTION (AVAILABLE)

Suppression (type)	none
Hose Stations	none
Portable Extinguishers	yes, adjacent
Detectors (type)	ionization

FIRE RESISTANCE RATING

Walls	HC
Floor, Ceiling, Roof	2hr
Penetrations	P, C, SG
Fixed Openings	OD/2C
Doors	none

HOT STANDBY SYSTEMS	Equipment	Valves	Cable
Reactor Coolant			
Reactor Protection System			
Shutdown Cooling			
Chemical and Volume Control		A,B,N	A,B
Main Feedwater			
Main Steam		B	B
HVAC			
Auxiliary Feedwater			
Engineered Safety Feature			
Component Cooling Water			
Saltwater Cooling Water			
Emergency Chilled Water			
Diesel Generator Systems			

COLD SHUTDOWN SYSTEMS	Equipment	Valves	Cable
Shutdown Cooling		A,B	A,B
CCW (To SDC)			
HVAC			
Summary (Hot and Cold)		A,B,N	A,B

ESSENTIAL ELECTRIC SYSTEMS	Equipment	MCC and Switchgear	Cable
220 KV (AC)			
4160 V (AC)			
480 V (AC)			
120 V (AC)			
125 V (DC)			
Electric Panels			A,B,C,X
Summary			A,B,C,X

ASSOCIATED CIRCUITS OF CONCERN

H/I Pressure Interface	YES
Spurious Operation	YES

FIRE AREA/ZONE 3-PE-30-2D

7.13.4.1 Location

Penetration Building - El. 30'-0" - Piping Area - 805 square feet - Figures 8-28

7.13.4.2 Fire Loading

Fire loading category - Minimal
Maximum permissible fire loading - 40,000 Btu/sq. ft. (Note 1)
Note 1:The maximum permissible fire loading is based on an evenly distributed loading of combustible materials.

7.13.4.3 Design Basis Fire

A fire is not expected to occur in this area during normal operation. The maximum credible fire is postulated to involve transient combustible materials.

7.13.4.4 Fire Protection Equipment

Manual fire fighting equipment is available within the zone and in adjacent zone 3-PE-30-2C. Ionization smoke detectors, located within the zone, provide early warning alarm in the control room.

7.13.4.5 Construction

The walls defining the zone are nonrated reinforced concrete construction with an approximate thickness of 18 inches. The ceiling and floor are 2 hour rated. The zone is accessed through two open doorways from adjacent zone 3-PE-30-2C.

7.13.4.6 Licensee Controlled Specification Barriers

For definition of the barriers requiring surveillance per LCS 3.7.104, refer to the latest revision of Figure 8-28, sheet 3.

7.13.4.7 Conclusions

The ionization detection system is expected to detect the products of combustion from an incipient fire and alert the control room for prompt response by the fire department. The available portable equipment is adequate to extinguish a transient fire.

The fire boundary between 3-PE-30-2D and 2-AR-24-94 was evaluated. The boundary and associated fire protection features were found to be adequate to prevent the propagation of fire between the fire areas. The design basis fire is insufficient to breach the barriers defining the zone/fire area.

Appendix R compliance for fire area 3-PE-(-18)-2 is discussed in fire zone 3-PE-9-2A.

7.13.5 FIRE AREA/ZONE: 3-PE-45-3A

FIRE AREA/ZONE: 3-PE-45-3A

AREA: 6415 sq. ft. DESCRIPTION: ELECTRICAL PENETRATION AREA

DESIGN BASIS FIRE

Fire Loading Category:	Low
Fire Loading - Max Permiss:	160,000.0 Btu's/sq.ft.

FIRE PROTECTION (AVAILABLE)

Suppression (type)	none
Hose Stations	(2) seismic
Portable Extinguishers	yes
Detectors (type)	ionization

FIRE RESISTANCE RATING

Walls	HC/containment, 3hr/others
Floor, Ceiling, Roof	2hr
Penetrations	D, P, C, QP/130
Fixed Openings	MH/3B, CH/3B, SG
Doors	L/3-SE-50-146, A3-AC-50-32,A/3-FH-45-130, A/3-FH-45-131

HOT STANDBY SYSTEMS	Equipment	Valves	Cable
Reactor Coolant	A*		A,B,D,A*
Reactor Protection System			
Shutdown Cooling			A
Chemical and Volume Control			A,B
Main Feedwater			
Main Steam	A*		A,B,D,A*
HVAC			A
Auxiliary Feedwater			
Engineered Safety Feature			
Component Cooling Water			A,B,X
Saltwater Cooling Water			
Emergency Chilled Water			A
Diesel Generator Systems			A

COLD SHUTDOWN SYSTEMS	Equipment	Valves	Cable
Shutdown Cooling			A,B
CCW (To SDC)			
HVAC			
Summary (Hot and Cold)	A*		A,A*, B,D,X

ESSENTIAL ELECTRIC SYSTEMS	Equipment	MCC and Switchgear	Cable
220 KV (AC)			X
4160 V (AC)			A
480 V (AC)	A*		A
120 V (AC)	A*,X*		
125 V (DC)			
Electric Panels	A*		A,A*,B,D,X
Summary	A*,X*		A,A*,B,D,X

ASSOCIATED CIRCUITS OF CONCERN

H/I Pressure Interface	YES
Spurious Operation	YES

FIRE AREA/ZONE 3-PE-45-3A

7.13.5.1 Location

Penetration Building - El. 45'-0" - Electrical Penetration Area - 6415 square feet - Figures 8-29

7.13.5.2 Fire Loading

Fire loading category - Low
Maximum permissible fire loading - 160,000 BTU's/sq. ft. (Note 1)

Note 1:The maximum permissible fire loading is based on an evenly distributed loading of combustible materials.

7.13.5.3 Design Basis Fire

The design basis fire is postulated to be a fire that would involve mostly cable insulation.

The design basis fire is conservatively based on the simultaneous total combustion of all combustibles in the zone.

7.13.5.4 Fire Protection Equipment

Manual fire fighting equipment is available within the zone. Ionization smoke detectors located within the zone provide early warning alarm in the control room.

7.13.5.5 Construction

The walls of the zone adjoining adjacent fire areas are 3 hour rated reinforced concrete. The wall separating the area from containment is nonrated reinforced concrete construction with an approximate thickness of 4 feet. The floor and ceiling of the zone are 2 hour rated, with the exception of the metal hatches covering the tendon access openings to the electrical penetration area above (3-PE-63-3B). The metal hatches and their support framing are protected by 2 hour rated material. The zone communicates with the fuel handling building (3-FH-45-130 and 3-FH-45-131) and the auxiliary control building (3-AC-50-32) through 3 hour rated doors. A bullet-resistant door opens to the roof of the safety equipment building (3-SE-50-146). A concrete hatch of similar thickness as the ceiling communicates with the elevation above (3-PE-63-3B) and is located in the center of the fire zone.

7.13.5.6 Licensee Controlled Specification Barriers

For definition of the barriers requiring surveillance per LCS 3.7.104, refer to the latest revision of Figure 8-29, sheet 3.

7.13.5.7 Conclusions

The ionization detection system is expected to detect the products of combustion from an incipient fire and alert the control room for prompt response by the fire department. The available portable equipment is adequate to extinguish the fire.

The normal ventilation system will effectively remove the smoke generated by the design basis fire until the fire dampers operate. Portable smoke exhaust fans may then be used to vent smoke from the zone.

The substantial construction of the zone ceiling has been evaluated to be sufficient to prevent the propagation of a fire beyond the barriers of the fire zone boundary.

The barriers between 3-PE-45-3A and 3-PE-63-3B, 3-FH-45-130, 3-FH-63-134 and 3-FH-45-131 were evaluated. The fire boundaries and associated fire protection features were found to be adequate to prevent the propagation of fire beyond the fire boundaries. The design basis fire is insufficient to breach the barriers defining the zone/fire area.

7.13.5.8 Fire Area/Zone 3-PE-45-3A Appendix R Compliance

Safe shutdown capability will be provided by utilizing Train B systems. Functionally redundant components protected from fire damage will be utilized in conjunction with operator action on manual or disabled components to achieve safe shutdown.

One train of systems necessary to achieve hot standby and cold shutdown has been evaluated to remain available for safe shutdown in accordance with 10CFR50, Appendix R, III.G.1 and III.G.2.a. A deviation from the requirements of 10CFR50 Appendix R, III.G.2.a has been accepted for the use of 2 hour equivalent fire barriers in lieu of 3 hour barriers to separate redundant safe shutdown trains. The fire detection and suppression systems in this area/zone were evaluated and shown to provide a level of protection equivalent to the requirements of the applicable sections of Appendix R.

7.13.6 FIRE AREA/ZONE: 3-PE-63-3B

FIRE AREA/ZONE: 3-PE-63-3B

AREA: 6415 sq. ft. DESCRIPTION: ELECT. PEN. AREA/PERSONNEL MON. AREA

DESIGN BASIS FIRE

Fire Loading Category:	Low
Fire Loading - Max Permiss:	160,000.0 Btu's/sq.ft.

FIRE PROTECTION (AVAILABLE)

Suppression (type)	none
Hose Stations	(2) seismic
Portable Extinguishers	yes
Detectors (type)	ionization

FIRE RESISTANCE RATING

Walls	HC/containment, 2HR/178A, 3hr/others
Floor, Ceiling, Roof	2hr
Penetrations	P, C, D
Fixed Openings	MH/3A, CH/3A, SG
Doors	A/3-AC-70-65, A/2-AR-63-116, (2) A/2-AR-68-178A,A/3-FH-63-134, A/3-FH-17-123

HOT STANDBY SYSTEMS	Equipment	Valves	Cable
Reactor Coolant			A,B,C,B*
Reactor Protection System			
Shutdown Cooling			B
Chemical and Volume Control			A,B
Main Feedwater			
Main Steam			B,C
HVAC			B
Auxiliary Feedwater			
Engineered Safety Feature			
Component Cooling Water			B
Saltwater Cooling Water			
Emergency Chilled Water			B
Diesel Generator Systems			

COLD SHUTDOWN SYSTEMS	Equipment	Valves	Cable
Shutdown Cooling			A,B
CCW (To SDC)			
HVAC			
Summary (Hot and Cold)			A,B,C,B*

ESSENTIAL ELECTRIC SYSTEMS	Equipment	MCC and Switchgear	Cable
220 KV (AC)			X
4160 V (AC)			B
480 V (AC)			
120 V (AC)			
125 V (DC)			
Electric Panels			A,B,C,X
Summary			A,B,C,X

ASSOCIATED CIRCUITS OF CONCERN

H/I Pressure Interface	YES
Spurious Operation	YES

FIRE AREA/ZONE 3-PE-63-3B

7.13.6.1 Location

Penetration Building - El. 63'-6" - Electrical Penetration Area/Personnel Monitor Area - 6415 square feet - Figures 8-30

7.13.6.2 Fire Loading

Fire loading category - Low
Maximum permissible fire loading - 160,000 Btu/sq. ft. (Note 1)

Note 1:The maximum permissible loading is based on an evenly distributed loading of combustible materials.

7.13.6.3 Design Basis Fire

The design basis fire is postulated to be a fire that would involve mostly alcohol, plastic, rubber, cable insulation and Class A combustibles.

The design basis fire is conservatively based on the simultaneous total combustion of all combustibles in the zone.

7.13.6.4 Fire Protection Equipment

Manual fire fighting equipment is available within the zone. Ionization smoke detectors, located throughout the zone, provide early warning alarm in the control room.

7.13.6.5 Construction

The walls are 3 hour rated except the wall to 2-AR-68-178A which is 2 hour rated. The wall separating the zone from containment is nonrated reinforced concrete construction with an approximate thickness of 4 feet. The floor is 2 hour rated with the exception of the metal hatches covering the tendon access openings to the electrical penetration area below (3-PE-45-3A). These metal hatches and their support framing are protected by 2 hour rated material. Six 3 hour rated doors communicate with the auxiliary control building (3-AC-70-65), the auxiliary radwaste building (2-AR-63-116 and 2-AR-68-178A), and the fuel handling building (3-FH-63-134 and 3-FH-17-123). A concrete hatch of similar thickness as the floor communicates with the elevation below (3-PE-45-3A) and is located in the center of the fire zone.

7.13.6.6 Licensee Controlled Specification Barriers

For definition of the barriers requiring surveillance per LCS 3.7.104, refer to the latest revision of Figure 8-30, sheet 3.

7.13.6.7 Conclusions

The ionization detection system is expected to detect the products of combustion from an incipient fire and alert the control room for prompt response by the fire department. The available portable equipment is adequate to extinguish the fire.

The normal ventilation system will effectively remove the smoke generated by the design basis fire until the fire dampers operate. Portable smoke exhaust fans may then be used to vent smoke from the zone.

The barriers between 3-PE-63-3B and 3-PE-45-3A, 2-AR-68-178A and 3-FH-63-134 were evaluated. The fire boundaries and associated fire protection features were found to be adequate to prevent the propagation of fire beyond the fire boundaries. Detection/suppression systems for this zone were evaluated and determined to be adequate.

The design basis fire is insufficient to breach the barriers defining the zone/fire area.

7.13.6.8 Fire Area/Zone 3-PE-63-3B Appendix R Compliance

Safe shutdown capability will be provided by utilizing Train A systems. Functionally redundant components protected from fire damage will be utilized in conjunction with operator action on manual or disabled components to achieve safe shutdown.

One train of systems necessary to achieve hot standby and cold shutdown has been evaluated to remain available for safe shutdown in accordance with 10CFR50, Appendix R, III.G.1 and III.G.2.a. A deviation from the requirements of 10CFR50 Appendix R, III.G.2.a has been accepted for the use of 2-hour equivalent fire barriers in lieu of 3-hour barriers to separate redundant safe shutdown trains. The fire detection and suppression systems in this area/zone were evaluated and shown to provide a level of protection equivalent to the requirements of Appendix R.

7. DETAILED FIRE HAZARD ANALYSIS

7.14 UNIT 3 SAFETY EQUIPMENT BUILDING

The Unit 3 safety equipment building is a reinforced concrete structure that contains safety-related pump rooms and electrical tunnel areas. The Safety Equipment Building is divided into (13) fire areas. The barrier, penetration and door ratings are noted on the matrices.

The safety equipment building contains part of or all of the following systems, which can be used for, or support, safe shutdown and cooldown:

- Shutdown Cooling
- Main Feedwater
- Auxiliary Feedwater
- Saltwater Cooling
- Emergency Chilled Water
- Essential Electric Systems
- Main Feedwater
- Engineered Safety Feature
- Diesel Generator Systems
- HVAC
- Main Steam

The types of protection/detection equipment available in or near this building consists of the following:

- Portable extinguishers.
- Smoke and fixed temperature rate of rise heat detectors.
- A standpipe system with manual hose stations.
- A fixed water spray system is provided to protect the electrical tunnel. The detectors used to automatically operate the spray system will be fixed temperature rate-of-rise heat detectors.
- Wet-pipe sprinkler systems.

Fire Area/Zone	Contains Safe Shutdown Equipment/Cables	Contains Safety-Related Equipment/Cables	Figure No.
3-SE-(-5)-135A	Yes	Yes	8-31, 8-32
3-SE-(-5)-135B	Yes	Yes	8-31
3-SE-(-5)-135C	Yes	Yes	8-31
3-SE-(-5)-135D	Yes	Yes	8-31
3-SE-(-15)-136	Yes	Yes	8-31, 8-32
3-SE-(-15)-137A	Yes	Yes	8-31
3-SE-(-15)-137B	Yes	Yes	8-31
3-SE-(-15)-137C	Yes	Yes	8-31
3-SE-(-15)-138	Yes	Yes	8-31, 8-32
3-SE-(-15)-139	Yes	Yes	8-31, 8-32
3-SE-8-140A	Yes	Yes	8-32
3-SE-8-140B	Yes	Yes	8-32
3-SE-8-141	Yes	Yes	8-32
3-SE-30-142A	Yes	Yes	8-33, 8-34
3-SE-30-145A	Yes	Yes	8-33
3-SE-25-145B	No	No	8-33, 8-41
3-SE-50-146	No	No	8-34
3-SE-(-12)-170	Yes	Yes	8-27, 8-31
3-SE-30-173	No	No	8-33
3-SE-(-2)-176	No	No	8-32

7.14.1 FIRE AREA/ZONE: 3-SE-(-5)-135A

FIRE AREA/ZONE: 3-SE-(-5)-135A

AREA: 7285 sq. ft. DESCRIPTION: PIPING RM/HEAT EXCH RM.

DESIGN BASIS FIRE

Fire Loading Category:	Minimal
Fire Loading - Max Permiss:	13,000.0 Btu's/sq.ft.

FIRE PROTECTION (AVAILABLE)

Suppression (type)	none @ 5'-3", wet pipe system @ 8'-0
Hose Stations	(1) @ (-5'-3"), (1) @ 8'0"
Portable Extinguishers	yes
Detectors (type)	none

FIRE RESISTANCE RATING

Walls	HC/141, others 3hr
Floor, Ceiling, Roof	2hr, HC/floor grade
Penetrations	P, C, D, NP/141, QP/136, QP/135B, QC/148G
Fixed Openings	MH/135B, 135C, 135D, 2B
Doors	(2)W/3-TB-8-148G, W/3-TB-7-148A,W/3-SE-(-15)-136,W/3-SE-(-5)-135B, 135C, 135D

HOT STANDBY SYSTEMS	Equipment	Valves	Cable
Reactor Coolant			
Reactor Protection System			
Shutdown Cooling			
Chemical and Volume Control			
Main Feedwater			
Main Steam			
HVAC			
Auxiliary Feedwater			
Engineered Safety Feature			
Component Cooling Water	N	A,B	A,B,b
Saltwater Cooling Water			
Emergency Chilled Water			
Diesel Generator Systems			

COLD SHUTDOWN SYSTEMS	Equipment	Valves	Cable
Shutdown Cooling			
CCW (To SDC)			
HVAC			
Summary (Hot and Cold)	N	A,B	A,B,b

ESSENTIAL ELECTRIC SYSTEMS	Equipment	MCC and Switchgear	Cable
220 KV (AC)			
4160 V (AC)	A/B		
480 V (AC)			
120 V (AC)			
125 V (DC)			
Electric Panels			A,B
Summary	A/B		A,B

ASSOCIATED CIRCUITS OF CONCERN

H/I Pressure Interface	NO
Spurious Operation	YES

FIRE AREA/ZONE 3-SE-(-5)-135A

7.14.1.1 Location

Safety Equipment Building - El. (-5'-3") - Piping Room/Heat Exchanger Room - 7285 square feet - Figures 8-31, 8-32

7.14.1.2 Fire Loading

Fire loading category - Minimal
Maximum permissible fire loading - 13,000 Btu/sq. ft. (Note 1)

Note 1:The maximum permissible fire loading is based on an evenly distributed loading of combustible materials.

7.14.1.3 Design Basis Fire

The design basis fire is postulated to be a fire that would involve mostly rubber, plastic, and cable insulation.

The design basis fire is conservatively based on the simultaneous total combustion of all combustibles in the zone.

7.14.1.4 Fire Protection Equipment

The zone contains an automatic wet pipe sprinkler system at el. 8' 0". In addition, manual fire fighting equipment is available at both el. 8'-0" and el. (-5'-3").

7.14.1.5 Construction

The walls of the zone are reinforced concrete with a 3 hour rating with the exception of the wall to 3-SE-8-141 which is nonrated reinforced concrete construction with an approximate thickness of 20 inches. The ceiling and floor to other fire areas/zones are 2 hour rated. The floor to grade is nonrated heavy concrete construction. At the (-5'-3") elevation, three nonrated watertight doors communicate with the pump rooms (3-SE-(-5)-135B, 3-SE-(-5)-135C, and 3-SE-(-5)-135D). At the 8'-0" elevation, three nonrated watertight doors separate the zone from the turbine building (3-TB-7-148A and 3-TB-8-148G), and one watertight door communicates with the adjacent A/C room (3-SE-(-15)-136).

Watertight hatches in the floor at elevation 8'-0" communicate with the pump rooms below. The duct penetrations are provided with 3 hour rated fire dampers.

7.14.1.6 Licensee Controlled Specification Barriers

For definition of the barriers requiring surveillance per LCS 3.7.104, refer to the latest revisions of Figures 8-31 and 8-32, sheet 3.

Cable for the following system is wrapped:

Component Cooling Water - Train B

7.14.1.7 Conclusions

Portable smoke exhaust fans may be used to remove smoke generated by the design basis fire. The fire boundaries between 3-SE-(-5)-135A and 3-SE-(-5)-135B, 3-SE-(-5)-135D, 3-TB-8-148G, 3-PE-(-18)-2B, 3-SE-(-15)-136, 3-SE-8-141 and 3-TB-7-148A were evaluated. The fire boundaries and associated fire protection features were found to be adequate to prevent the propagation of fire beyond the fire boundaries. The low fire loading and the substantial construction of the barriers and nonrated doors preclude the propagation of the design basis fire beyond the boundaries defining the zone.

7.14.1.8 Fire Area 3-SE-(-5)-135 Appendix R Compliance

Safe shutdown capability will be provided by utilizing Train A or B systems. Functionally redundant components protected from fire damage will be utilized in conjunction with operator action on manual or disabled components to achieve safe shutdown.

One train of systems necessary to achieve hot standby and cold shutdown has been evaluated to remain available for safe shutdown in accordance with 10CFR50, Appendix R, III.G.1 and III.G.2.b and c. A deviation from the requirements of 10CFR50 Appendix R, III.G.2 has been accepted for fire area 3-135 where redundant safe shutdown equipment is located, but area wide fire detection and suppression systems are not installed. The barriers between zones within the fire area have been upgraded to 3 hours (walls) and 2 hours (floor/ceiling). The fire detection and suppression systems in this area/zone were evaluated and shown to provide a level of protection equivalent to the requirements of Appendix R.

7.14.2 FIRE AREA/ZONE: 3-SE-(-5)-135B

FIRE AREA/ZONE: 3-SE-(-5)-135B

AREA: 700 sq. ft. DESCRIPTION: TRAIN B CCW PUMP ROOM

DESIGN BASIS FIRE

Fire Loading Category:	Minimal
Fire Loading - Max Permiss:	40,000.0 Btu's/sq.ft.

FIRE PROTECTION (AVAILABLE)

Suppression (type)	none
Hose Stations	none, (1) in 3-SE-(-5)-135A
Portable Extinguishers	none, adjacent
Detectors (type)	ionization

FIRE RESISTANCE RATING

Walls	3hr
Floor, Ceiling, Roof	2hr, HC/floor grade
Penetrations	P, C, QP/135C, QP/135A
Fixed Openings	MH/135A
Doors	W/3-SE-(-5)-135A

HOT STANDBY SYSTEMS	Equipment	Valves	Cable
Reactor Coolant			
Reactor Protection System			
Shutdown Cooling			
Chemical and Volume Control			
Main Feedwater			
Main Steam			
HVAC			
Auxiliary Feedwater			
Engineered Safety Feature			
Component Cooling Water	B	B	A,B
Saltwater Cooling Water			
Emergency Chilled Water			
Diesel Generator Systems			

COLD SHUTDOWN SYSTEMS	Equipment	Valves	Cable
Shutdown Cooling			
CCW (To SDC)			
HVAC			
Summary (Hot and Cold)	B	B	A,B

ESSENTIAL ELECTRIC SYSTEMS	Equipment	MCC and Switchgear	Cable
220 KV (AC)			
4160 V (AC)			
480 V (AC)			
120 V (AC)			
125 V (DC)			
Electric Panels			A,B
Summary			A,B

ASSOCIATED CIRCUITS OF CONCERN

H/I Pressure Interface	NO
Spurious Operation	YES

FIRE AREA/ZONE 3-SE-(-5)-135B

7.14.2.1 Location

Safety Equipment Building - El. (-5'-3") - Train B CCW Pump Room - 700 square feet - Figures 8-31

7.14.2.2 Fire Loading

Fire loading category - Minimal
Maximum permissible fire loading - 40,000 Btu/sq. ft. (Note 1)

Note 1:The maximum permissible fire loading is based on an evenly distributed loading of combustible materials.

7.14.2.3 Design Basis Fire

The design basis fire is postulated to be a fire that would involve mostly oil.

The design basis fire is conservatively based on the simultaneous total combustion of all combustibles in the zone.

7.14.2.4 Fire Protection Equipment

There is no fire fighting equipment in the zone. Manual fire fighting equipment is available in adjacent zone 3-SE-(-5)-135A. An ionization smoke detector provides early warning alarm in the control room.

7.14.2.5 Construction

The walls of the zone are reinforced concrete with a 3 hour rating. The ceiling and floor to other fire areas/zones are 2 hour rated. The floor to grade is nonrated heavy concrete construction. A nonrated watertight door allows access to the zone from 3-SE-(-5)- 135A. A watertight hatch in the ceiling communicates with the piping rooms above (3-SE-(-5)-135A).

7.14.2.6 Licensee Controlled Specification Barriers

For definition of the barriers requiring surveillance per LCS 3.7.104, refer to the latest revision of Figure 8-31, sheet 3.

7.14.2.7 Conclusions

Portable smoke exhaust fans may be used to remove smoke generated by the design basis fire.

The ionization detector is expected to detect the products of combustion from an incipient fire and alert the control room for prompt response by the fire department. The available portable equipment is adequate to extinguish the fire.

The fire boundaries between 3-SE-(-5)-135B and 3-SE-(-5)-135A and 3-SE-(-5)-135C were evaluated. The fire boundaries and associated fire protection features were found to be adequate to prevent the propagation of fire beyond the fire boundaries. The low fire loading and the substantial construction of the barriers and watertight door preclude the propagation of the design basis fire beyond the boundaries defining the zone.

Appendix R compliance for fire area 3-SE-(-5)-135 is discussed in fire zone 3-SE-(-5)-135A.

7.14.3 FIRE AREA/ZONE: 3-SE-(-5)-135C

FIRE AREA/ZONE: 3-SE-(-5)-135C

AREA: 700 sq. ft. DESCRIPTION: SPARE CCW PUMP ROOM

DESIGN BASIS FIRE

Fire Loading Category:	Minimal
Fire Loading - Max Permiss:	40,000.0 Btu's/sq.ft.

FIRE PROTECTION (AVAILABLE)

Suppression (type)	none
Hose Stations	none, (1) in 3-SE-(-5)-135A
Portable Extinguishers	none, adjacent
Detectors (type)	ionization

FIRE RESISTANCE RATING

Walls	3hr
Floor, Ceiling, Roof	2hr, HC/floor grade
Penetrations	P, C, QP/135D, QP/135B, QP/137C
Fixed Openings	MH/135A
Doors	W/3-SE-(-5)-135A

HOT STANDBY SYSTEMS	Equipment	Valves	Cable
Reactor Coolant			
Reactor Protection System			
Shutdown Cooling			
Chemical and Volume Control			
Main Feedwater			
Main Steam			
HVAC			
Auxiliary Feedwater			
Engineered Safety Feature			
Component Cooling Water	A/B	A	A,B
Saltwater Cooling Water			
Emergency Chilled Water			
Diesel Generator Systems			

COLD SHUTDOWN SYSTEMS	Equipment	Valves	Cable
Shutdown Cooling			
CCW (To SDC)			
HVAC			
Summary (Hot and Cold)	A/B	A	A,B

ESSENTIAL ELECTRIC SYSTEMS	Equipment	MCC and Switchgear	Cable
220 KV (AC)			
4160 V (AC)			
480 V (AC)			
120 V (AC)			
125 V (DC)			
Electric Panels			A,B
Summary			A,B

ASSOCIATED CIRCUITS OF CONCERN

H/I Pressure Interface	NO
Spurious Operation	YES

FIRE AREA/ZONE 3-SE-(-5)-135C

7.14.3.1 Location

Safety Equipment Building - El. (-5'-3") - Spare CCW Pump Room - 700 square feet - Figures 8-31

7.14.3.2 Fire Loading

Fire loading category - Minimal
Maximum permissible fire loading - 40,000 Btu/sq. ft. (Note 1)

Note 1:The maximum permissible fire loading is based on an evenly distributed loading of combustible materials.

7.14.3.3 Design Basis Fire

The design basis fire is postulated to be a fire that would involve mostly oil.

The design basis fire is conservatively based on the simultaneous total combustion of all combustibles in the zone.

7.14.3.4 Fire Protection Equipment

There is no fire fighting equipment in the zone. Manual fire fighting equipment is available in adjacent zone 3-SE-(-5)-135A. An ionization smoke detector provides early warning alarm in the control room.

7.14.3.5 Construction

The walls defining the zone are 3 hour rated reinforced concrete with an approximate thickness of 20 inches. The ceiling and floor to other fire areas/zones are 2 hour rated. The floor to grade is nonrated heavy concrete construction. A watertight door allows access to the area from the piping room (3-SE-(-5)-135A). A watertight hatch in the ceiling communicates with the piping rooms above (3-SE-(-5)-135A).

7.14.3.6 Licensee Controlled Specification Barriers

For definition of the barriers requiring surveillance per LCS 3.7.104, refer to the latest revision of Figure 8-31, sheet 3.

7.14.3.7 Conclusions

The ionization detector is expected to detect the products of combustion from an incipient fire and alert the control room for prompt response by the fire department. The available portable equipment is adequate to extinguish the fire.

Portable exhaust fans may be used to remove smoke generated by the design basis fire.

The fire boundaries between 3-SE-(-5)-135C, 3-SE-(-5)-135B, 3-SE-(-5)-135D and 3-SE-(-15)-137C were evaluated. The fire boundaries and associated fire protection features were found to be adequate to prevent the propagation of fire beyond the fire boundaries. The low fire loading and the substantial construction of the barriers and watertight door preclude the propagation of the design basis fire beyond the boundaries of the zone.

Appendix R compliance for fire area 3-SE-(-5)-135 is discussed in fire zone 3-SE-(-5)-135A.

7.14.4 FIRE AREA/ZONE: 3-SE-(-5)-135D

FIRE AREA/ZONE: 3-SE-(-5)-135D

AREA: 600 sq. ft. DESCRIPTION: TRAIN A PUMP ROOM

DESIGN BASIS FIRE

Fire Loading Category:	Minimal
Fire Loading - Max Permiss:	40,000.0 Btu's/sq.ft.

FIRE PROTECTION (AVAILABLE)

Suppression (type)	none
Hose Stations	none, (1) in 3-SE-(-5)-135A
Portable Extinguishers	none, adjacent
Detectors (type)	ionization

FIRE RESISTANCE RATING

Walls	3hr
Floor, Ceiling, Roof	2hr/ceiling, HC/floor
Penetrations	P, C, QP/135C
Fixed Openings	MH/135A
Doors	W/3-SE-(-5)-135A

HOT STANDBY SYSTEMS	Equipment	Valves	Cable
Reactor Coolant			
Reactor Protection System			
Shutdown Cooling			
Chemical and Volume Control			
Main Feedwater			
Main Steam			
HVAC			
Auxiliary Feedwater			
Engineered Safety Feature			
Component Cooling Water	A		A
Saltwater Cooling Water			
Emergency Chilled Water			
Diesel Generator Systems			

COLD SHUTDOWN SYSTEMS	Equipment	Valves	Cable
Shutdown Cooling			
CCW (To SDC)			
HVAC			
Summary (Hot and Cold)	A		A

ESSENTIAL ELECTRIC SYSTEMS	Equipment	MCC and Switchgear	Cable
220 KV (AC)			
4160 V (AC)			
480 V (AC)			
120 V (AC)			
125 V (DC)			
Electric Panels			A
Summary			A

ASSOCIATED CIRCUITS OF CONCERN

H/I Pressure Interface	NO
Spurious Operation	YES

FIRE AREA/ZONE 3-SE-(-5)-135D

7.14.4.1 Location

Safety Equipment Building - El. (-5'-3") - Train A CCW Pump Room - 600 square feet - Figures 8-31

7.14.4.2 Fire Loading

Fire loading category - Minimal
Maximum permissible fire loading - 40,000 Btu/sq. ft. (Note 1)

Note 1:The maximum permissible fire loading is based on an evenly distributed loading of combustible materials.

7.14.4.3 Design Basis Fire

The design basis fire is postulated to be a fire that would involve mostly oil.

The design basis fire is conservatively based on the simultaneous total combustion of all combustibles in the zone.

7.14.4.4 Fire Protection Equipment

There is no fire fighting equipment in the zone. Manual fire fighting equipment is available in adjacent zone 3-SE-(-5)-135A. An ionization smoke detector, located within the zone, provides early warning alarm in the control room.

7.14.4.5 Construction

The walls of the zone are reinforced concrete with a 3 hour rating. The ceiling is 2 hour rated. The floor to grade is nonrated heavy concrete construction. A watertight door allows access to the area from the piping room (3-SE-(-5)-135A). A watertight hatch in the ceiling communicates with the piping rooms above (3-SE-(-5)-135A).

7.14.4.6 Licensee Controlled Specification Barriers

For definition of the barriers requiring surveillance per LCS 3.7.104, refer to the latest revision of Figure 8-31, sheet 3.

7.14.4.7 Conclusions

The ionization detector is expected to detect the products of combustion from an incipient fire and alert the control room for prompt response by the fire department. The available portable equipment is adequate to extinguish the fire.

FIRE AREA/ZONE 3-SE-(-5)-135D

Portable smoke exhaust fans may be used to remove smoke generated by the design basis fire.

The fire boundaries between 3-SE-(-5)-135D and 3-SE-(-5)-135A and 3-SE-(-5)-135C were evaluated. The fire boundaries and associated fire protection features were found to be adequate to prevent the propagation of fire beyond the fire boundaries. The low fire loading and the substantial construction of the barrier and watertight door preclude the propagation of the design basis fire beyond the boundaries of the zone.

Appendix R compliance for fire area 3-SE-(-5)-135 is discussed in fire zone 3-SE-(-5)-135A.

7.14.5 FIRE AREA/ZONE: 3-SE-(-15)-136

FIRE AREA/ZONE: 3-SE-(-15)-136

AREA: 1860 sq. ft. DESCRIPTION: STAIRCASE / A/C ROOM

DESIGN BASIS FIRE

Fire Loading Category:	Minimal
Fire Loading - Max Permiss:	13,000.0 Btu's/sq.ft.

FIRE PROTECTION (AVAILABLE)

Suppression (type)	wet pipe sprinklers @ el. 8'-0"
Hose Stations	(1) @ 8'-0"
Portable Extinguishers	yes
Detectors (type)	ionization @ 8'-0"

FIRE RESISTANCE RATING

Walls	HC/2B, 138, 139, 140A, 140B, others 3hr
Floor, Ceiling, Roof	2hr, HC/floor grade
Penetrations	P, D, C, NC/139, NP/SEE TEXT, QP/SEE TEXT
Fixed Openings	OP/2B, CH/137A, 137B
Doors	W/137A, 137B, 137C, 138, 139, W/140A, 141, 135A, (2)W/148A

HOT STANDBY SYSTEMS	Equipment	Valves	Cable
Reactor Coolant			
Reactor Protection System			
Shutdown Cooling			
Chemical and Volume Control			
Main Feedwater			
Main Steam			
HVAC			
Auxiliary Feedwater			
Engineered Safety Feature			
Component Cooling Water		N	A,B
Saltwater Cooling Water			
Emergency Chilled Water			
Diesel Generator Systems			A,B

COLD SHUTDOWN SYSTEMS	Equipment	Valves	Cable
Shutdown Cooling		A,B	A,B,b
CCW (To SDC)		A,B	A,B
HVAC			A,b
Summary (Hot and Cold)		A,B,N	A,B,b

ESSENTIAL ELECTRIC SYSTEMS	Equipment	MCC and Switchgear	Cable
220 KV (AC)			
4160 V (AC)			
480 V (AC)			
120 V (AC)			
125 V (DC)			
Electric Panels			A,B,X
Summary			A,B,X

ASSOCIATED CIRCUITS OF CONCERN

H/I Pressure Interface	NO
Spurious Operation	YES

FIRE AREA/ZONE 3-SE-(-15)-136

7.14.5.1 Location

Safety Equipment Building - El. (-15'-0") - Staircase/A.C. Room - 1860 square feet - Figures 8-31, 8-32

7.14.5.2 Fire Loading

Fire loading category - Minimal
Maximum permissible fire loading - 13,000 Btu/sq. ft. (Note 1)

Note 1:The maximum permissible fire loading is based on an evenly distributed loading of combustible materials.

7.14.5.3 Design Basis Fire

The design basis fire is postulated to be a fire that would involve mostly cable, plastic, rubber, and Class A combustibles.

The design basis fire is conservatively based on the simultaneous total combustion of all combustibles in the area.

7.14.5.4 Fire Protection Equipment

The area contains an automatic wet pipe sprinkler system at el. 8'-0". Manual fire fighting equipment is available in the area at the 8'-0" elevation. Ionization smoke detectors, located within the area, provide early warning alarm in the control room.

7.14.5.5 Construction

The area consists of two levels connected by an open stairwell. The south and west walls as well as the walls adjoining 3-SE-(-5)-135A, 3-SE-(-5)-135B, 3-SE-(-15)-137C and 3-SE-8-141 are 3 hour rated reinforced concrete. The remainder of the area walls are nonrated reinforced concrete construction with an approximate thickness of 20 inches. The barrier to 3-PE-(-18)-2B has an open blockout for pipes and is nonrated. The ceiling is 2 hour rated. The floor to other fire areas is 2 hour rated. The floor to grade is nonrated heavy concrete construction. Hatches in the floor of the area at elevation 8'-0" communicate with the pump rooms (3-SE-(-15)-137A and 3-SE-(-15)-137B) below. Watertight doors separate the area from safety related pump rooms (3-SE-(-15)-137A, 137B, and 137C), the surge tank rooms (3-SE-8-141 and 3-SE-8-140A), the heat exchanger rooms (3-SE-(-15)-138 and 3-SE-(-15)139), the piping room (3-SE-(-5)-135A) and the turbine building (3-TB-7-148A). Ventilation duct penetrations in 3 hour rated walls are provided with 3 hour rated dampers. All other ventilation duct penetrations are provided with 1-1/2 hour rated fire dampers. The seals in technical specification barriers which are not rated consistent with the barrier or whose construction does not support a rating or are unsealed are: NP/138, 139, 140A, and 140B, QP135A, 137C, 141, and 161B.

7.14.5.6 Licensee Controlled Specification Barriers

For definition of the barriers requiring surveillance per LCS 3.7.104, refer to the latest revisions of Figures 8-31 and 8-32, sheet 3.

Cable for the following system is wrapped:
HVAC - Train B
SDC - Train B

7.14.5.7 Conclusions

The ionization detectors are expected to detect the products of combustion from an incipient fire for prompt response by the fire department. Portable equipment, available in the area, is adequate to extinguish the fire. In the event the fire achieves sufficient intensity, the wet pipe sprinkler system will actuate automatically to control and extinguish the fire. The normal ventilation system will effectively remove the smoke generated by the design basis fire until the fire dampers operate. Portable smoke exhaust fans may then be used to vent smoke from the area.

The fire boundaries between fire area 3-SE-(-15)-136 and 3-SE-(-5)-135A, 3-SE-(-15)-137A, 3-SE-(-15)-137B, 3-SE-(-15)-137C, 3-SE-(-15)-138, 3-SE-(-15)-139, 3-SE-8-140A, 3-SE-8-140B, 3-SE-8-141, 3-TB-7-148A and 2-TK-(-2)-161B were evaluated. The fire boundaries and associated fire protection features were found to be adequate to prevent the propagation of fire beyond the fire boundaries. The low fire loading and the substantial construction of the heavy concrete walls and nonrated doors preclude the propagation of the design basis fire beyond the boundaries defining the area.

7.14.5.8 Fire Area 3-SE-(-15)-136 Appendix R Compliance

Safe shutdown capability will be provided by utilizing Train B systems. Functionally redundant components protected from fire damage will be utilized in conjunction with operator action on manual or disabled components to achieve safe shutdown.

One train of systems necessary to achieve hot standby and cold shutdown has been evaluated to remain available for safe shutdown in accordance with 10CFR50, Appendix R, III.G.1 and III.G.2.c. The fire detection and suppression systems in this area/zone were evaluated and shown to provide a level of protection equivalent to the requirements of Appendix R.

7.14.6 FIRE AREA/ZONE: 3-SE-(-15)-137A

FIRE AREA/ZONE: 3-SE-(-15)-137A

AREA: 1210 sq. ft. DESCRIPTION: SAFETY RELATED PUMP ROOM

DESIGN BASIS FIRE

Fire Loading Category:	Minimal
Fire Loading - Max Permiss:	40,000.0 Btu's/sq.ft.

FIRE PROTECTION (AVAILABLE)

Suppression (type)	none
Hose Stations	none,(1) IN 3-SE-(-15)-136
Portable Extinguishers	none, adjacent
Detectors (type)	ionization

FIRE RESISTANCE RATING

Walls	137B/HC, others 3hr
Floor, Ceiling, Roof	2hr/ceiling, HC/floor
Penetrations	C, P, QC/139, QP/137C
Fixed Openings	CH/136
Doors	W/3-SE-(-15)-136

HOT STANDBY SYSTEMS	Equipment	Valves	Cable
Reactor Coolant			
Reactor Protection System			
Shutdown Cooling			
Chemical and Volume Control			
Main Feedwater			
Main Steam			
HVAC			
Auxiliary Feedwater			
Engineered Safety Feature			
Component Cooling Water			
Saltwater Cooling Water			
Emergency Chilled Water			
Diesel Generator Systems			

COLD SHUTDOWN SYSTEMS	Equipment	Valves	Cable
Shutdown Cooling	B	A,B,N	A,B
CCW (To SDC)			
HVAC	B		B
Summary (Hot and Cold)	B	A,B,N	A,B

ESSENTIAL ELECTRIC SYSTEMS	Equipment	MCC and Switchgear	Cable
220 KV (AC)			
4160 V (AC)			
480 V (AC)			
120 V (AC)			
125 V (DC)			
Electric Panels			A,B
Summary			A,B

ASSOCIATED CIRCUITS OF CONCERN

H/I Pressure Interface	NO
Spurious Operation	NO

FIRE AREA/ZONE 3-SE-(-15)-137A

7.14.6.1 Location

Safety Equipment Building - El. (-15'-0") - Safety Related Pump Room - 1210 square feet - Figures 8-31

7.14.6.2 Fire Loading

Fire loading category - Minimal
Maximum permissible fire loading - 40,000 Btu/sq. ft. (Note 1)

Note 1:The maximum permissible fire loading is based on an evenly distributed loading of combustible materials.

7.14.6.3 Design Basis Fire

The design basis fire is postulated to be a fire that would involve mostly cable and oil.

The design basis fire is conservatively based on the simultaneous total combustion of all combustibles in the zone.

7.14.6.4 Fire Protection Equipment

There is no fire fighting equipment in the zone. Manual fire fighting equipment is available in adjacent area 3-SE-(-15)-136. An ionization detector, located within the zone, provides early warning alarm in the control room.

7.14.6.5 Construction

The walls of the zone are reinforced concrete with a 3 hour rating, except the zone boundary to 3-SE-(-15)-137B which is nonrated reinforced concrete construction with an approximate thickness of 20 inches. The ceiling is 2 hour rated. The floor to grade is nonrated heavy concrete construction. A watertight door allows access to the zone from the stairwell (3-SE-(-15)-136).

7.14.6.6 Licensee Controlled Specification Barriers

For definition of the barriers requiring surveillance per LCS 3.7.104, refer to the latest revision of Figure 8-31, sheet 3.

(Note: 3-SE-(-15)-137A and 3-SE-(-15)-137B are analyzed as a singular area. 3-SE-(-15)-137C is suitably separated from those zones and is analyzed independently.)

7.14.6.7 Conclusions

The ionization detection system is expected to detect the products of combustion from an incipient fire and alert the control room for prompt response by the fire department. The available portable equipment is adequate to extinguish the fire.

Portable smoke exhaust fans may be used to remove smoke generated by the design basis fire.

The fire boundaries between fire area 3-SE-(-15)-137A and 3-SE-(-15)-137C, 3-SE-(-15)-136 and 3-SE-(-15)-139 were evaluated. The fire boundaries and associated fire protection features were found to be adequate to prevent the propagation of fire beyond the fire boundaries. The low fire loading and the substantial construction of the barriers and nonrated door preclude the propagation of the design basis fire beyond the boundaries defining the zone.

7.14.6.8 Fire Area 3-SE-(-15)-137A/B Appendix R Compliance

Safe shutdown capability will be provided by utilizing Train A systems. Functionally redundant components protected from fire damage will be utilized in conjunction with operator action on manual or disabled components to achieve safe shutdown.

One train of systems necessary to achieve hot standby and cold shutdown has been evaluated to remain available for safe shutdown in accordance with 10CFR50, Appendix R, III.G.1 and III.G.2.a. A deviation from the requirements of 10CFR50 Appendix R, III.G.2.a has been accepted for concrete walls not having a 3 hour rating between Train A Safety Related Pump Room 3-SE-(-15)-137C and the Safety Pump Room 3-SE-(-15)-137A and 3-SE-(-15)-137B, and between the Safety Related Pump Room 3-SE-(-15)-137A, -137B and -137C and fire area 3-SE-(-15)-136. The barriers between pump room 137C and 137A and 137C and 136 have been upgraded to 3 hours.
3SE-137A-3

7.14.7 FIRE AREA/ZONE: 3-SE-(-15)-137B

FIRE AREA/ZONE: 3-SE-(-15)-137B

AREA: 336 sq. ft. DESCRIPTION: SAFETY RELATED PUMP ROOM

DESIGN BASIS FIRE

Fire Loading Category:	Minimal
Fire Loading - Max Permiss:	40,000.0 Btu's/sq.ft.

FIRE PROTECTION (AVAILABLE)

Suppression (type)	none
Hose Stations	none, (1) in 3-SE-(-15)-136
Portable Extinguishers	none, adjacent
Detectors (type)	ionization

FIRE RESISTANCE RATING

Walls	137A/HC, others 3hr
Floor, Ceiling, Roof	2hr/ceiling, HC/floor
Penetrations	P,C
Fixed Openings	CH/136
Doors	W/3-SE-(-15)-136

HOT STANDBY SYSTEMS	Equipment	Valves	Cable
Reactor Coolant			
Reactor Protection System			
Shutdown Cooling			
Chemical and Volume Control			
Main Feedwater			
Main Steam			
HVAC			
Auxiliary Feedwater			
Engineered Safety Feature			
Component Cooling Water			
Saltwater Cooling Water			
Emergency Chilled Water			
Diesel Generator Systems			

COLD SHUTDOWN SYSTEMS	Equipment	Valves	Cable
Shutdown Cooling			
CCW (To SDC)			
HVAC			
Summary (Hot and Cold)			

ESSENTIAL ELECTRIC SYSTEMS	Equipment	MCC and Switchgear	Cable
220 KV (AC)			
4160 V (AC)			
480 V (AC)			
120 V (AC)			
125 V (DC)			
Electric Panels			B
Summary			B

ASSOCIATED CIRCUITS OF CONCERN

H/I Pressure Interface	NO
Spurious Operation	NO

FIRE AREA/ZONE 3-SE-(-15)-137B

7.14.7.1 Location

Safety Equipment Building - El. (-15'-0") - Safety Related Pump Room - 336 square feet - Figures 8-31

7.14.7.2 Fire Loading

Fire loading category - Minimal
Maximum permissible fire loading - 40,000 Btu/sq. ft. (Note 1)

Note 1:The maximum permissible fire loading is based on an evenly distributed loading of combustible materials.

7.14.7.3 Design Basis Fire

The design basis fire is postulated to be a fire that would involve mostly oil.

The design basis fire is conservatively based on the simultaneous total combustion of all combustibles in the zone.

7.14.7.4 Fire Protection Equipment

There is no fire fighting equipment in the zone. Manual fire fighting equipment is available in adjacent area 3-SE-(-15)-136. An ionization smoke detector, located within the zone, provides early warning alarm in the control room.

7.14.7.5 Construction

The walls of the zone are reinforced concrete with a 3 hour rating except the zone boundary to 3-SE-(-15)-137A which is nonrated reinforced concrete construction with an approximate thickness of 20 inches. The ceiling is 2 hour rated. The floor to grade is nonrated heavy concrete construction. A nonrated watertight door allows access to the zone from the stairwell (3-SE-(-15)-136).

7.14.7.6 Licensee Controlled Specification Barriers

For definition of the barriers requiring surveillance per LCS 3.7.104, refer to the latest revision of Figure 8-31, sheet 3.

7.14.7.7 Conclusions

The ionization detection system is expected to detect the products of combustion from an incipient fire and alert the control room for prompt response by the fire department. The available portable equipment is adequate to extinguish the fire.

FIRE AREA/ZONE 3-SE(-15)-137B

Portable smoke exhaust fans may be used to remove smoke generated by the design basis fire.

The fire area boundaries between 3-SE-(-15)-137B and 3-SE-(-15)-136 were evaluated. The fire boundaries and associated fire protection features were found to be adequate to prevent the propagation of fire beyond the fire boundaries. The low fire loading and the substantial construction of the heavy concrete walls and nonrated door preclude the propagation of the design basis fire beyond the boundaries defining the zone.

Appendix R compliance for fire area 3-SE-(-15)-137A/B is discussed in fire zone 3-SE-(-15)-137A.

7.14.8 FIRE AREA/ZONE: 3-SE-(-15)-137C

FIRE AREA/ZONE: 3-SE-(-15)-137C

AREA: 920 sq. ft. DESCRIPTION: SAFETY RELATED PUMP ROOM

DESIGN BASIS FIRE

Fire Loading Category:	Minimal
Fire Loading - Max Permiss:	40,000.0 Btu's/sq.ft.

FIRE PROTECTION (AVAILABLE)

Suppression (type)	none
Hose Stations	none, (1) in 3-SE-(15)-136
Portable Extinguishers	none, adjacent
Detectors (type)	ionization

FIRE RESISTANCE RATING

Walls	2B/HC, others 3hr
Floor, Ceiling, Roof	2hr/ceiling, HC/floor
Penetrations	P,C, QP/137A, QP/135C, QP/136
Fixed Openings	OP/2B, CH/140A
Doors	W/3-SE-(-15)-136

HOT STANDBY SYSTEMS	Equipment	Valves	Cable
Reactor Coolant			
Reactor Protection System			
Shutdown Cooling			
Chemical and Volume Control			
Main Feedwater			
Main Steam			
HVAC			
Auxiliary Feedwater			
Engineered Safety Feature			
Component Cooling Water			
Saltwater Cooling Water			
Emergency Chilled Water			
Diesel Generator Systems			

COLD SHUTDOWN SYSTEMS	Equipment	Valves	Cable
Shutdown Cooling	A,N	B,N	A,B
CCW (To SDC)			
HVAC	A		A
Summary (Hot and Cold)	A,N	B,N	A,B

ESSENTIAL ELECTRIC SYSTEMS	Equipment	MCC and Switchgear	Cable
220 KV (AC)			
4160 V (AC)			
480 V (AC)			
120 V (AC)			
125 V (DC)			
Electric Panels			A,B
Summary			A,B

ASSOCIATED CIRCUITS OF CONCERN

H/I Pressure Interface	NO
Spurious Operation	NO

FIRE AREA/ZONE 3-SE-(-15)-137C

7.14.8.1 Location

Safety Equipment Building - El. (-15'-0") - Safety Related Pump Room - 920 square feet - Figures 8-31

7.14.8.2 Fire Loading

Fire loading category - Minimal
Maximum permissible fire loading - 40,000 Btu/sq. ft. (Note 1)

Note 1:The maximum permissible fire loading is based on an evenly distributed loading of combustible materials.

7.14.8.3 Design Basis Fire

The design basis fire is postulated to be a fire that would involve mostly oil.

The design basis fire is conservatively based on the simultaneous total combustion of all combustibles in the zone.

7.14.8.4 Fire Protection Equipment

There is no fire fighting equipment in the zone. Manual fire fighting equipment is available in adjacent area 3-SE-(-15)-136. One ionization smoke detector, located within the zone, provides early warning alarm in the control room.

7.14.8.5 Construction

The walls of the zone are reinforced concrete with a 3 hour rating with the exception of the wall to 3-PE-(-18)-2B which has a nonrated open blockout for pipes. The ceiling is 2 hour rated. The floor to grade is nonrated heavy concrete construction. A nonrated watertight door allows access to the zone from the stairwell (3-SE-(-15)-136).

7.14.8.6 Licensee Controlled Specification Barriers

For definition of the barriers requiring surveillance per LCS 3.7.104 refer to the latest revision of Figure 8-31, sheet 3.

(Note: 3-SE-(-15)-137A and 3-SE-(-15)-137B were analyzed as a singular area.
3-SE-(-15)-137C is suitably separated from these zones and is analyzed independently.)

7.14.8.7 Conclusions

The ionization detection system is expected to detect the products of combustion from an incipient fire and alert the control room for prompt response by the fire department. The available portable equipment is adequate to extinguish the fire.

Portable smoke exhaust fans may be used to remove smoke generated by the design basis fire.

The fire boundaries between 3-SE-(-15)-137C and 3-SE-(-15)-137A, 3-SE-(-15)-136, 3-SE-(-5)-135C and 3-SE-8-140A were evaluated. The fire boundaries and associated fire protection features were found to be adequate to prevent the propagation of fire beyond the fire boundaries. The low fire loading and the substantial construction of the barriers and nonrated door preclude the propagation of the design basis fire beyond the boundaries defining the zone.

7.14.8.8 Fire Area 3-SE-(-15)-137C Appendix R Compliance

Safe shutdown capability will be provided by utilizing Train B systems. Functionally redundant components protected from fire damage will be utilized in conjunction with operator action on manual or disabled components to achieve safe shutdown.

One train of systems necessary to achieve hot standby and cold shutdown has been evaluated to remain available for safe shutdown in accordance with 10CFR50, Appendix R, III.G.1 and III.G.2.a. A deviation from the requirements of 10CFR50 Appendix R, III.G.2.a has been accepted for concrete walls not having a 3-hour rating between the Train A Safety Related Pump Room (3-SE-(-15)-137C) and the Safety Related Pump Rooms (3-SE-(-15)-137A and 3-SE-(-15)-137B) and between the Safety Related Pump Rooms (3-SE-(-15)-137C) and fire area 3-SE-(-15)-136. The barriers between pump room 137C and 137A and 137C and 136 have been upgraded to a three hour rating.

7.14.9 FIRE AREA/ZONE: 3-SE-(-15)-138

FIRE AREA/ZONE: 3-SE-(-15)-138

AREA: 360 sq. ft. DESCRIPTION: HEAT EXCH. ROOM

DESIGN BASIS FIRE

Fire Loading Category:	Minimal
Fire Loading - Max Permiss:	13,000.0 Btu's/sq.ft.

FIRE PROTECTION (AVAILABLE)

Suppression (type)	None
Hose Stations	none, (1) in 3-SE-(-15)-136 @ 8'
Portable Extinguishers	none, adjacent
Detectors (type)	None

FIRE RESISTANCE RATING

Walls	136/HC, others 3hr
Floor, Ceiling, Roof	2hr/ceiling, HC/floor
Penetrations	C, P, QP/139, QP/161B, NP/136
Fixed Openings	CH/145A
Doors	W/3-SE-(-15)-136 (at el. 8'-0")

HOT STANDBY SYSTEMS	Equipment	Valves	Cable
Reactor Coolant			
Reactor Protection System			
Shutdown Cooling			
Chemical and Volume Control			
Main Feedwater			
Main Steam			
HVAC			
Auxiliary Feedwater			
Engineered Safety Feature			
Component Cooling Water			
Saltwater Cooling Water			
Emergency Chilled Water			
Diesel Generator Systems			

COLD SHUTDOWN SYSTEMS	Equipment	Valves	Cable
Shutdown Cooling	B,N	B	B
CCW (To SDC)			
HVAC			
Summary (Hot and Cold)	B,N	B	B

ESSENTIAL ELECTRIC SYSTEMS	Equipment	MCC and Switchgear	Cable
220 KV (AC)			
4160 V (AC)			
480 V (AC)			
120 V (AC)			
125 V (DC)			
Electric Panels			B,X
Summary			B,X

ASSOCIATED CIRCUITS OF CONCERN

H/I Pressure Interface	NO
Spurious Operation	NO

FIRE AREA/ZONE 3-SE-(-15)-138

7.14.9.1 Location

Safety Equipment Building - El. (-15'-0") - Heat Exchanger Room - 360 square feet - Figures 8-31, 8-32

7.14.9.2 Fire Loading

Fire loading category - Minimal
Maximum permissible fire loading - 13,000 Btu/sq. ft. (Note 1)

Note 1:The maximum permissible fire loading is based on an evenly distributed loading of combustible materials.

7.14.9.3 Design Basis Fire

A fire is not expected to occur in this area during normal operation. The maximum credible fire is postulated to involve transient combustible materials.
Fire Protection Equipment

There is no fire fighting equipment in the area. Manual fire fighting equipment is available in adjacent area 3-SE-(-15)-136. No fire detection equipment is provided within the area.

7.14.9.4 Construction

The walls of the zone are reinforced concrete with a 3 hour rating, except the wall to 3-SE-(-15)-136 which is nonrated reinforced concrete with an approximate thickness of 18 inches. The ceiling is 2 hour rated. The floor to grade is nonrated heavy concrete construction. Watertight doors communicate with the A/C room (3-SE-(-15)-136).

7.14.9.5 Licensee Controlled Specification Barriers

For definition of the barriers requiring surveillance per LCS 3.7.104, refer to the latest revisions of Figures 8-31 and 8-32, sheet 3.

7.14.9.6 Conclusions

Portable smoke exhaust fans may be used to remove smoke generated by the design basis fire.

The fire boundaries between fire area 3-SE-(15)-138 and 3-SE-(-15)-136, 3-SE-(-15)-139, 3-SE-30-145A and 3-TK-(-2)-161B were evaluated. The fire boundaries and associated fire protection features were found to be adequate to prevent the propagation of fire beyond the fire boundaries. The low fire loading and the substantial construction of the barriers and nonrated doors preclude the propagation of the design basis fire beyond the boundaries defining the area.

FIRE AREA/ZONE 3-SE-(-15)-138

7.14.9.7 Fire Area 3-SE-(-15)-138 Appendix R Compliance

Safe shutdown capability will be provided by utilizing Train A systems. Functionally redundant components protected from fire damage will be utilized in conjunction with operator action on manual or disabled components to achieve safe shutdown.

One train of systems necessary to achieve hot standby and cold shutdown conditions independent of the subject fire area will be free of fire damage. Therefore, this fire area complies with the criteria of 10CFR50, Appendix R, III.G.1.

7.14.10 FIRE AREA/ZONE: 3-SE-(-15)-139

FIRE AREA/ZONE: 3-SE-(-15)-139

AREA: 360 sq. ft. DESCRIPTION: HEAT EXCH. ROOM

DESIGN BASIS FIRE

Fire Loading Category:	Minimal
Fire Loading - Max Permiss:	13,000.0 Btu's/sq.ft.

FIRE PROTECTION (AVAILABLE)

Suppression (type)	none
Hose Stations	none, (1) in 3-SE-(-15)-136 @ 8'
Portable Extinguishers	none, adjacent
Detectors (type)	none

FIRE RESISTANCE RATING

Walls	136/HC, others 3hr
Floor, Ceiling, Roof	2hr/ceiling, HC/floor
Penetrations	P, C, QP/138, NC/136, NP/136, QC/137A
Fixed Openings	CH/145A
Doors	W/3-SE-(-15)-136 (at el. 8'-0")

HOT STANDBY SYSTEMS	Equipment	Valves	Cable
Reactor Coolant			
Reactor Protection System			
Shutdown Cooling			
Chemical and Volume Control			
Main Feedwater			
Main Steam			
HVAC			
Auxiliary Feedwater			
Engineered Safety Feature			
Component Cooling Water			
Saltwater Cooling Water			
Emergency Chilled Water			
Diesel Generator Systems			

COLD SHUTDOWN SYSTEMS	Equipment	Valves	Cable
Shutdown Cooling	A,N	A,B	A,B
CCW (To SDC)			
HVAC			
Summary (Hot and Cold)	A,N	A,B	A,B

ESSENTIAL ELECTRIC SYSTEMS	Equipment	MCC and Switchgear	Cable
220 KV (AC)			
4160 V (AC)			
480 V (AC)			
120 V (AC)			
125 V (DC)			
Electric Panels			A,B,X
Summary			A,B,X

ASSOCIATED CIRCUITS OF CONCERN

H/I Pressure Interface	NO
Spurious Operation	NO

FIRE AREA/ZONE 3-SE-(15)-139

7.14.10.1 Location

Safety Equipment Building - El. (-15'-0") - Heat Exchanger Room - 360 square feet - Figures 8-31, 8-32

7.14.10.2 Fire Loading

Fire loading category - Minimal
Maximum permissible fire loading - 13,000 Btu/sq. ft. (Note 1)

Note 1:The maximum permissible fire loading is based on an evenly distributed loading of combustible materials.

7.14.10.3 Design Basis Fire

A fire is not expected to occur in this area during normal operation. The maximum credible fire is postulated to involve transient combustible materials.

7.14.10.4 Fire Protection Equipment

There is no fire fighting equipment in the area. Manual fire fighting equipment is available in adjacent area 3-SE-(-15)-136. No fire detection equipment is provided within the area.

7.14.10.5 Construction

The walls of the area are reinforced concrete with a 3 hour rating, except the wall to 3-SE-(-15)-136 which is nonrated reinforced concrete construction with an approximate thickness of 18 inches. The ceiling is 2 hour rated. The floor to grade is nonrated heavy concrete construction. A watertight door allows access to the zone from the A/C room (3-SE-(-15)-136).

7.14.10.6 Licensee Controlled Specification Barriers

For definition of the barriers requiring surveillance per LCS 3.7.104, refer to the latest revisions of Figures 8-31 and 8-32, sheet 3.

7.14.10.7 Conclusions

Portable smoke exhaust fans may be used to remove smoke generated by the design basis fire.

FIRE AREA/ZONE 3-SE-(15)-139

The fire boundaries between fire area 3-SE-(15)-139 and 3-SE-(-15)-137A, 3-SE-(-15)-136, 3-SE-(-15)-138 and 3-SE-30-145A were evaluated. The fire boundaries and associated fire protection features were found to be adequate to prevent the propagation of fire beyond the fire boundaries. The low fire loading and the substantial construction of the barriers and nonrated door preclude the propagation of the design basis fire beyond the boundaries defining the area. 3SE-139-2

7.14.10.8 Fire Area 3-SE-(-15)-139 Appendix R Compliance

Safe shutdown capability will be provided by utilizing Train B systems. Functionally redundant components protected from fire damage will be utilized in conjunction with operator action on manual or disabled components to achieve safe shutdown.

One train of systems necessary to achieve hot standby and cold shutdown conditions independent of the subject fire area will be free of fire damage. Therefore, this fire area complies with the criteria of 10CFR50, Appendix R, III.G.1.

7.14.11 FIRE AREA/ZONE: 3-SE-8-140A

FIRE AREA/ZONE: 3-SE-8-140A

AREA: 400 sq. ft. DESCRIPTION: SURGE TK. ROOM

DESIGN BASIS FIRE

Fire Loading Category:	Minimal
Fire Loading - Max Permiss:	13,000.0 Btu's/sq.ft.

FIRE PROTECTION (AVAILABLE)

Suppression (type)	none
Hose Stations	none, (1) in 3-SE-(-15)-136
Portable Extinguishers	none, adjacent
Detectors (type)	none

FIRE RESISTANCE RATING

Walls	north, east/3hr, south, west/HC
Floor, Ceiling, Roof	2hr
Penetrations	P, C, NP/136
Fixed Openings	OP/140B, CH/137C
Doors	W/3-SE-(-15)-136

HOT STANDBY SYSTEMS	Equipment	Valves	Cable
Reactor Coolant			
Reactor Protection System			
Shutdown Cooling			
Chemical and Volume Control			
Main Feedwater			
Main Steam			
HVAC			
Auxiliary Feedwater			
Engineered Safety Feature			
Component Cooling Water	N	B	A,B
Saltwater Cooling Water			
Emergency Chilled Water			
Diesel Generator Systems			

COLD SHUTDOWN SYSTEMS	Equipment	Valves	Cable
Shutdown Cooling			
CCW (To SDC)			
HVAC			
Summary (Hot and Cold)	N	B	A,B

ESSENTIAL ELECTRIC SYSTEMS	Equipment	MCC and Switchgear	Cable
220 KV (AC)			
4160 V (AC)			
480 V (AC)			
120 V (AC)			
125 V (DC)			
Electric Panels			A,B,X
Summary			A,B,X

ASSOCIATED CIRCUITS OF CONCERN

H/I Pressure Interface	NO
Spurious Operation	YES

FIRE AREA/ZONE 3-SE-8-140A

7.14.11.1 Location

Safety Equipment Building - El. 8'-0" - Surge Tank Room - 400 square feet - Figures 8-32

7.14.11.2 Fire Loading

Fire loading category - Minimal
Maximum permissible fire loading - 13,000 Btu/sq. ft. (Note 1)

Note 1:The maximum permissible fire loading is based on an evenly distributed loading of combustible materials.

7.14.11.3 Design Basis Fire

A fire is not expected to occur in this area during normal operation. The maximum credible fire is postulated to involve transient combustible materials.

7.14.11.4 Fire Protection Equipment

There is no fire fighting equipment in the zone. Manual fire fighting equipment is available in adjacent area 3-SE-(-15)-136. No fire detection equipment is provided within the zone.

7.14.11.5 Construction

The north and east walls are reinforced concrete with a 3 hour rating. The west wall is nonrated reinforced concrete construction with an approximate thickness of 12 inches. The south wall, adjoining the chemical storage tank room (3-SE-8-140B), is 3'6" high. The ceiling and floor are 2 hour rated. One nonrated watertight door allows access to the zone from the A/C room (3-SE-(-15)-136).

7.14.11.6 Licensee Controlled Specification Barriers

For definition of the barriers requiring surveillance per LCS 3.7.104, refer to the latest revision of Figure 8-32, sheet 3.

7.14.11.7 Conclusions

Portable smoke exhaust fans may be used to remove smoke generated by the design basis fire.

The fire boundaries between 3-SE-8-140A and 3-SE-(-15)-136, 3-SE-(-15)-137C were evaluated. The fire boundaries and associated fire protection features were found to be adequate to prevent the propagation of fire beyond the fire boundaries. The low fire loading and the substantial construction of the heavy concrete walls and nonrated door preclude the propagation of the design basis fire beyond the boundaries defining the fire area.

7.14.11.8 Fire Area 3-SE-8-140 Appendix R Compliance

Safe shutdown capability will be provided by utilizing Train B systems. Functionally redundant components protected from fire damage will be utilized in conjunction with operator action on manual or disabled components to achieve safe shutdown.

One train of systems necessary to achieve hot standby and cold shutdown conditions independent of the subject fire area will be free of fire damage. Therefore, this fire area complies with the criteria of 10CFR50, Appendix R, III.G.1.

7.14.12 FIRE AREA/ZONE: 3-SE-8-140B

FIRE AREA/ZONE: 3-SE-8-140B

AREA: 320 sq. ft. DESCRIPTION: CHEM. STORAGE RM.

DESIGN BASIS FIRE

Fire Loading Category:	Minimal
Fire Loading - Max Permiss:	13,000.0 Btu's/sq.ft.

FIRE PROTECTION (AVAILABLE)

Suppression (type)	none
Hose Stations	none, (1) in 3-SE-(-15)-136
Portable Extinguishers	none, adjacent
Detectors (type)	ionization

FIRE RESISTANCE RATING

Walls	south and east/3hr, north and west/HC
Floor, Ceiling, Roof	2hr
Penetrations	P, C, NP/136
Fixed Openings	OP/140A
Doors	none

HOT STANDBY SYSTEMS	Equipment	Valves	Cable
Reactor Coolant			
Reactor Protection System			
Shutdown Cooling			
Chemical and Volume Control			
Main Feedwater			
Main Steam			
HVAC			
Auxiliary Feedwater			
Engineered Safety Feature			
Component Cooling Water			
Saltwater Cooling Water			
Emergency Chilled Water			
Diesel Generator Systems			

COLD SHUTDOWN SYSTEMS	Equipment	Valves	Cable
Shutdown Cooling			
CCW (To SDC)			
HVAC			A
Summary (Hot and Cold)			A

ESSENTIAL ELECTRIC SYSTEMS	Equipment	MCC and Switchgear	Cable
220 KV (AC)			
4160 V (AC)			
480 V (AC)			
120 V (AC)			
125 V (DC)			
Electric Panels			A,B
Summary			A,B

ASSOCIATED CIRCUITS OF CONCERN

H/I Pressure Interface	NO
Spurious Operation	NO

FIRE AREA/ZONE 3-SE-8-140B

7.14.12.1 Location

Safety Equipment Building - El. 8'-0" - Chemical Storage Room -320 square feet - Figures 8-32

7.14.12.2 Fire Loading

Fire loading category - Minimal
Maximum permissible fire loading - 13,000 Btu/sq. ft. (Note 1)

Note 1:The maximum permissible fire loading is based on an evenly distributed loading of combustible materials.

7.14.12.3 Design Basis Fire

A fire is not expected to occur in this area during normal operation. The maximum credible fire is postulated to involve transient combustible materials.

7.14.12.4 Fire Protection Equipment

There is no fire fighting equipment in the zone. Manual fire fighting equipment is available in adjacent area 3-SE-(-15)-136. An ionization smoke detector, located within the zone, provides early warning alarm in the control room.

7.14.12.5 Construction

The east and south walls are reinforced concrete with a 3 hour rating. The west wall is nonrated reinforced concrete construction with an approximate thickness of 12 inches. The north wall, adjoining the surge tank room (3-SE-8-140A), is 3'-6" high. The ceiling and floor are 2 hour rated.

7.14.12.6 Licensee Controlled Specification Barriers

For definition of the barriers requiring surveillance per LCS 3.7.104, refer to the latest revision of Figure 8-32, sheet 3.

7.14.12.7 Conclusions

The ionization detector is expected to detect the products of combustion from an incipient fire and alert the control room for prompt response by the fire department. The available portable equipment is adequate to extinguish the fire.

Portable smoke exhaust fans may be used to remove smoke generated by the design basis fire.

The fire boundaries between 3-SE-8-140B and 3-SE-(-15)-136 were evaluated. The fire boundaries and associated fire protection features were found to be adequate to prevent the propagation of fire beyond the fire boundaries. The low fire loading and the substantial construction of the heavy concrete walls preclude the propagation of the design basis fire beyond the boundaries defining the fire area.

Appendix R compliance for fire area 3-SE-8-140 is discussed in fire zone 3-SE-8-140A.

7.14.13 FIRE AREA/ZONE: 3-SE-8-141

FIRE AREA/ZONE: 3-SE-8-141

AREA: 300 sq. ft. DESCRIPTION: SURGE TK. RM.

DESIGN BASIS FIRE

Fire Loading Category:	Minimal
Fire Loading - Max Permiss:	13,000.0 Btu's/sq.ft.

FIRE PROTECTION (AVAILABLE)

Suppression (type)	none
Hose Stations	none, (1) in 3-SE-(-15)-136
Portable Extinguishers	none, adjacent
Detectors (type)	none

FIRE RESISTANCE RATING

Walls	135A/HC, others 3hr
Floor, Ceiling, Roof	2hr
Penetrations	P, C, QP/136, NP/135A
Fixed Openings	none
Doors	W/3-SE-(-15)-136

HOT STANDBY SYSTEMS	Equipment	Valves	Cable
Reactor Coolant			
Reactor Protection System			
Shutdown Cooling			
Chemical and Volume Control			
Main Feedwater			
Main Steam			
HVAC			
Auxiliary Feedwater			
Engineered Safety Feature			
Component Cooling Water	N	A	A,B
Saltwater Cooling Water			
Emergency Chilled Water			
Diesel Generator Systems			

COLD SHUTDOWN SYSTEMS	Equipment	Valves	Cable
Shutdown Cooling			A
CCW (To SDC)			
HVAC			
Summary (Hot and Cold)	N	A	A,B

ESSENTIAL ELECTRIC SYSTEMS	Equipment	MCC and Switchgear	Cable
220 KV (AC)			
4160 V (AC)			
480 V (AC)			
120 V (AC)			
125 V (DC)			
Electric Panels			A,X
Summary			A,X

ASSOCIATED CIRCUITS OF CONCERN

H/I Pressure Interface	NO
Spurious Operation	YES

FIRE AREA/ZONE 3-SE-8-141

7.14.13.1 Location

Safety Equipment Building - El. 8'-0" - Surge Tank Room - 300 square feet - Figures 8-32

7.14.13.2 Fire Loading

Fire loading category - Minimal
Maximum permissible fire loading - 13,000 Btu/sq. ft. (Note 1)

Note 1:The maximum permissible fire loading is based on an evenly distributed loading of combustible materials.

7.14.13.3 Design Basis Fire

The design basis fire is postulated to be a fire that would involve mostly cable insulation.

The design basis fire is conservatively based on the simultaneous total combustion of all combustibles in the zone.

7.14.13.4 Fire Protection Equipment

There is no fire fighting equipment in the area. Manual fire fighting equipment is available in adjacent area 3-SE-(-15)-136. No fire detection equipment is provided within the area.

7.14.13.5 Construction

The walls of the area are reinforced concrete and are 3 hour rated, except for the wall adjoining 3-SE-(-5)-135A which is nonrated reinforced concrete construction with an approximate thickness of 1 foot. The ceiling and floor are 2 hour rated. A nonrated watertight door allows access to the area from the A/C room (3-SE-(-15)-136).

7.14.13.6 Licensee Controlled Specification Barriers

For definition of the barriers requiring surveillance per LCS 3.7.104, refer to the latest revision of Figure 8-32, sheet 3.

7.14.13.7 Conclusions

Portable exhaust fans may be used to remove smoke generated by the design basis fire.

FIRE AREA/ZONE 3-SE-8-141

The fire boundaries between fire area 3-SE-8-141 and 3-SE-(-5)-135A and 3-SE-(-15)-136 were evaluated. The fire boundaries and associated fire protection features were found to be adequate to prevent the propagation of fire beyond the fire boundaries. The low fire loading and the substantial construction of the barriers and nonrated door preclude the propagation of the design basis fire beyond the boundaries defining the area.

7.14.13.8 Fire Area 3-SE-8-141 Appendix R Compliance

Safe shutdown capability will be provided by utilizing Train B systems. Functionally redundant components protected from fire damage will be utilized in conjunction with operator action on manual or disabled components to achieve safe shutdown.

One train of systems necessary to achieve hot standby and cold shutdown conditions independent of the subject fire area will be free of fire damage. Therefore, this fire area complies with the criteria of 10CFR50, Appendix R, III.G.1.

7.14.14 FIRE AREA/ZONE: 3-SE-30-142A

FIRE AREA/ZONE: 3-SE-30-142A

AREA: 6634 sq. ft. DESCRIPTION: ELECTRICAL TUNNEL

DESIGN BASIS FIRE

Fire Loading Category:	Medium
Fire Loading - Max Permiss:	160,000.0 Btu's/sq.ft.

FIRE PROTECTION (AVAILABLE)

Suppression (type)	water spray system
Hose Stations	none, (1) in 3-AC-30-21, (1) in 2-AC-30-22
Portable Extinguishers	yes
Detectors (type)	ionization, heat detectors

FIRE RESISTANCE RATING

Walls	NR/142B, HC/146, 3hr others
Floor, Ceiling, Roof	2hr
Penetrations	C, P
Fixed Openings	louvers/exterior
Doors	X/3-AC-30-21, A/3-AC-70-65

HOT STANDBY SYSTEMS	Equipment	Valves	Cable
Reactor Coolant			
Reactor Protection System			
Shutdown Cooling			
Chemical and Volume Control			
Main Feedwater			A,B
Main Steam			A,B,A*
HVAC			a,B
Auxiliary Feedwater			A,a,B,C
Engineered Safety Feature			A,B,C
Component Cooling Water			A,a,B
Saltwater Cooling Water			
Emergency Chilled Water			
Diesel Generator Systems			B

COLD SHUTDOWN SYSTEMS	Equipment	Valves	Cable
Shutdown Cooling			A,a,B
CCW (To SDC)			B,A
HVAC			a,B
Summary (Hot and Cold)			a,A,A*,B,C

ESSENTIAL ELECTRIC SYSTEMS	Equipment	MCC and Switchgear	Cable
220 KV (AC)			X
4160 V (AC)			B,A
480 V (AC)			B
120 V (AC)			
125 V (DC)			
Electric Panels			A,A*,B,X
Summary			A,A*,B,X

ASSOCIATED CIRCUITS OF CONCERN

H/I Pressure Interface	NO
Spurious Operation	YES

FIRE AREA/ZONE 3-SE-30-142A

7.14.14.1 Location

Safety Equipment Building - El. 30'-0" - Electrical Tunnel - 6634 square feet - Figures 8-33, 8-34

7.14.14.2 Fire Loading

Fire loading category - Medium
Maximum permissible fire loading - 160,000 Btu/sq. ft. (Note 1)

Note 1:The maximum permissible fire loading is based on an evenly distributed loading of combustible materials.

7.14.14.3 Design Basis Fire

The design basis fire is postulated to be a fire that would involve mostly cable insulation and oil.

The design basis fire is conservatively based on the simultaneous total combustion of all combustibles in the zone.

7.14.14.4 Fire Protection Equipment

The zone contains an automatic water spray system with fixed temperature rate of rise heat detectors. Actuation by the heat detectors results in control room annunciation. Manual fire fighting equipment is available within the zone and from the auxiliary control building (3-AC-30-21 and 2-AC-30-22). Ionization smoke detectors, located within the zone, provide early warning alarm in the control room.

7.14.14.5 Construction

The walls defining the zone are reinforced concrete and are 3 hour rated, except the walls adjoining zone 3-SE-50-146 at the riser which are heavy concrete. The roof and floor are 2 hour rated. A 3 hour rated door communicates with the auxiliary control building (3-AC-70-65). A 3 hour UL equivalent door also communicates with the auxiliary control building (3-AC-30-21). The zone is open to the cable tunnel (3-CT-(-2)-142B). Exhaust louvers penetrate the exterior walls. Interior ventilation duct penetrations are provided with 3 hour rated fire dampers.

7.14.14.6 Licensee Controlled Specification Barriers

For definition of the barriers requiring surveillance per LCS 3.7.104, refer to the latest revisions of Figures 8-33 and 8-34, sheet 3.

Cable for the following systems is wrapped in fire zone 3-142A:

Component Cooling Water - Train A	Shutdown Cooling - Train A
Auxiliary Feedwater - Train A	HVAC - Train A

7.14.14.7 Conclusions

The ionization detection system is expected to detect the products of combustion from an incipient fire and alert the control room for prompt response by the fire department. Portable suppression equipment is available. The water spray system may also be actuated from one of the manual pull stations located throughout the zone. The available portable equipment is adequate to extinguish the fire during its initial stages of growth.

In the event the fire achieves sufficient intensity, the fixed temperature rate of rise heat detectors will actuate the water spray system automatically. Actuation by the heat detectors is alarmed in the control room. The water spray system will control and suppress the fire until the department arrives and completes the extinguishment with portable equipment.

Should automatic water spray system fail to actuate, the fire department will be utilized to extinguish the fire.

The normal ventilation system will effectively remove the smoke generated by the design basis fire. Portable smoke exhaust fans may be used if additional smoke removal capability is required.

The fire boundaries between 3-SE-30-142A and 3-SE-50-146 were evaluated. The boundaries and associated fire protection features were found to be adequate to prevent the propagation of fire between the fire areas.

The design basis fire is insufficient to breach the barriers defining the zone/fire area.

7.14.14.8 Fire Area 3-CT-(-2)-142 Appendix R Compliance

Safe shutdown capability will be provided by utilizing Train A or Train B systems as available for a fire in zones 142A and 142B, and Train B systems for a fire in zone 142C. For fires in 142A and 142B, Train A equipment is utilized for shutdown except for localized areas where Train A equipment is not protected. In these localized areas, there is adequate separation between the Train A and Train B equipment and cabling to ensure that the Train B equipment will be available. Train A CCW, HVAC, SDC, and AFW system cables routed in zone 3-142A or 3-142B are wrapped and will remain available.

FIRE AREA/ZONE 3-SE-30-142A

One train of systems necessary to achieve hot standby and cold shutdown has been evaluated to remain available for safe shutdown in accordance with 10CFR50, Appendix R, Sections III.G.1 and III.G.2.b and c. A deviation has been accepted from the requirements of Section III.G.2. to the extent it requires the separation of redundant safe shutdown trains by one hour rated barriers. Specifically, this deviation was requested for redundant safe shutdown cables in fire zone 3-SE-30-142A separated by 43 feet with intervening combustibles, and redundant safe shutdown cables in fire zone 3-CT-(-2)-142B separated by 125 feet with intervening combustibles. The redundant cables are not protected by one hour rated barriers. The fire detection and suppression systems in this area/zone were evaluated and shown to provide a level of protection equivalent to the requirements of Appendix R.

7.14.15 FIRE AREA/ZONE: 3-SE-30-145A

FIRE AREA/ZONE: 3-SE-30-145A

AREA: 4576 sq. ft. DESCRIPTION: WTR. CTRL. RM./EQUIP. ACC. RM.

DESIGN BASIS FIRE

Fire Loading Category:	Minimal
Fire Loading - Max Permiss:	13,000.0 Btu's/sq.ft.

FIRE PROTECTION (AVAILABLE)

Suppression (type)	none
Hose Stations	none
Portable Extinguishers	none
Detectors (type)	ioinization (local)

FIRE RESISTANCE RATING

Walls	3hr/142A, 2C, 3A, 2hr/173, NR/146, 145B, HC/others
Floor, Ceiling, Roof	2hr floor, partial roof
Penetrations	P, C
Fixed Openings	CH/138, 139, OP/146, MH/tendon acc. gallery
Doors	none

HOT STANDBY SYSTEMS	Equipment	Valves	Cable
Reactor Coolant			
Reactor Protection System			
Shutdown Cooling			
Chemical and Volume Control			
Main Feedwater		A,B,N	A,B
Main Steam		A,B,N	A*,A,B
HVAC			
Auxiliary Feedwater		A,B	A,B
Engineered Safety Feature			
Component Cooling Water			
Saltwater Cooling Water			
Emergency Chilled Water			
Diesel Generator Systems			

COLD SHUTDOWN SYSTEMS	Equipment	Valves	Cable
Shutdown Cooling			
CCW (To SDC)			
HVAC			
Summary (Hot and Cold)		A,B,N	A*,A,B

ESSENTIAL ELECTRIC SYSTEMS	Equipment	MCC and Switchgear	Cable
220 KV (AC)			
4160 V (AC)			
480 V (AC)			
120 V (AC)			
125 V (DC)			
Electric Panels			A*,A,B,X
Summary			A*,A,B,X

ASSOCIATED CIRCUITS OF CONCERN

H/I Pressure Interface	NO
Spurious Operation	YES

FIRE AREA/ZONE 3-SE-30-145A

7.14.15.1 Location

Safety Equipment Building - El. 30'-0" - Water Control Room/Equipment Access Room - 4576 square feet - Figures 8-33

7.14.15.2 Fire Loading

Fire loading category - Minimal
Maximum permissible fire loading - 13,000 Btu/sq. ft. (Note 1)

Note 1:The maximum permissible fire loading is based on an evenly distributed loading of combustible materials.

7.14.15.3 Design Basis Fire

The design basis fire is postulated to be a fire that would involve mostly hydraulic fluid.

The design basis fire is conservatively based on the simultaneous total combustion of all combustibles in the zone.

7.14.15.4 Fire Protection Equipment

There is no fire fighting equipment located within the zone. Local ionization smoke detectors provide early warning alarm in the control room. Manual suppression capabilities available from hydrants in the yard.

7.14.15.5 Construction

The zone is comprised of the 30'-0" elevation of the roof of the safety equipment building. The north and west walls, which separate the area from the adjacent electrical tunnel (3-SE-30-142A), are reinforced concrete with a 3 hour rating as is the wall to the Penetration Building. The portion of the south wall adjoining the alarm station (3-SE-30-173) is 2 hour rated. The floor is 2 hour rated with removable hatches to the heat exchanger rooms (3-SE-(-15)-138 and 3-SE-(-15)-139) below. A partial heavy concrete roof and heavy concrete missile shields are provided to protect the main steam isolation valves.

7.14.15.6 Licensee Controlled Specification Barriers

For definition of the barriers requiring surveillance per LCS 3.7.104, refer to the latest revision of Figure 8-33, sheet 3.

7.14.15.7 Conclusions

The local ionization detectors are expected to detect the products of combustion from an incipient fire and alert the control room for prompt response by the fire department. The available portable equipment is adequate to extinguish the fire.

The fire boundaries between fire area 3-SE-30-145A and 3-SE-(-15)-138 and 3-SE-(-15)-139 were evaluated. The fire boundaries and associated fire protection features were found to be adequate to prevent the propagation of fire beyond the fire boundaries. The design basis fire is insufficient to breach the barriers separating the zone from adjacent areas containing safe shutdown equipment.

7.14.15.8 Fire Area 3-SE-25-145 Appendix R Compliance

Safe shutdown capability will be provided by utilizing Train A systems. Functionally redundant components protected from fire damage will be utilized in conjunction with operator action on manual or disabled components to achieve safe shutdown.

One train of systems necessary to achieve hot standby and cold shutdown conditions independent of the subject fire area will be free of fire damage. Therefore, this fire area complies with the criteria of 10CFR50, Appendix R, III.G.1.

7.14.16 FIRE AREA/ZONE: 3-SE-25-145B

FIRE AREA/ZONE: 3-SE-30-145B

AREA: 343 sq. ft. DESCRIPTION: AFW STEAM TRENCH

DESIGN BASIS FIRE

Fire Loading Category:	Minimal
Fire Loading - Max Permiss:	13,000.0 Btu's/sq.ft.

FIRE PROTECTION (AVAILABLE)

Suppression (type)	none
Hose Stations	none
Portable Extinguishers	none
Detectors (type)	none

FIRE RESISTANCE RATING

Walls	NR/145A, others HC
Floor, Ceiling, Roof	2hr floor to 142B, 161B, HC/floor grade
Penetrations	NP/161A
Fixed Openings	roof grating
Doors	none

HOT STANDBY SYSTEMS	Equipment	Valves	Cable
Reactor Coolant			
Reactor Protection System			
Shutdown Cooling			
Chemical and Volume Control			
Main Feedwater			
Main Steam			
HVAC			
Auxiliary Feedwater			
Engineered Safety Feature			
Component Cooling Water			
Saltwater Cooling Water			
Emergency Chilled Water			
Diesel Generator Systems			

COLD SHUTDOWN SYSTEMS	Equipment	Valves	Cable
Shutdown Cooling			
CCW (To SDC)			
HVAC			
Summary (Hot and Cold)			

ESSENTIAL ELECTRIC SYSTEMS	Equipment	MCC and Switchgear	Cable
220 KV (AC)			
4160 V (AC)			
480 V (AC)			
120 V (AC)			
125 V (DC)			
Electric Panels			
Summary			

ASSOCIATED CIRCUITS OF CONCERN

H/l Pressure Interface	NO
Spurious Operation	NO

7.14.17 FIRE AREA/ZONE: 3-SE-50-146

FIRE AREA/ZONE: 3-SE-50-146

AREA: 6476 sq. ft. DESCRIPTION: ROOF SE BUILDING

DESIGN BASIS FIRE

Fire Loading Category:	Minimal
Fire Loading - Max Permiss:	13,000.0 Btu's/sq.ft.

FIRE PROTECTION (AVAILABLE)

Suppression (type)	none
Hose Stations	none
Portable Extinguishers	none
Detectors (type)	none

FIRE RESISTANCE RATING

Walls	3hr/32, 33, 3A, HC/142A, NR/others
Floor, Ceiling, Roof	2hr/floor, no roof
Penetrations	none
Fixed Openings	OP/145A
Doors	L/3-PE-45-3A

HOT STANDBY SYSTEMS	Equipment	Valves	Cable
Reactor Coolant			
Reactor Protection System			
Shutdown Cooling			
Chemical and Volume Control			
Main Feedwater			
Main Steam			
HVAC			
Auxiliary Feedwater			
Engineered Safety Feature			
Component Cooling Water			
Saltwater Cooling Water			
Emergency Chilled Water			
Diesel Generator Systems			

COLD SHUTDOWN SYSTEMS	Equipment	Valves	Cable
Shutdown Cooling			
CCW (To SDC)			
HVAC			
Summary (Hot and Cold)			

ESSENTIAL ELECTRIC SYSTEMS	Equipment	MCC and Switchgear	Cable
220 KV (AC)			
4160 V (AC)			
480 V (AC)			
120 V (AC)			
125 V (DC)			
Electric Panels			
Summary			

ASSOCIATED CIRCUITS OF CONCERN

H/I Pressure Interface	NO
Spurious Operation	NO

7.14.18 FIRE AREA/ZONE: 3-SE-(-12)-170

FIRE AREA/ZONE: 3-SE-(-12)-170

AREA: 4834 sq. ft. DESCRIPTION: EMERGENCY RECIRC. TUNNEL

DESIGN BASIS FIRE

Fire Loading Category:	Minimal
Fire Loading - Max Permiss:	13,000.0 Btu's/sq.ft.

FIRE PROTECTION (AVAILABLE)

Suppression (type)	none
Hose Stations	none
Portable Extinguishers	none
Detectors (type)	none

FIRE RESISTANCE RATING

Walls	west 3hr, others HC
Floor, Ceiling, Roof	2hr/ceiling, HC/floor
Penetrations	P, C
Fixed Openings	none
Doors	(3)W/tendon access gallery

HOT STANDBY SYSTEMS	Equipment	Valves	Cable
Reactor Coolant			
Reactor Protection System			
Shutdown Cooling			
Chemical and Volume Control			
Main Feedwater			
Main Steam			
HVAC			
Auxiliary Feedwater			
Engineered Safety Feature			
Component Cooling Water			
Saltwater Cooling Water			
Emergency Chilled Water			
Diesel Generator Systems			

COLD SHUTDOWN SYSTEMS	Equipment	Valves	Cable
Shutdown Cooling			
CCW (To SDC)			
HVAC			
Summary (Hot and Cold)			

ESSENTIAL ELECTRIC SYSTEMS	Equipment	MCC and Switchgear	Cable
220 KV (AC)			
4160 V (AC)			
480 V (AC)			
120 V (AC)			
125 V (DC)			
Electric Panels			A,B
Summary			A,B

ASSOCIATED CIRCUITS OF CONCERN

H/I Pressure Interface	NO
Spurious Operation	NO

FIRE AREA/ZONE 3-SE-(-12)-170

7.14.18.1 Location

Safety Equipment Building - El. (-12'-0") - Emergency Recirc. Tunnel - 4834 square feet - Figures 8-27, 8-31

7.14.18.2 Fire Loading

Fire loading category - Minimal
Maximum permissible fire loading - 13,000 Btu/sq. ft. (Note 1)

Note 1:The maximum permissible fire loading is based on an evenly distributed loading of combustible materials.

7.14.18.3 Design Basis Fire

A fire is not expected to occur in this area during normal operation. The maximum credible fire is postulated to involve transient combustible materials.
Fire Protection Equipment

There is no fire fighting or fire detection equipment located within the area.

7.14.18.4 Construction

The west wall of the area is 3 hour rated. The remainder of the area walls are heavy concrete with an approximate thickness of 36 inches. The ceiling is 2 hour rated. The floor to grade is nonrated heavy concrete construction. Redundant safe shutdown system valves, located in the isolation valve rooms, are separated by a full height heavy concrete wall, which runs the entire length of the room east of the tendon access gallery. Each valve room is separated from the tendon access gallery by a nonrated watertight door. A nonrated watertight door also provides access to the emergency recirculation piping tunnel, west of the tendon access gallery.

7.14.18.5 Licensee Controlled Specification Barriers

For definition of the barriers requiring surveillance per LCS 3.7.104, refer to the latest revisions of Figures 8-27 and 8-31, sheet 3.

7.14.18.6 Conclusions

The fire boundaries and associated fire protection features are adequate to prevent the propagation of fire beyond the fire boundaries. The minimal fire loading, the lack of access, and the substantial construction of the heavy concrete walls precludes the possibility of a significant fire.

7.14.18.7 Fire Area 3-SE-(-12)-170 Appendix R Compliance

Safe shutdown capability will be provided by utilizing Train A systems. Functionally redundant components protected from fire damage will be utilized in conjunction with operator action on manual or disabled components to achieve safe shutdown.

One train of systems necessary to achieve hot standby and cold shutdown conditions independent of the subject fire area will be free of fire damage. Therefore, this fire area complies with the criteria of 10CFR50, Appendix R, III.G.1.

7.14.19 FIRE AREA/ZONE: 3-SE-30-173

FIRE AREA/ZONE: 3-SE-30-173

AREA: 208 sq. ft. DESCRIPTION: ALARM STATION – ROOM 112

DESIGN BASIS FIRE

Fire Loading Category:	Low
Fire Loading - Max Permiss:	40,000.0 Btu's/sq.ft.

FIRE PROTECTION (AVAILABLE)

Suppression (type)	none
Hose Stations	none
Portable Extinguishers	yes
Detectors (type)	ionization

FIRE RESISTANCE RATING

Walls	south and west/3hr, others 2hr
Floor, Ceiling, Roof	2hr
Penetrations	C D
Fixed Openings	none
Doors	X/exterior

HOT STANDBY SYSTEMS	Equipment	Valves	Cable
Reactor Coolant			
Reactor Protection System			
Shutdown Cooling			
Chemical and Volume Control			
Main Feedwater			
Main Steam			
HVAC			
Auxiliary Feedwater			
Engineered Safety Feature			
Component Cooling Water			
Saltwater Cooling Water			
Emergency Chilled Water			
Diesel Generator Systems			

COLD SHUTDOWN SYSTEMS	Equipment	Valves	Cable
Shutdown Cooling			
CCW (To SDC)			
HVAC			
Summary (Hot and Cold)			

ESSENTIAL ELECTRIC SYSTEMS	Equipment	MCC and Switchgear	Cable
220 KV (AC)			
4160 V (AC)			
480 V (AC)			
120 V (AC)			
125 V (DC)			
Electric Panels			
Summary			

ASSOCIATED CIRCUITS OF CONCERN

H/I Pressure Interface	NO
Spurious Operation	NO

7.14.20 FIRE AREA/ZONE: 3-SE-(-2)-176

FIRE AREA/ZONE: 3-SE-(-2)-176

AREA: 660 sq. ft. DESCRIPTION: CABLE TUNNEL ACCESS ROOM

DESIGN BASIS FIRE

Fire Loading Category:	Minimal
Fire Loading - Max Permiss:	13,0000.0 Btu's/sq.ft.

FIRE PROTECTION (AVAILABLE)

Suppression (type)	none
Hose Stations	none
Portable Extinguishers	none, adjacent
Detectors (type)	none

FIRE RESISTANCE RATING

Walls	142B/3hr, others HC
Floor, Ceiling, Roof	2hr/ceiling, HC/floor
Penetrations	C, NP/161B
Fixed Openings	MH/173
Doors	B/3-CT-(-2)-142B

HOT STANDBY SYSTEMS	Equipment	Valves	Cable
Reactor Coolant			
Reactor Protection System			
Shutdown Cooling			
Chemical and Volume Control			
Main Feedwater			
Main Steam			
HVAC			
Auxiliary Feedwater			
Engineered Safety Feature			
Component Cooling Water			
Saltwater Cooling Water			
Emergency Chilled Water			
Diesel Generator Systems			

COLD SHUTDOWN SYSTEMS	Equipment	Valves	Cable
Shutdown Cooling			
CCW (To SDC)			
HVAC			
Summary (Hot and Cold)			

ESSENTIAL ELECTRIC SYSTEMS	Equipment	MCC and Switchgear	Cable
220 KV (AC)			
4160 V (AC)			
480 V (AC)			
120 V (AC)			
125 V (DC)			
Electric Panels			
Summary			

ASSOCIATED CIRCUITS OF CONCERN

H/I Pressure Interface	NO
Spurious Operation	NO

7. DETAILED FIRE HAZARD ANALYSIS

7.15 UNIT 3 FUEL HANDLING BUILDING

The Unit 3 Fuel Handling Building is a reinforced concrete structure which houses the fuel handling systems and the spent fuel pool. The Fuel Handling Building is divided into thirteen (13) fire areas. The barrier penetration and door fire ratings are noted in the matrices.

The Fuel Handling Building contains part of or all of the following systems, which can be used for, or support, safe shutdown and cooldown:

- Component Cooling Water
- Electrical Panels

The type of fire protection/detection equipment available in or near this building consists of the following:

- Portable extinguishers.
- Manual water spray systems are provided for charcoal filter units. Heat sensors, installed in the filters, alarm on high temperature.
- Smoke and infrared detectors.
- A standpipe system with manual hose stations.

Fire Area/Zone	Contains Safe Shutdown Equipment/Cables	Contains Safety-Related Equipment/Cables	Figure No.
3-FH-17-122	No	Yes	8-35
3-FH-17-123	Yes	Yes	8-35, 8-36
3-FH-15-124	No	No	8-35, 8-36
3-FH-15-125	No	Yes	8-35, 8-36
3-FH-30-126	Yes	Yes	8-35
3-FH-30-127	No	Yes	8-35
3-FH-30-128	No	No	8-35
3-FH-30-129	No	No	8-35, 8-36
3-FH-45-130	Yes	Yes	8-36
3-FH-45-131	No	No	8-36
3-FH-45-132	Yes	Yes	8-36
3-FH-63-134	No	No	8-36
3-FH-30-174	No	No	8-36

7.15.1 FIRE AREA/ZONE: 3-FH-17-122

FIRE AREA/ZONE: 3-FH-17-122

AREA: 671 sq. ft. DESCRIPTION: FUEL PUMP RM.

DESIGN BASIS FIRE

Fire Loading Category:	Minimal
Fire Loading - Max Permiss:	40,000.0 Btu's/sq.ft.

FIRE PROTECTION (AVAILABLE)

Suppression (type)	none
Hose Stations	none
Portable Extinguishers	none, adjacent
Detectors (type)	ionization

FIRE RESISTANCE RATING

Walls	3hr
Floor, Ceiling, Roof	2hr/ceiling, HC/floor
Penetrations	C, P, D
Fixed Openings	MH/126
Doors	A/3-PE-9-2A

HOT STANDBY SYSTEMS	Equipment	Valves	Cable
Reactor Coolant			
Reactor Protection System			
Shutdown Cooling			
Chemical and Volume Control			
Main Feedwater			
Main Steam			
HVAC			
Auxiliary Feedwater			
Engineered Safety Feature			
Component Cooling Water			
Saltwater Cooling Water			
Emergency Chilled Water			
Diesel Generator Systems			

COLD SHUTDOWN SYSTEMS	Equipment	Valves	Cable
Shutdown Cooling			
CCW (To SDC)			
HVAC			
Summary (Hot and Cold)			

ESSENTIAL ELECTRIC SYSTEMS	Equipment	MCC and Switchgear	Cable
220 KV (AC)			
4160 V (AC)			
480 V (AC)			
120 V (AC)			
125 V (DC)			
Electric Panels			
Summary			

ASSOCIATED CIRCUITS OF CONCERN

H/I Pressure Interface	NO
Spurious Operation	NO

FIRE AREA/ZONE 3-FH-17-122

7.15.1.1 Location

Fuel Handling Building - El. 17'-6' - Fuel Pump Room - 671 square feet - Figure 8-35

7.15.1.2 Fire Loading

Fire loading category - Minimal
Maximum permissible fire loading - 40,000 Btu/sq. ft. (Note 1)

Note 1:The maximum permissible loading is based on an evenly distributed loading of combustible materials.

7.15.1.3 Design Basis Fire

The design basis fire is postulated to be a fire would involve mostly oil.

The design basis fire is conservatively based on the simultaneous total combustion of all combustibles in the area.

7.15.1.4 Fire Protection Equipment

There is no fire fighting equipment in the area. Manual fire fighting equipment is available in adjacent zone 3-PE-9-2A. Ionization smoke detectors, located in the area, provide early warning alarm in the control room.

7.15.1.5 Construction

The walls defining the area are 3 hour rated. The ceiling is 2 hour rated heavy concrete construction. The floor to grade is nonrated heavy concrete construction. One 3 hour rated door separates the area from the penetration building (3-PE-9-2A). Ventilation duct penetrations are provided with 3 hour rated dampers.

7.15.1.6 Safe Shutdown Equipment

None

7.15.1.7 Licensee Controlled Specification Barriers

For definition of the barriers requiring surveillance per LCS 3.7.104, refer to the latest revision of Figure 8-35, sheet 3.

FIRE AREA/ZONE 3-FH-17-122

7.15.1.8 Conclusions

The ionization detection system is expected to detect the products of combustion from the incipient fire and alert the control room for prompt response by the fire department. The available portable equipment is adequate to extinguish the fire.

The normal ventilation system will effectively remove the smoke generated by the design basis fire until the fire dampers operate. Portable smoke exhaust fans may then be used to vent smoke from the area.

The design basis fire is insufficient to breach the barriers defining the zone/fire area.

7.15.1.9 Fire Area 3-FH-17-122 Appendix R Compliance

Safe shutdown capability will be provided by utilizing Train A or Train B systems. No safe shutdown systems will be disabled by a fire in this area.

One train of systems necessary to achieve hot standby and cold shutdown conditions independent of the subject fire area will be free of fire damage. Therefore, this fire area complies with the criteria of 10CFR50, Appendix R, III.G.1.
3FH-122-3

7.15.2 FIRE AREA/ZONE: 3-FH-17-123

FIRE AREA/ZONE: 3-FH-17-123

AREA: 5717 sq. ft. DESCRIPTION: SPENT FUEL POOL/OPER. FLOOR

DESIGN BASIS FIRE

Fire Loading Category:	Minimal
Fire Loading - Max Permiss:	40,000.0 Btu's/sq.ft.

FIRE PROTECTION (AVAILABLE)

Suppression (type)	none
Hose Stations	(2) @ el. 63'-6"
Portable Extinguishers	yes
Detectors (type)	infrared

FIRE RESISTANCE RATING

Walls	3hr
Floor, Ceiling, Roof	2hr, HC/floor grade
Penetrations	D, P, C, ND/exterior
Fixed Openings	(2)CH/174, (2)MH/174
Doors	A/3-PE-63-3B

HOT STANDBY SYSTEMS	Equipment	Valves	Cable
Reactor Coolant			
Reactor Protection System			
Shutdown Cooling			
Chemical and Volume Control			
Main Feedwater			
Main Steam			
HVAC			
Auxiliary Feedwater			
Engineered Safety Feature			
Component Cooling Water			
Saltwater Cooling Water			
Emergency Chilled Water			
Diesel Generator Systems			

COLD SHUTDOWN SYSTEMS	Equipment	Valves	Cable
Shutdown Cooling			
CCW (To SDC)			
HVAC			
Summary (Hot and Cold)			

ESSENTIAL ELECTRIC SYSTEMS	Equipment	MCC and Switchgear	Cable
220 KV (AC)			
4160 V (AC)			
480 V (AC)			
120 V (AC)			
125 V (DC)			
Electric Panels			B,X
Summary			B,X

ASSOCIATED CIRCUITS OF CONCERN

H/I Pressure Interface	NO
Spurious Operation	NO

FIRE AREA/ZONE 3-FH-17-123

7.15.2.1 Location

Fuel Handling Building - El. 17'-6" - Spent Fuel Pool/Operating Floor - 5717 square feet - Figures 8-35, 8-36

7.15.2.2 Fire Loading

Fire loading category - Minimal
Maximum permissible fire loading - 40,000 Btu/sq. ft. (Note 1)
Note 1:The maximum permissible fire loading is based on an evenly distributed loading of combustible materials.

7.15.2.3 Design Basis Fire

The design basis fire is postulated to be a fire that would involve mostly Class A combustibles, lubricating oil and grease, rubber, and cable.

The design basis fire is conservatively based on the simultaneous total combustion of all combustibles in the area.

7.15.2.4 Fire Protection Equipment

Manual fire fighting equipment is available in the area. Infrared detectors provide early warning alarm in the control room.

7.15.2.5 Construction

The walls of the area are 3 hour rated. The floor to other fire area/zones and ceiling are 2 hour rated concrete construction. The floor to grade is nonrated heavy concrete construction. A 3 hour rated door separates the area from the penetration building (3-PE-63-3B). Ventilation duct penetrations to adjacent areas are provided with 3 hour rated fire dampers.

7.15.2.6 Licensee Controlled Specification Barriers

For definition of the barriers requiring surveillance per LCS 3.7.104, refer to the latest revisions of Figures 8-35 and 8-36, sheet 3.

7.15.2.7 Conclusions

The infrared detection system is expected to detect the fire within the initial stages of growth and alert the control room for prompt response by the fire department. The available portable equipment is adequate to extinguish the fire.

The normal ventilation system will effectively remove the smoke generated by the design basis fire. Portable smoke exhaust fans may then be used to vent smoke from the area.

The design basis fire is insufficient to breach the barriers defining the zone/fire area.

7.15.2.8 Fire Area 3-FH-17-123 Appendix R Compliance

Safe shutdown capability will be provided by utilizing Train A systems. Functionally redundant components protected from fire damage will be utilized to achieve safe shutdown.
One train of systems necessary to achieve hot standby and cold shutdown conditions independent of the subject fire area will be free of fire damage. Therefore, this fire area complies with the criteria of 10CFR50, Appendix R, III.G.1.

7.15.3 FIRE AREA/ZONE: 3-FH-15-124

FIRE AREA/ZONE: 3-FH-17-124

AREA: 197 sq. ft. DESCRIPTION: STAIRCASE

DESIGN BASIS FIRE

Fire Loading Category:	Minimal
Fire Loading - Max Permiss:	160,000.0 Btu's/sq.ft.

FIRE PROTECTION (AVAILABLE)

Suppression (type)	none
Hose Stations	none
Portable Extinguishers	none
Detectors (type)	none

FIRE RESISTANCE RATING

Walls	3hr/north, 2A, others 2hr.
Floor, Ceiling, Roof	2hr/ceiling, HC/floor
Penetrations	P, C
Fixed Openings	none
Doors	A/3-PE-9-2A, B/3-FH-15-125,B/3-FH-30-128,B/3-FH-45-131, A/3-FH-63-134, NR/exterior

HOT STANDBY SYSTEMS	Equipment	Valves	Cable
Reactor Coolant			
Reactor Protection System			
Shutdown Cooling			
Chemical and Volume Control			
Main Feedwater			
Main Steam			
HVAC			
Auxiliary Feedwater			
Engineered Safety Feature			
Component Cooling Water			
Saltwater Cooling Water			
Emergency Chilled Water			
Diesel Generator Systems			

COLD SHUTDOWN SYSTEMS	Equipment	Valves	Cable
Shutdown Cooling			
CCW (To SDC)			
HVAC			
Summary (Hot and Cold)			

ESSENTIAL ELECTRIC SYSTEMS	Equipment	MCC and Switchgear	Cable
220 KV (AC)			
4160 V (AC)			
480 V (AC)			
120 V (AC)			
125 V (DC)			
Electric Panels			
Summary			

ASSOCIATED CIRCUITS OF CONCERN

H/I Pressure Interface	NO
Spurious Operation	NO

7.15.4 FIRE AREA/ZONE: 3-FH-15-125

FIRE AREA/ZONE: 3-FH-15-125

AREA: 847 sq. ft. DESCRIPTION: STORAGE RM. 102 + 103

DESIGN BASIS FIRE

Fire Loading Category:	Medium
Fire Loading - Max Permiss:	160,000.0 Btu's/sq.ft.

FIRE PROTECTION (AVAILABLE)

Suppression (type)	none
Hose Stations	none
Portable Extinguishers	yes
Detectors (type)	none

FIRE RESISTANCE RATING

Walls	3hr/123, 142C, 2hr/124, HC/exterior
Floor, Ceiling, Roof	2hr/ceiling, HC/floor
Penetrations	D, C
Fixed Openings	none
Doors	B/3-FH-15-124

HOT STANDBY SYSTEMS	Equipment	Valves	Cable
Reactor Coolant			
Reactor Protection System			
Shutdown Cooling			
Chemical and Volume Control			
Main Feedwater			
Main Steam			
HVAC			
Auxiliary Feedwater			
Engineered Safety Feature			
Component Cooling Water			
Saltwater Cooling Water			
Emergency Chilled Water			
Diesel Generator Systems			

COLD SHUTDOWN SYSTEMS	Equipment	Valves	Cable
Shutdown Cooling			
CCW (To SDC)			
HVAC			
Summary (Hot and Cold)			

ESSENTIAL ELECTRIC SYSTEMS	Equipment	MCC and Switchgear	Cable
220 KV (AC)			
4160 V (AC)			
480 V (AC)			
120 V (AC)			
125 V (DC)			
Electric Panels			
Summary			

ASSOCIATED CIRCUITS OF CONCERN

H/I Pressure Interface	NO
Spurious Operation	NO

FIRE AREA/ZONE 3-FH-15-125

7.15.4.1 Location

Fuel Handling Building - El. 15'-0" - Storage Rooms 102 and 103 - 847 square feet - Figure 8-35.

7.15.4.2 Fire Loading

Fire loading category – Medium
Maximum permissible fire loading - 160,000 Btu/sq. ft. (Note 1)

Note 1:The maximum permissible fire loading is based on an evenly distributed loading of combustible materials.

7.15.4.3 Design Basis Fire

A fire is not expected to occur in this area during normal operation. The maximum credible fire is postulated to involve transient and stored combustible materials.

7.15.4.4 Fire Protection Equipment

Manual fire fighting equipment is available within the area. No fire detection equipment is provided within the area.

7.15.4.5 Construction

The west wall of the area, which separates the area from the cable shaft (3-CT-16-142C), is 3 hour rated. The portions of the area walls adjoining the penetration building and the spent fuel pool (3-FH-17-123) are 3 hour rated. The walls separating the area from the stairwell (3-FH-15-124) are 2 hour rated. Exterior walls are nonrated heavy concrete construction. The ceiling is 2 hour rated concrete construction. The floor to grade is nonrated heavy concrete construction. The area communicates with the stairwell through a 1-1/2 hour rated door. Ventilation duct penetrations are provided with 1-1/2 hour rated fire dampers.

7.15.4.6 Licensee Controlled Specification Barriers

For definition of the barriers requiring surveillance per LCS 3.7.104, refer to the latest revision of Figure 8-35, sheet 3.

7.15.4.7 Conclusions

The available portable equipment is adequate to extinguish the fire.

The normal ventilation system will effectively remove the smoke generated by the design basis fire until the fire dampers operate. Portable smoke exhaust fans may then be used to vent smoke from the area.

The design basis fire is insufficient to breach the barriers defining the zone/fire area.

7.15.4.8 Fire Area 3-FH-15-125 Appendix R Compliance

Safe shutdown capability will be provided by utilizing Train A or Train B systems. No safe shutdown systems will be disabled by a fire in this area.

One train of systems necessary to achieve hot standby and cold shutdown conditions independent of the subject fire area will be free of fire damage. Therefore, this fire area complies with the criteria of 10CFR50, Appendix R, III.G.1.

7.15.5 FIRE AREA/ZONE: 3-FH-30-126

FIRE AREA/ZONE: 3-FH-30-126

AREA: 671 sq. ft. DESCRIPTION: HEAT EXCHANGER RM.

DESIGN BASIS FIRE

Fire Loading Category:	Minimal
Fire Loading - Max Permiss:	13,000.0 Btu's/sq.ft.

FIRE PROTECTION (AVAILABLE)

Suppression (type)	none
Hose Stations	none
Portable Extinguishers	none, adjacent
Detectors (type)	none

FIRE RESISTANCE RATING

Walls	3hr
Floor, Ceiling, Roof	2hr
Penetrations	P, C, D
Fixed Openings	MH/122
Doors	A/3-PE-30-2C

HOT STANDBY SYSTEMS	Equipment	Valves	Cable
Reactor Coolant			
Reactor Protection System			
Shutdown Cooling			
Chemical and Volume Control			
Main Feedwater			
Main Steam			
HVAC			
Auxiliary Feedwater			
Engineered Safety Feature			
Component Cooling Water		N	
Saltwater Cooling Water			
Emergency Chilled Water			
Diesel Generator Systems			

COLD SHUTDOWN SYSTEMS	Equipment	Valves	Cable
Shutdown Cooling			
CCW (To SDC)			
HVAC			
Summary (Hot and Cold)		N	

ESSENTIAL ELECTRIC SYSTEMS	Equipment	MCC and Switchgear	Cable
220 KV (AC)			
4160 V (AC)			
480 V (AC)			
120 V (AC)			
125 V (DC)			
Electric Panels			
Summary			

ASSOCIATED CIRCUITS OF CONCERN

H/I Pressure Interface	NO
Spurious Operation	NO

FIRE AREA/ZONE 3-FH-30-126

7.15.5.1 Location

Fuel Handling Building - El. 30'-0" - Heat Exchanger Room - 671 square feet - Figure 8-35

7.15.5.2 Fire Loading

Fire loading category - Minimal
Maximum permissible fire loading - 13,000 Btu/sq. ft. (Note 1)
Note 1:The maximum permissible fire loading is based on an evenly distributed loading of combustible materials.

7.15.5.3 Design Basis Fire

A fire is not expected to occur in this area during normal operation. The maximum credible fire is postulated to involve transient combustible materials.

7.15.5.4 Fire Protection Equipment

There is no fire fighting or fire detection equipment within the area. Manual fire fighting equipment is available in adjacent zone 3-PE-30-2C.

7.15.5.5 Construction

The walls defining the area are 3 hour rated reinforced concrete construction. The floor and ceiling are 2 hour rated. A 3 hour rated door separates the area from the penetration building (3-PE-30-2C). Ventilation duct penetrations are provided with 3 hour rated fire dampers.

7.15.5.6 Licensee Controlled Specification Barriers

For definition of the barriers requiring surveillance per LCS 3.7.104, refer to the latest revision of Figure 8-35, sheet 3.

7.15.5.7 Conclusions

The normal ventilation system will effectively remove the smoke generated by the design basis fire until the fire dampers operate. Portable smoke exhaust fans may then be used to vent smoke from the area.

The design basis fire is insufficient to breach the barriers defining the zone/fire area.

7.15.5.8 Fire Area 3-FH-30-126 Appendix R Compliance

Safe shutdown capability will be provided by utilizing Train A or Train B systems. No safe shutdown systems will be disabled by a fire in this area.

FIRE AREA/ZONE 3-FH-30-126

One train of systems necessary to achieve hot standby and cold shutdown conditions independent of the subject fire area will be free of fire damage. Therefore, this fire area complies with the criteria of 10CFR50, Appendix R, III.G.1.

7.15.6 FIRE AREA/ZONE: 3-FH-30-127

FIRE AREA/ZONE: 3-FH-30-127

AREA: 972 sq. ft. DESCRIPTION: TOOL DECON. RM.

DESIGN BASIS FIRE

Fire Loading Category:	Medium
Fire Loading - Max Permiss:	160,000.0 Btu's/sq.ft.

FIRE PROTECTION (AVAILABLE)

Suppression (type)	none
Hose Stations	none
Portable Extinguishers	yes
Detectors (type)	none

FIRE RESISTANCE RATING

Walls	3hr/123, 2hr/128, 124, HC/others
Floor, Ceiling, Roof	2hr
Penetrations	P, C, D
Fixed Openings	none
Doors	A/3-FH-30-128, NR/exterior

HOT STANDBY SYSTEMS	Equipment	Valves	Cable
Reactor Coolant			
Reactor Protection System			
Shutdown Cooling			
Chemical and Volume Control			
Main Feedwater			
Main Steam			
HVAC			
Auxiliary Feedwater			
Engineered Safety Feature			
Component Cooling Water			
Saltwater Cooling Water			
Emergency Chilled Water			
Diesel Generator Systems			

COLD SHUTDOWN SYSTEMS	Equipment	Valves	Cable
Shutdown Cooling			
CCW (To SDC)			
HVAC			
Summary (Hot and Cold)			

ESSENTIAL ELECTRIC SYSTEMS	Equipment	MCC and Switchgear	Cable
220 KV (AC)			
4160 V (AC)			
480 V (AC)			
120 V (AC)			
125 V (DC)			
Electric Panels			
Summary			

ASSOCIATED CIRCUITS OF CONCERN

H/I Pressure Interface	NO
Spurious Operation	NO

FIRE AREA/ZONE 3-FH-30-127

7.15.6.1 Location

Fuel Handling Building - El. 30'-0" - Tool Decontamination Room - 972 square feet - Figure 8-35

7.15.6.2 Fire Loading

Fire loading category –Medium

- Maximum permissible fire loading - 160,000 Btu/sq. ft. (Note 1)

Note 1:The maximum permissible loading is based on an evenly distributed loading of combustible materials.

7.15.6.3 Design Basis Fire

The design basis fire is postulated to be a fire that would involve mostly plastic, solvents, rubber, and Class A combustibles.

The design basis fire is conservatively based on the simultaneous total combustion of all combustibles in the area.

7.15.6.4 Fire Protection Equipment

Manual fire fighting equipment is available within the area. No fire detection equipment is provided.

7.15.6.5 Construction

The north wall separating the area from adjacent area 3-FH-17-123 is 3 hour rated. The remainder of the area's interior walls, as well as the floor and ceiling, are 2 hour rated. Exterior walls are nonrated concrete construction with an approximate thickness of 18 inches. The exterior door is nonrated. The door separating the area from the vestibule (3-FH-30-128) is a 3-hour rated door. Ventilation duct penetrations in the floor and ceiling are provided with 1-1/2 hour rated fire dampers.

7.15.6.6 Licensee Controlled Specification Barriers

For definition of the barriers requiring surveillance per LCS 3.7.104, refer to the latest revision of Figure 8-35, sheet 3.

7.15.6.7 Conclusions

The available portable equipment is adequate to extinguish the fire.

The normal ventilation system will effectively remove the smoke generated by the design basis fire until the fire dampers operate. Smoke may then be cleared by opening the exterior door, or through the use of portable smoke exhaust fans.

The design basis fire is insufficient to breach the barriers defining the zone/fire area.

7.15.6.8 Fire Area 3-FH-30-127 Appendix R Compliance

Safe shutdown capability will be provided by utilizing Train A or Train B systems. No safe shutdown systems will be disabled by a fire in this area.

One train of systems necessary to achieve hot standby and cold shutdown conditions independent of the subject fire area will be free of fire damage. Therefore, this fire area complies with the criteria of 10CFR50, Appendix R, III.G.1.

7.15.7 FIRE AREA/ZONE: 3-FH-30-128

FIRE AREA/ZONE: 3-FH-30-128

AREA: 90 sq. ft. DESCRIPTION: VESTIBULE 203

DESIGN BASIS FIRE

Fire Loading Category:	Minimal
Fire Loading - Max Permiss:	13,000.0 Btu's/sq.ft.

FIRE PROTECTION (AVAILABLE)

Suppression (type)	none
Hose Stations	none
Portable Extinguishers	none, adjacent
Detectors (type)	none

FIRE RESISTANCE RATING

Walls	3hr/2C 142C, 2hr/others
Floor, Ceiling, Roof	2hr
Penetrations	P, C
Fixed Openings	MH/129
Doors	B/3-FH-15-124, X/3-PE-30-2C, A/3-FH-30-,127, NR/exterior, B/3-FH-30-129

HOT STANDBY SYSTEMS	Equipment	Valves	Cable
Reactor Coolant			
Reactor Protection System			
Shutdown Cooling			
Chemical and Volume Control			
Main Feedwater			
Main Steam			
HVAC			
Auxiliary Feedwater			
Engineered Safety Feature			
Component Cooling Water			
Saltwater Cooling Water			
Emergency Chilled Water			
Diesel Generator Systems			

COLD SHUTDOWN SYSTEMS	Equipment	Valves	Cable
Shutdown Cooling			
CCW (To SDC)			
HVAC			
Summary (Hot and Cold)			

ESSENTIAL ELECTRIC SYSTEMS	Equipment	MCC and Switchgear	Cable
220 KV (AC)			
4160 V (AC)			
480 V (AC)			
120 V (AC)			
125 V (DC)			
Electric Panels			
Summary			

ASSOCIATED CIRCUITS OF CONCERN

H/I Pressure Interface	NO
Spurious Operation	NO

7.15.8 FIRE AREA/ZONE: 3-FH-30-129

FIRE AREA/ZONE: 3-FH-30-129

AREA: 14 sq. ft. DESCRIPTION: DUMBWAITER

DESIGN BASIS FIRE

Fire Loading Category:	Minimal
Fire Loading - Max Permiss:	13,000.0 Btu's/sq.ft.

FIRE PROTECTION (AVAILABLE)

Suppression (type)	none
Hose Stations	none
Portable Extinguishers	none
Detectors (type)	none

FIRE RESISTANCE RATING

Walls	3hr/north,west,others 2hr
Floor, Ceiling, Roof	2hr
Penetrations	none
Fixed Openings	MH/134
Doors	B/3-FH-30-128, B/3-FH-63-134

HOT STANDBY SYSTEMS	Equipment	Valves	Cable
Reactor Coolant			
Reactor Protection System			
Shutdown Cooling			
Chemical and Volume Control			
Main Feedwater			
Main Steam			
HVAC			
Auxiliary Feedwater			
Engineered Safety Feature			
Component Cooling Water			
Saltwater Cooling Water			
Emergency Chilled Water			
Diesel Generator Systems			

COLD SHUTDOWN SYSTEMS	Equipment	Valves	Cable
Shutdown Cooling			
CCW (To SDC)			
HVAC			
Summary (Hot and Cold)			

ESSENTIAL ELECTRIC SYSTEMS	Equipment	MCC and Switchgear	Cable
220 KV (AC)			
4160 V (AC)			
480 V (AC)			
120 V (AC)			
125 V (DC)			
Electric Panels			
Summary			

ASSOCIATED CIRCUITS OF CONCERN

H/I Pressure Interface	NO
Spurious Operation	NO

7.15.9 FIRE AREA/ZONE: 3-FH-45-130

FIRE AREA/ZONE: 3-FH-45-130

AREA: 875 sq. ft. DESCRIPTION: A/C RM. NO. 2

DESIGN BASIS FIRE

Fire Loading Category:	Medium
Fire Loading - Max Permiss:	160,000.0 Btu's/sq.ft.

FIRE PROTECTION (AVAILABLE)

Suppression (type)	manual water spray for charcoal
Hose Stations	none
Portable Extinguishers	yes, adjacent
Detectors (type)	ionization, temp. detectors for charcoal

FIRE RESISTANCE RATING

Walls	3hr
Floor, Ceiling, Roof	2hr
Penetrations	P, C, D, QP/3A
Fixed Openings	none
Doors	A/3-PE-45-3A

HOT STANDBY SYSTEMS	Equipment	Valves	Cable
Reactor Coolant			
Reactor Protection System			
Shutdown Cooling			
Chemical and Volume Control			
Main Feedwater			
Main Steam			
HVAC			
Auxiliary Feedwater			
Engineered Safety Feature			
Component Cooling Water			
Saltwater Cooling Water			
Emergency Chilled Water			
Diesel Generator Systems			

COLD SHUTDOWN SYSTEMS	Equipment	Valves	Cable
Shutdown Cooling			
CCW (To SDC)			
HVAC			
Summary (Hot and Cold)			

ESSENTIAL ELECTRIC SYSTEMS	Equipment	MCC and Switchgear	Cable
220 KV (AC)			
4160 V (AC)			
480 V (AC)			
120 V (AC)			
125 V (DC)			
Electric Panels			A
Summary			A

ASSOCIATED CIRCUITS OF CONCERN

H/I Pressure Interface	NO
Spurious Operation	NO

FIRE AREA/ZONE 3-FH-45-130

7.15.9.1 Location

Fuel Handling Building - El. 45'-0" - A/C Room No. 2 - 875 square feet - Figure 8-36

7.15.9.2 Fire Loading

Fire loading category - Medium
Maximum permissible fire loading - 160,000 Btu/sq. ft. (Note 1)

Note 1:The maximum permissible loading is based on an evenly distributed loading of combustible materials.

7.15.9.3 Design Basis Fire

The design basis fire is postulated to be a fire that would involve mostly charcoal and cable insulation.

The design basis fire is conservatively based on the simultaneous total combustion of all combustibles in the area.

7.15.9.4 Fire Protection Equipment

A manual water spray system is provided for the charcoal filters in the area. A temperature detector is located in the charcoal filter to alarm filter high temperature conditions in the control room. Manual fire fighting equipment is available in the area and in adjacent zone 3-PE-45-3A. One ionization smoke detector provides early warning alarm in the control room.

7.15.9.5 Construction

The walls defining the area are 3 hour rated reinforced concrete construction. The ceiling and floor are 2 hour rated. One 3 hour rated door separates the area from the penetration building (3-PE-45-3A). Ventilation duct penetrations are provided with 3 hour rated dampers.

7.15.9.6 Licensee Controlled Specification Barriers

For definition of the barriers requiring surveillance per LCS 3.7.104, refer to the latest revision of Figure 8-36, sheet 3.

7.15.9.7 Conclusions

In the event of a charcoal fire, the temperature detector installed in the filters is expected to provide control room alarm on high temperature. The operator will then send personnel into the area to manually operate the charcoal filter water spray system to control and extinguish the fire.

In the event of a transient fire in the area, the ionization detector is expected to detect the fire and alert the control room.

Normal ventilation will effectively remove the smoke from the area until the fire dampers operate. Portable smoke exhaust fans may then be used to vent smoke from the area.

The fire boundary between 3-FH-45-130 and 3-PE-45-3A was evaluated. The fire boundary and associated fire protection features were found to be adequate to prevent fire propagation between the fire areas.

The design basis fire is insufficient to breach the barriers defining the zone/fire area.

7.15.9.8 Fire Area 3-FH-45-130 Appendix R Compliance

Safe shutdown capability will be provided by utilizing Train B systems. Functionally redundant components protected from fire damage will be utilized to achieve safe shutdown.

One train of systems necessary to achieve hot standby and cold shutdown conditions independent of the subject fire area will be free of fire damage. Therefore, this fire area complies with the criteria of 10CFR50, Appendix R, III.G.1.

7.15.10 FIRE AREA/ZONE: 3-FH-45-131

FIRE AREA/ZONE: 3-FH-45-131

AREA: 34 sq. ft. DESCRIPTION: VESTIBULE 303

DESIGN BASIS FIRE

Fire Loading Category:	Minimal
Fire Loading - Max Permiss:	160,000.0 Btu's/sq.ft.

FIRE PROTECTION (AVAILABLE)

Suppression (type)	none
Hose Stations	none
Portable Extinguishers	none, adjacent
Detectors (type)	none

FIRE RESISTANCE RATING

Walls	3hr/3A 2hr/others
Floor, Ceiling, Roof	2hr
Penetrations	C
Fixed Openings	none
Doors	B/3-FH-15-124, B/3-FH-45-132,A/3-PE-45-3A

HOT STANDBY SYSTEMS	Equipment	Valves	Cable
Reactor Coolant			
Reactor Protection System			
Shutdown Cooling			
Chemical and Volume Control			
Main Feedwater			
Main Steam			
HVAC			
Auxiliary Feedwater			
Engineered Safety Feature			
Component Cooling Water			
Saltwater Cooling Water			
Emergency Chilled Water			
Diesel Generator Systems			

COLD SHUTDOWN SYSTEMS	Equipment	Valves	Cable
Shutdown Cooling			
CCW (To SDC)			
HVAC			
Summary (Hot and Cold)			

ESSENTIAL ELECTRIC SYSTEMS	Equipment	MCC and Switchgear	Cable
220 KV (AC)			
4160 V (AC)			
480 V (AC)			
120 V (AC)			
125 V (DC)			
Electric Panels			
Summary			

ASSOCIATED CIRCUITS OF CONCERN

H/I Pressure Interface	NO
Spurious Operation	NO

7.15.11 FIRE AREA/ZONE: 3-FH-45-132

FIRE AREA/ZONE: 3-FH-45-132

AREA: 734 sq. ft. DESCRIPTION: A/C RM. NO. 1

DESIGN BASIS FIRE

Fire Loading Category:	High
Fire Loading - Max Permiss:	(SEE TEXT)

FIRE PROTECTION (AVAILABLE)

Suppression (type)	manual water spray for charcoal
Hose Stations	none
Portable Extinguishers	yes
Detectors (type)	ionization, temp. detect. for char. filter

FIRE RESISTANCE RATING

Walls	3hr/3A,123, 142C 2hr/others
Floor, Ceiling, Roof	2hr
Penetrations	P, C, D
Fixed Openings	none
Doors	B/3-FH-45-131

HOT STANDBY SYSTEMS	Equipment	Valves	Cable
Reactor Coolant			
Reactor Protection System			
Shutdown Cooling			
Chemical and Volume Control			
Main Feedwater			
Main Steam			
HVAC			
Auxiliary Feedwater			
Engineered Safety Feature			
Component Cooling Water			
Saltwater Cooling Water			
Emergency Chilled Water			
Diesel Generator Systems			

COLD SHUTDOWN SYSTEMS	Equipment	Valves	Cable
Shutdown Cooling			
CCW (To SDC)			
HVAC			
Summary (Hot and Cold)			

ESSENTIAL ELECTRIC SYSTEMS	Equipment	MCC and Switchgear	Cable
220 KV (AC)			
4160 V (AC)			
480 V (AC)			
120 V (AC)			
125 V (DC)			
Electric Panels			B
Summary			B

ASSOCIATED CIRCUITS OF CONCERN

H/I Pressure Interface	NO
Spurious Operation	NO

FIRE AREA/ZONE 3-FH-45-132

7.15.11.1 Location

Fuel Handling Building - El. 45'-0" - A/C Room No. 1 - 743 square feet - Figure 8-36

7.15.11.2 Fire Loading

Fire loading category - High
Maximum permissible fire loading - 160,000 Btu/sq. ft. (Notes 1 and 2)

Note 1:The maximum permissible loading is based on an evenly distributed loading of combustible materials.

Note 2:The maximum permissible fire loading is based on the reduced fuel contribution of the charcoal, which is entirely contained within the charcoal filters.

7.15.11.3 Design Basis Fire

The design basis fire is postulated to be a fire that would involve mostly charcoal.

The design basis fire is conservatively based on the simultaneous total combustion of all combustibles in the area.

7.15.11.4 Fire Protection Equipment

A manual water spray system is provided for the charcoal filters in the area. A temperature detector is located in the charcoal filter to alarm filter high temperature conditions in the control room. Manual fire fighting equipment is available within the area. One ionization smoke detector provides early warning alarm in the control room.

7.15.11.5 Construction

The walls to 3-FH-17-123, 3-CT-16-142C and 3-PE-45-3A are 3 hour rated. The remaining walls are 2 hour rated. The ceiling and floor are 2 hour rated. A 1-1/2 hour rated door allows access to the area from the vestibule (3-FH-45-131). Ventilation duct penetrations in 3 hour rated walls are provided with 3 hour rated fire dampers. Ventilation penetrations in the floor are provided with 1-1/2 hour rated fire dampers.

7.15.11.6 Licensee Controlled Specification Barriers

For definition of the barriers requiring surveillance per LCS 3.7.104, refer to the latest revision of Figure 8-36, sheet 3.

7.15.11.7 Conclusions

In the event of a charcoal fire, the temperature detector installed in the filters is expected to provide control room alarm on high temperature. The operator will then send personnel into the area to manually operate the charcoal filter water spray system to control and extinguish the fire.

In the event of a transient fire in the area, the ionization detector is expected to detect the fire and alert the control room.

The normal ventilation system will effectively remove the smoke from the area until the fire dampers operate. Portable smoke exhaust fans may then be used to vent smoke from the area.

The design basis fire is insufficient to breach the barriers defining the zone/fire area.

7.15.11.8 Fire Area 3-FH-45-132 Appendix R Compliance

Safe shutdown capability will be provided by utilizing Train A systems. Functionally redundant components protected from fire damage will be utilized to achieve safe shutdown.

One train of systems necessary to achieve hot standby and cold shutdown conditions independent of the subject fire area will be free of fire damage. Therefore, this fire area complies with the criteria of 10CFR50, Appendix R, III.G.1.

7.15.12 FIRE AREA/ZONE: 3-FH-63-134

FIRE AREA/ZONE: 3-FH-63-134

AREA: 34 sq. ft. DESCRIPTION: VESTIBULE 403

DESIGN BASIS FIRE

Fire Loading Category:	Minimal
Fire Loading - Max Permiss:	13,000.0 Btu's/sq.ft.

FIRE PROTECTION (AVAILABLE)

Suppression (type)	none
Hose Stations	none
Portable Extinguishers	none, adjacent
Detectors (type)	none

FIRE RESISTANCE RATING

Walls	3hr/3B, 2hr/others
Floor, Ceiling, Roof	2hr
Penetrations	C
Fixed Openings	MH/129
Doors	B/3-FH-15-124, NR/roof, A/3-PE-63-3B, B/3-FH-30-129

HOT STANDBY SYSTEMS	Equipment	Valves	Cable
Reactor Coolant			
Reactor Protection System			
Shutdown Cooling			
Chemical and Volume Control			
Main Feedwater			
Main Steam			
HVAC			
Auxiliary Feedwater			
Engineered Safety Feature			
Component Cooling Water			
Saltwater Cooling Water			
Emergency Chilled Water			
Diesel Generator Systems			

COLD SHUTDOWN SYSTEMS	Equipment	Valves	Cable
Shutdown Cooling			
CCW (To SDC)			
HVAC			
Summary (Hot and Cold)			

ESSENTIAL ELECTRIC SYSTEMS	Equipment	MCC and Switchgear	Cable
220 KV (AC)			
4160 V (AC)			
480 V (AC)			
120 V (AC)			
125 V (DC)			
Electric Panels			
Summary			

ASSOCIATED CIRCUITS OF CONCERN

H/I Pressure Interface	NO
Spurious Operation	NO

7.15.13 FIRE AREA/ZONE: 3-FH-30-174

FIRE AREA/ZONE: 3-FH-30-174

AREA: 3165 sq. ft. DESCRIPTION: RAILROAD BAY

DESIGN BASIS FIRE

Fire Loading Category:	Minimal
Fire Loading - Max Permiss:	160,000.0 Btu's/sq.ft.

FIRE PROTECTION (AVAILABLE)

Suppression (type)	wet pipe sprinklers
Hose Stations	none
Portable Extinguishers	none
Detectors (type)	none

FIRE RESISTANCE RATING

Walls	west 3hr, east HC, north and south NR
Floor, Ceiling, Roof	2hr
Penetrations	C
Fixed Openings	MH/123, CH/123
Doors	none

HOT STANDBY SYSTEMS	Equipment	Valves	Cable
Reactor Coolant			
Reactor Protection System			
Shutdown Cooling			
Chemical and Volume Control			
Main Feedwater			
Main Steam			
HVAC			
Auxiliary Feedwater			
Engineered Safety Feature			
Component Cooling Water			
Saltwater Cooling Water			
Emergency Chilled Water			
Diesel Generator Systems			

COLD SHUTDOWN SYSTEMS	Equipment	Valves	Cable
Shutdown Cooling			
CCW (To SDC)			
HVAC			
Summary (Hot and Cold)			

ESSENTIAL ELECTRIC SYSTEMS	Equipment	MCC and Switchgear	Cable
220 KV (AC)			
4160 V (AC)			
480 V (AC)			
120 V (AC)			
125 V (DC)			
Electric Panels			
Summary			

ASSOCIATED CIRCUITS OF CONCERN

H/I Pressure Interface	NO
Spurious Operation	NO

7. DETAILED FIRE HAZARD ANALYSIS

7.16 UNIT 3 TURBINE BUILDING

The Unit 3 Turbine Building is a reinforced concrete structure adjacent to the Safety Equipment Building and the Auxiliary Control Building. The Turbine Building is divided into five (5) fire areas. The barrier, penetration and door ratings are noted in the matrices.

The Turbine Building contains part of or all of the following systems, which can be used for, or support, safe shutdown and cooldown:

- Chemical and Volume Control
- HVAC
- Saltwater Cooling
- Shutdown Cooling
- Essential Electric Systems
- Component Cooling Water

The types of fire protection/detection equipment available in or near this building consists of the following:

- Portable extinguishers.

- Automatic water spray systems provide fire suppression to the following hazard areas: feedwater pumps, feedwater turbines, hydrogen oil seal unit, lube oil room and hydrogen gas control cubicle. Heat detectors are provided to actuate fire suppression systems for the hazard areas above.

- Smoke and fixed temperature rate of rise heat detectors.

- Wet-pipe sprinkler systems provide fire suppression to feedwater pump/turbine lube oil purifiers.

- Carbon dioxide suppression to protect the turbine generator bearings.

- A standpipe system with manual hose stations.

Fire Area/Zone	Contains Safe Shutdown Equipment/Cables	Contains Safety-Related Equipment/Cables	Figure No.
3-TB-7-148A	Yes	Yes	8-37, 8-38, 8-39
3-TB-9-148C	Yes	Yes	8-37
3-TB-9-148F	Yes	Yes	8-37
3-TB-8-148G	No	No	8-27, 8-32, 8-31
3-TB-30-148H	No	No	8-38, 8-39, 8-40
3-TB-7-149	No	No	8-37, 8-38
3-TB-7-150	No	No	8-37, 8-38, 8-39
3-TB-30-153	Yes	No	8-38
3-TB-72-154A	No	No	8-40

7.16.1 FIRE AREA/ZONE: 3-TB-7-148A

FIRE AREA/ZONE: 3-TB-7-148A

AREA: 47626 sq. ft. DESCRIPTION: TURBINE BLDG.

DESIGN BASIS FIRE

Fire Loading Category:	Low
Fire Loading - Max Permiss:	80,000.0 Btu's/sq.ft.

FIRE PROTECTION (AVAILABLE)

Suppression (type)	water spray system (locally), wet pipe sprinkler system (locally)
Hose Stations	(12)
Portable Extinguishers	yes
Detectors (type)	ionization, local heat detectors

FIRE RESISTANCE RATING

Walls	(see text)
Floor, Ceiling, Roof	2hr/153, 149, HC/154A, 148E, grade
Penetrations	C, P, ND/153, QC/149
Fixed Openings	OD/148G, MH/148E, MH/153, metal shroud/154A
Doors	(2)A/3-149, B/3-153, (2)B/3-150, (2)X/3-148C, (3)NR/148H, (4)NR/ext, W/3-135A, W/3-136

HOT STANDBY SYSTEMS	Equipment	Valves	Cable
Reactor Coolant			
Reactor Protection System			
Shutdown Cooling			
Chemical and Volume Control			
Main Feedwater			
Main Steam			
HVAC			
Auxiliary Feedwater			
Engineered Safety Feature			
Component Cooling Water			
Saltwater Cooling Water			
Emergency Chilled Water			
Diesel Generator Systems			

COLD SHUTDOWN SYSTEMS	Equipment	Valves	Cable
Shutdown Cooling			
CCW (To SDC)			
HVAC			
Summary (Hot and Cold)			

ESSENTIAL ELECTRIC SYSTEMS	Equipment	MCC and Switchgear	Cable
220 KV (AC)			X
4160 V (AC)			
480 V (AC)			
120 V (AC)			
125 V (DC)			
Electric Panels			A,X
Summary			A,X

ASSOCIATED CIRCUITS OF CONCERN

H/I Pressure Interface	NO
Spurious Operation	YES

FIRE AREA/ZONE 3-TB-7-148A

7.16.1.1 Location

Turbine Building - El. 7'-0" - Unit 2 - 47,626 square feet - Figure 8-37

7.16.1.2 Fire Loading

Fire loading category - Low
Maximum permissible fire loading - 80,000 Btu/sq. ft. (Note 1)

Note 1:The maximum permissible fire loading is based on an evenly distributed loading of combustible materials.

7.16.1.3 Design Basis Fire

The design basis fire is postulated to be a fire that would involve mostly cable insulation, oil and grease, plastic, charcoal, and miscellaneous combustibles.

The design basis fire is conservatively based on the simultaneous total combustion of all combustibles in the zone.

7.16.1.4 Fire Protection Equipment

The zone contains an automatic local water spray and wet pipe sprinkler systems for the feedpump oil and generator seal oil systems. Manual fire fighting equipment is available within the zone. Hose streams are available from yard hydrants or portable equipment. Ionization smoke detectors, located throughout the zone, provide early warning alarm in the control room.

7.16.1.5 Construction

A 3 hour rated wall separates the zone from the main lube oil building, 3-TB-7-149, 3-SE-(-5)-135A, 3-SE-(-15)-136, 3-SE-30-142A, 3-CT-(-2)-142B, and 3-TB-9-148C. The zone is separated from the elevator shaft, 3-TB-7-150, by a 2 hour rated wall. The wall between the zone and area 3-TB-30-153 are 1 hour rated. The remaining barriers are nonrated. The floor and ceiling are 2 hour rated concrete construction except to 2-TB-(-9)-148E, 3-TB-72-154A, and grade which are nonrated heavy concrete. An open doorway communicates with the corridor, 3-TB-7-148G. A metal hatch connects the zone to the Unit 2/3 saltwater cooling pipe tunnel, 2-TB-(-9)-148E. Rated and nonrated cabling and piping penetrations and nonrated ductwork penetrations exist in the zone. A 3 hour rated door communicates with the main lube oil building, 3-TB-7-149. The elevator shaft, 3-TB-7-150, and the switchgear room 3-TB-30-153, are separated from the zone by 1-1/2 hour rated doors. Two UL Class A equivalent doors separate the zone from the pump/heat exchanger area, 3-TB-9-148C. Nonrated doors connect the zone to the full flow condensate polisher demineralizer area, 3-TB-30-148H, and the exterior. Watertight doors communicate to 3-SE-(-15)-136 and 3-SE-(-5)-135A.

7.16.1.6 Licensee Controlled Specification Barriers

For definition of the barriers requiring surveillance per LCS 3.7.104, refer to the latest revision of Figure 8-37, Sheet 3.

7.16.1.7 Conclusions

The ionization detection system is expected to detect the products of combustion from an incipient fire and alert the control room for prompt response by the fire department. Local heat detectors are also available. Water spray and wet pipe systems are provided locally and manual suppression equipment is available. These fire protection features will adequately mitigate the consequences of fire.

The fire boundaries between 3-TB-7-148A and 3-TB-7-149, 3-SE-(-15)-136, 3-SE-(-5)-135A were evaluated. The boundaries and associated fire protection features were found to be adequate to prevent the propagation of fire between the fire areas. The design basis fire is insufficient to breach the barriers defining the zone/fire area.

Appendix R compliance for fire area 2-TB-(-9)-148 is discussed in fire zone 2-TB-7-148A.

7.16.2 FIRE AREA/ZONE: 3-TB-9-148C

FIRE AREA/ZONE: 3-TB-9-148C

AREA: 6841 sq. ft. DESCRIPTION: UNIT 3 PUMP/HEAT EXCHANGE AREA

DESIGN BASIS FIRE

Fire Loading Category:	Minimal
Fire Loading - Max Permiss:	13,000.0 Btu's/sq.ft.

FIRE PROTECTION (AVAILABLE)

Suppression (type)	none
Hose Stations	(1)
Portable Extinguishers	yes
Detectors (type)	none

FIRE RESISTANCE RATING

Walls	3hr/148A, HC/others
Floor, Ceiling, Roof	NR, no roof
Penetrations	NP/149
Fixed Openings	OP/exterior OP/149
Doors	NR/2-TB-7-148B, L/3-T/B-9-148F, A/3-TB-7-149, (2) X/3-TB-7-148A

HOT STANDBY SYSTEMS	Equipment	Valves	Cable
Reactor Coolant			
Reactor Protection System			
Shutdown Cooling			
Chemical and Volume Control			
Main Feedwater			
Main Steam			
HVAC			
Auxiliary Feedwater			
Engineered Safety Feature			
Component Cooling Water			
Saltwater Cooling Water			
Emergency Chilled Water			
Diesel Generator Systems			

COLD SHUTDOWN SYSTEMS	Equipment	Valves	Cable
Shutdown Cooling			
CCW (To SDC)			
HVAC			
Summary (Hot and Cold)			

ESSENTIAL ELECTRIC SYSTEMS	Equipment	MCC and Switchgear	Cable
220 KV (AC)			
4160 V (AC)			
480 V (AC)			
120 V (AC)			
125 V (DC)			
Electric Panels			A
Summary			A

ASSOCIATED CIRCUITS OF CONCERN

H/I Pressure Interface	NO
Spurious Operation	NO

FIRE AREA/ZONE 3-TB-9-148C

7.16.2.1 Location

Intake Structure - El. 9'-0" - Unit 3 Circulating Water Pump/Heat Exchanger Area - 6841 square feet - Figure 8-37

7.16.2.2 Fire Loading

Fire loading category - Minimal
Maximum permissible fire loading - 13,000 Btu/sq. ft. (Note 1)

Note 1:The maximum permissible fire loading is based on an evenly distributed loading of combustible materials.

7.16.2.3 Design Basis Fire

The design basis fire is postulated to be a fire that would involve mostly cable insulation.

The design basis fire is conservatively based on the simultaneous total combustion of all combustibles in the zone.

7.16.2.4 Fire Protection Equipment

Manual fire fighting equipment is available within the zone. No fire detection equipment is provided within the zone.

7.16.2.5 Construction

The zone is not enclosed. A 3 hour rated reinforced concrete wall separates the area from the turbine building (3-TB-7-148A). The zone is separated from the adjacent saltwater cooling pump room (3-TB-9-148F) and main lube oil building (3-TB-7-149) by heavy concrete walls. A nonrated door communicates with the access road (2-TB-7-148B). A bullet-resistant door opens to the saltwater cooling pump room (3-TB-9-148F). A 3 hour rated door separates the area from the main lube oil building. Two UL Class A equivalent doors separate the zone from Zone 3-148A.

7.16.2.6 Licensee Controlled Specification Barriers

For definition of the barriers requiring surveillance per LCS 3.7.104, refer to the latest revision of Figure 8-37, sheet 3.

7.16.2.7 Conclusions

Manual suppression is available in the zone and is adequate to extinguish a fire. Detection is not provided. Heavy concrete walls and rated, nonrated and bullet-resistant doors separate the zone from adjacent safety related areas.

The design basis fire is insufficient to breach the barriers defining the zone/fire area.

Appendix R compliance for fire area 2-TB-(-9)-148 is discussed in fire zone 2-TB-7-148A.

7.16.3 FIRE AREA/ZONE: 3-TB-9-148F

FIRE AREA/ZONE: 3-TB-9-148F

AREA: 3250 sq. ft. DESCRIPTION: UNIT 3 SALTWATER PUMP ROOM

DESIGN BASIS FIRE

Fire Loading Category:	Minimal
Fire Loading - Max Permiss:	160,000.0 Btu's/sq.ft.

FIRE PROTECTION (AVAILABLE)

Suppression (type)	wet pipe sprinklers
Hose Stations	none, (1) in yard
Portable Extinguishers	yes
Detectors (type)	ionization

FIRE RESISTANCE RATING

Walls	HC
Floor, Ceiling, Roof	HC
Penetrations	C, P, NP/148C, NP/148B, NP/exterior
Fixed Openings	OP/148E, CH/exterior
Doors	L/3-TB-9-148C, L/2-TB-7-148B

HOT STANDBY SYSTEMS	Equipment	Valves	Cable
Reactor Coolant			
Reactor Protection System			
Shutdown Cooling			
Chemical and Volume Control			
Main Feedwater			
Main Steam			
HVAC	A,B		A,B
Auxiliary Feedwater			
Engineered Safety Feature			
Component Cooling Water			
Saltwater Cooling Water	A,B	A,B	A,B
Emergency Chilled Water			
Diesel Generator Systems			

COLD SHUTDOWN SYSTEMS	Equipment	Valves	Cable
Shutdown Cooling			
CCW (To SDC)			
HVAC			
Summary (Hot and Cold)	A,B	A,B	A,B

ESSENTIAL ELECTRIC SYSTEMS	Equipment	MCC and Switchgear	Cable
220 KV (AC)			
4160 V (AC)			
480 V (AC)			
120 V (AC)			
125 V (DC)			
Electric Panels			A,B
Summary			A,B

ASSOCIATED CIRCUITS OF CONCERN

H/I Pressure Interface	NO
Spurious Operation	NO

FIRE AREA/ZONE 3-TB-9-148F

7.16.3.1 Location

Intake Structure - El. (-9'-0") - Unit 3 Salt Water Cooling Pump Room - 3250 square feet - Figure 8-37

7.16.3.2 Fire Loading

Fire loading category - Minimal
Maximum permissible fire loading - 160,000 Btu/sq. ft. (Note 1)

Note 1:The maximum permissible fire loading is based on an evenly distributed loading of combustible materials.

7.16.3.3 Design Basis Fire

The design basis fire is postulated to be a fire that would involve mostly cable insulation and oil.

The design basis fire is conservatively based on the simultaneous total combustion of all combustibles in the zone.

7.16.3.4 Fire Protection Equipment

The zone contains an automatic wet pipe sprinkler system. Manual fire fighting equipment is available within the zone. Hose streams are available from yard hydrants or portable equipment. Ionization smoke detectors, located throughout the zone, provide early warning alarm in the control room.

7.16.3.5 Construction

The walls defining the zone are nonrated reinforced concrete construction with an approximate thickness of 12 inches. The ceiling and floor are also heavy concrete construction. Two bullet-resistant doors separate the zone from adjacent zones 3-TB-9-148C and 2-TB-7-148B. The zone communicates with the adjacent saltwater cooling pipe tunnel (2-TB-(-9)-148E) through an unsealed piping penetration.

7.16.3.6 Licensee Controlled Specification Barriers

For definition of the barriers requiring surveillance per LCS 3.7.104, refer to the latest revision of Figure 8-37, sheet 3.

7.16.3.7 Conclusions

Smoke generated by the design basis fire will be vented to the outside through the louvers in the exterior wall of the zone. Portable smoke exhaust fans may be used if additional smoke removal capability is required.

The ionization detection system is expected to detect the products of combustion from an incipient fire and alert the control room for prompt response by the fire department. Wet pipe sprinklers and portable extinguishers are provided in the zone. These fire protection features will adequately mitigate the consequences of fire.

The design basis fire is insufficient to breach the barriers defining the zone/fire area.

A deviation from the requirements of 10CFR50 Appendix R, III.G.2 has been accepted for (1) redundant safe shutdown equipment in zones 2-TB-9-148F and 3-TB-9-148F separated by greater than 20 feet with limited intervening combustibles and partial detection, and (2) for lack of area-wide suppression and detection in the Turbine Building fire area 148.

Appendix R compliance for fire area 2-TB-(-9)-148 is discussed in fire zone 2-TB-7-148A.

7.16.4 FIRE AREA/ZONE: 3-TB-8-148G

FIRE AREA/ZONE: 3-TB-8-148G

AREA: 880 sq. ft. DESCRIPTION: CORRIDOR

DESIGN BASIS FIRE

Fire Loading Category:	Minimal
Fire Loading - Max Permiss:	13,000.0 Btu's/sq.ft.

FIRE PROTECTION (AVAILABLE)

Suppression (type)	none
Hose Stations	none
Portable Extinguishers	none
Detectors (type)	none

FIRE RESISTANCE RATING

Walls	3hr/7,81,135A,2A, others HC
Floor, Ceiling, Roof	2hr, HC/floor grade
Penetrations	QC/135A
Fixed Openings	OD/148A
Doors	(2) W/3-SE-9-150-135A, W/3-PE-9-2A

HOT STANDBY SYSTEMS	Equipment	Valves	Cable
Reactor Coolant			
Reactor Protection System			
Shutdown Cooling			
Chemical and Volume Control			
Main Feedwater			
Main Steam			
HVAC			
Auxiliary Feedwater			
Engineered Safety Feature			
Component Cooling Water			
Saltwater Cooling Water			
Emergency Chilled Water			
Diesel Generator Systems			

COLD SHUTDOWN SYSTEMS	Equipment	Valves	Cable
Shutdown Cooling			
CCW (To SDC)			
HVAC			
Summary (Hot and Cold)			

ESSENTIAL ELECTRIC SYSTEMS	Equipment	MCC and Switchgear	Cable
220 KV (AC)			
4160 V (AC)			
480 V (AC)			
120 V (AC)			
125 V (DC)			
Electric Panels			
Summary			

ASSOCIATED CIRCUITS OF CONCERN

H/I Pressure Interface	NO
Spurious Operation	YES

7.16.5 FIRE AREA/ZONE: 3-TB-30-148H

FIRE AREA/ZONE: 3-TB-30-148H

AREA: 9000 sq. ft. DESCRIPTION: FFCPD AREA

DESIGN BASIS FIRE

Fire Loading Category:	Low
Fire Loading - Max Permiss:	40,000.0 Btu's/sq.ft.

FIRE PROTECTION (AVAILABLE)

Suppression (type)	none
Hose Stations	(4)
Portable Extinguishers	yes
Detectors (type)	ionization, heat

FIRE RESISTANCE RATING

Walls	1hr/153, NR/others
Floor, Ceiling, Roof	NR
Penetrations	none
Fixed Openings	OP/exterior
Doors	(3)NR/3-TB-8-148A, NR/3-TB-30-153

HOT STANDBY SYSTEMS	Equipment	Valves	Cable
Reactor Coolant			
Reactor Protection System			
Shutdown Cooling			
Chemical and Volume Control			
Main Feedwater			
Main Steam			
HVAC			
Auxiliary Feedwater			
Engineered Safety Feature			
Component Cooling Water			
Saltwater Cooling Water			
Emergency Chilled Water			
Diesel Generator Systems			

COLD SHUTDOWN SYSTEMS	Equipment	Valves	Cable
Shutdown Cooling			
CCW (To SDC)			
HVAC			
Summary (Hot and Cold)			

ESSENTIAL ELECTRIC SYSTEMS	Equipment	MCC and Switchgear	Cable
220 KV (AC)			
4160 V (AC)			
480 V (AC)			
120 V (AC)			
125 V (DC)			
Electric Panels			
Summary			

ASSOCIATED CIRCUITS OF CONCERN

H/I Pressure Interface	NO
Spurious Operation	NO

7.16.6 FIRE AREA/ZONE: 3-TB-7-149

FIRE AREA/ZONE: 3-TB-7-149

AREA: 1554 sq. ft. DESCRIPTION: MAIN LUBE OIL BUILDING

DESIGN BASIS FIRE

Fire Loading Category:	High
Fire Loading - Max Permiss:	2,666,441.0 Btu's/sq.ft.

FIRE PROTECTION (AVAILABLE)

Suppression (type)	water spray system, wet pipe sprinklers
Hose Stations	none, (1) in 3-TB-7-148A
Portable Extinguishers	yes
Detectors (type)	ionization, heat detectors

FIRE RESISTANCE RATING

Walls	HC/148C, others 3hr
Floor, Ceiling, Roof	HC/floor, 2hr/ceiling
Penetrations	P, C, D,NP/148C, QC/148A
Fixed Openings	OP/148C, louvers
Doors	(2)A/3-TB-7-148A, A/3-TB-9-148C

HOT STANDBY SYSTEMS	Equipment	Valves	Cable
Reactor Coolant			
Reactor Protection System			
Shutdown Cooling			
Chemical and Volume Control			
Main Feedwater			
Main Steam			
HVAC			
Auxiliary Feedwater			
Engineered Safety Feature			
Component Cooling Water			
Saltwater Cooling Water			
Emergency Chilled Water			
Diesel Generator Systems			

COLD SHUTDOWN SYSTEMS	Equipment	Valves	Cable
Shutdown Cooling			
CCW (To SDC)			
HVAC			
Summary (Hot and Cold)			

ESSENTIAL ELECTRIC SYSTEMS	Equipment	MCC and Switchgear	Cable
220 KV (AC)			
4160 V (AC)			
480 V (AC)			
120 V (AC)			
125 V (DC)			
Electric Panels			
Summary			

ASSOCIATED CIRCUITS OF CONCERN

H/I Pressure Interface	NO
Spurious Operation	NO

7.16.7 FIRE AREA/ZONE: 3-TB-7-150

FIRE AREA/ZONE: 3-TB-7-150

AREA: 500 sq. ft. DESCRIPTION: ELEVATOR SHAFT

DESIGN BASIS FIRE

Fire Loading Category:	Minimal
Fire Loading - Max Permiss:	13,000.0 Btu's/sq.ft.

FIRE PROTECTION (AVAILABLE)

Suppression (type)	none
Hose Stations	none, (1) in adjacent zone each floor
Portable Extinguishers	yes, adjacent
Detectors (type)	ionization in elev. machine room

FIRE RESISTANCE RATING

Walls	2hr
Floor, Ceiling, Roof	HC
Penetrations	none
Fixed Openings	louver
Doors	(2)B/3-TB-7-148A, NR/exterior

HOT STANDBY SYSTEMS	Equipment	Valves	Cable
Reactor Coolant			
Reactor Protection System			
Shutdown Cooling			
Chemical and Volume Control			
Main Feedwater			
Main Steam			
HVAC			
Auxiliary Feedwater			
Engineered Safety Feature			
Component Cooling Water			
Saltwater Cooling Water			
Emergency Chilled Water			
Diesel Generator Systems			

COLD SHUTDOWN SYSTEMS	Equipment	Valves	Cable
Shutdown Cooling			
CCW (To SDC)			
HVAC			
Summary (Hot and Cold)			

ESSENTIAL ELECTRIC SYSTEMS	Equipment	MCC and Switchgear	Cable
220 KV (AC)			
4160 V (AC)			
480 V (AC)			
120 V (AC)			
125 V (DC)			
Electric Panels			
Summary			

ASSOCIATED CIRCUITS OF CONCERN

H/I Pressure Interface	NO
Spurious Operation	NO

7.16.8 FIRE AREA/ZONE: 3-TB-30-153

FIRE AREA/ZONE: 3-TB-30-153

AREA: 4176 sq. ft. DESCRIPTION: SWITCHGEAR ROOM

DESIGN BASIS FIRE

Fire Loading Category:	Low
Fire Loading - Max Permiss:	40,000.0 Btu's/sq.ft.

FIRE PROTECTION (AVAILABLE)

Suppression (type)	none
Hose Stations	none, (1) in 3-TB-7-148a
Portable Extinguishers	yes, adjacent
Detectors (type)	ionization

FIRE RESISTANCE RATING

Walls	3hr/142B, 1hr/others
Floor, Ceiling, Roof	2hr
Penetrations	C, P, D, ND/148A
Fixed Openings	louvers, MH/148A
Doors	NR/exterior, B/3-TB-7-148A, NR/2-TB-30-148H

HOT STANDBY SYSTEMS	Equipment	Valves	Cable
Reactor Coolant			
Reactor Protection System			
Shutdown Cooling			
Chemical and Volume Control			
Main Feedwater			
Main Steam			
HVAC			
Auxiliary Feedwater			
Engineered Safety Feature			
Component Cooling Water			
Saltwater Cooling Water			
Emergency Chilled Water			
Diesel Generator Systems			

COLD SHUTDOWN SYSTEMS	Equipment	Valves	Cable
Shutdown Cooling			
CCW (To SDC)			
HVAC			
Summary (Hot and Cold)			

ESSENTIAL ELECTRIC SYSTEMS	Equipment	MCC and Switchgear	Cable
220 KV (AC)			X
4160 V (AC)			
480 V (AC)			
120 V (AC)			
125 V (DC)			
Electric Panels			X
Summary			X

ASSOCIATED CIRCUITS OF CONCERN

H/I Pressure Interface	NO
Spurious Operation	NO

FIRE AREA/ZONE 3-TB-30-153

7.16.8.1 Location

Turbine Building - El. 30' -0" - Switchgear Room - 4176 square feet

7.16.8.2 Fire Loading

Fire loading category - Low
Maximum permissible fire loading - 40,000 Btu/sq. ft. (Note 1)

Note 1:The maximum permissible fire loading is based on an evenly distributed loading of combustible materials.

7.16.8.3 Design Basis Fire

The design basis fire involves mostly cable insulation and is conservatively based on the simultaneous total combustion of all combustibles in the zone.

7.16.8.4 Fire Protection Equipment

The zone contains no automatic suppression systems or hose stations, and a minimum of one portable extinguisher. There are ionization detectors located in the zone to provide early warning alarm to the control room. Yard hydrants and portable extinguishers in adjacent areas are also available to provide fire fighting capability.

7.16.8.5 Construction

The east area boundary is a 3 hour rated wall where it interfaces with 3-CT-(-2)-142B. Other walls have 1 hour ratings. The floor and ceiling have a 2 hour rating. There are non-rated penetrations and dampers leading to adjacent areas. Two non-rated doors separate the area from the yard and the FFCPC area. A 1-1/2 hour rated door separates the area from zone 148A.

7.16.8.6 Licensee Controlled Specification Barriers

For definition of the barriers requiring surveillance per LCS 3.7.104, refer to the latest revision of Figure 8-38, sheet 3.

7.16.8.7 Conclusions

The ionization detectors are expected to detect the products of combustion from an incipient fire and alert the control room for prompt action by the fire department. The available manual fire fighting equipment is adequate to extinguish the fire. These fire protection features will adequately mitigate the consequences of the fire and confine it to the subject fire area.

The design basis fire is insufficient to breach the barriers defining the fire area.

FIRE AREA/ZONE 3-TB 30-153

7.16.8.8 Fire Area 3-TB-30-153 Appendix R Compliance

Safe shutdown capability in the subject fire area will be provided utilizing Train A systems. Functionally redundant components protected from fire damage will be utilized to achieve safe shutdown.

One train of systems necessary to achieve hot standby and cold shutdown conditions independent of the subject fire area will be free of fire damage. Therefore, this fire area complies with the criteria of 10CFR50, Appendix R, Section III.G.1.

7.16.9 FIRE AREA/ZONE: 3-TB-72-154A

FIRE AREA/ZONE: 3-TB-72-154A

AREA: 49680 sq. ft. DESCRIPTION: TURBINE GENERATOR DECK

DESIGN BASIS FIRE

Fire Loading Category:	Minimal
Fire Loading - Max Permiss:	13,000.0 Btu's/sq.ft.

FIRE PROTECTION (AVAILABLE)

Suppression (type)	CO2 for generator bearings
Hose Stations	(4)
Portable Extinguishers	yes
Detectors (type)	local heat detectors

FIRE RESISTANCE RATING

Walls	none
Floor, Ceiling, Roof	HC, no roof
Penetrations	NC/148A, NP/148A
Fixed Openings	MH/148A, metal shroud/148A
Doors	none

HOT STANDBY SYSTEMS	Equipment	Valves	Cable
Reactor Coolant			
Reactor Protection System			
Shutdown Cooling			
Chemical and Volume Control			
Main Feedwater			
Main Steam			
HVAC			
Auxiliary Feedwater			
Engineered Safety Feature			
Component Cooling Water			
Saltwater Cooling Water			
Emergency Chilled Water			
Diesel Generator Systems			

COLD SHUTDOWN SYSTEMS	Equipment	Valves	Cable
Shutdown Cooling			
CCW (To SDC)			
HVAC			
Summary (Hot and Cold)			

ESSENTIAL ELECTRIC SYSTEMS	Equipment	MCC and Switchgear	Cable
220 KV (AC)			
4160 V (AC)			
480 V (AC)			
120 V (AC)			
125 V (DC)			
Electric Panels			
Summary			

ASSOCIATED CIRCUITS OF CONCERN

H/I Pressure Interface	NO
Spurious Operation	NO

FIRE AREA/ZONE 3-TB-72-154A

7.16.9.1 Location

Turbine Building - El. 72'-0" - Turbine Generator Deck - 49,680 square feet

7.16.9.2 Fire Loading

Fire loading category - Minimal
Maximum permissible fire loading - 13,000 Btu/sq. ft. (Note 1)

Note 1:The maximum permissible fire loading is based on an evenly distributed loading of combustible materials.

7.16.9.3 Design Basis Fire

The design basis fire is postulated to be a fire that would involve mostly Hydraulic oil. The design basis fire is conservatively based on simultaneous total combustion of all combustibles in the fire zone.

7.16.9.4 Fire Protection Equipment

The zone contains CO_2 suppression system for the generator bearings, hose stations, portable extinguishers and local heat detectors.

7.16.9.5 Construction

The zone floor is of heavy concrete construction. A metal hatch provides access to zone 3-TB-7-148A. Unsealed cabling and piping penetrations run into zone 3-TB-7-148A. There are no walls or doors in the zone.

7.16.9.6 Licensee Controlled Specification Barriers

For definition of the barriers requiring surveillance per LCS 3.7.104, refer to the latest revision of Figure 8-14, sheet 3.

7.16.9.7 Conclusions

The fixed temperature rate of rise heat detectors provide early warning alarm to the control room. The CO_2 suppression system, hose stations and portable equipment available is adequate to extinguish the design basis fire.

Manual suppression equipment is provided in the fire zone. A CO_2 suppression system is provided for the generator bearings. The fire zone contains local heat detectors. These fire protection features will adequately mitigate the consequences of fire.

The design basis fire is insufficient to breach the barriers defining the zone/fire area.

7.16.9.8 Fire Area 3-TB-72-154 Appendix R Compliance

Safe shutdown capability will be provided by utilizing Train A systems.

One train of systems necessary to achieve hot standby and cold shutdown conditions independent of the subject fire area will be free of fire damage. Therefore, this fire area complies with the criteria of 10CFR50, Appendix R, III.G.1.

7. DETAILED FIRE HAZARD ANALYSIS

7.17 UNIT 3 CABLE TUNNELS

The Unit 3 Cable Tunnel fire area (a portion of which is in the Safety Equipment building) contains part of or all of the following systems, which can be used for, or support, safe shutdown and cooldown:

- Shutdown Cooling
- Auxiliary Feedwater
- Component Cooling Water
- Saltwater Cooling Water
- Essential Electric Systems
- Diesel Generator Systems
- Main Feedwater
- Main Steam
- HVAC
- Engineered Safety Feature
- Emergency Chilled Water

The barrier, penetration, and door ratings are noted in the matrices.

The types of protection/detection equipment available in or near the tunnels consist of the following:

- Portable extinguishers.
- Smoke and fixed temperature rate of rise heat detectors.
- Fixed water spray systems. The detectors used to automatically operate the spray systems will be fixed temperature rate of rise heat detectors.
- Hose streams from yard hydrants or portable equipment.

Fire Area/Zone	Contains Safe Shutdown Equipment/Cables	Contains Safety-Related Equipment/Cables	Figure No.
3-CT-(-2)-142B	Yes	Yes	8-33, 8-42
3-CT-16-142C	Yes	Yes	8-27, 8-28, 8-29, 8-30, 8-35, 8-36, 8-42

7.17.1 FIRE AREA/ZONE: 3-CT-(-2)-142B

FIRE AREA/ZONE: 3-CT-(2)-142B

AREA: 7253 sq. ft. DESCRIPTION: ELECTRICAL CABLE TUNNEL

DESIGN BASIS FIRE

Fire Loading Category:	Medium
Fire Loading - Max Permiss:	160,000.0 Btu's/sq.ft.

FIRE PROTECTION (AVAILABLE)

Suppression (type)	water spray system
Hose Stations	none, hydrants on yard main
Portable Extinguishers	yes
Detectors (type)	ionization, heat detectors

FIRE RESISTANCE RATING

Walls	HC/137A, 136, NR/142A, 142C, others 3hr
Floor, Ceiling, Roof	2hr/see text, HC/floor grade
Penetrations	C, SG, NC/200B, QD
Fixed Openings	OP/142A, OP/142C, M/exterior
Doors	B/3-SE-(-2)-176

HOT STANDBY SYSTEMS	Equipment	Valves	Cable
Reactor Coolant			
Reactor Protection System			
Shutdown Cooling			
Chemical and Volume Control			
Main Feedwater			
Main Steam			A,B
HVAC			a,B
Auxiliary Feedwater			a,A,B,C
Engineered Safety Feature			A,B,C,D
Component Cooling Water			
Saltwater Cooling Water			
Emergency Chilled Water			
Diesel Generator Systems			A,B

COLD SHUTDOWN SYSTEMS	Equipment	Valves	Cable
Shutdown Cooling			
CCW (To SDC)			
HVAC			
Summary (Hot and Cold)			a,A,B,C,D

ESSENTIAL ELECTRIC SYSTEMS	Equipment	MCC and Switchgear	Cable
220 KV (AC)			X
4160 V (AC)			A,B
480 V (AC)			A,B
120 V (AC)			
125 V (DC)			
Electric Panels			A,B,X
Summary			A,B,X

ASSOCIATED CIRCUITS OF CONCERN

H/I Pressure Interface	NO
Spurious Operation	YES

FIRE AREA/ZONE 3-CT-(-2)-142B

7.17.1.1 Location

Cable Tunnel - El. (-2'-6") - Electrical Cable Tunnel - 7253 square feet - Figures 8-33, 8-42

7.17.1.2 Fire Loading

Fire loading category - Medium
Maximum permissible fire loading - 160,000 Btu/sq. ft. (Note 1)

Note 1:The maximum permissible fire loading is based on an evenly distributed loading.

7.17.1.3 Design Basis Fire

The design basis fire is postulated to be a fire that would involve mostly cable insulation.

The design basis fire is conservatively based on the simultaneous total combustion of all combustibles in the zone.

7.17.1.4 Fire Protection Equipment

The zone contains an automatic water spray system, with fixed temperature rate of rise actuation. Actuation by the heat detectors results in control room annunciation. Manual fire fighting equipment is available within the zone. In addition, hose streams are available from yard hydrants or portable equipment. Ionization smoke detectors, located throughout the zone, provide early warning alarm in the control room.

7.17.1.5 Construction

The walls defining the zone are reinforced concrete with a 3 hour rating except the walls adjoining areas 3-SE-(-15)-136 and 3-SE-(-15)-137A. The walls to these two areas is part of a double wall configuration. The walls on the 3-SE-(-15)-136 and 3-SE-(-15)-137A side (of the double wall) are 3 hour rated so in essence three hour separation is provided between electrical cable tunnel and these two areas. The walls to Zone 3-161C, D & E are also part of a double wall configuration. The wall on the 3-142B side is 3 hour rated, and the other wall is non-rated heavy concrete. Two manholes approximately 10'x6'-6" (3-161E & D) and a cable vault approximately 17'x8' (3-161C) comprise this interface. There is a 1-1/2 hour fire rated damper which interfaces with 3-161C. The ceiling is 2 hour rated as is the floor to other fire area/zones. The ceiling has nonrated cable penetrations to the Unit Auxiliary and Reserve Auxiliary transformer termination enclosures in the Yard Area (2-YD-30-200B) above. The floor to grade is nonrated heavy concrete construction. The zone is open to the safety equipment building electrical tunnel (3-SE-30-142A), and to the cable shaft (3-CT-16-142C) which are zones of the same fire area. Four covered manholes provide access to the tunnel at ground level. A 1-1/2 hour rated fire door is provided to fire area 3-SE-(-2)-176.

7.17.1.6 Licensee Controlled Specification Barriers

For definition of the barriers requiring surveillance per LCS 3.7.104, refer to the latest revisions of Figures 8-33 and 8-42, sheet 3.

Cable for the following systems is wrapped in Fire Zone 3-142B:

Auxiliary Feedwater - Train A
HVAC - Train A

7.17.1.7 Conclusions

The ionization detection system is expected to detect the products of combustion from an incipient fire and alert the control room for prompt response by the fire department. Portable suppression equipment is available. The water spray system may also be actuated from one of the manual pull stations located throughout the zone. The available portable equipment is adequate to extinguish the fire during its initial stages of growth.

In the event the fire achieves sufficient intensity, the fixed temperature rate of rise heat detectors will actuate the water spray system automatically. Actuation by the heat detectors is alarmed in the control room. The water spray system will control and suppress the fire until the fire department arrives and completes the extinguishment with portable equipment.

Should automatic water spray system fail to actuate, the fire department will be utilized to extinguish the fire.

The fire boundaries between 3-CT-(-2)-142B and 3-SE-(-15)-136, and 3-SE-(-15)-137A were evaluated. The boundaries and associated fire protection features were found to be adequate to prevent the propagation of fire between the fire areas.

The fire boundaries between 3-CT-(-2)-142B and 2-YD-30-200B were evaluated. The boundaries and associated fire protection features were found to be adequate to prevent the propagation of fire between the fire areas.

A deviation from the requirements of 10CFR50 Appendix R, III.G.2 has been accepted for fire area 3-142 to the extent it requires the separation of redundant safe shutdown trains by 20 feet separation with no intervening combustibles and 1 hour rated barriers with suppression and detection. The fire detection and suppression systems in this area/zone were evaluated and shown to provide a level of protection equivalent to the requirements Appendix R. Appendix R compliance for fire area 3-CT-(-2)-142 is discussed in fire zone 3-SE-30-142A.

7.17.2 FIRE AREA/ZONE: 3-CT-16-142C

FIRE AREA/ZONE: 3-CT-16-142C

AREA: 150 sq. ft. DESCRIPTION: CABLE SHAFT

DESIGN BASIS FIRE

Fire Loading Category:	High
Fire Loading - Max Permiss:	(SEE TEXT)

FIRE PROTECTION (AVAILABLE)

Suppression (type)	water spray
Hose Stations	none, hydrants on yard main
Portable Extinguishers	none, adjacent
Detectors (type)	ionization, heat detectors

FIRE RESISTANCE RATING

Walls	NR/142B, others 3hr
Floor, Ceiling, Roof	2hr/see ceiling, HC/floor
Penetrations	C, P
Fixed Openings	OP/142B
Doors	none

HOT STANDBY SYSTEMS	Equipment	Valves	Cable
Reactor Coolant			
Reactor Protection System			
Shutdown Cooling			
Chemical and Volume Control			
Main Feedwater			
Main Steam			
HVAC			
Auxiliary Feedwater			
Engineered Safety Feature			
Component Cooling Water			
Saltwater Cooling Water			
Emergency Chilled Water			
Diesel Generator Systems			A

COLD SHUTDOWN SYSTEMS	Equipment	Valves	Cable
Shutdown Cooling			
CCW (To SDC)			
HVAC			
Summary (Hot and Cold)			A

ESSENTIAL ELECTRIC SYSTEMS	Equipment	MCC and Switchgear	Cable
220 KV (AC)			X
4160 V (AC)			A,B
480 V (AC)			A
120 V (AC)			
125 V (DC)			
Electric Panels			A
Summary			A,B,X

ASSOCIATED CIRCUITS OF CONCERN

H/I Pressure Interface	NO
Spurious Operation	YES

FIRE AREA/ZONE 3-CT-16-142C

7.17.2.1 Location

Cable Tunnel - El. 16'-6" - Cable Shaft - 150 square feet - Figures 8-27, 8-28, 8-29, 8-30, 8-35, 8-36, 8-42.

7.17.2.2 Fire Loading

Fire loading category - High (Note 2)
Maximum permissible fire loading - 160,000 Btu/sq. ft. (Note 1)

Note 1:The maximum permissible fire loading is based on an evenly distributed loading of combustible materials.

Note 2:The fire loading category shown above is distorted because this zone is a vertical cable chase with a very small floor area relative to its height.

7.17.2.3 Design Basis Fire

The design basis fire is postulated to be a fire that involve mostly cable insulation and plastic (i.e., chemgrate).

The design basis fire is conservatively based on the simultaneous total combustion of all combustibles in the zone.

7.17.2.4 Fire Protection Equipment

The zone contains an automatic water spray system with fixed temperature rate of rise actuation. Actuation by the heat detectors results in local and control room annunciation. Manual fire fighting equipment is available in adjacent zone 3-CT-(-2)-142B. In addition, hose streams are available from yard hydrants or portable equipment. An ionization smoke detector, located at the top of the cable shaft, provides early warning alarm in the control room.

7.17.2.5 Construction

The walls are 3 hour rated reinforced concrete construction. The zone is open to zone 3-CT-(-2)-142B. The ceiling is 2 hour rated concrete construction. The floor to grade is nonrated heavy concrete construction. Cable fire stops are provided for the vertical cable trays.

7.17.2.6 Licensee Controlled Specification Barriers

For definition of the barriers requiring surveillance per LCS 3.7.104, refer to the latest revisions of Figures 8-27, 8-28, 8-29, 8-30, 8-35, 8-36, and 8-42, sheet 3.

7.17.2.7 Conclusions

The ionization detection system is expected to detect the products of combustion from an incipient fire and alert the control room for prompt response by the fire department. Portable suppression equipment is available. The available portable equipment is adequate to extinguish the fire during its initial stages of growth.

In the event the fire achieves sufficient intensity, the fixed temperature rate of rise heat detectors will actuate the water spray system automatically. Actuation by the heat detectors is alarmed in the control room. The water spray system will control and suppress the fire until the fire department arrives and completes the extinguishment with portable equipment.

Should the automatic spray system fail to actuate, the fire department will be utilized to extinguish the fire.

A deviation from the requirements of 10CFR50, Appendix R has been accepted for fire area 3-142 to the extent it requires the separation of redundant safe shutdown trains by 20 foot separation with no intervening combustibles and 1 hour rated barriers with detection and suppression. The fire detection and suppression systems in this area/zone were evaluated and shown to provide a level of protection equivalent to the requirements of Appendix R.

Appendix R compliance for fire area 3-CT-(-2)-142 is discussed in fire zone 3-SE-30-142A.

7. DETAILED FIRE HAZARD ANALYSIS

7.18 UNIT 3 DIESEL GENERATOR BUILDING

The Unit 3 Diesel Generator building is a reinforced concrete structure which contains the diesel generators, fuel oil storage day tanks and support equipment. The Diesel Generator Building is divided into six (6) fire areas. The barrier, penetration and door ratings are noted in the matrices.

The Diesel Generator Building contains part of or all of the following systems:

- Diesel Generator Systems
- Essential Electric Systems

The type of fire protection/detection equipment available in or near this building consists of the following:

- Portable extinguishers
- Pre-action sprinkler systems are provided to protect the diesel generator systems.
- Smoke and infrared detectors.
- Standpipe system with manual hose stations.

Fire Area/Zone	Contains Safe Shutdown Equipment/Cables	Contains Safety-Related Equipment/Cables	Figure No.
3-DG-30-155	Yes	Yes	8-41
3-DG-30-156	No	No	8-41
3-DG-30-157	No	No	8-41
3-DG-30-158	Yes	Yes	8-41
3-DG-20-159	Yes	Yes	8-41
3-DG-20-160	Yes	Yes	8-41

7.18.1 FIRE AREA/ZONE: 3-DG-30-155

FIRE AREA/ZONE: 3-DG-30-155

AREA: 2128 sq. ft. DESCRIPTION: DIESEL GENERATOR RM. B

DESIGN BASIS FIRE

Fire Loading Category:	Medium
Fire Loading - Max Permiss:	160,000.0 Btu's/sq.ft.

FIRE PROTECTION (AVAILABLE)

Suppression (type)	automatic pre-action sprinkler sys.
Hose Stations	(2), hydrants on fire main
Portable Extinguishers	none, adjacent
Detectors (type)	Infrared, ionization

FIRE RESISTANCE RATING

Walls	3hr/156, 157, 158, HC/160, exterior
Floor, Ceiling, Roof	2hr/ceiling, HC/floor
Penetrations	NC/exterior, NP/exterior
Fixed Openings	OP/exterior, louvers/exterior
Doors	(2) A/3-DG-30-157, (2) A/3-DG-30-156

HOT STANDBY SYSTEMS	Equipment	Valves	Cable
Reactor Coolant			
Reactor Protection System			
Shutdown Cooling			
Chemical and Volume Control			
Main Feedwater			
Main Steam			
HVAC			
Auxiliary Feedwater			
Engineered Safety Feature			
Component Cooling Water			
Saltwater Cooling Water			
Emergency Chilled Water			
Diesel Generator Systems	B,N	B	B

COLD SHUTDOWN SYSTEMS	Equipment	Valves	Cable
Shutdown Cooling			
CCW (To SDC)			
HVAC			
Summary (Hot and Cold)	B,N	B	B

ESSENTIAL ELECTRIC SYSTEMS	Equipment	MCC and Switchgear	Cable
220 KV (AC)			
4160 V (AC)			B
480 V (AC)		B	B
120 V (AC)	B		
125 V (DC)			
Electric Panels	B		B
Summary	B	B	B

ASSOCIATED CIRCUITS OF CONCERN

H/I Pressure Interface	NO
Spurious Operation	YES

FIRE AREA/ZONE 3-DG-30-155

7.18.1.1 Location

Diesel Generator Building - El. 30'-0" - Diesel Generator Room B - 2128 square feet - Figure 8-41

7.18.1.2 Fire Loading

Fire loading category - Medium
Maximum permissible fire loading - 160,000 Btu/sq. ft. (Note 1)

Note 1:The maximum permissible loading is based on an evenly distributed loading of combustible materials.

7.18.1.3 Design Basis Fire

The design basis fire is postulated to be a fire that would involve mostly diesel fuel and lube oil.

The design basis fire is conservatively based on the simultaneous total combustion of all combustibles in the area.

7.18.1.4 Fire Protection Equipment

The area contains an automatic pre-action sprinkler system with infrared detector actuation. Actuation of the infrared detectors results in local and control room annunciation. Manual fire fighting equipment is available within the area and outside the east and west entrances to the building. Ionization smoke detectors, located in the area, provide early warning alarm in the control room.

7.18.1.5 Construction

The north wall, adjoining area 2-DG-30-158, is 3 hour rated reinforced concrete construction. The walls separating the area from the stairwells (3-DG-30-156 and 3-DG-30-157) are also 3 hour rated. The area's exterior walls are nonrated reinforced concrete with an approximate thickness of 3 feet. The ceiling is 2 hour rated. The floor to grade is heavy concrete construction. Two 3 hour rated doors open to the stairwells (3-DG-30-156 and 3-DG-30-157). Louvered ventilation openings communicate with the exterior.

7.18.1.6 Licensee Controlled Specification Barriers

For definition of the barriers requiring surveillance per LCS 3.7.104, refer to the latest revision of Figure 8-41, sheet 3.

7.18.1.7 Conclusions

The ionization and infrared detectors are expected to detect the fire in its initial stages of growth and alert the control room for prompt response by the fire department. The activation of the infrared detectors releases a tripping device to open the pre-action valve, allowing water to pressurize the sprinkler system. Sprinkler flow is initiated when further rise in ambient temperature causes the fusible links on the closed sprinkler heads to melt.

The design basis fire is insufficient to breach the fire barriers which separate the area from adjacent areas.

7.18.1.8 Fire Area 3-DG-30-155 Appendix R Compliance

Safe shutdown capability will be provided by utilizing Train A systems. Functionally redundant components protected from fire damage will be utilized in conjunction with operator action on manual or disabled components to achieve safe shutdown.

One train of systems necessary to achieve hot standby and cold shutdown conditions independent of the subject fire area will be free of fire damage. Therefore, this fire area complies with the criteria of 10CFR50, Appendix R, III.G.1.

7.18.2 FIRE AREA/ZONE: 3-DG-30-156

FIRE AREA/ZONE: 3-DG-30-156

AREA: 220 sq. ft. DESCRIPTION: STAIRCASE

DESIGN BASIS FIRE

Fire Loading Category:	Minimal
Fire Loading - Max Permiss:	160,000.0 Btu's/sq.ft.

FIRE PROTECTION (AVAILABLE)

Suppression (type)	none
Hose Stations	none
Portable Extinguishers	yes, adjacent
Detectors (type)	none

FIRE RESISTANCE RATING

Walls	3hr/155, 158, HC/exterior
Floor, Ceiling, Roof	2hr/ceiling, HC/floor
Penetrations	C
Fixed Openings	MH/158
Doors	X/exterior, (2)A/3-DG-30-155,(2) A/3-DG-30-158

HOT STANDBY SYSTEMS	Equipment	Valves	Cable
Reactor Coolant			
Reactor Protection System			
Shutdown Cooling			
Chemical and Volume Control			
Main Feedwater			
Main Steam			
HVAC			
Auxiliary Feedwater			
Engineered Safety Feature			
Component Cooling Water			
Saltwater Cooling Water			
Emergency Chilled Water			
Diesel Generator Systems			

COLD SHUTDOWN SYSTEMS	Equipment	Valves	Cable
Shutdown Cooling			
CCW (To SDC)			
HVAC			
Summary (Hot and Cold)			

ESSENTIAL ELECTRIC SYSTEMS	Equipment	MCC and Switchgear	Cable
220 KV (AC)			
4160 V (AC)			
480 V (AC)			
120 V (AC)			
125 V (DC)			
Electric Panels			
Summary			

ASSOCIATED CIRCUITS OF CONCERN

H/I Pressure Interface	NO
Spurious Operation	NO

7.18.3 FIRE AREA/ZONE: 3-DG-30-157

FIRE AREA/ZONE: 3-DG-30-157

AREA: 220 sq. ft. DESCRIPTION: STAIRCASE

DESIGN BASIS FIRE

Fire Loading Category:	Minimal
Fire Loading - Max Permiss:	160,000.0 Btu's/sq.ft.

FIRE PROTECTION (AVAILABLE)

Suppression (type)	none
Hose Stations	none
Portable Extinguishers	yes, adjacent
Detectors (type)	none

FIRE RESISTANCE RATING

Walls	3hr/155, 158, HC/exterior
Floor, Ceiling, Roof	2hr/ceiling, HC/floor
Penetrations	C
Fixed Openings	none
Doors	X/exterior, (2) A/3-DG-30-155,(2) A/3-DG-30-158

HOT STANDBY SYSTEMS	Equipment	Valves	Cable
Reactor Coolant			
Reactor Protection System			
Shutdown Cooling			
Chemical and Volume Control			
Main Feedwater			
Main Steam			
HVAC			
Auxiliary Feedwater			
Engineered Safety Feature			
Component Cooling Water			
Saltwater Cooling Water			
Emergency Chilled Water			
Diesel Generator Systems			

COLD SHUTDOWN SYSTEMS	Equipment	Valves	Cable
Shutdown Cooling			
CCW (To SDC)			
HVAC			
Summary (Hot and Cold)			

ESSENTIAL ELECTRIC SYSTEMS	Equipment	MCC and Switchgear	Cable
220 KV (AC)			
4160 V (AC)			
480 V (AC)			
120 V (AC)			
125 V (DC)			
Electric Panels			
Summary			

ASSOCIATED CIRCUITS OF CONCERN

H/I Pressure Interface	NO
Spurious Operation	NO

7.18.4 FIRE AREA/ZONE: 3-DG-30-158

FIRE AREA/ZONE: 3-DG-30-158

AREA: 2128 sq. ft. DESCRIPTION: DIESEL GENERATOR RM. A

DESIGN BASIS FIRE

Fire Loading Category:	Medium
Fire Loading - Max Permiss:	160,000.0 Btu's/sq.ft.

FIRE PROTECTION (AVAILABLE)

Suppression (type)	automatic pre-action sprinkler sys.
Hose Stations	(2), hydrants on fire main
Portable Extinguishers	none, adjacent
Detectors (type)	infrared, ionization

FIRE RESISTANCE RATING

Walls	3hr/155, 156, 157, HC/159, exterior
Floor, Ceiling, Roof	2hr/ceiling, HC/floor
Penetrations	NC/exterior, NP/exterior
Fixed Openings	OP/exterior, louvers/exterior, MH/156
Doors	(2) A/3-DG-30-157,(2) A/3-DG-30-156

HOT STANDBY SYSTEMS	Equipment	Valves	Cable
Reactor Coolant			
Reactor Protection System			
Shutdown Cooling			
Chemical and Volume Control			
Main Feedwater			
Main Steam			
HVAC			
Auxiliary Feedwater			
Engineered Safety Feature			
Component Cooling Water			
Saltwater Cooling Water			
Emergency Chilled Water			
Diesel Generator Systems	A,N	A,A*	A

COLD SHUTDOWN SYSTEMS	Equipment	Valves	Cable
Shutdown Cooling			
CCW (To SDC)			
HVAC			
Summary (Hot and Cold)	A,N	A,A*	A

ESSENTIAL ELECTRIC SYSTEMS	Equipment	MCC and Switchgear	Cable
220 KV (AC)			
4160 V (AC)			A
480 V (AC)		A	A
120 V (AC)	A		
125 V (DC)			
Electric Panels	A		A
Summary	A	A	A

ASSOCIATED CIRCUITS OF CONCERN

H/I Pressure Interface	NO
Spurious Operation	YES

FIRE AREA/ZONE 3-DG-30-158

7.18.4.1 Location

Diesel Generator Building - El. 30'-0" - Diesel Generator Room A - 2128 square feet - Figure 8-41

7.18.4.2 Fire Loading

Fire loading category - Medium
Maximum permissible fire loading - 160,000 Btu/sq. ft. (Note 1)

Note 1:The maximum permissible loading is based on an evenly distributed loading of combustible materials.

7.18.4.3 Design Basis Fire

The design basis fire is postulated to be a fire that would involve mostly diesel fuel and lube oil.

The design basis fire is conservatively based on the simultaneous total combustion of all combustibles in the area.

7.18.4.4 Fire Protection Equipment

The area contains an automatic pre-action sprinkler system with infrared detector actuation. Actuation of the infrared detectors results in local and control room annunciation. Manual fire fighting equipment is available within the area or outside the east and west entrances to the building. Ionization smoke detectors, located in the area, provide early warning alarm in the control room.

7.18.4.5 Construction

The south wall, adjoining 3-DG-30-155, is 3 hour rated reinforced concrete construction. The walls separating the area from the stairwells (3-DG-30-156 and 3-DG-30-157) are also 3 hour rated. There is a non-rated metal personnel access hatch which interfaces with 3-DG-30-156. The area's exterior walls are nonrated reinforced concrete with an approximate thickness of 3 feet. Two 3 hour rated doors open to each of the adjoining stairwells (3-DG-30-156 and 3-DG-30-157). Louvered ventilation openings communicate with the exterior. The ceiling is 2 hour rated concrete construction. The floor to grade is nonrated heavy concrete construction.

7.18.4.6 Licensee Controlled Specification Barriers

For definition of the barriers requiring surveillance per LCS 3.7.104, refer to the latest revision of Figure 8-41, sheet 3.

7.18.4.7 Conclusions

The ionization and infrared detectors are expected to detect the fire in its initial stages of growth and alert the control room for prompt response by the fire department. The activation of the infrared detectors releases a tripping device to open the pre-action valve, allowing water to pressurize the sprinkler system. Sprinkler flow is initiated when further rise in ambient temperature causes the fusible links on the closed sprinkler heads to melt.

The design basis fire is insufficient to breach the fire barriers which separate the area from adjacent areas.

The fire area boundary between 3-DG-30-158 and 3-DG-30-156 was evaluated. The fire boundaries and associated fire protection features were found to be adequate to prevent the propagation of fire beyond the fire boundaries. Based on the 3-hour construction of the area boundaries including the doors, no unsealed penetrations, and the limited fire hazards, in conjunction with the fire protection features of the east staircase and its adjacent fire areas, the fire area boundaries, including the non-rated metal hatch, are considered adequate.

7.18.4.8 Fire Area 3-DG-30-158 Appendix R Compliance

Safe shutdown capability will be provided by utilizing Train B systems. Functionally redundant components protected from fire damage will be utilized in conjunction with operator action on manual or disabled components to achieve safe shutdown.

One train of systems necessary to achieve hot standby and cold shutdown conditions independent of the subject fire area will be free of fire damage. Therefore, this fire area complies with the riteria of 10CFR50, Appendix R, III.G.1.

7.18.5 FIRE AREA/ZONE: 3-DG-20-159

FIRE AREA/ZONE: 3-DG-20-159

AREA: 345 sq. ft. DESCRIPTION: DIESEL FUEL TRANSFER PUMP RM. A

DESIGN BASIS FIRE

Fire Loading Category:	Minimal
Fire Loading - Max Permiss:	13,000.0 Btu's/sq.ft.

FIRE PROTECTION (AVAILABLE)

Suppression (type)	none
Hose Stations	hydrant on fire main
Portable Extinguishers	yes, adjacent
Detectors (type)	none

FIRE RESISTANCE RATING

Walls	south 3hr, others HC
Floor, Ceiling, Roof	2hr/ceiling, HC/floor
Penetrations	P, C, NP/exterior
Fixed Openings	CH/exterior, OH/exterior, MH/exterior
Doors	none

HOT STANDBY SYSTEMS	Equipment	Valves	Cable
Reactor Coolant			
Reactor Protection System			
Shutdown Cooling			
Chemical and Volume Control			
Main Feedwater			
Main Steam			
HVAC			
Auxiliary Feedwater			
Engineered Safety Feature			
Component Cooling Water			
Saltwater Cooling Water			
Emergency Chilled Water			
Diesel Generator Systems	A,N		A

COLD SHUTDOWN SYSTEMS	Equipment	Valves	Cable
Shutdown Cooling			
CCW (To SDC)			
HVAC			
Summary (Hot and Cold)	A,N		A

ESSENTIAL ELECTRIC SYSTEMS	Equipment	MCC and Switchgear	Cable
220 KV (AC)			
4160 V (AC)			
480 V (AC)			
120 V (AC)			
125 V (DC)			
Electric Panels			A
Summary			A

ASSOCIATED CIRCUITS OF CONCERN

H/I Pressure Interface	NO
Spurious Operation	YES

FIRE AREA/ZONE 3-DG-20-159

7.18.5.1 Location

Outside Diesel Generator Building - El. 20'-0" - Diesel Fuel Transfer Pump Room A - 345 square feet - Figure 8-41

7.18.5.2 Fire Loading

Fire loading category - Minimal
Maximum permissible fire loading - 13,000 Btu/sq. ft.

Note: Diesel Fuel Storage Tank is located directly below the transfer pump room and is not postulated to contribute to the design basis fire.

7.18.5.3 Design Basis Fire

A fire is not expected to occur in this area during normal operation. The maximum credible fire is postulated to involve transient combustible materials.

7.18.5.4 Fire Protection Equipment

There is no fire fighting or fire detection equipment in the area. Manual fire fighting equipment is available outside the west entrance to the diesel generator building. Hose streams are available from yard hydrants or portable equipment.

7.18.5.5 Construction

The area is entirely below ground. The south wall, which separates the area from the redundant fuel transfer pump room, is reinforced concrete with a 3 hour rating. The north, west, and east walls are reinforced concrete construction with an approximate thickness of 18 inches. The ceiling is 2 hour rated. The floor to grade is nonrated heavy concrete construction. The area is accessed through hatches at ground level.

7.18.5.6 Licensee Controlled Specification Barriers

For definition of the barriers requiring surveillance per LCS 3.7.104 refer to the latest revision of Figure 8-41, sheet 3.

7.18.5.7 Conclusions

The design basis fire is insufficient to breach the fire barriers which separate the area from adjacent areas.

FIRE AREA/ZONE 3-DG-20-159

7.18.5.8 Fire Area 3-DG-20-159 Appendix R Compliance

Safe shutdown capability will be provided by utilizing Train B systems. Functionally redundant components protected from fire damage will be utilized in conjunction with operator action on manual or disabled components to achieve safe shutdown.

One train of systems necessary to achieve hot standby and cold shutdown conditions independent of the subject fire area will be free of fire damage. Therefore, this fire area complies with the criteria of 10CFR50, Appendix R, III.G.1.

7.18.6 FIRE AREA/ZONE: 3-DG-20-160

FIRE AREA/ZONE: 3-DG-20-160

AREA: 345 sq. ft. DESCRIPTION: DIESEL FUEL TRANSFER PUMP RM. B

DESIGN BASIS FIRE

Fire Loading Category:	Minimal
Fire Loading - Max Permiss:	13,000.0 Btu's/sq.ft.

FIRE PROTECTION (AVAILABLE)

Suppression (type)	none
Hose Stations	hydrants on fire main
Portable Extinguishers	yes, adjacent
Detectors (type)	none

FIRE RESISTANCE RATING

Walls	north 3hr, others HC
Floor, Ceiling, Roof	2hr/ceiling, HC/floor
Penetrations	P, C, NP/exterior
Fixed Openings	CH/exterior, MH/exterior, OH/exterior
Doors	none

HOT STANDBY SYSTEMS	Equipment	Valves	Cable
Reactor Coolant			
Reactor Protection System			
Shutdown Cooling			
Chemical and Volume Control			
Main Feedwater			
Main Steam			
HVAC			
Auxiliary Feedwater			
Engineered Safety Feature			
Component Cooling Water			
Saltwater Cooling Water			
Emergency Chilled Water			
Diesel Generator Systems	B,N		B

COLD SHUTDOWN SYSTEMS	Equipment	Valves	Cable
Shutdown Cooling			
CCW (To SDC)			
HVAC			
Summary (Hot and Cold)	B,N		B

ESSENTIAL ELECTRIC SYSTEMS	Equipment	MCC and Switchgear	Cable
220 KV (AC)			
4160 V (AC)			
480 V (AC)			
120 V (AC)			
125 V (DC)			
Electric Panels			B
Summary			B

ASSOCIATED CIRCUITS OF CONCERN

H/I Pressure Interface	NO
Spurious Operation	YES

FIRE AREA/ZONE 3-DG-20-160

7.18.6.1 Location

Outside Diesel Generator Building - El. 20'-0" - Diesel Fuel Transfer Pump Room B - 345 square feet - Figure 8-41

7.18.6.2 Fire Loading

Fire loading category - Minimal
Maximum permissible fire loading - 13,000 Btu/sq. ft.

Note: Diesel Fuel Storage Tank is located directly below the transfer pump room and is not postulated to contribute to the design basis fire.
Design Basis Fire

A fire is not expected to occur in this area during normal operation. The maximum credible fire is postulated to involve transient combustible materials.

7.18.6.3 Fire Protection Equipment

There is no fire fighting or fire detection equipment in the area. Manual fire fighting equipment is available outside the west entrance to the diesel generator building. Hose streams are available from yard hydrants or portable equipment.

7.18.6.4 Construction

The area is entirely below ground. The north wall, which separates the area from the redundant fuel transfer pump room, is reinforced concrete with a 3 hour rating. The east, south, and west walls are reinforced concrete construction with an approximate thickness of 18 inches. The ceiling is 2 hour rated. The floor to grade is nonrated heavy concrete construction. The area is accessed through hatches at ground level.

7.18.6.5 Licensee Controlled Specification Barriers

For definition of the barriers requiring surveillance per LCS 3.7.104, refer to the latest revision of Figure 8-41, sheet 3.

7.18.6.6 Conclusions

The design basis fire is insufficient to breach the fire barriers which separate the area from adjacent areas.

7.18.6.7 Fire Area 3-DG-20-160 Appendix R Compliance

Safe shutdown capability will be provided by utilizing Train A systems. Functionally redundant components protected from fire damage will be utilized in conjunction with operator action on manual or disabled components to achieve safe shutdown.

One train of systems necessary to achieve hot standby and cold shutdown conditions independent of the subject fire area will be free of fire damage. Therefore, this fire area complies with the criteria of 10CFR50, Appendix R, III.G.1.

7. DETAILED FIRE HAZARD ANALYSIS

7.19 UNIT 3 TANK BUILDING

The Unit 3 Tank Building is a separate building which houses auxiliary feedwater pumps, refueling water storage tanks, and the condensate storage tanks. The Tank Building is divided into (5) fire areas. Each of these fire areas is separated from the others by fire resistant and heavy concrete barriers.

The Tank Building contains part of or all of the following systems, which can be used for, or support, safe shutdown and cooldown:

- Auxiliary Feedwater
- Emergency Chilled Water
- Main Steam
- Electrical Panels
- Engineered Safety Features
- Chemical and Volume Control

The types of fire protection/detection equipment available in or near this building consists of the following:

- Portable extinguishers.
- A pre-action sprinkler system is provided to protect the auxiliary feedwater pumps.
- Deluge systems are provided to protect auxiliary feedwater pumps P-504 and P-140.
- Smoke, infrared, and fixed temperature rate of rise heat detectors.
- Hose streams from yard hydrants or portable equipment.

Fire Area/Zone	Contains Safe Shutdown Equipment/Cables	Contains Safety-Related Equipment/Cables	Figure No.
3-TK-30-161A	Yes	Yes	8-41
3-TK-(-2)-161B	Yes	Yes	8-27, 8-28, 8-32, 8-41
3-TK-18-161C	Yes	Yes	8-41
3-TK-25-161D	Yes	Yes	8-41
3-TK-25-161E	Yes	Yes	8-41
3-TK-30-163	Yes	Yes	8-41
3-TK-30-164	Yes	Yes	8-41
3-TK-30-165	Yes	No	8-41
3-TK-30-166	Yes	Yes	8-41

7.19.1 FIRE AREA/ZONE: 3-TK-30-161A

FIRE AREA/ZONE: 3-TK-30-161A

AREA: 1725 sq. ft. DESCRIPTION: AFW PUMP RM.

DESIGN BASIS FIRE

Fire Loading Category:	Low
Fire Loading - Max Permiss:	160,000.0 Btu's/sq.ft.

FIRE PROTECTION (AVAILABLE)

Suppression (type)	pre-action sprinkler, deluge P-504, P-140
Hose Stations	none, hydrant on yard main
Portable Extinguishers	yes
Detectors (type)	infrared, ionization, local heat detectors

FIRE RESISTANCE RATING

Walls	HC
Floor, Ceiling, Roof	HC
Penetrations	NP/ext, NC/ext, P, C, NP/145B
Fixed Openings	louvers, OH/161B, OP/exterior, NP/145B
Doors	(2)NR/exterior

HOT STANDBY SYSTEMS	Equipment	Valves	Cable
Reactor Coolant			
Reactor Protection System			
Shutdown Cooling			
Chemical and Volume Control			
Main Feedwater			
Main Steam			
HVAC	A,B		A,B
Auxiliary Feedwater	A,B,C,N	A,B,C,N	A,B,C
Engineered Safety Feature			A,B,C,D
Component Cooling Water			
Saltwater Cooling Water			
Emergency Chilled Water			
Diesel Generator Systems			

COLD SHUTDOWN SYSTEMS	Equipment	Valves	Cable
Shutdown Cooling			
CCW (To SDC)			
HVAC			
Summary (Hot and Cold)	A,B,C,N	A,B,C,N	A,B,C,D

ESSENTIAL ELECTRIC SYSTEMS	Equipment	MCC and Switchgear	Cable
220 KV (AC)			
4160 V (AC)			
480 V (AC)			
120 V (AC)			
125 V (DC)			
Electric Panels	A,B,C		A,B,C
Summary	A,B,C		A,B,C

ASSOCIATED CIRCUITS OF CONCERN

H/I Pressure Interface	NO
Spurious Operation	YES

FIRE AREA/ZONE 3-TK-30-161A

7.19.1.1 Location

Tank Building - El. 30'-0" - Auxiliary Feedwater Pump Room - 1725 square feet - Figure 8-41

7.19.1.2 Fire Loading

Fire loading category - Low
Maximum permissible fire loading - 160,000 Btu/sq. ft. (Note 1)

Note 1:The maximum permissible fire loading is based on an evenly distributed loading of combustible materials.

7.19.1.3 Design Basis Fire

The design basis fire is postulated to be a fire that would involve mostly cable insulation and oil.

The design basis fire is conservatively based on the simultaneous total combustion of all combustibles in the zone.

7.19.1.4 Fire Protection Equipment

The zone contains an automatic pre-action sprinkler system, with infrared flame detector actuation. Water spray systems, with fixed temperature rate of rise actuation, are provided for auxiliary feedwater pumps P-504 and P-140. Actuation by the heat detectors or the infrared detectors results in control room annunciation. Manual fire fighting equipment is located within the zone. An ionization smoke detector, located in the zone, provides early warning alarm in the control room.

7.19.1.5 Construction

The floor, ceiling and walls are nonrated reinforced concrete construction with an approximate thickness of 2 feet. A partial height fire partition separates auxiliary feedwater pumps P-504 and P-141. Two nonrated doors open to the exterior. The area has a double wall interface with 3-142B, on the north. Two manholes and a cable vault (fire zones 161C, D, and E) comprise the interface. The 3-142B side is a 3-hour rated, the 3-161C, D, & E sides are heavy concrete.

7.19.1.6 Licensee Controlled Specification Barriers

For definition of the barriers requiring surveillance per LCS 3.7.104, refer to the latest revision of Figure 8-41, sheet 3.

7.19.1.7 Conclusions

The ionization and infrared detectors are expected to detect the fire in its initial stages of growth and alert the control room for prompt response by the fire department. The fire department then enters the pump room and extinguishes the fire with portable equipment or manually actuates the water spray systems as needed to protect safe shutdown equipment. The activation of the infrared detectors releases a tripping device to open the pre-action valve, allowing water to pressurize the sprinkler system. Sprinkler flow is initiated when the further rise in ambient temperature causes the fusible links on the closed sprinkler heads to melt. Water spray systems with fixed temperature rate of rise actuation are installed locally over Pumps P-504 and P-140 to prevent propagation of a pump fire to involve more than one auxiliary feedwater pump. Pump P-141 is protected by a partial height concrete fire partition, which protects it from redundant pumps.

The closed gravity feed lube oil system is installed in this zone to provide adequate lubrication of the auxiliary feedwater pump motor bearings in the event steam supply line to pump P-140 driver breaks. This system consists of an oil supply tank located on the roof for each motor to Train A and B pumps, fusible link oil release valves, and a gravity drain tank by each motor. The rise in ambient temperature above 212°F due to the steam line break or a fire will cause the fusible link valves to open. Following this, combustible oil will be fed through the pump bearings and to a collection tank at the total rate of 2.68 gpm. The maximum amount of the oil introduced into the room is 120 gallons. This amount of oil will increase fire loading in the room by approximately 9,240 BTU/sq. ft. A metal shroud is provided around the turbine driven AFW pump lube oil system, in order to protect the adjacent pumps from oil spray, which could create a fire hazard in the event of a lube oil line rupture.

The smoke generated by the design basis fire will be vented through the openings in the exterior wall. Portable smoke exhaust fans may be used if additional smoke removal capability is required.

Loss of one train of the auxiliary feedwater pumps and HVAC units is to be expected as a result of the postulated design basis fire. At least one auxiliary feedwater pump will remain available.

The fire area/zone boundaries were evaluated. The design basis fire is insufficient to breach the barriers defining the zone/fire area.

7.19.1.8 Fire Area 3-TK-(-2)-161 Appendix R Compliance

Safe shutdown capability will be provided by utilizing Train A or B systems. Safe shutdown analysis demonstrates that Train A or B AFW systems may be disabled by fire. At least one of the trains will remain available. Functionally redundant components will remain available and will be utilized in conjunction with operator action on manual or disabled components to achieve safe shutdown.

FIRE AREA/ZONE 3-TK-30-161A

One train of systems necessary to achieve hot standby and cold shutdown for a fire in area 3-161 has been evaluated to remain available for safe shutdown in accordance with 10CFR50, Appendix R, III.G.1 and III.G.2.b and c. A deviation from the requirements of 10CFR50 Appendix R, III.G.2.b has been requested for intervening combustibles between the auxiliary feedwater pumps and valves in zone 3-TK-30-161A. A deviation from the requirements of 10CFR50 Appendix R, III.G.2.c has been requested for one hour wrap without automatic suppression and detection in zone 3-TK-(-2)-161B. The fire detection and suppression systems in these areas/zones were evaluated and shown to provide a level of protection equivalent to the requirements of the applicable sections of Appendix R.

7.19.2 FIRE AREA/ZONE: 3-TK-(-2)-161B

FIRE AREA/ZONE: 3-TK-(-2)-161B

AREA: 2506 sq. ft. DESCRIPTION: AFW PIPE TUNNEL

DESIGN BASIS FIRE

Fire Loading Category:	Minimal
Fire Loading - Max Permiss:	13,000.0 Btu's/sq.ft.

FIRE PROTECTION (AVAILABLE)

Suppression (type)	none
Hose Stations	none
Portable Extinguishers	none, adjacent
Detectors (type)	none

FIRE RESISTANCE RATING

Walls	3hr/136, 137A, 138, 142B, others HC
Floor, Ceiling, Roof	2hr/142A, 142B, 145B, 173, 176, HC/161A, grade
Penetrations	SG, P, C, QP/136, QP/138, NP/176
Fixed Openings	OH/161A, OP/176
Doors	none

HOT STANDBY SYSTEMS	Equipment	Valves	Cable
Reactor Coolant			
Reactor Protection System			
Shutdown Cooling			
Chemical and Volume Control			
Main Feedwater			
Main Steam		A,B	A,B
HVAC			
Auxiliary Feedwater	A,B,N	A,B	a,A,B
Engineered Safety Feature			
Component Cooling Water			
Saltwater Cooling Water			
Emergency Chilled Water			
Diesel Generator Systems			

COLD SHUTDOWN SYSTEMS	Equipment	Valves	Cable
Shutdown Cooling			
CCW (To SDC)			
HVAC			
Summary (Hot and Cold)	A,B,N	A,B	a,A,B

ESSENTIAL ELECTRIC SYSTEMS	Equipment	MCC and Switchgear	Cable
220 KV (AC)			
4160 V (AC)			
480 V (AC)			
120 V (AC)			
125 V (DC)			
Electric Panels			A,B
Summary			A,B

ASSOCIATED CIRCUITS OF CONCERN

H/I Pressure Interface	NO
Spurious Operation	NO

FIRE AREA/ZONE 3-TK-(-2)-161B

7.19.2.1 Location

Tank Building - El. (-2-6') - Auxiliary Feedwater Pipe Tunnel - 2506 square feet - Figures 8-27, 8-28, 8-32, 8-41

7.19.2.2 Fire Loading

Fire loading category - Minimal
Maximum permissible fire loading - 13,000 Btu/sq. ft.

7.19.2.3 Design Basis Fire

A fire is not expected to occur during normal operations. The maximum credible fire is postulated to involve transient combustible materials.

7.19.2.4 Fire Protection Equipment

No fire fighting or fire detection equipment is provided within the zone. Manual fire fighting equipment is available in adjacent zone 3-TK-30-161A.

7.19.2.5 Construction

The walls separating the zone from 3-CT-(-2)-142B, 3-SE-(-15)-136, 3-SE-(-15)-137A, and 3-SE-(-15)-138 (single wall section), are three hour rated heavy concrete barriers. The walls to 3-TK-30-161A, 3-SE-(-2)-176 and 3-SE-(-15)-138 (double wall section), as well as to the exterior are nonrated heavy concrete barriers, approximately 18 inches thick. The wall to containment is also nonrated heavy concrete but is approximately 4' thick. The floor and ceiling barriers are two hour rated except those that go to the exterior which are nonrated heavy concrete. The zone is open to the auxiliary feedwater pump room (3-TK-30-161A).

7.19.2.6 Licensee Controlled Specification Barriers

For definition of the barriers requiring surveillance per LCS 3.7.104, refer to the latest revisions of Figures 8-27, 8-28, 8-32, and 8-41, sheet 3.

Cable for the system is wrapped:
Auxiliary Feedwater - Train A (3HV-4730)

7.19.2.7 Conclusions

Propagation of the transient combustible fire through the open access hatch to adjacent zone 3-TK-30-161A is postulated, but is not expected to occur. Safe shutdown systems in the zone above (i.e., 3-161A) are protected by infrared and ionization detectors, and an automatic pre-action sprinkler system.

FIRE AREA/ZONE 3-TK-(-2)-161B

The fire boundaries between 3-TK-(-2)-161B and 3-SE-(-2)-176, 3-SE-(-15)-136 and 3-SE-(-15)-138 were evaluated. The fire boundaries and associated fire protection features were found to be adequate to prevent the propagation of fire beyond the fire boundaries.

The design basis fire is insufficient to breach the barriers defining the zone/fire area.

Southern California Edison has committed to wrap the control cables for the Train A AFW isolation valve in this fire zone. A deviation from the requirements of 10CFR50 Appendix R, III.G.2.c has been requested for one hour wrap without automatic suppression and detection in zone 3-TK-(-2)-161B. The fire detection and suppression systems in these areas/zones were evaluated and shown to provide a level of protection equivalent to the requirements of the applicable sections of Appendix R.

Appendix R compliance for fire area 3-TK-(-2)-161 is discussed in fire zone 3-TK-30-161A.

7.19.3 FIRE AREA/ZONE: 3-TK-18-161C

FIRE AREA/ZONE: 3-TK-18-161C

AREA: 85 sq. ft. DESCRIPTION: AFW PUMP ROOM CABLE VAULT

DESIGN BASIS FIRE

Fire Loading Category:	Low
Fire Loading - Max Permiss:	80,000.0 Btu's/sq.ft.

FIRE PROTECTION (AVAILABLE)

Suppression (type)	none
Hose Stations	none
Portable Extinguishers	none, adjacent
Detectors (type)	none

FIRE RESISTANCE RATING

Walls	3hr/142B HC/others
Floor, Ceiling, Roof	HC/floor
Penetrations	QD, C
Fixed Openings	OH
Doors	none

HOT STANDBY SYSTEMS	Equipment	Valves	Cable
Reactor Coolant			
Reactor Protection System			
Shutdown Cooling			
Chemical and Volume Control			
Main Feedwater			
Main Steam			
HVAC			B
Auxiliary Feedwater			A,B
Engineered Safety Feature			
Component Cooling Water			
Saltwater Cooling Water			
Emergency Chilled Water			
Diesel Generator Systems			

COLD SHUTDOWN SYSTEMS	Equipment	Valves	Cable
Shutdown Cooling			
CCW (To SDC)			
HVAC			
Summary (Hot and Cold)			A,B

ESSENTIAL ELECTRIC SYSTEMS	Equipment	MCC and Switchgear	Cable
220 KV (AC)			
4160 V (AC)			
480 V (AC)			
120 V (AC)			
125 V (DC)			
Electric Panels			A,B
Summary			A,B

ASSOCIATED CIRCUITS OF CONCERN

H/I Pressure Interface	NO
Spurious Operation	NO

FIRE AREA/ZONE 3-TK-18-161C

7.19.3.1 Location

Tank Building - El. 18'-0" Auxiliary Feedwater Pump Room cable vault - 85 square feet - Fig. 8-26-

7.19.3.2 Fire Loading

Fire loading category - Low
Maximum permissible fire loading - 80,000 Btu/sq. ft. (Note 1)

Note 1:The maximum permissible fire loading is based on an evenly distributed loading of combustible materials.

7.19.3.3 Design Basis Fire

The design basis fire is postulated to be a fire that would involve mostly cable insulation.

7.19.3.4 Fire Protection Equipment

Manual fire fighting equipment is available within fire zone 3-161A.

7.19.3.5 Construction

The floor, and three walls are nonrated reinforced concrete construction with an approximate thickness of 2 feet. The area has a double wall interface with 3-142B, on the North. The 3-142B side is 3-hour rated, the 3-161C side is heavy concrete. A 1-1/2 hour rated fire damper interfaces with 2-142B. The ceiling is open to 3-161A.

7.19.3.6 Licensee Controlled Specification Barriers

For definition of the barriers requiring surveillance per LCS 3.7.104, refer to the latest revision of Figure 8-26, sheet 3.

7.19.3.7 Conclusions

The fire area boundaries between 3-TK-18-161C and 3-CT-(-2)-142B was evaluated. The fire boundaries and associated fire protection features were found to be adequate to prevent the propagation of fire beyond the fire boundaries.

The design basis fire is insufficient to breach the barriers defining the zone/fire area.

Appendix R compliance for fire area 3-TK-(-2)-161 is discussed in fire zone 3-TK-30-161A.

7.19.4 FIRE AREA/ZONE: 3-TK-25-161D

FIRE AREA/ZONE: 3-TK-25-161D

AREA: 50 sq. ft. DESCRIPTION: AFW PUMP ROOM MANHOLE

DESIGN BASIS FIRE

Fire Loading Category:	Minimal
Fire Loading - Max Permiss:	80,000.0 Btu's/sq.ft.

FIRE PROTECTION (AVAILABLE)

Suppression (type)	none
Hose Stations	none
Portable Extinguishers	none,adjacent
Detectors (type)	none

FIRE RESISTANCE RATING

Walls	3HR/142B, HC/others
Floor, Ceiling, Roof	HC/floor, ceiling MH/ceiling
Penetrations	C
Fixed Openings	MH
Doors	none

HOT STANDBY SYSTEMS	Equipment	Valves	Cable
Reactor Coolant			
Reactor Protection System			
Shutdown Cooling			
Chemical and Volume Control			
Main Feedwater			
Main Steam			
HVAC			B
Auxiliary Feedwater			B,C
Engineered Safety Feature			B
Component Cooling Water			
Saltwater Cooling Water			
Emergency Chilled Water			
Diesel Generator Systems			

COLD SHUTDOWN SYSTEMS	Equipment	Valves	Cable
Shutdown Cooling			
CCW (To SDC)			
HVAC			
Summary (Hot and Cold)			B,C

ESSENTIAL ELECTRIC SYSTEMS	Equipment	MCC and Switchgear	Cable
220 KV (AC)			
4160 V (AC)			
480 V (AC)			
120 V (AC)			
125 V (DC)			
Electric Panels			B,C
Summary			B,C

ASSOCIATED CIRCUITS OF CONCERN

H/I Pressure Interface	NO
Spurious Operation	NO

FIRE AREA/ZONE 3-TK-25-161D

7.19.4.1 Location

Tank Building - El. 25'-0" Auxiliary Feedwater Pump Room Manhole - 50 square feet - Fig. 8-26-

7.19.4.2 Fire Loading

Fire loading category - Minimal
Maximum permissible fire loading - 80,000 Btu/sq. ft. (Note 1)

Note 1:The maximum permissible fire loading is based on an evenly distributed loading of combustible materials.

7.19.4.3 Design Basis Fire

The design basis fire is postulated to be a fire that would involve mostly cable insulation.

7.19.4.4 Fire Protection Equipment

Manual fire fighting equipment is available within fire zone 3-161A.

7.19.4.5 Construction

The floor, ceiling, and three walls are nonrated reinforced concrete construction with an approximate thickness of 2 feet. The area has a double wall interface with 3-142B, on the North. The 3-142B side is 3-hour rated, the 3-161D side is heavy concrete. A three foot diameter steel manhole cover provides access from zone 3-161A.

7.19.4.6 Licensee Controlled Specification Barriers

For definition of the barriers requiring surveillance per LCS 3.7.104, refer to the latest revision of Figure 8-26, sheet 3.

7.19.4.7 Conclusions

The fire area boundaries between 3-TK-25-161D and 3-CT-(-2)-142B was evaluated. The fire boundaries and associated fire protection features were found to be adequate to prevent the propagation of fire beyond the fire boundaries.

The design basis fire is insufficient to breach the barriers defining the zone/fire area.

Appendix R compliance for fire area 3-TK-(-2)-161 is discussed in fire zone 3-TK-30-161A.

7.19.5 FIRE AREA/ZONE: 3-TK-25-161E

FIRE AREA/ZONE: 3-TK-25-161E

AREA: 70 sq. ft. DESCRIPTION: AFW PUMP ROOM MANHOLE

DESIGN BASIS FIRE

Fire Loading Category:	Minimal
Fire Loading - Max Permiss:	80,000.0 Btu's/sq.ft.

FIRE PROTECTION (AVAILABLE)

Suppression (type)	none
Hose Stations	none
Portable Extinguishers	none, adjacent
Detectors (type)	none

FIRE RESISTANCE RATING

Walls	3HR/142B, HC/others
Floor, Ceiling, Roof	HC/floor, ceiling MH/ceiling
Penetrations	C
Fixed Openings	MH
Doors	none

HOT STANDBY SYSTEMS	Equipment	Valves	Cable
Reactor Coolant			
Reactor Protection System			
Shutdown Cooling			
Chemical and Volume Control			
Main Feedwater			
Main Steam			
HVAC			A
Auxiliary Feedwater			A,C
Engineered Safety Feature			A
Component Cooling Water			
Saltwater Cooling Water			
Emergency Chilled Water			
Diesel Generator Systems			

COLD SHUTDOWN SYSTEMS	Equipment	Valves	Cable
Shutdown Cooling			
CCW (To SDC)			
HVAC			
Summary (Hot and Cold)			A,C

ESSENTIAL ELECTRIC SYSTEMS	Equipment	MCC and Switchgear	Cable
220 KV (AC)			
4160 V (AC)			
480 V (AC)			
120 V (AC)			
125 V (DC)			
Electric Panels			A,C
Summary			A,C

ASSOCIATED CIRCUITS OF CONCERN

H/I Pressure Interface	NO
Spurious Operation	NO

FIRE AREA/ZONE 3-TK-25-161E

7.19.5.1 Location

Tank Building - El. 25'-0" Auxiliary Feedwater Pump Room Manhole - 70 square feet - Fig. 8-26-

7.19.5.2 Fire Loading

Fire loading category - Minimal
Maximum permissible fire loading - 80,000 Btu/sq. ft. (Note 1)

Note 1:The maximum permissible fire loading is based on an evenly distributed loading of combustible materials.

7.19.5.3 Design Basis Fire

The design basis fire is postulated to be a fire that would involve mostly cable insulation.

7.19.5.4 Fire Protection Equipment

Manual fire fighting equipment is available within fire zone 3-161A.

7.19.5.5 Construction

The floor, ceiling, and three walls are nonrated reinforced concrete construction with an approximate thickness of 2 feet. The area has a double wall interface with 3-142B, on the North. The 3-142B side is 3-hour rated, the 3-161E side is heavy concrete. A three foot diameter steel manhole cover provides access from zone 3-161A.

7.19.5.6 Licensee Controlled Specification Barriers

For definition of the barriers requiring surveillance per LCS 3.7.104, refer to the latest revision of Figure 8-26, sheet 3.

7.19.5.7 Conclusions

The fire area boundaries between 3-TK-25-161E and 3-CT-(-2)-142B was evaluated. The fire boundaries and associated fire protection features were found to be adequate to prevent the propagation of fire beyond the fire boundaries.

The design basis fire is insufficient to breach the barriers defining the zone/fire area.

Appendix R compliance for fire area 3-TK-(-2)-161 is discussed in fire zone 3-TK-30-161A.

7.19.6 FIRE AREA/ZONE: 3-TK-30-163

FIRE AREA/ZONE: 3-TK-30-163

AREA: 1087 sq. ft. DESCRIPTION: REFUEL WTR. STORAGE TK.

DESIGN BASIS FIRE

Fire Loading Category:	Minimal
Fire Loading - Max Permiss:	13,000.0 Btu's/sq.ft.

FIRE PROTECTION (AVAILABLE)

Suppression (type)	none
Hose Stations	none, hydrant on yard main
Portable Extinguishers	none
Detectors (type)	none

FIRE RESISTANCE RATING

Walls	HC
Floor, Ceiling, Roof	floor HC, no roof
Penetrations	P, C, NC/161A, NP/161A
Fixed Openings	none
Doors	none

HOT STANDBY SYSTEMS	Equipment	Valves	Cable
Reactor Coolant			
Reactor Protection System			
Shutdown Cooling			
Chemical and Volume Control	N		
Main Feedwater			
Main Steam			
HVAC			
Auxiliary Feedwater		N	A,B
Engineered Safety Feature			
Component Cooling Water			
Saltwater Cooling Water			
Emergency Chilled Water			
Diesel Generator Systems			

COLD SHUTDOWN SYSTEMS	Equipment	Valves	Cable
Shutdown Cooling			
CCW (To SDC)			
HVAC			
Summary (Hot and Cold)	N	N	A,B

ESSENTIAL ELECTRIC SYSTEMS	Equipment	MCC and Switchgear	Cable
220 KV (AC)			
4160 V (AC)			
480 V (AC)			
120 V (AC)			
125 V (DC)			
Electric Panels			
Summary			

ASSOCIATED CIRCUITS OF CONCERN

H/I Pressure Interface	NO
Spurious Operation	NO

FIRE AREA/ZONE 3-TK-30-163

7.19.6.1 Location

Tank Building - El. 30'-0" - Refueling Water Storage Tank - 1087 square feet - Figure 8-41

7.19.6.2 Fire Loading

Fire loading category - Minimal
Maximum permissible fire loading - 13,000 Btu/sq. ft. (Note 1)

Note 1:The maximum permissible fire loading is based on an evenly distributed loading of combustible materials.

7.19.6.3 Design Basis Fire

The design basis fire is postulated to be a fire that would involve mostly cable insulation.

The design basis fire is conservatively based on the simultaneous total combustion of all combustibles in the area.

7.19.6.4 Fire Protection Equipment

There is no fire fighting or fire detection equipment within the area. Manual hose streams are available from yard hydrants or portable equipment.

7.19.6.5 Construction

The walls defining the area are nonrated reinforced concrete construction with an approximate thickness of 2 feet. The floor is heavy concrete construction. No roof is provided.

7.19.6.6 Licensee Controlled Specification Barriers

For definition of the barriers requiring surveillance per LCS 3.7.104, refer to the latest revision of Figure 8-41, sheet 3.

7.19.6.7 Conclusions

The available portable equipment is adequate to extinguish the fire.

The low fire loading and the substantial construction of the heavy concrete walls preclude the propagation of the design basis fire beyond the boundaries defining the area.
Fire Area 3-TK-30-163 Appendix R Compliance

FIRE AREA/ZONE 3-TK-30-163

Safe shutdown capability will be provided by utilizing Train A or B systems. Functionally redundant components protected from fire damage will be utilized in conjunction with operator action on manual or disabled components to achieve safe shutdown.

One train of systems necessary to achieve hot standby and cold shutdown conditions independent of the subject fire area will be free of fire damage. Therefore, this fire area complies with the criteria of 10CFR50, Appendix R, III.G.1.

7.19.7 FIRE AREA/ZONE: 3-TK-30-164

FIRE AREA/ZONE: 3-TK-30-164

AREA: 743 sq. ft. DESCRIPTION: CONDENSATE STORAGE TK.

DESIGN BASIS FIRE

Fire Loading Category:	Minimal
Fire Loading - Max Permiss:	13,000.0 Btu's/sq.ft.

FIRE PROTECTION (AVAILABLE)

Suppression (type)	none
Hose Stations	none, hydrant on yard main
Portable Extinguishers	none
Detectors (type)	none

FIRE RESISTANCE RATING

Walls	HC
Floor, Ceiling, Roof	HC
Penetrations	P, C, NC/exterior, NP/exterior
Fixed Openings	OP/200B (10" Drain Line)
Doors	NR/exterior

HOT STANDBY SYSTEMS	Equipment	Valves	Cable
Reactor Coolant			
Reactor Protection System			
Shutdown Cooling			
Chemical and Volume Control			
Main Feedwater			
Main Steam			
HVAC			
Auxiliary Feedwater	N	N	A,B
Engineered Safety Feature			
Component Cooling Water			
Saltwater Cooling Water			
Emergency Chilled Water			
Diesel Generator Systems			

COLD SHUTDOWN SYSTEMS	Equipment	Valves	Cable
Shutdown Cooling			
CCW (To SDC)			
HVAC			
Summary (Hot and Cold)	N	N	A,B

ESSENTIAL ELECTRIC SYSTEMS	Equipment	MCC and Switchgear	Cable
220 KV (AC)			
4160 V (AC)			
480 V (AC)			
120 V (AC)			
125 V (DC)			
Electric Panels			
Summary			

ASSOCIATED CIRCUITS OF CONCERN

H/I Pressure Interface	NO
Spurious Operation	NO

FIRE AREA/ZONE 3-TK-30-164

7.19.7.1 Location

Tank Building - El. 30'-0" - Condensate Storage Tank - 743 square feet - Figure 8-41

7.19.7.2 Fire Loading

Fire loading category - Minimal
Maximum permissible fire loading - 13,000 Btu/sq. ft. (Note 1)

Note 1:The maximum permissible fire loading is based on an evenly distributed loading of combustible materials.

7.19.7.3 Design Basis Fire

The design basis fire is postulated to be a fire that would involve mostly cable insulation.

The design basis fire is conservatively based on the simultaneous total combustion of all combustibles in the area.

7.19.7.4 Fire Protection Equipment

There is no fire fighting or fire detection equipment within the area. Manual hose streams are available from yard hydrants or portable equipment.

7.19.7.5 Construction

The walls are nonrated reinforced concrete construction with an approximate thickness of 2 feet. The floor and ceiling are heavy concrete. The exterior door is nonrated. There is a 10" drain line approximately two feet from grade elevation on the South wall.

7.19.7.6 Licensee Controlled Specification Barriers

For definition of the barriers requiring surveillance per LCS 3.7.104, refer to the latest revision of Figure 8-41, sheet 3.

7.19.7.7 Conclusions

The available portable equipment is adequate to extinguish the fire.

The low fire loading and the substantial construction of the heavy concrete walls and nonrated doors preclude the propagation of the design basis fire beyond the boundaries defining the area.

7.19.7.8 Fire Area 3-TK-30-164 Appendix R Compliance

Safe shutdown capability will be provided by utilizing Train A or B systems. Functionally redundant components protected from fire damage will be utilized in conjunction with operator action on manual or disabled components to achieve safe shutdown.

One train of systems necessary to achieve hot standby and cold shutdown conditions independent of the subject fire area will be free of fire damage. Therefore, this fire area complies with the criteria of 10CFR50, Appendix R, III.G.1.

7.19.8 FIRE AREA/ZONE: 3-TK-30-165

FIRE AREA/ZONE: 3-TK-30-165

AREA: 1002 sq. ft. DESCRIPTION: CONDENSATE STORAGE TK.

DESIGN BASIS FIRE

Fire Loading Category:	Minimal
Fire Loading - Max Permiss:	13,000.0 Btu's/sq.ft.

FIRE PROTECTION (AVAILABLE)

Suppression (type)	none
Hose Stations	none, hydrant on yard main
Portable Extinguishers	none
Detectors (type)	none

FIRE RESISTANCE RATING

Walls	HC
Floor, Ceiling, Roof	HC, no roof
Penetrations	P, C, NP/Exterior
Fixed Openings	OP/ 200B (10" Drain)
Doors	none

HOT STANDBY SYSTEMS	Equipment	Valves	Cable
Reactor Coolant			
Reactor Protection System			
Shutdown Cooling			
Chemical and Volume Control			
Main Feedwater			
Main Steam			
HVAC			
Auxiliary Feedwater	N		
Engineered Safety Feature			
Component Cooling Water			
Saltwater Cooling Water			
Emergency Chilled Water			
Diesel Generator Systems			

COLD SHUTDOWN SYSTEMS	Equipment	Valves	Cable
Shutdown Cooling			
CCW (To SDC)			
HVAC			
Summary (Hot and Cold)	N		

ESSENTIAL ELECTRIC SYSTEMS	Equipment	MCC and Switchgear	Cable
220 KV (AC)			
4160 V (AC)			
480 V (AC)			
120 V (AC)			
125 V (DC)			
Electric Panels			
Summary			

ASSOCIATED CIRCUITS OF CONCERN

H/I Pressure Interface	NO
Spurious Operation	NO

FIRE AREA/ZONE 3-TK-30-165

7.19.8.1 Location

Tank Building - El. 30'-0" - Condensate Storage Tank - 1002 square feet - Figure 8-41

7.19.8.2 Fire Loading

Fire loading category - Minimal
Maximum permissible fire loading - 13,000 Btu/sq. ft. (Note 1)

Note 1:The maximum permissible fire loading is based on an evenly distributed loading of combustible materials.

7.19.8.3 Design Basis Fire
The design basis fire is postulated to be a fire that would involve mostly cable insulation.

The design basis fire is conservatively based on the simultaneous total combustion of all combustibles in the area.

7.19.8.4 Fire Protection Equipment

There is no fire fighting or fire detection equipment within the area. Manual hose streams are available from yard hydrants or portable equipment.

7.19.8.5 Construction

The area walls are nonrated. The floor is heavy concrete. No roof is provided. There is a 10" drain line approximately 20 feet from grade elevation on the West wall.

7.19.8.6 Licensee Controlled Specification Barriers

For definition of the barriers requiring surveillance per LCS 3.7.104, refer to the latest revision of Figure 8-41, sheet 3.

7.19.8.7 Conclusions

The available portable equipment is adequate to extinguish the fire.

The low fire loading and the substantial construction of the heavy concrete walls preclude the propagation of the design basis fire beyond the boundaries defining the area.

7.19.8.8 Fire Area 3-TK-30-165 Appendix R Compliance

One train of systems necessary to achieve hot standby and cold shutdown conditions independent of the subject fire area will be free of fire damage. Therefore, this fire area complies with the criteria of 10CFR50, Appendix R, III.G.1.

7.19.9 FIRE AREA/ZONE: 3-TK-30-166

FIRE AREA/ZONE: 3-TK-30-166

AREA: 1091 sq. ft. DESCRIPTION: REFUELING WTR. STORAGE TK.

DESIGN BASIS FIRE

Fire Loading Category:	MInimal
Fire Loading - Max Permiss:	13,000.0 Btu's/sq.ft.

FIRE PROTECTION (AVAILABLE)

Suppression (type)	none
Hose Stations	none, hydrant on yard main
Portable Extinguishers	none
Detectors (type)	none

FIRE RESISTANCE RATING

Walls	HC
Floor, Ceiling, Roof	floor, HC, no roof
Penetrations	P, C, NP/161A
Fixed Openings	none
Doors	none

HOT STANDBY SYSTEMS	Equipment	Valves	Cable
Reactor Coolant			
Reactor Protection System			
Shutdown Cooling			
Chemical and Volume Control	N		
Main Feedwater			
Main Steam			
HVAC			
Auxiliary Feedwater		A,B	A,B
Engineered Safety Feature			A,B,C,D
Component Cooling Water			
Saltwater Cooling Water			
Emergency Chilled Water			
Diesel Generator Systems			

COLD SHUTDOWN SYSTEMS	Equipment	Valves	Cable
Shutdown Cooling			
CCW (To SDC)			
HVAC			
Summary (Hot and Cold)	N	A,B	A,B,C,D

ESSENTIAL ELECTRIC SYSTEMS	Equipment	MCC and Switchgear	Cable
220 KV (AC)			
4160 V (AC)			
480 V (AC)			
120 V (AC)			
125 V (DC)			
Electric Panels			A,B
Summary			A,B

ASSOCIATED CIRCUITS OF CONCERN

H/I Pressure Interface	NO
Spurious Operation	YES

FIRE AREA/ZONE 3-TK-30-166

7.19.9.1 Location

Tank Building - El. 30'-0" - Refueling Water Storage Tank - 1091 square feet - Figure 8-41

7.19.9.2 Fire Loading

Fire loading category - Minimal
Maximum permissible fire loading - 13,000 Btu/sq. ft. (Note 1)

Note 1:The maximum permissible fire loading is based on an evenly distributed loading of combustible materials.

7.19.9.3 Design Basis Fire

The design basis fire is postulated to be a fire that would involve mostly cable insulation.

The design basis fire is conservatively based on the simultaneous total combustion of all combustibles in the area.

7.19.9.4 Fire Protection Equipment

There is no fire fighting or fire detection equipment within the area. Manual hose streams are available from yard hydrants or portable equipment.

7.19.9.5 Construction

The walls of the area are nonrated reinforced concrete construction with an approximate thickness of 2 feet. The floor is heavy concrete. No roof is provided.

7.19.9.6 Licensee Controlled Specification Barriers

For definition of the barriers requiring surveillance per LCS 3.7.104, refer to the latest revision of Figure 8-41, sheet 3.

7.19.9.7 Conclusions

The available portable equipment is adequate to extinguish the fire.

The low fire loading and the substantial construction of the barriers preclude the propagation of the design basis fire beyond the boundaries defining the area.

7.19.9.8 Fire Area 3-TK-30-166 Appendix R Compliance

Safe shutdown capability will be provided by utilizing Train A systems. Functionally redundant components protected from fire damage will be utilized in conjunction with operator action on manual or disabled components to achieve safe shutdown.

One train of systems necessary to achieve hot standby and cold shutdown conditions independent of the subject fire area will be free of fire damage. Therefore, this fire area complies with the criteria of 10CFR50, Appendix R, III.G.1.

A. APPENDIX A (DELETED)

NOTE

Appendix A of the UFHA, Systems Required for Safe Shutdown in the Event of Fire – SONGS Unit 1, was removed as part of Revision 15 of the UFHA, since Unit 1 is permanently shutdown and being decommissioned. Refer to the SONGS Unit 1 Defueled Safety Analysis Report for pertinent information related to the SONGS 1 Fire Protection Program.

B. APPENDIX B

SYSTEMS REQUIRED FOR SAFE SHUTDOWN IN THE EVENT OF FIRE

B.1 INTRODUCTION

This appendix describes the plant functions and systems that are required to establish and maintain the reactor in a safe shutdown condition in the event of a fire in any fire area or zone within the plant.

The appendix is divided into four sections:

- Safe Shutdown Assumptions (B.2)
- Safe Shutdown Functional Requirements (B.3)
- Safe Shutdown System Requirements (B.4)
- Safe Shutdown Logics, Figure B-1 thru B-14 (B.5)

B.2 SAFE SHUTDOWN SYSTEM ASSUMPTIONS

The following assumptions are made in order to identify the systems required for safe shutdown in the event of a fire:

- At the time of the fire, all trains of safe shutdown systems are functional (i.e., none of the safe shutdown systems or components are undergoing maintenance or testing).

- The plant is operating at 100 percent power. This plant operating mode is the most limiting condition for evaluation of safe shutdown systems. Plant operating conditions during modes 5 and 6 are also considered to ensure proper evaluation of the Shutdown Cooling System.

- Plant accidents or the most severe natural phenomena are not postulated concurrently with the fire or subsequent plant shutdown.

- No credit is taken for offsite power being available. Offsite power causing spurious operation was evaluated, however, only until such time as operator action is taken to isolate the fault or offsite power.

- Independent fires in separate fire areas or zones are not postulated to occur simultaneously.

B.3 SAFE SHUTDOWN FUNCTIONAL REQUIREMENTS

Two kinds of shutdown conditions are addressed: hot shutdown and cold shutdown. Hot shutdown is the condition where the reactor is subcritical, the boron concentration is within the technical specification limits and RCS average temperature is less than 350□F, and greater than 200°F. This condition is defined by the Technical Specifications as Hot Standby. Cold shutdown is the condition where the reactor is subcritical, the boron concentration is within technical specification limits and RCS average temperature is less than or equal to 200°F.

The following performance criteria as specified by 10CFR50 Appendix R must be met:

- The reactivity control functions shall be capable of achieving and maintaining cold shutdown reactivity conditions.
- The reactor coolant makeup function shall be capable of maintaining the reactor coolant level within the level indication in the pressurizer.
- The reactor heat removal function shall be capable of achieving and maintaining decay heat removal.
- The process monitoring function shall be capable of providing direct readings of the process variables necessary to perform and control the above functions.
- The supporting functions shall be capable of providing the process cooling, lubrication, etc., necessary to permit the operation of the equipment used for safe shutdown functions.

The specific safe shutdown functional requirements necessary to satisfy the criteria listed are:

- Reactivity Control
- RCS Temperature Control
- RCS Pressure Control
- RCS Inventory Control
- Long Term Decay Heat Removal
- Auxiliary Support Systems:

  Containment Temperature Control
  Control Room HVAC
  Class 1E Essential Power and Distribution
  Plant Parameter Monitoring
  Component Cooling Water
  Salt Water Cooling
  Emergency Chilled Water

SSD Component HVAC
Fire Suppression System

These shutdown functional requirements are described below:

B.3.1 REACTIVITY CONTROL

Initial reactivity control is accomplished by the control rods which are inserted when the reactor trip breaker portion of the reactor protection system is de-energized either automatically or manually in the control room.

Long term reactivity control function is accomplished by achieving and maintaining sufficient RCS boration to ensure subcriticality of the reactor from the hot standby condition to cold shutdown. The Chemical and Volume Control System (charging pumps) inject borated water for reactivity control.

B.3.2 RCS TEMPERATURE CONTROL

Reactor Coolant System temperature control is achieved through steam generator pressure and level control. The decay heat removal function of the RCS shall be capable of transferring fission product decay heat from the reactor core at a rate such that specified acceptable fuel design limits and design conditions of the reactor coolant pressure boundary are not exceeded. Decay heat removal in hot standby is accomplished by the use of auxiliary feedwater pumps supplying water to the steam generators from the condensate storage tanks. The secondary side pressure in the steam generators is maintained by operation of the atmospheric dump valves (ADVs) or the main steam safety valves.

B.3.3 RCS PRESSURE CONTROL

RCS pressure control is achieved through the use of 1E-powered pressurizer backup heaters, charging pumps, and pressurizer auxiliary spray. Charging pumps or pressurizer heaters are utilized to increase pressure (where heaters are available they will be credited). Auxiliary spray is utilized to decrease pressure if cooldown rate does not provide sufficient pressure control. Pressure is controlled by isolating normal pressurizer spray, isolating or depressurizing the Safety Injection Tanks and de-energizing the non-1E pressurizer heaters. Although not specifically credited in the logic diagrams, charging pumps may be used to control RCS pressure.

B.3.4 RCS INVENTORY CONTROL

The RCS make-up control function is achieved by ensuring that sufficient make-up inventory is provided to compensate for RCS fluid losses. These losses occur as a result of identified and unidentified leakage from the RCS and contraction of the RCS during cooldown from hot standby to cold shutdown conditions.

RCS make-up inventory is provided via the charging pumps from the BAMU and RWST tanks.

B.3.5 LONG-TERM DECAY HEAT REMOVAL

Long-term decay heat removal is provided by the Shutdown Cooling System through the low-pressure safety injection (LPSI) pumps and the shutdown cooling heat exchangers.

B.3.6 AUXILIARY SUPPORT SYSTEMS

B.3.6.1 Containment Cooling

The containment temperature shall be maintained within allowable limits. This is to ensure containment building equipment and instrumentation operability. Containment temperature is controlled by the Containment Emergency HVAC System.

B.3.6.2 Control Room HVAC

The control room atmosphere shall be maintained within allowable limits for habitability and equipment operation. This will be accomplished by the control room and control room cabinet area Emergency HVAC Systems.

B.3.6.3 Class 1E Essential Power Distribution System

The Class 1E electrical distribution system shall be capable of providing electrical power to identified safe shutdown components. The Class 1E electrical distribution system consists of the 4160V, 480V and 120V AC, the 125V DC and electrical panel (E.P.) systems. Portions of the Non-Class 1E distribution system which may impact the operation of the Class 1E distribution system are identified to ensure the availability of the Class 1E system.

B.3.6.4 PlAnt Parameter Monitoring

The process monitoring function shall be capable of providing direct readings of those plant process variables necessary for the plant operators to perform and/or control the safe shutdown functions. This instrumentation will include as a minimum pressurizer pressure, pressurizer level, RCS cold leg (T_c) temperature, RCS hot leg (T_h) temperature, steam generator level and pressure, level indication for tanks (which need to be monitored or have limited quantities relative to their safe shutdown requirements - e.g. CST) and diagnostic instrumentation for shutdown systems. The alternative shutdown capability includes instrumentation for monitoring the neutron flux in the source range. Power transfer switches provided in the switchgear rooms enable power for the source range flux monitors to be transferred from train "B" to train "A". Though not required to support the normal safe shutdown capability, neutron flux monitoring capability is available for all fire areas outside the containment. For fires postulated inside the containment, a fire area not requiring alternative shutdown, neutron flux indication may not be available. Adequate shutdown margin is assured through the isolation of unborated water

sources to the charging pump suction and the monitoring of the injected volume of borated water from the boric acid makeup tanks.

Alternative Shutdown capability also includes Train "A" AFW pump discharge and suction pressure gauges to indirectly monitor AFW flow, during the short period of time that the narrow range Steam Generator level indication might be off-scale. Achieving Decay Heat Removal function is assured by providing adequate AFW flow to steam generator(s).

B.3.6.5 Component Cooling Water

The Component Cooling Water (CCW) System provides cooling water to the shutdown cooling heat exchanger, low pressure safety injection pumps, component cooling water pumps, reactor coolant pump seals, emergency chiller and the containment emergency cooling units.

During an App. R Fire, certain fire areas will require make-up water to the CCW System via the Fire Water System using a fire hose connected from a local hose station to one of the CCW surge tanks. The diesel driven fire water pump is used to provide flow.

B.3.6.6 Salt Water Cooling

The Salt Water Cooling (SWC) System provides cooling water to the Component Cooling Water System via the saltwater cooling pumps and the ultimate heat sink (sea water) supplying water to the component cooling water heat exchangers.

B.3.6.7 Emergency Chilled Water

The Emergency Chilled Water (ECW) System provides cooling water for control room, boric acid makeup pump room, charging pump room, low pressure safety injection pump room, switchgear room and electrical distribution room HVAC units. The ECW system supports equipment in both Units 2 and 3. It has two redundant loops that are cooled by either Unit 2 or 3 CCW and may be powered from either Unit 2 or 3.

B.3.6.8 SSD Component HVAC

Emergency HVAC fans are used in specific rooms of the plant to provide a controlled environment ensuring continued, proper operation of safe shutdown equipment. In addition to the cooling units identified in the Emergency Chilled Water System above, cooling units for the containment and fan units for the saltwater cooling pump rooms are utilized for shutdown.

B.3.6.9 Control Room Emergency Lighting

Diesel backed control room emergency lighting is required to ensure adequate post fire lighting in the control room for operators to perform the necessary control room functions. Lighting is

provided via overhead control room emergency lights. These lights are powered via Train B but can be transferred to Train A power via transfer switch.

B.3.6.10 Spent Fuel Pool Cooling

The Spent Fuel Pool Cooling (SFPC) System is not required to be operational to support the safe shutdown of SONGS 2 & 3. However, SCE previously committed to protect one train of the Spent Fuel Pool Cooling System from fire damage. An evaluation of systems in the plant which are available to ensure cooling of the spent fuel pool has demonstrated that additional capability is available. Therefore, SCE considers that the protection of the Spent Fuel Pool Cooling System is not required.

B.3.6.11 Fire Suppression System

Fire water is required for fire areas where redundant CCW make-up pumps and cables are located. A manual action is taken to align a fire water hose station to the CCW surge tanks using an existing hose at the local hose station and tools stored in a locked box marked for CCW make-up tool storage. The diesel driven fire water pump is then credited to provide water through the underground fire water and riser system to the surge tanks for CCW make-up.

Fire water is also required for D/G cooling in fire areas where a spurious start of the diesel generator in conjunction with a failure of the D/G radiator fans is possible. The Fire Water System is hard piped to the D/G from a local stand pipe, and a manual action is taken to open the manual valves prior to starting the D/G.

B.4 SAFE SHUTDOWN SYSTEM REQUIREMENTS

The following system or portions thereof are required to provide the functional requirements listed in Section B.3.

- Reactor Coolant System (RCS)
- Main Steam System (MSS)
- Auxiliary Feedwater System (AFW)
- Main Feedwater System (MFW)
- Chemical and Volume Control System (CVCS)
- Shutdown Cooling System (SDC)
- Component Cooling Water System (CCW)
- Salt Water Cooling System (SWC)
- Containment Emergency Cooling System (HVAC)
- Emergency Chilled Water System (ECW)
- Diesel Generator Systems (DG)
- HVAC Systems (HVAC)
- Control Room Complex Emergency HVAC System (HVAC)
- Reactor Protection System (RPS)

- Control Room Emergency Lighting

The Containment Emergency Cooling System, HVAC Systems and Control Room Complex Emergency HVAC System are included together in the safe shutdown component listings in Section 7.0 as HVAC.

These systems, their system boundaries, and mode of operation are described below. Detailed descriptions of the system interactions are provided in the Safe Shutdown Logic diagrams provided in this section.

For all systems described, the system boundaries were drawn at miscellaneous instrument taps, tank overflow lines, closed vent and drain lines, steam traps, wye strainers, casing drains, closed manual valves and properly oriented check valves in addition to specific boundaries cited below.

B.4.1 REACTOR COOLANT SYSTEM

The primary functions of the Reactor Coolant System (RCS) are to transfer heat energy generated in the reactor core to the steam generators and to provide sufficient cooling of the reactor core in order to maintain its functional integrity. The RCS is a pressurized closed loop system with two coolant loops. The system consists of one reactor vessel, and two parallel coolant loops, each containing one steam generator, two reactor coolant pumps and associated piping. A pressurizer is connected to one of the RCS hot legs to maintain system pressure. The Reactor Coolant System is isolated during post fire shutdown (closure of letdown path, sample valves and pressurizer normal spray valves) to aid in inventory and pressure control.

B.4.2 MAIN STEAM SYSTEM

The primary function of the Main Steam System (MSS) is to remove heat from the Reactor Coolant System and provide high quality steam to the Main Turbine. The heat energy is removed from the reactor coolant and used for steam production in two Steam Generators. Saturated steam from the two Steam Generators flows through the containment wall in two main steam lines. Each line contains nine spring-loaded safety valves, one power-operated Atmospheric Dump Valve (ADV) and a Main Steam Isolation Valve (MSIV).

The Main Steam System will be isolated at the MSIV's during the post fire shutdown scenario in order to control secondary inventory. The ADV's will also be isolated initially until cooldown is initiated at which time they will be throttled to control the cooldown rate.

B.4.3 AUXILIARY FEEDWATER SYSTEM

The primary function of the Auxiliary Feedwater System (AFW) is to supply feedwater to the steam generators during normal plant startup and shutdown. In addition, the AFW System automatically supplies feedwater to the steam generators during emergency conditions for reactor decay heat removal and reactor coolant system cooldown.

The AFW System is comprised of three 100% capacity Auxiliary Feedwater Pumps, and associated piping, controls, valves, and instrumentation. Two of the pumps are driven by electric motors with each pump discharge piping lined up to one of the two steam generators. The third pump is driven by a steam turbine and its discharge is interconnected with both steam generators via the same piping used by the motor-driven pumps.

The Auxiliary Feedwater System is utilized in the post fire shutdown scenario to maintain steam generator level and thereby control cooldown.

B.4.4 MAIN FEEDWATER SYSTEM

The primary function of the Main Feedwater System (MFW) is to provide a continuous supply of preheated feedwater to the two Steam Generators under steady-state and transient conditions. The condensate is supplied to the Main Feedwater System from the Condensate System.

The Main Feedwater System is isolated at the MFW isolation valves in order to prevent overfill of the steam generators during post fire shutdown.

B.4.5 CHEMICAL AND VOLUME CONTROL SYSTEM

The Chemical and Volume Control System (CVCS) maintains the chemistry, purity and activity level of the reactor coolant during normal operation and shutdown. The CVCS maintains the required volume of water in the Reactor Coolant System (RCS) by compensating for reactor coolant contraction or expansion resulting from changes in reactor coolant temperature. In addition, the CVCS continuously measures and controls the boron concentration in the RCS.

During post fire shutdown, the CVCS System is utilized to control primary pressure and pressurizer level and RCS boron concentration.

B.4.6 SHUTDOWN COOLING SYSTEM

The primary function of the Shutdown Cooling (SDC) System is to perform long term decay heat removal. The SDC System is a subsystem of the Safety Injection and Containment Spray Systems. The system consists of two Low Pressure Safety Injection (LPSI) Pumps, two Shutdown Cooling Heat Exchangers and associated piping and instrumentation.

The Shutdown Cooling System is utilized during the post fire shutdown scenario in the transition to cold shutdown and is then utilized to maintain cold shutdown conditions. During Modes 5 & 6 with the Reactor Coolant System depressurized and vented, the containment spray pumps may be used in lieu of the LPSI pumps.

B.4.7 COMPONENT COOLING WATER SYSTEM

The primary function of the Component Cooling Water (CCW) System is to remove heat from the reactor auxiliary systems carrying radioactive fluids and from the post-accident heat removal systems. The CCW System is a closed pressurized system. The system is arranged in two independent, full capacity, critical cooling loops and one noncritical cooling loop. One Component Cooling Water Pump is installed in each critical loop to circulate the cooling water through a CCW Heat Exchanger where heat is transferred to the D.S. Saltwater Cooling System.

For post fire shutdown, only one CCW critical loop (without the noncritical loop) is required to perform safe shutdown heat removal functions.

B.4.8 SALTWATER COOLING SYSTEM

The primary function of the Saltwater Cooling (SWC) System is to transfer heat from the Component Cooling Water System to the ultimate heat sink (Pacific Ocean) during normal operating conditions and during emergency shutdown conditions. SONGS 2 and 3 have independent Saltwater Cooling Systems. Each system has two redundant trains with two pumps per train capable of providing 100% of the cooling design requirements for a unit. The SWC Pumps are located in the intake structure and pump seawater through the component cooling water heat exchangers.

B.4.9 CONTAINMENT EMERGENCY COOLING SYSTEM

As a result of RCS heat losses during shutdown, cooling is required to maintain the proper temperature inside containment. The Containment Emergency Cooling System consists of four separate fan cooler units, two units per train.

B.4.10 EMERGENCY CHILLED WATER SYSTEM

The primary function of the Emergency Chilled Water (ECW) System is to supply cooling water to HVAC loads that cool safety related equipment. The ECW System is composed of two 100% capacity loops.

The Chilled Water Pump discharges to the loop's Chiller Unit where heat is removed from the water and transferred to the component Cooling Water System. The chilled water from the Chiller Unit flows through the various loads and back to the suction of the chilled water pump.

B.4.11 DIESEL GENERATOR SYSTEMS

The Diesel Generator (DG) Systems provide a reliable source of onsite AC power capable of rapidly supplying all the Emergency Safety Feature Loads required to safely shutdown the plant in response to a total or partial loss of offsite power. The Emergency DG System consists of two diesel generators per unit. Each diesel generator set consists of associated DG support systems and two tandem diesel engines, driving one electrical generator. Each generator can supply

power to its respective Engineered Safety Feature (ESF) load group through a safety related 4160V bus.

B.4.12 HVAC SYSTEMS

HVAC Systems are required for room cooling for the following safe shutdown components for each unit:

SWC Pump P-112A
SWC Pump P-113B
SWC Pump P-114B
SWC Pump P-307A
Train A Class 1E Switchgear and Distribution Panels
Train B Class 1E Switchgear and Distribution Panels

LPSI Pump P-015 #
LPSI Pump P-016 #

CVCS Pump P-190
CVCS Pump P-191
CVCS Pump P-192

BAMU Pump P-174
BAMU Pump P-175

Chiller room cooling fans are not required for chiller operation. CCW pump room HVAC units are not required for CCW pump operation.

#When a containment spray pump is used in lieu of a LPSI pump, in Modes 5 & 6 with the RCS vented, the corresponding HVAC unit is required to provide LPSI/CS pump room cooling.

B.4.13 CONTROL ROOM COMPLEX EMERGENCY HVAC SYSTEM

The primary function of the Control Room Emergency HVAC System is to provide air conditioning during emergency operations for safe equipment operation and personnel habitability.

B.4.14 REACTOR PROTECTION SYSTEM

To achieve initial reactivity control the control rods must be inserted. Due to the fail safe design of the reactor trip breakers, tripping of these breakers only requires deenergizing the associated trains. Credit is taken for deenergizing the reactor trip breakers from the control room if not already deenergized due to automatic RPS response.

B.5 SAFE SHUTDOWN LOGIC DIAGRAMS

One system level safe shutdown logic diagram and six component level diagrams were developed for each unit. These logic diagrams as listed below are:

	Figure No.	
	Unit 2	Unit 3
Safe Shutdown System Logic	B-1	B-8
Inventory, Pressure and Reactivity Logic	B-2	B-9
Hot Standby Temperature Logic	B-3	B-10
Cold Shutdown Temperature Logic	B-4	B-11
Auxiliary Support Systems	B-5	B-12
Control Room and Containment HVAC Logic	B-6	B-13
Electrical Power Logic	B-7	B-14

Figure B-15 provides a legend of the symbols used on the logic diagrams.
The following nomenclature is used on the logic diagrams:

OR- EXCLUSIVE OR OPEN DURING A PORTION OF THE SHUTDOWN AND CLOSED DURING OTHER PORTIONS

NO, NC, NT - NORMALLY: OPEN, CLOSED, OPEN/CLOSED (time dependent)

DO, DC, DT - DESIRED: OPEN, CLOSED, OPEN/CLOSED (time dependent)

FO, FC, FL - FAILS: OPEN, CLOSED, AS IS

VALVE POSITION DEPENDENT ON TRAIN LINEUP TO BE UTILIZED
SAFE SHUTDOWN COMPONENT IDENTIFICATION/LOGIC DIAGRAMS

ACRONYM DEFINITIONS

ACRONYM	DEFINITION
A	TRAIN A
ADV	ATMOSPHERIC DUMP VALVE
AFW	AUXILIARY FEED WATER
AUX	AUXILIARY
B	TRAIN B
B CHGR	BATTERY CHARGER
BAMU	BORIC ACID MAKE-UP
BD	BLOW DOWN
BTY	BATTERY
C	TRAIN C

APPENDIX B

VALVE POSITION DEPENDENT ON TRAIN LINEUP TO BE UTILIZED
SAFE SHUTDOWN COMPONENT IDENTIFICATION/LOGIC DIAGRAMS

ACRONYM DEFINITIONS

CCW	COMPONENT COOLING WATER
CNTRL	CONTROL
COND	CONDENSATE
CR	CONTROL ROOM
CS	CONTAINMENT SPRAY
CST	CONDENSATE STORAGE TANK
D	TRAIN D
DC	DESIRED CLOSED
DEMIN	DEMINERALIZER
DEPRESS	DEPRESSURIZATION
DG	DIESEL GENERATOR
DO	DESIRED OPEN
DT	DESIRED CONTROLLED/THROTTLED
ECW	EMERGENCY CHILLED WATER
EPPM	ESSENTIAL PLANT PARAMETERS MONITORING
EVSD	EVACUATION SHUTDOWN
FC	FAIL CLOSE
FL	FAIL AS-IS
FO	FAIL OPEN
HPSI	HIGH PRESSURE SAFETY INJECTION
HTRS	HEATERS
HVAC	HEATING, VENTILATION AND AIR CONDITIONING
HX	HEAT EXCHANGER
IND	INDICATION
INST	INSTRUMENTATION
INV	INVERTER
ISOL	ISOLATION
LPSI	LOW PRESSURE SAFETY INJECTION
LVL	LEVEL
M/U	MAKE-UP
MBTS	MANUAL BUS TRANSFER SWITCH
MFIV	MAIN FEEDWATER ISOLATION VALVE
MINIFLOW	MINIMUM FLOW
MSIV	MAIN STEAM ISOLATION VALVE
MSS	MAIN STEAM SYSTEM
NC	NORMALLY CLOSED
NCL	NON-CRITICAL LOOP
NO	NORMALLY OPEN

APPENDIX B

VALVE POSITION DEPENDENT ON TRAIN LINEUP TO BE UTILIZED
SAFE SHUTDOWN COMPONENT IDENTIFICATION/LOGIC DIAGRAMS

ACRONYM DEFINITIONS

NT	NORMALLY OPEN DURING A PORTION OF THE SHUTDOWN AND CLOSED DURING OTHER POSITIONS
OP	OPERATING
PNL	PANEL
PRESS	PRESSURE
PZR	PRESSURIZER
RCP	REACTOR COOLANT PUMP
RCS	REACTOR COOLANT SYSTEM
RECIRC	RECIRCULATION
RWST	REFUELING WATER STORAGE TANK
S/G	STEAM GENERATOR
SDC	SHUTDOWN COOLING
SDCHX	SHUTDOWN COOLING HEAT EXCHANGER
SFPC	SPENT FUEL POOL COOLING
SG	STEAM GENERATOR
SI	SAFETY INJECTION
SIT	SAFETY INJECTION TANK
SSD	SAFE SHUTDOWN
SWC	SALT WATER COOLING
TEMP	TEMPERATURE
Tc	RCS COLD LEG TEMPERATURE
Th	RCS HOT LEG TEMPERATURE
UPS	UNINTERRUPTABLE POWER SUPPLY
VCT	VOLUME CONTROL TANK
WR	WIDE RANGE
X	TRAIN X
X-CONNECT	CROSS CONNECT
XFRMS	TRANSFORMERS

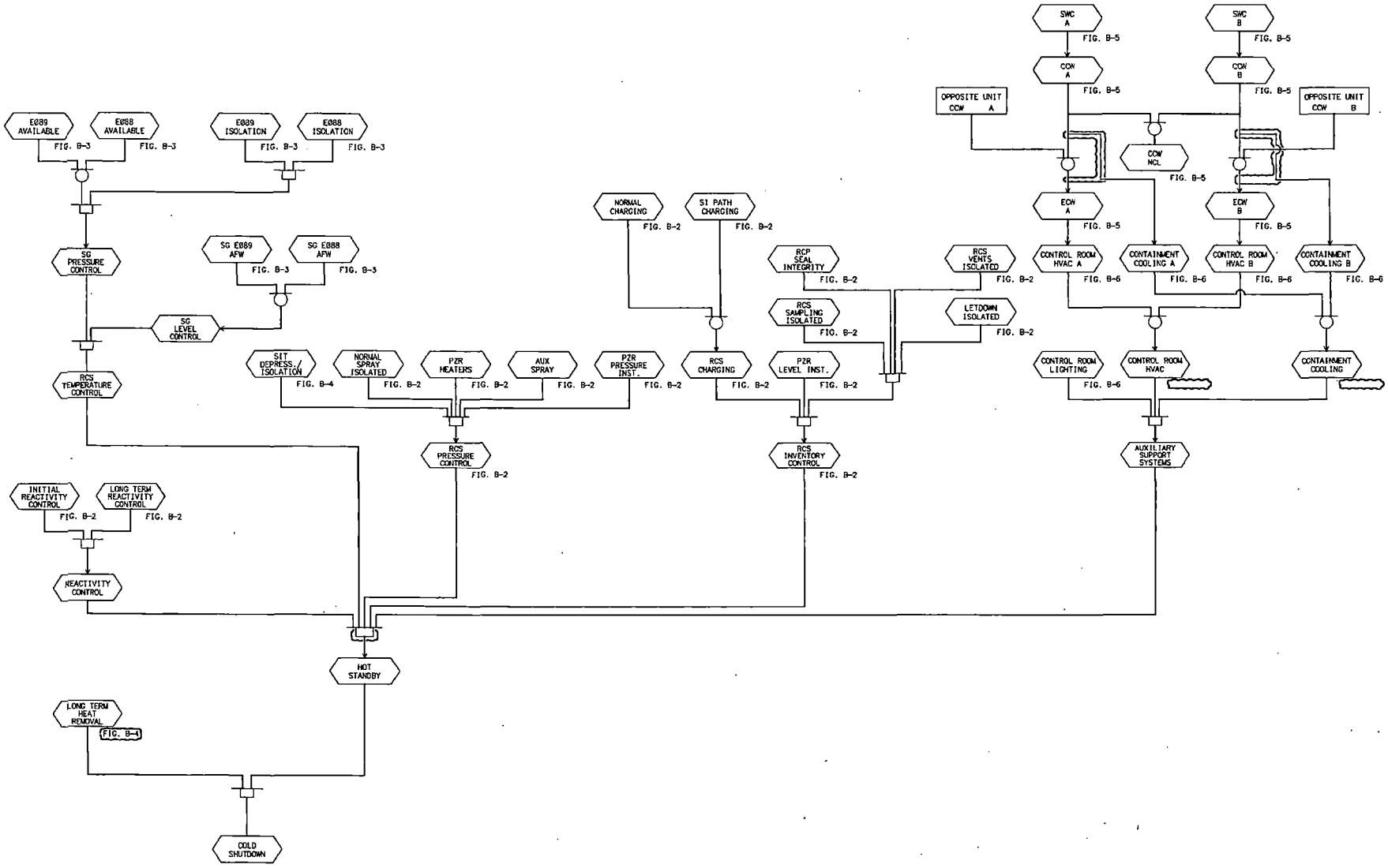

DRAWING NUMBER	DESCRIPTION	NO	DESCRIPTION	RE	IRE	GS	DM	CHK	OTHER	DATE
REFERENCES			REVISIONS							
		1	REVISED IN RESPONSE TO AR 880906366.						DCMS	05/01/01
		0	AS BUILT CATIA DWG.						DCMS	06/19/98

QC III-FPS UNIT 2

SAN ONOFRE NUCLEAR GENERATING STATION

UNIT 2
SAFE SHUTDOWN LOGIC DIAGRAM
SSD SYSTEM LOGIC
(FIGURE B-1 UFHA APPENDIX B)

SOUTHERN CALIFORNIA EDISON

Scale: NONE DRAWN BY: L. SALDWBIDES

P.REVIEW DCMS STATUS = APRV MAY 1, 2001 09:01

90035CA REV 1

UFHA 2/3 Amended: April 2009

Site File Copy

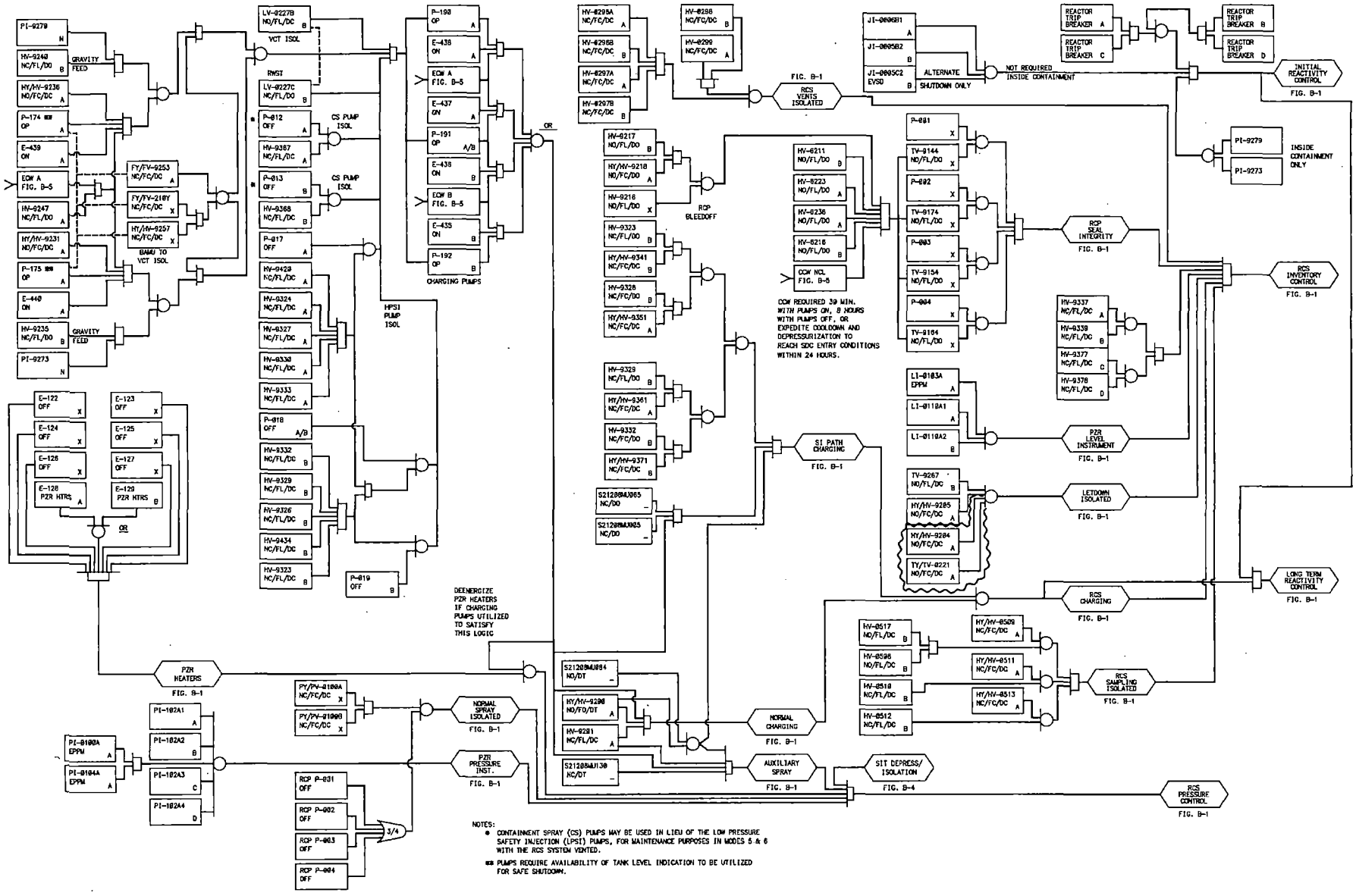

NOTES:

- CONTAINMENT SPRAY (CS) PUMPS MAY BE USED IN LIEU OF THE LOW PRESSURE SAFETY INJECTION (LPSI) PUMPS, FOR MAINTENANCE PURPOSES IN MODES 5 & 6 WITH THE RCS SYSTEM VENTED.
- ** PUMPS REQUIRE AVAILABILITY OF TANK LEVEL INDICATION TO BE UTILIZED FOR SAFE SHUTDOWN.

DRAWING NUMBER	DESCRIPTION	NO	DESCRIPTION	RE	IRE	FLS	DM	CHK	OTHER	DATE
		3	INCORP. ECN A18183.						DCMS	05/13/05
REFERENCES		REVISIONS								

QC III-FPS UNIT 2

SAN ONOFRE NUCLEAR GENERATING STATION

UNIT 2
SAFE SHUTDOWN LOGIC DIAGRAM
INVENTORY PRESSURE AND REACTIVITY LOGIC
(FIGURE B-2 UFHA APPENDIX B)

SOUTHERN CALIFORNIA EDISON

Scale: NONE DRAWN BY: M. KERZIE

P.REVIEW DCMS STATUS = APRV MAY 16, 2005 10:55

90035CB REV 3

UFHA 2/3 Amended: April 2009

Site File Copy

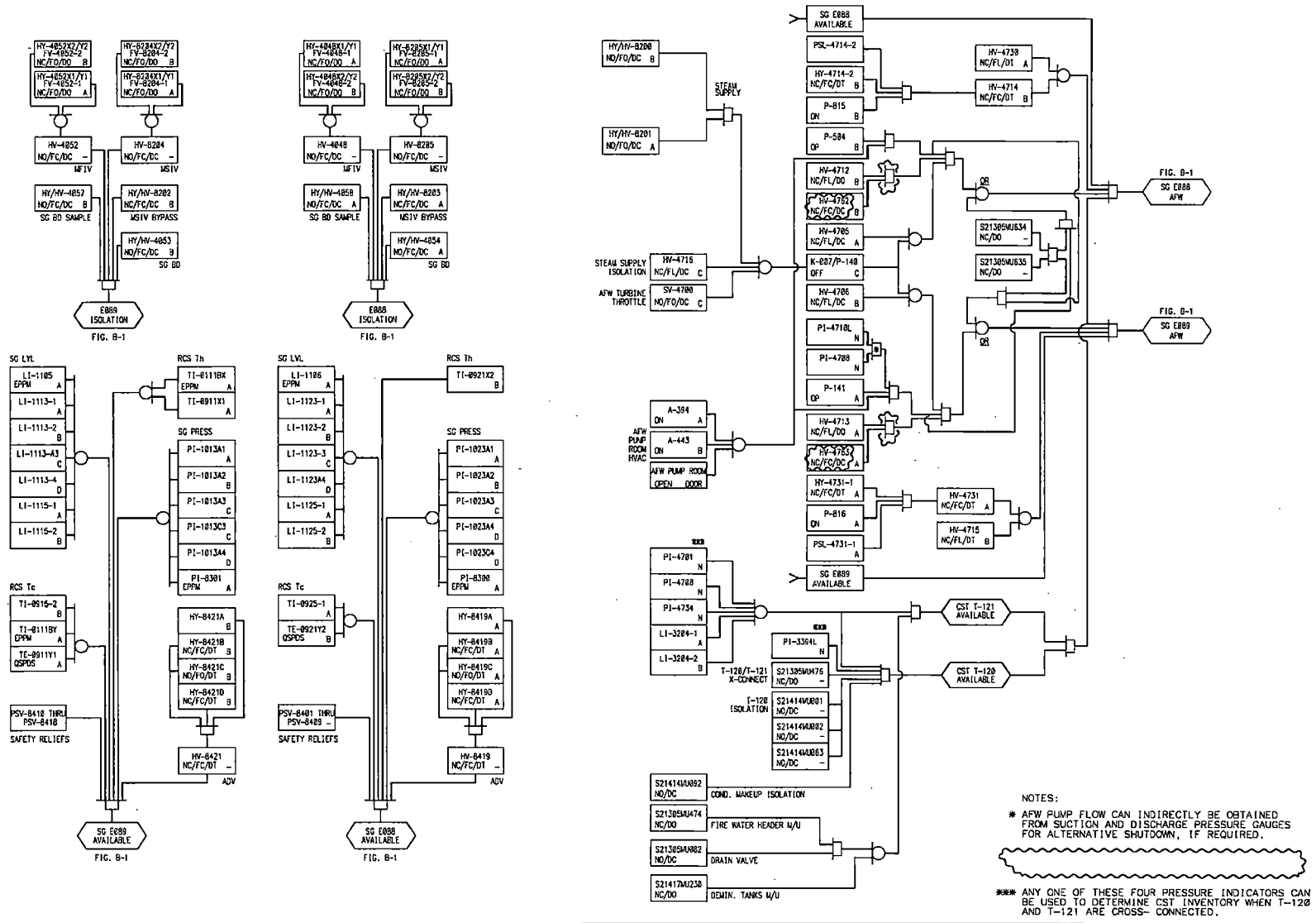

NOTES:

* AFW PUMP FLOW CAN INDIRECTLY BE OBTAINED FROM SUCTION AND DISCHARGE PRESSURE GAUGES FOR ALTERNATIVE SHUTDOWN, IF REQUIRED.

*** ANY ONE OF THESE FOUR PRESSURE INDICATORS CAN BE USED TO DETERMINE CST INVENTORY WHEN T-120 AND T-121 ARE CROSS- CONNECTED.

DRAWING NUMBER	DESCRIPTION	NO	DESCRIPTION	RE	IRE	FLS	ORIG	CHK	OTHER	DATE
		3	INCORP. DCN'S 2 & 3.				MJK	LS	DCMS	04/26/06

REFERENCES — REVISIONS

QC III-FPS UNIT 2

SAN ONOFRE NUCLEAR GENERATING STATION

UNIT 2
SAFE SHUTDOWN LOGIC DIAGRAM
HOT STANDBY TEMPERATURE LOGIC
(FIGURE B-3 UFHA APPENDIX B)

SOUTHERN CALIFORNIA EDISON

Scale: NONE DRAWN BY: M. KERZIE

P.REVIEW DCMS STATUS = APRV APRIL 26, 2006 15:51

90035CC REV 3

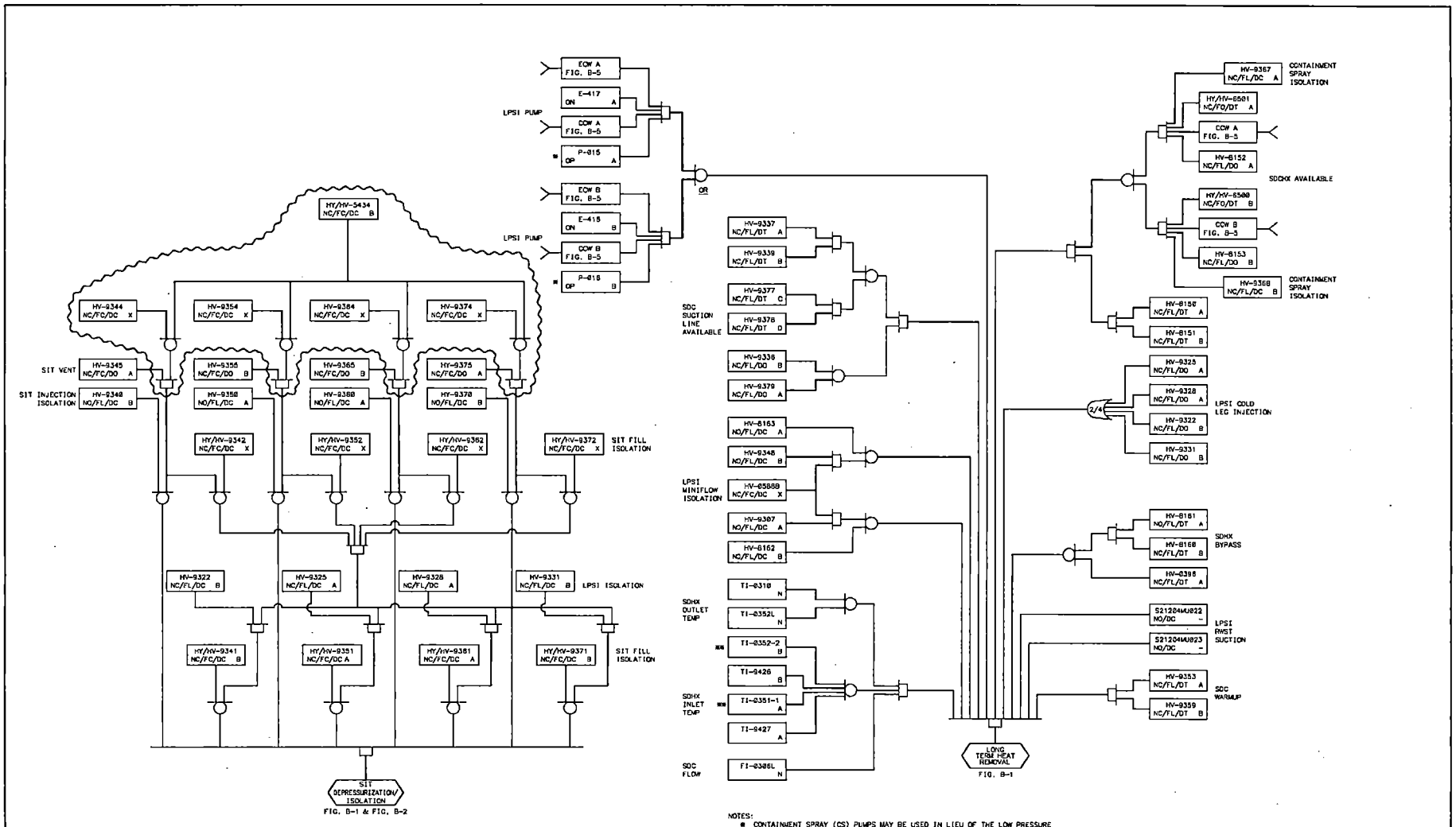

NOTES:

* CONTAINMENT SPRAY (CS) PUMPS MAY BE USED IN LIEU OF THE LOW PRESSURE SAFETY INJECTION (LPSI) PUMPS FOR MAINTENANCE PURPOSES IN MODES 5 & 6 WITH THE RCS SYSTEM VENTED.

** WHEN A CONTAINMENT SPRAY PUMP IS USED IN LIEU OF LPSI PUMP, IN MODES 5 & 6 WITH RCS VENTED, THE CORRESPONDING TRAIN LOCAL SDC HX INLET TEMP. INDICATOR IS REQUIRED.

DRAWING NUMBER	DESCRIPTION	NO	DESCRIPTION	RE	IRE	FLS	ORIG	CHK	OTHER	DATE
REFERENCES		REVISIONS								
		2	INCORP. ECN A19887.				MJK	LS	DCMS	04/28/06

QC III-FPS UNIT 2

SAN ONOFRE NUCLEAR GENERATING STATION

UNIT 2
SAFE SHUTDOWN LOGIC DIAGRAM
COLD SHUTDOWN TEMPERATURE LOGIC
(FIGURE B-4 UFHA APPENDIX B)

SOUTHERN CALIFORNIA EDISON

Scale: NONE DRAWN BY: M. KERZIE

P.REVIEW DCMS STATUS = APRV APRIL 28, 2006 11:19

90035CD REV 2

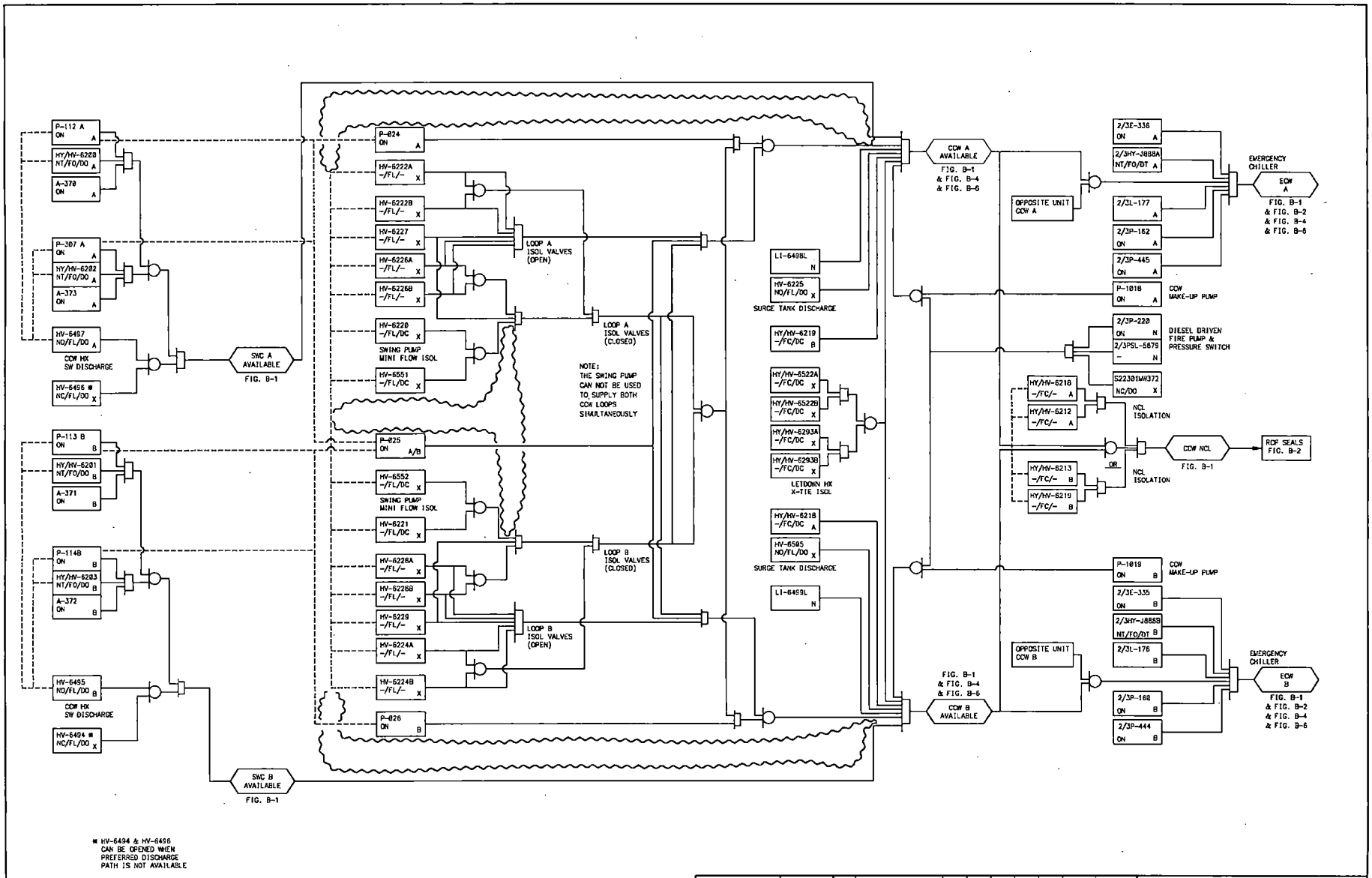

DRAWING NUMBER	DESCRIPTION	NO	DESCRIPTION	RE	IRE	FLS	DM	CHK	OTHER	DATE
		3	AS BUILT PER ECP 81050462-45	CJV	TAR				DCMS	10/13/87
REFERENCES		REVISIONS								

QC III-FPS UNIT 2

SAN ONOFRE NUCLEAR GENERATING STATION

UNIT 2
SAFE SHUTDOWN LOGIC DIAGRAM
AUXILIARY SUPPORT SYSTEMS
(FIGURE B-5 UFHA APPENDIX B)

SOUTHERN CALIFORNIA EDISON

Scale: NONE DRAWN BY: F. GOPAR

P.REVIEW DCMS STATUS = APRV OCTOBER 12, 2007 09:34

90035CE REV 3

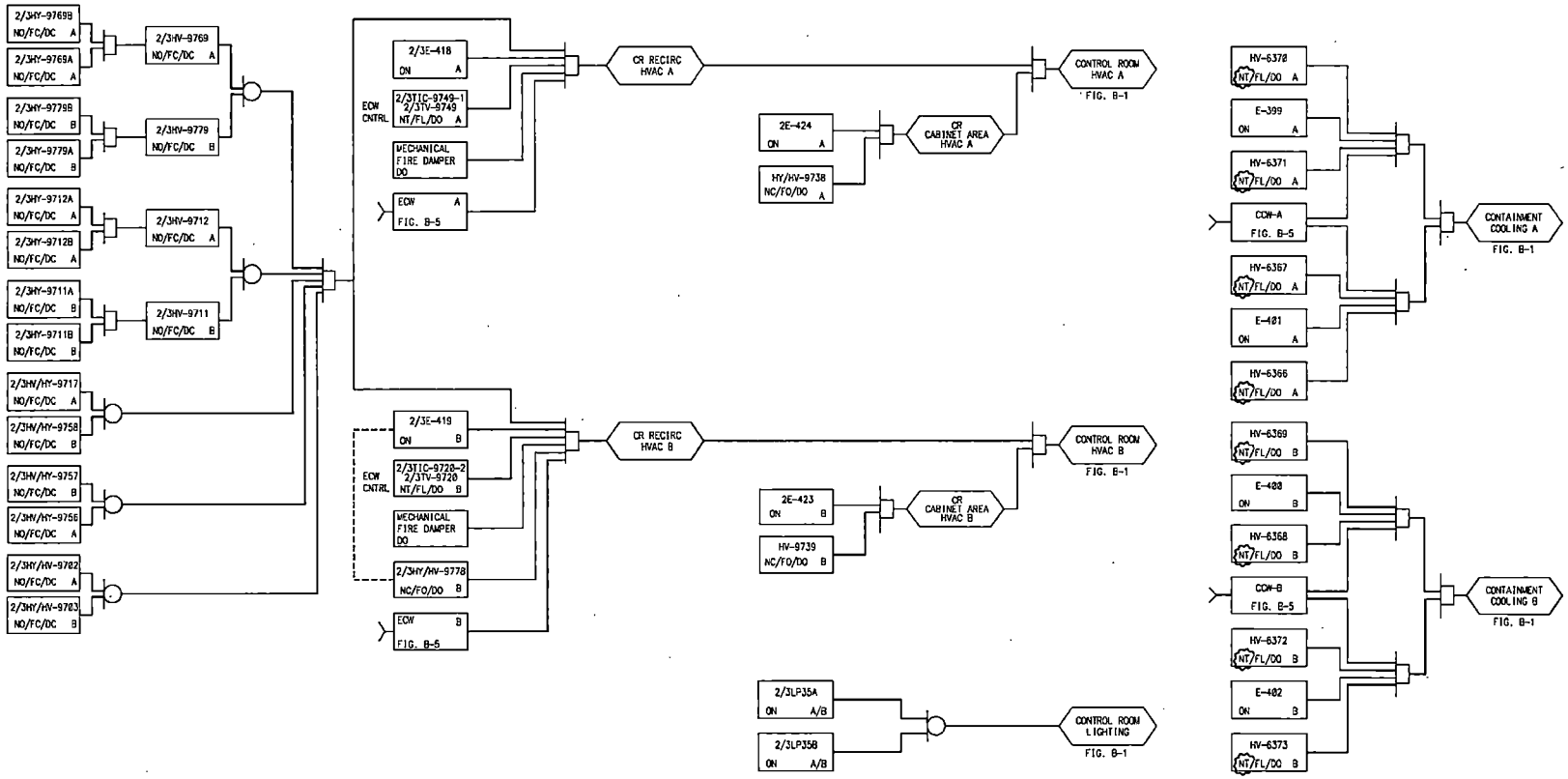

DRAWING NUMBER	DESCRIPTION	NO	DESCRIPTION	RE	IRE	FLS	ORIG	CHK	OTHER	DATE
		2	INCORP. ECN A10864.				MJK	LS	DCMS	04/26/06
REFERENCES		REVISIONS								

QC III-FPS UNIT 2

SAN ONOFRE NUCLEAR GENERATING STATION

UNIT 2
SAFE SHUTDOWN LOGIC DIAGRAM
CONTROL ROOM AND CONTAINMENT HVAC LOGIC
(FIGURE B-6 UFHA APPENDIX B)

SOUTHERN CALIFORNIA EDISON

Scale: NONE DRAWN BY: M. KERZIE

P.REVIEW DCMS STATUS = APRV APRIL 26, 2006 11:01

90035CF REV 2

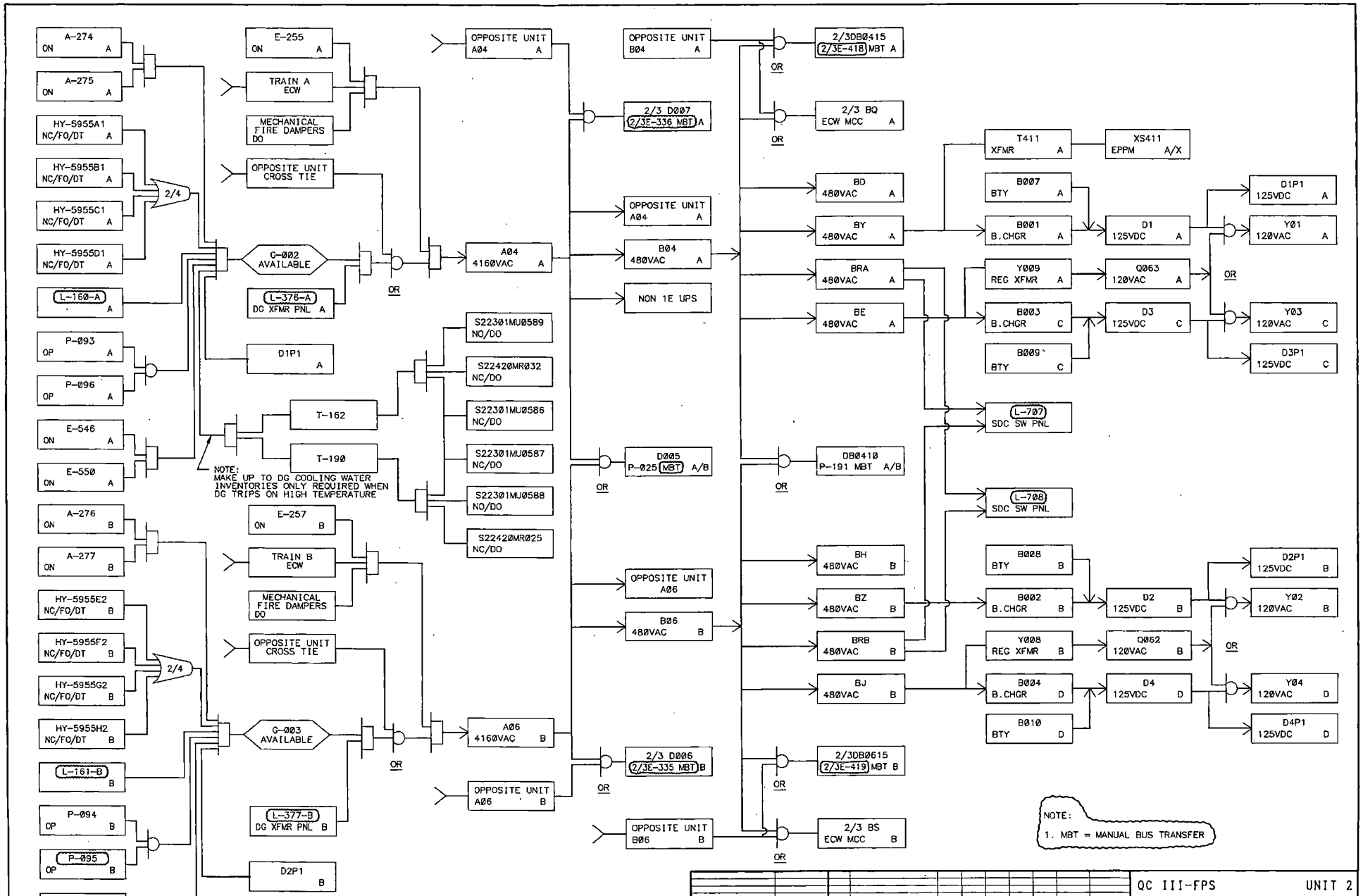

90035CG REV 2

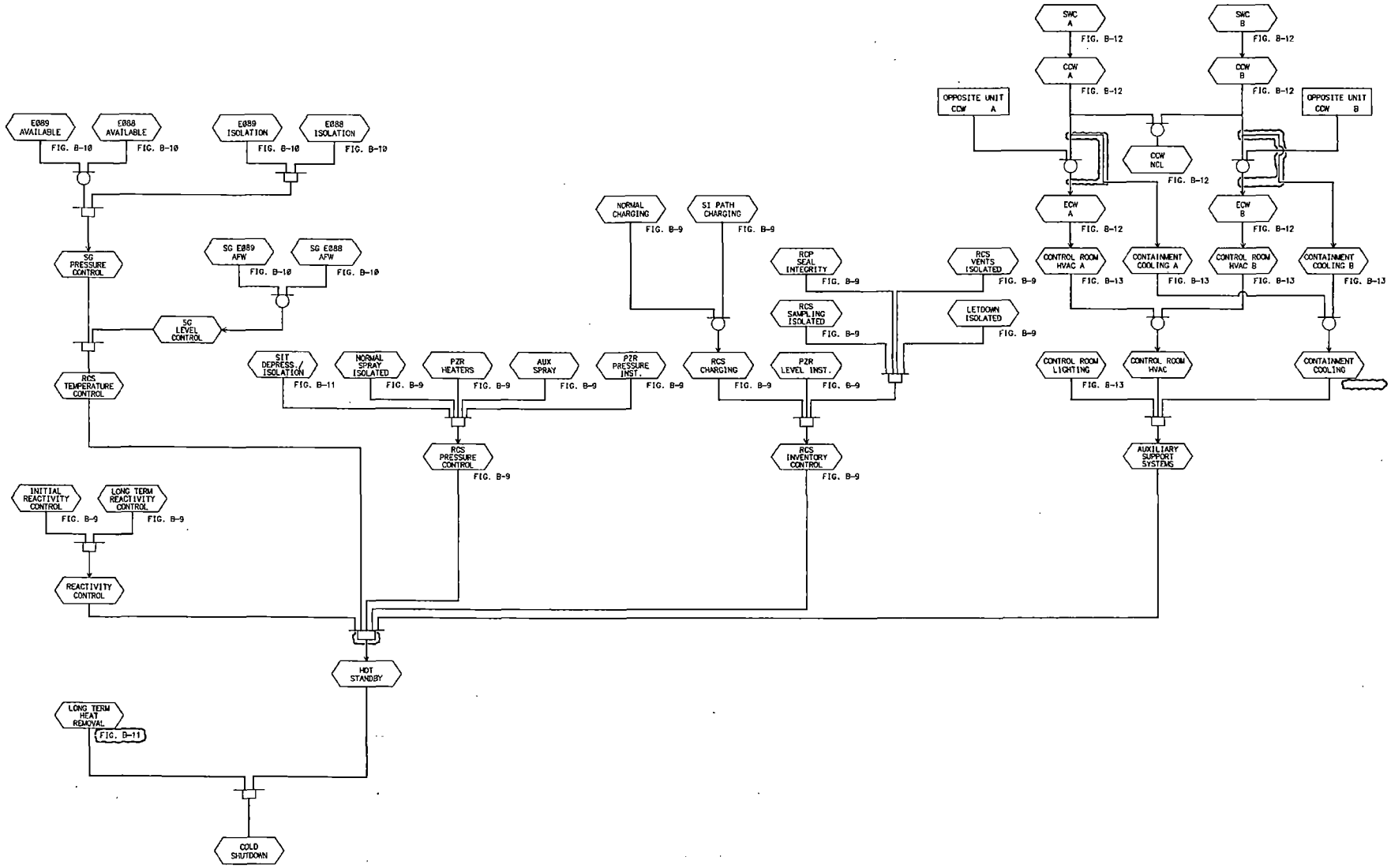

DRAWING NUMBER	DESCRIPTION

REFERENCES

NO	DESCRIPTION	RE	IRE	GS	DM	CHK	OTHER	DATE
1	REVISED IN RESPONSE TO AR 0C0900566.						DCWS	05/01/01
0	AS BUILT CATIA DWG.						DCWS	06/19/98

REVISIONS

QC III-FPS UNIT 3

SAN ONOFRE NUCLEAR GENERATING STATION

UNIT 3
SAFE SHUTDOWN LOGIC DIAGRAM
SSD SYSTEM LOGIC
(FIGURE B-8 UFHA APPENDIX B)

SOUTHERN CALIFORNIA EDISON

Scale: NONE DRAWN BY: L. SALUMBIDES

P.REVIEW DCWS STATUS = APRV MAY 1, 2001 09:01

90035CH REV 1

Site File Copy

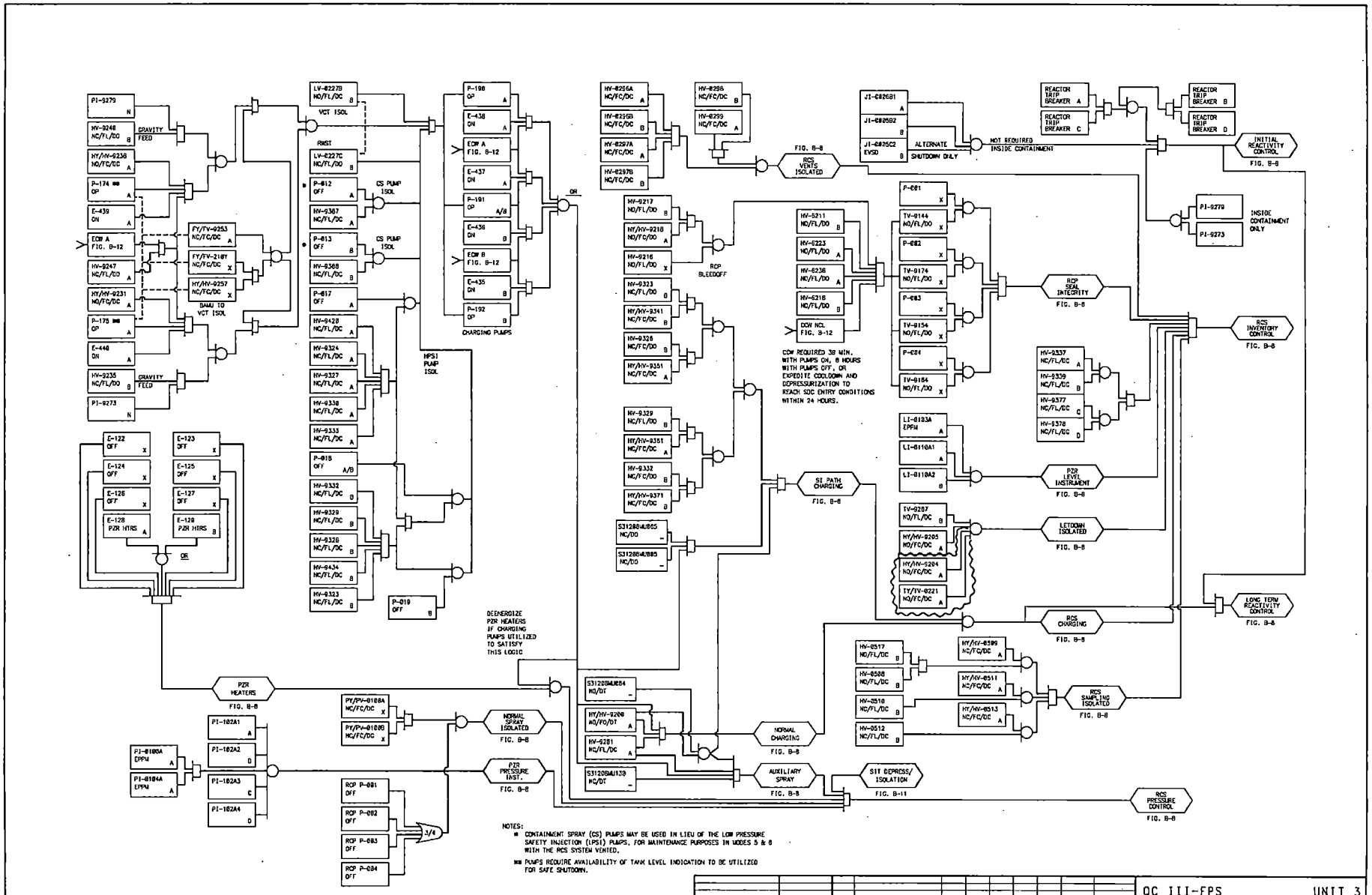

DRAWING NUMBER	DESCRIPTION	NO	DESCRIPTION	RE	IRE	FLS	DM	CHK	OTHER	DATE
		3	INCORP. ECN 410184.					NR	MATTDEWS	05/18/05
		REFERENCES		REVISIONS						

QC III-FPS UNIT 3

SAN ONOFRE NUCLEAR GENERATING STATION

UNIT 3
SAFE SHUTDOWN LOGIC DIAGRAM
INVENTORY PRESSURE AND REACTIVITY LOGIC
(FIGURE B-9 UFHA APPENDIX B)

SOUTHERN CALIFORNIA EDISON

Scale: NONE DRAWN BY: M. KERZIE

P.REVIEW DCMS STATUS = APRV MAY 16, 2005 11:17

90035CI REV 3

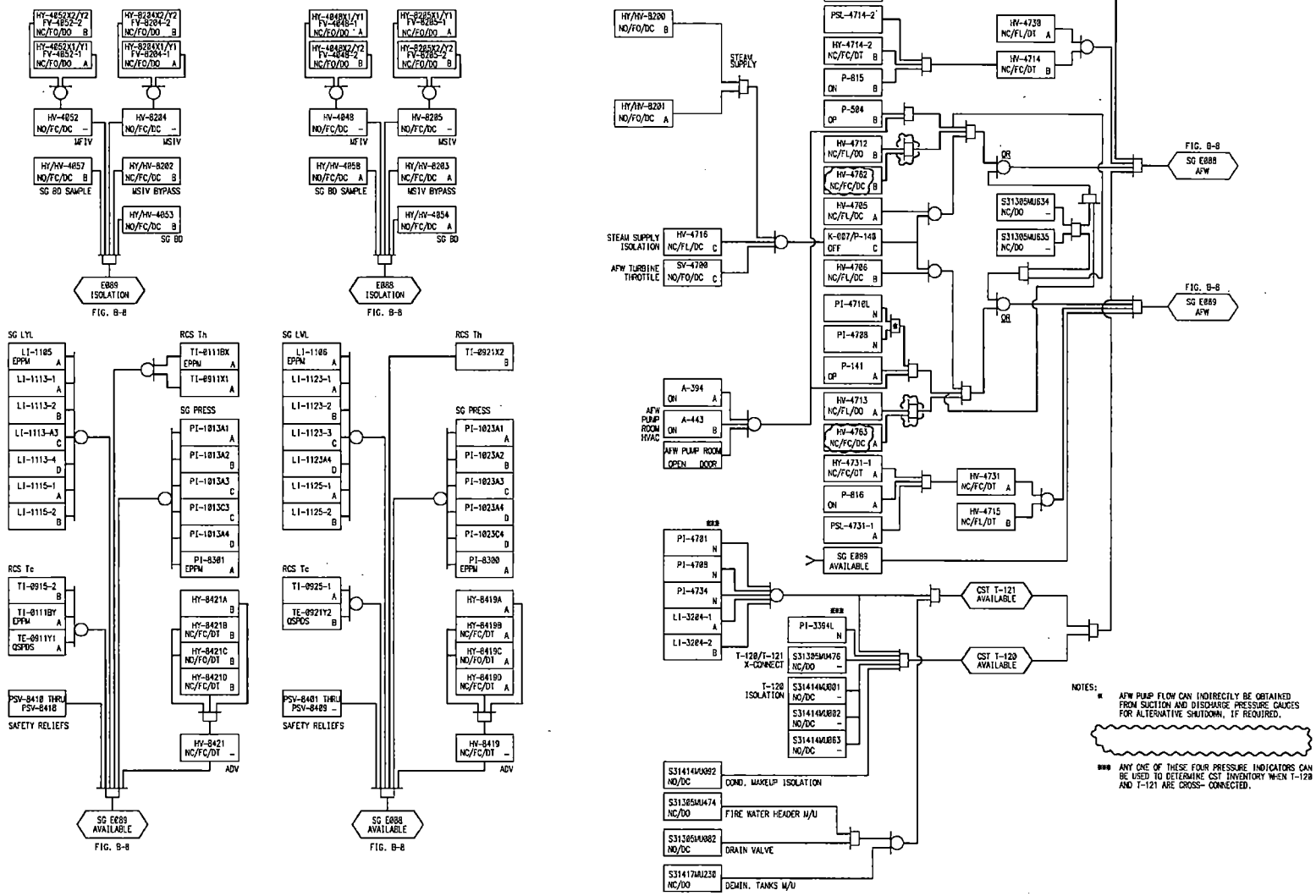

DRAWING NUMBER	DESCRIPTION	NO	DESCRIPTION	RE	IRE	FLS	ORIG	CHK	OTHER	DATE
REFERENCES		REVISIONS								

QC III-FPS UNIT 3

SAN ONOFRE NUCLEAR GENERATING STATION

UNIT 3
SAFE SHUTDOWN LOGIC DIAGRAM
HOT STANDBY TEMPERATURE LOGIC
(FIGURE B-10 UFHA APPENDIX B)

SOUTHERN CALIFORNIA EDISON

Scale: NONE DRAWN BY: M. KERZIE

P.REVIEW DCMS STATUS = APRV APRIL 26, 2006 15:48

90035CJ REV 3

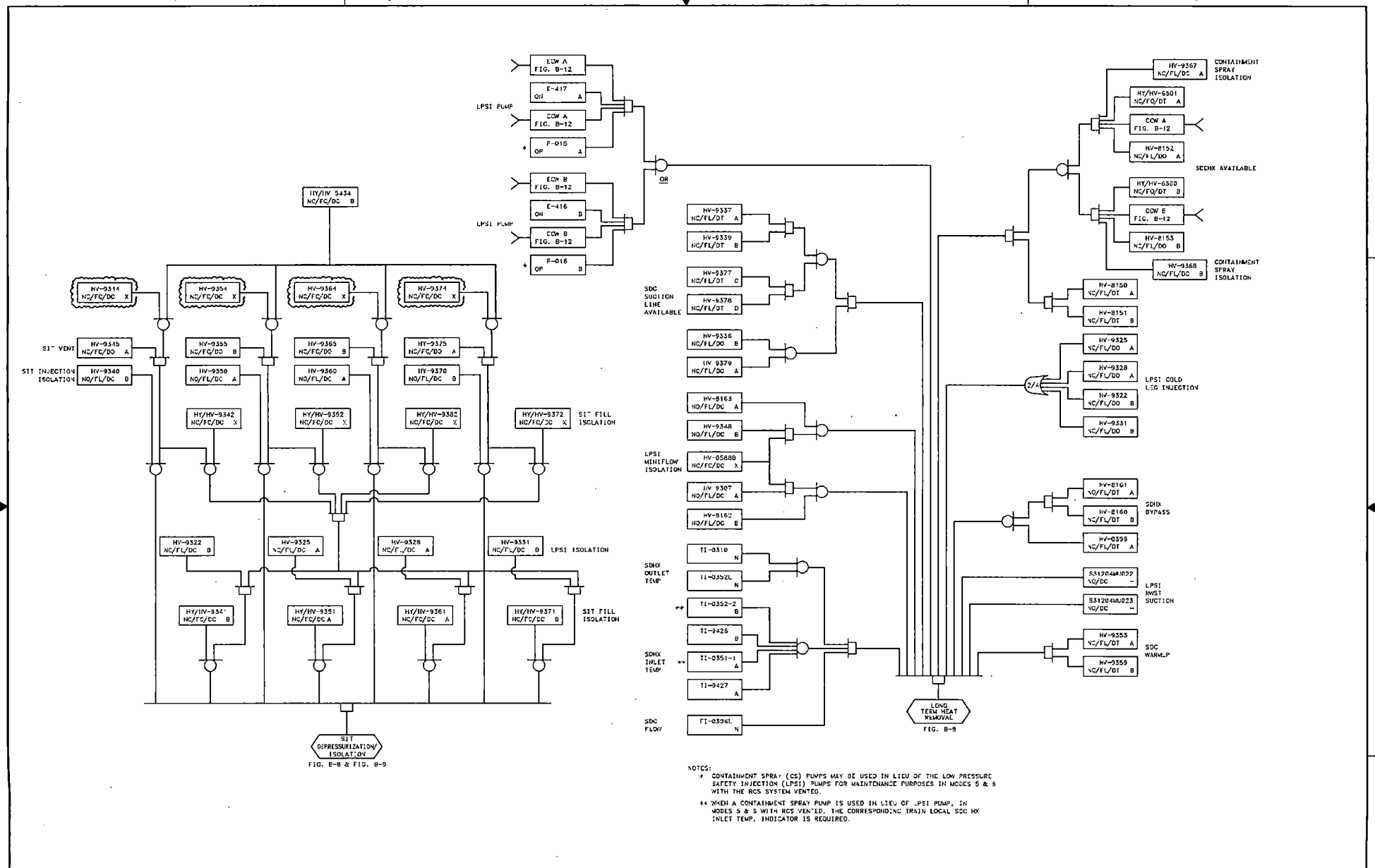

NOTES:

* CONTAINMENT SPRAY (CS) PUMPS MAY BE USED IN LIEU OF THE LOW PRESSURE SAFETY INJECTION (LPSI) PUMPS FOR MAINTENANCE PURPOSES IN MODES 5 & 6 WITH THE RCS SYSTEM VENTED.

** WHEN A CONTAINMENT SPRAY PUMP IS USED IN LIEU OF LPSI PUMP, IN MODES 5 & 6 WITH RCS VENTED, THE CORRESPONDING TRAIN LOCAL SDC HX INLET TEMP. INDICATOR IS REQUIRED.

DRAWING NUMBER	DESCRIPTION	NO	DESCRIPTION	RE	IRE	FLS	ORIG	CHK	OTHER	DATE
		3	ISSUED AS-BUILT PER AR 076808364-2.				LGS	LEP		08/28/2007

REFERENCES — REVISIONS

QC III-FPS UNIT 3

SAN ONOFRE NUCLEAR GENERATING STATION

SAFE SHUTDOWN LOGIC DIAGRAM
COLD SHUTDOWN TEMPERATURE LOGIC
(FIGURE B-11 UFHA APPENDIX B)

SOUTHERN CALIFORNIA EDISON

SCALE: NONE DRAWN BY: SALUMBIDES, L.

APRV 08/28/2007 10:25

90035CK REV 3

SDNOS FORMAT REV: H

CATIA V5 R16 SP3

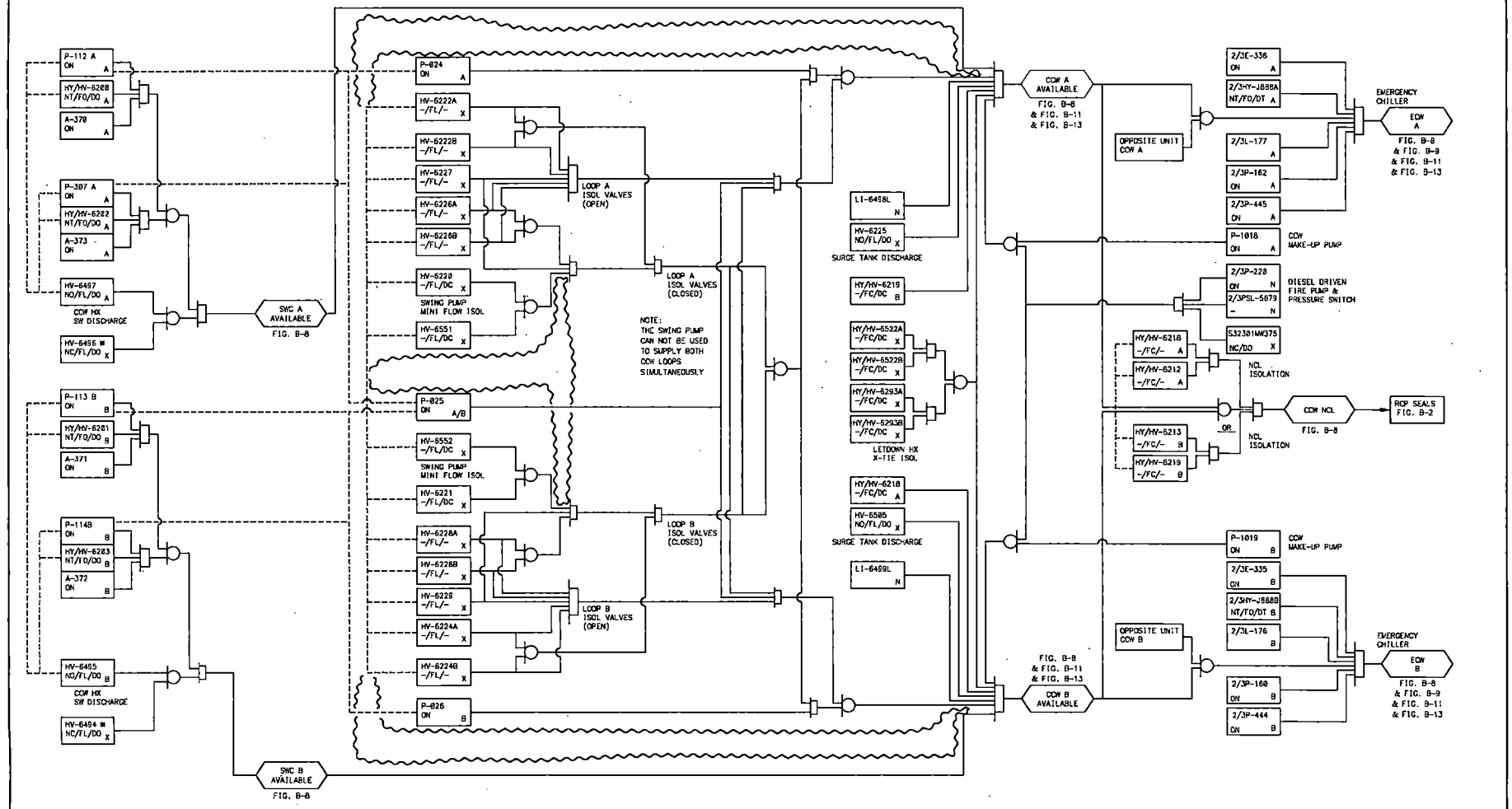

■ HV-6494 & HV-6496 CAN BE OPENED WHEN PREFERRED DISCHARGE PATH IS NOT AVAILABLE

DRAWING NUMBER	DESCRIPTION	NO	DESCRIPTION	RE	IRE	FLS	DM	CHK	OTHER	DATE
		3	AS BUILT PER ECP 818588492-45	CHV	TWB				DCMS	10/17/07

REFERENCES — REVISIONS

QC III-FPS UNIT 3

SAN ONOFRE NUCLEAR GENERATING STATION

UNIT 3
SAFE SHUTDOWN LOGIC DIAGRAM
AUXILIARY SUPPORT SYSTEMS
(FIGURE B-12 UFHA APPENDIX B)

SOUTHERN CALIFORNIA EDISON

Scale: NONE DRAWN BY: F. COPAR

P.REVIEW DCMS STATUS = APRV OCTOBER 12, 2007 09:35

90035CL REV 3

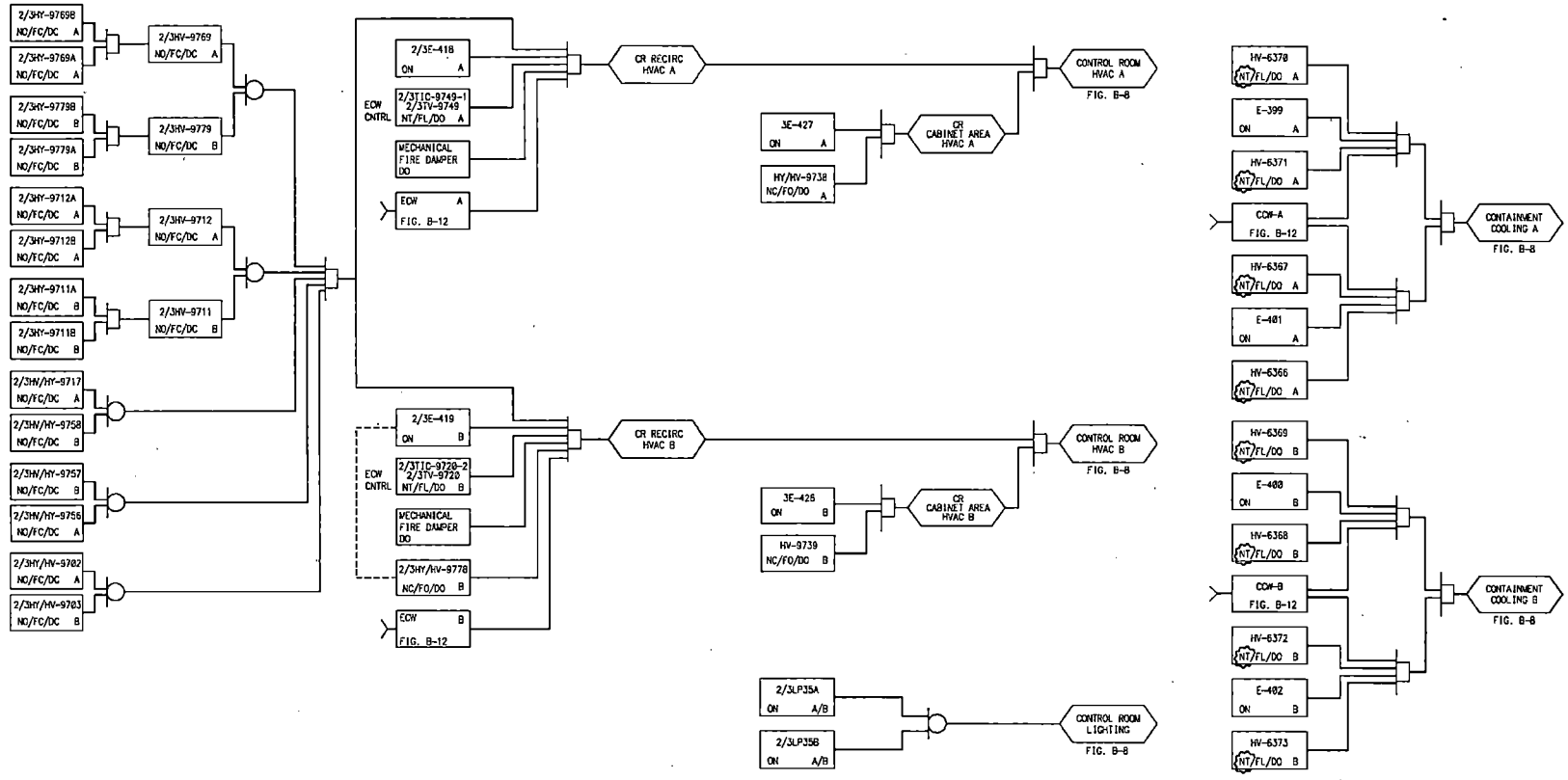

DRAWING NUMBER	DESCRIPTION	NO	DESCRIPTION	RE	IRE	FLS	ORIG	CHK	OTHER	DATE
REFERENCES		2	INCORP. ECN A10883.				MJK	LS	DCWS	04/26/06
			REVISIONS							

QC III-FPS UNIT 3

SAN ONOFRE NUCLEAR GENERATING STATION

UNIT 3
SAFE SHUTDOWN LOGIC DIAGRAM
CONTROL ROOM AND CONTAINMENT HVAC LOGIC
(FIGURE B-13 UFHA APPENDIX B)

SOUTHERN CALIFORNIA EDISON

Scale: NONE DRAWN BY: M. KERZIE

P.REVIEW DCMS STATUS = APRV APRIL 26, 2006 10:54

90035CM REV 2

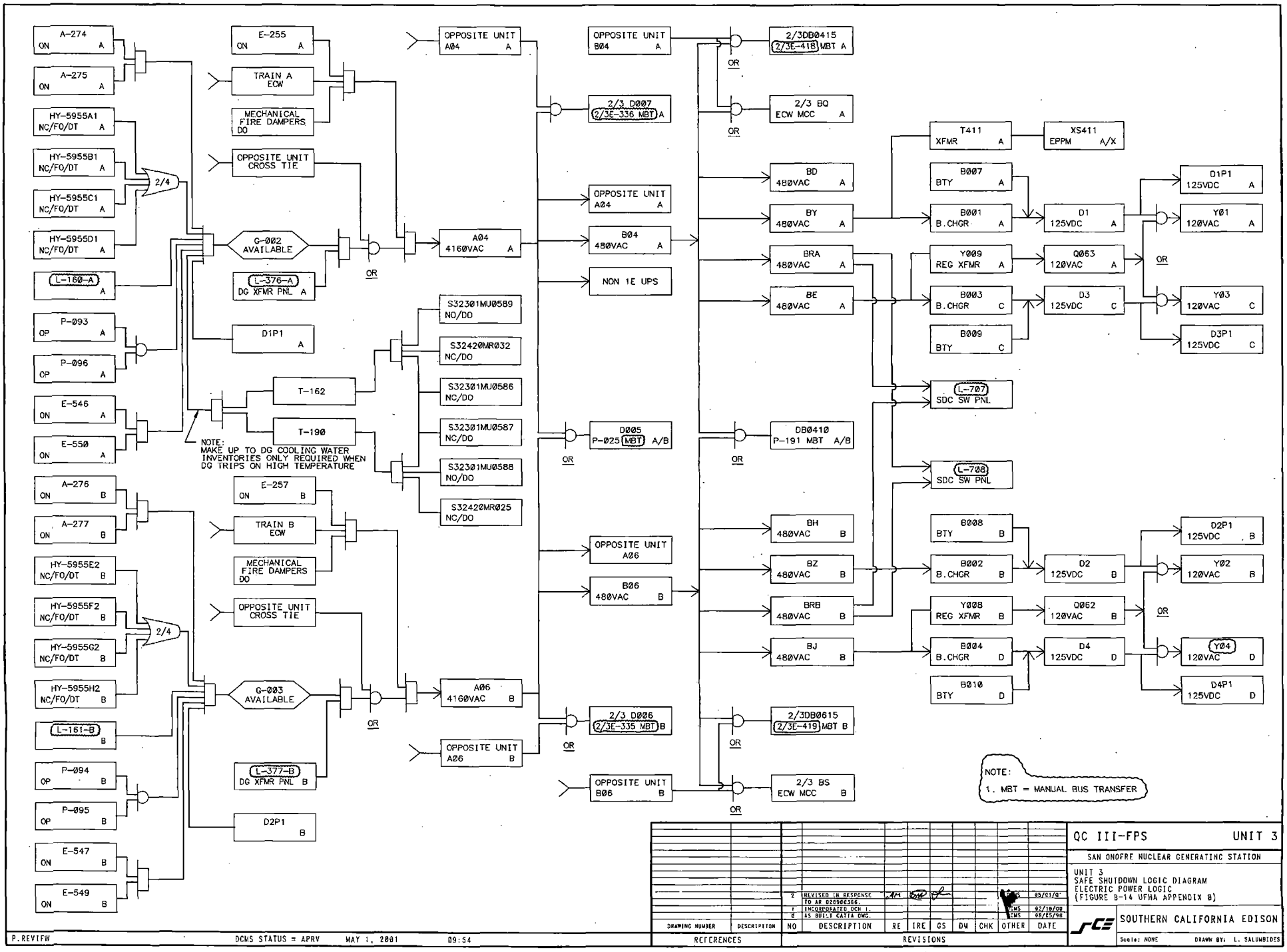

90035CN REV 2

Site File Copy

FUNCTION	SYMBOL	DESCRIPTION
AND		OUTPUT EXISTS ONLY WHEN ALL INPUTS ARE PRESENT.
OR		OUTPUT EXISTS ONLY WHEN ANY INPUT IS PRESENT.
NOT		OUTPUT EXISTS ONLY WHEN THE INPUT IS NOT PRESENT.
TIMED DELAY (ON DELAY)		OUTPUT EXISTS AFTER A TIME DELAY WHEN THE INPUT IS CONTINUOUSLY PRESENT. OUTPUT CEASES WHEN THE INPUT IS NOT PRESENT.
TIMED MEMORY (OFF DELAY)		OUTPUT EXISTS WHEN THE INPUT IS PRESENT AND CONTINUES TO EXIST FOR A TIME AFTER THE INPUT CEASES.
MEMORY	M / R	MEMORY OUTPUT EXISTS WHEN THE MEMORY INPUT IS PRESENT AND CONTINUES TO EXIST UNTIL THE RESET INPUT IS PRESENT. RESET OUTPUT EXISTS ONLY WHEN THE MEMORY OUTPUT IS NOT PRESENT.
COINCIDENCE MATRIX	A/B	OUTPUT EXISTS ONLY WHEN AT LEAST A OUT OF B INPUTS ARE PRESENT.
SPECIAL	#	NUMBER INDICATES NOTE DESCRIBING SPECIAL FUNCTION.
LIGHTS	R	RED-INDICATES EQUIPMENT IS RUNNING OR IN THE OPEN POSITION. WHERE SWITCHGEAR CIRCUIT BREAKERS ARE USED, THE RED LIGHT WILL SUPERVISE THE TRIP COIL.
	G DI ON MOT. PROT.	GREEN-INDICATES EQUIPMENT IS NOT RUNNING OR IN THE CLOSED POSITION. A BRIGHT-GREEN LIGHT INDICATES "MOTOR PROTECTION ACTUATION." IT IS DENOTED AS "DI (DOUBLE INTENSITY) ON MOT. PROT." AND IT IS ALSO ANNUNCIATED.
	A	AMBER-INDICATES EQUIPMENT IS IN THE AUTOMATIC MODE.
	W	WHITE-INDICATES AN ESF SIGNAL IS OVERRIDEN. (SEE DWG. 54002 NOTE 12)
	B	BLUE-INDICATES EQUIPMENT IS IN THE MANUAL MODE.
ANNUNCIATOR		ANNUNCIATOR INPUT
COMPUTER		COMPUTER INPUT
CROSS REFERENCE		CROSS REFERENCE TO ANOTHER DRAWING
STATEMENT OF INPUT		AN INPUT TO THE LOGIC SEQUENCE

ABBREVIATIONS

CCAS	CONTAINMENT COOLING ACTUATION SIGNAL
CEA	CONTROL ELEMENT ASSEMBLY (ROD)
CIAS	CONTAINMENT ISOLATION ACTUATION SIGNAL
CLD	CONTROL LOGIC DIAGRAM
CNTMT	CONTAINMENT
CPIS	CONTAINMENT PURGE ISOLATION SIGNAL
CR-#	CONTROL ROOM PANEL NUMBER
CRIS	CONTROL ROOM ISOLATION SIGNAL
CSAS	CONTAINMENT SPRAY ACTUATION SIGNAL
CWP	CEA WITHDRAWAL PROHIBIT
DNBR	DEPARTURE FROM NUCLEAR BOILING RATIO
EFAS	EMERGENCY FEEDWATER ACTUATION SIGNAL
ESFAS	ENGINEERED SAFETY FEATURES ACTUATION SYSTEM
FHIS	FUEL HANDLING ISOLATION SIGNAL
F.P.	FULL POWER
FWCS	FEEDWATER CONTROL SYSTEM
L-#	LOCAL PANEL NUMBER
LIN	LINEAR
LOG	LOGARITHMIC
LPD	LOCAL POWER DENSITY
MCC	MOTOR CONTROL CENTER
MSIS	MAIN STEAM ISOLATION SIGNAL
NR	NARROW RANGE
POS	POSITION
PPS	PLANT PROTECTION SYSTEM
PRESS	PRESSURE
PZR	PRESSURIZER
RAS	RECIRCULATION ACTUATION SIGNAL
RWST	REFUELING WATER STORAGE TANK
SBCS	STEAM BYPASS CONTROL SYSTEM
SG	STEAM GENERATOR
SIAS	SAFETY INJECTION ACTUATION SIGNAL
SWGR	SWITCHGEAR
TGIS	TOXIC GAS ISOLATION SIGNAL
WR	WIDE RANGE
2L-42	CONTROL ROOM EVACUATION REMOTE SHUTDOWN PANEL
ΔP	DIFFERENTIAL PRESSURE

THIS DRAWING IS ALSO UFSAR FIGURE 7.3-1

DRAWING NUMBER	DESCRIPTION
54022	RAS CLD
54021	EFAS CLD
54020	MSIS CLD
54019	CSAS CLD
54018	CCAS CLD
54017	CIAS CLD
54016	SIAS CLD
54015	FPS CLD
54012	TGIS CLD
54011	CRIS CLD
54010	FHIS CLD
54005	CPIS CLD
54002	CLD NOTES
LOOP FORMAT DWG (ALL)	FORMAT DWGS

REFERENCES

NO	DESCRIPTION	RE	IRE	GS	DW	XPRE	OTHER	DATE
2	REINSTATED & REDRAWN ON CATIA, AS REFERENCE DOCUMENTATION	BGJ	MP	MP	KJ	XPRE		1-25-92

REVISIONS

QC II UNITS 2 & 3

SAN ONOFRE NUCLEAR GENERATING STATION

CONTROL LOGIC DIAGRAM LEGEND

SOUTHERN CALIFORNIA EDISON

Scale: NONE DRAWN BY: T. NIEMAN

DECEMBER 23, 1991 9:02

54001 REV 2

C. APPENDIX C (DELETED)

NOTE

Appendix C of the UFHA, Design Basis Table – SONGS Unit 1, was removed as part of Revision 15 of the UFHA, since Unit 1 is permanently shutdown and being decommissioned. Refer to the SONGS Unit 1 Defueled Safety Analysis Report for pertinent information related to the SONGS 1 Fire Protection Program and a comparison of SONGS Unit 1 to the applicable sections of Branch Technical Position 9.5-1, Appendix A.

D. UFHA APPENDIX D

Design Basis Table

This section provides a comparison of the SONGS Units 2 and 3 commitments to the requirements of APCSB Branch Technical Position 9.5-1, Appendix A, and 10CFR50, Appendix R, Sections III.G, III.J, III.L, and III.O.

The information contained in the column titled "Compliance Statements From Licensing Documents and Selected Correspondence" is intended to provide background information regarding statements made in the original Unit's 2 and 3 Fire Hazards Analysis and other selected Licensing Documents. Information contained in this column may have been superseded by current Fire Protection Program elements and requirements. Commitments contained in this column were compared to the current Fire Protection Program during the Fire Protection Commitment Verification Effort conducted in 1987 (see Fire Protection Topical DBD (DBD-SO23-TR-FP). As part of that effort, items that only represent deviations from the fire protection criteria identified in BTP 9.5-1, Appendix A, have been specifically identified in "Basis for Acceptability" columns.

SECTION A - OVERALL REQUIREMENTS OF NUCLEAR PLANT FIRE PROTECTION PLAN				
Requirements of Standard Review Plan BTP 9.5-1, Appendix A (1977) Plants Under Construction	Compliance Alternate Compliance	Basis For Acceptability	Specific Exceptions To Compliance	Compliance Statements From Original FHA and Responses To Selected NRC Questions
1. PERSONNEL				
Responsibility for the over-all fire protection program should be assigned to a designated person in the upper level of management. This person should retain ultimate responsibility even though formulation and assurance of program implementation is delegated. Such delegation of authority should be to staff personnel prepared by training and experience in fire protection and nuclear plant safety to provide a balanced approach in directing the fire protection programs for nuclear power plants.	Comply	Meets Requirements Reference San Onofre Units 2&3 Updated Fire Hazards Analysis (FHA), Section 2.0 for the current SCE fire protection organization.	None	Ultimate responsibility for the overall Fire Protection Program at San Onofre Nuclear Generating Station rests with the Senior Vice President. The Vice President, Advanced Engineering, is responsible for quality assurance and control related to the Fire Protection Program. The Vice President, Nuclear Engineering and Operations (NEO), has been authorized to formulate and implement the Fire Protection Program using the staff organization within the NEO Department as indicated in Appendix A (Updated FSAR Figure 9.5-4).
The qualification requirements for the fire protection engineer or consultant who will assist in the design and selection of equipment, inspect and test the completed physical aspects of the system, develop the fire protection programs and assist in the fire-fighting training for the operating plant should be stated.	Comply - *Bechtel Power Corporation professional engineer for design construction, and equipment procurement (Mr. Bob Boas, FP000029, State of California). SCE professional engineer for Station (Mr. David Barreres, FP001299, State of California). Additionally, SCE has retained the services of Mr. J. N. Conway as a consultant. Mr. Conway is both a registered fire protection engineer (FP000799, State of California) and a full member of the Society of Fire Protection Engineers. *NOTE: Current personnel responsible for the Fire Protection Program meet the requirements of the August 19, 1977 letter from NRC, "Functional Responsibilities, Administration Control"	Meets Requirements	None	Bechtel Corporation assisted in the design and selection of the Fire Protection System for San Onofre Units 2&3 and will perform the construction and preoperational inspection and testing of the system. The qualifications of the fire protection engineer employed by Bechtel Corporation are listed in section I.B.4 of the original Fire Hazards Analysis (FHA).

SECTION A - OVERALL REQUIREMENTS OF NUCLEAR PLANT FIRE PROTECTION PLAN				
Requirements of Standard Review Plan BTP 9.5-1, Appendix A (1977) Plants Under Construction	Compliance Alternate Compliance	Basis For Acceptability	Specific Exceptions To Compliance	Compliance Statements From Original FHA and Responses To Selected NRC Questions
Subsequently, the FSAR should discuss the training and the updating provisions such as fire drills provided for maintaining the competence of the station fire-fighting and operating crew, including personnel responsible for inspecting the fire protection equipment.	Comply	Meets Requirements; Station Order S0123-FP-1 implements the Fire Protection Plan for San Onofre Units 2&3.	None	A general description of the staff responsibilities within the Power Supply and NEO Departments are as follows: a. Fire Equipment Inspectors Inspects and maintains fire suppression equipment and conducts firefighting training program for employees. b. Station Fire Brigade Provides a specialized organization to fight fires and deal with related emergencies when they occur. c. Station Fire Committee Determines that all forms of fire apparatus function properly and that all procedures and practices are in accordance with accepted rules and regulations. d. Corporate Fire Prevention Committee Develops and approves standards for fire protection facilities and apparatus and reviews before purchase. Makes recommendations regarding suitability of protection facilities for all locations, including the plans of proposed fire lines and for the placing of equipment. Additionally, the station staff is very active in fire protection activities. This includes maintenance of fire detection, suppression and extinguishing systems, as well as training of plant personnel and the fire brigade in manual fire fighting techniques. Monthly fire brigade meetings and quarterly fire drills are part of this training.

SECTION A - OVERALL REQUIREMENTS OF NUCLEAR PLANT FIRE PROTECTION PLAN				
Requirements of Standard Review Plan BTP 9.5-1, Appendix A (1977) Plants Under Construction	Compliance Alternate Compliance	Basis For Acceptability	Specific Exceptions To Compliance	Compliance Statements From Original FHA and Responses To Selected NRC Questions
				Orders, instructions, and procedures which detail activities relative to the San Onofre Fire Protection Program are described in Position B, Administrative Procedures, Controls and Fire Brigade. A comprehensive "Accident Prevention Manual," listing accident prevention rules and safe work practices, is issued to every employee. Compliance with the contents of the manual is mandatory. A Fire Prevention Manual, providing general instructions for prevention and control of fire, is available to employees. This manual was compiled by the Corporate Fire Prevention Committee in 1956 and is revised and updated as required. The "Property Loss" Insurer, Nuclear Mutual Limited (NML), is considered an integral part of the station's fire prevention program. Frequent routine inspections of the plant are performed by members of this organization and numerous improvements have been initiated in response to their recommendations. As a minimum, an NML inspector witnesses a station fire brigade drill annually. The procedures, equipment, and personnel for implementing the Fire Protection Program for buildings storing new reactor fuel and for adjacent fire zones which could affect the fuel storage zone will be fully operational before fuel is received at the site. The Fire Protection Program will be fully operational for the entire reactor prior to initial fuel loading in that reactor unit.

SECTION A - OVERALL REQUIREMENTS OF NUCLEAR PLANT FIRE PROTECTION PLAN				
Requirements of Standard Review Plan BTP 9.5-1, Appendix A (1977) Plants Under Construction	Compliance Alternate Compliance	Basis For Acceptability	Specific Exceptions To Compliance	Compliance Statements From Original FHA and Responses To Selected NRC Questions
				The operating Unit 1 is physically separated from Units 2&3 and associated construction activities. The Superintendent of the San Onofre Nuclear Generating Station has lead responsibility for Unit 1 fire protection and will assume responsibility for all three units prior to initial fuel loading of Unit 2.
The fire protection staff should be responsible for:				Section 9.5.1.7 of the San Onofre 2&3 FSAR discusses personnel qualification and training. The fire protection personnel of Bechtel (during construction) and SCE (during operation) are responsible for:
a. Coordination of building layout and system design with fire area requirements, including consideration of potential hazards associated with postulated design basis fires.	Comply	Meets Requirements	None	a. Coordination of building layout and systems design with fire requirements, including consideration of potential hazards associated with postulated design basis or credible fires.
b. Design and maintenance of fire detection, suppression, and extinguishing systems.	Comply - SCE project organization is responsible for the design of fire protection systems. Station Maintenance is responsible for maintenance of these systems.	Meets Requirements	None	b. Design and maintenance of fire detection, suppression and extinguishing systems.
c. Fire prevention activities	Comply - Site Emergency Preparedness is responsible for fire prevention activities.	Meets Requirements	None	c. Fire prevention activities
d. Training and manual fire-fighting activities of plant personnel and the fire brigade.	Comply - Reference San Onofre Units 2&3 Updated FHA, Section 2.0.	Meets Requirements	None	d. Plant personnel and fire brigade training and manual fire-fighting activities.
NOTE: NFPA 6 - "Recommendations for Organization of Industrial Fire Loss Prevention," contains useful guidance for organization and operation of the entire fire loss prevention program.	NFPA 6 has been withdrawn. However, NFPA 6 was used for guidance.	Meets Requirements	None	NFPA 6 - "Recommendations for Organization of Industrial Fire Loss Prevention," containing useful guidance for organization and operation of the entire fire loss prevention program is utilized by both Bechtel and SCE fire protection personnel.
2.DESIGN BASIS				

SECTION A - OVERALL REQUIREMENTS OF NUCLEAR PLANT FIRE PROTECTION PLAN				
Requirements of Standard Review Plan BTP 9.5-1, Appendix A (1977) Plants Under Construction	Compliance Alternate Compliance	Basis For Acceptability	Specific Exceptions To Compliance	Compliance Statements From Original FHA and Responses To Selected NRC Questions
The overall Fire Protection Program should be based upon evaluation of potential fire hazards throughout the plant and the effect of postulated design basis fires relative to maintaining ability to perform safety shutdown functions and minimize radioactive releases to the environment.	Comply - Reference San Onofre Units 2&3 Updated FHA for the current evaluation.	Meets Requirements	None	The overall fire protection program is based upon evaluation of potential fire hazards throughout the plant and the effect of postulated design basis fires relative to maintaining ability to perform safety shutdown functions and minimize radioactive releases to the environment.
3. BACKUP				
Total reliance should not be placed on a single automatic fire suppression system. Appropriate backup suppression capability should be provided.	Comply	Meets Requirements	None	Total reliance is not placed on a single automatic fire suppression system. Appropriate backup fire suppression capability is provided.
4. SINGLE FAILURE CRITERION				
A single failure in the fire suppression system should not impair both the primary and backup fire suppression capability. For example, redundant fire water pumps with independent power supplies and controls should be provided. Postulated fires or fire protection system failures need not be considered concurrent with other plant accidents or the most severe natural phenomena.	Comply	Meets Requirements	None	A single failure in the fire suppression system will not impair both the primary and backup fire suppression capability. For example, redundant fire pumps with independent power supplies and controls are provided. Postulated fires or fire protection system failures are not considered concurrent with other plant accidents or the most severe natural phenomena. Additional backup is provided from the San Onofre Unit 1 Fire Protection System, which is equipped with two 1,000 gpm motor-driven fire pumps, which take suction from a 3,000,000 gallon reservoir, through a normally closed isolation valve. The San Onofre 1 pumps and the San Onofre 2&3 pumps are powered from separate electrical supplies. The single line to containment is subject to single failure, but is built to a Class 1 level to preclude this. Note: Additional Backup is provided as described in UFHA Section 3.1.1. Unit 1 Fire Protection System is no longer credited as a U2/3 backup.

SECTION A - OVERALL REQUIREMENTS OF NUCLEAR PLANT FIRE PROTECTION PLAN				
Requirements of Standard Review Plan BTP 9.5-1, Appendix A (1977) Plants Under Construction	Compliance Alternate Compliance	Basis For Acceptability	Specific Exceptions To Compliance	Compliance Statements From Original FHA and Responses To Selected NRC Questions
The effects of lightning strikes should be included in the overall plant fire protection program.	Comply - Lightning protection is provided.	Meet Requirements	None	The effects of lightning strikes are included in the overall plant Fire Protection Program.
5. FIRE SUPPRESSION SYSTEMS				
Failure or inadvertent operation of the fire suppression system should not incapacitate safety-related systems or components.	Comply - A flooding analysis was performed and the results are tabulated in Updated FSAR Table 3.4-2. In addition, a systems interaction analysis has been prepared in accordance with the criteria specified in IE Bulletin 83-41. These analyses demonstrate that safety-related systems or components will not be incapacitated due to failure or inadvertent operation of the fire suppression system.	Meet Requirements	None	Failure or inadvertent operation of the fire suppression system will not incapacitate safety-related systems or components.
Fire suppression systems that are pressurized during normal plant operation should meet the guidelines specified in APSCB Branch Technical Position 3-1, "Protection Against Postulated Piping Failures in Fluid Systems Outside Containment."	Comply	Meets Requirements	None	All fire suppression systems located in areas containing safety-related equipment are normally dry. In addition, the fire suppression system piping supports in areas containing safety-related equipment are designed and analyzed to withstand an SSE.
6. FUEL STORAGE AREAS				
Schedule for implementation of modifications, if any, will be established on a case-by-case basis.	Not Applicable	Not Applicable	Not Applicable	The fire protection program (plans, personnel and equipment) for buildings storing new reactor fuel and for adjacent fire zones which could affect the fuel storage zone will be fully operational before fuel is received.
7. FUEL LOADING				
Schedule for implementation of modifications, if any, will be established on a case-by-case basis.	Not Applicable	Not Applicable	Not Applicable	The fire protection program for the entire reactor unit will be fully operational prior to initial fuel loading in that reactor unit.
8. MULTIPLE REACTOR SITES				

SECTION A - OVERALL REQUIREMENTS OF NUCLEAR PLANT FIRE PROTECTION PLAN				
Requirements of Standard Review Plan BTP 9.5-1, Appendix A (1977) Plants Under Construction	Compliance Alternate Compliance	Basis For Acceptability	Specific Exceptions To Compliance	Compliance Statements From Original FHA and Responses To Selected NRC Questions
On multiple reactor sites where there are operating reactors and construction of remaining units is being completed, the Fire Protection Program should provide continuing evaluation and include additional fire barriers, fire protection capability, and administrative controls necessary to protect the operating units from construction fire hazards. The superintendent of the operating plant should have the lead responsibility for site fire protection.	Not Applicable	Not Applicable	Not Applicable	On the San Onofre 2&3 project, which is a multiple unit site where there will be an operating reactor unit and construction of the remaining unit is being completed, the Fire Protection Program will provide continuing evaluation and include additional fire barriers, fire protection capability and administrative controls necessary to protect the operating units from construction fire hazards. The operating plant superintendent of SCE will have the lead responsibility for site fire protection.
9. <u>SIMULTANEOUS FIRES</u>				
Simultaneous fires in more than one reactor need not be postulated, where separation requirements are met. A fire involving more than one reactor unit need not be postulated except for facilities shared between units.	Comply	Meet Requirements	None	Simultaneous fires in more than one reactor are not postulated. A fire involving more than one reactor unit is not postulated, except for facilities shared between units.

SECTION B - ADMINISTRATIVE PROCEDURES, CONTROLS, AND FIRE BRIGADE				
Requirements of Standard Review Plan BTP 9.5-1, Appendix A (1977) Plants Under Construction	Compliance Alternate Compliance	Basis for Acceptability	Specific Exceptions To Compliance	Compliance Statements From Original FHA and Responses to Selected NRC Questions
1.Administrative procedures consistent with the need for maintaining the performance of the fire protection system and personnel in nuclear power plants should be provided.* Guidance is contained in the following publications: NFPA 4 - Organization for Fire Services NFPA 4A - Organization for Fire Services NFPA 6 - Industrial Fire Loss Prevention NFPA 7 - Management of Fire Emergencies NFPA 8 - Management Responsibility for Effects of Fire on Operations NFPA 27 - Private Fire Brigades *These compliance statements reflect the original San Onofre Units 2 and 3 Fire Protection Plan. There is not a direct correspondence with the requirements of Appendix A. *Portable fire extinguishers inspected monthly in accordance with Site Procedures. *Hose reels are inspected monthly in accordance with Site Procedures. *Hydrants are inspected quarterly in the Protected Area and semi-annually in the Owner Controlled Area in accordance with Site Procedures. Included in this procedure is the inspection of PIVs in the Owner Controlled Area only.	Comply - Station Order SO123-FP-1 "Fire Protection Plan" utilized the listed NFPA documents for guidance. However, Fire Protection Services at S.O.N.G.S. has evolved beyond the capabilities of a fire brigade out-lined in NFPA 27. These services are no longer provided by plant personnel drawn from various site departments and crafts. Rather, the services are provided by full-time professional fire fighters. All references in this FHA to 'Fire Brigade' should be read to mean 'Fire Department.' A Station Fire Committee no longer exists. In its place, the San Onofre Fire Department, together with its counterparts within the Emergency Preparedness Division, coordinates surveillance procedures and programs for equipment maintenance.	Meets Requirements	None	Direction for maintaining the performance of the fire protection systems and personnel at San Onofre Units 2&3 is provided by administrative order. This order outlines procedures to be used by the generating station for fire protection and requires the following: 1. The generating station is required to outline personnel responsibilities for fire fighting, training, inspection and maintenance of the fire-fighting equipment and coordination of the station's fire fighting program with local fire agencies. Procedures to be followed in the utilization of station fire-fighting equipment are also included. 2. Demonstration in hose handling, extinguisher operation, and fire fighting shall be held at least once each year. The fire-fighting demonstration includes an approved flame simulation. The fire demonstrations are coordinated with the Fire Inspectors from the Power Supply Department and local Fire Departments are notified and extended an invitation to participate. The Plant Manager arranges for as many of the station personnel to participate as practical. 3. Current emergency telephone numbers to be called in case of fire shall be readily available to the Operator in the Control Room and to the receptionists at the Administration Building switchboard. The fire agencies shall be listed in order of priority to be called if more than one agency is available.

SECTION B - ADMINISTRATIVE PROCEDURES, CONTROLS, AND FIRE BRIGADE				
Requirements of Standard Review Plan BTP 9.5-1, Appendix A (1977) Plants Under Construction	Compliance Alternate Compliance	Basis for Acceptability	Specific Exceptions To Compliance	Compliance Statements From Original FHA and Responses to Selected NRC Questions
2. Effective administrative measures should be implemented to prohibit bulk storage of combustible materials inside or adjacent to safety-related buildings or systems during operation or maintenance periods. Regulatory Guide 1.39, "Housekeeping Requirements for Water-Cooled Nuclear Power Plants," provides guidance on housekeeping, including the disposal of combustible materials.	Comply - Administrative procedures are in effect.	Meets Requirements	None	4. Local fire agencies that will normally answer emergency calls in case of fire will be asked to review facility fire equipment and ascertain that proper connections can be made between station equipment and the local fire agency equipment.
3. Normal and abnormal conditions or other anticipated operations such as modifications (e.g., breaking fire stops, impairment of fire detection and suppression systems) and refueling activities should be reviewed by appropriate levels of management and appropriate special actions and procedures such as fire watches or temporary fire barriers implemented to assure adequate fire protection and reactor safety. In particular:	Comply - Administrative procedures are in effect.	Meets Requirements	None	5. Each individual employee shall be knowledgeable in the full utilization of fire prevention equipment which he or she might be required to operate.
a. Work involving ignition sources such as welding and flame cutting should be done under closely controlled conditions. Procedures governing such work should be reviewed and approved by persons trained and experienced in fire protection. Persons performing and directly assisting in such work should be trained and equipped to prevent combat fires. If this is not possible, a person qualified in fire protection should directly monitor the work and function as a fire watch.	Comply - Administrative procedures are in effect.	Meets Requirements	None	6. Fire protection equipment to include, but not be limited to, fire blanket boxes, extinguishers, pumps, hydrants, sirens and hose locations shall be painted red with the exception that all hose cabinets in containment are white, and the hose cabinets in the control building visitor's gallery are black.
b. Leak testing, and similar procedures such as air flow determination, should use one of the commercially available aerosol techniques. Open flames or combustion generated smoke should not be permitted.	Comply	Meets Requirements	None	7. A routine monthly inspection and maintenance schedule for fire-fighting equipment shall be established to insure its availability and reliability. A supervisor shall be designated the responsibility for the inspection of fire-fighting equipment and shall prepare a routine inspection and status report to the superintendent.

SECTION B - ADMINISTRATIVE PROCEDURES, CONTROLS, AND FIRE BRIGADE				
Requirements of Standard Review Plan BTP 9.5-1, Appendix A (1977) Plants Under Construction	Compliance Alternate Compliance	Basis for Acceptability	Specific Exceptions To Compliance	Compliance Statements From Original FHA and Responses to Selected NRC Questions
c. Use of combustible material, e.g., HEPA and charcoal filters, dry ion exchange resins or other combustible supplies, in safety-related areas should be controlled. Use of wood inside buildings containing safety-related systems or equipment should be permitted only when suitable noncombustible substitutes are not available. If wood must be used, only fire retardant treated wood (scaffolding, lay down blocks) should be permitted. Such materials should be allowed into safety-related areas only when they are to be used immediately. Their possible and probable use should be considered in the analysis to determine the adequacy of the installed fire protection systems.	Comply - Administrative procedures controlling the use of transient combustibles are in effect. Reference Station Procedure SO23-XIII-4.13 "Inspection For Control of Combustible and Transient Fire Loads."	Meets Requirements Loads."	None	8. All fire extinguishers shall be examined and necessary corrective action taken to insure reliability and safety of operation on an annual basis under the direction of a Fire Equipment Inspector. a. Water, CO_2 and dry chemical fire extinguishers and the nitrogen cylinders associated with wheeled dry chemical extinguishers are to be hydrostatically tested by an accredited vendor at a minimum frequency of five years. b. Dry chemical extinguishers with mild-steel or brazed-brass shells are to be hydrostatically tested every twelve years.
4. Nuclear power plants are frequently located in remote areas, at some distance from public fire departments. Also, first response fire departments are often volunteer. Public fire department response should be considered in the overall fire protection program. However, the plant should be designed to be self-sufficient with respect to fire-fighting activities and rely on the public response only for supplemental or backup capability.	Comply - A 24-hour, full-time paid fire department is employed. Additionally, a mutual aid agreement exists with the USMC Camp Pendleton Fire Department. Additionally, SONGS Fire Department partispates in the San Diego County Fire Mutual Aid Agreement that provides support during a large-scale event with the limitation that SONGS maintains a full fire crew on site.	Meets Requirements	None	A Station Order delineates these requirements as follows: The "on-shift" Fire Brigade Chief is responsible for directing the fire-fighting efforts to bring any fire occurring within the units under control. He has the authority to order station personnel to assist in fighting the fire under his direction. The decision to call for outside equipment and assistance from Camp Pendleton Marine Corps Fire Department also rests with the Fire Brigade Chief or, in his absence, the designated alternate. If outside equipment is called out, the Fire Brigade Chief of the Camp Pendleton Senior Fire Fighter shall coordinate their efforts in directing the fire fighting to bring the fire under control. The Fire Brigade Chief shall have full direction when and if controlled areas are affected or threatened.

SECTION B - ADMINISTRATIVE PROCEDURES, CONTROLS, AND FIRE BRIGADE				
Requirements of Standard Review Plan BTP 9.5-1, Appendix A (1977) Plants Under Construction	Compliance Alternate Compliance	Basis for Acceptability	Specific Exceptions To Compliance	Compliance Statements From Original FHA and Responses to Selected NRC Questions
5. The need for good organization training and equipping of fire brigades at nuclear power plant sites requires effective measures be implemented to assure proper discharge of these functions. The guidance in Regulatory Guide 1.101, "Emergency Planning for Nuclear Power Plants," should be followed as applicable.	Comply - Station Order SO123-FP-1 identifies and governs the organizational responsibilities and functions required to effectively implement the SONGS 2 and 3 Fire Protection Program. Guidance provided in Regulatory Guide 1.101 has been considered in "Fire Fighting" procedure SO123-XIII-10 which is referenced in Station Order SO123-FP-1.	Meets Requirements	None	It is the responsibility of each individual assigned to the station to: 1. Be familiar with the contents of the Company's "Fire Prevention Manual" and all applicable station procedures. 2. Report any fire to the Control Room and do all within his power to bring the fire under control until help arrives.
a. Successful fire fighting requires testing and maintenance of the fire protection equipment, emergency lighting and communication, as well as practice brigades for the people who must utilize the equipment. A test plan that lists the individuals and their responsibilities in connection with routine tests and inspections of the fire detection and protection systems should be developed. The test plan should contain the types, frequency and detailed procedures for testing. Procedures should also contain instructions on maintaining fire protection during those periods when the fire protection system is impaired or during periods of plant maintenance, e.g., fire watches or temporary hose connections to water systems.	Comply - Reference Station Order SO123-FP-1 "Fire Protection Plan."	Meets Requirements	None	3. Report to his immediate supervisor or the Fire Committee Chairman any fire hazard that may come to his attention. 4. Work safely and in such a manner as not to create a fire hazard or accidental fire. 5. Familiarize himself with all station fire protection equipment as to location and proper use.

SECTION B - ADMINISTRATIVE PROCEDURES, CONTROLS, AND FIRE BRIGADE				
Requirements of Standard Review Plan BTP 9.5-1, Appendix A (1977) Plants Under Construction	Compliance Alternate Compliance	Basis for Acceptability	Specific Exceptions To Compliance	Compliance Statements From Original FHA and Responses to Selected NRC Questions
b. Basic training is a necessary element in effective fire fighting operation. In order for a fire brigade to operate effectively, it must operate as a team. All members must know what their individual duties are. They must be familiar with the layout of the plant and equipment location and operation in order to permit effective fire-fighting operations during times when a particular area is filled with smoke or is insufficiently lighted. Such training can only be accomplished by conducting drills several times a year (at least quarterly) so that all members of the fire brigade have had the opportunity to train as a team, testing itself in the major areas of the plant. The drills should include the simulated use of equipment in each area and should be pre-planned and post-critiqued to establish the training objective of the drills and determine how well these objectives have been met. These drills should periodically (at least annually) include local fire department participation where possible. Such drills also permit supervising personnel to evaluate the effectiveness of communications within the fire brigade and with the on-scene fire team leader, the reactor operator in the control room, and the offsite command post.	Comply - The fire department trains on a regular basis.	Meets Requirements	None	It is the responsibility of the Maintenance Supervisor and Fire Committee Chairman to: 1. Monthly inspect the station property for fire hazards and insure that the fire protection equipment is in proper working order. 2. Remove or remedy any fire hazard noted and to have repaired or replaced any faulty fire protection equipment. 3. Yearly test and clean each fire hose and properly dry and re-reel each hose during the annual fire prevention and equipment inspection tour of the Fire Equipment Inspector. 4. Keep permanent service records on all fire protection equipment, giving service date, repairs that were made, and the name of the individual performing the work. 5. Test the smoke detector alarm system by initiating an alarm from each detector. This test shall be accomplished once a month from one detector and at refueling intervals from all detectors.

SECTION B - ADMINISTRATIVE PROCEDURES, CONTROLS, AND FIRE BRIGADE				
Requirements of Standard Review Plan BTP 9.5-1, Appendix A (1977) Plants Under Construction	Compliance Alternate Compliance	Basis for Acceptability	Specific Exceptions To Compliance	Compliance Statements From Original FHA and Responses to Selected NRC Questions
6. To have proper coverage during all phases of operation, members of each shift crew should be trained in fire protection. Training of the plant fire brigade should be coordinated with the local fire department so that responsibilities and duties are delineated in advance. This coordination should be part of the training course and implemented into the training of the local fire department staff. Local fire departments should be educated in the operational precautions when fighting fires on nuclear power plant sites. Local fire departments should be made aware of the need for radioactive protection of personnel and the special hazards associated with a nuclear power plant site.	Comply - Reference San Onofre Units 2&3 Updated FHA, Section 2.0.	Meets Requirements	None	It is the responsibility of the Security Officer at the main gate in the event of a fire to: 1. Open gates and standby (unless otherwise ordered) to direct Camp Pendleton apparatus to the scene of the fire. 2. Keep the gate clear of all obstructions and vehicles for fire fighting equipment access to the station. 3. Supply each Camp Pendleton fire fighter with a film badge as he enters the station. 4. Collect film badges and identify each Camp Pendleton fire fighter by badge number prior to departure.
7. NFPA 27, "Private Fire Brigade" should be followed in organization, training, and fire drills. This standard also is applicable for the inspection and maintenance of fire fighting equipment.	Comply - However, Fire Protection Services at S.O.N.G.S. has evolved beyond the capabilities of a fire brigade out-lined in NFPA 27. These services are no longer provided by plant personnel drawn from various site departments and crafts. Rather, the services are provided by full-time professional fire fighters. All references in this FHA to 'Fire Brigade' should be read to mean 'Fire Department.' A Station Fire Committee no longer exists. In its place, the San Onofre Fire Department, together with its counterparts within the Emergency Preparedness Division, coordinates surveillance procedures and programs for equipment maintenance.	Meets Requirements	None	A station Fire Committee has been established to provide for a continuing surveillance of station fire fighting procedures and equipment. This committee: 1. Determines that all forms of fire apparatus function properly and that all procedures and practices are in accordance with accepted rules and regulations. 2. Reports findings at the monthly supervisors meeting. 3. Coordinates with the station Safety Committee in recommending Safety Meeting topics on discussion or demonstration of fire control apparatus and procedures.

SECTION B - ADMINISTRATIVE PROCEDURES, CONTROLS, AND FIRE BRIGADE				
Requirements of Standard Review Plan BTP 9.5-1, Appendix A (1977) Plants Under Construction	Compliance Alternate Compliance	Basis for Acceptability	Specific Exceptions To Compliance	Compliance Statements From Original FHA and Responses to Selected NRC Questions
Among the standards referenced in this document, the following should be utilized: NFPA 194, "Standard for Screw Threads and Gaskets for Fire Hose Couplings," NFPA 196, "Standard for Fire Hose," NFPA 197, "Training Standard on Initial Fire Attacks," NFPA 601, "Recommended Manual of Instructions and Duties for the Plant Watchman on Guard." NFPA booklets and pamphlets listed on page 27-11 of Volume 8, 1971-72 are also applicable for good training references. In addition, courses in fire prevention and fire suppression which are recognized and/or sponsored by the fire protection industry should be utilized.	Comply - The referenced NFPA documents were utilized for guidance.	Meet Requirements	None	A station order controls the use of combustible materials and specifically prohibits the bulk storage of combustible materials inside or adjacent to safety related buildings or systems. Other station procedures provide for implementation of controls for both normal and abnormal conditions. They provide guidance on the modification of flame barriers and on the deactivation of sections of the fire main. The applicants' Accident Prevention Rules and Safe Work Practices specifically prohibit open flames in areas containing flammable material. A special Station Order governs work involving open flame processes and requires that: 3. Portable extinguishers shall be procured from the warehouse and kept readily available to extinguish any fires in the vicinity of the open flame operations.	

SECTION B - ADMINISTRATIVE PROCEDURES, CONTROLS, AND FIRE BRIGADE				
Requirements of Standard Review Plan BTP 9.5-1, Appendix A (1977) Plants Under Construction	Compliance Alternate Compliance	Basis for Acceptability	Specific Exceptions To Compliance	Compliance Statements From Original FHA and Responses to Selected NRC Questions

Although the plant is designed to be self-sufficient with respect to fire fighting activities, a mutual fire fighting assistance agreement has been executed with the U.S. Marine Corps Camp Pendleton Base.

Communications with the Camp Pendleton Fire Department consist of a VHF Two-way-radio and a directly connected emergency phone. The radio is tested on a daily basis and a phone test is performed periodically. Additionally, telephone communication is available to the Marine Base exchange through a Company private automatic system and through the commercial "Bell system."

The station fire prevention and suppression systems are inspected and tested in accordance with a Maintenance Procedure as detailed below. Any faulty equipment is repaired or replaced promptly. Qualified personnel inspect and test fire fighting equipment every month as follows:

1. Portable Fire Extinguishers - CO_2 and Ansul

a. Inspect for external damage.

b. Check for broken seals.

c. Weigh extinguisher.

d. Inspect hoses, hose connections, and hose nozzles.

e. Check CO_2 cartridges and N_2 cylinders.

2. Hose Reels

a. Visually inspect hoses and hose covers.

b. Inspect and exercise nozzles.

NOTE: Fire hoses are hydrostatically tested once a year by a Fire Equipment Inspector.

SECTION B - ADMINISTRATIVE PROCEDURES, CONTROLS, AND FIRE BRIGADE				
Requirements of Standard Review Plan BTP 9.5-1, Appendix A (1977) Plants Under Construction	Compliance Alternate Compliance	Basis for Acceptability	Specific Exceptions To Compliance	Compliance Statements From Original FHA and Responses to Selected NRC Questions
				3. Fire Hydrants a. Inspect hose caps and threads; grease threads as needed. b. Inspect and operate shutoff valve. c. Check for valve leakage. 4. Post Indicator Valve (PIV) a. Check for broken seals. b. Check valve handles for defects. c. Check for damage of PIV casing. d. Exercise PIV's. 5. Fire Equipment and Storage Location Inventory and inspect the equipment. 6. Record Keeping Monthly records will be kept on all tests and inspections performed on station fire fighting equipment.

SECTION B - ADMINISTRATIVE PROCEDURES, CONTROLS, AND FIRE BRIGADE				
Requirements of Standard Review Plan BTP 9.5-1, Appendix A (1977) Plants Under Construction	Compliance Alternate Compliance	Basis for Acceptability	Specific Exceptions To Compliance	Compliance Statements From Original FHA and Responses to Selected NRC Questions
	Alternate Compliance	A minimum of 5 Fire Department members will be maintained onsite at all times. The Fire Department is staffed by full-fighters meeting selected requirements as established by Fire Protection Services using NFPA 1001 as a guiding document. The organization of the Fire Department is constructed around guidelines set forth in NFPA 1201 (formerly NFPA 4 and 4A).		A minimum of 5 fire brigade members will be maintained onsite at all times. The fire brigade may be manned by personnel assigned to Units 1, 2, or 3 and will be responsible for responding to fire emergencies anywhere on the site. The personnel assigned to the fire brigade are specified in station orders. Monthly meetings for all potential members of the fire brigade are held for training purposes. The training includes fire fighting with portable fire extinguishers, the use of hose lines, ventilation of buildings, salvage operations, rescue operations and the special aspects of fighting fires in controlled areas. It also includes coverage of new equipment, procedures, methods and hazards. These meetings are in addition to the training for all station personnel. Station personnel are trained to fight fires with the various types of equipment available in the station. Such training includes the aspects of fighting fires complicated by the presence of radioactivity. This training takes place during regular station safety meetings and fire fighting drills. The Camp Pendleton fire fighting crews are trained to fight all types of fires. Their training includes techniques for fighting fires complicated by the presence of radioactivity. Periodically, the Camp Pendleton fire fighters are brought to the station to familiarize them with the station and with the station fire fighting procedures.

SECTION B - ADMINISTRATIVE PROCEDURES, CONTROLS, AND FIRE BRIGADE				
Requirements of Standard Review Plan BTP 9.5-1, Appendix A (1977) Plants Under Construction	Compliance Alternate Compliance	Basis for Acceptability	Specific Exceptions To Compliance	Compliance Statements From Original FHA and Responses to Selected NRC Questions
				Unannounced practice drills are conducted quarterly to check the abilities of brigade members and other station personnel to perform the operations they are expected to carry out with the fire equipment provided. During these drills, equipment is operated whenever possible. For example, portable extinguishers are actually discharged, respiratory protective equipment worn, and water turned into hose lines. Practice drills are carried out under the control of the Fire Brigade Chief at a moderate pace with emphasis on effectiveness. All other station personnel on site during the drills participate under the direction of the brigade. At the conclusion of practice drills, equipment is promptly placed in readiness to respond to a fire call. Annually, these drills are conducted in cooperation with the Camp Pendleton Marine Corps Fire Department. An NML inspector of the fire insurance serving the Company witnesses a station fire brigade drill at least on an annual basis. The standards and guide lines promulgated by the fire protection industry and applicable government agencies are utilized in the development of Company fire protection policies and plans.

SECTION C - QUALITY ASSURANCE PROGRAM				
Requirements of Standard Review Plan BTP 9.5-1, Appendix A (1977) Plants Under Construction	Compliance Alternate Compliance	Basis for Acceptability	Specific Exceptions To Compliance	Compliance Statements From Original FHA and Responses To Selected NRC Questions
The quality assurance (QA) programs of the applicants and contractors should be developed and implemented to assure that the requirements for design, procurement, installation, and testing and administrative controls for the Fire Protection Program for safety-related areas as defined in this Branch Position are satisfied. The program should be under the management control of the QA organization.	Comply - Southern California Edison's Topical Quality Assurance Manual, Chapter 8A "Quality Assurance Program for Fire Protection Program."	Meets Requirements	None	The Quality Assurance Program for the Fire Protection Program during the design, construction, and startup phase of the subject units is designed to conform with the applicable requirements of Branch Technical Position APCSB 9.5.1 (5-1-76) Position B.7 and Appendix A (8-23-76) Position C based on the status of design and construction of fire protection program systems and components as of March 1, 1977. The applicant has delegated the work of implementation of this program to Bechtel Power Corporation but retains responsibility for Program application and implementation. The applicant's Quality Assurance Program as described in PSAR Appendix A, Attachment 1, shall be extended to include design review of selected Bechtel design documents, surveillance of construction activities, monitoring and conduct of startup tests and audits of program activities for the fire protection program systems and components. A description of the Bechtel Quality Assurance Program for the Fire Protection Program is listed below. 1. <u>Organization</u> a. Establishment and implementation of the Quality Assurance Program provisions for the fire protection system by the designated departments shall be the responsibility of the Project Manager. b. The Project QA Supervisor advises the Quality Assurance Manager on quality matters. He coordinates the establishment and assures implementation of the Quality Assurance Program for the fire protection systems. Quality Assurance and Quality Control personnel will assist the Project QA Supervisor in the performance of his duties. c. Bechtel personnel for engineering, construction, procurement, and startup will support the application of the Quality Assurance Program provisions to the fire protection systems by implementation of the requirements of this Program. d. The project responsibilities as applied to the Quality Assurance Program are delineated below:

SECTION C - QUALITY ASSURANCE PROGRAM				
Requirements of Standard Review Plan BTP 9.5-1, Appendix A (1977) Plants Under Construction	Compliance Alternate Compliance	Basis for Acceptability	Specific Exceptions To Compliance	Compliance Statements From Original FHA and Responses To Selected NRC Questions
				(1) The project Manager is responsible for coordination of activities between participating organizations and overall technical, schedule and economic management for the project. (2) The Project Engineer is responsible for fire protection systems engineering and design performed by Bechtel and for review of this area when performed by contractors. (3) The Project Procurement Manager is responsible for procurement of fire protection program materials, equipment, and services when performed by Bechtel. (4) The Field Construction Manager is responsible for installation of the fire protection equipment. (5) The Project Quality Assurance Supervisor is responsible for review, inspection, surveillance, and audit of the quality assurance program provisions. 2. Quality Assurance Program a. The Quality Assurance Program shall assure that design, procurement, construction, startup testing, and associated control requirements pertinent to the fire protection systems are satisfactory. These are the areas containing safety-related systems and components which are required to shut down the reactor, mitigate the consequences of postulated accidents, and maintain the reactor in a safe shutdown condition. b. Management shall regularly review the quality assurance program status.
The QA Program criteria that apply to the Fire Protection Program should include the following: 1. DESIGN CONTROL AND PROCUREMENT DOCUMENT CONTROL	Comply	Meets Requirements	None	1. Design Control

SECTION C - QUALITY ASSURANCE PROGRAM				
Requirements of Standard Review Plan BTP 9.5-1, Appendix A (1977) Plants Under Construction	Compliance Alternate Compliance	Basis for Acceptability	Specific Exceptions To Compliance	Compliance Statements From Original FHA and Responses To Selected NRC Questions
Measures should be established to assure that all design-related guidelines of the Branch Technical Position are included in design and procurement documents and that deviations there from are controlled.	Comply	Meets Requirements	None	a. Design control measures shall be provided and shall assure that fire protection system requirements are included in design documents and that deviations there from are controlled. b. Bechtel calculations, drawings and specifications will be checked and approved in accordance with established procedures. All design and procurement documents will be reviewed for compliance to SAR commitments and proposed deviations will be identified through established procedures.
2. Instructions, Procedures, and Drawings Inspections, tests, administrative controls, fire drills, and training that govern the Fire Protection Program should be prescribed by documented instructions, procedures, or drawings and should be accomplished in accordance with these documents.	Comply	Meets Requirements	None	2. Instructions, Procedures, and Drawings Inspections, tests, administrative controls, fire drills, and training that govern this program shall be prescribed by documented instructions, procedures or drawings an shall be accomplished in accordance with these documents.
3. Control of Purchased Material, Equipment, and Services Measures should be established to assure that purchased material, equipment and services conform to the procurement documents.	Comply	Meets Requirements	None	3. Control of Purchased Material, Equipment, and Services a. Suppliers of material, equipment, and services for the Fire Protection Program will be subject to source inspection surveillance in accordance with established procedures. The extent and application of these provisions to the fire protection systems will be determined on a case-by-case basis by project engineering. This determination shall be based on the complexity of the item being manufactured, the function of the item in service and the degree of inspectability upon receipt and installation at the jobsite. b. Jobsite contractors shall be subject to surveillance by QA/QC engineers in accordance with established procedures. c. Documentary evidence will be provided when required, to identify the specific requirements, such as codes, standards or specifications met by the purchased material and equipment. Testing and inspection at the jobsite combined with certified manufacturer's data, when available, will provide a record of material and equipment which will be used as a basis for operation of fire protection equipment. d. Receiving inspection will be provided at the jobsite in accordance with established procedures.

SECTION C - QUALITY ASSURANCE PROGRAM				
Requirements of Standard Review Plan BTP 9.5-1, Appendix A (1977) Plants Under Construction	Compliance Alternate Compliance	Basis for Acceptability	Specific Exceptions To Compliance	Compliance Statements From Original FHA and Responses To Selected NRC Questions
4. INSPECTION A program for independent inspection of activities affecting fire protection should be established and executed by, or for, the organization performing the activity to verify conformance with documented installation drawings and test procedures for accomplishing the activities.	Comply	Meets Requirements	None	4. Inspection a. Source inspection activities for the fire protection systems shall be provided for in accordance with the established procedures. b. Subcontractors performing fire protection system jobsite work activities shall establish appropriate organizational relationships to assure that inspection activities are performed by individuals other than those who performed the activity being inspected. Contractor shall implement a quality assurance program compatible with requirements outlined in this procedure. c. Inspection of fire protection material and equipment will be provided primarily at the jobsite with selected source inspection as required by engineering for the appropriate material. d. Verification of the fire protection system physical installation after construction by QA/QC is required and will be documented in accordance with established procedures. Verification of cable continuity will be performed during the normal course of startup testing.
5. TEST AND TEST CONTROLS A test program should be established and implemented to assure that testing is performed and verified by inspection and audit to demonstrate conformance with design and system readiness requirements. The tests should be performed in accordance with written test procedures; test results should be properly evaluated and acted on.	Comply	Meets Requirements	None	5. TEST CONTROLS a. Test controls for the fire protection systems shall be established and implemented in accordance with applicable requirements so that fire protection system tests are performed in accordance with written test procedures and that test results are properly evaluated and acted upon. b. The responsibility for implementation of test controls during the startup phase shall rest with startup engineers. Witnessing of tests will be provided by quality control engineers.

SECTION C - QUALITY ASSURANCE PROGRAM				
Requirements of Standard Review Plan BTP 9.5-1, Appendix A (1977) Plants Under Construction	Compliance Alternate Compliance	Basis for Acceptability	Specific Exceptions To Compliance	Compliance Statements From Original FHA and Responses To Selected NRC Questions
				c. Startup test controls shall assure that fire protection equipment is fully operational to meet design requirements at the time of installation. Periodic retests will be provided to assure equipment operability when required. A test plan shall be established which defines the types, frequency, and detailed procedures for periodic retesting of equipment. (This criteria applies to the installed system.)
6. INSPECTION, TEST AND OPERATING STATUS Measures should be established to provide for identification of items that have satisfactorily passed required tests and inspections.	Comply	Meets Requirements	None	6. INSPECTION, TEST AND OPERATING STATUS Inspection, test, and operating status of the fire protection equipment shall be documented in accordance with established procedures. These procedures will include provisions for identification of items satisfactorily passing required tests and inspections.
7. NON-CONFORMING ITEMS Measures should be established to control items that do not conform to specified requirements to prevent inadvertent use of installation.	Comply	Meets Requirements	None	7. Non-conforming Materials, Parts and Components Non-conforming conditions shall be identified, documented, and dispositioned consistent with established procedures. These procedures control items that do not conform to specified requirements to prevent inadvertent use of installation.
8. CORRECTIVE ACTION Measures should be established to assure that conditions adverse to fire protection, such as failures, malfunctions, deficiencies, deviations, defective components, uncontrolled combustible promptly identified, reported, and corrected.	Comply	Meets Requirements	None	8. CORRECTIVE ACTION Conditions adverse to maintaining the capability of the fire protection equipment to perform its intended function shall be identified, documented, and corrected in accordance with established procedures. These procedures provide assurance that failures, malfunctions, deficiencies, deviation defective components, uncontrolled combust material, and non-conformances are properly identified, reported, and corrected.
9. RECORDS Records should be prepared and maintained to furnish evidence that the criteria enumerated above are being met for activities affecting the fire protection program.	Comply	Meets Requirements	None	9. Quality Assurance Records a. Records shall be prepared and maintained sufficient to furnish evidence that the requirements of this Program are being met. These records include the following: (1) Design documents that form the basis for as-constructed conditions. (2) Documents for procurement that form the basis for manufacturing and inspection of items.

SECTION C - QUALITY ASSURANCE PROGRAM				
Requirements of Standard Review Plan BTP 9.5-1, Appendix A (1977) Plants Under Construction	Compliance Alternate Compliance	Basis for Acceptability	Specific Exceptions To Compliance	Compliance Statements From Original FHA and Responses To Selected NRC Questions
				(3) Inspection and test records evidencing the degree of compliance of as- constructed items with design and procurement document requirements are stored in field engineering files until completion of construction activities. Upon completion of construction activities they will be transferred to the Client's record retention center. (4) Non-conformance and corrective action reports. (5) Audit reports.
10. AUDITS Audits should be conducted and documented to verify compliance with the Fire Protection Program including design and procurement documents, instructions, procedures and drawings, and inspection and test activities.	Comply	Meets Requirements	None	10. AUDITS Audits of the Quality Assurance Program controls as applied to the fire protection program shall be performed in accordance with established procedures. These audits will be conducted and documented to verify compliance with the requirements of this Program. 11. Procurement Document Control Procurement document control measures shall be provided and shall assure that fire protection program requirements are included in procurement documents and that deviations therefrom are controlled. 12. Document Control Document control measures for the fire protection systems shall be provided and shall assure that documents affecting activities described herein shall be reviewed for adequacy and approved for release by authorized personnel and shall be distributed to and used at the locations where the prescribed activity is performed.

SECTION D - GENERAL GUIDELINES FOR PLANT PROTECTION				
Requirements of Standard Review Plan BTP 9.5-1, Appendix A (1977) Plants Under Construction	Compliance Alternate Compliance	Basis for Acceptability	Specific Exceptions To Compliance	Compliance Statements From Original FHA and Responses To Selected NRC Questions
1. BUILDING DESIGN				1. Building Design
a. Plant layouts should be arranged to:				a. Plant layouts are arranged such that:
(1) Isolate safety-related systems from unacceptable fire hazards, and	Comply	Meets Requirements	None	(1) All safety-related systems and components are isolated from fire hazards, which could damage both redundant safe shutdown systems. See D.1.(a)(2) below.
(2) Alternatives:				
a. Redundant safety-related systems that are subject to damage from a single fire hazard should be protected by a combination of fire retardant coatings and fire detection and suppression systems, or a separate system to perform the safety function should be provided.	Alternate Compliance. Safe shutdown systems (not including all safety-related systems) were individually analyzed to define specific requirements for providing wrap, suppression and/or detection based upon the fire hazards analysis. Refer to UFHA, App. D, 10CFR50 Appendix R compliance.	Safe shutdown can be achieved in the event of fire in any fire zone. Fire retardant coatings do not provide acceptable protection.	Reference San Onofre Units 2&3 Updated FHA, Section 7.0 for design details. Fire retardant coatings are not utilized.	(2) A fire barrier comprised of two one-inch thicknesses of heat insulating material with a rating of approximately one-hour blanket is wrapped around one train of redundant safe shutdown cables separated by less than 20 feet with the exception of the containment, cable spreading room and control room. Automatic deluge sprinkler systems analysis and smoke detectors are installed in cable riser galleries, cable tunnels and spreading rooms. Safe shutdown capability allows the plant to be put in a safe shutdown condition after loss of either the cable spreading room or control room. Within the containment, existing separation and administrative controls prevent damage from a single fire hazard to safe shutdown cables or equipment.

SECTION D - GENERAL GUIDELINES FOR PLANT PROTECTION				
Requirements of Standard Review Plan BTP 9.5-1, Appendix A (1977) Plants Under Construction	Compliance Alternate Compliance	Basis for Acceptability	Specific Exceptions To Compliance	Compliance Statements From Original FHA and Responses To Selected NRC Questions
				To provide remote safe shutdown capability that is electrically and physically independent of the control room and cable spreading room, isolation switches and/or relays to electrically isolate shutdown equipment controls on the remote shutdown panel from circuits in the cable spreading and control room are provided. A new safety-related (Seismic I) switch/relay panel will be installed in the load group A and load group B switchgear rooms which are separated by two-hour fire walls. All control and power circuits required for safe shutdown during or after operation of the transfer switches and/or relays will be identified and routed to ensure electrical and physical independence from the control room and cable spreading room. Process instrumentation cabinets for processing essential instrumentation signals are located only in the control room; therefore, transfer switches will not provide the desired separation. Therefore, a new non-safety related (Seismic II) instrumentation panel is provided in the electrical penetration area with self contained process instrumentation utilizing existing non-safety related transmitters which are isolated from existing instrumentation by means of transfer switches. Meters are provided on this panel to indicate steam generator pressure and level, pressurizer pressure and level, reactor coolant hot and cold leg temperatures. [Editorial Note: Cold leg temperature indication is not provided on the EPPM panel.]

SECTION D - GENERAL GUIDELINES FOR PLANT PROTECTION				
Requirements of Standard Review Plan BTP 9.5-1, Appendix A (1977) Plants Under Construction	Compliance Alternate Compliance	Basis for Acceptability	Specific Exceptions To Compliance	Compliance Statements From Original FHA and Responses To Selected NRC Questions
b. In order to accomplish 1.a above, safety-related systems and fire hazards should be identified throughout the plant. Therefore, a detailed fire hazard analysis should be made. The fire hazards analysis should be reviewed and updated as necessary.	Comply	Meets Requirements	None	A fire hazards analysis has been performed and an additional specific fire hazard analysis will be performed for each plant modification.
Additional fire hazards analysis should be done after any plant modification.	Comply	Meets Requirements	None	
c. Alternative guidance for constructed plants is shown in Section F.3, "Cabling Spreading Room."	See Section F.3.			See Section F.3.
d. Interior wall and structural components, thermal insulation materials and radiation shielding materials and sound-proofing should be non-combustible.	Comply with exception.	The use of fiberglass is minimized. The insulation will not significantly contribute to any fire. The use of urethane foam is limited to the emergency recirculation piping tunnels seismic joint for the purpose of ground water flood prevention. This material does not impact the combustible loading in any fire area as it is located in the seismic gap and is isolated between the ground and a steel plate. Thus, it will not contribute to any fire. Plastic reinforced fiberglass grating is used in the outside yard areas where there are limited combustible materials, and minimal exposure to Safety Related/Safe Shutdown equipment. Containment and other buildings contain embedded expansion material between concrete floors and steel columns. Encapsulated styrofoam and other joint materials do not contribute to fire propagation and, as such, are not counted as a combustible load.	Fiberglass used as a thermal insulation is combustible. Urethane foam, Prime Flex 900 LVSF, used as insulation for the purpose of flood prevention is combustible. Plastic reinforced fiberglass grating is used in the Unit 2 and 3 yard areas near the Intake Structure.	Interior wall and structural components and radiation shielding materials are non-combustible as required by Nuclear Mutual Limited (NML) - "Property Loss Prevention Standards for Nuclear Generating Stations."

SECTION D - GENERAL GUIDELINES FOR PLANT PROTECTION				
Requirements of Standard Review Plan BTP 9.5-1, Appendix A (1977) Plants Under Construction	Compliance Alternate Compliance	Basis for Acceptability	Specific Exceptions To Compliance	Compliance Statements From Original FHA and Responses To Selected NRC Questions
Interior finishes should be noncombustible or listed by a nationally recognized testing laboratory, such as Factory Mutual or Underwriters' Laboratory, Inc. for flame spread smoke and fuel contribution of 25 or less in its use configuration (ASTM E-84 Test), "Surface Burning Characteristics of Building Materials."	Comply with exception.	The use of vinyl flooring is limited.	The rating of the vinyl flooring exceeds the flame spread rating requirement.	The interior finishes are non-combustible as listed by Underwriters' Laboratory, Inc., or Factory Mutual for flame spread, smoke and fuel contribution of 25 or less in its final use configuration per ASTM E-84 Test - "Surface Burning Characteristics of Building Materials." Floor finishes are qualified to a No. 4 rating or less in the UL Test No. 992.
		Both ASTM E-648 (NFPA 253) and ASTM E-662 (NFPA 258) together now represent fire testing methods more suitable for carpet. This criteria met by the Control Room carpet is recognized by the NML Property Loss Prevention Standards as providing an acceptable level of protection to ensure that non combustible materials are utilized and fire hazards associated with this type of "interior finish" are minimized. ASTM E-84 (flame spread rating) is no longer recognized by NML as an acceptable test standard for carpet. This is consistent with industry practice.	Control Room carpeting has a critical radiant flux as measured by ASTM E-648 (NFPA 253) greater than or equal to .45 watts/sq. cm (class 1 rating) and a smoke development rating of less than or equal to 200 as tested in ASTM E-662 (NPFA 258). The carpet was not tested to ASTM E-84.	Response to FQO15.3 The definitions of non-combustible and limited combustible have been revised to conform with NFPA 220. All wrap, insulation and interior finish, in areas containing safety-related equipment, comply with the NFPA 220 non-combustible or limited combustible criteria (with the exception of the vinyl-asbestos floor covering of the continuously manned control room space, which has a flame spread rating of 75 instead of 25). All vinyl-asbestos tiles used in the plant are rated according to the UL 992 test and have a rating of 4 or lower. The air conditioning water chillers have been factory insulated with Rubatex which does not meet the limited combustible criteria, but the quantities are environmentally small with the maximum temperature being ambient. Approximately 15 pipe supports were also insulated with Rubatex but again the quantities are small and the maximum environmental temperature is ambient.
e. Metal deck roof construction should be noncombustible (see the building materials directory of Underwriters' Laboratory, Class I by Factory Mutual System Approval Guide.	Comply	Meets Requirements	None	All metal deck roof construction is non-combustible and listed as Class I by Factory Mutual, or Class A by Underwriters' Laboratories.

SECTION D - GENERAL GUIDELINES FOR PLANT PROTECTION				
Requirements of Standard Review Plan BTP 9.5-1, Appendix A (1977) Plants Under Construction	Compliance Alternate Compliance	Basis for Acceptability	Specific Exceptions To Compliance	Compliance Statements From Original FHA and Responses To Selected NRC Questions
Where combustible material is used in metal deck roofing design acceptable alternatives are 1) replace combustibles with noncombustible materials, 2) provide an automatic sprinkler system, or 3) provide ability to cover roof exterior and interior with adequate water volume and pressure.	Not Applicable	Not Applicable	Not Applicable	
f. Suspended ceilings and their supports should be of non-combustible construction. Concealed spaces should be devoid of combustibles. Adequate fire detection and suppression systems should be provided where full implementation is not practicable.	Comply with exception.	Manual fire fighting hose stations and portable extinguishers are available for use in fighting fires in concealed spaces. Fire detection or suppression is provided for all concealed space areas containing combustibles with one exception. The Appendix R compliance assessment has demonstrated that safe shutdown can be achieved for a fire in fire area/zones listed assuming the loss of all components and cabling in the area. There are no ignition sources in the areas/zones. The combustibles in concealed spaces consist of cable insulation routed in cable trays.	The following areas of the plant contain concealed spaces with combustible material in the concealed space and are not provided with both fire detection and suppression systems: 2-AC-30-20A 2-AC-30-27 2-AC-70-64 2-PE-63-3B 3-PE-63-3B In fire area 2-AC-30-22 neither fire detection nor fire suppression is provided, however, minimal combustible material is present in the concealed space.	Suspended ceilings and their supports are of noncombustible materials as defined in the Fire Hazards Analysis. Concealed spaces are devoid of combustibles except for lighting and associated lighting cables which are in aluminum sheath.
g. High voltage - high amperage transformers installed inside buildings containing safety-related systems should be of the dry type or insulated and cooled with non-combustible liquid.	Comply	Meets Requirements Dry type transformers are installed	None	All transformers installed inside safety-related buildings are of the dry type.
Safety-related systems that are exposed to flammable oil-filled transformers should be protected from the effects of a fire by:	Not Applicable	Not Applicable	Not Applicable	

SECTION D - GENERAL GUIDELINES FOR PLANT PROTECTION				
Requirements of Standard Review Plan BTP 9.5-1, Appendix A (1977) Plants Under Construction	Compliance Alternate Compliance	Basis for Acceptability	Specific Exceptions To Compliance	Compliance Statements From Original FHA and Responses To Selected NRC Questions
1. Replacing with dry transformers or transformers that are insulated and cooled with noncombustible liquid, or 2. Enclosing the transformer with a three-hour fire barrier and installing automatic water spray protection.				
h. Buildings containing safety-related systems, having openings in exterior walls closer than 50 feet to flammable oil-filled transformers should be protected from the effects of a fire by:	Alternate Compliance	The main and auxiliary reserve transformers are located less than 50 feet from the safety-related tank area enclosures. The combination of separation distance plus a 2-foot reinforced concrete wall provides equivalent fire protection. In addition, the Unit Auxiliary and Reserve Auxiliary transformer termination enclosures communicate with underground electrical cable tunnels which contain cables required for post-fire shutdown. The point of interface in all cases is a non-rated 0.25" steel plate with numerous cable penetrations. A Fire Protection engineering evaluation has been performed for these non-rated features in the two hour fire rated boundary. Based upon the fire protection features on either side of the non-rated features, the existing configuration is acceptable.	There are 10" drain lines on the CST enclosures. These penetrations do not compromise the fire protection features due to their configuration.	Buildings containing safety-related systems are protected from exposure or spill fires involving oil-filled transformers by being located more than 50 feet away or by ensuring that the wall of the safety-related building has a fire rating of three hours without openings.
1. Closing of the opening to have fire resistance equal to three hours. 2. Constructing a three-hour fire barrier between the transformers and the wall openings; or 3. Closing the opening and providing the capability to maintain a water curtain in case of a fire.				

SECTION D - GENERAL GUIDELINES FOR PLANT PROTECTION				
Requirements of Standard Review Plan BTP 9.5-1, Appendix A (1977) Plants Under Construction	Compliance Alternate Compliance	Basis for Acceptability	Specific Exceptions To Compliance	Compliance Statements From Original FHA and Responses To Selected NRC Questions
i. Floor drains, sized to remove expected fire fighting water flow should be provided in those areas where fixed water fire suppression systems are installed. Drains should also be provided in other areas where hand hose lines may be used if such fire fighting water could cause unacceptable damage to equipment in the area. Equipment should be installed on pedestals, or curbs should be provided as required to contain water and direct it to floor drains. (See NFPA 92M, "Waterproofing and Draining of Floors.") Drains in areas containing combustible liquids should have provisions for pre-venting the spread of the fire throughout the drain system.	Comply with exceptions.	An analysis of water accumulation in plant areas without drains sized for fire suppression systems has demonstrated that safe shutdown capability will not be adversely impacted.	Some areas are not provided with floor drains sized to remove expected fire fighting water.	Accumulation of water from the operation of any fire supression system will not create unacceptable consequences. Therefore, floor drains are not sized for fire suppression systems in all plant areas.
Water drainage from areas which may contain radioactivity should be sampled and analyzed before discharge to the environment. In operating plants or plants under construction, if accumulation of water from the operation of new fire suppression systems does not create unacceptable consequences, drains need not be installed.	Comply	Meets Requirements	None	
j. Floors, walls and ceilings enclosing separate fire areas should have minimum fire rating of three hours.	Non-compliance	Wall ratings are based upon the fire hazards analysis. Reference San Onofre Units 2&3 Updated FHA, Section 7.0.	Not all floors, walls and ceilings enclosing separate fire areas have a minimum fire rating of three hours.	Floors, walls, and ceilings of fire areas are separated from other fire areas of the plant by a minimum of two-hour fire rated barriers with many of the barriers rated as three hours.

SECTION D - GENERAL GUIDELINES FOR PLANT PROTECTION				
Requirements of Standard Review Plan BTP 9.5-1, Appendix A (1977) Plants Under Construction	Compliance Alternate Compliance	Basis for Acceptability	Specific Exceptions To Compliance	Compliance Statements From Original FHA and Responses To Selected NRC Questions
Penetration in these fire barriers, including conduits and piping, should be sealed or closed to provide a fire resistance rating at least equal to that of the fire barrier itself.	Comply with exception.	A penetration seal evaluation program has been performed which assessed the qualification of the fire barrier penetration seals. The program has evaluated the testing basis for the seal installation details which depict the preapproved configurations. Where a fire rated seal was not represented by a test, an 86-10 boundary evaluation was performed to demonstrate the adequacy of the seal. Fire areas which have corresponding 86-10 evaluations are identified in the detailed fire hazards analyses contained in Section 7.0.	Not all penetration seals provide a minimum fire rating equal to the rating of the barrier.	Penetrations in these fire barriers are sealed to provide a minimum fire rating equal to the rating of the barrier.
Door openings should be protected with equivalent rated doors, frames and hardware that have been tested and approved by a nationally recognized laboratory.	Comply with exceptions.	Special purpose doors were provided in accordance with overriding security, safety and nuclear concerns. All fire doors bear UL labels or have documentation that justifies the acceptability. Guidelines for future modifications of fire rated doors have been developed.	Fire protection requirements were not applied to special purpose doors provided for overriding security, safety and nuclear concerns (i.e., watertight and security doors).	Door openings are protected with fire rated doors (commensurate with or in excess of the rating of the barrier), frames, and hardware bearing a UL label.
Such doors should be normally closed and locked or alarmed with alarm and annunciation in the control room.	Non-compliance	Fire doors are sur-veilled in accordance with plant Licensee Controlled Specifications.	Doors are locked and alarmed in accordance with security requirements only.	
Penetrations for ventilation system should be protected by a standard "fire door damper" where required. (Refer to NFPA 80, "Fire Doors and Windows.")	Alternate Compliance	Fire areas without fire dampers in ducts penetrating fire area boundaries are identified in Section 7.0. The fire hazards	Fire dampers have been constructed and installed in accordance with NFPA 90A with two exceptions.	The HV&AC systems are designed in accordance with NFPA 90A, "Air Conditioning and Ventilation Systems." Since three-hour rated UL listed accordion-type fire dampers are presently

SECTION D - GENERAL GUIDELINES FOR PLANT PROTECTION				
Requirements of Standard Review Plan BTP 9.5-1, Appendix A (1977) Plants Under Construction	Compliance Alternate Compliance	Basis for Acceptability	Specific Exceptions To Compliance	Compliance Statements From Original FHA and Responses To Selected NRC Questions
		evaluations documented in Section 7.0 as well as in supplemental evaluations prepared in accordance with Generic Letter 86-10, demonstrate the adequacy of the barriers. Expansion gaps in excess of 1/4 inch have been sealed with a fire-resistant penetration seal material which prevents the propagation of fire and combustion products past the duct sleeve.	Fire dampers have not been installed in all fire barriers with a rating of 2 hours or greater. Expansion gaps around damper sleeves in fire barriers exceed the 1/4 inch gap specified by the damper manufacturer.	available, San Onofre 2&3 considers that the 3-hour fire rated "Fire Door Damper" is an earlier design method of providing an equivalently rated 3-hour fire damper.
The fire hazard in each area should be evaluated to determine barrier requirements.	Comply - San Onofre Units 2&3 Updated FHA, Section 7.0.	Meets Requirements The detailed fire hazards analyses in Section 7.0 demonstrate that the fire area/zone boundaries will prevent propagation of fire into adjacent fire areas/zones credited to protect safe shutdown components.	None	Fire zones within the fire areas are separated by fire walls with 1-, 2- and 3-hour ratings. The 2- and 3-hour barriers are provided with labeled doors and dampers and equipped with penetration seals equal to the rating of the wall. The 1-hour barriers are also equipped with labeled doors. Fire doors are normally closed, however, they are provided with alarms.
If barrier fire resistance cannot be made adequate, fire detection and suppression should be provided, such as: 1. Water curtain in case of fire. 2. Flame retardant coatings. 3. Additional fire barriers.	Not Applicable	Not Applicable	Not Applicable	Based on the results of the Fire Hazards Analysis, it has been determined that the fire barriers provided are adequate for the given hazard.

SECTION D - GENERAL GUIDELINES FOR PLANT PROTECTION				
Requirements of Standard Review Plan BTP 9.5-1, Appendix A (1977) Plants Under Construction	Compliance Alternate Compliance	Basis for Acceptability	Specific Exceptions To Compliance	Compliance Statements From Original FHA and Responses To Selected NRC Questions
				Response to FQO15.15 The floors and ceilings of building spaces containing equipment and cabling required for safe shutdown consist of concrete slabs 15 inches thick. These are considered to have a basic fire rating in excess of two hours due to their construction. The walls are constructed to the UBC and are thus qualified for their fire rating by following the code construction requirements. The main load bearing columns are constructed to the requirements of the UBC and are thus qualified for their three-hour rating by following the code construction requirements. Fire dampers are provided in conformance with NFPA, 90A-1973 and their fire rating is qualified to match or exceed the fire barriers. Each fire damper has a UL label and serial number on its frame. The fire dampers were installed in accordance with manufacturer's recommendations and installation methods that comply with their rating and qualification tests. All fire rated doors are purchased with UL labels and installed in accordance with the manufacturer's recommendations commensurate with the rating of the wall in which they were installed. All fire barrier penetration seals will be type tested in the configuration in which they will be used. Construction quality assurance procedures are applied to all the fire stop seals to ensure that each seal is installed to the applicable specification and drawing. The configuration of the assemblies tested complies with the requirements of ASTM E119.

SECTION D - GENERAL GUIDELINES FOR PLANT PROTECTION				
Requirements of Standard Review Plan BTP 9.5-1, Appendix A (1977) Plants Under Construction	Compliance Alternate Compliance	Basis for Acceptability	Specific Exceptions To Compliance	Compliance Statements From Original FHA and Responses To Selected NRC Questions
2. CONTROL OF COMBUSTIBLES				2. Control of Combustibles
a. Safety-related systems should be isolated or separated from combustible materials. When this is not possible because of the nature of the safety system or the combustible material, special protection should be provided to prevent a fire from defeating the safety system function. Such protection may involve a combination of automatic fire suppression, and construction capable of withstanding and containing a fire that consumes all combustibles present. Examples of such combustible materials that may not be separable from the remainder of its system are:	Comply	Meets Requirements	None	a. Safety-related systems are isolated or separated from combustible materials, and the combustible materials are provided with automatic sprinkler or spray suppression systems. [Editorial Note: See Section D.3.(c).] Specifically:
(1) Emergency diesel generator fuel oil day tanks.	Comply	Meets Requirements	None	(1) The diesel generator day tanks have only a capacity of 550 gallons and are located in the same areas as the diesel as permitted by NFPA. The entire diesel generator room is equipped with an automatic pre-action sprinkler system.
(2) Turbine-generator oil and hydraulic control fluid systems.	Comply	Meets Requirements	None	(2) The turbine-generator oil and hydraulic systems are isolated from all safety-related systems and components, and are equipped with automatic water extinguishing systems.
(3) Reactor coolant pump lube oil system.	Comply	Meets Requirements	None	(3) The reactor coolant pump lube oil systems are protected by a fixed deluge water spray system.
b. Bulk gas storage (either compressed or cryogenic) should not be permitted inside structures housing safety-related equipment. Storage of flammable gas such as hydrogen should be located outdoors or in separate detached buildings so that a fire or explosion will not adversely affect any safety-related system or equipment. (Refer to NFPA 50A, "Gaseous Hydrogen Systems.")	Comply	Meets Requirements	None	b. Bulk gas storage of propane, hydrogen, nitrogen, carbon dioxide, and compressed air is provided in the following locations:

SECTION D - GENERAL GUIDELINES FOR PLANT PROTECTION				
Requirements of Standard Review Plan BTP 9.5-1, Appendix A (1977) Plants Under Construction	Compliance Alternate Compliance	Basis for Acceptability	Specific Exceptions To Compliance	Compliance Statements From Original FHA and Responses To Selected NRC Questions
Care should be taken to locate high pressure gas storage containers with the long axis parallel to building walls. This will minimize the possibility of wall penetration in the event of a container failure. Use of compressed gases (especially flammable and fuel gases) inside buildings should be controlled. (Refer to NFPA 6, "Industrial Fire Loss Prevention.")	Comply with exception.	Walls enclosing the safety-related tanks are designed to be missile resistant.	High pressure nitrogen containers are located with the long axis not parallel to the walls enclosing the Unit 2 condensate storage tanks.	(1) Nitrogen - outside, adjacent to northeast corner of the enclosure for the Unit 2 condensate storage tanks. (2) Hydrogen - outside, between the gantry crane rail foundations beyond the north and south ends of the turbine buildings for Unit 2 and Unit 3, respectively. (3) Carbon dioxide - outside, beneath the access bridge in the intake structure area. (4) Compressed air - inside, in the northwest corner of the non-safety-related Unit 2 turbine building at the seven-foot elevation floor level. (5) Propane - outside, adjacent to the west side of the Unit 3 turbine building. (6) Essential gases for turbine laboratory consisting of acetylene, hydrogen, nitrous oxide, and oxygen are stored outside the west wall of the control building. The only stored compressed gases in safety-related buildings are those associated with portable fire extinguishers, the Halon 1301 cylinders for the computer room fire protection (located in a passageway alcove in back of both computer rooms in the auxiliary buildings control area 30-foot elevation level) and essential gases in the radio chemical laboratory at the 70-foot elevation which is not safety-related.

SECTION D - GENERAL GUIDELINES FOR PLANT PROTECTION				
Requirements of Standard Review Plan BTP 9.5-1, Appendix A (1977) Plants Under Construction	Compliance Alternate Compliance	Basis for Acceptability	Specific Exceptions To Compliance	Compliance Statements From Original FHA and Responses To Selected NRC Questions
c. The use of plastic materials should be minimized. In particular, halogenated plastics such as polyvinyl chloride (PVC) and neoprene should be used only when substitute noncombustible materials are not available. All plastic materials, including flame and fire retardant materials, will burn with an intensity and BTU production in a range similar to that of ordinary hydrocarbons. When burning, they produce heavy smoke that obscures visibility and can plug air filters, especially charcoal and HEPA. The halogenated plastics also release free chlorine and hydrogen chloride when burning which are toxic to humans and corrosive to equipment.	Comply with exceptions	The use of plastic materials is minimized throughout the plant with the exception of the turbine buildings which are naturally ventilated. The limited use of PVC in control panels and electric safety boxes is not in large enough quantities to cause any adverse effects given the existing fire detection and/or fire suppression systems provided.	PVC is used in areas of the turbine buildings and is used to a limited extent in certain control panels and electric safety boxes. Plastic material and PVC is used in the Battery Rooms. Limited quantity of PVC jacketed/ insulated/coated cables and PVC/plactic material (e.g., general office equipment, computers, printers, monitors, etc.,) are used throughout the plant.	c. The use of plastic materials is minimized within the plant. With respect to the use of halogenated plastics, PVC (polyvinyl chloride) is limited. Ethylene propylene rubber (EPR) and cross-linked polyethylene insulation are used on electrical cables, however, Neoprene is used for cable jacketing on the 600-volt power cables. PVC is used in certain control panels to a limited extent. Cables meet the flame test requirements of IEEE 383. Some specialty cables (not power) used in small quantities may not meet IEEE 383 requirements. [The fires postulated for areas containing cable insulation plastics include the combustible load and combustion products generated by these materials. The products of combustion from the above materials are noncorrosive and will not affect the ability to safely shut down the plant. The FHA verifies that safe shutdown of the plant is not affected by the fires postulated for these areas.]
d. Storage of flammable liquids should, as a minimum, comply with the requirements of NFPA 30, "Flammable and Combustible Liquids Code."	Comply with exceptions	Compliance for portable extinguishers is addressed in Section E.b. A review of site conditions shows that bulk storage of flammable and combustible liquids generally satisfies the requirements of NFPA-30. See NFPA-30 1973 code review, Memo to File from R. K.ichter, Sept, 11, 2001.	Portable extinguishers are not provided immediately outside or inside the D. G. compartments but are available outside the compartments in the vestibule.	d. Flammable liquids are stored in accordance with NFPA 30. Bulk storage of flammable liquids inside or adjacent to safety-related buildings or systems is prohibited.
<u>3. ELECTRIC CABLE CONSTRUCTION, CABLE TRAYS AND CABLE PENETRATION</u>				<u>3. Electric Cable Construction, Cable Trays and Cable Penetrations</u>
a. Only non-combustible materials should be used for cable tray construction.	Comply	Meets Requirements	None	a. Only noncombustible materials are used for cable tray construction.
b. See Section F.3 for fire protection guidelines for cable spreading rooms.	See Section F.3.			b. See Section F.3.

SECTION D - GENERAL GUIDELINES FOR PLANT PROTECTION				
Requirements of Standard Review Plan BTP 9.5-1, Appendix A (1977) Plants Under Construction	Compliance Alternate Compliance	Basis for Acceptability	Specific Exceptions To Compliance	Compliance Statements From Original FHA and Responses To Selected NRC Questions
c. Automatic water sprinkler systems should be provided for cable trays outside the cable spreading room.	Comply with exception.	Reference San Onofre Units 2&3 Updated FHA, Section 7.0.	Automatic water sprinkler systems are not provided for all cable trays.	c. Automatic deluge water spray systems are or will be provided for areas with a large concentration of cable trays, i.e., the cable risers and gallery areas and the cable tunnels. The electrical penetration rooms contain a large quantity of switch-gear and other electrical cabinets, and are therefore not equipped with automatic sprinklers. Other minor cable tray runs throughout the plant are not provided with automatic sprinklers since their fire load is small. These areas are equipped with manual fire hose stations.
Cables should be designed to allow wetting down with deluge water without electrical faulting.	Comply	Meets Requirements	None	All cables are designed to withstand wetting down with fire protection water.
Manual hose stations and portable hand extinguishers should be provided as backup.	Comply	Meets Requirements	None	Manual hose stations and/or portable hand extinguishers are provided as backup.
Safety-related equipment in the vicinity of such cable trays, that does not itself require water fire protection but is subject to unacceptable damage from sprinkler water discharge, should be protected from sprinkler system operation or malfunction.	Comply	Note: Failure or inadvertent operation of fire protection systems does not impact the ability to safely shut down.	None	
When safety-related cables do not satisfy the provisions of Regulatory Guide 1.75, all exposed cables should be covered with an approved fire retardant coating and a fixed automatic water fire suppression system should be provided.	Not Applicable	Not Applicable	Not Applicable	The San Onofre 2&3 cable tray spacing design is in accordance with the separation requirements in Regulatory Guide 1.75, to the extent described in the San Onofre 2&3 FSAR.
d. Cable and cable tray penetration of fire barriers (vertical and horizontal) should be sealed to give protection at least equivalent to that fire barrier. The design of fire barriers for horizontal and vertical cable trays should, as a minimum, meet the requirements of ASTM E-119, "Fire Test of Building Construction and Materials," including the hose stream test.	Comply with exception.	Vertical and horizontal cable tray penetrations are sealed to give protection equivalent to the fire barrier or have been determined to be adequate for the fire hazard. See App. R, Section III.G.2.c.	Not all penetration seals have a rating equal to that of the fire barrier.	d. Vertical and horizontal cable tray penetrations are sealed to give protection equivalent to the fire barrier.

SECTION D - GENERAL GUIDELINES FOR PLANT PROTECTION				
Requirements of Standard Review Plan BTP 9.5-1, Appendix A (1977) Plants Under Construction	Compliance Alternate Compliance	Basis for Acceptability	Specific Exceptions To Compliance	Compliance Statements From Original FHA and Responses To Selected NRC Questions
Where installed penetration seals are deficient with respect to fire resistance, these seals may be protected by covering both sides with an approved fire retardant material. The adequacy of using such material should be demonstrated by suitable testing.	Not Applicable	Not Applicable	Not Applicable	
e. Fire breaks should be provided as deemed necessary by the fire hazards analysis. Flame or flame retardant coatings may be used as a fire break for grouped electrical cables to limit spread of fire in cable ventings. (Possible cable derating owing to use of such coating materials must be considered during design.)	Comply	Meets Requirements	None	e. Fire breaks are provided in vertical cable runs at 30-foot intervals.
f. Electric cable constructions should, as a minimum, pass the current IEEE No. 383 flame test. (This does not imply that passing this test will not require additional fire protection.)	Comply with exceptions.	Generally, electrical cable meets the requirements of IEEE 383 vertical tray flame test. There are however certain types of cables such as ribbon type cable for control panel installations, heat tracing cables, and thermocouple cables that do not meet the IEEE 383 vertical tray flame test. Cable for these types of installations were assumed to be adequate as cables are typically routed in conduit, contained in metal control panel enclosures, or enclosed in thermal insulation (heat trace cable), and are not routed in cable trays where they would add to combustible loading. Exceptions to this would be cables from the NSSS supplier which are inside the computer room and cables provided with the turbine generator in the turbine building.	PVC cables will not pass the flame test specified in IEEE No. 383-1974. Minor amounts of non-IEEE 383 qualified cables are used in the plant which are associated with specialty pieces of equipment and/or vendor packages.	f. Generally, electrical cable (except that provided by the NSSS supplier which is inside the computer room and that provided with the turbine-generator in the turbine building) meets the requirements of IEEE No. 383.

SECTION D - GENERAL GUIDELINES FOR PLANT PROTECTION				
Requirements of Standard Review Plan BTP 9.5-1, Appendix A (1977) Plants Under Construction	Compliance Alternate Compliance	Basis for Acceptability	Specific Exceptions To Compliance	Compliance Statements From Original FHA and Responses To Selected NRC Questions
		Most non-safety related cable is qualified to IEEE No. 383. The use of PVC is minimized. The presence of limited amounts of non-IEEE No. 383 qualified cable in the plant fire areas does not impact the capability of the plant systems to protect against fire hazards. An analysis has been performed to demonstrate that a fire in any area would not adversely affect safe shutdown. Cables qualified to flame tests which are more severe than the IEEE 383 vertical tray test may be substituted for IEEE 383 qualified cable per guidance provided in the National Electric Codes (Section 760-30-1988)	Limited quantity of PVC jacketed/ insulated/coated cables are used throughout the plant. These cables are generally used for computers, specialty pieces of equipment, vendor packages, telecommunications, lighting, telephones, and fire detection.	
For cable installation in operating plants and plants under construction that do not meet the IEEE No. 383 flame test requirements, all cables must be covered with an approved flame retardant coating and properly derated.	Non-compliance	The use of PVC is minimized.	PVC cables are not covered with flame retardant coating.	
g. To the extent practical, cable construction that does not give off corrosive gases while burning should be used [applicable to new cable installations].	Comply	Meets Requirements	None	g. See item D.2.c.
h. Cable trays, raceways, conduit, trenches, or culverts should be used only for cables. Miscellaneous storage should not be permitted, nor should piping for flammable or combustible liquids or gases be installed in these areas.	Comply	Meets Requirements	None	h. Cable trays, raceways, and conduit are used for electrical cabling only. No miscellaneous storage of items such as plastic bags for refueling are stored in the containment. There is no piping for flammable or combustible liquids or gases installed in these areas.
Installed equipment in cable tunnels or culverts need not be removed if they present no hazard to the cable runs as determined by the fire hazards analysis.	Comply	Meets Requirements	None	

SECTION D - GENERAL GUIDELINES FOR PLANT PROTECTION				
Requirements of Standard Review Plan BTP 9.5-1, Appendix A (1977) Plants Under Construction	Compliance Alternate Compliance	Basis for Acceptability	Specific Exceptions To Compliance	Compliance Statements From Original FHA and Responses To Selected NRC Questions
i. The design of cable tunnels, culverts and spreading rooms should provide for automatic or manual smoke venting as required to facilitate manual fire fighting capability.	Comply	Meets Requirements	None	i. The cable spreading room and the cable tunnels (there are no culverts) are provided with automatic smoke venting by the normal ventilation system.
j. Cables in the control room should be kept to the minimum necessary for operation of the control room.	Comply	Meets Requirements	None	j. Cables within the control room are required for control room operation.
All cables entering the control room should terminate there.	Comply	Meets Requirements	None	All cables entering the control room terminate there.
Cables should not be installed in floor trenches or culverts in the control room.	Comply	Meets Requirements	None	There are no trenches or culverts.
Existing cabling installed in concealed floor and ceiling spaces should be protected with an automatic total flooding halon system.	Comply with exceptions.	Manual fire fighting hose stations and portable extinguishers are available for use in fighting fires in concealed spaces. Fire detection or suppression is provided for all concealed space areas containing combustibles with one exception. The Appendix R compliance assessment has demonstrated that safe shutdown can be achieved for a fire in the fire area/zones listed assuming the loss of all components and cabling in the area. There are no ignition sources in the areas/zones. The combustibles in the concealed spaces consist of cable insulation routed in cable trays.	The following areas of the plant contain concealed spaces with combustible material in the concealed space and are not provided with both fire detection and suppression systems: 2-AC-30-20A 2-AC-30-27 2-AC-70-64 2-PE-63-3B 3-PE-63-3B In fire area 2-AC-30-22 neither fire detection nor fire suppression is provided, however, minimal combustible material is present in the concealed space.	Only aluminum sheath cabling for lighting is installed above the false luminous ceiling. [Editorial Note: See Section F.2.]
4. VENTILATION				4. Ventilation
a. The products of combustion that need to be removed from a specific fire area should be evaluated to determine how they will be controlled. Smoke and corrosive gases should generally be automatically discharged directly outside to a safe location.	Comply	Meets Requirements	None	a. The products of combustion are directed outside.

SECTION D - GENERAL GUIDELINES FOR PLANT PROTECTION				
Requirements of Standard Review Plan BTP 9.5-1, Appendix A (1977) Plants Under Construction	Compliance Alternate Compliance	Basis for Acceptability	Specific Exceptions To Compliance	Compliance Statements From Original FHA and Responses To Selected NRC Questions
Smoke and gases containing radioactive materials should be monitored in the fire area to determine if release to the environment is within the permissible limits of the plant Technical Specifications.	Comply	Smoke and gases containing radioactive material are monitored locally by health physics technicians, as well as in the exhaust vent.	None	Any products of combustion within the containment are monitored for radioactivity prior to release to the atmosphere.
b. Any ventilation system designed to exhaust smoke or corrosive gases should be evaluated to ensure that inadvertent operation or single failures will not violate the controlled areas of the plant design. This requirement includes containment functions for protection of the public and maintaining habitability for operations personnel.	Comply	Meets Requirements. Portable exhaust fans are available for smoke removal.	None	b. Since there are no special "smoke removal systems" except for the smoke exhaust fan for the control area, the HV&AC systems used for normal and emergency plant conditions are used in conjunction with portable exhaust fans. Inadvertent operation or a single failure will not violate the controlled areas of the plant. <u>Response to FQ015.16</u> All areas containing safety-related components have been evaluated for smoke removal capability for manual fire fighting purposes. The smoke removal is accomplished primarily by IC engine-driven portable 16-inch exhaust fans. A total of six portable fans, each rated at 5000 ft^3/min capacity will be provided. In most areas, the portable exhaust fans will vent the smoke directly to outside. In certain areas, the smoke will be transferred to the adjoining corridor or nonsafety-related areas and then exhausted to the outside or to an adjacent large open space for dissipation. The smoke will not be transferred to any adjacent areas that contain equipment required or stairwells. The exhaust fans of the plant normal ventilation systems serving the cable tunnels continue to run in the event of fire for smoke-removal purposes.

SECTION D - GENERAL GUIDELINES FOR PLANT PROTECTION				
Requirements of Standard Review Plan BTP 9.5-1, Appendix A (1977) Plants Under Construction	Compliance Alternate Compliance	Basis for Acceptability	Specific Exceptions To Compliance	Compliance Statements From Original FHA and Responses To Selected NRC Questions
c. The power supply and controls for mechanical ventilation systems should be run outside the fire area served by the system.	Comply with exception.	Portable exhaust fans are available for smoke removal when required. Protection of the power supply cables for containment purge valves is not essential. Combustibles inside the containment are limited and controlled making it very unlikely that a fire will disable the isolation valves. In the event that a fire occurs at the location of the purge valves and circuits, smoke developed will rise to the containment dome enabling access by the fire brigade to extinguish the fire. The power and control circuits for HVAC units required to provide cooling for safe shutdown equipment are either located outside the fire area served by the system, protected by a raceway fire barrier or adequately separated from their redundant cabling.	Power supply and controls may be located inside the fire area served by the system.	c. The power and control cables for mechanical ventilation systems are run outside the fire area served except for the cable tunnels, cable spreading room risers, and the mechanical equipment room where the ventilation equipment is installed.
d. Fire suppression systems should be installed to protect charcoal filters in accordance with Regulatory Guide 1.52, "Design Testing and Maintenance Criteria for Atmospheric Cleanup Air Filtration."	Comply	Meets Requirements	None	d. All charcoal filters are equipped with manual deluge water spray systems.
e. The fresh air supply intakes to areas containing safety-related equipment or systems should be located remote from the exhaust air outlets and smoke vents of other fire areas to minimize the possibility of contaminating the intake air with the products of combustion.	Comply	Meets Requirements	None	e. HVAC system air supply intakes are located from exhaust outlets to minimize the possibility of contaminating the intake air with the products of combustion.
f. Stairwells should be designed to minimize smoke infiltration during a fire.	Comply	Meets Requirements	None	f. No provisions have been made for pressurizing the stairwells to minimize smoke infiltration since all fire doors are closed at all times and they are equipped with automatic door closures.

SECTION D - GENERAL GUIDELINES FOR PLANT PROTECTION				
Requirements of Standard Review Plan BTP 9.5-1, Appendix A (1977) Plants Under Construction	Compliance Alternate Compliance	Basis for Acceptability	Specific Exceptions To Compliance	Compliance Statements From Original FHA and Responses To Selected NRC Questions
Staircases should serve as escape routes and access routes for fire fighting. Fire exit routes should be clearly marked. Stairwells, elevators and chutes should be enclosed in mansonry towers with minimum fire rating of three hours and automatic fire doors at least equal to the enclosure construction, at each opening into the building.	Comply with exception.	Complies with the Uniform Building Code 1970 Edition.	One and one-half hour rated fire doors are provided.	The San Onofre 2&3 stairwells are designed to UBC standards which require two-hour fire resistance for the enclosure with 1-1/2 hour rated fire doors. However, the stairwell enclosures are actually 1 ft.-0 in. thick concrete, which provide much more than a three-hour fire resistance.
Elevators should not be used during fire emergencies.	Comply	Meets Requirements	None	Elevators will not be used during a fire.
Where stairwells or elevators cannot be enclosed in three-hour fire rated barrier with equivalent fire doors, escape and access routes should be established by pre-fire plan and practiced in drills by operating and fire brigade personnel.	Comply with exception.	Plant personnel will be familiar with access and egress routes, which are clearly marked.	Drills using the pre-fire plan are not run for operating personnel.	Plant personnel will be familiar with access and egress routes, which are clearly marked.
g. Smoke and heat vents may be useful in specific areas such as cable spreading rooms and diesel fuel oil storage areas and switchgear rooms.	Alternate Compliance.	See response to Section D.4.b.	Portable fans may be used for smoke removal.	g. Smoke and heat venting is provided for all areas within safety-related structures.
When natural-convection ventilation is used, a minimum ratio of 1 sq. foot of venting area per 200 sq. feet of floor area should be provided.	Not Applicable	Not Applicable	Not Applicable	
If forced-convection ventilation is used, 300 CFM should be provided for every 200 sq. feet of floor area. See NFPA No. 204 for additional guidance on smoke control.	Comply with exception	Fixed and portable ventilation is provided for smoke removal when required. See 6/29/88 Safety Evaluation Report	Manual smoke removal capability is used to supplement fixed smoke removal systems	Power venting is used, in all cases at rates ranging from .4 SCFM/ft2 to over 20 SCFM/ft^2 in areas with wood equivalent fire loads in excess of 1.0 lb/ft^2. Portable smoke removal equipment will be utilized by the fire brigade where necessary.

SECTION D - GENERAL GUIDELINES FOR PLANT PROTECTION				
Requirements of Standard Review Plan BTP 9.5-1, Appendix A (1977) Plants Under Construction	Compliance Alternate Compliance	Basis for Acceptability	Specific Exceptions To Compliance	Compliance Statements From Original FHA and Responses To Selected NRC Questions
h. Self-contained breathing apparatus, using full-face positive pressure masks, approved by NIOSH (National Institute for Occupational Safety and Health - approval formerly given by the U.S. Bureau of Mines) should be provided for fire brigade, damage control and control room personnel.	Comply	Meets Requirements Self-contained breathing apparatus units are reserved for the exclusive use of Fire Department personnel. The Units are distributed amongst the fire engines of the San Onofre Fire Department.	None	h. Self-contained breathing apparatus, using full-face positive pressure masks approved by NIOSH (National Institute for Occupational Safety and Health) with a minimum one-half hour service or operating life are provided. At least five self-contained breathing units reserved for exclusive fire brigade use will be located in each of the following areas: - north fire hose house - south fire hose house
Control room personnel may be furnished breathing air by a manifold system piped from a storage reservoir if practical. Service or operating life should be a minimum of one-half hour for the self-contained units.	Not Applicable	Not Applicable		Not Applicable Additional self-contained breathing units will be located in the control room area and the radiation protection area outside the containment personnel locks.
At least two extra air bottles should be located on site for each self-contained breathing unit.	Comply	Meets Requirements	None	Two extra air bottles are also provided for each self-contained breathing unit.
In addition, an onsite six-hour supply of reserve air should be provided and arranged to permit quick and complete replenishment of exhausted supply air bottles as they are returned.	Comply	Meets Requirements	None	In addition, an onsite six-hour reserve air supply will be provided and arranged to fully replenish exhausted supply air bottles as they are returned.
If compressors are used as a source of breathing air, only units approved for breathing air should be used. Special care must be taken to locate the compressor in areas free of dust and contaminants.	Comply	Meets requirements. SONGS has an Air Compressor Station dedicated to breathing air.	None	
i. Where total flooding gas extinguishing systems are used, area intake and exhaust ventilation dampers should close upon initiation of gas flow to maintain necessary gas concentration. (See NFPA 12, "Carbon Dioxide Systems" and 12A, "Halon 1301 Systems.")	Comply	Meets Requirements	None	i. A total flooding Halon 1301 system is provided for the computer rooms. Upon actuation of the system, all dampers in ductwork automatically close to retain the Halon in the computer rooms. Total flooding CO_2 is provided for the turbine-generator bearings, however, there are no dampers or ventilation ducts in this area.

SECTION D - GENERAL GUIDELINES FOR PLANT PROTECTION				
Requirements of Standard Review Plan BTP 9.5-1, Appendix A (1977) Plants Under Construction	Compliance Alternate Compliance	Basis for Acceptability	Specific Exceptions To Compliance	Compliance Statements From Original FHA and Responses To Selected NRC Questions
5. LIGHTING AND COMMUNICATION				5. Lighting and Communication
Lighting and two-way voice communication are vital to safe shutdown and emergency response in the event of fire. Suitable fixed and portable emergency lighting and communication devices should be provided to satisfy the following requirements:				
a. Fixed emergency lighting should consist of sealed beam units with individual eight-hour minimum battery power supplies.	Comply with exceptions.	See Design Basis Table, 10 CFR 50, Appendix R, Part III.J.	None	a. Fixed emergency eight-hour sealed beam lighting units are provided in all areas required for safe shutdown. Illumination of access and egress routes is currently provided by portable hand lights. Fixed emergency eight-hour sealed beam lighting units will be installed in access and egress routes prior to exceeding 5% power.
b. Suitable sealed beam battery-powered portable hand lights should be provided for emergency use.	Comply	Meets Requirements	None	b. Sealed beam battery-powered portable hand lights are provided throughout the plant.
c. Fixed emergency communication should use voice-powered hand sets at pre-selected stations.	Comply	Meets Requirements Sound powered phones will be utilized at pre-selected stations for safe shutdown monitoring functions.	None	c. A two-channel UHF radio is available for communications between all operating stations necessary for safe shutdown. The power is supplied from a safety-related bus with an SIS trip.
d. Fixed repeaters installed to permit use of portable radio communication units should be protected from exposure fire damage.	Alternate Compliance	Sound powered phones have been provided such that loss communication circuits will not preclude the ability to achieve safe shutdown. During the early stages of fire, the UHF and/or the PA system is expected to be available to notify the operators to return to the Control Room.	UHF repeating stations are not protected.	d. The UHF system provided for the fire brigade consists of portable units and repeating stations to ensure coverage. Repeating station, and associated cabling are not protected from fire exposure. However, PAX cables presently within 20 feet of the UHF cables will be rerouted, [or wrapped with two one-inch thicknesses of fire retardant blanket - Response to FQ015.20], to obtain adequate separation from an exposure fire.

SECTION D - GENERAL GUIDELINES FOR PLANT PROTECTION				
Requirements of Standard Review Plan BTP 9.5-1, Appendix A (1977) Plants Under Construction	Compliance Alternate Compliance	Basis for Acceptability	Specific Exceptions To Compliance	Compliance Statements From Original FHA and Responses To Selected NRC Questions
		The 800 MHZ UHF system requires power for signal keying and signal broadcast. These power supplies are backed up by Train B and A diesel generators, respectively. These loads are tripped on SIAS. Signal broadcast power is backed up by 90 minutes non-1E UPS batteries. The PAX system has a backup battery power supply. The PAX system is available for fire department utilization in areas where the UHF system may be damaged. Acceptance tests were performed on the 800 MHZ UHF communications system to identify areas of sub-standard communication from structural interferences. It was demonstrated that the communication system is adequate.		

SECTION E - FIRE DETECTION AND SUPPRESSION				
Requirements of Standard Review Plan BTP 9.5-1, Appendix A (1977) Plants Under Construction	Compliance Alternate Compliance	Basis for Acceptability	Specific Exceptions To Compliance	Compliance Statements From Original FHA and Responses To Selected NRC Questions
1. FIRE DETECTION				1. Fire Detection
a. Fire detection systems should, as a minimum, comply with NFPA 72D, "Standard for Installation, Maintenance, and Use of Proprietary Protective Signaling Systems." Deviations from the requirements of NFPA 72D should be identified and justified.	Comply with exceptions noted. NFPA 72D is used as a guideline.	Systems and devices are tested in accordance with requirements delineated in Licensee Controlled Specification. The higher rating of the overcurrent devices (fuses) does not detract from the primary purpose of equipment protection. Cables have been properly sized and are not affected by the higher rating. A short circuit will open the overcurrent device even at the higher rating. Indication of pre-action suppression system water flow is provided in the Control Room by indirect means. Fire detectors which actuate the pre-action sprinkler systems alarm in the Control Room and the ESO Office. In addition, any fire pre-action suppression system actuation in excess of the capacity of the jockey pumps will lower the system water pressure resulting in the start of the fire pump. The start of the fire pump is indicated and alarmed in the Control Room. Manufacturer's test program.	There are other exceptions to the NFPA codes not specifically listed in this table. See SONGS 2/3 NFPA code review documents for a listing of these code deviations. The basis for acceptablility of these deviations are also described in these NFPA Code Documents. NFPA 72D (1975) Article No. 1230: Systems are not tested per NFPA requirements. NFPA 72D (1975) Article No. 2331: Over-current devices are rated greater than 150% of the rating of the control unit. NFPA 72D (1975) Article No. 2541: See Section E.1.(b) below. Water flow alarms are not provided for pre-action sprinkler systems. NFPA 72E (1974) Article No. 2-5.1.1: Photoelectric smoke detectors are not listed.	a. All fire and smoke detectors are selected, located, and installed in accordance with NFPA 72E, manufacturer's recommendations and engineering judgment. NFPA 72D is used as a guideline for design of the detection system. To ensure sufficient detector response time to prevent loss of safety-related systems, smoke detectors are adjusted for sensitivity after an analysis of air velocity, type of combustible, and expected burn rate. Sensitivity adjustments will be made on installation according to manufacturer's recommendations for the conditions. Response to FQ015.21 All fire and smoke detectors are selected, located and installed in accordance with NFPA 72E, manufacturer's recommendations and engineering recommendations. In safety-related cable tray areas outside the containment, ionization type products of combustion detectors are used. The fire detection and alarm system, including water flow and valve supervision, is in conformance with NFPA 70 for Class I circuits and NFPA 72D for Class A systems, with the following exceptions: Supervision of "early-warning" fire detectors are 2-wire Class B, rather than 4-wire All other circuits, including automatic extinguishing actuation systems and fire alarm computer fire monitoring systems, conform to NFPA 72D.

SECTION E - FIRE DETECTION AND SUPPRESSION				
Requirements of Standard Review Plan BTP 9.5-1, Appendix A (1977) Plants Under Construction	Compliance Alternate Compliance	Basis for Acceptability	Specific Exceptions To Compliance	Compliance Statements From Original FHA and Responses To Selected NRC Questions
		All areas requiring detection per the requirements of Appendix R III.G have been reviewed and found to have the equivalent of full area detection or have been discussed in a deviation request. An evaluation of detector locations in other areas of the plant based on a sample walkdown has determined that the location and spacing of detectors is adequate for the hazard.	NFPA 72E (1974) Article No. 3-4, 4-4 Smoke and heat detectors may not be located at the ceiling and may not be located in all beam pockets.	The capability exists in the control room to override all other announcements being made on the plant public address (PA) system. All fire detection systems and automatic suppression systems are supplied with emergency power sources.
b. Fire detection system should give audible and visual alarm and annunciation in the control room. Local audible alarms should also sound at the location of the fire.	Comply with exception	The plant public address system can be used to announce fires plant-wide. Local panels associated with the areas of the plant containing fire protection/suppression systems are equipped with audible and visual fire alarms. Audible and visual alarms are provided in the Control Room and the ESO Office. Hard copy printers are also available in the ESO office and the Control Room area. o SCE to NRC letter dated 8/17/89 regarding Fire Alarms in the Control Room. o R. W. Krieger Memorandum for File dated 8/1/89.	Local audible fire alarms are not provided at early warning fire detection panels. Local charcoal filter panels are not provided with local audible alarms. During maintenance testing, alarms are provided in the ESO office only.	b. Fire detection systems give audible and visual alarm and annunciation in the control room, provide a signal to the digital events recorder in the computer room, and local audible alarms also sound at local fire alarm panels at the location of the fire. The plant public address system is used to announce fires plant wide.
c. Fire alarms should be distinctive and unique. They should not be capable of being confused with any other plant system alarms.	Comply with exception	The computer room HVAC normal and supply air smoke detection system is not LCS required system.	The computer room HVAC normal and supply air smoke detection system alarm is not distinctive and unique.	c. Fire alarms are distinctive, unique and will not be confused with any other plant working system.

SECTION E - FIRE DETECTION AND SUPPRESSION				
Requirements of Standard Review Plan BTP 9.5-1, Appendix A (1977) Plants Under Construction	Compliance Alternate Compliance	Basis for Acceptability	Specific Exceptions To Compliance	Compliance Statements From Original FHA and Responses To Selected NRC Questions
d. Fire detection and actuation systems should be connected to the plant emergency power supply.	Comply with exception	Full Flow Condensate Polisher Demineralizer area is not a safety-related area.	Full Flow Condensate Polisher Demineralizer Area detection system is not connected to an emergency power source. FP panels are shed from 1E power supply upon receipt of a SIAS signal.	d. The San Onofre 2&3 fire detection and actuation systems comply with this recommendation since they are connected to the diesel generator Class 1E electrical system but are tripped out on receipt of ESFAS.
2. <u>FIRE PROTECTION WATER SUPPLY SYSTEMS</u>				
a. An underground yard fire main loop should be installed to furnish anticipated fire water requirements.	Comply	Meets Requirements	None	2. <u>Fire Protection Water Supply Systems</u> a. An underground yard fire main loop is installed to furnish anticipated fire water requirements.
NFPA 24 - Standard for Outside Protection gives necessary guidance for such installation. It references other design codes and standards developed by such organizations as the American National Standards Institute (ANSI) and the American Water Works Association (AWWA).	Comply NFPA 24 was used for guidance.	Meets Requirements	None	NFPA 24 - Standard for Outside Protection provides necessary guidelines for such installation, references other design codes and standards such as ANSI and AWWA (American Water Works Association) and was utilized in the design.
Lined steel or cast iron pipe should be used to reduce internal tuberculation. Such tuberculation deposits in an unlined pipe over a period of years can significantly reduce water flow through the combination of increased friction and reduced pipe diameter.	Comply Lined cast iron water mains are installed.	Meets Requirements	None	Since cement-lined cast iron pipe is used at San Onofre 2&3, internal tuberculation is reduced, therefore, means to treat and flush the system is not required.
Means for treating and flushing the systems should be provided.	Comply with exception.	Water is initially treated.	Means for treating water at San Onofre Units 2&3 is not provided.	
Approved visually indicating sectional control valves, such as post-indicator valves, should be provided to isolate portions of the main for maintenance or repair without shutting off the entire system.	Comply	Meets Requirements	None	Post-Indicator valves (approved visually indicating sectional control valves) are provided to isolate portions of the fire main for maintenance or repair without shutting off the entire system.
The fire main system piping should be separate from service or sanitary water system piping.	Comply	Meets Requirements	None	The fire main system piping is separate from service or sanitary water system piping.

SECTION E - FIRE DETECTION AND SUPPRESSION				
Requirements of Standard Review Plan BTP 9.5-1, Appendix A (1977) Plants Under Construction	Compliance Alternate Compliance	Basis for Acceptability	Specific Exceptions To Compliance	Compliance Statements From Original FHA and Responses To Selected NRC Questions
Visible location marking signs for underground valves is acceptable. Alternate valve position indicators should also be provided.	Comply	Meets Requirements	None	
For operating plants, fire main system piping that can be isolated from service or sanitary water system piping is acceptable.	Not Applicable	Not Applicable	Not Applicable	
b. A common yard fire main loop may serve multi-unit nuclear power plant sites, if cross-connected between units.	Comply	Meets Requirements	None	b. A common yard fire main loop serves the multi-unit San Onofre 2&3 nuclear power plant site and is cross-connected between units.
Sectional control valves should permit maintaining independence of the individual loop around each unit.	Comply	Meets Requirements	None	Sectional control valves permit maintaining independence of the individual loop around each unit.
For such installation, common water supplies may also be utilized.				Common water supplies are utilized.
The water supply should be sized for the largest single expected flow.	Comply	Meets Requirements	None	The water supply is sized for the largest single expected flow.
For multiple reactor sites with widely separated plants (approaching 1 mile or more), separate yard fire main loops should be used. Sectionalized systems are acceptable.	Not Applicable	Not Applicable	Not Applicable	Since SONGS 2&3 Units are in close proximity and the auxiliary building is common to both units, a single cross-connected fire main loop is considered adequate. The SONGS 2&3 fire main can also be connected to the SONGS 1 fire main to provide additional backup. See Section A.4.
c. If pumps are required to meet system pressure or flow requirements, a sufficient number of pumps should be provided so that 100% capacity will be available with one pump inactive (e.g., three 50% pumps or two 100% pumps). At least one pump (if not powered from the emergency diesels) should be driven by nonelectrical means, preferably a diesel engine.	Comply	Meets Requirements	None	c. The two 50% (each) capacity electric-drive and single 100% capacity diesel-driven fire pumps are fed from a manifold connected to both fire water tanks with the capability to isolate either or both tanks.
The connection to the yard fire main loop from each fire pump should be widely separated, preferably located on opposite sides of the plant.	Non-compliance	Absence of any intervening combustible material and spatial separation prevents loss of all three pumps.	The pump outlet connections to the yard main loop are all at the pump pad location.	The pump outlet connections to the yard fire main loop are all at the pump pad location due to site geometry and spacing limitations.

SECTION E - FIRE DETECTION AND SUPPRESSION				
Requirements of Standard Review Plan BTP 9.5-1, Appendix A (1977) Plants Under Construction	Compliance Alternate Compliance	Basis for Acceptability	Specific Exceptions To Compliance	Compliance Statements From Original FHA and Responses To Selected NRC Questions
Each pump should have its own driver with independent power supplies and control.	Comply	Meets Requirements NOTE: Motor-driven fire pumps P221 and P222 are powered from offsite power. The 100% capacity diesel fire pump is independent of AC power.	None	Each fire pump has its own driver with independent power supplies and controllers.
Pumps and drivers should be located in rooms separated from the remaining pumps and equipment by a minimum 3-hour fire wall.	Non-compliance	Absence of any intervening combustible material and adequate spatial separation between the pumps prevents loss of all three fire pumps due to a single fire at the pump pad.	Pumps and drivers not located in rooms and not separated by 3-hour rated walls.	Due to space limitations, the fire pumps are located outside on the pump pad and are not enclosed, isolated, or separated by fire walls.
Alarms indicating pump running, driver availability, or failure to start should be provided in the control room.	Comply	Meets Requirements	None	Alarms indicating pump running, driver availability or failure to start are provided in the control room.
Details of the fire pump installation should, as a minimum, conform to NFPA 20, "Standard for the Installation of Centrifugal Fire Pumps."	Comply with exception.	The pressure switches were relocated to reduce personnel hazard during surveillance and does not affect function of controller.	All fire pump pressure switches have been relocated separate from the controller enclosure. There are other exceptions to the NFPA codes not specifically listed in this table. See SONGS 2/3 NFPA code review documents for a listing of these code deviations. The basis for acceptablility of these deviations are also described in these NFPA Code Documents. Also, reference Memo to File, Subject: NFPA Code Compliance - Resolution to Deficiencies, from M. Hojati, dated January 30, 1998.	Design and details of the fire pump installation conform to NFPA 20, "Standard For The Installation of Centrifugal Fire Pumps."
d. Two separate reliable water supplies should be provided if tanks are used, two 100% (minimum of 300,000 gallons each) system capacity tanks should be installed.	Comply	Meets Requirements	None	d. Two separate reliable water supplies consisting of two 100% system capacity, 375,000 gallons each, are installed of which 300,000 gallons each is reserved for fire protection and 75,000 each is reserved for service water.

SECTION E - FIRE DETECTION AND SUPPRESSION				
Requirements of Standard Review Plan BTP 9.5-1, Appendix A (1977) Plants Under Construction	Compliance Alternate Compliance	Basis for Acceptability	Specific Exceptions To Compliance	Compliance Statements From Original FHA and Responses To Selected NRC Questions
They should be so interconnected that pumps can take suction from either or both.	Comply	Meets Requirements	None	The tanks are interconnected so that the fire pumps can take suction from either or both tanks.
However, a leak in one tank or its piping should not cause both tanks to drain.	Comply	Meets Requirements	None	A leak in one tank or its piping (up to its isolation valve) will not cause both tanks to drain.
The main plant fire water supply should be capable of refilling either tank in a minimum of 8 hours.	Comply	Meets Requirements	None	The plant fire water supply capacity is capable of refilling either tank in a minimum of 8 hours.
Common tanks are permitted for fire and sanitary or service water storage. When this is done, however, minimum fire water storage requirements should be dedicated by means of a vertical standpipe for other water services.	Comply	Meets Requirements	None	San Onofre 2&3 fire water tanks are provided for fire and service water storage. However, minimum fire water storage requirements are dedicated by means of a vertical standpipe for service water. The 3,000,000 gallon reservoir from San Onofre 1 can also be used to refill the San Onofre 2&3 fire water tanks through gravity flow.
e. The fire water supply (total capacity and flowrate) should be calculated on the basis of the largest expected flowrate for a period of 2 hours, but not less than 300,000 gallons.	Comply with exception	The 750 gpm for manual hose streams exceeds nrc reg guide 1.189 requierement (500 gpm) and is considered adequate. Dedicated fire protection water supply for nominally 2 hours. Total tank capacity is 375,000 gals. See C871120G0245.	The San Onofre fire water supply capacity remains based upon 750 gpm in lieu of 1,000 gpm for manual hose streams. Required water supply of 313,200 gals. Dedicated firewater is 307,900 gals.	e. The fire water supply (total capacity and flowrate) is calculated on the basis of the largest expected flowrate for a period of 2 hours but not less than 300,000 gallons.
This flowrate should be based (conservatively) on 1,000 gpm for manual hose streams plus the greater of:		Fire pump flow capacity meets Reg Guide 1.1189 requirement of 500 gpm hose stream and largest spray/sprinkler system flow. See AR 070500625.	The San Onofre firewater pump flow capacity of the diesel-driven or two electric-driven pumps meets NPFA1-3, NFPA-20 and NEIL recommendations including the 500 gpm hose stream flow.	This flowrate is based (conservatively) on 750 gpm for manual hose streams plus the greater of:
(1) All sprinkler heads opened and flowing in the largest designed fire area; or (2) The largest open head deluge system operating.				(1) All sprinkler heads opened and flowing in the largest designed fire area; or (2) The largest open head deluge system operating. San Onofre 2&3 rate is based on the 750 gpm for manual hose streams as recommended by NML, which is considered adequate.

SECTION E - FIRE DETECTION AND SUPPRESSION				
Requirements of Standard Review Plan BTP 9.5-1, Appendix A (1977) Plants Under Construction	Compliance Alternate Compliance	Basis for Acceptability	Specific Exceptions To Compliance	Compliance Statements From Original FHA and Responses To Selected NRC Questions
f. Lakes or fresh water ponds of sufficient size may qualify as the sole source of water for fire protection, but require at least two intakes to the pump supply. When a common water supply is permitted for fire protection and the ultimate heat sink, the following conditions should also be satisfied: (1) The additional fire protection water requirements are designed into the total storage capacity; and (2) Failure of the fire protection system should not degrade the function of the ultimate heat sink.	Not Applicable	Not Applicable	Not Applicable	f. Since San Onofre 2&3 does not utilize lakes or fresh water ponds to provide water for fire protection, the applicable recommendations for such water sources do not apply.
g. Outside manual hose installation should be sufficient to reach any location with an effective hose stream. To accomplish this, hydrants should be installed approximately every 250 feet on the yard main system.	Alternate Compliance	There are 2 fire trucks each equipped with a minimum of 1000 feet of fire hose. The mobility of the trucks assist in laying hoses. These factors compensate for the hydrant spacing and will effectively cover any area of the plant.	A maximum distance of 300 feet exists between fire hydrants.	g. The outside manual hose installation is sufficient to reach any location within effective hose stream. To accomplish this, fire hydrants are installed every 250 feet on the yard fire main system. San Onofre 2&3 utilizes breakaway type hydrants to assure that the fire hydrant will remain in a shutoff condition should the hydrant be damaged by vehicular traffic.

SECTION E - FIRE DETECTION AND SUPPRESSION				
Requirements of Standard Review Plan BTP 9.5-1, Appendix A (1977) Plants Under Construction	Compliance Alternate Compliance	Basis for Acceptability	Specific Exceptions To Compliance	Compliance Statements From Original FHA and Responses To Selected NRC Questions
The lateral to each hydrant from the yard main should be controlled by a visually indicating or key-operated (curb) valve.	Alternate Compliance	Hydrant break-off check valves are provided. Post Indicating Valves or key-operated (curb) valves are used to sectionalize hydrants on the fire main.	Laterals are not in all cases equipped with isolation valves. (Ten) FH-1N, 2N, 4N, 5N, 6N, 1S, 2S, 4S, 6S, and 7S.	If the fire hydrant must be taken out-of-service for maintenance purposes, post-indicator valves on the fire main loop can be shut to isolate that portion of the loop. Response to FQ015.22 The fire main hydrants are the California break-off type which will shut off when the hydrant is broken. This type of hydrant failure mode still provides full coverage to safety-related areas with water suppression systems and water hose stations until such time as repairs can be made. For those hydrants where isolation results in temporary interruption of the water supply to certain plant areas, a fire watch will be posted in those areas as long as they remain isolated from the fire main loop. In addition, Seismic Category I manual fire fighting capability, independent of the main header, is provided within reach of all areas containing equipment required for safe shutdown.
A hose house equipped with hose and combination nozzle and other auxiliary equipment recommended in NFPA 24, "Outside Protection," should be provided as needed but at least every 1,000 feet.	Alternate Compliance	Two fire engines are equipped to carry equipment equivalent to that contained within three hose houses meeting the NFPA 24 requirements.	Hose houses are not equipped in accordance with NFPA 24.	Two large concrete block hose houses are located at opposite ends of the San Onofre 2&3 project and three smaller metal hose houses are interspersed around the yard fire main loop. The hose houses are equipped with hose, nozzles, and other auxiliary equipment as recommended by NFPA 24, "Outside Protection" are provided.
Threads compatible with those used by local fire departments should be provided on all hydrants, hose couplings, and standpipe risers. 3. WATER SPRINKLERS AND HOSE STANDPIPE SYSTEMS	Comply	Meets Requirements.	None	Threads compatible with those of the local fire department are provided on all hydrants, hose couplings, and standpipe risers. 3. Water Sprinkler and Hose Standpipe Systems

SECTION E - FIRE DETECTION AND SUPPRESSION				
Requirements of Standard Review Plan BTP 9.5-1, Appendix A (1977) Plants Under Construction	Compliance Alternate Compliance	Basis for Acceptability	Specific Exceptions To Compliance	Compliance Statements From Original FHA and Responses To Selected NRC Questions
a. Each automatic sprinkler system and manual hose station standpipe should have an independent connection to the plant underground water main. Headers fed from each end are permitted inside buildings to supply multiple sprinkler and standpipe systems. When provided, such headers are considered an extension of the yard main system.	Comply with exception.	Containment building fire suppression systems are normally dry pipe and require remote manual opening of the containment isolation valve to preclude inadvertent operation. Compensatory hose can be provided for the fuel handling building and diesel generator buildings.	Containment building, fuel handling building and diesel generating building fire sprinkler systems are supplied from single headers.	a. Automatic sprinkler systems and hose station standpipes are fed directly from the fire main or from headers inside the buildings. The headers supplying the systems in the containment buildings, fuel handling buildings and diesel generator buildings are supplied from a header fed only from one end. The remaining systems are supplied from headers from both ends.
The header arrangement should be such that no single failure can impair both the primary and backup fire protection systems.	See Section A.4.			The Fire Protection System is designed such that no single failure can impair both the primary and backup fire protection system, since portable extinguishers and hose streams from fire hydrants will be available.
Each sprinkler and standpipe system should be equipped with OS&Y (outside screw and yoke) gate valve, or other approved shut off valve, and water flow alarm.	Comply with exception.	The building header can be sectionalized for isolation. Flow alarms were not provided since hose stations are intended for use by the full-time fire brigade. Seismically qualified standpipes which can be isolated from the nonseismic portion of the fire water distribution system are provided in strategic locations throughout the plant. A fire department connection is provided in each seismic standpipe to enable the seismically qualified fire truck, located on site, to pressurize any seismically qualified standpipe in order to provide a minimum of two 75 gpm hose streams for a 2-hour period without interruption.	Standpipe systems are not equipped with isolation valve or water flow alarm.	Each sprinkler system is equipped with an outside screw and yoke (OS&Y) gate valve and a water flow alarm. The standpipe system is provided with a hose valve at each fire hose station for isolation.
Safety-related equipment that does not itself require sprinkler water fire protection, but is subject to unacceptable damage if wetted by sprinkler water discharge should be protected by water shields or baffles.	Comply See Section D.3(c)	Meets Requirements NOTE: Failure or inadvertent operation of sprinkler systems does not impact the ability to safely shutdown.	None	There are no safety-related pieces of equipment which could be damaged by water sprinkler discharges.

SECTION E - FIRE DETECTION AND SUPPRESSION				
Requirements of Standard Review Plan BTP 9.5-1, Appendix A (1977) Plants Under Construction	Compliance Alternate Compliance	Basis for Acceptability	Specific Exceptions To Compliance	Compliance Statements From Original FHA and Responses To Selected NRC Questions
b. All valves in the fire water systems should be electrically supervised. The electrical supervision signal should indicate in the control room and other appropriate command locations in the plant (see NFPA 26, "Supervision of Valves"). When electrical supervision of fire protection valves is not practicable, an adequate management supervision program should be provided. Such a program should include locking valves open with strict key control; tamper proof seals; and periodic, visual check of all valves.	Alternate Compliance	NFPA 26, 1988 Section 2-1 allows for underground gate valves not to be supervised. Hose valves operation would result in starting of the fire pumps due to system pressure drop. Charcoal filter system valves are normally closed to prevent spurious deluge of the charcoal filter. Valve position is verified periodically per Licensee Controlled Specifications surveillance (3.7.105.1.C).	Underground gate valves supplying firewater for nonsafety related facilities at the south end of the plant are not locked or electrically supervised. Other valves, such as hose valves, and charcoal filter suppression systems, are not provided with locks or electrical supervision.	b. All valves in the fire water system are electrically supervised with the exception of the hose valves which are normally closed and the post indicator valves (PIV) and header isolation valves for Seismic Category I standpipes in the radwaste and control buildings that are normally locked open. The hose valves are not electrically supervised since their opening will result in the starting of the fire pumps due to system pressure drop and will also provide an indication in the control room. The electrical supervision signal provides an indication in the control room and that signal is retransmitted to the computer room (digital events recorder). NFPA No. 26, "Supervision of Valves" is utilized in this design.

SECTION E - FIRE DETECTION AND SUPPRESSION				
Requirements of Standard Review Plan BTP 9.5-1, Appendix A (1977) Plants Under Construction	Compliance Alternate Compliance	Basis for Acceptability	Specific Exceptions To Compliance	Compliance Statements From Original FHA and Responses To Selected NRC Questions
c. Automatic sprinkler systems should as a minimum conform to requirements of appropriate standards such as NFPA 13, "Standard for the Installation of Sprinkler Systems," and NFPA 15 "Standard for Water Spray Fixed Systems."	Comply with exceptions. NFPA 13 and 15 are used as guidance.	The 200 psi hydrostatic test is considered adequate since it exceeds the fire pump operating pressure by 50 psi and the Jockey Pump operating pressure by 20 psi. The normal operating pressure with the fire pumps operating is 150 psi. When Jockey Pumps are operating the system pressure can reach a peak pressure of 180 psi. Since the gages meet the NFPA criteria during operation, the gages are considered to be an adequate alternate.	There are other exceptions to the NFPA codes not specifically listed in this table. See SONGS 2/3 NFPA code review documents for a listing of these code deviations. The basis for acceptablility of these deviations are also described in these NFPA Code Documents. NFPA 13 (1975) Article No. 1-11.3.1 and NFPA 15 (1973) Article No. 5011: Hydrostatic test of systems was done at 200 psi rather than 230 psi as required. NFPA 13 (1975) Article No. 2-9.2.2 and NFPA 15 (1973) Article No. 2101: Pressure gages installed do not have a maximum limit of two times the normal working pressure. Required gage limit is 2 times 180 psi equals 360 psi. Installed gages are limited to 300 psi.	c. Automatic sprinkler systems conform to requirements of appropriate NFPA Standards such as NFPA No. 13, "Standard for the Installation of Sprinkler Systems," and NFPA No. 15, "Standard for Water Spray Fixed Systems."
		An isolation valve is installed in each fire department connection to provide an adequate pressure boundary in the seismically designed piping. Operation of these valves is covered in the pertinent Fire Protection Procedure.	NFPA 13 (1975) Article 2-7.4.1 Check valves are not installed in the fire department connections to the seismic standpipes.	
		The existing system is designed for hazard protection and there are no significant amounts of combustibles in the area not directly covered by Diesel Generator Room walls are adequate to contain an incipient fire.	NFPA 13 (1975) Article 4-2.1.3 & 4-2.1.4 The end branch of the sprinkler system in the Diesel Generator Room is more than six feet from the wall.	

SECTION E - FIRE DETECTION AND SUPPRESSION				
Requirements of Standard Review Plan BTP 9.5-1, Appendix A (1977) Plants Under Construction	Compliance Alternate Compliance	Basis for Acceptability	Specific Exceptions To Compliance	Compliance Statements From Original FHA and Responses To Selected NRC Questions
		This system employs marginally more sprinkler heads (22) than the 20 allowed by the Code. This system is located in the limited access area and its exposure to damage is minimal. Further-more, this system is included in the Licensee Controlled Specification as a part of the plant surveillance program and is being periodically inspected.	NFPA 13 (1975) Article 5-3.5.2 No air supervision provided for the AFW Pump Room pre-action sprinkler system.	
		Systems and devices are tested in accordance with requirements delineated in the Licensee Controlled Specifications.	NFPA 15 (1973) Article 6013, 6018 and 6019 Systems are not tested per NFPA requirements.	
d. Interior manual hose installation should be able to reach any location with at least one effective hose stream.	Comply with exceptions.	The basis of acceptability is comprised of one or more of the following: 1. Installed automatic fire detection system provide early warning alarm in the control room for prompt response by the fire brigade.	The following fire areas cannot be reached with one effective hose stream from an interior hose station: 2-CO-15-1A 2-CT-16-142C 2-PE-9-2A 2-PE(-18)-2B 2-PE-30-2C 2-PE-30-2D 2-TK-(-2)-161B 2-PE-45-3A	d. Interior manual fire hose installations are capable of reaching any location with at least one effective hose stream.

SECTION E - FIRE DETECTION AND SUPPRESSION				
Requirements of Standard Review Plan BTP 9.5-1, Appendix A (1977) Plants Under Construction	Compliance Alternate Compliance	Basis for Acceptability	Specific Exceptions To Compliance	Compliance Statements From Original FHA and Responses To Selected NRC Questions
		2. Little or no fixed combustibles in the fire area/zone. Additionally, these areas are either totally enclosed or access is restricted to minimize the likelihood of fire (e.g., high radiation zones such as tank enclosures).	2-CO-15-1C 2-CO-15-1B 2-CO-63-1D 2-SE-(-12)-170 2-PE-63-3B 2-AC-30-20A 2-AC-9-16 2-AC-70-66 2-AC-70-67 2-AC-70-68 2-AC-70-69 2-AC-(-5)-169 2-AR-9-80 2-AR-9-81 2-AR-9-82	

SECTION E - FIRE DETECTION AND SUPPRESSION				
Requirements of Standard Review Plan BTP 9.5-1, Appendix A (1977) Plants Under Construction	Compliance Alternate Compliance	Basis for Acceptability	Specific Exceptions To Compliance	Compliance Statements From Original FHA and Responses To Selected NRC Questions
		3. SONGS 2 & 3 has a dedicated, full time, five-man (minimum) fire department providing coverage on a 24-hour basis. Two fully equipped fire engines (including 1000 ft. of 2-1/2" diameter or larger hose, 200 ft. of 1-1/2" diameter or larger hose, and 2 high rise packs consisting of 150 ft. of 1-3/4" hose, at least one of which is always initially taken directly to the fire area) are maintained by the fire department.	2-AR-9-83 2-AR-9-76 3-AR-9-91 3-AR-9-92 3-AR-9-75 2-AR-9-74 2-AR-9-73 2-AR-24-94 2-AR-24-95 2-AR-24-102B 2-AR-24-98 2-AR-37-105 3-AR-37-104 3-AR-24-95 2-AR-37-102A 2-AR-37-107 2-AR-50-111A 3-AR-37-110 2-AR-37-108 3-AR-24-96 2-AR-50-111B 3-AR-37-109 2-AR-63-119 2-AR-63-116 2-AR-63-121 3-AR-63-117	
		4. No safe shutdown components located in the area/zone. Fire in these zones will not impact safe shutdown equipment nor the ability of such systems to achieve and maintain safe shutdown.	2-FH-15-124 2-FH-15-125 2-FH-30-126 2-FH-30-127 2-FH-30-128 2-FH-30-129 2-FH-45-132 2-FH-45-130 2-FH-63-134 2-FH-45-131 2-SE-(-15)-138	

SECTION E - FIRE DETECTION AND SUPPRESSION				
Requirements of Standard Review Plan BTP 9.5-1, Appendix A (1977) Plants Under Construction	Compliance Alternate Compliance	Basis for Acceptability	Specific Exceptions To Compliance	Compliance Statements From Original FHA and Responses To Selected NRC Questions
		5. Installed automatic fire suppression capability. In the event the automatic suppression system fails to actuate, the fire department will initiate manual deluge system operation to prevent additional fire damage. 6. Portable fire extinguishers are available for use by the fire department in many fire areas/zones.	2-CT-(-2)-142B 2-SE-30-142A 2-SE-30-171 2-SE-30-144 2-SE-30-143 2-SE-25-145B 2-SE-30-145A 2-SE-50-146 2-TB-7-148A 2-TB-(-9)-148E 2-TB-9-148F 2-TB-7-148B 2-TB-7-149 2-TB-9-148C 2-DG-30-155 2-DG-30-156 2-DG-30-158 2-TK-30-161A 2-AC-85-72 2-TB-30-153 2-TB-72-154A	

SECTION E - FIRE DETECTION AND SUPPRESSION				
Requirements of Standard Review Plan BTP 9.5-1, Appendix A (1977) Plants Under Construction	Compliance Alternate Compliance	Basis for Acceptability	Specific Exceptions To Compliance	Compliance Statements From Original FHA and Responses To Selected NRC Questions
		5. Installed automatic fire suppression capability. In the event the automatic suppression system fails to actuate, the fire department will initiate manual deluge system operation to prevent additional fire damage. 6. Portable fire extinguishers are available for use by the fire department in many fire areas/zones.	2-TB-34-148D 2-TB-72-154B 3-DG-30-157 3-CO-15-1A 3-CT-16-142C 3-PE-9-2A 3-PE-(-18)-2B 3-PE-30-2C 3-PE-30-2D 3-TK-(-2)-161B 3-PE-45-3A 3-CO-15-1C 3-CO-15-1B 3-CO-63-1D 3-SE-(-12)-170 3-PE-63-3B 3-FH-15-125 3-FH-15-124 3-FH-30-126 3-FH-30-127 3-FH-30-128 3-FH-30-129 3-FH-45-132 3-FH-45-130 3-FH-63-134 3-FH-45-131 3-CT-(-2)-142B 3-SE-30-142A 3-SE-25-145B 3-SE-30-145A 3-SE-50-146 3-TB-7-148A 3-TB-9-148F 3-TB-7-149 3-DG-30-155 3-DG-30-156 3-DG-30-158 3-TK-30-161A 3-TB-30-153 3-TB-72-154A	

SECTION E - FIRE DETECTION AND SUPPRESSION				
Requirements of Standard Review Plan BTP 9.5-1, Appendix A (1977) Plants Under Construction	Compliance Alternate Compliance	Basis for Acceptability	Specific Exceptions To Compliance	Compliance Statements From Original FHA and Responses To Selected NRC Questions
To accomplish this, standpipes, with hose connections equipped with a maximum of 75 feet of 1-1/2 inch woven jacket-lined fire hose and suitable nozzles should be provided in all buildings, including containment on all floors and should be spaced at not more than 100-foot intervals.	Comply with exception.	Current requirements do not specify 100 foot interval spacing of hose stations. 100 feet of fire hose length is permitted by NFPA 14 (1974).	Hose stations are not spaced at 100 foot intervals. 100 feet of fire hose is used in the following fire areas: 2-FH-17-123 2-PE-45-3A 3-FH-17-123 3-PE-45-3A 3-AC-30-21 2-AC-30-28	To accomplish this, standpipes with fire hose connections, equipped with a maximum of 75 feet of 1-1/2 inch woven jacket-lined fire hose and suitable nozzles are provided on all floors, in all buildings, except the fuel handling building.
Individual standpipes should be of at least 4-inch diameter for multiple hose connections and 2-1/2 inch diameter for single hose connections.	Comply with exception.	The area supplied by the 3-inch line (Cable Tunnel) has automatic suppression and detection as well as other manual fire protection capability. The area supplied by the 2 inch line (9' Radwaste) is located in an area with redundant hose stations in the vicinity, and low combustible loading.	Several standpipes serving two hose stations are 3-inch diameter. One standpipe serving a single hose station is 2-inch diameter	Individual standpipes are minimum 4-inch diameter for multiple fire hose connections and 2-1/2 inch diameter for single fire hose connections.
These systems should follow the requirements of NFPA No. 14 for sizing, spacing and pipe support requirements (NELPIA).	Comply with exception.	Hose stations are intended for use by the full-time fire department. Handwheels are accessible for manipulation. System operability is not affected.	NFPA 14 Article No. 442: Pressure reducing devices have not been provided. Certain standpipe hose connections and valves do not meet NFPA-14 code requirements for height. These are accessible via use of ladders for manipulation by fire brigade personnel. Fire hose station handwheels in certain hose cabinets do not meet 1" gap requirements.	These systems follow the requirements of NFPA No. 14, "Standpipe and Hose System," for sizing, spacing and pipe support requirements.

SECTION E - FIRE DETECTION AND SUPPRESSION				
Requirements of Standard Review Plan BTP 9.5-1, Appendix A (1977) Plants Under Construction	Compliance Alternate Compliance	Basis for Acceptability	Specific Exceptions To Compliance	Compliance Statements From Original FHA and Responses To Selected NRC Questions
Hose stations should be located outside entrances to normally unoccupied areas and inside normally occupied areas.	Comply with exception.	See Section F.2.b.	Hose stations are not provided inside the control room.	Hose stations are located outside entrances to normally unoccupied areas and inside normally occupied areas. The hose stations consist of fire hose cabinets with fire hose valves and the fire hose and nozzle is standard for the industry.
Standpipes serving hose stations in areas housing safety-related equipment should have shut off valves and pressure reducing devices (if applicable) outside the area.	Non-compliance	Hose stations are intended for use by the full-time fire department. Post indicator valves and controlling gate valves can be effectively utilized in isolating a fire hose station assuming the connection to the normally shut fire hose valve is broken. Note: The retired Unit 1 auxiliary feedwater tank has been modified and may be credited as a source of firewater for post-seismic firefighting activities.	Shutoff valves and pressure devices are not provided.	Post indicator valves and controlling gate valves can be effectively utilized in isolating a fire hose station assuming the connection to the normally shut fire hose valve is broken. It should be noted that in addition to the normally shut fire hose valve, each hose has a normally shut adjustable nozzle. Also, based on the results of a flooding analysis, if a fire hose standpipe were to break in a safety related area, it would not impair the functioning of the safety related equipment. Standpipes and hose connections necessary to fight fires around safe shutdown equipment have been built to withstand an SSE. The water supply to these standpipes will be from mobile trailer tankers fitted with suitable pumps.
e. The proper type of hose nozzles to be supplied to each area should be based on on the fire hazard analysis. The usual combination spray/straight- stream nozzle may cause unacceptable mechanical damage (for example, the delicate electronic equipment in the control room) and be unsuitable.	Comply	Meets Requirements	None	e. The proper type of firehose nozzle supplied in each area is based on the fire hazard analysis. SONGS 2&3 fire hose nozzles are combination spray/straight-stream in all areas including the control room since the nozzles are adjustable from shutoff to full flow discharge.
Electrically safe nozzles should be provided at locations where electrical equipment or cabling is located.				Electrically safe nozzles are provided at locations where electrical equipment or cabling is located and are safe to 250,000 volts at 10 feet.

SECTION E - FIRE DETECTION AND SUPPRESSION				
Requirements of Standard Review Plan BTP 9.5-1, Appendix A (1977) Plants Under Construction	Compliance Alternate Compliance	Basis for Acceptability	Specific Exceptions To Compliance	Compliance Statements From Original FHA and Responses To Selected NRC Questions
f. Certain fires such as those involving flammable liquids respond well to foam suppression. Consideration should be given to use of any of the available foams for such specialized protection application. These include the more common chemical and mechanical low expansion foams, high expansion foam and the relatively new aqueous film forming foam (AFFF).	Not Applicable. There are no foam suppression systems installed in San Onofre Units 2&3.	Not Applicable	Not Applicable	f. Certain fires such as those involving flammable and combustible liquids respond well to foam suppression. Consideration is given to the use of available foams for such specialized protection. Eight (8) five (5) gallon cans of 3% foam concentrate, 1-1/2" foam play pipe and foam pickup tube is provided in each of the two large hose houses.
4. <u>HALON SUPPRESSION SYSTEMS</u>				4. <u>Halon Suppression Systems</u>
The use of Halon fire extinguishing agents should as a minimum comply with the requirements of NFPA 12A and 12B, "Halogenated Fire Extinguishing Agent Systems Halon 1301 and Halon 1211." Only UL or FM approved agents should be used.	Comply	Meets Requirements	None	The use of Halon fire extinguishing agents and systems comply with the requirements of NFPA 12A, "Halogenated Fire Extinguishing Agent Systems - Halon 1301." Only UL or FM approved agents and systems are used.
In addition to the guidelines of NFPA 12A and 12B, preventative maintenance and testing of the systems, including check weighing of the Halon cylinders should be done at least quarterly.	Alternate Compliance	Preventive maintenance and testing of the systems is performed semi-annually. These practices are consistent with NFPA 12A. Subject halon systems do not protect safety related areas/zones.	Check weighing of halon cylinders is performed semi-annually.	In addition to the guidelines of NFPA No. 12A, preventative maintenance and testing of the systems, including weighing of the Halon 1301 cylinders is done at least quarterly.

SECTION E - FIRE DETECTION AND SUPPRESSION				
Requirements of Standard Review Plan BTP 9.5-1, Appendix A (1977) Plants Under Construction	Compliance Alternate Compliance	Basis for Acceptability	Specific Exceptions To Compliance	Compliance Statements From Original FHA and Responses To Selected NRC Questions
Particular consideration should also be given to: a. Minimum required Halon concentration and soak time b. Toxicity of Halon c. Toxicity and corrosive characteristics of thermal decomposition products of Halon.	Comply	Meets Requirements	None	Particular consideration should was given to: a. Minimum required Halon 1301 concentration and soak time; b. Toxicity of Halon; c. Toxicity and corrosive characteristics of thermal decomposition products of Halon 1301; d. Offsetting requirements for venting during Halon 1301 discharge to prevent overpressurization versus sealing to prevent loss of agent; e. Design requirements from over-pressurization.
5. <u>CARBON DIOXIDE SUPPRESSION SYSTEMS</u> The use of carbon dioxide extinguishing systems should as a minimum comply with the requirements of NFPA 12, "Carbon Dioxide Extinguishing Systems."	Comply	Meets Requirements	None	5. <u>Carbon Dioxide Suppression Systems</u> A combination total flooding and local application fixed automatic CO_2 system is installed for turbine-generator bearing fire protection only. No other CO_2 fire extinguishing systems are used. The carbon dioxide extinguishing system complies with the requirements of NFPA No. 12, "Carbon Dioxide Extinguishing Systems."
Particular consideration should also be given to: a. Minimum required CO_2 concentration and soak time; b. Toxicity of CO_2 c. Possibility of secondary thermal shock (cooling) damage; d. Offsetting requirements for venting during CO_2 injection to prevent overpressurization versus sealing to prevent loss of agent;	Comply	Meets Requirements	None	Particular consideration was given to: a. Minimum required CO_2 concentration and soak time; b. Toxicity of CO_2; c. Possibility of secondary thermal shock (cooling) damage; d. Offsetting requirements for venting during CO_2 discharge to prevent overpressurization versus sealing to prevent loss of agent.

SECTION E - FIRE DETECTION AND SUPPRESSION				
Requirements of Standard Review Plan BTP 9.5-1, Appendix A (1977) Plants Under Construction	Compliance Alternate Compliance	Basis for Acceptability	Specific Exceptions To Compliance	Compliance Statements From Original FHA and Responses To Selected NRC Questions
e. Design requirements from overpressurization; and f. Possibility and probability of CO_2 systems being out-of-service because of personnel safety consideration. CO_2 systems are disarmed whenever people are present in an area so protected. Areas entered frequently (even though duration time for any visit is short) have often been found with CO_2 systems shut off.				e. Design requirements from overpressurization; and f. Possibility and probability of CO_2 systems being out-of-service due to personnel safety consideration. CO_2 systems are disarmed or isolated whenever people are present in an area so protected. The isolation valves are monitored and indication is provided in the control room to assure that the CO_2 system is returned back to service after isolation.
6. PORTABLE EXTINGUISHERS				6. Portable Extinguishers
Fire extinguishers should be provided in accordance with guidelines of NFPA 10 and 10A, "Portable Fire Extinguishers, Maintenance and Use." Dry chemical extinguishers should be installed with due consideration given to clean-up problems after use and possible adverse effects on equipment installed in the area.	Comply with exceptions	Meets Requirements	Code compliance deviations are documented in "NFPA" 10 Code Compliance Evaluation, ref. SCE Doc # C9310015602. Resolution to deviations are documented in SCE Memo dated May 2, 1991, CDM File # C91051751144-21. Also, see NFPA 10 Code Compliance Assessment memo to file from R. K. Richter, May 6, 2001.	Fire extinguishers are provided in accordance with guidelines of NFPA No. 10 and 10A, "Portable Fire Extinguishers, Installation" and "Portable Fire Extinguishers, Maintenance and Use." Dry chemical extinguishers are installed with due consideration given to clean-up problems after use and possible adverse effects on equipment installed in the area.

SECTION F - GUIDELINES FOR SPECIFIC PLANT AREAS				
Requirements of Standard Review Plan BTP 9.5-1, Appendix A (1977) Plants Under Construction	Compliance Alternate Compliance	Basis for Acceptability	Specific Exceptions To Compliance	Compliance Statements From Original FHA and Responses To Selected NRC Questions
1. PRIMARY AND SECONDARY CONTAINMENT a. Normal Operation				1. Containment a. Normal Operation
Fire protection requirements for the primary and secondary containment areas should be provided on the basis of specific identified hazards.	Refer to individual paragraphs presented in this section.			Fire protection requirements for the containment areas are provided on the basis of specific identified hazards.
For example:				Deluge water spray systems are provided for the reactor coolant pump lube oil systems and for the charcoal filters.
Lubricating oil or hydraulic fluid system for the primary coolant pumps.	Comply	Meets Requirements	None	
Cable tray arrangements and cable penetrations. Charcoal filters. Because of the general inaccessibility of these areas during normal plant operations, protection should be provided by automatic fixed systems. Automatic sprinklers should be installed for those hazards identified as requiring fixed suppression.	Alternate compliance. Comply with exception. Reference San Onofre Units 2&3, Updated FHA, Section 7.0.	Manual hose stations are adequate protection for the cable tray areas. In the event of charcoal fire it will be contained inside of the charcoal filter housing. Charcoal burns slowly and since there is nothing to burn except charcoal, a manual water spray system is sufficient for this application.	Manual hose stations are provided for cable trays. Manual deluge water spray systems are provided for charcoal filters.	Because of the general inaccessibility of the containment during normal operation, the deluge water spray systems are actuated automatically, however, the water spray systems being provided require remote manual opening of the containment isolation valve to initiate flow. This is done to preclude inadvertent operation. Piping from the containment isolating valve to the deluge valves has been checked to assure integrity during hydraulic transients at the initiation of flow.
Fire suppression systems should be provided based on the fire hazard analysis. Fixed fire suppression capability should be provided for hazards that could jeopardize safe plant shutdown.	Comply - Reference San Onofre Units 2&3 Updated FHA, Section 7.0.	Meets Requirements	None	

SECTION F - GUIDELINES FOR SPECIFIC PLANT AREAS				
Requirements of Standard Review Plan BTP 9.5-1, Appendix A (1977) Plants Under Construction	Compliance Alternate Compliance	Basis for Acceptability	Specific Exceptions To Compliance	Compliance Statements From Original FHA and Responses To Selected NRC Questions
Automatic sprinklers are preferred. An acceptable alternate is automatic gas (Halon or CO_2) for hazards identified as requiring fixed suppression protection. An enclosure may be required to confine the agent if a gas system is used. Such enclosures should not adversely affect safe shutdown, or other operating equipment in containment.	Comply Where automatic suppression is provided, water spray is used in lieu of sprinklers.	Meets Requirements	None	
Operation of the fire protection systems should not compromise integrity of the containment or the other safety-related systems. Fire protection activities in the containment areas should function in conjunction with total containment requirements such as control of contaminated liquid and gaseous release and ventilation.	Comply	Meets Requirements	None	Operation of the fire protection system will not compromise containment integrity or safety-related systems and will function in conjunction with total containment requirements such as ventilation, control of contaminated liquid and gaseous release.
Fire detection systems should alarm and annunciate in the control room. The type of detection used and the location of the detectors should be most suitable to the particular type of fire that could be expected from the identified hazard. A primary containment general area fire detection capability should be provided as backup for the above described hazard detection. To accomplish this, suitable smoke detection (e.g., visual obscuration, light scattering and particle counting) should be installed in the air recirculation system ahead of any filters.	Comply with exception.	Smoke detection is provided throughout containment with the exception of the 15-foot elevation. A fire at this elevation would be alarmed by detectors installed at higher elevations. In addition heat detectors are provided within the housing containing charcoal filters.	Smoke detection has not been installed in the air recirculation system ahead of any filters.	Fire detection systems installed within the containment alarm and annunciate in the control room as well as locally. In addition to an "overall" detection system throughout the containment, detectors are also provided near the specific hazards associated with the HV&AC charcoal filter and the reactor coolant pump lube oil systems.
Automatic fire suppression capability need not be provided in the primary containment atmospheres that are inerted during normal operation. However, special fire protection requirements during refueling and maintenance operations should be satisfied as provided below.	Not Applicable	Not Applicable	Not Applicable	
b. Refueling and Maintenance				b. Refueling and Maintenance

SECTION F - GUIDELINES FOR SPECIFIC PLANT AREAS				
Requirements of Standard Review Plan BTP 9.5-1, Appendix A (1977) Plants Under Construction	Compliance Alternate Compliance	Basis for Acceptability	Specific Exceptions To Compliance	Compliance Statements From Original FHA and Responses To Selected NRC Questions
Refueling and maintenance operations in containment may introduce additional hazards such as contamination control materials, decontamination supplies, wood planking, temporary wiring, welding and flame cutting (with portable compressed fuel gas supply). Possible fires would not necessarily be in the vicinity of fixed detection and suppression systems. Management procedures and controls necessary to assure adequate fire protection are discussed in Section 3a.	Comply Station administrative procedures are in effect.	Meets Requirements	None	
In addition, manual fire-fighting capability should be permanently installed in containment. Standpipes with hose stations, and portable fire extinguishers, should be installed at strategic locations throughout containment for any required manual fire-fighting operations. Equivalent protection from portable systems should be provided if it is impractical to install standpipes with hose stations.	Comply Standpipe with fire hose stations and portable fire extinguishers are provided and strategically located at each floor of the containment.	Meets Requirements	None	Permanently installed standpipes with hose stations are provided in the containment. Portable fire extinguishers are permanently installed at strategic locations throughout containment. Portable fire extinguishers are also stored near the personnel access hatch of the containment, and will be carried in for placement in strategic locations during refueling and maintenance periods.
Adequate self-contained breathing apparatus should be provided near the containment entrances for fire fighting and damage control personnel. These units should be independent of any breathing apparatus or air supply systems provided for general plant activities.	Alternate compliance.	Breathing apparatus is located on the fire engines.	Breathing apparatus is not provided near containment entrances.	Self contained breathing units reserved for exclusive fire brigade use are provided in the north fire hose house and the south fire hose house. Additional self-contained breathing units will be located in the control room area and the radiation protection area outside the containment personnel locks. This arrangement will enable the fire brigade to approach a fire from up to four location.
2. CONTROL ROOM				2. Control Room

SECTION F - GUIDELINES FOR SPECIFIC PLANT AREAS				
Requirements of Standard Review Plan BTP 9.5-1, Appendix A (1977) Plants Under Construction	Compliance Alternate Compliance	Basis for Acceptability	Specific Exceptions To Compliance	Compliance Statements From Original FHA and Responses To Selected NRC Questions
The control room is essential to safe reactor operation. It must be protected against disabling fire damage and should be separated from other areas of the plant by floors, walls and roofs having minimum fire resistance ratings of three hours.	Comply with exception.	The building construction meets the Uniform Building Code, 1970 Edition. In addition, the severity of the design basis fire does not exceed the wall rating. Reference San Onofre Units 2&3 Updated FHA, Section 7.0.	The exterior walls of the control building are of three-hour fire rated construction. The interior walls of the control room are of two-hour fire rated construction. The walls, floor and ceiling are two-hour rated barriers.	The floors and roof of the control room area have a 2-hour fire resistance rating. The walls of the control building separating the building from other areas of the plant are 3-hour fire barriers. The control room is separated from the radwaste area by a 3-hour rated wall; from the cable risers by 2-hour rated walls; and from the computer rooms and guard station by 1-hour and 2-hour constructed walls. Response to FQ015.25 The walls separating the control room from the cable risers provide a 2-hour fire rated barrier. Within the control room area, rooms with any significant fire loadings are the computer rooms, which have their own independent halon fire suppression systems, and the fan rooms, containing charcoal filters, which are equipped with their own independent automatic deluge systems. The wall separating the fan room from the other rooms in the control room area extend from floor slab to floor slab and have a 2-hour fire barrier rating. Additional hand held water extinguishers will be provided at strategic locations throughout the control room area. In addition, remote shutdown capability, independent of the control room area, will be provided. Product-of-combustion fire detectors are provided in Class 1E control room cabinets consoles, and panels, essential to safe shutdown, that contain more than one redundant train and are not separated by metal barriers between division (metal barriers to provide individual compartments for each train).

SECTION F - GUIDELINES FOR SPECIFIC PLANT AREAS				
Requirements of Standard Review Plan BTP 9.5-1, Appendix A (1977) Plants Under Construction	Compliance Alternate Compliance	Basis for Acceptability	Specific Exceptions To Compliance	Compliance Statements From Original FHA and Responses To Selected NRC Questions
Control room cabinets and consoles are subject to damage from two distinct fire hazards: a. Fire originating within a cabinet or console; and b. Exposure fire involving combustibles in the general room area. Manual fire fighting capability should be provided for both hazards. Hose stations and portable water and Halon extinguishers should be located in the control room to eliminate the need for operators to leave the control room.	Alternate compliance. Portable fire extinguishers are located in the control room. Hose stations are located in the cable riser galleries at each side of the control room.	Portable extinguishers and adjacent hose stations provide acceptable protection.	Portable halon extinguishers are not provided. Hose stations are located outside of the control room area.	The fire originating in a cabinet or console is limited by selection of noncombustible materials to the greatest extent possible and exposure fire involving combustibles in the general room area is limited by administrative procedures limiting the combustibles brought into the control room. Portable extinguishers are located in the control room to eliminate the need for operators to leave the control room.
An additional hose piping shutoff valve and pressure reducing device should be installed outside the control room.	See Sections E.3(a) and E.3(d).			
Hose stations adjacent to the control room with portable extinguishers in the control room are acceptable.	Comply	Meets Requirements	None	Hose stations with approved electrical nozzles are located in areas adjacent to the control room and can be brought into the control room if necessary using appropriate precautions.
Nozzles that are compatible with the hazards and equipment in the control room should be provided for the manual hose station. The nozzles chosen should satisfy actual fire fighting needs, satisfy electrical safety and minimize physical damage to electrical equipment from hose stream impingement.	Comply	Meets Requirements	None	
Fire detection in the control room cabinets, and consoles should be provided by smoke and heat detectors in each fire area. Alarm and annunciation should be provided in the control room. Fire alarms in other parts of the plant should also be alarmed and annunciated in the control room.	Comply	Meets Requirements	See Section E.1.B	Smoke detectors are provided in Class 1E control room cabinets essential to safe shutdown which contain more than one redundant train and separate compartments are not provided for each train.
Breathing apparatus for control room operators should be readily available.	Comply	Meets Requirements	None	Breathing apparatus for control room operators are readily available.
Control room floors, ceiling, supporting structures, and walls, including penetrations and doors, should be designed to a minimum fire rating of 3 hours.	Comply with exception. See response above.			The control room floors, floor-ceiling structures and walls including penetrations and doors are designed as previously addressed in this section.

SECTION F - GUIDELINES FOR SPECIFIC PLANT AREAS				
Requirements of Standard Review Plan BTP 9.5-1, Appendix A (1977) Plants Under Construction	Compliance Alternate Compliance	Basis for Acceptability	Specific Exceptions To Compliance	Compliance Statements From Original FHA and Responses To Selected NRC Questions
All penetration seals should be airtight.	Comply	Meets Requirements	None	All penetration seals in the control room are airtight.
The control room ventilation intake should be provided with smoke detection capability to automatically alarm locally and isolate the control room ventilation system to protect operators by preventing smoke from entering the control room.	Comply with exceptions.	Area-wide smoke detection is provided throughout the control room and in the control room outlet recirculation duct. The control room operator can manually shift the control room ventilation system to recirculation or isolation, as required.	Smoke detection is not provided in the control room intake. The control room is not automatically isolated.	The control room ventilation system as well as the control room in general is provided with smoke detection capability to automatically alarm locally and to isolate the control room ventilation system to protect the operations by preventing smoke from entering the control room.
Manually-operated venting of the control room should be available so that operators have the option of venting for visibility. Manually-operated ventilation systems are acceptable.	Comply	Meets Requirements	None	
Cables should not be located in concealed floor and ceiling spaces. If such concealed spaces are used, however, they should have fixed automatic total flooding halon protection.	Comply with exceptions. (See Section D.1.f)	Manual fire fighting stations and portable extinguishers provided in the area of the concealed spaces are available for use in fighting fires. The control room complex is obviously manned and no power cables are located in the concealed spaces.	Fire zone 2-30-AC-20A in the control room complex contains cables in concealed spaces which are not protected by a total flooding halon system.	Other than cables for lighting of the control room, cables are not located in concealed floor and ceiling spaces. Exception - there is a short length of train X instrumentation cable tray above corridor drop ceiling to reach a cabinet in corridor (no power or control cables involved).
All cables that enter the control room should terminate in the control room. That is, no cabling should be simply routed through the control room from one to another.	See Section D.3(j).			All cables which enter the control room terminate in the control room. Therefore, no cabling is routed through the control room from one area to another.
3. <u>CABLE SPREADING ROOM</u>				3. <u>Cable Spreading Room</u>
a. The preferred acceptable methods (for providing primary fire suppression) are:				a. The San Onofre 2&3 design is as follows:
(1) Automatic water system such as closed head sprinklers, open head deluge, or open directional spray nozzles. Deluge and open spray systems should have provisions for manual operation at a remote station; however, there should also be provisions to preclude inadvertent operation. Location of sprinkler heads or spray nozzles should consider cable tray sizing and arrangements to assure adequate water coverage.	Comply	Meets Requirements	None	(1) The primary fire suppression systems for the cable spreading room is the automatic sprinkler system with open directional spray nozzles with provisions for manual operation outside the cable spreading room. Provisions to preclude inaddvertent operation are included. The location of the spray nozzles take into consideration the cable tray sizing, arrangement and configuration to assure adequate water coverage.

SECTION F - GUIDELINES FOR SPECIFIC PLANT AREAS				
Requirements of Standard Review Plan BTP 9.5-1, Appendix A (1977) Plants Under Construction	Compliance Alternate Compliance	Basis for Acceptability	Specific Exceptions To Compliance	Compliance Statements From Original FHA and Responses To Selected NRC Questions
Cables should be designed to allow wetting down with deluge water without electrical faulting.	Comply	Meets Requirements	None	The electrical cables in the cable spreading room are designed to withstand 100% humidity and wetting down with deluge water without electrical faulting over an extended period of time.
Open head deluge and open directional spray systems should be zoned so that a single failure will not deprive the entire area of automatic fire suppression capability.	Comply	Meets Requirements	None	
The use of foam is acceptable, provided it is of a type capable of being delivered by a sprinkler or deluge system, such as an aqueous film forming foam (AFFF).	Not Applicable. Foam is not used for fire suppression.	Not Applicable	Not Applicable	
(2) Manual hoses and portable extinguishers should be provided as backup.	Comply	Meets Requirements	None	(2) The cable spreading room is provided with 1-1-/2 inch fire hose stations for manual fire fighting use, as well as portable CO_2 and portable dry chemical extinguishers.
(3) Each cable spreading room of each unit should have divisional cable separation, and be separated from the other and the rest of the plant by a minimum three-hour rated fire wall (refer to NFPA 251 or ASTM-E119 for fire test resistance rating).	Non-compliance	Alternate shutdown capability is provided. The equivalent fire severity is less than two hours in Unit 2 and less than 3 hours in Unit 3. Reference Document 90035CT, "In-Situ Combustible Loading."	A single cable spreading room is provided for each unit. Two-hour fire rated walls are provided in lieu of three-hour rated walls for separation of cable spreading rooms from other areas. Unit 3 cable spreading room has a fire severity greater than 2 hours, mainly from cable insulation. THe quantity of cable insulation conservatively assumes 25% cable tray fill and a simultaneous total combustion of all combustibles in the area. The configuration is considered acceptable based uo the fire protection features in the area.	(3) Separation is per Regulatory Guide 1.75 to the extent described in the San Onofre Units 2&3 FSAR. The cable spreading rooms for each unit are separated from the radwaste area by 3-hour rated barriers, from each other and the cable risers by 2-hour rated barriers, and from the corridor by a 2-hour barrier. These barriers are considered adequate in view of the fire load and electrical design criteria described in Section I.E.
(4) At least two remote and separate entrances are provided to the room for access by fire brigade personnel; and	Comply	Meets Requirements	None	(4) Two remote and separate entrances are provided to the cable spreading area for fire brigade access.

SECTION F - GUIDELINES FOR SPECIFIC PLANT AREAS				
Requirements of Standard Review Plan BTP 9.5-1, Appendix A (1977) Plants Under Construction	Compliance Alternate Compliance	Basis for Acceptability	Specific Exceptions To Compliance	Compliance Statements From Original FHA and Responses To Selected NRC Questions
(5) Aisle separation provided between tray stacks should be at least 3 feet wide and 8 feet high.	Non-compliance	7-foot vertical separation and automatic suppression provide adequate protection.	8-foot vertical separation is not provided.	(5) The present design provides aisle separation of 3 feet between tray stacks but only 7 feet high, which is considered adequate.
b. For cable spreading rooms that do not provide divisional cable separation of a(3), in addition to meeting a(1), (2), (4), and (5) above, the following should also be provided:				b. The San Onofre 2&3 design does not meet the separation criteria of (a.3) above, but does include the following:
(1) Divisional cable separation should meet the guidelines of Regulatory Guide 1.75, Physical Independence of Electric Systems.	Non-compliance	Divisional separation per Regulatory Guide 1.75 is provided to the extent described in the San Onofre 2&3 FSAR.		See F.3.(a.).3
(2) All cabling should be covered with a suitable fire retardant coating.	Alternate Compliance	The cable spreading room is provided with an early warning detection system, automatic zoned deluge water spray systems, portable extinguishers, standpipes and fire hose stations.	Cables are not provided with fire retardant coatings.	(2) Based on the results of a fire hazard analysis, and since the cable spreading room is provided with an early warning detection system, automatic zoned deluge water spray systems, portable extinguishers, standpipes and fire hose stations, cable per IEEE 383, and separation per Regulatory Guide 1.75 to the extent described in the San Onofre 2&3 FSAR, the present design is considered adequate without the provision of a fire retardant coating.
(3) As an alternate to a(1) above, automatically initiated gas systems (Halon or CO_2) may be used for primary fire suppression, provided a fixed water system is used as a backup.	Not Applicable	Not Applicable	Not Applicable	(3) Not applicable to San Onofre 2&3.
(4) Plants that cannot meet the guidelines of Regulatory Guide 1.75, in addition to meeting a(1), (2), (4), and (5) above, an auxiliary shutdown system with all cabling independent of of the cable spreading room should be provided.	Comply	Meets Requirements		(4) An auxiliary shutdown system with all cabling independent of the cable spreading room is provided in another area.

SECTION F - GUIDELINES FOR SPECIFIC PLANT AREAS				
Requirements of Standard Review Plan BTP 9.5-1, Appendix A (1977) Plants Under Construction	Compliance Alternate Compliance	Basis for Acceptability	Specific Exceptions To Compliance	Compliance Statements From Original FHA and Responses To Selected NRC Questions
For multiple-reactor unit sites, cable spreading rooms should not be shared between reactors. Each cable spreading room of each unit should have divisional cable separation as stated above and be separated from the other and the rest of the plant by a wall with a minimum fire rating of three hours. (See NFPA 251, "Fire Tests, Building Construction and Materials," or ASTM E119, "Fire Test of Building Construction and Materials," for fire test resistance rating.)	Comply with exceptions noted above. Cable spreading rooms are not shared between units.	See above.		The cable spreading room is not shared between Units 2&3. The two areas are separated by a 2-hour rated fire barrier. Based on the fire load, this barrier is adequate.
The ventilation system to the cable spreading room should be designed to isolate the area upon actuation of any gas extinguishing system in the area.	Not Applicable. Gaseous extinguishing systems are not used in these areas.	Not Applicable	Not Applicable	
In addition, smoke venting of the cable spreading room may be desirable. Such smoke venting systems should be controlled automatically by the fire detection or suppression system as appropriate. Capability for remote manual control should also be provided.	Comply	Meets Requirements	None	Smoke venting of the cable spreading room is provided by manual control until fire dampers close. Portable fans are also provided. [See SCE response to NRC question FQO15.16.]
4. PLANT COMPUTER ROOM				4. Plant Computer Rooms
Safety-related computers should be separated from other areas of the plant by barriers having a minimum three-hour fire resistant rating. Automatic fire detection should be provided to alarm and annunciate in the control room and alarm locally. Manual hose stations and portable water and halon fire extinguishers should be provided.	Comply with exception.	The Core Protection Calculators are located in the control room. Automatic fire detection, manual hose stations and portable extinguishers are provided.	The Core Protection Calculators are not separated from other fire areas by three-hour rated barriers.	The San Onofre 2&3 computers are not safety-related. However, the computer rooms are separated from other areas of the plant by one-hour constructed walls. Automatic early warning fire detection is provided which alarms locally and in the control room. An automatic total flooding Halon 1301 system is provided which alarms locally and in the control room, and portable CO_2 and dry chemical extinguishers as well as fire hose stations located outside the computer rooms are available for manual fire fighting.
5. SWITCHGEAR ROOMS				5. Switchgear Rooms

SECTION F - GUIDELINES FOR SPECIFIC PLANT AREAS				
Requirements of Standard Review Plan BTP 9.5-1, Appendix A (1977) Plants Under Construction	Compliance Alternate Compliance	Basis for Acceptability	Specific Exceptions To Compliance	Compliance Statements From Original FHA and Responses To Selected NRC Questions
Switchgear rooms should be separated from the remainder of the plant by minimum three-hour rated fire barriers to the extent practicable.	Non-compliance	Severity of the design basis fire is less than the barrier ratings. Reference San Onofre Units 2&3 Updated FHA, Section 7.0.	The switchgear rooms have two-hour rated walls, floors and ceilings.	The ESF switchgear rooms are located in the control building at elevation 50, which is isolated from the remainder of the plant by three-hour rated walls. Within the control building at elevation 50, the switchgear rooms are separated from other electrical equipment rooms by two-hour rated walls, which are consistent with the fire load within the rooms as indicated in the Fire Hazards Analysis.
Automatic fire detection should alarm and annunciate in the control room and alarm locally. Fire hose stations and portable extinguishers should be readily available.	Comply	Meets Requirements	None	Early warning fire detection is provided which alarms locally and in the control room.
Acceptable protection for cables that pass through the switchgear room is automatic water or gas agent suppression. Such automatic suppression must consider preventing unacceptable damage to electrical equipment and possible necessary containment of agent following discharge.	Non-compliance	Switchgear rooms are divisionally separated.	Automatic suppression systems are not provided.	Since there is a little cable that passes through the switchgear rooms, automatic suppression systems are not provided, however portable CO_2 and dry chemical extinguishers are provided in the rooms in addition to standpipes and fire hose stations equipped with electrical type nozzles located outside of the switchgear rooms.
6. <u>REMOTE SAFETY RELATED PANELS</u>				6. <u>Remote Safety Related Panels</u>
The general area housing remote safety-related panels should be provided with automatic fire detectors that alarm locally and alarm and annunciate in the control room.	Comply	Meets Requirements	None	The area housing the remote safety-related panels is provided with early warning fire detection which alarms locally and in the control room.
Combustible materials should be controlled and limited to those required for operation.	Comply Station administrative procedures are in effect.	Meets Requirements	None	There are no combustible materials stored in this area.
Portable extinguishers and manual hose stations should be provided.	Comply	Meets Requirements	None	The area is provided with portable CO_2 and dry chemical extinguishers and standpipes and fire hose stations are located outside of the room.
7. <u>STATION BATTERY ROOMS</u>				7. <u>Station Battery Rooms</u>

SECTION F - GUIDELINES FOR SPECIFIC PLANT AREAS				
Requirements of Standard Review Plan BTP 9.5-1, Appendix A (1977) Plants Under Construction	Compliance Alternate Compliance	Basis for Acceptability	Specific Exceptions To Compliance	Compliance Statements From Original FHA and Responses To Selected NRC Questions
Battery rooms should be protected against fire explosions. Battery rooms should be separated from each other and other areas of the plant by barriers having a minimum fire rating of three hours inclusive of all penetrations and openings. (See NFPA 69, "Standard on Explosion Prevention Systems."	Alternate Compliance. See alternative (a) below.	Severity of the design basis fire is less than the barrier ratings. Reference San Onofre Units 2&3 Updated FHA, Section 7.0.	The battery rooms have two-hour rated walls, floors and ceilings.	The rooms are separated from each other and other areas of the plant by two-hour rated fire barriers which are considered adequate with respect to the contained fire load. The rooms are ventilated to protect against explosions. The battery rooms are provided with hydrogen concentration detectors that alarm locally and in the control room. (See Response to NRC Question FQO15.28 below.)
Ventilation systems in the battery rooms should be capable of maintaining the hydrogen concentration well below 2% by volume hydrogen concentration.	Comply	Meets Requirements	None	The normal ventilation system is designed to minimize hydrogen concentration and the ESF battery rooms are also provided with an emergency (safety-related) ventilation system which can be used to remove high hydrogen concentration upon receipt of a high hydrogen concentration alarm.
Standpipe and hose and portable extinguishers should be provided.	Comply	Meets Requirements	None	The ESF battery rooms are provided with adequate fire hose stations and portable fire extinguishers located adjacent to these rooms.
Alternatives:				
a. Provide a total fire rated barrier enclosure of the battery room complex that exceeds the fire load contained in the room.	Comply	Meets Requirements	None	
b. Reduce the fire load to be within the fire barrier capability of 1-1/2 hours; or	Not Applicable	Not Applicable	Not Applicable	
c. Provide a remove manual actuated sprinkler system in each room and provide the 1-1/2 hour fire barrier separation.	Not Applicable	Not Applicable	Not Applicable	
8. <u>TURBINE LUBRICATION AND CONTROL OIL STORAGE AND USE AREAS</u>				8. <u>Turbine Lubrication and Control Oil Storage and Use Areas</u>

SECTION F - GUIDELINES FOR SPECIFIC PLANT AREAS				
Requirements of Standard Review Plan BTP 9.5-1, Appendix A (1977) Plants Under Construction	Compliance Alternate Compliance	Basis for Acceptability	Specific Exceptions To Compliance	Compliance Statements From Original FHA and Responses To Selected NRC Questions
A blank fire wall having a minimum resistance rating of three hours should separate all areas containing safety-related systems and equipment from the turbine oil system. When a blank wall is not present, open head deluge protection should be provided for the turbine oil hazards and automatic open head water curtain protection should be provided for wall openings.	Alternate Compliance	Three of the four walls in the Lube Oil Storage Room are 3-hour rated. The room has a water spray and a wet pipe sprinkler system. These systems are designed to control a fire before the barriers are threatened. The wall with unsealed openings is an exterior barrier.	One wall has unsealed openings and is a boundary with another fire area that has SR/SSD components. The ceiling is two hour rated. The suppression systems protect the general area or a specific hazard and not the wall openings.	All safety-related systems and components are separated from the turbine-generator lube oil systems by three-hour fire barriers.
9. DIESEL GENERATOR AREAS				9. Diesel Generator Areas
Diesel generators should be separated from each other and other areas of the plant by fire barriers having a minimum fire resistance rating of three hours.	Comply	Diesel generators are separated from each other by three-hour rated barriers.	None	The diesel generator buildings are separate buildings isolated from the remainder of the plant. The interior walls of each diesel generator building have a three-hour fire resisting rating.
Automatic fire suppression such as AFFF foam or sprinklers should be installed to combat any diesel generator or lubricating oil fires. Automatic fire detectors should be provided to alarm and annunciate in the control room and alarm locally.	Comply	Meets Requirements	None	The diesel generator rooms are provided with an automatic pre-action sprinkler system and an infra-red fire detection system which annunciates in the control room and alarms locally.
Drainage for fire fighting water and means for local manual venting of smoke should be provided.	Comply	Meets Requirements	None	Drainage for fire fighting water is required since the diesel generator building is located at grade level and the water will run out the doors and would be handled by the plant storm drains.
Day tanks with total capacity up to 1100 gallons are permitted in the diesel generator area under the following conditions:	Not Applicable. Refer to the following discussion for alternative protection provided.	Not Applicable	Not Applicable	The day tanks were discussed previously in Section D.2.(a).1.

SECTION F - GUIDELINES FOR SPECIFIC PLANT AREAS				
Requirements of Standard Review Plan BTP 9.5-1, Appendix A (1977) Plants Under Construction	Compliance Alternate Compliance	Basis for Acceptability	Specific Exceptions To Compliance	Compliance Statements From Original FHA and Responses To Selected NRC Questions
a. The day tank is located in a separate enclosure, with a minimum fire resistance rating of three hours, including doors or penetrations. These enclosures should be capable of containing the entire contents of the day tanks. The enclosure should be ventilated to avoid accumulation of oil fumes. b. The enclosure should be protected by automatic fire suppression systems such as AFFF or sprinklers.				
When day tanks cannot be separated from the diesel generator one of the following should be provided for the diesel generator area: a. Automatic open head deluge or open head spray nozzle system(s). b. Automatic closed head sprinklers. c. Automatic AFFF that is delivered by a sprinkler deluge or spray system. d. Automatic gas system (Halon or CO_2) may be used in lieu of foam or sprinklers to combat diesel generator and/or lubricating oil fires.	Comply Automatic closed head sprinklers are provided in accordance with alternative (b).	Meets Requirements	None	
10. <u>DIESEL FUEL OIL STORAGE AREAS</u>				10. <u>Diesel Fuel Oil Storage Areas</u>
Diesel fuel oil tanks with a capacity greater than 1100 gallons should not be located inside the buildings containing safety-related equipment. They should be located at least 50 feet from any building containing safety-related equipment, or if located within 50 feet, they should be housed in a separate building with construction having a minimum fire resistance rating of three hours. Buried tanks are considered as meeting the three-hour fire resist ance requirements. See NFPA 30, "Flammable and Combustible Liquids Code," for additional guidance.	Comply	Meets Requirements	None	The diesel generator fuel oil storage tanks and the auxiliary boiler diesel oil storage tanks are not located inside safety-related buildings. All of these tanks are buried. The compartments containing the pumps and piping associated with the tanks for the diesel generators are separated by three-hour barriers.

SECTION F - GUIDELINES FOR SPECIFIC PLANT AREAS				
Requirements of Standard Review Plan BTP 9.5-1, Appendix A (1977) Plants Under Construction	Compliance Alternate Compliance	Basis for Acceptability	Specific Exceptions To Compliance	Compliance Statements From Original FHA and Responses To Selected NRC Questions
When located in a separate building, the tank should be protected by an automatic fire suppression system such as AFFF or sprinklers.	Not Applicable	Not Applicable	Not Applicable	
Tanks, unless buried, should not be located directly above or below safety-related systems or equipment regardless of the fire rating or separating floors or ceilings.	Not Applicable	Not Applicable	Not Applicable	
In operating plants where tanks are located directly above or below the diesel generators and cannot reasonably be moved, separating floors and main structural members should, as a minimum, have fire resistance rating of three hours. Floors should be liquid tight to prevent possible oil spills from one level to another. Drains should be provided to remove possible oil spills and fire fighting water to a safe location.	Not Applicable	Not Applicable	Not Applicable	
One of the following acceptable methods of fire protection should also be provided: a. Automatic open head deluge or open head spray nozzle system(s). b. Automatic closed head sprinklers; or c. Automatic AFFF that is delivered by a sprinkler system or spray system.	Not Applicable	Not Applicable	Not Applicable	
11. SAFETY RELATED PUMPS				11. Safety Related Pumps
Pump houses and rooms housing safety-related pumps should be protected by automatic sprinkler protection unless a fire hazards analysis can demonstrate that a fire will not endanger other safety-related equipment required for safe plant shutdown. Early warning fire detection should be installed with alarm and annunciation locally and in the control room. Local hose stations and portable extinguishers should also be provided.	Comply	Meets Requirements	None	Based on the results of a fire hazards analysis, automatic fire suppression systems are not required. Portable extinguishers and standpipes and hose stations are located adjacent to the pump rooms. Early warning fire detection is provided which alarms locally and in the control room.
12. NEW FUEL AREA				12. New Fuel Area
Hand portable extinguishers should be located within this area.	Comply	Meets Requirements	None	Hand portable extinguishers are located in the New Fuel Area.

SECTION F - GUIDELINES FOR SPECIFIC PLANT AREAS				
Requirements of Standard Review Plan BTP 9.5-1, Appendix A (1977) Plants Under Construction	Compliance Alternate Compliance	Basis for Acceptability	Specific Exceptions To Compliance	Compliance Statements From Original FHA and Responses To Selected NRC Questions
Also, local hose stations should be outside but within hose reach of this area.	Comply	Meets Requirements	None	Local standpipe hose stations are provided in the spent fuel pool area and are located within reach of the new fuel area.
Automatic fire detection should alarm and annunciate in the control room and alarm locally.	Comply	Meets Requirements	None	Response to FQO15.29 Locations shall be in accordance with NFPA 14 to the extent practicable. Early warning fire detection is provided which alarms locally and in the control room.
Combustibles should be limited to a minimum in the new fuel area.	Comply Station administrative procedures are in effect.	Meets Requirements	None	The only combustibles located in this area would be new fuel shipping crates.
The storage area should be provided with drainage system to preclude accumulation of water.	Comply	Meets Requirements	None	
The storage configuration of new fuel should always be maintained so as to preclude criticality for any water density that might occur during fire water application.	Comply	Meets Requirements	None	For all normal and abnormal configurations including water densities from 10^{-6} to 1g/LL, the criticality criterion of less than 0.98 for new fuel assemblies is met.
13. SPENT FUEL POOL AREA				13. Spent Fuel Pool Area
Protection for the spent fuel pool area should be provided by local hose stations and portable extinguishers.	Comply	Meets Requirements	None	Hand portable extinguishers are located in the New Fuel Area. Local standpipe hose stations are provided in the spent fuel pool area and are located within reach of the new fuel area.
Automatic fire detection should be provided to alarm and annunciate in the control room and to alarm locally.	Comply	Meets Requirements	None	
14. RADWASTE BUILDING				14. Radwaste Building
The radwaste building should be separated from other areas of the plant by fire barriers.	Comply	Meets Requirements	None	The radwaste building is separated from other areas of the plant by three-hour rated fire barriers.
Automatic sprinklers should be used in all areas where combustible materials are located.	Alternate Compliance	Automatic detection which alarms and annuciates in the ESO office and Control Room, portable extinguishers, and manual hose stations are provided for zones which do not have automatic suppression.	Sprinklers are not provided in the high radioactive storage area or other Radwaste Building areas which contain no significant fixed combustibles.	Automatic sprinklers are installed in the truck bay loading area and the low radioactive waste storage area.

SECTION F - GUIDELINES FOR SPECIFIC PLANT AREAS				
Requirements of Standard Review Plan BTP 9.5-1, Appendix A (1977) Plants Under Construction	Compliance Alternate Compliance	Basis for Acceptability	Specific Exceptions To Compliance	Compliance Statements From Original FHA and Responses To Selected NRC Questions
Automatic fire detection should be provided to annunciate and alarm in the control room and alarm locally.	Comply	Meets Requirements	None	Early warning fire detection is provided which alarms locally and in the control room.
During a fire, the ventilation systems in these areas should be capable of being isolated.	Comply	Meets Requirements	None	The ventilation systems have the capacity to isolate fire areas.
Water should drain to liquid radwaste building sumps.	Comply	Meets Requirements	None	All floor drains are routed to the liquid radwaste system.
Acceptable alternative fire protection is automatic fire detection to alarm and annunciate in the control room, in addition to manual hose stations and portable extinguishers consisting of hand held and large wheeled units.	Comply with Exceptions	Adequate hand held extinguishers and manual hose stations have been provided in accordance with applicable NFPA standards.	Large wheeled extinguishers are not provided.	Portable extinguishers including large wheeled units are provided in addition to manual hose stations and wet standpipes with 2-1/2 inch hose connections. <u>Response to FQO15.32</u> Automatic sprinklers are installed to cover all three sections identified within the Low Radioactive Waste Storage Area (Zone 24), including the Low Radioactive Reusable Clothing Area. Only sealed metal liners (50 ft^3 size) and sealed 55-gallon metal drums containing urea formaldehyde are stored in the High Radioactive Waste Storage Area (Zone 25). These are not combustible and therefore, automatic sprinklers are not provided in this area. This is consistent with Appendix A which states sprinklers should be used in all areas where combustibles are located.
15. <u>DECONTAMINATION AREAS</u>				<u>15. Decontamination Areas</u>
The decontamination areas should be protected by automatic sprinklers if flammable liquids are stored.	Not Applicable	Not Applicable	Not Applicable	Sprinklers are not provided in the decontamination areas since flammable liquids will not be stored there.
Automatic fire detection should be provided to annunciate and alarm in the control room and alarm locally.	Non-compliance	Flammable liquids are not stored in decontamination areas.	Automatic fire detection is not provided in decontamination areas.	Early warning fire detector is not provided which alarms locally and in the control room.
The ventilation system should be capable of being isolated. Local hose stations and hand portable extinguishers should be provided as backup to the sprinkler system.	Comply	Meets Requirements	None	The HV&AC system has the capability to be isolated in the affected area in case of fire. Local hose stations are provided adjacent to the decontamination areas and portable extinguishers are provided in the decontamination areas.

SECTION F - GUIDELINES FOR SPECIFIC PLANT AREAS				
Requirements of Standard Review Plan BTP 9.5-1, Appendix A (1977) Plants Under Construction	Compliance Alternate Compliance	Basis for Acceptability	Specific Exceptions To Compliance	Compliance Statements From Original FHA and Responses To Selected NRC Questions
16. SAFETY-RELATED WATER TANKS				16. Safety-Related Water Tanks
Storage tanks that supply water for safe shutdown should be protected from the effects of fire.	Comply	Meets Requirements	None	The safety-related water tanks are separated from other areas of the plant by concrete barriers and are protected from the effects of fire.
Local hose stations and portable extinguishers should be provided. Portable extinguishers should be located in nearby hose houses.	Alternate Compliance	A fire in the tank area will be attacked by the full-time fire department utilizing the station fire engine.	A local hose station and portable extinguishers are not provided.	These tanks are located outdoors and are easily accessible to fire hoses from the outside fire hydrants and other portable extinguishing equipment.
Combustible materials should not be stored next to outdoor tanks.	Comply Station administrative procedures are in effect.	Meets Requirements	None	There are no combustibles stored near the water tanks or within the
A minimum of 50 feet of separation should be provided between outdoor tanks and combustible materials where feasible	Alternate Compliance. Refer to paragraph D.1.h.			
17. COOLING TOWERS				17. Cooling Towers
Cooling towers should be of non-combustible construction or so located that a fire will not adversely affect any safety-related systems or equipment. Cooling towers should be of non-combustible construction when the basins are used for the ultimate heat sink or for the fire protection water supply. Cooling towers of combustible construction, so located that a fire in them could adversely affect safety-related systems or equipment should be protected with an open head deluge system installation with hydrants and hose houses strategically located.	Not Applicable	Not Applicable	Not Applicable	San Onofre 2&3 is not equipped with cooling towers.
18. MISCELLANEOUS AREAS				18. Miscellaneous Areas

SECTION F - GUIDELINES FOR SPECIFIC PLANT AREAS				
Requirements of Standard Review Plan BTP 9.5-1, Appendix A (1977) Plants Under Construction	Compliance Alternate Compliance	Basis for Acceptability	Specific Exceptions To Compliance	Compliance Statements From Original FHA and Responses To Selected NRC Questions
Miscellaneous areas such as records storage areas, shops, warehouses, and auxiliary boiler rooms should be so located that a fire or effects of a fire, including smoke, will not adversely affect any safety-related systems or equipment. Fuel oil tanks for auxiliary boilers should be buried or provided with dikes to contain the entire tank contents.	Comply	Meets Requirements Note: Auxiliary Boiler is no longer in service.	None	The shops, warehouses, and records storage area is located in a separate isolated AWS building sufficiently separated from other areas of the plant such as not to adversely affect safety-related systems. Automatic sprinklers are provided for the warehouse and an automatic total flooding Halon 1301 system is provided for the records storage area. The auxiliary boiler is located outdoors and is protected by an automatic deluge water spray system, and the fuel oil tanks are buried.

SECTION G - SPECIAL PROTECTION GUIDELINES				
Requirements of Standard Review Plan BTP 9.5-1, Appendix A (1977) Plants Under Construction	Compliance Alternate Compliance	Basis for Acceptability	Specific Exceptions To Compliance	Compliance Statements From Original FHA and Responses To Selected NRC Questions
1. WELDING AND CUTTING, ACETYLENE - OXYGEN FUEL GAS SYSTEMS This equipment is used in various areas throughout the plant. Storage locations should be chosen to permit fire protection by automatic sprinkler systems. Local stations and portable equipment should be provided as backup. The requirements of NFPA 51 and NFPA 51B are applicable to these hazards. A permit system should be required to utilize this equipment. (Also refer to 2f herein.)	Comply	Meets Requirements NOTE: Welding equipment moved to Maintenance building, which has Automatic Sprinkler Protection.	None	1. Welding and Cutting, Acetylene - Oxygen Fuel Gas Systems Welding equipment will be stored in the AWS buidling in an area provided with automatic sprinkler protection. Local hose stations and portable extinguishers are also available. A permit will be required whenever welding or cutting type equipment is used in or adjacent to safety-related area.
2. STORAGE AREAS FOR DRY ION EXCHANGE RESINS Dry ion exchange resins should not be stored near essential safety- related systems. Dry unused resins should be protected by automatic wet pipe sprinkler installations. Detection by smoke and heat detectors should alarm and annunciate in the control room and alarm locally. Local hose stations and portable extinguishers should provide backup for these areas. Storage areas of dry resin should have curbs and drains. (Refer to NFPA 92M, "Waterproofing and Draining of Floors.")	Not Applicable	Dry ion exchange resins are not used.	None	2. Storage Areas for Dry Ion Exchange Resins San Onofre 2&3 will store new and unused ion exchange resins in a wet form, therefore not requiring sprinkler protection. Early warning detection is provided which alarms locally and in the control room. Portable extinguishers and local fire hose stations are also provided in these areas.
3. HAZARDOUS CHEMICALS Hazardous chemicals should be stored and protected in accordance with the recommendations of NFPA 49, "Hazardous Chemicals Data." Chemical storage areas should be well ventilated and protected against flooding conditions since some chemicals may react with water to produce ignition.	Comply	Meets Requirements	None	3. Hazardous Chemicals Hazardous chemicals will be stored and protected in accordance with NFPA 49 in a well ventilated area.
4. MATERIALS CONTAINING RADIOACTIVITY				4. Materials Containing Radioactivity

SECTION G - SPECIAL PROTECTION GUIDELINES				
Requirements of Standard Review Plan BTP 9.5-1, Appendix A (1977) Plants Under Construction	Compliance Alternate Compliance	Basis for Acceptability	Specific Exceptions To Compliance	Compliance Statements From Original FHA and Responses To Selected NRC Questions
Materials that collect and contain radioactivity such as spent ion exchange resins, charcoal filters, and HEPA filters should be stored in closed metal tanks or containers that are located in areas free from ignition sources or combustibles. These materials should be protected from exposure to fires in adjacent areas as well. Consideration should be given to requirements for removal of isotopic decay heat from entrained radioactive materials.	Comply	Meets Requirements	None	Materials that contain and collect radioactivity are stored in closed metal containers which are located in areas free of ignition sources. Consideration will be given to removal of decay heat from entrained radioactive materials.

10 CFR 50 APPENDIX R

NOTE: The purpose of this tabulation is to identify specific deviations to literal compliance with Appendix R requirements as part of the Updated Fire Hazards Analysis. This appendix addresses the literal requirements of 10 CFR 50, Appendix R - Fire Protection Program for Nuclear Power Facilities Operating Prior to January 1, 1979, Sections III.G. Fire Protection of Safe Shutdown Capability, III.J. Emergency Lighting, III.L. Alternative and Dedicated Shutdown and III.O. Oil Collection System for Reactor Coolant Pump as applied to San Onofre Units 2 and 3 by the full power operating license. Deviations identified in the original Fire Hazards Analysis and subsequent correspondence that have already been accepted by the NRC in previous licensing documents; i.e., the Safety Evaluation Report and Supplements are clearly identified in this tabulation. The deviations tabulated are based upon compliance with the requirements of Parts III.G, J, L, and O.

When San Onofre, Units 2 and 3 were being licensed by the NRC, the formal exemption process to Appendix R was not applicable to the project. The information provided by SCE in the Fire Hazards Analysis and correspondence that identified deviations from NRC requirements was reviewed and approved by the NRC in its Safety Evaluation Report. Where this occurred SCE has noted on this table that NRC concurrence with noted deviations has been granted previously.

The legend for the column titled "Affected Fire Area or Zone" is as follows:

AC - Auxiliary Control Building
AR - Auxiliary Radwaste Building
CO - Containment Building
CT - Electrical Cable Tunnel
DG - Diesel Generator Building
FH - Fuel Handling Building
PE - Penetration Building
SE - Safety Equipment Building
TB - Turbine Building
TK - Tank Building
YD - Yard Area

Fire Area Numbering Explanation: A-BB-CC-DDD-E
where:
A = Unit Number
BB = Building I.D.
CC = Elevation (lowest floor)
DDD = Fire Area (up to 3 digits)
E = Fire Zone (Alpha character)

10 CFR 50 APPENDIX R			
10 CFR 50 Appendix R Requirements	Specific Deviation	Basis for Acceptability	Affected Area or Fire Zone
Section III.G - Fire Protection of Safe Shutdown Capability 1. Fire protection features shall be provided for structures, systems, and components important to safe shutdown. These features shall be capable of limiting fire damage so that: a. One train of systems necessary to achieve and maintain hot shutdown conditions from either the control room or emergency control station(s) is free of fire damage; and b. Systems necessary to achieve and maintain cold shutdown from either the control room or emergency control station(s) can be repaired within 72 hours. 2. Except as provided for in paragraph G.3 of this section, where cables or equipment, including associated nonsafety circuits that could prevent operation or cause maloperation due to hot shorts, open circuits, or shorts to ground, of redundant trains of systems necessary to achieve and maintain hot shutdown conditions are located within the same fire area outside of primary containment, one of the redundant trains is free of fire damage shall be provided:	None	Fire protection features and alternate shutdown capability are provided consistent with the fire hazards analysis for each fire area/zone (reference Section 7.0 of the Updated FHA) and the functional requirements necessary to achieve safe shutdown (reference Appendix B of the Updated FHA). Methods for assuring that necessary structures, systems and components control station(s) can be repairedare free of fire damage (that is, capable of performing its intended function during and after a postulated fire) are provided. Repairs are credited for shutdown cooling temperature and flow indication. Materials for repairs are pre-staged onsite.	(Units 2 and 3) 2-SE-(-15)-137C 3-SE-(-15)-137C

10 CFR 50 APPENDIX R			
10 CFR 50 Appendix R Requirements	Specific Deviation	Basis for Acceptability	Affected Area or Fire Zone
a. Separation of cables and equipment and associated nonsafety circuits of redundant trains by a fire barrier having a three-hour rating. Structural steel forming a part of or supporting such fire barriers shall be protected to provide fire resistance equivalent to that required of the barrier.	(1) Where three-hour barriers are not provided, two-hour rated fire barriers or walls of heavy concrete construction in lieu of three-hour rated fire barriers are provided to separate redundant safe shutdown trains. (2) Safe shutdown cables in the yard area are not separated by 3-hour rated fire barriers.	(1) Safe shutdown cables between fire zones 2-3A/ 2-3B and 3-3A/3-3B are provided with the equivalent of 2-hour separation as the postulated fire duration in these zones is 2-hour or less and detection is available. Walls between 2-137A/2-137C and 3-137A/3-137C are constructed of heavy concrete and penetrations between them are sealed with seals which are either 3-hour rated or have been qualified to be adequate for the fire hazard. Barriers separating zones 2-137C/2-136, 2-137C/2-2B, 2-136/2-2B, 3-137C/3-136, 3-137C/3-2B and 3-136/3-2B have been determined to be adequate for the hazard. (2) The spatial separation, the contour of the ground, and lack of a combustible path between redundant trains provide equivalent protection.	(1) (Unit 2 and Common) 2-PE-45-3A 2-PE-63-3B 2-SE-(-15)-137A 2-SE-(-15)-137C 2-SE-(-15)-136 2-PE-(-18)-2B (Unit 3) 3-PE-45-3A 3-PE-63-3B 3-SE-(-15)-137A 3-SE-(-15)-137C 3-SE-(-15)-136 3-PE-(-18)-2B (2) (Units 2 and 3) 2-YD-30-200A 2-YD-30-200B

10 CFR 50 APPENDIX R			
10 CFR 50 Appendix R Requirements	Specific Deviation	Basis for Acceptability	Affected Area or Fire Zone
b. Separation of cables and equipment and associated nonsafety circuits of redundant trains by a horizontal distance of more than 20 feet with no intervening combustible or fire hazards. In addition, fire detectors and an automatic fire suppression system shall be installed in the fire area; or	The combination of twenty foot separation with no intervening combustibles coupled with detection and suppression has not been provided for the listed fire areas/zones.	Adequate area/zone-wide suppression/detection or other protection is provided for redundant safe shutdown equipment and cabling, or the combustible loading in the area is negligible. In addition, manual hose stations and portable fire extinguishers are readily available. The fire protection features available in these area/zones and the separation of redundant cables and equipment were evaluated and shown to provide a level of protection equivalent to the requirements of Appendix R, Section III.G.2.b.	(1) Automatic suppression and/or detection not provided. (Unit 2 and Common) 2-AR-9-762-SE-(-5)-135B 2-AR-9-84A 2-SE-(-5)-135C 2-AR-9-84B 2-SE-(-5)-135D 2-AR-24-94 2-TB-(-9)-148E 2-SE-(-5)-135A 2-TK-(-2)-161B (Unit 3) 3-AR-9-78A 3-SE-(-5)-135C 3-AR-9-78B 3-SE-(-5)-135D 3-SE-(-5)-135A 3-TB-9-148F 3-SE-(-5)-135B 3-TK-(-2)-161B Fire area 2&3-148 (lack of area wide suppression and detection) (2) Less than 20 feet separation with area-wide suppression and without complete area-wide detection (Unit 2 and Common) 2-AC-50-29 (3) Greater than 20 feet separation with intervening combustibles.

10 CFR 50 APPENDIX R			
10 CFR 50 Appendix R Requirements	Specific Deviation	Basis for Acceptability	Affected Area or Fire Zone
			(Unit 2 and Common) 2-SE-30-142A 2-CT-(-2)-142B 2-CT-16-142C 2-TB-9-148F 2-TK-30-161A (Unit 3) 3-SE-30-142A 3-CT-(-2)-142B 3-CT-16-142C 3-TB-9-148F 3-TK-30-161A (4) Less than 20 feet separation and no suppression or detection (Unit 2 and Common) 2-AR-9-76 2-AR-9-84A 2-AR-9-84B 2-AR-9-94 (Unit 3) 3-AR-9-78A 3-AR-9-78B
c. Enclosure of cable and equipment and associated nonsafety circuits of one redundant train in a fire barrier having a one-hour rating. In addition, fire detectors and an automatic fire suppression system shall be installed in the fire area.	(1) Redundant safe shutdown cabling is enclosed in a one-hour rated fire barrier without detection or suppression provided.	(1) Redundant cabling in the area is separated by a one hour barrier. There are no in-situ combustibles and manual fire suppression equipment is provided in adjacent zones. The fire protection features available in this zone were evaluated and shown to provide a level of protection equivalent to the requirements of Appendix R, Section III.G.2.c.	(1) 1-hour wrap with no automatic suppression or detection (Unit 2) 2-TK-(-2)-161B (Unit 3) 3-TK-(-2)-161B
	(2) 3M INTERAM Fire Barrier Material is used in all credited Type 2 Exposure Fire Barriers.	(2) The 3M INTERAM Fire Barrier material is considered to be bounded by the approved NRC deviation for raceway fire barrier material.	(2) Plant-wide

10 CFR 50 APPENDIX R			
10 CFR 50 Appendix R Requirements	Specific Deviation	Basis for Acceptability	Affected Area or Fire Zone
Inside noninerted containments, one of the fire protection means specified above or one of the following fire protection means shall be provided: d. Separation of cables and equipment and associated nonsafety circuits of redundant trains by a horizontal distance of more than 20 feet with no intervening combustibles or fire hazards;	Redundant safe shutdown instrumentation and equipment is separated by either less than 20 feet without intervening combustibles or greater than 20 feet with intervening combustibles.	All areas containing Cerablanket cable wraps are no longer credited as Type 2 Exposure Fire Barriers. Transient combustibles are controlled by plant administrative procedures and the limited access to the area when the plant is at power. The primary in-situ combustible is cable insulation. The only other significant combustibles are the charcoal filters of the air recirculation unit and the reactor coolant pump lube oil. Portions of the containment are provided with ionization smoke detectors that will provide alarm to the Control Room as well as the site fire department office in the event of fire. Temperature sensors are located in the charcoal filters of the air recirculation unit and are supplemented by a manually actuated water spray system. The reactor coolant pumps are providedwith a reactor coolant pump lube oil collection system (see III.0). Manual fire suppression equipment available includes portable fire extinguishers and hose stations. The fire protection features available in these zones and the separation of redundant cables and components were evaluated and shown to provide a level of protection equivalent to the requirements of Appendix R, Section III.G.2.d.	(Units 2 and 3) 2-CO-15-1A 2-CO-15-1B 2-CO-15-1C 2-CO-63-1D 3-CO-15-1A 3-CO-15-1B 3-CO-15-1C 3-CO-63-1D
e. Installation of fire detectors and an automatic fire suppression system in the fire area; or	Partial suppression/detection provided in containment.	See III G.2.d above.	(Units 2 and 3) 2-CO-15-1A 3-CO-15-1A 2-CO-15-1B 3-CO-15-1B 2-CO-15-1C 3-CO-15-1C 2-CO-63-1D 3-CO-63-1D
f. Separation of cables and equipment and associated nonsafety circuits of redundant trains by a noncombustible radiant energy shield.	None	Meets Requirements	(Units 2 and 3) 2-CO-15-1C 3-CO-15-1C 2-CO-15-1D 3-CO-15-1D

10 CFR 50 APPENDIX R			
10 CFR 50 Appendix R Requirements	Specific Deviation	Basis for Acceptability	Affected Area or Fire Zone
3. Alternative or dedicated shutdown capability and its associated circuits, independent of cables, systems or components in the area, room, or zone under consideration, shall be provided: a. Where the protection of systems whose function is required for hot shutdown does not satisfy the requirement of paragraph G.2 of this section, or b. Where redundant trains of systems required for hot shutdown located in the same fire area may be subject to damage from fire suppression activities or from the rupture or inadvertent operation of fire suppression systems.	None	Alternative safe shutdown capability is provided for instrumentation and control. The Essential Plant Parameters Monitoring (EPPM) panel is independent of control room indication. The EPPM panel is located in a separate fire area. Transfer switches for control circuits have been provided to separate the second points of control from a control room, cable spreading room, fan room (2-AC-30-26) or cable riser gallery fire. The transfer switches insure that the second points of control which are located in separate fire areas are not subject to consequences of the same design basis fire. The parameters provided on the EPPM panel are as follows: steam generator pressure and level, pressurizer pressure and level, and reactor coolant hot and cold leg temperature. Source range flux indication is provided at the Evacuation Shutdown Panel (EVSD). See III.L, also.	(Units 2 and 3) 2-AC-9-5 3-AC-9-6 3-AC-9-7 2-AC-9-14 2-AC-30-20A 3-AC-30-20B 2-AC-30-20C 2-AC-30-20D 2-AC-30-20E 3-AC-30-21 2-AC-30-26 2-AC-30-28
In addition, fire detection and a fixed fire suppression system shall be installed in the area, room or zone under consideration.	A fixed fire suppression system has not been provided for all fire areas credited for alternative shutdown. (Detection has been provided.)	Equipment and cabling required for alternative shutdown capability is provided in areas physically and electrically independent of the control room area. In addition, the control room is continuously manned and portable extinguishers are available. The fire protection features available in these zones were evaluated and shown to provide a level of protection equivalent to the requirements of Appendix R, Section III.G.3.	(Units 2 and 3) 2-AC-30-20A 2-AC-30-20D 2-AC-30-20E
Section III J - Specific Requirements Emergency Lighting Emergency lighting units with at least an eight-hour battery power supply shall be provided in all areas needed for operation of safe shutdown equipment and in access and egress routes thereto.	(1) Control room essential lighting is not backed by an eight-hour battery power supply. (2) Eight hour emergency lights will be provided only for safe shutdown equipment (and access and egress routes) requiring manual operator action within the first eight (8) hours post-fire.	(1) Emergency lighting provided for the control room is backed up by a 90 minute battery backup with a manual transfer to diesel generator-backed in lieu of eight hour battery packs. (2) Restoration of normal plant lighting is expected eight hours after the postulated fire. Eight-hour lighting has been tested under partial blackout conditions in conjunction with operator walkthrough of the alternate shutdown procedure.	(1) (Units 2 and 3) 2-AC-30-20A (2) All fire areas/zones which require manual operator actions eight hours after the design basis fire.
Section III.L - Alternative and Dedicated Shutdown Capability			

10 CFR 50 APPENDIX R			
10 CFR 50 Appendix R Requirements	Specific Deviation	Basis for Acceptability	Affected Area or Fire Zone
1. Alternative or dedicated shutdown capability provided for a specific fire area shall be able to (a) achieve and maintain subcritical reactivity conditions in the reactor; (b) maintain reactor coolant inventory; (c) achieve and maintain hot standby conditions for a PWR (hot shutdown for a BWR); (d) achieve cold shutdown conditions within 72 hours; and (e) maintain cold shutdown conditions thereafter. During the post-fire shutdown, the reactor coolant system process variables shall be maintained within those predicted for a loss of normal a.c. power, and the fission product boundary integrity shall not be affected; i.e., there shall be no fuel clad damage, rupture of any primary coolant boundary, of rupture of the containment boundary.	None	Alternative shutdown capability has been provided to meet the listed criteria.	(Units 2 and 3) 2-AC-9-5 3-AC-9-6 3-AC-9-7 2-AC-9-14 2-AC-30-20A 3-AC-30-20B 2-AC-30-20C 2-AC-30-20D 2-AC-30-20E 3-AC-30-21 2-AC-30-26 2-AC-30-28
2. The performance goals for the shutdown functions shall be: a. The reactivity control function shall be capable of achieving and maintaining cold shutdown reactivity conditions. b. The reactor coolant makeup function shall be capable of maintaining the reactor coolant level above the top of the core for BWRs and be within the level indication in the pressurizer for PWRs. c. The reactor heat removal function shall be capable of achieving and maintaining decay heat removal. d. The process monitoring function shall be capable of providing direct readings of the process variables necessary to perform and control the above functions. e. The supporting functions shall be capable of providing the process cooling, lubrication, etc., necessary to permit the operation of the equipment used for safe shutdown functions.	None	Meets Requirements.	See III.L.1
3. The shutdown capability for specific fire areas may be unique for each such area, or it may be one unique combination of systems for all such areas. In either case, the alternative shutdown capability shall be independent of the specific fire area(s) and shall accommodate postfire conditions where offsite power is available and where offsite power is not available for 72 hours. Procedures shall be in effect to implement this capability.	None	One-hour wrap, detection, and suppression are provided within the listed ASD fire areas to protect conduits and racewaysof systems required for alternative shutdown.	(Units 2 and 3) 2-AC-9-14 2-AC-30-28 3-AC-9-7 3-AC-30-21
4. If the capability to achieve and maintain cold shutdown will not be available because of fire damage, the equipment and systems comprising the means to achieve	None	Meets Requirements.	

10 CFR 50 APPENDIX R			
10 CFR 50 Appendix R Requirements	Specific Deviation	Basis for Acceptability	Affected Area or Fire Zone
and maintain the hot standby or hot shutdown condition shall be capable of maintaining such conditions until cold shutdown can be achieved. If such equipment and systems will not be capable of being powered by both onsite and offsite electric power systems because of fire damage, an independent onsite power system shall be provided. The number of operating shift personnel, exclusive of fire brigade members, required to operate such equipment and systems shall be on site at all times.			
5. Equipment and systems comprising the means to achieve and maintain cold shutdown conditions shall not be damaged by fire; or the fire damage to such equipment and systems shall be limited so that the systems can be made operable and cold shutdown can be achieved within 72 hours. Materials for such repairs shall be readily available on site and procedures shall be in effect to implement such repairs. If such equipment and systems used prior to 72 hours after the fire will not be capable of being powered by both onsite and offsite electric power systems because of fire damage, an independent onsite power system shall be provided. Equipment and systems used after 72 hours may be powered by offsite power only.	None	Meets Requirements.	
6. Shutdown systems installed to ensure postfire shutdown capability need not be designed to meet seismic Category I criteria, single failure criteria, or other design basis accident criteria, except where required for other reasons, e.g., because of interface with or impact on existing safety systems, or because of adverse valve actions due to fire damage.	None	Meets Requirements.	
7. The safe shutdown equipment and systems for each fire area shall be known to be isolated from associated non-safety circuits in the fire area so that hot shorts, open circuits, or shorts to ground in the associated circuits will not prevent operation of the safe shutdown equipment. The separation and barriers between trays and conduits containing associated circuits of one safe shutdown division and trays and conduits containing associated circuits or safe shutdown cables from the redundant division, or the isolation of these associated circuits from the safe shutdown equipment, shall be such that a postulated fire involving associated circuits will not prevent safe shutdown.	None	Meets Requirements. Associated circuit analyses have been performed to demonstrate the capability to achieve and maintain safe shutdown for a fire in any area.	
Section III O - Oil Collection System for Reactor Coolant Pump			

10 CFR 50 APPENDIX R			
10 CFR 50 Appendix R Requirements	Specific Deviation	Basis for Acceptability	Affected Area or Fire Zone
The reactor coolant pump shall be equipped with an oil collection system if the containment is not inerted during normal operation.	None	The NRC has previously reviewed and approved this system as documented in the NRC's Safety Evaluation related to the issuance of Operating License NPF-15, San Onofre, Unit 3 - Item C.1.h.	None
The oil collection system shall be designed, engineered, and installed such that failure will not lead to fire during normal or design basis accident conditions and there is reasonable assurance that the system will withstand the Safe Shutdown Earthquake.	None	A reactor coolant pump oil collection system is provided such that its failure will not lead to failure during normal or design basis accident conditions and that there is reasonable assurance that it will withstand a safe shutdown earthquake.	None
Such collection systems shall be capable of collecting lube oil from all potential pressurized and unpressurized leakage sites in the reactor coolant pump lube oil systems.	None	Note: Remote oil fill lines, which are normally dry and non-pressurized, are not furnished with lube oil collection system pans. These remote oil fill lines are used on an as-needed basis for adding small amounts of lube oil to the lower reservoirs.	None
Leakage shall be collected and drained to a vented closed container that can hold the entire lube system inventory.	None	There are two collecting tanks per unit and each tank is sized to collect the entire lube oil system inventory for two reactor coolant pumps.	None
A flame arrester is required in the vent if the flash point characteristics of the oil present the hazard of fire flashback.	None		None
Leakage points to be protected include lift pump and piping, overflow lines, and lube oil reservoirs where such features exist on the reactor coolant pumps.	None		None
The drain line shall be large enough to accommodate the largest potential leak.	None		None