Appendix C-1

Detailed Process Flow Diagram for PUG Plant

100-STO-001 ROM STOCKPILE	100-GRZ-001 24" GRIZZLY SCREEN	100-GRF-001 GRIZZLY FEEDER	100-CVO-001 JAW CRUSHER DISCHARGE CONVEYOR	100-BMA-001 TRAMP METAL MAGNET	100-STO-005 +24"/-36" WASTE ROCK STOCKPILE	110-CVO-002 3" SCREEN O/S DISCHARGE CONVEYOR	110-PCS-001 -6 MESH SCREEN UNDERFLOW PUMP	110-CCR-001 3/4" CONE CRUSHER	110-RCR-001 6 MESH ROLL CRUSHER	110-VIS-002 6 MESH SCREEN	110-CVO-006 -3" MESH CRUSHED ORE STOCKPILE FEED CONVEYOR	110-SBF-001A/B -3" MESH STOCKPILE BELT FEEDER
100-MOE-001 ROM LOADER	100-HOP-001 FEED DUMP HOPPER	100-JCR-001 24" JAW CRUSHER	100-TRB-001 TRASH BIN		110-VIS-001 3" SCREEN	110-STO-006 +3" LOW GRADE STOCKPILE	110-PBO-001 -6 MESH SCREEN UNDERFLOW SUMP	110-CVO-003 3/4" CONE CRUSHER DISCHARGE CONVEYOR	110-CVO-004 ROLL CRUSHER DISCHARGE CONVEYOR	110-CVO-005 6 MESH SCREEN O/S DISCHARGE CONVEYOR	110-STO-005 -3" MESH CRUSHED ORE STOCKPILE	110-CVO-007 -3" MESH STOCKPILE FEED CONVEYOR
NOTE 2						NOTE 2	NOTE 4			NOTE 4	NOTE 2	NOTE 2

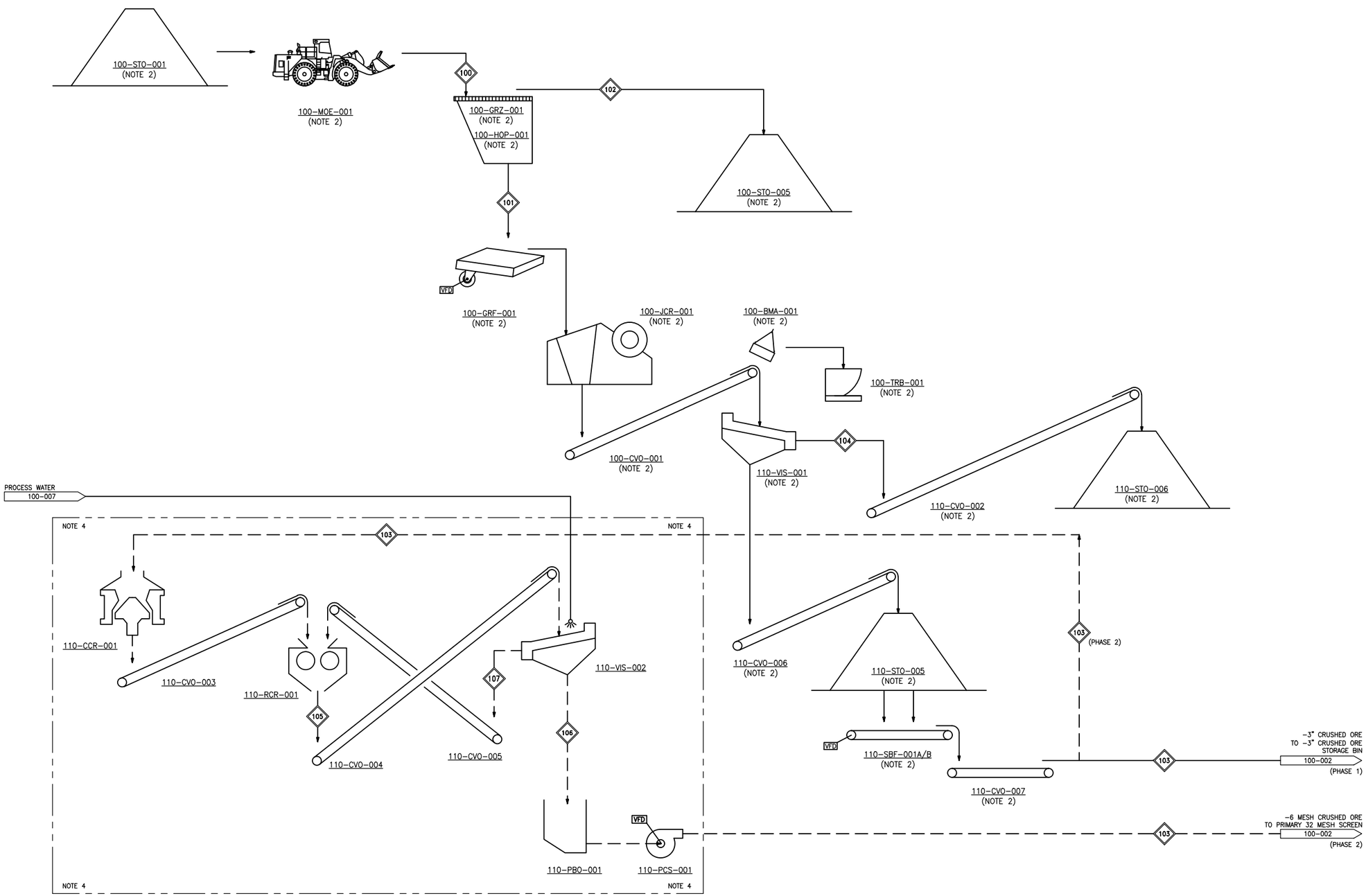

KEYPLAN

GENERAL NOTES

1. ALL EQUIPMENT AND STREAMS ARE TO BE INSTALLED FOR PHASE 2 EXCEPT WHERE REFERRED TO NOTE 2.
2. EQUIPMENT AND STREAMS TO BE INSTALLED FOR PHASE 1.
3. EQUIPMENT TO BE INSTALLED FOR PHASE 1 ONLY. NOT REQUIRED FOR PHASE 2.
4. EQUIPMENT TO BE RELOCATED FROM HYDROMET PLANT FOR PHASE 2.
5. EQUIPMENT AND STREAMS TO BE FUTURE UPGRADE FOR WHITETAIL COMPOSITE.
6. VENDOR PACKAGE.

DWG. NO.			REFERENCE	REF#		
B	RLC	J.D.	ISSUED FOR PREFEASIBILITY STUDY	14	07	01
A	P.T.	J.D.	ISSUED FOR PREFEASIBILITY STUDY	14	05	31
REV	BY	APPD	DESCRIPTION	YR	MO	DA

APPROVED P. DAHLBERG	DRAWN P. TREMBLAY	14	05	23
DATE 14/05/28	CHECK J. DAVIS	14	05	27
SCALE NONE	DESIGN P. DAHLBERG	14	05	19
PROJ. # 10135	DES.CHK P. DAHLBERG	14	05	19
	CAD FILE:			

ROCHE ENGINEERING
Roche Engineering
9815 S. Monroe St., Suite 502
Sandy, UT 84070
Phone: 801.871.2400
Fax: 801.656.0116
www.roche-engineering.com

Rare Element Resources

BEAR LODGE PROJECT

PRELIMINARY FEASIBILITY STUDY
PUG - CRUSHING AREA
FLOWSHEET

DWG. 10135-PFD-100-001 REV B

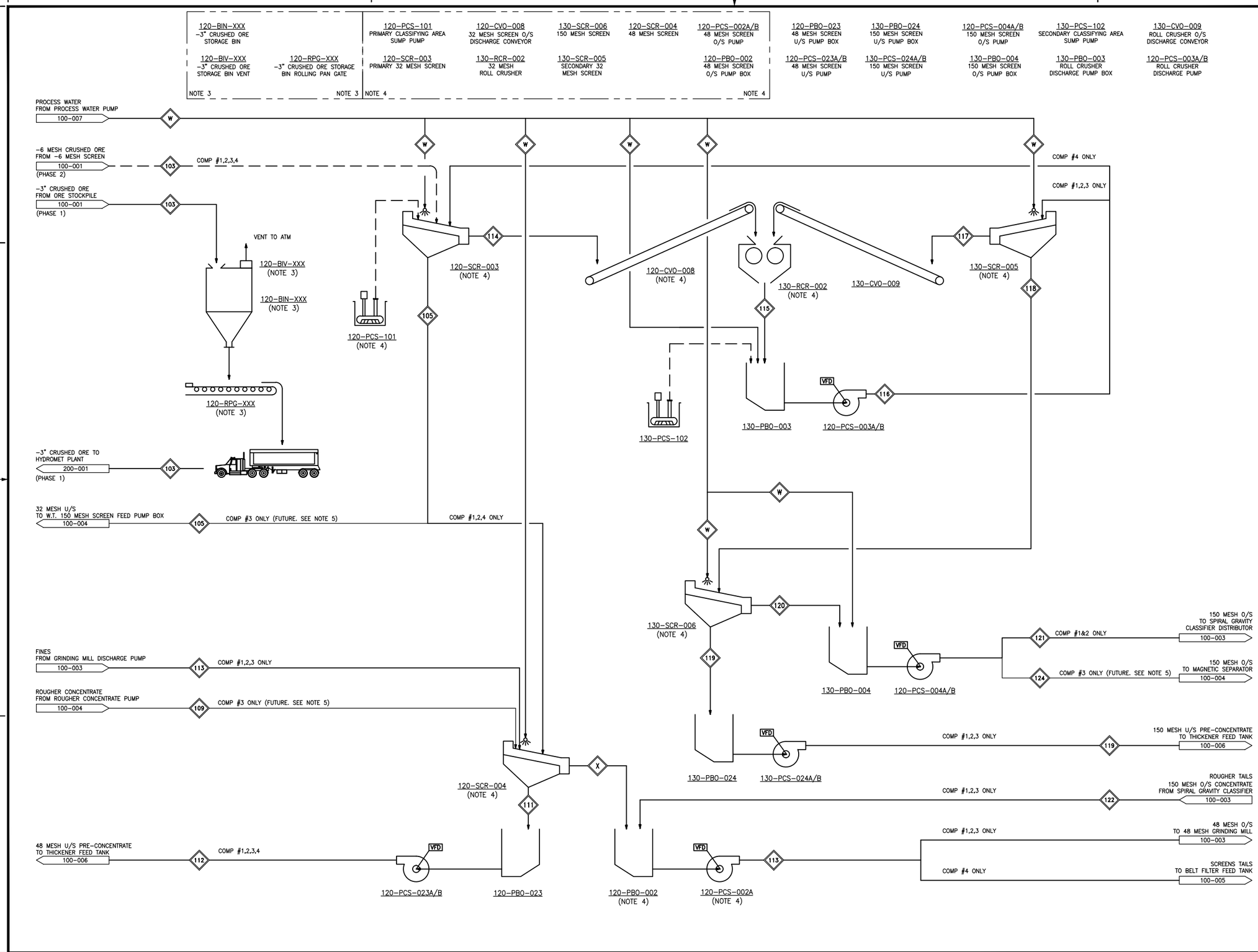

KEYPLAN

GENERAL NOTES

1. ALL EQUIPMENT AND STREAMS ARE TO BE INSTALLED FOR PHASE 2 EXCEPT WHERE REFERRED TO NOTE 2.
2. EQUIPMENT AND STREAMS TO BE INSTALLED FOR PHASE 1.
3. EQUIPMENT TO BE INSTALLED FOR PHASE 1 ONLY. NOT REQUIRED FOR PHASE 2.
4. EQUIPMENT TO BE RELOCATED FROM HYDROMET PLANT FOR PHASE 2.
5. EQUIPMENT AND STREAMS TO BE FUTURE UPGRADE FOR WHITETAIL COMPOSITE.
6. VENDOR PACKAGE.

DWG. NO.	REFERENCE	REF#

REV	BY	APPD	DESCRIPTION	YR	MO	DA
B	RLC	J.D.	ISSUED FOR PREFEASIBILITY STUDY	14	07	01
A	P.T.	J.D.	ISSUED FOR PREFEASIBILITY STUDY	14	05	31

APPROVED P. DAHLBERG	DRAWN P. TREMBLAY	14	05	23
DATE 14/05/28	CHECK J. DAVIS	14	05	27
SCALE NONE	DESIGN P. DAHLBERG	14	05	19
PROJ. # 10135	DES.CHK P. DAHLBERG	14	05	19
	CAD FILE:			

ROCHE ENGINEERING
Roche Engineering
9815 S. Monroe St., Suite 502
Sandy, UT 84070
Phone: 801.871.2400
Fax: 801.656.0116
www.roche-engineering.com

Rare Element Resources

BEAR LODGE PROJECT

PRELIMINARY FEASIBILITY STUDY
PUG - PRIMARY & SECONDARY CLASSIFYING AREA FLOWSHEET

DWG. 10114-PFD-100-002 REV B

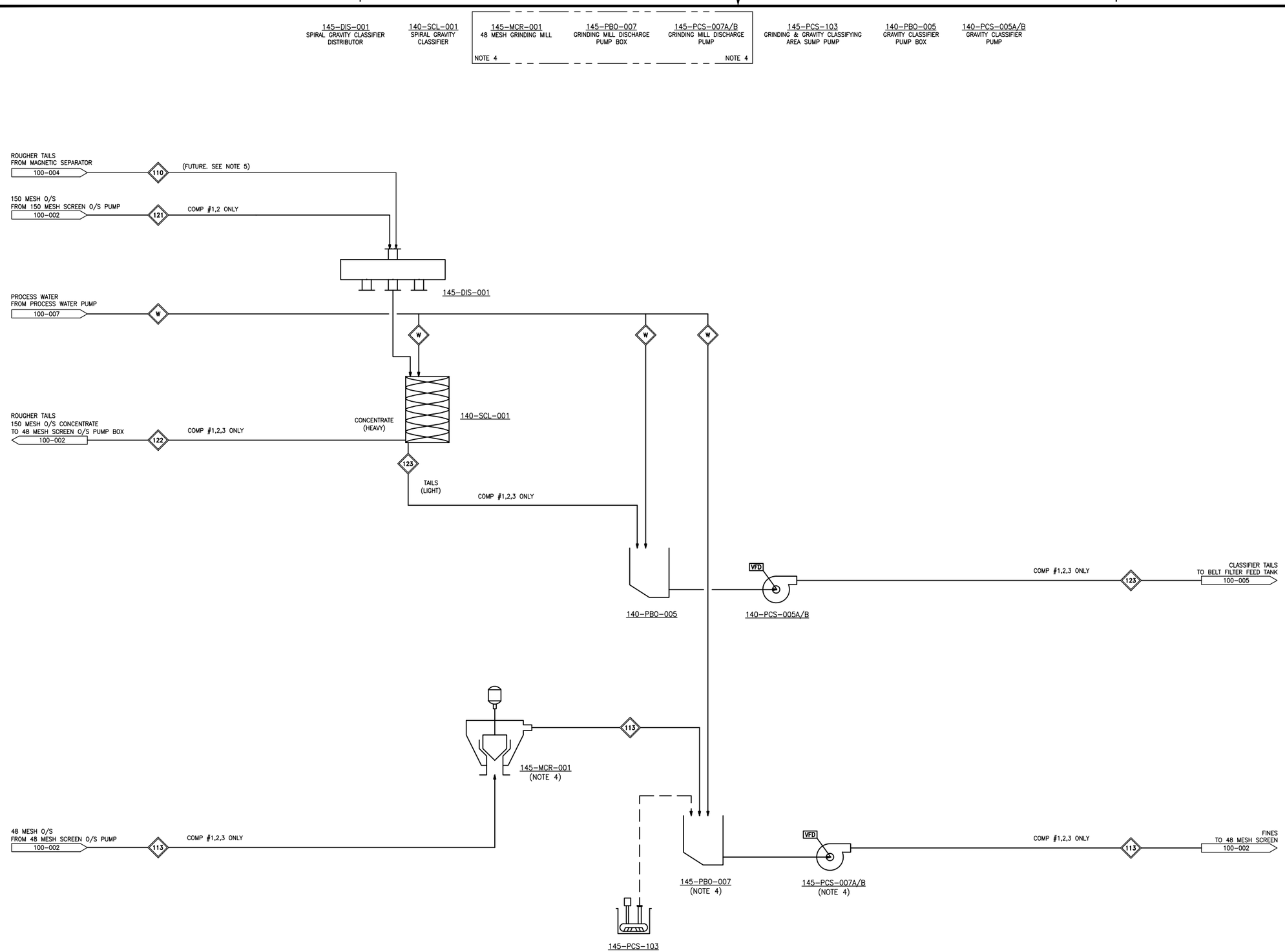

KEYPLAN

GENERAL NOTES

1. ALL EQUIPMENT AND STREAMS ARE TO BE INSTALLED FOR PHASE 2 EXCEPT WHERE REFERRED TO NOTE 2.
2. EQUIPMENT AND STREAMS TO BE INSTALLED FOR PHASE 1.
3. EQUIPMENT TO BE INSTALLED FOR PHASE 1 ONLY. NOT REQUIRED FOR PHASE 2.
4. EQUIPMENT TO BE RELOCATED FROM HYDROMET PLANT FOR PHASE 2.
5. EQUIPMENT AND STREAMS TO BE FUTURE UPGRADE FOR WHITETAIL COMPOSITE.
6. VENDOR PACKAGE.

DWG. NO.	REFERENCE	REF#

REV	BY	APPD	DESCRIPTION	YR	MO	DA
B	RLC	J.D.	ISSUED FOR PREFEASIBILITY STUDY	14	07	01
A	P.T.	J.D.	ISSUED FOR PREFEASIBILITY STUDY	14	05	31

APPROVED	P. DAHLBERG	DRAWN P. TREMBLAY	14	05	23
DATE	14/05/28	CHECK J. DAVIS	14	05	27
SCALE	NONE	DESIGN P. DAHLBERG	14	05	19
PROJ. #	10135	DES.CHK P. DAHLBERG	14	05	19
		CAD FILE:			

ROCHE ENGINEERING
Roche Engineering
9815 S. Monroe St., Suite 502
Sandy, UT 84070
Phone: 801.871.2400
Fax: 801.656.0116
www.roche-engineering.com

Rare Element Resources

BEAR LODGE PROJECT

PRELIMINARY FEASIBILITY STUDY
PUG - GRINDING & GRAVITY CLASSIFYING AREA
FLOWSHEET

DWG. 10135-PFD-100-003 REV B

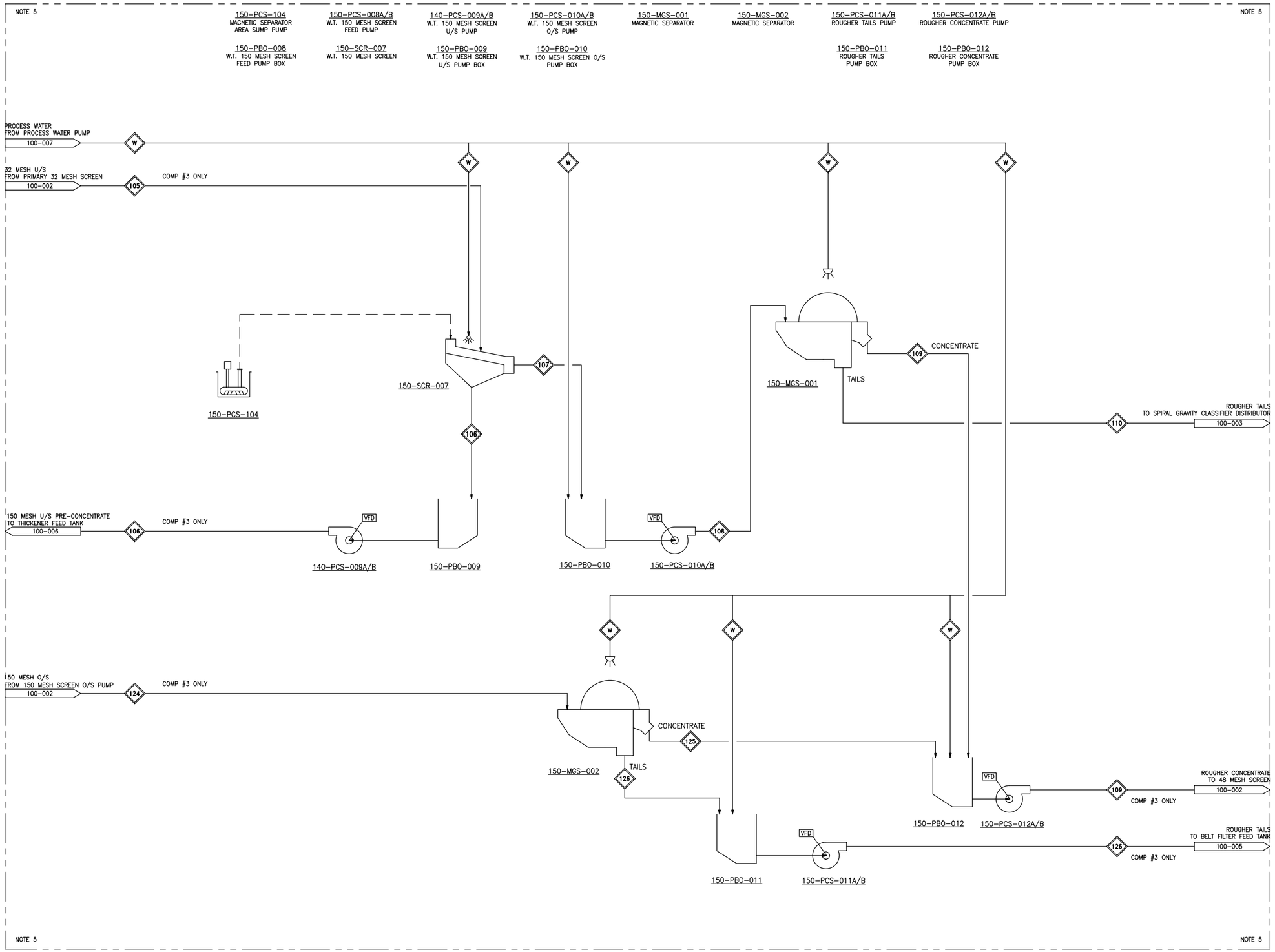

KEYPLAN

GENERAL NOTES

1. ALL EQUIPMENT AND STREAMS ARE TO BE INSTALLED FOR PHASE 2 EXCEPT WHERE REFERRED TO NOTE 2.
2. EQUIPMENT AND STREAMS TO BE INSTALLED FOR PHASE 1.
3. EQUIPMENT TO BE INSTALLED FOR PHASE 1 ONLY. NOT REQUIRED FOR PHASE 2.
4. EQUIPMENT TO BE RELOCATED FROM HYDROMET PLANT FOR PHASE 2.
5. EQUIPMENT AND STREAMS TO BE FUTURE UPGRADE FOR WHITETAIL COMPOSITE.
6. VENDOR PACKAGE.

DWG. NO.	REFERENCE	REF#

REV	BY	APPD	DESCRIPTION	YR	MO	DA
B	RLC	J.D.	ISSUED FOR PREFEASIBILITY STUDY	14	07	01
A	P.T.	J.D.	ISSUED FOR PREFEASIBILITY STUDY	14	05	31

APPROVED	P. DAHLBERG	DRAWN P. TREMBLAY	14 05 23
DATE	14/05/28	CHECK J. DAVIS	14 05 27
SCALE	NONE	DESIGN P. DAHLBERG	14 05 19
PROJ. #	10135	DES.CHK P. DAHLBERG	14 05 19
		CAD FILE:	

ROCHE ENGINEERING
Roche Engineering
9815 S. Monroe St., Suite 502
Sandy, UT 84070
Phone: 801.871.2400
Fax: 801.656.0116
www.roche-engineering.com

Rare Element Resources

BEAR LODGE PROJECT

PRELIMINARY FEASIBILITY STUDY
PUG - MAG SEPARATION WHITETAIL
UPGRADE AREA
FLOWSHEET

DWG. 10135-PFD-100-004 REV B

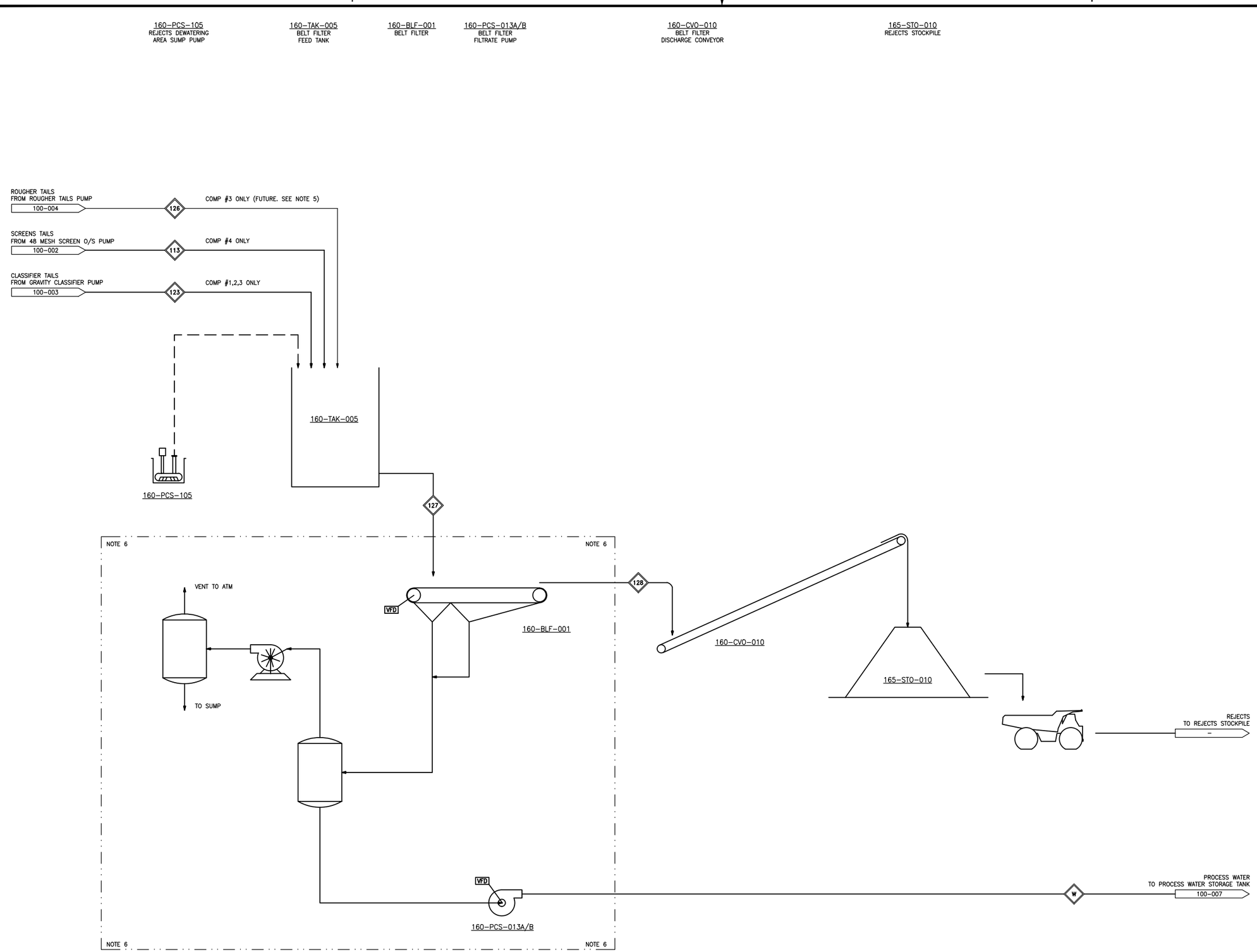

KEYPLAN

GENERAL NOTES

1. ALL EQUIPMENT AND STREAMS ARE TO BE INSTALLED FOR PHASE 2 EXCEPT WHERE REFERRED TO NOTE 2.
2. EQUIPMENT AND STREAMS TO BE INSTALLED FOR PHASE 1.
3. EQUIPMENT TO BE INSTALLED FOR PHASE 1 ONLY. NOT REQUIRED FOR PHASE 2.
4. EQUIPMENT TO BE RELOCATED FROM HYDROMET PLANT FOR PHASE 2.
5. EQUIPMENT AND STREAMS TO BE FUTURE UPGRADE FOR WHITETAIL COMPOSITE.
6. VENDOR PACKAGE.

DWG. NO.	REFERENCE	REF#

REV	BY	APPD	DESCRIPTION	YR	MO	DA
B	RLC	J.D.	ISSUED FOR PREFEASIBILITY STUDY	14	07	01
A	P.T.	J.D.	ISSUED FOR PREFEASIBILITY STUDY	14	05	31

APPROVED P. DAHLBERG	DRAWN P. TREMBLAY	14	05	23
DATE 14/05/28	CHECK J. DAVIS	14	05	27
SCALE NONE	DESIGN P. DAHLBERG	14	05	19
PROJ. # 10135	DES.CHK. P. DAHLBERG	14	05	19
	CAD FILE			

ROCHE ENGINEERING
Roche Engineering
9815 S. Monroe St., Suite 502
Sandy, UT 84070
Phone: 801.871.2400
Fax: 801.656.0116
www.roche-engineering.com

Rare Element Resources

BEAR LODGE PROJECT

PRELIMINARY FEASIBILITY STUDY
PUG - TAILINGS DEWATERING AREA FLOWSHEET

DWG. 10135-PFD-100-005 REV B

170-TAK-001 THICKENER FEED TANK	170-THK-001 THICKENER	170-PCS-014A/B THICKENER U/F PUMP	170-PCS-015A/B PRESS-FILTER FEED PUMP	170-PCS-017A/B PRESS-FILTER FILTRATE PUMP	170-TAK-005 PRESS-FILTER WASH WATER TANK	170-TAK-002 THICKENER O/F TANK	170-ILF-001A/B THICKENER O/F INLINE FILTER	170-HPP-001 PRESS-FILTER HYDRAULIC POWER UNIT	170-CVO-015 PRESS-FILTER DISCHARGE CONVEYOR	175-BIN-003 PRE-CONCENTRATE STORAGE BIN
170-PCS-106 PRE-CONCENTRATE DEWATERING AREA SUMP PUMP	170-RAM-001 THICKENER RAKE MECHANISM	170-TAK-003 PRESS-FILTER SURGE TANK	170-AGI-001 PRESS-FILTER SURGE TANK AGITATOR	170-TAK-004 PRESS-FILTER FILTRATE RECEIVER	170-PCS-022A/B PRESS-FILTER WASH WATER PUMP	170-PCS-016A/B THICKENER O/F PUMP	170-FPR-001 PRESS-FILTER	170-CHU-001 PRESS-FILTER DISCHARGE CHUTE	175-RPG-002 PRE-CONCENTRATE STORAGE BIN ROLLING PAN GATE	175-BIV-003 PRE-CONCENTRATE STORAGE BIN VENT

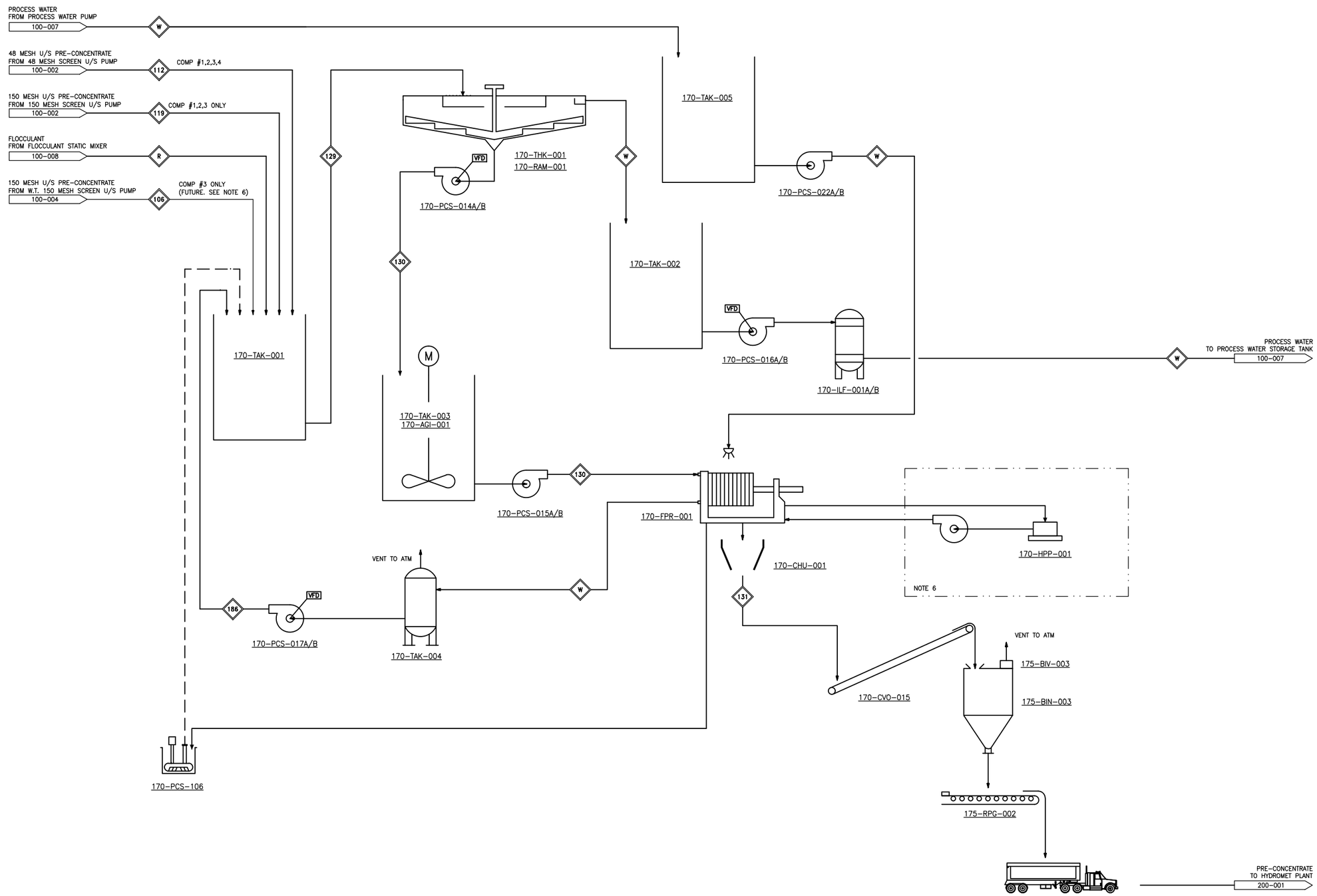

KEYPLAN

GENERAL NOTES

1. ALL EQUIPMENT AND STREAMS ARE TO BE INSTALLED FOR PHASE 2 EXCEPT WHERE REFERRED TO NOTE 2.
2. EQUIPMENT AND STREAMS TO BE INSTALLED FOR PHASE 1.
3. EQUIPMENT TO BE INSTALLED FOR PHASE 1 ONLY. NOT REQUIRED FOR PHASE 2.
4. EQUIPMENT TO BE RELOCATED FROM HYDROMET PLANT FOR PHASE 2.
5. EQUIPMENT AND STREAMS TO BE FUTURE UPGRADE FOR WHITETAIL COMPOSITE.
6. VENDOR PACKAGE.

DWG. NO.	REFERENCE	REF#

REV	BY	APPD	DESCRIPTION	YR	MO	DA
B	RLC	J.D.	ISSUED FOR PREFEASIBILITY STUDY	14	07	01
A	P.T.	J.D.	ISSUED FOR PREFEASIBILITY STUDY	14	05	31

APPROVED P. DAHLBERG	DRAWN P. TREMBLAY	14	05	23
DATE 14/05/28	CHECK J. DAVIS	14	05	27
SCALE NONE	DESIGN P. DAHLBERG	14	05	19
PROJ. # 10135	DES.CHK P. DAHLBERG	14	05	19
	CAD FILE:			

Roche Engineering
9815 S. Monroe St., Suite 502
Sandy, UT 84070
Phone: 801.871.2400
Fax: 801.656.0116
www.roche-engineering.com

Rare Element Resources

BEAR LODGE PROJECT

PRELIMINARY FEASIBILITY STUDY
PUG - PRE-CONCENTRATE DEWATERING AREA FLOWSHEET

DWG. 10135-PFD-100-006 REV B

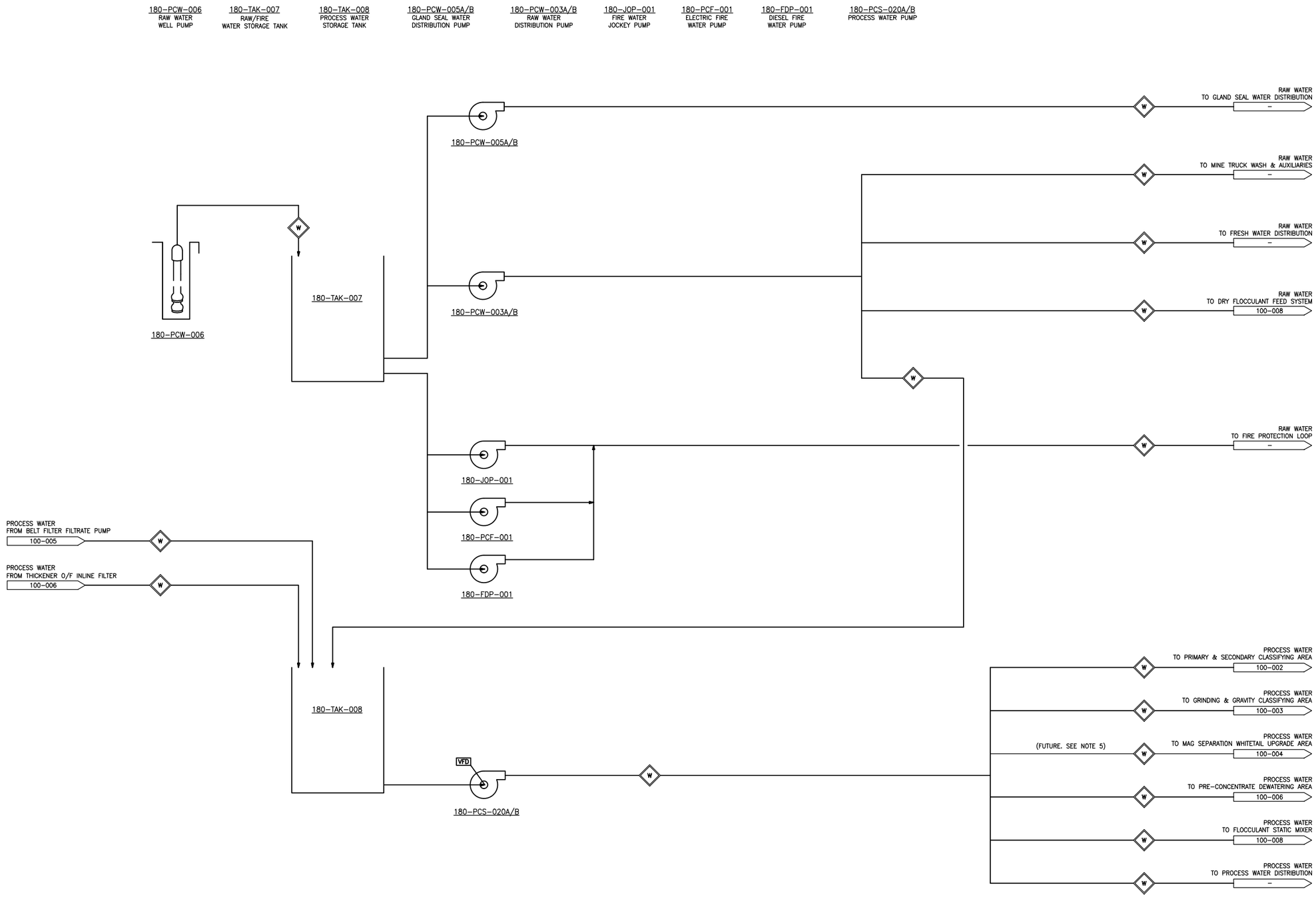

KEYPLAN

GENERAL NOTES

1. ALL EQUIPMENT AND STREAMS ARE TO BE INSTALLED FOR PHASE 2 EXCEPT WHERE REFERRED TO NOTE 2.
2. EQUIPMENT AND STREAMS TO BE INSTALLED FOR PHASE 1.
3. EQUIPMENT TO BE INSTALLED FOR PHASE 1 ONLY. NOT REQUIRED FOR PHASE 2.
4. EQUIPMENT TO BE RELOCATED FROM HYDROMET PLANT FOR PHASE 2.
5. EQUIPMENT AND STREAMS TO BE FUTURE UPGRADE FOR WHITETAIL COMPOSITE.
6. VENDOR PACKAGE.

DWG. NO.	REFERENCE	REF#

REV	BY	APPD	DESCRIPTION	YR	MO	DA
B	RLC	J.D.	ISSUED FOR PREFEASIBILITY STUDY	14	07	01
A	P.T.	J.D.	ISSUED FOR PREFEASIBILITY STUDY	14	05	31

APPROVED	P. DAHLBERG	DRAWN P. TREMBLAY	14	05 23
DATE	14/05/28	CHECK J. DAVIS	14	05 27
SCALE	NONE	DESIGN P. DAHLBERG	14	05 19
PROJ. #	10135	DES.CHK P. DAHLBERG	14	05 19
		CAD FILE:		

ROCHE ENGINEERING
Roche Engineering
9815 S. Monroe St., Suite 502
Sandy, UT 84070
Phone: 801.871.2400
Fax: 801.656.0116
www.roche-engineering.com

Rare Element Resources

BEAR LODGE PROJECT

PRELIMINARY FEASIBILITY STUDY
PUG - RAW & PROCESS WATER AREA FLOWSHEET

DWG. 10135-PFD-100-007 REV B

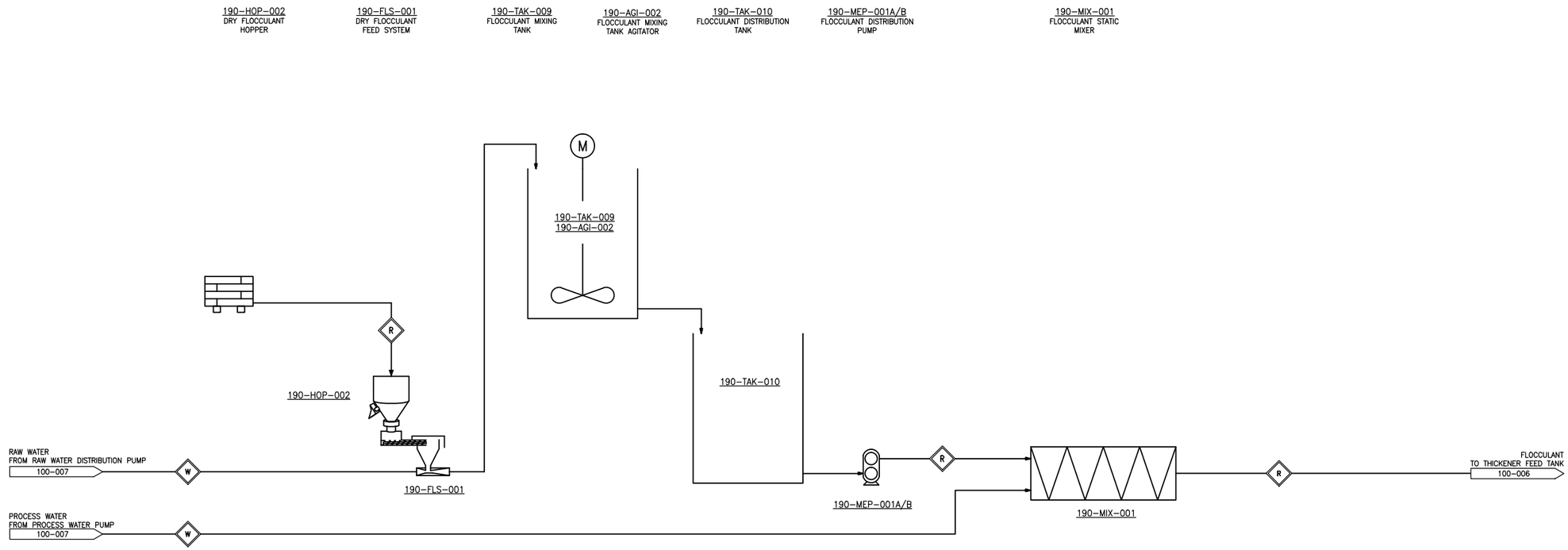

FLOCCULANT

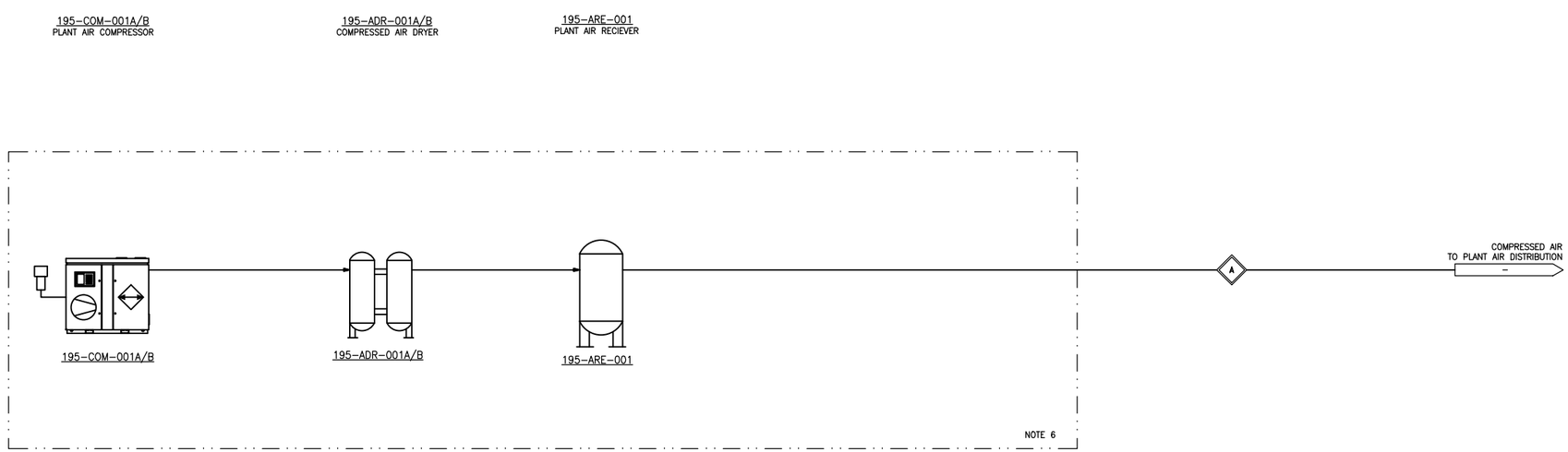

AIR SUPPLY

KEYPLAN

GENERAL NOTES

1. ALL EQUIPMENT AND STREAMS ARE TO BE INSTALLED FOR PHASE 2 EXCEPT WHERE REFERRED TO NOTE 2.
2. EQUIPMENT AND STREAMS TO BE INSTALLED FOR PHASE 1.
3. EQUIPMENT TO BE INSTALLED FOR PHASE 1 ONLY. NOT REQUIRED FOR PHASE 2.
4. EQUIPMENT TO BE RELOCATED FROM HYDROMET PLANT FOR PHASE 2.
5. EQUIPMENT AND STREAMS TO BE FUTURE UPGRADE FOR WHITETAIL COMPOSITE.
6. VENDOR PACKAGE.

DWG. NO.	REFERENCE	REF#

REV	BY	APPD	DESCRIPTION	YR	MO	DA
B	RLC	J.D.	ISSUED FOR PREFEASIBILITY STUDY	14	07	01
A	P.T.	J.D.	ISSUED FOR PREFEASIBILITY STUDY	14	05	31

APPROVED	P. DAHLBERG	DRAWN P. TREMBLAY	14	05	23
DATE	14/05/28	CHECK J. DAVIS	14	05	27
SCALE	NONE	DESIGN P. DAHLBERG	14	05	19
PROJ. #	10135	DES.CHK P. DAHLBERG	14	05	19
		CAD FILE:			

ROCHE ENGINEERING

Roche Engineering
9815 S. Monroe St., Suite 502
Sandy, UT 84070
Phone: 801.871.2400
Fax: 801.656.0116

www.roche-engineering.com

Rare Element Resources

BEAR LODGE PROJECT

PRELIMINARY FEASIBILITY STUDY
PUG - UTILITIES AREA
FLOWSHEET

DWG. 10135-PFD-100-008 REV B