ORIGINAL

# UNITED STATES OF AMERICA

# NUCLEAR REGULATORY COMMISSION

**Title:** BRIEFING ON PROPOSED REACTOR OVERSIGHT PROCESS IMPROVEMENTS AND ENFORCEMENT PUBLIC MEETING

**Location:** Rockville, Maryland

**Date:** Friday, March 26, 1999

**Pages:** 1 - 169


**ANN RILEY & ASSOCIATES, LTD.**
1025 Connecticut Avenue, NW, Suite 1014
Washington, D.C. 20036
(202) 842-0034

DISCLAIMER

This is an unofficial transcript of a meeting of the United States Nuclear Regulatory Commission held on March 26, 1999, in the Commission's office at One White Flint North, Rockville, Maryland. The meeting was open to public attendance and observation. This transcript has not been reviewed, corrected or edited, and it may contain inaccuracies.

The transcript is intended solely for general informational purposes. As provided by 10 CFR 9.103, it is not part of the formal or informal record of decision of the matters discussed. Expressions of opinion in this transcript do not necessarily reflect final determination or beliefs. No pleading or other paper may be filed with the Commission in any proceeding as the result of, or addressed to, any statement or argument contained herein, except as the Commission may authorize.

1 UNITED STATES OF AMERICA
2 NUCLEAR REGULATORY COMMISSION
3 ***
4 OFFICE OF THE SECRETARY
5 ***
6 BRIEFING ON PROPOSED REACTOR
7 OVERSIGHT PROCESS IMPROVEMENTS
8 AND ENFORCEMENT
9 ***
10 PUBLIC MEETING
11 One White Flint North
12 Room 1F-16
13 11555 Rockville Pike
14 Rockville, Maryland
15 Friday, March 26, 1999
16
17 The Commission met, pursuant to notice, at 9:07
18 a.m., the Honorable SHIRLEY A. JACKSON, Chairman of the
19 Commission, presiding.
20 COMMISSIONERS PRESENT:
21 SHIRLEY A. JACKSON, Chairperson
22 EDWARD MCGAFFIGAN, JR., Commissioner
23 JEFFREY S. MERRIFIELD, Commissioner
24 GRETA J. DICUS, Commissioner
25 NILS T. DIAZ, Commissioner

1 STAFF AND PRESENTERS SEATED AT THE COMMISSION TABLE:
2 STEPHEN BURNS, DEPUTY GENERAL COUNSEL
3 KENNETH HART, TECHNICAL COORDINATOR
4 RALPH BEEDLE, NEI
5 STEVE FLOYD, NEI
6 BOB BISHOP, GENERAL COUNSEL, NEI
7 DAVID LOCHBAUM, UCS
8 FRANK MIRAGLIA, NRC STAFF
9 SAMUEL COLLINS, NRC STAFF
10
11
12
13
14
15
16
17
18
19
20
21
22
23
24
25

1 P R O C E E D I N G S

2 [9:07 a.m.]

3 CHAIRMAN JACKSON: Good morning. The Commission
4 is very pleased to welcome members of the NRC staff and
5 representatives of the Nuclear Energy Institute and the
6 Union of Concern Scientists here today.

7 In this meeting, the NRC staff will discuss
8 progress in developing a revised power reactor oversight
9 program that has taken place since our January 20 meeting on
10 this topic.

11 As many of you know, the changes we will discuss
12 today are intended to resolve a number of weaknesses in the
13 NRC reactor inspection assessment and enforcement processes.
14 These weaknesses were identified by a number of sources,
15 including the NRC Commission and staff, the nuclear power
16 industry public interest groups, and the Congress.

17 As early as 1996, opportunities to improve the NRC
18 senior management meeting process were identified, which
19 prompted us to enlist the aid of Arthur Andersen &
20 Associates for assistance in developing recommendations for
21 a more scrutable and objective process.

22 Incremental improvements marked the intervening
23 period, with the development and use of plant information
24 matrices, improved inspection report preparation guidance,
25 and Commission direction to develop an integrated reactor

1 assessment program.

2 Throughout, my colleagues and I have actively
3 encouraged the staff to risk-inform the reactor inspection
4 assessment and enforcement processes. To that end, I
5 provided my thoughts on the subject to NRC senior managers
6 at a senior management meeting in July of last year and at
7 that time, we discussed elements of an assessment process
8 that might be based on the cornerstones of safety and a
9 risk-informed baseline inspection program.

10 Since that time, the staff has built on these
11 concepts admirably, I think, and with a lot of seminal input
12 from the nuclear industry and also the public and
13 governmental sources to create a fundamentally different
14 oversight program from that which currently is in place.

15 The staff recently forwarded to the Commission
16 SECY 99-007A, recommendations for reactor oversight process
17 improvements. Is there going to be a B? This paper
18 augments the information in the predecessor paper, 99-007,
19 and provides greater detail, as the Commission had asked, on
20 proposed enforcement program changes and assessment
21 methodologies, addresses public and Commission comments on
22 the original proposal, and reports on the results of
23 benchmarking that has taken place for the inspection finding
24 assessment process.

25 This represents the results, all of this, of a

1 synergistic approach. It includes input, as I've said
2 repeatedly, from our power reactor licensees, industry
3 advocacy groups, public interest groups, individual states,
4 and last, but certainly not least, the NRC staff, including
5 an in-depth and substantive involvement from all the
6 regions.
7 And the staff now requests that the Commission
8 approve the concepts and scope of the changes presented.
9 This meeting is intended to facilitate Commission
10 deliberation on this request and we're encouraged by
11 feedback from our stakeholders indicating that the program
12 appears to meet the goals the staff detailed in the paper
13 before us today.
14 Specifically, the new program is intended, first,
15 to ensure that plants to continue to operate safely; second,
16 enhance public confidence in our regulatory oversight;
17 third, improve efficiency and effectiveness; and, fourth,
18 reduce unnecessary regulatory burden.
19 We look forward to the presentations. I believe
20 that the Commission will benefit from a thorough discussion
21 of at least three topics in our meeting today; one, what
22 degree of assessment burden should we assign to our capable
23 inspectors; second, how enforcement should be integrated
24 with the assessment process; and, third, how do we ensure
25 that we do not minimize inappropriately the significance of

1 inspection findings.

2 I understand that copies of the viewgraphs and
3 SECY 99-007A are available at the entrances to the meeting.
4 We are now ready to hear from our eight closest friends and
5 we've all made a treaty, the Commissioners, that we will do
6 our level best not to ask any questions until you have gone
7 through your presentation. If we make it, it will be
8 unprecedented, but I believe we are going to work at that.

9 Now, on the other hand, Mr. Beedle, when you
10 arrive, we may ask questions from the beginning.

11 COMMISSIONER MERRIFIELD: Madam Chairman, if I may
12 --

13 CHAIRMAN JACKSON: See? No, no, no, no, no.

14 COMMISSIONER MERRIFIELD: I think a measure of
15 success of this meeting would be our not using up the
16 entirety of the three and a half hours allotted to it.

17 CHAIRMAN JACKSON: We will see.

18 COMMISSIONER MERRIFIELD: Summary and quick
19 comments of the staff would also probably be appreciated.

20 CHAIRMAN JACKSON: I see. So this is direction to
21 the staff. Begin.

22 MR. MIRAGLIA: Good morning, Madam Chairman,
23 Commissioners. I intend to be brief. The staff is here
24 today to discuss recommendations in the improvements of the
25 reactor oversight process. As indicated, this briefing

1 follows the activities and status since the meeting of the
2 Commission in January.
3 Since that last meeting, we've been working with
4 our stakeholders in public fora to develop a mutually
5 acceptable reactor oversight process.
6 In the context, I think we want to pay particular
7 note to the efforts of the regional office to support this
8 activity. It's been significant and invaluable, as well.
9 One point that I would like to stress is that as
10 always, the performance assessment process does not change
11 the agency's ability to act on any significant safety issue
12 that arises. We don't have to wait for the outcome of the
13 licensee performance assessment process.
14 As indicated, the staff is seeking the
15 Commission's approval regarding the scope and the concepts.
16 With me today, on my left, is Sam Collins, the Director of
17 the Office of Nuclear Reactor Regulation; Frank Gillespie,
18 Deputy Director, Division of Inspection Program Management,
19 NRR; William Dean, Chief of the Inspection Program Branch,
20 NRR; Morris Branch, Reactor Operations Engineer, NRR.
21 To my right, Jim Wiggins, Deputy Regional
22 Administrator, Region I; Jim Lieberman, Director, Office of
23 Enforcement; and, Alan Madison, Transition Task Force
24 Leader, NRR. With that, I will turn to Frank Gillespie, who
25 will open the staff's presentation.

1 MR. GILLESPIE: Good morning, Chairman Jackson,
2 Commissioners. The staff is here, as you said, today to
3 complete the discussion of the development efforts started
4 in our January briefing of the Commission and to mark an
5 important transition to the implementation phase of this
6 program.
7 In SECY 99-007, this documents the change and
8 serves as the basis, as you said, for today's briefing. We
9 believe that the topics listed to be discussed will address
10 the open questions from the last meeting and provide more
11 detail than the presenters.
12 In addition, we'd like to acknowledge up front
13 that we did get a large number of comments and many of the
14 comments will be dealt with in implementing documentation in
15 the detailed comments. So that when you see that the
16 comments are not necessarily dealt with in this paper, we
17 basically have a catalogue of comments which we're going to
18 need to deal with as we're writing the specific inspection
19 manual chapters and the implementing documentation
20 themselves. So these comments have been saved.
21 As part of the transition process, the staff is
22 requesting, as the paper said, approval to proceed to full
23 implementation in January of 2000. As we proceed into the
24 next months, there is a significant investment in writing
25 procedural documents, training a broad cross-section of the

1 staff, industry commitments to training their staffs,
2 developing processes and infrastructure for delivering
3 performance indicator information and digesting and
4 displaying information for the public.
5 Commission comment and approval, we feel,
6 therefore, at this point, is extremely important at this
7 time in order to continue on this very aggressive schedule.
8 While Bill Dean will cover the transition task
9 force organization and address any questions on staffing the
10 current effort, let me address the establishment of what we
11 call the executive forum, which consists of the deputy
12 regional administrators and is the reason Jim Wiggins from
13 Region I has joined us at the table.
14 Jim is serving as the chairman of the forum, which
15 was intended to give critical, very critical review, advice
16 and comment on focused areas of principal concern to the
17 regions as we move forward into this phase of
18 implementation. I would note that on the forum, there are
19 no NRR members. This really is intended to be the regional
20 critical review of what we're doing and we felt this was
21 extremely important for that independent look at what we're
22 doing.
23 Their effort is just starting and Jim can address
24 those questions later at his point in the presentation, and
25 any suggestions on the role that you would see this type of

1 executive forum serving that you might have.

2 With that, I'm not going to duplicate future

3 discussion. I'm going to turn it directly over to Bill

4 Dean, so we can get into the substance.

5 MR. DEAN: Good morning, Chairman, Commissioners.

6 If I could have the next slide, please. This slide

7 indicates the members of the transition task force. I

8 myself am the task manager; Alan Madison, at the other end

9 of the table, is the task force leader.

10 This indicates the major segments or programs that

11 are incorporated under the transition task force. All of

12 the members of that task force are here.

13 I would like to point out, in particular, Augie

14 Spector, who is helping us out in the communications area.

15 That is, with the rapid pace at which this program is

16 moving, the vast number of internal and external

17 stakeholders, the communications aspect of this process is

18 extremely important and Augie is providing us great support

19 in this area, as well as the other members of the task

20 force.

21 The next slide, please. This slide describes

22 basically the major transition milestones. You'll note the

23 first two items there, the original Commission presentation

24 in January and the public comment period in February have

25 been completed and we're at the point now with 99-07 Alpha

1 and this Commission briefing, at the point that we're
2 seeking Commission approval for proceeding with full
3 implementation.
4 This outlines the fairly substantial milestones
5 that remain, leading toward full implementation beginning in
6 January of 2000 and completion of the project review 2001.
7 So this is still a long way to go, but we're making good
8 progress.
9 Next slide, please. What I would like to spend a
10 few minutes talking about right now is, as Frank alluded to,
11 our approach in dealing with the public comments. Following
12 the Commission briefing and the issuance of SECY 99-007, we
13 issued a Federal Register notice that included a
14 questionnaire to help focus the public on areas that we are
15 looking for comments on. As you know, that paper was fairly
16 massive, and so we felt that the questionnaire would help
17 achieve comments in particular areas.
18 We received comments from 28 respondents. Most of
19 these respondents were industry respondents, but we did
20 receive several comments from public advocacy groups, like
21 UCS and Public Citizen, as well as two state regulatory
22 agencies from Pennsylvania and Illinois, and one public
23 citizen.
24 As Frank noted, a lot of these comments dealt with
25 implementation and developmental work, and so a lot of these

1 comments will be addressed as we develop the process, and
2 we've established a database to collect the comments and to
3 track basically our resolution of these comments. But a
4 number of them will not get resolved until we finish
5 development of a lot of the implementation guidance, as well
6 as going through the pilot program.
7 Next slide, please. Basically, the high level
8 comments can be grouped into four areas. The first is that
9 there is not adequate time or opportunity for the NRC to
10 seek or much less incorporate comments it received on
11 changes to the process. Secondly, that there were still
12 major developmental efforts to be accomplished that would
13 not receive public scrutiny; in particular, enforcement
14 policy and the significance determination process, which are
15 the main elements of 99-07 Alpha.
16 Third, that the feasibility of the process needed
17 to be demonstrated, especially for those plants that had
18 numerous problems with low significance that did not
19 necessarily trip a PI threshold. There was concern
20 expressed in that area. And, fourth, how would the NRC
21 prevent deterministic methods and, thus, subjectivity from
22 creeping back into the program through inspection findings.
23 I'd like to deal with the first issue or,
24 actually, the first two issues are fairly related, which is
25 about concerns for public comment. We are making every

1 effort to keep the public apprised of our developments
2 through public observations of our frequent meetings with
3 NEI as we develop the processes; making publicly available
4 many of our working documents and conducting public
5 workshops next month, April, and as well as in May, there
6 will be public workshops.
7 We also will be seeking specific public comment on
8 SECY 99-07 Alpha by issuing a Federal Register notice and as
9 Jim Lieberman will discuss during his part of the
10 presentation, a separate Federal Register notice on the
11 enforcement policy itself associated with the pilot program.
12 With respect to the feasibility of the process,
13 the feasibility review that we conducted several weeks ago,
14 that Morris Branch will discuss in just a few minutes, has
15 given the confidence to proceed with the pilot program.
16 Developmental work still remains and we expect to refine the
17 process as we move through the pilot program and gain
18 further experience.
19 But we are comfortable that we are heading down
20 the right track, although at a very rapid pace.
21 Regarding the issue of how do we deal with a plant
22 that has numerous low level issues, we are currently working
23 with the Office of Research to determine if a process to
24 assess the risk significance of a collection of low safety
25 significant issues is feasible. A basic tenet of this

1 program is that as long as a licensee remains within the
2 licensee response band of performance, that we will allow
3 the licensee to resolve issues with a minimal amount of NRC
4 intervention.
5 However, this issue is a concern to many of our
6 external and internal stakeholders, so we are pursuing
7 development of a tool for a process to determine that some
8 risk significance or risk characterization of such a
9 situation is feasible.
10 Finally, with respect to the concern raised about
11 the subjectivity of our inspection process, we are not going
12 to totally remove the subjective element from our oversight
13 program. But what we have done with this process is infuse
14 a greater degree of objectivity through the inclusion of
15 performance indicators, a greater focus on risk significance
16 of our inspection findings, and a more predictable,
17 consistent and scrutable process through our agency action
18 matrix.
19 We also plan, as part of our annual assessment
20 process, to provide not only assessment of licensee
21 performance, but also the oversight process itself,
22 including the inspection program.
23 Basically, that concludes my remarks this morning
24 and if there are no questions, I would like to introduce
25 Morris Branch, a member of the transition task force, who

1 led the feasibility review effort and development of the
2 significance determination process. And Gareth Perry is
3 going to take my seat for a few minutes. He's a
4 representative from the Division of Systems Safety and
5 Analysis, who was a key member of that transition task
6 force.
7 Thank you.
8 MR. BRANCH: Good morning. I am here today to
9 briefly describe the two tasks that were key elements in the
10 development of the new reactor oversight process. The first
11 task was the development of a process for determining the
12 risk significance of inspection findings and the second task
13 was to conduct the feasibility review of the above process
14 in other elements of the reactor oversight program to
15 determine if they are feasible to pilot in June.
16 Before I begin, I would first like to say that
17 this effort involved a wide variety of agency assets. Our
18 task group included members from Research, NRR, the Office
19 of Enforcement, Federal Training Center, and all four
20 regional offices. Mr. Gareth Perry, of the Division of
21 Systems Safety and Analysis of NRR, along with many others,
22 provided valuable PRA insight for the process development.
23 Mr. Perry is here today to answer any questions you may have
24 in the PRA area.
25 My background is inspection. I was a field

1 inspector for 16 years, resident inspector, senior resident
2 inspector, and since I've been in headquarters, I've led
3 several of the AE design reviews. I bring the end user
4 perspective to this project.
5 I would then like to briefly describe our efforts
6 to date in developing the processes to assign a risk
7 characterization, which we refer to as a significance
8 determination process, the STP, to an inspection finding.
9 This process is needed for the alignment of an inspection
10 finding for a cornerstone so it can be dovetailed with plant
11 performance indicators, PIs, during the plant assessment
12 process.
13 Slide, please. From this slide, you can see that
14 an inspection finding can take several routes. This slide
15 points out the areas where we have essentially completed
16 development of the STP work, as well as areas where
17 additional effort is needed. The slide also demonstrates
18 that the output of all the STP processes will be an input to
19 the plant assessment and, if necessary, enforcement process
20 that Mr. Jim Lieberman will describe later.
21 The to-be-determined on the slides represent areas
22 where more work is needed. For example, we still need to
23 make further progress in the areas of emergency
24 preparedness, radiation safety, safeguards, and shutdown
25 activities. We continue to work with industry

1 representatives in a publicly observed arena to further
2 develop this process.
3 We have made considerably more progress in the
4 development of a process to deal with items that may impact
5 an initiating event or mitigation of system cornerstones
6 associated with power situations, and I would like to
7 describe that process logic now, if there are no questions.
8 Next slide, please. Please note that this process
9 was developed using inputs derived from other agency
10 products, including Reg Guide 1.174; NUREG-5499, which
11 provides the likelihood probability of initiating events;
12 NUREG-4674, which describes the ASP screening rules; and, we
13 use typical equipment and human performance reliability
14 values generally consistent with those obtained from PRA
15 models.
16 Because this process is evolving, also, the
17 likelihood of initiating events currently in the SECY are
18 different from the values used in the feasibility study and
19 when Research provides more refined information as part of
20 their efforts, the values may change again.
21 We're just trying to describe our process and
22 concept here, not the final product.
23 From the diagram, you can see that the first step
24 in the process is to clearly identify the concern. During
25 process development and during the feasibility review, which

1 I will discuss later, it became clear that the inspector's
2 concern in any assumption has to be formulated prior to
3 using the tool. This part of the process is similar to
4 performing an engineering calculation. You first have to
5 state the problem, the assumption you are making, and then
6 you can use the process and expect repeatable results. This
7 is an assumption-driven process.
8 The next step, phase one, involves a screening of
9 issues for risk significance. This screening will be
10 accomplished by field inspectors. We believe that many
11 items will be screened as non-risk-significant in this step
12 and will be passed to the licensees for resolution through
13 their corrective action program.
14 Since we have used the screening criterion similar
15 to that used in the ASP program, we expect some results.
16 For example, during a given year, approximately 1,500 LERs
17 are issued. Of those, 50 to 100 are given a detailed review
18 and approximately ten to 15 are determined to be of risk
19 significance. Our process forces an inspector to make
20 reasonable, but conservative assumptions; therefore,
21 inspectors will most likely pass more items than necessary
22 into the phase two review.
23 That's okay. We would rather have false positives
24 at the inspector level that can be refined later during the
25 phase two process.

1 After the screening and you have determined that
2 an item requires a phase two review, the inspector has to
3 ask what initiating events are impacted by the findings.
4 There may be more than one scenario that has to be reviewed.
5 We have attempted to provide guidance to allow a field
6 inspector to conduct his phase two review. However, until
7 the inspector becomes more familiar with the process, we
8 anticipate additional risk analyst help will be needed.
9 The next step in the phase two review involves
10 determining the frequency of the initiating event and the
11 duration of the degraded condition. You then determine the
12 likelihood of occurrence of initiating event while the
13 degraded condition exists and then consider the availability
14 of mitigation equipment.
15 Mitigation of the risk significance of an issue is
16 based on the equipment available to perform the high level
17 safety functions, reactor heat removal, inventory control,
18 et cetera. The general rule of thumb is that each line of
19 mitigation available represents an order of ten change for
20 the better in delta core damage frequency. After you have
21 finished the phase two review, you will have determined the
22 final worst case significance of an issue.
23 This determination is represented by a color
24 scheme similar to that used in the PI threshold values. We
25 have built into the process a phase three review, if needed.

1 This review will be performed by risk analysts and will
2 allow refinement of the risk characterization of the
3 significance of an issue prior to final actions associated
4 with the plant assessment or enforcement processes.
5 Using this process, industry worked through
6 several examples of issues that we evaluated in the
7 feasibility review and they got similar results. The
8 process appears to be repeatable as long as the assumptions
9 are the same. To ensure consistency between regions and
10 inspectors, we're considering, at least for the pilot, to
11 also perform a sample review of items that go through the
12 phase two review and are determined to be green by the
13 inspector.
14 Are there any questions before I continue with
15 discussion of the feasibility review?
16 CHAIRMAN JACKSON: Keep going.
17 MR. BRANCH: Next slide, please. Section 4 of
18 SECY 99-007 describes the staff's plans to test the
19 workability of the new reactor oversight process in early
20 1999. This test was advertised as a limited review of a few
21 plants using available data to demonstrate the ability to
22 assign a risk characterization to items typically contained
23 in a plant's issue matrix, the PIMs. The staff also plans
24 to conduct and exercise a new plant assessment matrix on the
25 limited data and to reach conclusions related to actions to

1 be taken using the new process.

2 Because of schedule constraints, the feasibility
3 review was performed at a time when many elements of the new
4 reactor oversight process were still under development.
5 That was okay because this review was intended to identify
6 improvement standards to support the pilot and the pilot is
7 intended to identify and correct any additional program
8 problems prior to full implementation in January 2000.

9 Before I describe the process and the results of
10 the review, I would like to discuss some of the limitations
11 associated with this effort.

12 Data review was from a non-risk-informed
13 inspection program and in some cases, the PIMs represented a
14 level of effort more than that in either the old core or the
15 new baseline programs. Only six of the proposed 20 PIs were
16 available and this restricted the team's plant assessment
17 efforts to only the initiating event and mitigation system
18 cornerstones.

19 The team did not have the luxury of looking
20 backwards, reviewing more data in order to determine what
21 additional considerations may have influenced the plant's
22 performance review outcome. However, insights from
23 reasonable personnel were solicited.

24 With that, I would like to discuss the process and
25 the SALP code.

1 Next slide, please. The plants reviewed were D.C.
2 Cook Units 1 and 2 for 1996-97 time period; Millstone's
3 Units 2 and 3 for the '94-'95 time period; St. Lucie 1 and 2
4 for 1997-98 time period; Waterford 3 for 1997-1998 time
5 period.
6 The participants for this one-week feasibility
7 review consisted of several inspectors or first-line
8 supervisors from the four regions, several risk analysts
9 from headquarters, a member from OE, and a member from the
10 training center. The first day we spent training and
11 providing an overview of the new process to the team.
12 We broke into two groups during the second and
13 third day and processed as many PIMs entries as we could
14 through the risk characterization process. We could only
15 effectively review about 20 to 30 issues per group in the
16 two days allotted. However, we did process items that we
17 suspected to be of risk significance. That was hardware
18 items from LERs that challenge the risk assessment tool.
19 The fourth day, we assigned the limited PI data to
20 a cornerstone and colored some of the assessment inputs. On
21 the last day, we simulated a plant assessment based on the
22 data available and provided reasonable recommendations based
23 on the action matrix. The regional representatives provided
24 insight as to what actions were actually taken at the time
25 and attempted to explain the differences between what we

1 would recommend with the new process versus what was done
2 under the old.
3 Next slide, please. The results of the new
4 process was determined feasible to pilot. The exercise did
5 challenge the risk characterization process and many
6 feedback items were incorporated, but more work is needed.
7 The review determined that most of the risk important items
8 were design or hardware related and this insight was passed
9 to the task group developing the inspection procedures.
10 Based on the limited data reviewed, actions
11 proposed by the new process were similar to those actions
12 actually taken, with the exception of a few plants, but even
13 then the actions taken by the region were well explained
14 when put in the context of previous year's performance,
15 which affects how the action matrix is utilized.
16 While it is clear that inspector training is
17 needed and there would be more involvement of risk analysts
18 in executing the process, the review team came away from
19 this effort with a good appreciation of the process and its
20 capabilities.
21 Are there any questions?
22 CHAIRMAN JACKSON: I think what we may need to do,
23 so that we don't lose the thread, is to pause and see if
24 there are a few questions, because I believe the next stage
25 is talking about enforcement.

1 MR. BRANCH: Enforcement, yes, ma'am.

2 CHAIRMAN JACKSON: Is that correct? So let me
3 just ask a few questions and then we'll just go in order
4 down the line. That way, we can try to keep it fairly
5 disciplined.

6 You talked about the need for more risk analysts.
7 Is that to say that the intent would be to increase the
8 number and then have it go back down again as the inspectors
9 become more comfortable with going through? I mean, how, in
10 fact, would this work?

11 MR. COLLINS: Madam Chairman, I think the
12 statement that Morris indicated as a result of the
13 feasibility studies would tell us that SRA involvement is
14 necessary to supplement.

15 CHAIRMAN JACKSON: On a continuing basis.

16 MR. COLLINS: On a continuing basis.

17 CHAIRMAN JACKSON: As a supplement.

18 MR. COLLINS: To supplement those decisions and
19 processes that are now focused towards the resident and the
20 senior staff. This is somewhat in response to your first
21 concern, an assessment of the burden on our inspectors as a
22 result of the process, particularly the assessment process
23 itself.

24 We have talked internally and we're trying to be
25 very circumspect about where this program is driving our

1 overall resources, but we are actively discussing the need
2 for not only more involvement by SRAs, which might redefine
3 what their current tasks are and focus in more towards
4 ongoing processes rather than right now they're focused,
5 more or less, towards the results of our traditional
6 process, but also for the next class of SRAs, which is
7 typically a two-year training cycle.
8 It's time to think about that not only in support
9 of this program, but in support of overall agency succession
10 planning.
11 CHAIRMAN JACKSON: Have you dealt with the issue
12 of regional managers, particularly at the branch chief
13 level, finding themselves having to manage some plants under
14 the old process and some under the new, at least in the
15 pilot phase?
16 MR. COLLINS: Yes. This topic was brought to our
17 attention, quite appropriately, by Region III this week,
18 when myself, Bill Dean and other members of the team rolled
19 out some aspects of these processes.
20 There were branch chiefs there from DRP and other
21 members of the Region III staff. I thought we had a very
22 good meeting and it was very interactive.
23 One of the issues that was brought forth was the
24 balance between branch chiefs, which typically now are
25 assigned two to three, sometimes four, depending on plant

1 performance, individual plants. We took that issue away.
2 One of the areas that we are exploring, however,
3 is the need to supplement regional staffing, particularly in
4 the interim, but perhaps for longer periods, with an
5 individual who would serve as an oversight process
6 coordinator, who would essentially look at the process in a
7 wide view and who would support the individuals who are
8 actually implementing the process as far as feedback,
9 refinement, and, also, to some extent, to look at the
10 processes to be sure that they're being applied equitably,
11 consistently amongst all plants, and those coordinators
12 would communicate to be sure that that's being done on an
13 overall national basis.
14 So it is an issue that's only one sensitivity that
15 we have as far as being able to provide for some relief, but
16 we committed to Jim Dyer yesterday to take that issue away.
17 There were two solutions which were proposed. I
18 think we have to work through those. One was grouping the
19 pilot plants under one branch chief. Initial discussions
20 determined that might not be the right thing to do for a lot
21 of reasons. So obviously we have to provide for some
22 additional support.
23 CHAIRMAN JACKSON: Is our public outreach
24 effective in engaging the public living around the plants?
25 MR. COLLINS: Now, you're referring to currently,

1 as we receive comments, or in the future with our
2 communications plan, or both?
3 CHAIRMAN JACKSON: Right, all of the above.
4 MR. COLLINS: All right. Let me ask the staff to
5 address the comments and perhaps for the communications
6 people to address it.
7 MR. MADISON: Actually, I'd like to address that.
8 We haven't, to date, gone out to each of the pilot plants,
9 but it is, in our thinking, jointly with NEI, to attempt to
10 reach the public surrounding each pilot facility and offer
11 ourselves for questions and answers.
12 MR. COLLINS: I think to some extent, Chairman, as
13 far as we've gone with the rollout of the process and the
14 communication with our stakeholders, at the regulatory
15 information conference, of course, we had a very detailed
16 breakout session.
17 There were members of the public on limited
18 accessibility, certainly, since the meeting was held in
19 downtown Washington, but probably on a little higher level,
20 we're sensitive to the transition issues which were brought
21 to us as a result of terminating the SALP with the state
22 partners.
23 We did provide for a fairly detailed discussion
24 for the states in that forum and a number of the states did
25 attend the regulatory information conference, and Paul

1 Lohaus has coordinated that for us. That's only one aspect
2 of the wider spectrum of the public.
3 CHAIRMAN JACKSON: If you go to your significance
4 determination process, and you talked about assumptions, I
5 guess the question becomes how many individual judgments and
6 assumptions are involved in the process.
7 MR. BRANCH: The assumptions have to be clearly
8 stated. It depends on the issue. One of the examples we
9 put in the Commission paper was dealing with an MOV that may
10 have hardened grease. Your assumption, in order to run it
11 through the process and actually use the risk assessment
12 tool, you have to say what that means; that that means the
13 valve is inoperable and, therefore, the train of equipment
14 is not available to do its function, and then that's the
15 assumptions you would have to make.
16 CHAIRMAN JACKSON: So you basically have to make a
17 binary judgment in terms of applying the risk methodology,
18 because, in fact, I mean, I know people are talking about it
19 in terms of so-called dynamic PRAs, but people are not
20 really dealing with degraded performance; something works,
21 but it's degraded. They think you have to make an
22 assumption that it's either going to perform its intended
23 function or it doesn't. Is that correct?
24 MR. BRANCH: Yes. It's just like 91-18, the
25 generic letter, allows a licensee to declare the equipment

1 operable, but degraded, but then that degraded condition
2 goes into a corrective action program for correction.
3 CHAIRMAN JACKSON: Well, it has a slightly
4 different meaning when you're talking about doing an
5 analysis in risk space in terms of decision trees.
6 MR. GILLESPIE: And we have designed the process,
7 and I'm going to reiterate what Morris said, to allow false
8 positives to come through and, hopefully, in making that
9 binary decision, there is a conservatism built into the
10 initial phase one questioning.
11 It does lead, in much of the procedures manual,
12 the inspector through; if this train is out, is another
13 train of the same system -- is another system performing the
14 same function. So it has a process in it that leads the
15 inspector's thought process through it. So it's not ad hoc.
16 The other thing is, and this is going to be, I
17 think, a significant improvement, Research, in the shorter
18 term, is going to be supplying us with -- we had asked for
19 system and they said they were going to try to give us
20 plant-specific table one and table two, if you look at that
21 enclosure, so that the inspector won't have to try to
22 interpolate, at a boiling water reactor, how it relates to a
23 steam generator tube rupture.
24 The first process was using some generic insights
25 with a mixture of initiating and mitigating effects from the

1 two different designs and Research is supporting us so that
2 the inspector at a particular facility will be able to see
3 his facility in those tables, and that's going to take a lot
4 of --
5 CHAIRMAN JACKSON: So the tables are generic or
6 they are plant-specific?
7 MR. GILLESPIE: These tables are generic in the
8 test process, but our intention is now to go to
9 plant-specific tables for the individual inspectors, again,
10 to bring more consistency for the individual plant decisions
11 to bear.
12 MR. PERRY: Maybe I can add to that. I think
13 those tables are intended to remain as they are. What Frank
14 is referring to is that we would like to have tables that
15 will help the licensees determine -- or the NRC staff to
16 determine which column of the table two that they're in.
17 So that those tables will tell you which systems
18 you have available to respond to different mitigating
19 systems for the different reactor types.
20 CHAIRMAN JACKSON: We're also interested in this
21 issue of guidance on assumptions. You could have hardened
22 grease with an MOV. The question is, is the default
23 assumption that it's inoperable or is the default assumption
24 that it is operable. And if you're going to be able to have
25 consistency in approach plant-to-plant or region-to-region,

1 you're going to have to deal with issues like that. You
2 agree?
3 MR. PERRY: Yes.
4 MR. GILLESPIE: Yes.
5 MR. BRANCH: Yes.
6 MR. PERRY: I think one of the important things
7 about the way the system has been set up, though, is that it
8 begs for a clear definition of those assumptions.
9 Therefore, it opens up a pathway for discussion, basically.
10 So it will be very clear what people are assuming and I'm
11 not sure that -- I mean, it may be that -- it's true that in
12 one plant, this does lead to an inoperability, and in
13 another plant, maybe --
14 CHAIRMAN JACKSON: All I'm trying to say is that
15 there needs to be something that bounds that discussion.
16 MR. PERRY: That's right.
17 CHAIRMAN JACKSON: Because it can't be all over
18 the map.
19 MR. PERRY: No, no.
20 CHAIRMAN JACKSON: Otherwise, how you go about
21 doing a risk determination is affected very strongly by that
22 kind of thing.
23 MR. PERRY: Yes.
24 CHAIRMAN JACKSON: And let me ask you this
25 question. How are you going to deal with

1 non-hardware-related issues? Like corrective action program
2 deficiencies or sleeping operators in the control room or
3 programmatic breakdowns. How does that play in here?
4 MR. MADISON: The process, as it stands, does not
5 address programmatic issues. We are working with, as was
6 mentioned earlier, Research in looking at the -- these
7 generally fall into the lower level or lower risk
8 significant types.
9 CHAIRMAN JACKSON: But what about the operator
10 sleeping in the control room?
11 MR. MADISON: That would actually fall outside the
12 process. I think Jim could probably address that question
13 better.
14 CHAIRMAN JACKSON: All right. Well, you can
15 address it when your turn comes, so we won't get out of
16 sequence here.
17 Also, I was looking at the particular feasibility
18 review plants and if you look at those plants, especially
19 for D.C. Cook and Waterford, a fair number of the findings
20 that were assessed actually couldn't be screened with your
21 risk model.
22 So how are you going to -- how are you proposing
23 to treat those?
24 MR. BRANCH: There are still holes that we have to
25 work on. Some of the issues we're dealing with, shutdown

1 risk, we currently do not have a screening tool for that
2 yet. We're working on that. We've put in place, though, I
3 think as you read through the SECY, that the inspectors are
4 going to have to call risk analysts or talk to someone else
5 to get that insight right now, until we can develop that.
6 Fire issues were -- several of the issues were
7 fire issues. We're working currently to develop a process
8 in the fire area, where they will feed into this process.
9 Once they determine the likelihood of events and the
10 equipment that you can use to mitigate, then it fees right
11 into this process, and we're going to change the tables here
12 somewhat to allow it to dovetail right into this process.
13 CHAIRMAN JACKSON: So going back to -- you
14 mentioned shutdown risk. If a plant is in a state of forced
15 shutdown, it seems that you revert back to the manual
16 chapter 0350 process. Is that right?
17 MR. BRANCH: I was referring mostly to just
18 shutdown activities during refuelings.
19 CHAIRMAN JACKSON: But let me pursue this line.
20 You're basically saying that because you don't have the
21 performance indicators, you can't use this process. You
22 don't believe that the inspection findings --
23 MR. BRANCH: No, no.
24 MR. MADISON: No, no, no. What Morris is saying
25 is that the tool that he has developed, at its current

1 design, does not directly address shutdown issues. It
2 doesn't properly characterize the risk significance of
3 shutdown issues.
4 What we're working with others and NRR and
5 Research to develop is a front-end device that would help
6 properly characterize the risk significance of the shutdown
7 issues that feed into this process and decide what aspects
8 of the process are applicable during shutdown.
9 There were some draft concepts in the radiation
10 protection emergency preparedness and the safeguards area
11 attached. We have similar concepts in fire protection,
12 shutdown risk. They weren't as well along as the ones that
13 we attached to it, so we didn't put it with the paper.
14 MR. GILLESPIE: I will say, also, this afternoon,
15 there is a tabletop exercise of feasibility study for the
16 emergency planning process, participating with all the
17 regions, and it's going on. Tom Essig, from our Emergency
18 Planning Group, is heading that this afternoon. So we do
19 have an ongoing process that is actually stepping forward.
20 And in the next week, I think it's scheduled for
21 April 8, there is a similar tabletop for the refinement of
22 the radiation protection process. Then we'll work forward
23 for safeguards and shutdown, also.
24 It's just that they can't use this tool, but a
25 similar parallel tool which is specific to the topic area is

1 going to be necessary.

2 MR. COLLINS: Chairman, not to lose, I believe,
3 the statement you made, which is also important, there are
4 other policy decisions and programs which need to be
5 consistent and commensurate with this process as it is
6 proposed.

7 One of those is the agency's approach to plants
8 that are on extended shutdowns. As you appropriately
9 referenced, we currently use the 0350, manual chapter 0350
10 process as guidance on how to interact with our
11 stakeholders, particularly licensees, in regards to
12 long-term shutdown.

13 That policy, the senior management meeting
14 concept, the Commission meeting that now typically follows
15 the senior management meeting concept, all of those would
16 have to be and are being looked at to be consistent with our
17 ongoing process.

18 As you know, we have a SECY paper, 99-86, which
19 very recently was provided to the Commission that touches on
20 some of those areas.

21 CHAIRMAN JACKSON: Commissioner Dicus.

22 COMMISSIONER DICUS: The paper does not describe
23 how positive inspection findings have been factored into the
24 process, which leads me to believe that positive inspection
25 findings will not be part of the process. Is that true?

1 MR. MIRAGLIA: That is true.

2 COMMISSIONER DICUS: Only negative findings and
3 then the risk characterization of them.

4 MR. MIRAGLIA: That's true.

5 COMMISSIONER DICUS: And I had a similar question
6 to the Chairman's on where we were with emergency
7 preparedness in radiation safety, et cetera, but I think
8 you've addressed that with the process that you have
9 ongoing.

10 My question really concerned whether or not you
11 will be far enough along that these things can be included
12 in the training sessions in April.

13 MR. MADISON: That is our goal, is to get those to
14 at least where we can train, in draft form. They may not
15 actually be signed off, but we'll train on those processes.
16 We'll decide if they're ready go to.

17 COMMISSIONER DICUS: Then finally, I understand
18 that the inspection report will document the phase one
19 screening and the phase two risk characterization, but have
20 you determined what the standard inspection report will look
21 like or is this to come later?

22 MR. MADISON: We're still working in that
23 direction.

24 COMMISSIONER DICUS: Thank you. That's it.

25 CHAIRMAN JACKSON: Thank you. Commissioner Diaz.

1 COMMISSIONER DIAZ: First, let me make a statement
2 of a simple kind that I think I need to do. It's kind of a
3 my pet theory that the probability of successful closure of
4 any process of endeavor is inversely proportional to the
5 numbers of degrees of freedom in the process. The more
6 things you deal with, the more problems you have.
7 But that's okay, everybody knows that. But the
8 problem is there is a second part to that, which is that the
9 additional degrees of freedom that have less importance
10 proliferate and add to the N factorial much more faster than
11 the larger issues. So you can actually start going down a
12 path and keep going.
13 And the reason that I bring that up is because in
14 the paper, and it refers to the significance determination
15 process on slide eight, there is a statement that we're now
16 going to look at the sign-in assistant to analyze the risk
17 significance of numerous small problems of low safety
18 significance, which, in the aggregate, could be significant.
19 This is what I call adding degrees of freedom to a
20 process that is still looking at the major components and
21 trying to determine how they interact, and then looking at
22 something that really is very difficult to look at. It's
23 undetermined. It might not add, in the front end, to the
24 process.
25 And there's two ways that people normally deal

1 with small issues and one is very easy. People take them
2 and score them. So they'll be higher. Then they put
3 whatever signs --
4 CHAIRMAN JACKSON: If it's less than one, it
5 becomes smaller.
6 COMMISSIONER DIAZ: Yes, but then you can put
7 whatever sign you want on it. But since they're always
8 positive, they're always above the line.
9 However, Mother Nature has something that I really
10 want to the staff to understand, which is when you take
11 noise or small things in any kind of signal analysis data
12 and so forth and you cross-correlate it with itself, the
13 noise drops out, and the reason is that they have different
14 signs and positive things, tend to compensate negative
15 things.
16 And if we look at the negative things and start to
17 aggregate them without really putting them in the context of
18 all the things, we can always get an aggregate that keeps
19 increasing and, of course, you can always start looking at
20 lower and lower and lower levels.
21 So I would caution, when we look at the things,
22 that it would be balanced and that at the front end of the
23 process, we do not emphasize the very small safety
24 significant things, because we really don't know how to deal
25 with them. They will complicate the process and they will

1 eventually lead to a stalemate in how do you deal with those
2 things.
3 MR. COLLINS: I'm going to take some liberty,
4 Commissioner Diaz, and assume there is a question in there.
5 COMMISSIONER DIAZ: Good. It was hidden.
6 MR. COLLINS: The staff acknowledges and agrees
7 with your intent. Right now, what we are trying to
8 understand is would we lose any valuable information by not
9 considering, in the aggregate, these types of issues.
10 Examples would be corrective action programs that
11 licensees implement are trending information. Licensees
12 have the ability, and it's a very sophisticated system, some
13 more than others, to link low level items to get most likely
14 to programmatic issues rather than safety significant
15 issues. And we want to ensure that, as an agency, before we
16 raise the threshold for consideration of these types of
17 issues, that we don't lose value information.
18 This gets a little bit into a statement that was
19 made earlier about how do you handle the subjectivity in the
20 process. There is a general feeling amongst the staff and,
21 anecdotally, I think, at least some industry agrees,
22 although they would agree that it's their role to do it,
23 with the preponderance of evidence or the gut feeling, if
24 you will, based on information that doesn't tie neatly
25 together, but you can draw lines through that have a

1 tendency to support the performance of overall programs and
2 should that reach us to an auction or to a mandated
3 threshold by which we go and periodically review the status
4 of a program, even though the indicators wouldn't lead you
5 in that direction.
6 That's still under assessment. These lower level
7 issues could potentially be an input to that decision-making
8 process.
9 COMMISSIONER DIAZ: You do understand that by
10 following many, many, many, many, many small things, you
11 could do precisely what you do not want to do, which is to
12 focus on the big, big, big, big, things. You could start
13 more, more, more, more time doing that, with less, less,
14 less returns.
15 CHAIRMAN JACKSON: It's a question of the balance
16 and where you place the weight.
17 MR. COLLINS: Yes.
18 CHAIRMAN JACKSON: Commissioner McGaffigan.
19 COMMISSIONER McGAFFIGAN: I'm afraid I'm going to
20 take a little bit more time. I asked a lot of the questions
21 of the staff privately. I'd first give an impression.
22 I have some real misgivings, not about the pilot, the
23 industry is willing to have the pilot, but about this thing
24 being ready by January 2000 for implementation and I think
25 somebody said at the outset the goal was to get our sign-off

1 on that and, in theory, and I'm very far from that.
2 But let me give you some questions that will tell
3 you why. On the positive, since we've been talking about
4 positive inspection findings, I'm looking at the last paper
5 and I'm surprised that Mr. Gillespie's answer because the
6 attachment to the last paper, the 99-007, in response to the
7 direction that the Commission had given I previous SRMs,
8 that the staff should continue to include positive findings
9 in inspection reports, you said, yes, we are, positive
10 inspection findings will remain in the inspection reports.
11 I guess maybe we didn't ask the right question,
12 which is you don't intend to use them in the assessment
13 process, is that right?
14 MR. GILLESPIE: That's true. Right now, in the
15 assessment process, there is no folding in of positive
16 findings. There is no risk measure on how much safer a
17 certain finding gets a plant to fold it in.
18 COMMISSIONER McGAFFIGAN: I think there is a huge
19 hole here that is still not filled. You've given us this
20 process for taking an individual inspection finding and
21 coming up with a core damage frequency number or some sort
22 of judgment of risk, but you are not telling us how you take
23 the sum of inspection findings, the sum of performance
24 indicators, and assign a color to and properly balance them
25 all and assign a color to a cornerstone, unless a single

1 inspection finding that's yellow or white puts them in the
2 cornerstone into white.
3 In which case, in the process, you get a random
4 event where you get a white inspection finding, you're
5 otherwise a pretty darn good plant and you're suddenly white
6 or yellow in the cornerstone. I'm just trying to understand
7 that.
8 MR. GILLESPIE: And if that happens, going by a
9 threshold is a step from turning us to being into more
10 diagnostic and more included and engaging more. So if there
11 is a clear understanding why a threshold is broken, then we
12 have a decision point at that point.
13 It's not -- things do happen and we recognize
14 that, and so these are thresholds where we go from -- into
15 -- I would say into a diagnostic mode. We depart from our
16 baseline and get more involved and want to understand what
17 the problem is.
18 Once you get the specifics of the problem and
19 understand it, then you have a decision on further action.
20 So someone going past a threshold, an individual
21 threshold, may not, in fact, be a long-term major issue.
22 COMMISSIONER McGAFFIGAN: But I think it's a
23 disadvantage for the client. If it's a random event and
24 somebody happens to -- and it's a bad event, you guys
25 calculate delta CDF and it's five-times-ten-to-the-minus-six

1 or something, and you guys, whatever the threshold is and
2 it's way above it, you say, my gosh, this is a bad event.
3 But it's because a piece of equipment randomly
4 failed or whatever. I don't know what it is.
5 CHAIRMAN JACKSON: Excuse me. I think the real
6 question one has to understand is whether a threshold is
7 tripped by virtue of a given failure of a piece of
8 equipment, propagating into a certain core damage frequency
9 region.
10 I think the real issue is how do you relate the
11 given inspection finding to whether or not a plant crosses a
12 threshold vis-à-vis a cornerstone.
13 MR. MADISON: Frank, maybe I can address some of
14 that. First of all, in the significance determination
15 process, the object of the process is to fully characterize
16 the finding, including all mitigation capability, which may
17 be an operator with a procedure in hand, and the positive
18 findings that you may have in that process.
19 Also, the assessment process does not take any one
20 issue and color cornerstone or the overall process. There
21 is no intent to color the cornerstones any color and if you
22 look in -- when you look in the action matrix, you saw that
23 there were no colors for cornerstones or colors for
24 strategic performance areas.
25 The colors were associated with inputs, either

1 performance indicator or inspection inputs, and the actions
2 that we would take out of that matrix would be in response
3 to those.
4 COMMISSIONER McGAFFIGAN: I misunderstood at the
5 time. I didn't think it was a single input. I thought it
6 was a composite input that you were -- but I'll just --
7 rather than belabor it, I'll -- another thing that I am very
8 worried about, and I guess we'll hear from Mr. Lochbaum
9 later, the pencil-whipping, the significance process -- you
10 know, maybe it's good enough to pilot, but I am quite
11 concerned that it's becoming darn close to risk-based.
12 Also, there is pencil-whipping that goes on in
13 both directions. I have been the -- I won't go through the
14 case, but I have seen it where headquarters staff looking at
15 what was done in region, and basically said that that --
16 something that was allegedly risk significant really wasn't
17 and that the assumptions -- I mean, it's these assumptions
18 that were used that were extraordinary in order to drive up
19 and make an inspection finding.
20 I know you're going to work on that, but it's -- I
21 have my doubts that this is going to be a straightforward
22 process. Then you've got the other hole the Chairman
23 mentioned earlier, which is how do you deal with all the
24 programmatic issues, which were dismissed quickly as, well,
25 maybe a lot of them are non-risk-significant, maybe, except

1 for the sleeping operators.

2 I fear that, for better or for worse, we may be
3 abandoning all sorts of rules that are on the books that --
4 you know, some sort of delta CDF calculations that are
5 insignificant, in which case we should have a massive
6 rule-making pretty darn quick to get rid of all that stuff,
7 or I don't know what.

8 But I have grave misgivings about a lot of this,
9 now that I see the flesh being put on the bones, and I'll
10 just leave it at that.

11 MR. MIRAGLIA: May I make a comment, Commissioner,
12 with regard to that? I think it's clear from the staff's
13 paper and the briefing today that there's still lots of work
14 to be done. We do not have all of the answers. The staff
15 is here to say that we know enough to pilot it, and the
16 pilot is going to inform us as we go along.

17 I think we have to make sure that we are not
18 losing useful information in terms of some of the low
19 significance things that we talked about and we really have
20 to understand the process. I think the pilots are going to
21 inform the process.

22 The idea of the significance matrix and process is to give
23 scrutability and an understanding. Is there mutual
24 understanding on both sides of the table that a threshold
25 has been crossed? Is that objective inscrutable and

1 reproducible, that there is agreement that a threshold has
2 been crossed? And then the degree of engagement will
3 change, depending on which threshold it is and then that has
4 a focused kind of discussion then on what those issues and
5 what the significance is.
6 I think it's to add a discipline to meet the
7 Commission's objectives of having this process to be
8 objective, scrutable and reproducible.
9 Are there still lots of questions? I think the
10 staff would definitely agree with you, there is still lots
11 of work to be done. I think we'll learn a lot by the pilots
12 in terms of where we can go and when this process can be
13 fully implemented.
14 CHAIRMAN JACKSON: I think a question may be more
15 is a six-month pilot, in the end, going to be enough,
16 depending upon the degree of completeness of the answers to
17 various questions.
18 But if the fundamental intent is that the pilot is
19 going to flesh out those answers, then it may be that the
20 six-month and immediately going January of 2000 may not be
21 feasible.
22 So I think that that is the question.
23 COMMISSIONER McGAFFIGAN: I'm just putting
24 everybody on notice that I don't think it is.
25 CHAIRMAN JACKSON: Well, that's fine and the

1 Commission can say that the pilot should go on and with the
2 particular objective of fleshing out a whole series of
3 questions and if it's premature to say it will happen in
4 January of 2000, it's premature to say it will happen in
5 January of 2000.
6 But that's why you do the pilots, in point of
7 fact.
8 MR. COLLINS: I'd like to just acknowledge that I
9 believe, at this point in time, we're working to the
10 Commission's schedule.
11 CHAIRMAN JACKSON: That's right. It's the
12 Commission's schedule.
13 MR. COLLINS: And if the Commission believes that
14 that schedule is inappropriate or the depth and breadth of
15 the --
16 CHAIRMAN JACKSON: Right. And the Commission, as
17 a whole, will make that determination.
18 MR. COLLINS: Yes, ma'am.
19 MR. GILLESPIE: What I'd like to say, later, on
20 the last slide, we're working with the Office of Research,
21 as Bill said, and if it's worthwhile, although it may not be
22 at this time, we are working on this concept of a number of
23 program failures and, in fact, we did a small pilot effort
24 as part of the corrective action program only two weeks ago
25 at Clinton and we had previously done something similar in

1 this vein at Beaver Valley.

2 So we are actively pursuing it and maybe at the

3 end, if there is time and there is still question on that,

4 we can just give a little bit more insight into what we're

5 trying there as a new concept.

6 CHAIRMAN JACKSON: Commissioner Merrifield.

7 COMMISSIONER MERRIFIELD: Thank you, Chairman. An

8 up-front comment. First off, I want to compliment the staff

9 for a lot of hard work. This is an excruciating process to

10 get where we are. Obviously, we've commented, as

11 Commissioner McGaffigan has, that it's a work in progress

12 and I think we recognize that.

13 In terms of timeliness, I think we should adhere

14 to the time line and do the reassessment and perhaps it may

15 or may not be in January, that we need to give you more

16 time. But I think it's important for us to keep the

17 pace going.

18 That goes to my first question. Between November

19 1999 and January of the year 2000, what interaction do you

20 plan with the Commission, the industry and the public to

21 share the lessons learned from the pilots and how will

22 stakeholders be able to weigh in on the changes that you

23 deem are appropriate to the pilots and the recommendations

24 you'll be giving to the Commission?

25 MR. COLLINS: Commissioner Merrifield, we can

1 answer some of that now and perhaps defer a little bit of
2 that to the communications plans.
3 COMMISSIONER MERRIFIELD: That's fine. Given our
4 time limits, briefing us -- that's fine.
5 MR. COLLINS: As well as the Chairman's question
6 on public involvement, I believe we'll elaborate on that at
7 the communications plan time.
8 MR. MADISON: There's a lot of that work that has
9 to happen. We're developing some of the concepts, some of
10 our thinking in this area. But we had originally intended
11 all along to have a meeting in the October-November
12 time-frame with the public to describe our lessons learned
13 at that point from the pilot program. We feel that there's
14 also, following that, a definite need for interaction with
15 the Commission to describe our progress and lessons that
16 we've learned and decide where we go from there.
17 CHAIRMAN JACKSON: May I just make a comment?
18 Fundamentally, it is always a prerogative of the Commission
19 to say when it wants to be engaged and how and give the
20 staff that guidance.
21 COMMISSIONER MERRIFIELD: I recognize that. When
22 I looked at slide five, which showed a number of milestones,
23 none of those indicated any either stakeholder meetings or
24 meetings with the Commission in the time line.
25 MR. MADISON: I think when we get to the

1 communications plan, we'll go over pages and pages of it.
2 COMMISSIONER MERRIFIELD: Let's keep going. You
3 received several comments regarding the issue of manual
4 scrams. Now, in the backup paper, you've indicated that
5 manual scrams should be treated as the same as automatic
6 scrams from a risk perspective and you believe that there is
7 no difference between them.
8 I remain somewhat concerned about the potential of
9 sending the wrong message with respect to conservative
10 decision-making by operators. Having read the paper, I know
11 the position.
12 What I'd like is a brief description of the
13 analysis you have that supports your conclusion.
14 MR. PERRY: Could I ask a clarification of what's
15 the conclusion you want?
16 COMMISSIONER MERRIFIELD: You conclude that there
17 is no difference between manual and automatic scrams from a
18 risk perspective and what I'm attempting to assert is that
19 we may be sending the wrong signal to operators not to worry
20 about -- making them too conservative about using manual
21 scrams when they feel that they're necessary.
22 MR. PERRY: I think we discussed that in Region
23 III yesterday, in fact, because they raised the same issue.
24 We have opposing views, but one of the views is that the
25 necessity to perform a manual scram usually means there is

1 something wrong. The fact that there is something wrong is
2 related to the risk.
3 So I think it's in that sense. The manual scrams
4 here are those that are done in response to conditions that
5 would have led to a scram in any case.
6 MR. COLLINS: Unplanned.
7 MR. PERRY: Unplanned scram, if you will. This
8 doesn't relate to those manual scrams that occur when the
9 plant is being brought down for an outage, where the plant
10 may be scrammed manually.
11 MR. GILLESPIE: Let me suggest, because this --
12 your point was actually a point of much discussion in one of
13 our in-plant meetings. The industry people, plant manager
14 level kind of people really came up and said that there is
15 no way that our operators, as well trained as they are, if
16 they see the plant in trouble, are not going to do it,
17 because of this.
18 And so what I'd suggest is -- I mean, this is not
19 in-depth analysis. This is a judgment. And that was their
20 reaction. You're balancing the insight you're getting from
21 a safety condition which would either cause an automatic
22 scram or you're doing a manual scram just right before the
23 automatic scram is going to come into play anyway and the
24 information that that gives you of the operation of the
25 facility, against a very subjective judgment, is that the

1 operator would fight his entire training not to do it.

2 And I'd say this, Ralph Beedle and Steve Floyd, on

3 the industry side, maybe should address this when it's their

4 turn, also, because it was a point of discussion, exactly

5 your point about is this going the wrong way or sending the

6 wrong message, and this is a balance and it was a judgment.

7 It's not a calculation here.

8 MR. COLLINS: Commissioner Merrifield, let me have

9 a take-away for the staff here, but I want to be sure and I

10 want to be sure that we understand your issue, for our sake.

11 Clearly, it's not the intent for the staff to send

12 any message that manually scramming the plant in a dynamic

13 situation to preclude automatic scram or challenge to safety

14 systems, the safety actuation systems, is the wrong thing to

15 do.

16 What the staff, I believe, needs to provide to the

17 Commission is a basis that we will gain information as a

18 result of this particular indicator that is not available

19 any other way, and, therefore, we're not compromising, by

20 using this as an indicator, our message to the operators.

21 We will endeavor to do that and we will get back

22 with the Commission.

23 COMMISSIONER MERRIFIELD: It raises the question,

24 it obviously has in the regions, about the potential for a

25 mixed message there.

1 MR. COLLINS: Yes, and Region III brought that up
2 yesterday and it's a valid issue.
3 COMMISSIONER MERRIFIELD: Right. Going to slide
4 nine, you indicate that licensee identified issues, and this
5 is sort of a general take-away I get from this slide.
6 When reviewed by NRC inspectors or candidates for the
7 inspection finding risk characterization process, do you
8 have any concerns that will serve as a disincentive for
9 licensees who aggressively identify their own problems or
10 inhibit licensees from disclosing these problems to the NRC?
11 MR. BRANCH: No. What we are trying to do with
12 the characterization process is to come up with an
13 indication of what the issue represents as far as how it
14 would compare to a PI. That's what we're doing here.
15 So when licensees identify issues and write LERs,
16 if there are risk-significant issues, we want to know about
17 them and we want to run through the process and actually use
18 that data for the assessment process.
19 COMMISSIONER MERRIFIELD: My last question for
20 this section is a follow-up to a question that was asked by
21 the Chairman related to the 0350 process. I guess I was
22 somewhat left unclear how the interaction for plants that
23 are in extended outage -- what your planning is -- right
24 now, we're going to a process that would be relatively
25 disciplined as it relates to operating plants.

1 Yet, if we have a plant in an extended outage,
2 we're going to a 0350 process, which is, arguably,
3 relatively undisciplined.
4 So I'm interested in the interaction.
5 CHAIRMAN JACKSON: I would disagree that 0350 is
6 undisciplined. It may not be referenced in the tight way to
7 cornerstones of safety and so on. That's the difficulty,
8 which is why I raised the question, but it has its
9 discipline built into it. It's a very disciplined process.
10 COMMISSIONER MERRIFIELD: All right. Chairman, I
11 misspoke. I would argue -- that's fine. I would argue it
12 has less discipline, perhaps, and one could argue the degree
13 of less discipline.
14 MR. MIRAGLIA: From an overall perspective,
15 Commissioner, I think that the comment that the staff was
16 giving is that the Commission has clearly indicated to the
17 staff to look at our assessment processes and then have an
18 alignment and an integration of those kinds of things.
19 In terms of the plants in extended shutdown, we
20 have lots of work to do and as we have that process better
21 defined, it's going to impact and influence the processes
22 and procedures for 0350.
23 You are going to hear today how we're aligning the
24 enforcement process. So as these tools are developed and we
25 get those thresholds defined and more predictability and

1 discipline in the process, the intent would be to go back
2 and inform those processes, as well.
3 We're just not that far along. We've looked at
4 350 to the extent that deficiencies and concerns have been
5 raised, to try to look at those issues there, and this is
6 going to further inform those kinds of processes in the
7 future.
8 COMMISSIONER MERRIFIELD: So you would foresee
9 greater alignment between the two processes down the road.
10 MR. MIRAGLIA: Absolutely. I just don't think
11 we're there yet.
12 MR. GILLESPIE: If I could, let me see if I could
13 inject what I will call a scale here on risk significant
14 events, because our screening process basically took the
15 precursor screening process and tried to delve into what was
16 the thought process behind it and simplify it, so that the
17 risk analyst wasn't needing an inspector who could use it.
18 But when you look at the -- as Morris said, when
19 you look at the precursor data, our own reports, we're
20 looking at a number of -- the number of greater than like
21 ten-to-the-minus-six, although the precursor program deals
22 in a different calculation. It's an instantaneous risk.
23 But we're only looking at less than ten events a
24 year. So in a scale -- and this, I think, addresses
25 Commissioner McGaffigan's point just a little bit -- there

1 is an expectation and history tells us that about one
2 percent of all the LERs and everything reported will
3 probably result in a broken threshold, including things
4 found by the licensee and put into his own corrective action
5 program.
6 So we should have an expectation that there's at
7 least ten occasions per year when we should be getting more
8 diagnostic and saying what's going on here, just based on
9 our own information and past history.
10 But that's not thousands and so the greater use of
11 the SRA in those events is very doable in a scale sort of
12 sense. It's more the exception than the rule.
13 So I would just like to interject that, because
14 that dealt with a lot of our thinking about if you let twice
15 as many things through the screening process as really
16 should get through, what does that mean? It means 20 items
17 instead of ten, in a whole year, for a whole industry. So
18 that puts in a slightly different perspective, I think.
19 That's part of our thinking in developing the idea
20 of allowing false positives through and trying to come up
21 with a conservative approach, but handleable.
22 COMMISSIONER McGAFFIGAN: Madam Chairman, I was
23 first going to agree with you on the manual chapter 0350
24 process. It isn't clear to me that it's undisciplined. I
25 think what it does --

1 COMMISSIONER MERRIFIELD: But I want to make a
2 clarification. It was not my intent to say undisciplined.
3 I meant to say less disciplined.
4 COMMISSIONER McGAFFIGAN: And just so it's clear
5 to me, it's less disciplined because I think that the heart
6 of many manual chapter 0350 processes are in the hole that
7 the Chairman identified at the outset, which is programmatic
8 deficiencies, which this process doesn't lend itself to,
9 this calculating whether it's ten-to-the-minus-six CDF or
10 not.
11 I also am a little concerned with the answer about
12 there being ten risk significant events a year. I know the
13 industry is good, but if we're down to having sort of an
14 expectation at the outset that we have ten findings a year
15 that we have to worry about, then I think we're also saying
16 unless performance indicators are bad, everybody is going to
17 be in green and we're not going to have much to do.
18 So maybe it's that these programmatic issues are
19 the things that are going to again drive things -- drive us
20 into having to do something, but it's -- I don't know.
21 CHAIRMAN JACKSON: Commissioner Diaz.
22 COMMISSIONER DIAZ: I just wanted to point out
23 that Commissioner McGaffigan has elicited a kind of a
24 question or comment which I think you all are doing it, but
25 maybe the Commission is not hearing well.

1 That is that these processes are not risk-based
2 processes and that's -- and no matter how much PRA you put
3 into them, and hopefully there will be more, there is a
4 technical basis which is fundamental to the PRA or to
5 whatever we do.
6 I mean, do you have one pump functional that was
7 capable of providing the required function? Do you have the
8 amount of water? Regardless of what the PRA results said
9 you could have done, if, during mode five, you had, quote,
10 an event and the temperature in the core went up by two
11 degrees and it went up to the very high temperature of 110
12 degrees, how do you assess that.
13 And the other thing is the regulatory basis. So
14 you have three things that are playing in here and I think,
15 from my viewpoint, what Commissioner McGaffigan's comment
16 has elicited is that in some case, we need to understand a
17 little better how the interplay of the technical basis, the
18 regulatory basis, and the risk-informed processes are
19 convergent to provide us with the right information, and
20 they are not independent of each other.
21 MR. COLLINS: Right. That's a legitimate issue.
22 I think when we get to Jim Lieberman's presentation, perhaps
23 slide 19 has a tendency to integrate where we are with our
24 license requirements as far as compliance with rules and
25 regulations and acknowledging that those issues exist within

1 the industry and they will not be ignored by the agency as
2 opposed to the dispositioning of those issues on the
3 approach commensurate with risk and safety and a process
4 that's defined to ensure that's done consistently.
5 I believe we'll touch upon some of those areas in
6 Jim's presentation and certainly if we don't satisfy the
7 Commission --
8 CHAIRMAN JACKSON: Then we'll now go to Jim's
9 presentation. So we can get to that. Thank you.
10 MR. LIEBERMAN: Good morning, Chairman Jackson and
11 Commissioners. Slide 13. We've developed a new approach to
12 enforcement and integrate in the new overall reactor
13 oversight process.
14 Our plan is to apply it during the pilot process.
15 It should make the enforcement process simpler, clearer,
16 and, most importantly, more risk-informed and
17 performance-based.
18 The approach is described in SECY 99-007A.
19 Following Commission approval of the paper, we plan to
20 submit to the Commission an interim revision to the
21 enforcement policy to address the pilot program for
22 publication in the Federal Register. This is providing
23 notice to the pilot plants and serve as a basis to obtain
24 public comments on the enforcement approach.
25 The current escalated enforcement process has been

1 successful in focusing attention on compliance issues to
2 improve safety. We've used enforcement to provide
3 regulatory messages, to improve performance. Sometimes,
4 however, mixed messages were provided because the staff did
5 not always integrate the SALP and enforcement processes.
6 In reconsidering our enforcement approach, in
7 light of the new assessment process, we wanted to integrate
8 enforcement into the overall reactor oversight process.
9 We've discussed various approaches to achieve this
10 integration in public stakeholders' meetings.
11 If I could have the next slide. As a first step,
12 informally, in the enforcement approach, we considered the
13 purposes of enforcement and assessment. They're similar.
14 Each process evaluates the safety significance of individual
15 compliance issues. Both serve as a basis to formulate
16 agency responses to violations of performance issues. The
17 enforcement process uses sanctions, such as citations and
18 penalties. It also uses processes similar to those
19 described in the action matrix of the assessment process,
20 such as regulatory conferences to discuss declining
21 performance, 50.54(f) letters as a means of information, and
22 orders.
23 Both provide incentives to improve compliance and
24 performance, as you provide a measure of deterrence, since
25 presumably licensees strive to avoid negative performance

1 labels and the associated regulatory attention, similar to
2 licensees today when they try to avoid enforcement
3 sanctions.
4 Finally, both provide the public with NRC's views
5 on the status of performance and compliance.
6 If I could have the next slide. Given the
7 similarity and the purposes of both enforcement and
8 assessment, our goal is not to have two separate processes.
9 Rather, we want an enforcement program that compliments the
10 assessment process, not drives it.
11 The assessment process will be considering
12 compliance issues, as well as findings that might not be
13 violations. Enforcements, on the other hand, only focuses
14 on violations. It should be used in a manner that maintains
15 an emphasis on compliance and serves as a basis to document
16 compliance issues and obtain corrective action.
17 Enforcement also has a focus on safety, consistent
18 with the philosophy of the new assessment process. We want
19 enforcement to be more risk-informed and performance-based.
20 We want to maximize the likelihood that what's considered
21 significant from an assessment view will be considered
22 significant from an enforcement view and vice versa.
23 To achieve this, we should evaluating individual
24 enforcement findings once, using the same process for both
25 assessment and enforcement. As with our other programs, we

1 want to design any new enforcement process in a manner that
2 would not create unnecessary regulatory burdens. We want to
3 simplify the process and make it more predictable, creating
4 a more effective and efficient process.
5 Making the enforcement process more consistent and
6 more predictable should add to public confidence.
7 If I could have the next slide.
8 We've come up with an approach that meets our
9 objectives. Essentially, it provides violations under two
10 groups. The first groups are those violations which would
11 be evaluated under the significance determination process
12 and considered by the HC action matrix. The second group
13 includes three types of violations; first, violations
14 outside the assessment process, such as willful violations
15 and those that impede or may impact the regulatory process;
16 second, violations that involve actual consequences, such as
17 over-exposures and substantial releases of material; and,
18 third, particularly significant violations.
19 If I could have the next slide. As to the first
20 group, we will be building on the interim enforcement policy
21 for severity level four violations. That went in effect
22 March 11. Violations will be considered for either formal
23 or informal enforcement action based on the assessment
24 process.
25 Severity levels are not needed to be used.

1 Violations which are evaluated by the assessment processes
2 inputs to the regulatory response band, white, yellow or
3 red, will be considered for formal enforcement. These
4 violations, being risk or safety significant, would result
5 in notices of violations, requiring formal responses, unless
6 NRC already has the required information on the docket.
7 Violations evaluated by the assessment process as
8 inputs to the licensee response band, green, will be
9 considered for informal enforcement and treated as non-cited
10 violations. These violations are not considered risk or
11 safety significant.
12 We plan to continue exceptions one, two and four
13 of the interim enforcement policy. These three exceptions
14 address failing to restore compliance, failing to place the
15 violation in a corrective action program, and certain
16 willful violations.
17 The third exception, which addresses repetitive
18 level four violations identified by the NRC would no longer
19 be needed, as the issue of repetition is more of an
20 assessment issue and, therefore, should be addressed in the
21 assessment process.
22 To maintain consistency in regulatory messages,
23 the assessment action matrix and not the enforcement process
24 will be utilized to formulate the agency response to root
25 causes and emphasize the need to improve performance for

1 safety significant violations. We would not be using civil
2 penalties for most group one violations.
3 The assessment process will provide for
4 conferences to discuss declining performance and compliance
5 issues. Licensees will have incentives to avoid being
6 labeled white, yellow or red band performance so that
7 further negative impacts and civil penalties normally would
8 not be needed to deter violations covered by the assessment
9 process.
10 A question was raised earlier about programmatic
11 issues relating to problems with corrective action programs
12 and how would that be treated in the process.
13 From an enforcement perspective, in the absence of
14 a risk significance, those items would be considered a
15 non-cited, as they would be treated as green. They'd be
16 included in inspection reports and they'd be placed into the
17 PIM.
18 If the licensee crosses into a white area, such
19 that it now is in the regulated response band, now we go
20 into a more diagnostic mode. That information would be
21 utilized in helping us plan our approach. But if the
22 failures to take corrective action, a repetitive violation,
23 are not in and of themselves risk significant or safety
24 significant, then they would still be considered as
25 non-cited violations.

1 If I could have the next slide. The traditional
2 enforcement process with a potential for civil penalties
3 would be retained for the second group of violations. These
4 are violations where a more deterrent approach may be
5 warranted.
6 We reserve the traditional approach with the four
7 existing severity levels for violations which are not
8 evaluated by the significance determination process, and,
9 therefore, are outside the assessment process for
10 deterrents. These would be violations involving willfulness
11 and discrimination, sleeping operator issue, such as Peach
12 Bottom, would be included there, because that was an
13 integrity issue.
14 Also, violations which impede or impact the
15 process, the NRC process of oversight would also be subject
16 to the current enforcement process. These violations would
17 include violations associated with reporting issues, by
18 completing inaccurate information to the agency, failures to
19 obtain NRC approval such as for 50.59 changes to QA plans,
20 and other issues that impact our ability to oversee
21 licensees.
22 In addition, the traditional enforcement process,
23 given the importance to avoid actual consequences, would be
24 retained for violations involving over-exposures and
25 substantial releases of material, because there the barriers

1 failed.

2 Finally, we reserve the authority of the
3 Commission to utilize traditional enforcement approach with
4 civil penalties for particularly significant violations,
5 such as exceeding safety limits or involving accidental
6 criticality.

7 If I could have the next slide. The approach that
8 I have been discussing is a clear shift from our past
9 approaches to enforcement, which we've been using for almost
10 30 years. It would take regulatory functions which, in the
11 past, have been separate activities and integrate them.
12 Enforcement will compliment assessment as part of the
13 overall reactor oversight process.

14 We will be escalating our regulatory responses
15 based on safety significance. The new approach will retain
16 a compliance focus as we move to a more risk-informed and
17 performance-based regulatory process.

18 The new process should deter violations and result
19 in improved performance as the licensees strive to avoid
20 regulatory costs, such as increased inspection costs and
21 regulatory attention given by compliance and performance
22 issues with safety impacts as evaluated by the assessment
23 process in the action matrix.

24 There will be a reduced need for civil penalties
25 and its associated burdens. An enforcement process that is

1 consistent with the assessment process provides for more
2 consistent and more predictable regulatory responses should
3 further public confidence. Once the assessment process has
4 evaluated the violations, enforcement will be relatively
5 straightforward, making the process more -- easier to
6 implement and thus more efficient than the current process.
7 I'd be happy to answer any questions you might
8 have.
9 CHAIRMAN JACKSON: Let me ask a few questions
10 here. You talk about a two-track approach and you talk
11 about violations involving something with actual
12 consequences.
13 But some of the violations that actual
14 consequences that were identified in the paper seem to have
15 this SDP-like evaluation process. For instance, if you talk
16 about worker radiation protection.
17 And I guess I don't understand why those kinds of
18 processes cannot be folded into an SDP type evaluation.
19 MR. LIEBERMAN: Those types of violations will be
20 evaluated under the SDP process and will be assigned colors
21 for the action matrix. But when a worker is over-exposed or
22 a member of the public is exposed, in our view, that raises
23 to a level of unacceptability that should not happen.
24 Over-exposure is extremely rare at reactors and we
25 want to keep it that way. So that's why we feel that is

1 appropriate to have a civil penalty if that happens.

2 CHAIRMAN JACKSON: Okay. Then you mentioned that

3 the assessment action matrix formulates the NRC response and

4 normally would not use civil penalties. What criteria would

5 you use to determine when to issue civil penalty, as opposed

6 to sending a message that, per se, says you would not

7 normally use civil penalties?

8 MR. LIEBERMAN: I use the term normally, for

9 example, with the radiation protection issue. The only time

10 that we would use civil penalties would be when you're in

11 the second group and some items in the second group also are

12 evaluated by the action matrix; for example, the

13 over-exposures, the releases of material, the particularly

14 significant type violations, exceeding the safety limit.

15 Exceeding the safety limit would be, I presume,

16 red in the action matrix.

17 CHAIRMAN JACKSON: So you're saying that if a

18 violation is covered by the SDP and it goes through that

19 process, it is deemed to be very risk significant, that you

20 would not issue a civil penalty. That's what you're saying.

21 MR. LIEBERMAN: That is correct. The only times

22 would be in these extremely rare situations and in those

23 cases, it would require the specific approval of the

24 Commission. Our intent is most violations -- almost all

25 violations which are evaluated by the action matrix would be

1 treated by that matrix and not -- and we not utilize civil
2 penalties.
3 MR. GILLESPIE: In the matrix piece, because we're
4 marrying enforcement and assessment here and trying to get
5 kind of a seamless flow, the ultimate sanction and the
6 purpose of the assessment matrix was to get the plant into a
7 safe configuration, if you would; to have a safe plant, to
8 get the corrective action done, and it does go through a set
9 of meetings, regional meetings, Commission level meetings,
10 and shutdown orders are in there.
11 So it's those sanctions are still in our tool kit.
12 Those sanctions are very much there. It wasn't clear,
13 philosophically, when Jim and the staff and his staff and
14 our staff were looking at this that the civil penalty
15 actually contributed to the safe configuration of the
16 facility, and that was kind of a philosophy that we knew
17 with it.
18 But a confirmatory action letter, an order, if you
19 have something that's recalcitrant, that's necessary. The
20 focus was getting the licensee to correct the condition and
21 if it was deliberate, that takes you outside the system, and
22 if it's deliberate, you are in civil penalty space.
23 MR. MIRAGLIA: I think it's consistent with the
24 threshold approach and the level of escalation of regulatory
25 involvement, and I think the process we're talking about is

1 aligning those processes and our enforcement tools are
2 broader than just civil penalties.
3 I think Jim actually has a phrase in one of his
4 papers that talks about enforcement being broader than all
5 of those kinds of things, including --
6 MR. LIEBERMAN: Our thought process that led to
7 this approach is that assessment and enforcement are
8 essentially the same thing. They're evaluating the
9 violations, they're evaluating issues, and formulating
10 agency response. The action matrix leading to the shutdown,
11 which is the ultimate action for unacceptable performance,
12 should be a system that provides deterrence, because
13 obviously no one wants to shut down, and the escalating
14 responses should achieve the same actions from licensees
15 that we have civil penalties for and to provide the coherent
16 message, we wanted to have a more seamless approach.
17 There were some violations that one might say are
18 beyond the pail, just grossly unacceptable, and that is
19 releasing material in substantial amounts or over-exposures.
20 CHAIRMAN JACKSON: Let me ask you this question.
21 Could you ever envision enforcement resulting from
22 assessment? Let me explain to you what I mean. You stress
23 a lot putting things into a corrective action program.
24 Suppose that an assessment determines -- if that's what the
25 assessment is going to cover -- that a licensee's corrective

1 action program is woefully inadequate.

2 What's going to happen? Are you going to take an

3 enforcement action? Are you going to inspect them some

4 more? What's going to happen? It's just kind of punting

5 over the fence into corrective action programs, but you

6 describe this significance determination process that

7 doesn't even deal with that. But everything gets punted

8 over the fence into corrective action programs from

9 enforcement and otherwise.

10 So I guess I'm a little confused in terms of what

11 happens then. If you're going to be performance-based as

12 opposed to programmatically driven, then a corrective action

13 program is only as effective as what it achieves.

14 MR. MIRAGLIA: Exactly.

15 CHAIRMAN JACKSON: And what you have not

16 addressed, from what I've heard on both the assessment side

17 and the enforcement side, is how you're going to get at the

18 issue of the effectiveness of a corrective action program.

19 That is what has gotten us into trouble with some

20 famous examples. So the question is, how are you going to

21 get to that.

22 MR. COLLINS: You raise an issue that I think is

23 going to have to be explained in a plain English way for

24 anyone to really be able to fit all the pieces together, in

25 that when we talk enforcement, there is a tendency here,

1 even as we work on this process, to deal in separate
2 programs and not take -- it's a theorem of mathematics that
3 you referenced in one of your presentations, where you try
4 to measure it from inside, you can't measure it outside.
5 CHAIRMAN JACKSON: The measurement sets the item
6 state.
7 MR. COLLINS: Right. Bodim's mathematical theory.
8 CHAIRMAN JACKSON: It's quantum mechanics.
9 MR. COLLINS: Quantum mechanics. Okay. You have
10 to be able to step back and see how all these pieces fit
11 together and what is the hierarchy, which we're building and
12 we haven't done a real effective job of communicating yet,
13 certainly not to the public.
14 There are some building blocks in this process
15 that are tested and handled differently than routine
16 inspection findings. The corrective action program is one,
17 because this process is dependent on an effective corrective
18 action program.
19 The other aspects, where we can't lose sight as
20 the staff that enforcement, in and of itself, is a
21 derivative of inspection and assessment and reporting is in
22 there, also.
23 It's a means to an end after you do the --
24 CHAIRMAN JACKSON: Tell me, just tell me precisely
25 how you're going to handle effectiveness of corrective

1 action programs within the new process.

2 MR. COLLINS: Okay. You want a direct answer.

3 CHAIRMAN JACKSON: That's what I need to

4 understand.

5 MR. COLLINS: Frank.

6 MR. GILLESPIE: Let me go back to specifically our

7 basic assumption in this whole process. And if this is a

8 flawed basic assumption, we don't think it is, but it is our

9 basic assumption.

10 It is that if someone -- if someone is performing

11 in the 20 quantitative indicators and I will call it the

12 seven cornerstone inspection indicator areas, in the green,

13 then there is an expectation that you can't do that if you

14 have a satisfactory corrective action program --

15 unsatisfactory corrective action program.

16 That was an ongoing assumption, that was kind of a

17 basic assumption upon which a lot of this is built; that the

18 thresholds were picked such that, the screening process was

19 picked such that a significant failure of the corrective

20 action program should show up with specific performance and

21 that was a basic premise of the program.

22 Now, because it is such a big cornerstone of the

23 whole program, if you would, cornerstone in a different

24 sense, in the inspection portion, we have what I will call

25 an extraordinary amount of inspection that would come in.

1 It's built into each inspectable area and it's periodically
2 then going to be built in to go in and specifically look at
3 the corrective action program.
4 And now we have some longer-term efforts that we
5 have to do and we have to be able to look at it better.
6 CHAIRMAN JACKSON: So if you have it built in and
7 you have this additional emphasis in inspection on
8 corrective action program efficacy, how does that get rolled
9 into some kind of a performance assessment?
10 MR. GILLESPIE: It's going to get rolled in
11 through the normal process, because we will be looking at
12 the corrective action programs and if the corrective action
13 program -- if the cumulative number of things in the
14 corrective action program -- you might say -- are all
15 aligned, so that there is an unsafe condition represented at
16 that plant at a point in time, that's a failure of the
17 corrective action program.
18 We're working very hard now to understand how do
19 we relate the corrective action program specifically through
20 the SPD screening process to a level of safety.
21 We're going to continue to work that, but it goes
22 right -- that inspection finding goes right into the system.
23 CHAIRMAN JACKSON: I'm confused. Commissioner
24 Dicus.
25 COMMISSIONER DISCUS: That probably makes two of

1 us, but let me go back to public participation. The current
2 enforcement policy allows for public attendance at
3 enforcement conferences, and my question is what is the
4 parallel process for public participation under the new
5 enforcement policy?
6 For example, will the public be able to attend
7 these quarterly and mid-cycle performance meetings? And if
8 the answer to that is yes, how do you plan to transmit that
9 information to them or is that part of your communication
10 plan that's still under development?
11 MR. MADISON: I thought the question was going to
12 be for Jim. Could you repeat the question? I was thinking
13 of another issue.
14 MR. COLLINS: Let me try to answer. I think it's
15 important to understand that our enforcement process still
16 has all the attributes that it did before. We were focusing
17 specifically on when escalated enforcement results in a
18 civil penalty. But escalated enforcement will still have
19 the opportunity for enforcement conferences, including
20 public observation of those.
21 Currently, our PPR meetings are not open to
22 public. We communicate those by ways of letters that we
23 send to licensees that forecast our inspection plan based on
24 trends. Those subsequently are discussed in public meetings
25 at the sites in a graded approach, depending on the level in

1 the region, and perhaps I should ask Jim to elaborate on
2 this, to ensure that public understands how we translate
3 inspection findings that are contained in the PIM, into
4 inspection planning, and into inspection effort at the site.
5 Those processes currently we do not envision to
6 change, although we have to look at those in light of the
7 observation or the oversight process to ensure that the
8 language that we speak still makes sense. We have yet to
9 clarify, although we have an interim paper in front of the
10 Commission, the role of the annual, quote, roll-up meeting
11 and certainly we will formulate a proposal and receive
12 Commission guidance on an annual Commission meeting.
13 So those are a little further out, but they are
14 yet to be touched on and public participation will be part
15 of that.
16 MR. LIEBERMAN: In addition, when we get into
17 inspection findings that have white inputs, one of the
18 options on the matrix is a regulatory conference and we
19 haven't worked out how we're going to bind the regulatory
20 conference with the enforcement conference, whether that's
21 going to be two meetings or one meeting, but that would be a
22 public meeting, as enforcement conferences are now.
23 COMMISSIONER DICUS: Okay. Then one other
24 question. This is coming off of slide 18 and it relates to
25 those violations, the particularly significant violations.

1 My question is, I know in your paper you mention examples of
2 what some of those are. I guess my question goes to, do you
3 have or are you planning to develop a set of criteria to
4 define what these might be?
5 And I suggest that, if it's possible, because
6 otherwise some subjectivity might creep into determining
7 what would fall into that category.
8 MR. LIEBERMAN: We haven't yet decided exactly
9 what those should be. Probably will be more like the level
10 one violation today in power reactors. Again, we feel that
11 to keep control on those and make sure these really are
12 significant violations, we would only do this with
13 Commission approval.
14 COMMISSIONER DICUS: Okay. Thank you.
15 CHAIRMAN JACKSON: Commissioner Diaz.
16 COMMISSIONER DIAZ: First, going back to the first
17 part of the discussion. I notice that you keep using this
18 word "seamless" and I get a little bit concerned with how
19 the word seamless is used and how far it is taken.
20 It seems to me like there is a meshing or an
21 interplay between the inspection, assessment and
22 enforcement, and at which time you're using this process as
23 to the term of what enforcement means.
24 But eventually I believe you mean to continue with
25 a discreet enforcement process that once you have used a

1 determination from this measurement, that you actually say
2 this is now enforcement and it's no longer seamless to the
3 oversight process.
4 Is that correct?
5 MR. LIEBERMAN: I think yes and no. The process
6 will begin together. The inspection findings will be
7 evaluated for significance and then if it appears to be risk
8 significant, then from an enforcement point of view, that
9 separates into developing non-compliances, the citation.
10 Now, that documentation may have -- may be
11 combined with the same documentation that we might be
12 inviting the licensee in to having a regulatory conference
13 under the action matrix. So whether there are going to be
14 two letters or one letter, but there's a separate focus on
15 compliance, what are the requirements and how they were
16 violated and obtain the response.
17 That response would be fed back into the
18 inspection process.
19 COMMISSIONER DIAZ: But there is a discreet action
20 taken by enforcement and then feeds back. That still makes
21 it a discreet process that is not seamless. I mean, if the
22 Commission wants to know what the process of enforcement is
23 at any one time, we should be able to get exactly that.
24 MR. GILLESPIE: Yes.
25 MR. LIEBERMAN: Yes.

1 COMMISSIONER DIAZ: Good. The second, on slide
2 18, again, there is a statement, violations impacting
3 regulatory processes. In the paper, you talk about 50.59
4 and it goes further into things like less than
5 ten-to-the-minus-six delta CDF, which are part of things
6 that are not important, and that seems to be minimal, to me.
7 CHAIRMAN JACKSON: Nice try.
8 COMMISSIONER DIAZ: Could you elaborate on what
9 impacting the regulatory process means?
10 MR. LIEBERMAN: There are various requirements
11 that provide for the licensees providing information to us,
12 changing the QA plans, changes to the security plans,
13 changes to the emergency preparedness plans, 50.59 type
14 issues, providing -- making the facility available for
15 inspections, giving us information that we need to do our
16 job, providing reports to us, Part 55, certifying operators'
17 training.
18 A variety of things that don't go to whether the
19 -- say, the safety level of a particular reactor, but goes
20 to how we oversee licensees and the requirements associated
21 with NRC's ability to oversee licensees. Those would be
22 those type of violations.
23 COMMISSIONER DIAZ: And those will be clearly
24 identified and discreetly separated, not even seamless from
25 the others.

1 MR. LIEBERMAN: That's right. That would be a
2 separate -- that category would be a separate group.
3 CHAIRMAN JACKSON: Commissioner McGaffigan.
4 COMMISSIONER McGAFFIGAN: On the two tracks, if
5 you look back over the past year or any recent year and made
6 a guesstimate as to what percentage of escalated enforcement
7 actions would fall into the significance determination
8 process loop and which percentage -- what number would fall
9 into the other loop, what would your guesstimate be?
10 MR. LIEBERMAN: Okay. I have looked at the last
11 two years of escalated enforcement from the point of view of
12 the traditional group and the non-traditional group. I
13 think that was about 17 percent.
14 As to --
15 COMMISSIONER McGAFFIGAN: Which was 17 percent?
16 MR. LIEBERMAN: About 17 percent were the
17 traditional -- would be covered under traditional
18 enforcement. The integrity issues impacting the process,
19 things like that.
20 COMMISSIONER McGAFFIGAN: And 83 percent would
21 lend itself to the significance determination process?
22 MR. LIEBERMAN: Right. I have not done a review
23 of the numbers of cases that we consider for escalated
24 action in the first group and how many of those would be
25 considered significant under the white, yellow, red. As a

1 guesstimate, it would probably be a 30 percent maybe, a
2 third.
3 COMMISSIONER McGAFFIGAN: Thirty percent of the 83
4 percent.
5 MR. LIEBERMAN: Right. And I say that because of
6 the regulatory significance aspect. We would not -- where
7 today we might aggregate violations based on regulatory
8 significance, we would not be doing that because we would be
9 focusing more on the risk aspect. But I would also say that
10 in the past several months, the number of escalated actions
11 have dropped considerably because we're focusing on
12 regulatory significance with a tighter screening to make
13 sure there is a more -- there is a closer nexus to safety.
14 From that point of view, the more recent escalated
15 enforcement may be in line with the -- what violations would
16 be significant under this new approach.
17 COMMISSIONER McGAFFIGAN: If I understood Mr.
18 Gillespie earlier, he said there's ten or fewer are likely
19 to be the annual number of events. You're basically going
20 to be a corollary of the assessment process, of the
21 inspection process, and ten or fewer events will trip the
22 trigger. You're not going to bother, as I understood
23 earlier, to try to assess severity levels to it.
24 Once they're into the triggered space, you'll do a
25 notice of violation.

1 MR. LIEBERMAN: That's right.

2 COMMISSIONER McGAFFIGAN: And so in numerical
3 terms, if it's ten, let's assume ten, and then what does the
4 17 percent add up to per year as a number? Isn't there
5 going to be a very significant decline in enforcement under
6 this approach?

7 MR. LIEBERMAN: There will certainly be a decline
8 in the group one cases compared to, say, two or three years
9 ago, but in more recent months, we have not had many
10 escalated reactor cases in the past six months.
11 COMMISSIONER McGAFFIGAN: Going to Mr. Lochbaum's
12 pencil-whipping issue, is there going to be any scrutability
13 into the process whereby you guys determine that an item
14 doesn't reach this ten-to-the-minus-six threshold? I know
15 that's a summary that's much more complex than that, but in
16 -- I mean, is there going to be a -- based -- you're going
17 to -- in the PIM item, you're going to say we have this
18 inspection finding and it didn't breach any threshold
19 because under our matrix or under our STP, it ended up in
20 category Y, which is not a category that brings concern, and
21 then the public could come in and ask, well, jeez, I can
22 make this calculation, I question that.

23 MR. GILLESPIE: Yes. We're still going to be
24 documenting our findings, compliance, rules, license
25 requirements are still there. So when we come across it, it

1 will be documented in the report and will be visible.
2 COMMISSIONER McGAFFIGAN: But will you document
3 why, for -- say there's a close call -- why it ended up as a
4 non -- in the significance determination process, why it
5 turned out non-significant, that it was categorized -- I'm
6 trying to --
7 MR. GILLESPIE: Yes. We're going to have to have
8 -- actually --
9 COMMISSIONER McGAFFIGAN: And it fell into
10 category H or whatever.
11 MR. GILLESPIE: If something gets screened out,
12 we're going to have to have documentation in the report that
13 documents why, consistent even with the policy today on
14 level four violations, why it just got turned over to the
15 licensee. So there will have to be a characterization of
16 the -- of each observation that's listed.
17 It's not in the calculation. It will be a
18 characterization that this fell below the threshold, it may
19 be a statement such that the phase one of our published
20 screening criteria, that it's screened out at phase one, if
21 it were turned over to the licensee's corrective action
22 program.
23 And I think we're being public with that and we're
24 going to be held accountable to what we write and what we
25 say.

1 CHAIRMAN JACKSON: Commissioner Merrifield.

2 COMMISSIONER MERRIFIELD: I don't have a question,
3 as Commissioner Dicus already essentially asked it, related
4 to the particularly significant violations issue. But I
5 guess I do want to weigh in with my feeling that this --
6 given the fact we will be -- we won't be in the action
7 matrix at that point, I think it's important to have good
8 guidance to make sure we've got sufficient discipline to
9 ensure that we're using that particular flexibility and that
10 we do it in a consistent manner.

11 CHAIRMAN JACKSON: Okay. We want to move on.

12 MR. MADISON: Good morning. My portion of the
13 presentation will address changes to the processes described
14 in SECY 99-007, the pilot program and its success criteria,
15 and our communication plan.

16 Based on comments received from the Commission,
17 public, industry and the staff, numerous changes were made
18 to the processes described in SECY 99-007. These include
19 the addition of the significance determination process
20 presented by Morris Branch and the enforcement policy which
21 Jim just discussed.

22 However, let me be clear; no changes were made or
23 necessary regarding the basic concepts or principles
24 described in our original submittal.

25 Noteworthy changes were made in the following

1 areas. The assessment process action matrix has been
2 modified to provide for increased Commission awareness and
3 earlier involvement. Also, the last column was modified to
4 reflect the original intended meaning of overall
5 unacceptable performance and to indicate that plants are not
6 permitted to operate within this band.
7 In the column that includes repetitive degraded
8 cornerstone was modified to include one red assessment
9 input. We continue to consider possible refinements and
10 discuss possible refinements to the matrix.
11 The staff has modified the performance indicator
12 table to reflect the progress in this area. For example,
13 the risk significant scrams indicator has been renamed
14 scrams with loss of normal heat removal, to reflect the
15 method that was used to set the thresholds.
16 The SSPI indicators were renamed safety system
17 unavailability indicators, as a more accurate name, and to
18 differentiate them from the WANO indicators.
19 Additionally, several thresholds were changed in
20 that indicator.
21 The containment leakage indicator was changed to
22 eliminate the use of the integrated leak rate test results
23 and to use only the local leak rate test results, because
24 these are more frequently monitored. This indicator will
25 provide more meaningful information.

1 Most recently, the vital area security equipment indicator,
2 availability indicator has been dropped because it was not
3 considered meaningful, and safety system failures has been
4 renamed safety system functional failure to more accurately
5 reflect the purpose of the indicator. We just did that a
6 couple of days ago and it's actually not reflected in
7 99-007A.
8 Also of note are some items which did not change.
9 For example, concern had been expressed that the red
10 thresholds for unplanned scrams and scrams with loss of
11 normal heat removal should be set at lower risk-informed
12 levels. The staff has determined that these settings were
13 risk-informed rather than risk-based and that they
14 appropriately indicate the margin of safety in that area.
15 Questions were raised regarding the lack of red
16 thresholds for several PIs. These remained N/A for various
17 reasons. For example, the barriers PI lower thresholds are
18 already set at the technical specification limits.
19 Consequently, operations beyond these settings would never
20 be allowed. The plant would already be shut down.
21 On the other hand, unplanned transients remained
22 N/A because they represent little or no public or risk to
23 the public health and safety, and so threshold setting was
24 inappropriate.
25 Safety system failures, we felt because of the

1 wide range of systems, the differences in safety
2 significance, that it was not possible to assign a risk
3 significance to these indicators or thresholds at the yellow
4 and the red level.
5 In the baseline inspection area, the staff has
6 determined that inclusion of severe accident management
7 guidance would not be appropriate at this time.
8 Additionally, the staff has agreed on the knowledge gained
9 from conducting the pilot fire protection functional
10 inspections and how it should be factored into the baseline
11 inspection program, and this is reflected in the revised RIM
12 document.
13 Are there any questions in this area?
14 CHAIRMAN JACKSON: Why don't you keep going.
15 MR. MADISON: Next slide, please. As mentioned in
16 SECY 99-007, the staff intends to exercise the proposed
17 processes during a pilot program beginning June 1 of this
18 year. The purpose of the pilot program is to exercise the
19 entire oversight process, including inspection, significance
20 determination, assessment and enforcement, to identify
21 weaknesses and challenges to the process, and to propose
22 changes and refinements prior to full implementation in
23 January 2000.
24 An additional objective of the pilot is to better
25 quantify the level of effort required by the baseline

1 inspection program. The success of the pilot will be
2 measured against pre-established criteria, which I will
3 discuss in a moment.
4 Next slide, please. We have selected nine
5 facilities to participate in the pilot. Our selection
6 criteria included a balance of plant design, plant
7 performance characteristics, and regional work loads, and an
8 attempt to give priority to those licensees that had
9 volunteered or had participated in the NEI task force.
10 Next slide, please. During the pilot, we will
11 follow established ground rules. For example, all pilot
12 plants will be subject to the revised oversight process,
13 including enforcement, in lieu of the current processes.
14 This will require pre-planning by each region to identify
15 those portions of the baseline inspection program and any
16 initiative or reactive inspection to be performed at each
17 facility. The goal is to exercise each baseline inspection
18 procedure in each region at least once, including in the
19 areas of emergency preparedness, radiation protection and
20 safeguards.
21 However, the intention is not to accomplish 12
22 months of inspection in a six-month pilot. Care will be
23 taken to prevent over-exercising the baseline program at any
24 facility.
25 To aid in this pre-planning, PI data collection

1 will begin in May and will include the previous one to two
2 years of data. Also, PI data will be reported on a monthly
3 basis during the pilot and will be made publicly available
4 on our web site.
5 Additionally, in November or mid-cycle, an
6 inspection planning type review will be performed for each
7 facility.
8 Next slide, please. As I mentioned previously,
9 the success of the pilot program will be measured against
10 pre-established criteria. Criteria have been established to
11 measure the efficiency and effectiveness of performance
12 indicator reporting and the baseline inspection program.
13 This includes the elements of planning, conduct of the
14 inspection, inspection finding evaluation and documentation.
15 Criteria have also been established to measure the
16 effectiveness and efficiency of the assessment process and
17 the enforcement policy, as well as the success of the
18 overall program. And criteria have been established to
19 determine the readiness of information management systems to
20 support full implementation.
21 Where possible, quantitative success criteria were
22 chosen. However, certain success criteria can only be
23 measured by expert judgment. To accommodate this process,
24 we will establish the pilot program evaluation panel. The
25 panel will be composed of NRC staff and NRC representatives,

1 including pilot plant personnel.

2 Additionally, representatives of the state

3 regulatory agencies involved in the pilot program will be

4 included, as well as a representative of a public interest

5 group. At this time, Mr. David Lochbaum has agreed to

6 participate in this panel.

7 The panel will be kept aware of the pilot program

8 activities and will meet periodically to assess progress.

9 These individuals will then provide their assessment of the

10 success of the pilot program in a report that will be made

11 part of our final report in January 2000.

12 By continuing to involve our internal and external

13 stakeholders, we hope to capitalize on their strengths and

14 facilitate acceptance of the final product.

15 Next slide, please. To prepare for the pilot

16 program, we're in the process of developing the performance

17 indicator reporting manual in cooperation with NEI, as well

18 as the baseline inspection procedures and other program

19 documents. Training on the processes will be accomplished

20 during three workshops. During the week of April 12, NRC

21 and licensee staff participating in the pilot program will

22 receive training associated with the performance indicators.

23 This will be a public workshop held in Glen Allen, Illinois.

24 Consequently, other interested individuals will

25 attend. However, the space is limited and the workshop will

1 be structured to focus on pilot program participants.
2 During the week of April 26, NRC staff will
3 receive training associated with the baseline inspection
4 program and the significance determination process. Pilot
5 plant states with reactor inspection programs have also been
6 invited to participate in this workshop. This will not be a
7 public workshop and will be held in Region II.
8 Following this workshop, inspection planning
9 meetings will be held in each region, with the assistance of
10 the transition task force, to determine the level of effort
11 required at each pilot facility.
12 The third workshop will include presentations on
13 the performance indicators, a brief workshop on the baseline
14 inspection procedures, and the significance determination
15 process, descriptions of actual plant inspection activities
16 at each facility, discussion regarding the inspection and
17 enforcement programs and description of major activities
18 during the pilot study, including mid-cycle reviews, and the
19 pilot program evaluation panel.
20 This will be a public workshop and will be held in
21 the Philadelphia area.
22 Next slide, please. In keeping with the
23 Commission's direction regarding communications and
24 incorporating the previous communication activities
25 regarding the tasking memorandum, the transition task force

1 includes a staff dedicated to communication.

2 As was previously introduced, Mr. Augost Spector

3 is the task lead in that area.

4 The true measure of our program's success is how

5 well our people carry out the plans and changes discussed

6 here today. This requires consistent, effective, accurate

7 and timely communication with both our internal and external

8 stakeholders. Our communication plan provides an approach,

9 we think, which fosters these objectives.

10 Our plan calls for reiterating as often as

11 possible the four key messages; to maintain safety by

12 establishing a regulatory framework that ensures that plants

13 continue to be operated safely, to enhance public confidence

14 by increasing predictability, consistency and objectivity of

15 the oversight processes, so that all constituents will be

16 well served by the changes taking place; to improve

17 effectiveness and efficiency of the oversight process by

18 focusing agency resources and increased licensee resources

19 on those issues with the most risk significance; and, to

20 reduce unnecessary regulatory burden for ourselves, as well

21 as our licensees, as the process becomes more effective and

22 efficient.

23 We meet with external stakeholders on a regular

24 basis, holding public meetings once every two weeks with

25 NEI, licensees and members of the interested public. These

1 sessions are considered true working sessions, at which time
2 there is open and meaningful dialogue. We have also met
3 informally with state representatives and have established
4 liaisons with the Office of State Programs and the Office of
5 Congressional Affairs. We have learned much from these
6 public meetings and feel that the results of our new program
7 will reflect the needs of our constituents, as well as
8 maintaining a sound regulatory program.
9 Next slide, please. To accomplish these
10 objectives and to deliver the key messages, our
11 communication plan utilizes a variety of approaches. Key to
12 communicating with our staff are our supervisors. We've
13 begun to hold meetings with our first level supervisors,
14 including section leaders and branch chiefs, within each
15 region as well as in NRR, to provide them with the necessary
16 information and to answer their questions and concerns.
17 We have established a network of employees
18 throughout each region and major headquarter offices to form
19 what we call a change coalition. Change coalition members
20 will provide feedback to the transition task force in the
21 form of specific concerns regarding program implementation
22 or specific technical portions of the program.
23 We've provided our change coalition members with a
24 guide book, which we call the change coalition backpack,
25 which not only outlines the vision for the future, we hope,

1 but provides both typical questions along with answers,
2 which change coalition members may use as they meet with
3 fellow employees.
4 The transition task force is also utilizing a
5 variety of electronic communication approaches, including a
6 web page, which became active, I believe, the day before
7 yesterday, which consists of a series of internal to NRC and
8 eventually external web links, which directly relate the new
9 oversight framework program. This will be updated each week
10 under a "What's New" link and also disk versions of the web
11 page will be made available to those that do not have access
12 to the internet.
13 A variety of print media will be used to
14 communicate with our external stakeholders. The most
15 current print communication is the recently published
16 NUREG-1649, which was included in the SECY 99-007. This
17 consists of a plain English explanation of the current
18 status of the regulatory initiative. This publication was
19 coordinated by our Office of Public Affairs and along with
20 the transition task force providing assistance in
21 development of the content.
22 In the future, we expect that this NUREG will be
23 updated so as to reflect current information, as will all of
24 our communication activities.
25 Then as I mentioned earlier, we're also

1 considering additional communication activities to try to
2 focus on the members of the public that are directly
3 associated with the pilot facilities and additional
4 workshops have been in the concept phase at least planned
5 for each region that would mirror the May 17 workshop, as a
6 public way of -- a way of getting additional public
7 information out.
8 Additionally, we believe that by continuing to
9 involve various NRC staff, industry, state and public
10 stakeholders in multiple facets of the development and the
11 pilot program, we will enhance communication, foster real
12 change, and ensure successful accomplishment of our overall
13 objectives.
14 This concludes my remarks.
15 CHAIRMAN JACKSON: Thank you. Let me ask you a
16 couple of questions. I noted that one of the success
17 criteria involved all sites expending within 25 percent of
18 the same effort in terms of hours. Do the inspectors know
19 that that is a goal and what the hourly goals are for
20 various cornerstones or can this lead to corrupting the
21 sample?
22 MR. MADISON: As I mentioned earlier, we're still
23 in the process of really refining what do we mean by the
24 level of effort for each of the inspectable areas, and we're
25 going to be monitoring that during the pilot.

1 It's a rough goal. We're still in the process of
2 evaluating how we're going to communicate that to the
3 inspection staff, as well as the pilot participants.
4 CHAIRMAN JACKSON: And I noted also that another
5 success criterion was whether the total inspection efforts
6 is reduced by 15 percent over the existing core program, and
7 I'm curious as to how you arrive at it.
8 If you are, in fact, risk-informed, are you
9 prepared for the total inspection hours to increase by 25
10 percent or 15 percent?
11 MR. MADISON: That is a distinct possibility. We
12 have challenged the individuals that are writing these
13 procedures to not focus on the hours necessary to perform
14 the inspection, but on what is the important aspects or
15 things that they need to look at during the inspection
16 activities.
17 CHAIRMAN JACKSON: But if you have a success
18 criteria that relates to reducing the hours by a specified
19 amount going in, how do those two things comport?
20 MR. MIRAGLIA: I think, Madam Chairman, in terms
21 of -- and Frank could probably add more. In terms of
22 developing the risk-informed inspection program, that was
23 done by the folks in the field and it was a best estimate
24 and we've got this number in mind. It's a goal. We want to
25 see how close we can come to that goal.

1 In terms of the planning process for previous
2 budgets, there have been some assumed efficiencies in there.
3 I think the pilots are going to inform us as to how close to
4 that we come and we realize.
5 CHAIRMAN JACKSON: My only real comment is this;
6 I'm sure which way it's going to go, but if you set an
7 arbitrary percentage, to me, that's not a risk-informed
8 approach. That in point of fact, the point of having the
9 pilot is to understand where the risk-informed approach
10 might take you.
11 It could be plus or minus 25 percent, but you
12 always seem to be hours-driven and as opposed to really
13 having a pilot program do just what it's supposed to
14 accomplish.
15 MR. MADISON: And in actual fact, that's why we
16 added qualitative success criteria, primarily is that -- and
17 we feel that those possibly override --
18 CHAIRMAN JACKSON: Well, this is NRC. You put a
19 number down, that's the way it's going to end up. And you
20 know it and I know it. And so I claim that you've already
21 biased the results. And a risk-informed approach drives you
22 to where it drives you and so you've already biased it.
23 MR. MIRAGLIA: I think the intent would to do the
24 risk-informed and see what the hours are.
25 CHAIRMAN JACKSON: But you've laid out success,

1 quote-unquote, success criteria that are referenced to a
2 specific direction and a specific quantitative result. And
3 even if I wanted to accept the direction, the specific
4 quantitative result, so you've put a double bias and there
5 is no way you can walk around that.
6 MR. GILLESPIE: Chairman Jackson, we agree and, in
7 fact, we had discussion after the paper went out on that
8 one, where we stepped back and put it in the perspective of
9 it's the wrong goal. We do think a comparison between a
10 risk-informed baseline and a core is the wrong goal and we
11 agree.
12 The structure we'd see here is they should go out
13 and they should look. If there is any reduction -- if there
14 is any reduction in the future, as would be expected, it
15 will come from the restrictions placed on having a public
16 structure, which really impacts the regional initiative
17 aspects of it.
18 The real question would be is when are you going
19 to react and how much are you going to react, not -- I'm
20 agreeing it's an unfair criterion and we're already looking
21 at it differently.
22 CHAIRMAN JACKSON: All I'm saying is it's a
23 criterion that is an oxymoron really to a risk-informed
24 approach.
25 MR. GILLESPIE: It is.

1 CHAIRMAN JACKSON: A risk-informed approach should
2 lead you where it leads you.
3 MR. GILLESPIE: Yes, we agree.
4 CHAIRMAN JACKSON: I mean, I'm probably the only
5 one around here who does not have a bias as to where -- what
6 risk-informed means. That it takes you where it takes you.
7 And if it takes you down, it takes you down. If it takes
8 you down by 30 percent, it takes you down by 30 percent. If
9 it blips up, it blips up.
10 Otherwise, you are driving a result as opposed to
11 saying that you're taking a risk-informed approach. Why
12 have all this apparatus for doing risk analysis if, in fact,
13 you've already decided from the beginning what the result is
14 going to be, and so I think you need to think about that.
15 Then my only other question is, have you clearly
16 identified areas of licensee performance or aspects that are
17 not covered by the performance indicators, but which are
18 tied to the cornerstones? I'm not sure that I got that
19 clearly from you.
20 MR. GILLESPIE: Yes.
21 CHAIRMAN JACKSON: What I'm saying is if you have
22 a risk-informed baseline inspection program, is it only
23 covering the areas that the performance indicators cover?
24 MR. GILLESPIE: No. In fact, it's going back to
25 January and where we approach it was the first question was

1 what's everything that we should need to inspect at a
2 facility. Then you took the performance indicators --
3 remember when Bruce overlaid the performance indicators and
4 said where are we inspecting where the performance
5 indicators are already giving us information. Then we broke
6 down the inspection even further into verification of the
7 indicators, inspection where no indicators covered it, and
8 inspection where indicators were only partially covering it.
9 So we did go through a very, very deliberate
10 process in trying to step back and look at the whole to make
11 sure we had the whole risk -- all high risk areas adequately
12 covered to develop the information we needed to make a
13 decision.
14 MR. MIRAGLIA: So the inspection program that we
15 have has all three of those covered.
16 MR. GILLESPIE: Has all three of those in there.
17 CHAIRMAN JACKSON: Let me go back again to this
18 business of a risk-informed approach. An approach with more
19 integrity, with a goal like this. If we really did a
20 risk-informed baseline inspection program using tying things
21 to the cornerstones, using all the apparatus, and it came
22 out that on average, the net number of hours were 25 percent
23 down and we looked at what the implications of that would be
24 for nonetheless maintaining a presence in the plants and
25 regional structure and decided it couldn't go down that

1 much, that 15 percent, because we had to maintain some
2 baseline resources, that is a more honest approach than to
3 say it's 15 percent today, and that's all I'm really saying.
4 That if you haven't even gone into your pilot, you
5 still have all of these questions that various people have
6 asked, and you have assigned some number, then you have
7 already driven the process the way you go.
8 MR. MIRAGLIA: That's fair and I'm not going to
9 disagree with that, Madam Chairman. I think the issue that
10 you're raising, there are other issues that we have to
11 consider within the context of the overall planning process,
12 and we're asking ourselves those kinds of questions and
13 trying to get a feel for that and what issues do they raise
14 for us in other contexts, as well, and we are going to be
15 communicating with the Commission on it.
16 CHAIRMAN JACKSON: Let me ask one last question or
17 comment. If 15 percent is where efficiencies within your
18 existing process would take you, then that should be
19 disjoined from some overlay on the risk-informed baseline
20 inspection program. But when you mix the two, then you're
21 biasing it.
22 COMMISSIONER MERRIFIELD: Chairman, I don't mean
23 to go out of order. I just want to make a comment. I agree
24 with you that if we're going to take a look at this, we
25 ought to be willing to accept up or down the way it goes, if

1 we're truly going to be risk-informed, and I just wanted to
2 -- the Chairman had made a comment that she was the only one
3 who felt this way.
4 I just want to make it clear that I share her
5 concern in that regard.
6 CHAIRMAN JACKSON: I appreciate that, because I
7 get frustrated, because we talk risk-informed, but people
8 assume that they can just assign some figure. And what I'm
9 saying is it could be 25 percent down, I will accept that,
10 too, if you've done an honest risk-informed approach. But
11 if it fluctuates up, then you ought to be able to look at
12 that and justify it. That's the whole point of doing it
13 that way, so that you have some coherent basis for whatever
14 you do.
15 And if you don't accept it, then there is no point
16 in doing all of this, there is no point involving
17 sophisticated risk analysis and all of this kind of thing.
18 It's just a game. And I feel that very strongly.
19 MR. MIRAGLIA: I don't think that was the staff's
20 intent, Madam Chairman, and I fully agree with you and I
21 think the pilots will tell us what we aren't going to be
22 able to achieve.
23 CHAIRMAN JACKSON: Commissioner Dicus.
24 COMMISSIONER DICUS: The project managers clearly
25 had a significant role to play in the old SALP process.

1 Could you give me some idea on what their role will be in
2 the new process?
3 MR. GILLESPIE: In the new process, it would be
4 very, very much significantly less. In the current
5 reorganization in NRR, even the name of the licensing group,
6 they are now the licensing project managers. So I think
7 there is indication that we're looking at a changing or
8 evolving role for the project managers, and they will be
9 focusing on the licensing process.
10 MR. COLLINS: Right now the project managers
11 provide input to the plant issues matrix, having to do with
12 the performance of the engineering and the licensing
13 departments. That will not change. They do not duplicate
14 those functions that are performed by the region, as we have
15 in the past, as early as a year to two years ago. We cut
16 those areas out of the budget.
17 COMMISSIONER DICUS: And the other quick question,
18 you've obviously communicated with the states that have the
19 pilot plants in them. What is the reaction overall from the
20 states?
21 MR. MIRAGLIA: We had a session at the RIC and it
22 wasn't representative of all of the states that may have the
23 pilots, but some, and then as Alan indicated, that we intend
24 to go out to each of the affected -- Alan, you might want to
25 characterize some of the discussion that was there.

1 MR. MADISON: So far, they have basically just
2 been informed of the concepts and the things that we -- in
3 basic terms, what we intend to do, and there has been a
4 great interest on their part. They -- I know at least the
5 State of Illinois very interested in participating in the
6 workshops.
7 MR. MIRAGLIA: I was going to interject, just more
8 broadly, the changes that we're making within our regulatory
9 process is not only here in performance assessment, but in
10 the licensing area and renewal and adjudication process. We
11 have the challenge of keeping the four cornerstones ahead of
12 us or four filters in terms of we need to make sure we
13 articulate it internally, as well as externally, about
14 maintaining safety and doing our regulatory mission.
15 The key mission is to provide reasonable assurance
16 of protection of public health and safety and we have to do
17 it in a way that people don't hear reduce unnecessary
18 burden, that we're walking away from that mission. And we
19 have to do it that the public confidence that all the
20 stakeholders have in our processes are understood. So to do
21 the job effectively and efficiently, and that's a balance
22 that we're going to have on many of these issues.
23 I think there is some indication in the paper here
24 relative to how we're going to communicate with performance
25 assessment, but I think that challenge is before the staff

1 and the agency to articulate that and all the changes that
2 we're making.
3 CHAIRMAN JACKSON: If I may interject on
4 Commissioner Dicus' question, and if it's going off the
5 track, I'll withdraw it. But in terms of stakeholders, how
6 are resident inspectors reacting to what they think they
7 know about this program?
8 MR. MIRAGLIA: Jim is here as part of the change
9 coalition and that would be a segue to that part of the
10 process, and Jim could perhaps indicate that.
11 MR. WIGGINS: We in the region have been spending
12 a significant amount of time trying to communicate with our
13 staff on this. We recognize, though, that our primary role
14 right now, especially during this transition, is to keep our
15 eye on the plants as they're running today. That's the
16 primary thing we're doing in the NRR program.
17 But at the same time, we've invested heavily in
18 the development of the program and invested heavily in
19 communicating it. Sam and his staff have been helpful, as
20 you probably understand, his staff has been going out to the
21 regions with the express intent of communicating and
22 discussing with the regional staff the program, so that we
23 can increase understanding.
24 My sense of where the residents and the region
25 based inspectors are coming from, honestly, there is some

1 varying opinion, but the general trend is they're
2 inspectors, so they're skeptics. The best inspectors are
3 skeptics. They want to be shown before they buy it
4 completely. But at the same time, they're cautiously
5 optimistic with the program.
6 Most folks in the region, the overwhelming
7 majority, and as soon as you communicate it, if you
8 communicate it well, you're able to sign more people up to
9 it.
10 I would characterize the regions as being
11 committed to make the program work and as opposed to some
12 type of a construct where we're trying to stand in the way
13 of it, and this is from the regional administrators down to
14 the -- throughout the staff, to the newest inspector.
15 I would say, in direct answer to your question,
16 the people are skeptics at this point.
17 CHAIRMAN JACKSON: They're from Missouri.
18 MR. WIGGINS: Right. They're inspectors. We
19 train them not to accept promises, but to look for results.
20 CHAIRMAN JACKSON: No promissory notes.
21 MR. WIGGINS: And that's what they're looking for.
22 But at the same time, I think it's fair to state, and the
23 rest of the regional administrators would agree with this,
24 that overall they're cautiously optimistic with the program.
25 COMMISSIONER MERRIFIELD: Chairman, if I may go

1 out of order, as well, just because it touches on this very
2 issue. I have visited a number of plants in regions
3 recently and I have talked to a number of the inspectors and
4 I agree with you that I think that there is a commitment.
5 We've got some great staff and I think they're committed to
6 doing the right thing.
7 But I think there is that skepticism there and
8 even more so than I think perhaps you've indicated. Two of
9 the most significant issues that they raised to me, the
10 first one related to a general feeling that they felt their
11 hands were going to be tied in this new oversight process
12 and that if they found a problem in a plant that was not
13 associated with a risk significant system, that they would
14 be forbidden to raise that problem to plant management.
15 The other issue that was raised is that there are
16 some inspectors who I spoke to who had themselves convinced
17 that the number of inspection hours that they were going to
18 be having would be cut in half, not 15 percent, but in half.
19 So clearly there are some misconceptions still out there,
20 and these are relatively recent conversations.
21 But I think there are still some misconceptions
22 out there in the field and I sort of pass along that I think
23 we've got more work to do in that regard.
24 MR. WIGGINS: I didn't want to say that everyone
25 has bought into it and there aren't some real concerns. I

1 don't want to leave the impression that everyone has signed
2 up completely or anywhere near that at this point.
3 I think, though, it's fair to say, as folks have
4 the opportunity to get more involved in understanding the
5 program, and it takes time, they begin to feel better about
6 it as they understand it more, they begin to feel better.
7 Frankly, when the program was first being
8 developed and the first understanding that came out, and you
9 can talk to the folks in the field, what they see the
10 program is more a performance indicator dominated program
11 and then they look at the performance indicators that are in
12 the current program and say, gee, we're going to be
13 marginalized, we're going to be on the sidelines as passive
14 observers in the process.
15 What they're under-valuing is the role of the
16 inspection and the inspection areas at this point. They
17 haven't completely understood them, because up to this
18 point, all you see in the inspection program is some topics.
19 It's the transition task force now that's putting some meat
20 around the topics and that's what they're waiting to see.
21 What I wanted to tell you before, what the four of
22 us hope to do for the regional administrators is to show the
23 continued commitment from the region in the development of
24 the program, but to try to provide the perspective of the
25 front end implementer and what the front-end implementer

1 sees in this assessment and oversight program, and to bring
2 to the table the concerns, an understanding of the concerns
3 that, Commissioner, you're seeing when you talk to the staff
4 out there.
5 They can work the arithmetic, they can work the
6 numbers. They know how many inspection hours we've been
7 given. They know the number in the paper that's tied to the
8 baseline and they can draw conclusions.
9 I believe what you're hearing from the staff now,
10 though, and somewhat in response to the Chairman, going
11 along with the Chairman's question, is there is more of a
12 focus, especially during the pilot, and let's make sure
13 we're doing the right thing. Make sure we're doing the
14 right inspection, make sure we're covering the right areas,
15 got the appropriate scope and depth and content, and see how
16 much time it takes to do the program and to work the results
17 through whatever significance determination process it has
18 to go under, how long does it take.
19 And the point of view, I think I would agree with
20 you, it takes as long as it takes and to get the end point,
21 the outcome that you're looking for. So I would say you're
22 right. Like I said, there's a spectrum of opinion and the
23 -- I would hold that there are -- it is a tough discussion
24 for folks and there is some concern with regard to whether
25 the NRC will still be as effective as it had been.

1 I think we're making -- I think from the four of
2 us, the four deputies, I think we generally would agree that
3 we're making progress in that regard. We're trying to get
4 the word to folks, and Sam and his staff is helping by
5 coming out into the regions and taking their comments and
6 showing that there is a positive reaction.
7 They're getting it -- the comments are coming in
8 and they're being considered and there is rational
9 explanations for what's in the program now. There is an
10 up-front answer back. If the answer to the question is we
11 don't know, we have to work on it, that's what is coming
12 through, and I think that's going to help in the long run.
13 COMMISSIONER MERRIFIELD: As somewhat a fan of
14 military history, the lesson is that the best battle plans
15 designed at headquarters are only as good as the ability to
16 implement that at the front lines, and for us, and I guess I
17 sort of turn the more sentinels of safety, our front line
18 inspectors ultimately are the proof in the pudding as to
19 whether this plan that we've put together is going to work,
20 and I think it's very important that we really spend a lot
21 of time communicating with them and getting them in with our
22 program.
23 CHAIRMAN JACKSON: And to get their insights.
24 COMMISSIONER MERRIFIELD: And their insights, yes.
25 CHAIRMAN JACKSON: Right. Because the worst thing

1 that could happen for us is that we merrily roll along, we
2 work with our stakeholders, we have Mr. Lochbaum involved,
3 we work so nicely with NEI, and then you end up having your
4 own internal whistle-blowers, who are the people who go to
5 those plants every day of the week.
6 Then it is a disaster and if you don't understand
7 that, then we're all barking up the wrong tree here.
8 MR. COLLINS: Commissioner, we understand that.
9 We have had the regions involved since the inception of this
10 program. We have had on the conceptual design team.
11 CHAIRMAN JACKSON: But it's the same thing, Sam,
12 and this is not meant to get into an argument with you, but
13 it's what we do with our licensees. Does it go down through
14 the organization and if you go and ask the random inspector
15 105, what is he going to tell you.
16 And I agree. I know you've had the regions
17 involved and I applaud actually having this executive
18 coalition, but the metric for us is the same for the metric
19 we claim in terms of, quote-unquote, safety culture with our
20 licensees, and that is, is it down through the organization
21 and does everybody understand where we're going and
22 understand it. And if they don't --
23 MR. COLLINS: The answer to that is no, it's not,
24 but the answer is that we've been working on it very hard
25 and we have the communication --

1 CHAIRMAN JACKSON: All this just says re-double
2 the efforts. The Commissioner has told you he's been to
3 plants recently, he knows what he's hearing. It's not
4 unlike what I've heard when I've had the Chairman/staff
5 dialogues. Then I'm talking to large numbers of folks.
6 So it's just a warning. I mean, it's just a
7 warning flag and, Augie, I'm glad you're here and you're
8 hearing all of this, because it just tells you the
9 importance of communication, because those are the rocks on
10 which this big ship can wreck.
11 MR. MIRAGLIA: We don't underestimate that
12 challenge, Madam Chairman, and we fully understand it. The
13 point I would make is that we have that challenge in other
14 areas, as well.
15 CHAIRMAN JACKSON: I think we're going to have to
16 move along. Commissioner Diaz? And we're going to abrogate
17 the rest of your slides. We'll just read them, because
18 we've got two other panels here.
19 COMMISSIONER DIAZ: I think this has come up
20 several times today and I keep seeing it in a lot of the
21 work that the staff is common, is this four key messages,
22 four key cornerstones, four key filters, four is maintained,
23 safety, improved efficiency and effectiveness, reduce
24 unnecessary burden, and increase public confidence.
25 I think those are all very good. I think

1 sometimes, and I'm going to borrow from Mr. Lochbaum, you
2 know the sense that he communicated at one time is in the
3 area of increasing public confidence, it is very difficult
4 to use that a priori, because you really don't know what the
5 effects, that fundamentally increasing public confidence,
6 the result of what we do is a result of the implementation.
7 And so we need to be focusing on what the results
8 are and how do we properly communicate and to increase
9 public confidence, it's the results that really count and
10 it's counting them ahead of time is good, but it's not
11 sufficient to achieve the objectives.
12 CHAIRMAN JACKSON: Commissioner McGaffigan.
13 COMMISSIONER McGAFFIGAN: With regard to the
14 dialogue that was had a few minutes ago, I encourage the
15 skepticism. I may be being subversive here, but I encourage
16 the skepticism at the lower parts of the staff, if they are
17 indeed raising these issues.
18 I think the issue of marginalizing the inspection
19 process and relying unnecessarily or precipitously on
20 performance indicators is exactly a good issue. If the
21 entire inspection process, if the expectation going in is
22 that the entire inspection process per year is going to
23 result in ten or less significant findings that threaten a
24 white or yellow input into the process, I do think
25 performance indicators will give us more white or yellows.

1 The expectation going in is on inspection
2 findings, but -- so I encourage the skepticism and I hope
3 we'll listen to the skepticism, because if we're really in
4 the mode already of trying to roll this thing over people, I
5 think I agree with the Chairman, there will be a backlash at
6 some point, because some of their concerns may indeed
7 develop.
8 MR. MIRAGLIA: Commissioner, I would have to react
9 to the word that we're trying roll it over to the staff. I
10 don't believe that we have underestimated the challenge that
11 it's going to take to change the management and the culture
12 of this organization.
13 We've talked to the Commission on several
14 instances and the change coalition, the backpack, the
15 meetings that we have, we have all the inspectors on board,
16 no. Are we going to make them part of the process? Yes.
17 This has to be a participative process.
18 That's our goal and objective. Are we there
19 today? Clearly, you heard from Jim, representing the
20 regions, that we're not there. I don't believe we
21 underestimate that challenge.
22 CHAIRMAN JACKSON: I think, Frank, we should all
23 be calm, but the fact that you're hearing it tells you the
24 degree of concern that the Commission has about it, and
25 that's the message you need to take away.

1 MR. MIRAGLIA: And I would agree and I would say
2 the management has that degree of concern, as well.
3 COMMISSIONER McGAFFIGAN: The question on the
4 topic we just had, the public communications strategy, is
5 there any intent to involve not just Mr. Lochbaum, but local
6 publics? Are you going to simulate local public meetings,
7 where you try to explain this process in plain English at
8 the plants and try to walk people through why they should
9 have enhanced confidence in this and why we're still
10 maintaining safety under this process?
11 MR. MADISON: Yes, sir. I think I said that
12 earlier, that we -- that is in our plan. We've talked about
13 this would be a cooperative type of effort with the licensee
14 at that facility, where we would be available to explain the
15 process and then answer questions.
16 COMMISSIONER McGAFFIGAN: Not just explain the process, but
17 take November; in November you're going to have a process,
18 you're going to run it five months, and you're going to have
19 some results and you're going to have either inspection
20 findings or you're going to have performance indicators.
21 Are you going to attempt to sit down and say here is our
22 assessment, not just of the process, but here is our
23 assessment of this licensee based on the pilot over the last
24 six months, using the new process.
25 MR. MADISON: We were -- our planning had been

1 that we would do that in a large public workshop, not
2 necessarily at each individual pilot facility.
3 CHAIRMAN JACKSON: I think you might want to
4 reassess that.
5 MR. MADISON: We'll take that comment. Thank you.
6 CHAIRMAN JACKSON: Commissioner Merrifield.
7 COMMISSIONER MERRIFIELD: I just want to repeat
8 part of what I said before, and I direct some of this to
9 Frank and Sam. I think the staff has done an awful lot of
10 hard work and needs to be complimented for that. This is a
11 work in progress.
12 I think we all need to recognize that. That's why
13 we have a pilot, to take those lessons. And one of the
14 things that relates to the comment that I had gotten from
15 some of the inspectors that I talked to, I just want to
16 relate that.
17 It seems to me, and you didn't say this, but it
18 seems to me that the pilots is a critical place where we're
19 going to have -- and I assume you naturally intended that --
20 obviously, the inspectors are going to have a very intimate
21 involvement in those pilots.
22 This is clearly an opportunity now where they will
23 really be able to get their hands around it and you didn't
24 mention that, but it dawned on me that clearly they will
25 have a significant input in the pilot process in terms of

1 the analysis.

2 MR. MIRAGLIA: Specific training for the resident

3 is going to be implemented by those residents and the

4 regional folks in the field. So that's the intent.

5 MR. MADISON: We actually have two of the resident

6 inspectors involved in the pilot study and are writing

7 procedures right now.

8 COMMISSIONER MERRIFIELD: Well, good. Hopefully

9 they can take some of the experience that they have and the

10 lessons that they've learned through the pilots and share

11 that with their counterparts in the regions and perhaps

12 dispel some of these lingering concerns.

13 MR. MIRAGLIA: The expectations that we have in

14 terms of involving the regions and the folks that are in the

15 field that are going to implement the process is that they

16 become change anchors for those processes.

17 CHAIRMAN JACKSON: You know, before I excuse this

18 panel, the hardest thing, when you've worked as hard as all

19 of you have in getting this to this point, is for someone to

20 come along and appear to criticize. But I think we all kind

21 of are nervous together, because we know we're embarking on

22 something that is quite different from where we've been

23 heretofore.

24 I think we all have come to believe it's the right

25 way to go, but don't misread the Commission's concerns. At

1 least don't misread mine, because I have complete disjoining
2 of my raising what I consider to be legitimate concerns with
3 my being able to compliment you on what you've done to this
4 point, because you've done an amazing job in a very short
5 time, under an enormous amount of pressure, and I thank you
6 for that.
7 COMMISSIONER MERRIFIELD: I second the Chairman.
8 CHAIRMAN JACKSON: So I'm going to excuse this panel and
9 then we'll bring -- we'll have a five-minute break and then
10 the next panel will consist of Mr. Lochbaum, from UCS.
11 [Recess.]
12 CHAIRMAN JACKSON: We will now hear from Mr. David
13 Lochbaum.
14 COMMISSIONER McGAFFIGAN: Why don't we do them at
15 the same time?
16 CHAIRMAN JACKSON: Well, we have an idea. It's a
17 question of whether the NEI representatives are willing to
18 come forward at this time, so we can have one panel. If Mr.
19 Lochbaum can be surrounded by these folks. Mr. Beedle, Mr.
20 Floyd, and then we have the mysterious gentleman.
21 MR. BISHOP: Madam Chairman, Bob Bishop, General
22 Counsel of NEI.
23 CHAIRMAN JACKSON: Would you turn on your
24 microphone?
25 MR. BISHOP: My sense is the presumption is either

1 that everyone knows me or no one cares.

2 CHAIRMAN JACKSON: Well, the only thing I would

3 say is it's the bow tie that made me think you were a

4 lawyer.

5 MR. BISHOP: Thank you.

6 CHAIRMAN JACKSON: That's okay, I don't want to

7 hear it.

8 COMMISSIONER MERRIFIELD: I want a bow tie, I want

9 to make that very clear.

10 CHAIRMAN JACKSON: Let us begin. Mr. Lochbaum.

11 MR. LOCHBAUM: Thank you. The assessment program

12 that's presented in SECY 99-07A can be viewed two different

13 ways. Originally, I had titled my presentation for this

14 morning as public confidence in the process, but it got

15 changed a little bit.

16 The new process, there are certainly elements of

17 the new process that could be viewed as improvements across

18 the board. There are also things in the new process or

19 changes in the new process that could be viewed as lessening

20 regulatory effectiveness.

21 I think our personal view is that the overall net

22 effect of the proposed changes are positive, but we're

23 getting a lot of calls from people that live around the

24 plants and people we work with feeling that these possible

25 elements of back retreating outweigh the benefits and they,

1 therefore, should not -- we should not move in this
2 direction.
3 So I think it goes back to a public communications
4 standpoint, unless we're wrong, but we hope we're not.
5 The program needs to be communicated fully and
6 effectively so that people really understand it, and I think
7 that's where I've tried to steer most of my comments today.
8 I originally spent a lot of time looking at 1649,
9 because I thought it was a proposed document. I didn't
10 realize it was out. Because I attended all three days of
11 regulatory information conference, but I never saw it, so I
12 didn't know that it was a public document. So a lot of
13 those comments are moot now.
14 The proposed oversight process is not complete, as
15 we heard this morning, but it appears to be developed to the
16 point where the time has come to try it out. To us, the
17 encouraging thing about trying out a work in progress is
18 that the NRC staff has been and appears -- there is every
19 sign that it will continue to be receptive to comments and
20 to make midcourse corrections. So with that encouragement,
21 we figure it's probably time to go ahead and try this thing
22 and see how it works.
23 Plus, some haste is warranted because the plants
24 are currently operating in a transition regulatory state and
25 of uncertain effectiveness. So there is risk either way and

1 we think the risks of not proceeding are greater than
2 proceeding at this point.
3 With respect to the question of aggregation of
4 little bitty things, we think it's time to put this issue
5 onto the shelf until sometime in the future. To me, it's
6 kind of like trying to determine if the car involved in a
7 drive-by shooting was speeding at the time. We really need
8 to focus on the felonies before we get into the
9 misdemeanors.
10 COMMISSIONER MERRIFIELD: You really have a term
11 for those phrases. We ought to compliment him.
12 CHAIRMAN JACKSON: Are you sure you were not an
13 English major?
14 MR. LOCHBAUM: No, I got proof of that.
15 CHAIRMAN JACKSON: I like that. Can I use that?
16 MR. LOCHBAUM: Sure.
17 CHAIRMAN JACKSON: You won't accuse me of
18 plagiarism.
19 MR. LOCHBAUM: No. I don't even know what that
20 word means. Slide three. These are things that we look at
21 as being the best parts of the new program. The new
22 assessments -- the old assessments used to be performed in
23 four broad categories, even though it says board categories.
24 CHAIRMAN JACKSON: Now I see what you mean about
25 the English major.

1 MR. LOCHBAUM: I do that mainly for Herb's
2 benefit. He catches one every time. So it's just to make
3 him happy.
4 The new process is going to look at 18 to 20
5 performance indicators and so you get more discreet
6 indications of performance. In addition, the new
7 performance assessments will be done every three months
8 instead of 18 to 24 months. You'll be better defined and
9 quicker NRC response to performance declines. So we think
10 those greatly outweigh any potential drawbacks in the new
11 process.
12 But there are signs that people could take that
13 the new process is a step backwards or at least not a step
14 forward, those being, not in any particular order, the fact
15 that level four violations are now being neglected.
16 NRC is going to rely heavily on performance
17 indicators provided by the plant owners themselves.
18 CHAIRMAN JACKSON: Can we have the next viewgraph,
19 please?
20 MR. LOCHBAUM: The NRC will be spending -- may or
21 may not be spending significantly fewer hours inspecting
22 plants and the NRC will downplay problems if the overall
23 performance is green.
24 That's slide five, please. Then I took particular
25 issue of page two of the SECY paper, which said over the

1 last ten years, commercial nuclear power plants have
2 operated safely. I took personal -- I have a chip on my
3 shoulder, because if I felt that was true, I wouldn't be
4 with UCS. It was my feeling that the NRC didn't handle a
5 safety issue that I brought forward that led me to be at UCS
6 and I think that's the reason George Glass is on the cover
7 of Time and others, that there is two sides to every coin.
8 I work with a lot of people who share this view.
9 CHAIRMAN JACKSON: May we have the next viewgraph,
10 please?
11 MR. LOCHBAUM: I think the important thing is that
12 that opinion and also the opinion on the next page, slide
13 six, GAO's opinion that NRC regulations and guidance do not
14 define for either a licensee or the public the conditions
15 necessary for plant safety. If GAO's opinion is right, then
16 the first opinions can't be right, because the NRC doesn't
17 know what safe and unsafe is.
18 I think the important part is that they're all
19 just opinions. It doesn't really matter, but they do lead
20 to perceptions amongst the various stakeholders and I think
21 those perceptions are the key to why some people think this
22 program will work and may not work.
23 Going to specific comments, on slide seven, the
24 figure one, which was also in slide eight in the handout
25 this morning, on the significance determination process,

1 contains a box titled engage licensee and NRC risk analyst
2 for refinement.
3 There was no discussion of what that really meant
4 within the SECY paper or this morning. Our concern is
5 that's the subjectivity of the past, where there was a
6 problem, you then kicked it back to the licensee to say tell
7 me why this is not a problem. That, first of all, it isn't
8 going to incur some kind of delay. Since the results are
9 being reported quarterly, you can't wait six months to a
10 year to get a response back on what this -- whether this
11 really was or was not a problem. So we're concerned about
12 the potential delays.
13 We're also concerned about what -- if there is a
14 large percentage of these items that are passed through all
15 the other screens and get to this point and now downplay,
16 the public confidence in the whole process will be not as
17 great if there isn't a high percentage of these things that
18 are downplayed at that point.
19 Also, there seem to be an awful lot of boxes on
20 that screening or significance determination process and it
21 makes me a little bit skeptical that that process is going
22 to be timely.
23 On attachment four, the enforcement strategy, this
24 was already discussed this morning a little bit. Whether
25 you can really use a delta core damage frequency to

1 determine the significance of inspection findings. I think
2 it works pretty well in the performance indicators, because
3 if there is a bias between the plants, it's the same bias
4 and it doesn't -- it gives you some relative indication of
5 safety significance.
6 On individual inspection findings, when you start dealing
7 with licensees, you're going to get some licensees that can
8 play the game very well, that played the game under the SALP
9 process very well, and there's going to be some licensees
10 that can't play the game very well, and their inspection
11 findings will not be.
12 Plus, you allow the NRC subjectivity in whether
13 they -- how much weight they want to give on the licensee's
14 determination of whether -- how refined refined can be. So
15 we think there are some concerns with these two process as
16 they are coupled together.
17 The example would be this Sunday is the 20th
18 anniversary of the Three Mile Island accident. I think if
19 you took the stuck-open pilot operated relief valve, which
20 there had been a history at the plant and other plants, the
21 closed AFW valves and the human performance problems, and
22 did a delta core damage frequency on those three events, you
23 probably would have gotten something less than
24 ten-to-the-minus-sixth.
25 Which is not to say that this new process should

1 be able to capture or prevent TMI, that is not a realistic
2 goal and that's not what we're saying, but the point we're
3 trying to make is that numbers can be misleading sometimes
4 and too much faith put into a shaky system is not warranted
5 at this time. Maybe down the road, but not at this time.
6 We also are somewhat disheartened at the April
7 1998 predecisional enforcement conference for the D.C. Cook
8 situation, Mr. Lieberman asked the licensee if the
9 containment was functional or operable at the time and they
10 said they couldn't -- didn't have an analysis to show that
11 it was, but their gut feeling was it would have worked and
12 would have functioned in case of an accident.
13 I don't know how a gut feeling, is that
14 ten-to-the-minus-sixth, I don't know how that will play out
15 in this new system, but we're concerned that those kind of
16 numbers might be used to downplay the significance of what
17 happened at that plant and others in the future.
18 Slide eight, please. These were the comments on
19 the NUREG, which I thought was a draft form, so I spent more
20 time there than I probably should have. Some of these words
21 are difficult for the people in the street to understand,
22 like the manual unplanned reactor scram, somebody actually
23 asked me one time how it could be, does the operator just
24 not know what was going on. They took it that the unplanned
25 was the fact that he somehow bumped into the scram switches

1 or something, how did that happen, not that it was what
2 really happened.
3 Those terms have real nice meaning to most people
4 in the industry, but not people in the street who don't know
5 what that nice -- those tricky words mean.
6 So sometimes that can lead to a false impression
7 and heighten concerns. So I'm not going to spend a lot more
8 time on that.
9 Slide nine. The communication plan, I thought it
10 was interesting that on the table, the internal/external
11 stakeholders, there wasn't any public -- actually people
12 living around the plants included. For the pilot plants,
13 we'd be glad to provide a list of people living around each
14 one of those plants that are concerned about safety and the
15 people we deal with.
16 I can't guarantee that they'll come to the
17 meetings and things like that, but they should at least be
18 solicited to see if they're interested, and I can provide
19 that if that would be helpful.
20 In conclusion, going back to the statement on
21 slide ten, if the NRC staff truly believed that all nuclear
22 power plants had operated safely in the last ten years,
23 first of all, the Senate might be right as far as reducing
24 the number of staff members.
25 If that is truly the case, then the staff may be

1 too large, as the Senate proposed last year. We don't agree
2 with that. We think the staff has an important mission and
3 needs to do that. We don't think there should be any number
4 cut drastically. We also don't think the evidence would
5 suggest it.
6 It goes back to the definition of safety and I
7 think the person in the street could see a car zoom by a
8 school district and consider that an unsafe practice,
9 whether you hit a child or not. It is an unsafe practice.
10 So I think some of the plants in the last ten years have
11 been in the more broadly accepted view of safety and
12 non-safety, been operated unsafely.
13 The fact that they didn't cause an accident or
14 there wasn't an accident at the time is nice, but it's not
15 the true definition of safe and unsafe.
16 So I think that may be a difference between the
17 public acceptance of these terms, is the definition of what
18 is safe and unsafe, and I think it's important that in this
19 process, we nail that down and reach a consensus on that.
20 Thank you.
21 CHAIRMAN JACKSON: Okay. Commissioner Dicus.
22 COMMISSIONER DICUS: No questions.
23 CHAIRMAN JACKSON: Commissioner McGaffigan.
24 COMMISSIONER McGAFFIGAN: The issue of what the
25 role if inspection is compared to performance indicators, we

1 had some discussion of that earlier. What is your
2 expectation of our inspection program and what its
3 contribution to this process is going to be? You heard
4 Commissioner Merrifield and the staff talk about the fear
5 among some of our folks that our inspection program is going
6 to be marginalized, but relatively few findings are going to
7 rise to the significance that they're going to have any
8 impact at all on the assessment process.
9 And since I think we've now got -- we don't have
10 an enforcement process driving assessment anymore, we have
11 the enforcement process, at least for the calculable areas,
12 a corollary of the assessment process, which may be good.
13 But does that add up to you or would you expect
14 more of the inspection process? What are your expectations?
15 MR. LOCHBAUM: Like I said, I didn't look at it in
16 that view. I looked at it in view of the feasibility study.
17 It showed like D.C. Cook and Millstone, a lot of the issues
18 that came out of that backward-looking or the feasibility
19 study was that hardware issues were identified and those
20 hardware issues weren't really captured under the old
21 inspection program.
22 I think the new focus, as I saw it laid out in the
23 January original version of the SECY paper, kind of
24 recognized that and took the inspection program into the
25 right areas.

1 CHAIRMAN JACKSON: Do you feel that's being
2 preserved in 007A?
3 MR. LOCHBAUM: I think so, yes, from everything
4 I've seen.
5 COMMISSIONER McGAFFIGAN: But we don't expect to
6 find much. You think the new inspection process, with this
7 threshold for ten-to-the-minus-six delta CDF, whatever, that
8 those things that happened at Millstone or the other plants
9 would have triggered, or are we really relying on
10 performance indicators to trigger that this plant is in some
11 difficulty?
12 Because if you take each of them individually and
13 pencil-whip it, as you say, you may remain merrily in the
14 below ten-to-the-minus-six zone and how does it all --
15 MR. LOCHBAUM: I think I haven't tried to figure
16 out which is more important, because I think it's being
17 presented as an integrated process and I think they're
18 equally important.
19 I think the fact that there are so many discreet
20 categories, that whether it's a performance indicator that
21 raises a flag or an inspection finding that raises a flag,
22 the process should allow that to be -- that performance
23 slide to be detected and action taken to correct it.
24 I think the numbers I heard today, if I was an
25 inspector and I saw that there were only ten -- you know,

1 that number of ten that kept getting used, I'd want to get
2 one of those ten. So I think I would -- and I think I
3 could, over the next year, get one of those ten, because
4 that gets you into a pretty elite category right off the
5 top.
6 COMMISSIONER McGAFFIGAN: Are you volunteering to
7 -- no, I'm just --
8 MR. LOCHBAUM: I am. I'm not sure the plants
9 would equally volunteer for that. I didn't realize that
10 point about having the inspectors on board. I think that
11 was important that that came up this morning, because I
12 hadn't thought of that and I feel somewhat remiss for not
13 having, because it is an important part.
14 But I think the effort that I saw in January, as
15 far as what the inspection module was laid out and what it
16 was going to look at, should be a pretty good process.
17 COMMISSIONER McGAFFIGAN: Who is going to -- if
18 you're worried about pencil-whipping and some licensees
19 being better at it than others, do you intend or who will
20 keep the process on us? They did answer earlier it's going
21 to be scrutable and, therefore, when they categorize it, an
22 inspection finding is something that's not going to be one
23 of the ten, that they'll have a little notation in there as
24 to why it wasn't, that it fell into category 1GH or
25 something.

1 And then you'll be able to go to work and see
2 whether you agree or whether there's an awful lot of these
3 1GHs showing up, starting a pattern or whatever. But is
4 there any intent -- has anybody in the public have the
5 resources to look at the results and question whether we are
6 covering things up or pencil whipping things?
7 MR. LOCHBAUM: I think Ross Perot has the
8 resources. Whether he'll allocate them for the purpose, I
9 don't know.
10 COMMISSIONER MCGAFFIGAN: Are you, also, making a
11 request to the Ross Perot foundation?
12 MR. LOCHBAUM: No. I think that's a good
13 question. I don't know -- the best we can do is monitor
14 processes and when we see abuses, raise a flag. I think --
15 like I said earlier, I'm encouraged by the NRC staff's
16 receptiveness to comments. I have every reason to believe
17 that's going to continue and that will -- that's why I
18 agreed to Mr. Madison's request to be on -- although I
19 forgot to check with him about the uniforms, but I wanted to
20 be on the --
21 MR. MADISON: No uniforms.
22 [Laughter.]
23 MR. LOCHBAUM: Agreed. I think that would be
24 helpful. That's how we intend to factor that kind of
25 comments back.

1 MR. MCGAFFIGAN: Thank you, Madam Chairman.
2 CHAIRMAN JACKSON: Thank you. Commissioner
3 Merrifield.
4 COMMISSIONER MERRIFIELD: I've got two questions.
5 I guess -- I've been sitting here long enough at this point.
6 I was going through slide five and I'm not as -- I saw the
7 comments about the Easter Bunny, Santa Clause, and the Tooth
8 Fairy, and I'm not as receptive to sarcasm as I may have
9 been a few hours ago. But, I guess my primary point relates
10 to the comment in SECY 97-07A, regarding the fact that
11 overall plant performance has improved -- that's sort of the
12 second half of that sentence -- over the last 10 years.
13 And I guess the question I have for you is: are
14 you saying that overall plant performance has not improved
15 over the last 10 years or do you think it's the matter that
16 we, as the NRC, lack the objective evidence to make that
17 conclusion?
18 MR. LOCHBAUM: Right now, there's four plants that
19 have been shut down for over year due to safety problems.
20 The fact that these plants are in extended shutdowns,
21 there's no winners for -- shows that they built -- they're
22 in pretty big holes, that it takes a year plus outage to
23 fix. Our feeling is that those plants were marginally safe
24 or unsafe before they shut down for these year plus outages,
25 and that shouldn't have been allowed to happen. It's good

1 that the process ultimately led to them being shut down and
2 there things to be fixed. But, in our view, that downward
3 slide hurt for too long a period and too much safety margin
4 was removed before that step was taken.
5 MR. MERRIFIELD: That's fair, but let me reiterate
6 my question. Are we or are we not safer than we were 10
7 years ago? That's the summary of what the second part of
8 that sentence says.
9 MR. LOCHBAUM: I think you're -- overall, it's
10 safer than it was 10 years ago. But, in some respects, it's
11 like Abe Lincoln. You were shot in the head. Overall, his
12 body was in pretty good shape, but --
13 [Laughter.]
14 CHAIRMAN JACKSON: He's good.
15 MR. MERRIFIELD: You know, you just had to tag
16 that on. I'll take the first half of your answer on that
17 one.
18 MR. LOCHBAUM: The same price.
19 MR. MERRIFIELD: I'll just finish -- I know you
20 spent some time going with some detailed comments regarding
21 new reg 1649, and I have to say, I appreciate those
22 comments. Obviously, you know, notwithstanding the fact,
23 you sort of -- you were looking at an interim document,
24 rather than a final one. I think that, obviously, you put a
25 lot of time and thought into that. I think -- you know, we

1 know the staff is working hard to explain this stuff. It's
2 in plain English and I think, hopefully, as we do a further
3 revision on that document, your comments and further
4 comments in that regard will prove helpful.
5 MR. LOCHBAUM: Okay; thank you.
6 CHAIRMAN JACKSON: I have a few questions for you.
7 I'm going to your slide that talks about signs that NRC is
8 retreating. That's slide four. You said most level four
9 violations are being neglected. The question I would have
10 for you, as you look at the -- where the enforcement program
11 has gone, what, in terms of correcting the conditions that
12 make up the violation, has changed from the old method?
13 MR. LOCHBAUM: None whatsoever. It's not that I
14 disagree. In fact, I was a proponent or an advocate of the
15 new process, as it's done.
16 CHAIRMAN JACKSON: Okay.
17 MR. LOCHBAUM: But, you know, the slide that was
18 shown to the Senate, where you show the numbers, somebody
19 who wasn't privy to those meetings and understands why that
20 happened, looks at that -- could look at that, that the NRC
21 has just conceded to what the Senate asked for and just
22 backed off and let the industry do what it wants. I don't
23 think that's a fair impression, but that's --
24 CHAIRMAN JACKSON: So, it's a communication issue?
25 MR. LOCHBAUM: Right.

1 CHAIRMAN JACKSON: Then you say NRC will rely
2 heavily on performance indicators and data supplied by the
3 plant owners. And the question is, again, is this a
4 communication issue or do you acknowledge both the NRC
5 verification of the PIs included in the program, as well as
6 the fact that the baseline inspection program will cover
7 more than just what the PIs will cover?
8 MR. LOCHBAUM: I take great comfort in both of
9 those. I don't see any problem with it. This is part of
10 the question I get most often from reporters, who call up
11 and want to know what's the difference between the new
12 program and no program. Most reports and most people, who
13 live around the plants, don't sense some kind of game being
14 played by licensees and the number -- the information that's
15 being passed along and some ability to manipulate it and,
16 therefore, the NRC to be misled.
17 My consistent answer is, if you don't trust the
18 plant owners, you should take away the keys. You shouldn't
19 -- this shouldn't be what you're worried about. I mean,
20 they have a big investment in that plant. They're doing
21 things right. You know, trust -- you need to get trust out
22 of the equation. To a certain extent, the NRC is coming in
23 and verifying that, to make sure that the information is
24 right. I think that's a prudent thing to do. But, we don't
25 have any problem at all. But, that's a comment we get more

1 often than anything else.

2 CHAIRMAN JACKSON: Do you feel, again, it's

3 communication, in the sense of the NRC not adequately

4 explaining the various elements, not just performance

5 indicators, but the baseline inspection program and how

6 enforcement is going to work, the integrated whole?

7 MR. LOCHBAUM: Well, I think it's a symptom of an

8 overall communication problem, because we get a lot of calls

9 from people who think that the resident inspectors are

10 looking over their shoulder of every plant employee doing

11 every test and inspection. And that's not a realistic

12 expectation; it should never be. But, people don't really

13 understand what the inspection program is and lack of --

14 this is a fall out of that lack of understanding.

15 CHAIRMAN JACKSON: And then the one that says, NRC

16 will downplay problems, if the overall plant performance is

17 green. I mean, the fact that you've endorsed the process

18 means that's not what you believe, but this is a perception,

19 again. Is that what you're saying?

20 MR. LOCHBAUM: Right. Even -- we skipped over the

21 third one with the few hours. I don't see any of these as

22 being problems. These are perception issues that I've heard

23 over the last few months, that are all communication

24 problems. I'm not sure that NUREG-1649 really address these

25 and put these kind of issues to bed.

1 CHAIRMAN JACKSON: If I go to slide six, where you
2 said you agreed with GAO's comments --
3 MR. LOCHBAUM: Yes.
4 CHAIRMAN JACKSON: -- NRC's regulations and other
5 guidance do not define for either a licensee or the public
6 the conditions necessary for pant safety, therefore,
7 determining a plant safety is objective. Would you be
8 arguing that if NRC went away, that the existing level of
9 safety would remain and there is no role for the regulatory
10 oversight?
11 MR. LOCHBAUM: I don't personally believe that,
12 but I would be hard pressed to prove it. Because, if you
13 look at the industry, there are really good performers, who
14 are doing it because it's economics and they're making a
15 huge investment. There are certain people that don't get
16 the message. And I think the people who don't get the
17 message, unless the NRC does a better job of getting that
18 message to them, will persist in the future. And the guys
19 who are doing good now will continue to do good.
20 CHAIRMAN JACKSON: On your page seven, the issue
21 on enforcement strategy. You know, you pointed out what you
22 felt were weaknesses of the $10^{-6}$ delta CDF. And to some
23 extent, I agree with you. I understand what you mean. But,
24 what would you see us offer, as an alternative methodology,
25 to get at the --

1 MR. LOCHBAUM: I wouldn't -- in terms of
2 enforcement space, I wouldn't even worry about it. I would
3 decouple that all together. The assessment program, itself,
4 with the responses that are built into that matrix, those
5 are -- that just seems like a waste of effort on everybody's
6 part, with the exceptions of the ones that are -- the
7 willful -- the other category, the willful actions and so
8 on. That seems like a lot of unnecessary effort.
9 CHAIRMAN JACKSON: And slide 10, you say, if NRC
10 staff truly believes that all nuclear power plants have
11 operated safely, and this is going back to what you were
12 saying earlier -- I guess I'm trying to understand something
13 -- and if it truly believes that all the NPPs have operated
14 safely in the past 10 years, the proposed reactor oversight
15 process is doomed to failure. I guess the question is --
16 I'm trying to make a link between this statement about its
17 being doomed to failure, to your basically believing, you
18 know, let's get on with the process, where --
19 MR. LOCHBAUM: Right.
20 CHAIRMAN JACKSON: -- you like it. I mean, are
21 you arguing that there's some holes in the process, as it
22 has been laid out, that wouldn't allow us to have gotten at
23 these today, if we use the process on a go forward basis?
24 You know, what do you say about whether these particular
25 licensees would have been captured?

1 MR. LOCHBAUM: I think the hole -- in the January
2 Commission briefing, we talked about the executive
3 overrides. If the staff believes all plants are safe, then
4 there would be a greater reluctance --
5 MR. MERRIFIELD: If I could interrupt for a
6 second.
7 MR. LOCHBAUM: Yes.
8 MR. MERRIFIELD: You've got to go back to the
9 language. It says, over the last 10 years, commercial
10 nuclear power plants have operated safely and overall plant
11 performance has improved. It doesn't say all plants --
12 CHAIRMAN JACKSON: I think there are two issues
13 here.
14 MR. MERRIFIELD: -- have operated safely.
15 CHAIRMAN JACKSON: One has to do with his bullet
16 that has "all," as opposed to --
17 MR. MERRIFIELD: Right.
18 CHAIRMAN JACKSON: -- average performance. But,
19 there's a separate question that I'm actually addressing,
20 which has to do with these specifically identified examples
21 that you say have been shut down for a year, two years, for
22 serious safety problems. I guess I'm trying to understand
23 whether you think the process, as laid out, will -- well,
24 first of all, are you saying that you, yourself, or UCS
25 believes that these plants were not being operated safely?

1 MR. LOCHBAUM: I believe D.C. Cook, Millstone,
2 LaSalle, and I don't know much about Haddam Neck, when they
3 got the fines, so I'd say three of those four were unsafe,
4 yes.
5 CHAIRMAN JACKSON: Now, do you believe that the
6 process, as outlined, will capture those?
7 MR. LOCHBAUM: It's hard to say. It could. But
8 with the -- for example, the Millstone case, we have a
9 letter -- correspondence between the Director of NRR and
10 myself about whether that plant was operated safely the day
11 before it shut down. The NRR staff's position is yes, it
12 was. If you believe Millstone was operated safely and you
13 have a -- either at that plant or another plant, you have
14 similar kinds of performance problems, you will be less
15 likely to consider it red, whatever it was performance
16 indicator inspection finding, you're more likely to put it
17 into white or yellow.
18 CHAIRMAN JACKSON: So, what you're saying is your
19 concern is whether some subjective and/or summary judgment
20 will override what comes out of an examination of
21 performance indicators and the inspection program?
22 MR. LOCHBAUM: Exactly.
23 CHAIRMAN JACKSON: Is that what you're saying?
24 MR. LOCHBAUM: That's exactly right.
25 CHAIRMAN JACKSON: So, what you're basically

1 saying is that if one is going to implement the process, one
2 has to implement the process and not have -- and refine it
3 as necessary through the pilots, but not have it overridden
4 by summary subjective judgments? Is that the message you
5 really want to deliver?
6 MR. LOCHBAUM: That's the message, because that
7 was what we told the Senate, was, technically, the old
8 program, the way it was written would have worked as well.
9 So, it's not the program, it's the implementation. And I
10 think that's still the key to this program, as well as it
11 was the old one.
12 CHAIRMAN JACKSON: Okay. I think that's a good --
13 that's a reasonable admonition. When Arthur Andersen came
14 in here -- I don't know how long ago now -- two or three
15 years ago and looked at the issue of performance indicators
16 and whether they could be developed or used to make
17 judgments in the then senior management process, a point
18 that was made was that -- by them, at least they asserted,
19 was that NRC had ample data, had a lot of data from the
20 various -- I mean, even if they were -- some of them
21 redundant and so forth. But, it had ample data from the
22 existing processes: inspections, PPRs, SALPs, whatever.
23 But, there got to be a point where there was a disconnect
24 between everything below the senior management meeting and
25 the senior management meeting, itself, in terms of the

1 judgments that were made. And so, I think -- is that what
2 your comment relates to?
3 MR. LOCHBAUM: The other comment on putting the
4 aggregate of little bitty items on the shelf?
5 CHAIRMAN JACKSON: Right.
6 MR. LOCHBAUM: This focused on the importance of
7 first, get some confidence and then go on to the lesser
8 important stuff.
9 CHAIRMAN JACKSON: And then I think just back to
10 your sort of basic bullet, I think -- is the message there
11 that you want to be sure that one doesn't confuse aggregate
12 performance for all performance, in terms of aggregate being
13 good or improved, versus all being good and improved?
14 MR. LOCHBAUM: Right, because --
15 CHAIRMAN JACKSON: Given the specific examples
16 you've culled out here, is that the message, that one --
17 MR. LOCHBAUM: That's --
18 CHAIRMAN JACKSON: -- should not confuse the issue
19 by taking average to include all, is that -- because, it
20 does say "average;" it doesn't say "all."
21 MR. LOCHBAUM: Right. Well, that's kind of the
22 new oversight process, is that the inspection reports are
23 going to document positive findings, but the assessment
24 program is not. It's looking at the bad parts. So, this
25 statement lumped it all together, kind of threw it --

1 probably like judges, you throw out the high and the lows,
2 you go for the middle. But, in nuclear safety, it's really
3 the lows that are what this agency should be looking at.
4 CHAIRMAN JACKSON: That's right. I mean, TMI was
5 one plant.
6 MR. LOCHBAUM: Right.
7 CHAIRMAN JACKSON: Since you're talking about the
8 20-year anniversary, it was one plant; right?
9 MR. LOCHBAUM: Yeah.
10 CHAIRMAN JACKSON: And the one plant drags all the
11 plants down, by implication.
12 COMMISSIONER MCGAFFIGAN: Madam Chairman, can I
13 ask him one question before you let him go? There's one
14 issue that came up this week, and I meant to ask you about
15 when it was my turn. You've recently sent us a report about
16 excess of overtime, use of excess of overtime in the
17 industry. And I was a little surprised that you hadn't said
18 that that should be a performance indicator. Is your
19 long-term strategy, that we -- if you get all the data that
20 you and the various Congressmen are asking for from us and
21 we look at it, that this will be a performance indicator on
22 human performance or something? What do we do with the
23 information you're asking for?
24 MR. LOCHBAUM: We very carefully didn't ask for
25 performance indicators, because there are several plants,

1 and perhaps the majority of plants, that do have adequate
2 controls on worker overtime. It's kind of like our comments
3 on safety culture, we didn't want to create a new rule -- a
4 new performance indicator, because most of the people are
5 doing well. There are some people that are abusing the
6 system and those are the ones that need to be dealt with.
7 And it's not fair to penalize all the plants for a couple
8 that are abusing the system.
9 COMMISSIONER MCGAFFIGAN: But isn't that what a
10 performance indicator is? I mean, if you had a performance
11 indicator and 90 out of the 103 plants, or 98 out of the 103
12 plants are doing swell, and then green would be the 21's
13 indicator and 98 are doing well and we could focus on the
14 five and we'd know them. So, that's why I'm a little
15 puzzled why you say --
16 MR. LOCHBAUM: Well, performance indicators aren't
17 necessarily places where -- I think most of the performance
18 indicators, 90 percent of the plants are going to be doing
19 swell. I think our group has a proliferation component and
20 we're worried about just assume any performance indicators.
21 If the answer to every issue is a performance indicator,
22 that's a burden -- unnecessarily regulatory burden part of
23 it. So, we're trying not to do that --
24 COMMISSIONER MCGAFFIGAN: Okay.
25 MR. LOCHBAUM: -- whenever possible.

1 CHAIRMAN JACKSON: Commissioner Diaz didn't have
2 the benefit of, you know, hearing your remarks and the
3 particular twists. Nonetheless, I would like to offer him
4 the opportunity to ask any questions.
5 COMMISSIONER DIAZ: I would just like to say a
6 comment, that everybody looks very good on the T.V.
7 monitors.
8 [Laughter.]
9 CHAIRMAN JACKSON: You mean from upstairs?
10 COMMISSIONER DIAZ: From upstairs. It's a little
11 bit better than looking across the table. No, no, just
12 kidding.
13 [Laughter.]
14 CHAIRMAN JACKSON: I think we'll go along now to
15 -- it's getting late -- Mr. Beedle, Mr. Floyd, and Mr.
16 Bishop. Thank you.
17 MR. BEEDLE: Commissioners, good afternoon.
18 CHAIRMAN JACKSON: Yes, good afternoon.
19 MR. BEEDLE: Could we have slide two for -- let's
20 go to slide two. We would -- some general remarks: we
21 think there's been some just superb progress made in this
22 area and we would comment on the fact that the staff has
23 really put an awful lot of effort into this. We've, also,
24 had a lot of industry effort devoted to it, as well. And as
25 a result of that, I think there's been a lot of stakeholder

1 industry, as well as other support and opportunity to
2 participate in this.
3 CHAIRMAN JACKSON: Let me ask you a question, Mr.
4 Beedle. When you say stakeholder, do you mean industry?
5 MR. BEEDLE: I mean industry and it's open to the
6 public. We've had some, not many, but it's been available
7 to them. So the opportunity is there, whether or not they
8 avail themselves of that opportunity. I've often wondered
9 whether we ought to just go down and grab four or five
10 people off the street, bring them up, and have them sit in a
11 meeting. We call that a public meeting. But, they are
12 public and they're noticed and those that are interested
13 participate. In fact, I would note that David's been
14 involved in the initial workshop that we had on this
15 subject. I think you were there probably the full time, or
16 at least the better part of it.
17 A lot of, I think, good dialogue in this process
18 that I think serves as a model. As you know, we've
19 continued to press to have more and more information
20 exchange with the agency, as we try and come to grips with
21 some of these problems.
22 And before we turn to some details that Steve will
23 cover, let me talk just a little bit about this scram issue
24 and I think there was an invitation that we make some
25 comment on that. In the early days of INPO's development of

1 the performance indicators, there was concern over how you
2 counted the scrams. And at the time we were developing
3 those indicators, the number of scrams per plant was, in
4 some cases, in the teens, but typically in the five or six
5 range. And there was a real concern for trying to rely
6 heavily on the automatic protection systems at the plant.
7 It isn't that they didn't trust them, but they wanted the
8 operators to understand that you didn't rely on that system
9 to protect you.
10 And so, they were encouraging the operators to
11 take manual action before you got to the point where the
12 trip signals would cause the plant to scram. And in
13 counting the number of scrams as a performance indicator,
14 they made a reason judgment that we would only count the
15 automatic scrams and that would thereby encourage the
16 operators to take manual action, before the automatic kicked
17 in. And that's how we got into that -- this conflict
18 between automatic and manual, at least from the performance
19 indicators, as INPO was looking at them. And I think in a
20 large measure, that has carried in to this discussion of
21 whether or not we ought to count all scrams in looking at
22 the performance indicators for this assessment process.
23 We have made some tremendous improvement in the
24 performance indicators overall, the WANO performance
25 indicators, and we're looking at the typical plant has less

1 than one scram a year. We've had a couple of plants
2 recently where they had a little more than two or three
3 scrams, but it's, you know, pretty decent.
4 So, now, we're talking about an indicator for this
5 assessment process, where the lower end of the green band is
6 at three. And I would argue that any plant that has three,
7 whether they are automatic or manual -- unplanned manual, is
8 probably looking at some problems in the plant that is
9 deserving of attention. So, we see this green band that was
10 established for the scram parameter here in the assessment
11 process is all encompassing, in terms of the performance
12 indicator that the WANO performance indicator would have you
13 look at.
14 So, we're -- you know, we don't -- we have not
15 been overly concerned about counting the manual scrams.
16 And, in fact, we think that counting the manual scrams is,
17 along with the automatic scrams, is the right thing to do,
18 because it represents that transient in the plant that is
19 indicative of some material or procedure problems.
20 COMMISSIONER DIAZ: I'm sorry, I just want to
21 bring something out that will probably show how old I am,
22 which is not precisely one of my favorite subjects. But, I
23 clearly remember in 1978-79, the studies being made with a
24 totally different twist. We didn't know how to use risk
25 information. And we actually looked at the fact that scrams

1 were an indication of how good the safety systems were. And
2 the manual scrams were a good indication of how alert the
3 crews were.
4 And of course, a lot of changed since then. But,
5 however, it does still remain that, you know, scrams per se
6 -- and this is what -- you know, before I said it's
7 important to, you know, deal together with the technology
8 base, the regulatory base, and the risk-informed based, and
9 not independent of each other, because many years ago, we
10 used to say, wow, this plant -- if anything happens and it
11 shuts down.
12 Of course, now, we are concerned about the
13 shutdown. But, it does, you know, show you how the industry
14 has changed and how the regulatory bases have changed. And
15 now, we have an opportunity of pulling them together and we
16 should avail ourselves of the history and the risk
17 significance of these events.
18 CHAIRMAN JACKSON: Commissioner?
19 MR. MERRIFIELD: I was just -- I was actually
20 going to wait and ask you that question at the end, but, I
21 was just wondering if Mr. Lochbaum had a response. Do you
22 agree with Mr. Beedle on that?
23 MR. LOCHBAUM: Well, one of the things I got out
24 of this morning's discussion was the redefinition of manual
25 scrams to be loss of heat sink. And I think -- that was the

1 first time I heard that. That's not right?
2 MR. DEAN: No.
3 MR. LOCHBAUM: Okay. Well, even with that
4 correction, now, I still do agree with Mr. Beedle. From
5 everything I've seen, from what I've read, I think that's
6 not going to be a problem. So, I would agree with him.
7 MR. BEEDLE: Well, this topic of counting the
8 manual scrams has been -- there's been a lot of heated
9 discussion within the industry, because they're still
10 looking at the performance indicators that the WANO
11 organization utilizes, in comparing that with what the staff
12 has proposed.
13 And that's the case in a number of these
14 indicators. There's a little conflict between a WANO
15 indicator and what is being proposed for use in this
16 assessment process, and we continue to try to resolve that.
17 It's easy to look at this set of indicators and say, is this
18 the same as the WANO indicator. And the answer is no, and
19 we need to continually remind people of that.
20 One last observation, before I turn it over to
21 Steve, is this issue of communications. And I agree with
22 David and I agree with the Commissioners and I agree with
23 the staff, that it is an issue that we need to put a lot of
24 effort into. Steve has now structured an organization, in
25 which he's got some people dedicated to dealing with the

1 pilot plant process, as well as communications and
2 information transfer. And we'll work hard to try and make
3 sure that our people within the industry and the people in
4 the vicinity of the plants are as informed as we can
5 possibly make them with out this process. So, it's not
6 something that's escaped the industry and our effort to try
7 and deal with this.
8 So, with that, Steve.
9 MR. FLOYD: Thank you, Ralph. Good afternoon. If
10 I could have slide three, please.
11 I do have a couple of open issues and comments to
12 make on the overall process. But, first, I think where we
13 really are in this process now is it's time to test it out
14 in the pilot phase. I think we've pretty much learned about
15 all we could learn about where our differences of opinion
16 may be right now, without getting more knowledge. And the
17 only way we're going to get more knowledge, I think, is to
18 test it out and move forward. So, don't read my comments as
19 being impediments to moving forward, but merely things that
20 need to be addressed and considered as we move forward.
21 The significance determination process that Morris
22 Branch described, we think it's well developed. It's well
23 thought out. It's been an awful lot of effort put into
24 that. We were very encouraged in one exercise we went
25 through. The staff asked us to take a look at about 20

1 licensee events reports that they thought had some
2 significance from the past census they did internally and
3 have our people take a look at it to see if we would reach
4 the same significance determination using the matrices in
5 that process. And I can tell you with the exception of one,
6 we did, and the one was probably -- because we had some
7 later information that was factored into it that staff
8 didn't have at the time and, perhaps, if they had that
9 information, we think they might have reached the same
10 conclusion that we did on it.
11 CHAIRMAN JACKSON: Mr. Floyd, do you feel that the
12 significance determination process works equally well
13 vis-a-vis inspection findings, as opposed to LERs, you know,
14 event reports?
15 MR. FLOYD: Yes, we do. And, in fact, we've taken
16 a look at some of the inspection findings internally. And
17 the one thing I do agree with what the staff said this
18 morning is that there's going to be heavy reliance placed
19 upon people that have legitimate risk analysis capability.
20 And that's going to be an important part, as we try to test
21 this out.
22 Now, what we found within our industry group is
23 that those people that did not have much of a risk
24 background had a lot of difficulty applying the table and
25 often got quite variant answers. But the people that had a

1 good foundation in risk analysis capability were very
2 quickly able to assess the matrices and come to the
3 conclusion. In fact, we have a very experienced risk
4 analyst on our task team that took a look at the 20 and he
5 actually did all 20 in about a four-hour period and reached
6 a consensus that was consistent with the staff's evaluation
7 of it. So, we don't think it's a very difficult process to
8 go through, if you have the right going in knowledge.
9 The same cannot be said, however, for the
10 significance determination process, we think, for the
11 non-reactor safety cornerstones. There's been much less
12 effort and development put into these so far. We're not
13 sure the flowcharts are the right way to go with those. We
14 think it might be simpler and clearer to construct some
15 tables that give by -- give criteria and then give by
16 examples what might be different categories of findings.
17 The flowcharts right now are relatively confusing to work
18 your way through and somewhat subjective -- in fact, very
19 subjective. And as an example, I'd just point you to the
20 one, four safeguards and the others suffer from some of the
21 same problems.
22 The very first decision box in the flowchart asks
23 if -- asks you to determine the risk of radiological
24 sabotage, as a result of the condition, and you have two
25 outcomes coming out of the box. It either has some risk or

1 it has low risk. I don't know the difference between those
2 two, so -- there's more development work that needs to be
3 done. But, I think it can be developed.
4 The draft inspection procedures have just been
5 released for public comment. We just got them. I believe
6 Wednesday they were put in the PDR. So, we'll be going
7 through those and probably have comments in the future on
8 those.
9 On the action matrix, and I think this is an
10 important point for the industry. I think we need to
11 maintain the objective that what we're really after here is
12 trying to evaluate performance relative to the safety
13 significance of issues. And in one case, for example, in
14 the action matrix, there's a heading that talks about the
15 results. And there's a characterization that repetitive or
16 multiple degraded cornerstones, which may be degraded or put
17 into that characterization merely on the basis of white
18 inputs, we don't think that should be characterized as a
19 significant reduction in safety margin. Because if you go
20 into the other section of the SECY paper, where we talk
21 about the overall construct of the response zones, a white
22 inspection finding or a white performance indicator result
23 is characterized as having minimal reduction in margin of
24 safety and it's the yellow findings or PI results that are
25 characterized as having a significant reduction in margin of

1 safety. So, any more than you can take multiple greens and
2 say, gee, I think that might equal a white, we don't think
3 it's appropriate to take multiple whites and say, I think
4 that might equal a yellow.
5 The other thing that we think could be an
6 enhancement to the action matrix would be to distinguish
7 between a red input that is due to a single event, and I
8 think it was an issue that Commissioner McGaffigan mentioned
9 this morning, as compared to a red input, where it might be
10 as a result of a more programmatic issue at the plant, which
11 would be an indication of a more systemic problem. And
12 there needs to be some way to characterize those two
13 situations within the action matrix.
14 CHAIRMAN JACKSON: Let me ask you a question. I
15 mean, in terms of tying two and three together, you know,
16 there is an issue -- I'll use Mr. Lochbaum's example of, you
17 know, the individual who speeds pass the school every day
18 and doesn't hit anybody, and then one day he plows into a
19 group of kids and kills them all. And so, there has to be
20 someway to get from the one and do something to preventing
21 the other. And so, I think, you know, that's a kind of
22 issue that links your second and third bullets, and that you
23 can't walk away from.
24 MR. FLOYD: Yes. We totally agree. I think there
25 are several different ways to accommodate that in the action

1 matrix. Perhaps the addition of another column in the
2 matrix, to make not such a large jump between just having
3 one or two white findings all the way over to a
4 characterization of the significant reduction in margin of
5 safety is a way to handle it. Maybe an acknowledgment that
6 if you start having repetitive multiple degraded -- multiple
7 or degraded cornerstones, as a result of only white
8 findings, that -- there is indication that there is a
9 systemic problem of some kind going at the plant, but I
10 think it's premature to jump to the conclusion, as the
11 action matrix does, that that condition represents a
12 significant reduction in margin. It's certainly something
13 that needs to be evaluated and I think that can be reflected
14 --
15 CHAIRMAN JACKSON: Well, I think the issue -- the
16 programmatic issue and how it may relate to some multiple,
17 you know, degraded cornerstones that would put you in the
18 white is going to have to be addressed. I mean, I even had
19 licensees come in to tell me anyway, I don't know what they
20 tell the rest of them, but to tell me that, in fact, what
21 they look at for themselves is not just whether there is
22 someone big banana; but, in fact, they look at declining
23 trends across multiple areas, as a sign that they may be
24 getting into trouble. And so, one cannot take away from the
25 regulator the right and the ability to do that. But, I

1 agree with you, that one has to refine how one arrives at
2 the conclusion.
3 MR. FLOYD: I don't think in terms of philosophy
4 we differ at all. I think the only point we're making is
5 that the characterization of the wording in the action
6 matrix may not be the appropriate wording to use, but,
7 certainly, the issues that underlie it have to be dealt
8 with.
9 MR. BEEDLE: Let me just comment. The matrix
10 helps you characterize things. But, I don't think we want
11 to lose sight of the fact that when you end up with a white
12 cornerstone, that the objective of the program was to
13 trigger an increased response on the part of the inspection
14 folks to go out and find out what's happening.
15 CHAIRMAN JACKSON: No, I agree.
16 MR. BEEDLE: I mean, that was the whole purpose of
17 this program, was to allocate resources, so -- you know, as
18 opposed to characterizing three whites equal one, you know,
19 or whatever.
20 CHAIRMAN JACKSON: Oh, I agree with that. That's
21 right.
22 MR. FLOYD: If we could go to slide five, please.
23 I'll try not to spend too much time on this. I know we
24 spent a lot of time on this issue quite a bit and this is
25 the aggregation of low significant findings into something

1 which may have risk significance. We think the process has
2 a lot of measures in it that maybe make that particular
3 activity not really warranted. We agree with the staff's
4 underpinning in the whole oversight process, that it's
5 difficult to maintain performance on all of the indicators
6 and to have an absence of significant inspection findings
7 over a period of in-depth inspection, unless you have an
8 effective corrective action program.
9 If you really stop and think about it, the whole
10 purpose of the corrective action program is to ensure that
11 the desired results are being achieved and that when they're
12 not, that corrective actions are put into place, such that
13 in the future that you can have assurance that they are
14 being achieved. That can -- now, if there is a problem, a
15 legitimate problem with the corrective action program, then
16 we do believe that it will start showing up in the
17 performance indicators, crossing at the threshold, and it
18 will also start to show up as in the area of more
19 significant inspection findings.
20 But, we think with the response band approach that
21 has been set up, where you have decades of margin between
22 the bands, in terms of their risk importance, that there's
23 an opportunity to catch it in plenty of time before it does
24 result in an unacceptable condition. And we agree with
25 Commissioner's Diaz's comments that you can chase your tail

1 on this one quite a bit and spend a lot of resources for
2 perhaps not a lot of return, when the whole construct of the
3 process with the margins and the bands allows for the lack
4 of perfection in this area, because it does give you early
5 warning.
6 CHAIRMAN JACKSON: But, do you agree with
7 Commissioner Diaz that you have to fold in risk, you know,
8 regulation, and the technical?
9 MR. FLOYD: Absolutely; absolutely. You can't
10 focus on just the one.
11 Slide six. Enforcement: I'll be quick on this
12 one. We do support the proposed enforcement approach. We
13 think it's very innovative. It should result in a more
14 efficient and effective use of NRC and industry resources.
15 We think by focusing on fixing the condition and less
16 discussion on what is the actual severity level, what should
17 be the value of the civil penalty, who found it, who should
18 get credit, who should not get credit, and all those issues,
19 which really detract from what the bottom purpose is, and
20 that is to identify and fix the problems.
21 We do think a little more definition of criteria
22 is needed for the violations that are still subject to
23 traditional enforcement action. And I guess the bottom line
24 here is we need to ensure that that significance and,
25 therefore, the severity levels and CPs of those are

1 consistent with the oversight process. That can certainly
2 be done and we fully expect that it is being done.
3 Slide seven. I want to shift now to the
4 preparation for the pilot study. The performance indicator
5 manual is nearing completion. This is the manual that will
6 be used as the primary education tool for the April 12th to
7 15th NRC sponsored workshop. We're in the process also of
8 developing software to facilitate data reporting, not only
9 for the pilot plants, but for the balance of industry. And
10 at least the effort to date looks like we're going to be
11 able to come up with a very uniform reporting and results
12 display for all plants, which should ensure a degree of
13 consistency across the industry on this. So, we're
14 encouraged by that.
15 The pilot plants are gearing up for the study.
16 And as Ralph mentioned, we do have now a dedicated training
17 and communications programs being developed, and we are
18 working with the NRC personnel in the equivalent roles, to
19 ensure that we're using the same terminology, so that we
20 don't unnecessarily confuse the public by trying to explain
21 the same concept with different terms.
22 CHAIRMAN JACKSON: Does the industry understand
23 that the process is not just performance indicator driven?
24 MR. FLOYD: Absolutely. We've made that point
25 very loud and clear to the plants.

1 MR. BEEDLE: In conclusion, the industry does
2 believe that the revised process will fulfill the agency's
3 objective of trying to produce a more objective assessment
4 process. There's tremendous industry interest in this. And
5 as you may know, a number of plants petitioned the staff to
6 be included in the pilot program and were turned down simply
7 because of the amount of resources needed to deal with the
8 limited number of pilots. And then the process, we do
9 believe, will provide stakeholders, and read that industry
10 and others, with a more effective and objective picture of
11 the actual plant safety performance.
12 And so with that, we are willing to answer any
13 questions you might have.
14 CHAIRMAN JACKSON: Thank you. Commissioner Dicus?
15 COMMISSIONER DICUS: I don't have any, thank you.
16 CHAIRMAN JACKSON: Commissioner Diaz?
17 COMMISSIONER DIAZ: I'm just going to pick up on
18 something that Commissioner Dicus said this morning, which
19 I'd like the Commission to concede that the next time that
20 we have one of these meetings, we have the stakeholders,
21 where we would put on first, so we can pounce on them with
22 the same gusto that we do on the staff.
23 [Laughter.]
24 CHAIRMAN JACKSON: That's an interesting comment.
25 MR. BEEDLE: What do you think, David? I thought

1 they landed on you pretty well.

2 [Laughter.]

3 CHAIRMAN JACKSON: Commissioner McGaffigan?

4 COMMISSIONER MCGAFFIGAN: Just to not let them get
5 off. You know, you can sense, on our part, some trouble
6 with the notion that we're going to have on the order of 10
7 significant inspection findings a year, a massive program to
8 get 10 findings. And it sort of goes to this issue of
9 aggregation of lower -- I'm trying to figure out whether we
10 set the thresholds right for these inspection findings, to
11 trigger you guys into white, or whether you, indeed, believe
12 the industry is performing so well that expectation of it in
13 the order of 10 findings a year is what we should go into
14 this with.

15 MR. FLOYD: I guess one way of addressing that is
16 -- and it's really the work that the staff did, is they went
17 back and took a look at, at least for the limited sample of
18 plants that they did evaluate the significance of the
19 inspection findings and licensee event reports for, where
20 would that have put them in the action matrix base and how
21 well did that comport with the actions that the agency
22 thought were appropriate to take against those facilities.
23 And I think at least for the ones that they evaluated, they
24 came out generally in alignment with what they -- with the
25 actions that were appropriate for the agency.

1 MR. MCGAFFIGAN: My recollection is it's the
2 performance indicators, rather than the inspection findings
3 that are -- maybe that's your expectation going in, that the
4 performance indicators are going to be the thing that really
5 is at the heart of the process. And the staff -- I guess
6 you're saying the inspection program is being focused on the
7 other areas, the other areas are not as likely to trip
8 performance indicators, and the inspection findings the
9 staff -- I mean, might once have had in an area covered by a
10 performance indicator, they're now relying on the
11 performance indicators?
12 CHAIRMAN JACKSON: No, they are not supposed to be
13 that way.
14 COMMISSIONER DICUS: No.
15 CHAIRMAN JACKSON: The inspection program is to
16 both validate the performance indicators, as well as to
17 cover areas that the performance indicators do not cover.
18 That's what my recollection is.
19 COMMISSIONER DICUS: Right.
20 MR. BEEDLE: I think probably one of the best
21 examples of those areas that aren't covered by performance
22 indicators is design basis. I mean, the rules and the
23 requirements for design basis performance still exists. So
24 --
25 CHAIRMAN JACKSON: I agree, but --

1 MR. BEEDLE: The way to look at it is through
2 inspection.
3 CHAIRMAN JACKSON: -- I think there's a
4 communication difference. Staff tells us -- tells me that
5 its risk-informed baseline inspection program will both
6 validate the performance indicators and cover areas --
7 MR. BEEDLE: Right.
8 CHAIRMAN JACKSON: -- the performance indicators
9 do not cover. Not that they -- the inspection program just
10 covers areas of the performance indicators.
11 MR. MCGAFFIGAN: But the validation, as I
12 understand it, is yes, indeed, they have this number of
13 safety system actuations last quarter, as opposed to maybe
14 -- there is a communication issue here, whether they will
15 then inspect in-depth, as to why they had a bunch of safety
16 system actuations the last quarter or --
17 CHAIRMAN JACKSON: Let me let Frank speak to that.
18 Frank, do you have a comment?
19 MR. GILLESPIE: I think we're getting to actually
20 the integral nature of all the pieces, and it is very
21 difficult. In the inspection program, the way the
22 inspection procedures, themselves, and the inspected areas
23 are set up, there is a reactor element to it. It also
24 guides the person through, if I find this, querying, is the
25 next train of this system available. If the next train of

1 the system isn't available, the person is then guided to the
2 next system that provides a similar function.
3 So, just because an individual observation doesn't
4 make a threshold, it's not an individual finding in the way
5 we're talking. An observation is the plant configuration at
6 the time. So if the inspection procedure is followed
7 through completely, then we may, indeed, be tripping a
8 threshold. The inspection procedures, in and of themselves,
9 are intended to look at defense in depth, maintenance of
10 function. So, it's not just one pump. That one pump should
11 cause the inspectors, then, to look at the power to the
12 other train and anything that could upset that function.
13 So, it is an integral hole.
14 And on the verification, we, indeed, would be
15 doing more than saying, well, yes, they just had three
16 scrams. The inspection program would have -- right now,
17 would have in that area, would have the inspector saying,
18 okay, putting the corrective action program, was a root
19 cause analysis done; did the root cause analysis make sense.
20 Just because it didn't trap -- press the three -- trip the
21 three scram threshold, doesn't mean as part of the routine
22 program, it would not be followed up. Indeed, it would.
23 So, each thing would be followed up and documented. So even
24 though it doesn't trip a threshold, the public documentation
25 will, in fact, be available for everyone's scrutiny.

1 Did I answer the --

2 CHAIRMAN JACKSON: Any other questions? Go ahead.

3 MR. MCGAFFIGAN: That's okay; that's fine.

4 CHAIRMAN JACKSON: Mr. Merrifield?

5 MR. MERRIFIELD: I just have a brief question for
6 both Mr. Beedle and Mr. Lochbaum. We talked earlier about
7 the -- with the staff about 0350 process and the
8 interrelationship, as we evolve into a new oversight
9 process. I just want to get your comments relative to that
10 discussion. Where do you think that the -- you know, do you
11 see us going into a situation where we will have a more
12 seamless web between 0350 and what we are postulating for a
13 new pilot project?

14 MR. LOCHBAUM: Well, I guess when I heard that
15 discussion this morning, I think if -- with this new
16 oversight process, we should have fewer challenges to 0350.
17 But, there still might be a plant in that category, so it's
18 good to retain it.

19 We have a letter into the Commission -- I forget
20 the exact date -- about two different 0350 processes, one at
21 Millstone and one at D.C. Cook, being essentially 180
22 degrees apart. So, if we get to vote on which one we like,
23 we like the one that was used in Region 3. But, there needs
24 to be consistency, and I don't know how to do that in the
25 process. If they're all to be like Region 3, implemented

1 0350, that would work great; if not, it wouldn't. So, it's
2 hard to say.
3 MR. BEEDLE: I think this assessment process that
4 we're going through is going to probably give us a much
5 better picture of where the plant is from not only the NRC's
6 point of view, but the licensee's point of view and the
7 stakeholder's point of view, the public. And I think with
8 that, we'll see better definition, better clarity, and
9 understand better what actions the NRC takes in dealing with
10 the performance issues at the plant. So, I think we see a
11 much improved process here.
12 CHAIRMAN JACKSON: Thank you. On behalf of my
13 Commission colleagues, I would like to thank the NRC staff,
14 NEI, and the Union of Concerned Scientists for a most
15 informative meeting. I, again, would like to congratulate
16 the staff and our stakeholders, both those assembled here
17 and those not, for what I consider to be an outstanding
18 effort in coming this far, this fast.
19 At this year's regulatory information conference,
20 I commented that the reactor oversight program was a work in
21 progress and that it should remain so with continuous
22 improvement as a goal. I think we've seen today that while
23 a great deal remains to be done, a great deal has been
24 accomplished to develop this program. And while we are far
25 from being able to see -- to declare victory in this

1 endeavor, at this point, I think we can see enough to see
2 that victory is achievable.
3 And I hope this effort, in fact, will encourage
4 other similar cooperative NRC stakeholder efforts, such as
5 in the area of decommissioning and risk informing Part 50 of
6 the Code of Federal Regulations, and comparable improvement
7 in the inspection assessment and enforcement processes for
8 materials licensees.
9 And with that, unless we have any further
10 comments, we're adjourned. And we're going to move
11 immediately into an affirmation session, so we can do it
12 before Commissioner Diaz has to leave.
13 [Whereupon, at 12:57 p.m., the briefing was
14 concluded.]
15
16
17
18
19
20
21
22
23
24
25

CERTIFICATE

This is to certify that the attached description of a meeting of the U.S. Nuclear Regulatory Commission entitled:

TITLE OF MEETING: BRIEFING ON PROPOSED REACTOR OVERSIGHT PROCESS IMPROVEMENTS AND ENFORCEMENT PUBLIC MEETING

PLACE OF MEETING: Rockville, Maryland

DATE OF MEETING: Friday, March 26, 1999

was held as herein appears, is a true and accurate record of the meeting, and that this is the original transcript thereof taken stenographically by me, thereafter reduced to typewriting by me or under the direction of the court reporting company

Transcriber: Natalie Renner

Reporter: Mark Mahoney

# NRC Briefing on Reactor Oversight Process Improvements March 26, 1999

Ralph Beedle

Steve Floyd

NEI

# General Comments

- Good progress continues to be made
- Ample opportunity for stakeholder involvement
- Cooperative dialogue should serve as the model for other regulatory reform initiatives
- Some details still need to be refined…but enough in place to proceed with pilot study

NEI

# Open Issues/Comments

- Significance Determination Process (SDP) for reactor safety cornerstones well developed -- ready for pilots
- SDP for non-reactor safety cornerstones not ready -- flowcharts are subjective and confusing
- Draft inspection procedures just released for public comment

NEI

# Open Issues/Comments

- Action Matrix
  - Need to maintain objective to evaluate performance relative to safety significance of issues
  - Repetitive or multiple degraded cornerstones due to white inputs should not be characterized as a "significant reduction in safety margin"
  - Need to distinguish between a red input due to a single event versus programmatic issue



NEI

# Open Issues/Comments

- Lingering cultural issue: NRC staff concern with quantity of issues of low safety significance
  - SECY mentions RES project to analyze "risk significance" of the aggregation of "low significant" findings
  - Substantial margins built into the process (PI thresholds and risk-focused inspection) do not warrant this attention

NEI

# Enforcement

- Industry supports proposed enforcement approach
- Should result in more efficient and effective use of NRC and industry resources
- More definition of criteria needed for violations still subject to traditional enforcement actions

# Industry Preparation for Pilot Study

- Performance Indicator manual nearing completion
- Software development to facilitate data reporting -- for pilots and balance of industry
- Pilot plants gearing up for study
- Training/communications programs being developed

NEI

# Conclusions

- Industry believes revised process will fulfill agency objectives
- Great industry interest in proceeding with pilot study
- Process will provide all stakeholders with a more effective and objective picture of actual plant safety performance

NEI

UNION OF
CONCERNED
SCIENTISTS

# Partial Comments on the Reactor Oversight Process


**David A. Lochbaum**

**Union of Concerned Scientists**


**March 26, 1999**

UNION OF
CONCERNED
SCIENTISTS

# Introduction

- Proposed inspection, assessment, and enforcement processes can be viewed as improvements
- Parts of the proposed processes can also be viewed as evidence that the NRC is lessening its regulatory effectiveness
- NRC should develop a simple, plain-English brochure comparing the proposed processes to the old processes (NUREG-1649 is <u>NOT</u> such a document)

UNION OF
CONCERNED
SCIENTISTS

# Signs that NRC is Improving

- Plant assessments based on 18-20 performance indicators and risk-informed inspection findings instead of only 4 board categories

- Plant assessments every 3 months instead of every 18-24 months

- Better-defined NRC response to performance declines

UNION OF
CONCERNED
SCIENTISTS

# Signs that NRC is Retreating

- Most Level IV violations are being "neglected"
- NRC will rely heavily on performance indicators and data supplied by the plant owners
- NRC will spend significantly fewer hours inspecting plants
- NRC will "downplay" problems if overall plant performance is "green"

UNION OF
CONCERNED
SCIENTISTS

# Another Sign that NRC Has Retreated

- SECY-99-007A, page 2, first sentence: "Over the last 10 years, commercial nuclear power plants have operated safely and overall plant performance has improved. This improvement in plant performance can be attributed, in part, to successful regulatory oversight"

- These are NRC's opinion, not facts -- the agency is entitled to any opinions it wants.

- UCS does not share this view -- we don't believe in the Easter Bunny or Santa Claus or the Tooth Fairy either.

UNION OF
CONCERNED
SCIENTISTS

# Another Sign that NRC Has Retreated (continued)

- GAO/OCG-99-19, January 1999
  - "NRC's regulations and other guidance do not define, for either a licensee or the public, the conditions necessary for a plant's safety; therefore, determining a plant's safety is subjective."
- Also opinion, not fact -- the GAO is entitled to any opinion it wants.
- UCS, and *most* members of the public that we interact with, agree with the GAO's views, not those of NRC.

UNION OF
CONCERNED
SCIENTISTS

# Partial Comments on SECY-99-007A

## Attachment 2 - Inspection Finding Risk Characterization Process:

- Fig. 1, Significance Determination Process, contains a box titled "Engage Licensee and NRC Risk Analysts for Refinement" -- this step must be eliminated <u>before</u> the pilot effort
- Appendix 1 describes the Significance Determination Process, but Phase 3, the Risk Refinement part, "is not described herein." Why was this phase put in at this time if the justification does not exist?
- On average, how many years will it take for the typical inspection finding to percolate through this characterization process?

## Attachment 4 - Enforcement Strategy:

- "Violations in a risk range of greater than $10^{-6}$ $\Delta$CDF will be evaluated as 'significant' and assigned a color band of white, yellow, or red for assessment purposes." Didn't Quad Cities pencil-whip a two order of magnitude change in CDF? It would be a dreadful mistake to pursue this method at this time.

UNION OF
CONCERNED
SCIENTISTS

# More Partial Comments on SECY-99-007A

## Attachment 7 - NUREG-1649

- 4th paragraph on page 1 should be deleted as irrelevant.
- The bulleted items on page 1 should be clarified. The second bullet, for example, could be revised to: "Focusing regulatory attention on facilities with performance problems."
- The tables on pages 2 and 3 could be simplified. For example, use "plant owner" instead of "licensee." Also, a reasonable person might wonder how there can be a manual unplanned reactor scram.
- The 6th paragraph on page 4 needs to explain why a 15% reduction in inspection hours is a good thing.
- The 7th paragraph in page 4 should indicate that hard copy of inspection reports will continue to be available.
- The definitions of the assessment categories on page 5 are "weak" and should be "improved" or "enhanced."

UNION OF
CONCERNED
SCIENTISTS

# Even More Partial Comments on SECY-99-007A

- **Attachment 8 -Communication Plan**
  - **The table of internal and external stakeholders does not include the public (i.e., the people living near the plants that the regulations are intended to protect). Is this omission intentional?**

UNION OF
CONCERNED
SCIENTISTS

# Conclusion

- If NRC staff truly believes that <u>all</u> nuclear power plants have operated safely the past ten years, the proposed reactor oversight process is doomed to failure.
  - Was NU fined $600,000 for safe operation at Haddam Neck?
  - Was ComEd fined $600,000 for safe operation at LaSalle?
  - Was NU fined $2.1 million for safe operation at Millstone?
  - Was AEP fined $500,000 for safe operation at D C Cook?

# RECOMMENDATIONS FOR REACTOR OVERSIGHT PROCESS IMPROVEMENT
# (FOLLOW UP TO SECY 99-007)

NUCLEAR REGULATORY COMMISSION
OFFICE OF NUCLEAR REACTOR REGULATION

MARCH 26, 1999

# Recommendations for Reactor Oversight Process Improvement (Follow up to SECY 99-007)

- William Travers
- Samuel Collins
- Frank Gillespie
- William Dean
- Morris Branch
- James Lieberman
- Alan Madison
- James Wiggins

# Topics to be discussed . . .

- Public Comments
- Significance Determination Process
- Feasibility Review Results
- Enforcement Strategy
- Significant changes to SECY - 99-007
- Pilot program status and schedule
- Communication initiatives
- Future Improvements

# Current Status . . .

- Transitioning from development to implementation
- Requesting Approval for Full Implementation

# Transition Task Force

- William Dean (NRR) Task Manager
- Alan Madison (NRR) Task Force Leader

  - Timothy Frye (NRR) Pilot Program Lead
  - Donald Hickman (NRR) PI Lead
  - David Gamberoni (NRR) Assessment Lead
  - August Spector (HR) Communications Lead
  - Lee Miller (TTD) Training Lead
  - Steven Stein (NRR) Inspection Procedure Lead
  - Morris Branch (NRR) SDP Review Lead

# Major Transition Milestones

- Commission Presentation - January 1999
- Public Comment Period - February
- Final Commission approval - April
- Workshops/Training sessions - April/May
- Begin Pilot Projects - June
- Implementation Workshop - October
- Complete Pilot Projects - November
- Implement New Process - January 2000
- First Annual Review - April 2001
- Complete Project - June

# Public Comment Strategy

- High-level Comments
- Detailed Comments: Program Documents
- Implementation Comments: Pilot Program

# High-level Comments

- Opportunity and time to include public
- Additions to process
- Feasibility review and pilot program
- Addressing subjectivity concerns

# SIGNIFICANCE DETERMINATION PROCESS

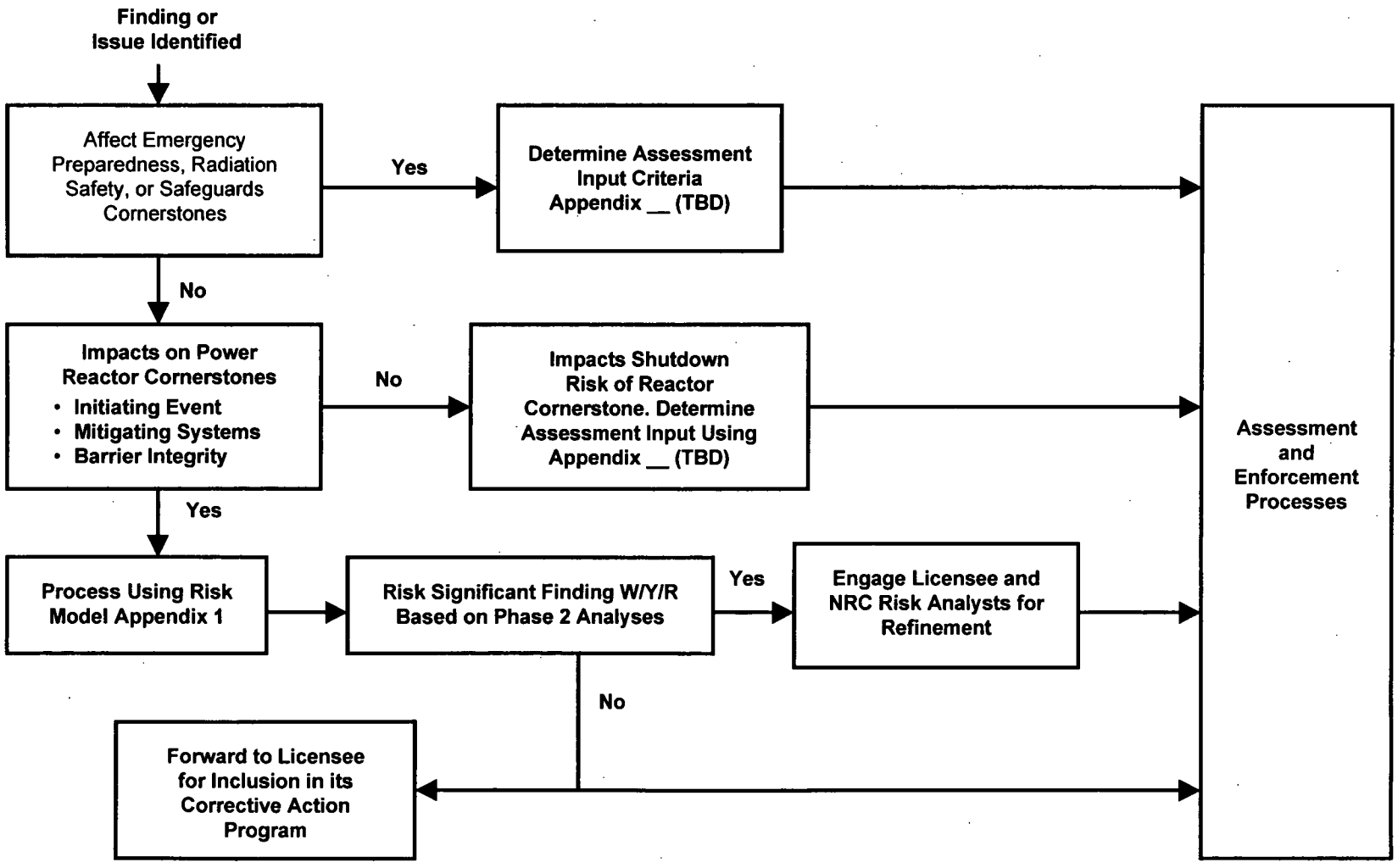

# S D P INITATING EVENTS, MITIGATION SYSTEMS & BARRIER INTEGRITY CORNERSTONES FOR POWER SITUATIONS

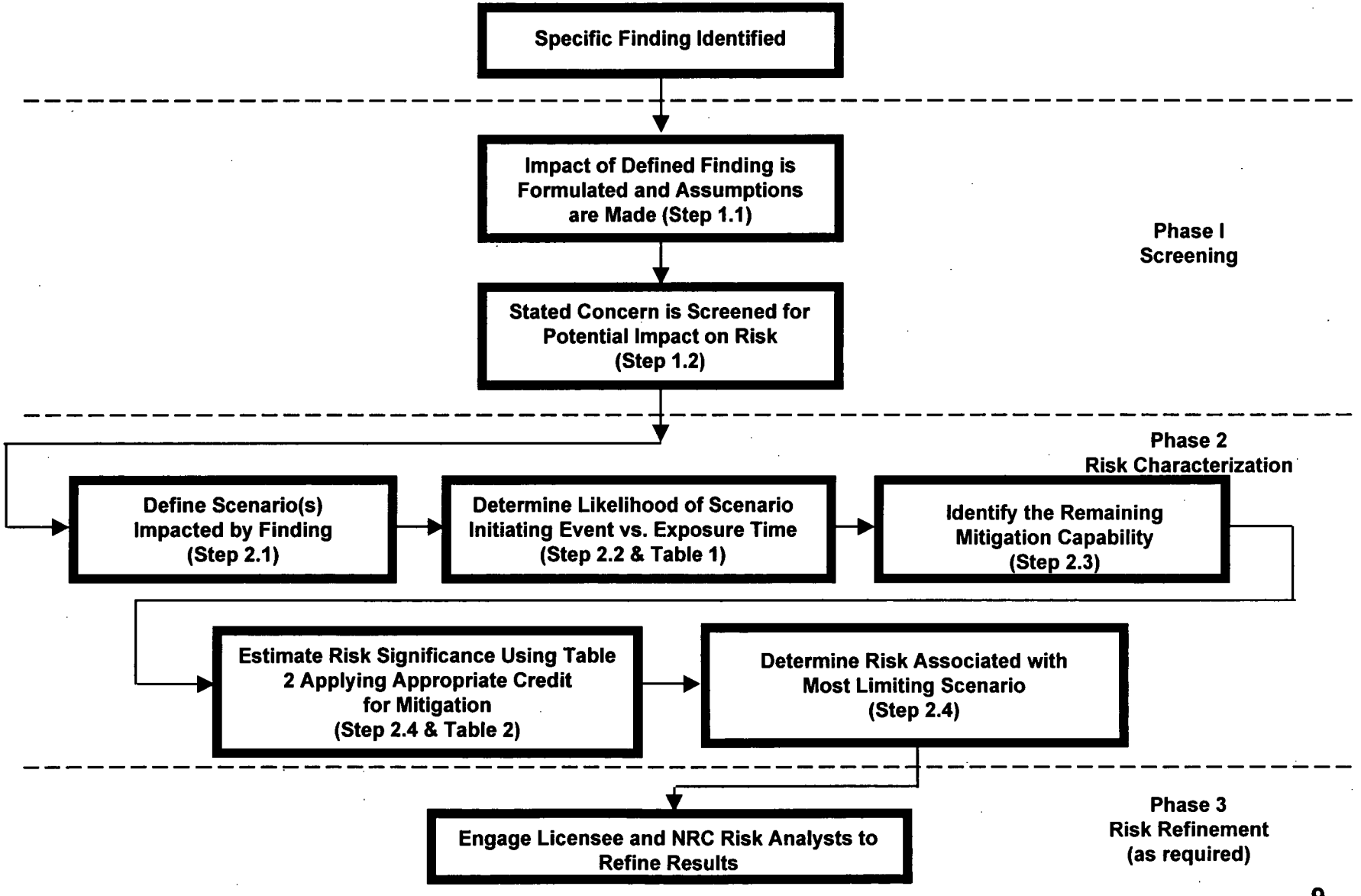

# Feasibility Review: Objectives and Limitations

- Evaluate new oversight program feasibility
- Evaluate usability of Significance Determination Process
- Based upon available performance data, assess plant performance using new methods
- Compare results of new process with old process

# Feasibility Review: Plants

| Plant | Period |
|---|---|
| D.C. Cook: Units 1 & 2 | -- 1996-1997 |
| Millstone: Units 2&3 | -- 1994-1995 |
| St. Lucie: Units 1&2 | -- 1997-1998 |
| Waterford: Unit 3 | -- 1997-1998 |

# Feasibility Review: Results

- New process feasible to pilot
- Significance Determination Process successful for items in current scope. More work and refinement needed.
- Actions proposed by new assessment process similar to past actions, but new approach more scrutable
- Inspector training needed

# Proposed Enforcement Approach

- Integration of Enforcement and Reactor Oversight

# Enforcement and Assessment Purposes Similar

- Safety significance evaluated
- Agency responses formulated
- Emphasize performance and compliance
- Public notice provided

# New Enforcement Process Should:

- Complement assessment process, not drive it
- Maintain focus on compliance
- Be risk informed and performance based
- Reduce unnecessary regulatory burden
- Encourage effectiveness and efficiency
- Increase public confidence

# Reactor Enforcement: Two Track Approach

- Violations covered by the SDP
- Violations not covered by the SDP or with actual consequences

# Proposed Enforcement Approach: Violations covered by SDP

- Assessment process to categorize significance
- NOV's for safety/risk significant violations
- NCV's for less significant violations
  (utilize 3 of 4 Interim Policy Exceptions)
- Assessment Action Matrix formulates NRC response
  (normally would not use civil penalties)

# Traditional Enforcement

- Not covered by SDP
  - Willful and discrimination violations
  - Violations impacting regulatory process
- Over exposures and material releases
- Particularly significant violations

# Enforcement Process will Complement Assessment

- Escalating regulatory response based on safety significance
- Maintain compliance focus
- Should deter non-compliance
- Improve public confidence
- More efficient for NRC to implement

# SECY-99-007: Noteworthy Changes

- Action Matrix revised
- Performance Indicators clarified
- Additional issues addressed:
  - Severe accident management guidance
  - Fire Protection Functional Inspection

# Pilot Program

- Six-month program begins June 1999
- Objective -- exercise processes before full implementation
- Each region has two pilot sites
- Site selection coordinated with industry
- Established criteria will measure success

# Plants Participating in Pilot

- Hope Creek -- RI
- Salem 1 and 2 -- RI
- FitzPatrick -- RI
- Shearon Harris -- RII
- Sequoyah 1 and 2 -- RII
- Prairie Island 1 and 2 -- RIII
- Quad Cities 1 and 2 -- RIII
- Ft. Calhoun -- RIV
- Cooper -- RIV

# Pilot Program Ground Rules

- Revised inspection, assessment, and enforcement processes in lieu of current processes
- Regional planning of baseline and initiative inspections for all plants
- Each baseline inspection procedure performed by each region at least once
- PI data collection begins May 1999
- Mid-cycle PI assessment and inspection findings in November 1999

# Pilot Program Success Criteria: Efficiency and Effectiveness Measures

- Quantitative and qualitative measures

- Pilot Program Evaluation Panel (PPEP) to assess qualitative success criteria

# Major Activities Prior to Pilot

- Develop & issue procedures by May 1999
- Training sessions
  - PI Workshop -- April 1999
  - Inspection Program Training -- April 1999
  - Pilot Program Workshop -- May 1999
- Inspection program planning meetings held in regions

# Communication Plan: Overview

- Objectives
- Four key messages
- Stakeholders identified
- Varied approaches applied

# Communication Plan: Key Approaches

- First Level Supervisor
- Change Coalition
- Electronic Communication
- Internal Written
- Interface Sessions

# Comments from the Change Coalition Executive Forum . . .

- Role to provide high-level comments at key points during the transition and the pilot project phase.

# Future Improvements . . .

- ...generation of plant specific risk insights
- ...computerized system to capture and link cumulative inspection findings to risk
- ...development of additional and improved risk-informed PI's

# POLICY ISSUE
## (Notation Vote)

March 22, 1999 SECY-99-007A

FOR: The Commissioners

FROM: William D. Travers
Executive Director for Operations

SUBJECT: RECOMMENDATIONS FOR REACTOR OVERSIGHT PROCESS IMPROVEMENTS (FOLLOW-UP TO SECY-99-007)

PURPOSE:

This Commission paper forwards additional information and noteworthy changes to the staff recommendations for improving the regulatory oversight process initially provided by SECY-99-007, "Recommendations for Reactor Oversight Process Improvements."

This Commission paper also responds to the Commission's comments from the January 20, 1999, briefing on SECY-99-007 and provides the staff's responses to public comments.

Finally, this paper presents a pilot plan for implementing the new reactor oversight process including success criteria. The staff is asking the Commission for final approval on the scope and concepts of the recommended changes to the regulatory oversight process, and to approve its continued development and full implementation. The pilot program is intended to identify implementation issues and resolve them in a timely manner in order to support full implementation of the new process beginning in January 2000. Additionally, resource issues will be identified and addressed during the implementation of the pilot program.

BACKGROUND:

On January 8, 1999, the staff issued SECY-99-007, forwarding the staff's recommendations for a new reactor oversight process. On January 20, 1999, the staff briefed the Commission on the staff's proposal described in SECY-99-007. The following issues represent a brief summary of the concepts presented in SECY-99-007.

Contact:
Alan L. Madison, NRR
301-415-8498

Over the last 10 years, commercial nuclear power plants have been operated safely and overall plant performance has improved. This improvement in plant performance can be attributed, in part, to successful regulatory oversight. Despite this success, the agency has noted that the current reactor oversight process (1) is at times not clearly focused on the most safety important issues, (2) consists of redundant actions and outputs, and (3) is frequently subjective, with NRC action taken in a manner that is at times neither scrutable nor predictable.

In the new regulatory oversight process--

- There will be a risk-informed baseline inspection program that establishes the minimum direct inspection effort for all licensees.
- The NRC will retain its ability to take immediate action as delineated in the action matrix to address a significant decline in licensee performance.
- Thresholds will be established for licensee safety performance, below which increased NRC interaction would be warranted.
- Adequate assurance of licensee performance will require assessment of both performance indicators (PIs) and inspection findings.
- Inspection findings will be evaluated for significance and integrated with PIs in a timely manner to support overall assessment of licensee performance.
- Both PIs and inspection findings will be evaluated against risk-informed thresholds, where feasible.
- Crossing a PI threshold and an inspection threshold will have the same meaning with respect to safety significance and required NRC interaction.
- The baseline inspection program will cover those risk-significant attributes of licensee performance not adequately covered by PIs.
- The baseline inspection program will also verify the accuracy of PI data collection and analysis and provide for event response, as appropriate.
- Enforcement actions will be focused on issues that are risk significant.
- Guidelines will be established for identifying and responding to unacceptable licensee performance.

The following discussion provides additional process details, including a summary of public comments, a tool to aid in assessing the significance of inspection findings and the associated feasibility review results, enforcement strategy, a summary of noteworthy revisions to recommendations in SECY-99-007, and a pilot program plan with associated success criteria. An Office of Public Affairs summary of the new reactor oversight process and a communications plan are also included. These issues are discussed in detail in Attachments 1 through 8 to this paper.

DISCUSSION

Summary of Public Comments

On January 22, 1999, the staff issued a *Federal Register* notice soliciting public comments on the scope and content of the recommendations described in SECY-99-007. The comment period was limited to 30 days to support issuance of this Commission paper and the overall transition schedule. The staff received 28 responses from diverse organizations including licensees, the Nuclear Energy Institute (NEI), the Institute of Nuclear Power Operators, an owners group, public advocacy groups, State regulatory organizations, and a member of the general public.

The staff is using a three-pronged approach to address stakeholder comments: (1) high-level policy issues and comments are addressed below and in Attachment 1 to this paper, (2) detailed comments are being addressed during the development of program documents (e.g., performance indicator manual, inspection procedures, assessment procedures, enforcement guidance), and (3) some comments will be addressed during the pilot application of the new reactor oversight process (i.e., if a methodology being piloted is unsuccessful, an alternative offered by a commentor may be considered).

The high-level policy issues and the staff's approach in addressing them are as follows:

- Issue: Stakeholders are not being given a reasonable amount of time and opportunity to comment on the proposed changes to the reactor oversight process.

  Approach: The staff agrees that the aggressive schedule for piloting and implementing the new reactor oversight process makes it more difficult to seek, review, and incorporate stakeholder comments. However, the staff is making an earnest effort to address this issue. The staff will seek stakeholder comments on this paper and on oversight program policy documents. The staff will also hold several public workshops and issue press releases, when appropriate, to communicate with the general public. These activities are described in the communication plan, Attachment 8 to this paper.

- Issue: Several significant components of the new reactor oversight process remain to be developed, including the methodology for assigning significance to inspection findings and the revised enforcement policy. In addition, stakeholders would like the opportunity to comment on these components.

  Approach: These process components are addressed in Attachments 2, 3, and 4 to this paper. The staff will seek stakeholder comment on these components in parallel with the Commission's review of this paper. Comments will be considered during the development of guidance documents for the pilot program.

- Issue: Feasibility of the new reactor oversight process for full implementation needs to be clearly shown. In particular, how does the process deal with licensees that experience numerous problems and degradations of low safety significance, which may be precursors of future significant problems, but where there are few, if any, problems that trip a PI threshold?

Approach: The feasibility review described in Attachment 3 to this paper concluded that the new process is feasible to pilot. The pilot program and associated success criteria are designed to measure whether the new process is ready for full implementation in January 2000. It is expected that problems that arise during the pilot program can be addressed before full implementation.

Attachment 2 to this paper describes how degradations in plant performance will be reviewed. Currently, the staff intends to review issues or groups of coexistent issues for their risk significance. In addition, the Office of Nuclear Regulatory Research (RES) is evaluating the feasibility of designing a system to analyze the risk significance of numerous small problems of low safety significance, which in the aggregate could be significant. If this process proves feasible, the staff would appropriately incorporate it into the new reactor oversight process.

- Issue: Historically, subjectivity appears to creep into the NRC reactor oversight process through inspection findings focused on processes and outputs versus outcomes. How is the NRC addressing this concern?

  Approach: Both the risk-informed baseline inspection program and the inspection finding risk characterization process are designed to focus NRC attention on risk significant issues. In addition, the enhanced use of PIs provides additional objectivity to the overall process. Finally, the staff will continue to regularly solicit regulatory impact information from stakeholders.

Attachment 1 to this paper provides additional staff approaches for addressing high-level comments related to specific topics such as the use and suitability of PIs.

Additional Reactor Oversight Process Details

Inspection Finding Risk Characterization Process (IFRCP)

In SECY-99-007, the staff highlighted the need to develop a method for risk characterizing inspection program findings. The staff developed a process, described in detail in Attachment 2 to this paper, to elevate potentially risk-significant issues, screen out issues that have minimal or no risk significance, and to trigger more detailed analysis of issues when warranted. The current process only focuses on inspection findings associated with the cornerstones for initiating events, mitigation systems, and barrier integrity. The staff is performing additional work to develop the process for issues associated with emergency preparedness, radiation safety, safeguards, shutdown risk, and fire protection. The staff will complete these efforts in time to support implementation of the pilot program.

Note: Subsequent to the feasibility review discussed below, the staff renamed this process the Significance Determination Process (SDP) to more accurately and succinctly describe the process.

The staff performed a limited-scope feasibility review using PIs and the process for characterizing risk significance of inspection program findings to determine if the new regulatory oversight process was feasible to pilot. The staff reviewed the performance data for four sites, as described in Attachment 3 to this paper, and determined that the process was feasible to pilot, as long as the following issues were addressed:

- Issue: The risk-informed baseline inspection program should provide increased focus on the area of design engineering, compared to that provided by the current core inspection program.

  Approach: The transition task force personnel responsible for developing the baseline inspection program have been tasked with enhancing the focus on the area of design engineering.

- Issue: The additional development work on the process, described above and in Attachment 2, needs to progress to the point that it can be tested during the pilot program. In some areas, it may be more feasible to use agency risk analysts to review inspection findings, until the process is fully developed. The impact of this approach on the alignment of staff resources is being reviewed.

  Approach: The staff responsible for these technical areas are working diligently to complete these activities before commencement of the pilot program.

- Issue: The pilot program should be designed to record performance data in a conservative manner. Specifically, the staff should continue to document those issues with some risk significance, which do not trip an inspection finding significance threshold.

  Approach: The staff will continue to record and trend information that does not rise to the white threshold (described in Attachment 2 to this paper). As noted above, RES is working to develop a process to analyze the risk significance of numerous, low safety-significant issues, which in the aggregate could be significant.

Enforcement Strategy

In SECY-99-007, the staff highlighted the need to further develop options for improving the enforcement policy. The Office of Enforcement developed a new enforcement strategy for the new reactor oversight process that will be tested during the pilot program. The proposed enforcement approach is designed to complement the assessment process--

- For violations that are evaluated under the action matrix and SDP:

  1 Notices of violation will be issued for safety-significant violations; a written response from the licensee will be required. Severity levels will not normally be used, nor will civil penalties normally be issued. The action matrix rather than severity levels and civil penalties will be used to provide incentives to improve performance.

2 Noncited violations will usually be issued for less safety-significant violations; correcting these issues will be tracked under the licensee's corrective action program.

- The traditional enforcement process (including the use of civil penalties) will be reserved for:

  1 situations in which there are actual safety consequences (such as an overexposure to the public or plant personnel or a substantial release of radioactive material),

  2 violations related to willfulness including discrimination, or

  3 violations that may impact the NRC's ability for oversight of licensed activities.

- The Commission will reserve its authority to issue civil penalties for particularly significant violations such as safety limit violations and accidental criticality.

Specific details and limitations are discussed in Attachment 4 to this paper. Following Commission approval of the changes to the enforcement process, the staff intends to submit an Interim Enforcement Policy for publication in the *Federal Register* and for Commission approval.

A strong communication outreach effort that emphasizes that the NRC is continuing to focus on compliance as part of the agency's effort to become more risk-informed and performance-based will be used to provide accurate and timely information to NRC stakeholders and the public. As knowledge is gained regarding how the inspection, assessment, and enforcement processes fit together, the consistent agency approach should be recognized. This approach will continue to cause increased regulatory action in response to risk-significant performance degradations (as defined by the action matrix) and should result in deterring poor performance that the agency's enforcement policy was intended to provide in the past. A process that is more predictable, objective, and understandable, should increase public confidence that the agency is satisfying its mission. The staff will closely monitor the pilot program to ensure that enforcement policy changes are clearly communicated and consistently implemented.

Changes from SECY-99-007

Attachment 5 to this paper contains program guidance which has been revised from that originally presented in SECY-99-007. Of note is that the staff revised the performance assessment process action matrix and performance indicator table in response to Commission and stakeholder comments.

Pilot Plan

As discussed in SECY-99-007, the staff will pilot the new reactor oversight process during a 6-month period beginning June 1, 1999. Details of the pilot program are discussed in Attachment 6 to this paper. The purpose of the pilot program is to exercise the new processes (PI data reporting, inspection, assessment, and enforcement), to identify process and procedure problems and make appropriate changes, and, to the extent possible, evaluate the effectiveness of the new process. Full implementation of the new oversight process will commence pending successful completion of the pilot program, as measured against preestablished success criteria. A notable feature of the pilot program is the use of a Pilot Program Evaluation Panel, consisting of NRC, NEI, industry, public, and State representatives, to aid in evaluating the effectiveness of the pilot program.

OPA issued a press release on February 22, 1999, announcing the eight pilot plant sites (consisting of nine plants) and licensees. The list of pilot plants is also contained in Attachment 6 to this paper, along with the pilot plant selection criteria.

Communication and Training Plans

In response to the Commission's comments on SECY-99-007, OPA prepared a plain language summary of SECY-99-007: NUREG-1649, "New NRC Reactor Inspection and Oversight Program (Attachment 7 to this paper)." OPA also posted this document on the NRC Web page to enhance availability to the general public. This document will be revised periodically as progress is made on the new reactor oversight process.

The staff also developed a communication plan, Attachment 8 to this paper, to coordinate the extensive efforts required to properly communicate plans, activities, and results to our stakeholders before, during, and after the transition to the new reactor oversight process. Activities of note include public workshops, press releases, and presentations to NRC personnel, representatives of the industry, and the public.

Currently, the staff is developing training activities and materials for the NRC and licensee personnel associated with the pilot plants. The staff is also developing a longer term training plan to support full implementation of the new oversight process. The longer term training will commence early in Fiscal Year (FY) 2000.

RESOURCES

As described in SECY-99-007, considerable resources will be required in the short term to develop and implement these changes. Required full-time equivalent positions are within the currently budgeted resources in FY 1999 and FY 2000 for developing and implementing changes to the inspection and assessment programs.

Although overall resource savings are expected in the long term, it would be premature to make any resource reduction decisions at this time beyond those already documented in the FY 2000 budget submittal. The staff will be able to further quantify these resources changes after experience is gained through the pilot program and early phases of full implementation.

COMMISSION COMMENTS

During the January 20, 1999, briefing on SECY-99-007, several Commissioners identified areas of interest. While the SRM for this paper has yet to be issued, this paper addresses many of the high level comments received during the briefing. The staff will address detailed comments during the development of program guidance for the new reactor oversight process.

The Commission also asked the staff to estimate the impact of the new reactor oversight process on licensee resources. The staff believes that after the initial start-up period, the overall impact on licensee resources may be less than the current process. Factors that would result in less direct effort are (1) the baseline inspection program and regional initiative inspection, as currently envisioned, will require less direct inspection hours than the current inspection program, (2) the streamlined assessment process is expected to require fewer NRC staff resources than the current Systematic Assessment of Licensee Performance and Senior Management Meeting processes, and (3) the new enforcement policy will treat low safety-significant issues more efficiently by allowing licensees to incorporate these issues within their corrective action programs, as opposed to requiring formal responses to the NRC. However, the impact of the staff's efforts to assess the risk significance of inspection findings and possible adjustments to inspector roles and responsibilities not associated with direct inspection may require greater effort. Clearly, the staff needs experience through the pilot program and early phases of full implementation to make informed judgements about resource implications. The staff developed success criteria for the pilot program related to the reduction in unnecessary regulatory burden and intends to survey licensees on this issue following the first full year of implementation.

COORDINATION:

The Office of the General Counsel has reviewed this Commission paper and has no legal objections to its content.

The Office of the Chief Information Officer has reviewed this Commission paper for information technology and information management implications and has no objections.

The Office of the Chief Financial Officer has reviewed this Commission paper for resource implications and has no objections.

RECOMMENDATIONS: That the Commission:

1. Approve the scope and concepts of the recommended changes to the regulatory oversight process, and its continued development and full implementation.

2. Note that unless directed otherwise, the staff will continue with development efforts.

William D. Travers
Executive Director
for Operations

Attachments:
1. SECY-99-007 Public Comment
2. Inspection Finding Risk Characterization Process
3. Feasibility Review of the Inspection Finding Risk Characterization and Reactor Oversight Processes
4. Enforcement Strategy for New Reactor Oversight Process
5. Noteworthy Changes to SECY-99-007 Concepts
6. Pilot Program
7. New NRC Reactor Inspection and Oversight Process (NUREG-1649)
8. Communication Plan

Commissioners' completed vote sheets/comments should be provided directly to the Office of the Secretary by COB Tuesday, April 6, 1999.

Commission Staff Office comments, if any, should be submitted to the Commissioners NLT March 31, 1999, with an information copy to the Office of the Secretary. If the paper is of such a nature that it requires additional review and comment, the Commissioners and the Secretariat should be apprised of when comments may be expected.

DISTRIBUTION:
Commissioners
OGC
OCAA
OIG
OPA
OCA
ACRS
CIO
CFO
EDO
REGIONS
SECY

**SECY-99-007 PUBLIC COMMENT**

Attachment 1

# 1 OVERVIEW

## 1.1 Background

On January 8, 1999, the staff issued SECY-99-007, "Recommendations for Reactor Oversight Process Improvements," which forwarded the staff's recommendations for improving the regulatory oversight processes. This paper presented recommendations for improving the NRC's inspection, assessment, and enforcement processes and included a transition plan for implementing these recommended changes. By *Federal Register* notice dated January 22, 1999, the staff solicited public comments on the scope and content of the recommendations described in SECY-99-007. The *Federal Register* notice used a questionnaire format to help solicit and focus comments on the concepts developed for the regulatory oversight process. A 30-day comment period, which ended on February 22, 1999, was established to submit comments. The following provides a summary of the comments received and their disposition.

## 1.2 General Information

The 28 respondents to the *Federal Register* notice are listed in Table 1.1 of this attachment. The respondents included a wide cross-section of stakeholders, including 19 individual licensees, the Nuclear Energy Institute (NEI), the Institute of Nuclear Power Operators, the Westinghouse Owners Group, the Region IV Utility Group, two public advocacy groups, two State regulatory organizations, and one member of the general public.

The scope of the responses varied considerably among the respondents. Some addressed every subject in the questionnaire, others wrote general letters that did not specifically address the questions in the *Federal Register* notice. Because the responses were so varied, the staff chose to capture general comments from the responses (primarily extracted from the text of the letters) as well as specific responses to the questions. Comments that differed from the majority opinions are listed under "Other views". Specific responses are numbered according to their originator as listed in Table 1.1. As stated in the *Federal Register* notice, individual comments may be reviewed at the NRC Public Document Room.

## 1.3 Summary of Comments Received

The majority of the comments provided by the respondents dealt with specific details and the implementation of the various recommended processes. Examples of these comments include (1) the appropriate thresholds and their basis for the various PIs, (2) the ability of recommended PIs to adequately measure licensee performance, (3) the intent and focus of the inspectable areas in the new risk-informed baseline inspection program, and (4) the conduct of the new assessment activities and the use of the action matrix. These comments were reviewed and forwarded to the staff responsible for developing those areas of the new oversight program. These comments will continue to be evaluated and incorporated as appropriate as the process details are completed.

Several respondents provided comments that have a significant impact on the concepts developed for the regulatory oversight processes and the plans for transitioning from the current processes to the new processes. These comments were evaluated by the staff and dispositioned as follows:

A. Several respondents noted that Commission paper SECY-99-007 did not provide sufficient detail on how the enforcement policy would be revised to be integrated and consistent with the proposed inspection and assessment processes. The staff has further developed the recommendations for revising the enforcement policy, which are presented in Attachment 4.

B. Several respondents also commented that more information was needed on how inspection findings from the new risk-informed baseline inspection program would be evaluated for significance, and used with performance indicators (PIs) to assess licensee performance. The staff has also completed significant work in this area, with the concepts presented in Attachment 2.

C. Another concern expressed by the respondents was that any additional developments to the regulatory oversight processes should be provided to the public for comment prior to implementation. In particular, the respondents requested that the public be allowed to review and comment on the revised enforcement policy and the inspection finding evaluation process prior their implementation.

To address this concern, the staff intends to hold a 30-day public comment period on the new regulatory oversight process details, including enforcement policy revisions and inspection finding evaluation guidance, during the pilot program. This will allow any process changes resulting from public review and comment to be incorporated during the pilot program, prior to full implementation.

D. Several respondents stated that manual scrams should not be included with automatic scrams in the unplanned scram PI. The commenters stated that including manual scrams in this PI could send the wrong message to licensee management and operations personnel, and could result in a non-conservative decision with adverse safety consequences.

The staff reviewed this comment and concluded that the impact would be negligible, relative to other factors influencing operator response during a transient. The revised reactor oversight assessment program is risk-informed and performance-based to focus NRC and licensee resources on the most important contributors to risk to public health and safety. The objective of the Initiating Events cornerstone is to limit the frequency of those events that upset plant stability and challenge critical safety functions. Such an event can lead to either an automatic scram when a plant parameter exceeds a set point, or a manual scram when directed by an abnormal procedure or an emergency operating procedure. In addition, operators are trained to manually scram the reactor if an automatic scram is unavoidable. A manual scram, therefore, may be implemented for the same or similar plant conditions that would cause an automatic scram, and the effect on the plant is the same - to upset plant stability and challenge critical safety functions. From a risk perspective, there is no difference between an automatic and a manual scram.

E. Several respondents stated that the green/white thresholds for the SSPI unavailability PIs are in some cases more restrictive than the industry goals for the year 2000. The commenters noted that these goals were carefully chosen to balance planned

unavailability with the conduct of preventive maintenance to maintain high levels of safety system reliability.

The staff reviewed this comment and concluded that the thresholds should be changed. The green/white thresholds for the BWR residual heat removal (RHR) and PWR high pressure safety injection (HPSI) systems have been changed from 0.015 to 0.020 to match the industry goals.

F. A comment was received regarding the use of the reactor coolant system (RCS) specific activity PI to monitor fuel cladding barrier integrity. It was noted that the Union of Concerned Scientists (UCS) had submitted a technical report and 10 CFR 2.206 petitions concerning the continued plant operation with fuel cladding failures at the Perry Nuclear Power Plant and River Bend Station. These Petitions stated there was no technical basis to allow plants to operate with any leaking fuel. It was further stated that the NRC should resolve these safety concerns regarding operating with leaking fuel prior to adopting the RCS specific activity PI.

By letter from the Director, Office of Nuclear Reactor Regulation, the UCS request for the immediate shutdown of the Perry and River Bend plants was denied. The basis for this denial was that a preliminary evaluation by NRC staff concluded that there were no urgent safety problems that warranted immediate action by the NRC. Nuclear plant operation with a minimal amount of fuel cladding damage is allowed, provided that the licensee continues to meet its technical specification (TS) reactor coolant system chemistry requirements, which ensure that the radiological consequences of postulated design-basis accidents are within the appropriate dose acceptance criteria. The staff intends to continue to use this PI in the new oversight processes. The staff will re-evaluate the use of this PI, as appropriate, when a Director's Decision pursuant to 10 CFR 2.206 is rendered on the issues raised in the Petitions.

G. Several respondents commented that the Containment Leakage PI, with a green/white threshold of >100% $L_A$, did not present a good measure of barrier integrity. They stated that this PI was unlikely to ever leave the green band, and therefore would provide a false sense of security. It was suggested that a more appropriate measure of containment integrity would be the reliability of the containment heat removal systems.

The staff reviewed this comment and reached the following conclusions. The proposed containment leakage indicator monitors the "as found" integrated containment leakage, and is a measure of containment performance over the last operating cycle. The staff agrees that this is not a good indicator of the current or future performance of the containment. The staff is developing an indicator proposed by NEI which will monitor containment performance throughout the operating cycle as licensees perform local leak rate tests. The results of those tests will be used to modify the base leakage determined prior to the start of the operating cycle. The staff intends to implement this indicator in the pilot program. In addition, the performance of the containment heat removal systems are monitored by the safety system failure indicator.

H. One respondent raised a concern that the new assessment model appears to mask performance problems that were caught in the past. This comment was based on the PI data provided in Attachment 2 to SECY-99-007, which presented the results of back-testing the proposed PIs against historical plant data. It was noted that none of the PIs for the plants tested crossed the RED threshold, and if these results were applied to the action matrix, the NRC would not have required any of these plants to shutdown. The respondent stated that the NRC should complete it's back-testing by explaining how it would have handled several historical problem plants.

As described in Attachment 3, the NRC performed a feasibility study of the inspection finding risk characterization process to determine if this process would identify risk-significant issues that would indicate the need for increased NRC interaction. Four plants were included in this feasibility study, including DC Cook and Millstone. The results of the study showed that the inspection finding risk characterization process identified the historical, risk-significant issues at these plants. These findings, when applied to the action matrix, would have resulted in NRC actions similar to those that were actually taken during the time periods reviewed.

I. Many respondents stated that it was important that the PI thresholds be consistent with the plant design and licensing basis. One example where this might not be the case was given for the emergency power safety system performance indicator (SSPI) unavailability PI. The green/white threshold for this PI does not allow for the increased technical specification allowed outage times for emergency diesel generators that the NRC has recently approved for some licensees. Therefore, this PI could trip the threshold when performing maintenance that is fully in accordance with regulatory requirements.

The staff reviewed this comment and determined that the threshold should be changed. The emergency ac power system green/white threshold has been changed from 0.020 to 0.038 to allow for the increased allowed outage time.

J. Several respondents stated that the physical security PIs and some of the emergency preparedness (EP) PIs have not been well developed, are not risk-informed, and their usefulness is still unknown. These respondents stated that the proposed PIs for the physical protection system should be deleted and physical protection should be assessed using complimentary inspections only. Further, the PIs for EP should be reviewed for their ability to indicate safety-significant, risk-informed performance.

The staff reviewed this comment and reached the following conclusions. The physical security PIs were developed by the NRC with input from industry representatives knowledgeable in plant security requirements and systems. Key attributes of licensee performance were identified that protect the plant against radiological sabotage. PIs were then identified that could provide objective measures of some of these attributes. These PIs measure the performance of equipment and programs that are important to meeting the objective of this cornerstone. They are therefore risk-informed, represent the best effort of industry and NRC experts, and are expected to provide useful information. They will be put through a trial program to test their usefulness. Should the trial program expose any weaknesses, or identify any necessary improvements,

appropriate changes to the physical security PIs will be made prior to their full implementation.

The EP PIs were developed by the NRC with input from industry staff knowledgeable in EP. The key attributes of licensee performance were identified that provide adequate emergency preparedness to protect public health and safety. PIs were then identified that could provide objective measures of some of these attributes. These PIs measure the performance of equipment and programs that are important to meeting the objective of this cornerstone. They are therefore risk-informed, represent the best effort of industry and NRC experts, and are expected to provide useful information. The staff has discussed the EP PIs in public meetings with industry personnel involved in emergency preparedness. There was agreement in these meetings that the indicators, with some modifications, provide useful measures of some of the key attributes of licensee performance to meet he objective of the EP cornerstone. The proposed modifications have been incorporated and the indicators will be used in the pilot program and any necessary changes will be made prior to their full implementation.

K. Many respondents had concerns with the emergency response organization (ERO) drill participation PI in particular. These respondents stated that this PI is merely a measure of attendance at a drill, and does not measure a safety outcome or measure the capability of the ERO to perform its duty. The respondents further stated that this PI does not have a regulatory basis and could impose a significant new training burden on licensees.

The staff reviewed this comment and reached the following conclusions. The ERO drill participation PI is complementary to the drill/exercise performance (DEP) indicator. The DEP, if it is in the green band, demonstrates that the licensee is able to perform, accurately and in a timely manner, the risk-significant functions of classification of emergencies, notification of offsite authorities, and preparation of protective action recommendations. But the DEP indicator alone does not provide assurance that the licensee has an adequate number of proficient personnel to staff the ERO at any time to successfully perform these important functions. The ERO drill participation PI provides that assurance by monitoring the proficiency of the licensee's key staff positions. It is more than a measure of attendance, as it requires participation in the drill in a meaningful manner so that experience and proficiency are obtained. 10 CFR 50.47(b)(14) requires that deficiencies identified in drills or exercises be corrected, including ERO member proficiency problems. It does not impose a significant new training burden on licensees because it allows for a wide range of drill experiences to be credited toward proficiency.

L. Several respondents stated that It was not appropriate to include specific severe accident management guideline (SAMG) elements in the inspection or performance assessment processes for the new oversight process. The reason given by the respondents is that SAMG was an industry initiative and there was no regulatory basis for inspecting or assessing SAMG implementation.

The staff has reviewed these comments and agrees that licensees' activities for severe accident management are not appropriate for direct inspection, especially in the

baseline program. However, the staff believes that some oversight of licensees' self-assessments in this area is appropriate and is still considering how best to incorporate the oversight into the inspection program.

## 2 RESPONSE TO *FEDERAL REGISTER* NOTICE QUESTIONNAIRE

### A. REGULATORY OVERSIGHT FRAMEWORK, PERFORMANCE INDICATORS, AND THRESHOLDS

1. Framework Structure

The oversight framework includes cornerstones of safety that (1) limit the frequency of initiating events; (2) ensure the availability, reliability, and capability of mitigating systems; (3) ensure the integrity of the fuel cladding, the reactor coolant system, and containment boundaries; (4) ensure the adequacy of the emergency preparedness functions; (5) protect the public from exposure to radioactive material releases; (6) protect nuclear plant workers from exposure to radiation; and (7) provide assurance that the physical protection system can protect against the design-basis threat of radiological sabotage. **Are there any other significant areas that need to be addressed in order for the NRC to meet its mission of ensuring that commercial nuclear power plants are operated in a manner that provides adequate protection of public health and safety and the environment and protects against radiological sabotage and the theft or diversion of special nuclear materials?**

General Comments

Most respondents stated the seven cornerstones cover all significant areas that need to addressed in order for the NRC to meet its mission.

Other Views

*Some respondents recommended that the NRC use plant-specific (or at least design type-specific), state of the art PRA's in order to have the best available information. Thresholds should be derived from plant-specific (or at least type-specific) PRA data (13) (20).*

*Some respondents stated that an additional cornerstone that covers the cross-cutting issues of management and human performance needs to be seriously considered, and PIs established, to measure performance in those areas. Additionally, design issues will still have to be dealt with by the inspection program (13) (5).*

*Some respondents were concerned about the quality and completeness of NRC reviews of licensee EP programs and that the biennial evaluations by the NRC are not representative of true utility emergency preparedness (9) (13).*

*The current proposal fails to address the interface between the NRC reactor oversight process and the whistle blowers in the nuclear industry (15).*

2. Performance Bands

The oversight framework includes thresholds for determining licensee performance within four performance bands: a licensee response band, an increased regulatory response band, a required regulatory response band, and an unacceptable performance band. The thresholds between the bands were selected to identify significant deviations from nominal industry performance and to differentiate between levels of risk significance, as indicated by PIs or inspection findings. **Are there alternative means of setting thresholds between the bands that should be considered?**

General Comments

Most respondents stated that the methodology for setting thresholds for the PIs was appropriate. The NRC has amply described the thresholds to be used in the new oversight process however the proof will be in the implementation.

Other Views

*Thresholds should be based on root causes, rather than symptom based (5).*

*There was no discussion in SECY-99-007 of how inspection findings will be converted into assessment inputs. The NRC should describe how it intends to establish thresholds for inspection findings and provide a separate public comment period once that information is available (1) (6) (8).*

*Not necessarily between the bands, but perhaps PIs should be considered for below the green licensee response band. As early indicators (for licensee consideration only), a group of complimentary PIs under the primary indicator might give indication of changing performance in specific areas (13).*

3. Performance Indicators

The NRC staff developed a set of 20 indicators to measure important attributes of the seven areas listed in question 1 above. The PIs, together with findings from associated baseline inspections in attributes not fully measured or not measured at all by the indicators, should provide a broad sample of data on which to assess licensee performance in those important attributes. One reason these specific indicators were proposed is because they are readily available and can be implemented in a short period of time. Other indicators will be developed and included in the oversight process as their ability to measure licensee performance is determined. **Will these PIs, along with inspection findings, be effective in determining varying levels of licensee performance?**

General Comments

Most respondents stated that this approach should provide the best possible means of determining levels of safety performance by licensees. Most stated that the process was sound, but only time would tell, and the process would only be as good as it is implemented.

Other Views

*One respondent stated that previous NRC performance indicators have been manipulated and that the notion of improving industry performance is more a function of changes in reporting requirements or NRC policies rather than actual industry improvement (15).*

4. Other Comments

**Are there any other comments related to the oversight framework, PIs, or thresholds?**

General Comments

One respondent commented on the use of the RCS specific activity PI and the containment leakage PI. The respondent stated that it is illegal and potentially unsafe for nuclear plants to operate with any fuel leakers, as stated in 10 CFR 2.206 petitions filed with NRC. This issue should be resolved prior to adopting this PI. The respondent further stated that the containment leakage PI is a meaningless indicator because it will always be green (or if it isn't it will represent plant conditions that had already been corrected) (1).

The SSPI indicators do not properly account for system degradation caused by passive design problems (1).

It should be noted that design and licensing basis issues have been prominent in several recent plant performance declines. It would appear that the NRC inspection would continue to be the appropriate method for the NRC to monitor this important area (7).

The PIs used at plants should be changed only with the permission of the NRC, like the current licensee quality assurance programs (13).

## B. RISK-INFORMED BASELINE INSPECTIONS

1. Inspectable Areas

The proposed baseline inspection program is based on a set of inspectable areas that, in conjunction with the PIs, provides enough information to determine whether the objectives of each cornerstone of safety are being met. **Are there any other areas not encompassed by the inspectable areas that need to be reviewed to achieve the same goal?**

General Comments

Most respondents stated that there were no additional inspectable areas that needed to be reviewed. However, if additional PIs are developed, there should be a corresponding decrease in inspection activities.

2. Other Comments

**Are there any other comments related to the proposed baseline inspection program?**

General Comments

Inspection procedures will have to include more than brief checklists. They should be supplemented with a living explanatory document (5).

The proposed baseline inspections will concentrate on areas not covered by PIs and consequently there will be little chance to confirm or refute inspection findings. The NRC should provide objective acceptance criteria for inspection findings (1).

If management effectiveness is not adopted as a cornerstone, then this area needs to be inspected (13).

The baseline inspection program along with the PIs have been sufficient to figure which reactors were the poor performers and needed additional regulatory attention. However, when discussions regarding enforcement and the watch list, senior managers substituted their own opinions for data (15).

## C. ASSESSMENT PROCESS

1. Frequency of Assessments

The proposed assessment process provides four levels of review of licensee performance: continuous, quarterly, semiannual, and annual. Each successive level is performed at a higher organizational level within the NRC. The semiannual and annual periods would coincide with an annual inspection planning process and the NRC's budgeting process. **Are the proposed assessment periods sufficient to maintain a current understanding of licensee performance?**

General Comments

Most respondents stated that the proposed assessment periods should be sufficient and that there will be a more frequent review of licensee performance than now exists. Several respondents also recommended that inspector exit meetings continue since they are a frequent and formal means to communicate with licensee management.

Other Views

*The proposed assessment periods would be sufficient if the NRC had ever shown a willingness to step in and halt unsafe operation (15).*

2. Action Decision Model

An action matrix was developed to provide guidance for consistently considering those actions that the NRC needs to take in response to the assessed performance of licensees. The actions are categorized into four areas (management meeting, licensee action, NRC inspection, and regulatory action) and are graded across five ranges of licensee performance. The decision to take an action would be determined directly from the threshold assessments of PIs and inspection areas. As changes in performance become more significant, more significant actions would be considered. The action matrix is not intended to be absolute. It establishes expectations for NRC-licensee interactions, licensee actions, and NRC actions and does not preclude taking less action or additional action, when justified. **Will the use of the action matrix and underlying decision logic reasonably result in timely and effective action?**

General Comments

Most respondents stated that the use of the action matrix should result in an effective and timely assessment process. Some respondents recommended eliminating the numbers from the action matrix as these numbers could easily be confused as the new equivalent of SALP scores. Also, the use of the term "overall red" should not be used as it implies that all of the performance indicators and inspection findings add up into a total rating.

Other Views

*Timely and effective action can only be achieved if the senior management at NRC has the will to enforce the regulations. "Executive over-rides" provide any opportunity to replace facts with individual judgement and prevent them from holding licensees accountable (15).*

*The previous oversight process would have worked if senior management had not neglected or downplayed clear warning signs of declining performance trends (1).*

3. Communicating Assessment Results

The proposed assessment process includes several methods for communicating information to licensees and the public. First, the information being assessed (PIs and inspection results) will be made public as the information becomes available. Second, the NRC will send each licensee a letter every 6 months that describes any changes in the NRC's planned inspections for the upcoming 6 months on the basis of licensee performance. Third, each licensee will receive an annual report that includes the NRC's assessment of the licensee's performance and any associated actions taken because of that performance. In addition to issuing the annual assessment report, the NRC will hold an annual public meeting with each licensee to discuss its performance. Finally, a public meeting with the Commission will be held annually to discuss the performance at all plants. **Do**

**these reports and meetings provide sufficient opportunity for licensees and the general public to gain an understanding of performance and to interact with the NRC?**

General Comments

Most respondents stated that more information will be made available under this system than the previous one.

Other Views

*This process seems to provide an ample opportunity for licensees to understand and unduly influence NRC's assessment of their reactors. As for the public, the only means for interacting with the NRC and the licensee is through the 10 CFR 2.206 process (15) .*

*Any discussions that attempt to try to summarize a plant's overall performance should be avoided since the PIs and inspection findings will speak for themselves (21).*

4. Other Comments

**Are there any other comments related to the proposed assessment process?**

General Comments

Seems to be artificially tied to the budget process. More likely cycle would be based on refueling outage or consistent with TS (5).

## E. IMPLEMENTATION

1. Transition Plan

The Commission paper includes a transition plan that identifies important activities needed to complete and implement the proposed processes. **Are there other major activities not identified on the plan that if not accomplished could prevent successful implementation of the proposed processes?**

General Comments

Most respondents stated that the transition plan appears well thought out and robust. However, there will be a need to address cultural issues and individual concerns.

Other Views

*There needs to be a culture change amongst inspectors such that the new program doesn't continue unintended regulation by inspection (21).*

*The NRC should consider providing a full-time staff position with responsibility for the reactor oversight program comparable to the function of the Agency Allegation Advisor to monitor the staff's actions in implementing the revised oversight process (1).*

2. Other Comments

**Are there any other comments related to implementing the new processes?**

General Comments

The public needs to be educated on the process and a brief, plain language english description of the proposed process should be developed for public dissemination (1).

## F. ADDITIONAL COMMENTS

In addition to the previously mentioned issues, commenters were invited to give any other views on the NRC assessment process that could assist the NRC in improving its effectiveness.

General Comments

Most respondents commended the Commission and staff for its work on the new process. They were encouraged by the fundamental, positive change to the regulatory oversight processes and believed that the process and reasoning behind the proposed process were sound. More work needs to be done with change management and in planned reforms in inspection and enforcement.

Other Views

*Some respondents stated that the practical effect of using specific metrics for performance measurement is that these PI metrics become regulatory requirements, and enforced as such. They further stated that thresholds may be perceived as limits by utilities, which may penalize conservative decision making (8) (16).*

*One respondent recommended that 1) EP plans, programs, and procedural considerations by the NRC should include the active participation of the state government, 2) EP should be re-established as a separately evaluated area, 3) the statistical approach to EP evaluation should be validated by two independent, qualified, non-government organizations, and 4) The NRC should put more, not less, resources into EP evaluations (9).*

*One respondent stated that as additional PIs are developed, that there be a corresponding decrease in the baseline inspection activity. Changes to the thresholds should not be made without good reason and should not rise with any future overall industry performance. Licensee performance should not be assessed by either PIs or inspections in areas that do not relate to a regulatory requirement. The action matrix should be applied within a strategic performance area, rather than on a cornerstone by cornerstone basis (7).*

*Many respondents noted that the enforcement changes and process for evaluating inspection findings were not described in SECY-99-007, and the public has a right to review and comment on these proposed changes (1) (6). The opportunity for public comments should also be afforded for the final performance metrics set to be used (8).*

*Many respondents noted that it is important that the PI thresholds be consistent with plant design and licensing basis. The emergency power SSPI unavailability PI does not allow for the increased TS AOTs for EDGs that some licensees have recently adopted after NRC review and approval. Therefore, this PI could trip a threshold when performing maintenance fully in accordance with regulatory requirements (7) (8) (14) (16).*

*Several respondents had comments on the EP and physical security PIs. One respondent stated that the proposed PIs for physical protection system should be deleted (18). Others stated that the physical security PIs and some of the EP PIs have not been well developed, are not risk-informed, and their usefulness is still unknown. Physical protection should be assessed using complimentary inspections only, and PIs for EP should be reviewed for their ability to indicate safety-significant, risk-informed performance (19) (20).*

*Many respondents had concerns with the emergency response organization (ERO) drill participation PI in particular. These respondents stated that this PI is merely a measure of attendance at a drill, and does not measure a safety outcome or measure the capability of the ERO to perform its duty. The respondents further stated that this PI does not have a regulatory basis and could impose a significant new training burden on licensees (6) (7) (8) (16) (18).*

*Several respondents stated that further work needs to be done in integrating the enforcement process with assessment (21) (7) (19).*

*Some respondents stated that it is not appropriate to include specific severe accident management guideline (SAMG) elements in the inspection or performance assessment processes for the new oversight process (3) (7) (16).*

*Some respondents stated that manual scrams should not be included with automatic scrams in the unplanned scram PI (4) (18).*

*Several respondents stated that the green/white thresholds for the SSPI unavailability PIs are in some cases more restrictive than the industry's year 2000*

*goals. These goals were carefully chosen to balance planned unavailability with the conduct of preventive maintenance to maintain high levels of safety system reliability (4) (7).*

Table 1.1 List of Public Comment Respondents

(1) Union of Concerned Scientists (UCS)
(2) Southern Company
(3) Westinghouse Owners Group
(4) Institute of Nuclear Power Operations (INPO)
(5) Charles R. Jones
(6) Consumers Energy
(7) Nuclear Energy Institute (NEI)
(8) Southern California Edison
(9) Pennsylvania Emergency Management Agency
(10) (Repeat Submittal of (9))
(11) Virginia Power
(12) Alliant Energy
(13) State of Illinois Department of Nuclear Safety
(14) South Texas Project Nuclear Operating Company
(15) Public Citizen's Critical Mass Energy Project
(16) PECO Energy Company
(17) Commonwealth Edison Company
(18) South Carolina Electric & Gas Company
(19) Union Electric Company
(20) Arizona Public Service Company
(21) Entergy Operations, Inc.

The following submittals were received after the due date and the specific comments could not be included in the detailed evaluation presented in this attachment. These comments have been forwarded to the staff and will be reviewed and evaluated during the development of the process details and implementing guidance.

(22) Florida Power Corporation
(23) North Atlantic Energy Service Corporation
(24) Region IV Utility Group
(25) Tennessee Valley Authority
(26) Pacific Gas and Electric Company
(27) Northern States Power Company
(28) TU Electric
(29) (Repeat Submittal of (15))
(30) Wolf Creek Nuclear Operating Corporation

# INSPECTION FINDING
# RISK CHARACTERIZATION PROCESS


Developed by:

Task Leader Morris Branch

Task Members
Douglas Coe
Jin Chung
Thomas Dexter
John Flack
Stephen Klementowicz
Steve Mays
Eugene McPeek
Scott Morris
Gareth Parry
Roger Pederson
William Ruland
Randolph Sullivan
Barry Westreich
James Wigginton
Peter Wilson


Attachment 2

## Introduction

SECY-99-007, dated January 8, 1999, described the need for a method of assigning a risk characterization to inspection findings. This risk characterization is necessary so that inspection findings can be aligned with risk-informed plant performance indicators (PIs) during the plant performance assessment process. Figure 1 describes the process flow of typical inspection findings or issues. Figure 1 also outlines the different paths an issue could take with the final output of each process being an input to the assessment and/or the enforcement process. Appendix 1 of this attachment describes in detail the staff's efforts to date for the risk characterization of inspection findings, which have a potential impact on at-power operations, thereby affecting the initiating event, mitigating systems, or barrier cornerstones associated with the reactor safety strategic performance area. It is expected that this process will address most of the risk-significant issues that would be experienced at a facility. However, issues associated with shutdown risk, emergency preparedness, radiation safety, and safeguards need a risk characterization process as well. The staff is currently developing processes with the nuclear industry and the public to characterize the risk significance of inspection findings in these areas.

The concepts being explored for the emergency preparedness, radiation safety, and safeguards areas involve the development of a process flow and decision logic that will complement or supplement PI data. The products developed by this ongoing effort will receive a tabletop exercise similar to that accomplished during the feasibility review of the reactor oversight process described in Attachment 3 of this paper. That feasibility review highlighted the need for a risk characterization process for all plant items included in a plant's plant issue matrix (PIM). Recommendations from the feasibility review included the need to have these processes essentially complete before their use during the plant pilot study described in Attachment 6.

Although the staff fully expects to have most of the risk characterization processes in place for the pilot study, further enhancement and development will continue. However, if for example, difficulty is encountered in developing a method for the risk characterization of shutdown activities, the inspection staff may have to involve a risk analyst or a risk panel in order to properly characterize the finding until the guidance can be developed. The Office of Research (RES) plans to continue its support of the oversight process by providing risk expertise, methods, data, and insights into various areas. Specific activities being developed for the pilot program include:

- generation and consolidation of plant-specific risk insights to help focus plant inspections on risk significant areas,

- generation of plant-specific insights to support the inspection finding risk characterization and reactor assessment process,

In addition, there are longer term RES activities associated with the oversight process. These include:

- development of risk-informed performance indicators to enhance the merit of current indicators, including additional indicators that cover shutdown operations, cross systems

performance (such as component performance, common cause failures, and human performance) and potential integrated indicators of performance that cover multiple areas within or across cornerstones.

These activities will improve NRC's ability to apply risk to plant inspections and enhance the ability to evaluate plants through the plant assessment process. In addition, RES will continue to investigate the impact of modeling techniques, assumptions, and data on probabilistic risk assessment (PRA) results and conclusions, and the impact they have on the regulatory decision-making process.

Figure 1 (Significance Determination Process (SDP)) and Appendix 1 (Process for Characterizing the Risk Significancy of Inspection Findings) for at-power situations are included herein to describe the staff's efforts in this area. Additionally, for completeness, Appendix 2 presents the current DRAFT concepts for characterizing the risk significance of inspection findings in the emergency preparedness, radiation safety, and safeguards areas.

# SIGNIFICANCE DETERMINATION PROCESS

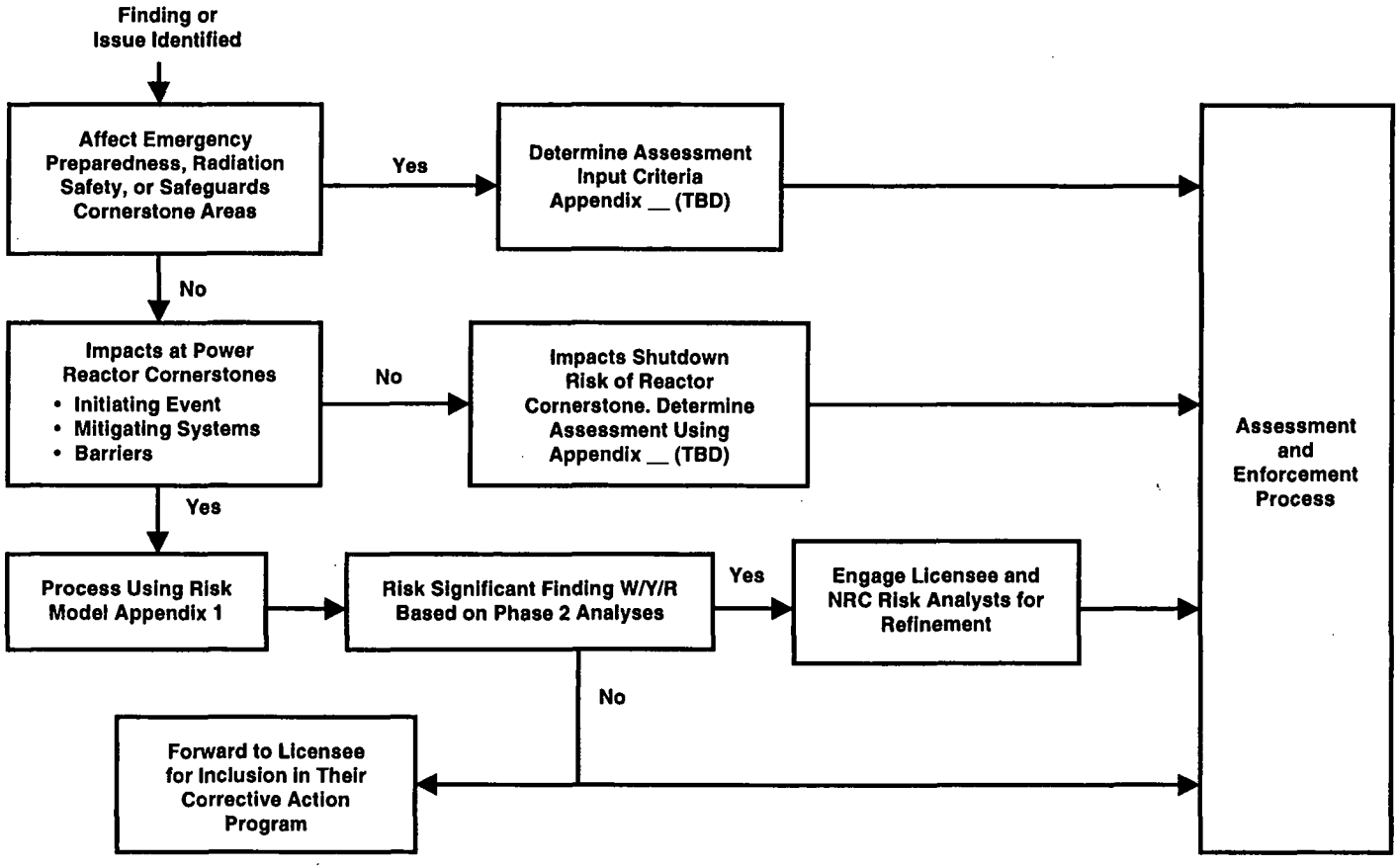


Figure 1

## Appendix 1

### Process for Characterizing the Risk Significance of Inspection Findings

Entry Conditions

This process is currently designed to assess only those inspection findings associated with at-power operations within the cornerstones of initiating events, mitigation systems, and barrier integrity under the reactor safety strategic performance area. Compliance with Technical Specifications (TS) and design-bases assumptions continue to provide defense-in-depth and safety margins. An actual initiating event will either be captured by a performance indicator (e.g., a reactor trip) or, if it is complicated by equipment malfunction or operator error, will be assessed by NRC risk analysts outside of the process described herein.

Objectives

1. To characterize the risk significance of an inspection finding consistent with the regulatory response thresholds used for performance indicators (PIs) in the NRC licensee performance assessment process and for entry into the enforcement process.

2. To provide a risk-informed framework for discussing and communicating the potential significance of inspection findings.

Defining Characteristic

The most important characteristic of this process is that it elevates potentially risk-significant issues early in the process and screens out those findings that have minimal or no risk significance. Further, field inspectors and their managers should be able to efficiently use the basic accident scenario concepts in this process to categorize individual inspection findings by potential risk significance. The process presumes the user has a basic understanding of risk analysis methods.

Introduction

The proposed overall licensee assessment process (as defined in SECY-99-007) evaluates licensee performance using a combination of PI and inspections. Thresholds have been established for the PIs, which, if exceeded, may prompt additional actions to focus licensee and NRC attention on areas in which there is a potential decline in licensee performance. The inspection finding risk characterization process described in this appendix and illustrated in Figure 1 evaluates the significance of individual inspection findings so that the overall licensee performance assessment process can compare and evaluate them on a significance scale similar to the PI information. Licensee-identified issues, when reviewed by NRC inspectors, are also candidates for this process.

# SIGNIFICANCE DETERMINATION PROCESS INITATING EVENT, MITIGATING SYSTEMS & BARRIER CORNERSTONES AT_POWER

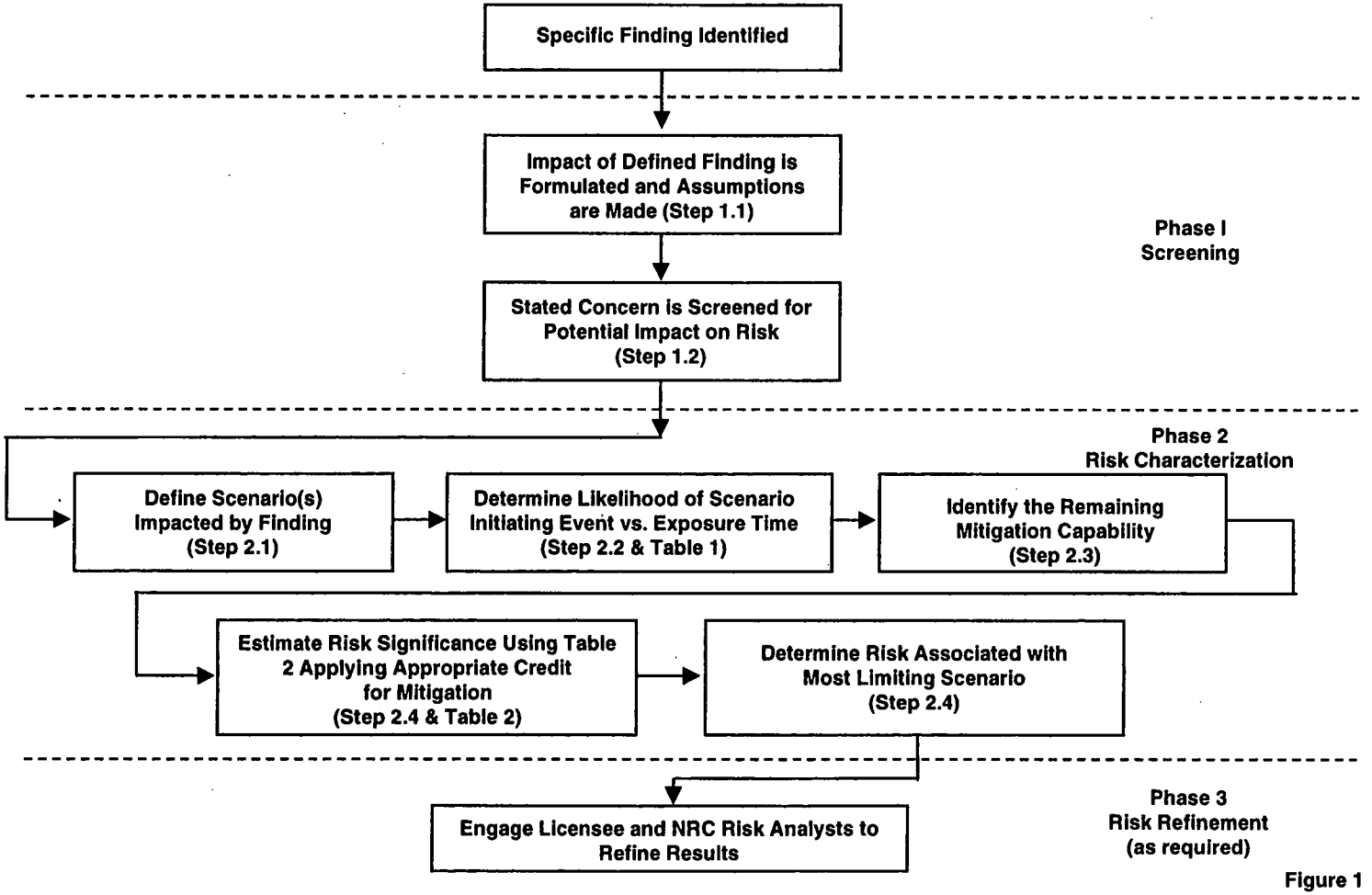


Figure 1

Inspection findings related to reactor safety cornerstones (initiating events, mitigating systems, and barrier integrity) will be assessed differently than the remaining areas (emergency planning, occupational exposure, public exposure, and physical security). For the reactor safety cornerstones, excluding the EP area, each finding is evaluated using a risk-informed framework that relates the finding to specific structures, systems, or components (SSCs), identifies the core damage scenarios to which the failure of the SSCs contribute, estimates how likely the initiating event for such scenarios might be, and finally determines what capability would remain to prevent core damage if the initiating events for the identified scenarios actually occurred.

Bases

The approach described in this Appendix was developed using input derived from other agency documents, including the following:

- Regulatory Guide 1.174, "An Approach for Using Probabilistic Risk Assessment (PRA) in Risk-Informed Decisions on Plant-Specific Changes to the Licensing Basis;"
- Table 1 was based on generic values obtained from NUREG/CR-5499, "Rates of Initiating Events at U.S. Nuclear Power Plants: 1987 - 1995;"
- The accident sequence precursor (ASP) screening rules as outlined in NUREG/CR-4674, "Precursors to Potential Severe Core Damage Accidents."

In addition, Table 2 is based on generic numbers that are generally consistent with values obtained from PRA models.

Sensitivity Test of Inspection Finding Risk Characterization Screening Process

The staff performed a simple test of the sensitivity of the screening process. The test was designed to ensure that items with proven risk importance would not be screened out by the process. The staff reviewed the 1996 accident sequence precursors (ASP) to potential severe core damage events. In 1996, the NRC identified in NUREG/CR-4674, Vol. 25, 14 precursors with a conditional core damage probability (CCDP) greater than 1E-6 affecting 13 units. There were seven precursor events involving initiating events at power, six precursor events involving unavailabilities at power, and one precursor event involving an initiating event while the plant was shutdown. With the exception of the shutdown event, which the IFRCP does not currently model, all of the risk significant ASP events successfully passed the screening test and would have required further evaluation using Phase 2 of the model. Because of the simplicity of the model, the process has the potential to overestimate the risk significance of some events, possibly requiring a more refined evaluation before a final assessment can be made.

Process Discussion

The inspection finding assessment process is a graduated approach that uses a three-phase process to differentiate inspection findings on the basis of their actual or potential risk significance. Findings that pass through a screening phase will proceed to be evaluated by the next phase.

Phase 1 - **Definition and Initial Screening of Findings:** Precise characterization of the finding and an initial screening-out of low-significance findings

Phase 2 - **Risk Significance Approximation and Basis:** Initial approximation of the risk significance of the finding and development of the basis for this determination for those findings that pass through the Phase 1 screening

Phase 3 - **Risk Significance Finalization and Justification:** As-needed refinement of the risk significance of Phase 2 findings by an NRC risk analyst

Phases 1 and 2 are intended to be accomplished primarily by field inspectors and their first-line managers. Until a user becomes practiced in its use, it is expected that an NRC risk analyst may be needed to assist with some of the assumptions used for the Phase 2 assessment. However, after inspection personnel become more familiar with the process, involvement of a risk analyst is expected to become more limited. The Phase 3 review is not mandatory and is only intended to confirm or modify the results of significant ("white" or above) or controversial findings from the Phase 2 assessment. Phase 3 analysis methods will utilize current PRA techniques and rely on the expertise of knowledgeable risk analysts.

**Step 1 - Definition and Initial Screening of Findings**

Step 1.1 - Definition of the Inspection Finding and Assumed Impact

It is crucial that inspection findings be well defined in order to consistently execute the logic required by this process. The process can be entered with inspection findings that involve multiple degraded conditions that concurrently affect safety. The definition of the finding should be based on the known existing facts and should NOT include hypothetical failures such as the one single failure assumed for licensing basis design requirements. The statement of the finding should clearly identify the equipment potentially or actually impacted, as this will be used in the risk characterization process. In some cases, the impact of the finding can be stated unambiguously in terms of the status of a piece of equipment, for example, whether it is operable or not, or whether it is available to perform its function or not. In other cases, the finding may specify conditions under which a piece of equipment becomes unavailable. In still other cases, those involving degraded conditions for example, the impact is not determined, and assumptions will have to be made for the purposes of assessing the risk significance. Any explicitly stated assumptions regarding the effect of the finding on the safety functions should initially be conservative (i.e., force a potentially higher risk significance) because the final result will always be viewed from the context of those assumptions. Subsequent information or analysis from the licensee or other sources is expected, in many cases, to reduce the significance of the finding, with an appropriate explicit and defensible rationale. Findings must also be well defined because the assumptions can be modified to examine their influence on the results. However, the general rule is that the definition of the finding must address its safety function impact and any assumptions regarding other plant conditions. Examples include the following:

1. The following situations represent two different findings: a motor-operated valve (MOV) in a pressurized-water reactor (PWR) auxiliary feedwater (AFW) system is found with hardened gearbox grease (i.e., is degraded); and an MOV in the AFW system is found with a broken wire that renders it non-functional. For the purposes of assessing the risk

significance, the impact of both could be characterized conservatively as "MOV does not perform its safety function of opening to provide flow to the steam generators." In the first case, it is necessary to assume that the hardened grease makes the valve unavailable, while in the second it is not.

2. A finding involving a deficiency in the design of the plant could be stated as follows: "Equipment/System/Component X would not perform its safety function of .... under conditions. ..." For example, a remote shutdown panel that might be rendered inhabitable during a cable spreading room fire that causes a loss of offsite power due to inadequate heating, ventilation, and air conditioning (HVAC) dispersion of the resulting smoke, would be characterized conservatively as "plant cooldown not possible from control room or remote shutdown panel during a loss of offsite power (LOOP) caused by cable spreading room fire due to inhabitability from resulting smoke and loss of power to remote shutdown panel HVAC."

**Step 1.2 - Initial Screening of the Inspection Finding**

For the sake of efficiency, the initial screening is intended to screen out those findings that have minimal or no impact on risk early in this process. The screening guidelines are linked to the cornerstones as follows: If there is negligible impact on meeting the reactor safety cornerstone objectives, the finding can be identified as having minimal or no impact on risk and should be corrected under the licensee's corrective action process.

The decision logic is described as follows:

If the finding and its associated assumptions, as defined in Step 1.1, could simultaneously adversely affect two or more reactor safety cornerstones, then Phase 1 is complete and the user should proceed directly to the Phase 2 analysis. Alternatively, the finding can be screened out immediately (characterized as having little or no risk potential impact and exit this process) if it can be shown to NOT be related to any adverse effect on any reactor safety cornerstone. Finally, if the finding and its associated assumptions affect only ONE reactor safety cornerstone, it may still be screened out as follows:

> If only the mitigation systems cornerstone is affected and the finding and the associated assumptions do NOT represent a loss of safety function of a system, OR the finding and associated assumptions represent a loss of safety function of a single train of a multi-train system for LESS THAN the allowed outage time (AOT) prescribed by the limiting condition for operation (LCO) for Technical Specification equipment, OR represents a design or qualification finding but the equipment or the system is still operable (e.g., meets NRC Generic Letter 91-18 criteria to remain operable), OR is not categorized as a risk-significant SSC under the maintenance rule (10 CFR 50.65) then the finding would be considered green and screened out.
>
> If only the initiating event cornerstone is affected and the finding and associated assumptions have no other impact than increasing the likelihood of an uncomplicated reactor trip, the finding would be considered green and screened out.

If only the fuel barrier is affected, the issue will be screened out since a PI exists for this barrier.

If any reactor coolant system (RCS) barrier function to mitigate an accident sequence is affected, the issue will be assessed in Phase 2.

If the containment barrier is affected, the concern is referred to a risk analyst until more guidance can be provided.

Any inspection finding that is NOT screened out (i.e., characterized as green) by the above-mentioned decision logic should be assessed using the Phase 2 process described herein.

**Phase 2 - Risk Significance Approximation and Basis**

**Step 2.1 - Define the Applicable Scenarios**

Once an inspection finding passes through the Phase 1 screening, it is evaluated in a more detailed manner using the Phase 2 process described herein. The first step in Phase 2 is to ask the question "Under what core damage accident scenarios would the finding, as defined in Step 1.1, increase risk?"

Determining which scenarios make an inspection finding risk important may not always be intuitive. Therefore, documents such as plant-specific PRA studies, safety analysis reports, TS bases, and emergency operating procedures should be reviewed as needed to ensure that the most likely events and circumstances are considered. Specifically, the inspector must determine which core damage scenarios are adversely impacted by each finding.

Identifying the scenarios begins with identifying the equipment and the assumed or actual impact of the finding, and takes into consideration the role the equipment plays in either the continued operation of the plant or the response to an initiating event. This step leads to an identification of the role of the finding in either contributing to an initiating event or affecting a mitigating system, or both. For the mitigating systems, the impact may be one of two kinds: the finding results in the equipment function's being compromised or the finding relates to the identification of a condition under which the function would become compromised. In the first of these two cases, the function can be assumed to be lost, and the scenario of interest is the initiating event for which the equipment is required and the remaining equipment that by design can provide the same function as that which has been lost. For the second case, the scenario definition must also include the condition under which the function would become compromised. For example, if the finding is that if two operator actions are reversed while performing the switchover to recirculation in a PWR, the safety injection (SI) pumps could be irreparably damaged due to cavitation, the scenario definition includes the loss of coolant accident (LOCA) initiating event, the failure of the charging system (if it is a viable alternative means of providing sump recirculation), and also the human error (which represents the condition under which the pumps would fail). If the finding were that the SI pumps could never be aligned properly for some reason (this extreme case is an example to demonstrate a point only), the scenario definition would involve only the LOCA and the charging system failures.

During this phase of the process, inspectors may determine that several different scenarios are affected by a particular inspection finding. This determination can occur in one of two ways:

> First, the finding may be related to an increase in the likelihood of an initiating event, which may require consideration of several scenarios resulting from this initiating event.
>
> Second, a finding may be related to a system required to respond to several initiating events. For example, the discovery of a degraded instrument air system could affect plant response to both a loss of offsite power and a LOCA. Each of these two initiating events must be considered separately so that the next step of the Phase 2 evaluation process can determine which scenario is potentially most significant.

The scenario resulting in the highest significance will be used to establish the initial relative risk-significance of the finding. If a Phase 2 assessment of multiple applicable scenarios results in all "green" significance, the user should seek assistance of a risk analyst, since the Phase 2 process cannot effectively "sum" the significance of multiple low-significance scenarios. Additionally, a particular inspection finding may affect multiple cornerstones by both increasing the probability of an initiating event and degrading the capability or reliability of a mitigating system. Again, each applicable scenario must be considered to determine which is the most significant.

In identifying possible core damage accident scenarios, consideration must also be given to the role of support systems as well as the primary system. For example, if a particular initiating event can be mitigated by more than one system providing the same safety function, but all such systems are dependent on a single train of a support system (e.g., service water or emergency ac power), the limiting scenario may involve the failure of the single train of the support system rather than the individual primary system trains.

**Step 2.2 - Estimation of the Likelihood of Scenario Initiating Events and Conditions**

In Step 2.1, sets of core damage accident scenarios were determined that could be made more likely by the identified inspection finding (degraded condition). This step should result in the identification of one or more initiating events, each followed by various sequences of equipment failures or operator errors. To determine the most limiting scenario, perform the following analysis for <u>each</u> set of scenarios with a common initiating event.

If the finding does not relate to an increased likelihood of an initiating event, the initiating events for which the affected SSC(s) are required are allocated to a frequency range in accordance with guidance provided in the left-hand column of Table 1 herein. Table 1 is entered from the left column, using the initiating event frequency, and from the bottom, using the estimated time that the degraded condition existed, to arrive at a likelihood rating (A - H) for the combination of the initiating event and the duration of the degraded condition.

If the finding relates to an increased likelihood of a specific initiating event, the likelihood of that initiating event is increased according to the significance of the degradation. For example, if the inspection finding is that loose parts are found inside a steam generator, then the frequency of a steam generator tube rupture (SGTR) for that plant may increase to the next higher frequency category, and Table 1 is entered accordingly.

When the scenario includes the identification of a condition under which a function, a system, or a train becomes unavailable, then this fact has to be factored into the assessment. It is not appropriate to assume that the affected function, system, or train is unavailable. At this point, it is necessary that a risk analyst assess the probability of the condition, and adjust the likelihood of the initiating event (or events) by the appropriate amount. For example:

- A finding that if a control valve in the instrument air system fails it could lead to overpressure of a low-pressure part of the system, thereby leading to the failure of the equipment controlled by the air system. The probability of interest is that of the failure of the valve during the mission time, which depends on the impact of the failure. For example, if the valve failure would lead to a reactor trip in addition to failing some mitigating equipment, the mission time is 1 year, and the initiating event frequency would be the probability of failure of the valve in one year. If the impact is simply on the mitigating systems for a LOCA, the mission time is that time required to place the plant in a safe, stable state. In this case, the LOCA frequency would be adjusted by the probability that the valve failure would occur during the mission time.

Finally, remember that the definition of the finding and the selection of core damage accident scenarios should be strictly based on the known existing facts and should NOT include hypothetical failures, such as the one single failure assumed for licensing basis design requirements.

**Table 1 - Estimated Likelihood Rating for Initiating Event Occurrence During Degraded Period (taken from NUREG/CR-5499)**

| Approx. Freq. | Example Event Type | Estimated Likelihood Rating | | |
|---|---|---|---|---|
| >1 per 1 - 10 yr | Reactor Trip<br>Loss of condenser | **A** | **B** | **C** |
| 1 per 10 - $10^2$ yr | Loss of Offsite Power<br>Total loss of main FW<br>Stuck open SRV (BWR)<br>MSLB (outside cntmt)<br>Loss of 1 SR AC bus<br>Loss of Instr/Cntrl Air<br>Fire causing reactor trip | **B** | **C** | **D** |
| 1 per $10^2$ - $10^3$ yr | SGTR<br>Stuck open PORV/SV<br>RCP seal LOCA (PWR)<br>MFLB<br>MSLB inside PWR cntmt<br>Loss of 1 SR DC bus<br>Flood causing reactor trip | **C** | **D** | **E** |
| 1 per $10^3$ - $10^4$ yr | Small LOCA<br>Loss of all service water | **D** | **E** | **F** |
| 1 per $10^4$ - $10^5$ yr | Med LOCA<br>Large LOCA (BWR) | **E** | **F** | **G** |
| <1 per $10^5$ yr | Large LOCA (PWR)<br>ISLOCA<br>Vessel Rupture | **F** | **G** | **H** |
| | | > 30 days | 30-3days | <3 days |
| | | Exposure Time for Degraded Condition | | |

Use of Table 1 should result in one or more initiating events of interest with an associated likelihood rating ("A" through "H") for each.

**Step 2.3 - Estimation of remaining mitigation capability**

The scenarios of interest have now been identified, and Table 1 has been used to estimate associated initiating event frequencies and to combine them with degraded condition exposure time to arrive at an estimate of the likelihood of the initiating events. Following an initiating event, core damage will result from a series of system, component, or operator failures. In this step, the user will approximate the probability of failing to mitigate the core damage scenarios

associated with the condition identified by the finding. Findings defined in Phase 1 will generally identify the potential for degrading a particular function. Therefore, the probability of preventing the scenarios that include this degraded function will depend on the number of remaining success paths for providing the function.

To count success paths in a probabilistically consistent manner, systems are considered to be either single train or redundant. A redundant system is a system that has more than one identical train, where the loss of one train does not lead to a loss of function. However, all trains of a redundant system are subject to a possible common-cause failure. Success paths may be provided by each train of diverse single-train systems (e.g., high-pressure injection in a boiling water reactor (BWR) for a loss of feedwater transient may be provided by the high-pressure coolant injection (HPCI) and reactor core isolation coolant (RCIC) systems, both single train systems), or by diverse redundant systems (e.g., low-pressure injection may be provided by the low-pressure core spray (LPCS) and the LPCI systems in a BWR-4, both multi train systems), or by mixtures of single-train and redundant systems. In addition, in some cases there may be time to recover the function or train that has been lost, which can be credited as a success path under certain conditions.

In counting the number of remaining available success paths for a scenario affected by the degradation assumed by the finding, the user must select the most appropriate column of Table 2, "Risk Significance Estimation Matrix," for each affected scenario. Each column in Table 2 represents about one order of magnitude difference from adjacent columns in the failure probability of remaining success paths, and the descriptions in the column headings are intended as examples of mitigation methods that can typically be assumed. Refer to Figure 2 for basic guidance on how to determine the number of trains and redundant systems. In addition, the following rules and guidelines apply:

- Only equipment that the licensee has scoped into the maintenance rule (10 CFR 50.65) may be credited for remaining mitigation capability. This provides a minimum level of assurance that credited equipment meets pre-established reliability goals or performance criteria.

- The potential for common-cause failure of the remaining success paths is accounted for in the column definitions of Table 2. Therefore, any actual evidence of a common-cause failure must be included in the definition of the inspection finding.

- Credit for recovery may be taken if there is a possibility of restoration of the SSC or a function that has been assumed to be lost due to the condition identified by the finding. Recovery actions should be credited only if there is sufficient time available, environmental conditions allow access, they are covered by operator training and written procedures, and necessary equipment is available or appropriately staged and ready. For recovery actions that are relatively complex, and/or require actions outside the control room, it is particularly important that the actions required are feasible within the time available to prevent core damage. If there are no remaining success paths other than restoring the failed equipment, and the above conditions are met, then Column 6 of Table 2 will credit this recovery. For example, consider an inspection finding involving a potentially recoverable system failure, such as a failed automatic start feature. If status indication exists and simple operator action would be able to start the equipment within

sufficient time to provide the system function, then more credit can be given to recovery, which may be more appropriately given by using Column 5. If other equipment is also available as remaining success paths, then operator actions may be used to supplement that equipment.

- Caution has to be exercised when taking credit for systems that are dependent on manual actuation (such as standby liquid control (SLC) in BWRs). If the time to initiate the system is short and performed under stressful conditions, Column 5 should be used for a redundant system rather than Column 4. When there is ample time, as in the initiation of suppression pool cooling in BWRs, the human error probability is low enough that the nominal system column can be used.

When all scenarios have been assigned and the associated likelihood and remaining mitigation capability estimated, the Table 2 matrix described in the next section can be used to estimate the potential significance of the degraded condition, within the context of all assumptions made to this point.

**Step 2.4 - Estimating the Risk Significance of Inspection Findings**

The last step of the Phase 2 assessment process is to estimate the relative risk significance of the finding. The risk is estimated by employing an evaluation matrix (Table 2 herein), which utilizes the information gained from Steps 2.1 through 2.3. This matrix combines the scenario likelihood derived in Step 2.2 with the remaining mitigation capability determined in Step 2.3 and establishes an estimated risk significance for the particular finding. One of only four possible results can be obtained: Green, White, Yellow, or Red. These results are comparable to those used for PIs. The user must complete this assessment process for <u>each</u> scenario affected by the inspection finding before determining the scenario of highest significance.

As a mental "benchmark," the user of this process should recognize that a "Green" outcome will involve any condition that has three or more diverse trains of remaining mitigation capability no matter how frequently it occurs, and that a "Red" outcome will involve any condition that has zero or only one train of remaining mitigation capability if the initiating events that require such capability occur more often than once every 1000 reactor-years (e.g., a small LOCA, a LOOP, or a reactor trip).

| Initiating Event Likelihood (From Step 2.2) | Remaining Mitigation Capability (From Step 2.3) | | | | | | |
|---|---|---|---|---|---|---|---|
| | ≥3 diverse trains<br>OR<br>2 systems each with redundancy<br>(1) | 1 train + 1 system with redundancy<br>OR<br>2 diverse trains + recovery of failed train<br>(2) | 2 diverse trains<br>OR<br>1 system with redundancy + recovery of failed train<br>(3) | 1 train + recovery of failed train<br>OR<br>1 system with redundancy (automatic initiation or no time constraints)<br>(4) | 1 train<br>OR<br>1 system with redundancy (manual actuation under time constraints)<br>(5) | Recovery of failed train<br>(6) | none<br>(7) |
| A | Green | White | Yellow | Red | Red | Red | Red |
| B | Green | Green | White | Yellow | Red | Red | Red |
| C | Green | Green | Green | White | Yellow | Red | Red |
| D | Green | Green | Green | Green | White | Yellow | Red |
| E | Green | Green | Green | Green | Green | White | Yellow |
| F | Green | Green | Green | Green | Green | Green | White |
| G | Green | Green | Green | Green | Green | Green | Green |
| H | Green | Green | Green | Green | Green | Green | Green |

**Table 2 - Risk Significance Estimation Matrix**

**Step 2.5 - Documenting the Results**

The results of the Phase 2 risk estimation will be communicated to the licensee through the inspection report process. It is expected that risk-significant or controversial findings will require obtaining licensee risk perspectives and will most likely prompt a Phase 3 review. If the inspectors, and appropriate regional and Headquarters staff (when necessary), agree with the results of the Phase 2 assessment, the final results will be documented in an inspection report and no further review is needed. The extent of documentation should include all information needed to reconstruct the Phase 2 analysis. Although licensee perspectives will be considered, the NRC staff will retain the final responsibility for determining the risk significance of a finding and will provide its justification in an inspection report or other appropriate document. When licensee assumptions or perspectives differ from those of the staff, the staff should explicitly justify the basis for its determination.

**Phase 3 - Risk Significance Finalization and Justification**

If determined necessary, this phase is intended to refine or modify the earlier screening results from Phases 1 and 2. Phase 3 analysis will utilize current PRA techniques and rely on the expertise of knowledgeable risk analysts. The Phase 3 assessment is not described herein.

Work Remaining

Work with RES to develop design-specific models and better criteria for evaluating findings associated with the containment barrier, fire protection, and shutdown operations.

# PROCESS FOR APPLYING MITIGATION IN TABLE 2

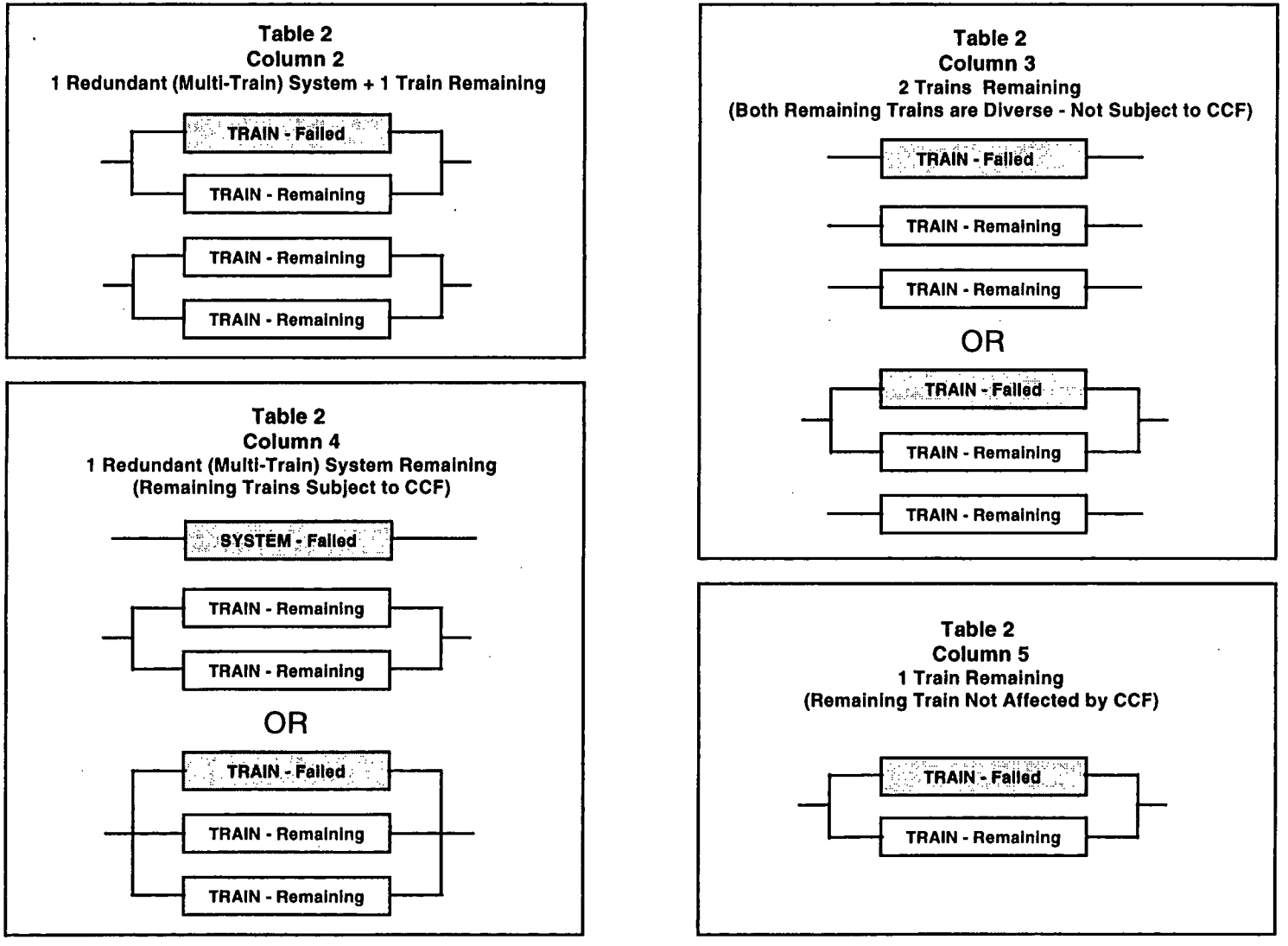


Figure 2

Appendix 2

Concepts for Characterizing the Risk Significance of Inspection Findings in the Emergency Preparedness, Radiation Safety, and Safeguards Area

## DRAFT CONCEPTS

This appendix and its attachments convey to the Commission, current staff's concepts for evaluating inspection findings in the emergency preparedness, radiation safety, and safeguards areas. Thresholds were selected on a significance scale similar to those established for the plant performance indicators that industry plans to submit. The staff continues development of this guidance with industry and fully expects to have a process in place for the pilot currently scheduled for June, 1999. As part of this effort, table-top reviews of real and postulated examples are planned to further refine the concepts.

draft

Attachment 1

**Emergency Preparedness**

DRAFT

An assessment methodology was developed to address findings resulting from inspections performed under the Emergency Preparedness (EP) cornerstone. The process has been reviewed within NRC and additional review from other stakeholders is being sought. It consists of flow chart logic to disposition inspection findings into one of the following categories: "licensee response band," "increased regulatory response band," "required regulatory response band," or "unacceptable performance band."

During the development of EP performance indicators risk significant areas were identified as distinct from other program areas. These development efforts were performed by a group of EP subject matter experts with input from members of the public. The assessment methodology also recognizes failures in the identified risk significant areas as more significant than findings in other program areas.

Emergency Preparedness regulations codify a set of emergency planning standards in 10 CFR 50.47(b) and Appendix E to Part 50. The risk significant areas of EP align with a subset of the planning standards and requirements. The flow chart logic uses failure to meet or implement planning standards and other regulatory requirements, and failure to identify problems in compliance as criteria to disposition inspection findings. Failure to meet or implement planning standards identified as risk significant results in a higher level of NRC involvement. While the assessment process does not generally sum unrelated findings to escalate the resultant response band disposition, a program collapse is indicated by failure to meet multiple planning standards. The assessment logic recognizes this unlikely, but significant, deterioration of an EP program and responds with increased regulatory involvement, including the potential for a set of concurrent findings being assessed as "unacceptable performance."

The process flow is described in the diagrams herein.

NRC Oversight Assessment Process for
Emergency Preparedness Inspection Findings – Sheet 1

draft 1 March 16, 1999

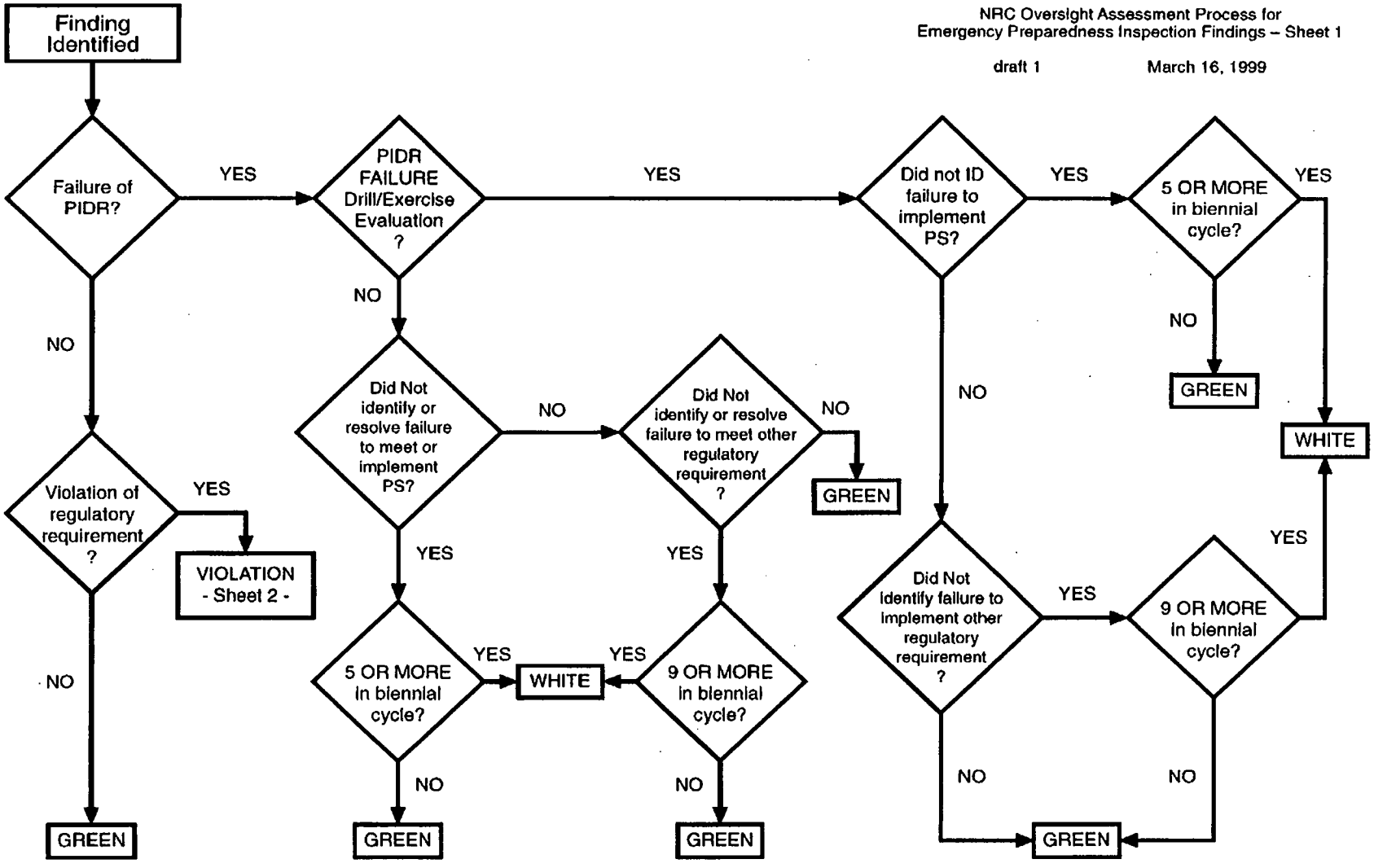


**RSPS** = The Risk Significant Planning Standards: 50, 47(b) 5, 4, 9 & 10 and Appendix E section IV B, C, D(1) & D(3)
**PS** = The Planning Standards of 50-47(b) and Appendix E
**PIDR** = Problem Identification and Resolution System

NRC Oversight Assessment Process for
Emergency Preparedness Inspection Findings – Sheet 2

draft 1 March 16, 1999

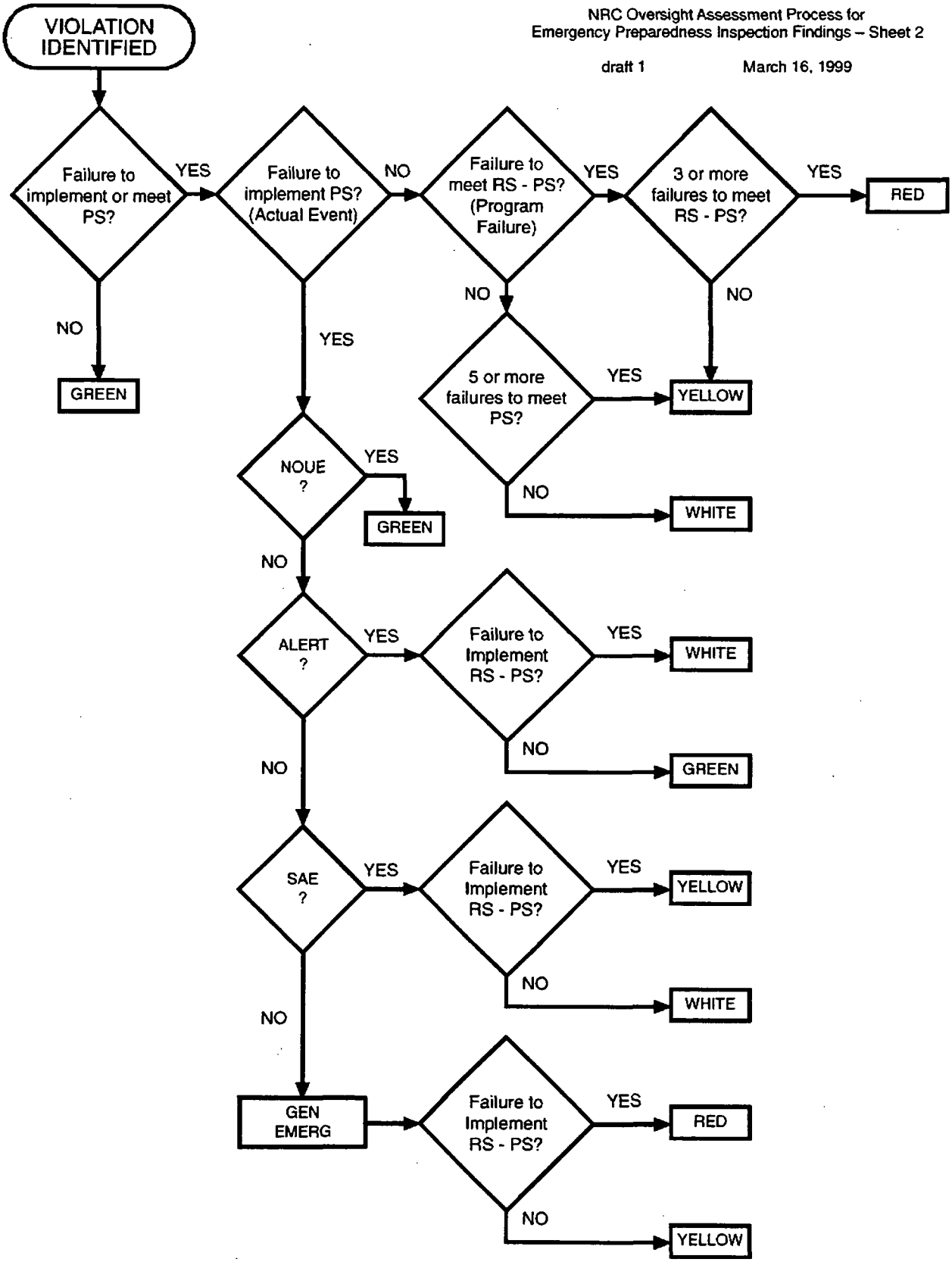

Attachment 2

**Radiation Safety**

DRAFT

An assessment methodology concept was developed to address and access the risk significance of NRC inspection findings in the occupation and public radiation protection cornerstones. This process consists of flow chart logic to disposition inspection findings into one of the following categories: "Licensee response band", "increased regulatory response band", "required regulatory response band" or "unacceptable performance band." A portion of the flow chart logic was developed -- the risk significant area of work in high and very high radiation areas and uncontrolled worker exposures. Complementary inspection findings risk characterization charts have been developed for both the occupational and public dose areas. Public meetings have been held to benefit from stakeholder feedback and will continue as the assessment process further develops.

The disposition of inspection findings in the " as low as reasonably achievable" (ALARA) area in the occupational worker dose cornerstone is yet to be developed. Preliminary planning by the NRC staff has emphasized the importance of using quantitative criteria to help ensure consistency in risk significance decision making.

draft

INSPECTION FINDINGS RISK CHARACTERIZATION IN RADIATION PROTECTION AREA (OCCUPATIONAL)

**GREEN**

( Licensee Response Band)

NRC or licensee-identified non-conformance that, if uncorrected, would result in an unplanned occupational TEDE greater than 100 mrem or >2% of 10 CFR Part 20 dose limits.

**WHITE**

(Increased Regulatory Response Band)

Multiple NRC or licensee-identified non-conformances that, if uncorrected, would result in an unplanned occupational TEDE greater than 2 rem or >40% of 10 CFR Part 20 dose limits (with one or more PI's involving unplanned occupational TEDE greater than 100 mrem or >2% of 10 CFR Part 20 dose limits in past 12 months.

NRC or licensee-identified non-conformance involving an area with dose rates greater than 25 R/h with one or two barrier failures.

**YELLOW**

( Required Regulatory Response Band)

NRC or licensee-identified non-conformance that, if uncorrected, would result in an actual or substantial potential for an occupational TEDE in excess of 5 rem or greater than 10 CFR Part 20 dose limits.

NRC or licensee-identified non-conformance involving an area with dose rates greater than 25 R/h with three or more barrier failures.

NRC or licensee-identified non-conformance involving an area with dose rates greater than 500 R/h with one or two barrier failures.

**RED**

(Loss of confidence in HP program's ability to provide assurance of worker safety)

NRC or licensee-identified non-conformance that, if unidentified and uncorrected, would result in an actual or substantial potential for an occupational TEDE in excess of 25 rem or greater than five times 10 CFR Part 20 dose limits.

NRC or licensee-identified non-conformance involving an area with dose rates greater than 500 R/h with three or more barrier failures.

The process flow is described in the diagram herein.

draft

# OCCUPATIONAL RADIATION SAFETY

**Draft**

March 16, 1999

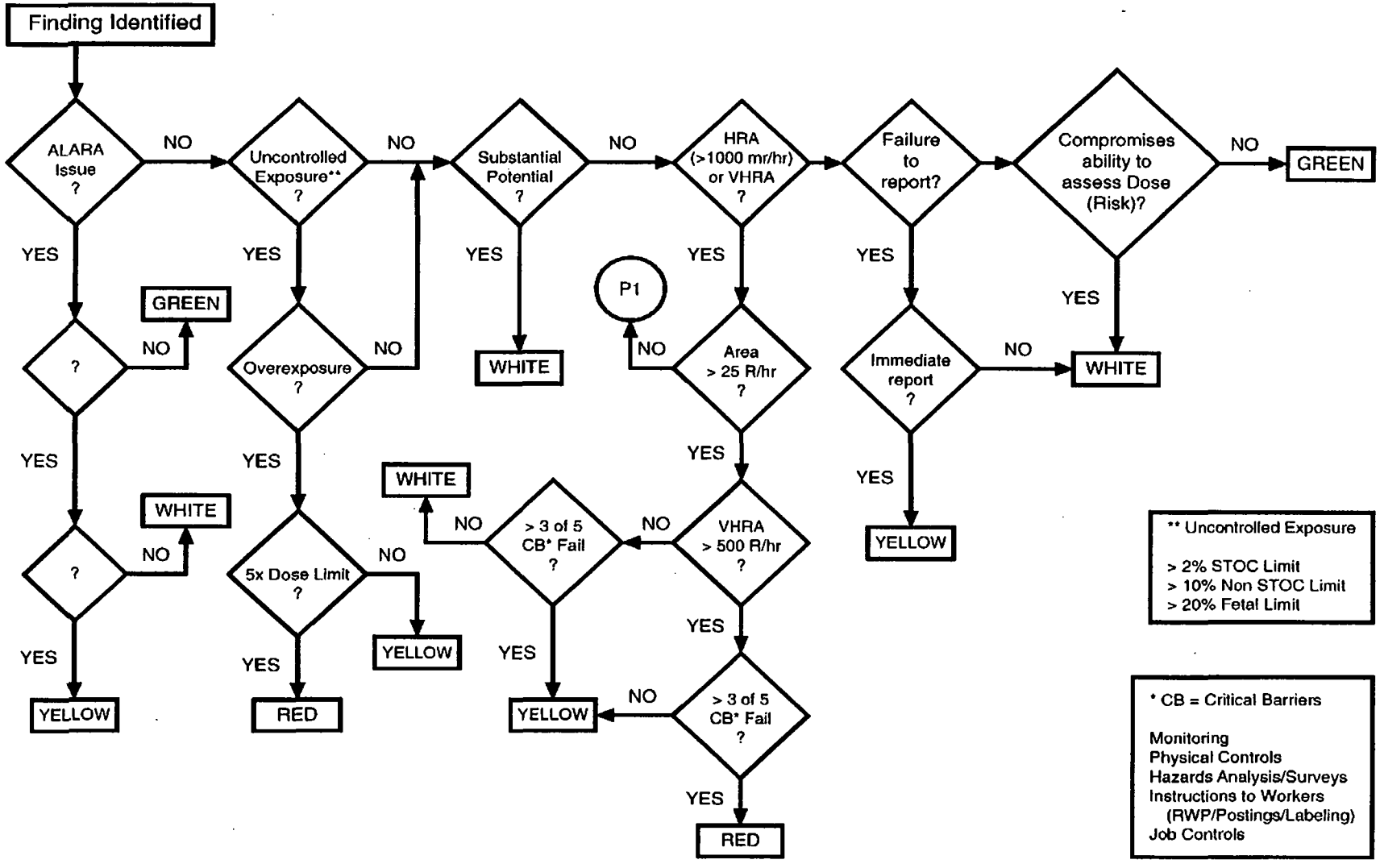

## INSPECTION FINDINGS RISK CHARACTERIZATION IN RADIATION PROTECTION AREA (PUBLIC EXPOSURE)

**GREEN** (Licensee Response Band)

NRC or licensee identified non-conformance that results in exposure to a member of the public from releases of radioactivity and radiation to a TEDE less than or equal to 0.025 rem.

NRC or licensee identified non-conformance of the monitoring or control of radioactive gaseous or liquid effluents that did not compromise the ability to maintain exposure to a member of the public within Technical Specifications (i.e., keep radioactive effluents within design objectives of Appendix I to 10 CFR Part 50).

NRC or licensee identified non-conformance that did not compromise the effectiveness of the radiological environmental monitoring program (i.e., the level of radioactivity in the sample medium was within the reporting levels in the Technical Specifications or the ODCM; or no more than 2 occurrences in which the required environmental sampling was not performed).

NRC or Licensee identified non-conformance in which a land use census was not conducted in accordance with the Technical Specifications or the ODCM.

NRC or Licensee identified non-conformance in which the interlaboratory comparison program was not performed in accordance with the Technical Specifications or the ODCM.

**WHITE** (Increased Regulatory Response Band)

NRC or licensee identified non-conformance that results in an estimated exposure to a member of the public from releases of radioactivity and radiation to a TEDE greater than 0.025 rem, but less than or equal to 0.1 rem; or 2 or more occurrences that resulted in an estimated exposure to a member of the public from releases of radioactivity and radiation to a TEDE less than or equal to 0.025 rem.

NRC or licensee identified non-conformance of the radiological effluent monitoring program to adequately monitor or control the discharge of radioactive gaseous or liquid effluents which results in an estimated exposure to a member of the public in excess of the Technical Specifications (i.e., doses were greater than the design objectives of Appendix I to 10 CFR Part 50).

NRC or licensee identified non-conformance of the radiological environmental monitoring program where, as a result of plant effluents, there were 2 or more occurrences of environmental sample media exceeding the reporting levels specified in the Technical Specifications or the ODCM or 4 or more occurrences in which the required environmental sampling was not performed.

**YELLOW** (Required Regulatory Response Band)

NRC or licensee identified non-conformance that results in an estimated exposure to a member of the public from releases of radioactivity and radiation to a TEDE greater than 0.1 rem, but less than or equal to 0.5 rem; or 5 or more occurrences that resulted in an estimated exposure to a member of the public from releases of radioactivity and radiation to a TEDE less than or equal to 0.025 rem.

NRC or licensee identified non-conformance of the radiological effluent monitoring program to adequately monitor or control the discharge of radioactive gaseous or liquid effluents which results in 2 or more occurrences of an estimated exposure to a member of the public in excess of the Technical Specifications (i.e., doses were greater than the design objectives of Appendix I to 10 CFR Part 50).

NRC or licensee identified non-conformance of the radiological environmental monitoring program where, as a result of plant effluents, there were 4 or more occurrences of environmental sampling media exceeding the reporting levels specified in the Technical Specifications or the ODCM.

.

**RED** (Loss of confidence in the Licensee's ability to provide assurance of radiological safety to a member of the public)

NRC or licensee identified non-conformance that results in an estimated exposure to a member of the public from releases of radioactivity and radiation to a TEDE greater than 0.5 rem.

NRC or licensee identified non-conformance of the radiological effluent monitoring program to adequately monitor or control the discharge of radioactive gaseous or liquid effluents which results in 4 or more occurrences of an estimated exposure to a member of the public in excess of the Technical Specifications (i.e., doses were greater than the design objectives of Appendix I to 10 CFR Part 50).

NRC or licensee identified non-conformance of the radiological environmental monitoring program where, as a result of plant effluents, there were 8 or more occurrences of environmental sampling media exceeding the reporting levels specified in the Technical Specifications or the ODCM.

The process flow is described in the diagram herein.

# PUBLIC RADIATION SAFETY

**Draft**

March 16, 1999

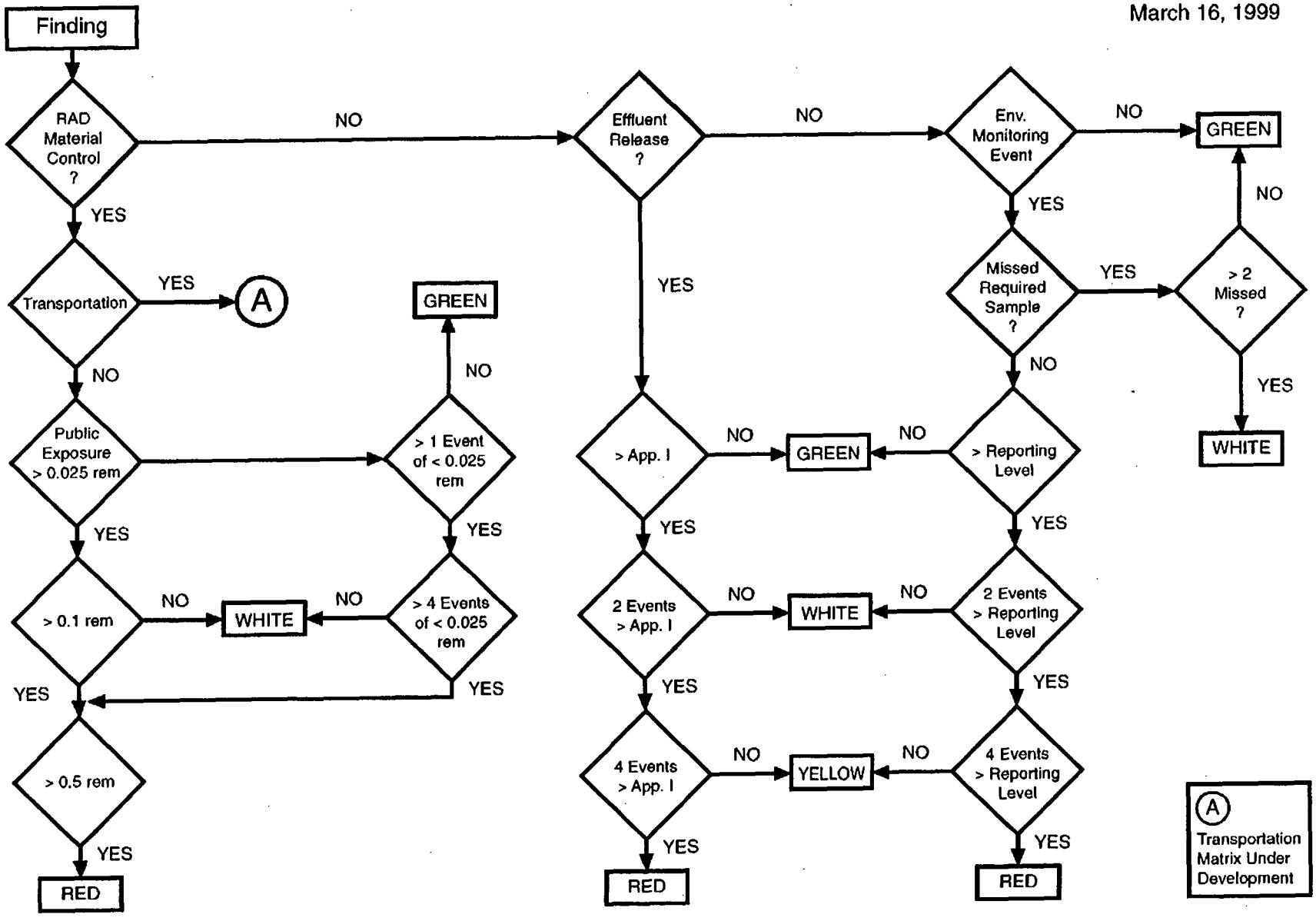

Attachment 3

**Safeguards**

DRAFT

The overall risk assessment of safeguards inspection findings involve the determination of the risk of radiological sabotage. A nonconformance issue is evaluated to establish whether there is low risk or more than low risk to radiological sabotage. If there is a low risk, the issue is within the (licensee's response band) and will be resolved via the licensee's corrective action program. If there is more than low risk, the nonconformance is to be evaluated to determine if it is predictable or easily exploitable. If the nonconformance was not predictable or easily exploitable, then the issue can be dispositioned within the (licensee's response band) unless the number of events within the last 12 months exceeds two, which would result in an (increased regulatory response band).

However, if the nonconformance is either predictable or easily exploitable, the influence of aggravating factors needs to be determined. If there are no aggravating factors, the issue is within the (licensee's response band) unless the number of events within the last 12 months exceeds three, which would result in a (required regulated response band). An (increased regulatory response band) would be appropriate for two-three events within the last 12 months. One event would fall within the (licensee's response band). If the issue was influenced by aggravating factors, then the issue needs to be evaluated against safeguards mitigating factors. If the issue was influenced by such mitigating factors, the issue would fall within a (required regulatory response band). If it was not subject to such an influence and operational solutions were successful, the issue again would fall within a (required regulatory response band). If operational solutions were not successful, it would result in a loss of confidence in the licensee's ability to provide assurance of radiological safety to a member of the public.

The process flow is described in the diagram herein.

Overall Assessment Process
Risk Assessment of
Safeguards Inspection Findings

draft 1 March 16, 1999

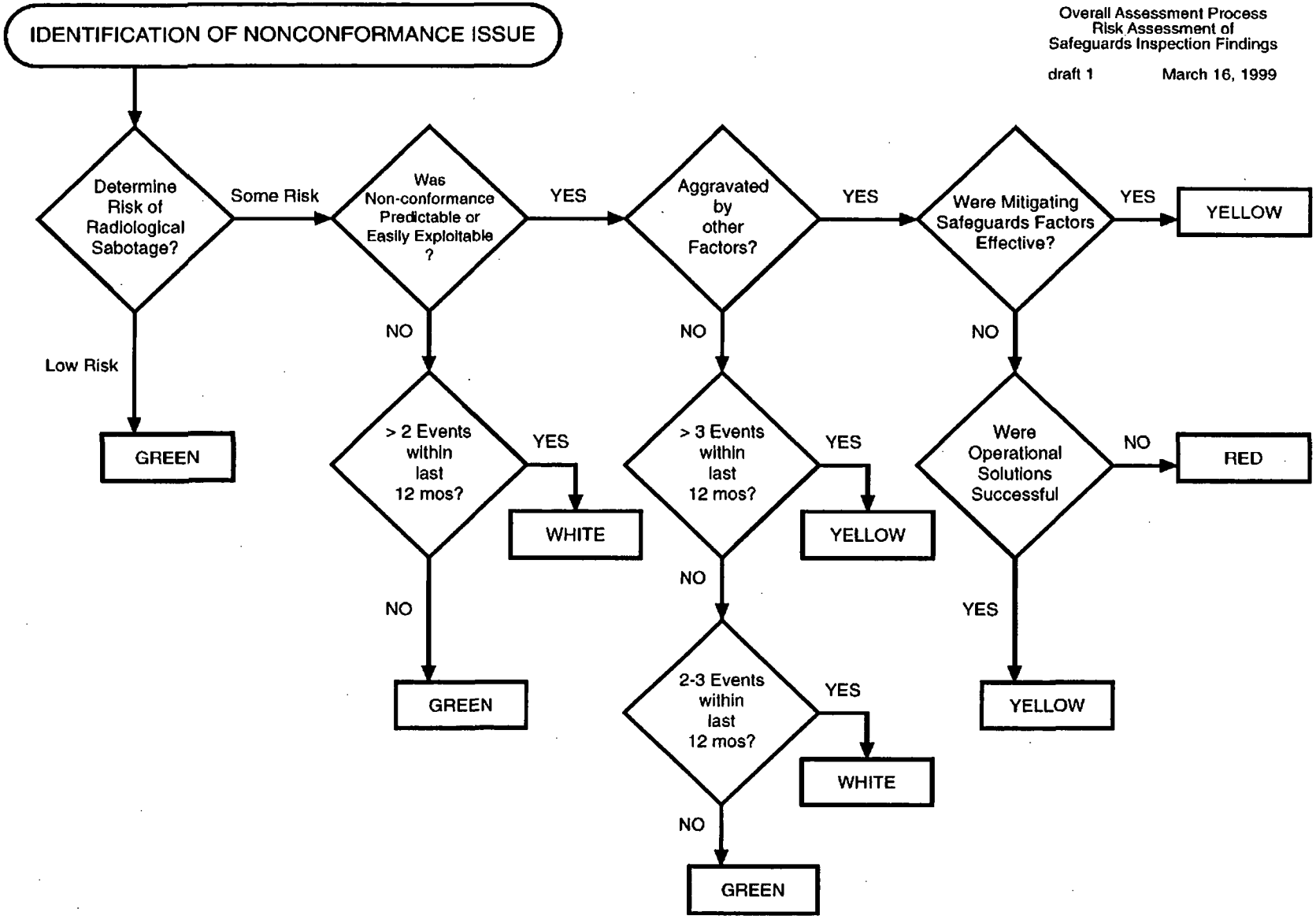

**FEASIBILITY REVIEW OF THE INSPECTION FINDING RISK CHARACTERIZATION AND REACTOR OVERSIGHT PROCESS**

| | |
|---|---|
| Task Group Leader | Morris Branch |
| Task Group Members | Larry Bell<br>Bruce Burgess<br>Jin Chung<br>Douglas Coe<br>John Flack<br>James Gavula<br>Peter Habighorst<br>Phillip Harrell<br>William Jones<br>Gareth Parry<br>Larry Scholl<br>McKenzie Thomas<br>Leonard Wert<br>Barry Westreich<br>John White |

Attachment 3

## INTRODUCTION

Section 4 of the Assessment Process (Attachment 4 to SECY-99-007) described a multi-level process for evaluating the feasibility of the new reactor oversight process. The staff planned a test application for early 1999, in which an initial trial of the workability of the proposed process would be conducted. This feasibility review would include a test at a few plants, subject to the availability of data, to demonstrate the ability of the process to reliably assign risk significance and assessment area information to individual plant issue matrix (PIM) entries, evaluate assessment inputs for cornerstones, and to reach conclusions related to actions to be taken that are consistent with actions suggested by concurrently or historically available independent data.

This Appendix describes the scope, findings, results, and recommendations of the initial trial (feasibility) of the new reactor oversight process.

### Scope

Because of the schedule, this feasibility review was performed at a time when many of the elements of the new reactor oversight process were still under development. For example, the process for risk characterization of inspection program findings described in Attachment 2 of this Commission paper was not fully developed. However, the concept and methods for assigning a risk characterization to the initiating events and mitigating systems cornerstones have been developed. This feasibility review was intended to solicit end-user insights and feedback as to the potential for applying the new concepts and processes being developed to actual plant specific information. It is expected that additional insights and feedback will be gained from the forthcoming workshops and during the implementation of the pilot plant process planned to begin in early summer 1999.

This initial trial of the worakability of the new proposed reactor oversight process was a limited exercise that began on February 22, 1999, and ended 5 days later on February 26, 1999, with a debriefing of the task group. The task group consisted of two members each from Regions II, III, and IV and three members from Region I. A training staff member participated as both a technical member and a monitor to develop future training needs for effective implementation of the new process. A staff member from the Office of Enforcement (OE) also participated to provide the enforcement perspective associated with many of the issues reviewed.

To promote efficiency and effectiveness, the working groups were divided into two groups for the purpose of reviewing plant specific data. Region I members were paired with Region II, Region

III with Region IV, and one to two risk analysts were also assigned to the groups. The training staff and the OE members rotated between the two groups.

**Caution must be exercised regarding extrapolating information from this review because:**

- The review was limited to 1 week and many of the elements of the new oversight program are still being developed. Only a limited number of PIM items and licensee event reports (LERs) could be processed with the currently developed inspection program finding risk characterization process.

- Performance indicator (PI) data available for the review was limited; only 6 of the proposed approximate 20 PIs were used.

- Inspection results reviewed were from the existing inspection program which, in the case of Millstone and D. C. Cook, represented a significant use of resources. For example, approximately 10,000 inspector hours were expended at D. C. Cook during the two-year period reviewed. However, most of the risk-significant issues were discovered during an intense design-focused architect engineering inspection that was not a part of the old core inspection program and may not be substantially represented in the new baseline inspection program.

Four plants were selected for the review. The time period of interest was selected to allow the use of as recent data as possible, but at the same time allow the task group to apply at-power PI data during the plant performance review. The plants reviewed and the periods of interest are as follows:

- D. C. Cook Units 1 and 2 for the period 1996 - 1997

- Millstone Units 2 and 3 for the period 1994 - 1995

- St. Lucie Units 1 and 2 for the period 1997 - 1998

- Waterford Unit 3 for the period 1997 - 1998

Objectives

The stated objectives of the feasibility review were to --

- Evaluate the feasibility of new oversight program, realizing that further development and refinement will continue during the pilot and the final implementation phases

  - Evaluate the feasibility of a process for risk significance characterization of an inspection program finding or issue

  - Evaluate the process for alignment of inspection findings and available PI data to cornerstone areas

- Use available data to conduct an abbreviated performance assessment of the plants, and compare proposed actions based on the new process to those actually taken. Additionally, differences between the two processes should be explained based on regional insights

- Determine training needs and future involvement of risk analysts in the process

- Provide feedback for use in the continued development of the risk characterization, inspection program development, and the assessment processes

**Details**

For the purpose of this paper, the details of how the process was implemented and the results are addressed in the description of the D.C. Cook review. For the other plants, a brief description of the results and conclusions will be provided under that plant's review description.

**Risk Characterization of Inspection Program Findings**

D.C. Cook Units 1 and 2

The feasibility task group reviewed thirty-five licensee event reports (LERs) and 89 PIM items. The task group, using the inspection finding risk characterization process, initially screened 10 items as potentially risk-significant "red" items (5 items for each unit), 1 item was white, and 25 items were green. All of the items that were screened red were LERs based on findings identified by the architect engineering inspection (IR 50-315, 316/97-201). Of the 5 red items, 4 involved the containment and 1 addressed the potential single failure of control air regulators for the 85, 50, and 20-pound air headers. The white item (LER 315/97-20) also involved degradation of the containment sump associated with plugging of vent holes in the sump roof that were designed to limit the effects of air entrainment. This LER was subsequently retracted by the licensee and was, therefore, not used during the plant assessment described later in this attachment.

The risk characterization of inspection findings required that the finding and all assumptions be clearly stated. Clearly stating the assumptions was essential for accurate risk characterization of the inspection findings. For example, several LERs reviewed described the degradation of the containment sump and its function as a reliable source of suction for all trains of emergency core cooling (ECCS) equipment that rely on the sump during the long-term or recirculation phase of operation. For the purpose of risk characterization, the problem(s) statement identified "all trains of ECCS inoperable during the Recirculation Phase of operation." These findings were screened into the process (i.e., Phase 2 review was required), and the process then required selection of the appropriate accident scenarios that may be impacted by the findings. The next step involved consideration of the duration or exposure time for the degraded condition and its impact on the estimated likelihood of the initiating event's of interest. The task group considered the remaining mitigation capabilities and formed a risk characterization of the finding. The duration was more than 30 days and no mitigation was applied. The most limiting scenario was determined to be a medium-size loss of coolant accident (LOCA), and Table 2 of the process instructions characterized the potential risk of the finding as "red."

The other item considered to be "red" as to potential risk significant involved the postulated failure of a single nonsafety-related 20-pound instrument air regulator (LER 315/97-26). The task group made the assumptions that the air regulator would fail, resulting in damage to the downstream valve operators for the steam generator power operated relief valve and the residual heat removal heat exchanger outlet valves. Although the licensee determined that relief protection for the downstream piping was necessary, its LER submittal made the case that the likelihood of failure was low on the basis of operating history at all of its plants and that the probability of failure combined with a LOCA was even more unlikely. This exercise demonstrated the conservative approach of the process and also pointed out the clear need to consider licensee's positions associated with assumptions and problem statements made by the NRC. Phase 3 of the risk characterization process was developed for just this type of case.

Limitations of the current risk characterization process were known going into the feasibility review. Regarding the PIM items, of the 89 items reviewed, 35 were covered under the LER review and 33 were issues that could not be screened using the risk model. Some of the items were screened out by the process because they involved programmatic issues, 50.59 issues, or were issues that were already evaluated during the LER review. The majority of the remaining items involving containment barriers, security, or emergency preparedness issues did not fit the current model well.

Millstone Units 2 and 3

The PIM process was not in place for Millstone during the 1994 and 1995-time period. For the purpose of this review, an issues list was developed by the Region I members of the task group. During this two-days exercise, time only allowed approximately 12 items for each unit to be processed as to their risk characterization. For Unit 2, eight items were considered green, one item white, one item was considered red, and two items were outside the scope of the model. For Unit 3, there were six green items and no White, Yellow, or Red items. The white issue for Unit 2 (LER 336/94-01) involved multiple failures of two auxiliary feedwater regulating valves. The one red item involved the discovery that containment sump valves were susceptible to pressure locking (LER 336/95-08).

St. Lucie Units 1 and 2

The task group reviewed a total of 12 issues. Most of the items were addressed in LERs. Before the task group's review, the St. Lucie's PIM items were pre-screened for the 1997-1998 time period, and 17 items were selected for screening. Eight of these items involved fire protection and Appendix R issues, some of which are not addressed by the current model. Further refinement of the model is ongoing to address areas identified as not being covered by the current model.

Of those items reviewed, one was characterized as having "red" risk significance. This item involved an issue associated with the Unit 1 recirculation actuation system (RAS) setpoint value. Specifically, because of the setpoint, the emergency core cooling system (ECCS) suction valves' automatic swap-over from the refueling water storage tank to the sump would have occurred at 3 feet from tank bottom verses the required four feet, leading to a possible loss of net-positive-suction-head for the ECCS pumps.

Of the remaining items, only one was screened into phase 2 and it was evaluated as green. Six items were screened out in Phase 1, and three were not within the scope of the current process. These items involved an actual initiating event, fire protection, and a containment cooling issue.

Waterford

For Waterford, the task group reviewed 19 items. Of the 19 items, eight were considered outside the scope of the currently developed risk characterization process. These items were associated with shutdown risk, administrative program problems, and some Appendix R type issues. The task group screened nine of the items as green; two of these items had previously been considered escalated enforcement issues. Two items involved the licensee's discovery of gas intrusion in the RHR system piping, which could have an affect on both the shutdown cooling and the low pressure injection modes of system operation. For the purpose of the plant performance assessment described herein, this item was considered as being only one item of potential risk significance.

**Plant Performance Assessment**

After completing the risk characterization process, the task group reviewed six PIs generated by NRC and the Nuclear Energy Institute (NEI) and aligned them to the initiating event and the mitigating system's cornerstones. Information for the other cornerstones was not characterized since PI data was not readily available. The results of this effort are described in the following tables.

When the information reviewed was considered essentially identical for both units for the time of interest, the data were presented in a combined table. This was the case for D.C. Cook, as indicated in the tables below.

DATA SUMMARY Plant: D.C. Cook - Units 1 and 2 Year 1996

| Initiating Event | Rating or No. | Mitigating System | Rating or No. |
|---|---|---|---|
| PI- SCRAM | Green | PI- HPI | Green |
| PI- Transients | Green | PI-AFW | Green |
| "G" Inspection Finding (IF) | 0 items | PI-Emer AC | Green |
| "W" IF | 0 items | PI -SSF | Green |
| "Y" IF | 0 items | "G" IF | 5 items |
| "R" IF | 0 items | "W" IF | 0 items |
| | | "Y" IF | 0 items |
| | | "R" IF | 0 items |
| Summary of Results and Recommended Actions From Action Matrix: All green items continue routine activities. | | | |
| Actual Response Taken at the Time: A safety system functional inspection, a system operational performance inspection, and an integrated performance assessment process were conducted. | | | |
| Remarks: Problems in maintenance, inservice testing, and corrective actions were of concern. Additionally, in some instances, the engineering staff exhibited inadequate awareness, understanding, and use of the plant design and licensing bases. Further balance-of-plant problems resulted in plant trips, transients and forced shutdowns. | | | |

DATA SUMMARY Plant: D.C. Cook - Units 1 and 2 Year 1997

| Initiating Events | Rating or No. | Mitigating Systems | Rating or No. |
|---|---|---|---|
| PI- SCRAM | Green | PI- HPI | Green |
| PI- Transients | Green | PI-AFW | Green |
| "G" IF | 0 items | PI-Emer AC | Green |
| "W" IF | 0 items | PI -SSF | White |
| "Y" IF | 0 items | "G" IF | 7 items |
| "R" IF | 0 items | "W" IF | 0 items |
| | | "Y" IF | 0 items |
| | | "R" IF | 2 items* |

Summary of Results and Recommended Actions From Action Matrix: Significant degraded cornerstone actions would be recommended. The recommended response would be; the EDO or Commission should discuss performance with senior management, a team Inspection focused on the cause of overall degradation should be performed, the licensee should implement a performance improvement plan with NRC oversight, a 10 CFR 50.54(f) and Confirmatory Action Letter (CAL) should be issued. Additionally, consideration should be given to assigning N+1 inspectors to the site for 2 consecutive cycles.

Actual Response Taken During the Assessment Period: The region performed an operational safety team inspection and requested that an architect engineer (AE) inspection of D.C. Cook be performed. Once the problems were known and the plant was shut down in accordance with its Technical Specification's the region issued a CAL and in early 1998, Implemented the NRC's Inspection Manual Chapter 0350 process. Escalated enforcement was issued for numerous design deficiencies identified by the AE design inspection.

Remarks: * Five separate LERs were considered during this assessment. The four containment LER issues were listed as one risk significant item and the 1 Red item associated with the potential failure of the instrument air regulator may be mitigated from red to a less risk significant item on the basis of a more refined NRC and licensee risk assessment of this item.

DATA SUMMARY Plant: Millstone - Unit 2 Year 1994

| Initiating Events | Rating or # | Mitigating Systems | Rating or # |
|---|---|---|---|
| PI- SCRAM | Green | PI- HPI | Green |
| PI- Transients | Green | PI-AFW | Green |
| "G" IF | 0 items | PI-Emer AC | Green |
| "W" IF | 0 items | PI -SSF | White |
| "Y" IF | 0 items | "G" IF | 5 items |
| "R" IF | 0 items | "W" IF | 1 item |
| | | "Y" IF | 0 items |
| | | "R" IF | 0 items |

Summary of Results and Recommended Actions From Action Matrix: One degraded cornerstone actions would be recommended. The DD/RA should meet with licensee management. An inspection focused on the basis or the causal link for safety system failures should be conducted. Recommend that an N+1 inspector coverage be established for a two cycles. The Regional Administrator should discuss the issues with the licensee.

Actual Response Taken: A management meeting was held concerning procedure adherence and corrective action. Engagement continued with the Millstone Assessment Panel reviewing and coordinating NRC's activities. A reverse CAL was solicited from the licensee relative to performance improvement program and the EDO and RA met with the licensee's Board of Directors.

Remarks: Essentially no difference between recommended and actual agency response.

DATA SUMMARY Plant: Millstone - Unit 2 Year 1995

| Initiating Events | Rating or No. | Mitigating Systems | Rating or No. |
|---|---|---|---|
| PI- SCRAM | Green | PI- HPI | Green |
| PI- Transients | Green | PI-AFW | Green |
| IF "G" | 0 items | PI-Emer AC | Green |
| IF "W" | 0 items | PI -SSF | White |
| IF "Y" | 0 items | IF "G" | 2 items |
| IF "R" | 0 items | IF "W" | 0 items |
| | | IF "Y" | 0 items |
| | | IF "R" | 1 item |

Summary of Results and Recommended Actions From Action Matrix: Significant degraded cornerstone actions would be recommended because repetitive degraded cornerstones and one red finding. The EDO or Commission should meet with senior licensee management and the licensee should develop an improvement plan with NRC oversight. A team inspection should evaluate controls of original design bases because of the risk significant concern about pressure locking of the containment sump valves and continued safety system failures. A 10 CFR 50.54(f) letter should be issued with a proposed CAL.

Actual Response Taken at the Time: Escalated enforcement actions were taken for the risk significant red item. The Millstone Assessment Team continued its activities. A procurement inspection, a service water operation performance inspection, and an engineering program review were conducted. A followup review of the EOP program was also conducted. A restart meeting was conducted and a startup team inspection was performed. The NRC used portions of Manual Chapter 0350 to conduct their activities.

Remarks: In general there was no difference between expected and actual agency response. However, numerous initiative inspections were conducted to address long-standing performance issues such as poor corrective action program, and the quality of engineering work.

DATA SUMMARY Plant: Millstone- Unit 3 Years 1994 & 1995

| Initiating Events | Rating or No. | Mitigating Systems | Rating or No. |
|---|---|---|---|
| PI- SCRAM | Green | PI- HPI | Green |
| PI- Transients | Green | PI-AFW | Green |
| "G" IF | 3 items | PI-Emer AC | Green |
| "W" IF | 0 items | PI -SSF | Green |
| "Y" IF | 0 items | "G" IF | 0 items |
| "R" IF | 0 items | "W" IF | 0 items |
| | | "Y" IF | 0 items |
| | | "R" IF | 0 items |
| Summary of Results and Recommended Actions From Action Matrix: Cornerstone objectives fully met as all items were green. | | | |
| Actual Response Taken at the Time: Unit 3 was impacted by all of the efforts associated with improving the performance of Units 1 and 2, so it is not easy to differentiate. | | | |
| Remarks: None | | | |

DATA SUMMARY Plant: St. Lucie - Unit 1 Year 1997

| Initiating Events | Rating or No. | Mitigating Systems | Rating or No. |
|---|---|---|---|
| PI- SCRAM | Green | PI- HPI | White |
| PI- Transients | Green | PI-AFW | Green |
| "G" IF | 0 items | PI-Emer AC | Green |
| "W" IF | 0 items | PI -SSF | Green |
| "Y" IF | 0 items | "G" IF | 2 items |
| "R" IF | 0 items | "W" IF | 0 items |
| | | "Y" IF | 0 items |
| | | "R" IF | 1 item |

Summary of Results and Recommended Actions From Action Matrix: The matrix would have indicated that a significant degraded cornerstone action would be appropriate. However, the one red item that drove the assessment in this area was identified by the licensee and if credit for operator actions was allowed, the item would have been a yellow item. The task group decision was made on the basis of information available at the time, and a later review of this issue by the AEOD accident sequence precursor (ASP) process allowed credit for operator actions. Therefore, the actions for one degraded cornerstone would be more appropriate.

Actual Response Taken at the Time: The red or yellow item was considered a Level 2 enforcement issue and a civil penalty was issued. The region was conducting quarterly meetings with the licensee to discuss corrective actions for perceived weak areas including engineering and the 50.59 process.

Remarks: The recommended actions as a result of the process agreed with the actual actions taken. Regional management was meeting with the licensee quarterly to discuss performance issues, including engineering problems. St. Lucie had been under a performance improvement program for previously identified issues.

DATA SUMMARY Plant: St. Lucie - Unit 1 Year 1998 Unit 2 Years 1997 and 1998

| Initiating Events | Rating or No. | Mitigating Systems | Rating or No. |
|---|---|---|---|
| PI- SCRAM | Green | PI- HPI | Green |
| PI- Transients | Green | PI-AFW | Green |
| "G" IF | 0 items | PI-Emer AC | Green |
| "W" IF | 0 items | PI -SSF | Green |
| "Y" IF | 0 items | "G" IF | 1 - 3 items |
| "R" IF | 0 items | "W" IF | 0 items |
| | | "Y" IF | 0 items |
| | | "R" IF | 0 items |
| Summary of Results and Recommended Actions From Action Matrix: Cornerstone objectives fully met, all assessment inputs green, continue routine activities. | | | |
| Actual Response Taken at the Time: Performance was determined by the region to be improving. A routine inspection program was conducted with a pilot fire protection functional inspection that identified several fire protection problems. | | | |
| Remarks: None | | | |

DATA SUMMARY Plant: Waterford - Unit 3 Year 1997

| Initiating Events | Rating or No. | Mitigating Systems | Rating or No. |
|---|---|---|---|
| PI- SCRAM | Green | PI- HPI | Green |
| PI- Transients | Green | PI-AFW | Green |
| "G" IF- | 1 item | PI-Emer AC | Green |
| "W" IF | 0 items | PI -SSF | White |
| "Y" IF | 0 items | "G" IF | 7 items |
| "R" IF | 0 items | "W" IF | 1 item * |
| | | "Y" IF | 0 items |
| | | "R" IF | 0 items |

Summary of Results and Recommended Actions From Action Matrix: Actions for one degraded cornerstone would be recommended. The DD/RA should meet with licensee management and an inspection focused on the causes of safety system failures should be performed. The RA should discuss performance with the licensee and sign the assessment report.

Actual Response Taken at the Time: The licensee voluntarily implemented a performance improvement plan and quarterly meetings with the licensee were held by RA/DD/BC to discuss the improvement program, with emphasis on engineering. An AE design inspection was scheduled.

Remarks: The * in the white findings block indicates that two LERs were issued to describe what was actually one event of a Nitrogen void in the LPSI piping that affected both the low pressure safety injection and the shutdown cooling functions. Additionally, the actions taken appear to be more conservative than those warranted based solely on the data reviewed.

DATA SUMMARY Plant: Waterford - Unit 3 Year 1998

| Initiating Events | Rating or No. | Mitigating Systems | Rating or No. |
|---|---|---|---|
| PI- SCRAM | Green | PI- HPI | Green |
| PI- Transients | Green | PI-AFW | Green |
| "G" IF | 0 items | PI-Emer AC | Green |
| "W" IF | 0 items | PI -SSF | Green |
| "Y" IF | 0 items | "G" IF | 1 item |
| "R" IF | 0 items | "W" IF | 0 items |
| | | "Y" IF | 0 items |
| | | "R" IF | 0 items |
| Summary of Results and Recommended Actions From Action Matrix: Cornerstone objectives fully met, all findings were green, continue routine activities. | | | |
| Actual Response Taken at the Time: There was little relief from the actions taken for the previous years performance. | | | |
| Remarks: Region's concern was with engineering activities at Waterford and this concern drove many of the regions actions. | | | |

Results

- The task group determined that the new processes are feasible to pilot but refinement is needed in some areas and additional development is needed for the cornerstone issues that are not currently covered.

- The risk characterization process was useful in characterizing the risk significance of those items within the scope of the current process.

  - The simple screening and Phase 2 process tend to be conservative and will most likely require a Phase 3 review by both the NRC and the licensee before any action decisions are made.

  - A test of repeatability of the process for two items was successful. Further testing is planned.

  - Further refinement is necessary to allow easier alignment of an issue to a cornerstone and permit items involving containment barriers, fire protection issues, and shutdown risk to be addressed. Additionally, criteria for findings associated with the emergency preparedness, radiation safety, and safeguards

areas are being developed, and tabletop reviews of typical findings in these areas are planned.

- Thorough training of inspectors is needed to implement the new process and increased involvement of regional and Headquarters risk analysts is expected until such time that inspectors become more familiar with the processes.

- The plant performance assessment process provided valuable insights, and with the exception of Millstone 3 and perhaps Waterford, the actions proposed by the new program were similar to the actions taken at the time. The actions recommended by the new process were made on the basis of the risk insights from hardware problems that were experienced (**what** occurred) and not insights of the programmatic or repetitive items (**why** they occurred). For D. C. Cook, the assessment of the 1997 data revealed that until the plant's shutdown, performance was considered within the licensee's response band (green). After the intense design-focused inspection, risk-significant hardware/design problems drove plant performance to where the mitigating system cornerstone was considered to be significantly degraded by the action matrix. The performance review did identify a number of PIM items that individually, on the basis of risk, were green items. Additionally, many of the risk-significant items identified by the AE design team had been previously evaluated and disposed by the licensee through their corrective action program.

Recommendations

The improved reactor oversight program should be piloted and continuous improvement feedback should be solicited, evaluated, and implemented as appropriate.

The risk characterization process needs to be essentially complete and necessary personnel trained before the pilot program is begun.

Based on the feasibility review, risk significant findings, were for the most part, related to a design or hardware issue. This observation was provided to the task group responsible for the development of the new risk-informed baseline inspection. Additionally, the task group's experience with identified design deficiencies at D. C. Cook, some of which existed since initial plant construction, were provided to the assessment task group for evaluation. It is fully expected that refinement of the inspection and assessment processes will continue during the pilot. The Office of Research is pursuing a method of determining if a combination of green items under a single cornerstone can represent a risk-significant pattern that can then be used in the plant assessment process to focus additional inspection or licensee's efforts if necessary.

# ENFORCEMENT STRATEGY FOR NEW REACTOR OVERSIGHT PROCESS

Task Leader Barry Westreich

David Nelson

Attachment 4

## 1. INTRODUCTION AND PURPOSE

As described in NUREG-1600, Revision 1, "General Statement of Policy and Procedures for NRC Enforcement Actions," the purpose of the current NRC enforcement program is to support the NRC's overall safety mission in protecting the public and the environment. Consistent with that purpose, enforcement actions have been used as a deterrent to emphasize the importance of compliance with requirements and to encourage prompt identification and prompt, comprehensive correction of violations.

Historically, the Enforcement Policy provided vigorous enforcement action when dealing with licensees, contractors, and their employees who did not devote the necessary meticulous attention to detail and did not achieve the high standard of compliance with NRC requirements. In addition, the staff reviewed each case and determined the enforcement action to be taken based on the specific circumstances.

The current enforcement process has been successful in focusing attention on compliance issues to improve safety. The enforcement process (1) assesses the significance of individual inspection findings and events, (2) formulates the appropriate agency response to these findings and events, (3) emphasizes good performance and compliance, (4) provides incentives for performance improvement, and (5) provides public notification of the NRC's views on licensees' performance and actions. It is noteworthy that while there have been substantial changes to the enforcement program since 1980, the basic theory of enforcement using sanctions, including the use of civil penalties to deter noncompliance, has been used by the Commission for almost thirty years. In sum, escalated enforcement actions have been used to provide regulatory messages in the context of sanctions to encourage licensees to improve their performance. However, the NRC has at times not always integrated the enforcement process with its performance assessment processes. This may have resulted in mixed regulatory messages regarding the NRC's assessment of licensee performance and improvement initiatives.

The development of a new reactor oversight process with a more structured performance assessment process, including a process to evaluate the significance of individual compliance findings with more predictable regulatory responses through its action matrix, provides an opportunity to reconsider the existing enforcement process. In considering a new approach to enforcement, the staff is not saying that the existing process which used civil penalties has not served the agency or is ineffective. However, given a more predicable and scrutable oversight process, a greater agency focus on risk and performance, and the maturing of the industry with improved overall performance, this is an opportunity to develop an approach to enforcement that will better integrate with the overall reactor oversight process. The new reactor oversight process is intended to provide similar functions as the current enforcement process. For example:

- Individual compliance findings are evaluated for significance under each system.
- Both the current enforcement and the new oversight processes result in formulating agency responses to violations and performance issues. The enforcement process uses sanctions such as citations and penalties. It also uses processes similar to what the assessment process action matrix utilizes such as meetings to discuss deteriorating

performance, 50.54(f) letters, Demands for Information, Confirmatory Action Letters, and Orders to formulate the agency response.

- Both processes provide incentives to improve performance and compliance as they provide measures of deterrence since licensees normally strive to avoid regulatory actions and enforcement sanctions.

- Both approaches also provide the public with the NRC views on the status of licensees' performance and compliance.

Given the similarities in the purposes of the two programs, the enforcement program should be used to complement the assessment program by focusing on individual violations. The agency response to declining performance, whether caused by violations or other concerns, should be dictated by the agency action matrix. The result should be a unified approach within the agency for determining and responding to performance issues of a licensee that (a) maintains a focus on safety and compliance, (b) is more consistent with predictable results, (c) is more effective and efficient, (d) is easily understandable, and (e) decreases unnecessary regulatory burden. It should, therefore, promote public confidence in the regulatory process.

## 2. PROPOSED ENFORCEMENT PROGRAM

### 2.1 Background

To ensure a consistent approach between the enforcement program and the assessment process, one agency method for categorizing the risk significance of findings involving violations should be utilized. The Significance Determination Process (SDP) is being developed to characterize inspection findings on the basis of their risk significance and performance impact. To support a unified approach to significance, the enforcement program should also use the results of the SDP categorization of the significance of findings involving violations.

The significance of an issue under the new assessment process may differ from that under the current enforcement program because of the different focus of the current enforcement program and the methodology to be used in the SDP. The current enforcement program focuses on causes of violations, as well as the consequences resulting from violations. In some cases the root cause has been perceived to be more significant than the consequences. The SDP for three of the four reactor safety cornerstones is a process that uses risk analysis to calculate the effect of equipment degradation on the ability of the licensee to mitigate an accident and the resulting change in core damage frequency ($\Delta$CDF). Each compliance finding will be evaluated to determine its risk significance and will formulate an input in the assessment process. Violations in a risk range of greater than $10^{-6}$ $\Delta$CDF will be evaluated as "significant" and assigned a color band of white, yellow, or red for assessment purposes. Violations evaluated at less than $10^{-6}$ $\Delta$CDF would not be considered significant violations and assigned a color band of green. Within the other four cornerstones, occupational radiation safety, public radiation safety, physical protection, and emergency preparedness, violations will also be subject to an analysis to categorize the significance of compliance findings. As a result, some issues that were considered significant violations under the current enforcement policy may not be of significance under the new assessment process.

When analyzing different options for revising the enforcement policy to make it consistent with the assessment process, the staff considered using a direct tie to the significance of a finding that was determined by the SDP categorization. For example, following disposition of the significance of an issue by the SDP, the enforcement process could categorize the issue as follows:

- Green - Severity Level 4 violation
- White - Severity Level 3 violation
- Yellow - Severity Level 2 violation
- Red - Severity Level 1 violation

An assessment process with sanctions similar to the current enforcement process could be used based on the severity level. Although this option would preserve a more traditional approach to enforcement, there are substantial questions as to whether it is a viable approach. This is because the underlying process for determining the significance of inspection findings using the SDP uses risk analysis, particularly for three of the four reactor safety cornerstones, and relies on various assumptions in performing the analysis. The lack of standardized methodology for making these assumptions and for performing these types of risk assessments, and the lack of fidelity of Probabilistic Risk Assessments (PRAs), may make decisions to cite a violation at a particular severity level and impose a civil penalty difficult to defend when confronted with a licensee's differing assumptions and risk assessment methodology. In addition, mixed messages may likely occur as enforcement action resulting from the traditional enforcement approach may be inconsistent with the actions flowing from the assessment action matrix.

## 2.2 The Proposed Enforcement Approach

As a result of the problems inherent in tying the assessment of findings directly to the color bands of the assessment process previously described, a different approach was considered. Because the assessment process will provide many of the functions and objectives that the enforcement program had been performing in the past and in light of the maturing and overall improved performance of licensees, a new enforcement approach is warranted that will complement the assessment process. In developing a new approach, the staff had the following objectives:

1) Enforcement needs to be consistent with the safety philosophy of the assessment process.
2) It needs to maintain an emphasis on compliance.
3) The enforcement process needs to be simplified and predicable to create a more efficient and effective process.
4) It needs to support public confidence in the NRC regulatory process.
5) As with other agency actions it should neither create nor perpetuate unnecessary regulatory burdens.

The proposed approach meets these objectives. It essentially divides violations into two groups. The first group are those violations that can be evaluated under the SDP where appropriate action will be determined by the agency action matrix. The second group are those violations outside the capability of the SDP, such as willful violations, those that may impact the

NRC's ability for oversight of the regulatory process and those which involve an overexposure or actual release of radioactive material.

### 2.2.1 Violations Addressed by the Assessment Process Action Matrix

The first group of violations are those that will be assessed by the SDP and the action matrix. Violations will be considered requiring either formal or informal enforcement action. No severity levels will be used. Violations that are evaluated by the SDP as not being significant from a risk perspective will be inputs to the assessment process, but within the licensee response band. Such violations will be considered for informal enforcement and treated as non cited violations consistent with the criteria of Appendix C, Interim Enforcement Policy for Reactor Severity Level IV Violations, 64FR6388, February 9, 1999. Three of the four exceptions to the Interim Enforcement Policy would remain in place. Specifically, a notice of violation would normally be issued only if (1) the licensee fails to restore compliance within a reasonable time after the violation was identified, (2) the licensee fails to place the violation into the corrective action program, or (3) the violation was willful. Willful violations will be treated in accordance with the current section VII.B.1(d) of the Enforcement Policy.

The other exception to issuance of a non cited violation under the Interim Enforcement Policy is a violation that is repetitive as a result of inadequate corrective action and is identified by the NRC. The significance of this type of violation is based on the effectiveness of the licensee's corrective action program, which is a performance assessment issue. The assessment process should determine the significance of this type of violation, and if not risk significant as determined by the SDP, even if repetitive, the violation would be treated as non cited. Thus, the staff would not continue use of this exception. It is noted that in SECY 98-256, the staff stated that this exception might be reconsidered based on the new oversight program.

Violations that are evaluated by the SDP as risk significant will be assigned a color band related to their significance for use by the assessment process and will be considered for formal enforcement action, but typically not civil penalties. As a result of being risk-significant, a formal notice of violation will be issued requiring a formal written response unless sufficient information is already on the docket. Although this approach may have some of the same concerns as noted above by using non-standardized assumptions and methodologies for assessing risk, it should be easier to determine whether a violation is risk-significant (i.e. at least white) than to determine and defend a severity level based on which specific color band range it is in (i.e. white, yellow, or red). The enforcement approach will be based on the significance of the violation independent of the overall response band the licensee is in at the time.

The assessment action matrix and not the enforcement program will be used to formulate the agency response; to determine root causes, if warranted, and to emphasize the need to improve performance for safety-significant violations. Regulatory conferences and other actions as determined by the action matrix will be held if merited by the specific violations or the overall performance of the licensee. Use of the assessment matrix with its escalating responses, (e.g., increased inspection, regulatory attention, and regulatory actions) should provide appropriate incentives and should deter licensee's from being in the increased regulatory response band. Thus, the staff is not proposing the use of the traditional enforcement approach with civil penalties to provide deterrence. This approach will result in

enforcement complementing assessment, maintaining consistency, and promoting a predictable and unified regulatory message. If consistently applied, it should build public confidence.

### 2.2.2 Violations Subject to Traditional Enforcement Actions

In the second group of violations, the traditional enforcement program would be retained, along with a potential for the imposition of civil penalties or other appropriate enforcement action. These violations involve (1) willfulness including discrimination, (2) actions that may impact the NRC's ability for oversight of licensee activities[1], and (3) actual consequences such as an overexposure to the public or plant personnel or a substantial release of radioactive material. A more traditional enforcement approach is warranted for deterrence. This approach would retain the four severity levels and civil penalties under the current enforcement policy.

Finally, there may be particularly significant violations where it is appropriate to have a civil penalty, notwithstanding the program described above, for violations addressed in the action matrix. While expected to be rare, the staff does not believe the Commission's policy should prohibit it from exercising the Section 234 authority of the Atomic Energy Act. Therefore, the policy should provide provisions for the Commission to impose civil penalties for particularly significant cases. Examples where a civil penalty may be warranted include, a significant violation of a safety limit as described in 10 CFR 50.36 (a) or for an inadvertent criticality, both of which are Severity Level I violations in the current enforcement policy.

#### 2.2.2.1 Comparison of the Proposed Process with the Current Enforcement Policy

The Office of Enforcement performed a review of the escalated enforcement actions issued during 1997 and 1998 to determine how many of these issued violations might remain under the new enforcement process. About 17% of the escalated violations were related to willfulness, impacting the regulatory process or actual consequences.

## 3. CONCLUSION

This proposed enforcement program is a shift from the past implementation of the NRC enforcement function. However, the new enforcement process will maintain a focus on compliance by the use of formal and informal enforcement actions as NRC moves to a more risk-informed and performance-based regulatory process. Corrective action will be addressed. It will leverage the NRC's resources by obtaining formal responses for more significant violations. The NRC regulatory response will continue to escalate on the basis of the safety significance of the issues and the overall performance of a licensee. Increased regulatory scrutiny, as well as deterrence of poor performance should result in the maintenance of a satisfactory level of performance by licensees. Because the assessment process will be performing many of the functions that the enforcement program provided in the past, there is a

---

[1] Violations that involve actions that may impact the regulatory oversight process include those associated with reporting issues, failure to obtain NRC approvals such as for changes to the facility as required by 10 CFR 50.59, 10 CFR 50.54(a), 10 CFR 50.54 (p), and failure to provide the NRC with complete and accurate information or to maintain accurate records.

reduced need for varying severity levels and the imposition of civil penalties. This should produce a more consistent regulatory message. Although the abandonment of civil penalties for most reactor cases may initially cause a problem with negative public perception, the overall approach to assessment, inspection, and enforcement should in the long term assure the public that the NRC is fulfilling its mission of protecting public health and safety. For violations addressed by the assessment process action matrix, this approach should result in NRC and licensees resolving issues in a more efficient manner. Finally, for violations involving willfulness (including discrimination), that may impact the NRC's ability for oversight of licensee activities, or actual consequences, the traditional enforcement program will continue to be utilized.

# NOTEWORTHY CHANGES TO SECY-99-007 CONCEPTS

Attachment 5

Following the issuance of SECY-99-007, the transition task force was assembled and continued concept development. The following items were changed in response to Commission comments, public comments, and developmental efforts including the feasibility review--

Action Matrix

The action matrix was modified to address Commission concerns expressed at the January 20, 1999, briefing and public comments. See Table 5.1. Specific changes include--

- The actions in the column that includes a repetitive degraded cornerstone were modified to provide for increased Commission awareness and potential involvement.
- The overall unacceptable performance column was modified to indicate plants are not permitted to operate within this band.
- The column that includes a repetitive degraded cornerstone was modified to address one red assessment input.
- Column descriptions were enhanced and column numbers were removed.
- References to the N+1 resident inspector policy were removed.

Several Commissioners emphasized that the staff should address how NRC actions for significant declines in licensee performance, which are identified during the annual cycle, will be taken. As described in SECY-99-007, the staff proposes to use the action matrix as a guide in determining appropriate actions. If an action that requires agency-level approval is necessary during the cycle, necessary concurrences will be obtained without having to hold an Agency Action Review meeting.

Performance Indicator Table

The staff modified the performance indicator table to reflect progress in this area and Commission, licensee, and public comments (see Table 5.2). The staff is developing a detailed performance indicator manual and will exercise it during the pilot program. Specific changes include--

- The risk-significant scrams indicator was renamed "scrams with loss of normal heat removal" to reflect the method that was used to set the thresholds.
- The vital area security equipment availability indicator was removed because it was not meaningful. The baseline inspection program will provide coverage in this area.
- The Safety System Performance Indicators (SSPIs) were changed as follows:

    1. For BWRs, the HPCI and RCIC systems, which are treated as two trains of the same system in the WANO indicator, were separated into two systems, making a total of 4 BWR systems being monitored by these PIs.

2. For PWRs, the RHR system was added, making a total of 4 systems monitored by these PIs.

3. The indicators were renamed "Safety System Unavailability" indicators to differentiate them from the WANO indicators.

4. The green-white thresholds for the BWR RHR and the PWR HPSI systems were changed from 1.5% to 2% to match the industry's year 2000 goals for those systems.

5. The green-white threshold for the PWR RHR system was set at 2%.

6. The green-white threshold for the emergency ac system was changed from 2.5% to 3.8% to accommodate 2-week allowed outage times.

7. The yellow-red thresholds for the RHR and PWR HPSI systems were changed from TBD to 10%.

- The containment leakage indicator was changed to eliminate the use of the ILRT results and to use only the LLRT results. The green-white threshold for this indicator was accordingly changed from 100% of $L_a$ to 60% of $L_a$.

- The ERO readiness indicator was modified to state that only key ERO positions are included.

- The Alert and Notification System indicator was changed to measure siren operability by calculating the percentage of successful siren tests rather than the percentage of time availability of the sirens.

- The dual indicators for the EP and both radiation safety cornerstones were changed to single indicators.

- A uniform format for all thresholds was established.

NOTE: The staff carefully considered Commission comments related to concerns about the magnitude and, in some cases, yellow-red threshold values. Where values are indicated in this column they are risk-informed. Several N/A's remain because applicable technical specifications and regulations preclude establishing higher thresholds because the plant will already be shutdown. Also, in some cases, there is insufficient correlation to risk to establish a yellow-red threshold value.

Risk-Informed Baseline Inspection Program

Fire Protection Inspections

The staff is considering how to factor the knowledge gained from conducting the pilot Fire Protection Functional Inspections into the baseline inspection program. The staff has drafted a procedure that adds 72 hours to the 36-hour triennial inspection described in RIM 1 of

SECY-99-007. The additional 72 hours would be used for two additional experienced inspectors (electrical and mechanical engineers) to form a three person, one-week team inspection, focused on post-fire safe shutdown and configuration management. The staff has scheduled a meeting for March 25, 1999, to discuss an NEI proposal on the structure of future fire protection inspections. The staff's draft baseline inspection procedure for fire protection will be discussed at that meeting.

Table 5.1 Action Matrix.

| | LICENSEE PERFORMANCE<br>INCREASING SAFETY SIGNIFICANCE ----------> | | | | | |
|---|---|---|---|---|---|---|
| RESULTS | | All Assessment Inputs (Performance Indicators (PIs) and Inspection Findings) Green; Cornerstone Objectives Fully Met | One or Two Inputs White (in different cornerstones); Cornerstone Objectives Fully Met | One Degraded Cornerstone (2 White Inputs or 1 Yellow Input) or any 3 White Inputs in a Strategic Performance Area; Cornerstone Objectives Met with Minimal Reduction in Safety Margin | Repetitive Degraded Cornerstone, Multiple Degraded Cornerstones, Multiple Yellow Inputs, or 1 Red Input[1]; Cornerstone Objectives Met with Significant Reduction in Safety Margin | Overall Unacceptable Performance; Plants Not Permitted to Operate Within this Band, Unacceptable Margin to Safety |
| RESPONSE | Regulatory Conference | Routine Senior Resident Inspector (SRI) Interaction | Branch Chief (BC) or Division Director (DD) Meet with Licensee | DD or Regional Administrator (RA) Meet with Licensee | EDO (or Commission) Meet with Senior Licensee Management | Commission meeting with Senior Licensee Management |
| RESPONSE | Licensee Action | Licensee Corrective Action | Licensee Corrective Action with NRC Oversight | Licensee Self Assessment with NRC Oversight | Licensee Performance Improvement Plan with NRC Oversight | |
| RESPONSE | NRC Inspection | Risk-Informed Baseline Inspection Program (Baseline) | Baseline and Inspection Follow-up | Baseline and Inspection Focused on Cause of Degradation | Baseline and Team Inspection Focused on Cause of Degradation | |
| RESPONSE | Regulatory Actions | None | Document Response to Degrading Area in Inspection Report | Docket Response to Degrading Condition | -10 CFR 2.204 DFI<br>-10 CFR 50.54(f) Letter<br>- CAL/Order | Order to Modify, Suspend, or Revoke Licensed Activities |
| COMMUNICATION | Assessment Report | DD review/sign assessment report (w/ inspection plan) | DD review/sign assessment report (w/ inspection plan) | RA review/sign assessment report (w/ inspection plan) | RA review/sign assessment report (w/ inspection plan)<br><br>Commission Informed | |
| COMMUNICATION | Public Assessment Meeting | SRI or BC Meet with Licensee | BC or DD Meet with Licensee | RA Discuss Performance with Licensee | EDO (or Commission) Discuss Performance with Senior Licensee Management | Commission Meeting with Senior Licensee Management |
| | <---------- Regional Review / Agency Review ----------> | | | | | |

[1] It is expected that in a few limited situations an inspection finding of this significance will be identified that is not indicative of overall licensee performance. The staff will consider treating these inspection findings as exceptions for the purpose of determining appropriate actions.

**Table 5.2 Performance Indicators**

| Cornerstone | | Indicator | | Thresholds: Increased Regulatory Response | Thresholds: Required Regulatory Response | Thresholds: Unaccept. Performan. |
|---|---|---|---|---|---|---|
| Initiating Events | | Unplanned scrams per 7,000 critical hours | | >3 | >6 | >25 |
| | | Scrams with loss of normal heat removal per 36 months | | >4 | >10 | >20 |
| | | Unplanned transients per 7,000 critical hours | | >8 | NA | NA |
| Mitigating Systems | | Safety system unavailability, % per 36 months | High-Pressure Injection | | | |
| | | | BWRs | | | |
| | | | HPCI | >4% | >12% | >50% |
| | | | HPCS | >1.5% | >4% | >20% |
| | | | PWRs | | | |
| | | | HPSI | >2% | >5% | >10% |
| | | | High-Pressure Heat Removal | | | |
| | | | BWRs | | | |
| | | | RCIC | >4% | >12% | >50% |
| | | | PWRs | | | |
| | | | AFW | >2% | >6% | >12% |
| | | | Residual Heat Removal | >2% | >5% | >10% |
| | | | Emergency AC Power | >3.8% | >5% (>2 EDG >10%) | >10% (>2 EDG >20%) |
| | | Safety system failures per 12 months | | >5 | NA | NA |
| Barriers | Fuel Cladding | Reactor Coolant System (RCS) specific activity, % of Tech. Spec. limit | | >50% | >100% | NA |
| | RCS | RCS leak rate, % of Tech. Spec. Limit | | >50% | >100% | NA |
| | Containment | Containment leakage, % of allowable ($L_a$) | | >60% | NA | NA |

| Table 5.2 Performance Indicators | | | | |
|---|---|---|---|---|
| **Emergency Preparedness** | Emergency Response Organization (ERO) drill/exercise performance, % per 24 months | <90% | <70% | NA |
| | ERO readiness, % of key positions per 24 months | <80% | <60% | NA |
| | Alert and Notification System performance, % of operable sirens per 12 months | <94% | <90% | NA |
| **Occupational Radiation Safety** | Occupational exposure control effectiveness: (1) the number of non-compliances with 10 CFR Part 20 requirements for high (>1000 mr/hr) and very high radiation areas, and (2) uncontrolled personnel exposures exceeding 10% of the stochastic or 2% of the non-stochastic limits per 36 months | >5 | >11 | NA |
| **Public Radiation Safety** | Offsite release performance: the number of effluent events that are reportable per 10CFR Part 50 Appendix I, the Offsite Dose Calculation Manual, or Technical Specifications per 36 months | >6 | >13 | NA |
| **Physical Protection** | Protected area security equipment availability, % per 12 months | <95% | <85% | NA |
| | Personnel screening reportable program failures per 12 months | >2 | >5 | NA |
| | Personnel reliability reportable program failures per 12 months | >2 | >5 | NA |

# PILOT PROGRAM

Task Leader Timothy Frye

Attachment 6

# 1 INTRODUCTION

## 1.1 Purpose

The purpose of the pilot program is to apply the proposed new regulatory oversight processes described in Commission paper SECY-99-007 to a select number of plants. Performance indicator (PI) data reporting and the revised inspection, assessment, and enforcement processes will be exercised at the pilot plants. Lessons learned from this pilot effort will allow the processes and procedures to be refined and revised as necessary prior to full implementation.

## 1.2 Scope

The pilot program will be a 6-month effort that will involve two sites from each region. The plants selected, as shown in Table 6.1, represent a cross-section of design and licensee performance across the industry. The pilot plants will collect and report PI data, be inspected by the NRC under the new risk-informed baseline inspection program, have enforcement action taken under the new enforcement policy, and be assessed under the new streamlined assessment process.

## 1.3 Objectives

The objectives of the pilot program are to (1) exercise the new regulatory oversight processes to evaluate whether or not they can function efficiently, (2) identify process and procedure problems and make appropriate changes prior to full implementation, and (3) to the extent possible, evaluate the effectiveness of the new processes. The pilot program will also measure the agency and licensee resources required to implement the new inspection, assessment, and enforcement processes in order to quantify the resource changes. The results of the pilot program will be evaluated against pre-established success criteria. Full implementation of the new oversight processes will commence pending successful completion of the pilot program, as measured against these success criteria.

## 1.4 Schedule and Major Milestones

The major milestones for the pilot program are listed below. A more detailed schedule for pilot program implementation is provided in Section 2 of this attachment.

| | | |
|---|---|---|
| April 1999 | - | First draft of oversight process procedures completed |
| | - | PI reporting training session |
| | - | NRC inspection program training session |
| May 1999 | - | Regulatory oversight process workshop |
| | - | Issue final draft procedures for pilot program |
| June 1, 1999 | - | Begin pilot program |
| November 1999 | - | Pilot plant mid-cycle review, inspection planning meeting, issuance of 6-month inspection look-ahead letter |

| | | |
|---|---|---|
| December 1999 | - | Evaluate new regulatory oversight processes at pilot plants against success criteria |

# 2 PILOT PROGRAM

## 2.1 Objectives of the Pilot Program

The objectives of the pilot program are to apply the new PI, inspection, assessment, and enforcement processes to a limited number of plants in order to (1) exercise the new regulatory oversight processes and evaluate whether or not they can function efficiently, (2) identify process and procedure problems and make appropriate changes prior to full implementation, and (3) to the extent possible, evaluate the effectiveness of the new processes. The pilot program will also measure the agency and licensee resources required to implement the new inspection, assessment, and enforcement processes in order to quantify the resource changes. Ground rules for how these new processes will be applied to the pilot plants are discussed in Section 2.3. As described in Section 2.5, pilot program success criteria have been established to measure the ability to meet these objectives. Full implementation of the new oversight processes will commence pending successful completion of the pilot program, as measured against these success criteria. Specific objectives of the pilot program are as follows:

1. Perform a limited-scale exercise of the following processes to evaluate whether they can function efficiently, including:

    - PI data reporting by the industry
    - Performance of a risk-informed baseline inspection program by the NRC
    - Evaluation of PI and inspection results and determination of appropriate actions through the assessment process
    - Implementation of a revised enforcement process that is integrated with the other new oversight processes
    - NRC time reporting and information management systems

2. Identify problems with processes and implementing procedures and make appropriate changes to support full implementation in January 2000, including:

    - Issuing final PI collection and reporting guidance to the industry by October 1999
    - Issuing new or revised inspection program documentation (e.g., inspection procedures, inspection manual chapter 0610, etc.) by December 1999
    - Final enforcement policy revisions by December 1999
    - NRC time reporting and information management systems ready by December 1999
    - Assessment process management directive issued by February 2000

3. To the extent possible, evaluate the effectiveness of the new regulatory oversight processes to determine whether:

- The PIs and their thresholds provide an appropriate objective measure of plant performance
- The baseline inspection program adequately supplements and complements the PIs so that the combination of PIs and inspection provide reasonable assurance that the cornerstone objectives are being met
- The baseline inspection program is effective at independently verifying the accuracy of the PIs
- The new enforcement policy results in enforcement actions for issues that are consistent with the safety significance resulting from the assessment process
- The use of the new assessment process and action matrix results in more consistent and predictable NRC action decisions for plants with varying levels of performance

## 2.2 Pilot Program Major Milestones

Attachment 6 to Commission paper SECY-99-007 provided the plan that the NRC would use to transition through the implementation of the revised oversight processes. The following provides a summary of those transition plan activities related to the pilot program and an updated schedule based on continued development work and coordination with the industry and public.

### 2.2.1 Prerequisite Work for Pilot Program

| | | |
|---|---|---|
| March 1999 | - | Develop PI procedures (PI reporting manual) |
| | - | Develop baseline inspection program procedures |
| April 1999 | - | Develop assessment procedures |
| | - | Develop enforcement procedures (including Commission paper on interim enforcement policy) |
| | - | Develop NRC information management systems for pilot |
| | - | PI reporting public workshop for pilot plant representatives |
| | - | NRC inspection program training session for pilot plant inspectors and managers |
| May 1999 | - | Regional planning of the baseline inspection program for the pilot plants |
| | - | NRC/Industry public workshop on the regulatory oversight process pilot program (PI reporting, inspection, assessment, and enforcement) |
| | - | Issue final PI reporting, baseline inspection program, and assessment process procedures for use during pilot |

| | | |
|---|---|---|
| | - | Issue interim enforcement policy for pilot plants |

### 2.2.2 Pilot Activities

| | | |
|---|---|---|
| May 1999 | - | Pilot plants start PI data collection |
| June 1, 1999 | - | Commence pilot program |
| July 1999 | - | PI verification inspection |
| | - | Periodic NRC/Industry public meetings to review pilot results |
| September 1999 | - | Quarterly assessment review |
| October 1999 | - | Industry/NRC public workshop on pilot program results |
| November 1999 | - | Mid-cycle assessment review |
| December 1999 | - | Analysis of pilot results against success criteria |

### 2.2.3 Final Products

| | | |
|---|---|---|
| October 1999 | - | PI reporting manual issued |
| December 1999 | - | Baseline inspection program issued |
| | - | Revised Enforcement Policy issued |
| | - | Information systems (RPS, RITS, etc.,) in place |
| February 2000 | - | Revised assessment procedures issued |

## 2.3 Pilot Program Ground Rules

The following ground rules define how the pilot program will be performed for the participating sites; they were developed to ensure that the objectives of the pilot program would be met. These ground rules were developed in conjunction with the regions and with headquarters program offices; comments from the industry and the public were considered and incorporated as appropriate.

The pilot program ground rules are as follows:

- The pilot plants will receive the new baseline inspection program in lieu of the current core program.

- The pilot plants will be assessed under the new assessment process in lieu of the current plant performance review (PPR) process (i.e., no August PPR for the pilot plants). The pilot plants will undergo a periodic assessment at the mid-cycle review, scheduled to take place in November 1999.

- PI data collection for the pilot program will start in May 1999, and the first PI report will be due from the participating licensees by June 15, 1999. In addition to the pilot plants, additional licensees may voluntarily report the PIs. The pilot plants will be asked to collect and report one years worth of historical PI data (two years of data when possible) to supplement the data collected during the pilot program.

- Pilot plants will be handled under the new enforcement policy, in lieu of the current enforcement policy.

- The risk-informed baseline inspection program will be conducted at the pilot plants as follows:

  - Regional planning of the new baseline inspection program will be conducted for all pilot plants.

  - Periodic adjustments to the inspection schedule to add, or remove, initiative inspection will be performed for all plants.

  - All new baseline inspection procedures will be performed in each region during the pilot program, but each procedure will not be performed at each plant. For example, the biannual problem identification and resolution inspection procedure might be tested at only four pilot plants, one in each region.

  - The PI verification portion of the baseline inspection program will be tested at all of the pilot plants, but all PIs might not need to be verified at each plant.

  - As many inspectable areas as possible will be inspected based on their intended frequency and the availability of associated activities. Some inspectable areas may not be covered because they will not be applicable to the pilot sites; such as the refueling and outage related activities.

- Regional inspection planning meetings, with program office oversight and assistance, will be held for each pilot plant in May 1999. At that time, previously scheduled regional initiative inspections will be reevaluated to determine the continued need for the inspection under the new oversight framework.

- The need for additional regional initiative inspection during the pilot program will be determined based on a periodic review of the PI results and baseline inspection findings.

- A mid-cycle review and inspection planning meeting, including the issuance of a 6-month inspection look-ahead letter, will be held for each pilot plant by the end of November 1999. These assessment and inspection planning activities will be based on the 5 months of pilot data collected by the end of October 1999.

- Subsequent to the completion of the pilot program, pilot plants will continue under the new oversight processes if full implementation is delayed for the short term (less than 3 months). If it is expected that full implementation will be delayed for more than 3

months, then the staff will evaluate restoring pilot plants to the current regulatory oversight processes.

- The pilot plants will be discussed as part of the April 2000 senior management meeting (SMM) process. At the SMM screening meetings, the pilot plant performance review and discussion of agency action will be based on the PI results and baseline inspection findings, as applied to the action matrix. The action matrix will be used to the extent practicable to determine which pilot plants need to be discussed further at the SMM.

### 2.4 Pilot Program Support Organization

The transition task force (TTF) will provide support to the pilot plant sites and regions throughout the pilot program. One or two TTF members will be assigned to each region as the primary points of contact during the pilot program. These pilot program support staff members will be the focal point for regional and industry questions on program implementation, will make periodic site visits to monitor NRC and licensee implementation of the program, and will solicit NRC staff and licensee comments on program effectiveness. The insights gained by the pilot program support staff will be part of the input that is considered by the Pilot Program Evaluation Panel.

#### 2.4.1 Pilot Program Evaluation Panel

The Pilot Program Evaluation Panel (PPEP) will function as a management-level oversight group to monitor and evaluate the success of the pilot effort. The PPEP will meet periodically during the pilot program to review the implementation of the oversight processes and the results generated by the PI reporting, baseline inspection, assessment, and enforcement activities. At the end of the pilot program, the PPEP will evaluate the pilot program results against the success criteria described in Section 2.5. For those success criteria that are intended to measure the effectiveness of the processes, and that generally do not have a quantifiable performance measure, the PPEP will serve as an "expert panel" to review the results and judge the success.

As the tasks of the PPEP are better defined and formalized, the staff will work with the Office of the General Counsel to ensure that Federal Advisory Committee Act (FACA) requirements are adhered to.

The PPEP will be a cross-disciplinary group of about eleven people, with membership anticipated to be as follows:

- Deputy Director, Division of Inspection Program Management, NRR - PPEP Chairman
- Three regional division directors (combination of Division of Reactor Safety and Division of Reactor Projects division directors)
- TTF Executive Forum Chairman
- Office of Enforcement representative
- One Nuclear Energy Institute (NEI) representative
- Two pilot plant licensee representatives
- One member of the public
- One State regulatory agency representative

## 2.5 Pilot Program Success Criteria

The following success criteria will be used to evaluate the results of the regulatory oversight process improvement pilot program. These criteria will determine whether the overall objectives of the pilot program have been met, and whether the new oversight processes (1) ensure that plants continue to be operated safely, (2) enhance public confidence by increasing predictability, consistency and objectivity of the oversight process so that all constituents will be well served by the changes taking place, (3) improve the efficiency and effectiveness of regulatory oversight by focusing agency and licensee resources on those issues with the most safety significance, and (4) reduce unnecessary regulatory burden on licensees as the processes become more efficient and effective.

### 2.5.1 Performance Indicator Reporting

The following criteria will measure the efficiency and effectiveness of PI reporting.

- Can PI data be accurately reported by the industry, in accordance with reporting guidelines? They can, if by the end of the pilot program, each PI is reported accurately for at least 8 out of the 9 pilot plants.

- Can PI data results be submitted by the industry in a timely manner? They can, if by the end of the pilot program, all plants submit PI data within one business day of the due date.

### 2.5.2 Risk-informed Baseline Inspection Program

The following criteria will measure the efficiency and effectiveness of the baseline inspection program, including inspection planning, conduct of inspections, inspection finding evaluation, and inspection finding documentation.

- Can the inspection planning process be efficiently performed to support the assessment cycle? It can, if the planning process supports issuing a 6-month inspection look-ahead letter within 4 weeks from the end of an assessment cycle for at least 8 out of the 9 pilot plants.

- Are the inspection procedures clearly written so that the inspectors can consistently conduct the inspections as intended? They are, if by the end of the pilot program, resources expended to perform each inspection procedure are within 25% of each other for at least 8 out of the 9 pilot plants. Inspection procedure quality will also be determined by a PPEP evaluation of feedback from the procedure users.

- Are less NRC inspection resources required to perform the new risk-informed baseline inspection procedures. They are, if the direct inspection effort expended to perform the baseline inspection procedures are about 15% less than the resources expended for the core inspection procedures over the same time period.

- Can the inspection finding risk characterization guidance be used by inspectors and regional management to efficiently categorize inspection findings in a timely manner? It can, if by the end of the pilot program, inspection reports and updated plant issues

matrices (PIMs) can be issued within 30 days of the end of an inspection period for at least 8 out of the 9 pilot plants.

- Can inspection findings be properly assigned a safety significance rating in accordance with established guidance? They can, if by the end of the pilot program, at least 95% of the inspection findings were properly categorized and no risk-significant inspection findings were screened out. Success will be determined by an independent review by the PPEP.

- Are the scope and frequencies of the baseline inspection procedures adequate to address their intended cornerstone attributes? Success will be determined by an independent evaluation by the PPEP.

### 2.5.3 Assessment

The following criteria will measure the efficiency and effectiveness of the new assessment processes.

- Can the assessment process be performed within the scheduled time? It can, if for at least 8 out of the 9 pilot plants, an assessment of the PIs and inspection findings can be completed, with a letter forwarding the results and a 6-month inspection look-ahead schedule, within 4 weeks of the last PI data submittal.

- Can the action matrix be used to take appropriate NRC actions in response to indications of licencee performance? It can, if there is no more than one instance (with a goal of zero) in which an independent review by the PPEP concluded that action required for a pilot plant is different from the range of actions specified by the action matrix.

- Does the combination of PI results and inspection findings provide an adequate indication of licensee performance? Does the process provide a reasonable assurance that the cornerstone objectives are being met and safe plant operation is maintained? Success will be determined by an independent evaluation by the PPEP.

- Are the mid-cycle assessments performed for the pilot plants in a manner that is consistent across the regions and that meets the objectives of the assessment program guidance? Success will be determined by an independent evaluation by the PPEP.

### 2.5.4 Enforcement

The following criteria will measure the effectiveness of the new enforcement policy.

- Enforcement actions are taken in a manner consistent with the assessment of inspection findings by the risk characterization guidance. Yes, as determined by an independent review by the PPEP.

### 2.5.5 Information Management Systems

The following criteria will determine whether the NRCs' information management systems are ready to support full implementation of the new regulatory oversight processes.

- Are the assessment data and results readily available to the public? They are, if by the end of the pilot program, the NRC information systems support receiving industry data, and if PIs and inspection findings are publicly available on the Internet within 30 days of the data submittal for at least 8 out of the 9 pilot plants.

- Are the time reporting and budget systems, such as the Regulatory Information Tracking System, ready to support the process changes? They are, if by the end of the pilot program, the time expended for regulatory oversight activities is accurately recorded at least 95% of the time.

- Are the NRC information support systems, such as the Reactor Program System (RPS) and its associated modules, ready to support full implementation of the new oversight processes? They are, as determined by an independent evaluation by the PPEP.

### 2.5.6 Overall

The following criteria will measure the overall success of the pilot program, including an evaluation of the training provided and an evaluation of the regulatory burden imposed on licensees by the new processes.

- Have inspectors and managers been adequately trained to successfully implement the new oversight processes? They have, as determined by a training effectiveness evaluation reviewed by the PPEP.

- Are the new regulatory oversight processes more efficient and effective overall? They are, if by the end of the pilot program, the agency resources required to implement the inspection, assessment, and enforcement programs are about 15% less than currently required.

- Do the new oversight processes remove unnecessary regulatory burden, as appropriate, from the licensees? They do, based on the results of a pilot plant licensee survey reviewed by the PPEP.

## 3 PILOT PLANT SELECTION

The following criteria were used to identify potential sites for the pilot program:

- To the maximum extent possible, licensees were chosen that had either volunteered to participate in the pilot program, or that had participated in the NEI task group working on improving the regulatory oversight processes. A number of different licensees were chosen to participate in order to maximize industry exposure to the new processes.

- Plants were chosen to represent a broad spectrum of performance levels, but plants that were in extended shutdowns because of performance issues were not considered.

- A mix of pressurized-water reactors (PWRs) and boiling-water reactors (BWRs) was chosen.

- A mix of plant vendors and plant ages was chosen.

- To the extent possible, two plants with different performance levels within each region were chosen.

- NRC regional office concerns, such as experience of NRC staff associated with pilot plants and transition issues (such as expected departure of key NRC personnel during the pilot program), were considered.

- Licensee concerns, such as their involvement with other significant NRC activities (license renewal, steam generator replacement, etc.), were considered.

These criteria, and potential candidate plants, were discussed with NRC headquarters and regional management, and with NEI. All potential plants that selected to participate were first contacted by NEI, and all agreed to participate in the pilot program. Before publicly announcing which sites were participating in the pilot program, the NRC staff contacted each of the appropriate State organizations to notify them of the site's participation in the pilot program. After the State notifications were completed, a press release was issued on February 22, 1999, to announce the pilot program and the participating sites. Before commencing the pilot program, the staff has offered to participate in public meetings with State and local representative to discuss the pilot program and the revised oversight processes.

The following table summarizes the sites that the NRC and the industry agreed would participate in the pilot program. It is important to note that there are actually nine pilot plants since Public Service Electric & Gas Company (PSE&G) requested that both Salem and Hope Creek participate in the pilot program. NRC headquarters and Region I management agreed with this request.

Table 6.1 - Pilot Plants

| Region | Plant | Licensee | Last SALP[1] | PWR/ BWR | Vendor/Age |
|---|---|---|---|---|---|
| I | Hope Creek | Public Service Electric &Gas (PSE&G) | 2/2/2/1 | BWR | General Electric(GE) Type 4/ 13 years |
| I | Salem 1&2 | PSE&G | 1/2/2/1 | PWR | 4 Loop Westinghouse (W)/ 20 years |
| I | FitzPatrick | New York Power Authority | 2/2/2/2 | BWR | GE Type 4/ 24 years |
| II | Harris | Carolina Power & Light Company | 1/1/2/1 | PWR | 3 Loop W/ 12 years |
| II | Sequoyah 1&2 | Tennessee Valley Authority | 2/2/2/1 | PWR | 4 Loop W/ 18 years |
| III | Prairie Island 1&2 | Northern States Power Company | 2/1/2/1 | PWR | 2 Loop W/ 25 years |
| III | Quad Cities 1&2 | Commonwealth Edison Company | 2/3/3/2 | BWR | GE Type 3/ 26 years |
| IV | Ft. Calhoun | Omaha Public Power District | 2/2/1/2 | PWR | Combustion Engineering (CE)/ 26 years |
| IV | Cooper | Nebraska Public Power District | 2/2/3/1 | BWR | GE Type 4/ 25 years |
| SUMMARY | 9 Plants | 8 Licensees | 1/1/2/1 to 2/3/3/2 | 5 PWRs 4 BWRs | 4 W plants 1 CE plant 4 GE plants |

Note 1 - SALP scores correspond to the following SALP functional areas: Operations/Maintenance/Engineering/Plant Support

# NEW NRC REACTOR INSPECTION AND OVERSIGHT PROCESS (NUREG-1649)

Attachment 7

# New NRC Reactor Inspection and Oversight Program

February 1999

UNITED STATES NUCLEAR REGULATORY COMMISSION

NUREG-1649

# New NRC Reactor Inspection and Oversight Program

The Nuclear Regulatory Commission is revamping its inspection and oversight program for commercial nuclear power plants. The new program takes into account improvements in the performance of the nuclear industry over the past twenty years, and the desire of the NRC to apply more objective, timely, safety-significant criteria in assessing performance, as well as the agency's need to effectively regulate the industry with a smaller staff and budget.

The new program will be used at eight nuclear power plants on a pilot basis, beginning in June. The experience of this pilot program will be used to evaluate and, if needed, modify the new processes before they are extended to all plants in January next year.

The impetus behind this comprehensive change in approach came both from the NRC's own fundamental reviews of its regulatory program as part of the "reinventing government" process and from concerns expressed by the nuclear industry, Congressional committees and public interest groups.

The commercial nuclear power industry in the United States is a mature industry. Most of the more than 100 nuclear plants have been operating for more than 10 years, and half of them have operated for more than 20 years. To the best of our knowledge, no new nuclear power plants are now planned by the industry, although the NRC has approved standardized designs for improved nuclear power facilities.

All the evidence suggests that the safety and reliability of the nuclear industry has improved markedly, since the mid-1980's. The number of automatic shutdowns, the number of significant safety problems, and the number and duration of outages caused by equipment problems have all decreased.

The improvements in plant performance can be attributed both to efforts within the nuclear industry and to successful regulatory oversight. Despite this success, the NRC has noted that the current processes for inspection, assessment, and enforcement are not always focused on the most important safety issues. In some situations, regulatory activities have been redundant or inefficient; at times, overly subjective. NRC actions have not always been understandable or predictable.

To address these concerns, the new oversight program calls for:

- Focusing inspections on activities where the potential risks are greater
- Applying greater regulatory attention to facilities with performance problems and reducing regulatory attention on facilities that perform well
- Using objective measurements of the performance of nuclear power plants whenever possible
- Giving the nuclear industry and the public timely and understandable assessments of plant performance
- Avoiding unnecessary regulatory burdens on nuclear facilities
- Responding to violations of regulations in a predictable and consistent manner that reflects the safety impact of the violations

*(continued on next page)*

The key features of the program deal with new methods for assessing performance and inspecting to assure safe operation. It spells out more clearly what a nuclear plant operator can expect with good performance and what agency actions will be taken if performance declines.

The new commercial nuclear oversight program is, of course, anchored in the NRC's mission to ensure public health and safety in the operation of such power plants.

The objective is to monitor performance in three areas -- reactor safety (avoiding accidents and reducing the consequences of accidents if they occur); radiation safety for plant workers and the public during routine operations; and protection of the plant against sabotage and other security threats.

Another way of looking at the mission is to identify the "cornerstones" of safe nuclear plant operation in each of the three areas:

## Reactor Safety Cornerstones

- Initiating Events -- Minimizing events that could lead to an accident
- Mitigation Systems -- Assure the ability of safety systems to respond to and lessen the severity of an accident
- Barrier Integrity -- Maintain barriers to the release of radioactivity in an accident
- Emergency Preparedness -- plans by the utility and governmental agencies to shelter or evacuate people in the community in the event of a severe accident

## Radiation Safety Cornerstones

- Plant worker -- Minimize exposure during routine operations
- General public -- Provide adequate protection during routine operations

## Security Cornerstone

- Physical protection of plant and control of nuclear fuel

Three cross-cutting elements are part of each of these cornerstones:

- Human performance
- Management attention to safety and workers' ability to raise safety issues ("Safety-conscious" work environment)
- Finding and fixing problems (Licensee's corrective action program)

## Measuring nuclear plant performance

Nuclear plant performance will be measured by a combination of objective performance indicators and by the inspection program which will be refocused on those plant activities which have the greatest impact on safety and overall risk.

## Performance Indicators

Performance indicators use objective data to monitor each of the "cornerstone" areas. The data which make up the performance indicators will be generated by the utilities and submitted to the NRC. The NRC will also monitor plant activities through its inspection program both to validate the accuracy of the performance indicator information and to assess performance that is not measured by the performance indicators.

The principal performance indicators now planned are:

| Safety Cornerstone | Performance Indicator |
|---|---|
| Initiating events | Unplanned reactor shutdowns (automatic and manual) |
| | Risk-significant shutdowns |
| | "Transients" -- unplanned events that result in changes in reactor power |
| Mitigating Systems | Safety System not available<br>• Specific Emergency Core Cooling Systems<br>• Emergency Electric Power Systems |
| | Safety System Failures |
| Integrity of barriers to release of radioactivity | Fuel Cladding (measured by radioactivity in reactor cooling system) |
| | Reactor cooling system leak rate |
| | Reactor containment leak rate (when tested) |
| Emergency Preparedness | Emergency response organization drill performance |
| | Readiness of emergency response organization |
| | Availability of notification system for area residents |
| Occupational Radiation Safety | Compliance with regulations for access control of radiation areas in plant |
| | Uncontrolled radiation exposures to workers greater than 10 percent of regulatory limit |
| Public Radiation Safety | Effluent releases requiring reporting under NRC regulations and license conditions |
| Physical Protection | Security system equipment availability |
| | Effective control of access to plant (personnel screening) |
| | Employee fitness-for-duty program effectiveness |

*(continued on next page)*

## Inspections

The new inspection program will include baseline inspections common to all nuclear plants. Inspections beyond the baseline will be performed at plants with performance below a specified threshold, based on performance indicators and inspection findings, or in response to a specific event or problem at a plant.

The baseline inspection program will be based on the "cornerstone" areas important to safety. It will focus on activities and systems that are "risk significant," that is those activities and systems that have a potential to initiate an accident or increase the consequences of a possible accident. The inspection program will also review how the utilities find and fix problems and how they accept and encourage the raising of safety issues by employees.

The inspections will be performed by NRC resident inspectors stationed at each nuclear power plant, and by inspectors based either in one of the four NRC regional offices or in NRC Headquarters in Rockville, Maryland. The regional offices are in King of Prussia, Pennsylvania; Atlanta, Georgia; Lisle, Illinois; and Arlington, Texas.

The redesigned inspection program was developed using a risk-informed approach to select areas to inspect within each cornerstone. The inspection areas were selected because of their importance from the point of view of potential risk, past operational experience, and regulatory requirements. Within each inspection area, the scope of the inspection will be set using the same assessment of risk significance. The degree to which the area is measured by a performance indicator also affects the scope.

The baseline inspection program has three parts -- inspection of areas not covered by performance indicators or where a performance indicator does not fully cover the inspection area; inspections to verify the accuracy of information provided by a licensee's performance indicators; and a comprehensive review of the utility's effectiveness in finding and resolving problems.

The baseline inspection process will represent about a 15 percent reduction from the current typical reactor inspection program. The current program calls for about 2,200 hours of inspection per year at a good performing reactor. The new, risk-informed baseline inspection program will involve about 1,850 inspection hours per year.

As is the current practice, inspection reports will be issued on all inspections. The reports are available to the public. When the NRC's new document management system begins operation later this year, the reports will be available on the agency's Internet web site.

## Assessing plant performance

The performance indicator data, submitted by the utilities, will be evaluated and integrated with the findings of the NRC inspection program. Each of the performance indicators has criteria for measuring acceptable performance. (Like all industrial activities, nuclear power plants are not error-free or risk-free. Equipment problems will occur. Each performance indicator is designed to determine acceptable levels of operation within adequate safety margins.)

The performance indicators will be monitored continually by the NRC staff and reported quarterly by the licensees. Significant problems identified by performance indicators or by NRC inspectors will be dealt with promptly.

Each performance indicator and inspection assessment will be categorized to determine the appropriate regulatory response:

Category "Green" - Acceptable performance with NRC "baseline" oversight

- Cornerstone objectives fully met
- No significant deviation from expected performance

Category "White" - Acceptable performance with increased regulatory response

- Cornerstone objectives met with minimal reduction in safety margin
- Outside bounds of expected performance
- Within NRC license (Technical Specification) limits
- Changes in performance but with very small effect on accident risk

Category "Yellow" - Acceptable performance with required regulatory response

- Cornerstone objectives met but with significant reduction in safety margin
- NRC license (Technical Specification) limits reached or exceeded
- Changes in performance with a small effect on accident risk

Category "Red" - Unacceptable performance with plant not permitted to operate

- Plant performance significantly outside design basis
- Loss of confidence in ability of plant to provide assurance of public health and safety with continued operation
- Unacceptable decrease in margins of safety

Each calendar quarter, the resident inspectors and the inspection staff in the regional office will meet to review the performance of all nuclear power plants in that region as measured by the performance indicators and by inspection findings. Every six months, this review will be expanded to include planning of inspections for the following six-month period.

For those performance indicators and inspection areas outside of the "green" category, the agency will increase its inspection and oversight activities in those affected areas.

Each year, the final quarterly review will involve a more detailed assessment of plant performance over the previous 12 months and preparation of a performance report, as well as the inspection plan for the following six-month period. This review will include NRC headquarters staff members as well as the regional staff and the resident inspectors.

The annual review will also identify those plants with declining performance which may require further agency action. These plants will be discussed at an annual meeting of the NRC's senior managers. Based on these discussions, some plants may also be reviewed during a public Commission meeting on plant performance to consider what further agency action should be taken.

Following the Commission meeting, the annual performance reports for all plants will be issued and the NRC staff will hold public meetings with each licensee to discuss the previous year's performance.

## How the NRC will respond to plant performance

The quarterly reviews of plant performance, using the performance indicators and inspection assessments, will determine what additional action, if any, the NRC will take. The new process provides for four levels of regulatory response beyond the routine inspection and oversight program. This process is intended to be more predictable than current practices by linking regulatory actions to specific performance criteria.

*(continued on next page)*

| Assessment of Plant Performance (in order of increasing safety significance) | NRC Response |
|---|---|
| I. All Performance Indicators and Cornerstone Inspection Findings GREEN<br>• Cornerstone objectives fully met. | • Routine resident inspector and staff interaction<br>• Normal baseline inspection program<br>• Annual assessment public meeting |
| II. One or two inputs WHITE in different cornerstones<br>• Cornerstone objectives fully met. | • Staff to hold public meeting with licensee management<br>• Licensee corrective action to address WHITE inputs<br>• NRC inspection followup on WHITE inputs and corrective action |
| III. One degraded cornerstone (two inputs WHITE or one input YELLOW) or three inputs in any cornerstone WHITE<br>• Cornerstone objectives met with minimal reduction in safety margin | • Regional Administrator to hold public meeting with Senior Licensee Management<br>• Licensee to conduct self-assessment with NRC oversight<br>• Licensee submits response to degraded area<br>• Inspection focused on cause of degraded performance<br>• Consider additional resident inspector |
| IV. Repetitive degraded cornerstone, multiple degraded cornerstones, or multiple YELLOW inputs<br>• Cornerstone objectives met with significant reduction in safety margin | • Executive Director for Operations to hold public meeting with Senior Licensee Management<br>• Licensee develops performance improvement plan with NRC oversight<br>• NRC team inspection focused on cause of degraded performance<br>• Consider additional resident inspector<br>• "Demand for Information" or "Confirmatory Action Letter" |
| V. Overall RED (unacceptable performance)<br>• Unacceptable reduction in safety margin | • Plant not normally permitted to operate<br>• Commission meeting with Senior Licensee Management<br>• Order to modify, suspend, or revoke license |

## Enforcement Actions

Any changes in the NRC's enforcement program will be developed after the revised inspection and oversight program is approved. Until that time, the NRC will continue to issue Notices of Violation when significant violations are identified during inspections. The Notice of Violation requires the utility to take corrective action to prevent a recurrence of the violation and may include a fine.

## Making performance information available to the public

The new inspection and oversight program will provide more information on plant performance than in the past, and the information will be available on a more frequent basis. Updated plant performance information will be issued by the NRC every three months. This information will be placed on the NRC's internet web site as well as in its Public Document Room in Washington, D.C.

The NRC staff is currently developing the format that will be used for the quarterly report. The process will call for a utility to submit to the NRC the quarterly performance indicator data for the plant which it operates. The NRC staff will review the data for completeness and accuracy. The staff will then combine the utility-submitted performance indicators with performance indicators generated for each of the "safety cornerstone" areas by the NRC's own inspection program. The quarterly performance report will include performance indicator data and inspection findings for the previous four quarters to provide a context for assessing performance and observing trends in that performance. This unified performance indicator report will then be issued to the licensee and to the public.

Every six months, the performance report will also include the plan for inspections to be conducted during the ensuing six months. The last report in a yearly cycle will include a narrative assessment of the plant's performance over the previous 12 months. The NRC staff will also hold an annual public meeting with each licensee to discuss the plant's performance.

The fourth quarter report for each plant will be issued following a public Commission meeting to review the performance of all commercial nuclear plants. This meeting will focus on any plants which require additional NRC oversight because of declining performance or continued performance problems.

## How this oversight program differs from the current system

The current inspection program was designed for an industry which was more likely to experience equipment and performance problems than is currently the case. Therefore, the existing programs are aimed at observing plant activities, encouraging improved performance, and responding to operational problems as they occur.

The new inspection program recognizes that most plants are now performing substantially better than did the plants of the mid-1980's. For example, in the 1980's the typical plant had about eight unplanned shutdowns ("scrams") a year. In the past year, the number of reactor scrams averaged less than one per year per plant. This is an important measure of plant operations, and demonstrates the significant improvement in performance at most plants.

The new program is designed to focus the agency's resources on the relatively small

number of plants which continue to have performance problems, while reducing the regulatory impact on plants that perform well. This will involve a reduced inspection effort for those plants which have demonstrated that they meet the "safety cornerstone" objectives. These plants will receive a baseline inspection program performed by NRC resident inspectors and by inspectors from the regional offices.

The baseline inspection program will monitor plant activities as an "indicator" of plant performance. If performance declines, the inspection effort would increase to consider what caused the decline. By way of contrast, the traditional NRC inspection program was more diagnostic in the first instance, looking for problems, and their causes, no matter how the plant was performing. The new baseline program is more "risk-informed" -- it concentrates on those plant activities and systems which have the greatest potential impact on plant safety.

Plants which do not meet the "safety cornerstone" objectives will have an increased inspection program, focusing on areas of declining performance. There will also be "reactive" inspections beyond the baseline program, even at plants performing well, if there are operational problems or events the NRC believes require greater scrutiny. Generic problems, affecting some or all plants, may require additional inspections.

The assessment program will be substantially different from the previous process. The new program makes much more extensive use of performance indicators. The indicators and inspection findings provide the basis for quarterly reviews of plant performance.

Performance assessment previously involved three processes:

- Plant Performance Review - conducted every six months to assess events, inspection findings, and other data. This review was done to plan future inspections and to identify those plants with declining performance that required further NRC action.

- Senior Management Meeting and Watch List - the plant performance review was used to identify those plants which required further discussion by the NRC senior managers to determine if additional regulatory action was needed. The senior managers reviewed the information assessing plant performance. The managers designated those plants warranting heightened NRC monitoring as being on a "watch list." These "watch list" plants were then discussed at a public meeting with the Commission.

- About every 18 months, the NRC staff performed a separate review of the performance of each plant, preparing a Systematic Assessment of Licensee Performance (SALP report). This report included a numerical rating of the plant in four categories--plant operations, maintenance, engineering, and plant support--as well as providing a narrative discussion of overall performance. For plants with performance problems, the SALP period could to be shortened to as little as once a year, while plants with superior performance were assessed every 24 months.

The NRC began a review of this assessment process in 1996, including an evaluation by an outside consulting firm. The staff review and that of the consultants underscored the need for an assessment process that was more timely and more objective.

# Schedule for changes in oversight program

| | |
|---|---|
| 1999 | |
| March | Proposed Commission decision on program |
| June | Six month long pilot program at eight reactor sites, two in each region |
| October | Workshop to describe implementation of new program |
| November | Completion of pilot program |
| 2000 | |
| January | New process in effect for all plants |
| 2001 | |
| April | First annual plant performance review of all plants under new process |
| June | Complete evaluation of effectiveness of new process |

# COMMUNICATION PLAN

| | |
|---|---|
| Task Leader | August Spector |
| Task Members | Roy Mathew<br>Robert Pascarelli |

Attachment 8

# *COMMUNICATING THE TRANSITION*

# A COMMUNICATION PLAN

**General overview:**

The agency is in the process of developing a risk-informed approach to oversight and inspection of reactor licensees. The approach utilizes the best of current inspection practices and the best of risk informed processes. The need for change has been brought about by internal NRC introspection and initiative, maturity of the inspection and operational programs, external stakeholder desire to improve the licensing process in terms of a maturing industry and changing economic and regulatory environment. This communication plan is designed to assist in the transition to risk-informed oversight and inspection of reactor licensees. The communication plan provides an approach toward achieving these ends.

**Objectives:**

- Provide accurate and timely information
- Create positive stakeholder perception
- Deal with negative perceptions, dispel rumors, and reduce uncertainty
- Cooperate with stakeholders at all levels and maintain positive relationships
- Assist in the cultural transition of agency stakeholders and others

**Message Development:**

- Obtain facts about new approach and quickly distribute to stakeholders
- Develop analogies or stories which will help communicate to stakeholders through verbal and non-verbal visualization
- Provide consistent messages by various communicators outlined in the Communication Plan process
- Provide factual, unbiased, and balanced messages
- Distribute the message to internal stakeholders working from the top down, bottom up, and middle outward.
- Encourage feedback to Senior management by all levels (top, bottom, and middle)
- Provide a planned/structured communication approach which corresponds to the various stages of Transition Task Force implementation.

**Key policy messages:**

1. **Maintain safety** by establishing a regulatory oversight framework that ensures that plants continue to be operated safely. In addition to safety, the word maintain is a key word of emphasis. The message we must get across to our staff is that NRC inspectors have done an excellent job during the past twenty years, but due to a maturing industry a more risk informed approach is now required. This approach is based upon the work performed in the past by agency employees and will be maintained by continued inspections based upon risk informed processes. Safety is the foremost consideration and that this is clearly communicated.

2. **Enhance public confidence** by increasing predictability, consistency and objectivity of the oversight process so that all constituents will be well served by the changes taking place.

3. **Improve effectiveness and efficiency** of the oversight process by focusing agency resources and licensee resources on those issues with the most risk-significance. This will result from new approaches to oversight which allow focus on areas of greatest concern.

4. **Reduce unnecessary regulatory burden** as the process becomes more efficient and effective.

**Stakeholders** Identified: There are five levels of stakeholders between External and Internal constituencies.

| Internal | External |
|---|---|
| Group A: Headquarters within NRR, RES both management and non-management | Group D: State Program Offices, Congress, Legislatures |
| Group B: Other Headquarter NMSS, other both management and non-management | Group E: Press, Public Interest Groups, Industry Groups (NEI, ANS, INPO, etc.), Individual Utilities |
| Group C: Regions both management and inspectors | |

**Some current stakeholder communication issues:**

**Internal Stakeholders:** To keep NRC employees informed of current program activities, enhance their understanding of technical approaches being developed, help make the process of change/transition run smoother, seek and respond to comments/ideas of employees to improve the process, to reduce common fears among staff which arise during any period of profound change.

♦How will this affect job security, work activities, information flow, performance appraisal, responsibility, self-control of personal destiny, etc. by current NRC personnel, especially Regional inspectors.
♦Timeliness of process/policy development and conflict between existing policy and new or interim approach.
♦Identification of top management support (HQ and Regional) for new effort.
♦How will the new process affect self-esteem of agency, inspectors, technical staff, etc. as compared to current approach. Will management demonstrate empathy and caring of employee needs/concerns?
♦How will employee deal with the potential change in inspection approach in addition to all the other changes being brought about within the organization (i.e., NRC Reorganization, new management appointments, changes in Commissioners, etc.)
♦How will budget and other resource declines affect me and my work activities?

**External Stakeholders:** To keep public, industry and interest groups informed of current program activities, enhance their understanding of technical and policy issues, seek and respond to comments/ideas of various groups in order to improve the processes.

♦How will the new process affect plant operation, internal plant processes?

- How will new process affect compensation of key plant managers/employees?
- What influence will potential Congressional oversight have on NRC activities?
- How will we work under a potential duel system of regulations?
- How will the plants participating in pilot study be evaluated before, during, and after the pilot?

**Formation of opinion leader groups.**

A number of internal groups are to be established designed to help transmit messages throughout the agency and to provide feedback to Senior management and the Transition Task Force. Among these will be a Change Coalition and an Executive Forum made up of senior members of the Change Coalition.

**Change Coalition**. The Change Coalition is considered the "voice" of the agency as it transitions from the current regulatory framework to a risk-informed oversight process. Chosen because they are considered "opinion leaders" among their peers, Change Coalition members will facilitate communication with employees of the agency and provide interpretative feedback to the Transition Task Force in its effort to develop the oversight program. They will act as positive examples and role models for our internal stakeholders related to the transition process. It is important to bring senior management's message directly to working levels within the organization, hence the Change Coalition will be an important vehicle toward achieving this end. Change Coalition members will be given the "Change Coalition *Backpack,*" a guide consisting of essential information about the transition. The *Backpack* will be periodically updated in order to keep change coalition members current.

**Change Coalition Executive Forum:** will provide high-level regional oversight and a global perspective to the change process and feedback to the Transition Task Force and Senior HQ management. The Executive Forum is made up of the four Deputy Regional Administrators. The Executive Forum will act in an advisory capacity, will actively participate in Commission presentations, will meet approximately every three to four weeks. The purpose of the executive council is to provide regional leadership as the agency transforms to a risk-informed oversight process. The Executive Forum will provide advice and guidance to HQ, but not establish requirements.

**Role of First Level Supervisor:**

The Transition Task Force recognizes the importance of first level supervisors in supporting cultural transition, especially within NRR and Regional Offices. They have a key role in communicating to their staffs information about the changes which will be taking place within the agency. The first level supervisor maintains close contact with employees and are respected by them, hence it is considered important to have the supervisor actively involved in the transition process and to provide a positive role model during the process of transition and beyond. The Transition Team, through direct contact and through the Change Coalition, will keep agency supervisors informed and provide them with information which they may pass on to their subordinates. We expect the supervisor to keep Change Coalition members informed of employee issues which will be brought to the attention of the Transition Team.

**Working with External Stakeholders:**

The agency has developed positive and long term relationships with external stakeholder groups. Among these are NEI, various public interest groups, industry management, State Program Offices, and, to varying degrees legislative bodies. These relationships will be maintained and

strengthened throughout the process. Regular periodic public meetings have been held and scheduled providing these groups an opportunity to provide constructive input to the Transition Task Force and to the Commission. In addition, agency management has supported professional and industry activities by providing presenters at conferences and meetings sponsored by these groups (and co-sponsored with the NRC). These efforts will be continued. The attached schedule provides currently planned activities.

**Pilot Projects:**

The Transition Task Force will conduct nine pilot projects throughout the country in conjunction with various utilities. These pilot projects will be designed to test new approaches developed by the agency. It is planned that before each pilot project a public meeting be held in the geographic vicinity of pilot plant sites. Utility management will be asked to participate in order to inform the public of its involvement in the pilot. These meetings will provide NRC an opportunity to inform local citizen and interest groups of the changes to take place, and to solicit public input.

**Internal Stakeholder meetings:**

Each Region holds several inspector "counterpart" meetings during the year. Transition Task Force members have been scheduled to give presentations at these meetings in order to transmit key messages, update staff on current activities, and solicit input from field inspectors and Regional staff. Senior Task Force members and HQ Senior management will present at these sessions, hence demonstrating top management support of the transition efforts.

**Small group information sessions:**

Transition Task Force members and Change Coalition members will periodically visit Regional and HQ offices to provide small group information sessions with front line employees. These sessions will be conducted in an informal manner and provide an opportunity for NRC employees to share their views, provide constructive input to the process, and to be kept informed of current events. It is important that these small group sessions be properly orchestrated and provided on a timely fashion. These informal small group sessions provide an excellent opportunity to reduce any cynicism and encourage the formation of the cultural change within the agency.

**Electronic Communication:**

Today communicating electronically with both internal and external stakeholders is key to bringing key messages and to solicit input/feedback. We will establish a WEB page, known as the E-PAGE, for both internal and external use which will describe key messages, maintain up-dated information, provide links to other WEB pages, and provide contact sources for additional information. (These sources will be coordinated with Public Affairs.) The E-PAGE will be coordinated with both Public Affairs and the EDO communication activities, in order to provide consistent messages. We expect the E-PAGE to be in operation by early March. In addition to the E-PAGE, we are considering issuing computer disks and/or CD-ROMs of the information on the WEB pages so that those who do not have access to Internet facilities can access the information.

The Transition Task Force is planning to produce two short documentary TV videotape programs which will depict the entire transition process and explain the reasons for change, what the

changes will be, and show the progression of the pilot project. This tape can be used both internally and externally enhancing the understanding of our stakeholders.

**Public Affairs Interface:**

It is important to establish and maintain a working relationship with the agency and Regional Public Affairs Offices. We have established this relationship and have maintained contact. Public Affairs has developed several written overviews about the Transition effort. These have been reviewed by the Transition Team. The first plain English overview was published in February 1999 as NUREG-1649 and distributed at the Regulatory information Conference on March 4.In addition, Public Affairs will periodically issue press releases to inform the public of current events. Public Affairs will be conducting briefings with the media designed to inform them of program activities and supply them with background data. The Transition Team will provide assistance in this effort.

**Internal Written Communication:**

In addition to the internal E-PAGE, several internal written communication vehicles are planned. The February issue of the NRR newsletter had a featured article about the Transition Task Force and its efforts. We are planning a four page feature story in an upcoming issue of the NR&C Newsletter which will describe the process and include photographs and pictures to promote interest. We expect to reprint/overprint copies of this spread to be used in future communication efforts. In addition, we are considering including a one page up-date article in the June, September, November, and January (2000) issues of the NR&C. It is our desire to have print materials and slides used in communicating this effort to be professional looking and consistent.

**Interface with EDO/Commission Staff:**

In order to maintain communication links with the EDO and Commission staff the Transition Task Force will periodically brief technical staff members. These briefings will solicit input from staff members in addition to keeping them up to date.

**Interface with Training:**

A member of the Transition Task Force will be responsible for developing training plans and activities directed at the technical staff. These activities will not only further knowledge and understanding of new approaches, but will assist in bringing about the cultural changes which will naturally occur.

**Schedule of events planned at this time:** See attached

# Draft: Regulatory Oversight Process Communication Plan Schedule

**January 1999**
1/14 Brief Regional DRP Directors
1/14 Meet with NEI to discuss Pilot Plan
1/20 Commission briefing on Process Recommendations
1/20 Enforcement Coordinators Briefing
1/22 Press Release to announce 30 day comment period
1/26 Brief ACRS on Final Recommendations
1/27 NEI/Public Meeting
1/28 Brief Industry Regulatory Compliance and Technology Group
1/28 Visit Salem NPP

**February 1999**
2/3 R-I Town Meeting Conference Call
2/2 NEI Meeting with Industry; Site VPs/Licensing Managers - East
2/3 NEI Meeting with Industry; Site VPs/Licensing Managers - West
2/10 NEI/Public Meeting: coordinated with OE
2/11 NEI Task Force Briefing of NSIAC
2/17 R-II Resident Meeting
2/18 R-IV Resident Counterpart Meeting
2/23 Public Comment Period ends
2/24 NEI/Public Meeting
Regional Meetings (coincide with PPRs to describe new process) held on various dates

**March 1999**

3/3-5 Regulatory Information Conference (introduce concepts)
3/11 NEI/Public Meeting
3/12 Executive Forum Mtg.- Videoconference
3/15 Change Coalition Mtg.- Videoconference
3/24 NEI/Public Meeting
3/24-25 Meeting R-3 (SC,FG,MJ,AM)
3/26 Commission Meeting
3/26 Draft IP and IMC 0610 & PIM Guidance for Pilot use issued for comment (made available to the public

**April 1999**

4/6-8 Briefing for American Power Conference (Frank Gillespie presenter)
4/7 NEI Mtg. Public meeting
4/7 Train the Trainer Session NEI/NRC
4/8 Meeting R-1
4/12-15 PI Workshop (R-3) public
4/22 NEI Public meeting
4/26-30 Inspector Workshop (R-2) NRC

**May 1999**

5/4-6 R-1 Resident Mtg. (Tentative)
Joint NRC/NEI meeting to resolve issues prior to Pilot (TBA)
5/17-20 Pilot Workshop - Public R-1/HQ
5/24-25 Managing Change Class Open to Task Force and Change Coalition members

**June 1999**
6/1 Pilot Begins
6/6-10 ANS Conference presentation (tentative)
6/15 Issue Press Release on Enforcement Revisions
6/23 NEA Conference presentation (Tentative)
**July 1999**

7/12 Present at MIT Course (Gillespie)
7/15-30 Conduct Regional Meetings with States on details of new process

**September 1999**

Brief Commission TAs on Progress (TBD)

**October 1999**

10/11-25 (TBD) conduct joint NRC/Industry 2 day Workshop (NRC/NEI)
Issue a Press Release regarding the Workshop

**November 1999**

Begin NRC Training session for inspectors
**December 1999**
Training Sessions for NRC inspectors continue
Brief Commission TA's

**January 2000**

1/15 Press Release issued announcing full process implementation and SALP deletion

**May 2000**

Commission Briefing on Assessment results
Press Release issued

Note:
1. Change Coalition, Executive Forum and other internal communication vehicles to be on going
2. Public Meeting Information to be posted on NRC Web-page