THE FOLLOWING DRAWINGS
TO BE WITHHELD FROM
PUBLIC PER 10 CFR 2.390 AND SECY-04-0191.

57730
102023-6
102023-8
102023-9
102023-11
102023-12
102023-16
102023-17
102023-18
108023-6
108023-8
108023-9
108023-11
108023-12
108023-18
438431
438432
438445
438449
439533
498992
498993
500852
500853
500976
663082-2

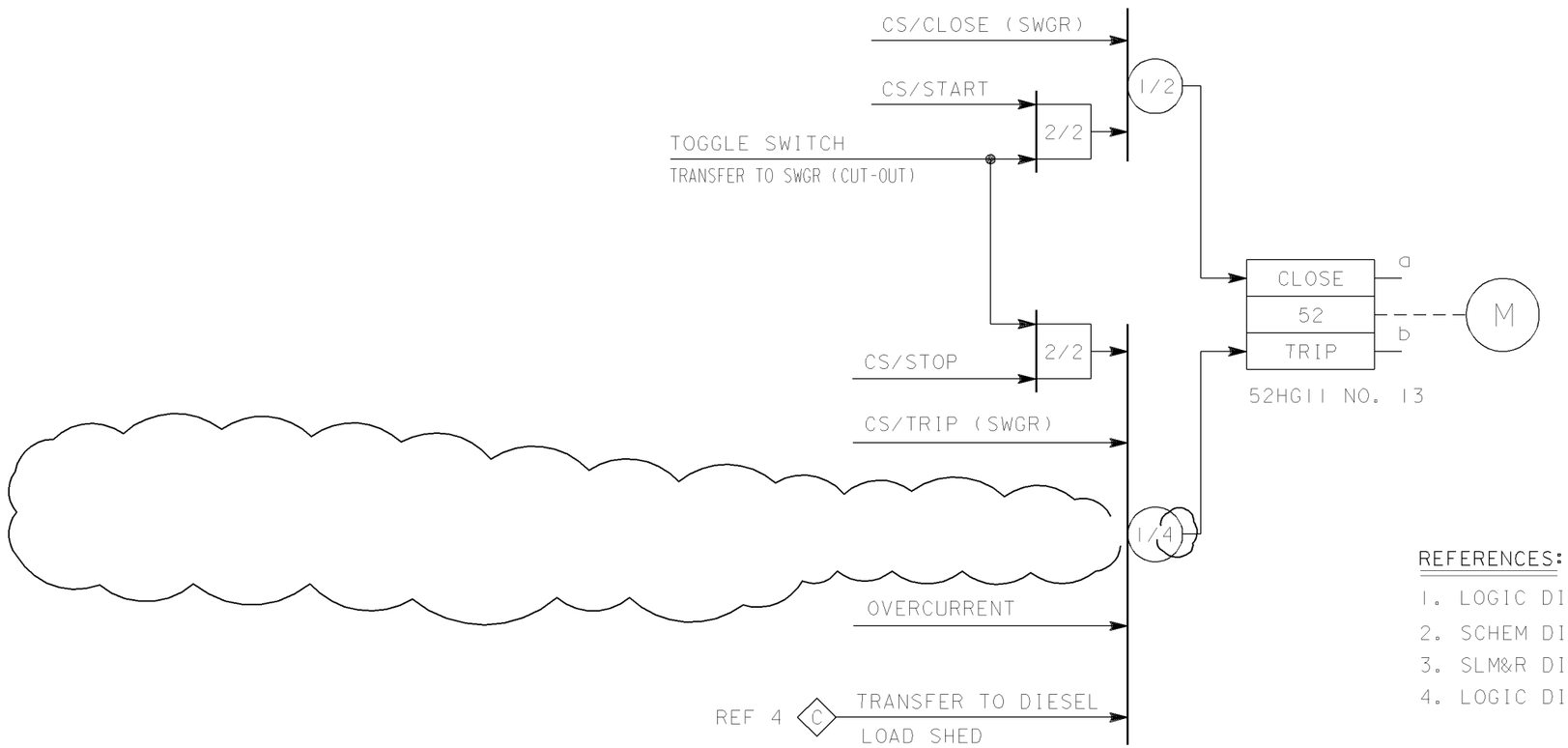

REFERENCES: DWG NO.

1. LOGIC DIAGRAM SYMBOLS _____ 19425
2. SCHEM DIAG CHARGING PUMP #13 _____ 4008756
3. SLM&R DIAG 4KV BUS F,G&H _____ 437533
4. LOGIC DIAG 4KV BUS SECT "G" AUTO XFER ___ 458864

NUCLEAR SAFETY RELATED

KEY DWG. SECTION 3

UNIT 1

DATE	
05-25-2007	
D.D.	RHS1
R.E.	FxC2
I.V.	
P.E.	RWB7

REGISTERED PROFESSIONAL ENGINEER
RICHARD WILLIAM BECKER
E 9776
Exp. 9/30/2008
ELECTRICAL
STATE OF CALIFORNIA

REVISION DESCRIPTION

REVISED PER DCI-SE-49704-01

ELECTRICAL
LOGIC DIAGRAM
CENTRIFUGAL CHARGING PUMP 1-3

DIABLO CANYON POWER PLANT
PACIFIC GAS AND ELECTRIC COMPANY
SAN FRANCISCO, CALIFORNIA

DWG SCALE:
BILL OF MATL:
SUPSDS:
SUPSD BY:

DRAWING	SHEET	PAGE	REV
19404	1	0	6

RASTER=19404.dgn
DGN=19404.dgn
CAD User:RHS1 Date: 05-25-2007

INPG
1 Size

U# 2 - 102788

19405

CS/CLOSE (SWGR)
BREAKER IN TEST POSITION
CS/START
43/TS/CONTROL ROOM
LUBE OIL PRESS
CS/NEUT-START
REF 4 & 5 (A) SIS AUTO START SIGNAL 4KV AUTO XFER SIGNAL (NO SIS) (B)
CS/START △ REMOTE
ALARM
CS/NEUT △ REMOTE
43/MAN
CS/TRIP (SWGR)
START CHG PP
CHG PP RUNNING (3 MIN)
CS/STOP △ REMOTE
OVERCURRENT
REF 4 & 5 (F) SIS AUTO START SIGNAL 4KV AUTO XFER SIGNAL (NO SIS) (G)
CS/AUTO
CS/STOP
REF 4 & 5 (C) TRANSFER TO DIESEL LOAD SHED
L.O. LOW PRESS
CS/ON
OVERCURRENT
ON
OFF
CLOSE
52
TRIP
52HF11 NO. 11
52HG9 NO. 12
52-1F-60 NO. 11
52-1G-64 NO. 12

NOTES:

43 - MODE SELECTOR SWITCH FOR SELECTING "AUTO" OR "MANUAL" MODE LOCATED ON HOT SHUT DOWN PANEL.

43/TS - TRANSFERS CONTROL FROM MAIN CONT BD TO HOT SHUT DOWN PANEL. LOCATED AT THE SWGR.

△ - REMOTE CONTROL SWITCH LOCATED ON HOT SHUT DOWN PANEL

REFERENCES: DWG NO.

1. LOGIC DIAGRAM SYMBOLS — — — — 19425
2. SCH DIAG CHARGING PP — — — — 437595
3. SLM&R DIAG 4KV BUS F,G&H — — 437533
4. LOGIC DIAG 4KV "F" AUTO XFR — 458863
5. LOGIC DIAG 4KV "G" AUTO XFR — 458864

CHARGING PUMP AUXILIARY LUBE OIL PUMP

NUCLEAR SAFETY RELATED

REGISTERED PROFESSIONAL ENGINEER T.A. BETTERSWORTH 1986 ELECTRICAL STATE OF CALIFORNIA

REV	REGISTERED ENGINEER	SIGNATURE	CA REG NO.	EXP DATE
7	M Basu		C12314	12/31/94

KEY ELEC SECT 3 RM INDEXED REV 6 UNIT 1

COAST VALLEYS DIVISION

NO.	DATE	DESCRIPTION	GM	DWN.	CHKD.	SUPV.	APVD.	
7	1-18-94	REDRAWN; REV LOGIC; DEL ASTERISK	—	WAA				
		NOTE; ADD REF'S 4 & 5 (FCT-16395)		DWL				
6	12-1-92	REV AS PER LOGIC DIAGRAM (FCT-	—	MS	VAL	DSW	NH	MB
		14621,DCI-EE-47591 & 47593)						

REVISIONS

APPROVED BY	
LRW	GM 167027
DN	SUPV. H HERTING
JWC	DSGN. E ZEITER
TAB	DWN. O CASTELLANOS
	CHKD. EZ/J CUENCO
	O.K. KZ / HH
	DATE 11-25-69
	SCALES NONE

LOGIC DIAGRAM
CENTRIFUGAL CHARGING PUMPS

DIABLO CANYON

DEPARTMENT OF ENGINEERING
PACIFIC GAS AND ELECTRIC COMPANY
SAN FRANCISCO, CALIFORNIA

MICROFILM	7
BILL OF MATL	
DWG LIST	
SUPSDS	
SUPSD BY	
SHEET NO.	SHEETS
19405	REV. 7

SCAN 7 IIC

19405D.E62 01-14-94 DWL

DWG TYPE	DWG SUBJECT	DRAWING TITLE	UNIT NO.	PROJECT LOCATION	INSTALLATION TYPE	DIVISION NAME	MISC	DD CODE	MAN HOURS	CADD	DRAWING SOURCE
7		LØGIC DIAG CNTFGL CHRG PPS	#1	DIABLØ	L	B		GD		C	A
14	15	16-21 16-44	42 44	45-50	51	52	53	55 56	57 59	60	70

U#2-102789

19406

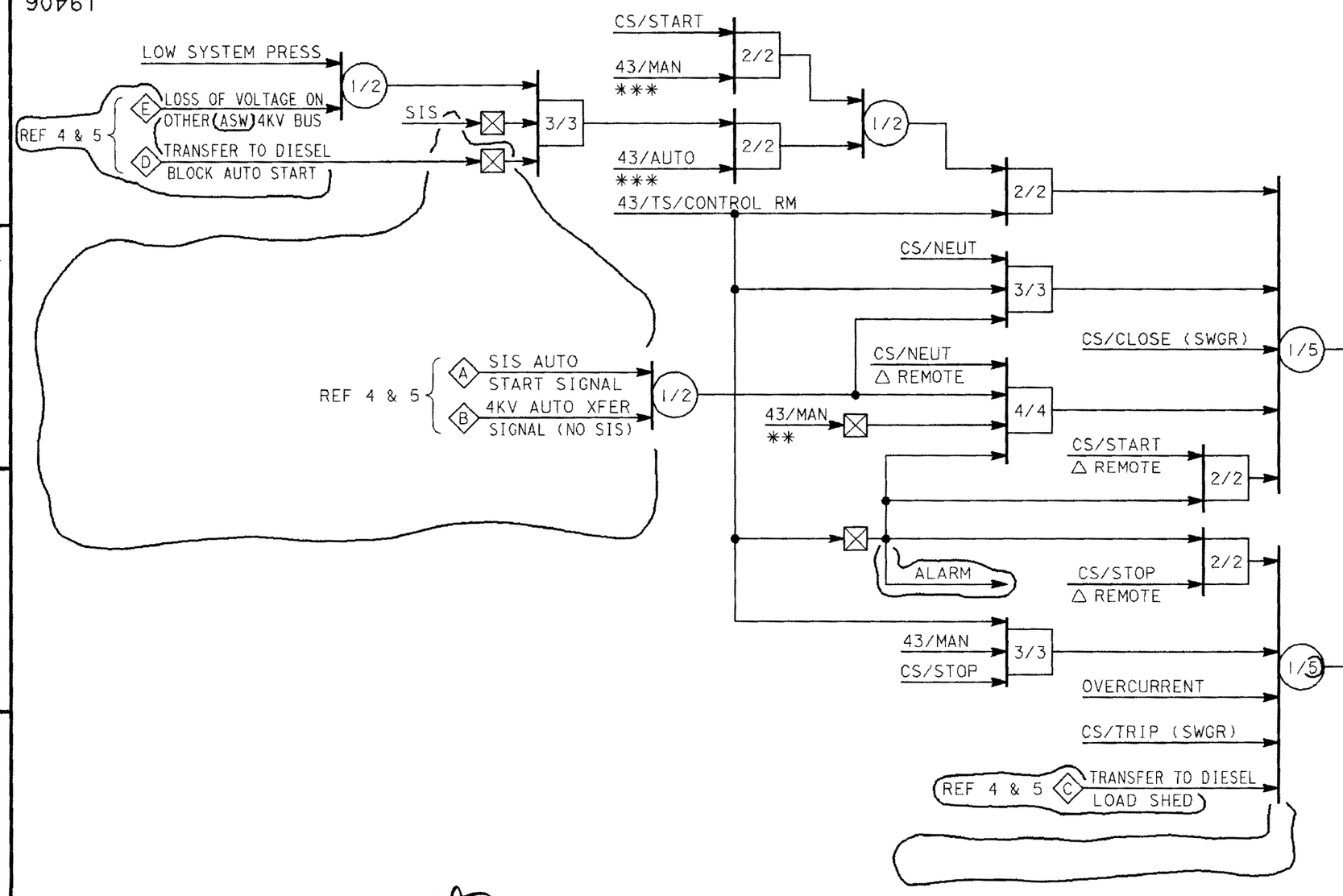

52HF8 NO. 11
52HG6 NO. 12

NOTES:

43 - MODE SELECTOR SWITCH FOR SELECTION BETWEEN "AUTO" & "MANUAL"

43/TS - TRANSFERS CONTROL FROM MAIN CONT BD TO HOT SHUTDOWN PNL. LOC AT SWGR.

△ - REMOTE CONTROL SWITCH LOCATED ON HOT SHUTDOWN PANEL

** - SWITCH IS LOCATED AT THE HOT SHUTDOWN PANEL

*** - SWITCH IS LOCATED IN THE MAIN CONTROL ROOM

REFERENCES: DWG NO.

1. LOGIC DIAGRAM SYMBOLS — 19425
2. SCH DIAG AUX SALT WATER PP — 437594
3. SLM&R DIAG 4KV BUS F,G&H — 437533
4. LOGIC DIAG 4KV "F" AUTO XFR — 458863
5. LOGIC DIAG 4KV "G" AUTO XFR — 458864

REGISTERED PROFESSIONAL ENGINEER T.A. BETTERSWORTH 1986 ELECTRICAL STATE OF CALIFORNIA

REV	REGISTERED ENGINEER	SIGNATURE	CA REG NO	EXP DATE
4	M Brown		C12314	12/31/94

KEY ELEC SECT 3

RM INDEXED REV 3

NUCLEAR SAFETY RELATED

UNIT 1

COAST VALLEYS DIVISION

NO.	DATE	DESCRIPTION	GM	DWN.	CHKD.	SUPV.	APVD.	
4	1-19-94	REDRAWN; REV LOGIC & NOTES; ADD REF 4 & 5 (FCT-16395)	—	WAA DWL				
3	12-1-92	REV AS PER LOGIC DIAGRAM (FCT-14621, DCI-EE-47591 & -47593)	—	MS	VAL	DSW		MB
1	2-16-73	MISC CHGS APPROVED FOR CONSTRUCTION(M)	167027		EZ		LRW	DN

REVISIONS

APPROVED BY	
LRW	GM 167027
JBG/DN	SUPV. H. HERTING
JWC	DSGN. E. ZEITER
TAB	DWN. E.Z.
	CHKD. GVZ/HH
	O.K. EZ / HH
	DATE 11-25-69
	SCALES NONE

LOGIC DIAGRAM
AUXILIARY SALT WATER PUMPS

DIABLO CANYON

DEPARTMENT OF ENGINEERING
PACIFIC GAS AND ELECTRIC COMPANY
SAN FRANCISCO, CALIFORNIA

MICROFILM	4
BILL OF MATL	
DWG LIST	
SUPSDS	
SUPSD BY	
SHEET NO.	SHEETS
19406	REV. 4

19406D.E62 01-18-94 DWL

DWG TYPE 4 (14) | DWG SUBJECT (15) | DRAWING TITLE AUXILIARY SALTWATER PUMPS (16-44) | UNIT NO. #1 (42 44) | PROJECT LOCATION DIABLO (45-50) | INSTALLATION TYPE L (51) | DIVISION NAME B (52) | MISC (53) | DD CODE GD (55 56) | MAN HOURS (57 59) | CADD C (60) | DRAWING SOURCE (70) | SCAN 4 | IC | U#2-102790

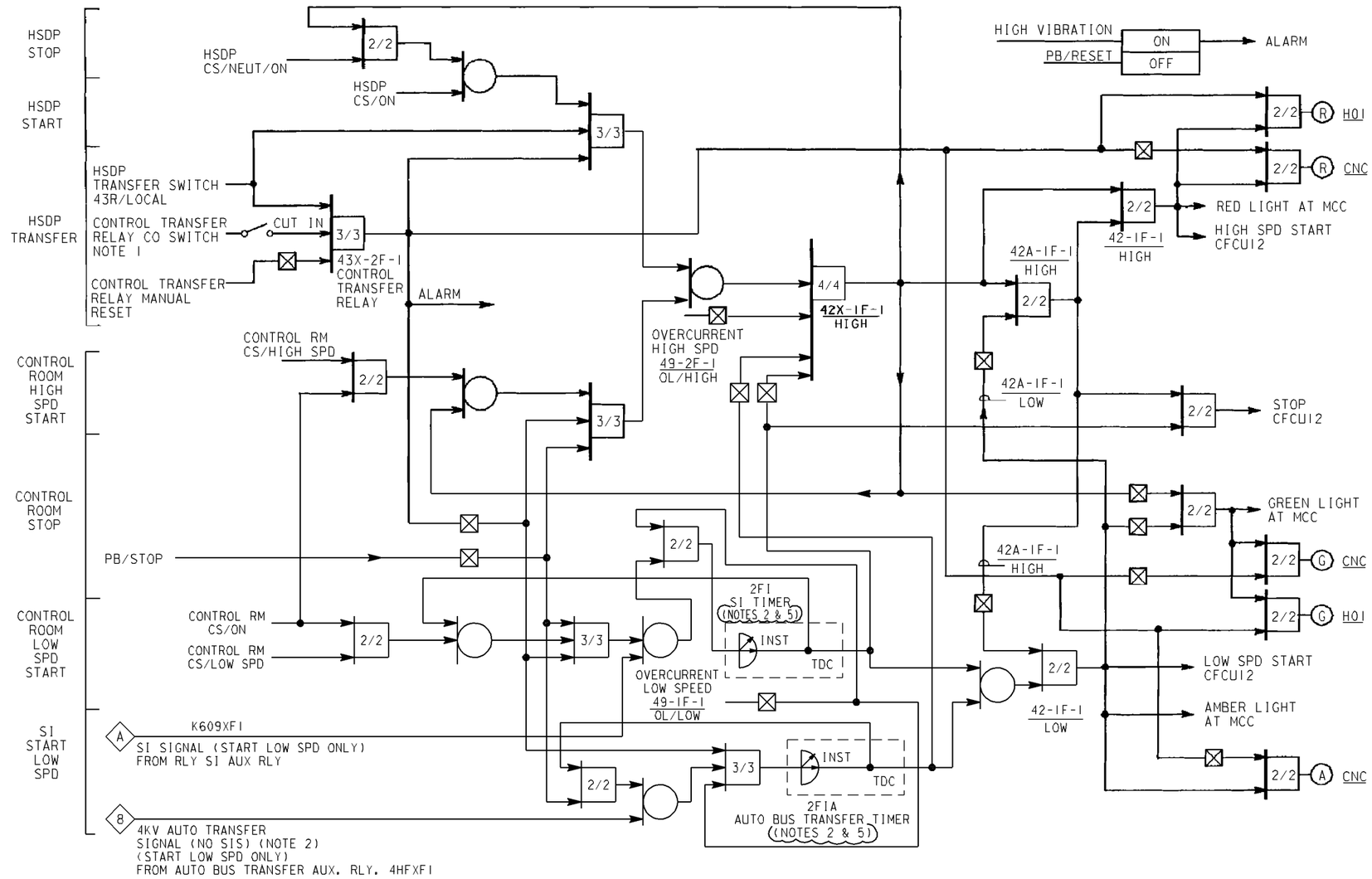

TABLE A

CFCU	DEVICE	DESCRIPTION	SETTING
12	2F1	SI TIMER	REF 2
12	2F1A	AUTO XFR TIMER	REF 2
11	2F2	SI TIMER	REF 2
11	2F2A	AUTO XFR TIMER	REF 2
13	2G1	SI TIMER	REF 3
13	2G1A	AUTO XFR TIMER	REF 3
14	2H1	SI TIMER	REF 4
14	2H1A	AUTO XFR TIMER	REF 4
15	2G2	SI TIMER	REF 3
15	2G2A	AUTO XFR TIMER	REF 3

REFERENCES:

	DWG NO.
1. LOGIC DIAGRAM SYMBOLS	19425
2. LOGIC DIAG 4KV "F" AUTO XFR	458863
3. LOGIC DIAG 4KV "G" AUTO XFR	458864
4. LOGIC DIAG 4KV "H" AUTO XFR	458865
5. LIST OF ELEC DEVICES FOR PROT & CONTROL	SAP
6. SCH DIAG FAN COOLERS	437600

NOTES:

1. CONTROL TRANSFER RELAY C.O. SWITCH
   FANS 11, 13 & 14 - NORMALLY CUT IN
   FANS 12, 15 - NORMALLY CUT OUT
   ALARM WHEN NOT IN NORMAL POSITION
2. THE PREFIX 2 REFERS TO IEEE DEVICE #2 WHICH IS A TIME DELAY STARTING OR CLOSING RELAY. IT'S NOT REFERING TO UNIT 2
3. DELETED
4. 480V AC IS REQUIRED FOR 120V CONTROL POWER.
5. SINGLE RELAYS HAVE BEEN REPLACED WITH TWO (2) RELAYS. ONE (1) RELAY HAS INSTANTANEOUS CONTACTS AND ONE (1) RELAY HAS THE TIME DELAY CONTACTS. THE LOGIC IS THE SAME.

LEGEND:

43R - TRANSFERS CONTROL FROM CONTROL BOARD TO HOT SHUTDOWN PANEL (HSDP)

◇ - DENOTES INTERCONNECTION TO OTHER LOGIC DIAG. REF 2, 3 & 4

NUCLEAR SAFETY RELATED

KEY DWG. SECTION 3

UNIT 1

DATE	
10-08-2012	
D.D.	MNRU
R.E.	SMB5
I.V.	
P.E.	AGB2

REGISTERED PROFESSIONAL ENGINEER ALAN GLEN BARTA E 9271 Exp. 9/30/2013 ELECTRICAL STATE OF CALIFORNIA

REVISION DESCRIPTION

REVISED PER DDN-2*931

ELECTRICAL
LOGIC DIAGRAM
CONTAINMENT FAN COOLERS

DIABLO CANYON POWER PLANT
PACIFIC GAS AND ELECTRIC COMPANY
SAN FRANCISCO, CALIFORNIA

DWG SCALE:
BILL OF MATL:
SUPSDS:
SUPSD BY:

DRAWING	SHEET	PAGE	REV
19407	1	0	16

RASTER=002g1091.dgn
DGN=002g1091.dgn
CAD User:MNRU Date: 10-08-2012

INPG
1 Size

19408

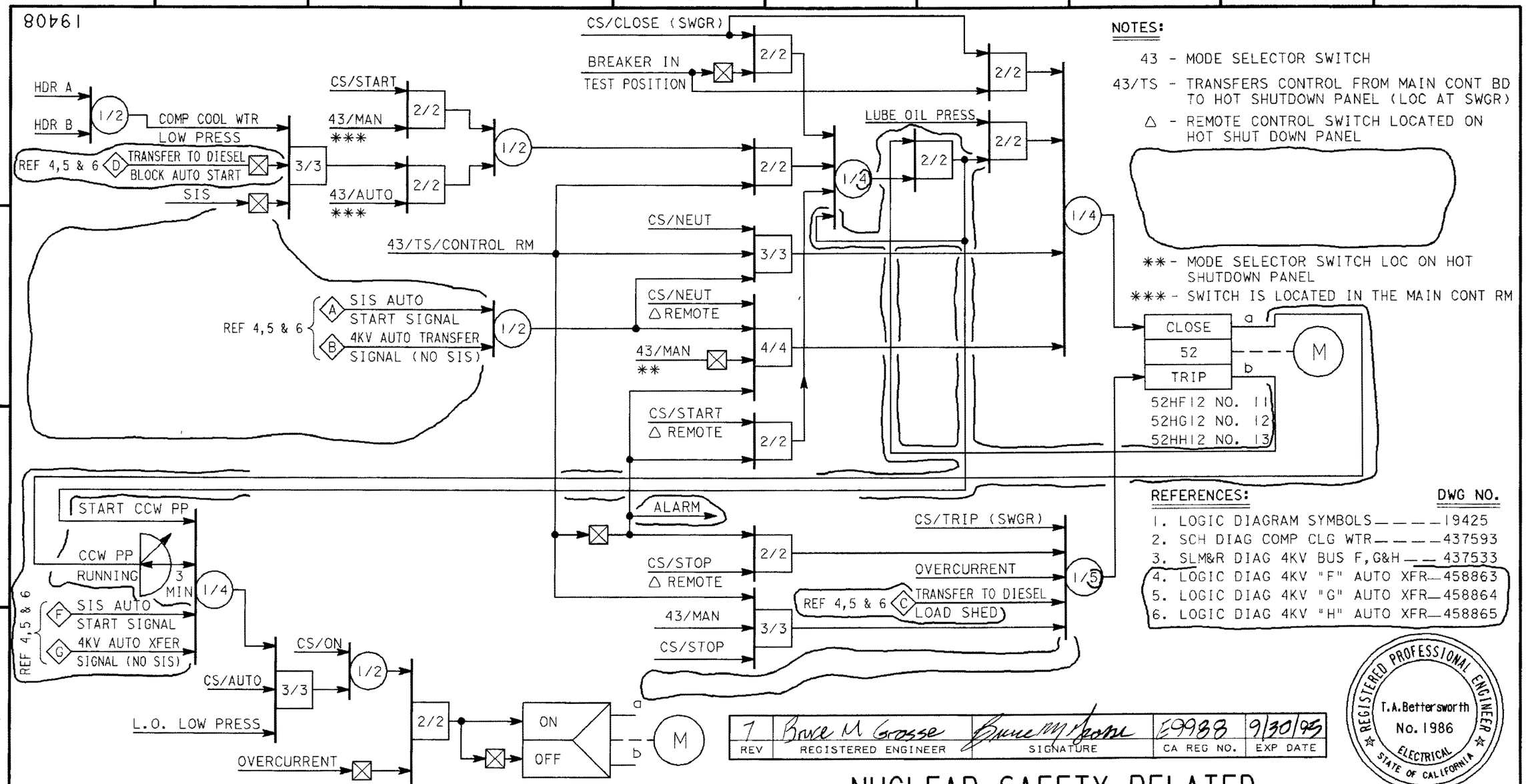

NOTES:

43 - MODE SELECTOR SWITCH

43/TS - TRANSFERS CONTROL FROM MAIN CONT BD TO HOT SHUTDOWN PANEL (LOC AT SWGR)

△ - REMOTE CONTROL SWITCH LOCATED ON HOT SHUT DOWN PANEL

** - MODE SELECTOR SWITCH LOC ON HOT SHUTDOWN PANEL

*** - SWITCH IS LOCATED IN THE MAIN CONT RM

REFERENCES:

	DWG NO.
1. LOGIC DIAGRAM SYMBOLS	19425
2. SCH DIAG COMP CLG WTR	437593
3. SLM&R DIAG 4KV BUS F,G&H	437533
4. LOGIC DIAG 4KV "F" AUTO XFR	458863
5. LOGIC DIAG 4KV "G" AUTO XFR	458864
6. LOGIC DIAG 4KV "H" AUTO XFR	458865

REV	REGISTERED ENGINEER	SIGNATURE	CA REG NO.	EXP DATE
7	Bruce M Grosse	Bruce M Grosse	E9988	9/30/95

REGISTERED PROFESSIONAL ENGINEER T.A. Bettersworth No. 1986 ELECTRICAL STATE OF CALIFORNIA

COMPONENT COOLING PUMP AUXILIARY LUBE OIL PUMP

52-1F-44 NO. 11
52-1G-41 NO. 12
52-1H-35 NO. 13

NUCLEAR SAFETY RELATED

KEY DWG--SECTION 3 UNIT 1

COAST VALLEYS DIVISION

NO.	DATE	DESCRIPTION	GM	DWN.	CHKD.	SUPV.	APVD.
7	2-24-94	REDRAWN; REV LOGIC; ADD REF'S 4,5 & 6 (FCT-16395)	—	WAA DWL	VAL		22B
6	12-1-92	REV AS PER LOGIC DIAGRAM (FCT-14621, DC1-EE-47591,-47593 & -47594)	—	MS	VAL	DSW	MB

REVISIONS

APPROVED BY	
LRW	GM 167027
DN	SUPV. H HERTING
JWC	DSGN. E ZEITER
TAB	DWN. R.S/F.MOY
	CHKD. E ZEITER
	O.K. EZ HH
	DATE 11-25-69
	SCALES NONE

LOGIC DIAGRAM
COMPONENT COOLING WATER PUMPS

DIABLO CANYON

DEPARTMENT OF ENGINEERING
PACIFIC GAS AND ELECTRIC COMPANY
SAN FRANCISCO, CALIFORNIA

MICROFILM	7
BILL OF MATL	
DWG LIST	
SUPSDS	
SUPSD BY	
SHEET NO.	SHEETS
19408	REV. 7

19408D.E62 02-24-94 WAA

DWG TYPE 7 | DWG SUBJECT | DRAWING TITLE LØGIC DIAG CMPNT CLG WTRPP | UNIT NO. #1 | PROJECT LOCATION DIABLØ | INSTALLATION TYPE L | DIVISION NAME B | MISC | DD CODE GD | MAN HOURS | CADD C | DRAWING SOURCE A

SCAN 7 U# IC 02792

19409

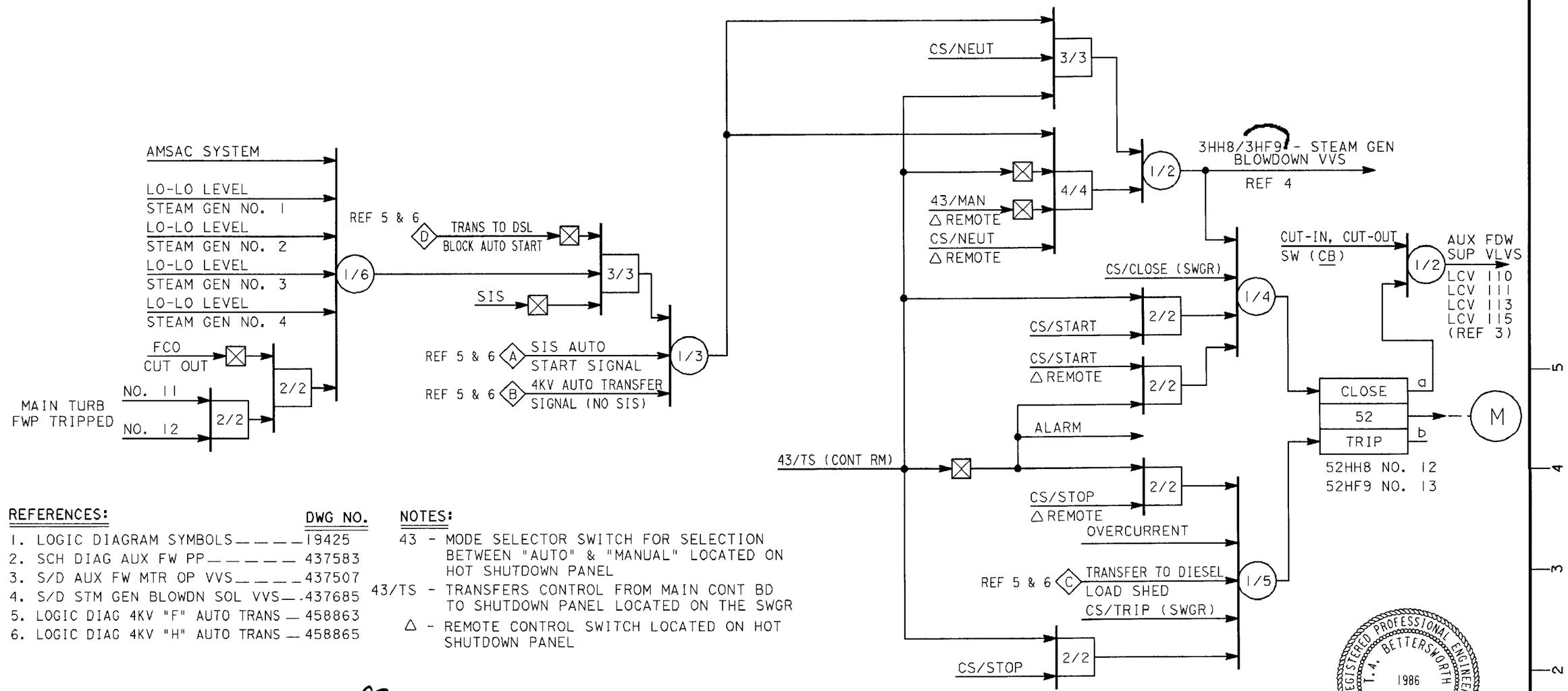

REFERENCES:

	DWG NO.
1. LOGIC DIAGRAM SYMBOLS	19425
2. SCH DIAG AUX FW PP	437583
3. S/D AUX FW MTR OP VVS	437507
4. S/D STM GEN BLOWDN SOL VVS	437685
5. LOGIC DIAG 4KV "F" AUTO TRANS	458863
6. LOGIC DIAG 4KV "H" AUTO TRANS	458865

NOTES:

43 - MODE SELECTOR SWITCH FOR SELECTION BETWEEN "AUTO" & "MANUAL" LOCATED ON HOT SHUTDOWN PANEL

43/TS - TRANSFERS CONTROL FROM MAIN CONT BD TO SHUTDOWN PANEL LOCATED ON THE SWGR

△ - REMOTE CONTROL SWITCH LOCATED ON HOT SHUTDOWN PANEL

REV	REGISTERED ENGINEER	SIGNATURE	CA REG NO.	EXP DATE
9	M Bass		C12314	12/31/94

KEY DWG--SECT 3

NUCLEAR SAFETY RELATED

UNIT 1

NO.	DATE	DESCRIPTION	GM	DWN.	CHKD.	SUPV.	APVD.	
9	5-5-94	REV 3HH8 TO 3HH8/3HF9 (FCT-17116)	—	WAA	WG	JAN	MH	MB
8	1-20-94	REDRAWN; DEL STAR NOTE; ADD REF'S 5 & 6; REV LOGIC (FCT-16395)	—	WAA	WG	KS	MH/RNT	MB
7	12-1-92	REV AS PER LOGIC DIAGRAM (FCT-14621) (DCI-EE-47591,-47594)	—	DWL MS	VAL	DSW		MB

REVISIONS

APPROVED BY	
LRW	GM 167027
DN	SUPV. H HERTING
JWC	DSGN. E ZEITER
TAB	DWN. R D SMITH
	CHKD. EZ
	O.K. GVZ HH
	DATE 11-25-69
	SCALES NONE

LOGIC DIAGRAM
AUXILIARY FEEDWATER PUMPS

DIABLO CANYON

DEPARTMENT OF ENGINEERING
PACIFIC GAS AND ELECTRIC COMPANY
SAN FRANCISCO, CALIFORNIA

COAST VALLEYS DIVISION

MICROFILM	9
BILL OF MATL	
DWG LIST	
SUPSDS	
SUPSD BY	
SHEET NO.	SHEETS
19409	REV. 9

19409D.E62 04-27-94 WAA

DWG TYPE	DWG SUBJECT	DRAWING TITLE	UNIT NO	PROJECT LOCATION	INSTALLATION TYPE	DIVISION NAME	MISC	DD CODE	MAN HOURS	CADD	DRAWING SOURCE
4		AUXILIARY FEEDWATER PUMPS	#1	DIABLO	L	B		GD		C	A
14	15	16-21 16-44	42 44	45-50	51	52	53	55 56	57 59	60	70

SCAN 9 IC 9

SCAN 9 IC

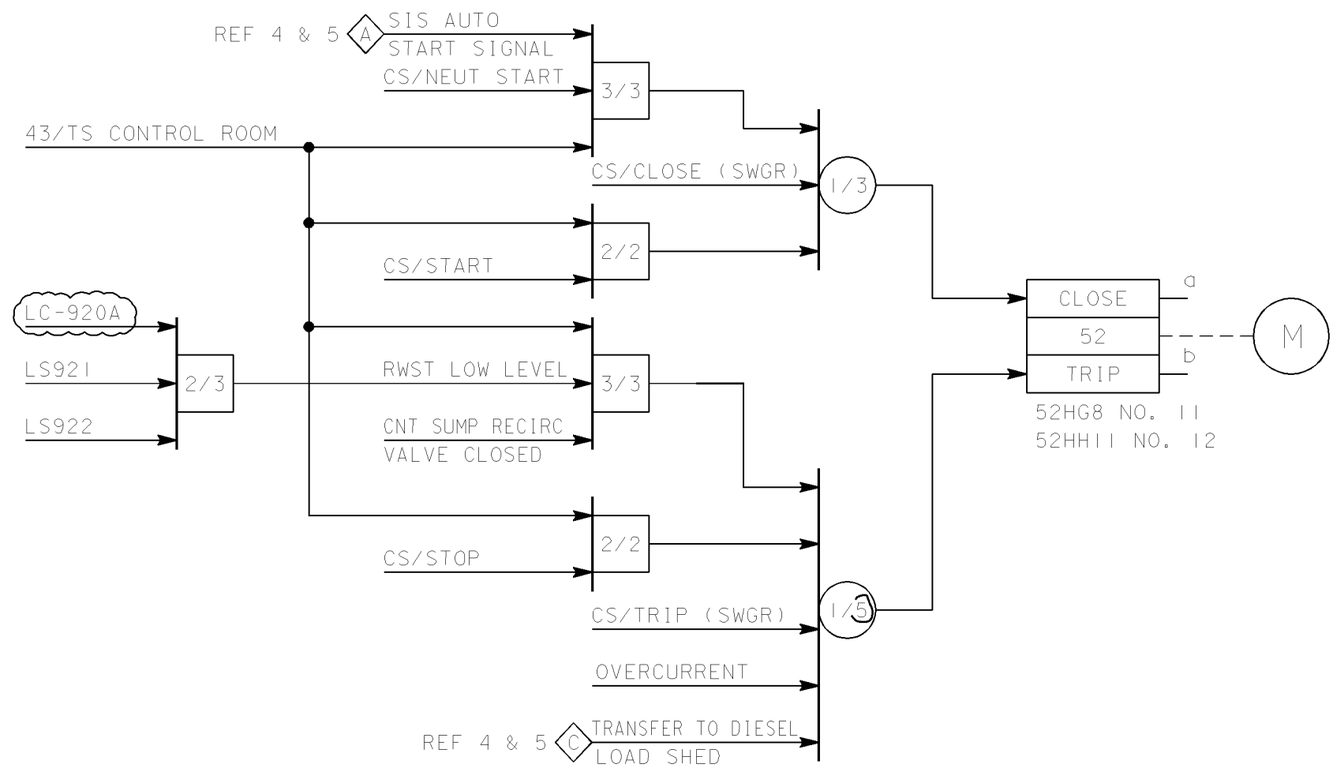

NOTES:

1. 43/TS - TRANSFERS CONTROL FROM LOCAL TO CONTROL ROOM. SWITCH IS LOCATED AT THE SWITCHGEAR.

REFERENCES:	DWG NO.
1. SCH DIAG RES HEAT REM	437591
2. LOGIC DIAGRAM SYMBOLS	19425
3. SLM&R DIAG 4K F,G & H	437533
4. LOGIC DIAG 4KV "G" AUTO TRANS	458864
5. LOGIC DIAG 4KV "H" AUTO TRANS	458865

REGISTERED PROFESSIONAL ENGINEER
LAWRENCE A. LODOLO
E 10315
Exp. 9/30/04
ELECTRICAL
STATE OF CALIFORNIA

KEY DWG--SECTION 3

NUCLEAR SAFETY RELATED

UNIT 1

DATE 3/2/01		DESCRIPTION	COORDINATION	
DWN.	RHS1	Revised per FCT 025512	NUCL.	-
R.E.	KJD3		MECH.	-
INDEP. VERIFIER	-		ELEC.	-
			CIVIL	-
			PIPING	-
P.E.	LAL3		I&C	-
REVISION INFORMATION				

LOGIC DIAGRAM
RESIDUAL HEAT REMOVAL PUMPS

DIABLO CANYON POWER PLANT
PACIFIC GAS AND ELECTRIC COMPANY
SAN FRANCISCO, CALIFORNIA

DWG SCALE	
BILL OF MATL	
SUPSDS	
SUPSD BY	
SHEET NO. 1 OF	
19410	REV 8

CAD User:RHS1 Date: 3-02-2001
DGN=19410.DGN

INPG

U#2-102793

19411

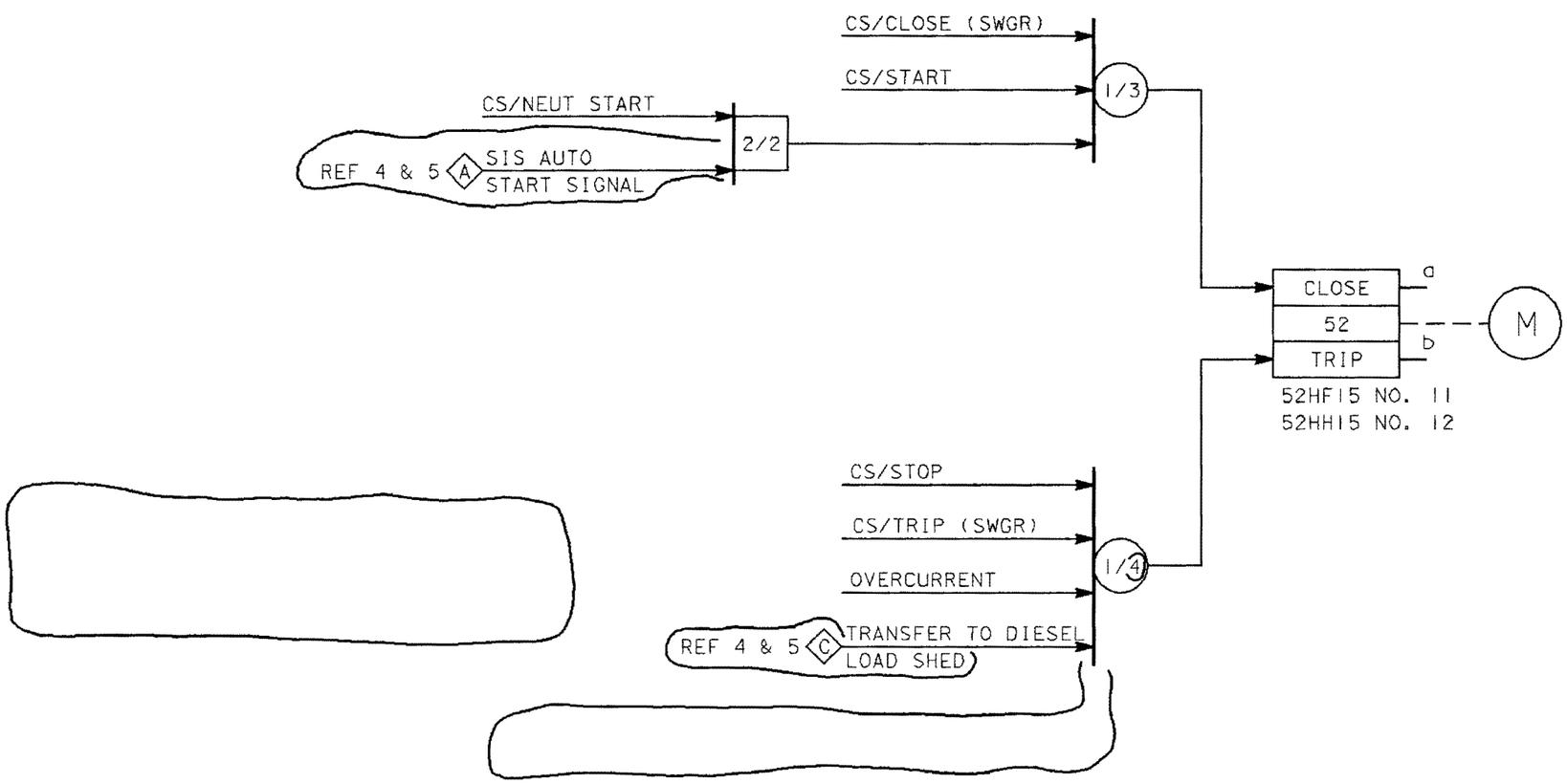

REFERENCES: DWG NO.

1. SCH DIAG SAFETY INJ PP — — — 437589
2. SLM&R DIAG 4KV F, G & H — — — 437533
3. LOGIC DIAGRAM SYMBOLS — — — — 19425
4. LOGIC DIAG 4KV "F" AUTO TRANS — 458863
5. LOGIC DIAG 4KV "H" AUTO TRANS — 458865

REGISTERED PROFESSIONAL ENGINEER T.A. BETTERSWORTH 1986 ELECTRICAL STATE OF CALIFORNIA

REV	REGISTERED ENGINEER	SIGNATURE	CA REG NO.	EXP DATE
4	M Baum		C12314	12/31/94

KEY DWG--SECT 3

RM INDEXED REV ___

NUCLEAR SAFETY RELATED

SCAN 4 IC

COAST VALLEYS DIVISION

UNIT 1

MICROFILM 4

NO.	DATE	DESCRIPTION	GM	DWN.	CHKD.	SUPV.	APVD.	
4	1-14-94	REDRAWN; REV LOGIC; DEL NOTE;	—	WAA	WJ	VL	KAW	SLW
		ADD REF 4 & 5 (FCT-16395)		DWL				
3	2-16-90	REV NOTE & TIMER SETTING (FCT-10345)	167027	TE	VL	JC	KAW	SLW
2	3-13-73	CHGD TIME SETTING ON TIMERS (E)	167027		EZ		LRW	DN
1	1-12-73	APPROVED FOR CONSTRUCTION	167027		EZ		LRW	DN

REVISIONS

APPROVED BY	
LRW	GM 167027
	SUPV. H. HERTING
	DSGN. E. ZEITER
DN	DWN. K. P. SCHOLZ
	CHKD. EZ
JWC	O.K. GVZ / HH
TAB	DATE 12-4-69
	SCALES NONE

LOGIC DIAGRAM
SAFETY INJECTION PUMPS

DIABLO CANYON

DEPARTMENT OF ENGINEERING
PACIFIC GAS AND ELECTRIC COMPANY
SAN FRANCISCO, CALIFORNIA

BILL OF MATL
DWG LIST
SUPSDS
SUPSD BY

SHEET NO. 19411 SHEETS REV. 4

19411D.E62 01-11-94 DWL

DWG TYPE	DWG SUBJECT	DRAWING TITLE	UNIT NO.	PROJECT LOCATION	INSTALLATION TYPE	DIVISION NAME	MISC	DD CODE	MAN HOURS	CADD	DRAWING SOURCE
4		SAFETY INJECTION PUMPS	#1	DIABLO	L	B		GD		C	A
14	15	16-44	42 44	45-50	51	52	53	55 56	57 59	60	70

U#2-102794

19412

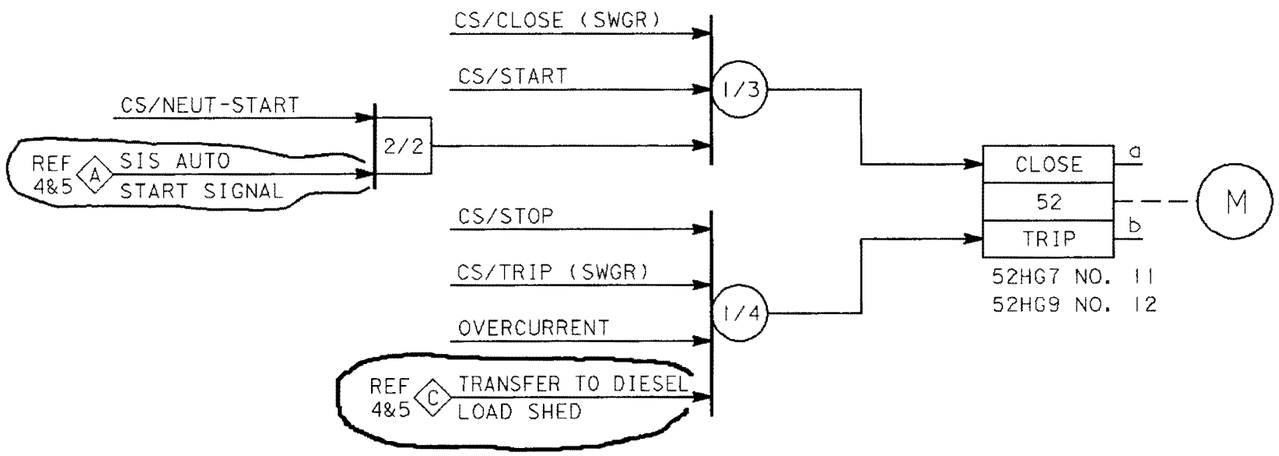

NOTE

◇ DENOTES INTERCONNECTION TO OTHER LOGIC DIAGRAM

REFERENCES

		DWG NO.
1.	SCH DIAG CONTAINMENT SPRAY	437590
2.	LOGIC DIAG SYMBOLS	19425
3.	SLM&R DIAG 4KV BUS F, G & H	437533
4.	LOGIC DIAG 4KV BUS G AUTO TRANS	458864
5.	LOGIC DIAG 4KV BUS H AUTO TRANS	458865

RM INDEXED REV. ____

SCAN 4 IC

REGISTERED PROFESSIONAL ENGINEER T.A. Bettersworth No. 1986 ELECTRICAL STATE OF CALIFORNIA

COAST VALLEYS DIVISION

NUCLEAR SAFETY RELATED

UNIT 1

REV	REGISTERED ENGINEER	SIGNATURE	CA REG NO.	EXP DATE
4	M Barr		C12314	12/31/94

KEY DWG--SECTION 3

NO.	DATE	DESCRIPTION	GM/SPEC	DWN	CHKD	SUPV	APVD BY	
4	1-14-94	REV LOGIC, NOTE & REFERENCE (FCT-16395)	—	WAA				
3	4-24-84	REV & REDRAWN; AS BUILT (DCI-EE-3377,R1)	167027	LCV	II	JC	MH/WV	SA
2	3-13-73	CHGD TIME SETTING ON TIMERS (E)	167027		EZ	HH	LRW	DN
1	1-12-73	MISC CHGS APPROVED FOR CONSTRUCTION	167027		EZ	HH	LRW	DN

REVISIONS

APPROVED BY	GM 167027
	SUPV H. HERTING
LRW	DSGN E. ZEITER
	DWN K. P. SMITH
DN	CHKD HH/J. CUENCO
	OK EZ HH
JWC	DATE 1-12-73
TAB	SCALES NONE

LOGIC DIAGRAM
CONTAINMENT SPRAY PUMPS

DIABLO CANYON

DEPARTMENT OF ENGINEERING
PACIFIC GAS AND ELECTRIC COMPANY
SAN FRANCISCO, CALIFORNIA

MICROFILM	4
BILL OF MATL	
DWG LIST	
SUPSDS	
SUPSD BY	
SHEET NO.	SHEETS
19412	REV 4

DRAWING SOURCE A 70 | CADD C 60 | MAN HOURS 57 59 | DD CODE G D 55 56 | MISC 53 | DIVISION NAME B 52 | INSTALLATION TYPE L 51 | PROJECT LOCATION D I A B L 0 45-50 | UNIT No. 2 42 44 | DRAWING TITLE C 0 N T A I N M E N T S P R A Y P U M P S 16-44 21 | DWG SUBJECT 15 | DWG TYPE 4 14

19412d.e62 01-07-94 DWL

U2=102795

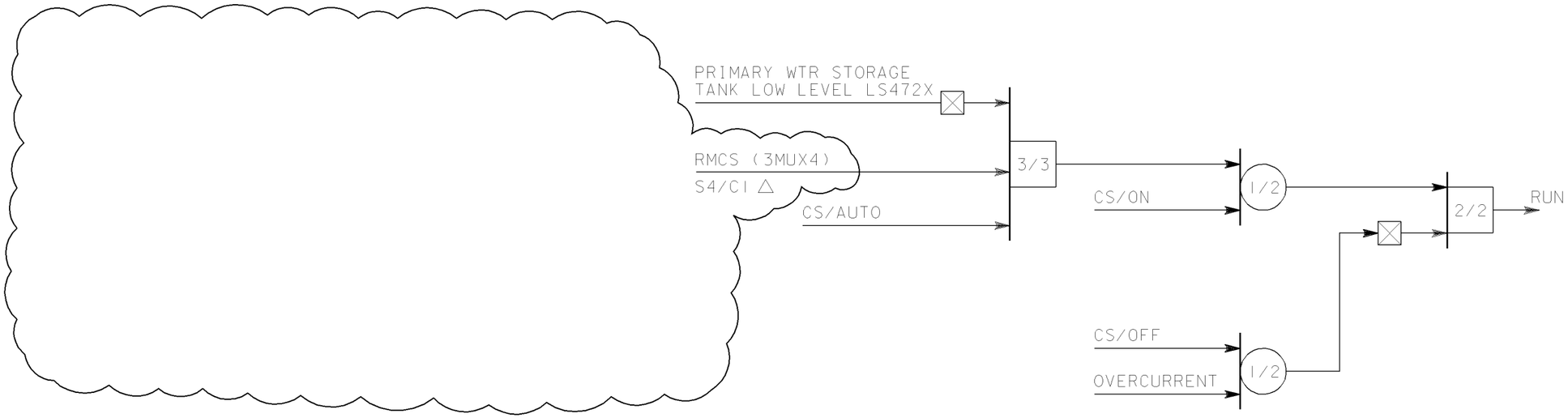

REFERENCE — DWG NO.

1. SCHEM DIAG CHEMICAL & VOLUME CONTROL SYS _____ 437597
2. SCHEM DIAG RC M-U SYS _____ 437596

NOTE

△ - SIGNAL FROM RMCS-RNARB PLC OUTPUT S4/C1.

NUCLEAR SAFETY RELATED

KEY DWG. SECTION 3

UNIT 1

DATE	
06-11-2007	
D.D.	RxG2
R.E.	FxC2
I.V.	
P.E.	RWB7

REGISTERED PROFESSIONAL ENGINEER — RICHARD WILLIAM BECKER — E 9776 — Exp. 9/30/2008 — ELECTRICAL — STATE OF CALIFORNIA

REVISION DESCRIPTION

REVISED PER DCI-SE-049779-00

ELECTRICAL
LOGIC DIAGRAM
PRIMARY MAKE-UP WATER PUMPS

DIABLO CANYON POWER PLANT
PACIFIC GAS AND ELECTRIC COMPANY
SAN FRANCISCO, CALIFORNIA

DWG SCALE:			
BILL OF MATL:			
SUPSDS:			
SUPSD BY:			
DRAWING	SHEET	PAGE	REV
19413	1	0	3

RASTER=19413.dgn
DGN=19413.dgn
CAD User:RxG2 Date: 06-11-2007

INPG
1 Size

U#2 - 102796

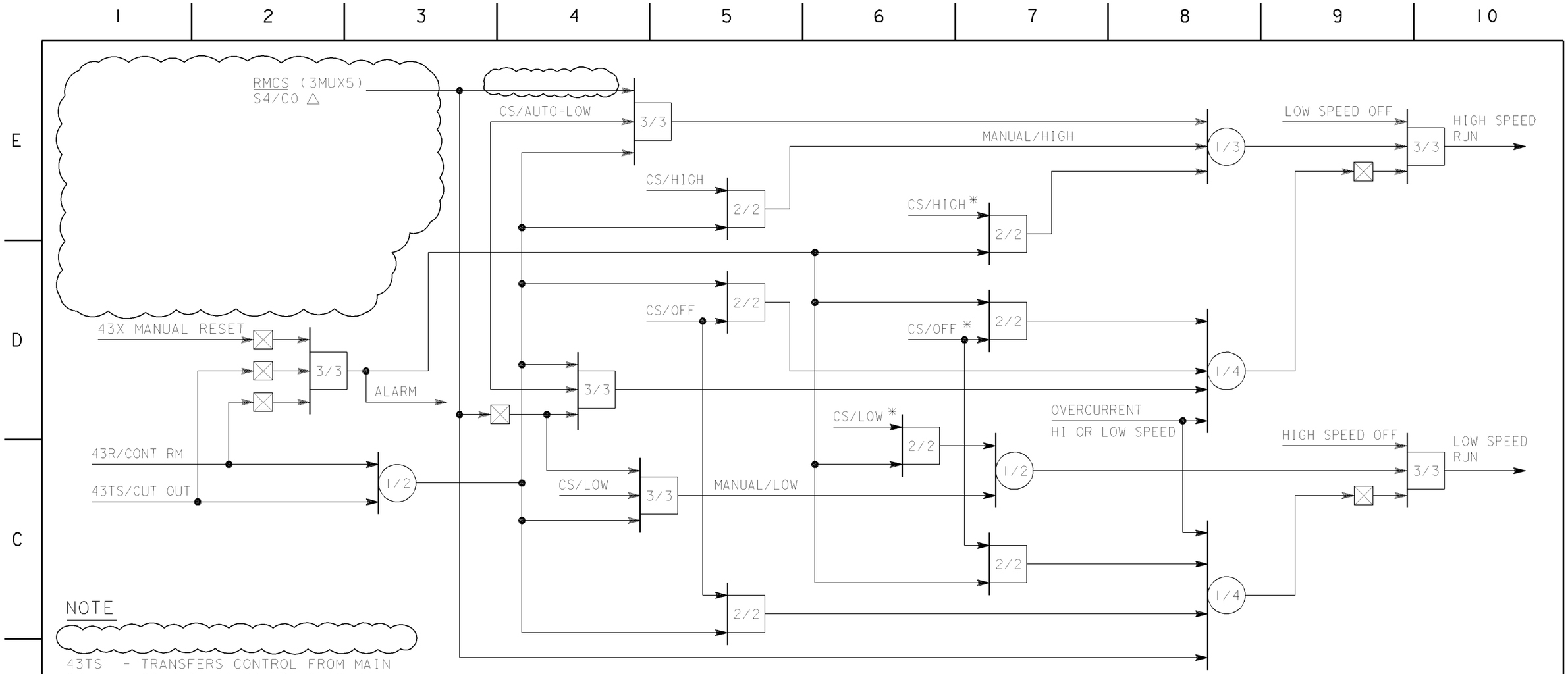

NOTE

43TS OR 43R - TRANSFERS CONTROL FROM MAIN CONTROL BOARD TO HOT SHUT-DOWN PANEL (HSP) 43R LOCATED AT HSP, 43/TS LOCATED AT MCC

* - CS LOCATED AT HOT SHUT DOWN PANEL

△ - SIGNAL FROM RMCS-RNARB PLC OUTPUT S4/CO.

REFERENCE	DWG NO.
1. CHEMICAL & VOLUME CONTROL SYS	437597
2. SCH DIAG RC M-U SYST	437596

NUCLEAR SAFETY RELATED

KEY DWG. SECTION 3

UNIT 1

DATE	
06-11-2007	
D.D.	RxG2
R.E.	FxC2
I.V.	
P.E.	RWB7

REGISTERED PROFESSIONAL ENGINEER
RICHARD WILLIAM BECKER
E 9776
Exp. 9/30/2008
ELECTRICAL
STATE OF CALIFORNIA

REVISION DESCRIPTION

REVISED PER DCI-SE-049779-00

ELECTRICAL
LOGIC DIAGRAM
BORIC ACID TRANSFER PUMPS

DIABLO CANYON POWER PLANT
PACIFIC GAS AND ELECTRIC COMPANY
SAN FRANCISCO, CALIFORNIA

DWG SCALE:
BILL OF MATL:
SUPSDS:
SUPSD BY:

DRAWING	SHEET	PAGE	REV
19414	1	0	3

RASTER=19414.dgn
DGN=19414.dgn
CAD User:RxG2 Date: 06-11-2007

INPG
1 Size

U#2 - 102797

19425

LOGIC SYMBOLS

SYMBOL	FUNCTION	DEFINITION
2/2	AND	A CONTROL FUNCTION WHICH PRODUCES AN OUTPUT WHEN EVERY INPUT SIGNAL IS APPLIED.
1/3	OR	A CONTROL FUNCTION WHICH PRODUCES AN OUTPUT ONLY WHEN ONE (OR MORE) INPUT SIGNAL IS APPLIED.
	NOT	A CONTROL FUNCTION WHICH PRODUCES AN OUTPUT ONLY WHEN NO INPUT SIGNAL IS APPLIED.
ON / OFF (C, b)	OFF RETURN MEMORY	A CONTROL FUNCTION WHICH RETAINS THE CONDITION OF OUTPUT CORRESPONDING TO THE INPUT LAST APPLIED EXCEPT UPON INTERRUPTION OF POWER IT RETURNS TO THE OFF CONDITION.
ON / OFF	RETENTIVE MEMORY	A CONTROL FUNCTION WHICH RETAINS THE CONDITION OF OUTPUT CORRESPONDING TO THE INPUT LAST APPLIED EVEN WITH A POWER FAILURE.
		DENOTE INTERCONNECTION TO OTHER LOGIC
0-30S	ADJUSTABLE TIME DELAY ENERGIZING	A CONTROL FUNCTION WHICH PRODUCES AN OUTPUT FOLLOWING DEFINITIVE INTENTIONAL TIME DELAY AFTER ITS INPUT SIGNAL IS APPLIED. (EXAMPLE SHOWS 0 TO 30 SECONDS ADJUSTABLE TIME DELAY ENERGIZING.)
0-30S	ADJUSTABLE TIME DELAY DE-ENERGIZING	A CONTROL FUNCTION WHOSE OUTPUT IS DE-ENERGIZED FOLLOWING A DEFINITIVE INTENTIONAL TIME DELAY AFTER ITS INPUT SIGNAL IS REMOVED. (EXAMPLE SHOW 0 TO 30 SECONDS ADJUSTABLE TIME DELAY DE-ENERGIZING.)
2/3	COINCIDENCE (2 OUT OF 3 SHOWN)	A CONTROL FUNCTION WHICH PRODUCES AN OUTPUT ONLY WHEN THE PRESCRIBED NUMBER OF INPUT SIGNALS IS APPLIED. (FOR EXAMPLE SHOWN, ANY 2 INPUT SIGNALS ARE REQUIRED FOR AN OUTPUT.)
CLOSE / 52 / TRIP (C, b)	CIRCUIT BREAKER	A MECHANICAL SWITCHING DEVICE WHICH RETAINS THE CONDITION OF OUTPUT CORRESPONDING TO THE INPUT LAST APPLIED, AND APPLIES ELECTRICAL POWER TO AN ACTUATING DEVICE. THIS BREAKER IS ALSO TRIP FREE, AND WILL NOT 'PUMP' (SEE NOTE).

DEVICE FUNCTION NUMBERS AND LETTERS

a	OUTPUT PRESENT WHEN CIRCUIT BREAKER IS CLOSED
b	OUTPUT PRESENT WHEN CIRCUIT BREAKER IS OPEN
CS	CONTROL SWITCH
SIS	SAFETY INJECTION SIGNAL
43	AUTOMATIC - MANUAL TRANSFER SWITCH
43MU	MAKE - UP MODE SELECTOR SWITCH
43R OR 43/TS	TRANSFER SWITCH USED TO TRANSFER CONTROL FROM THE MAIN CONTROL ROOM TO THE HOT SHUTDOWN PANEL. SWITCH IS LOCATED ON THE HOT SHUTDOWN PANEL OR SWITCHGEAR.
42-.F-2	MOTOR STARTER 480V BUS SECTION F BREAKER NO.2
52-.F-2	CIRCUIT BREAKER 480V BUS SECTION F BREAKER NO.2
52-G6	CIRCUIT BREAKER 4KV BUS SECTION G BREAKER NO.6
52VD6	CIRCUIT BREAKER 2KV BUS SECTION D BREAKER NO.6
(SV),(CV)	LETTERS IN PARENTHESIS INDICATE THE TYPE OF ELECTRICAL RELAY
CS/OPEN OR 43/LOCAL	DESIGNATION ABOVE THE LINE DENOTES DEVICE, DESIGNATION BELOW THE LINE DESIGNATES THE SIGNAL INFORMATION OR POSITION.

RM INDEXED REV. 3

REGISTERED PROFESSIONAL ENGINEER — T.A. Betterworth No. 1986 — ELECTRICAL — STATE OF CALIFORNIA

REV	REGISTERED ENGINEER	SIGNATURE	CA REG NO.	EXP DATE
3	M Basu		C12314	12/31/94

19425D.ESS 05-21-93 DWL

KEY DWG--SECTION 3 UNITS 1 & 2

NO.	DATE	DESCRIPTION	GM/SPEC	DWN	CHKD	SUPV	APVD BY
3	6-4-93	REDRAWN; APPLIED DWG TO UNITS 1 & 2 (DC2-EE-48591) (DC2-EE-48593) (DC2-EE-48594) (FCT-15279)	—	DWL	VAr		
1	9-29-71	APPROVED FOR CONSTR	167027		EZ		JEH

REVISIONS

APPROVED BY	GM 167027
JEH	SUPV H. HERTING
	DSGN E. ZEITER
DN	DWN E.Z.
JWC	CHKD
	OK GVZ HH
TAB	DATE 2-17-70
	SCALES NONE

LOGIC DIAGRAM SYMBOLS

DIABLO CANYON

DEPARTMENT OF ENGINEERING
PACIFIC GAS AND ELECTRIC COMPANY
SAN FRANCISCO, CALIFORNIA

COAST VALLEYS DIVISION

MICROFILM	3
BILL OF MATL	
DWG LIST	050052
SUPSDS	
SUPSD BY	
SHEET NO.	SHEETS
19425	REV 3

DRAWING SOURCE A; CADD C; MAN HOURS; DO CODE G D; MISC; DIVISION NAME B3; INSTALLATION TYPE L; PROJECT LOCATION D I A B L O; UNIT NO. 1 & 2; DRAWING TITLE L O G I C D I A G R A M S Y M B O L S; DWG SUBJECT; DWG TYPE S

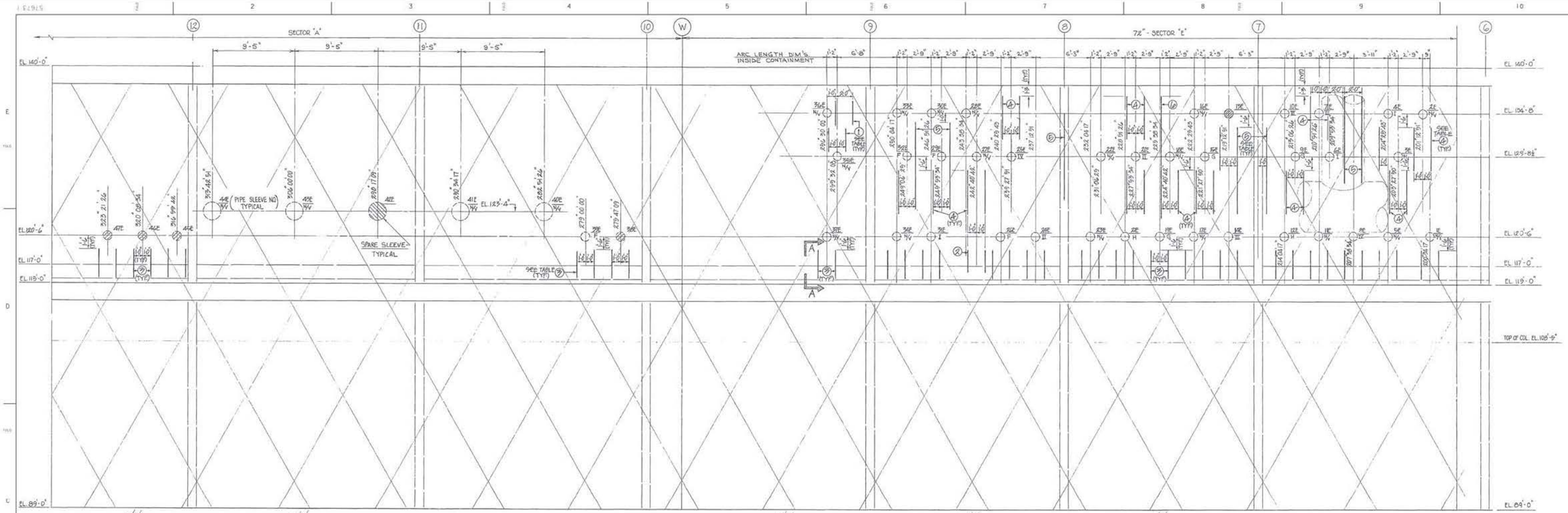

DEVELOPED ELEVATION — LOOKING FROM OUTSIDE

N.T.S.

PIPE SLEEVE NO	PENETRATION NO	G.E. SERIAL NO.	REMARKS	
1E	1E	634-3300	L.V. POWER	PRESS. HTRS.
2E	2E	634-3385	PROCESS INSTR.	SOL. VALVES
3E	3E	634-3306	L.V. POWER	FAN COOLER 14
4E	4E	3336 *	NUCLEAR INSTR.	
5E	5E	634-3298	L.V. POWER	L.C. 13J
6E	6E	634-3319	NUCLEAR INSTR.	
7E	10E	634-3310	NUCLEAR INSTR.	
8E	8E	634-3290	PROCESS INSTR.	
9E	9E	634-3307	L.V. POWER	FAN COOLER 13
10E	39E	634-3317	NUCLEAR INSTR.	
11E	11E	634-3299	L.V. POWER	
12E	12E	634-3355	L.V. POWER	
13E	15E	634-3312	SPARE	
14E	14E	634-3292	PROCESS INSTR.	REACT. PROT.
15E	13E	634-3308	L.V. POWER	FAN COOLER 15
16E	16E	634-3293	PROCESS INSTR.	
17E	17E	634-3309	L.V. POWER	L.C. 13 I
18E	18E	634-3303	ROD POWER	
19E	19E	634-3356	L.V. POWER	
20E	36E	634-3318	NUCLEAR INSTR.	
21E	21E		VITAL INSTR.	
22E	25E	3335 *	NUCLEAR INSTR.	INCORE
23E	23E	634-3364	L.V. POWER	
24E	24E	634-3294	PROCESS INSTR.	REACT. PROT.
25E	34E	634-3316	NUCLEAR INSTR.	
26E	26E	634-3357	L.V. POWER	
27E	27E	634-3305	ROD POWER	
28E	20E	3333 *	NUCLEAR INSTR.	INCORE TEMP.
29E	29E	634-3310	L.V. POWER	FAN COOLER 12
30E	22E	634-3312	ROD POWER	
31E	31E	634-3296	PROCESS INSTR.	REACT. PROT.
32E	32E	634-3311	L.V. POWER	FAN COOLER 11
33E	33E	634-3297	PROCESS INSTR.	
34E	30E	634-3302	L.V. POWER	PRESS. HTRS.
35E	7E	634-3331	PROCESS INSTR.	INCORE
36E	28E	634-3335	PROCESS INSTR.	INCORE
37E	37E	634-3301	L.V. POWER	PRESS. HTRS.
38E			SPARE	
39E	39E		VITAL INSTR.	
40E	40E	634-3362	H.V. POWER	RCP 13
41E	41E	634-3363	H.V. POWER	RCP 11
42E	42E	634-3364	ELECTRICAL PENETRATION TO BE STORED IN WAREHOUSE	
43E	43E	(1813 *)	H.V. POWER	RCP 14
44E	42E	634-3364	H.V. POWER	RCP 12
45E	58		MINI - EQUIPMENT HATCH	
46E			SPARE	
47E	60		MINI - EQUIPMENT HATCH	

* - CONAX BUFFALO CORP. PENETRATION

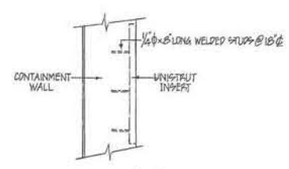

SECTION "A-A"

UNISTRUT INSERTS TABLE			
ITEM NO.	LENGTH	CAT. NO.	STUDS REQ'D
1	2'-8"	P3257	2
2	3'-0"	P3257A	2
3	3'-4"	P3258	3
4	5'-0"	P3260	4
5	10'-0"	P3263	7
6	14'-0"	P3267	9

NOTE: PROVIDE INSERTS W/1/4"Ø×8" LONG WELDED STUDS

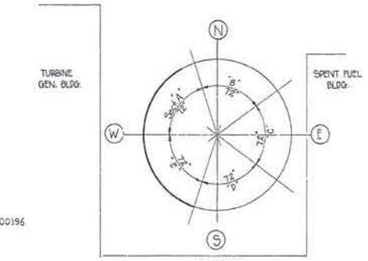

PLAN

NOTES

1. ALL ELECTRICAL PENETRATION SLEEVES TO BE 12" (42 TOTAL) EXCEPT (9) 24" PENETRATIONS
2. FOR ELECTRICAL PENETRATION SLEEVE DETAILS, SEE MECHANICAL DWG. NO. 500196

REFERENCE DRAWINGS

CYLINDER REINFORCING: LOWER HALF OUTER CURTAIN - SECTOR "A" CONTAINMENT STRUCTURE --- 438214
Do Do - SECTOR "E" Do --- 438218
Do INNER CURTAIN - SECTOR "A" CONTAINMENT STRUCTURE --- 438296
Do Do - SECTOR "E" Do --- 438298
DETAILS OF CONTAINMENT ELECTRICAL PENETRATION PIPE SLEEVE --- 500196
CONTAINMENT PIPING PENETRATIONS - LIST OF MECHANICAL & ELECTRICAL PENETRATIONS --- 500186

UNIT 1

DATE		REVISION DESCRIPTION
10-23-2009		REVISED PER DCN-2-505-R
D.D.	ADMI	
R.E.	FWC2	
I.V.		
P.E.	AOBZ	

ELECTRICAL
ARRANGEMENT AND DETAILS
CONTAINMENT ELECTRICAL
PENETRATION PIPE SLEEVES

DIABLO CANYON POWER PLANT
PACIFIC GAS AND ELECTRIC COMPANY
SAN FRANCISCO, CALIFORNIA

DWG SCALE:
BILL OF MATL:
SUPSDS1
SUPSD BIX

DRAWING	SHEET	PAGE	REV
57673	1	0	15

RASTER=57673.dgn
DGN=57673.dgn
CAD User=ADMI Date=10-23-2009

VALVE SYMBOLS

PGE & COMMON (NOTE 7) TITLE WESTINGHOUSE

- NON-CONTROLLED (MANUAL) SEE VALVE SPEC. - DWG. 049020
- ADDITIONAL VALVE DESCRIPTION
- SERIES NO.
- PRESSURE RATING
- TYPE
- SIZE (SHOWN ONLY IF DIFF. FROM LINE SIZE)
- FOR TUBING VALVE IDENTIFICATION SEE DWG 053479
- VALVE TYPE
- VALVE SIZE
- (SPECIFIED ON VALVE REFERENCE GUIDE) DC-663219-30 — 3/4-T58
- ITEM NO. SEE DWG. 102039 (ALTERNATE SPEC)

USES THE VALVE TYPE DESIGNATION SHOWN BELOW

- MODULATING VALVE
- NORMALLY CLOSED VALVE (ON-OFF)
- NORMALLY OPEN VALVE (ON-OFF)
- THROTTLED VALVE (MANUAL)
- EXCESS FLOW CHECK VALVE

PG&E USES THE FUNCTIONAL DESIGNATION SHOWN ABOVE

- GATE VALVE
- GATE VALVE (DOUBLE DISC)
- NEEDLE VALVE
- GLOBE VALVE
- BALL VALVE
- DIAPHRAGM VALVE
- BUTTERFLY VALVE
- THREEWAY VALVE (NORMALLY CLOSED PORT; NORMALLY OPEN PORT; ALWAYS OPEN (COMMON) PORT)
- CHECK VALVE
- CHECK VALVE WITH OPERATOR
- DAMPER
- SEE ABBREVIATION
- AIR OPERATOR
- AIR OPERATOR (WITH POSITIONER)
- INSTRUMENT ACTUATED OPERATOR WITH VALVE POSITIONER
- PROCESS ACTUATED OPERATOR VALVE WITH VALVE POSITIONER
- PROCESS ACTUATED VALVE OPERATOR WITH PILOT (DOWNSTREAM BLEED)
- DOUBLE DISC GATE VALVE WITH THERMAL RELIEF CONNECTION
- ELECTRIC SOLENOID OPERATOR
- ELECTRIC MOTOR OPERATOR
- MANUAL REGULATOR OR SELF CONTAINED REGULATOR
- PRESSURE REDUCING REGULATOR WITH EXTERNAL PRESSURE TAP
- RUPTURE DISC.
- RELIEF VALVE
- VACUUM BREAKER
- STEM LEAKOFF
- ANGLE VALVE
- EXTENSION STEM OR OPERATOR THRU WALL PENETRATION

EQUIPMENT SYMBOLS

PGE & COMMON (NOTE 7) TITLE WESTINGHOUSE

- HEAT EXCHANGER (ANY TYPE)
- HEAT EXCHANGER (ALTERNATE)
- FLOW STRAIGHTENING VANE
- PULSATION DAMPENER
- POSITIVE DISPLACEMENT PUMP
- BLENDER
- CENTRIFUGAL PUMP
- SMALL CANNED MOTOR PUMP
- FAN, BLOWER OR COMPRESSOR
- JOHNSON SCREEN
- MIXER
- EJECTOR, EDUCTOR
- RESTRICTING ORIFICE
- FLOW PRIMARY ELEMENT
- STEAM TRAP (SEE DWG. 049063 FOR DETAILS)
- FILTER
- STRAINER (NUMBER IS NOT NEEDED FOR START-UP STRAINER)
- CONICAL STRAINER (FOR START-UP ONLY)
- EXPANSION JOINT
- FLEXIBLE CONNECTION
- FLEXIBLE HOSE
- DISCONNECT COUPLING
- BLIND PIPE END (PLUG OR CAP)
- BLIND FLANGE
- FIRE HOSE CONNECTION
- NOZZLE TERMINAL (SIZE SHOWN ONLY IF DIFF. FROM PIPE)
- MFR. NOZZLE IDENTIFICATION (IF AVAILABLE)
- REDUCER
- FLANGE CONNECTION (PIPING OR EQUIPMENT)
- HEATER (STEAM OR ELECTRICAL)
- LOOP SEAL (TRAP)
- SPRAY NOZZLES
- SPARGER (INSIDE VESSEL)
- SPECTACLE FLANGE
- THERMAL SLEEVE

INSTRUMENT SYMBOLS

COMMON (NOTE 7) TITLE

- PI 16 / 22-A34: INSTRUMENT NO IDENTIFICATION BALLOON (SEE TABLE BELOW); INSTRUMENT SCHEMATIC REFERENCE - USED FOR ALL MULTIPLE DEVICE INSTRUMENT LOOPS
- TI 781 / 12410A: INSTRUMENT NO.; (W) COMPUTER INPUT NO
- PI 6 (14): MECHANICAL PANEL NO. (SEE DWG. 101904)
- PS 6 (HIA): INST. FUNCTION - SEE LISTING BELOW (USED FOR SINGLE DEVICE INSTRUMENT ONLY)

DEVELOPMENT OF TAG NO. DESIGNATION (SEE ALSO SPECIAL TAGS)

INSTRUMENT FUNCTION (ATTACHED TO PIPE ONLY) (16)

PROCESS VARIABLE	THERMOWELL FOR THE SENSOR	ABBREVIATION	CONTROL VALVE	INDICATOR	SENSOR OR ELEMENT	SWITCH BLIND	SWITCH W/INDICATOR	TEST	TRANSMITTER	CONTROL BLIND	CONTROL W/INDICATOR
ANALYSIS	–	AN	–	ANI	CEL	ANS	–	ANX	ANT	–	–
FLOW	–	F	FCV	FI	FE	FS	FIS	FX	FT	FC	FIC
LEVEL	–	L	LCV	LI	–	LS	LIS	LX	LT	LC	LIC
NUCLEAR	–	N	–	NI	NE	–	–	–	–	NC	NIC
PRESSURE	–	P	PCV	PI	–	PS	PIS	PX	PT	PC	PIC
RADIATION	–	R	RCV	RI	RE	RS	RIS	RX	RT	RC	RIC
TEMPERATURE	TW	T	TCV	TI●	TE○	TS	TIS	TX	TT	TC	TIC
POSITION	–	PD	PD▲	PDI	–	POS	–	–	POT	–	–
MISC. (VIBRATION SW. SPEED CONTROL, ETC.)	–	Y	YCV	YI	YE	YS	YIS	YX	YT	YC	YIC

▲ POSITIONER
● TI - USED FOR THERMOCOUPLE ELEMENT ALSO
○ TE - USED FOR RTD ELEMENT ONLY

INST. FUNCTION LEGEND

- APS - AUTOMATIC PUMP START/STOP
- HIA - HIGH ALARM
- LOA - LOW ALARM
- INT - INTERLOCK
- TST - TEST
- HLA - HIGH/LOW ALARM

SPECIAL TAG:

- RV - RELIEF VALVE
- SC - SAMPLE COOLER
- SV - SOLENOID VALVE
- STR - STRAINER
- TRP - TRAP
- HCV - HAND CONTROL VALVE
- RTD - RESISTANCE TEMPERATURE DETECTOR
- FY - SAMPLE PUMP (10)

GENERAL NOTES:

1. FOR UNIT LINE NO. SEE LINE DESIGNATION (102040)
2. SEE INDIVIDUAL SCHEMATIC FOR SPECIAL SYMBOLS NOT SHOWN ON THIS LEGEND.
3. ON VENTS AND DRAINS WHERE A DOUBLE BARRIER IS REQUIRED REFER TO DWG. 049066 NOTE 4.
4. DC-663211-16 — SHEET NUMBER; RECORD NUMBER
5. ALL VALVES SHOWN TO HAVE LEAKOFF CONNECTIONS SHALL BE PERMANENTLY PIPED TO THE APPROPRIATE DRAIN POINT. ALL OTHER VALVES WITH LEAKOFF WILL HAVE LEAKOFF CONNECTIONS CAPPED.
6. (*) SUPPLIED WITH ASSOCIATED EQUIPMENT. (SEE PIPING SCHEMATIC FOR SPECIFIC INFO.)
   (**) INDICATES PIPE NOT SUPPLIED BY KELLOGG (8711) OR SCOTT (8831) (SEE PIPING SCHEMATIC FOR SPECIFIC INFORMATION)
7. COMMON - INDICATES THAT SAME SYMBOL IS USED FOR (W) OR PG&E. (30-E)
8. (W) SYMBOLS USED ON THIS SHEET EXTRACTED FROM DC-663200-10.
9. EQUIPMENT NUMBERING:
   - 0-1 - FOR UNITS 1 & 2 (COMMON)
   - 1-1 - FOR UNIT 1 ONLY
   - 2-1 - FOR UNIT 2 ONLY
   - EQUIPMENT NUMBER
   - UNIT NUMBER

LINE CODING

COMMON (NOTE 7) TITLE

- S2 36 4111: INSULATION SPECIFICATION (101905); LINE SIZE (INCHES); LINE NO. (OMITTED FOR <2-1/2" SHORT RUN); PIPING SPECIFICATION (049021)
- S2-36-4111 ALTERNATE (12)
- INSULATING FLANGE (SEE DWG. 065645)
- MAIN FLOW LINES
- SECONDARY FLOW LINES
- INSTRUMENT LINES (PROCESS)
- MAIN HEADER (AIR)
- BELLOWS SENSOR FILLED SEALED SYSTEM (CAPILLARY)
- INDICATES CHANGE OF LINE SPEC. SIZE OR NO. AND EQUIP. BOUNDARY
- PIPE PENETRATION NO. (INSIDE CONTAINMENT | OUTSIDE CONTAINMENT)
- CHANGE OF PIPING SPEC.
- SHIELD WALL PENETRATION
- CHANGE OF PG&E CLASS
- HEAT TRACING AND BOUNDARY

PG & E CODE CLASS	APPLICABLE CODES **	DESIGN CLASS (3)	SEISMIC CLASSIFICATION (2)
A	DESIGN - B31.1, FABRICATION, ERECT., NDE - B31.7 CLASS I	I	I
B	DESIGN, FABRICATION, ERECTION, NDE - B31.7 CLASS II	I	I
C	DESIGN, FABRICATION, ERECTION, NDE - B31.7 CLASS III	I	I
D (1, 8)	DESIGN, FABRICATION, ERECTION NDE-B31.7 CLASS III FOR NEW WORK DESIGN, FABRICATION, ERECTION NDE, B31.1 FOR WORK PERFORMED PRIOR TO UPGRADE	I	I
E (1)	DESIGN, FABRICATION, ERECTION NDE-B31.1	II	NON I
F (1)	PIPING DESIGN, NDE; FABRICATION & ERECTION, ANSI 31.1 - 1967 WITH ADDENDA & SHALL BE SEISMICALLY QUALIFIED FOR DESIGN EARTHQUAKE (DE) CONDITION (3)	II (2)	(4) NON I (DE)
G	NFPA AND ALSO COMPLIES WITH B31.1 *	II	I
G1	NFPA STANDARDS *	II	NON I
H (2)	PIPING DESIGN, NDE; FABRICATION AND ERECTION, ANSI B31.1-1967 WITH ADDENDA	II	NON I
J (3, 9)	ORIGINAL INSTALLATION - PG&E CODE CLASS E, DESIGN CLASS I (ANSI B31.7 CLASS II, 1969 EDITION PLUS 1970 ADDENDA) FOR REPAIR, REPLACEMENT OR NEW CONSTRUCTION	I	(4) I

* 10CFR50 APPENDIX B OR ALTERNATE QUALITY ASSURANCE PROGRAM APPLICABLE TO THESE CODE CLASSES.
** REFER TO PG&E SPECIFICATION 8707 AND 8711 TO DETERMINE THE PIPING CODES AND STANDARDS APPLICABLE TO A PARTICULAR PG&E CODE CLASS, NOT LISTED ABOVE.

VENT, DRAIN, TELL TALE SYSTEM IDENTIFICATION

- TEST VENT
- VENT
- VENT (EQUIPMENT)
- TV, V, V
- SEE DWG. 049066 FOR V, D&TT VALVE DETAILS. ALL OTHER VALVES TO BE IDENTIFIED
- TT, TC, D, D
- DRAIN FUNNEL
- DRAIN
- TEST CONN.
- TELL TALE

REFERENCE BLOCK COMMON (NOTE 7)

- 42-D | 02: PIPING OR INSTR. SCHEM. "FLAG"; DWG. NO. (LAST TWO DIGITS) NO. OMITTED FOR THE SAME DWG; DWG. COORDINATE (SIDE); DWG. COORDINATE (TOP)
- 42-D-02 ALTERNATE

ABBREVIATION & DESCRIPTION

NFPA	NATIONAL FIRE PROTECTION ASSOCIATION
RWST	REFUELING WATER STORAGE TANK
SRST	SPENT RESIN STORAGE TANK
PRT	PRESSURIZER RELIEF TANK
PRL	PRESSURE RELIEF LINE
ATM	ATMOSPHERE
PW	PRIMARY WATER
FAI	FAIL AS IS
FC	FAIL CLOSED
FO	FAIL OPEN
SC	SEALED CLOSED
SO	SEALED OPEN
DH	DRAIN HEADER (2)
GA	GAS ANALYZER
HT	HOLD-UP TANK (LIQUID)
NO	NORMALLY OPEN
NC	NORMALLY CLOSED
ECC	EMERGENCY COOLING CONNECTION
PP	PUMP
VH	VENT HEADER
DW	DEMINERALIZED WATER
D	LOCAL DRAIN
V	VENT TO ATMOSPHERE
N_2	NITROGEN
H_2	HYDROGEN
T	CONTAINMENT ISOLATION SIGNAL (PHASE A)
S	SAFETY INJECTION SIGNAL
P	CONTAINMENT SPRAY SIGNAL & CONTAINMENT ISOLATION SIGNAL (PHASE B)
RCDT	REACTOR COOLANT DRAIN TANK
IMB	INSIDE MISSILE BARRIER
OMB	OUTSIDE MISSILE BARRIER
RR	REACH ROD
PG	INDICATE PG&E SCOPE WITH A (W) SYSTEM
WM	WALL MOUNTED
(W)	WESTINGHOUSE ELECTRIC CO.
*	SUPPLIED WITH ASSOCIATED EQUIPMENT.
M	MAIN STEAM ISOLATION SIGNAL (13)
DR	DESIGN REQUIREMENT. SEE SYSTEM DCM (DESIGN CRITERIA MEMORANDUM) FOR DESIGN REQUIREMENTS/LIMITATIONS. (15)

ATIC

UNIT 1

P G & E CO.	102001	REV. 18
SHEET 3	PAGE 0	

DATE	DWN	RE	IV	PROFESSIONAL ENGINEER	PE DISC.	PE#	PE EXP.	
9/8/00	BLFI	RHSI	-	KERSI J. DALAL	MECHANICAL	M 16690	3/31/2004	Revised per FCT 025114

CAD User:BLFI Date: 9-08-2000 DGN=2001S3.DGN RASTER=2001S3.TIF

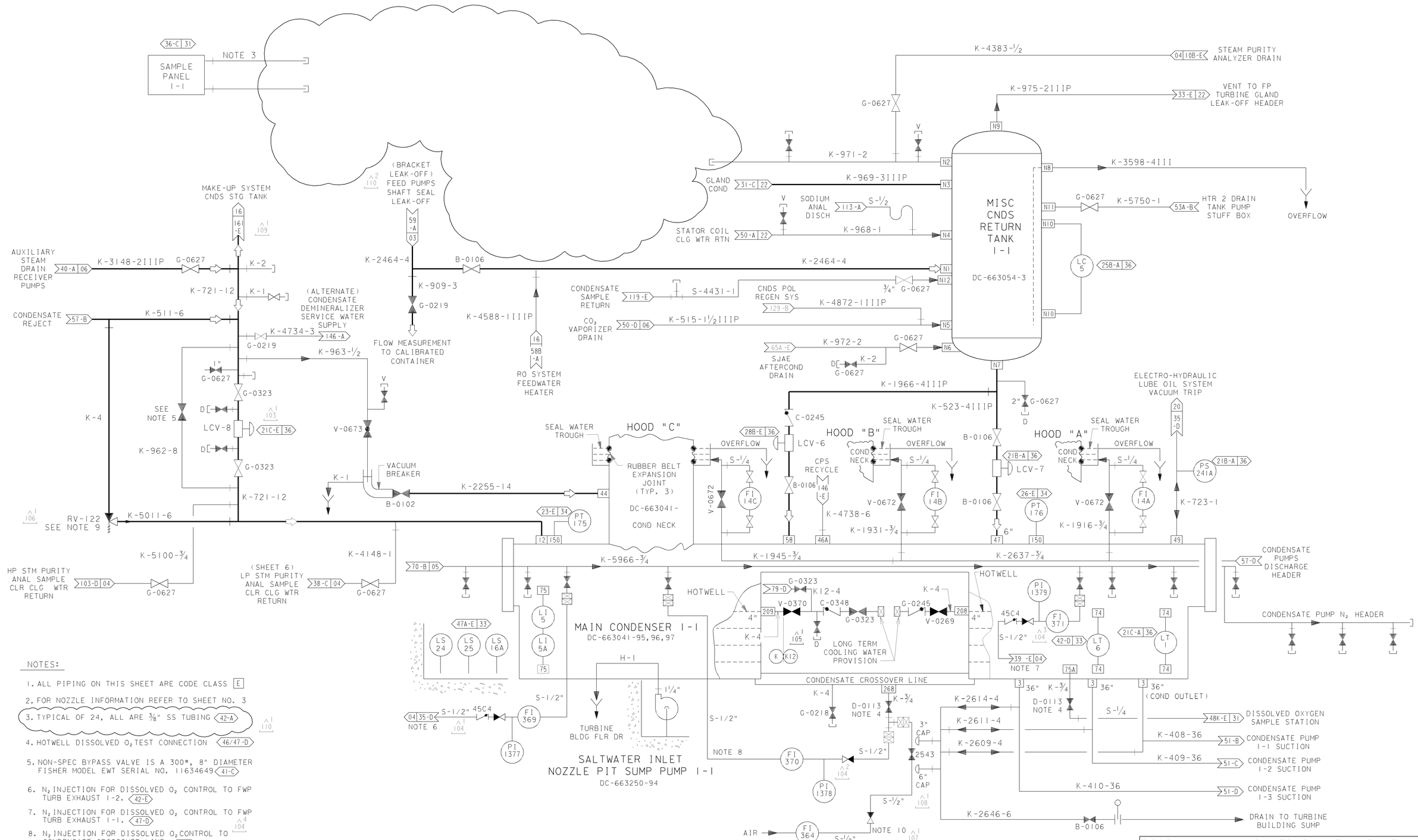

NOTES:

1. ALL PIPING ON THIS SHEET ARE CODE CLASS E
2. FOR NOZZLE INFORMATION REFER TO SHEET NO. 3
3. TYPICAL OF 24, ALL ARE 3/8" SS TUBING (42-A)
4. HOTWELL DISSOLVED O_2 TEST CONNECTION (46/47-D)
5. NON-SPEC BYPASS VALVE IS A 300#, 8" DIAMETER FISHER MODEL EWT SERIAL NO. 11634649 (41-C)
6. N_2 INJECTION FOR DISSOLVED O_2 CONTROL TO FWP TURB EXHAUST 1-2. (42-E)
7. N_2 INJECTION FOR DISSOLVED O_2 CONTROL TO FWP TURB EXHAUST 1-1. (47-D)
8. N_2 INJECTION FOR DISSOLVED O_2 CONTROL TO CONDENSATE CROSSOVER LINE. (45-D)
9. SPACER INSTALLED AT INLET TO RV-122. (40-C)
10. AIR INJECTION FOR DISSOLVED O_2 CONTROL TO CONDENSATE CROSSOVER LINE. (46-E)

DIABLO CANYON POWER PLANT - PG&E CO.
CONDENSATE SYSTEM

DRAWING	SHEET	PAGE	REV
102002	4	0	110

UNIT 1

DATE	DWN	RE	IV	PROFESSIONAL ENGINEER	PE DISC.	PE#	PE EXP.	
02-25-2010	AJFJ	FxC2		KERSI J. DALAL	MECHANICAL	M 16690	3/31/2010	REVISED PER DDN-2*169

RASTER=2002s4.dgn
DGN=2002s4.dgn
CAD User: AJFJ Date: 02-25-2010

3NPGIC
3 Size

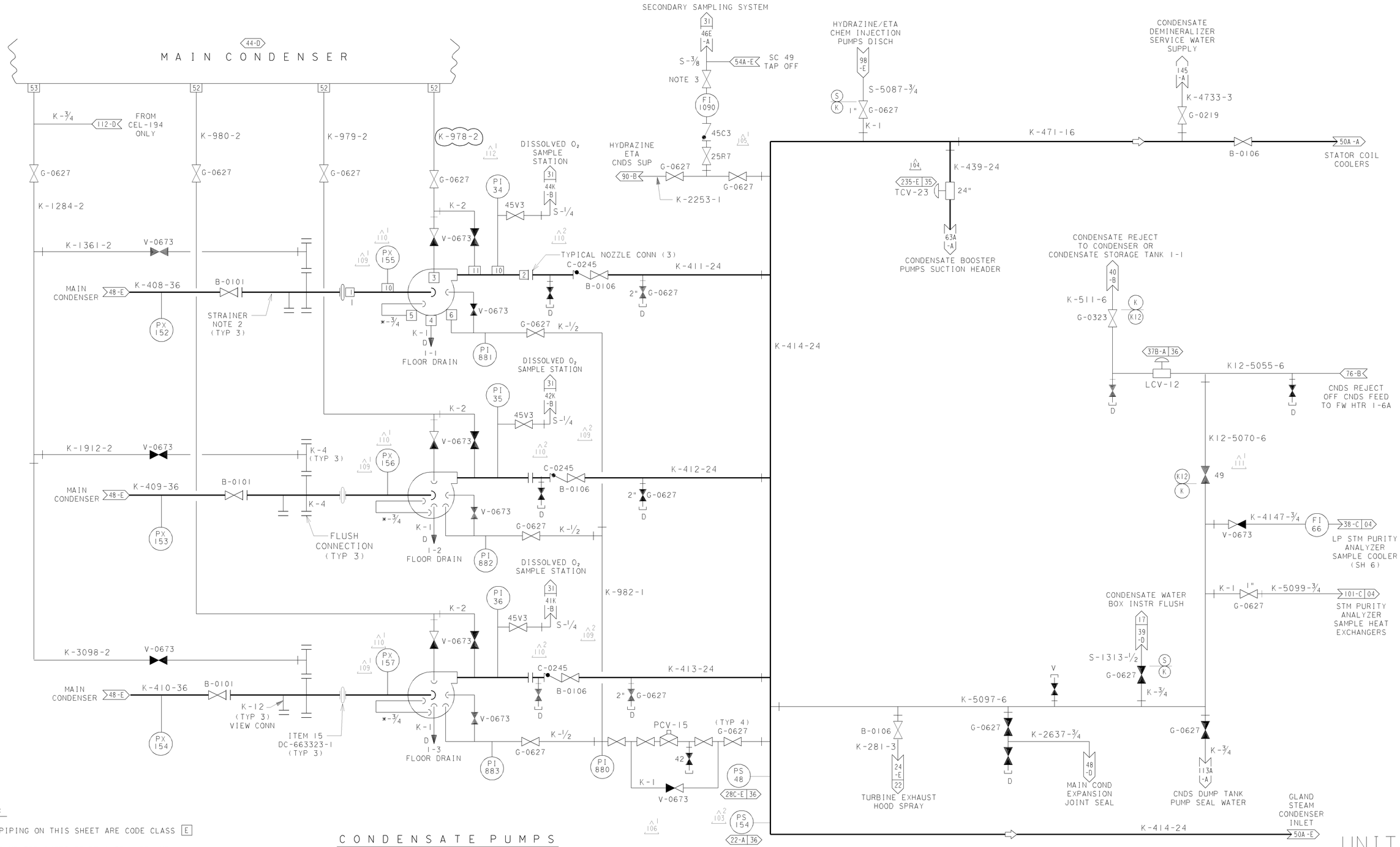

NOTES:

1. ALL PIPING ON THIS SHEET ARE CODE CLASS E
2. START-UP STRAINERS TO BE INSTALLED AND REMOVED AS NEEDED. REF PROJECT FILE 20-258-6 (52-B) (52-C) (52-D)
3. 3/8" S.S. REGULATING VALVE WHITEY, SWAGELOCK END CONNECTOR, CATALOG NO. IRS6 (55-A)

C O N D E N S A T E P U M P S

DC-663045-1

DIABLO CANYON POWER PLANT - PG&E CO.
CONDENSATE SYSTEM

DRAWING	SHEET	PAGE	REV
102002	5	0	112

DATE	DWN	RE	IV	PROFESSIONAL ENGINEER	PE DISC.	PE#	PE EXP.	
02-11-2010	AJFJ	FxC2		KERSI J. DALAL	MECHANICAL	M 16690	3/31/2010	REVISED PER DFT-7*727

RASTER=102002s5.dgn
DGN=102002s5.dgn
CAD User: AJFJ Date: 02-11-2010

SNPOIC
3 Size

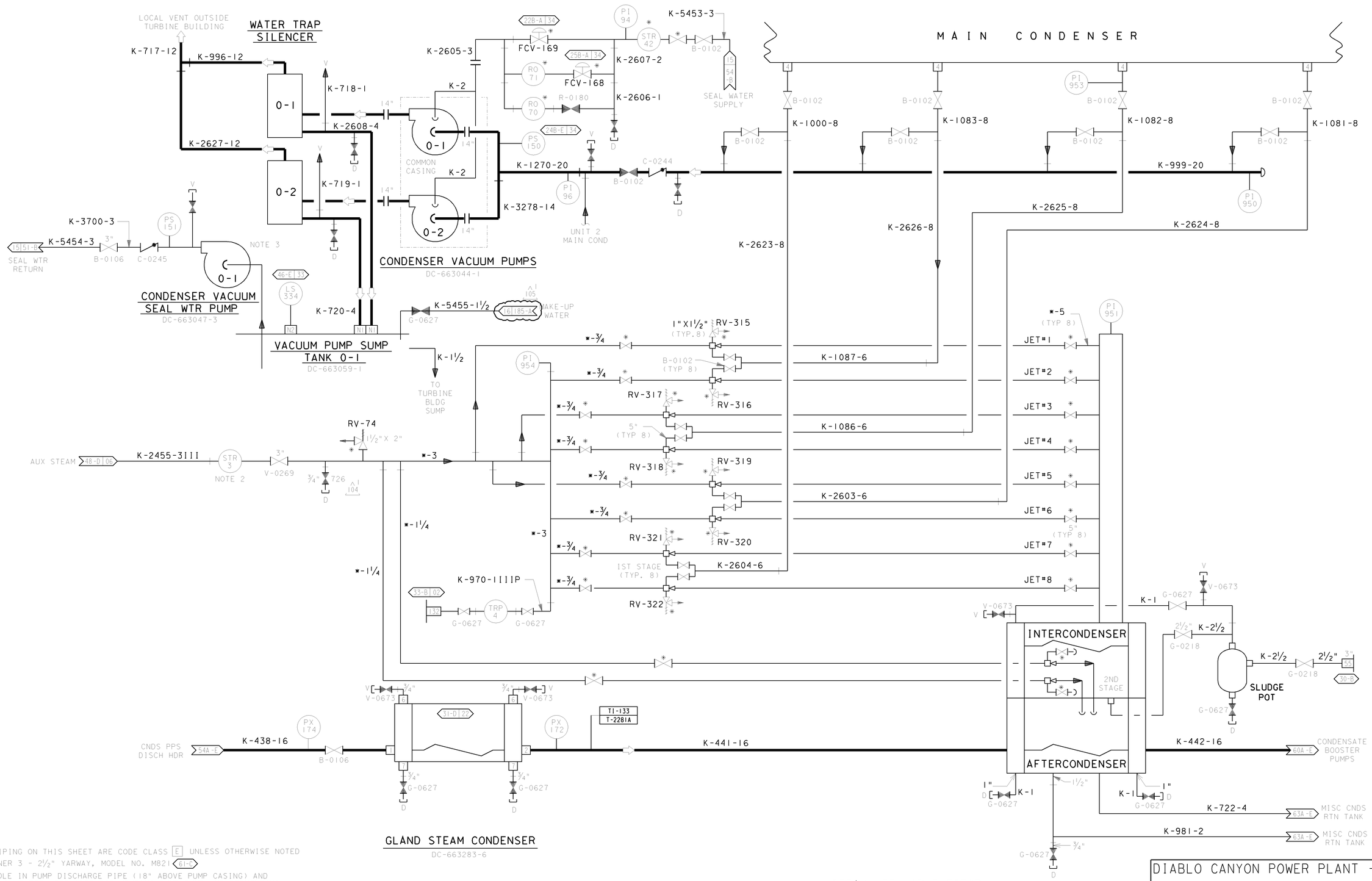

NOTES

1. ALL PIPING ON THIS SHEET ARE CODE CLASS E UNLESS OTHERWISE NOTED
2. STRAINER 3 - 2½" YARWAY, MODEL NO. M821 61-D
3. ⅛" HOLE IN PUMP DISCHARGE PIPE (18" ABOVE PUMP CASING) AND VENT VALVE BOTH PROVIDED FOR VENTING SUMP PUMP AND PREVENTING PUMP VAPOR BINDING 62-B

UNIT 1

DIABLO CANYON POWER PLANT - PG&E CO.

DRAWING	SHEET	PAGE	REV
102002	6	0	105

DATE	DWN	RE	IV	PROFESSIONAL ENGINEER	PE DISC.	PE#	PE EXP.	
12-19-2005	MIBF	KJD3		FRANCIS C. LING	MECHANICAL	M 16098	12/31/2005	REVISED PER FCT-030760

RASTER=200256.dgn
DGN=200256.dgn
CAD User: MIBF DGN: 12-19-2005

3 Size

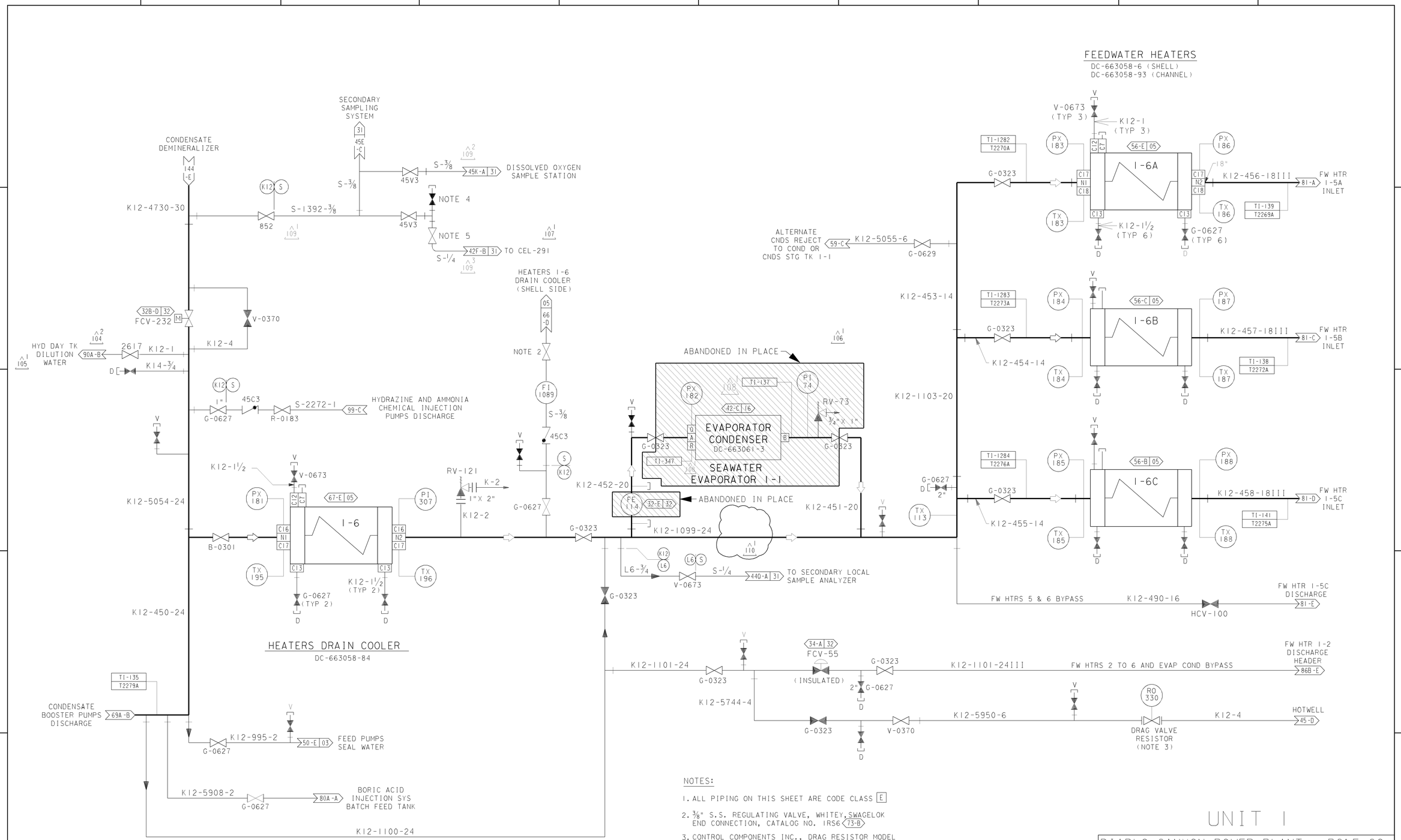

NOTES:

1. ALL PIPING ON THIS SHEET ARE CODE CLASS E
2. 3/8" S.S. REGULATING VALVE, WHITEY, SWAGELOK END CONNECTION, CATALOG NO. 1RS6 (73-B)
3. CONTROL COMPONENTS INC., DRAG RESISTOR MODEL 100V, RECORD 6010361-1 (78-D)
4. 3/8" SS VENT VALVE, WHITEY SWAGELOK SS 6LRF4.
5. 45V4 WHITEY #SS-3NBF4 1/4" SS.

UNIT 1

DIABLO CANYON POWER PLANT - PG&E CO.
CONDENSATE SYSTEM

DRAWING	SHEET	PAGE	REV
102002	7	0	110

DATE	DWN	RE	IV	PROFESSIONAL ENGINEER	PE DISC.	PE#	PE EXP.	
05-17-2012	MNRU	FxC2		KERSI J. DALAL	MECHANICAL	M 16690	3/31/2014	REVISED PER DDN-2*777-0

INPGIC
3 Size

RASTER=2002s7.dgn
DGN=2002s7.dgn
CAD User=MNRU Date=05-17-2012

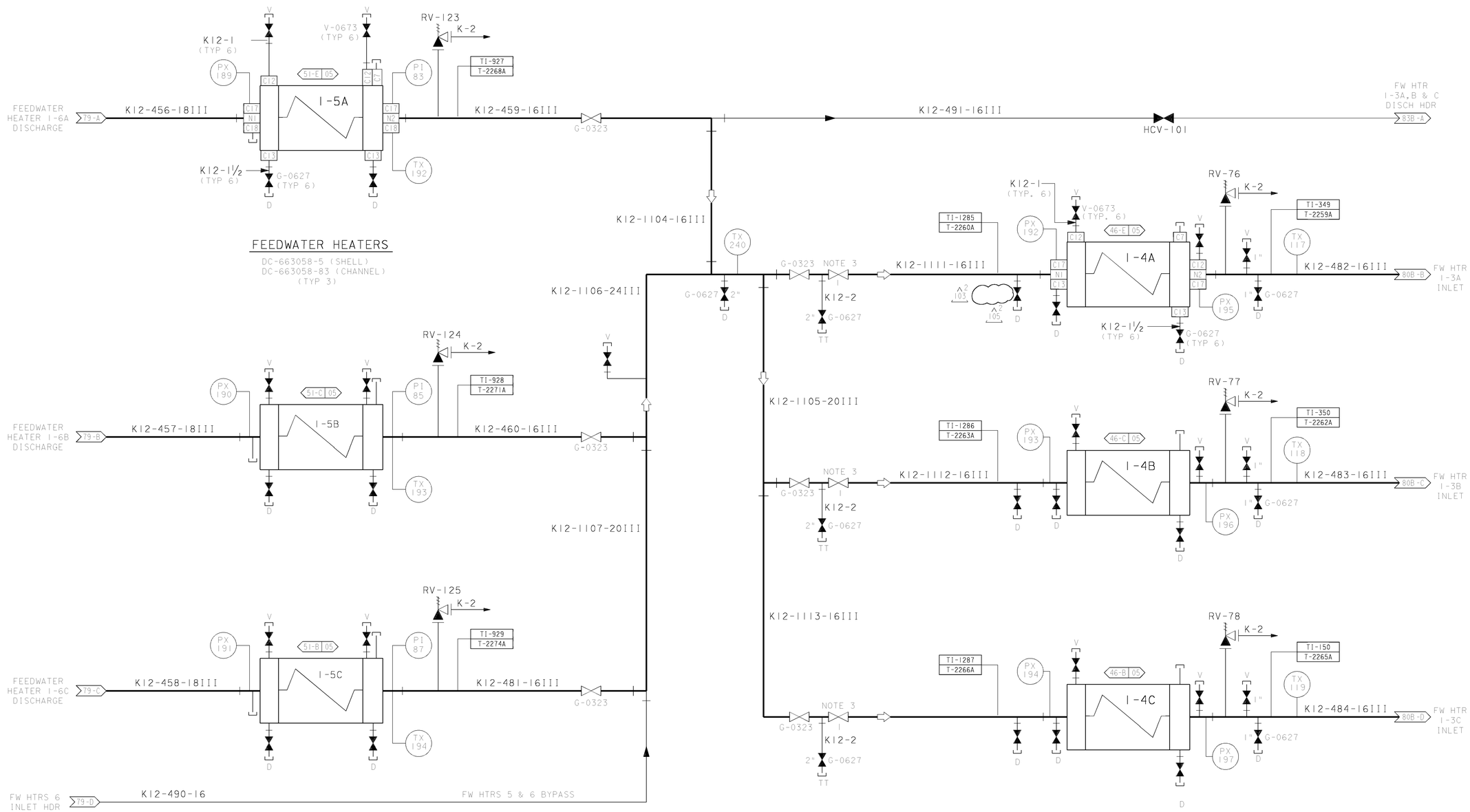

NOTES:

1. ALL VENT VALVES SHOULD BE V-0673.
2. ALL DRAIN VALVES SHOULD BE G-0627.
3. VALVES WITH ITEM NUMBER SHALL BE PER SPECIFICATION 1276 (REF DWG. 102039). 85-B 85-C 85-D
4. ALL THERMAL RV'S ON THIS SHEET SHALL BE 1"x2".

UNIT 1

P G & E CO.	102002	REV. 105
SHEET 8	PAGE 0	

DATE	DWN	RE	IV	PROFESSIONAL ENGINEER	PE DISC.	PE#	PE EXP.	
10/21/00	NDNI	RHSI	-	KERSI J. DALAL	MECHANICAL	M 16690	3/31/2004	Revised per FCT 025229

CAD User:NDNI Date:10-20-2000
DGN=200258.DGN
RASTER=200258.TIF

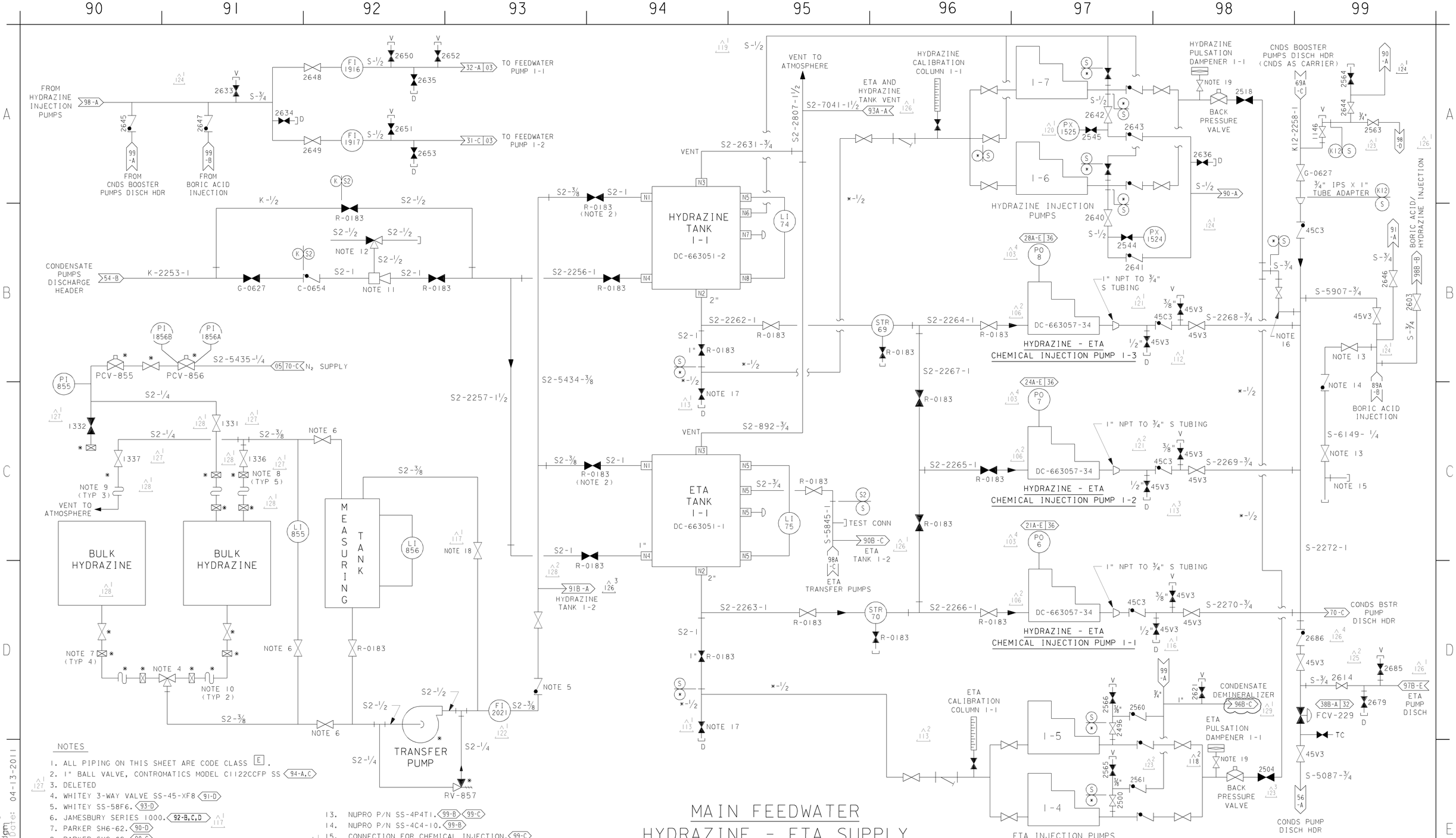

NOTES

1. ALL PIPING ON THIS SHEET ARE CODE CLASS E.
2. 1" BALL VALVE, CONTROMATICS MODEL C1122CCFP SS (94-A,C)
3. DELETED
4. WHITEY 3-WAY VALVE SS-45-XF8 (91-D)
5. WHITEY SS-58F6. (93-D)
6. JAMESBURY SERIES 1000. (92-B,C,D)
7. PARKER SH6-62. (90-D)
8. PARKER SH2-62. (90-C)
9. 1/4" DIAMETER POLY TUBING. (90-C)
10. 1/2" TEFLON HOSE WITH SS BRAIDING. (91-D)
11. ETA AND HYDRAZINE EDUCTOR (PENBERTHY #63A). (92-B)
12. SS 45 F X 8 (WHITEY). (92-A)
13. NUPRO P/N SS-4P4T1. (99-B) (99-C)
14. NUPRO P/N SS-4C4-10. (99-B)
15. CONNECTION FOR CHEMICAL INJECTION. (99-C)
16. WHITEY P/N SS-45S16. (99-B)
17. APOLLO #76-103 (94-B) (94-D)
18. PBM P/N SPH-31-SW2/FO (93-C)
19. CONBRACO P/N 76-103-01 (98-A)

MAIN FEEDWATER
HYDRAZINE - ETA SUPPLY

UNIT 1

DIABLO CANYON POWER PLANT - PG&E CO.
CONDENSATE SYSTEM

DRAWING	SHEET	PAGE	REV
102002	9	0	129

DATE	DWN	RE	IV	PROFESSIONAL ENGINEER	PE DISC.	PE#	PE EXP.	
04-13-2011	JBMX	FxC2		KERSI J. DALAL	MECHANICAL	M 16690	3/31/2012	REVISED PER DFT-7*1067

RASTER=102002s9.dgn
DGN=102002s9.dgn
CAD User=JBMX Date= 04-13-2011

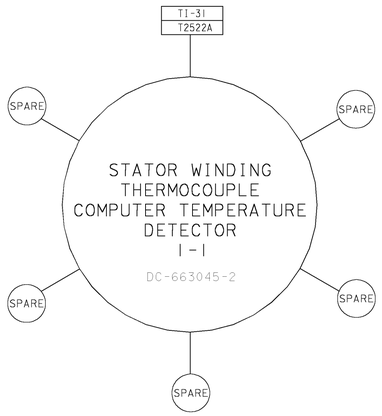

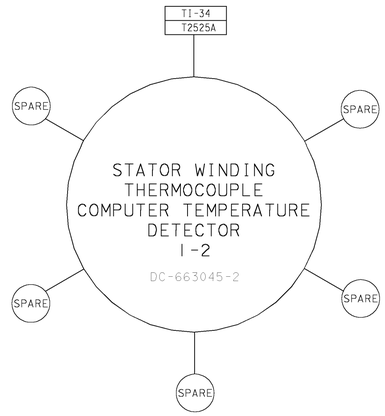

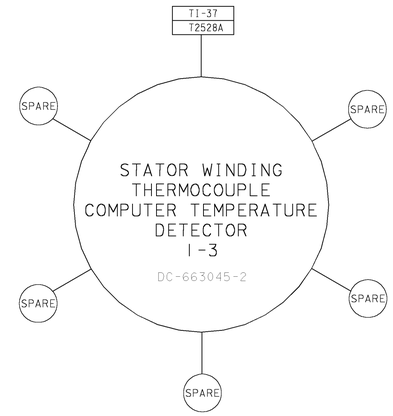

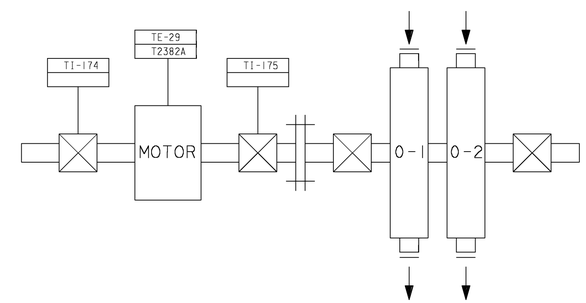

VACUUM PUMPS

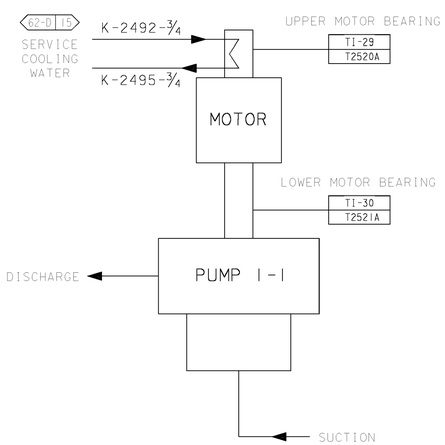

CONDENSATE PUMP MOTOR

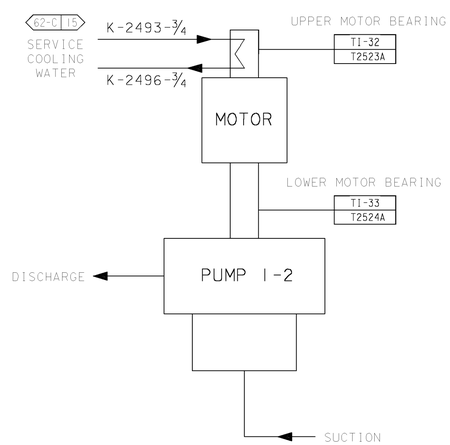

CONDENSATE PUMP MOTOR

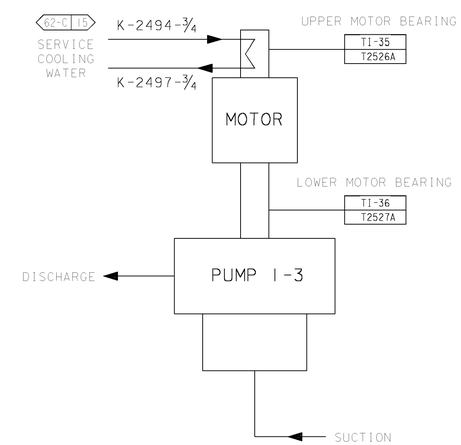

CONDENSATE PUMP MOTOR

UNIT 1

P G & E CO.	102002	REV. 103
SHEET 10 PAGE 0		

5/4/99	CMG9	FXC2	-	KERSI J. DALAL	MECHANICAL	M 16690	3/31/2000	Enhanced per FCT 023917
DATE	DWN	RE	IV	PROFESSIONAL ENGINEER	PE DISC.	PE#	PE EXP.	

CAD User:CMG9 Date: 4-29-1999
DGN=2002S10.DGN

MAIN CONDENSER TUBE SHEET SALT WATER LEAK DETECTION SYSTEM

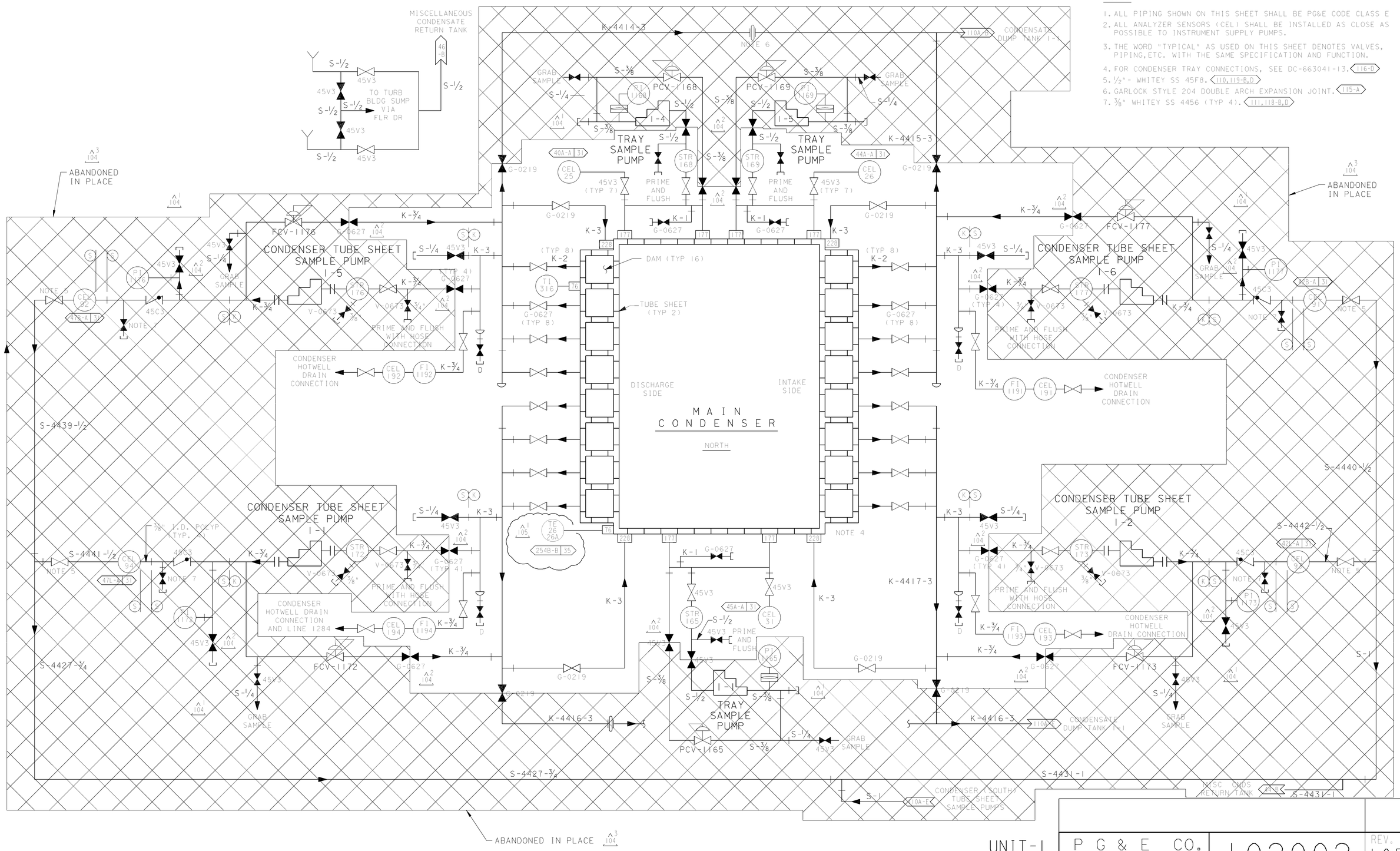

NOTES:

1. ALL PIPING SHOWN ON THIS SHEET SHALL BE PG&E CODE CLASS E
2. ALL ANALYZER SENSORS (CEL) SHALL BE INSTALLED AS CLOSE AS POSSIBLE TO INSTRUMENT SUPPLY PUMPS.
3. THE WORD "TYPICAL" AS USED ON THIS SHEET DENOTES VALVES, PIPING, ETC. WITH THE SAME SPECIFICATION AND FUNCTION.
4. FOR CONDENSER TRAY CONNECTIONS, SEE DC-663041-13. 116-D
5. 1/2"- WHITEY SS 45F8. 110,119-B,D
6. GARLOCK STYLE 204 DOUBLE ARCH EXPANSION JOINT. 115-A
7. 3/8" WHITEY SS 4456 (TYP 4). 111,118-B,D

UNIT-1

P G & E CO.		102002	REV. 105
SHEET 11	PAGE 0		

DATE	DWN.	RE	IV	PROFESSIONAL ENGINEER	PE DISC.	PE#	PE EXP.	
5/5/05	AJL2	FXC2	-	KERSI J. DALAL	MECHANICAL	M 16690	3/31/2006	Revised per FCT 030067

CAD User:AJL2 Date: 5-16-2003 DGN=2002S11.DGN

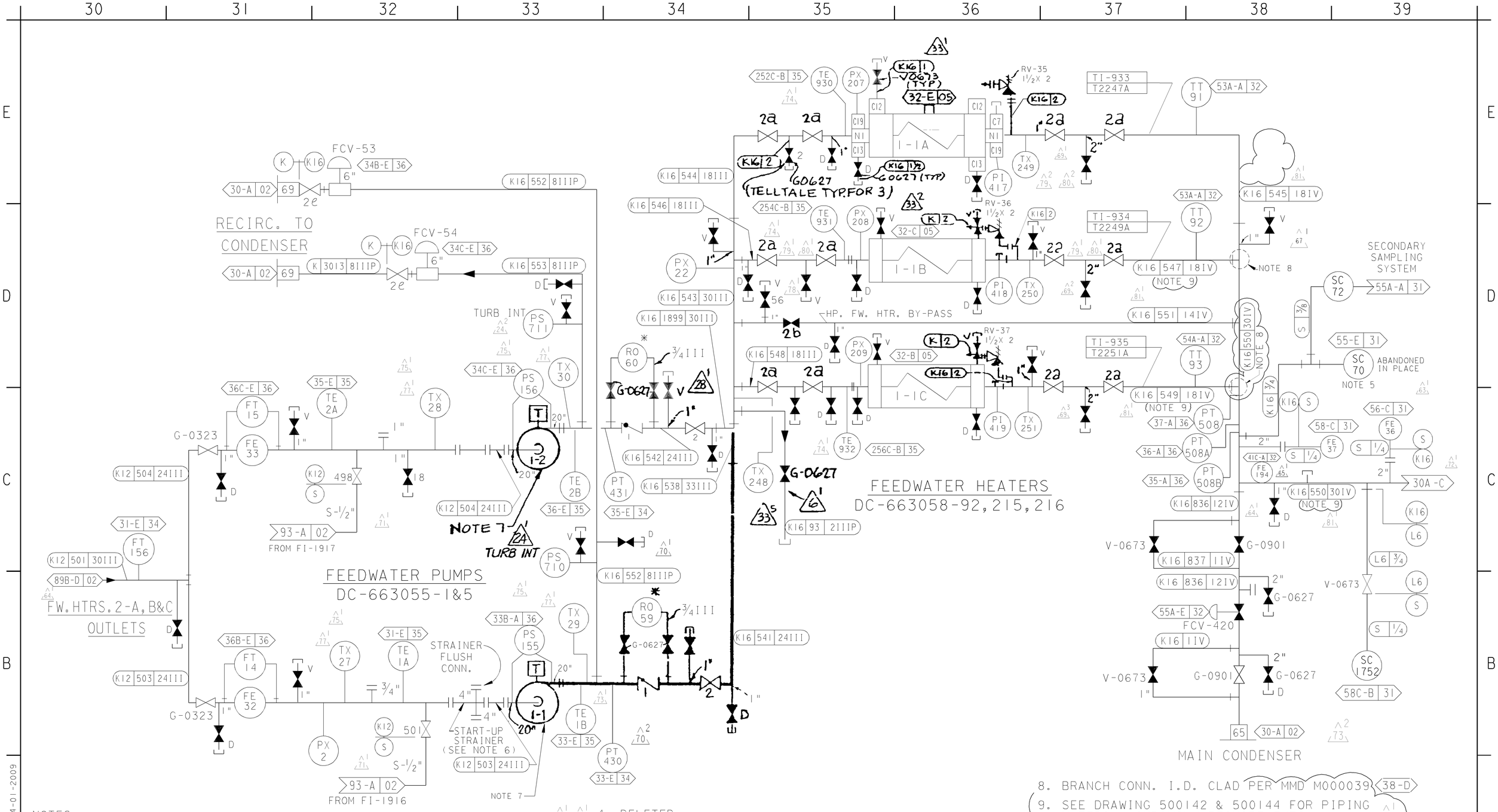

NOTES:

1. ALL ISOLATION VALVES ON THIS SHEET WITH PG&E MARK NO. SHALL BE UNDER SPEC. 8711 (KELLOG) EXCEPT AS NOTED.
2. ALL PIPINGS ON THIS SHEET SHALL BE PG&E CLASS E.
3. ALL VALVES ON THIS SHEET WITH ITEM NO. SHALL BE UNDER SPEC. 8762.
4. DELETED
5. SC-70 IS DESIGN CLASS II AND SEISMICALLY ANALYZED IN ACCORDANCE WITH DESIGN CRITERIA MEMORANDUM M-61 (39-C)
6. START-UP STRAINERS TO BE INSTALLED AND REMOVED AS NEEDED FOR REF PROJECT FILE 20.258.6.
7. FEEDWATER PUMP SUPERVISORY INSTRUMENTATION SHOWN ON 102020, SH. 6A.
8. BRANCH CONN. I.D. CLAD PER MMD M000039 (38-D)
9. SEE DRAWING 500142 & 500144 FOR PIPING MATERIAL CHROMIUM REQUIREMENTS

UNIT 1

DIABLO CANYON POWER PLANT - PG&E CO.
FEEDWATER SYSTEM

DRAWING	SHEET	PAGE	REV
102003	3	0	81

DATE	DWN	RE	IV	PROFESSIONAL ENGINEER	PE DISC.	PE#	PE EXP.	
04-01-2009	AJFJ	FxC2		KERSI J. DALAL	MECHANICAL	M 16690	3/31/2010	REVISED PER DFT-7*367

RASTER=erul0701.dgn
DGN=erul0701.dgn
CAD User: AJFJ Date: 04-01-2009
Graphic 3 Size

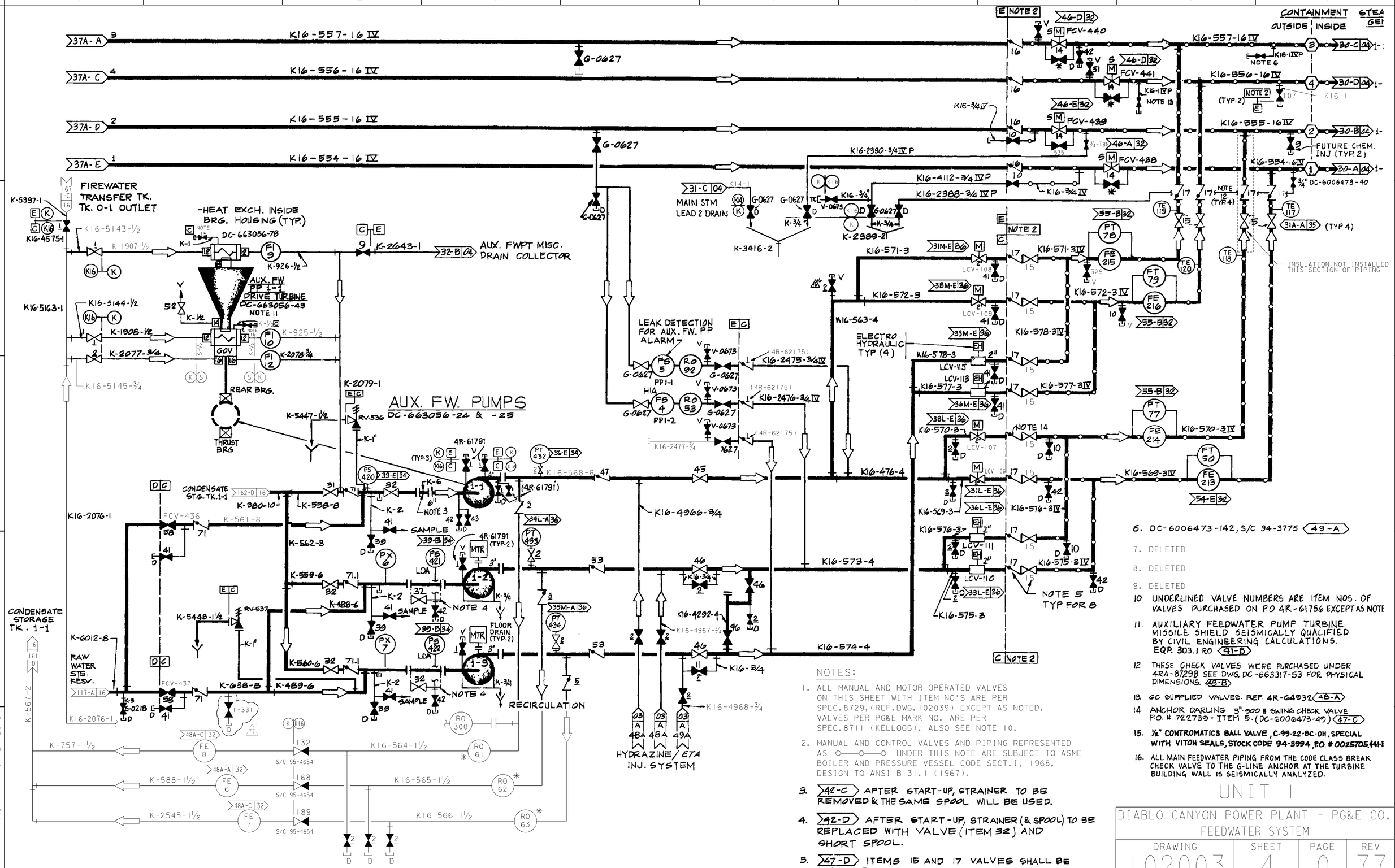

NOTES:

1. ALL MANUAL AND MOTOR OPERATED VALVES ON THIS SHEET WITH ITEM NO'S ARE PER SPEC. 8729, (REF. DWG. 102039) EXCEPT AS NOTED. VALVES PER PG&E MARK NO. ARE PER SPEC. 8711 (KELLOGG). ALSO SEE NOTE 10.
2. MANUAL AND CONTROL VALVES AND PIPING REPRESENTED AS ○——○——○ UNDER THIS NOTE ARE SUBJECT TO ASME BOILER AND PRESSURE VESSEL CODE SECT. I, 1968, DESIGN TO ANSI B 31.1 (1967).
3. >42-C> AFTER START-UP, STRAINER TO BE REMOVED & THE SAME SPOOL WILL BE USED.
4. >42-D> AFTER START-UP, STRAINER (& SPOOL) TO BE REPLACED WITH VALVE (ITEM 32) AND SHORT SPOOL.
5. >47-D> ITEMS 15 AND 17 VALVES SHALL BE INSULATED
6. DC-6006473-142, S/C 94-3775 <49-A>
7. DELETED
8. DELETED
9. DELETED
10. UNDERLINED VALVE NUMBERS ARE ITEM NOS. OF VALVES PURCHASED ON P.O 4R-61756 EXCEPT AS NOTE
11. AUXILIARY FEEDWATER PUMP TURBINE MISSILE SHIELD SEISMICALLY QUALIFIED BY CIVIL ENGINEERING CALCULATIONS. EQP. 303.1 RO <41-B>
12. THESE CHECK VALVES WERE PURCHASED UNDER 4RA-8729B SEE DWG. DC-663317-53 FOR PHYSICAL DIMENSIONS. <48-B>
13. GC SUPPLIED VALVES. REF. 4R-64932 <48-A>
14. ANCHOR DARLING 3"-900# SWING CHECK VALVE P.O. # 722739-ITEM 5. (DC-6006473-49) <47-C>
15. ½" CONTROMATICS BALL VALVE, C-99-22-BC-OH, SPECIAL WITH VITON SEALS, STOCK CODE 94-3994, P.O. # 0025705, 41-
16. ALL MAIN FEEDWATER PIPING FROM THE CODE CLASS BREAK CHECK VALVE TO THE G-LINE ANCHOR AT THE TURBINE BUILDING WALL IS SEISMICALLY ANALYZED.

UNIT 1

DIABLO CANYON POWER PLANT - PG&E CO.
FEEDWATER SYSTEM

DRAWING	SHEET	PAGE	REV
102003	4	0	77

DATE	DWN	RE	IV	PROFESSIONAL ENGINEER	PE DISC.	PE#	PE EXP.	
07-24-2013	MNRU	FAZI	KJD3	NOT REQUIRED	N/A	N/A	N/A	REVISED PER DFT-7*2245

RASTER=102003s4.dgn
DGN=102003s4.dgn
CAD User: MNRU DGN: 07-24-2013

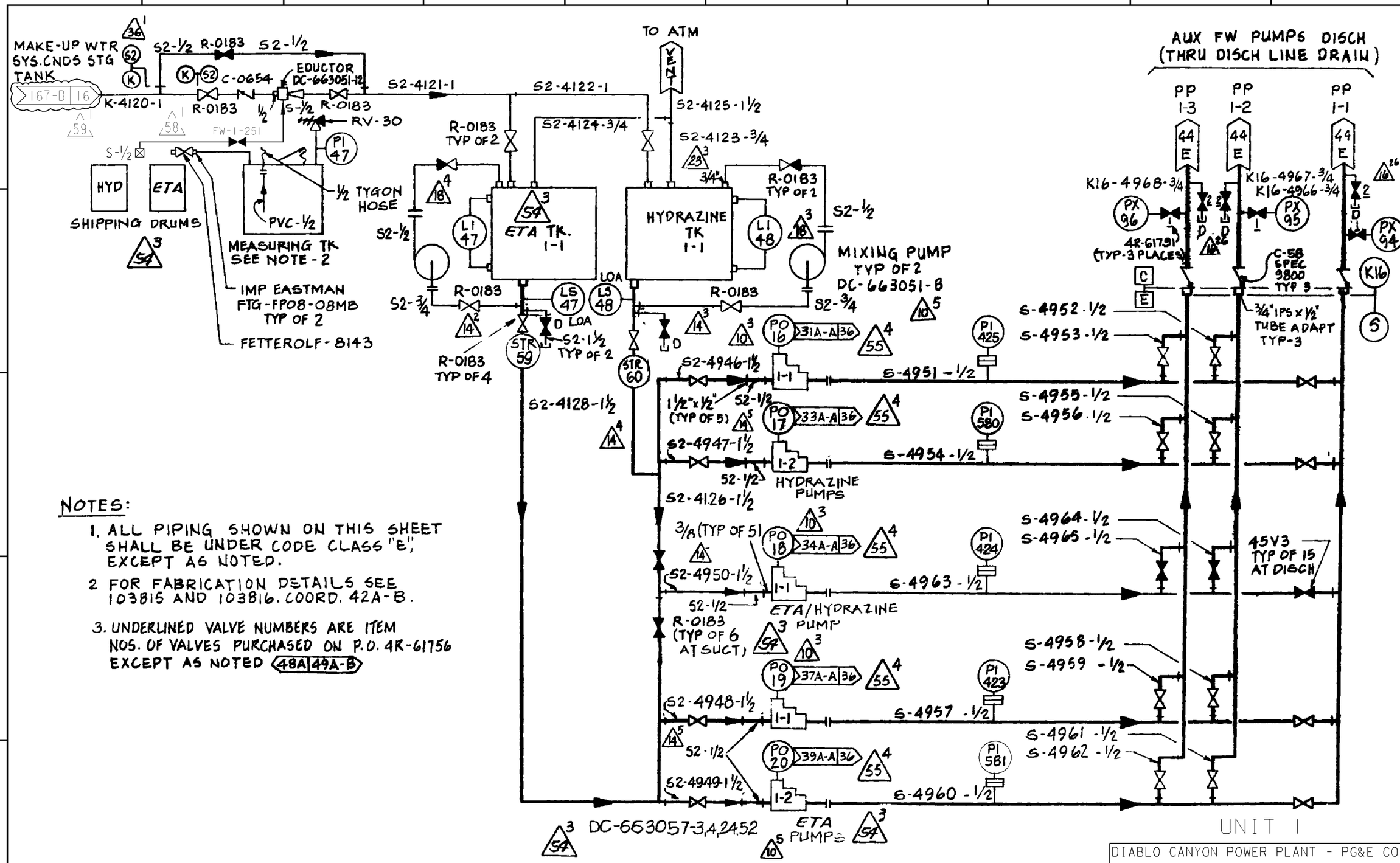

NOTES:

1. ALL PIPING SHOWN ON THIS SHEET SHALL BE UNDER CODE CLASS "E", EXCEPT AS NOTED.
2. FOR FABRICATION DETAILS SEE 103815 AND 103816. COORD. 42A-B.
3. UNDERLINED VALVE NUMBERS ARE ITEM NOS. OF VALVES PURCHASED ON P.O. 4R-61756 EXCEPT AS NOTED 48A 49A-B

AUXILIARY FEEDWATER ETA/HYDRAZINE INJECTION SYSTEM

DIABLO CANYON POWER PLANT - PG&E CO.

DRAWING	SHEET	PAGE	REV
102003	4A	0	59

DATE	DWN	RE	IV	PROFESSIONAL ENGINEER	PE DISC.	PE#	PE EXP.	
01-04-2006	MIBF	KJD3		FRANCIS C. LING	MECHANICAL	M 16098	12/31/2007	REVISED PER FCT-030760

RASTER=2003s4a.dgn
DGN=2003s4a.dgn
CAD User: MIBF Date: 01-04-2006

INPGIC
I Size

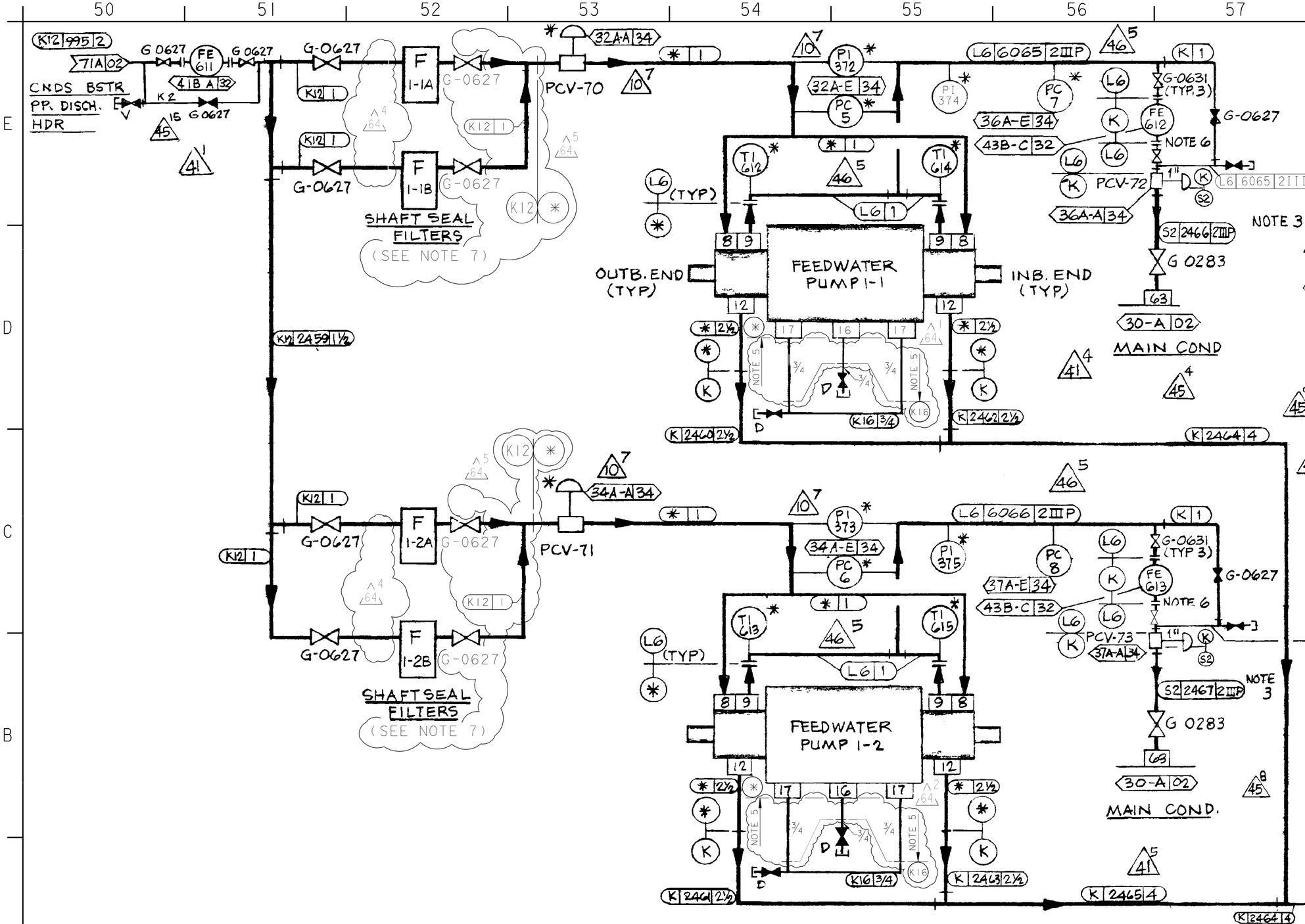

NOTE:

1. ALL PIPING ON THIS SHEET TO BE CODE CLASS E
2. ALL ISOLATION VALVES ON THIS SHEET WITH PG&E MARK NOS SHALL BE FURNISHED BY SPEC 8711
3. PIPING & SWAGE MATERIAL SHALL BE PER SPEC S2 EXCEPT THAT WALL THICKNESS SHALL BE SCH. 80 & MATERIAL SHALL TP304L FOR PIPING, VALVE & FLANGE <57-B,E>
4. FE/FIT-611,-612,-613 AND FT-614 SHALL BE CALIBRATED PER QUALIFIED PROCEDURES PRIOR TO BEING USED TO CALIBRATE REACTOR POWER LEVEL
5. CASING PIPE STUBS ARE SCH. 160 ASTM A335 GR P22 <54/55-B,D>
6. FLANGE PAIRS IMMEDIATELY UPSTREAM & DOWNSTREAM OF FLOW SECTIONS FE-612/FE-613 AND IMMEDIATELY UPSTREAM OF PCV-72/PCV-73 ARE PER PIPE SPEC K. <57-C,E>
7. PALL FILTER P/N: HH8600B16**TBP <52-B,D>

FEEDWATER PUMPS SHAFT SEAL SYSTEM

DC-663055-285

UNIT 1

P G & E CO.	102003	REV. 64
SHEET 5 PAGE 0		

DATE	DWN	RE	IV	PROFESSIONAL ENGINEER	PE DISC.	PE#	PE EXP.	
5/23/02	RHSI	RXG2	KJD3	KERSI J. DALAL	MECHANICAL	M 16690	3/31/2004	Revised per A0542376/FCT-26092-02 & A0539217/FCT-25944-01

CAD User:rxg2 Date: 4-23-2002 DGN=ERU87661.DGN RASTER=ERU87661.TIF

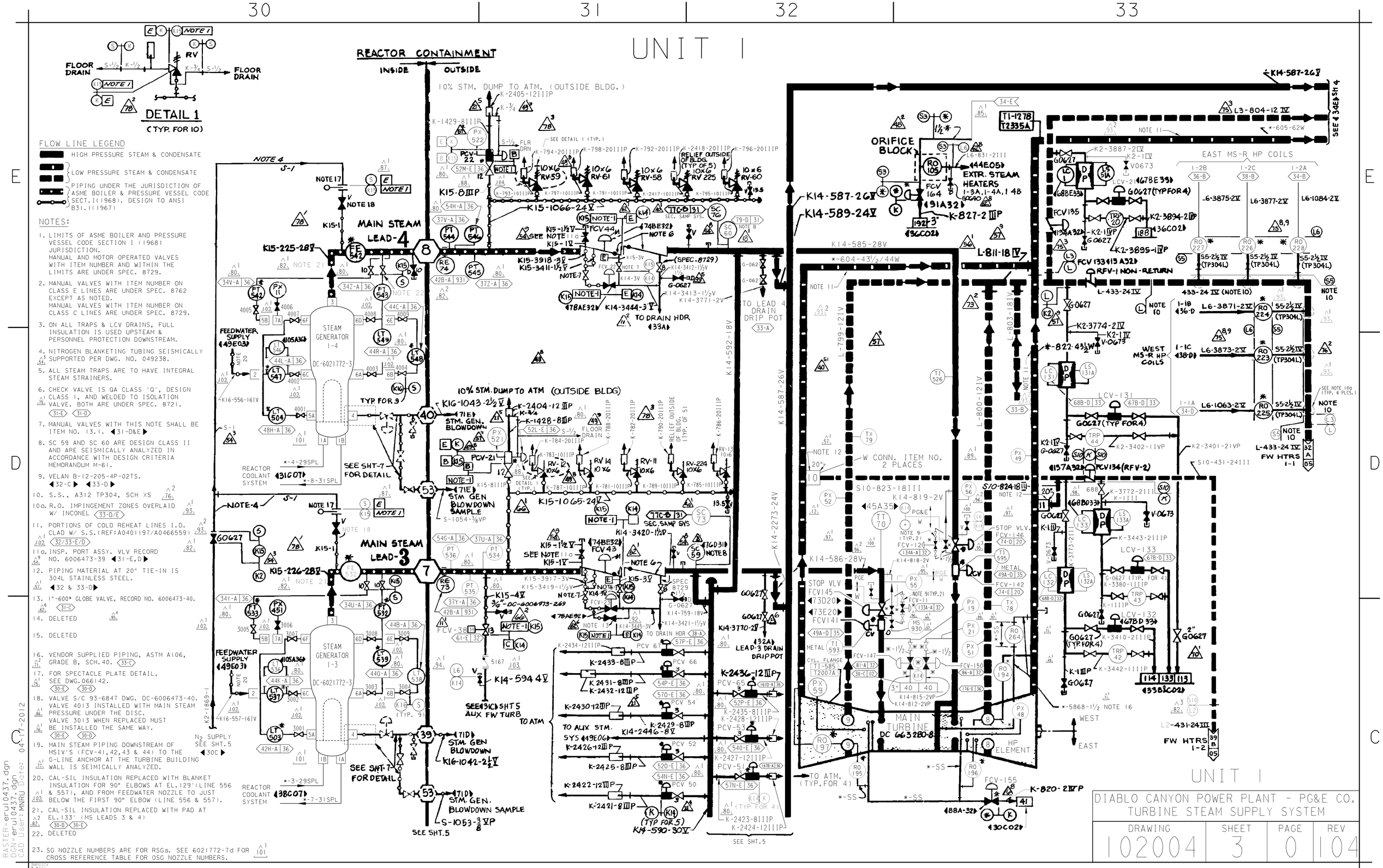

FLOW LINE LEGEND

- HIGH PRESSURE STEAM & CONDENSATE
- LOW PRESSURE STEAM & CONDENSATE
- PIPING UNDER THE JURISDICTION OF ASME BOILER & PRESSURE VESSEL CODE SECT. I (1968). DESIGN TO ANSI B31.1 (1967)

NOTES:

1. LIMITS OF ASME BOILER AND PRESSURE VESSEL CODE SECTION I (1968) JURISDICTION. MANUAL AND MOTOR OPERATED VALVES WITH ITEM NUMBER AND WITHIN THE LIMITS ARE UNDER SPEC. 8729.
2. MANUAL VALVES WITH ITEM NUMBER ON CLASS E LINES ARE UNDER SPEC. 8762 EXCEPT AS NOTED. MANUAL VALVES WITH ITEM NUMBER ON CLASS C LINES ARE UNDER SPEC. 8729.
3. ON ALL TRAPS & LCV DRAINS, FULL INSULATION IS USED UPSTEAM & PERSONNEL PROTECTION DOWNSTREAM.
4. NITROGEN BLANKETING TUBING SEISMICALLY SUPPORTED PER DWG. NO. 049238.
5. ALL STEAM TRAPS ARE TO HAVE INTEGRAL STEAM STRAINERS.
6. CHECK VALVE IS QA CLASS 'Q', DESIGN CLASS I, AND WELDED TO ISOLATION VALVE. BOTH ARE UNDER SPEC. 8721. (31-E) (31-D)
7. MANUAL VALVES WITH THIS NOTE SHALL BE ITEM NO. 13.1. ◀ 31-D&E ▶
8. SC 59 AND SC 60 ARE DESIGN CLASS II AND ARE SEISMICALLY ANALYZED IN ACCORDANCE WITH DESIGN CRITERIA MEMORANDUM M-61.
9. VELAN B-12-205-4P-02TS. ◀ 32-C ▶ ◀ 33-D ▶
10. S.S., A312 TP304, SCH XS
10a. R.O. IMPINGEMENT ZONES OVERLAID W/ INCONEL (33-D/E)
11. PORTIONS OF COLD REHEAT LINES I.D. CLAD W/ S.S. (REF: A0401197/A0466559) (32/33-E/D)
11a. INSP. PORT ASSY. VLV RECORD NO. 6006473-39 ◀ 31-E, D ▶
12. PIPING MATERIAL AT 20" TIE-IN IS 304L STAINLESS STEEL. ◀ 32 & 33-D ▶
13. 1"-600# GLOBE VALVE, RECORD NO. 6006473-40. (31-C)
14. DELETED
15. DELETED
16. VENDOR SUPPLIED PIPING, ASTM A106, GRADE B, SCH. 40. (33-C)
17. FOR SPECTACLE PLATE DETAIL, SEE DWG. 066142. (30-E) (30-D)
18. VALVE S/C 93-6847 DWG. DC-6006473-40. VALVE 4013 INSTALLED WITH MAIN STEAM PRESSURE UNDER THE DISC. VALVE 3013 WHEN REPLACED MUST BE INSTALLED THE SAME WAY. (30-E) (30-D)
19. MAIN STEAM PIPING DOWNSTREAM OF MSIV'S (FCV-41, 42, 43 & 44) TO THE G-LINE ANCHOR AT THE TURBINE BUILDING WALL IS SEIMICALLY ANALYZED. ◀ 30C ▶
20. CAL-SIL INSULATION REPLACED WITH BLANKET INSULATION FOR 90° ELBOWS AT EL. 129' (LINE 556 & 557), AND FROM FEEDWATER NOZZLE TO JUST BELOW THE FIRST 90° ELBOW (LINE 556 & 557).
21. CAL-SIL INSULATION REPLACED WITH PAD AT EL. 133' (MS LEADS 3 & 4) (30-D) (30-E)
22. DELETED
23. SG NOZZLE NUMBERS ARE FOR RSGs. SEE 6021772-7d FOR CROSS REFERENCE TABLE FOR OSG NOZZLE NUMBERS.

UNIT 1

DIABLO CANYON POWER PLANT - PG&E CO.
TURBINE STEAM SUPPLY SYSTEM

DRAWING	SHEET	PAGE	REV
102004	3	0	104

DATE	DWN	RE	IV	PROFESSIONAL ENGINEER	PE DISC.	PE#	PE EXP.	
04-17-2012	MNRU	FxC2		KERSI J. DALAL	MECHANICAL	M 16690	3/31/2014	REVISED PER DFT-7*1489-0

RASTER=eruj0437.dgn
DGN=eruj0437.dgn
CAD User=MNRU Date: 04-17-2012

SHEETSIZE
3 size

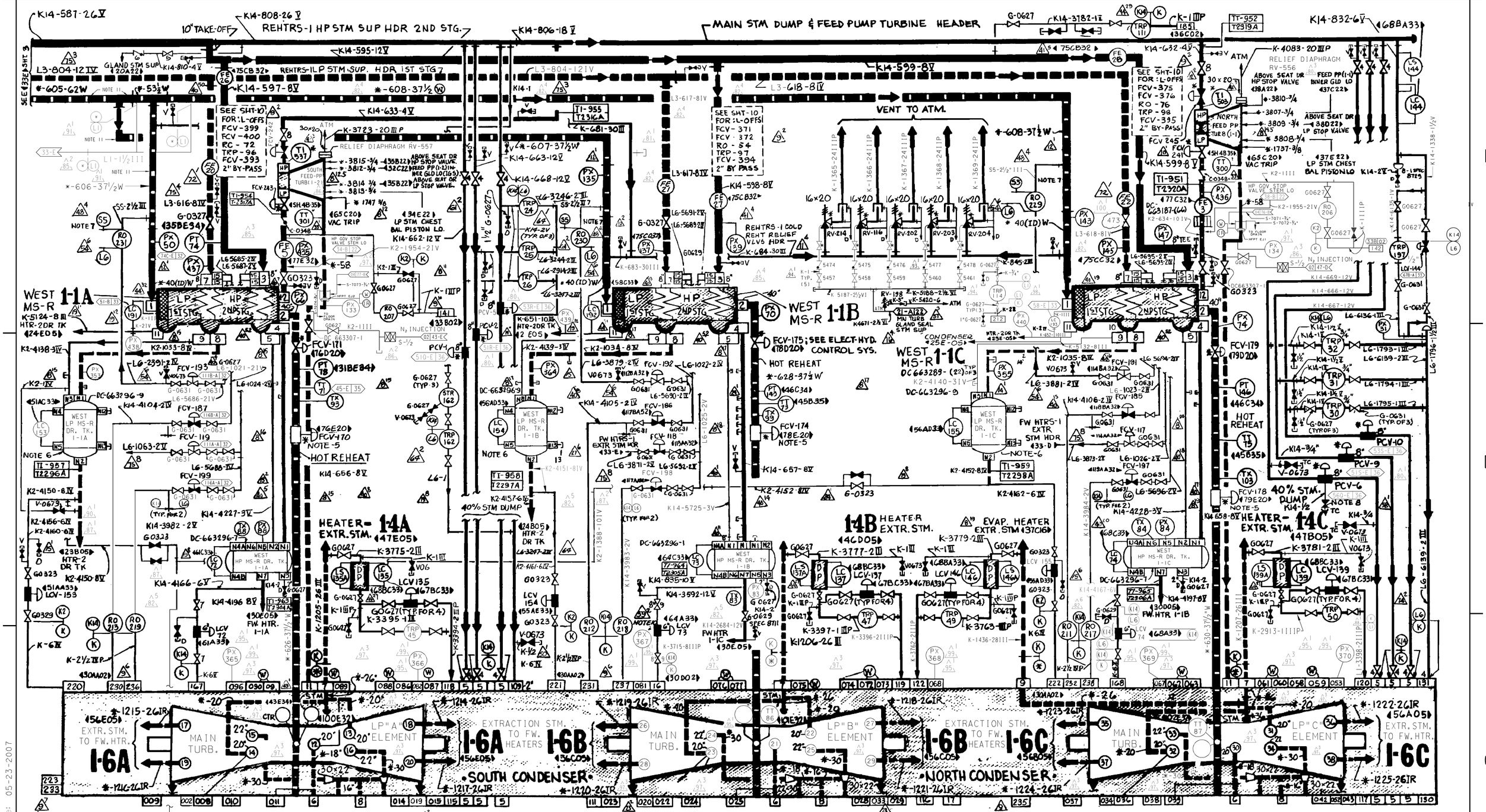

NOTES:
1. PG&E CODE CLASS E MANUAL VALVES WITH ITEM NOS. ARE UNDER SPEC. 8762.
2. ON ALL TRAPS AND LCV DRAINS, FULL INSULATION IS USED UPSTREAM AND PERSONNEL PROTECTION DOWNSTREAM.
3. (W) DENOTES WESTINGHOUSE NOZZLE.
4. ALL PIPING THIS SHEET: PG&E CODE CLASS E
5. REFER TO E-H SYS. DWG. 102020 SHTS. 3 & 3A.
6. ADDITIONAL INST. & NOZZLES FOR LPMS-R DRAIN TANK.

LP MS-R DRAIN TK.	LI NOZ. N6/N7	LG (LOA) NOZ. N8/N9	LS (LIA) NOZ. N10/N11
1-1A	253	253A	253B
1-1B	254	254A	254B
1-1C	255	255A	255B

7. 2½" PIPING DENOTED IS PG&E PIPING SPEC. S5. EXCEPT SOCKET WELDING ENDS ARE USED AT ELBOWS.
8. 1/2" GLOBE, DWG. 6006473-40 (39-D)
9. DELETED
10. CONDENSER NITROGEN INJECTION FOR DISSOLVED OXYGEN CONTROL IS THROUGH PX-367. FOR NITROGE SUPPLY, SEE SYSTEM 05, (102005, COORD. 78-D). (36-C)
11. PORTIONS OF COLD REHEAT LINES I.D. CLAD W/ S.S. REF: A0401197/A0466559. (34-E)

FLOW LINE LEGEND
HIGH PRESSURE STEAM AND CONDENSATE
LOW PRESSURE STEAM AND CONDENSATE

DIABLO CANYON POWER PLANT - PG&E CO.
TURBINE STEAM SUPPLY SYSTEM

DRAWING	SHEET	PAGE	REV
102004	4	0	100

DATE	DWN	RE	IV	PROFESSIONAL ENGINEER	PE DISC.	PE#	PE EXP.	
05-23-2007	MIBF	FxC2		KERSI J. DALAL	MECHANICAL	M 16690	3/31/2008	REVISED PER FCT-32460

RASTER=ERU10438.DGN
DGN=ERU10438.DGN
CAD User: MIBF Date: 05-23-2007

STM. GEN. NOZZLES	
PG&E	MFR.
1-A	1A
1-B	1B
3	2
4	3
5-A	4A
5-B	4B
6	5
7	6
8D-1	7B
8D-2	7A
9A-1	8A
9A-2	8D
9B-1	8B
9B-2	8E
9C-1	8C
9C-2	8F

ABOVE NOZ. EQUIV. TYP. FOR ALL GENS. SEE NOTE 8

FLOW LINE LEGEND

- HIGH PRESSURE STEAM & CONDENSATE
- LOW PRESSURE STEAM & CONDENSATE
- PIPING UNDER THE JURISDICTION OF ASME BOILER & PRESSURE VESSEL CODE SECT. I (1968. DESIGN TO ANSI B31.1 (1967)

NOTES:

1. LIMITS OF ASME BOILER AND PRESSURE VESSEL CODE SECTION I (1968) JURISDICTION. MANUAL AND MOTOR OPERATED VALVES WITH ITEM NUMBER AND WITHIN LIMITS ARE UNDER SPEC. 8729.
2. MANUAL VALVES WITH ITEM NUMBER ON CLASS E LINES ARE UNDER SPEC. 8762 EXCEPT AS NOTED. MANUAL VALVES WITH ITEM NUMBER ON CLASS B OR C LINES ARE UNDER SPEC. 8729 EXCEPT AS NOTED.
3. ON ALL TRAPS & LCV DRAINS, FULL INSULATION IS USED UPSTREAM & PERSONNEL PROTECTION DOWN STREAM.
4. NITROGEN BLANKETING TUBING SEISMICALLY SUPPORTED PER DWG. NO. 049238.
5. ALL STEAM TRAPS ARE TO HAVE INTEGRAL STEAM STRAINERS.
6. CHECK VALVE IS QA CLASS 'Q', DESIGN CLASS I, AND WELDED TO ISOLATION VALVE. BOTH ARE UNDER SPEC. 8721 (31-B) (31-A)
7. MANUAL VALVES WITH THIS NOTE SHALL BE ITEM NO. 13.1 (31-A/D)
8. (SEE TABLE (30-C)) SUBSCRIPTS A, B, A-1, A-2, ETC. WERE ADDED TO NOZZLE NOS. TO DIFFERENTIATE SERVICE & INSTRUMENT TAGGING. REF. DWGS: DC-663206-3,-13 TO -20.
9. (FE-1) ORIFICE PLATE REMOVED. ORIFICE FLANGES WITH VALVES RETAINED. (31-B)
10. VELAN MODEL #W04-2074B-02MS, DWG. #DC-6006473-40. (31-B)
11. CAL-SIL INSULATION REPLACED WITH BLANKET INSULATION FOR 90° ELBOWS AT EL.129' (LINE 554&555), AND FROM FEEDWATER NOZZLE TO JUST BELOW THE FIRST 90° ELBOW (LINE 554&555).
12. SC57 & SC58 ARE DESIGN CLASS II & ARE SEISMICALLY ANALYZED IN ACCORDANCE WITH DESIGN CRITERIA MEMORANDUM M61.
13. MAIN STEAM LEAD DRIP POT DRAIN PIPING SHALL BE IN ACCORDANCE WITH DC-049063 TYPE V.
14. ½", P0722732, ITEM 1.
15. VELAN B 12 205 4P-02TS (33-B)
16. DELETED.
17. DELETED.
18. INSP PORT ASSY VALVE RECORD NO. 6006473-39 (31-A/B)
19. 1" VELAN CHECK VALVE DWG. #DC-6006473-169 STOCK #93-2915. (31-B)
20. TEMPORARY PRESSURE TRANSDUCER AND GAUGE FOR TESTING OF FCV-95. (31-B)
21. 4"Ø PIPE IS SCH 80 ASME SA 106, GR. B. (31-B)
22. 4"Ø, 900# RJWN FLANGE. (31-B)
23. 4" - 900# DD, GATE, BW ANCHOR/DARLING DWG. 6011930-7 & 8 RPE P-7385. (31-B)
24. 1" - 1500# GLOBE KEROTEST, SC#94-3775 DWG. 6006473-142. (31-B)
25. 1" SPECTACLE FLANGE ANSI 600#, GREENWOOD, DC-6012369-1. (30-C)

-NOTES CONT AT 53-B

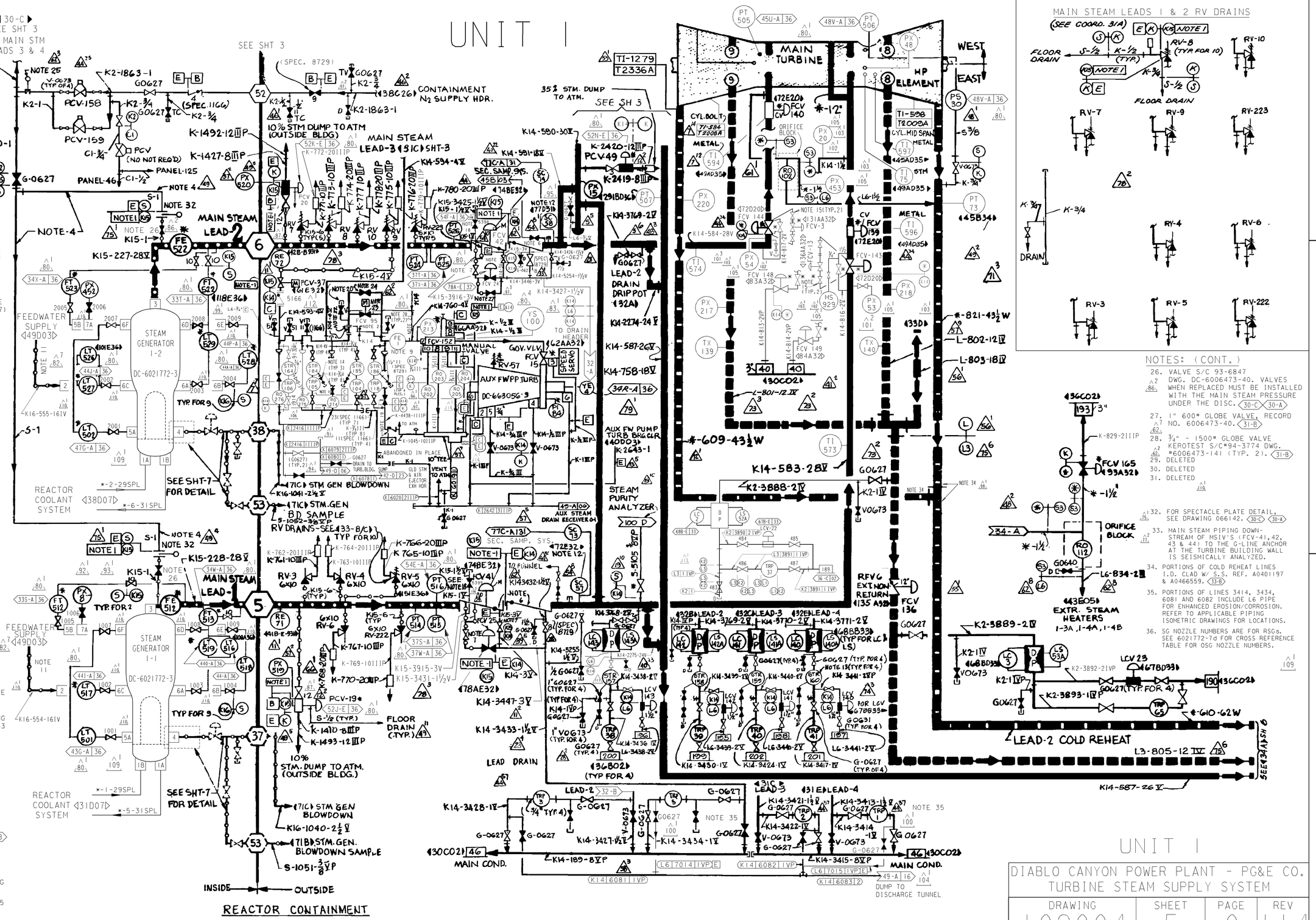

NOTES: (CONT.)

26. VALVE S/C 93-6847
27. DWG. DC-6006473-40. VALVES WHEN REPLACED MUST BE INSTALLED WITH THE MAIN STEAM PRESSURE UNDER THE DISC. (30-C) (30-A)
28. 1" 600# GLOBE VALVE, RECORD NO. 6006473-40. (31-B)
29. 3/4" - 1500# GLOBE VALVE KEROTEST S/C#94-3774 DWG. #6006473-141 (TYP. 2). (31-B)
30. DELETED
31. DELETED
32. FOR SPECTACLE PLATE DETAIL, SEE DRAWING 066142. (30-C) (30-A)
33. MAIN STEAM PIPING DOWN-STREAM OF MSIV'S (FCV-41,42, 43 & 44) TO THE G-LINE ANCHOR AT THE TURBINE BUILDING WALL IS SEISMICALLY ANALYZED.
34. PORTIONS OF COLD REHEAT LINES I.D. CLAD W/ S.S. REF. A0401197 & A0466559. (33-B)
35. PORTIONS OF LINES 3414, 3434, 6081 AND 6082 INCLUDE L6 PIPE FOR ENHANCED EROSION/CORROSION. REFER TO APPLICABLE PIPING ISOMETRIC DRAWINGS FOR LOCATIONS.
36. SG NOZZLE NUMBERS ARE FOR RSGs. SEE 6021772-7d FOR CROSS REFERENCE TABLE FOR OSG NOZZLE NUMBERS.

UNIT 1

DIABLO CANYON POWER PLANT - PG&E CO.
TURBINE STEAM SUPPLY SYSTEM

DRAWING	SHEET	PAGE	REV
102004	5	0	114

DATE	DWN	RE	IV	PROFESSIONAL ENGINEER	PE DISC.	PE#	PE EXP.	
08-29-2012	AJFJ	FXC2		KERSI J. DALAL	MECHANICAL	M 16690	3/31/2014	REVISED PER DFT-7*1712

RASTER=eru08135.dgn
DGN=eru08135.dgn
CAD User=AJFJ Date: 08-29-2012

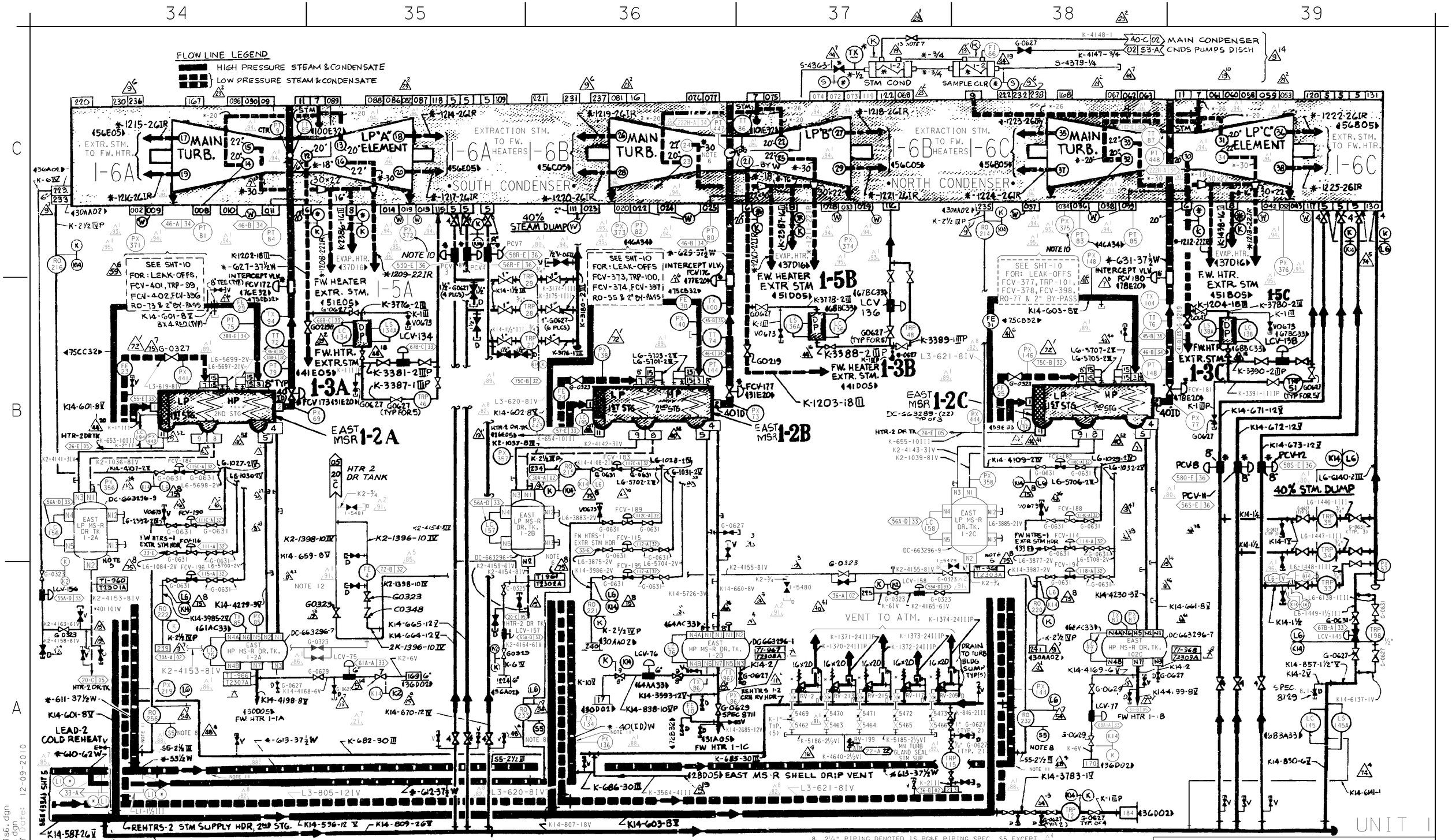

NOTES:

1. PG&E CODE CLASS E MANUAL & MOTOR OPERATED VALVES WITH ITEM NO. ARE UNDER SPEC. 8762.
2. ON ALL TRAP & LCV DRAINS FULL INSULATION IS USED UP STREAM AND PERSONNEL PROTECTION DOWNSTREAM.
3. W DENOTES WESTINGHOUSE NOZZLE.
4. ALL PIPING THIS SHEET: PG&E CODE CLASS E.
5. ADDITIONAL INST. & NOZZLES FOR LP MS-R DRAIN TANK
6. NOZZLE SAMPLE DAB BY WESTINGHOUSE (DWG. DC-663280-65) 36-C
7. 1" VOGT GLOBE VALVE SER 12141P HF 800 W.P. 37-C
8. 2½" PIPING DENOTED IS PG&E PIPING SPEC. S5 EXCEPT SOCKET WELDING ENDS ARE USED AT ELBOWS.
9. DELETED
10. COND. N, INJ. FOR DISSOLVED O, CONT. IS THRU PX-372 & PX-375. FOR N, SUPPLY SEE SYSTEM 05 (102005, COORD. 78-D 35,38-C
11. PORTIONS OF COLD REHEAT LINE I.D. CLAD W/ S.S. REF: A0401197/A0466559. 34/36/38-A
12. VALVE DELETED. 91

LP MS-R DRAIN TK	LI	LS(LOA)	LS(MIA)
	NOZ.N7/N6	NOZ.N8/N9	NOZ.N10/N11
I-2A	256	256A	256B
I-2B	257	257A	257B
I-2C	258	258A	258B

DIABLO CANYON POWER PLANT - PG&E CO.
TURBINE STEAM SUPPLY SYSTEM

DRAWING	SHEET	PAGE	REV
102004	6	0	96

DATE	DWN	RE	IV				
12-09-2010	GNO7	FxC2		KERSI J. DALAL	MECHANICAL	M 16690	3/31/2012	REVISED PER DFT-7*939
				PROFESSIONAL ENGINEER	PE DISC.	PE#	PE EXP.	

RASTER=102004s6.dgn
DGN=102004s6.dgn
CAD User: GNO7 Date: 12-09-2010

UNIT 1

STEAM GENERATORS BLOWDOWN SYSTEM

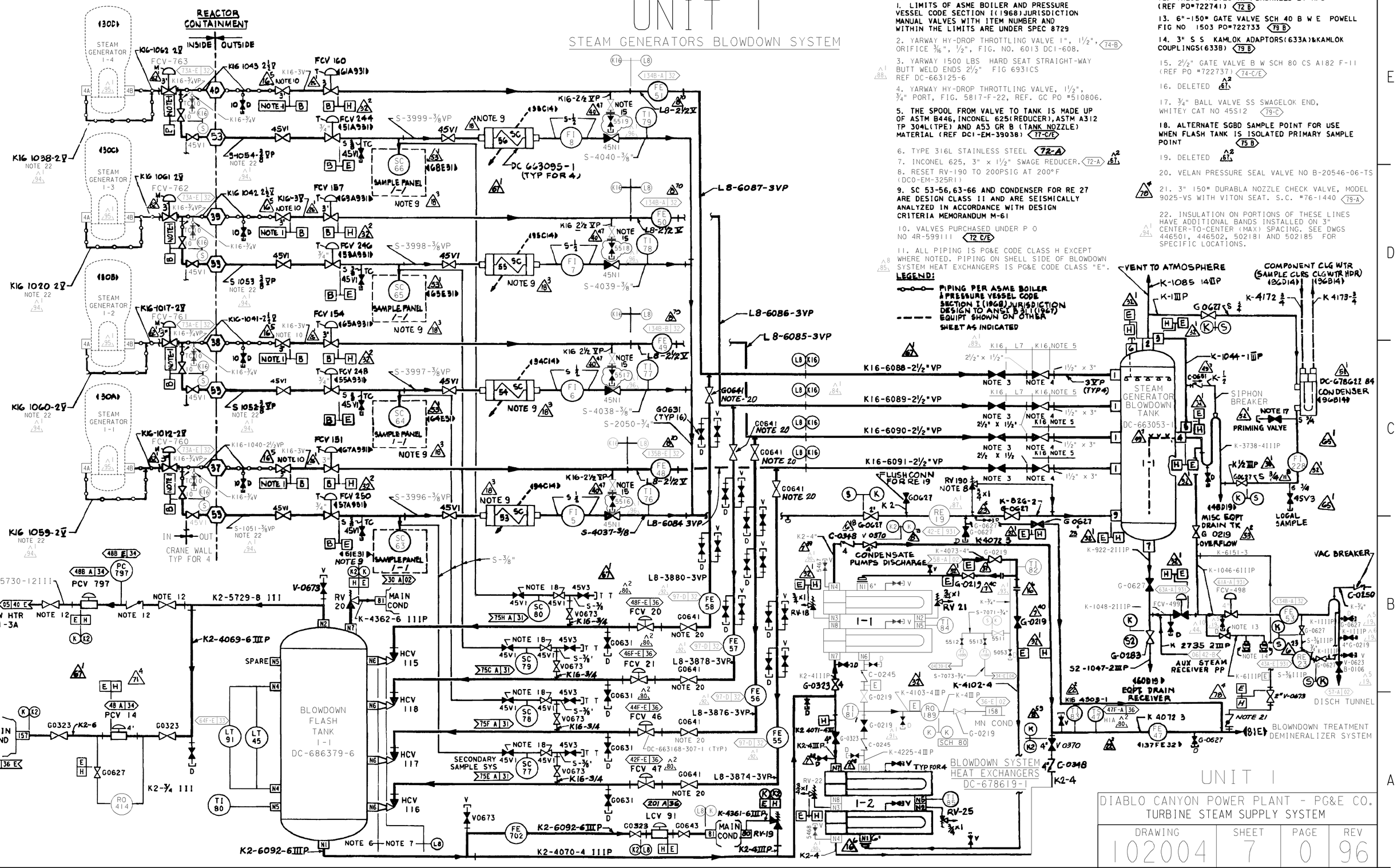

NOTES

1. LIMITS OF ASME BOILER AND PRESSURE VESSEL CODE SECTION I(1968)JURISDICTION MANUAL VALVES WITH ITEM NUMBER AND WITHIN THE LIMITS ARE UNDER SPEC 8729
2. YARWAY HY-DROP THROTTLING VALVE 1", 1½", ORIFICE ⅜", ½", FIG. NO. 6013 DCI-608. (74-B)
3. YARWAY 1500 LBS HARD SEAT STRAIGHT-WAY BUTT WELD ENDS 2½" FIG 6931CS REF DC-663125-6
4. YARWAY HY-DROP THROTTLING VALVE, 1½", ¾" PORT, FIG. 5817-F-22, REF. GC PO #510806.
5. THE SPOOL FROM VALVE TO TANK IS MADE UP OF ASTM B446, INCONEL 625(REDUCER), ASTM A312 TP 304L(TPE) AND A53 GR B (TANK NOZZLE) MATERIAL (REF DCI-EM-39038) (77-C/E)
6. TYPE 316L STAINLESS STEEL (72-A)
7. INCONEL 625, 3" × 1½" SWAGE REDUCER. (72-A) (67)
8. RESET RV-190 TO 200PSIG AT 200°F (DCO-EM-325R1)
9. SC 53-56,63-66 AND CONDENSER FOR RE 27 ARE DESIGN CLASS II AND ARE SEISMICALLY ANALYZED IN ACCORDANCE WITH DESIGN CRITERIA MEMORANDUM M-61
10. VALVES PURCHASED UNDER P O NO 4R-599111 (72 C/E)
11. ALL PIPING IS PG&E CODE CLASS H EXCEPT WHERE NOTED. PIPING ON SHELL SIDE OF BLOWDOWN SYSTEM HEAT EXCHANGERS IS PG&E CODE CLASS "E".

LEGEND:

- PIPING PER ASME BOILER & PRESSURE VESSEL CODE SECTION I (1968) JURISDICTION DESIGN TO ANSI B31 (1967) EQUIPT SHOWN ON OTHER SHEET AS INDICATED
- PIPING PER ASME BOILER & PRESSURE VESSEL CODE SECTION I (1968) JURISDICTION MANUAL VALVES WITH ITEM NUMBER AND WITHIN THE LIMITS ARE UNDER SPEC 8729

12. THESE VALVES ARE PURCHASED BY NPO (REF PO#722741) (72 B)
13. 6"-150# GATE VALVE SCH 40 B W E POWELL FIG NO 1503 PO#722733 (79 B)
14. 3" S S KAMLOK ADAPTORS(633A)&KAMLOK COUPLINGS(633B) (79 B)
15. 2½" GATE VALVE B W SCH 80 CS A182 F-11 (REF PO #722737) (74-C/E)
16. DELETED (67)
17. ¾" BALL VALVE SS SWAGELOK END, WHITEY CAT NO 45S12 (79-C)
18. ALTERNATE SGBD SAMPLE POINT FOR USE WHEN FLASH TANK IS ISOLATED PRIMARY SAMPLE POINT (75 B)
19. DELETED (67)
20. VELAN PRESSURE SEAL VALVE NO B-20546-06-TS
21. 3" 150# DURABLA NOZZLE CHECK VALVE, MODEL 9025-VS WITH VITON SEAT. S.C. #76-1440 (79-A)
22. INSULATION ON PORTIONS OF THESE LINES HAVE ADDITIONAL BANDS INSTALLED ON 3" CENTER-TO-CENTER (MAX) SPACING. SEE DWGS 446501, 446502, 502181 AND 502185 FOR SPECIFIC LOCATIONS.

UNIT 1

DIABLO CANYON POWER PLANT - PG&E CO.
TURBINE STEAM SUPPLY SYSTEM

DRAWING	SHEET	PAGE	REV
102004	7	0	96

DATE	DWN	RE	IV	PROFESSIONAL ENGINEER	PE DISC.	PE#	PE EXP.	
05-01-2012	AJFJ	FxC2		KERSI J. DALAL	MECHANICAL	M 16690	3/31/2014	REVISED PER DDT-4#408-01

RASTER=erul041.dgn
DGN=erul041.dgn
CAD User-AJFJ Date: 05-01-2012

STEAM GENERATORS BLOWDOWN TREATMENT DEMINERALIZER SYSTEM

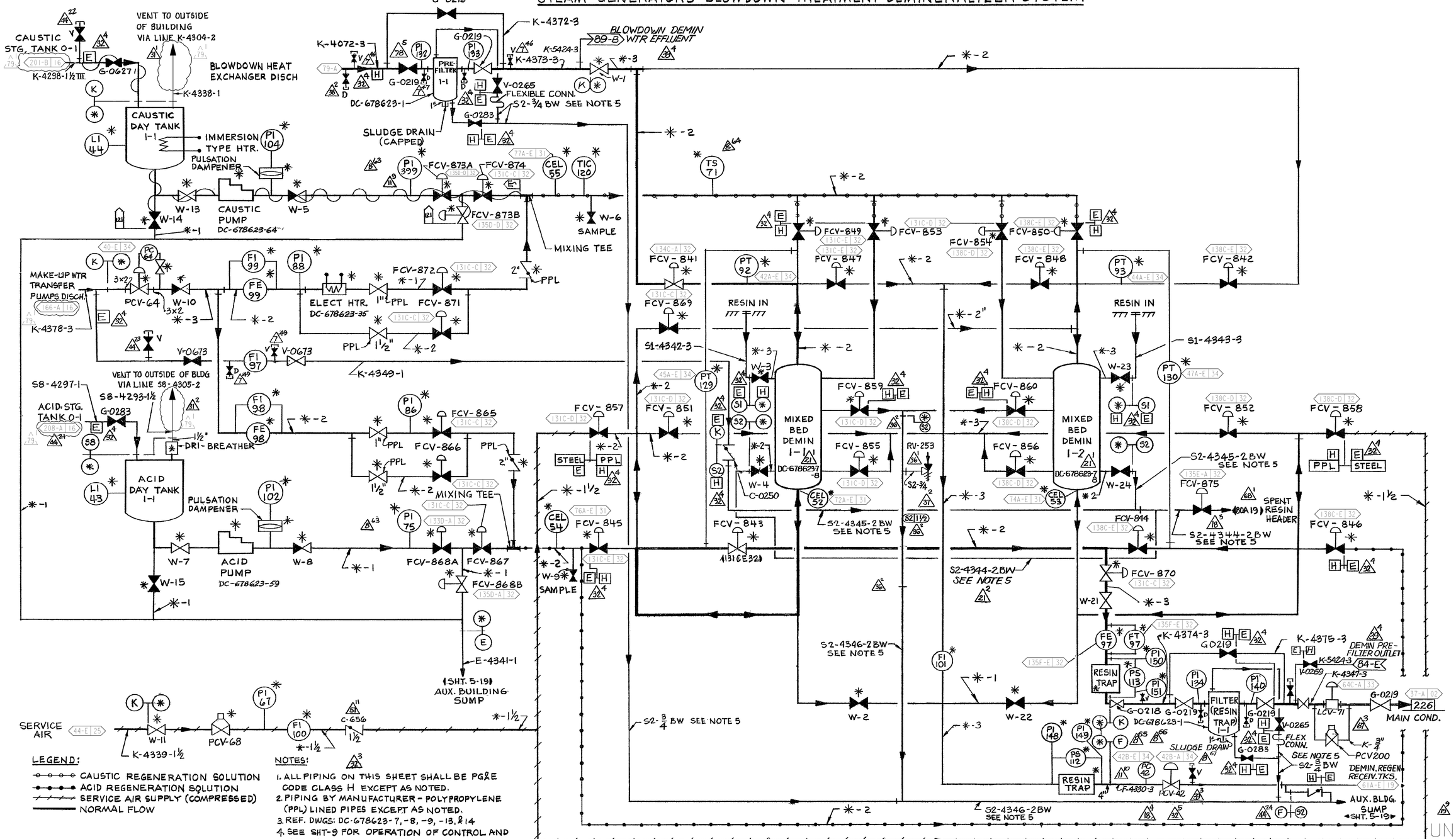

LEGEND:

- CAUSTIC REGENERATION SOLUTION
- ACID REGENERATION SOLUTION
- SERVICE AIR SUPPLY (COMPRESSED)
- NORMAL FLOW

NOTES:

1. ALL PIPING ON THIS SHEET SHALL BE PG&E CODE CLASS H EXCEPT AS NOTED.
2. PIPING BY MANUFACTURER - POLYPROPYLENE (PPL) LINED PIPES EXCEPT AS NOTED.
3. REF. DWGS: DC-678623-7, -8, -9, -13, & 14
4. SEE SHT-9 FOR OPERATION OF CONTROL AND REGENERATION PROGRAM.
5. BW- DENOTES BUTTWELDED, LINES WITH THIS NOTE SHALL HAVE BUTTWELDED JOINTS TO AVOID ENTRAPMENT OF RESIN. (83E, 84B, 85B, 86A, 88A/B)
6
7. ~~POSI-SEAL 02-1134-13-01-02 BUTTERFLY VALVE WITH 1M GEAR OPERATOR (87-4)~~

DIABLO CANYON POWER PLANT - PG&E CO.

DRAWING	SHEET	PAGE	REV
102004	8	0	79

DATE	DWN	RE	IV	PROFESSIONAL ENGINEER	PE DISC.	PE#	PE EXP.	
12-19-2005	MIBF	KJD3		FRANCIS C. LING	MECHANICAL	M 16098	12/31/2005	REVISED PER FCT-030760

RASTER=2004s8.dgn
DGN=2004s8.dgn
CAD User: MIBF DGrev: 12-19-2005

ANSI/ISO 3 Size

90 91 92 93 94 95 96 97 98 99

OPERATION OF CONTROL AND REGENERATION PROGRAM FOR STEAM GENERATORS BLOWDOWN CLEAN-UP MIXED BED DEMINERALIZERS

STEP SWITCH NO.					FLOW CONTROL VALVE (MIXED BED DEMINERALIZERS: 1-1/1-2 .													FLOW CONTROL VALVE (ACID SOLUTION)						FLOW CONTROL VALVE (CAUSTIC SOLUTION)										
							A	B	E	F	C	D	G	H		I			K	L	M				N	O	P					J	Q	R	S	T
					FCV-841 FCV-842	FCV-843 FCV-844	FCV-845 FCV-846	FCV-847 FCV-848	FCV-849 FCV-850	FCV-851 FCV-852	FCV-853 FCV-854	FCV-855 FCV-856	FCV-857 FCV-858	FCV-859 FCV-860	FCV-869			FCV-870	FCV-865	FCV-866	FCV-867	FCV-868A	FCV-868B	-	FCV-871	FCV-872	FCV 873A	-	-	FCV-874	FCV 873B					
					SERVICE		BACKWASH		RINSE																									
STEP	FUNCTION AND DESCRIPTION	RATE (GPM)	SOURCE	TIME (MIN)	INLET	OUTLET	ACID INLET	OUTLET	INLET	OUTLET	CAUSTIC INLET	INTER-FACE OUTLET	AIR INLET	VENT	SERIES			ISO-LATION	DI-LUTION WATER	BACK-WASH	SHUT-OFF WATER	SHUT-OFF ACID	LEAK OFF	PUMP	DILUTION WATER COLD	DILUTION WATER HOT	SHUT-OFF CAUSTIC	CAUSTIC TEMP CONTROL	PUMP	SHUT OFF WATER	LEAK OFF	REGEN COM-PLETE RESET	FINAL RINSE COND CHECK	TIMER RESET	REGEN COM-PLETE ALARM	REGEN RESET
1	LAG			0.5	BY SELECTOR SWITCH										BY SELECTOR SWITCH			ON HIGH CONDUCTIVITY					○							○			⊗		
2	BACKWASH	60	RI	15			○	○												○			○								○					
3	LAG			0.5																			○								○					
4	ACID DRAW	0.58	H_2SO_4	20			○				○	○							○		○	○		R		○	○	○	R	○						
		24.5	RI																																	
	CAUSTIC DRAW (B)	0.9	NaOH																																	
		16	RI																																	
5	ACID DISPLACE	24.5	RI	20 (B)			○				○	○							○				○			○	○	○	R	○						
	CAUSTIC DRAW (B)	0.9	NaOH																																	
		16	RI																																	
6	CATION RINSE	24.5	RI	16			○				○	○							○				○			○					○					
	CAUSTIC DISPLACE	14.2	RI																																	
7	CATION RINSE	24.5	RI	19			○		○			○							○				○		○						○					
	ANION RINSE	75	RI																																	
8	BED LEVEL DRAIN			10		○		○		○			○										○								○					
9	BACKFILL (12")	24.5	RI	6	○									○					○				○								○					
10	AIR MIX (NO.1)	147 SCFM		10									○	○									○								○					
11	LAG			0.5																			○								○			⊗		
12	BED LEVEL DRAIN			5		○		○		○				○									○								○					
13	AIR MIX (NO.2)	147 SCFM		10									○	○									○								○					
14	REFILL	75	RI	12			○							○									○		○						○					
15	FINAL RINSE	75	RI	5			○	○															○		○						○					
16	CONDUCTIVITY CHECK	5	RI	2			○	○															○								○		⊗			
17																																⊗			⊗	
18	SERVICE		SI																				○								○					⊗
MANUAL	SERVICE RINSE	75	RI	5			○	○															○		○						○					
MANUAL	CONDUCTIVITY CHECK	5	RI	2			○																○		○						○					

LEGEND: ○ VALVE OPEN (PIN INSERTED)
⊗ VALVE CLOSED
R PUMP RUNNING

RI REGENERANT INLET WATER
SI SERVICE INLET
⊗ PIN INSERTED

H_2SO_4 - 98% ACID
NaOH - 50% CAUSTIC

UNIT - 1 (4)

P. G. & E. CO.	102004	CHANGE 19
SHEET 9 OF SHEETS		

35 M/M NEG 19 SCANNED: 17

FILM 1 V 19

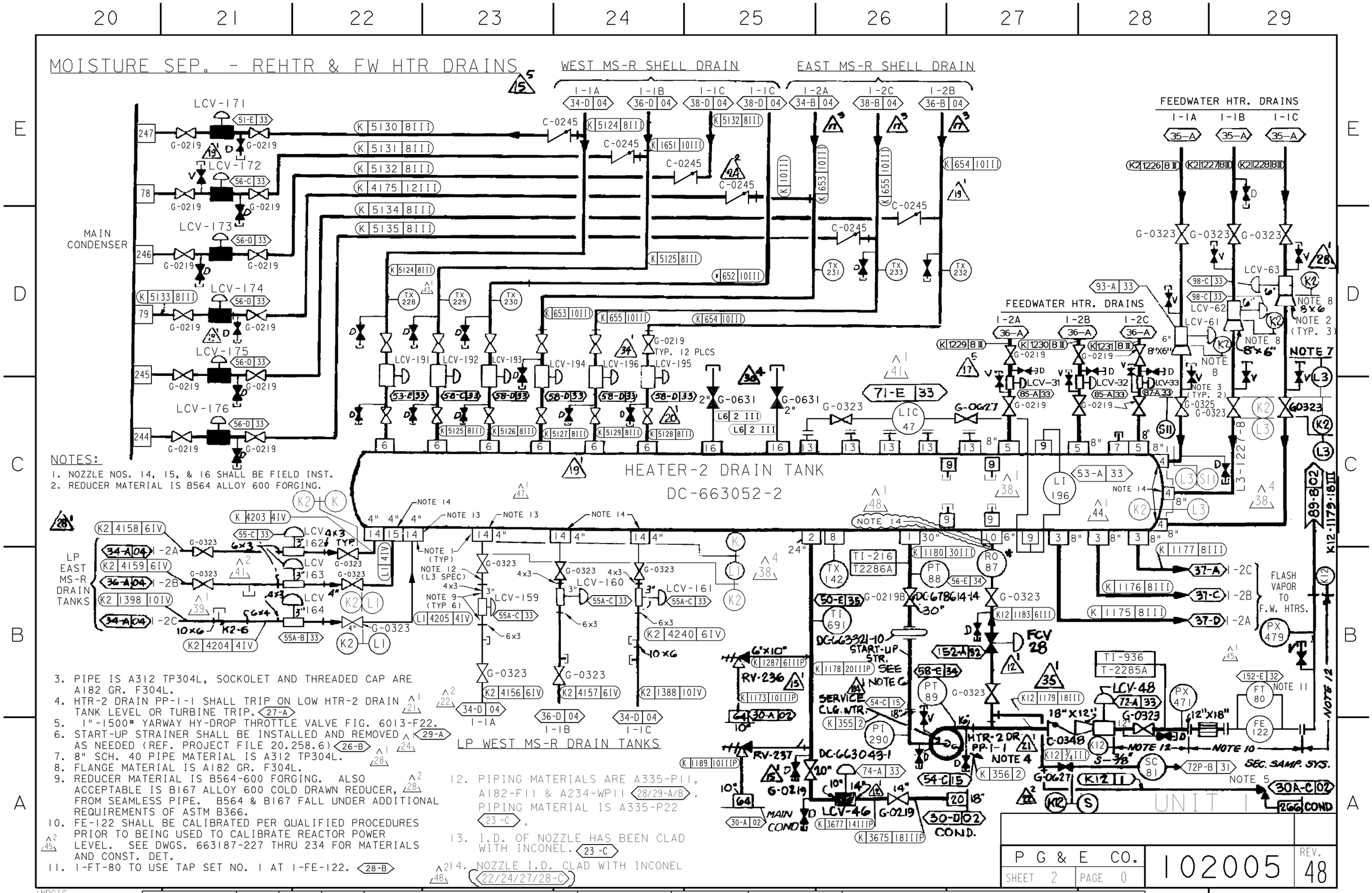

NOTES:

1. NOZZLE NOS. 14, 15, & 16 SHALL BE FIELD INST.
2. REDUCER MATERIAL IS B564 ALLOY 600 FORGING.
3. PIPE IS A312 TP304L, SOCKOLET AND THREADED CAP ARE A182 GR. F304L.
4. HTR-2 DRAIN PP-1-1 SHALL TRIP ON LOW HTR-2 DRAIN TANK LEVEL OR TURBINE TRIP. (27-A)
5. 1"-1500# YARWAY HY-DROP THROTTLE VALVE FIG. 6013-F22.
6. START-UP STRAINER SHALL BE INSTALLED AND REMOVED AS NEEDED (REF. PROJECT FILE 20.258.6) (26-B) (29-A)
7. 8" SCH. 40 PIPE MATERIAL IS A312 TP304L.
8. FLANGE MATERIAL IS A182 GR. F304L.
9. REDUCER MATERIAL IS B564-600 FORGING. ALSO ACCEPTABLE IS B167 ALLOY 600 COLD DRAWN REDUCER, FROM SEAMLESS PIPE. B564 & B167 FALL UNDER ADDITIONAL REQUIREMENTS OF ASTM B366.
10. FE-122 SHALL BE CALIBRATED PER QUALIFIED PROCEDURES PRIOR TO BEING USED TO CALIBRATE REACTOR POWER LEVEL. SEE DWGS. 663187-227 THRU 234 FOR MATERIALS AND CONST. DET.
11. 1-FT-80 TO USE TAP SET NO. 1 AT 1-FE-122. (28-B)
12. PIPING MATERIALS ARE A335-P11, A182-F11 & A234-WP11 (28/29-A/B). PIPING MATERIAL IS A335-P22 (23-C).
13. I.D. OF NOZZLE HAS BEEN CLAD WITH INCONEL. (23-C)
14. NOZZLE I.D. CLAD WITH INCONEL (22/24/27/28-C)

CAD User:MIBF Date: 5-11-2004
DGN=2005S2.DGN
RASTER=2005S2.TIF

INPGIC

5/11/04	MIBF	FXC2	-	KERSI J. DALAL	MECHANICAL	M 16690	3/31/2006	Revised per FCT 028824
DATE	DWN	RE	IV	PROFESSIONAL ENGINEER	PE DISC.	PE#	PE EXP.	

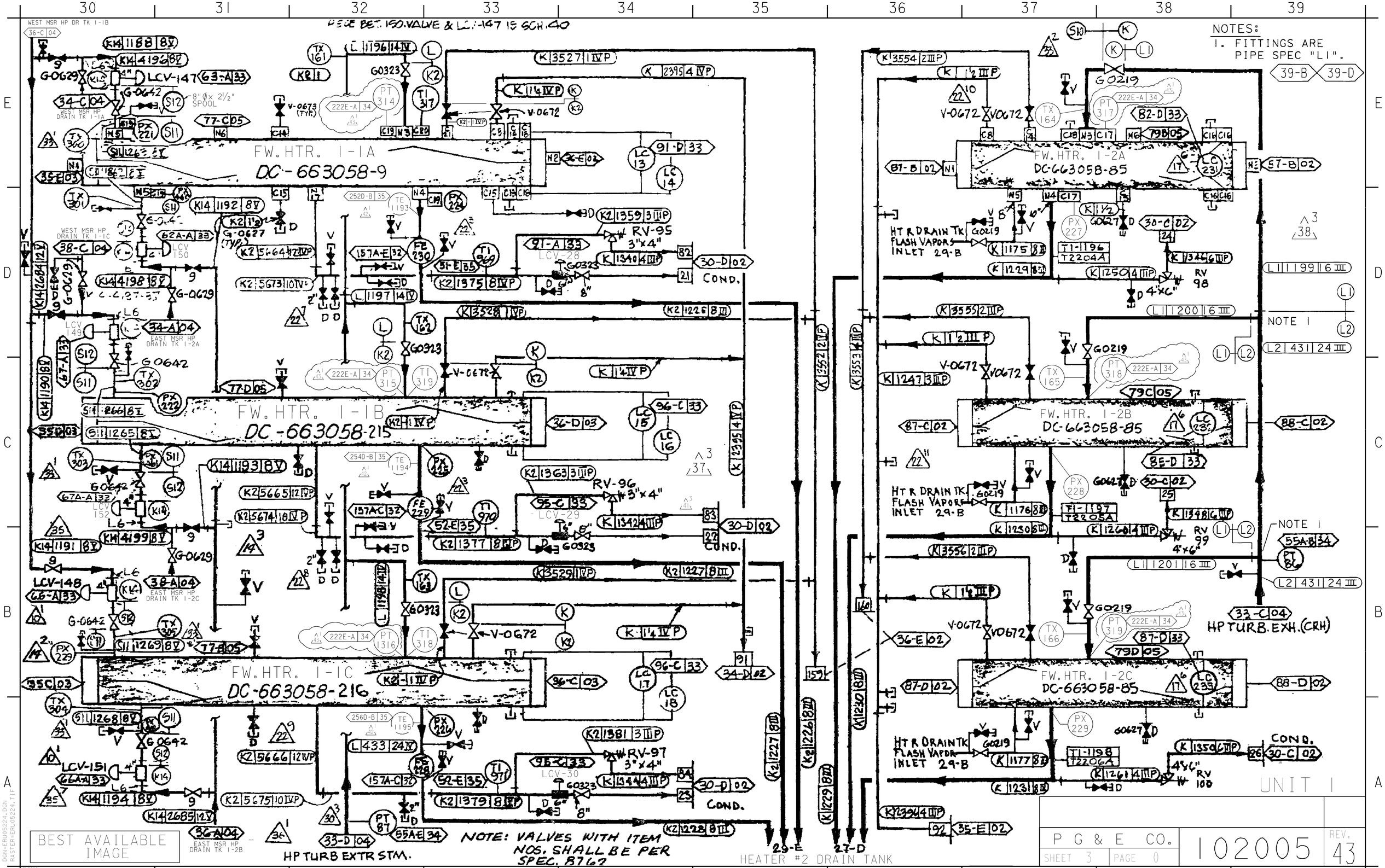

P G & E CO.		102005	REV. 43
SHEET 3	PAGE 0		

DATE	DWN	RE	IV	PROFESSIONAL ENGINEER	PE DISC.	PE#	PE EXP.	
7/13/05	AJL2	FXC2	KJD3	KERSI J. DALAL	MECHANICAL	M 16690	3/31/2006	Revised per DCI-SJ-049659-01

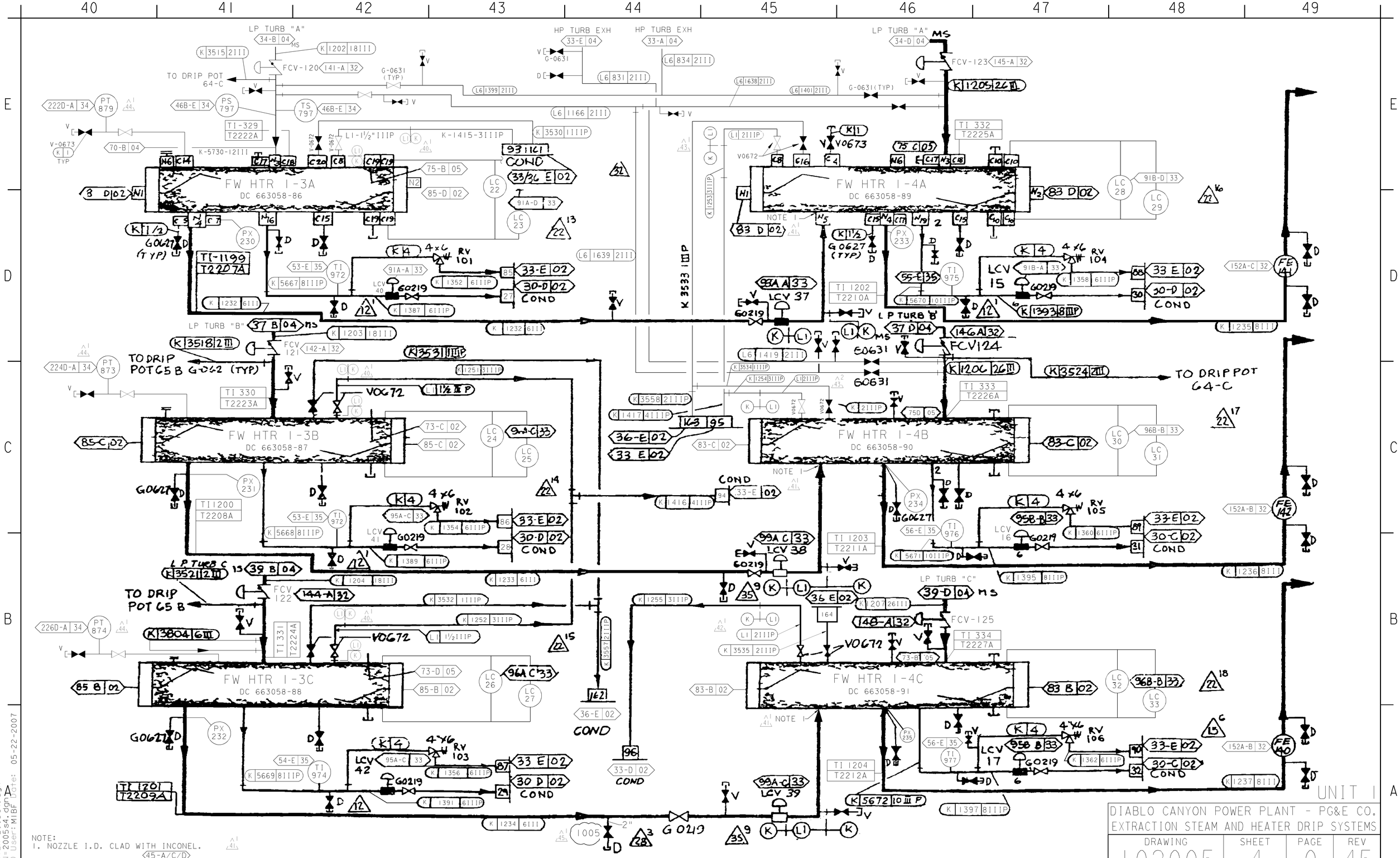
FW HTR 1-3A
DC 663058-86
FW HTR 1-4A
DC 663058-89
FW HTR 1-3B
DC 663058-87
FW HTR 1-4B
DC 663058-90
FW HTR 1-3C
DC 663058-88
FW HTR 1-4C
DC 663058-91
LP TURB "A"
LP TURB "B"
LP TURB "C"
HP TURB EXH
TO DRIP POT 64-C
TO DRIP POT G5 B
TO DRIP POT 64-C
COND
UNIT 1
DIABLO CANYON POWER PLANT - PG&E CO.
EXTRACTION STEAM AND HEATER DRIP SYSTEMS
DRAWING 102005
SHEET 4
PAGE 0
REV 45
NOTE:
1. NOZZLE I.D. CLAD WITH INCONEL.
05-22-2007 MIBF FxC2 KERSI J. DALAL MECHANICAL M 16690 3/31/2008 REVISED PER FCT-32438
DATE DWN RE IV PROFESSIONAL ENGINEER PE DISC. PE# PE EXP.

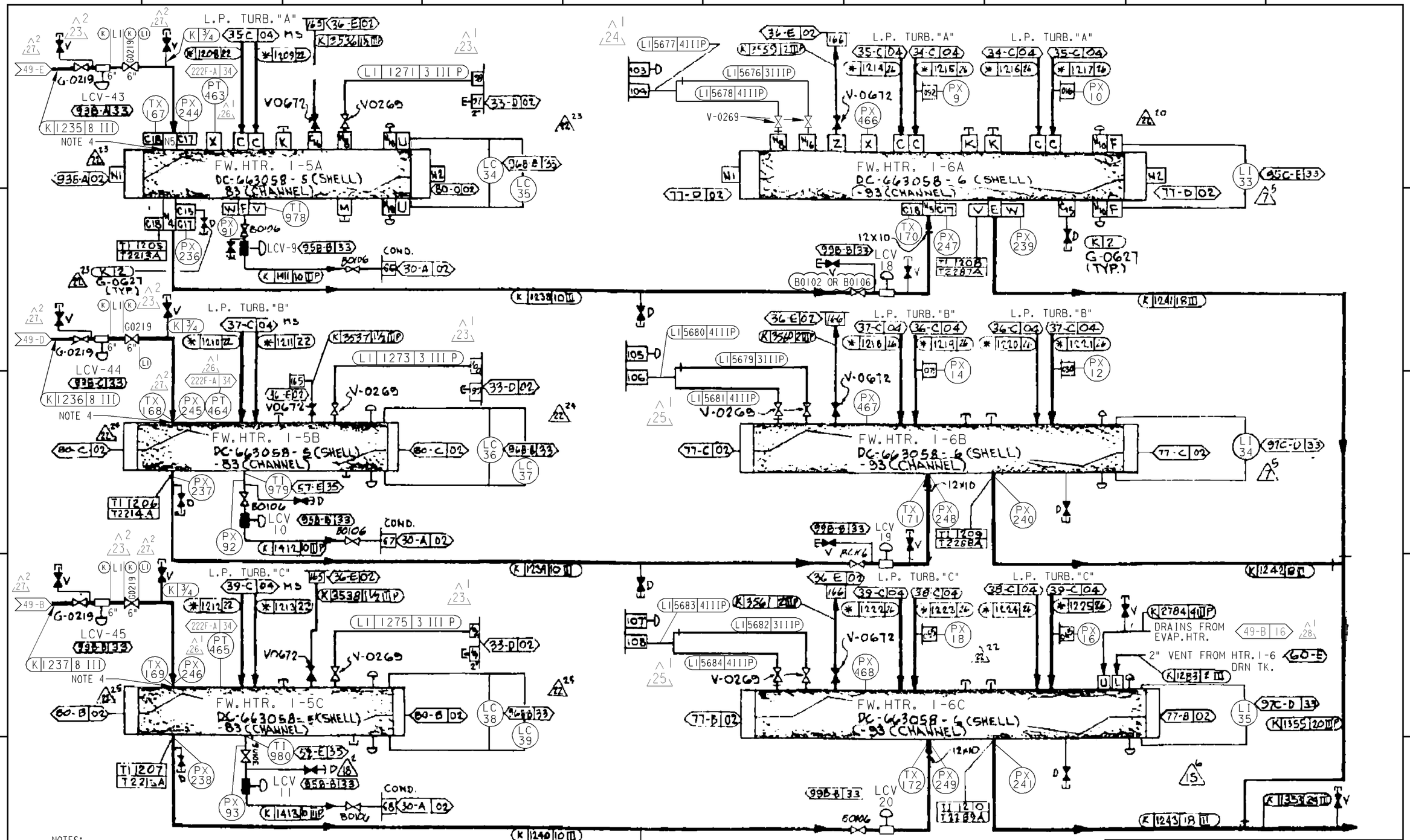

NOTES:

1. HTRS 5 & 6 ARE LOCATED IN CONDENSER NECK
2. DELETED
3. * INDICATES PIPING BY I.R.(INGERSOLL RAND) UNDER SPEC 8701
4. FAC - RESISTANT CLADDING APPLIED INSIDE NOZZLE N5 (51-B/C/E)

DIABLO CANYON POWER PLANT - PG&E CO.
EXTRACTION STEAM AND HEATER DRIP SYSTEMS

DRAWING	SHEET	PAGE	REV
102005	5	0	29

UNIT 1

DATE	DWN	RE	IV	PROFESSIONAL ENGINEER	PE DISC.	PE#	PE EXP.	
03-06-2009	ADMI	FxC2		KERSI J. DALAL	MECHANICAL	M 16690	3/31/2010	REVISED PER DDT-4*273-0

RASTER=2005s5.dgn
DGN=2005s5.dgn
CAD User: ADMI Date: 03-06-2009

INPGIC
1 Size

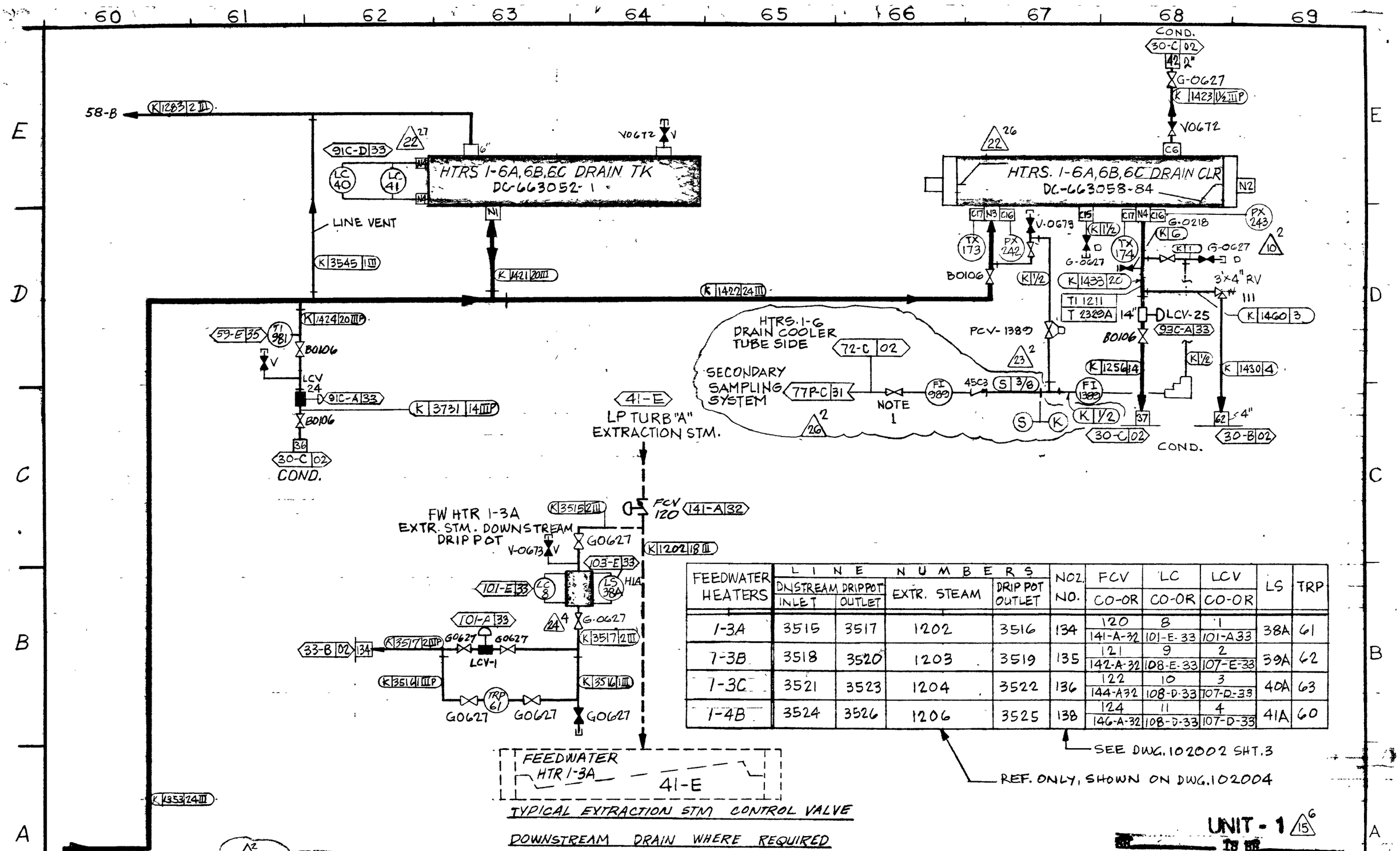

FEEDWATER HEATERS	LINE NUMBERS: DNSTREAM DRIPPOT INLET	DNSTREAM DRIPPOT OUTLET	EXTR. STEAM	DRIP POT OUTLET	NOZ. NO.	FCV CO-OR	LC CO-OR	LCV CO-OR	LS	TRP
1-3A	3515	3517	1202	3516	134	120 / 141-A-32	8 / 101-E-33	1 / 101-A33	38A	61
1-3B	3518	3520	1203	3519	135	121 / 142-A-32	9 / 108-E-33	2 / 107-E-33	39A	62
1-3C	3521	3523	1204	3522	136	122 / 144-A32	10 / 108-D-33	3 / 107-D-33	40A	63
1-4B	3524	3526	1206	3525	138	124 / 146-A-32	11 / 108-D-33	4 / 107-D-33	41A	60

SEE DWG. 102002 SHT. 3

REF. ONLY, SHOWN ON DWG. 102004

FEEDWATER HEATERS NITROGEN SUPPLY SYSTEM

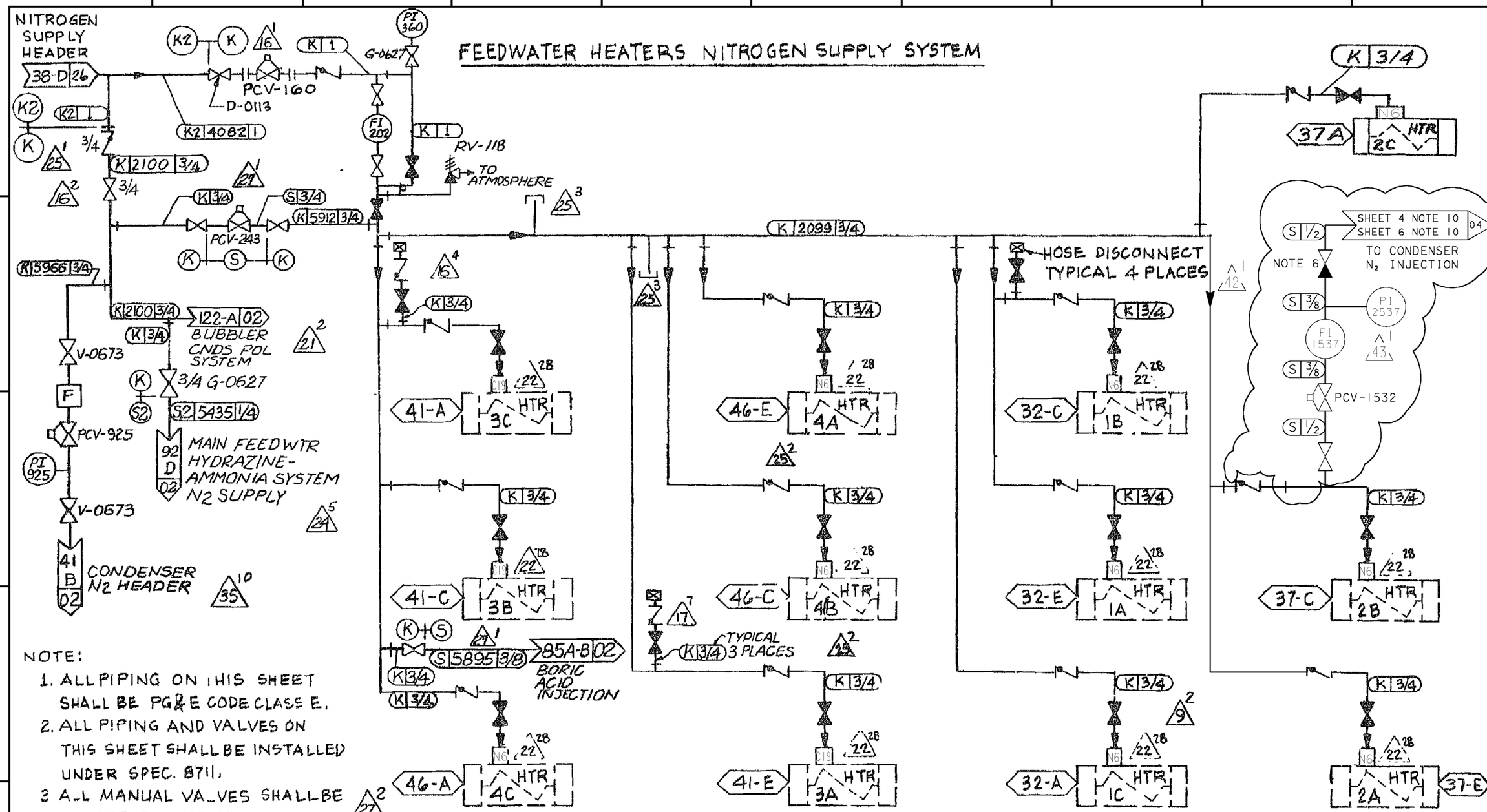

NOTE:

1. ALL PIPING ON THIS SHEET SHALL BE PG&E CODE CLASS E.
2. ALL PIPING AND VALVES ON THIS SHEET SHALL BE INSTALLED UNDER SPEC. 8711.
3. ALL MANUAL VALVES SHALL BE V-0673 EXCEPT AS NOTED.
4. ALL CHECK VALVES SHALL BE C-0651. (16 PLACES)
5. HOKE 0.125 METERING VALVE (NO I.D. NUMBER) 79-D
6. REGULATING VALVE, WHITEY SS-6NRF4 78-D

FEEDWATER HEATERS

UNIT 1

P G & E CO.		102005	REV. 43
SHEET 7	PAGE 0		

3/25/99	RHSI	RXG2	-	ALAN GLEN BARTA	ELECTRICAL	E 9271	9/30/2001	Revised per FCT 023236
DATE	DWN	RE	IV	PROFESSIONAL ENGINEER	PE DISC.	PE#	PE EXP.	

CAD User:RHSI Date: 3-25-1999
DGN=1020057.DGN
RASTER=1020057.TIF

INPGIC

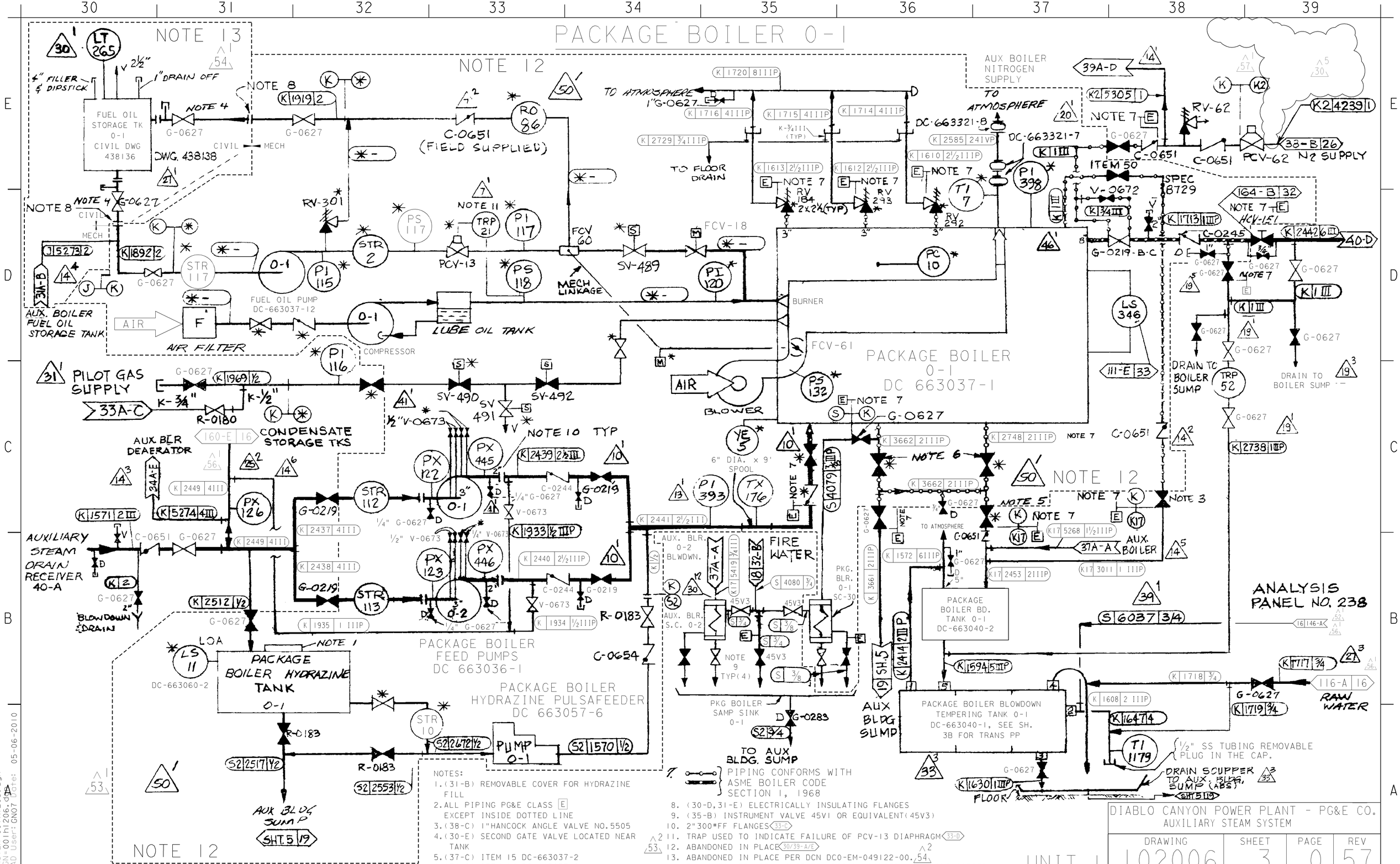

NOTES:

1. (31-B) REMOVABLE COVER FOR HYDRAZINE FILL
2. ALL PIPING PG&E CLASS E EXCEPT INSIDE DOTTED LINE
3. (38-C) 1" HANCOCK ANGLE VALVE NO. 5505
4. (30-E) SECOND GATE VALVE LOCATED NEAR TANK
5. (37-C) ITEM 15 DC-663037-2
6. (36-C) ITEM 14 DC-663037-2
7. PIPING CONFORMS WITH ASME BOILER CODE SECTION 1, 1968
8. (30-D, 31-E) ELECTRICALLY INSULATING FLANGES
9. (35-B) INSTRUMENT VALVE 45V1 OR EQUIVALENT (45V3)
10. 2" 300#FF FLANGES (33-C)
11. TRAP USED TO INDICATE FAILURE OF PCV-13 DIAPHRAGM (33-D)
12. ABANDONED IN PLACE (30/39-A/E)
13. ABANDONED IN PLACE PER DCN DC0-EM-049122-00. TANKS FILLED WITH CONCRETE; PIPING RINSED, CUT, AND CAPPED.

DIABLO CANYON POWER PLANT - PG&E CO.
AUXILIARY STEAM SYSTEM

DRAWING	SHEET	PAGE	REV
102006	3	0	57

UNIT 1

DATE	DWN	RE	IV	PROFESSIONAL ENGINEER	PE DISC.	PE#	PE EXP.	
05-06-2010	GNO7	FxC2		KERSI J. DALAL	MECHANICAL	M 16690	3/31/2012	REVISED PER DFT-7*792

RASTER=001hl206.dgn
DGN=001hl206.dgn
CAD User: GNO7 Date: 05-06-2010

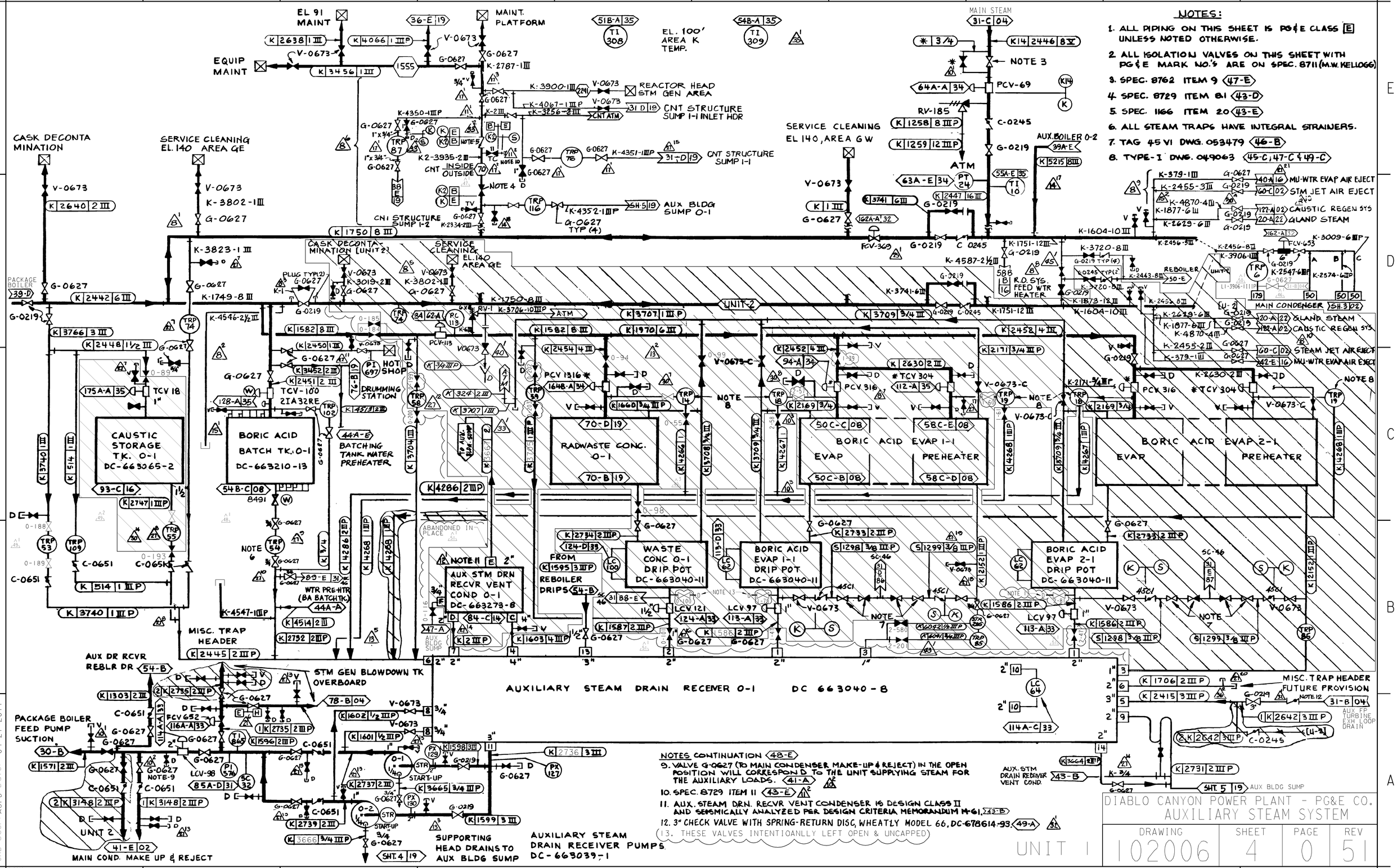

NOTES:

1. ALL PIPING ON THIS SHEET IS PG&E CLASS E UNLESS NOTED OTHERWISE.
2. ALL ISOLATION VALVES ON THIS SHEET WITH PG&E MARK NO.'S ARE ON SPEC. 8711 (M.W. KELLOGG)
3. SPEC. 8762 ITEM 9 (47-E)
4. SPEC. 8729 ITEM 8.1 (43-D)
5. SPEC. 1166 ITEM 20 (43-E)
6. ALL STEAM TRAPS HAVE INTEGRAL STRAINERS.
7. TAG 45 VI DWG. 053479 (46-B)
8. TYPE-I DWG. 049063 (45-C; 47-C & 49-C)

NOTES CONTINUATION (48-E)

9. VALVE G-0627 (TO MAIN CONDENSER MAKE-UP & REJECT) IN THE OPEN POSITION WILL CORRESPOND TO THE UNIT SUPPLYING STEAM FOR THE AUXILIARY LOADS. (41-A)
10. SPEC. 8729 ITEM 11 (43-E)
11. AUX. STEAM DRN. RECVR VENT CONDENSER IS DESIGN CLASS II AND SEISMICALLY ANALYZED PER DESIGN CRITERIA MEMORANDUM M-61. (43-B)
12. 3" CHECK VALVE WITH SPRING-RETURN DISC, WHEATLY MODEL 66, DC-678614-93. (49-A)
13. THESE VALVES INTENTIOANLLY LEFT OPEN & UNCAPPED

DIABLO CANYON POWER PLANT - PG&E CO.
AUXILIARY STEAM SYSTEM

DRAWING	SHEET	PAGE	REV
102006	4	0	51

DATE	DWN	RE	IV	PROFESSIONAL ENGINEER	PE DISC.	PE#	PE EXP.	
04-21-2011	AJFJ	FxC2		KERSI J. DALAL	MECHANICAL	M 16690	3/31/2012	REVISED PER DDN-2*560

RASTER=00241543.DGN
DGN=00241543.DGN
CAD User: AJFJ Date: 04-21-2011
DMGTC
3 Size

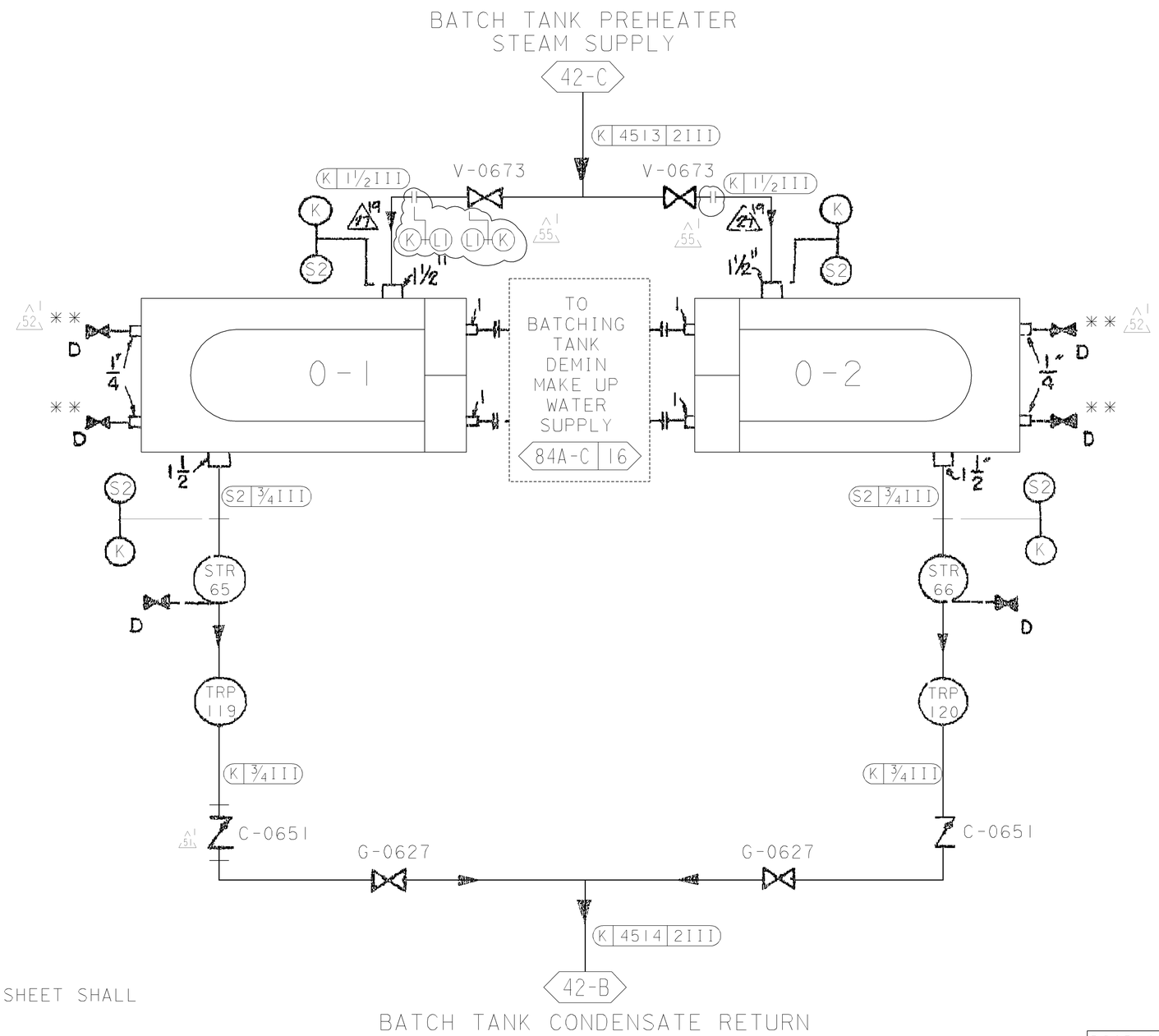

NOTE

ALL PIPING ON THIS SHEET SHALL BE PG&E CLASS E

** CVCS VALVES

B A BATCHING TANK WATER PREHEATER

UNIT 1

DIABLO CANYON POWER PLANT - PG&E CO.
AUXILIARY STEAM SYSTEM

DRAWING	SHEET	PAGE	REV
102006	4A	0	55

DATE	DWN	RE	IV	PROFESSIONAL ENGINEER	PE DISC.	PE#	PE EXP.	
10-23-2012	MNRU	FxC2		KERSI J. DALAL	MECHANICAL	M 16690	3/31/2014	REVISED PER DFT-7*1851

RASTER=102006s4a.dgn
DGN=102006s4a.dgn
CAD User: MNRU Date: 10-23-2012

INPGIC
3 Size

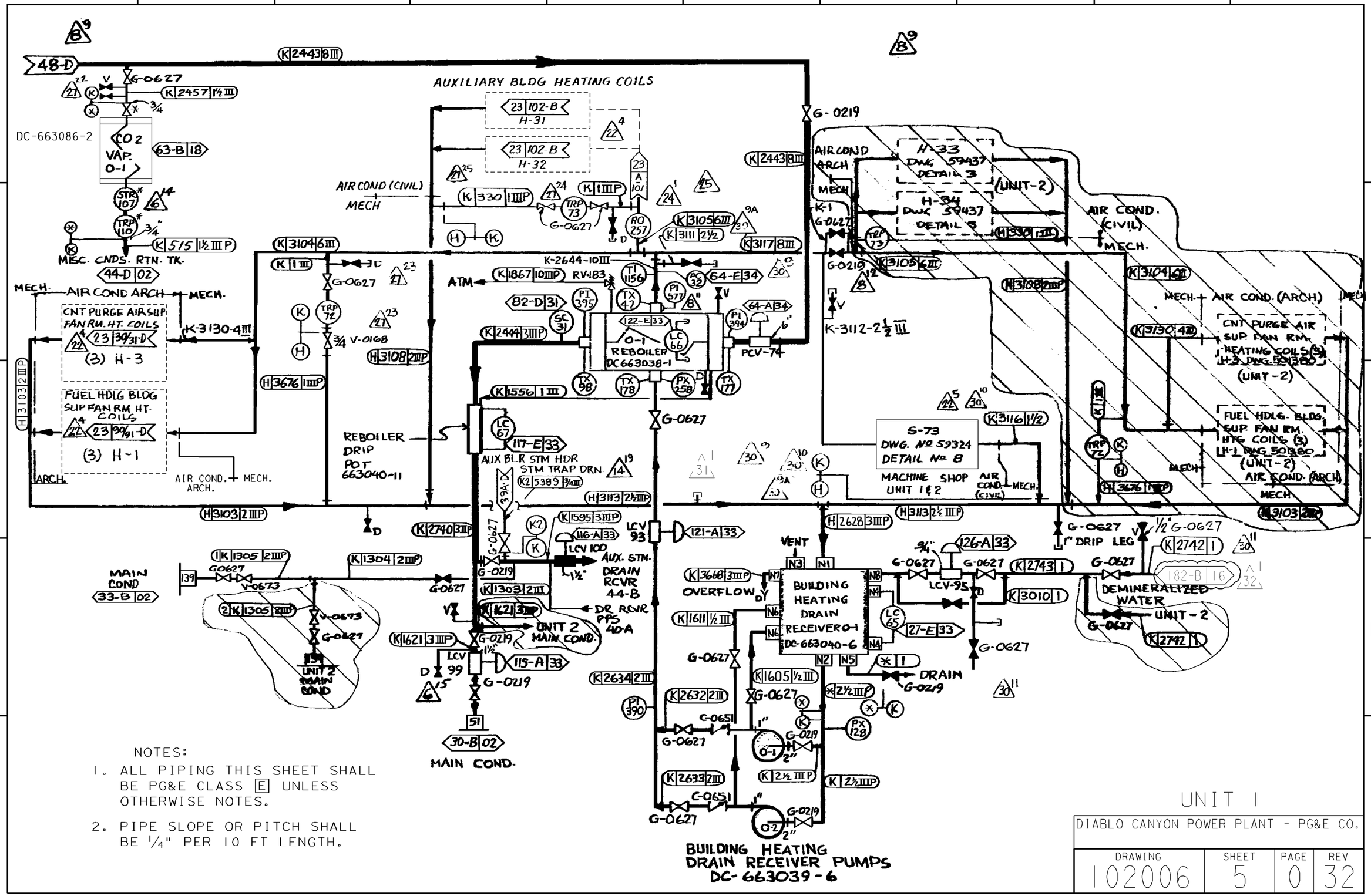

NOTES:

1. ALL PIPING THIS SHEET SHALL BE PG&E CLASS E UNLESS OTHERWISE NOTES.
2. PIPE SLOPE OR PITCH SHALL BE 1/4" PER 10 FT LENGTH.

UNIT 1

DIABLO CANYON POWER PLANT - PG&E CO.

DRAWING	SHEET	PAGE	REV
102006	5	0	32

DATE	DWN	RE	IV	PROFESSIONAL ENGINEER	PE DISC.	PE#	PE EXP.	
01-06-2006	MIBF	KJD3		FRANCIS C. LING	MECHANICAL	M 16098	12/31/2007	REVISED PER FCT-030760

RASTER=102006s5.dgn
DGN=102006s5.dgn
CAD User: MIBF Date: 01-06-2006

INPGIC
I Size

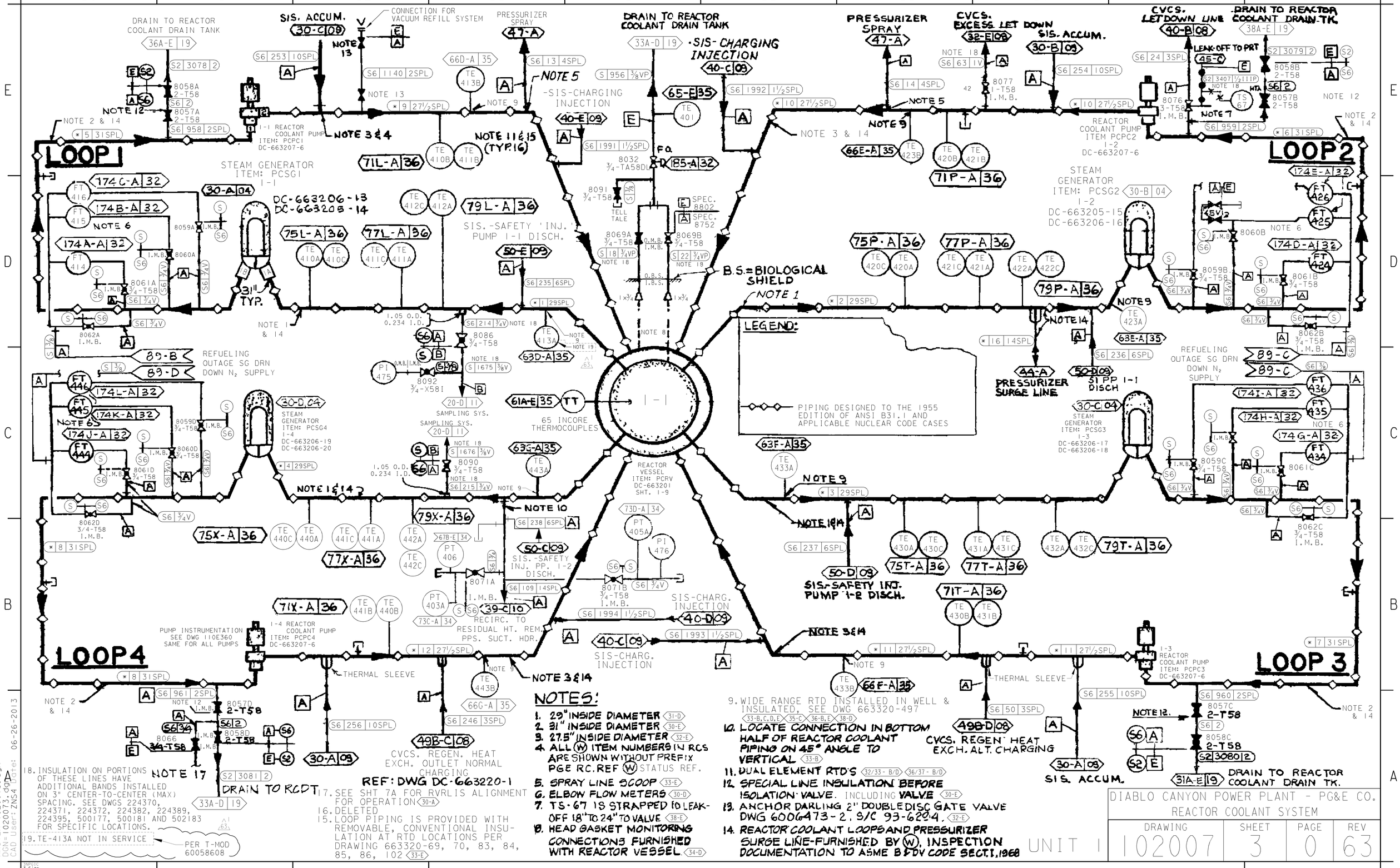

NOTES:

1. 29" INSIDE DIAMETER (31-D)
2. 31" INSIDE DIAMETER (30-E)
3. 27.5" INSIDE DIAMETER (32-E)
4. ALL (W) ITEM NUMBERS IN RCS ARE SHOWN WITHOUT PREFIX PGE RC.REF (W) STATUS REF.
5. SPRAY LINE SCOOP (33-E)
6. ELBOW FLOW METERS (30-D)
7. TS-67 IS STRAPPED TO LEAK-OFF 18" TO 24" TO VALVE (38-E)
8. HEAD GASKET MONITORING CONNECTIONS FURNISHED WITH REACTOR VESSEL. (34-D)
9. WIDE RANGE RTD INSTALLED IN WELL & INSULATED, SEE DWG 663320-497 (33-B,C,D,E) (35-C) (36-B,E) (38-D)
10. LOCATE CONNECTION IN BOTTOM HALF OF REACTOR COOLANT PIPING ON 45° ANGLE TO VERTICAL (33-B)
11. DUAL ELEMENT RTD'S (32/33-B/D) (36/37-B/D)
12. SPECIAL LINE INSULATION BEFORE ISOLATION VALVE. INCLUDING VALVE (30-E)
13. ANCHOR DARLING 2" DOUBLE DISC GATE VALVE DWG 6006473-2, S/C 93-620.4. (32-E)
14. REACTOR COOLANT LOOPS AND PRESSURIZER SURGE LINE-FURNISHED BY (W), INSPECTION DOCUMENTATION TO ASME B&PV CODE SECT.I, 1968
15. LOOP PIPING IS PROVIDED WITH REMOVABLE, CONVENTIONAL INSULATION AT RTD LOCATIONS PER DRAWING 663320-69, 70, 83, 84, 85, 86, 102 (33-E)
16. DELETED
17. SEE SHT 7A FOR RVRLIS ALIGNMENT FOR OPERATION (30-A)
18. INSULATION ON PORTIONS OF THESE LINES HAVE ADDITIONAL BANDS INSTALLED ON 3" CENTER-TO-CENTER (MAX) SPACING. SEE DWGS 224370, 224371, 224372, 224382, 224389, 224395, 500177, 500181 AND 502183 FOR SPECIFIC LOCATIONS.
19. TE-413A NOT IN SERVICE — PER T-MOD 60058608

DIABLO CANYON POWER PLANT - PG&E CO. REACTOR COOLANT SYSTEM			
DRAWING	SHEET	PAGE	REV
102007	3	0	63

UNIT 1

DATE	DWN	RE	IV	PROFESSIONAL ENGINEER	PE DISC.	PE#	PE EXP.	
06-26-2013	ZNS4	FxC2	KJD3	NOT REQUIRED	N/A	N/A	N/A	REVISED PER DDT-4*893

RASTER=1020073.dgn DGN=1020073.dgn CAD User=ZNS4 DGTe: 06-26-2013

3 size

LEGEND:

VALVE LEAK-OFF

PIPING DESIGNED TO THE 1955 EDITION OF ANSI B31.1 AND APPLICABLE NUCLEAR CODE CASES.

NOTES: (CONTINUED)

23. 3/4-X42D, ITT VALVE NO. 2471-10-M-3/4" DWG. NO. 663219-267, STOCK CODE 42-2543, FOR TEST CONNECTION. (48-E)
24. 3"-150#, ITT BALL VALVE W/ BETTIS CB-415-SRGO ACTUATOR DWG. NO. DC 6006473-236, STOCK CODE 34-6447, P.O.#038232. (48-D)
25. ANCHOR/DARLING 3/4" -1878GB. DC-6006473-97 PO# 019183 (44-B)

NOTES: CONT'D. FROM (47-A)

19. LOOP SEALS ARE INSULATED FROM PRESSURIZER NOZZLES TO SAFETY VALVES WITH REFLECTIVE AND FIBERGLASS INSULATION PER 663320-96. (42/44-C)
20. PRIMARY WTR FOR MAINTENANCE WASH DOWN AREA. (47-C)
21. REMOTE OPERATORS DISCONNECTED AND ABANDONED IN-PLACE (45-A)
22. SEE SHEET 7A FOR RVRLIS (41-B) ALIGNMENT FOR OPERATION (42-B, 44-C, 46-E)

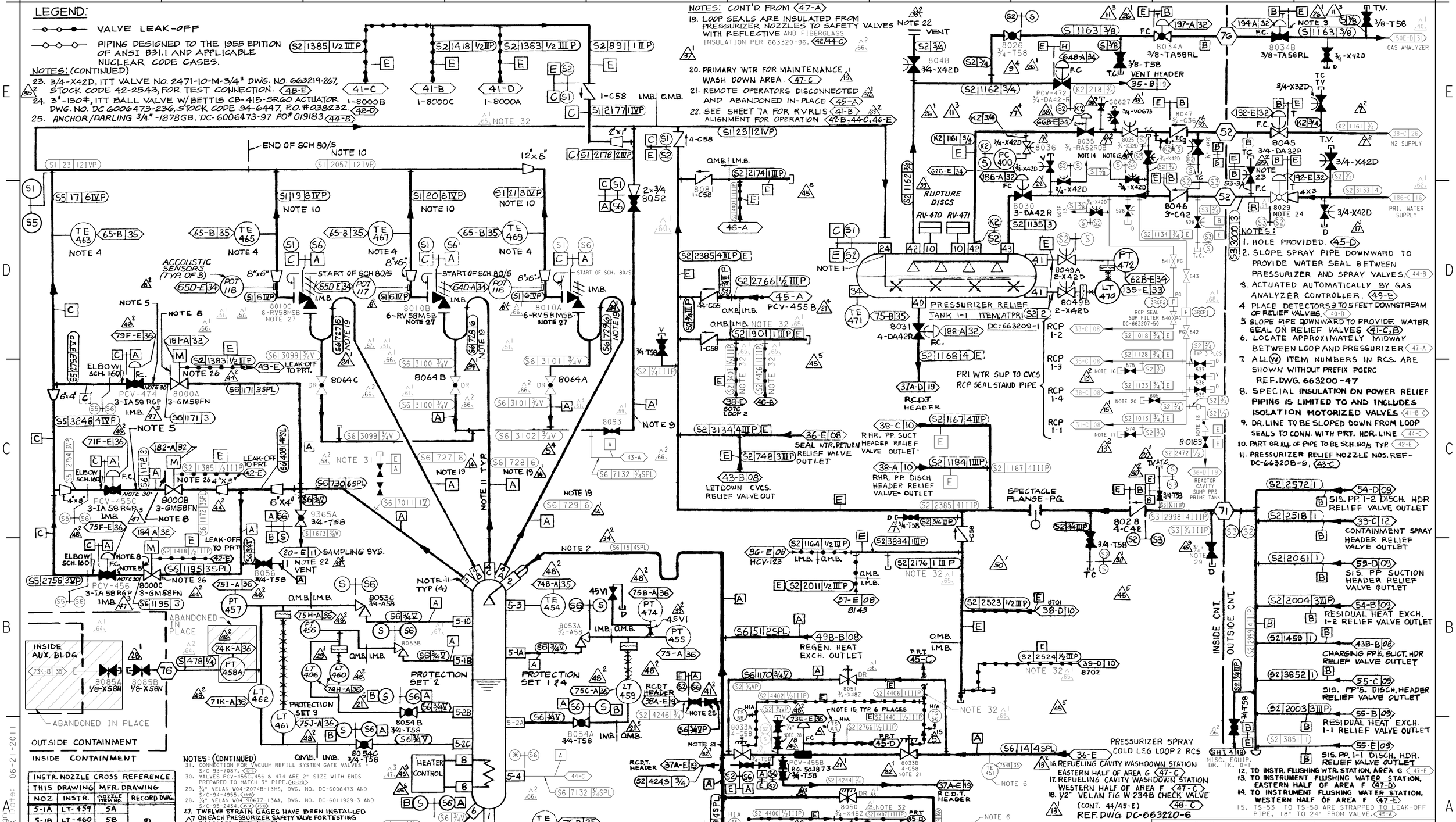

NOTES:

1. HOLE PROVIDED. (45-D)
2. SLOPE SPRAY PIPE DOWNWARD TO PROVIDE WATER SEAL BETWEEN PRESSURIZER AND SPRAY VALVES. (44-B)
3. ACTUATED AUTOMATICALLY BY GAS ANALYZER CONTROLLER. (49-E)
4. PLACE DETECTORS 3 TO 5 FEET DOWNSTREAM OF RELIEF VALVES. (40-D)
5. SLOPE PIPE DOWNWARD TO PROVIDE WATER SEAL ON RELIEF VALVES (41-C, B)
6. LOCATE APPROXIMATELY MIDWAY BETWEEN LOOP AND PRESSURIZER (47-A)
7. ALL (W) ITEM NUMBERS IN R.C.S. ARE SHOWN WITHOUT PREFIX PGERC REF. DWG. 663200-47
8. SPECIAL INSULATION ON POWER RELIEF PIPING IS LIMITED TO AND INCLUDES ISOLATION MOTORIZED VALVES (41-B C)
9. DR. LINE TO BE SLOPED DOWN FROM LOOP SEALS TO CONN. WITH PRT. HDR. LINE (44-C)
10. PART OR ALL OF PIPE TO BE SCH. 80/S TYP (42-E)
11. PRESSURIZER RELIEF NOZZLE NOS. REF- DC-663208-9, (43-C)
12. TO INSTR. FLUSHING WTR. STATION, AREA G (47-E)
13. TO INSTRUMENT FLUSHING WATER STATION, EASTERN HALF OF AREA F (47-D)
14. TO INSTRUMENT FLUSHING WATER STATION, WESTERN HALF OF AREA F (47-E)
15. TS-53 TO TS-58 ARE STRAPPED TO LEAK-OFF PIPE, 18" TO 24" FROM VALVE. (45-A)
16. REFUELING CAVITY WASHDOWN STATION EASTERN HALF OF AREA G (47-C)
17. REFUELING CAVITY WASHDOWN STATION WESTERN HALF OF AREA F (47-C)
18. 1/2" VELAN FIG W-234B CHECK VALVE (CONT. 44/45-E) REF. DWG. DC-663220-6 (48-C)

NOTES: (CONTINUED)

31. CONNECTION FOR VACUUM REFILL SYSTEM GATE VALVES - S/C 93-7087. (43)
30. VALVES PCV-455C, 456 & 474 ARE 2" SIZE WITH ENDS PREPARED TO MATCH 3" PIPE. (40-C/B)
29. 3/4" VELAN W04-2074B-13MS, DWG. NO. DC-6006473 AND S/C-94-4955. (48-B)
28. 3/4" VELAN W04-9067Z-13AA, DWG. NO. DC-6011929-3 AND S/C-95-2434. (48-A) (48-B)
27. TWELVE STRAIN GAGES HAVE BEEN INSTALLED ON EACH PRESSURIZER SAFETY VALVE FOR TESTING PURPOSES. (41/42/43-D)
26. THE VALVE DISCS FOR 1-8000A/B/C HAVE 1/8" DIA PRESSURE RELIEF HOLES DRILLED IN THE UPSTREAM SIDE OF THE DISC. REF. DWG. DC-663213-388 (41-C/D)

32. INSULATION ON PORTIONS OF THESE LINES HAVE ADDITIONAL BANDS INSTALLED ON 3" CENTER-TO-CENTER (MAX) SPACING. SEE DWGS. 224377, 224382, 224413, 224414, 224415, 437991 AND 50004B FOR SPECIFIC LOCATIONS.

INSTR. NOZZLE CROSS REFERENCE.			
THIS DRAWING		MFR. DRAWING	
NOZ.	INSTR.	NOZZLE ITEM NO.	RECORD DWG.
5-1A	LT-459	5A	DC-663208-9
5-1B	LT-460	5B	
5-1C	LT-461	5C	
5-2A	LT-459	5D	
5-2B	LT-460	5E	
5-2C	LT-461	5F	
5-3	TE-454	5H	
6	TE-453	6	

DIABLO CANYON POWER PLANT - PG&E CO.
REACTOR COOLANT SYSTEM

DRAWING	SHEET	PAGE	REV
102007	4	0	68

UNIT 1

DATE	DWN	RE	IV	PROFESSIONAL ENGINEER	PE DISC.	PE#	PE EXP.	
06-21-2011	CNHK	FxC2		KERSI J. DALAL	MECHANICAL	M 16690	3/31/2012	REVISED PER DFT-7*1251-0

RASTER-2007s4.dgn
DGN-2007s4.dgn
CAD User: CNHK Date: 06-21-2011

Unofficial 1 Size

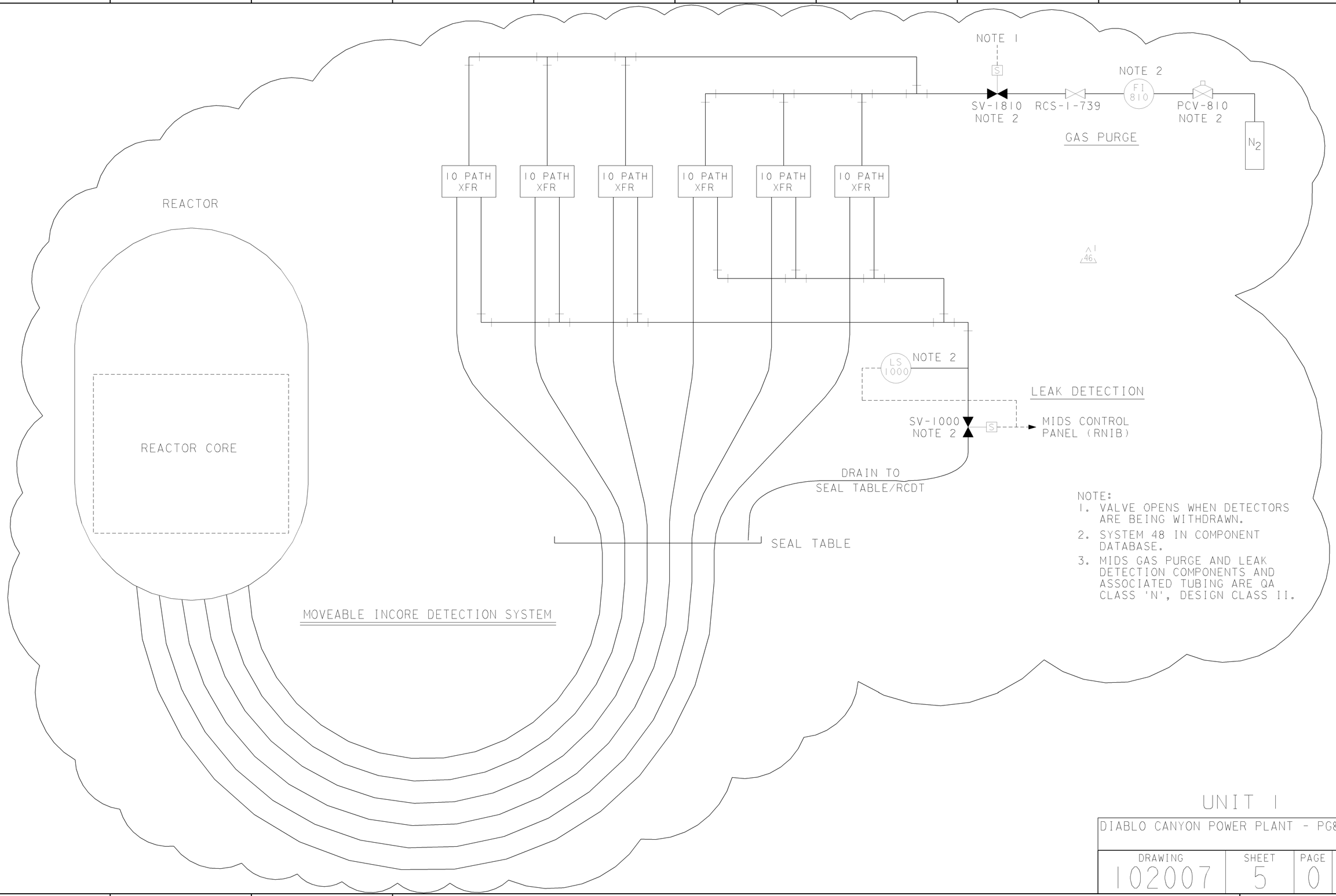

NOTE:
1. VALVE OPENS WHEN DETECTORS ARE BEING WITHDRAWN.
2. SYSTEM 48 IN COMPONENT DATABASE.
3. MIDS GAS PURGE AND LEAK DETECTION COMPONENTS AND ASSOCIATED TUBING ARE QA CLASS 'N', DESIGN CLASS II.

UNIT 1

DIABLO CANYON POWER PLANT - PG&E CO.

DRAWING	SHEET	PAGE	REV
102007	5	0	46

DATE	DWN	RE	IV	PROFESSIONAL ENGINEER	PE DISC.	PE#	PE EXP.	
02-22-2006	AJL2	LAL3		KERSI J. DALAL	MECHANICAL	M 16690	3/31/2006	REVISED PER FCT-031027

RASTER=102007s5.dgn
DGN=102007s5.dgn
CAD User=AJL2 Date: 02-22-2006

3 size

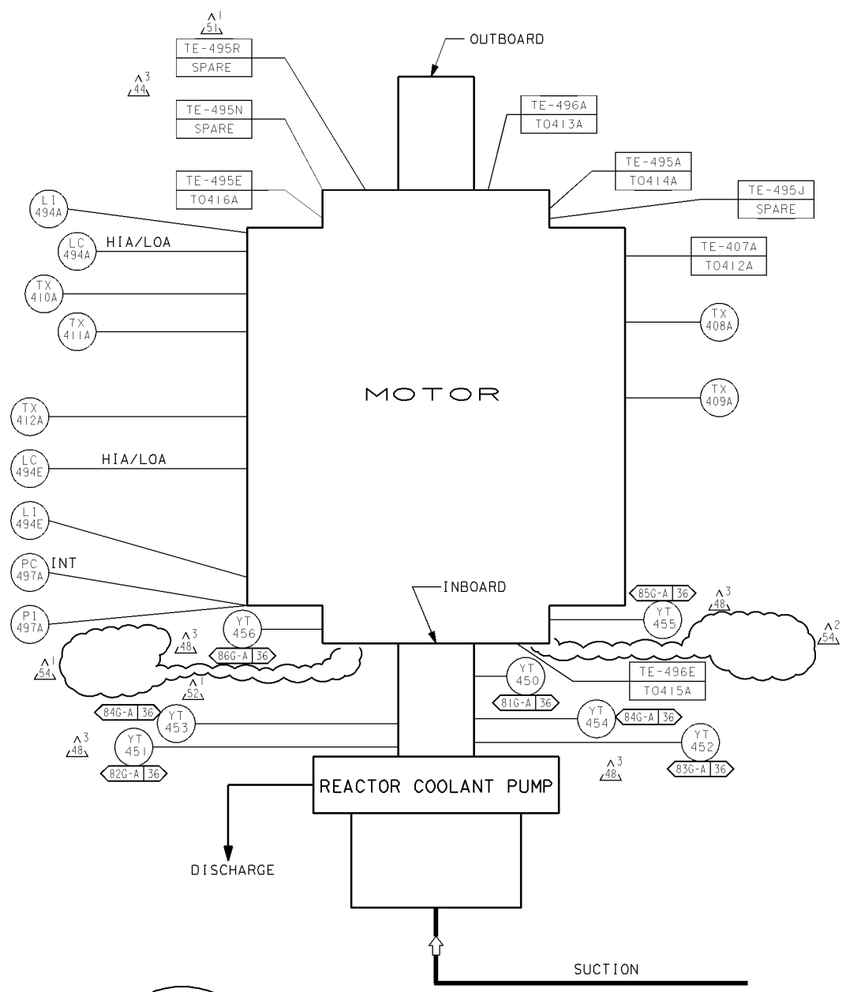

INSTRUMENT		PUMP 1	PUMP 2	PUMP 3	PUMP 4
UPPER OIL RESERVOIR FOR UPPER RADIAL AND THRUST BEARING		LC-494A	LC-494B	LC-494C	LC-494D
		LI-494A	LI-494B	LI-494C	LI-494D
LOWER OIL RESERVOIR		LC-494E	LC-494F	LC-494G	LC-494H
		LI-494E	LI-494F	LI-494G	LI-494H
STATOR WINDING COMPUTER POINT NO.	SLOT 52	TE-407A T0412A	TE-407B T0432A	TE-407C T0452A	TE-407D T0472A
STATOR WINDING	SLOT 64	TX-408A	TX-408B	TX-408C	TX-408D
	SLOT 76	TX-409A	TX-409B	TX-409C	TX-409D
	SLOT 106	TX-410A	TX-410B	TX-410C	TX-410D
	SLOT 10	TX-411A	TX-411B	TX-411C	TX-411D
	SLOT 22	TX-412A	TX-412B	TX-412C	TX-412D
THRUST BEARING UPPER SHOE. COMPUTER POINT NO.		TE-495A	TE-495B	TE-495C	TE-495D
		T0414A	T0434A	T0454A	T0474A
THRUST BEARING UPPER SHOE		TE-495J	TE-495K	TE-495L	TE-495M
		SPARE	SPARE	SPARE	SPARE
THRUST BEARING LOWER SHOE. COMPUTER POINT NO.		TE-495E	TE-495F	TE-495G	TE-495H
		T0416A	T0436A	T0456A	T0476A
THRUST BEARING LOWER SHOE		TE-495N	TE-495O	TE-495P	TE-495Q
		SPARE	SPARE	SPARE	SPARE
UPPER RADIAL BEARING COMPUTER POINT NO.		TE-496A	TE-496B	TE-496C	TE-496D
		T0413A	T0433A	T0453A	T0473A
UPPER RADIAL BEARING		TE-495R	TE-495S	TE-495T	TE-495U
		SPARE	SPARE	SPARE	SPARE
LOWER RADIAL BEARING COMPUTER POINT NO.		TE-496E	TE-496F	TE-496G	TE-496H
		T0415A	T0435A	T0455A	T0475A
OIL LIFT PUMP PRESSURE		PC-497A	PC-497B	PC-497C	PC-497D
		PI-497A	PI-497B	PI-497C	PI-497D
PP SHAFT RADIAL VIB X - PROBE		YT-452	YT-462	YT-472	YT-482
PP SHAFT RADIAL VIB Y - PROBE		YT-453	YT-463	YT-473	YT-483
PP SHAFT RADIAL VIB X - PROBE		YT-450	YT-460	YT-470	YT-480
PP SHAFT RADIAL VIB Y - PROBE		YT-451	YT-461	YT-471	YT-481
KEYPHASOR		YT-454	YT-464	YT-474	YT-484
VELOCITY - X		YT-455	YT-465	YT-475	YT-485
VELOCITY - Y		YT-456	YT-466	YT-476	YT-486

NOTE 4

NOTE 5

NOTES:

1. DELETED
2. DELETED
3. DELETED
4. FOR INSTRUMENT ORIENTATION SEE DWG 054174 FIG 926, SHT 29
5. INSTRUMENT SCHEMATIC COORD'S FOR PUMPS 2, 3 & 4 ARE NOT PROVIDED ON THIS SHEET; SEE SHEETS 8H , I & J OF DWG 102036, 53B-C.

UNIT 1

REACTOR COOLANT PUMPS INSTRUMENTATION

P G & E CO.		102007	REV. 54
SHEET 5A	PAGE 0		

12/20/02	PMH2	AGB2	-	D.J. KINOSHITA	MECHANICAL	M 19615	9/30/2003	Revised per FCT 027136
DATE	DWN	RE	IV	PROFESSIONAL ENGINEER	PE DISC.	PE#	PE EXP.	

INPG2ND

CAD User:rxg2 Date: 5-23-2002
DGN=2007S5A.DGN

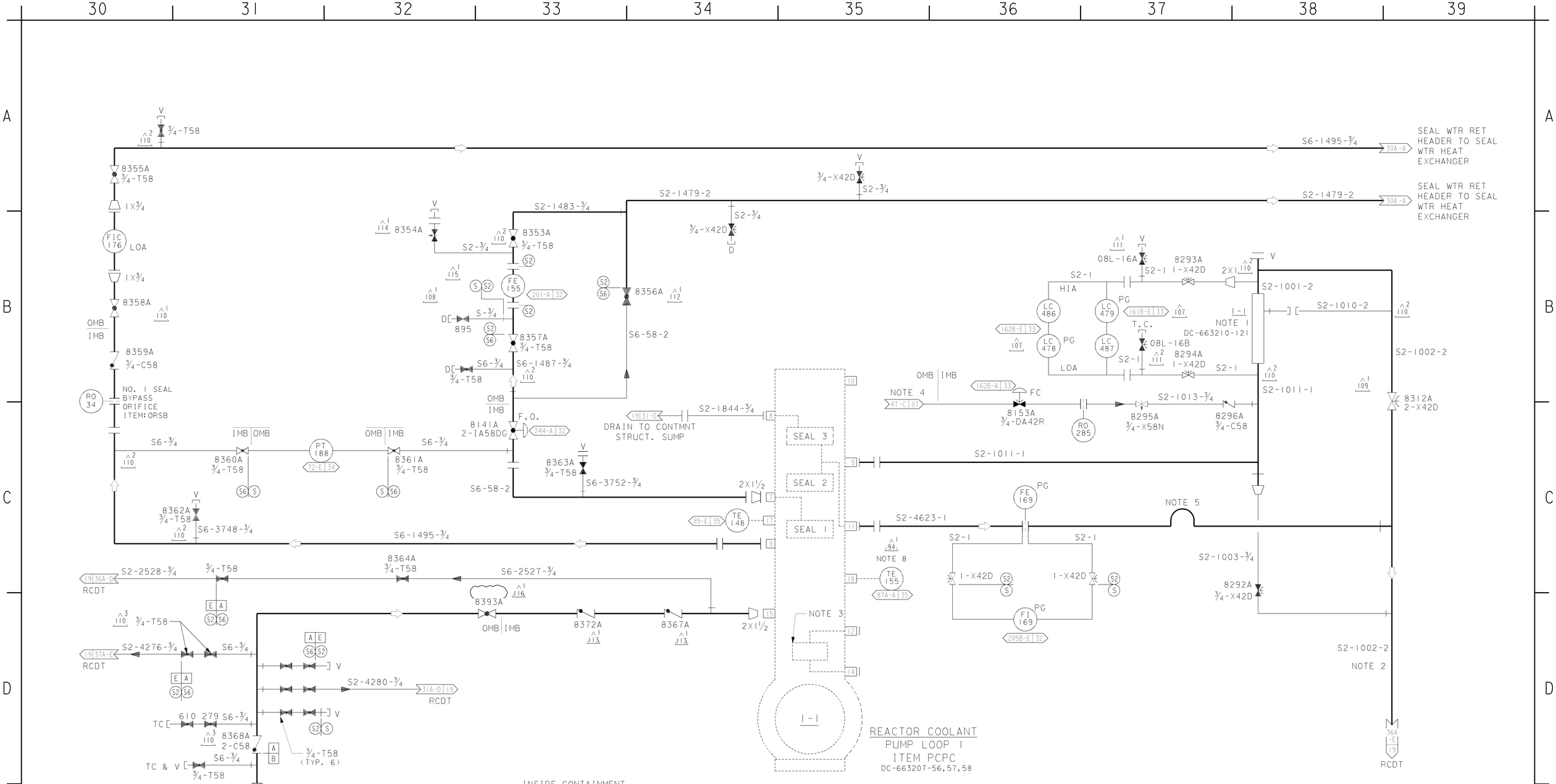

NOTES:

1. 7'-6" LONG SCHEDULE 10S STANDPIPE. BOTH ENDS CAPPED A MINIMUN 3 PSI WATER PRESSURE IS REQUIRED AT NOZ. 19 (38-B)
2. THIS PIPING SHOULD BE SLOPED DOWNHILL THROUGH THE RUN OF THE DRAIN (39-D)
3. LABYRINTH SEAL THERMAL BARRIER (35-D)
4. MAKEUP WATER LINE FROM THE PRESSURIZER RELIEF TANK PRIMARY MAKEUP WATER SUPPLY (35-C)
5. TOP OF LOOP SEAL IS 6" ABOVE NOZ. 11 (37-C)
6. ALL ITEM NUMBERS IN CVCS ARE SHOWN WITHOUT PREFIX PGECS.
7. ANCHOR/DARLING 1"-1878GB, DC-6006473-157, S/C 94-3771. (31-E)
8. CODE CLASS BOUNDARIES ARE DEFINED IN DRAWING 663207 SHEET 56. (35-C)

UNIT 1

DIABLO CANYON POWER PLANT - PG&E CO.
CHEMICAL & VOLUME CONTROL SYSTEM

DRAWING	SHEET	PAGE	REV
102008	3	0	116

DATE	DWN	RE	IV	PROFESSIONAL ENGINEER	PE DISC.	PE#	PE EXP.	
07-11-2012	JBMX	FAZI		KERSI J. DALAL	MECHANICAL	M 16690	3/31/2014	REVISED PER DFT-7*1625

RASTER=2008s3.dgn
DGN=2008s3.dgn
CAD User: JBMX Date: 07-11-2012

3 Size

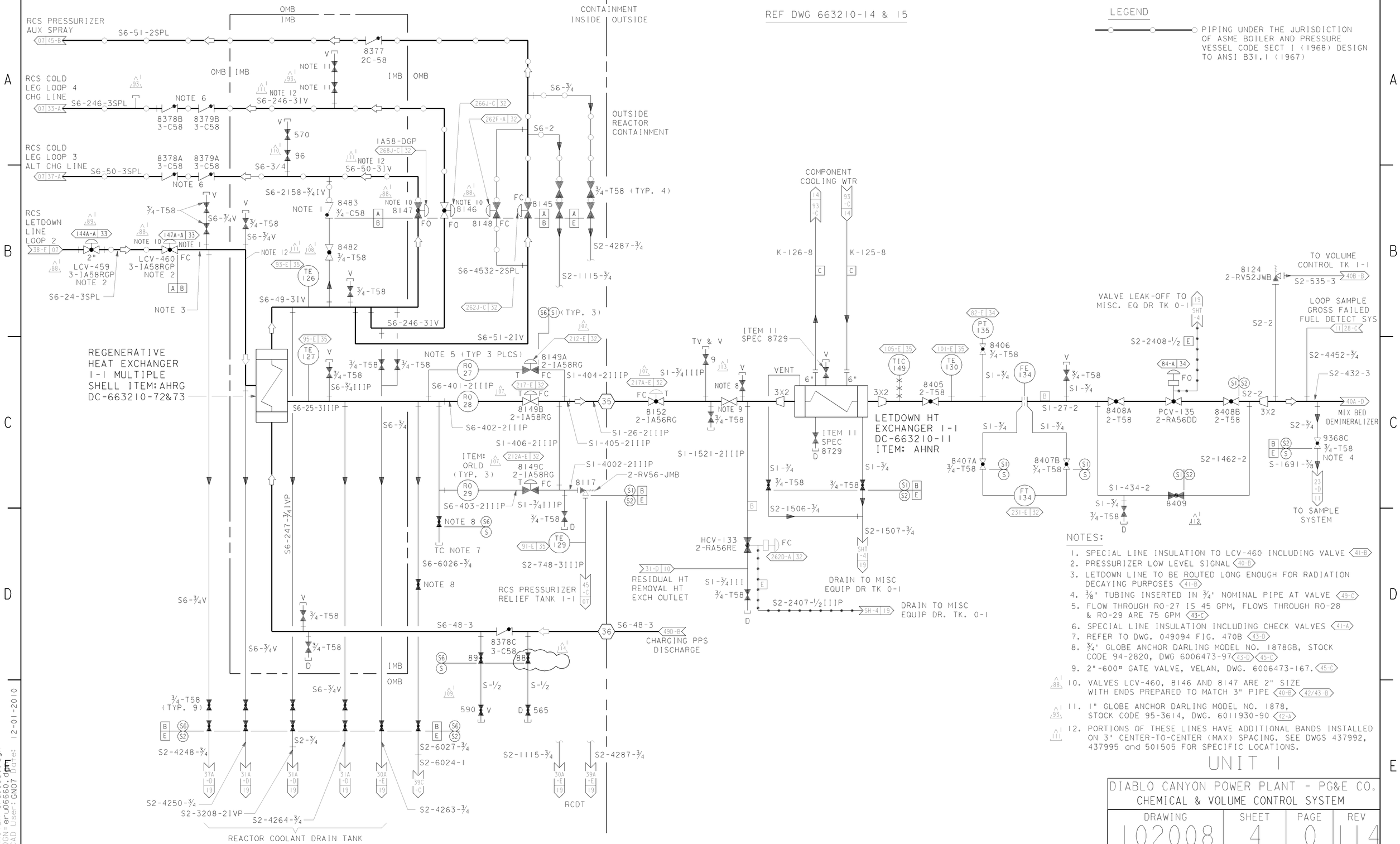

NOTES:

1. SPECIAL LINE INSULATION TO LCV-460 INCLUDING VALVE (41-B)
2. PRESSURIZER LOW LEVEL SIGNAL (40-B)
3. LETDOWN LINE TO BE ROUTED LONG ENOUGH FOR RADIATION DECAYING PURPOSES (41-B)
4. 3/8" TUBING INSERTED IN 3/4" NOMINAL PIPE AT VALVE (49-C)
5. FLOW THROUGH RO-27 IS 45 GPM, FLOWS THROUGH RO-28 & RO-29 ARE 75 GPM (43-C)
6. SPECIAL LINE INSULATION INCLUDING CHECK VALVES (41-A)
7. REFER TO DWG. 049094 FIG. 470B (43-D)
8. 3/4" GLOBE ANCHOR DARLING MODEL NO. 1878GB, STOCK CODE 94-2820, DWG 6006473-97 (43-D) (45-C)
9. 2"-600# GATE VALVE, VELAN, DWG. 6006473-167. (45-C)
10. VALVES LCV-460, 8146 AND 8147 ARE 2" SIZE WITH ENDS PREPARED TO MATCH 3" PIPE (40-B) (42/43-B)
11. 1" GLOBE ANCHOR DARLING MODEL NO. 1878, STOCK CODE 95-3614, DWG. 6011930-90 (42-A)
12. PORTIONS OF THESE LINES HAVE ADDITIONAL BANDS INSTALLED ON 3" CENTER-TO-CENTER (MAX) SPACING. SEE DWGS 437992, 437995 and 501505 FOR SPECIFIC LOCATIONS.

UNIT 1

DIABLO CANYON POWER PLANT - PG&E CO.
CHEMICAL & VOLUME CONTROL SYSTEM

DRAWING	SHEET	PAGE	REV
102008	4	0	114

DATE	DWN	RE	IV	PROFESSIONAL ENGINEER	PE DISC.	PE#	PE EXP.	
12-01-2010	GNO7	FxC2		KERSI J. DALAL	MECHANICAL	M 16690	3/31/2012	REVISED PER DFT-7*910

RASTER-eru06660.dgn
DGN-eru06660.dgn
CAD User: GNO7 Date: 12-01-2010

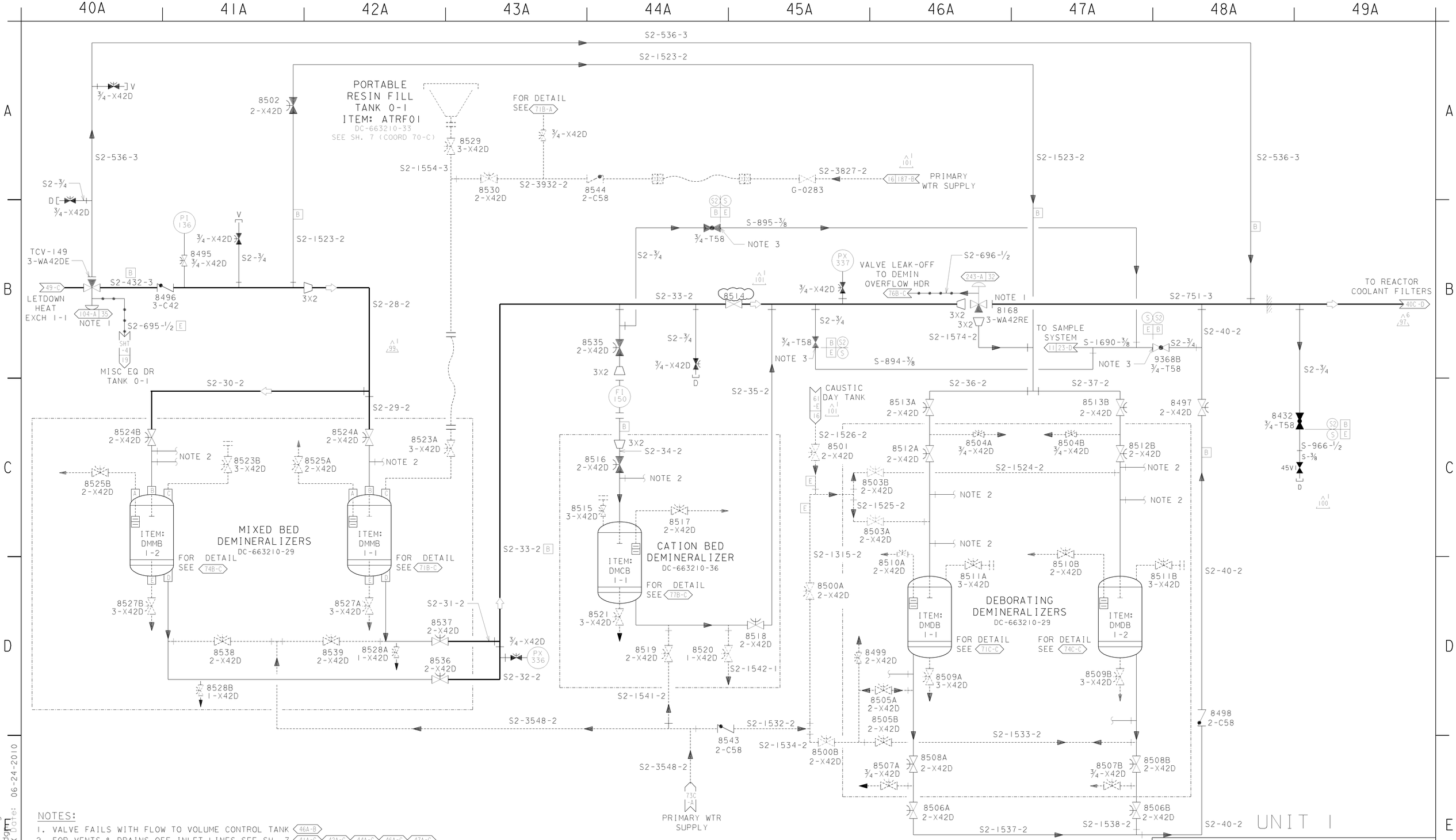

NOTES:

1. VALVE FAILS WITH FLOW TO VOLUME CONTROL TANK 46A-B
2. FOR VENTS & DRAINS OFF INLET LINES SEE SH. 7 41A-C 42A-C 44A-C 46A-C 47A-C
3. 3/8" TUBING INSERTED IN 3/4" NOMINAL PIPE AT VALVE 45A-B

REF DWG 663210-15

DIABLO CANYON POWER PLANT - PG&E CO.
CHEMICAL & VOLUME CONTROL SYSTEM

DRAWING	SHEET	PAGE	REV
102008	4A	0	102

DATE	DWN	RE	IV	PROFESSIONAL ENGINEER	PE DISC.	PE#	PE EXP.	
06-24-2010	JBMX	AGB2		KERSI J. DALAL	MECHANICAL	M 16690	3/31/2012	REVISED PER DFT-7*829

RASTER=2008s4a.dgn
DGN=2008s4a.dgn
CAD User: JBMX Date: 06-24-2010

3NRGIC
3 Size

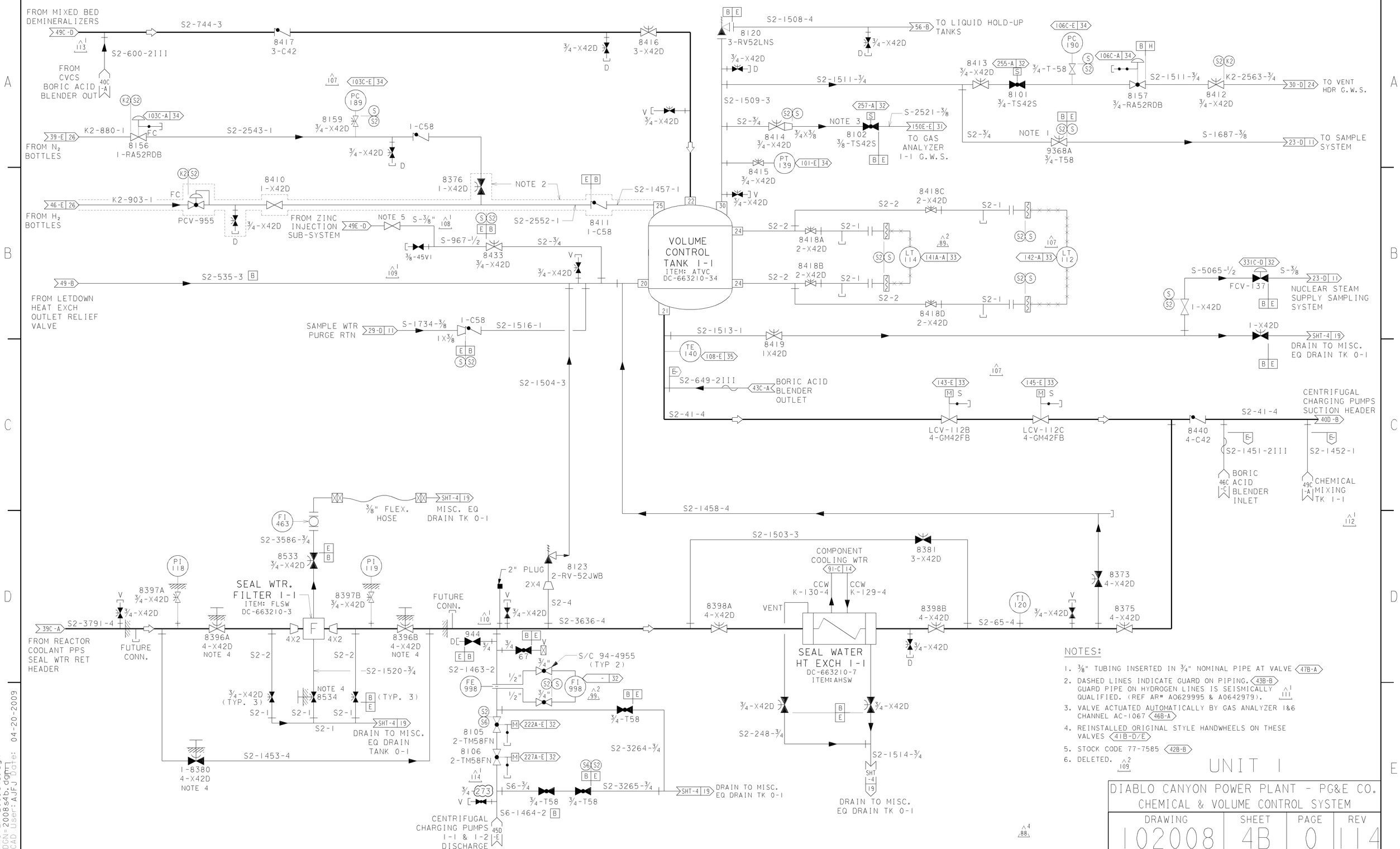

NOTES:

1. 3/8" TUBING INSERTED IN 3/4" NOMINAL PIPE AT VALVE 47B-A
2. DASHED LINES INDICATE GUARD ON PIPING. 43B-B GUARD PIPE ON HYDROGEN LINES IS SEISMICALLY QUALIFIED. (REF AR# A0629995 & A0642979). 111
3. VALVE ACTUATED AUTOMATICALLY BY GAS ANALYZER I&6 CHANNEL AC-1067 46B-A
4. REINSTALLED ORIGINAL STYLE HANDWHEELS ON THESE VALVES 41B-D/E
5. STOCK CODE 77-7585 42B-B
6. DELETED. 109

UNIT 1

DIABLO CANYON POWER PLANT - PG&E CO.
CHEMICAL & VOLUME CONTROL SYSTEM

DRAWING	SHEET	PAGE	REV
102008	4B	0	114

DATE	DWN	RE	IV	PROFESSIONAL ENGINEER	PE DISC.	PE#	PE EXP.	
04-20-2009	AJFJ	FxC2		KERSI J. DALAL	MECHANICAL	M 16690	3/31/2010	REVISED PER DFT-7*393

RASTER=2008s4b.dgn
DGN=2008s4b.dgn
CAD User: AJFJ Date: 04-20-2009

INFOTC
3 Size

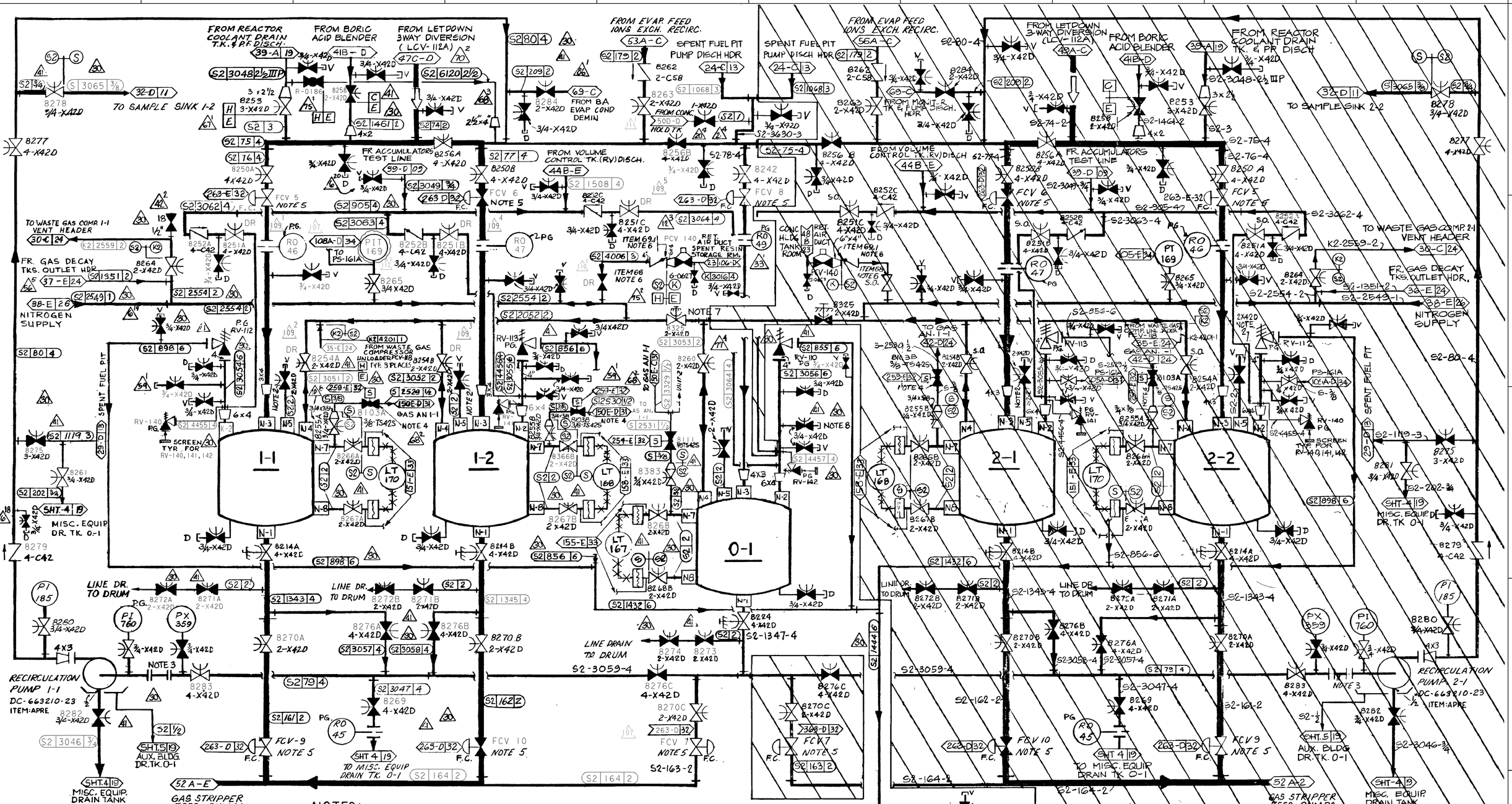

NOTES:

1. TANKS BY PG&E (54-A)
2. TO BE USED FOR START-UP, THEN CAPPED (51-C)
3. TEMPORARY STRAINER IS PLACED IN THE SPOOL PIECE DURING INITIAL FLUSHING OPERATIONS. STRAINER MUST BE REMOVED BEFORE PLANT START UP. (51-E)
4. VALVE ACTUATED AUTOMATICALLY BY GAS ANALYZER, I&C CHANNEL NO. AC-1067. (52-C)
5. P.G.&E. VALVES COVERED BY SPEC. 0732. (51-E)
6. P.G.&E. VALVES COVERED BY SPEC. 8729. (54-D)
7. INTERLOCKED REACH RODS WILL BE USED TO ENSURE ONE VALVE REMAINS OPEN AT ALL TIMES. (54-D)
8. FUTURE CONNECTION TO PS-161 IF OPERATING CONDITION REQUIRES. (55-C)
9. ALL PIPING IS PG&E CLASS E EXCEPT AS NOTED.

LIQUID HOLD-UP TANKS

NOTE 1 DC-663233-3

REF. DWG.: DC-663210-16

DIABLO CANYON POWER PLANT - PG&E CO.
CHEMICAL & VOLUME CONTROL SYSTEM

DRAWING	SHEET	PAGE	REV
102008	5	0	12

UNIT 1

DATE	DWN	RE	IV	PROFESSIONAL ENGINEER	PE DISC.	PE#	PE EXP.	
07-27-2011	AJFJ	RxG2		KERSI J. DALAL	MECHANICAL	M 16690	3/31/2012	REVISED PER DAS-6*421

RASTER=102008s5.dgn
DGN=102008s5.dgn
CAD User: AJFJ Date: 07-27-2011

3NPGIC
3 Size

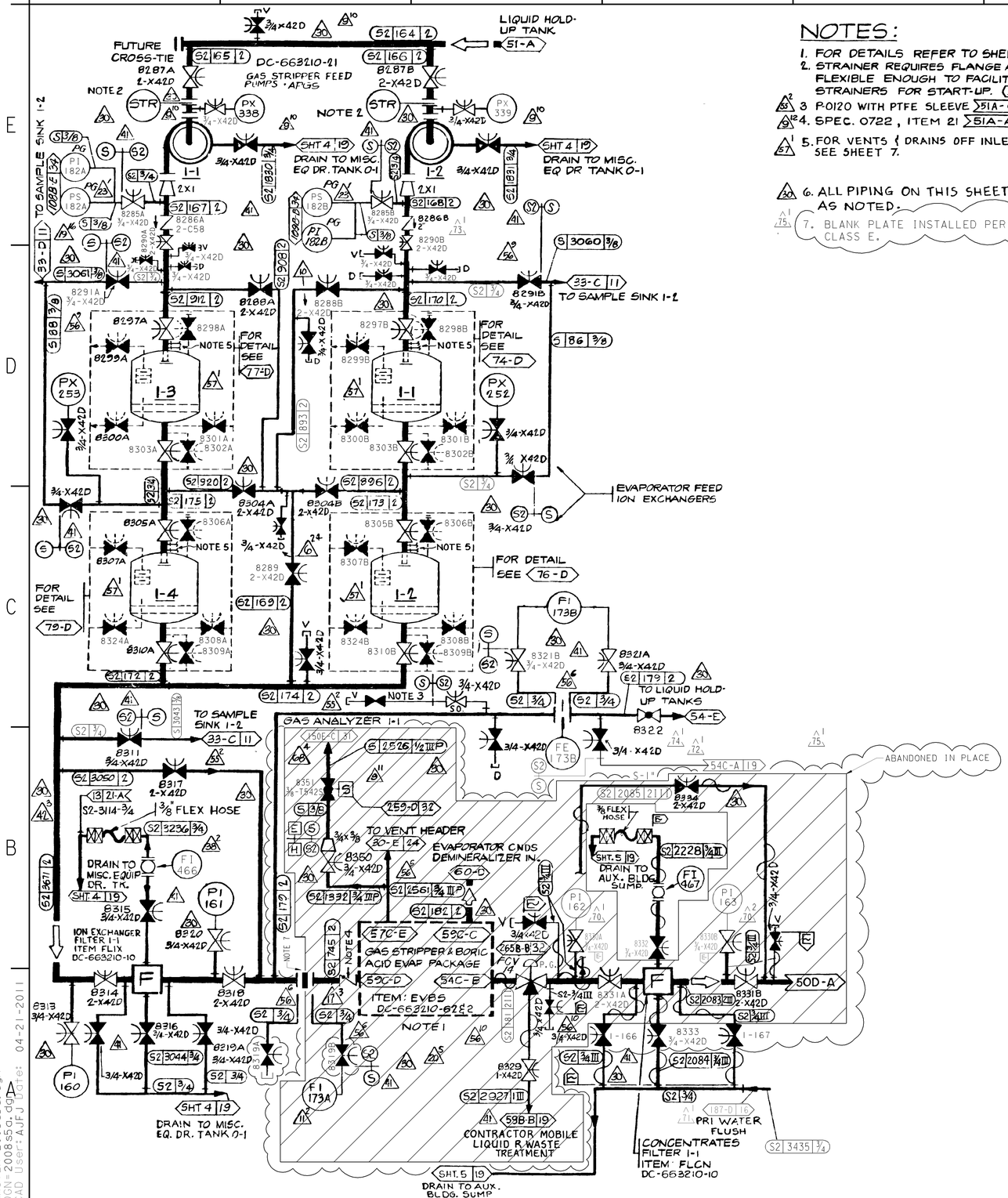

NOTES:

1. FOR DETAILS REFER TO SHEET 5C (52A-A)
2. STRAINER REQUIRES FLANGE AND SUCTION PIPING FLEXIBLE ENOUGH TO FACILITATE INSTALLATION OF PANCAKE STRAINERS FOR START-UP. (51A-E) (50A-E)
3. P-0120 WITH PTFE SLEEVE >51A-C
4. SPEC. 0722, ITEM 21 >51A-A >58A-A
5. FOR VENTS & DRAINS OFF INLET LINES SEE SHEET 7.
6. ALL PIPING ON THIS SHEET IS PG&E CODE CLASS E EXCEPT AS NOTED.
7. BLANK PLATE INSTALLED PER "S2" SPEC, CODE CLASS E.

UNIT 1

DIABLO CANYON POWER PLANT - PG&E CO. CHEMICAL & VOLUME CONTROL SYSTEM			
DRAWING	SHEET	PAGE	REV
102008	5A	0	75

DATE	DWN	RE	IV	PROFESSIONAL ENGINEER	PE DISC.	PE#	PE EXP.	
04-21-2011	AJFJ	FxC2		KERSI J. DALAL	MECHANICAL	M 16690	3/31/2012	REVISED PER DDN-2*560

RASTER=2008s5a.dgn
DGN=2008s5a.dgn
CAD User=AJFJ Date= 04-21-2011

Width 3' size

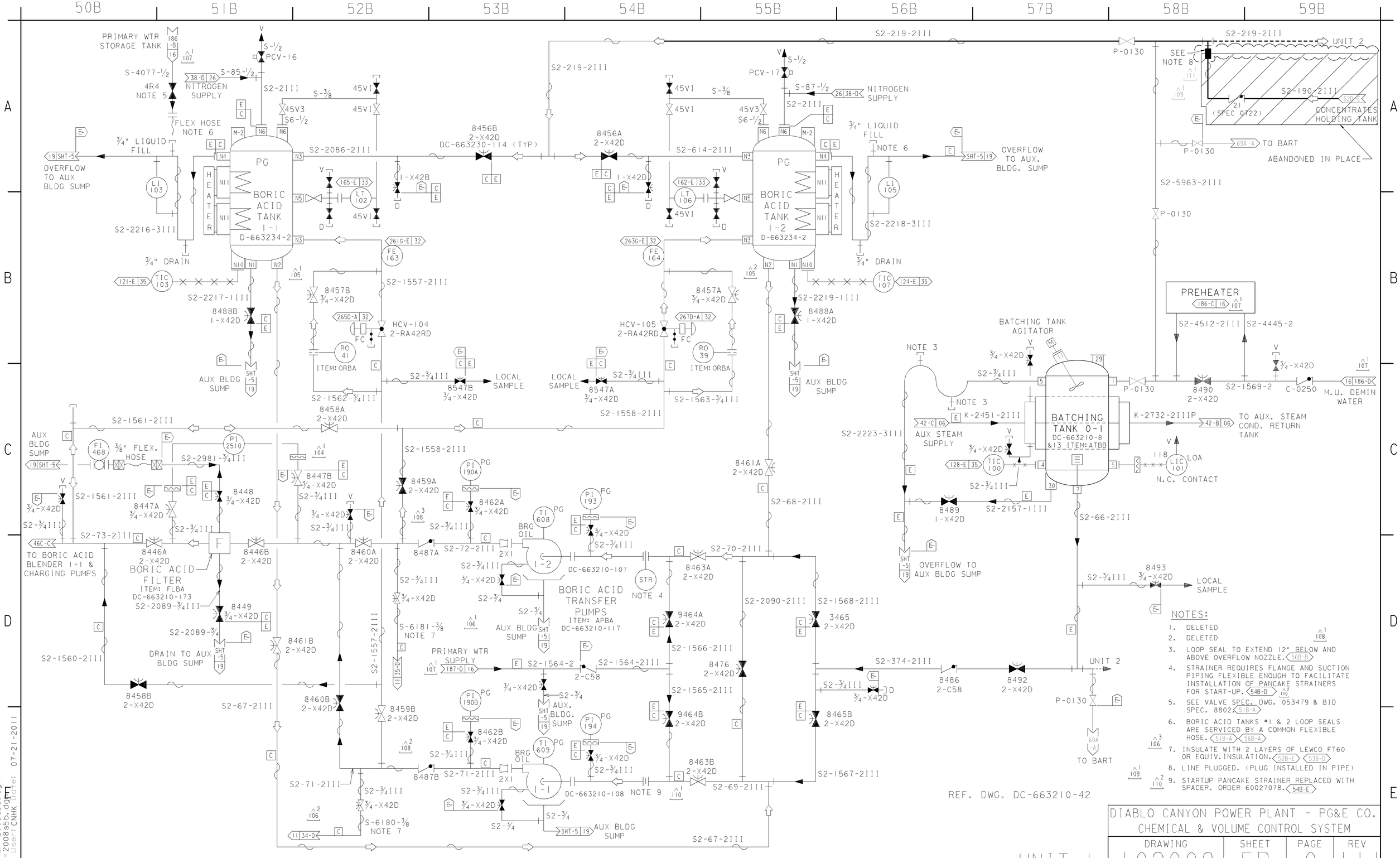
50B
51B
52B
53B
54B
55B
56B
57B
58B
59B
PRIMARY WTR STORAGE TANK
S-4077-1/2
4R4 NOTE 5
FLEX HOSE NOTE 6
S-85-1/2
NITROGEN SUPPLY
PCV-16
S-1/2
S2-2111
S-3/8
45V3
S6-1/2
45VI
3/4" LIQUID FILL
OVERFLOW TO AUX BLDG SUMP
LI 103
S2-2216-3111
3/4" DRAIN
TIC 103
S2-2217-1111
8488B 1-X42D
AUX BLDG SUMP
PG
BORIC ACID TANK 1-1 D-663234-2
HEATER
S2-2086-2111
165-E 33
LT 102
1-X42B
8456B 2-X42D
DC-663230-114 (TYP)
261G-E 32
FE 163
S2-1557-2111
8457B 3/4-X42D
265D-A 32
HCV-104 2-RA42RD
FC
RO 41
ITEM: ORBA
S2-3/4111
8547B 3/4-X42D
LOCAL SAMPLE
S2-1562-3/4111
8458A 2-X42D
S2-1561-2111
AUX BLDG SUMP
FI 468
3/8" FLEX. HOSE
PI 2510
S2-2981-3/4111
8448 3/4-X42D
8447A 3/4-X42D
S2-73-2111
TO BORIC ACID BLENDER 1-1 & CHARGING PUMPS
8446A 2-X42D
BORIC ACID FILTER
ITEM: FLBA
DC-663210-173
8446B 2-X42D
S2-2089-3/4111
8449 3/4-X42D
S2-2089-3/4
DRAIN TO AUX BLDG SUMP
8461B 2-X42D
S2-1560-2111
8458B 2-X42D
S2-67-2111
8460B 2-X42D
8459B 2-X42D
S2-1557-2111
S-6181-3/8 NOTE 7
8447B 3/4-X42D
S2-1558-2111
8459A 2-X42D
PI 190A
8462A 3/4-X42D
8460A 2-X42D
8487A
S2-72-2111
TI 608
BRG OIL
1-2
DC-663210-107
PI 193
S2-68-2111
8461A 2-X42D
S2-219-2111
S2-614-2111
8456A 2-X42D
1-X42D
162-E 33
LT 106
PCV-17
S-87-1/2
NITROGEN SUPPLY
3/4" LIQUID FILL
NOTE 6
OVERFLOW TO AUX. BLDG. SUMP
LI 105
S2-2218-3111
3/4" DRAIN
TIC 107
124-E 35
S2-2219-1111
8488A 1-X42D
AUX BLDG SUMP
263G-E 32
FE 164
8457A 3/4-X42D
267D-A 32
HCV-105 2-RA42RD
RO 39
ITEM: ORBA
S2-1563-3/4111
LOCAL SAMPLE
8547A 3/4-X42D
S2-1558-2111
8461A 2-X42D
S2-68-2111
S2-70-2111
8463A 2-X42D
STR
NOTE 4
BORIC ACID TRANSFER PUMPS
ITEM: APBA
DC-663210-117
AUX BLDG SUMP
9464A 2-X42D
S2-2090-2111
S2-1568-2111
3465 2-X42D
S2-1566-2111
8476 2-X42D
S2-1565-2111
9464B 2-X42D
8465B 2-X42D
S2-374-2111
8486 2-C58
8492 2-X42D
UNIT 2
P-0130
60A
TO BART
PRIMARY WTR SUPPLY
187-D 16
S2-1564-2
2-C58
S2-1564-2111
AUX. BLDG. SUMP
PI 190B
8462B 3/4-X42D
TI 609
1-1
DC-663210-108
NOTE 9
PI 194
8463B 2-X42D
S2-69-2111
S2-1567-2111
8487B
S2-71-2111
S-6180-3/8 NOTE 7
AUX BLDG SUMP
S2-67-2111
S2-219-2111
UNIT 2
SEE NOTE 8
S2-190-2111
21 (SPEC 0722)
CONCENTRATES HOLDING TANK
TO BART
ABANDONED IN PLACE
S2-5963-2111
P-0130
PREHEATER
186-C 16
S2-4512-2111
S2-4445-2
BATCHING TANK AGITATOR
NOTE 3
3/4-X42D
S2-3/4111
BATCHING TANK 0-1
DC-663210-8 &13 ITEM: ATBB
P-0130
8490 2-X42D
S2-1569-2
C-0250
M.U. DEMIN WATER
K-2451-2111
AUX STEAM SUPPLY
K-2732-2111P
TO AUX. STEAM COND. RETURN TANK
S2-2223-3111
TIC 100
128-E 35
LIC 101
LOA
N.C. CONTACT
8489 1-X42D
S2-2157-1111
S2-66-2111
OVERFLOW TO AUX BLDG SUMP
8493 3/4-X42D
LOCAL SAMPLE
S2-3/4111
NOTES:
1. DELETED
2. DELETED
3. LOOP SEAL TO EXTEND 12" BELOW AND ABOVE OVERFLOW NOZZLE. 56B-B
4. STRAINER REQUIRES FLANGE AND SUCTION PIPING FLEXIBLE ENOUGH TO FACILITATE INSTALLATION OF PANCAKE STRAINERS FOR START-UP. 54B-D
5. SEE VALVE SPEC. DWG. 053479 & BID SPEC. 8802. 51B-A
6. BORIC ACID TANKS #1 & 2 LOOP SEALS ARE SERVICED BY A COMMON FLEXIBLE HOSE. 51B-A 56B-A
7. INSULATE WITH 2 LAYERS OF LEWCO FT60 OR EQUIV. INSULATION. 52B-E 53B-D
8. LINE PLUGGED. (PLUG INSTALLED IN PIPE)
9. STARTUP PANCAKE STRAINER REPLACED WITH SPACER. ORDER 60027078. 54B-E
REF. DWG. DC-663210-42
UNIT 1
DIABLO CANYON POWER PLANT - PG&E CO.
CHEMICAL & VOLUME CONTROL SYSTEM
DRAWING 102008
SHEET 5B
PAGE 0
REV 111
07-21-2011 CNHK RxG2 KERSI J. DALAL MECHANICAL M 16690 3/31/2012 REVISED PER DFT-7*1265-0
DATE DWN RE IV PROFESSIONAL ENGINEER PE DISC. PE# PE EXP.
RASTER-2008s5b.dgn
DGN-2008s5b.dgn
CAD User: CNHK Date: 07-21-2011
SIZE: 3 Size

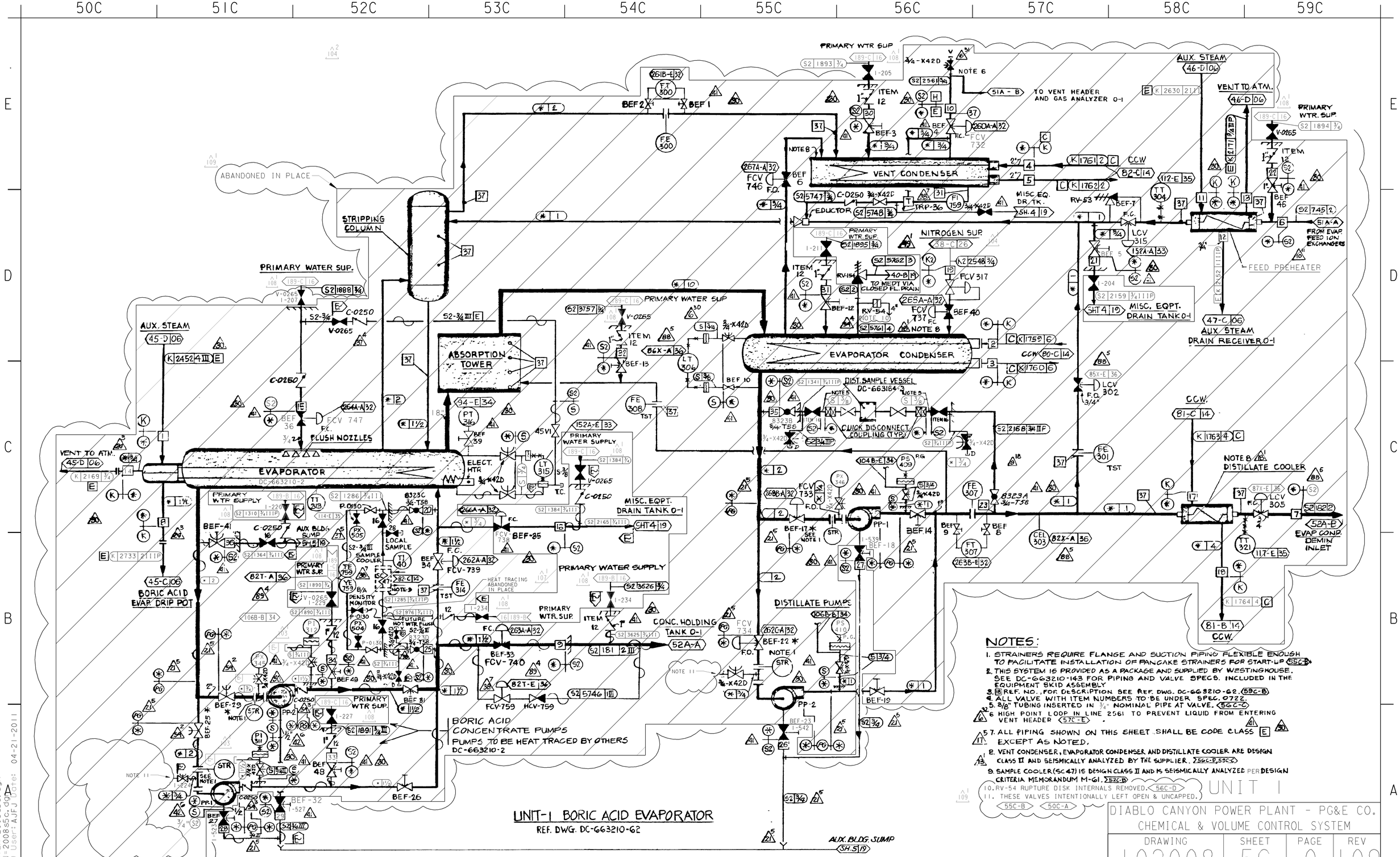

NOTES:

1. STRAINERS REQUIRE FLANGE AND SUCTION PIPING FLEXIBLE ENOUGH TO FACILITATE INSTALLATION OF PANCAKE STRAINERS FOR START-UP (55C-B)
2. THIS SYSTEM IS PROVIDED AS A PACKAGE AND SUPPLIED BY WESTINGHOUSE. SEE DC-663210-143 FOR PIPING AND VALVE SPECS. INCLUDED IN THE EQUIPMENT SKID ASSEMBLY
3. (18) REF. NO., FOR DESCRIPTION SEE REF. DWG. DC-663210-62. (59C-B)
4. ALL VALVE WITH ITEM NUMBERS TO BE UNDER SPEC. 0722.
5. 3/8" TUBING INSERTED IN 3/4" NOMINAL PIPE AT VALVE. (56C-C)
6. HIGH POINT LOOP IN LINE 2561 TO PREVENT LIQUID FROM ENTERING VENT HEADER (57C-E)
7. ALL PIPING SHOWN ON THIS SHEET SHALL BE CODE CLASS E EXCEPT AS NOTED.
8. VENT CONDENSER, EVAPORATOR CONDENSER AND DISTILLATE COOLER ARE DESIGN CLASS II AND SEISMICALLY ANALYZED BY THE SUPPLIER. (56C-D, 59C-C)
9. SAMPLE COOLER (SC 47) IS DESIGN CLASS II AND IS SEISMICALLY ANALYZED PER DESIGN CRITERIA MEMORANDUM M-61. (52C-B)
10. RV-54 RUPTURE DISK INTERNALS REMOVED. (56C-D)
11. THESE VALVES INTENTIONALLY LEFT OPEN & UNCAPPED. (55C-B) (50C-A)

UNIT 1

DIABLO CANYON POWER PLANT - PG&E CO.
CHEMICAL & VOLUME CONTROL SYSTEM

DRAWING	SHEET	PAGE	REV
102008	5C	0	109

DATE	DWN	RE	IV	PROFESSIONAL ENGINEER	PE DISC.	PE#	PE EXP.	
04-21-2011	AJFJ	FxC2		KERSI J. DALAL	MECHANICAL	M 16690	3/31/2012	REVISED PER DDN-2*560

RASTER=2008s5c.dgn
DGN=2008s5c.dgn
CAD User: AJFJ Date: 04-21-2011

3 Size

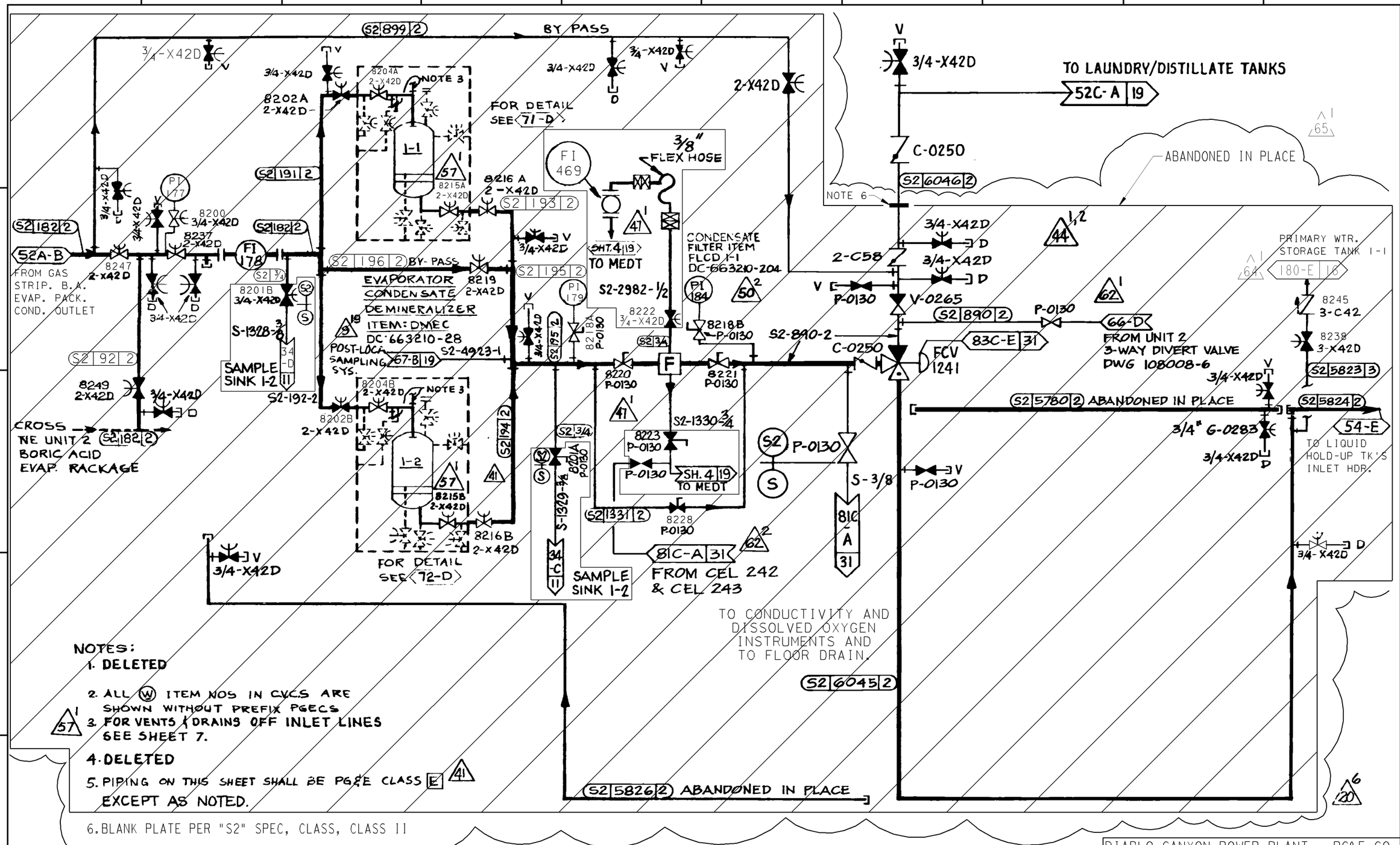

NOTES:

1. DELETED
2. ALL (W) ITEM NOS IN CVCS ARE SHOWN WITHOUT PREFIX PGECS
3. FOR VENTS & DRAINS OFF INLET LINES SEE SHEET 7.
4. DELETED
5. PIPING ON THIS SHEET SHALL BE PG&E CLASS E EXCEPT AS NOTED.
6. BLANK PLATE PER "S2" SPEC, CLASS, CLASS II

REF. DWG. 663210-41

UNIT 1

DIABLO CANYON POWER PLANT - PG&E CO.
CHEMICAL & VOLUME CONTROL SYSTEM

DRAWING	SHEET	PAGE	REV
102008	6	0	65

DATE	DWN	RE	IV	PROFESSIONAL ENGINEER	PE DISC.	PE#	PE EXP.	
04-13-2011	AJFJ	FxC2		KERSI J. DALAL	MECHANICAL	M 16690	3/31/2012	REVISED PER DDN-2*560

RASTER=2008s6.dgn
DGN=2008s6.dgn
CAD User: AJFJ Date: 04-13-2011

INPGIC
1 Size

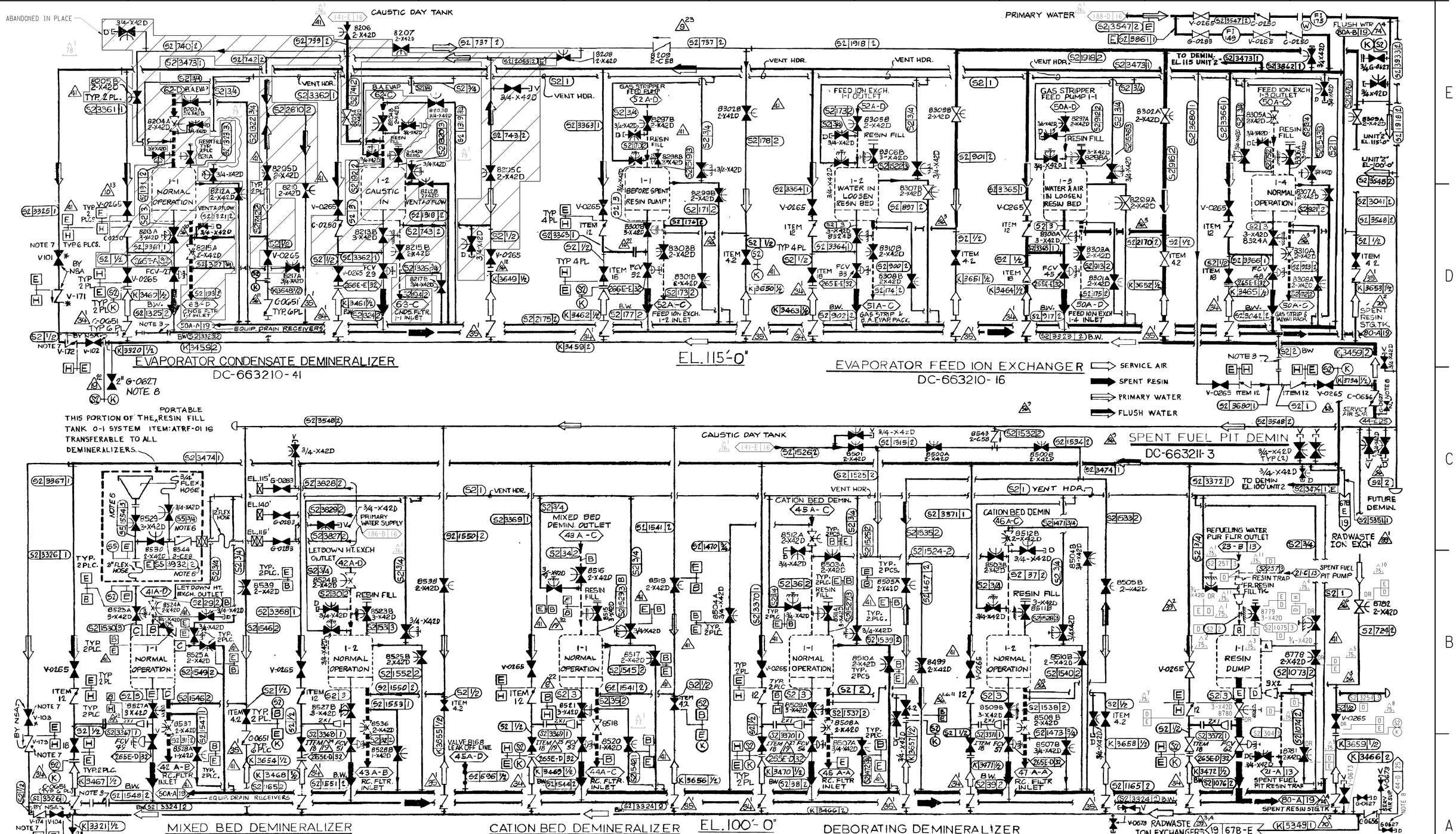

NOTES:
1. FOR PIPING SPECS, SPEC BOUNDARIES, CODE CLASSES AND CODE BOUNDARIES REFER TO EQUIPMENT 1 IN EACH DEMINERALIZER GROUP.
2. B.W. INDICATES-BUTTWELDED (72-A)
3. 1" FLANGED SPOOL FOR CLEANOUT ENTRY INTO 2" LINE. (70,79-A,D)
4. ALL VALVES WITH ITEM NOS. TO BE UNDER SPEC. 0722 UNLESS NOTED.
5. PIPING ON THIS SHEET IS P.G.&E. CODE CLASS E, (41) EXCEPT AS NOTED.
6. SPEC. "S5" APPLIES TO PIPE ONLY, EXCLUDING FLANGES AND VALVES
7. VALVES PROVIDED BY "NSA" SEE DWG. 101935 (VALVE INVENTORY) (70-D,A)
8. RESIN HDR. BLOWOUT VALVES (70-C,A) (78-C,A)

DIABLO CANYON POWER PLANT - PG&E CO.
CHEMICAL & VOLUME CONTROL SYSTEM

DRAWING	SHEET	PAGE	REV
102008	7	0	79

UNIT 1

DATE	DWN	RE	IV	PROFESSIONAL ENGINEER	PE DISC.	PE#	PE EXP.	
12-21-2011	MNRU	FxC2		KERSI J. DALAL	MECHANICAL	M 16690	3/31/2012	REVISED PER DFT-7*1399-0

RASTER=102008a7.dgn
DGN=102008a7.dgn
CAD User: MNRU Date: 12-21-2011

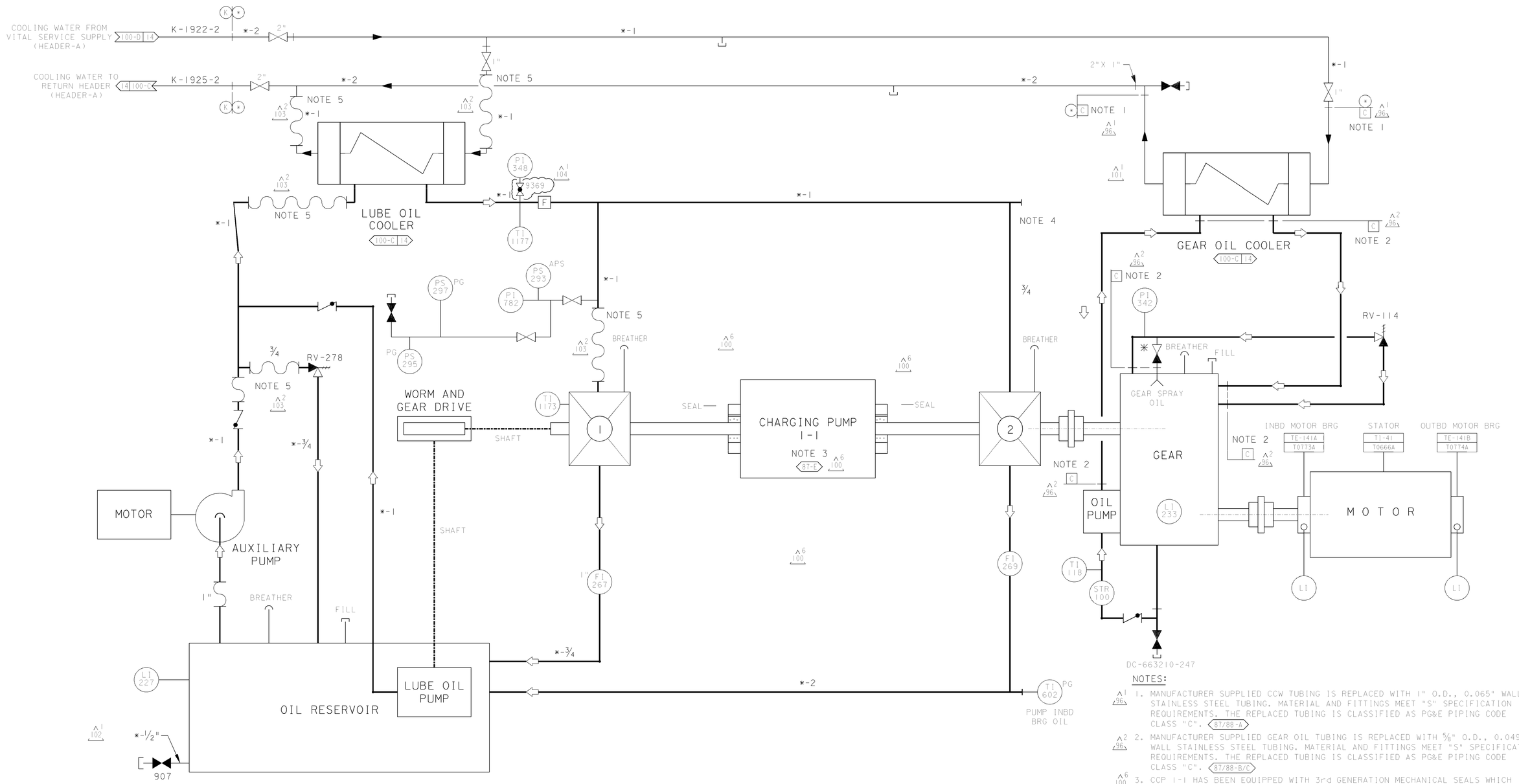

NOTES:

1. MANUFACTURER SUPPLIED CCW TUBING IS REPLACED WITH 1" O.D., 0.065" WALL STAINLESS STEEL TUBING. MATERIAL AND FITTINGS MEET "S" SPECIFICATION REQUIREMENTS. THE REPLACED TUBING IS CLASSIFIED AS PG&E PIPING CODE CLASS "C". 87/88-A
2. MANUFACTURER SUPPLIED GEAR OIL TUBING IS REPLACED WITH 5/8" O.D., 0.049" WALL STAINLESS STEEL TUBING. MATERIAL AND FITTINGS MEET "S" SPECIFICATION REQUIREMENTS. THE REPLACED TUBING IS CLASSIFIED AS PG&E PIPING CODE CLASS "C". 87/88-B/C
3. CCP 1-1 HAS BEEN EQUIPPED WITH 3rd GENERATION MECHANICAL SEALS WHICH DO NOT REQUIRE CCW FOR EXTERNAL COOLING. 85-C
4. MANUFACTURE SUPPLIED INBOARD SUPPLY TUBING IS REPLACED WITH 3/4" OD, 0.049" WALL STAINLESS STEEL TUBING. MATERIAL AND FITTINGS MEET "S" SPECIFICATION REQUIREMENTS. 87-B
5. TUBING HAS BEEN CHANGED TO ALL STAINLESS STEEL FLEXIBLE STYLE. FITTINGS TO CONFORM TO MEET "S" SPECIFICATION REQUIREMENTS. (SWAGELOK OR EQUAL), REFERENCE AT-MM AR A0559003. 81/82/83-A/B/C 86-B

CENTRIFUGAL CHARGING PUMP 1-1
LUBE OIL, GEAR OIL, SEAL FLUSH AND COOLER PIPING

DC-663210-50

UNIT 1

P G & E CO.	102008	REV. 104
SHEET 8	PAGE 0	

DATE	DWN	RE	IV	PROFESSIONAL ENGINEER	PE DISC.	PE#	PE EXP.	
12/4/02	PMH2	RMD1	-	ERBAN L. GREEN	MECHANICAL	M 20917	6/30/2005	Revised per FCT 027006

CAD User:PMH2 Date:11-26-2002
DGN=200858.DGN

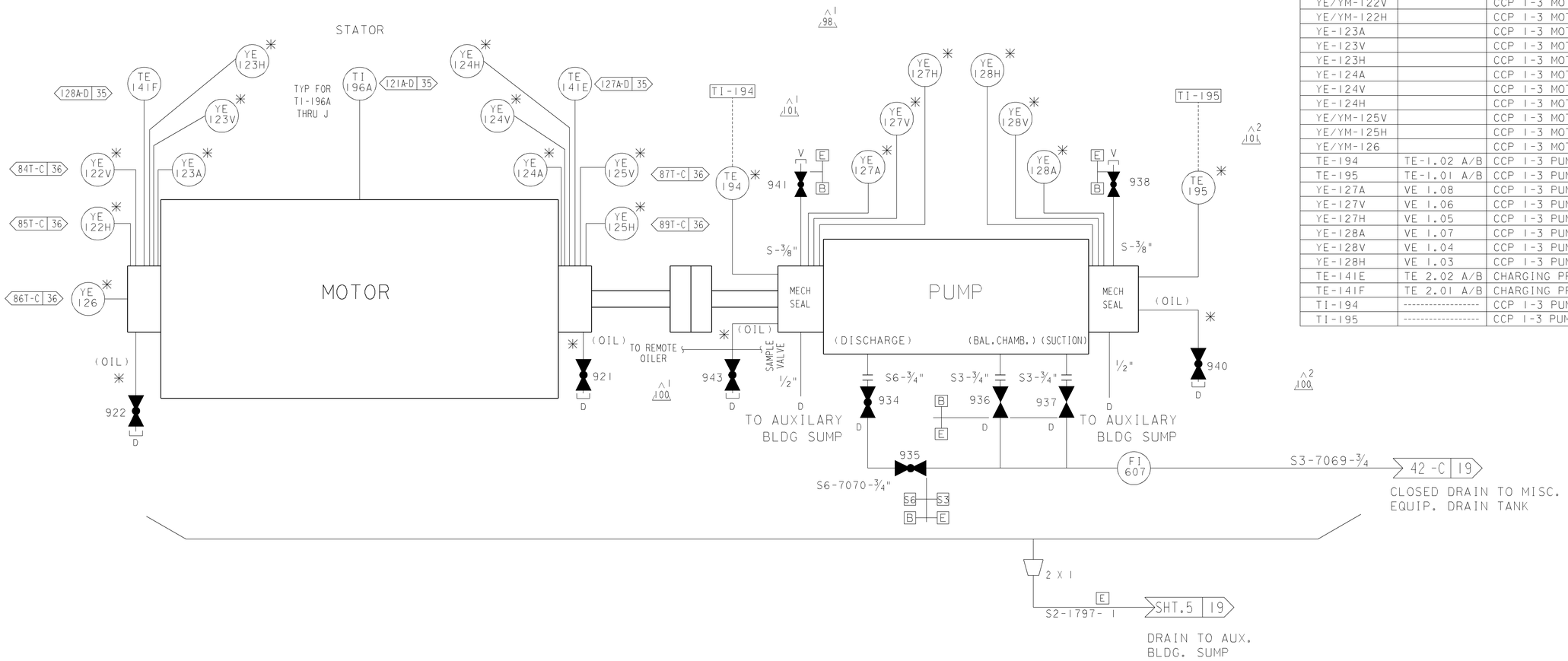

DCPP COMP. #	VENDOR COMP. #	DCPP DESCRIPTION
YE/YM-122V		CCP 1-3 MOTOR OUTBD SHAFT VIBR VERT-D1V
YE/YM-122H		CCP 1-3 MOTOR OUTBD SHAFT VIBR HORIZ-D1H
YE-123A		CCP 1-3 MOTOR OUTBD CASING VIBR AXIAL-V1A
YE-123V		CCP 1-3 MOTOR OUTBD CASING VIBR VERT-V1V
YE-123H		CCP 1-3 MOTOR OUTBD CASING VIBR HORIZ-V1H
YE-124A		CCP 1-3 MOTOR INBD CASING VIBR AXIAL-V2A
YE-124V		CCP 1-3 MOTOR INBD CASING VIBR VERT-V2V
YE-124H		CCP 1-3 MOTOR INBD CASING VIBR HORIZ-V2H
YE/YM-125V		CCP 1-3 MOTOR INBD SHAFT VIBR VERT-D2V
YE/YM-125H		CCP 1-3 MOTOR INBD SHAFT VIBR HORIZ-D2H
YE/YM-126		CCP 1-3 MOTOR SHAFT SPEED-SPD
TE-194	TE-1.02 A/B	CCP 1-3 PUMP INBD BRG TEMPERATURE ELEMENT
TE-195	TE-1.01 A/B	CCP 1-3 PUMP OUTBD BRG TEMPERATURE ELEMENT
YE-127A	VE 1.08	CCP 1-3 PUMP INBD CASING VIBR AXIAL-V3A
YE-127V	VE 1.06	CCP 1-3 PUMP INBD CASING VIBR VERT-V3V
YE-127H	VE 1.05	CCP 1-3 PUMP INBD CASING VIBR HORIZ-V3H
YE-128A	VE 1.07	CCP 1-3 PUMP OUTBD CASING VIBR AXIAL-V4A
YE-128V	VE 1.04	CCP 1-3 PUMP OUTBD CASING VIBR VERT-V4V
YE-128H	VE 1.03	CCP 1-3 PUMP OUTBD CASING VIBR HORIZ-V4H
TE-141E	TE 2.02 A/B	CHARGING PP 1-3 MTR INBD BRG
TE-141F	TE 2.01 A/B	CHARGING PP 1-3 MTR OUTBD BRG
TI-194	----------	CCP 1-3 PUMP INBD BRG TEMPERATURE INDICATOR
TI-195	----------	CCP 1-3 PUMP OUTBD BRG TEMPERATURE INDICATOR

NOTES:

1. ALL PIPING AND VALVES CONNECTED TO THE PUMP BEARING OIL HOUSINGS, PUMP MECH. SEAL HOUSING DRAINS, AND MOTOR BEARING OIL HOUSINGS ARE PIPE CODE CLASS E.
2. ALL VIBRATION, SPEED, AND TEMPERATURE MONITORING INSTRUMENTATION IS INSTRUMENT CLASS II. SEE VENDOR DRAWINGS 663210-321, -334, & -339 FOR ADDITIONAL INSTRUMENTATION INFORMATION.
3. * - SUPPLIED WITH ASSOCIATED EQUIPMENT. FOR LEGEND SEE PIPING SCHEMATIC LEGEND DWG. 102001-3.

CENTRIFUGAL CHARGING PUMP 1-3

REF DWG DC-663210-301

UNIT 1

DIABLO CANYON POWER PLANT - PG&E CO.
CHEMICAL & VOLUME CONTROL SYSTEM

DRAWING	SHEET	PAGE	REV
102008	9	0	102

DATE	DWN	RE	IV	PROFESSIONAL ENGINEER	PE DISC.	PE#	PE EXP.	
07-22-2009	RxG2	FxC2		KERSI J. DALAL	MECHANICAL	M 16690	3/31/2010	REVISED PER DFT-7*491

RASTER-2008s9.dgn
DGN-2008s9.dgn
CAD User:RxG2 DGN: 07-22-2009

MICRO STATION 3 Size

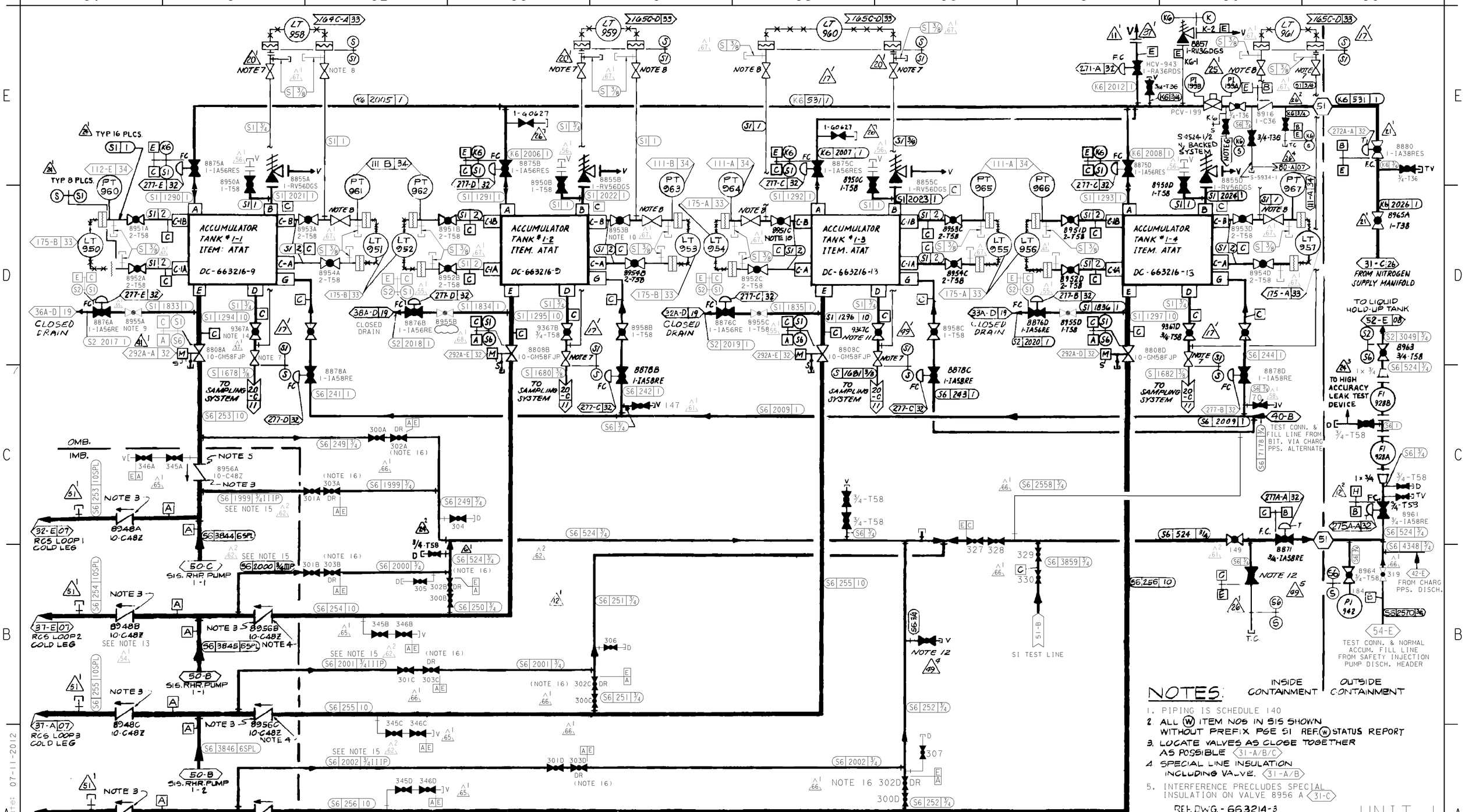

NOTES:

1. PIPING IS SCHEDULE 140
2. ALL (W) ITEM NOS IN SIS SHOWN WITHOUT PREFIX PGE SI REF. (W) STATUS REPORT
3. LOCATE VALVES AS CLOSE TOGETHER AS POSSIBLE (31-A/B/C)
4. SPECIAL LINE INSULATION INCLUDING VALVE. (31-A/B)
5. INTERFERENCE PRECLUDES SPECIAL INSULATION ON VALVE 8956 A (31-C)

REF. DWG. - 663214-3
- 663216-6

6. TERMINATES AT 4 N_2 ACCUMULATORS PIPED TO 2 PRESSURIZER. PORV'S AND 4 RCS CHARGING CONTROL VALVE OPERATORS COORD 1-C OF 341001, AND PIPED TO ACCUMULATORS FOR VALVES 9356A & 9351A & B (COORD 334A-C OF DWG. 102032-33A).
7. 3/4"- VALVE, PO#024588, ITEM 5, STOCK # 94-3781
8. 1" - VALVE, PO #024588, ITEM 6, STOCK # 94-3782
9. 1" VALVE, DWG.# 6006473-157, S/C# 94-3771
10. 2" VALVE, DWG. 6006473-159, S/C# 94-3773 (34/35-D)
11. VALVE, DWG. 6006473-168, S/C 94-4955 (35/36-D)
12. 3/4" ANCHOR DARLING MODEL 187868, DWG. 6006473-97, S/C 94-2820 (36-B) (38-B)
13. NO INSULATION ON CHECK VALVE SI-1-8948B (30-B)
14. VALVE DWG 6011929-8 S/C #95-5897 (31-D)
15. INSULATION ON PORTIONS OF THESE LINES HAVE ADDITIONAL BANDS INSTALLED ON 3" CENTER-TO-CENTER (MAX) SPACING. SEE DRI OR ISOMETRIC FOR SPECIFIC LOCATIONS.
16. MECHANICAL TRAVEL STOP INSTALLED ON VALVES 302A THRU D AND 303A THRU D TO LIMIT OPEN STEM TRAVEL (REF. DWG# 6011930-140, PAGE 3)

UNIT 1

DIABLO CANYON POWER PLANT - PG&E CO.
SAFETY INJECTION SYSTEM

DRAWING	SHEET	PAGE	REV
102009	3	0	68

DATE	DWN	RE	IV	PROFESSIONAL ENGINEER	PE DISC.	PE#	PE EXP.	
07-11-2012	JBMX	FAZI		KERSI J. DALAL	MECHANICAL	M 16690	3/31/2014	REVISED PER DFT-7*1611

RASTER=200953.dgn
DGN=200953.dgn
CAD User: JBMX DGTe: 07-11-2012

3 Size

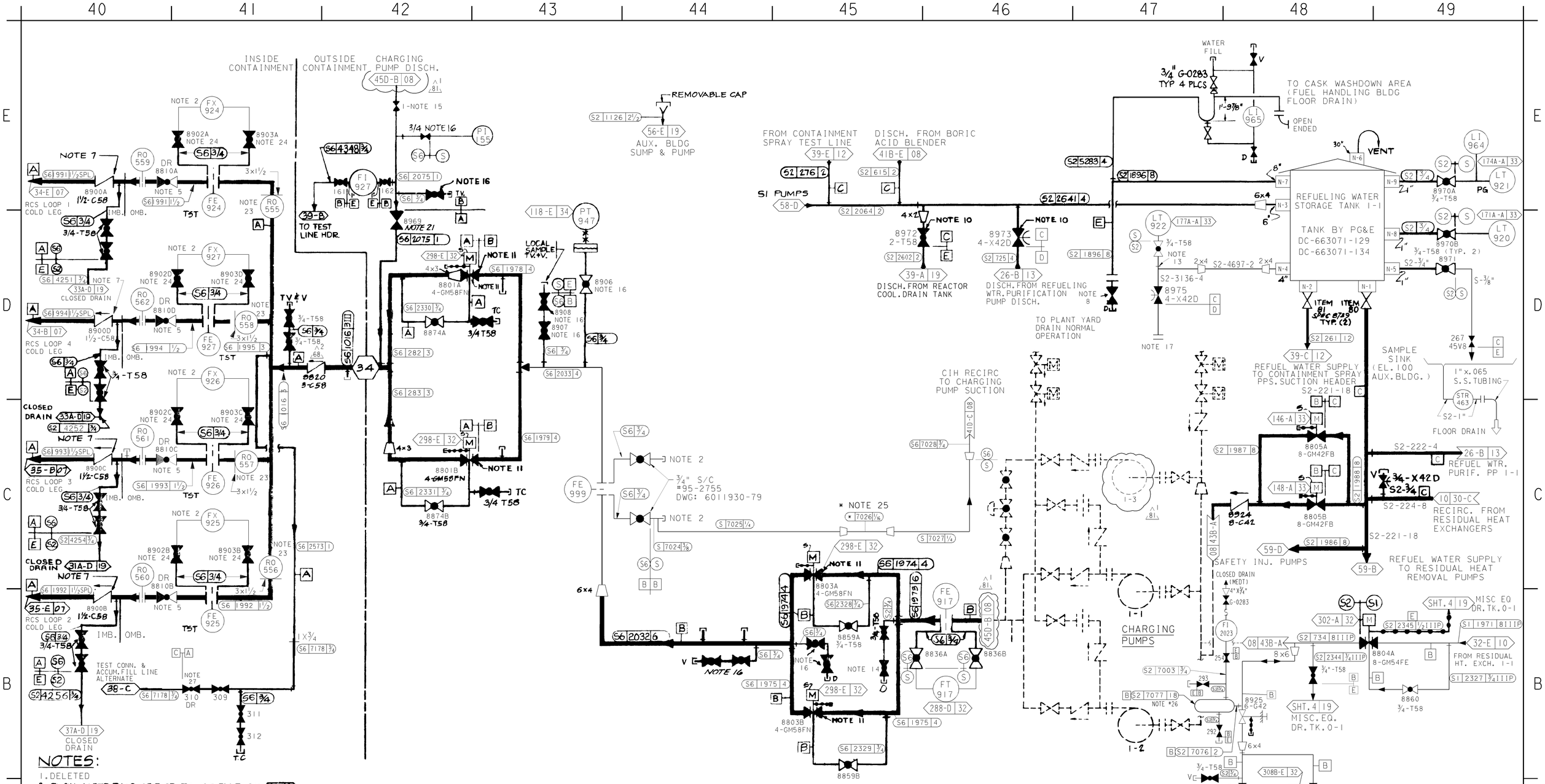

NOTES:

1. DELETED
2. FLOW METERING ORIFICE TO VERIFY FLOW (41-C/D) DURING PREOPERATIONAL TESTING
   USE OF FLOW METERING ORIFICE WILL REQUIRE ISOLATION OF CIH RECIRCULATION LINE.
3. DELETED
4. PG. INDICATES PG&E CO. SCOPE
5. VALVES ARE SET TO BALANCE ECCS INJECTION FLOWS AND TO PREVENT PUMP RUNOUT, THEN CONTROLLED IN THE THROTTLED POSITION. (40-C) (40-D)
6. ALL WESTINGHOUSE ITEM NUMBERS IN SIS ARE SHOWN WITHOUT PREFIX PG&E - 51
7. SPECIAL LINE INSULATION INCLUDING CHECK (40-C/E)
8. WHEN WATER IS CONTAMINATED, BLIND FLANGE (47-D) WITH HOSE BIBB MUST BE INSTALLED TO ALLOW DRAINING TO MISC. EQUIP. DRAIN TANK 0-1. VLV: CRANE - ALOYCO. (P.O. 031713)
9. DELETED
10. CHAIN OPERATED. (46-D) (47-D)
11. DARLING MNF VALVE (42-D) (42-C) (45-B) (45-B)
12. DELETED
13. FIELD TO INSTALL BOSS PER FIG.-343 DWG.053093 (47-D)
14. ANCHOR/DARLING MODEL 1878, DC-6006473-7 (45-B)
15. ANCHOR/DARLING #1878GB, DC-6006473-157 (42-E)
16. ANCHOR/DARLING 3/4"-1878GB, DC-6006473-97, S/C 94-2820 (42-E) (43-D) (44-B) (45-B)
17. BLANK FLANGE IS PG&E CODE CLASS "C" (47-D)
18. DELETED.
19. DELETED.
20. DELETED
21. VALVE, DWG.6006473-157, S/C 94-3771
22. DELETED
23. THE RO ASSEMBLY CONSISTS OF A PRESSURE REDUCING ORIFICE (PRO), A SWAGE TYPE REDUCER AND A FLOW BAFFLE PER DRAWING DC 663230-409
24. ANCHOR/DARING #1878 GB, S/C 95-5170 (41-C/D/E)
25. FOR LINE-7026- 1/16:
    PG&E S-SPECIFICATION WITH THE FOLLOWING SPECIAL REQUIREMENTS:
    - TUBING SIZE SHALL BE 1/16 INCH OD WITH WALL THICKNESS OF 0.020".
    - SEAMLESS STAINLESS STEEL TUBING MATERIAL GRADE TP304 MAY BE SUBSTITUTED FOR GRADE TP316. ALL OTHER REQUIREMENTS OF S-SPECIFICATION SHALL APPLY.
    - LENGTH OF LINE-7026- 1/16; 24 FEET ± 2 FEET (REF. DCP N-49631).
26. S2-7077-18 INDICATES SUCTION VOID HEADER (47-B)
27. MECHANICAL TRAVEL STOP INSTALLED ON VALVE 310 (41-B) TO LIMIT OPEN STEM TRAVEL (REF: DWG# 6011930-140, PAGE 3)

DIABLO CANYON POWER PLANT - PG&E CO.
SAFETY INJECTION SYSTEM

DRAWING	SHEET	PAGE	REV
102009	4	0	81

DATE	DWN	RE	IV	PROFESSIONAL ENGINEER	PE DISC.	PE#	PE EXP.	
10-31-2013	MNRU	FxC2	KJD3	NOT REQUIRED	N/A	N/A	N/A	REVISED PER DFT-7*2331

RASTER-102009S4.dgn
DGN-102009S4.dgn
CAD User: MNRU Date: 10-31-2013

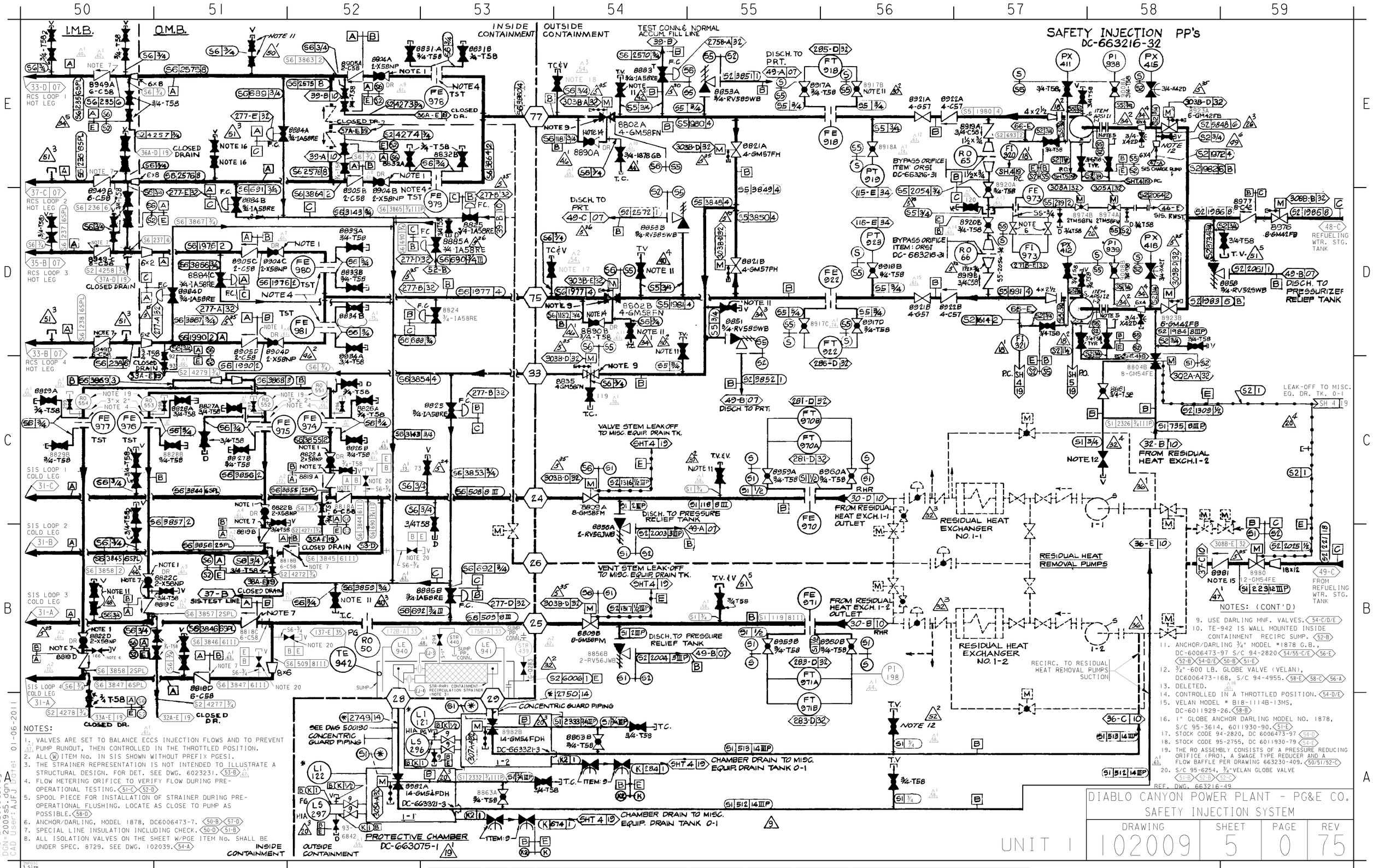

NOTES:

1. VALVES ARE SET TO BALANCE ECCS INJECTION FLOWS AND TO PREVENT PUMP RUNOUT, THEN CONTROLLED IN THE THROTTLED POSITION.
2. ALL (W) ITEM No. IN SIS SHOWN WITHOUT PREFIX PGESI.
3. THE STRAINER REPRESENTATION IS NOT INTENDED TO ILLUSTRATE A STRUCTURAL DESIGN. FOR DET. SEE DWG. 6023231. (53-B)
4. FLOW METERING ORIFICE TO VERIFY FLOW DURING PRE-OPERATIONAL TESTING. (51-C) (52-D)
5. SPOOL PIECE FOR INSTALLATION OF STRAINER DURING PRE-OPERATIONAL FLUSHING. LOCATE AS CLOSE TO PUMP AS POSSIBLE. (58-D)
6. ANCHOR/DARLING, MODEL 1878, DC6006473-7. (50-B) (57-D)
7. SPECIAL LINE INSULATION INCLUDING CHECK. (50-D) (51-B)
8. ALL ISOLATION VALVES ON THE SHEET W/PGE ITEM No. SHALL BE UNDER SPEC. 8729. SEE DWG. 102039. (54-A)

NOTES: (CONT'D)

9. USE DARLING MNF. VALVES. (54-C/D/E)
10. TE-942 IS WALL MOUNTED INSIDE CONTAINMENT RECIRC SUMP. (52-B)
11. ANCHOR/DARLING ¾" MODEL #1878 G.B., DC-6006473-97 S/C 94-2820 (54/55-C/E) (56-E)
12. ¾"-600 LB. GLOBE VALVE (VELAN), DC6006473-168, S/C 94-4955. (58-E) (58-C) (56-A)
13. DELETED.
14. CONTROLLED IN A THROTTLED POSITION. (54-D/E)
15. VELAN MODEL # B18-1114B-13MS, DC-6011929-26. (58-B)
16. 1" GLOBE ANCHOR DARLING MODEL NO. 1878, S/C 95-3614, 6011930-90. (51-E)
17. STOCK CODE 94-2820, DC 6006473-97 (54-D)
18. STOCK CODE 95-2755, DC 6011930-79 (54-E)
19. THE RO ASSEMBLY CONSISTS OF A PRESSURE REDUCING ORIFICE (PRO), A SWAGE TYPE REDUCER AND A FLOW BAFFLE PER DRAWING 663230-409. (50/51/52-C)
20. S/C 95-6254, ¾"VELAN GLOBE VALVE (51-B) (52-B) (52-C)

REF. DWG. 663216-49

DIABLO CANYON POWER PLANT - PG&E CO.
SAFETY INJECTION SYSTEM

DRAWING	SHEET	PAGE	REV
102009	5	0	75

DATE	DWN	RE	IV	PROFESSIONAL ENGINEER	PE DISC.	PE#	PE EXP.	
01-06-2011	AJFJ	FxC2		KERSI J. DALAL	MECHANICAL	M 16690	3/31/2012	REVISED PER DFT-7*1014

RASTER-2009s5.dgn
DGN-2009s5.dgn Date: 01-06-2011
CAD User-AJFJ

SHEET 3 SIZE

NOTES:
1. ALL TUBING STEEL
2. ALL PIPE SCH 40 - ASTM A53
3. ALL CONNECTORS - S.S.
4. ALL PIPE FITTINGS - ASTM A-105 GR.2

SIS PUMP.	1-1	1-2
DRAIN LINE NUMBER	S2 693 2	S2 1614 2

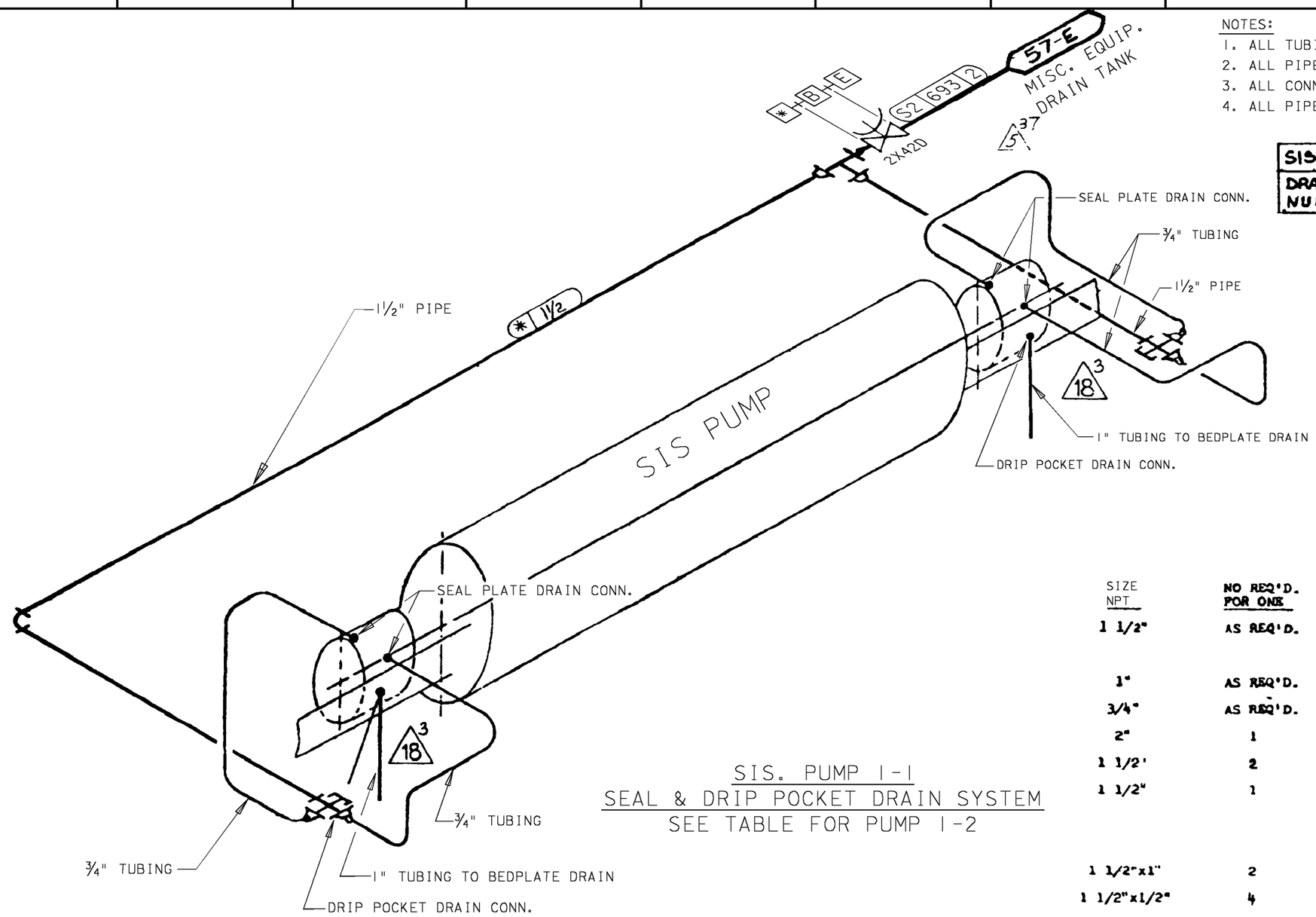

SIS. PUMP 1-1
SEAL & DRIP POCKET DRAIN SYSTEM
SEE TABLE FOR PUMP 1-2

SIZE NPT	NO REQ'D. FOR ONE	DESCRIPTION
1 1/2"	AS REQ'D.	PIPE - C.T.S.
1"	AS REQ'D.	TUBING .049 WALL THICKNESS
3/4"	AS REQ'D.	TUBING .049 WALL THICKNESS
2"	1	TEE - 2000#
1 1/2"	2	CROSS - 2000#
1 1/2"	1	ELBOW - 2000#
1 1/2"x1"	2	HEX BUSHING
1 1/2"x1/2"	4	HEX BUSHING
2"x1 1/2"	2	HEX BUSHING
1"	4	16-16 FBZ-SS - OR EQUAL (1)
1/2"	8	12-8 FBZ -SS - OR EQUAL (1)

WESTINGHOUSE EL. CORP. - APD.

PUMP NO.	SPIN NO.
(2) 45493/99	PSE SIAPSI - 1/2
45491/92	AEP SIAPSI - 1/2
45490/94	AMP SIAPSI - 1/2
45495/96	PNJ SIAPSI - 1/2
45497/98	PGE SIAPSI - 1/2
45489/500	PEG SIAPSI - 1/2

SAFETY INJECTION
CUST. OR NO. 54-E-705-03B SUPP.
DATE: 6-25-69

OUR OR NO. 346-354
2 1/2" - JTCH - 10 STEL

DRAWING STATUS PWR PLANT EQUIPMENT	BY	DATE
[illegible]		
[illegible]		
[illegible]		
APPROVED FOR CONSTRUCTION		11/26/69

DC-663216-28 UNIT - 1 (13) 2

NO.	CHANGES MADE	DATE
(1)	DRAIN FITTINGS REVISED	2 APR
(2)	PUMP SPIN NOS. UP-DATED	4-6 70
(3)		

PACIFIC PUMPS INC.
LOS ANGELES, CALIF
SEAL & DRIP POCKET DRAIN PIPING
DRAWN A. DATE 6-25-69 TYPE JTCH
TRACED SCALE — PART NO.
CHECKED APB
APPROVED
CSD-45489-1

P G & E CO.		102009	REV.
SHEET 6	PAGE 0		19

4/27/99	CMG9	FXC2	-	KERSI J. DALAL	MECHANICAL	M 16690	3/31/2000	Enhanced per FCT 023917
DATE	DWN	RE	IV	PROFESSIONAL ENGINEER	PE DISC.	PE#	PE EXP.	

CAD User:CMG9 Date: 4-26-1999
DGN=2009S6.DGN
RASTER=2009S6.TIF
INPGIC

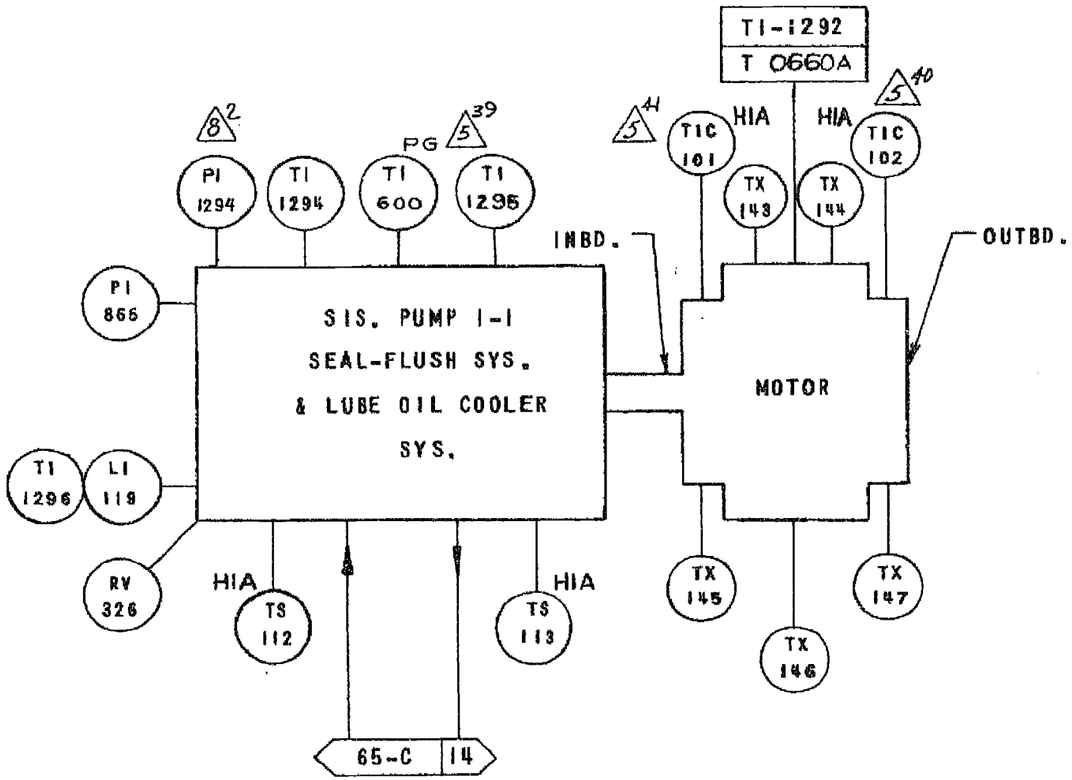

SERVICE	ITEM NO. (W)	PG&E INSTR. NO. PUMP 1	PG&E INSTR. NO. PUMP 2	
L.O.COOLER RELIEF VALVE	S13	RV-326	RV-327	
PUMP THRUST BRG.L.O. SUPPLY	S11	PI-865	PI-866	
PUMP L.O. RESERVOIR	S09	LI-119 TI-1296	LI-120 TI-1299	
L.O.CLR.OUTLET L.O.TEMP.	S06	TI-1294	TI-1297	
PUMP THRUST BRG.L.O. TEMP.	S03	TI-1295	TI-1298	
PUMP OUTBD.SEAL-FLUSH TEMP.	G15	TS-112	TS-114	
PUMP INBD.SEAL-FLUSH TEMP.	G15	TS-113	TS-115	
PUMP INBD. BRG. TEMP.	———	TI-600	TI-601	BY PGE
L.O.CLR OUTLET L.O. PRESSURE	T41	PI-1294	PI-1297	
MOTOR STATOR TEMP.	SLOT 1	TI-1292 T 0660A	TI-1293 T 0661A	
MOTOR STATOR TEMP.	SLOT 7	TX-143	TX-148	
MOTOR STATOR TEMP.	SLOT 13	TX-144	TX-149	
MOTOR STATOR TEMP.	SLOT 19	TX-145	TX-150	
MOTOR STATOR TEMP.	SLOT 25	TX-146	TX-151	
MOTOR STATOR TEMP	SLOT 31	TX-147	TX-152	
MOTOR INBD.BRG.TEMP.	———	TIC-101	TIC-104	
MOTOR OUTBD.BRG.TEMP.	———	TIC-102	TIC-105	

SIS. PUMP INSTR.
TYP.

REF:
DC-663216-26
DC-663216-32
DC-663216-33
DC-663216-43

UNIT 1

P G & E CO.
SHEET 7 PAGE 0
102009
REV. 14

DATE	DWN	RE	IV	PROFESSIONAL ENGINEER	PE DISC.	PE#	PE EXP.	
4/27/99	CMG9	FXC2	-	KERSI J. DALAL	MECHANICAL	M 16690	3/31/2000	Enhanced per FCT 023917

CAD User:CMG9 Date: 4-16-1999
DGN=2009S7.DGN
RASTER=2009S7.TIF

INPGIC

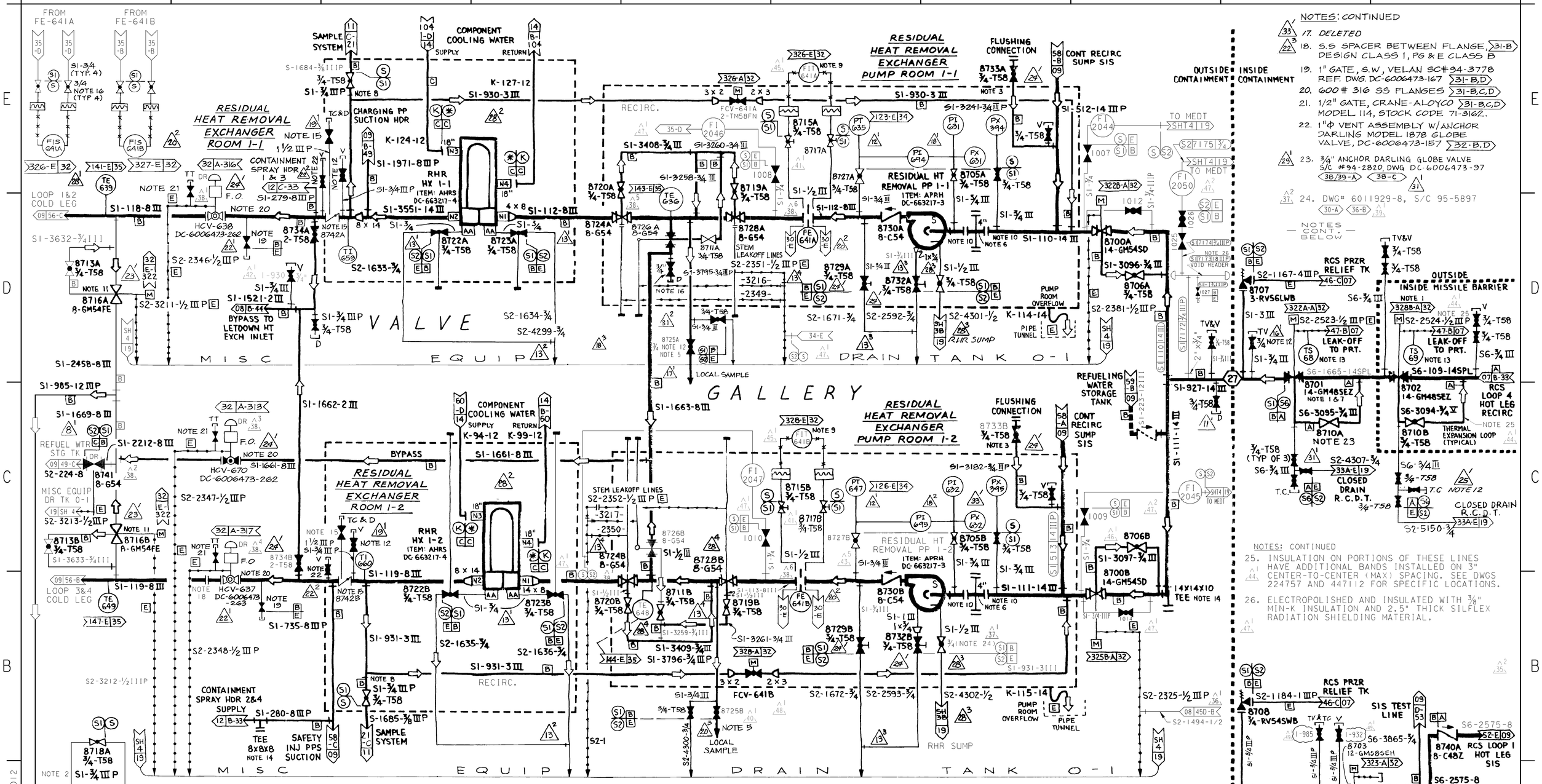

NOTES: CONTINUED

17. DELETED
18. S.S SPACER BETWEEN FLANGE, 31-B DESIGN CLASS 1, PG & E CLASS B
19. 1" GATE, S.W, VELAN SC#94-3778 REF. DWG. DC-6006473-130 31-B,D
20. 600# 316 SS FLANGES 31-B,C,D
21. 1/2" GATE, CRANE-ALOYCO 31-B,C,D MODEL 114, STOCK CODE 71-3162.
22. 1"Φ VENT ASSEMBLY W/ANCHOR DARLING MODEL 1878 GLOBE VALVE, DC-6006473-157 32-B,D
23. 3/4" ANCHOR DARLING GLOBE VALVE S/C #94-2820, DWG DC-6006473-97 38/39-A 38-C
24. DWG# 6011929-8, S/C 95-5897 30-A 36-B

— NOTES CONT. — BELOW

NOTES: CONTINUED

25. INSULATION ON PORTIONS OF THESE LINES HAVE ADDITIONAL BANDS INSTALLED ON 3" CENTER-TO-CENTER (MAX) SPACING. SEE DWGS 224757 AND 447112 FOR SPECIFIC LOCATIONS.
26. ELECTROPOLISHED AND INSULATED WITH 3/8" MIN-K INSULATION AND 2.5" THICK SILFLEX RADIATION SHIELDING MATERIAL.

— NOTES CONT. — ABOVE

NOTES:

1. VALVE INTERLOCKED WITH REACTOR COOLANT SYSTEM PRESSURE SIGNAL. 38-C 39-D
2. ELBOW TAPS FOR FLOW METER. 30-A
3. LOCATE ABOVE RESIDUAL HEAT REMOVAL PUMP SHIELDING. 36-C,E
4. ALL (W) ITEM NOS ARE SHOWN WITHOUT PREFIX PGE-AC, REFER TO (W) STATUS REPORT DC-663200-47.
5. LOCATE VALVE OUTSIDE SHIELD WALL. SAMPLE LINE MUST BE AT A LOWER ELEVATION THAN THE 8 INCH PIPE BEING SAMPLED. 34-B,C
6. TEMPORARY STRAINER IS PLACED IN THE SPOOL PIECE DURING INITIAL FLUSHING OPERATIONS. STRAINER MUST BE REMOVED BEFORE PLANT START-UP. 36-B,D
7. SPECIAL LINE INSULATION INCLUDING VALVE. 38-C
8. LOCATE SAMPLE LINE CONNECTION AS CLOSE AS POSSIBLE TO THE 8 INCH RHR HX DISCHARGE LINE. 32-B,E
9. LOCATE ORIFICE FLOW METER INDICATION OUTSIDE OF SHIELD WALL. 35-C,E
10. 300# 316 SS FLANGES 22 36-B,D AND 4 PCS FLUSHING SPOOLS FLANGES ON LINE NO 110 & 111.
11. VALVES 8716 A & B ARE ALOYCO DC-663219- 593 30-D,C
12. NEW VALVE IS ANCHOR/DARLING, MODEL #1878 DRAWING # 6006473-97, P.O. 019183. 38-D, 34-D, 32-B, -D, 39-C
13. TS-68 & 69 ARE TO BE STRAPPED TO PIPE 18"-24" FROM VALVE. 38&39-D
14. PROVISIONS FOR SPENT FUEL POOL COOLING WATER SYSTEM INCREASED CAPACITY. 31&37-B
15. ANCHOR/DARLING, P.O.37211, TC/D DWG # 6006473-260, 8742A DWG.# 6006473-259, 8742B DWG # 6006473-254 32-B,D
16. VELAN MODEL W04-2074B-13MS, DWG. # 6006473-168, S/C 94-4955 30-E 34-D

UNIT 1 | DIABLO CANYON POWER PLANT - PG&E CO.
RESIDUAL HEAT REMOVAL SYSTEM

DRAWING	SHEET	PAGE	REV
102010	3	0	49

DATE	DWN	RE	IV	PROFESSIONAL ENGINEER	PE DISC.	PE#	PE EXP.	
07-13-2012	MNRU	FxC2		KERSI J. DALAL	MECHANICAL	M 16690	3/31/2014	REVISED PER DFT-7*1661-0

RASTER=2010s3.dgn
DGN=2010s3.dgn
CAD User: MNRU Date: 07-13-2012
3 Size

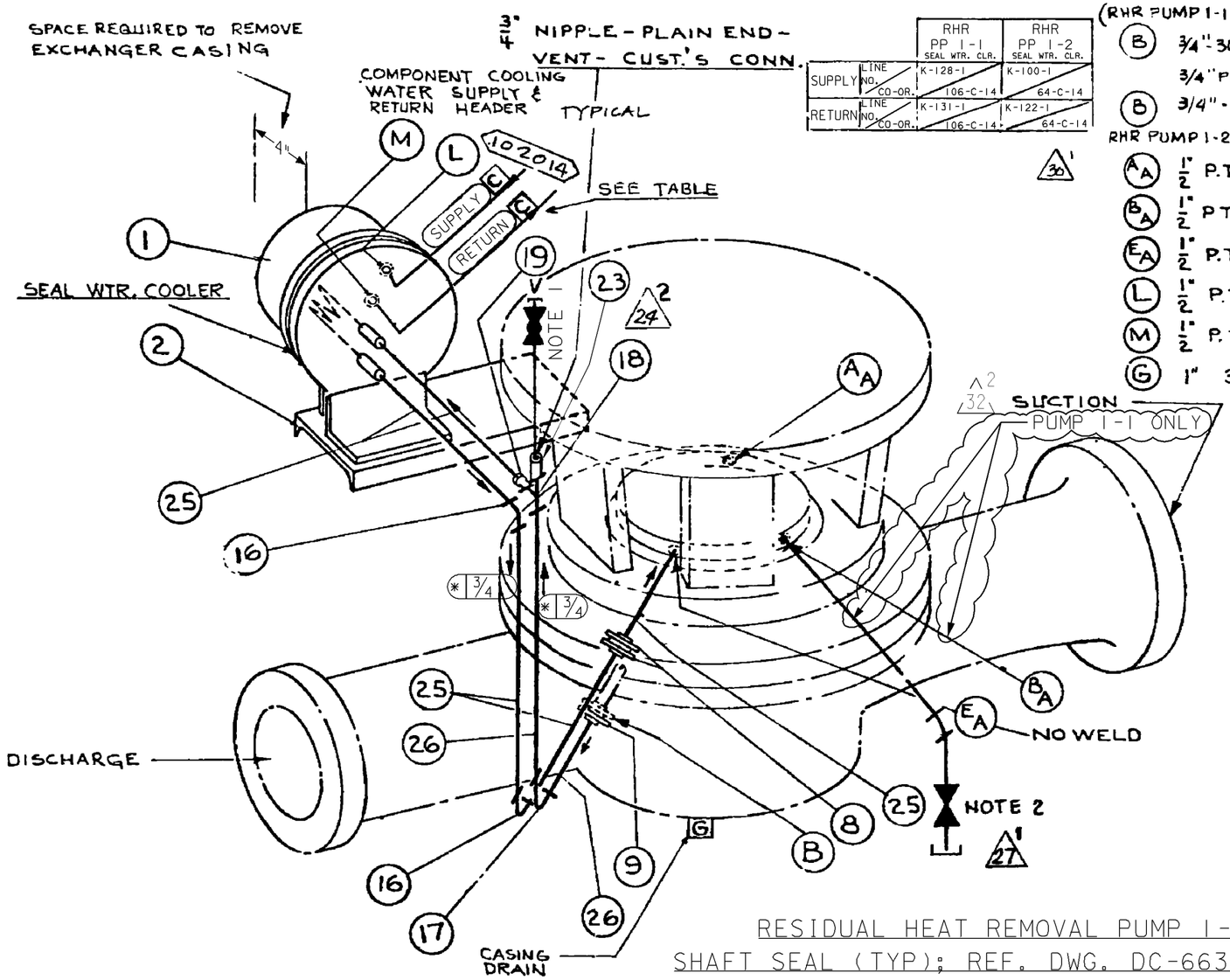

		RHR PP 1-1 SEAL WTR. CLR.	RHR PP 1-2 SEAL WTR. CLR.
SUPPLY	LINE NO. / CO-OR.	K-128-1 / 106-C-14	K-100-1 / 64-C-14
RETURN	LINE NO. / CO-OR.	K-131-1 / 106-C-14	K-122-1 / 64-C-14

30

(RHR PUMP 1-1 ONLY) 30

(B) 3/4"-300# RAISED FACE FLANGE, SA-182, TP-304 - PUMPING RING OUTLET PIPED TO HEAT EXCHANGER → PRESSURE DROP 1 PSI
3/4" PIPE, SCH. 160, SA-376, TP-304

(B) 3/4"-300# RAISED FACE FLANGE - PUMPING RING OUTLET PIPED TO HEAT EXCHANGER → PRESSURE DROP 1 PSI

RHR PUMP 1-2 ONLY

(A) 1/2" P.T. - VENT OR QUENCH

(B) 1/2" PT - DRAIN (GLAND DRAIN)

(E) 1/2" P.T. - FLUSHING CONN. - PIPED FROM HEAT EXCHANGER

(L) 1/2" P.T. - COOLING LIQUID - IN
(M) 1/2" P.T. - COOLING LIQUID - OUT
} HEAT EXCHANGER 10 G.P.M. REQUIRED

(G) 1" 300# RF FLANGE - CASING DRAIN 28

DYE PENETRATE TEST REQUIRED.
ALL SEALWELDS PER PT ASME-3
NO POSTWELD HEAT TREATMENT REQUIRED.

28

RECIRCULATION OF LIQUID FROM SEAL WITH PUMPING RING - THRU COOLER & BACK TO SEAL.

RESIDUAL HEAT REMOVAL PUMP 1-1
SHAFT SEAL (TYP); REF. DWG. DC-663217-25

28

NOTE 24

1. PUMP 1-1, 3/4"-T58
   PUMP 1-2, ANCHOR DARLING MODEL 1878G8,
   DWG. 6006973-97, S/C. 94-2820
2. PUMP 1-1 ONLY, 3/4"-T58 (45-B) 27

32

11
UNIT 1

P G & E CO.		102010	REV. 32
SHEET 4	PAGE 0		

4/26/04	MIBF	CDP3	-	KERSI J. DALAL	MECHANICAL	M 16690	3/31/2006	Revised per FCT 028019
DATE	DWN	RE	IV	PROFESSIONAL ENGINEER	PE DISC.	PE#	PE EXP.	

CAD User: mlbf Date: 4-23-2004
DGN=2010S4.DGN
RASTER=2010S4.TIF
INPGIC

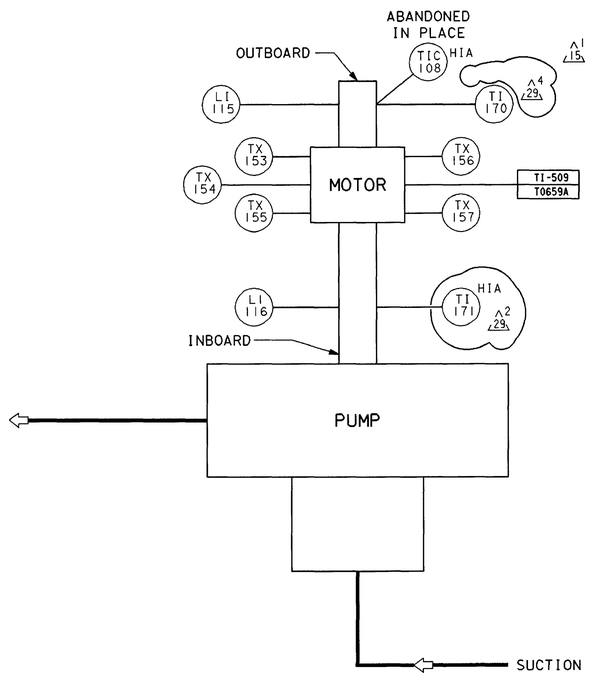

SERVICE		PG&E INSTR. NO. PUMP 1	PG&E INSTR. NO. PUMP 2	
MOTOR OUTBOARD BRG. TEMP.	15 1	TI-170 148-E 35	TI-172 148-B 35	20 1
MOTOR INBOARD BRG. TEMP.	29 2	TI-171 134A-E 35	TI-173 138A-E 35	29 3
MOTOR OUTBOARD L.O. GAGE		LI-115	LI-117	
MOTOR INBOARD L.O. GAGE		LI-116	LI-118	
MOTOR STATOR TEMP.		TI-509 T0659A	TI-514 T0665A	
MOTOR STATOR TEMP.		TX-153	TX-223	
MOTOR STATOR TEMP.		TX-154	TX-224	
MOTOR STATOR TEMP.		TX-155	TX-225	
MOTOR STATOR TEMP.		TX-156	TX-226	
MOTOR STATOR TEMP.		TX-157	TX-227	

RESIDUAL HEAT REMOVAL PUMP

TYPICAL

REFERENCE DWG. DC-663217-10

UNIT 1

P.G.&E. CO.	DRAWING NUMBER	REV
SHEET 5 OF SHEETS	102010	29
RMS INDEXED REV ____	MICROFILM	

2010S5.M01 5-5-94 ROA

SCAN 20 TC 29

NUCLEAR STEAM SUPPLY SAMPLING SYSTEM

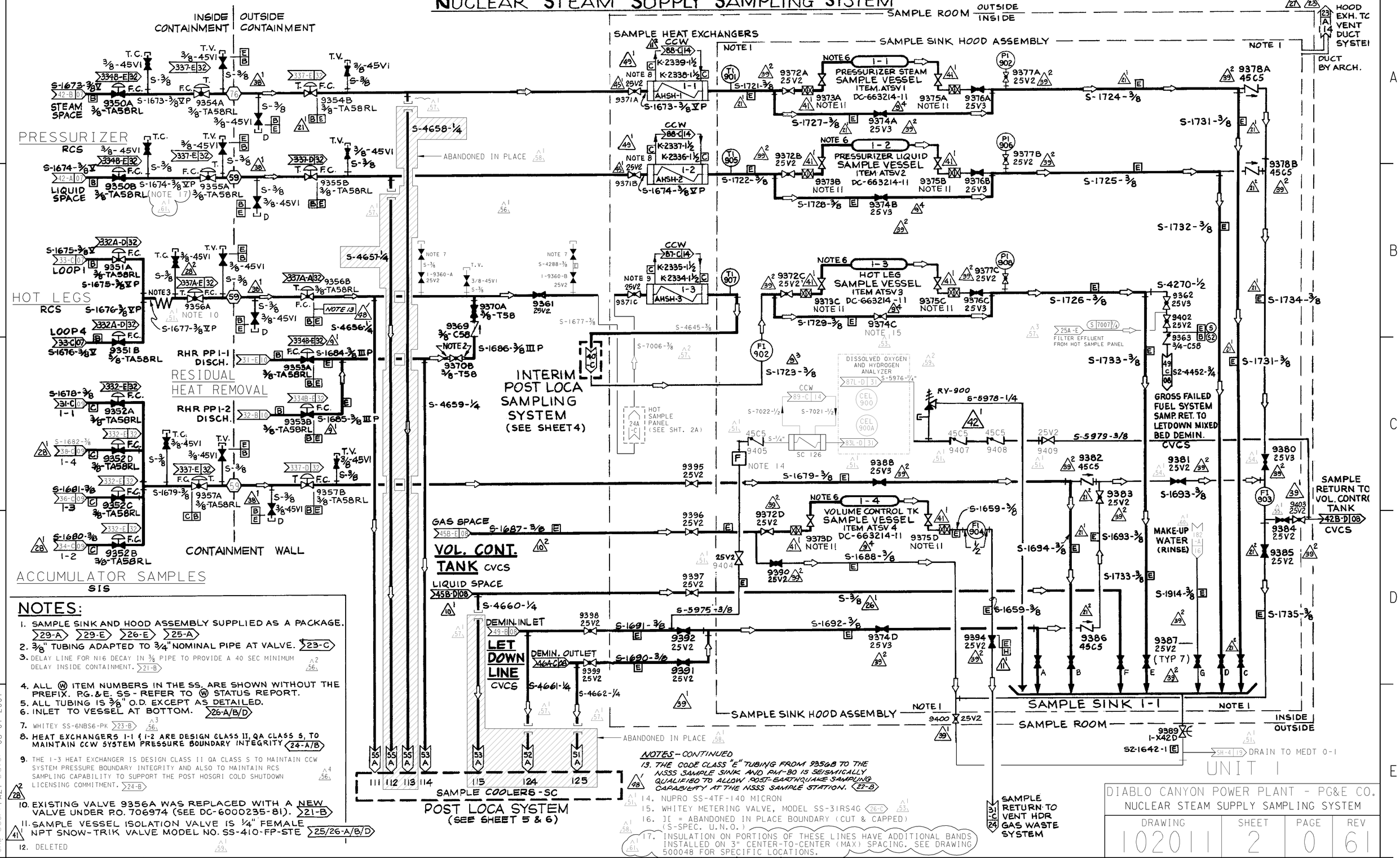

NOTES:

1. SAMPLE SINK AND HOOD ASSEMBLY SUPPLIED AS A PACKAGE. 29-A 29-E 26-E 25-A
2. 3/8" TUBING ADAPTED TO 3/4" NOMINAL PIPE AT VALVE. 23-C
3. DELAY LINE FOR N16 DECAY IN 3/8 PIPE TO PROVIDE A 40 SEC MINIMUM DELAY INSIDE CONTAINMENT. 21-B
4. ALL (W) ITEM NUMBERS IN THE SS. ARE SHOWN WITHOUT THE PREFIX. PG.&E. SS - REFER TO (W) STATUS REPORT.
5. ALL TUBING IS 3/8" O.D. EXCEPT AS DETAILED.
6. INLET TO VESSEL AT BOTTOM. 26-A/B/D
7. WHITEY SS-6NBS6-PK 23-B
8. HEAT EXCHANGERS 1-1 & 1-2 ARE DESIGN CLASS II, QA CLASS S, TO MAINTAIN CCW SYSTEM PRESSURE BOUNDARY INTEGRITY 24-A/B
9. THE 1-3 HEAT EXCHANGER IS DESIGN CLASS II QA CLASS S TO MAINTAIN CCW SYSTEM PRESSURE BOUNDARY INTEGRITY AND ALSO TO MAINTAIN RCS SAMPLING CAPABILITY TO SUPPORT THE POST HOSGRI COLD SHUTDOWN LICENSING COMMITMENT. 24-B
10. EXISTING VALVE 9356A WAS REPLACED WITH A NEW VALVE UNDER P.O. 706974 (SEE DC-6000235-81). 21-B
11. SAMPLE VESSEL ISOLATION VALVE IS 1/4" FEMALE NPT SNOW-TRIK VALVE MODEL NO. SS-410-FP-STE 25/26-A/B/D
12. DELETED

NOTES - CONTINUED

13. THE CODE CLASS "E" TUBING FROM 9356B TO THE NSSS SAMPLE SINK AND RM-80 IS SEISMICALLY QUALIFIED TO ALLOW POST-EARTHQUAKE SAMPLING CAPABILITY AT THE NSSS SAMPLE STATION. 27-B
14. NUPRO SS-4TF-140 MICRON
15. WHITEY METERING VALVE, MODEL SS-31RS4G 26-C
16.][= ABANDONED IN PLACE BOUNDARY (CUT & CAPPED) (S-SPEC. U.N.O.)
17. INSULATION ON PORTIONS OF THESE LINES HAVE ADDITIONAL BANDS INSTALLED ON 3" CENTER-TO-CENTER (MAX) SPACING. SEE DRAWING 500048 FOR SPECIFIC LOCATIONS.

DIABLO CANYON POWER PLANT - PG&E CO.
NUCLEAR STEAM SUPPLY SAMPLING SYSTEM

DRAWING	SHEET	PAGE	REV
102011	2	0	61

DATE	DWN	RE	IV	PROFESSIONAL ENGINEER	PE DISC.	PE#	PE EXP.	
06-01-2007	FAZI	FxC2		KERSI J. DALAL	MECHANICAL	M 16690	3/31/2008	REVISED PER FCT-31957

RASTER-er\08126.dgn
DGN-er\08126.dgn
CAD User-FAZI Date: 06-01-2007

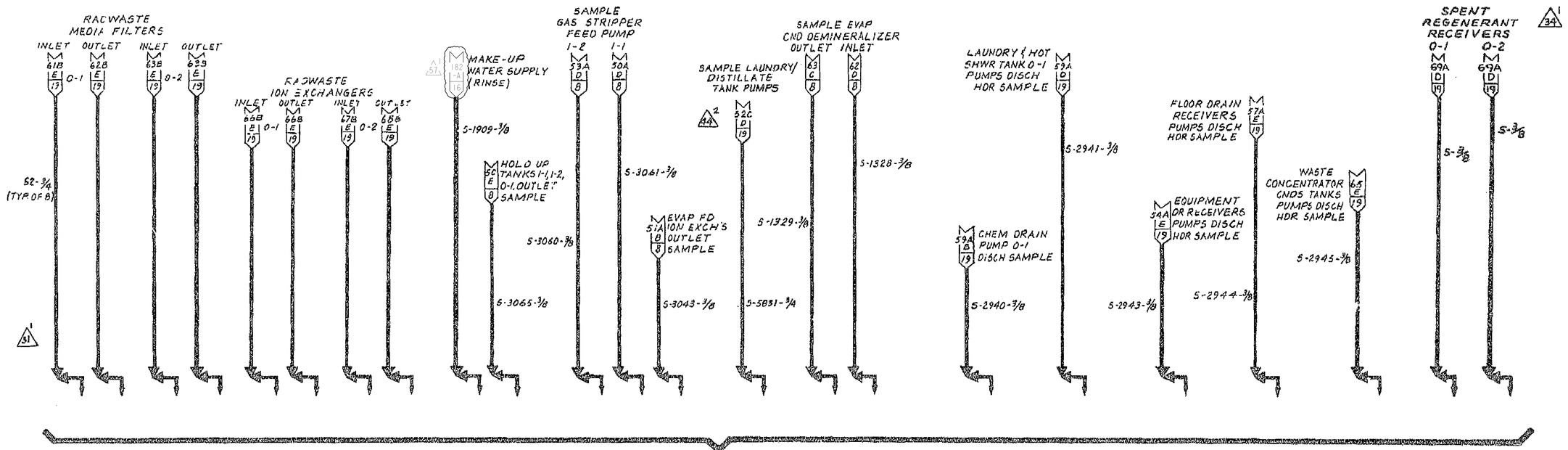

NOTES:

1. ALL PIPE & TUBING ON THIS SHEET SHALL BE PG&E CLASS "E" & INSTRUMENT CLASS II RESPECTIVELY.
2. ALL VALVES EXCEPT AS NOTED SHALL BE "WHITEY" 6LRSG SPEC BB02
3. INSULATE WITH 2 LAYERS OF LEWCO FT60 OR EQUIV. INSULATION.

UNIT 1

DIABLO CANYON POWER PLANT - PG&E CO.

DRAWING	SHEET	PAGE	REV
102011	3	0	57

DATE	DWN	RE	IV	PROFESSIONAL ENGINEER	PE DISC.	PE#	PE EXP.	
01-26-2006	MIBF	KJD3		FRANCIS C. LING	MECHANICAL	M 16098	12/31/2007	REVISED PER FCT-030760

RASTER=001h1127.dgn
DGN=001h1127.dgn
CAD User: MIBF Date: 01-26-2006

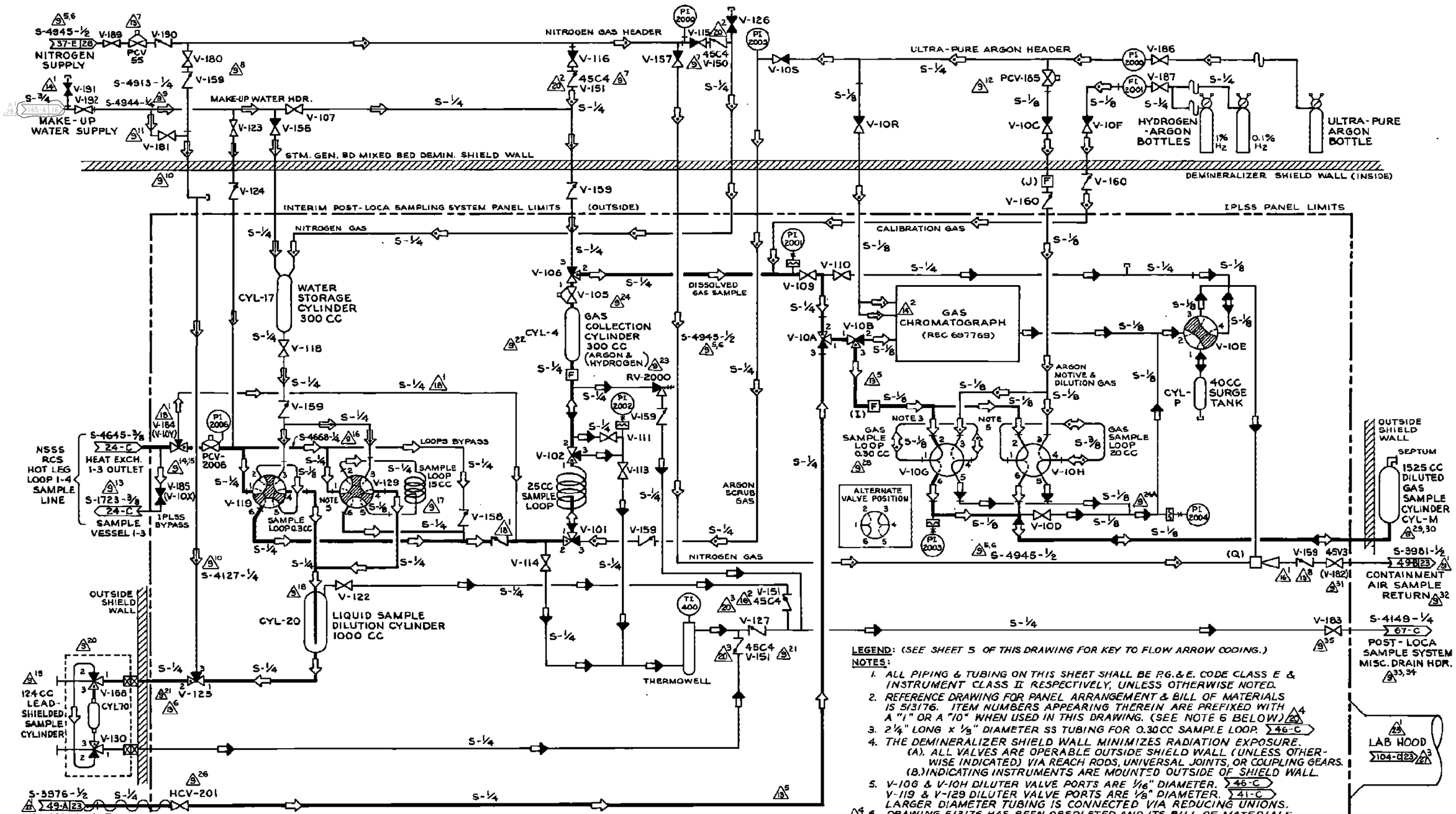

LEGEND: *(SEE SHEET 5 OF THIS DRAWING FOR KEY TO FLOW ARROW CODING.)*

NOTES:

1. *ALL PIPING & TUBING ON THIS SHEET SHALL BE P.G.&E. CODE CLASS E & INSTRUMENT CLASS II RESPECTIVELY, UNLESS OTHERWISE NOTED.*
2. *REFERENCE DRAWING FOR PANEL ARRANGEMENT & BILL OF MATERIALS IS 513176. ITEM NUMBERS APPEARING THEREIN ARE PREFIXED WITH A "1" OR A "10" WHEN USED IN THIS DRAWING. (SEE NOTE 6 BELOW)*
3. *2¼" LONG x ⅛" DIAMETER SS TUBING FOR 0.30CC SAMPLE LOOP.*
4. *THE DEMINERALIZER SHIELD WALL MINIMIZES RADIATION EXPOSURE.*
   (A). ALL VALVES ARE OPERABLE OUTSIDE SHIELD WALL (UNLESS OTHERWISE INDICATED) VIA REACH RODS, UNIVERSAL JOINTS, OR COUPLING GEARS.
   (B.) INDICATING INSTRUMENTS ARE MOUNTED OUTSIDE OF SHIELD WALL.
5. *V-10G & V-10H DILUTER VALVE PORTS ARE 1/16" DIAMETER. V-119 & V-129 DILUTER VALVE PORTS ARE ⅛" DIAMETER. LARGER DIAMETER TUBING IS CONNECTED VIA REDUCING UNIONS.*
6. *DRAWING 513176 HAS BEEN OBSOLETED AND ITS BILL OF MATERIALS HAS BEEN SUPERSEDED BY DRAWING 022823.*

UNIT 1

INTERIM POST-LOCA SAMPLING SYSTEM

DIABLO CANYON POWER PLANT - PG&E CO.

DRAWING	SHEET	PAGE	REV
102011	4	0	28

DATE	DWN	RE	IV	PROFESSIONAL ENGINEER	PE DISC.	PE#	PE EXP.	
01-24-2006	MIBF	RHSI		FRANCIS C. LING	MECHANICAL	M 16098	12/31/2007	REVISED PER FCT-030760

RASTER=2011s4.dgn
DGN=2011s4.dgn
CAD User: MIBF Date: 01-24-2006

POST LOCA SAMPLING SYSTEM

3-WAY VALVE
OPEN THIS CYCLE — CLOSED THIS CYCLE — OPEN EITHER CYCLE

ARROW CODE (SHT'S. 4,5&6)
- GAS OR LIQUID SAMPLE
- GAS SUPPLY OR BACKFLUSH
- DEMINERALIZED WATER SUPPLY
- WASTE/DRAIN
- COOLING WATER
- MULTIPLE FLOW (SAMPLE LEFT, WASTE RIGHT)

SOLID: POSITION A
DOTTED: POSITION B

SEQUENCE OF BACK-FLUSH LINES ON DRAIN HEADER S2-4930-1 ARE PRESENTED FOR DRAWING CLARITY ONLY.

PANEL PM 80
REF. DWG.: ELEC. 447541

SAMPLE COOLER RACK
DC-696213-5,-6

HIGH RADIATION LIQUID SAMPLE PANEL (HRLSP)

REACTOR COOLANT MODULE
DC-696213-27

DEMINERALIZER MODULE
DC-696213-14

RADWASTE MODULE
DC-696213-28

GLASS ENCLOSED SPLASH BOX FOR GRAB SAMPLES (MOUNTED ON PANEL FRONT)

TROUGH-LENGTH OF BASE OF PANEL

TROUGH AT BASE OF PANEL

SAMPLING PANELS IN POST LOCA SAMPLING ROOM ARE SHOWN ON BOTH SHEETS 5 AND 6 (COMPLEMENTING EACH OTHER). SEE SHEET 6 FOR:
- PANEL ABBREVIATION LIST
- PHYSICAL ORIENTATION
- ADDITIONAL NOTES
- REFERENCES

QUICK REFERENCE TAGS
- DW MAKE-UP WATER
- GI GAS (WITH SUFFIX TYP.)
- SI SAMPLE
- WI WASTE/DRAIN

NOTES – CONTINUED
5. THE CODE CLASS "E" TUBING FROM 9356B TO THE NSSS SAMPLE SINK AND PM-80 IS SEISMICALLY QUALIFIED TO ALLOW POST-EARTHQUAKE SAMPLING CAPABILITY AT THE NSSS SAMPLE STATION. (59-A)
6. VALVE, HOKE BALL 7115G6Y (50-C)
7. VALVE, WHITEY NEEDLE SS-1VS4 (TYP.10) (52-A)
8. SAMPLE COOLERS ARE DESIGN CLASS II & SEISMICALLY QUALIFIED (59-B)
9. CEL-1109 IS CUT & CAPPED; CEL-1109 IS BYPASSED, INLET TUBING TO OUTLET TUBING. (S-SPEC) (56-D)

10. ⌧ = ABANDONED IN PLACE BOUNDARY (CUT & CAPPED) (S-SPEC. U.N.O.)
✳ = ABANDONED IN PLACE BOUNDARY VALVE (D.R.)

NOTES:
1. VALVE, NUPRO BELLOWS SEALED SS-4UW-IN (TYP. 8) (51-A)
2. ALL PIPING & TUBING SHALL BE PG.&E. CODE CLASS E AND INSTRUMENT CLASS II RESPECTIVELY, UNLESS NOTED OTHERWISE.
3. FILTER, NUPRO SS-6TF (50-A)
4. COALESCING FILTER, SENTRY P/N G-019364. (56-D)

UNIT 1

DIABLO CANYON POWER PLANT - PG&E CO.
NUCLEAR STEAM SUPPLY SAMPLING SYSTEM

DRAWING	SHEET	PAGE	REV
102011	5	0	59

DATE	DWN	RE	IV	PROFESSIONAL ENGINEER	PE DISC.	PE#	PE EXP.	
05-17-2011	AJFJ	FxC2		KERSI J. DALAL	MECHANICAL	M 16690	3/31/2012	REVISED PER DFT-7*1139

RASTER-er\08127.dgn
DGN-er\08127.dgn
CAD User: AJFJ Date: 05-17-2011

POST-LOCA SAMPLING SYSTEM

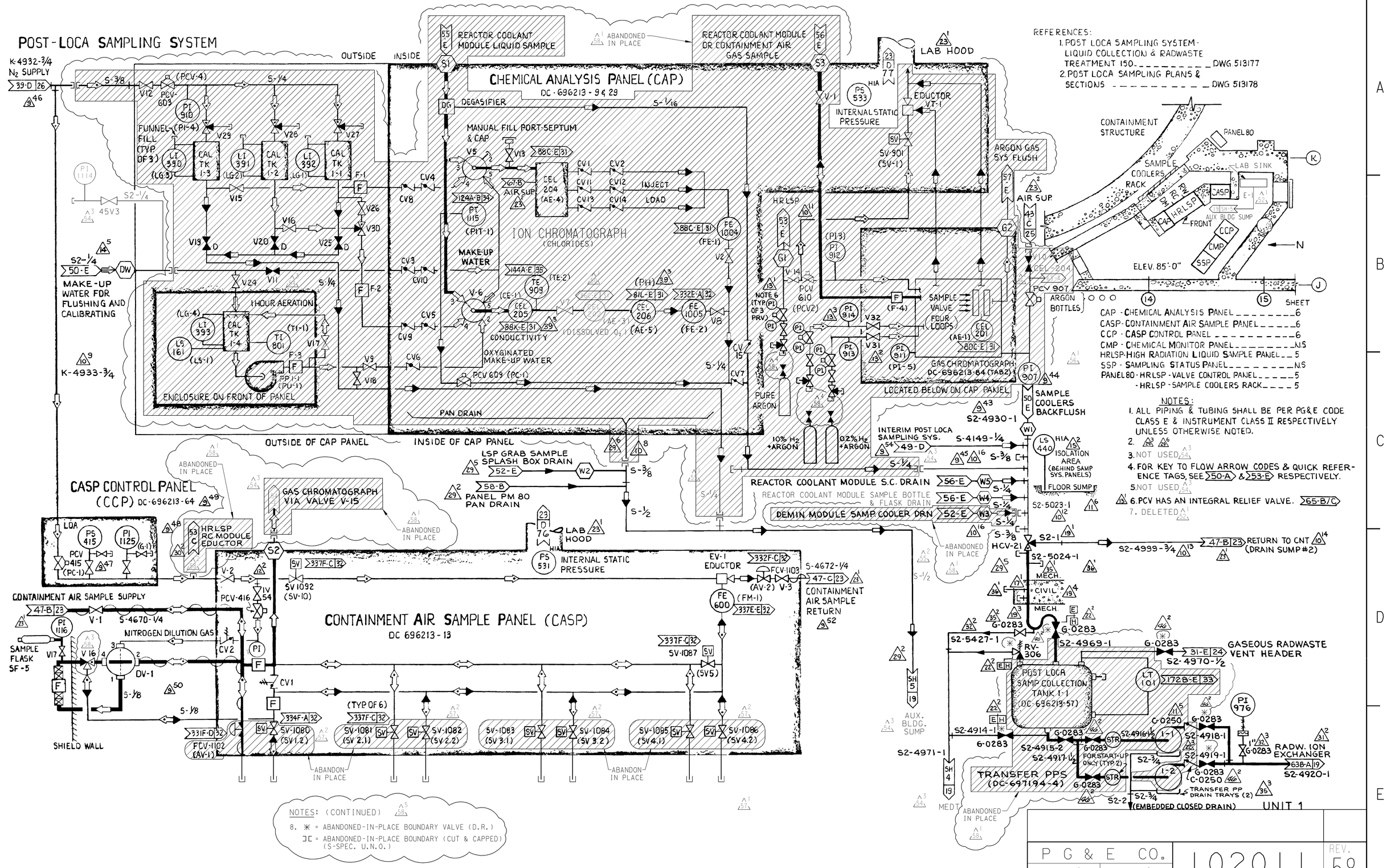

REFERENCES:
1. POST LOCA SAMPLING SYSTEM - LIQUID COLLECTION & RADWASTE TREATMENT 150 _____ DWG 513177
2. POST LOCA SAMPLING PLANS & SECTIONS _____ DWG 513178

NOTES:
1. ALL PIPING & TUBING SHALL BE PER PG&E CODE CLASS E & INSTRUMENT CLASS II RESPECTIVELY UNLESS OTHERWISE NOTED.
2. 29 29
3. NOT USED 54
4. FOR KEY TO FLOW ARROW CODES & QUICK REFERENCE TAGS, SEE 50-A & 53-E RESPECTIVELY.
5. NOT USED 54
6. PCV HAS AN INTEGRAL RELIEF VALVE. 65-B/C
7. DELETED 52

NOTES: (CONTINUED) 58
8. ✳ = ABANDONED-IN-PLACE BOUNDARY VALVE (D.R.)
⋈ = ABANDONED-IN-PLACE BOUNDARY (CUT & CAPPED) (S-SPEC. U.N.O.)

10/4/02	AJL2	FXC2	JNS5	KERSI J. DALAL	MECHANICAL	M 16690	3/31/2004	Revised per DCI-SN-049588-00
DATE	DWN	RE	IV	PROFESSIONAL ENGINEER	PE DISC.	PE#	PE EXP.	

P G & E CO. | SHEET 6 | PAGE 0 | 102011 | REV. 58

CAD User:rxg2 Date:10-04-2002 DGN=ERU11554.DGN RASTER=ERU11554.TIF

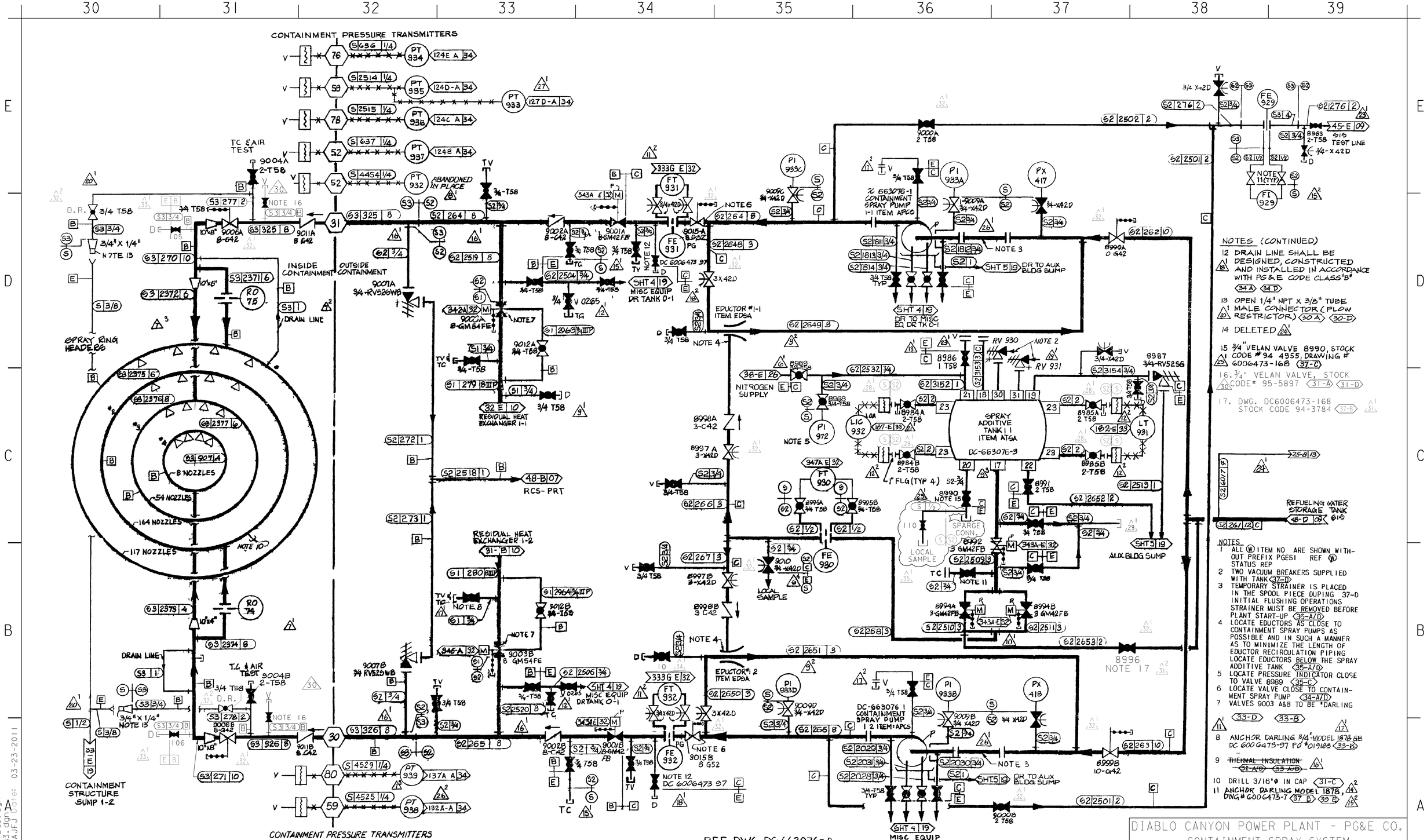

NOTES (CONTINUED)

12 DRAIN LINE SHALL BE DESIGNED, CONSTRUCTED AND INSTALLED IN ACCORDANCE WITH PG&E CODE CLASS "B" (34-A) (34-D)

13 OPEN 1/4" NPT X 3/8" TUBE MALE CONNECTOR (FLOW RESTRICTOR) (30-A) (30-D)

14 DELETED

15 3/4" VELAN VALVE 8990, STOCK CODE #94 4955, DRAWING # 6006473-168 (37-D)

16. 3/4" VELAN VALVE, STOCK CODE # 95-5897 (31-A) (31-D)

17. DWG. DC6006473-168 STOCK CODE 94-3784 (37-B)

NOTES

1 ALL (W) ITEM NO ARE SHOWN WITHOUT PREFIX PGESI REF (W) STATUS REP

2 TWO VACUUM BREAKERS SUPPLIED WITH TANK (37-D)

3 TEMPORARY STRAINER IS PLACED IN THE SPOOL PIECE DUPING 37-D INITIAL FLUSHING OPERATIONS STRAINER MUST BE REMOVED BEFORE PLANT START-UP (36-A/D)

4 LOCATE EDUCTORS AS CLOSE TO CONTAINMENT SPRAY PUMPS AS POSSIBLE AND IN SUCH A MANNER AS TO MINIMIZE THE LENGTH OF EDUCTOR RECIRCULATION PIPING LOCATE EDUCTORS BELOW THE SPRAY ADDITIVE TANK (35-A/D)

5 LOCATE PRESSURE INDICATOR CLOSE TO VALVE 8989 (35-C)

6 LOCATE VALVE CLOSE TO CONTAINMENT SPRAY PUMP (34-A/D)

7 VALVES 9003 A&B TO BE "DARLING (33-D) (33-B)

8 ANCHOR DARLING 3/4"-MODEL 1878 GB DC 6006473-97 PO #019188 (33-B)

9 ~~THERMAL INSULATION (32-A/D) (33-A/D)~~

10 DRILL 3/16"Φ IN CAP (31-C)

11 ANCHOR DARLING MODEL 1878, DWG # 6006473-7 (37-D) (39-E)

DIABLO CANYON POWER PLANT - PG&E CO. CONTAINMENT SPRAY SYSTEM			
DRAWING	SHEET	PAGE	REV
102012	3	0	35

UNIT 1

DATE	DWN	RE	IV	PROFESSIONAL ENGINEER	PE DISC.	PE#	PE EXP.	
03-23-2011	AJFJ	FxC2		KERSI J. DALAL	MECHANICAL	M 16690	3/31/2012	REVISED PER DDT-4*488-01

RASTER=2012s3.dgn
DGN=2012s3.dgn
CAD User: AJFJ Date: 03-23-2011

3NPIC
3 Size

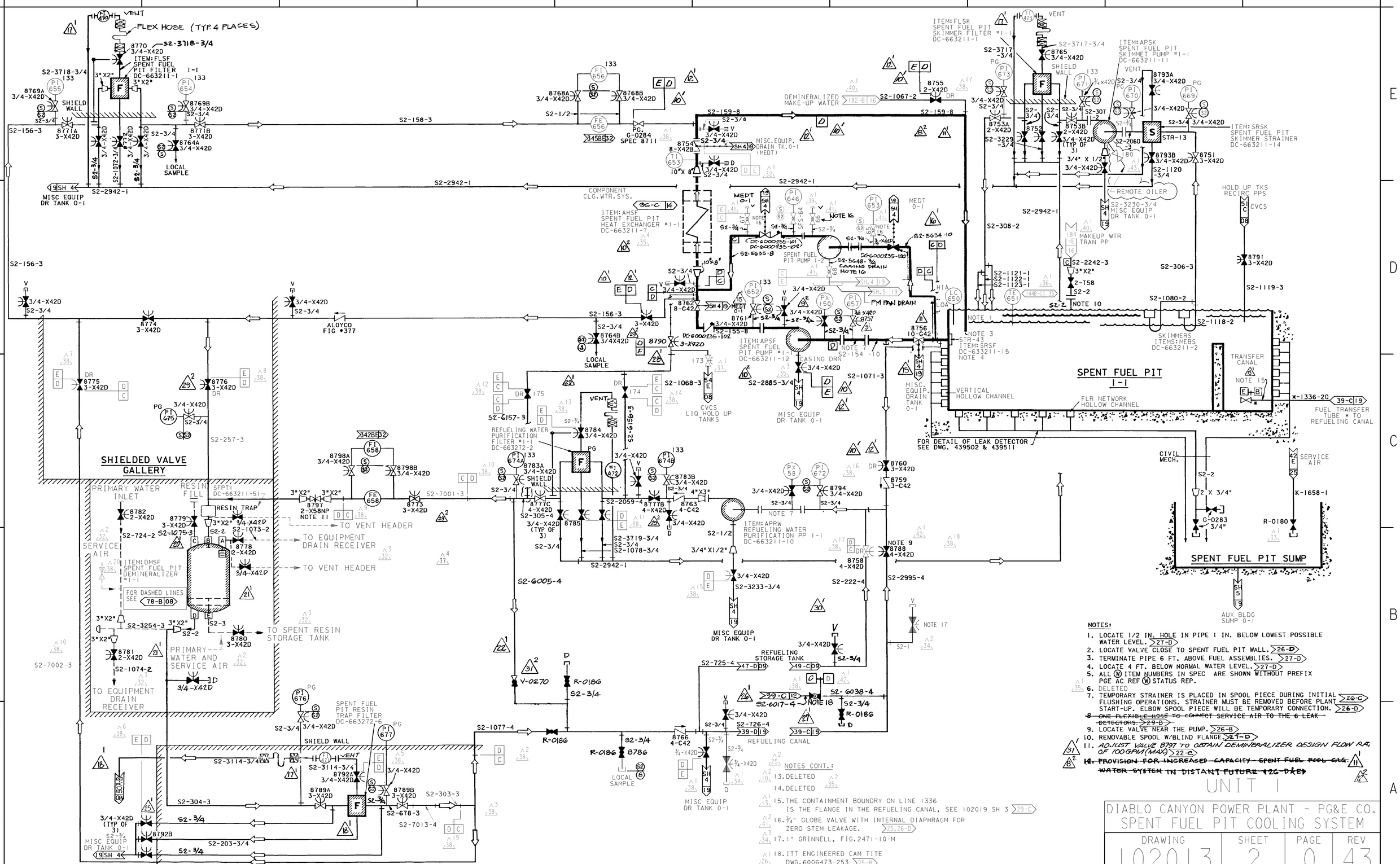

NOTES:

1. LOCATE 1/2 IN. HOLE IN PIPE 1 IN. BELOW LOWEST POSSIBLE WATER LEVEL. >27-D
2. LOCATE VALVE CLOSE TO SPENT FUEL PIT WALL. >26-D
3. TERMINATE PIPE 6 FT. ABOVE FUEL ASSEMBLIES. >27-D
4. LOCATE 4 FT. BELOW NORMAL WATER LEVEL. >27-D
5. ALL (W) ITEM NUMBERS IN SPEC ARE SHOWN WITHOUT PREFIX PGE AC REF (W) STATUS REP.
6. DELETED
7. TEMPORARY STRAINER IS PLACED IN SPOOL PIECE DURING INITIAL FLUSHING OPERATIONS. STRAINER MUST BE REMOVED BEFORE PLANT START-UP. ELBOW SPOOL PIECE WILL BE TEMPORARY CONNECTION. >26-D
8. ~~ONE FLEXIBLE HOSE TO CONNECT SERVICE AIR TO THE 6 LEAK DETECTORS. >29-D~~
9. LOCATE VALVE NEAR THE PUMP. >26-B
10. REMOVABLE SPOOL W/BLIND FLANGE. >27-D
11. *ADJUST VALVE 8797 TO OBTAIN DEMINERALIZER DESIGN FLOW RA. OF 100GPM(MAX)* >22-C
12. ~~PROVISION FOR INCREASED CAPACITY SPENT FUEL POOL GAS WATER SYSTEM IN DISTANT FUTURE (26-D&E)~~

NOTES CONT.:

13. DELETED
14. DELETED
15. THE CONTAINMENT BOUNDRY ON LINE 1336 IS THE FLANGE IN THE REFUELING CANAL, SEE 102019 SH 3 >29-C
16. 3/4" GLOBE VALVE WITH INTERNAL DIAPHRAGM FOR ZERO STEM LEAKAGE. >25,26-D
17. 1" GRINNELL, FIG.2471-10-M
18. ITT ENGINEERED CAM TITE DWG.6006473-253 >25-B

UNIT 1

DIABLO CANYON POWER PLANT - PG&E CO.
SPENT FUEL PIT COOLING SYSTEM

DRAWING	SHEET	PAGE	REV
102013	2	0	43

DATE	DWN	RE	IV	PROFESSIONAL ENGINEER	PE DISC.	PE#	PE EXP.	
05-10-2010	CNHK	RxG2		KERSI J. DALAL	MECHANICAL	M 16690	3/31/2012	REVISED PER DDT-4*223-1

RASTER=2013s2.dgn
DGN=2013s2.dgn
CAD User=CNHK DGTe: 05-10-2010

NOTE: 3 size

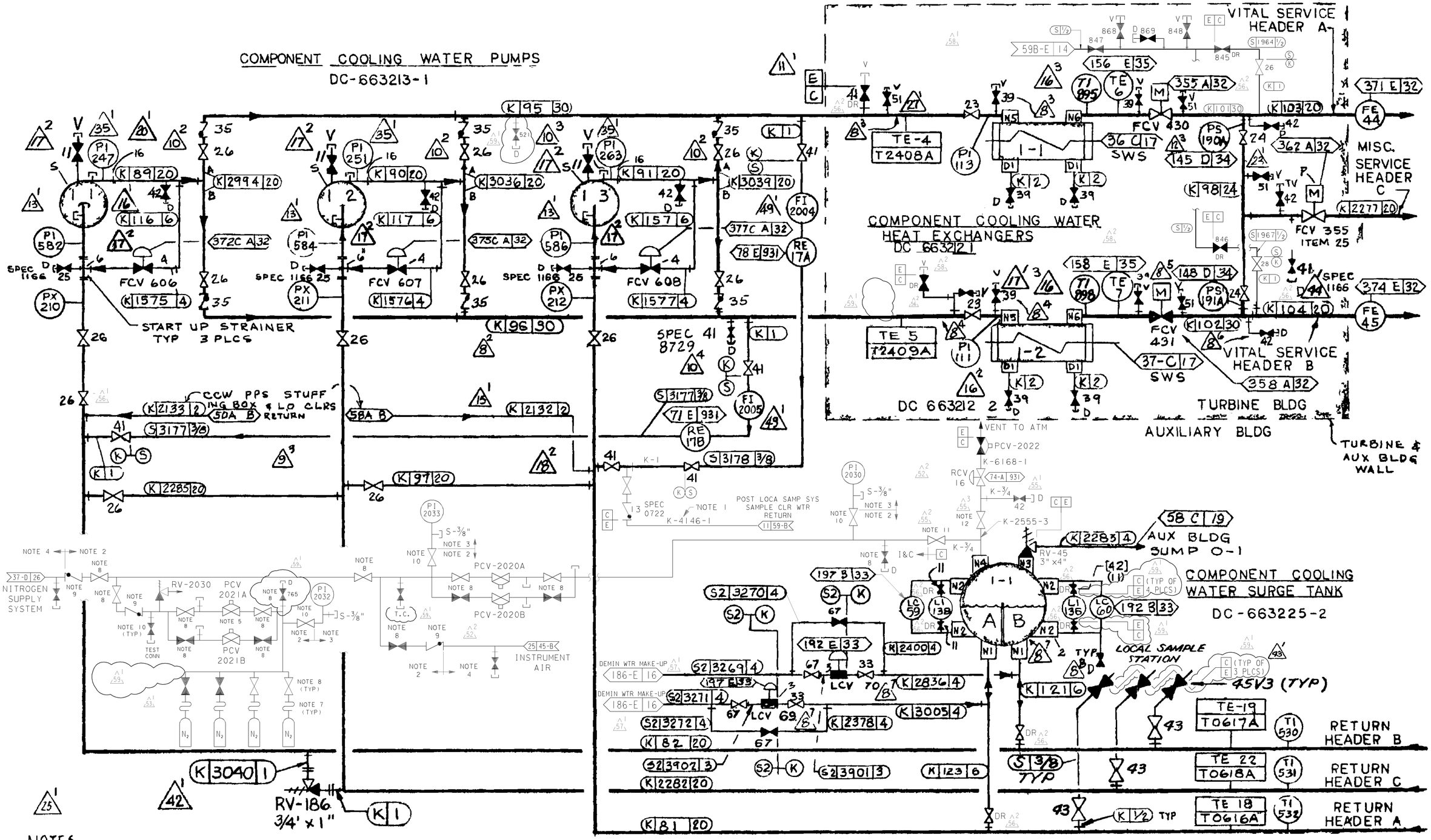

NOTES

1. CODE CLASS E PORTION OF LINE 4146 SHALL BE SEISMICALLY ANALYZED TO DESIGN CLASS I CRITERIA (55-C)
2. INSTRUMENT DESIGN CLASSIFICATION ID (53-B) (56-C)
3. INSTRUMENT DESIGN CLASSIFICATION IC (53-C) (56-C)
4. INSTRUMENT DESIGN CLASSIFICATION II (53-B)
5. PCV HAS AN INTEGRAL RELIEF VALVE
6. UNLESS SPECIFIED OTHERWISE THE SURGE TANK PRESSURIZATION LINES ARE 3/4" x 0.065" WALL SS TUBING
7. 1/2" FLEXIBLE TUBING, SWAGELOK NO. 8R-8
8. WHITEY MODEL NO. SS-63ES12 (53-B) (56-C)
9. NUPRO MODEL NO. SS-CH16S12-1 (53-B)
10. 3/8" WHITEY MODEL NO. SS-43ES6-SH (53-B) (56-C)
11. STOCK CODE 93-6841 (56-C)
12. STOCK CODE 95-4119 (56-C)

UNIT 1

DIABLO CANYON POWER PLANT - PG&E CO. COMPONENT COOLING WATER SYSTEM			
DRAWING	SHEET	PAGE	REV
102014	5	0	59

DATE	DWN	RE	IV	PROFESSIONAL ENGINEER	PE DISC.	PE#	PE EXP.	
07-27-2012	MNRU	FxC2		KERSI J. DALAL	MECHANICAL	M 16690	3/31/2014	REVISED PER DFT-7*1630-0

RASTER=001H1099.dgn
DGN=001H1099.dgn
CAD User=MNRU Date: 07-27-2012

MPGIC 3 Size

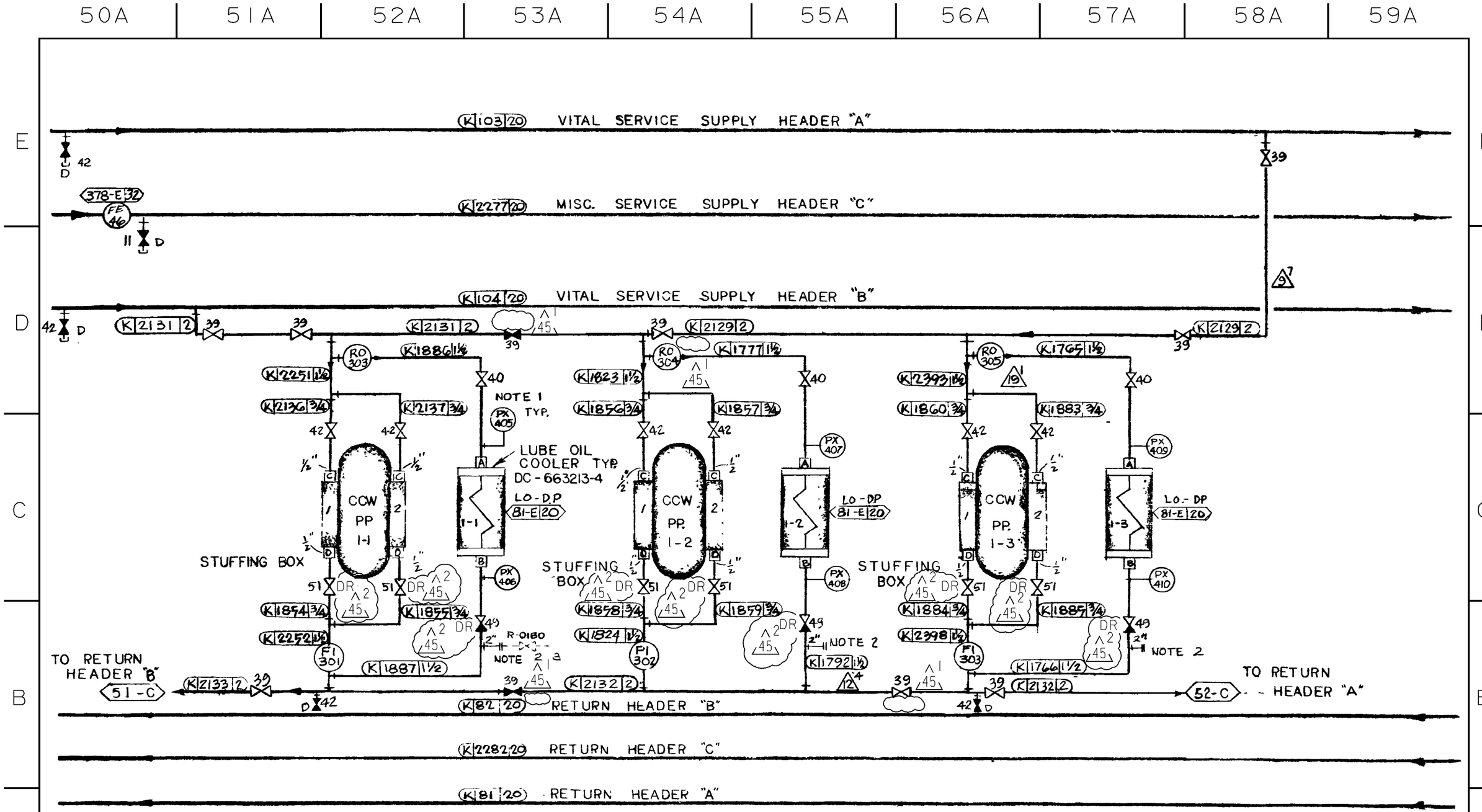

COMPONENT COOLING WATER PUMPS COOLING REQUIREMENTS

DC-663213-1

NOTES:

1. PXS TO BE LOCATED WITHIN 1' OF HEAT EXCHANGER (53A-D)
2. LOCATE FLANGE FOR EASY CONNECTION OF TEMPORARY VALVE AND PRESSURE TEST GAGE REPLACE WITH BLIND FLANGE AFTER TEST (53A-B)
3. VALVE IS NON-CLASS I. 2" BALL VALVE WITH 2" FLANGE AT ONE END AND 2" MALE NIPPLE AT OTHER END. ONLY ONE VALVE WILL BE USED AT SEVERAL TEST POINTS, REMOVE VALVE PRIOR TO OPERATION. SYS IS CLASS I (53A-B)

UNIT-1

P G & E CO.	SHEET 5A PAGE 0	102014 REV. 45

3/1/01	PMH2	FXC2	-	KERSI J. DALAL	MECHANICAL	M 16690	3/31/2004	Revised per FCT 025489
DATE	DWN	RE	IV	PROFESSIONAL ENGINEER	PE DISC.	PE#	PE EXP.	

INPGIC

CAD User:PMH2 Date: 3-01-2001
DGN=2014S5A.DGN
RASTER=2014S5A.TIF

NOTES CON'T: 5. DRAIN W/ QUICK-DISCONNECT COUPLING W/ INTEGRAL CHECK VALVE FOR EMERGENCY TIE-IN TO FIRE PROTECTION SYS (102018-5A). COUPLING TO BE REMOVED WHEN DRAINING IS REQUIRED.

6. DRAIN W/ QUICK-DISCONNECT COUPLING W/ INTEGRAL CHECK VALVE. DRAIN HOSE TO BE ATTACHED FOR ROUTING FLOW TO FLOOR DRAINS WHEN FPS TIE-IN (NOTE 5) IS OPERATIONAL COUPLING TO BE REMOVED WHEN DRAINING IS REQUIRED

7. THE INSTRUMENT AIR TO FCV-360 AND TCV-27 HAS BEEN ISOLATED. BOTH VALVES ARE FULLY OPEN. (66-B)

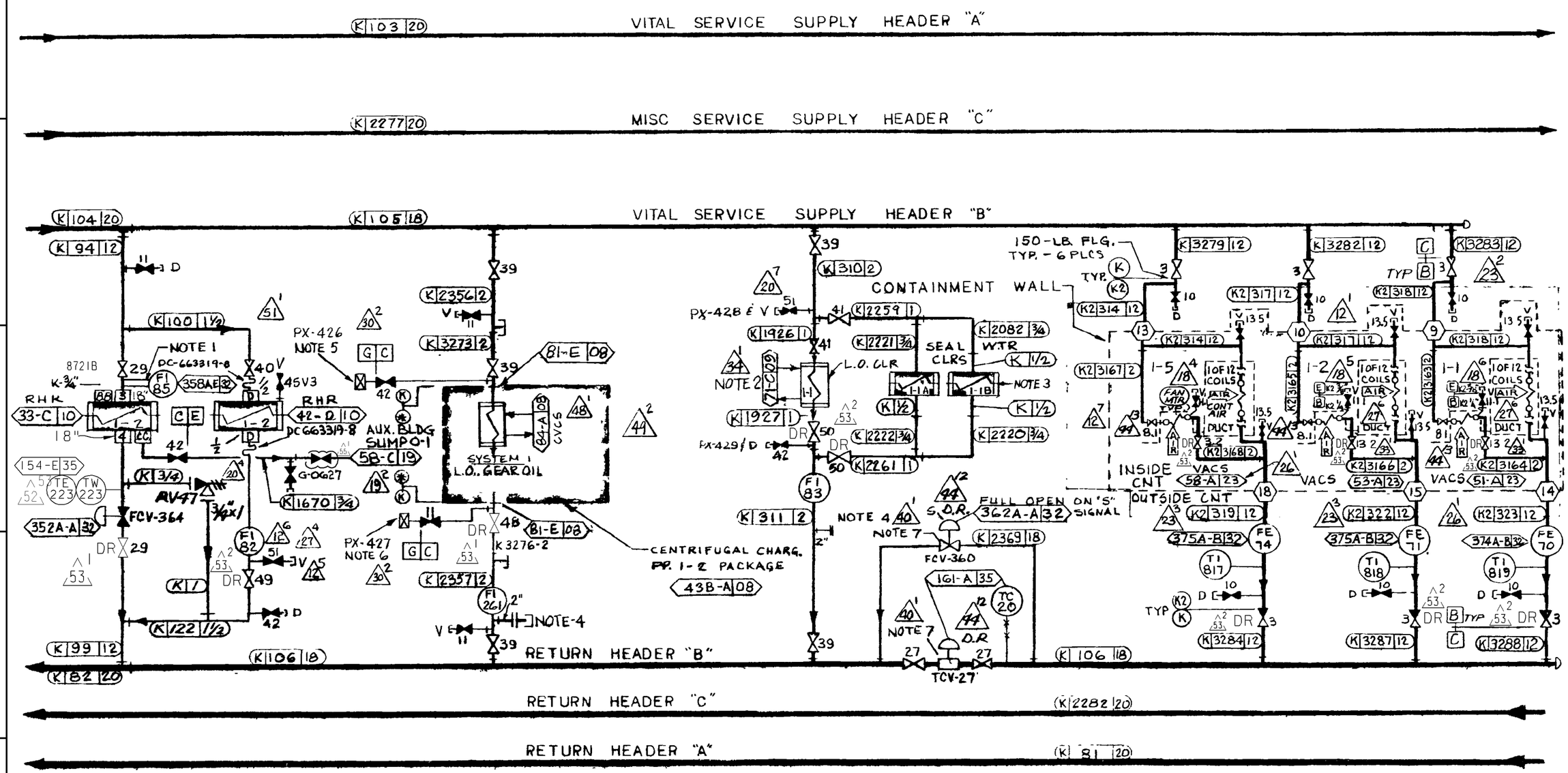

RESIDUAL H.X. 1-2
DC-663217-4

RES HEAT REM.
PP 1-2 SEAL WTR. CLR.
DC-663217-9,16

CENTRIFUGAL CHARGING PUMP 1-2 PACKAGE CLRS.
DC-663210-40, 47, 48, 49, 50

SAFETY INJECTION PP 1-1 COOLER
DC-663216-26, 32

REACTOR CONTAINMENT FAN COOLERS
DC-663079-2,5
CLG. COILS
FAN MTRS.
H X.

UNIT 1

NOTES:
1. ELBOW TAPS FOR FLOW INDICATION. (60-D)
2. REFER TO S.I.S. PUMP LUBE OIL COOLING SYSTEM, P.G.&E RECORD NO. DC-663216-26 (65-C)
3. REFER TO SIS PP. SEAL FLUSH SYSTEM DIAGRAM, DC 663216 27 (66-C)

HEADER "B" COMPONENTS

4. TEST POINT, SEE NOTES 2 & 3 SHT-5A COORD C3-B.

-NOTES CON'T ABOVE-

DIABLO CANYON POWER PLANT - PG&E CO.
COMPONENT COOLING WATER SYSTEM

DRAWING	SHEET	PAGE	REV
102014	6	0	55

DATE	DWN	RE	IV	PROFESSIONAL ENGINEER	PE DISC.	PE#	PE EXP.	
07-27-2012	MNRU	FxC2		KERSI J. DALAL	MECHANICAL	M 16690	3/31/2014	REVISED PER DFT-7*1629-0

INPGIC
1 Size

RASTER=102014s6.dgn
DGN=102014s6.dgn
CAD User: MNRU Date: 07-27-2012

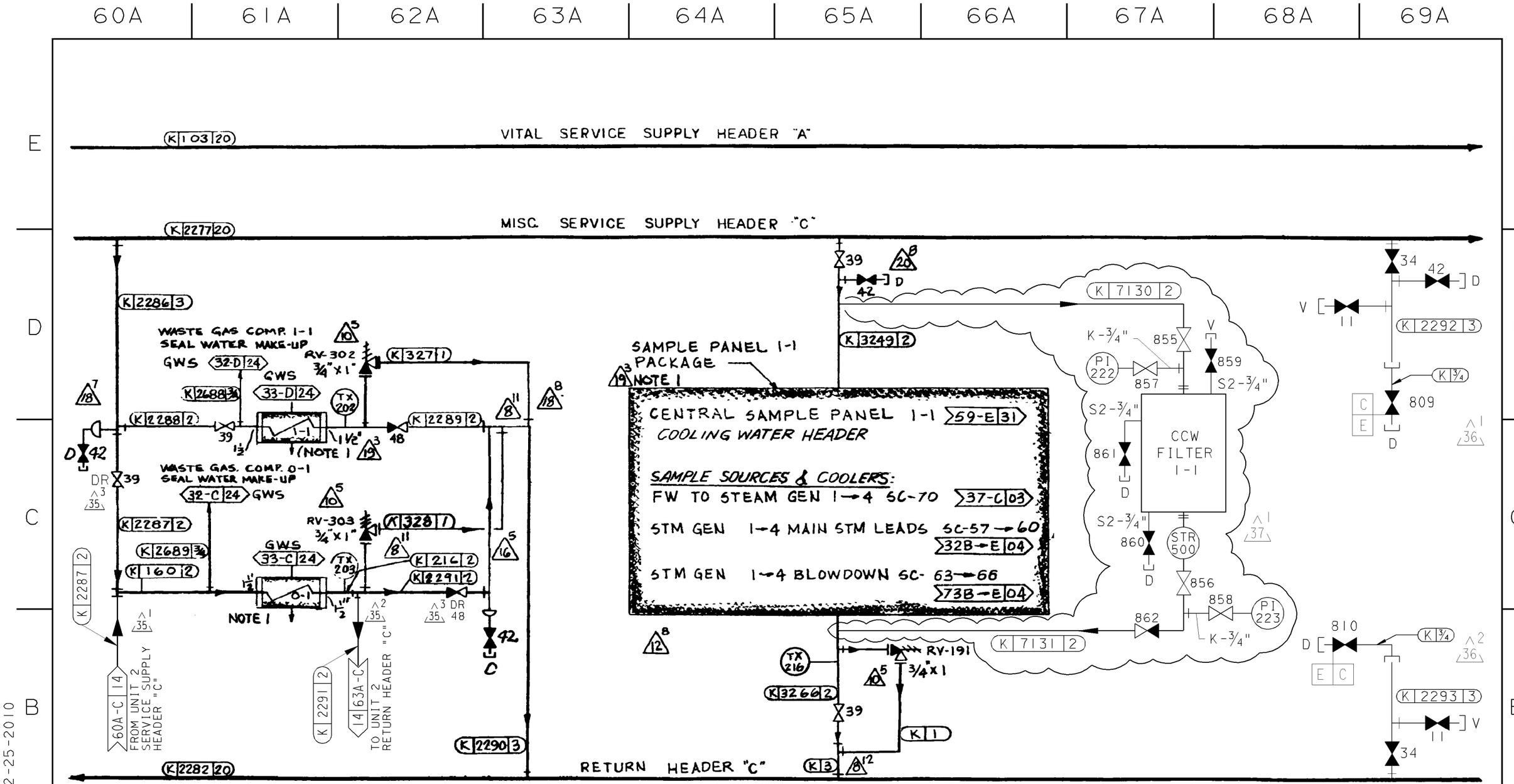

WASTE GAS COMPRESSORS 1-1, 0-1
SEAL WATER COOLERS
DC-663274-2

CENTRAL SAMPLE PANEL 1-1
COOLERS
DC-663108-5

NOTE
1. WASTE GAS COMPRESSOR SEAL WATER COOLERS & CENTRAL SAMPLE PANEL COOLERS ARE DESIGN CLASS II & SEISMICALLY ANALYZED IN ACCORDANCE WITH DESIGN CRITERIA MEMORANDUM T-10 (FORMERLY M-61) 61A-C/D, 64A-D

HEADER "C" COMPONENTS

UNIT 1

DIABLO CANYON POWER PLANT - PG&E CO.
COMPONENT COOLING WATER SYSTEM

DRAWING	SHEET	PAGE	REV
102014	6A	0	37

DATE	DWN	RE	IV	PROFESSIONAL ENGINEER	PE DISC.	PE#	PE EXP.	
02-25-2010	AJFJ	FxC2		KERSI J. DALAL	MECHANICAL	M 16690	3/31/2010	REVISED PER DDN-2*169

RASTER=2014s6a.dgn
DGN=2014s6a.dgn
CAD User: AJFJ Date: 02-25-2010
INPGIC
1 Size

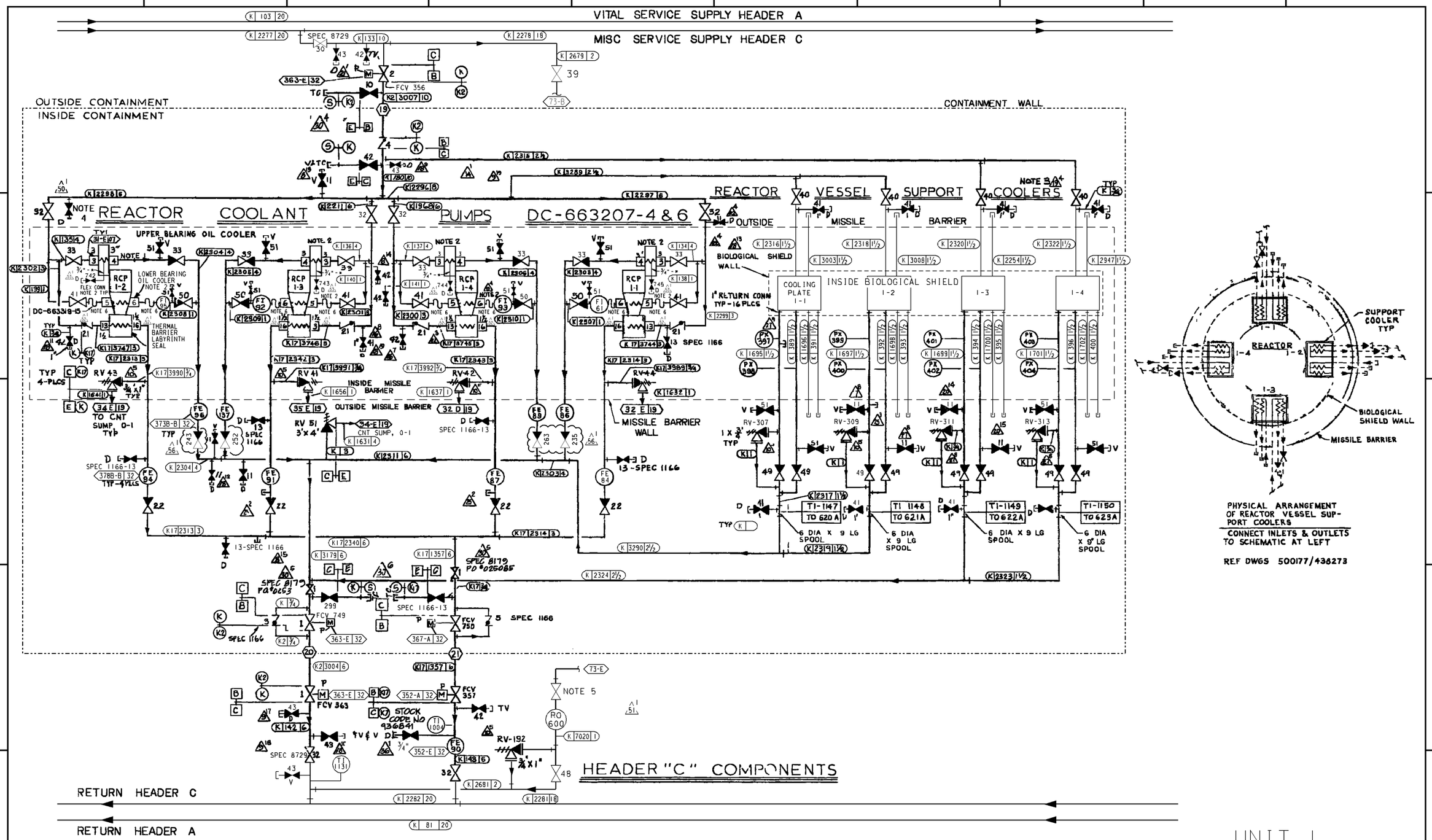

NOTES:

1. REACTOR COOLANT PUMP 1-2 HAS SHORT PIPE (K-3) BETWEEN UPPER BEARING OIL COOLER OUTLET NOZZLE NO. 4 AND LINE NUMBER 2304, RCP 1-2 ONLY. 70-D
2. REACTOR COOLANT PP L.O. COOLERS ARE DESIGN CLASS II & SEISMICALLY ANALYZED BY THE SUPPLIER. 71/74-D
3. REACTOR VESSEL SUPPORT COOLERS ARE DESIGN CLASS II AND SEISMICALLY ANALYZED PER DESIGN CRITERIA MEMORANDUM T-10 (FORMERLY M-61). 77-B
4. VALVE, DC-6006473-269, STOCK CODE 93-6846.
5. VALVE, DC-6006473-39, STOCK CODE 93-6842.
6. ISOLATION KIT INSTALLED AT ONE END OF FLEX LINE MIN.

UNIT 1

DIABLO CANYON POWER PLANT - PG&E CO.
COMPONENT COOLING WATER SYSTEM

DRAWING	SHEET	PAGE	REV
102014	7	0	56

DATE	DWN	RE	IV	PROFESSIONAL ENGINEER	PE DISC.	PE#	PE EXP.	
08-05-2011	CNHK	FxC2		KERSI J. DALAL	MECHANICAL	M 16690	3/31/2012	REVISED PER DFT-7*1279-0

INPGIC
1 Size

RASTER=001h1095.DGN
DGN=001h1095.DGN
CAD User: CNHK Date: 08-05-2011

NOTES CONT'D

4. S—D—S - INDICATES LINE COMING OFF PIPE CAP 22 1
5. DELETED
6. FOR INFO ON VALVES AND COOLER HOT SAMPLE PANEL SEE DC-6016129-1.
7. PIPING CODE CLASS E BOUNDARY IS CLASS II (QA CLASS S). 2
8. BLANK PLATE INSTALLED PER "K" SPEC, CODE CLASS C. 53

NOTES CONT'D.

2. BORIC ACID EVAP. PKG. COOLERS (EXCEPT SAMPLE COOLER), WASTE CONC. PKG. (EXCEPT SAMPLE COOLER) & NSSS SAMPLE HX. CCW. SIDE ARE DESIGN CLASS II & SEISMICALLY ANALYZED BY THE SUPPLIER >81/82-C, 85/86-C, 87/89-C<
3. B.A PKG. SAMPLE COOLER (SC 47), AUX. STM. DRAIN REC. VENT COND & WASTE CONC. PKG. SAMPLE COOLER (SC 48) ARE DESIGN CLASS II & SEISMICALLY ANALYZED PER DESIGN CRITERIA MEMORANDUM T-10 (FORMERLY M-61) >82/84-C, 86-C<. 34 2

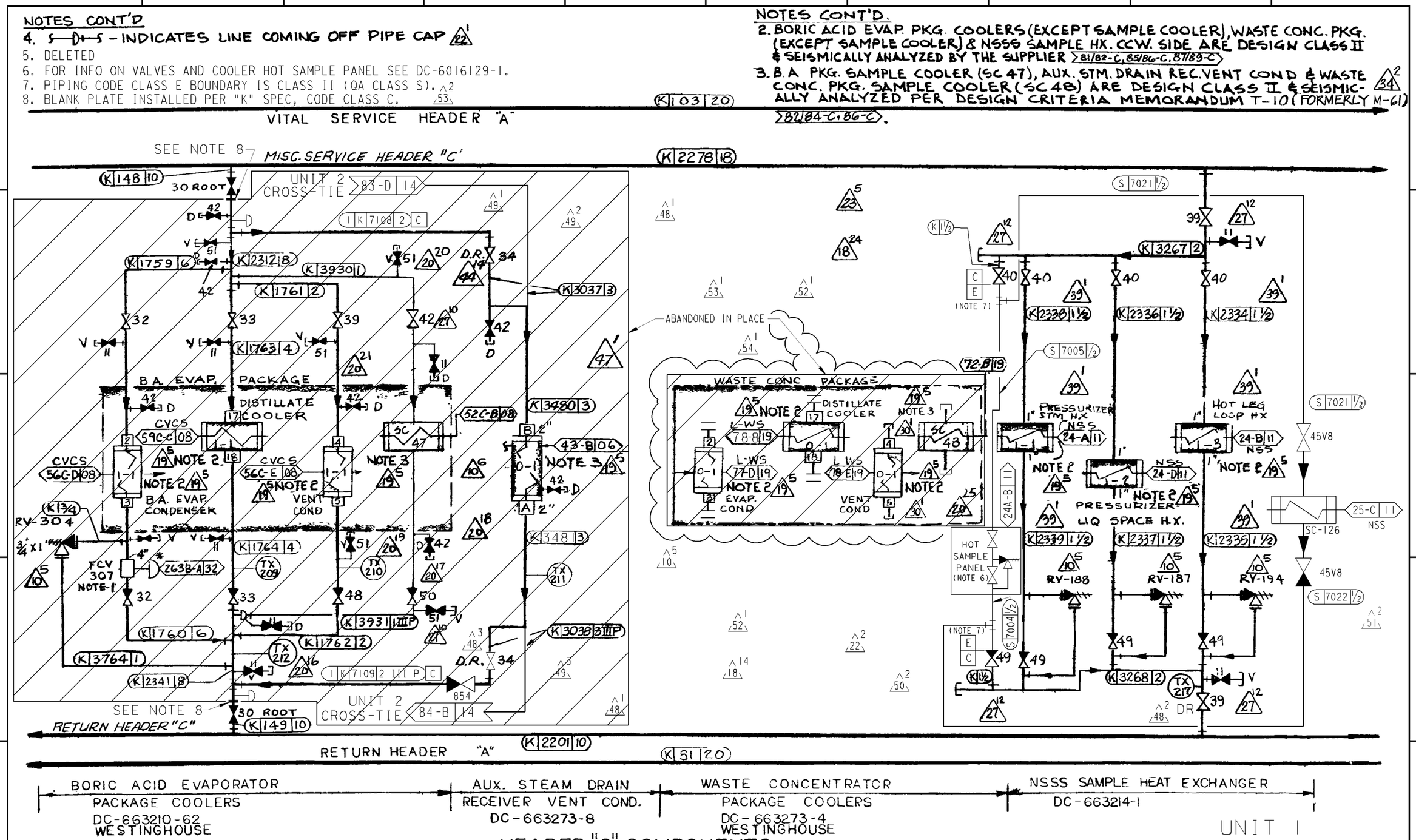

HEADER "C" COMPONENTS

NOTES:

1. VALVE PLACES OUTSIDE EVAPORATION AREA DUE TO HIGH RADIATION LEVEL. <80-B>

-CONT. AT TOP RIGHT-

DIABLO CANYON POWER PLANT - PG&E CO.
COMPONENT COOLING WATER SYSTEM

DRAWING	SHEET	PAGE	REV
102014	8	0	54

DATE	DWN	RE	IV	PROFESSIONAL ENGINEER	PE DISC.	PE#	PE EXP.	
08-08-2011	CNHK	FxC2		KERSI J. DALAL	MECHANICAL	M 16690	3/31/2012	REVISED PER DFT-7*1279-0

INPGIC
1 Size

RASTER=2014s8.dgn
DGN=2014s8.dgn
CAD User: CNHK Date: 08-08-2011

NOTES:
1. ST. GEN. BLOWDOWN SAMPLE COOLERS & COND. FOR SGBD TK VENT SAMPLE ARE DESIGN CLASS II & SEISMICALLY ANALYZED PER DESIGN CRITERIA MEMORANDUM T-10 (FORMERLY M-61) 95-C 41
2. DELETED 59
3. CODE CLASS E PORTIONS OF LINES 4172 & 4173 SHALL BE SEISMICALLY ANALYZED TO DESIGN CLASS I CRITERIA. 95-B,D
4. S/C 93-5909, DWG 6006473-8. 92-B
5. S/C 94-3774, DWG 6006473-141. 92-B 46
6. S/C 93-6841, DWG 6006473-166. 93-B
7. SOLID PLATE INSTALLED BETWEEN FLANGES TO DIVERT FLOW THROUGH TCV-130.
8. VALVE WAS ORIGINALLY PURCHASED AS TCV-130 AND IS NOW REDESIGNATED AS CCW-1-786 AS A MANUAL VALVE. 57

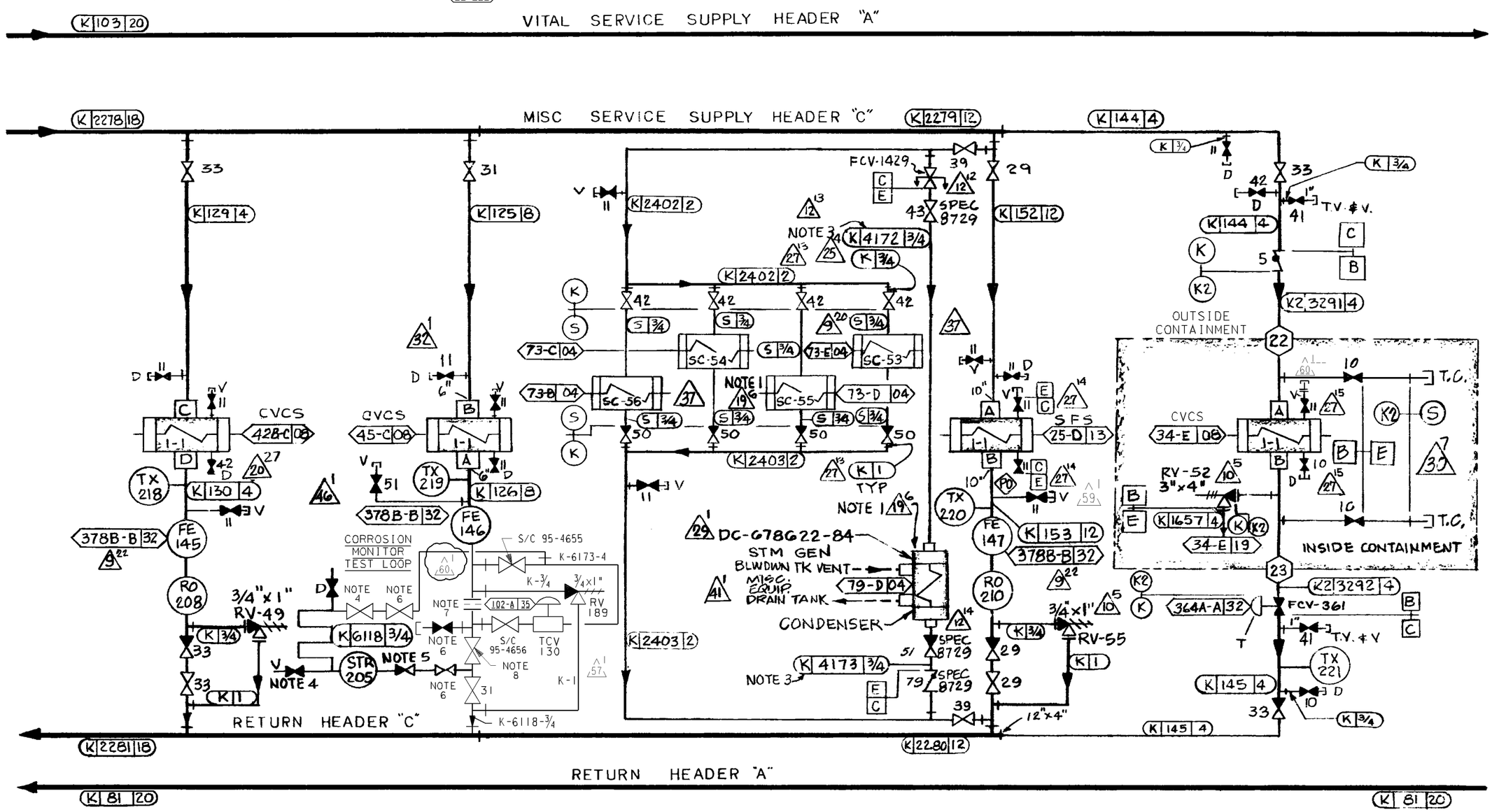

SEAL WATER HEAT EXCHANGER DC-663210-7

LETDOWN HEAT EXCHANGER DC-663210-11

STEAM GENERATOR BLOWDOWN SAMPLE COOLERS FOR RADIATION MONITORS DC-663095-1

SPENT FUEL PIT HEAT EXCHANGER DC-663211-7

EXCESS LETDOWN HEAT EXCHANGER DC-663210-12

HEADER "C" COMPONENTS

DIABLO CANYON POWER PLANT - PG&E CO.
COMPONENT COOLING WATER SYSTEM

DRAWING	SHEET	PAGE	REV
102014	9	0	61

DATE	DWN	RE	IV	PROFESSIONAL ENGINEER	PE DISC.	PE#	PE EXP.	
04-25-2012	JBMX	FxC2		KERSI J. DALAL	MECHANICAL	M 16690	3/31/2014	REVISED PER DFT-7*1525

INPGIC
I Size

RASTER=001h1093.dgn
DGN=001h1093.dgn
CAD User: JBMX Date: 04-25-2012

NOTES CONT: 7. CODE CLASS E PORTION OF LINE 4145 SHALL BE SEISMICALLY ANALYZED TO DESIGN CLASS I CRITERIA (102-E)

8. DRAIN W/ QUICK-DISCONNECT COUPLING W/ INTEGRAL CHECK VALVE FOR EMERGENCY TIE-IN TO FIRE PROTECTION SYSTEM (102018-5A). COUPLING TO BE REMOVED WHEN DRAINING IS REQUIRED.

9. DRAIN W/ QUICK-DISCONNECT COUPLING W/ INTEGRAL CHECK VALVE. DRAIN HOSE TO BE ATTACHED FOR ROUTING FLOW TO FLOOR DRAINS WHEN FPS TIE-IN (NOTE 8) IS OPERATIONAL COUPLING TO BE REMOVED WHEN DRAINING IS REQUIRED.

10. THE INSTRUMENT AIR TO FCV-366 AND TCV-28 HAS BEEN ISOLATED BOTH VALVES ARE FULLY OPEN. (106-B)

11. VALVE - S/C 99-6459 (105-C)

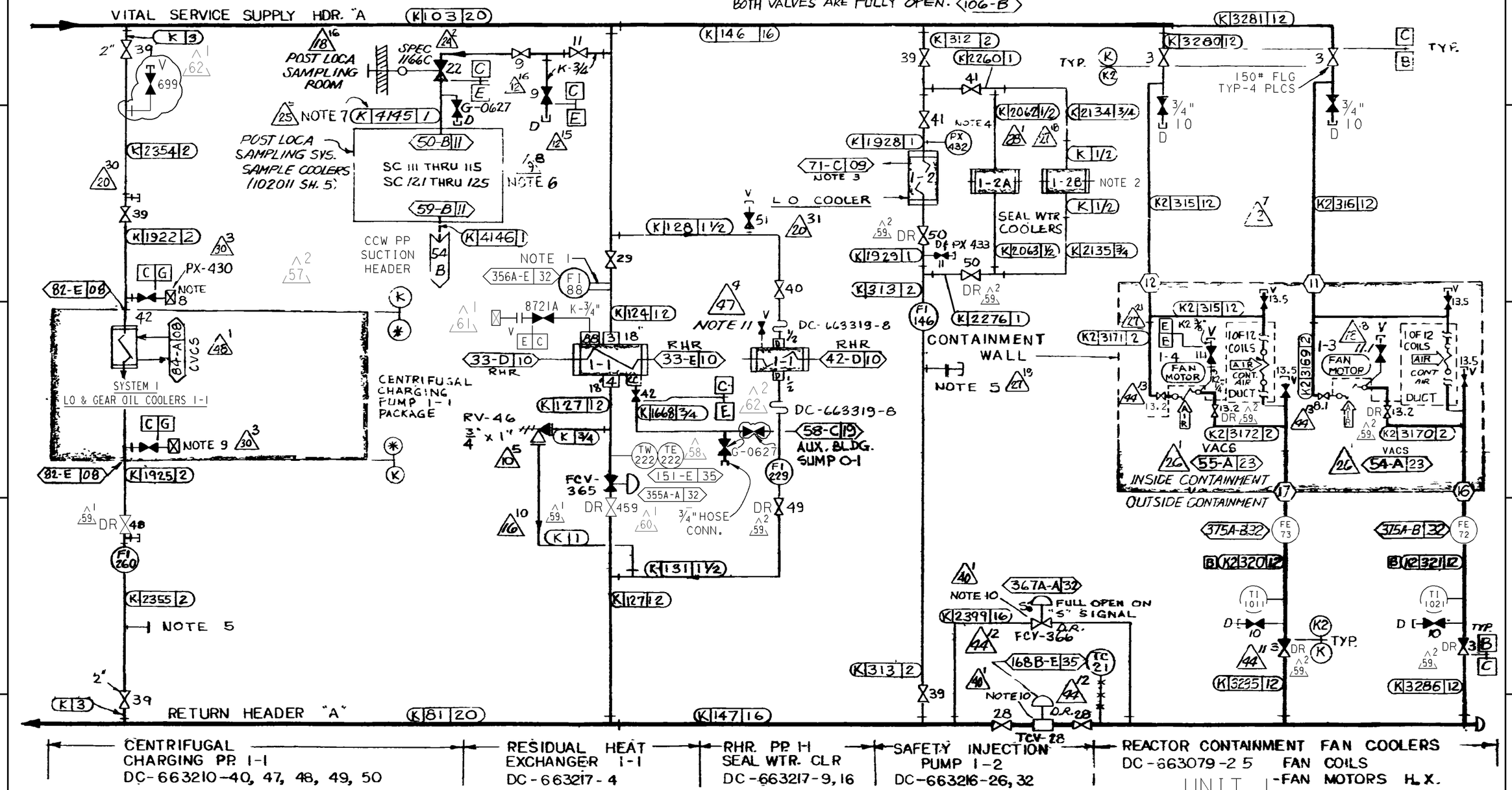

NOTES:

1. ELBOW TAPS FOR FLOW INDICATION (104-D)
2. REFER TO SIS PP SEAL FLUSH SYSTEM DIAGRAM, PG&E RECORD NO DC-663216-27 (107-D)
3. REFER TO SIS PP LUBE OIL COOLER SYSTEM MFR. DWG PG&E RECORD NO DC-663216-26 (105-D)

HEADER "A" COMPONENTS

4. PX'S TO BE LOCATED WITHIN 1' OF H.X. (106-E)
5. 2" BLIND FLANGE SEE NOTES 2 & 3 SH. 5A (100-B)
6. POST LOCA SAMPLE COOLERS ARE DESIGN CLASS II & SEISMICALLY ANALYZED PER DESIGN CRITERIA MEMORANDUM M-45 (103-D)

(SEE COORD 100-E FOR NOTES CONT.)

DIABLO CANYON POWER PLANT - PG&E CO.
COMPONENT COOLING WATER SYSTEM

DRAWING	SHEET	PAGE	REV
102014	10	0	62

DATE	DWN	RE	IV	PROFESSIONAL ENGINEER	PE DISC.	PE#	PE EXP.	
04-25-2012	JBMX	FxC2		KERSI J. DALAL	MECHANICAL	M 16690	3/31/2014	REVISED PER DFT-7*1526

RASTER=erul7616.dgn
DGN=erul7616.dgn
CAD User: JBMX Date: 04-25-2012

INPGIC
I Size

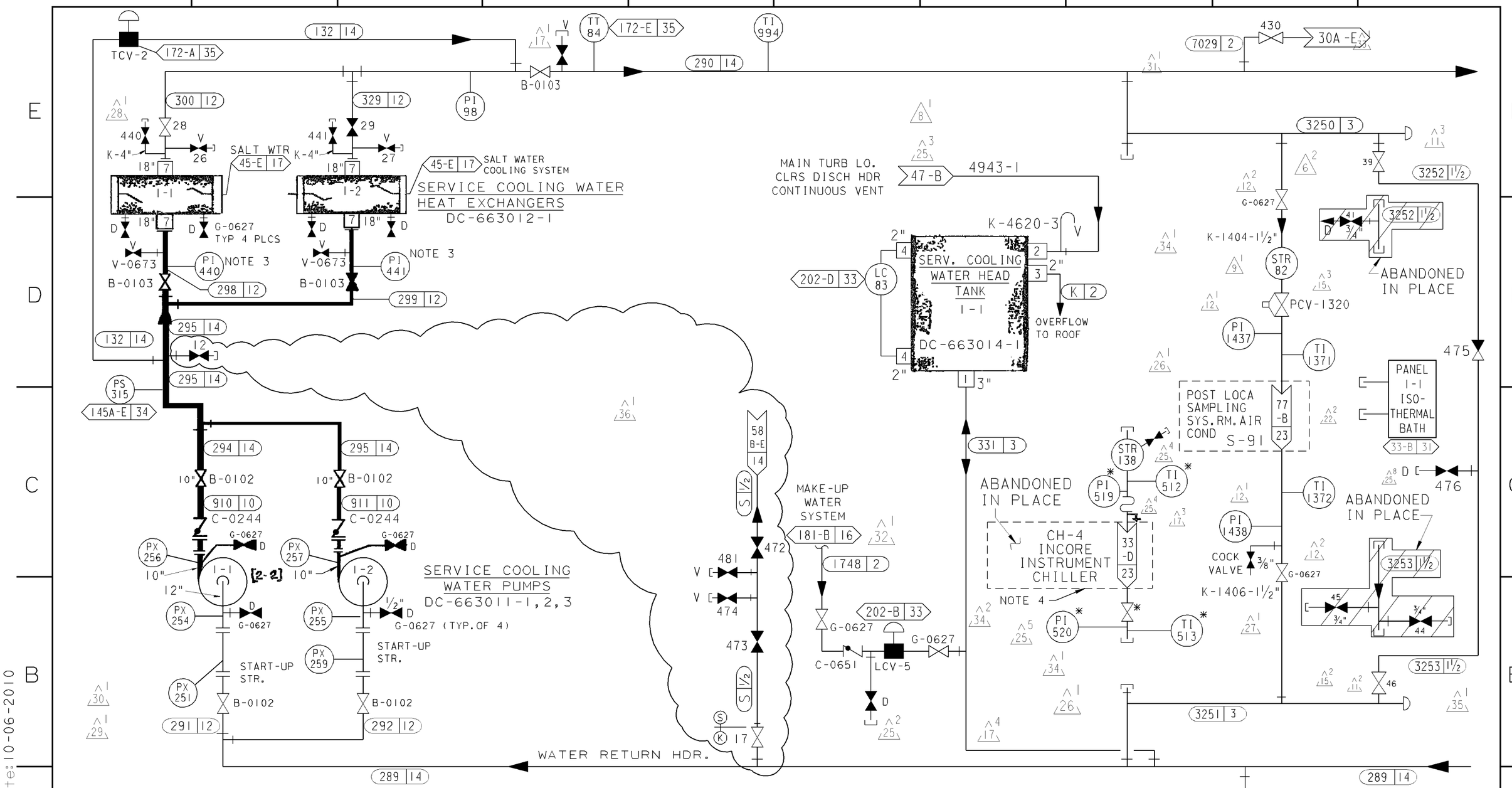

NOTES:

1. ALL PIPING ON THIS DWG SHALL BE "K" SPEC., PG&E CLASS "E"
2. ALL DRAIN AND VENT VALVES, DESIGNATED "D" & "V", ARE ¾".
3. INSTALL PI NEXT TO INLET VALVE IN ORDER TO MONITOR PLACING HX IN SERVICE. 31-D
4. CH-4 INCORE INSTRUMENT CHILLER AND ASSOCIATED COMPONENTS ARE ABANDONED IN PLACE.

DIABLO CANYON POWER PLANT - PG&E CO.
SERVICE COOLING WATER SYSTEM

DRAWING	SHEET	PAGE	REV
102015	3	0	36

DATE	DWN	RE	IV	PROFESSIONAL ENGINEER	PE DISC.	PE#	PE EXP.	
10-06-2010	JBMX	FxC2		KERSI J. DALAL	MECHANICAL	M 16690	3/31/2012	REVISED PER DDN-2*156 AND DFC-3*983

RASTER=2015s3.dgn
DGN=2015s3.dgn
CAD User: JBMX Date: 10-06-2010

INPG1C
1 Size

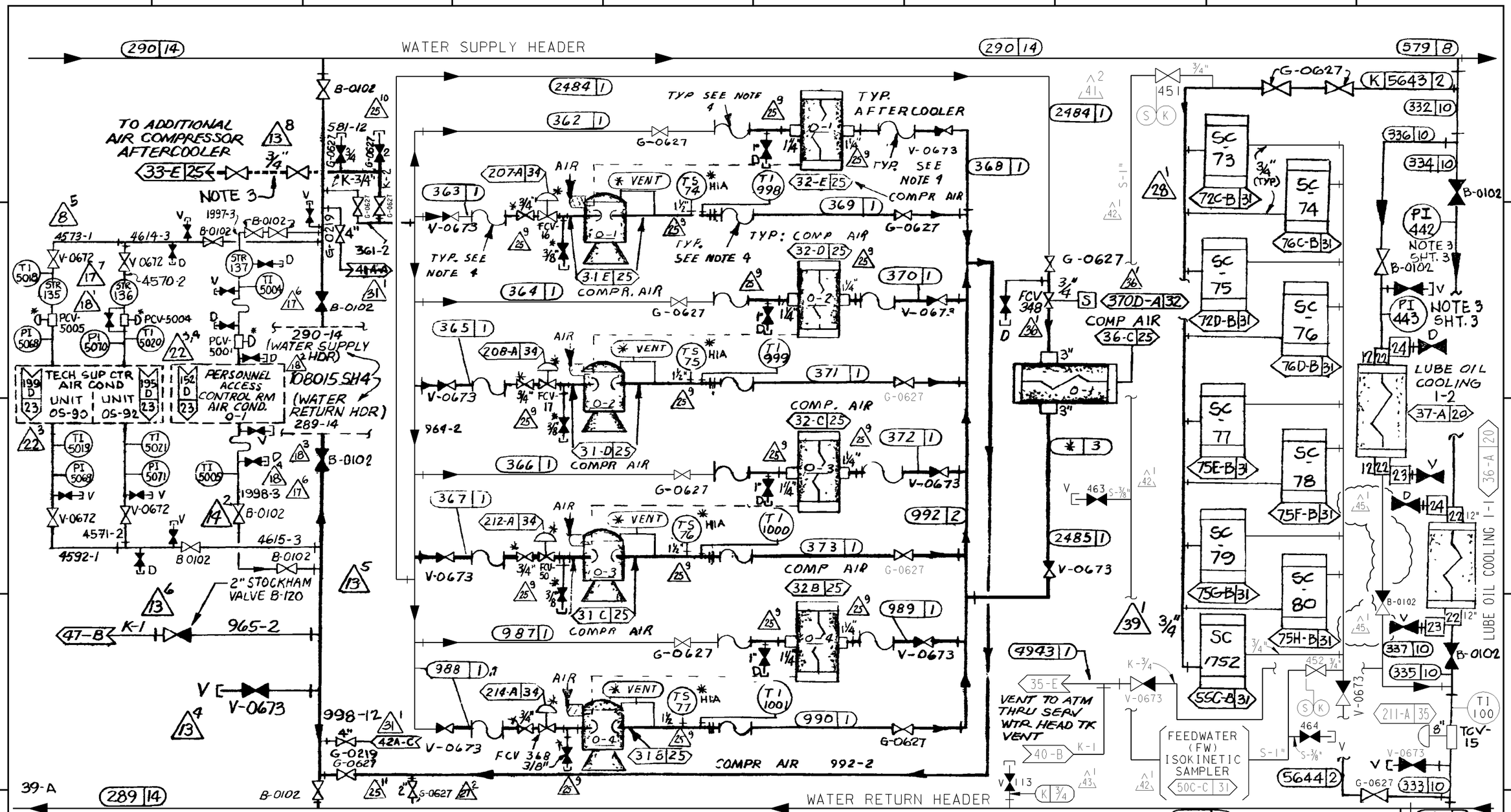

NOTES:
1. ALL PIPING THIS SHEET SHALL BE P.G.&E. CLASS "E".
2. PIPING LINE DESIGNATION NPS TO BE "K" SPECS.
3. TEMPORARY PIPING INCLUDES CARBON STEEL & MISCELLANEOUS GATE VALVES. 41-E, 43-A
4. FLEXIBLE HOSE TO BE PURCHASED UNDER EMM DC1-266 OR 44-E REPLACE FLEXIBLE HOSE PER RPE M-9066

PLANT AIR COMPRESSORS & AFTERCOOLERS
COMMON FACILITIES UNIT 1 & 2

AIR COMPPRESSORS DC-663002-1

AFTERCOOLERS DC-663002-16

PLANT AIR DRYER COOLER DC-663003-5

MAIN TURBINE RESERVOIR LUBE OIL COOLERS 663282-5
UNIT 1

DIABLO CANYON POWER PLANT - PG&E CO.
SERVICE COOLING WATER SYSTEM

DRAWING	SHEET	PAGE	REV
102015	4	0	45

DATE	DWN	RE	IV	PROFESSIONAL ENGINEER	PE DISC.	PE#	PE EXP.	
10-02-2007	FAZI	FxC2		KERSI J. DALAL	MECHANICAL	M 16690	3/31/2008	REVISED PER FCT-32897

RASTER=2015s4.dgn
DGN=2015s4.dgn
CAD User: FAZI Date: 10-02-2007

INPGIC
1 Size

WATER SUPPLY HEADER

4 x 3 RED

G 0218

G 0627

2605 3

5646 1

5893 1

SC 12

55A A 31

2486 1½

G 0621

G 0627

E H FLUID RESV COOLING

32 A 20

FEEDWTR(ALT) ISOKINETIC SAMPLER

54C-A 31

E H FLUID RESV COOLING

32 A 20

1-1

1-2

5894 1

V 0673

TEMP CONTROL VALVE

5647 1

V 0673

G-0219

60 D 02

K 5454 3

COND VAC SEAL WTR PP 0 1 DISCH

K 5453 3

63 E 02

COND VAC PP's CASING

G-0219

G 0219

G 0627

1952 A

580 B

DC 663284 3

DC 663280-36 TAB 14 PAGE 13 & FIG 1

ELECTRO HYDRAULIC CONTROL COOLERS

5893 1

SC 1753

44B-B 31

4294 3/4

2359 1½

G 0627

V 0673

TO HTR DR PP DISCH SAMPLE

SC-81

69 B 31

82 E 20

LUBE OIL CLR

4295 3/4

V 0673

V-0673

2360 1½

CONDENSER VACUUM PP 0 1 SEAL WATER HT XCHG (PLATE TYPE) DC 6003613 1

579 8

355 2

G 0627

2361 1½

355 2

59 B 02

G 0627

SEAL CIRC

5 GPM

PUMP 1-1

STUFFING BOX TYP

V 0673

2363 1½

V 0673

2364 1½

V-0673

59 C 02

356 2

2362 1½

C-0627

DC-663043-1

HEATER #2 DRAIN TY PUMP

NOTE 3

K 5742 1

344 3

347 3

348 3

B-0102

LUBE OIL COOLING

69 B 20

1-2 A

1 2B

SEAL HEAT EXCH R (TYP)

B 0102

351 3

352 3

SECONDARY PROCESS CONTROL RM ISOTHERMAL BATH WTR CHILLER DC 6006514 3

TCV 17

218-A 35

K 5743 1

NOTE 3

354 3

580 B

DC 663300 5

FEED PUMP TURBINE LUBE OIL COOLERS

NOTES 1 - PIPING LINE DESIGNATION NOS TO BE K SPECS

2 ALL PIPING THIS SHEET SHALL BE F G & E CLASS E

3 1 800LBS VOGT SW 13111 CS GATE VALVE 57BE

UNIT 1

DIABLO CANYON POWER PLANT - PG&E CO.

DRAWING	SHEET	PAGE	REV
102015	5	0	43

DATE	DWN	RE	IV	PROFESSIONAL ENGINEER	PE DISC.	PE#	PE EXP.	
12-01-2005	MIBF	RMDI		KERSI J. DALAL	MECHANICAL	M 16690	3/31/2006	REVISED PER FCT-028989

RASTER=001h1080.dgn
DGN=001h1080.dgn
CAD User: MIBF Date: 12-01-2005

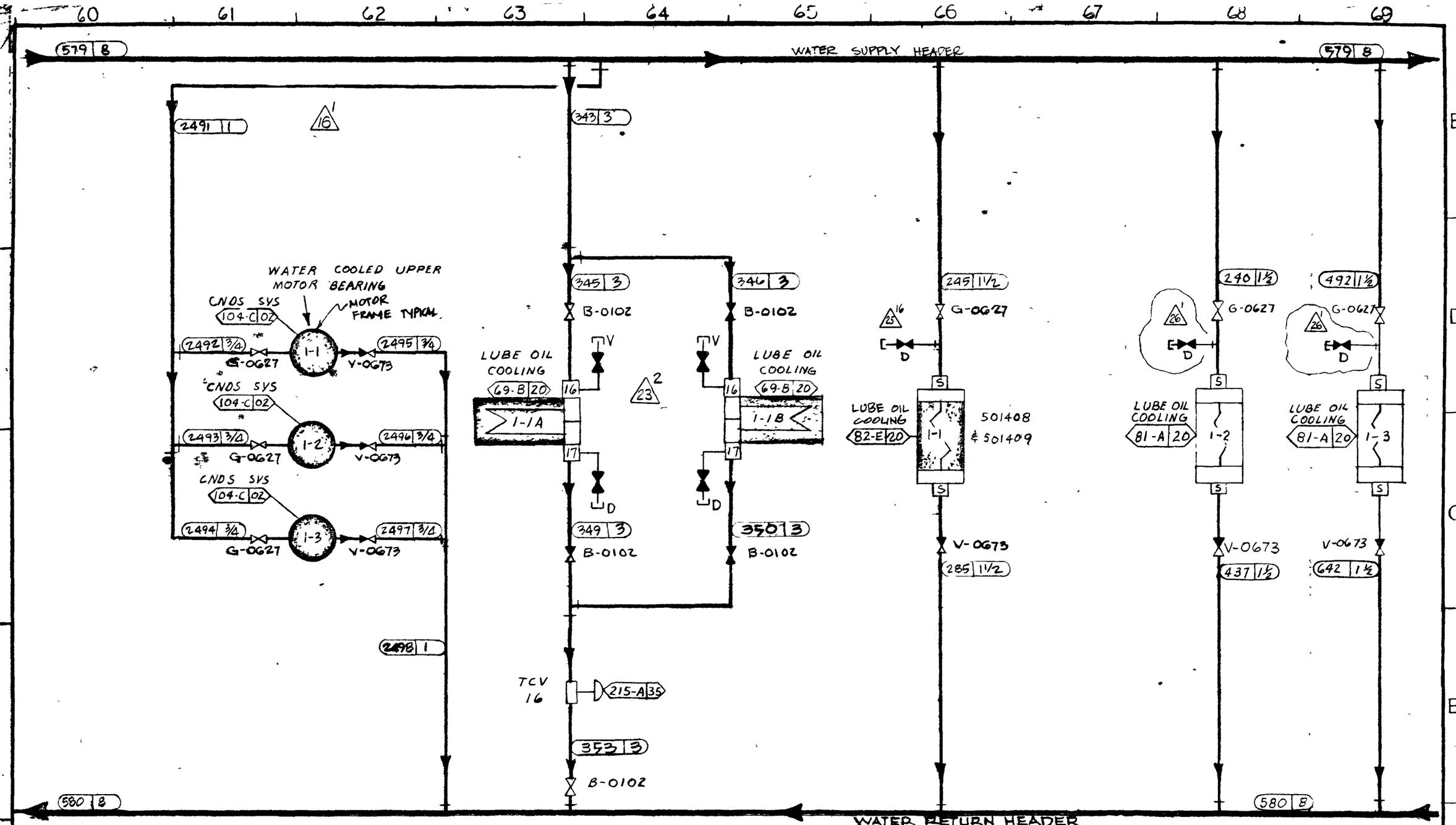
60
61
62
63
64
65
66
67
68
69
579 B
WATER SUPPLY HEADER
579 B
2491 1
16
343 3
WATER COOLED UPPER MOTOR BEARING
CNDS SYS
104-C 02
MOTOR FRAME TYPICAL
2492 3/4
G-0627
1-1
V-0673
2495 3/4
CNDS SYS
104-C 02
2493 3/4
G-0627
1-2
V-0673
2496 3/4
CNDS SYS
104-C 02
2494 3/4
G-0627
1-3
V-0673
2497 3/4
2498 1
345 3
B-0102
346 3
B-0102
LUBE OIL COOLING
69-B 20
1-1A
16
17
V
D
23
2
LUBE OIL COOLING
69-B 20
1-1B
349 3
B-0102
350 3
B-0102
TCV 16
215-A 35
353 3
B-0102
245 1 1/2
G-0627
23
16
D
LUBE OIL COOLING
82-E 20
1-1
S
501408 & 501409
V-0673
285 1 1/2
240 1 1/2
G-0627
26
1
D
LUBE OIL COOLING
81-A 20
1-2
V-0673
437 1 1/2
492 1 1/2
G-0627
26
1
D
LUBE OIL COOLING
81-A 20
1-3
V-0673
642 1 1/2
580 B
WATER RETURN HEADER
580 B
E
D
C
B
A
SCAN 26 IC
35 M/M Neg.
DC-663045-2
CONDENSATE PUMP MOTOR
UPPER BEARING
DC-663300-5
FEED PUMP TURBINE
LUBE OIL COOLERS
DC-663046-1,3
CONDENSATE BOOSTER PPS
LUBE OIL SUPPLY
9
13
1
6
UNIT - 1
NOTES
1. PIPING LINE DESIGNATION NOS. TO BE "K" SPECS.
2. ALL PIPING THIS SHEET SHALL BE P G & E CLASS "E".
P.G.&E.CO.
SHEET NO 6 OF SHEETS
DRAWING NUMBER
102015
CHANGE
26
35 M/M NEG
RM INDEXED REV. 26

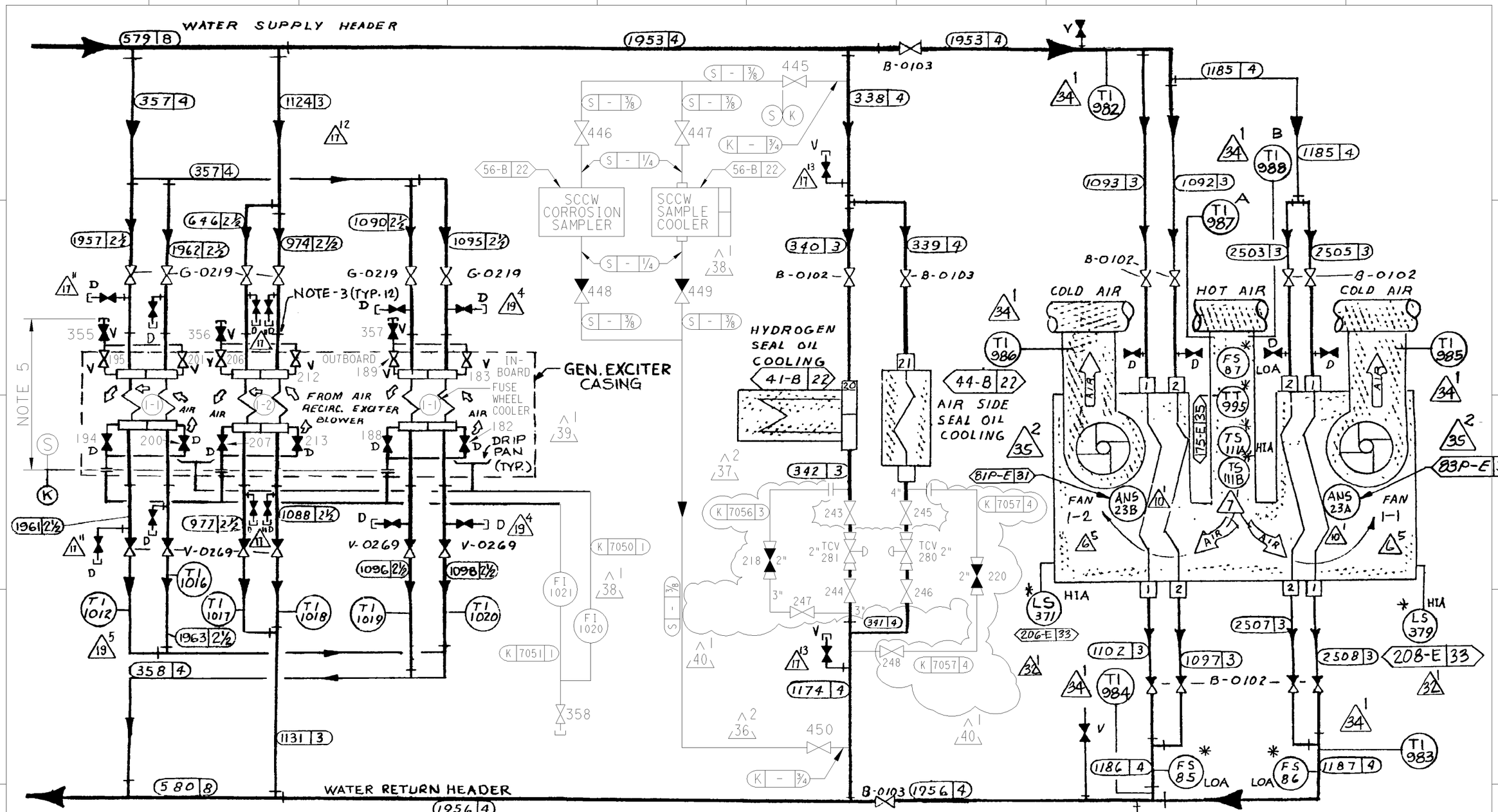

NOTES:

1. PIPING LINE DESIGNATION NO'S TO BE "K" SPEC.
2. ALL PIPING THIS SHEET SHALL BE P G & E. CLASS "E".
3. "VICTAULIC" TYPE COUPLING. TYP OF 12. SEE DC 663293-1 (71-D)
4. CORROSION MONITOR/SAMPLER IS CHEMISTRY CONTROLLED AND MAY BE REMOVED AND REINSTALLED AS NEEDED.
5. SS TUBING FOR COOLER VENTS AND DRAINS BY PG&E. SEE N-MOD A0726979.

DIABLO CANYON POWER PLANT - PG&E CO.
SERVICE COOLING WATER SYSTEM

DRAWING	SHEET	PAGE	REV
102015	7	0	40

UNIT 1

DATE	DWN	RE	IV	PROFESSIONAL ENGINEER	PE DISC.	PE#	PE EXP.	
2009-03-25	AJFJ	FxC2		KERSI J. DALAL	MECHANICAL	M 16690	3/31/2010	REVISED PER DDN-2*209-00 DFC-3*319-00, & DFC-3*383-01

INPGIC
1 Size

RASTER=102015s7.dgn
DGN=102015s7.dgn
CAD User:
Date:2009-03-25

BASIC DIAGRAM

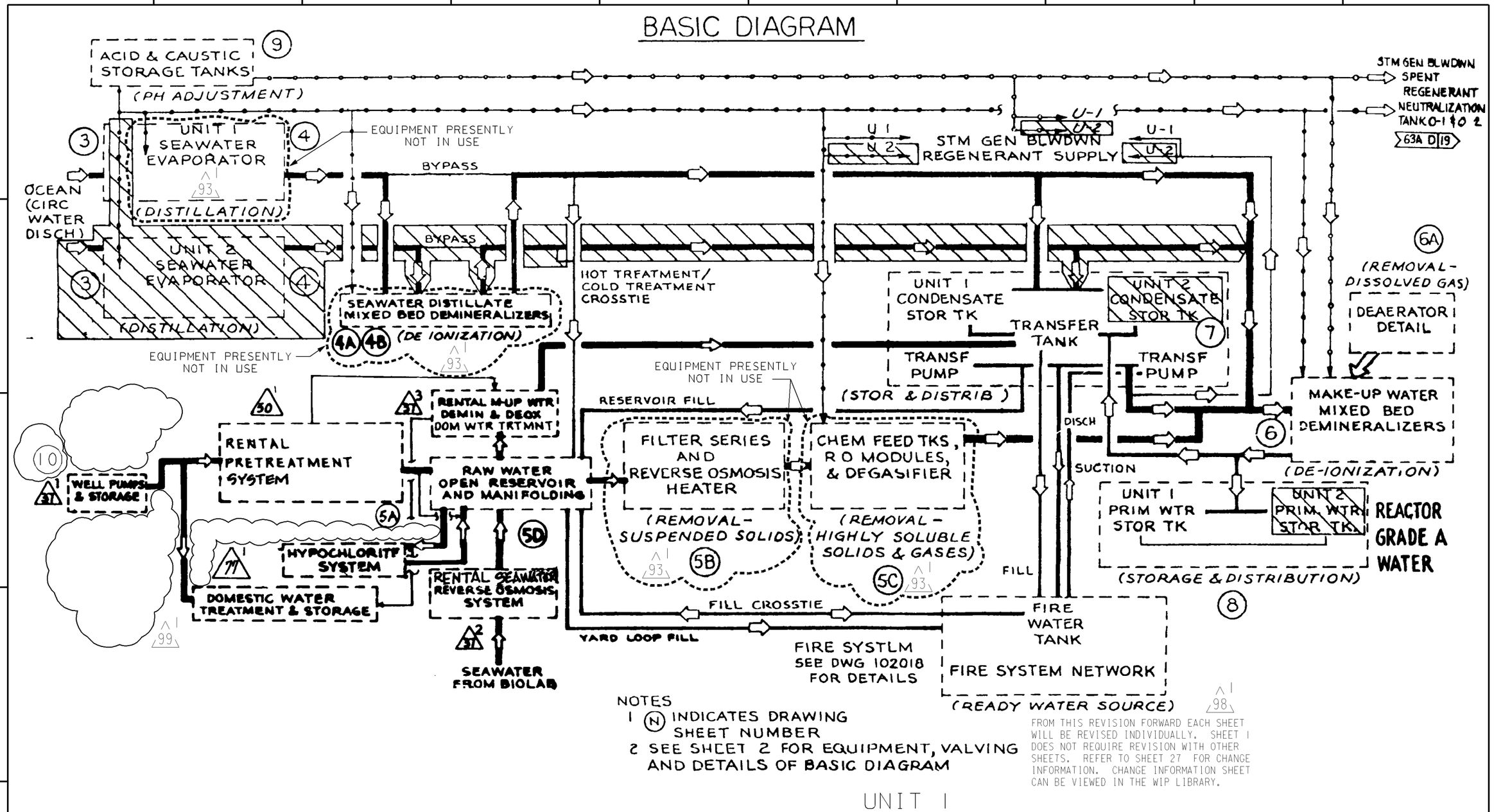

NOTES

1 (N) INDICATES DRAWING SHEET NUMBER

2 SEE SHEET 2 FOR EQUIPMENT, VALVING AND DETAILS OF BASIC DIAGRAM

FROM THIS REVISION FORWARD EACH SHEET WILL BE REVISED INDIVIDUALLY. SHEET 1 DOES NOT REQUIRE REVISION WITH OTHER SHEETS. REFER TO SHEET 27 FOR CHANGE INFORMATION. CHANGE INFORMATION SHEET CAN BE VIEWED IN THE WIP LIBRARY.

DATE	
11-01-2010	
D.D.	JBMX
R.E.	FxC2
I.V.	
P.E.	KJD3

REGISTERED PROFESSIONAL ENGINEER — KERSI J. DALAL — M 16690 — Exp. 3/31/2012 — MECHANICAL — STATE OF CALIFORNIA

REVISION DESCRIPTION

REVISED PER DDN-2*715

PIPING SCHEMATIC
MAKE-UP WATER SYSTEM

DIABLO CANYON POWER PLANT
PACIFIC GAS AND ELECTRIC COMPANY
SAN FRANCISCO, CALIFORNIA

DWG SCALE:
BILL OF MATL:
SUPSDS:
SUPSD BY:

DRAWING	SHEET	PAGE	REV
102016	1	0	99

RASTER=2016sl.dgn
DGN=2016sl.dgn
CAD User: JBMX Date: 11-01-2010

INPG
1 Size

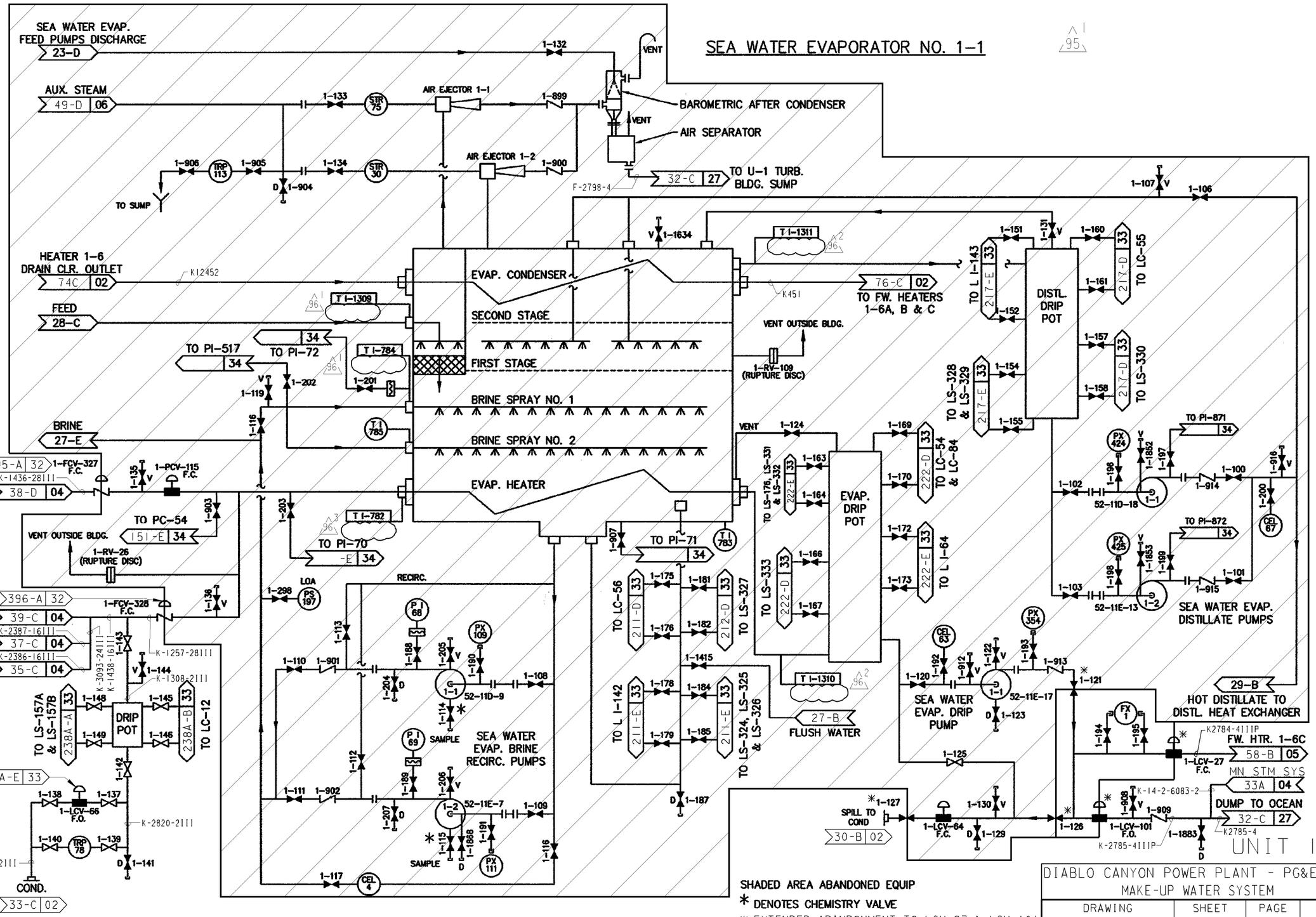

SHADED AREA ABANDONED EQUIP

* DENOTES CHEMISTRY VALVE

* EXTENDED ABANDONMENT TO LCV-27 & LCV-101
127, 126, 121 REMAIN BOUNDARY AS WELL

DIABLO CANYON POWER PLANT - PG&E CO.
MAKE-UP WATER SYSTEM

DRAWING	SHEET	PAGE	REV
102016	4	0	96

DATE	DWN	RE	IV	PROFESSIONAL ENGINEER	PE DISC.	PE#	PE EXP.	
04-20-2009	ADMI	FxC2		KERSI J. DALAL	MECHANICAL	M 16690	3/31/2010	REVISED PER DDN-2*115-00

RASTER=2016s04.dgn
DGN=2016s04.dgn
CAD User: ADMI Date: 04-20-2009

INPGIC
I Size

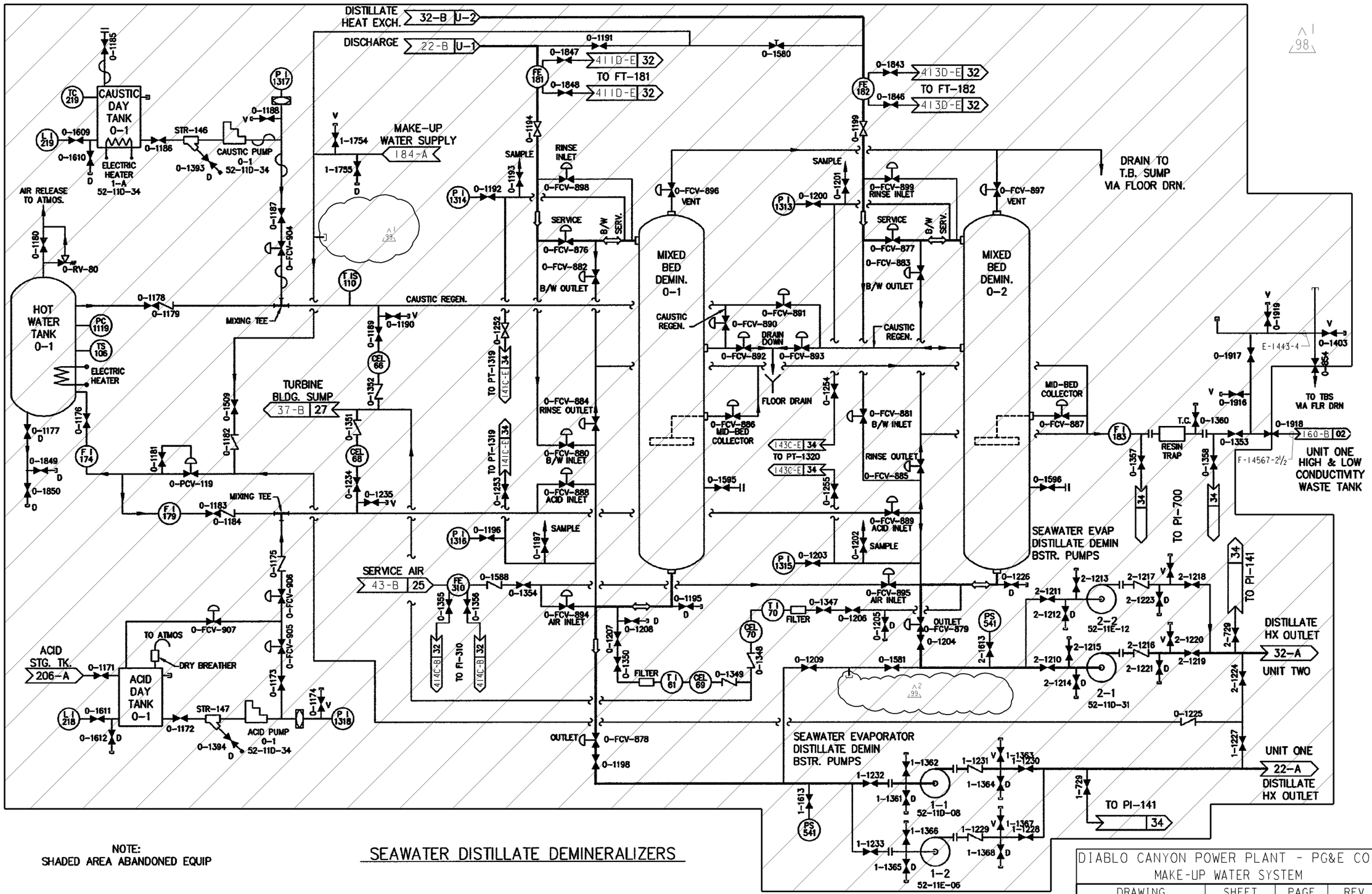
DISTILLATE HEAT EXCH. 32-B U-2
DISCHARGE 22-B U-1
CAUSTIC DAY TANK 0-1
ELECTRIC HEATER 1-A 52-11D-34
CAUSTIC PUMP 0-1 52-11D-34
MAKE-UP WATER SUPPLY 184-A
TO FT-181
TO FT-182
AIR RELEASE TO ATMOS.
HOT WATER TANK 0-1
ELECTRIC HEATER
MIXING TEE
CAUSTIC REGEN.
TURBINE BLDG. SUMP 37-B 27
SERVICE AIR 43-B 25
ACID STG. TK. 206-A
ACID DAY TANK 0-1
TO ATMOS
DRY BREATHER
ACID PUMP 0-1 52-11D-34
MIXED BED DEMIN. 0-1
MIXED BED DEMIN. 0-2
RINSE INLET
SERVICE
B/W SERV.
B/W OUTLET
RINSE OUTLET
B/W INLET
ACID INLET
AIR INLET
VENT
SAMPLE
FLOOR DRAIN
MID-BED COLLECTOR
DRAIN DOWN
DRAIN TO T.B. SUMP VIA FLOOR DRN.
TO TBS VIA FLR DRN
RESIN TRAP
UNIT ONE HIGH & LOW CONDUCTIVITY WASTE TANK
TO PI-700
SEAWATER EVAP DISTILLATE DEMIN BSTR. PUMPS
TO PI-141
DISTILLATE HX OUTLET
32-A
UNIT TWO
UNIT ONE
22-A
SEAWATER EVAPORATOR DISTILLATE DEMIN BSTR. PUMPS
2-2 52-11E-12
2-1 52-11D-31
1-1 52-11D-08
1-2 52-11E-06
NOTE: SHADED AREA ABANDONED EQUIP
SEAWATER DISTILLATE DEMINERALIZERS
UNIT 1 & 2
DIABLO CANYON POWER PLANT - PG&E CO.
MAKE-UP WATER SYSTEM
DRAWING 102016
SHEET 6
PAGE 0
REV 99
10-07-2010 JBMX FxC2 KERSI J. DALAL MECHANICAL M 16690 3/31/2012 REVISED PER DDN-2*156
DATE DWN RE IV PROFESSIONAL ENGINEER PE DISC. PE# PE EXP.
RASTER=2016s06.dgn
DGN=2016s06.dgn
CAD User: JBMX Date: 10-07-2010
INPGIC
1 Size

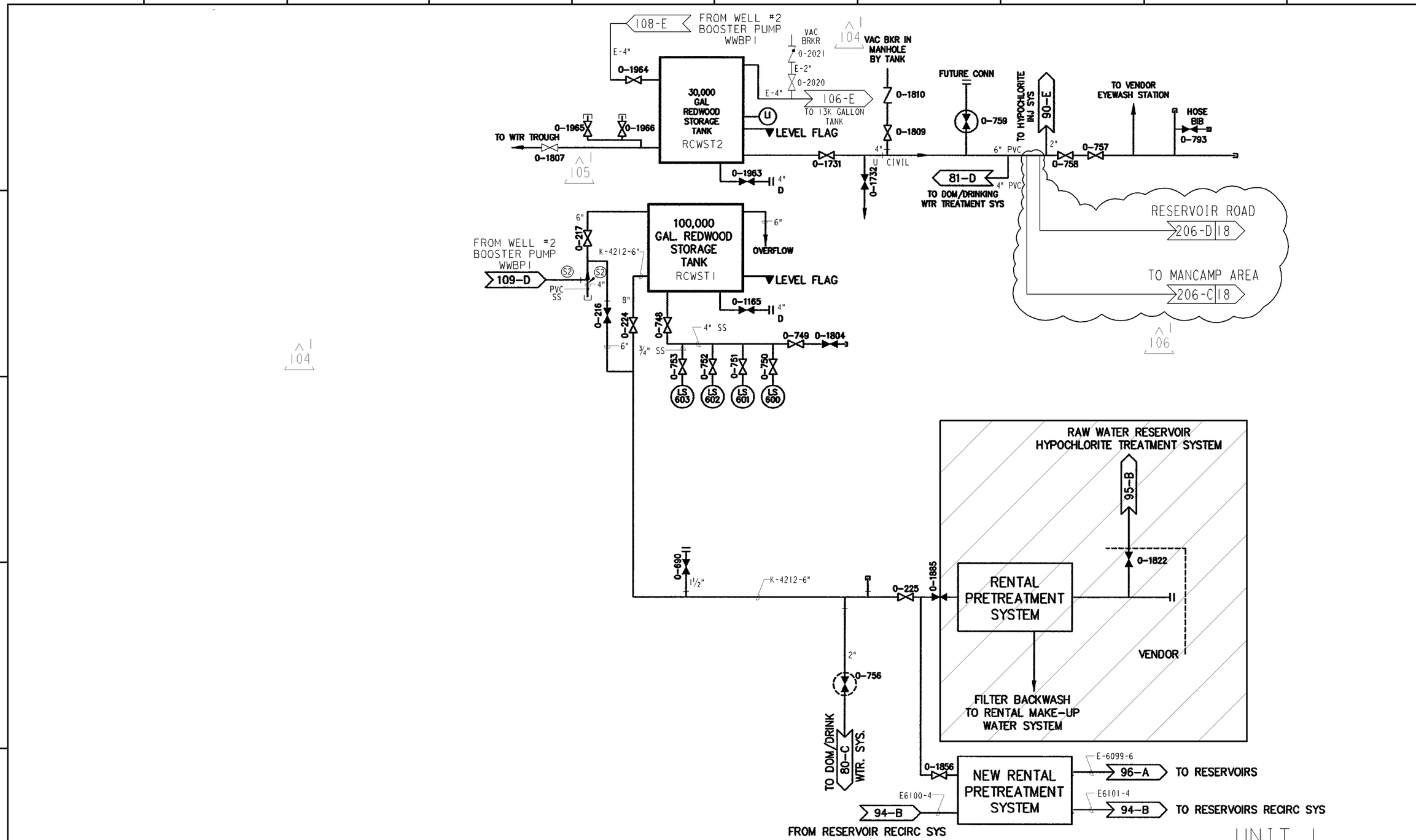

NOTE:
SHADED AREA ABANDONED EQUIP

DIABLO CANYON POWER PLANT - PG&E CO.
MAKE-UP WATER SYSTEM

DRAWING	SHEET	PAGE	REV
102016	7	0	106

DATE	DWN	RE	IV	PROFESSIONAL ENGINEER	PE DISC.	PE#	PE EXP.	
02-13-2013	MNRU	FxC2	KJD3	KERSI J. DALAL	MECHANICAL	M 16690	3/31/2014	REVISED PER DFT-7*1954

RASTER=atrxx.dgn
DGN=atrxx.dgn
CAD User: MNRU Date:02-13-2013

INPGIC
1 Size

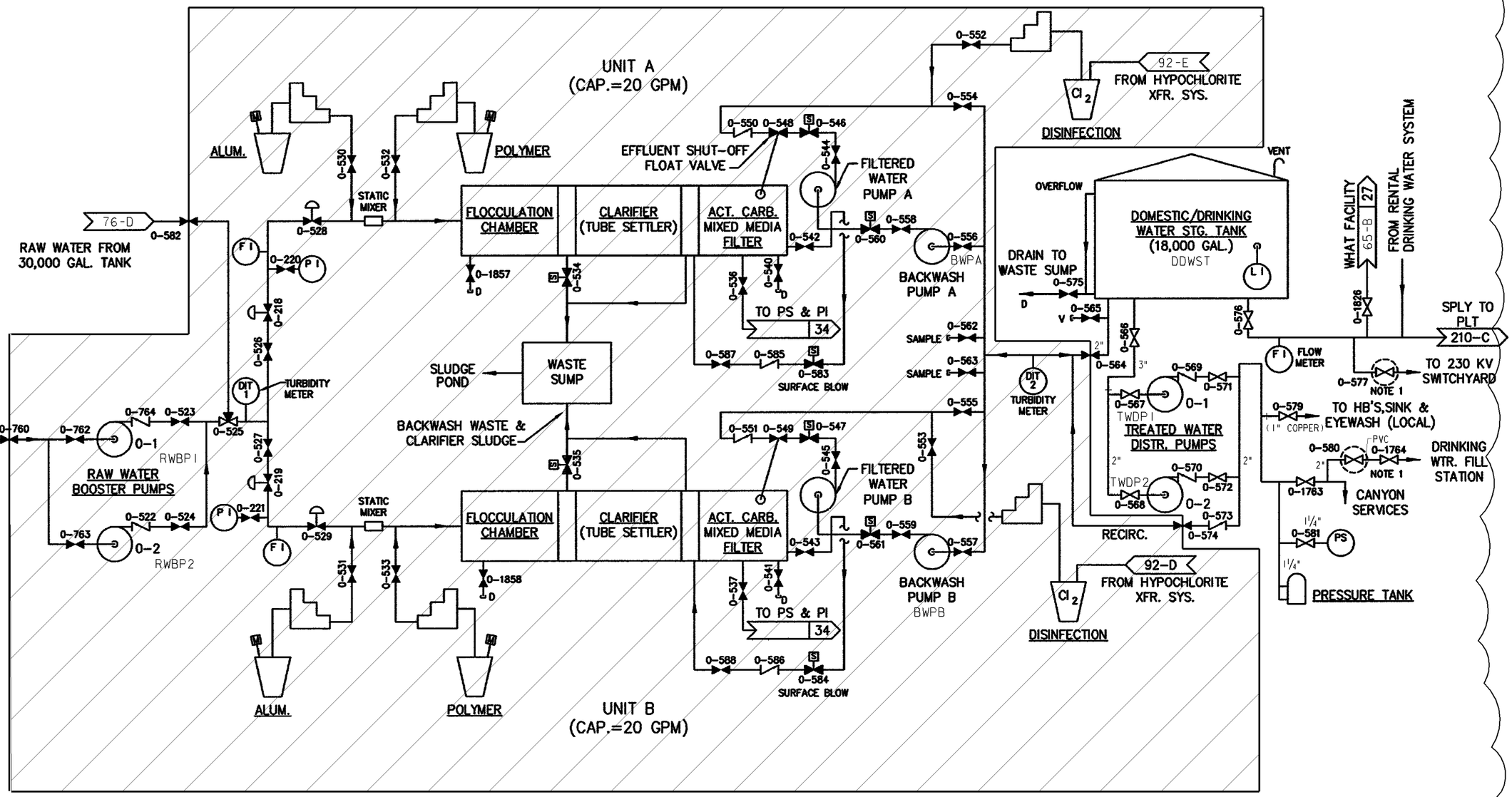

DOMESTIC/DRINKING WATER TREATMENT SYSTEM

NOTE 1) UNDERGROUND VALVE
SHADED AREA ABANDONED EQUIP

UNIT 1

DIABLO CANYON POWER PLANT - PG&E CO.

DRAWING	SHEET	PAGE	REV
102016	8	0	105

DATE	DWN	RE	IV	PROFESSIONAL ENGINEER	PE DISC.	PE#	PE EXP.	
01-04-2006	MIBF	KJD3		FRANCIS C. LING	MECHANICAL	M 16098	12/31/2007	REVISED PER FCT-030760

RASTER=2016s08.dgn
DGN=2016s08.dgn
CAD User: MIBF Date: 01-04-2006

INPGIC
1 Size

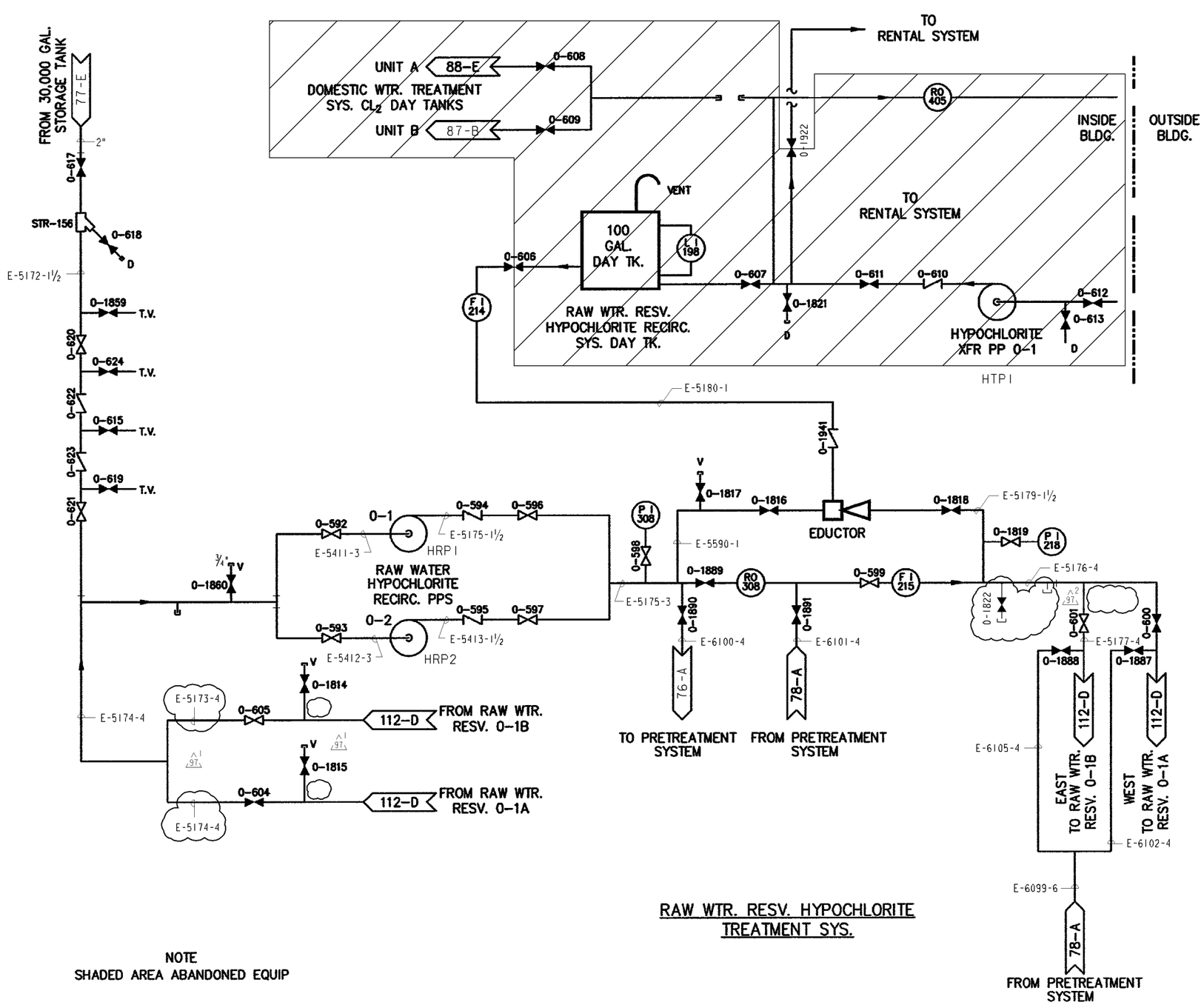

RAW WTR. RESV. HYPOCHLORITE TREATMENT SYS.

NOTE
SHADED AREA ABANDONED EQUIP

UNIT 1

DIABLO CANYON POWER PLANT - PG&E CO.
MAKE-UP WATER SYSTEM

DRAWING	SHEET	PAGE	REV
102016	9	0	97

DATE	DWN	RE	IV	PROFESSIONAL ENGINEER	PE DISC.	PE#	PE EXP.	
08-07-2009	RxG2	FxC2		KERSI J. DALAL	MECHANICAL	M 16690	3/31/2010	REVISED PER DDN-2*45

RASTER=2016s09.dgn
DGN=2016s09.dgn
CAD User: RxG2 Date: 08-07-2009

INPGIC
1 Size

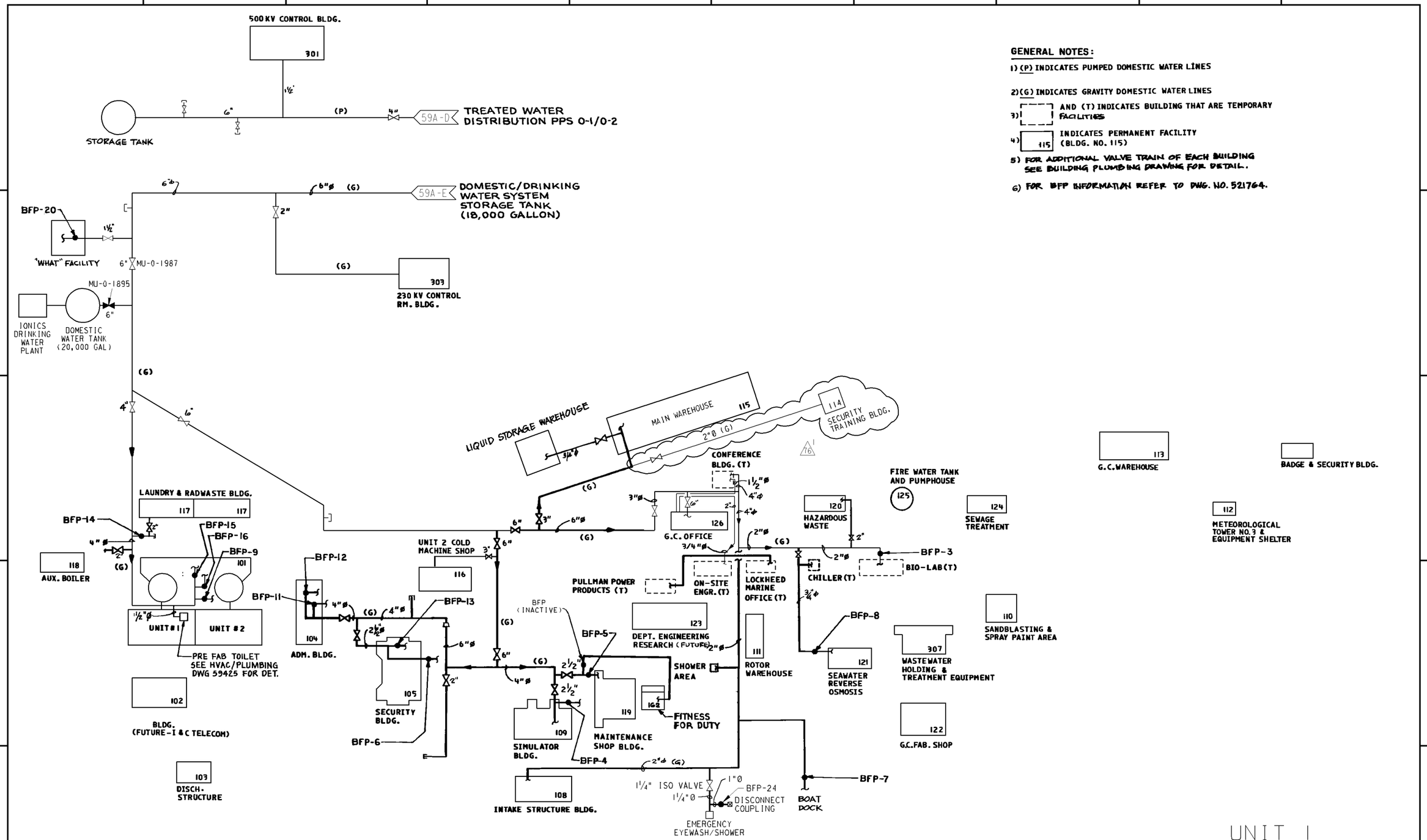

GENERAL NOTES:

1) (P) INDICATES PUMPED DOMESTIC WATER LINES

2) (G) INDICATES GRAVITY DOMESTIC WATER LINES

3) AND (T) INDICATES BUILDING THAT ARE TEMPORARY FACILITIES

4) 115 INDICATES PERMANENT FACILITY (BLDG. NO. 115)

5) FOR ADDITIONAL VALVE TRAIN OF EACH BUILDING SEE BUILDING PLUMBING DRAWING FOR DETAIL.

6) FOR BFP INFORMATION REFER TO DWG. NO. 521764.

DOMESTIC WATER FLOW DIAGRAM FOR DIABLO CANYON POWER PLANT

UNIT 1

DIABLO CANYON POWER PLANT - PG&E CO.
MAKE-UP WATER SYSTEM

DRAWING	SHEET	PAGE	REV
102016	9A	0	76

DATE	DWN	RE	IV	PROFESSIONAL ENGINEER	PE DISC.	PE#	PE EXP.	
11-20-2013	JBMX	FxC2	KJD3	NOT REQUIRED	N/A	N/A	N/A	REVISED PER DDT-4*034

RASTER=2016s9a.dgn
DGN=2016s9a.dgn
CAD User: JBMX Date: 11-20-2013

INPGIC
I Size

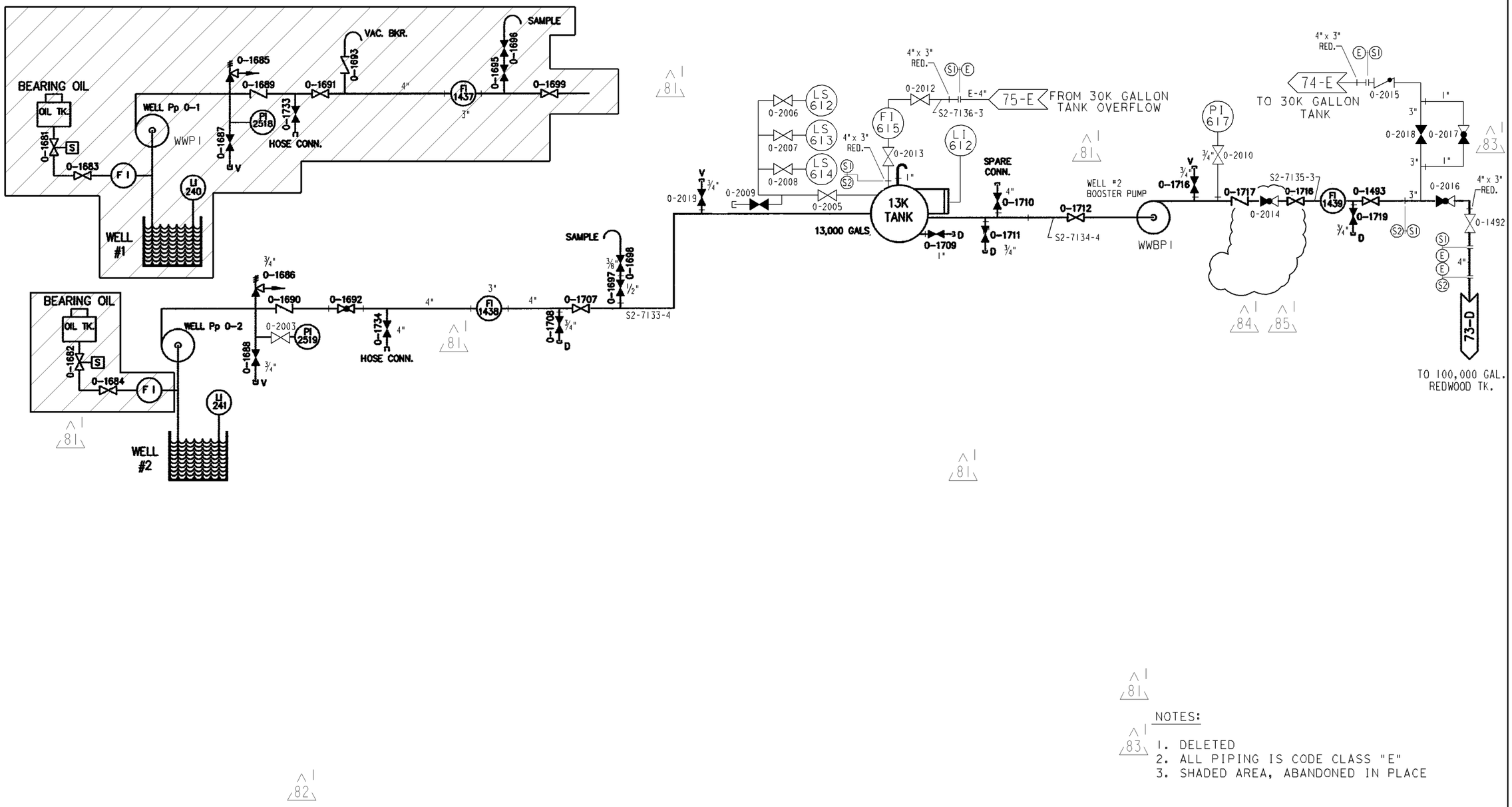

NOTES:

1. DELETED
2. ALL PIPING IS CODE CLASS "E"
3. SHADED AREA, ABANDONED IN PLACE

WELL WATER PUMPING SYSTEM

UNIT 1

DIABLO CANYON POWER PLANT - PG&E CO.
MAKE-UP WATER SYSTEM

DRAWING	SHEET	PAGE	REV
102016	10	0	85

DATE	DWN	RE	IV	PROFESSIONAL ENGINEER	PE DISC.	PE#	PE EXP.	
05-25-2012	MNRU	FxC2		KERSI J. DALAL	MECHANICAL	M 16690	3/31/2014	REVISED PER DDT-4*645-0

RASTER=2016s10.dgn
DGN=2016s10.dgn
CAD User: MNRU Date: 05-25-2012

INPG2ND
1 Size

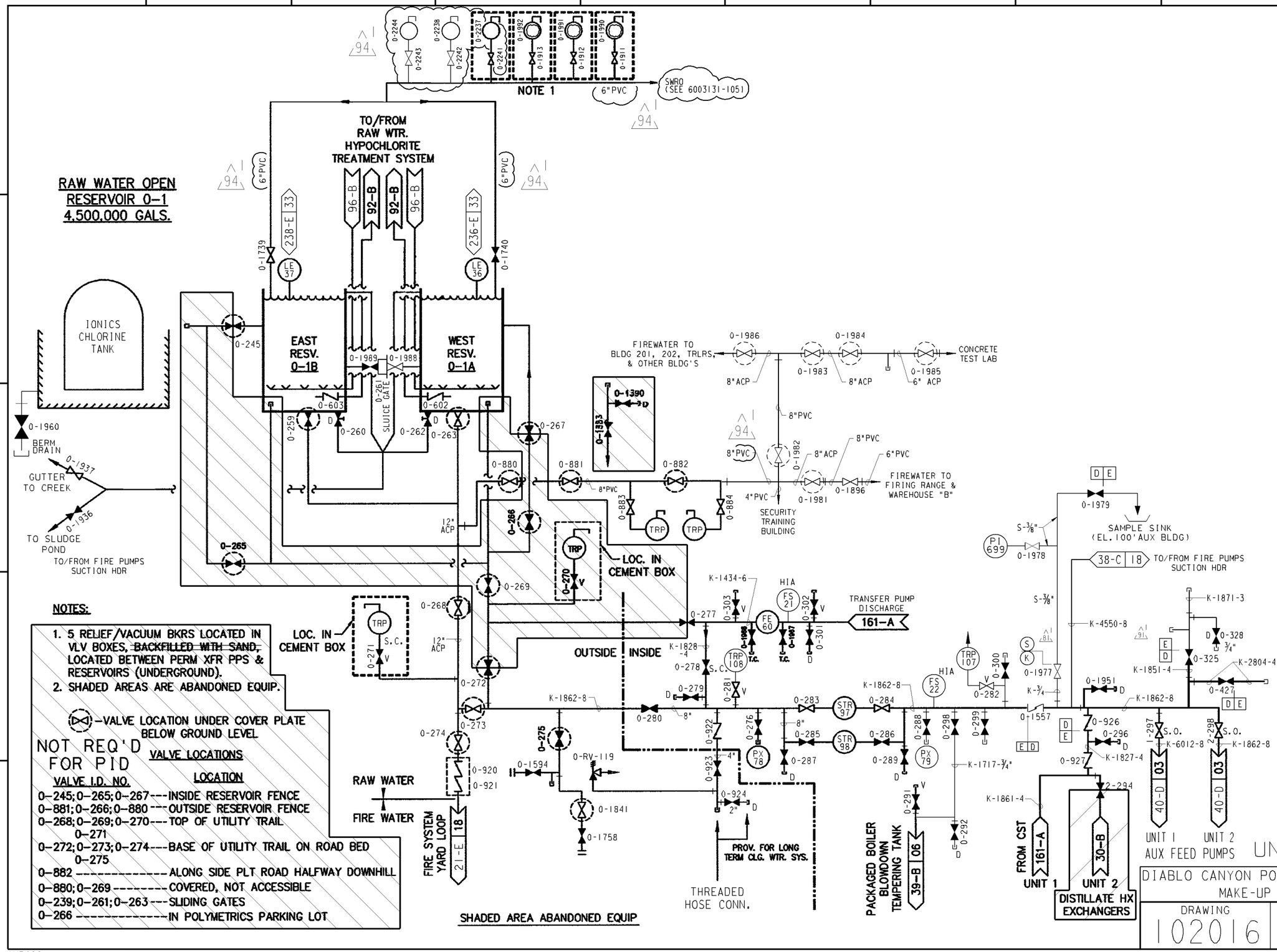

NOTES:

1. 5 RELIEF/VACUUM BKRS LOCATED IN VLV BOXES, ~~BACKFILLED WITH SAND,~~ LOCATED BETWEEN PERM XFR PPS & RESERVOIRS (UNDERGROUND).
2. SHADED AREAS ARE ABANDONED EQUIP.

—VALVE LOCATION UNDER COVER PLATE BELOW GROUND LEVEL

NOT REQ'D FOR PID

VALVE LOCATIONS

VALVE I.D. NO.	LOCATION
0-245; 0-265; 0-267	INSIDE RESERVOIR FENCE
0-881; 0-266; 0-880	OUTSIDE RESERVOIR FENCE
0-268; 0-269; 0-270 0-271	TOP OF UTILITY TRAIL
0-272; 0-273; 0-274 0-275	BASE OF UTILITY TRAIL ON ROAD BED
0-882	ALONG SIDE PLT ROAD HALFWAY DOWNHILL
0-880; 0-269	COVERED, NOT ACCESSIBLE
0-239; 0-261; 0-263	SLIDING GATES
0-266	IN POLYMETRICS PARKING LOT

SHADED AREA ABANDONED EQUIP

DIABLO CANYON POWER PLANT - PG&E CO.
MAKE-UP WATER SYSTEM

DRAWING	SHEET	PAGE	REV
102016	11	0	94

DATE	DWN	RE	IV	PROFESSIONAL ENGINEER	PE DISC.	PE#	PE EXP.	
01-07-2014	MNRU	FxC2	KJD3	NOT REQUIRED	N/A	N/A	N/A	REVISED PER DFT-7*2314

INPGIC
1 Size

RASTER=2016s11.dgn
DGN=2016s11.dgn
CAD User: MNRU Date: 01-07-2014

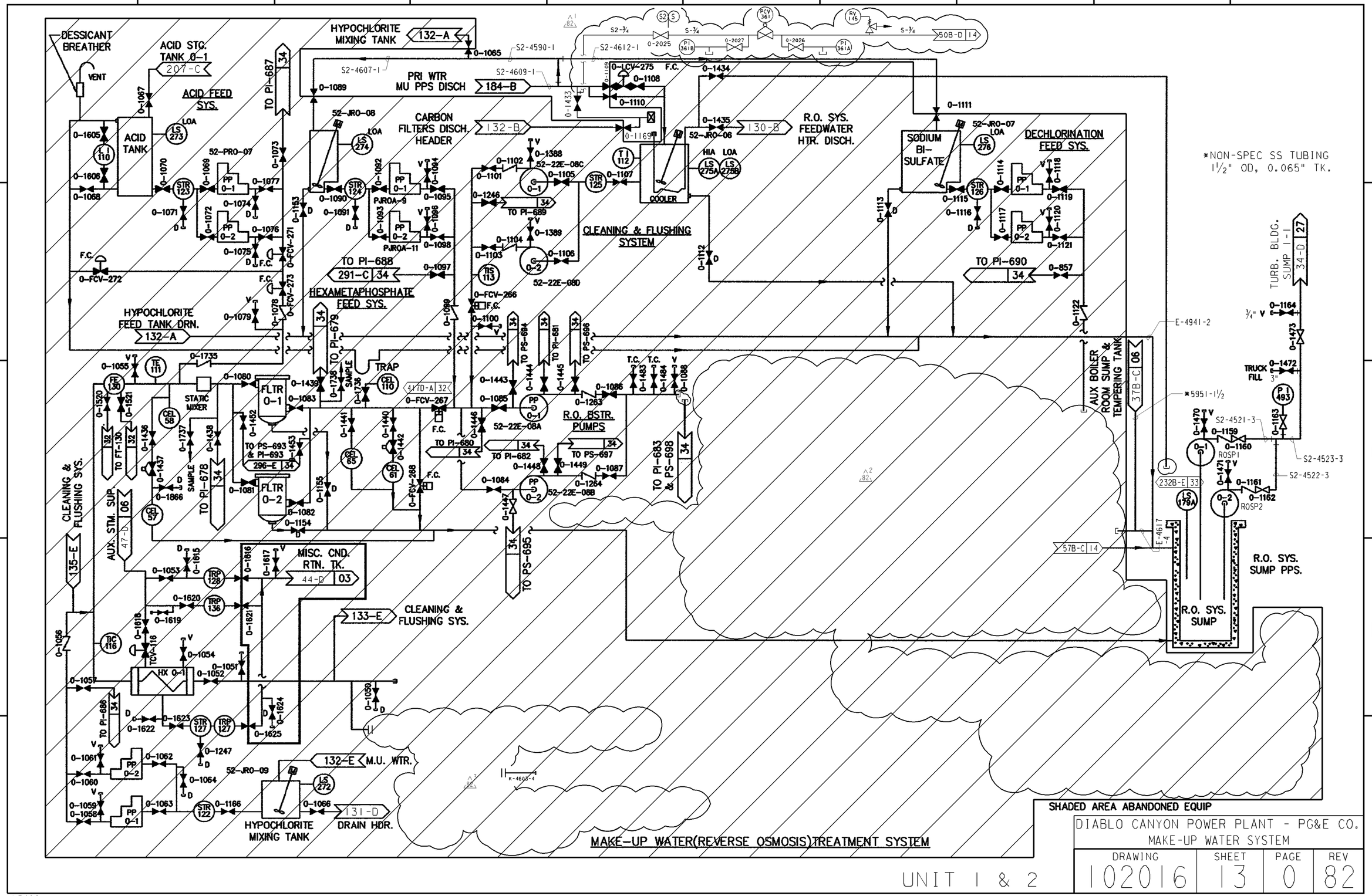

SHADED AREA ABANDONED EQUIP

DIABLO CANYON POWER PLANT - PG&E CO.
MAKE-UP WATER SYSTEM

DRAWING	SHEET	PAGE	REV
102016	13	0	82

UNIT 1 & 2

DATE	DWN	RE	IV	PROFESSIONAL ENGINEER	PE DISC.	PE#	PE EXP.	
10-07-2010	JBMX	FxC2		KERSI J. DALAL	MECHANICAL	M 16690	3/31/2012	REVISED PER DDN-2*156 DFC-3*983 AND DFC-3*1067

RASTER=2016s13.dgn
DGN=2016s13.dgn
CAD User: JBMX Date: 10-07-2010

INPGIC
1 Size

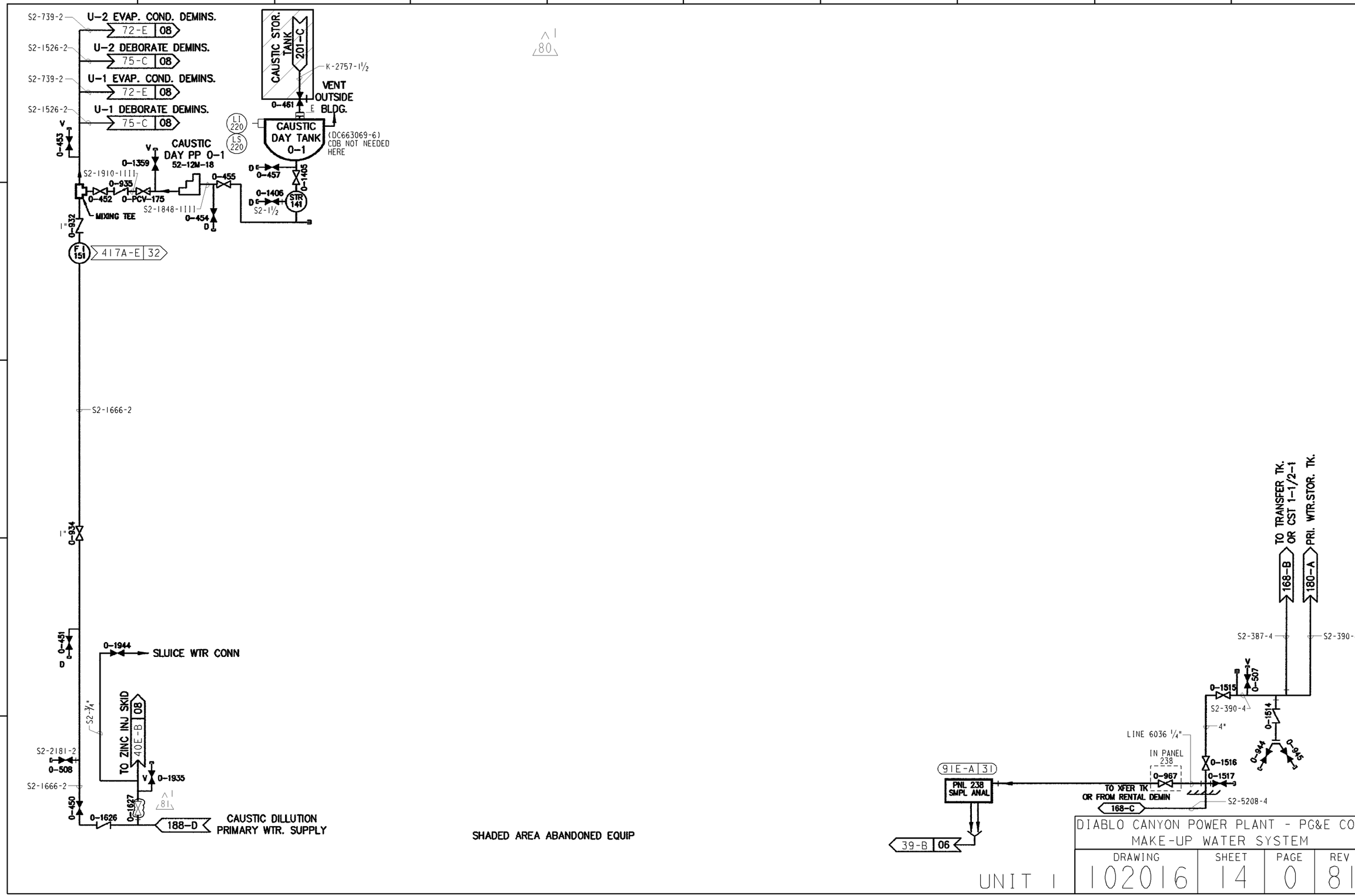

UNIT 1

DIABLO CANYON POWER PLANT - PG&E CO.
MAKE-UP WATER SYSTEM

DRAWING	SHEET	PAGE	REV
102016	14	0	81

DATE	DWN	RE	IV	PROFESSIONAL ENGINEER	PE DISC.	PE#	PE EXP.	
07-12-2010	JBMX	FxC2		KERSI J. DALAL	MECHANICAL	M 16690	3/31/2012	REVISED PER DFT-7*831

INPGIC
1 Size

RASTER=2016s14.dgn
DGN=2016s14.dgn
CAD User: JBMX Date:07-12-2010

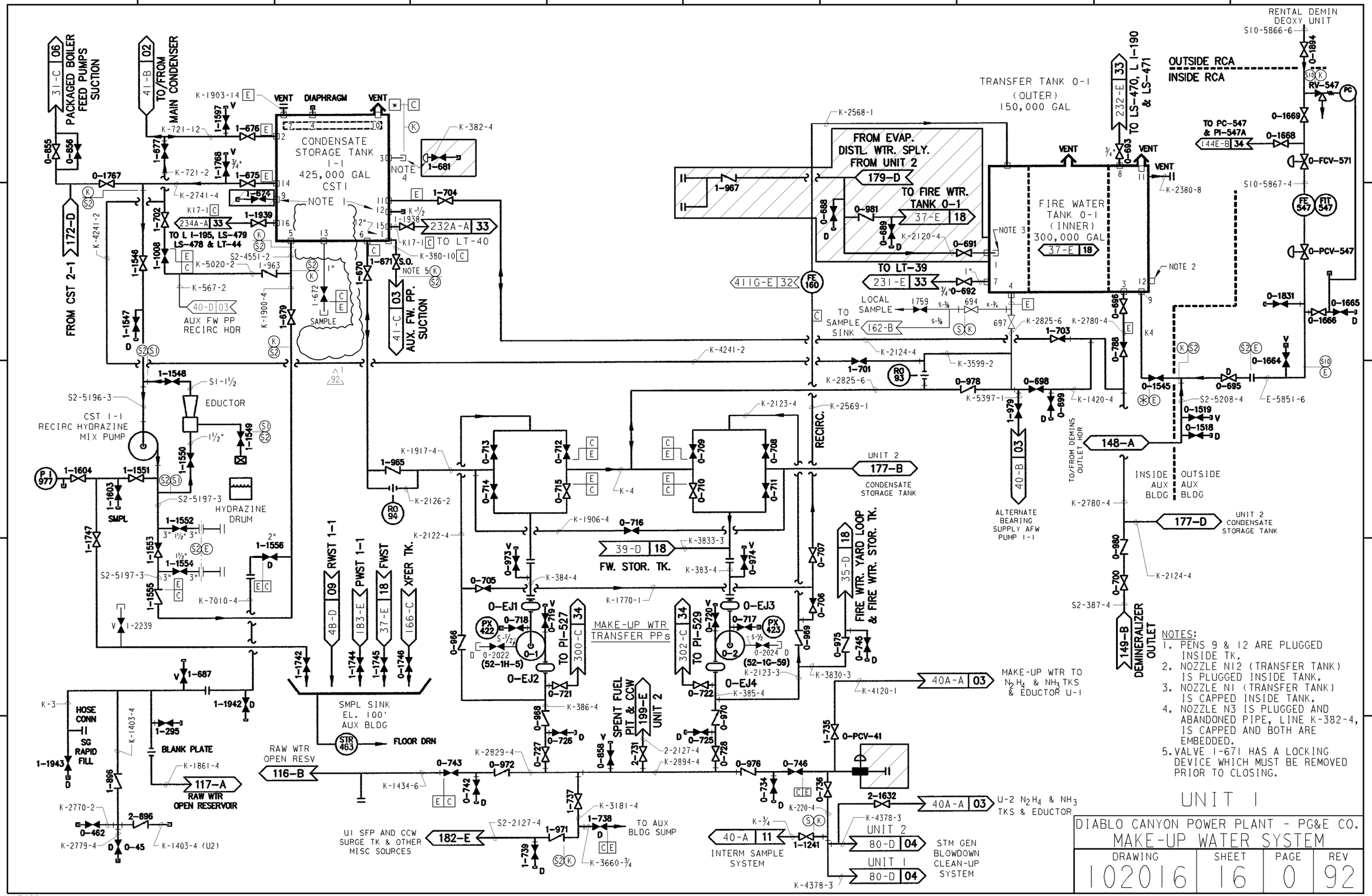

NOTES:

1. PENS 9 & 12 ARE PLUGGED INSIDE TK.
2. NOZZLE N12 (TRANSFER TANK) IS PLUGGED INSIDE TANK.
3. NOZZLE N1 (TRANSFER TANK) IS CAPPED INSIDE TANK.
4. NOZZLE N3 IS PLUGGED AND ABANDONED PIPE, LINE K-382-4, IS CAPPED AND BOTH ARE EMBEDDED.
5. VALVE 1-671 HAS A LOCKING DEVICE WHICH MUST BE REMOVED PRIOR TO CLOSING.

UNIT 1

DIABLO CANYON POWER PLANT - PG&E CO.

MAKE-UP WATER SYSTEM

DRAWING	SHEET	PAGE	REV
102016	16	0	92

DATE	DWN	RE	IV	PROFESSIONAL ENGINEER	PE DISC.	PE#	PE EXP.	
01-06-2014	MNRU	FxC2	KJD3	NOT REQUIRED	N/A	N/A	N/A	REVISED PER DDT-4*938

INPGIC
1 Size

RASTER=2016s16.dgn
DGN=2016s16.dgn
CAD User: MNRU Date: 01-06-2014

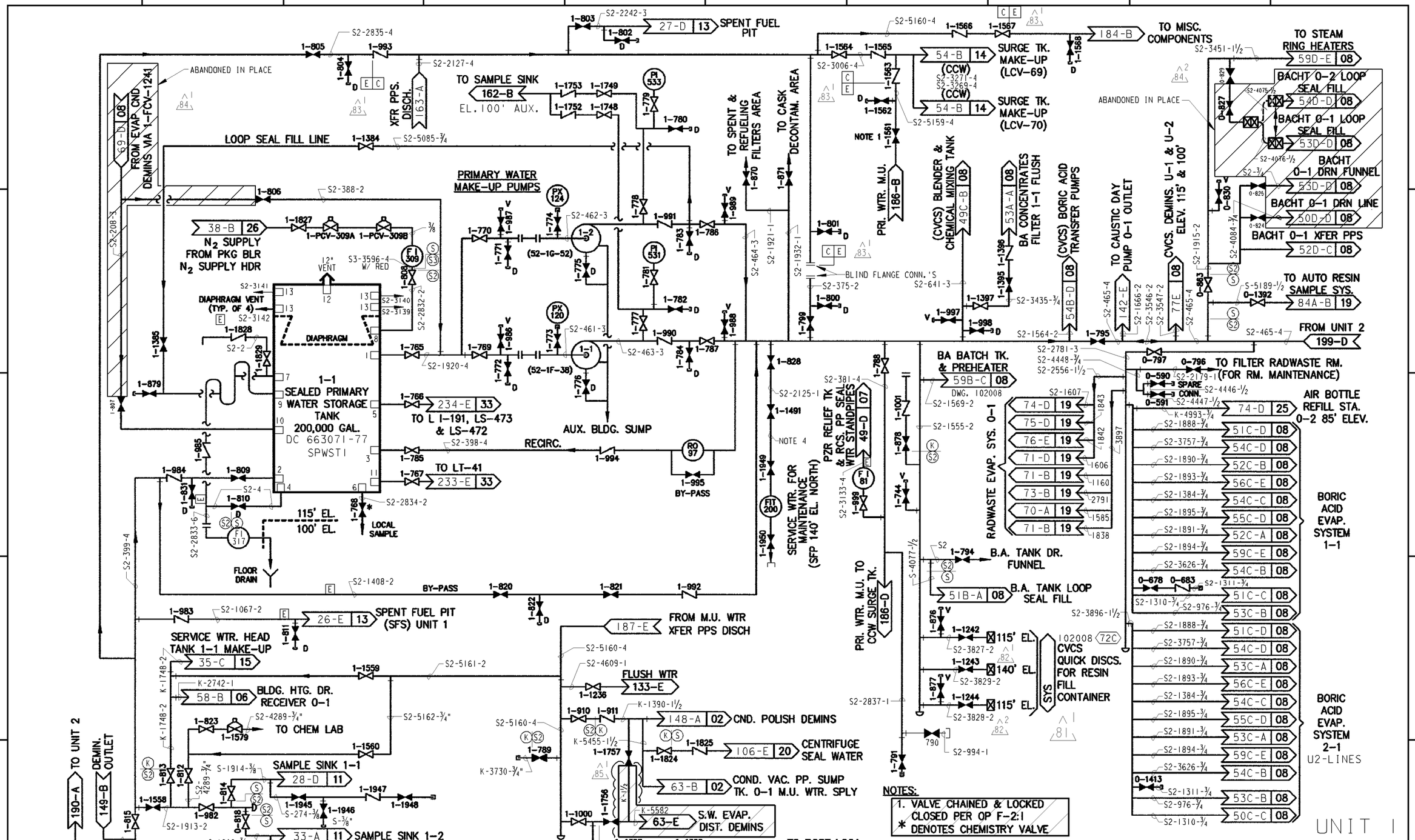

NOTES:

1. VALVE CHAINED & LOCKED CLOSED PER OP F-2:1
   * DENOTES CHEMISTRY VALVE
2. USED FOR EMERGENCY SPENT FUEL POOL MAKEUP. SEE AP-22 DO NOT REMOVE HOSE COUPLING
3. SHADED AREA ABANDONED EQUIP
4. PIPING IS SS SCH 40 THR'D SEE DWG. 224924 FOR DETAILS.

DIABLO CANYON POWER PLANT - PG&E CO.
MAKE-UP WATER SYSTEM

DRAWING	SHEET	PAGE	REV
102016	18	0	85

DATE	DWN	RE	IV	PROFESSIONAL ENGINEER	PE DISC.	PE#	PE EXP.	
07-21-2011	CNHK	RxG2		KERSI J. DALAL	MECHANICAL	M 16690	3/31/2012	REVISED PER DFT-7*1265-0

RASTER=2016s18.dgn
DGN=2016s18.dgn
CAD User: CNHK Date: 07-21-2011

INPG1C
1 Size

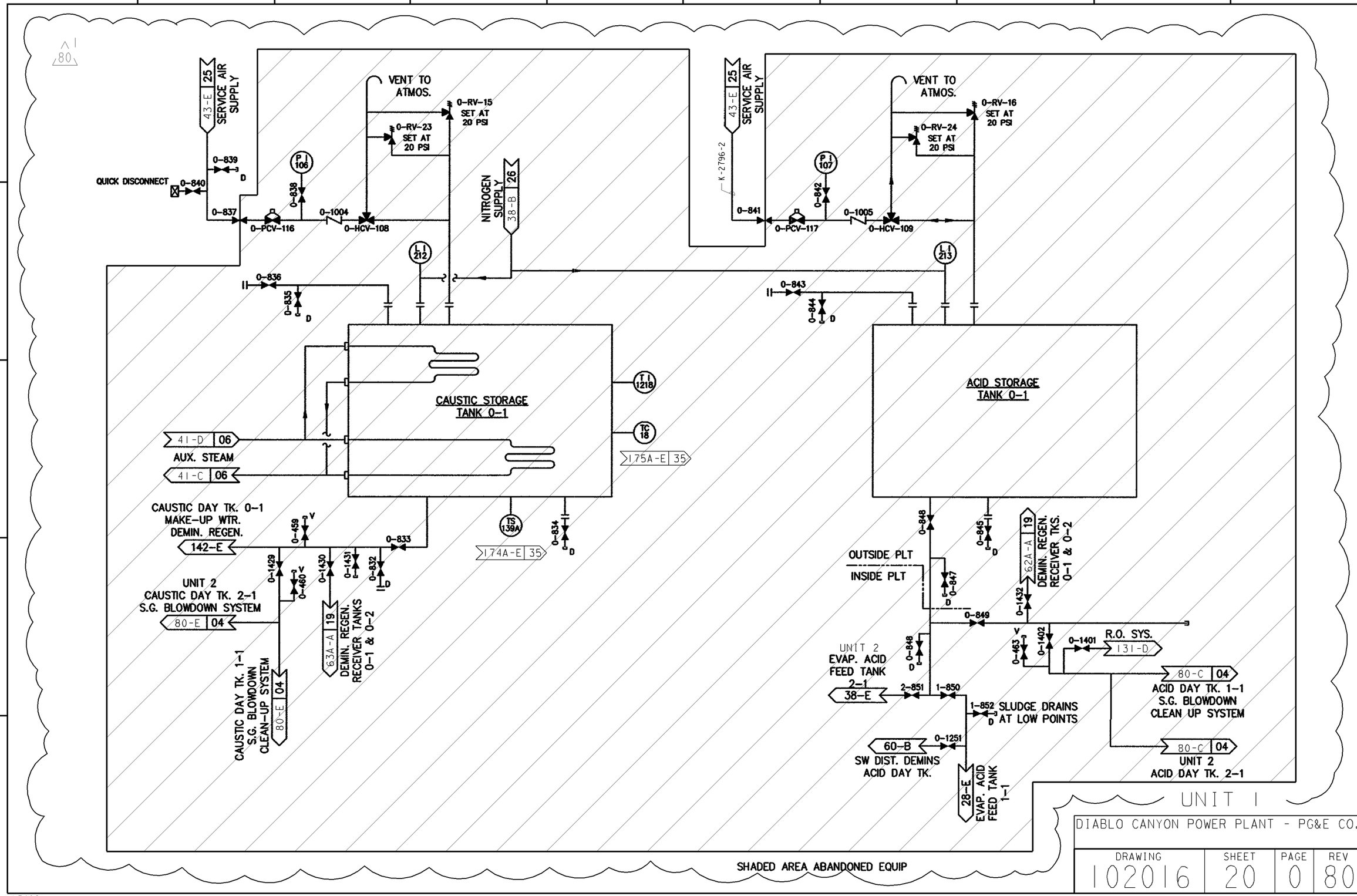

DIABLO CANYON POWER PLANT - PG&E CO.

DRAWING	SHEET	PAGE	REV
102016	20	0	80

DATE	DWN	RE	IV	PROFESSIONAL ENGINEER	PE DISC.	PE#	PE EXP.	
01-04-2006	MIBF	KJD3		FRANCIS C. LING	MECHANICAL	M 16098	12/31/2007	REVISED PER FCT-030760

RASTER=2016s20.dgn
DGN=2016s20.dgn
CAD User: MIBF Date: 01-04-2006

INPGIC
I Size

DOMESTIC & DRINKING WATER SYSTEM

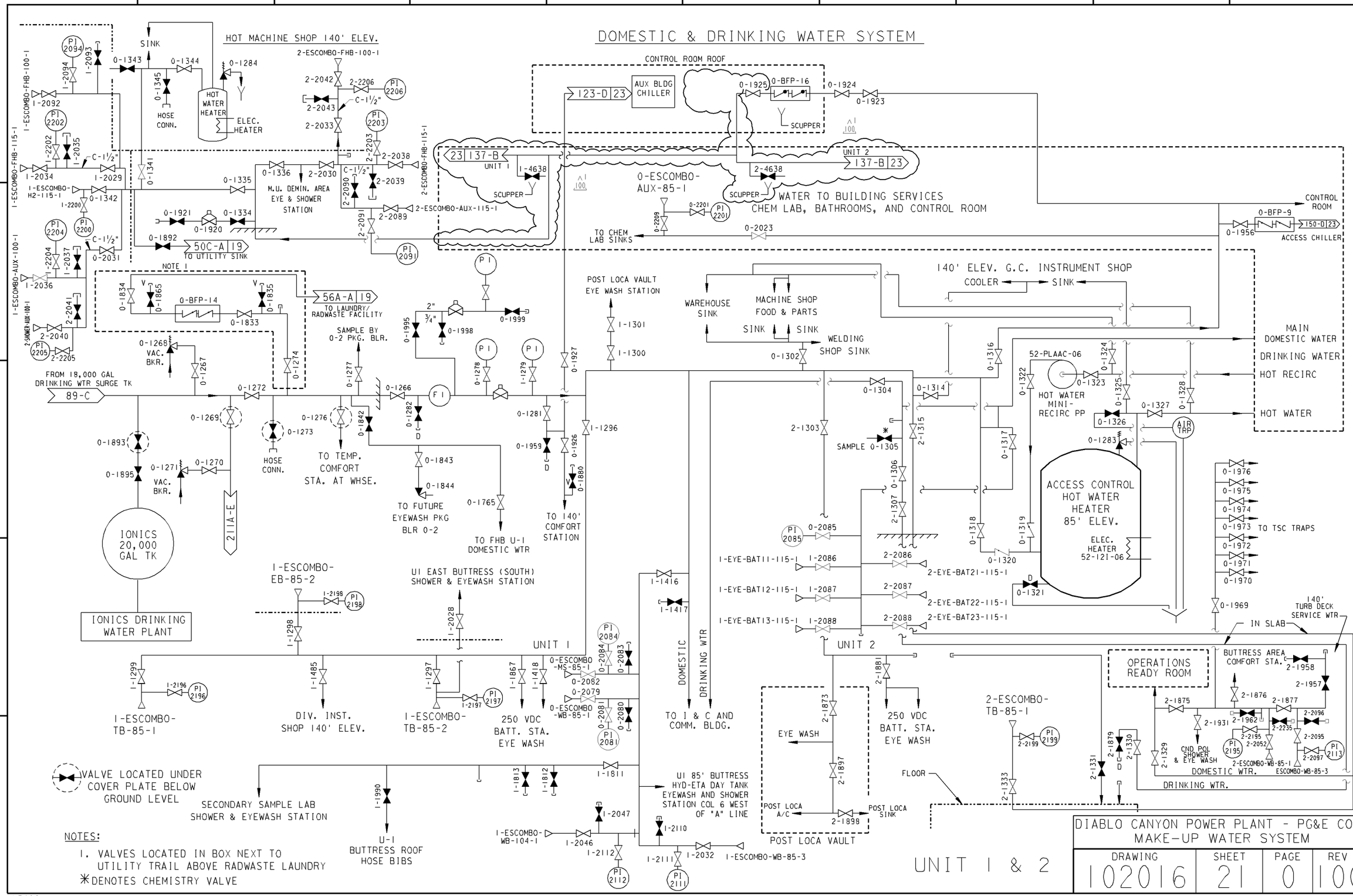

NOTES:

1. VALVES LOCATED IN BOX NEXT TO UTILITY TRAIL ABOVE RADWASTE LAUNDRY

✳ DENOTES CHEMISTRY VALVE

DIABLO CANYON POWER PLANT - PG&E CO.
MAKE-UP WATER SYSTEM

DRAWING	SHEET	PAGE	REV
102016	21	0	100

DATE	DWN	RE	IV	PROFESSIONAL ENGINEER	PE DISC.	PE#	PE EXP.	
06-13-2013	ZNS4	FxC2	KJD3		N/A	N/A	N/A	REVISED PER DFT-7*2150

RASTER=2016s21.dgn
DGN=2016s21.dgn
CAD User: ZNS4 Date: 06-13-2013

INPGIC
I Size

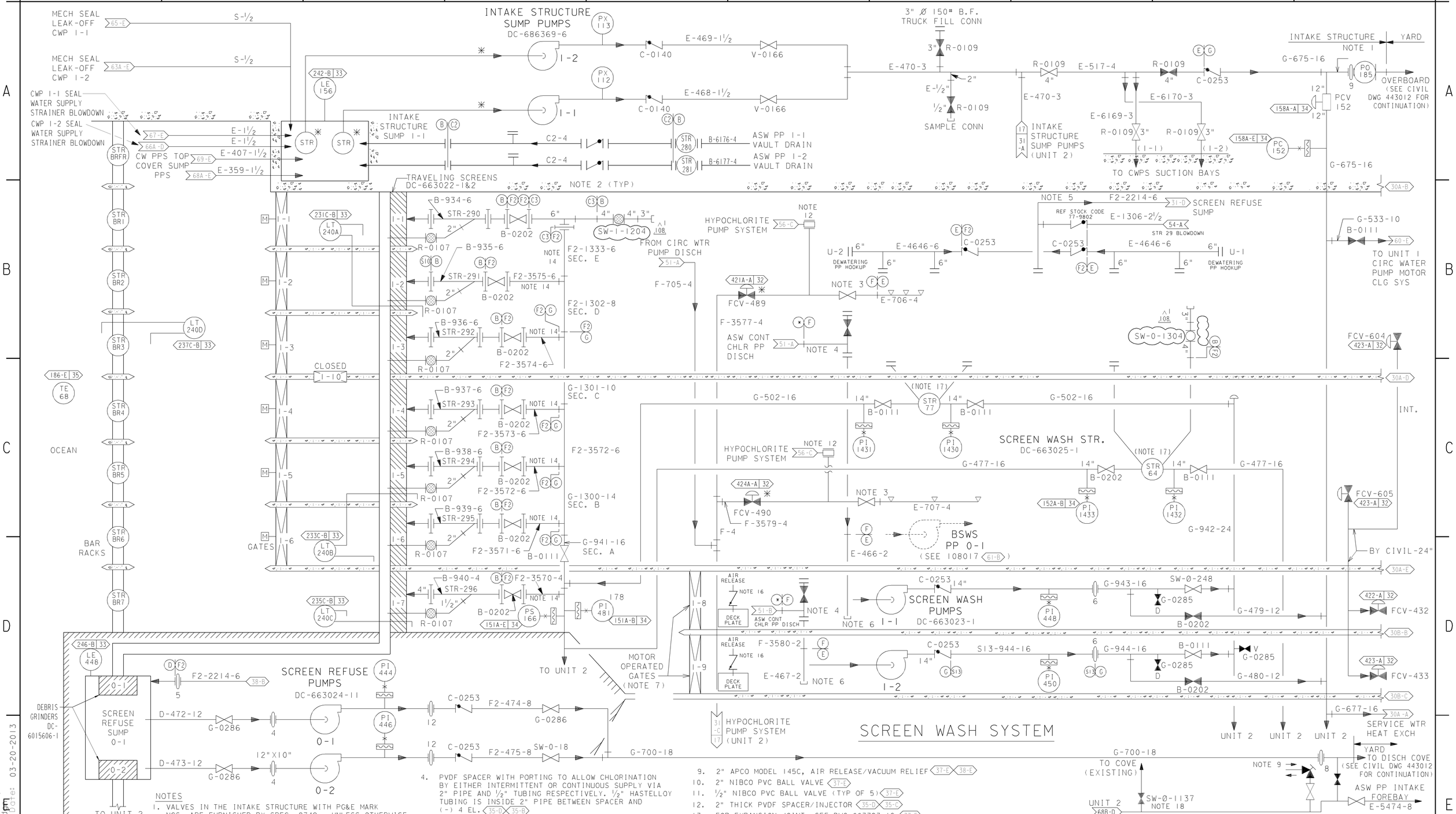

NOTES

1. VALVES IN THE INTAKE STRUCTURE WITH PG&E MARK NOS. ARE FURNISHED BY SPEC. 8749. UNLESS OTHERWISE NOTED. (39-A)
2. SWING CHECK VALVE EAGLE SERIES 10 A1 -Br OR STAINLESS STEEL.
3. 4"-150 LB. FLANGED DIAPHRAGM VALVE: DOW CHEM. MOD. 0676767 ON LINE 706 (35-B) DOW MODEL 373 ON LINE 707. (36-C) (34-A)
4. PVDF SPACER WITH PORTING TO ALLOW CHLORINATION BY EITHER INTERMITTENT OR CONTINUOUS SUPPLY VIA 2" PIPE AND ½" TUBING RESPECTIVELY. ½" HASTELLOY TUBING IS INSIDE 2" PIPE BETWEEN SPACER AND (-) 4 EL. (35-D) (35-B)
5. F2 SPEC. ON SCREEN WASH SYSTEM HAS LINING FOR NON-VENTED PIPING. (37-B)
6. ½" HASTELLOY TUBING RUNS ADJACENT TO 2"PVC IN BAY. TEN ½" DIA. HOLES IN 2" PIPE. SEE NOTE 4. (35-D)
7. ASW GATE MOTOR IS REMOTELY OPERATED FROM INTAKE.
8. ALL PIPES ON THIS SHEET ARE PG&E CLASS "E" UNLESS OTHERWISE NOTED. (34-D)
9. 2" APCO MODEL 145C, AIR RELEASE/VACUUM RELIEF (37-E) (38-E)
10. 2" NIBCO PVC BALL VALVE (37-E)
11. ½" NIBCO PVC BALL VALVE (TYP OF 5) (37-E)
12. 2" THICK PVDF SPACER/INJECTOR (35-D) (35-C)
13. FOR EXPANSION JOINT, SEE DWG 663323-12 (37-E)
14. PORTION OF THIS PIPING MAY INCLUDE PIPING SPEC "C3", SEE PIPING ISOMETRIC FOR DETAILS. (33-B/D)
15. TEST CONNECTION VALVES MAY BE REPLACED WITH PLUG (37-E)
16. 2" GOLDEN ANDERSON, AIR RELEASED/VACUUM VALVE (35-D)
17. STRAINER INTERNALS REMOVED.
18. VALVE IS BURIED SOUTH OF INTAKE, EXCAVATE PRIOR TO USE.

DIABLO CANYON POWER PLANT - PG&E CO.
SALTWATER SYSTEMS

DRAWING	SHEET	PAGE	REV
102017	3	0	108

UNIT 1

DATE	DWN	RE	IV	PROFESSIONAL ENGINEER	PE DISC.	PE #	PE EXP.	
03-20-2013	MNRU	FxC2	KJD3	NOT REQUIRED	N/A	N/A	N/A	REVISED PER DFT-7*2012

RASTER=102017s3.dgn
DGN=102017s3.dgn
CAD User: MNRU Date: 03-20-2013

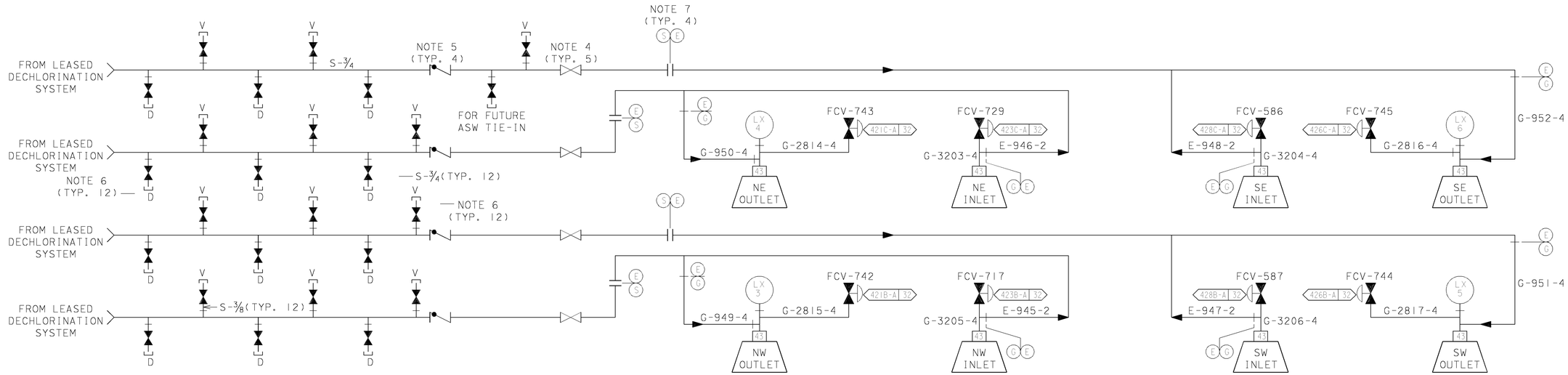

MAIN CONDENSER WATER BOX VENT SYSTEM

NOTES

1. ALL PIPING ON THIS SHEET IS PG&E CLASS E UNLESS OTHERWISE NOTED.
2. DEMUSSELING PROCEDURE STARTS AFTER THE SCREENS OF BOTH UNITS HAVE BEEN WASHED. 42-C
3. TEMPORARY CONNECTION INSTALLED AT FX FOR FRESH WATER DEMUSSELING PROCESS, WHICH IS USED AS ALTERNATIVE TO H.T. DEMUSSELING. 47-B
4. WHITEY SS-63TS13. 44-D
5. NUPRO SS-CH12-10 43-D
6. WHITEY SS-44S6 43-D
7. COMPLIES WITH "S" SPEC EXCEPT 3/4" TUBING WHICH HAS .065" WALL AND FLANGES ARE 2" 150# FFSW A182 GR F304. 44-D

UNIT 1

6/22/99	CMG9	FXC2	-	KERSI J. DALAL	MECHANICAL	M 16690	3/31/2000	Enhanced per FCT 023917
DATE	DWN	RE	IV	PROFESSIONAL ENGINEER	PE DISC.	PE#	PE EXP.	

1 67

P G & E CO. | 102017 | REV. 68

SHEET 4 | PAGE 0

CAD User:CMG9 Date: 6-22-1999
DGN=2017S4.DGN

PNPG1C

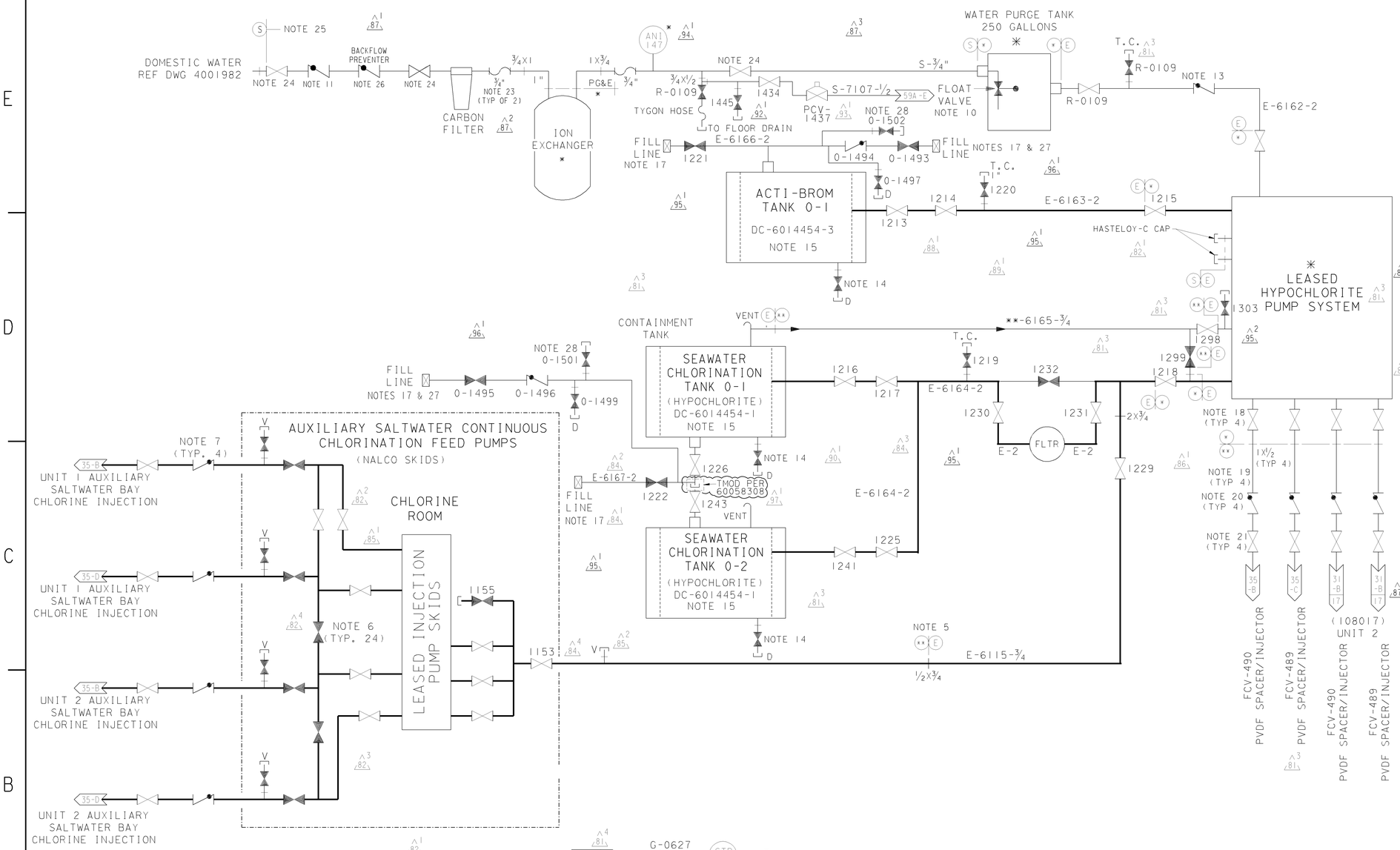

CHLORINATION SYSTEM

DC-663026-22

NOTES:

1. ALL PIPING IN THIS SHEET ARE PG&E CODE CLASS "E"
2. DELETED
3. DELETED
4. DELETED
5. ** 1/2 " OD HASTELOY C TUBING, 0.035 WALL THICKNESS, AND HASTELOY SWAGELOK FITTINGS (55-C) (55-D)
6. 1/2" WHITEY HASTELOY BALL VALVE WITH SWAGELOK END CONNECTIONS, MODEL # HC-63TS8-T (51-C)
7. 1/2" NUPRO HASTELOY SPRING LOADED CHECK VALVE WITH 10 PSIG CRACKING PRESSURE AND SWAGELOK END CONNECTIONS, MODEL # HC-BC-TR-10 (50-B)
8. DELETED
9. DELETED
10. FLOAT VALVE 1"X1" BRASS ROBERTS P/N R400 OR EQUIVALENT (55-A)
11. BACKFLOW PREVENTER 3/4" WATTS REGULATOR P/N 3/4"X 3/4"-7-2-2 OR EQUIVALENT (ABANDONED) (51-C)
12. 1" SS BALL VALVE, WHITEY 651S16 OR EQUIVALENT (54-A)
13. 2" PVC CHECK VALVE PASTOMATIC CKM100V OR EQUIVALENT (56-A)
14. DRAIN VALVE PROVIDED BY TANK VENDOR (54-B) (54-C)
15. TANK AND CONTAINMENT BULKHEAD FITTING ARE THREADED CONNECTIONS AS PROVIDED BY MANUFACTURER. CONNECTION BETWEEN TANK AND CONTAINMENT IS FLEXIBLE PVC (53-B)
16. DELETED
17. SECONDARY CONTAINMENT FOR FILL LINES PROVIDED BY 4" E-SPEC PIPING
18. TRUE UNION TYPE 1" THREADED BALL VALVES ,WITH VITON ELASTOMERS (OR EQUIVALENT) (57-D)
19. 1/2" HASTELOY C TUBING, .035" WALL (57-C)
20. NUPRO "C" SERIES CHECK VALVE WITH 1/2" SWAGELOK END CONNECTIONS, 10# CRACKING PRESS. (HC-8C-10 OR EQUIVALENT) (57-C)
21. WHITEY SERIES "60" BALL VALVE WITH 1/2" SWAGELOK END CONNECTIONS (HC-63TS8, OR EQUIVALENT) (57-C)
22. * DENOTES EQUIPMENT SUPPLIED BY OTHERS
23. 3/4" FLEXHOSE SYNFLEX 3130-12 STOCK CODE 17-2193 W/ 3/4" NPT FLEXHOSE COUPLINGS (STOCK CODE 17-2185 OR EQUIV.) (52/53-E)
24. BALL VALVE 3/4" SPEC R-0388 (STOCK CODE 72-9968 OR EQUIV.) (51-E) (53-E)
25. TUBE AND FITTINGS IAW "S" SPEC, UNLESS OTHERWISE NOTED (52-E)
26. 3/4" PRESSURE REDUCING BACKFLOW PREVENTER FEBCO MODEL 825-Y OR EQUIV. (51-E)
27. FOR PROFILE VIEW & PIPE SUPPORT SEE DWG 6023269-19. (52-D) (55-E)
28. DRAIN VALVES FOR LEAK DETECTION AT LOW POINT OF SECONDARY LEAKAGE CONTAINMENT PIPE FOR LINE 6166 AND 6167. (52-D) (54-E)

UNIT 1

DIABLO CANYON POWER PLANT - PG&E CO.
SALTWATER SYSTEMS

DRAWING	SHEET	PAGE	REV
102017	5	0	97

DATE	DWN	RE	IV	PROFESSIONAL ENGINEER	PE DISC.	PE#	PE EXP.	
10-14-2013	MNRU	RxG2	KJD3	NOT REQUIRED	N/A	N/A	N/A	REVISED PER DDT-4*887

RASTER=eru10734.dgn
DGN=eru10734.dgn
CAD User: MNRU DATE: 10-14-2013

3 Size

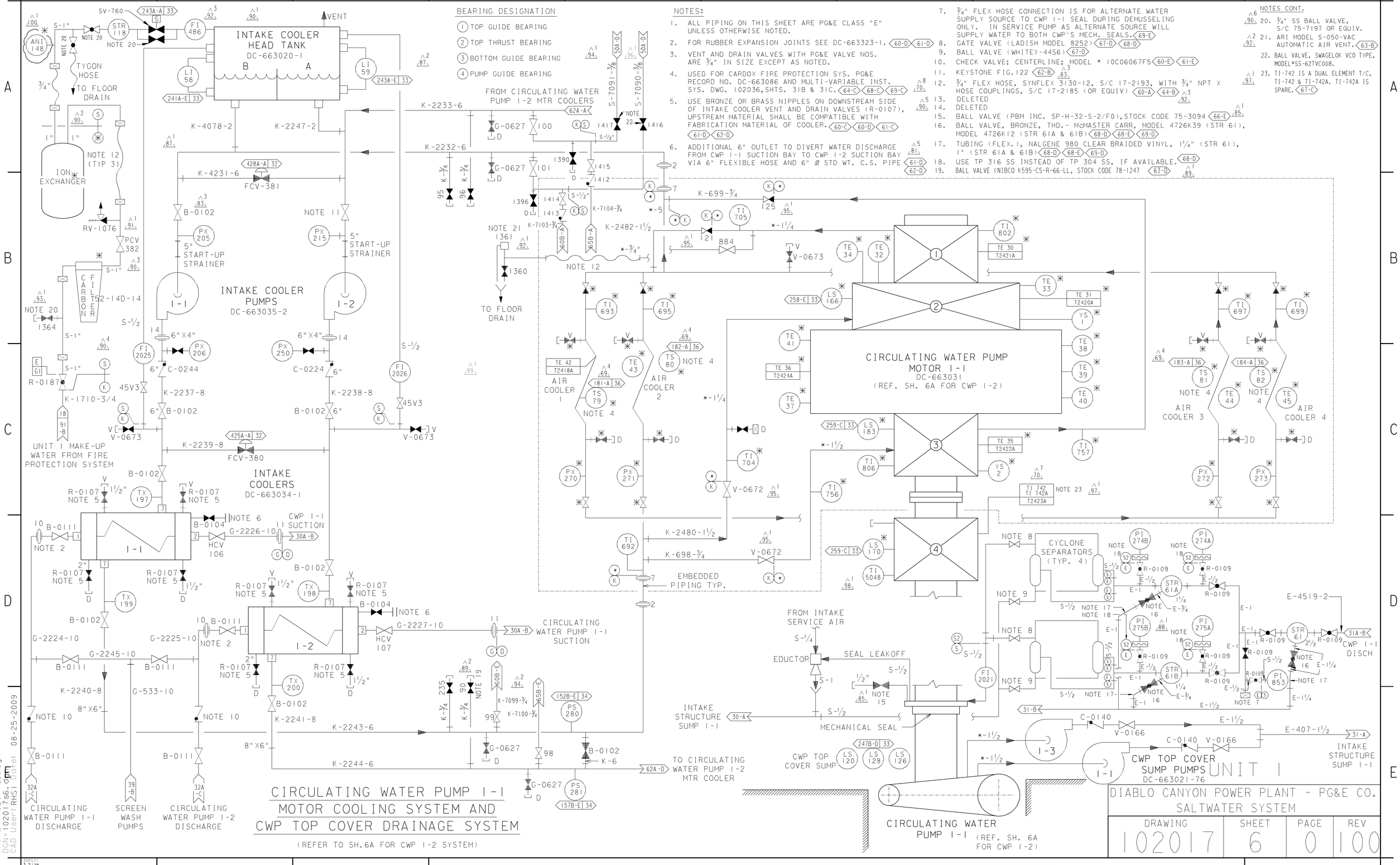

BEARING DESIGNATION

1. TOP GUIDE BEARING
2. TOP THRUST BEARING
3. BOTTOM GUIDE BEARING
4. PUMP GUIDE BEARING

NOTES:

1. ALL PIPING ON THIS SHEET ARE PG&E CLASS "E" UNLESS OTHERWISE NOTED.
2. FOR RUBBER EXPANSION JOINTS SEE DC-663323-1. (60-D) (61-D)
3. VENT AND DRAIN VALVES WITH PG&E VALVE NOS. ARE ¾" IN SIZE EXCEPT AS NOTED.
4. USED FOR CARDOX FIRE PROTECTION SYS. PG&E RECORD NO. DC-663086 AND MULTI-VARIABLE INST. SYS. DWG. 102036, SHTS. 31B & 31C. (64-C) (68-C) (69-C)
5. USE BRONZE OR BRASS NIPPLES ON DOWNSTREAM SIDE OF INTAKE COOLER VENT AND DRAIN VALVES (R-0107), UPSTREAM MATERIAL SHALL BE COMPATIBLE WITH FABRICATION MATERIAL OF COOLER. (60-C) (60-D) (61-C) (61-D) (62-D)
6. ADDITIONAL 6" OUTLET TO DIVERT WATER DISCHARGE FROM CWP 1-1 SUCTION BAY TO CWP 1-2 SUCTION BAY VIA 6" FLEXIBLE HOSE AND 6" Ø STD WT. C.S. PIPE (61-D) (62-D)
7. ¾" FLEX HOSE CONNECTION IS FOR ALTERNATE WATER SUPPLY SOURCE TO CWP 1-1 SEAL DURING DEMUSSELING ONLY. IN SERVICE PUMP AS ALTERNATE SOURCE WILL SUPPLY WATER TO BOTH CWP'S MECH. SEALS. (69-E)
8. GATE VALVE (LADISH MODEL 8252) (67-D) (68-D)
9. BALL VALVE (WHITEY-44S6) (67-D)
10. CHECK VALVE; CENTERLINE; MODEL # 10C06067F5 (60-E) (61-E)
11. KEYSTONE FIG.122 (62-B)
12. ¾" FLEX HOSE, SYNFLEX 3130-12, S/C 17-2193, WITH ¾" NPT X HOSE COUPLINGS, S/C 17-2185 (OR EQUIV) (60-A) (64-B)
13. DELETED
14. DELETED
15. BALL VALVE (PBM INC. SP-H-32-S-2/F0), STOCK CODE 75-3094 (66-E)
16. BALL VALVE, BRONZE, THD.- McMASTER CARR, MODEL 4726K39 (STR 61), MODEL 4726K12 (STR 61A & 61B) (68-D) (68-E) (69-D)
17. TUBING (FLEX.), NALGENE 980 CLEAR BRAIDED VINYL, 1¼" (STR 61), 1" (STR 61A & 61B) (68-D) (68-E) (69-D)
18. USE TP 316 SS INSTEAD OF TP 304 SS, IF AVAILABLE. (68-D)
19. BALL VALVE (NIBCO K595-CS-R-66-LL, STOCK CODE 78-1247 (63-D)

NOTES CONT.

20. ¾" SS BALL VALVE, S/C 75-7197 OR EQUIV.
21. ARI MODEL S-050-VAC AUTOMATIC AIR VENT. (63-B)
22. BALL VALVE, SWAGELOK VCO TYPE, MODEL=SS-62TVC008.
23. TI-742 IS A DUAL ELEMENT T/C, TI-742 & TI-742A. TI-742A IS SPARE. (67-C)

DATE	DWN	RE	IV	PROFESSIONAL ENGINEER	PE DISC.	PE#	PE EXP.	
08-25-2009	RHSI	FxC2		KERSI J. DALAL	MECHANICAL	M 16690	3/31/2010	REVISED PER DFT-7*517

RASTER=102017s6.dgn
DGN=102017s6.dgn
CAD User:RHSI Date: 08-25-2009

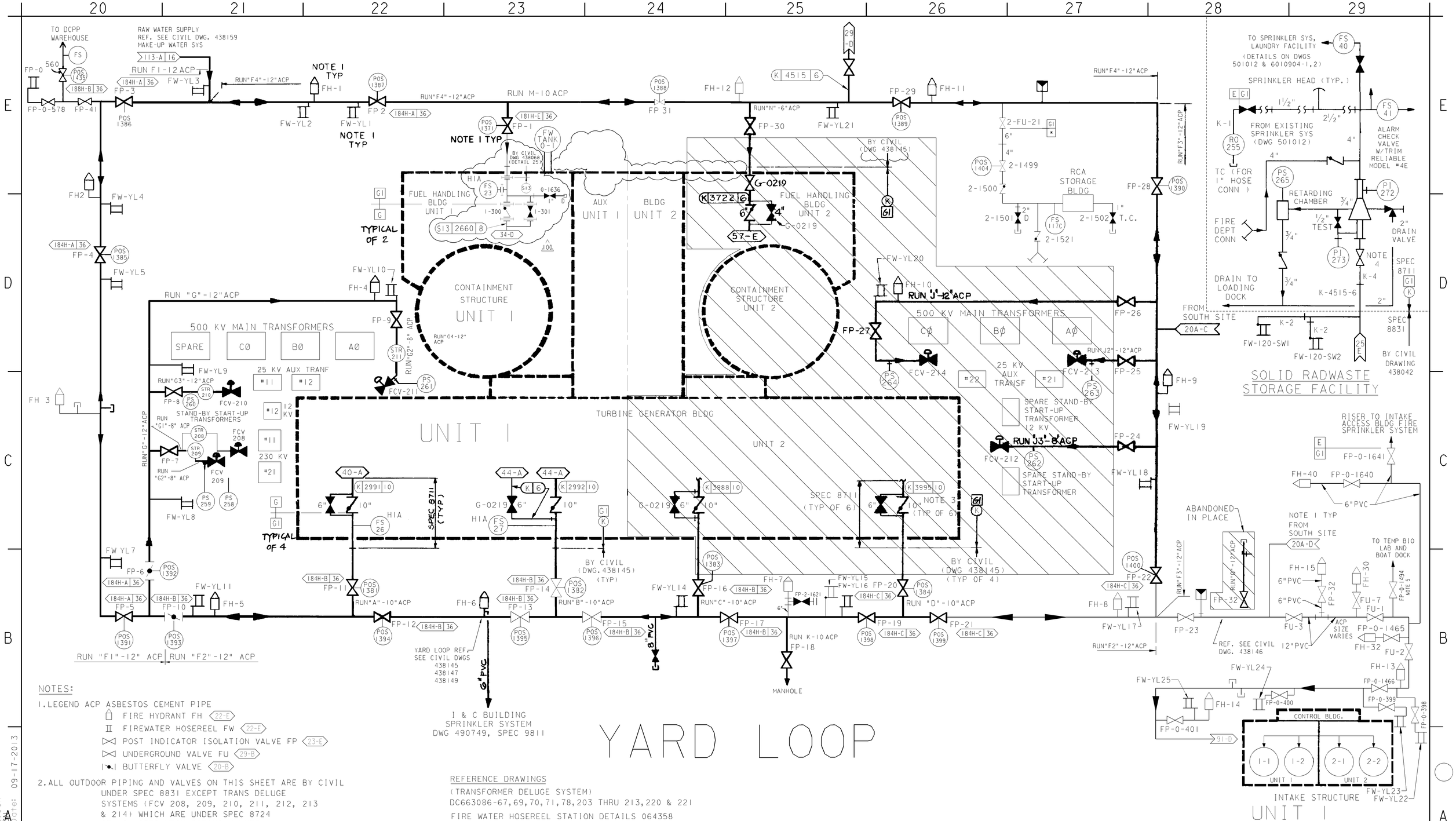

YARD LOOP

NOTES:

1. LEGEND ACP ASBESTOS CEMENT PIPE
   - FIRE HYDRANT FH (22-E)
   - FIREWATER HOSEREEL FW (22-E)
   - POST INDICATOR ISOLATION VALVE FP (23-E)
   - UNDERGROUND VALVE FU (29-B)
   - BUTTERFLY VALVE (20-B)
2. ALL OUTDOOR PIPING AND VALVES ON THIS SHEET ARE BY CIVIL UNDER SPEC 8831 EXCEPT TRANS DELUGE SYSTEMS (FCV 208, 209, 210, 211, 212, 213 & 214) WHICH ARE UNDER SPEC 8724 OR AS NOTED MECH PIPING VALVES.
3. CHECK VALVES ARE CRANE 150#, 147- 1/2 GATE VALVES ARE CRANE 150#, 147-1/2, EXCEPT AS SHOWN.
4. 4" KENNEDY 70240 175# (29-D)
5. VALVE FP-0-1494 IS BURIED AND INACCESSIBLE.

REFERENCE DRAWINGS

(TRANSFORMER DELUGE SYSTEM)
DC663086-67,69,70,71,78,203 THRU 213,220 & 221
FIRE WATER HOSEREEL STATION DETAILS 064358 AND 064359

(LAUNDRY FACILITY AND RADWASTE STORAGE SPRINKLER PIPING)
DC-6010904-1,2 (29 E)

(SOLID RADWASTE STORAGE BUILDING DRAINAGE & FIRE PROTECTION) 501012

DIABLO CANYON POWER PLANT - PG&E CO. FIRE PROTECTION SYSTEMS			
DRAWING	SHEET	PAGE	REV
102018	2	0	100

DATE	DWN	RE	IV	PROFESSIONAL ENGINEER	PE DISC.	PE#	PE EXP.	
09-17-2013	MNRU	FxC2	KJD3	NOT REQUIRED	N/A	N/A	N/A	REVISED PER DDN-2*426

RASTER=102018S2.DGN
DGN=102018S2.DGN
CAD User: MNRU Date: 09-17-2013

SMRGIC 3 Size

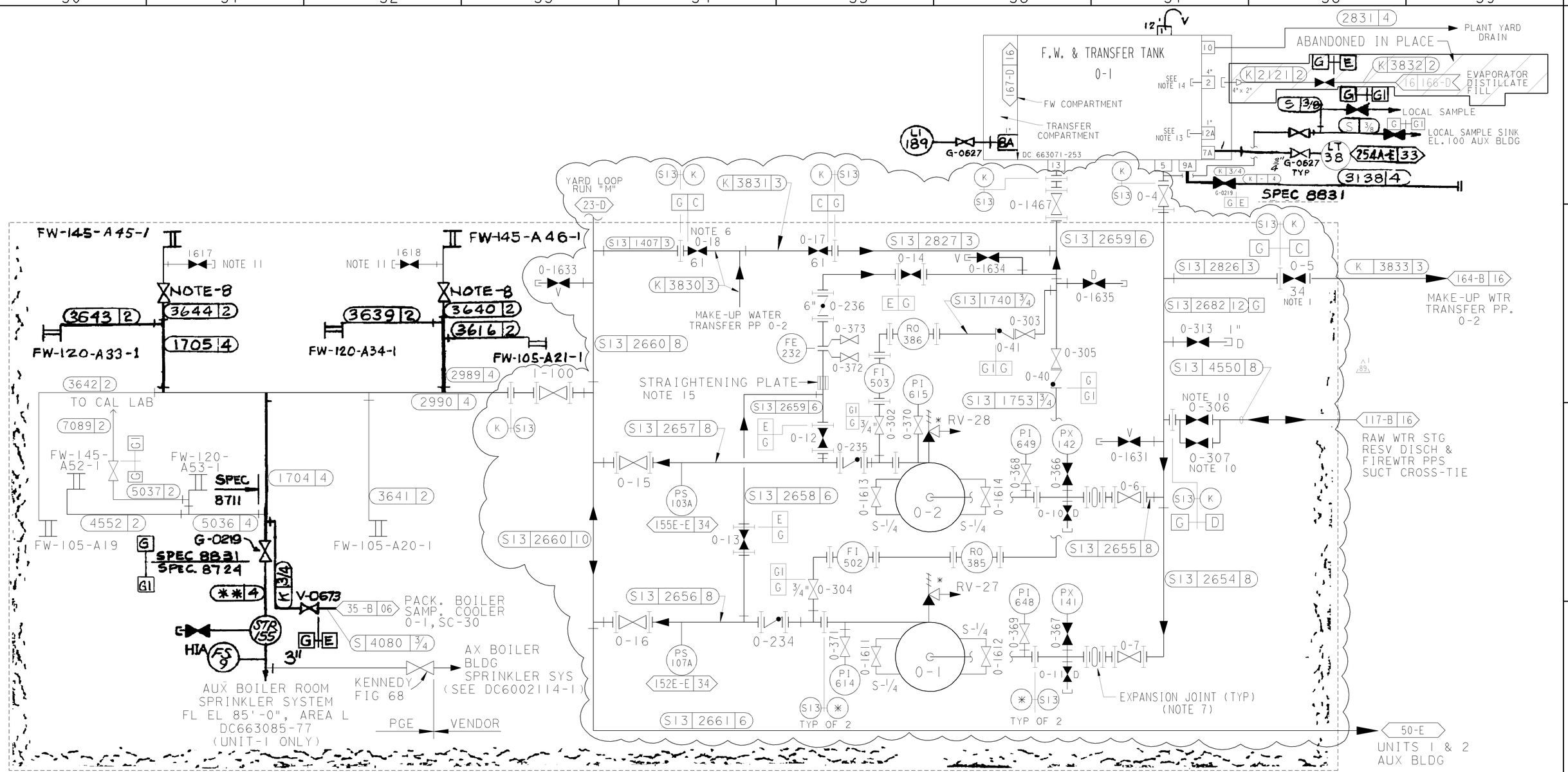

UNIT 1 FUEL HANDLING BLDG

FIREWATER PUMPS
DC-663085-1

NOTES:

1. VALVE ITEM NOS 34 & 79 ARE UNDER SPEC. 8729 AND INSTALLED UNDER SPEC. 8831. (38-D)
2. ALL PIPING WITH PG&E CLASS "C" & "E" ARE UNDER 8711 EXCEPT AS NOTED.
3. ALL PIPING & VALVES WITH PG&E CLASS "G" ARE UNDER SPEC. 8831 AND WITH ** INDICATE UNDER SPEC. 8724.
4. ALL PIPING ON THIS SHEET IS PIPING "K", EXCEPT AS NOTED.
5. DELETED.
6. VALVES ITEM NOS. 61 ARE UNDER SPEC. 8729 AND INSTALLED UNDER SPEC. 8711. (35-D)
7. EXPANSION JOINT SHALL BE REPLACED BY STRAINER DURING START-UP.
8. BONNEY FORGE 2" SW GATE VALVE CAT #HCW-108 (BODY A-105, SERT/STEM/DISC-13CR WP-800, TEMP-850° F) COORD-31/33-D.
9. ALL HOSEREELS HAVE RESTRICTING ORIFICES (REF DWG 060831) OR POWHATAN PRESSURE RESTRICTING VALVE 18-255 OR EQUIV.
10. KEYSTONE 8" BUTTERFLY VALVE, 150# FIG. 100, DC-6011479-156. (37-C)
11. CONNECTOR W/CAP.
12. MINIMUM CLEARANCE OF 0.010" IS REQUIRED BETWEEN THE STEM OF FP-0-4 AND THE ADJACENT PIPE PER SAPN 50317868. (37-D)
13. NOZZLE PLUGGED INSIDE TANK
14. NOZZLE CAPPED INSIDE TANK
15. FLOW STRAIGHTENING PLATE, VENDOR FLUIDIC TECHNIQUES DWG 663187-216

UNIT 1

DIABLO CANYON POWER PLANT - PG&E CO. FIRE PROTECTION SYSTEMS			
DRAWING	SHEET	PAGE	REV
102018	3	0	89

DATE	DWN	RE	IV	PROFESSIONAL ENGINEER	PE DISC.	PE#	PE EXP.	
09-19-2013	MNRU	FxC2	KJD3	NOT REQUIRED	N/A	N/A	N/A	REVISED PER DDN-2*426 DFC-3*1435 AND DFT-7*2299

RASTER-2018s3.dgn
DGN-2018s3.dgn
CAD User: MNRU Date: 09-19-2013
Metric 3 Size

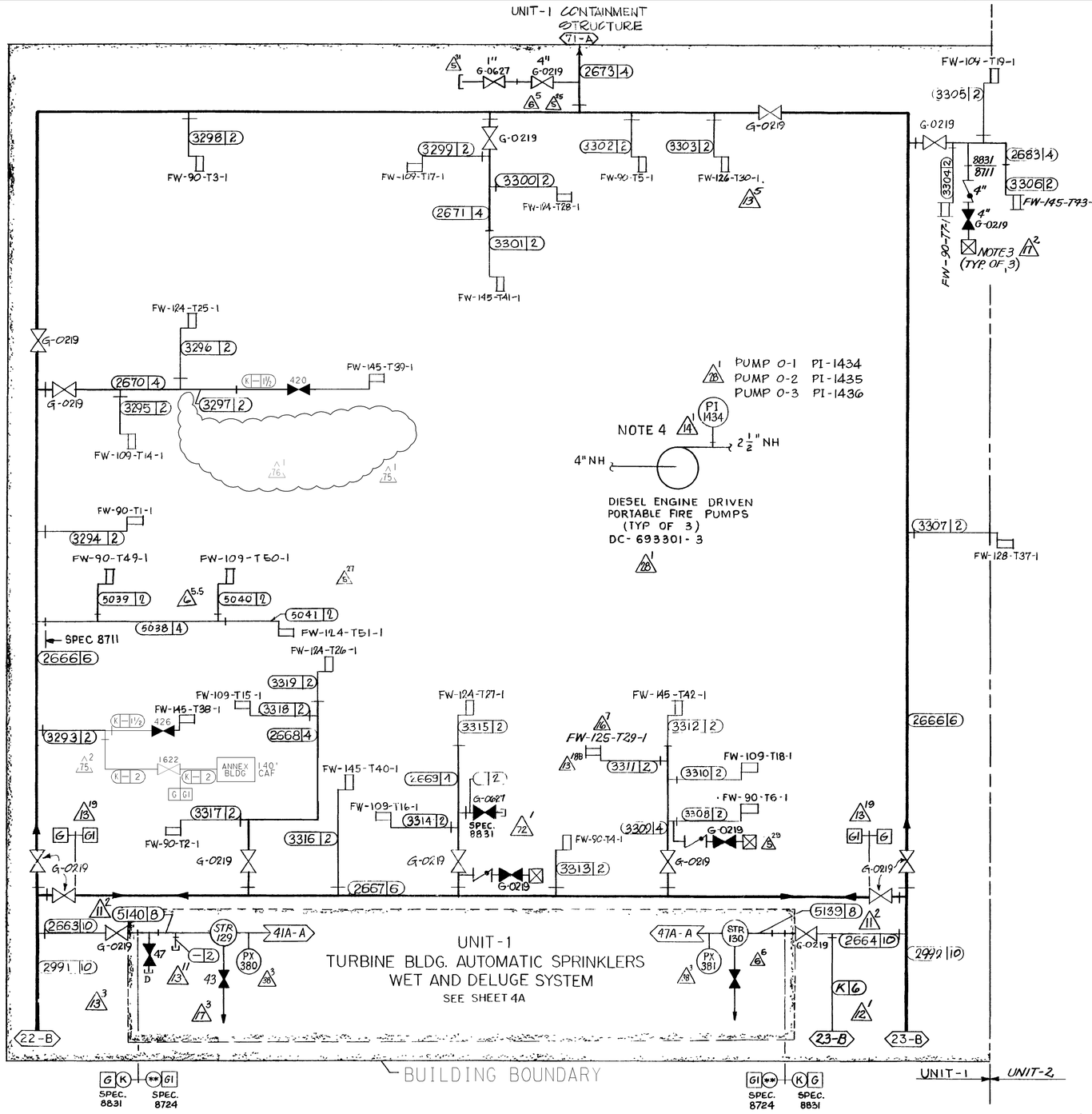

NOTES

1. ALL PIPING ON THIS SHEET IS UNDER SPEC. 8831 AND PG&E CLASS "G" EXCEPT AS NOTED. UNLESS OTHERWISE NOTED, PIPING INSIDE TURBINE BUILDING IS SPEC. "K"
2. PIPING WITH DOUBLE ASTERISKS ARE UNDER SPEC. 8724
3. 2 1/2" NATIONAL HOSE THREADED CONNECTION (CAPPED) FOR PORTABLE DIESEL ENGINE DRIVEN FIRE PUMPS, SPEC 8711. CHECK VALVES ARE LUNKENHEIMER MODEL NO. 157 3C. (42-B) (43-B) (45-D)
4. THE PORTABLE FIRE PUMPS ARE SEISMICALLY QUALIFIED IN ACCORDANCE WITH DESIGN CRITERIA MEMORANDUM T-10
5. DELETED

TURBINE BUILDING

UNIT 1

DIABLO CANYON POWER PLANT - PG&E CO.
FIRE PROTECTION SYSTEMS

DRAWING	SHEET	PAGE	REV
102018	4	0	76

DATE	DWN	RE	IV	PROFESSIONAL ENGINEER	PE DISC.	PE#	PE EXP.	
07-30-2009	RxG2	FxC2		KERSI J. DALAL	MECHANICAL	M 16690	3/31/2010	REVISED PER DAS-6*193

RASTER=102018S4.dgn
DGN=102018S4.dgn
CAD User: RxG2 Date: 07-30-2009
Sheet: 3 Size

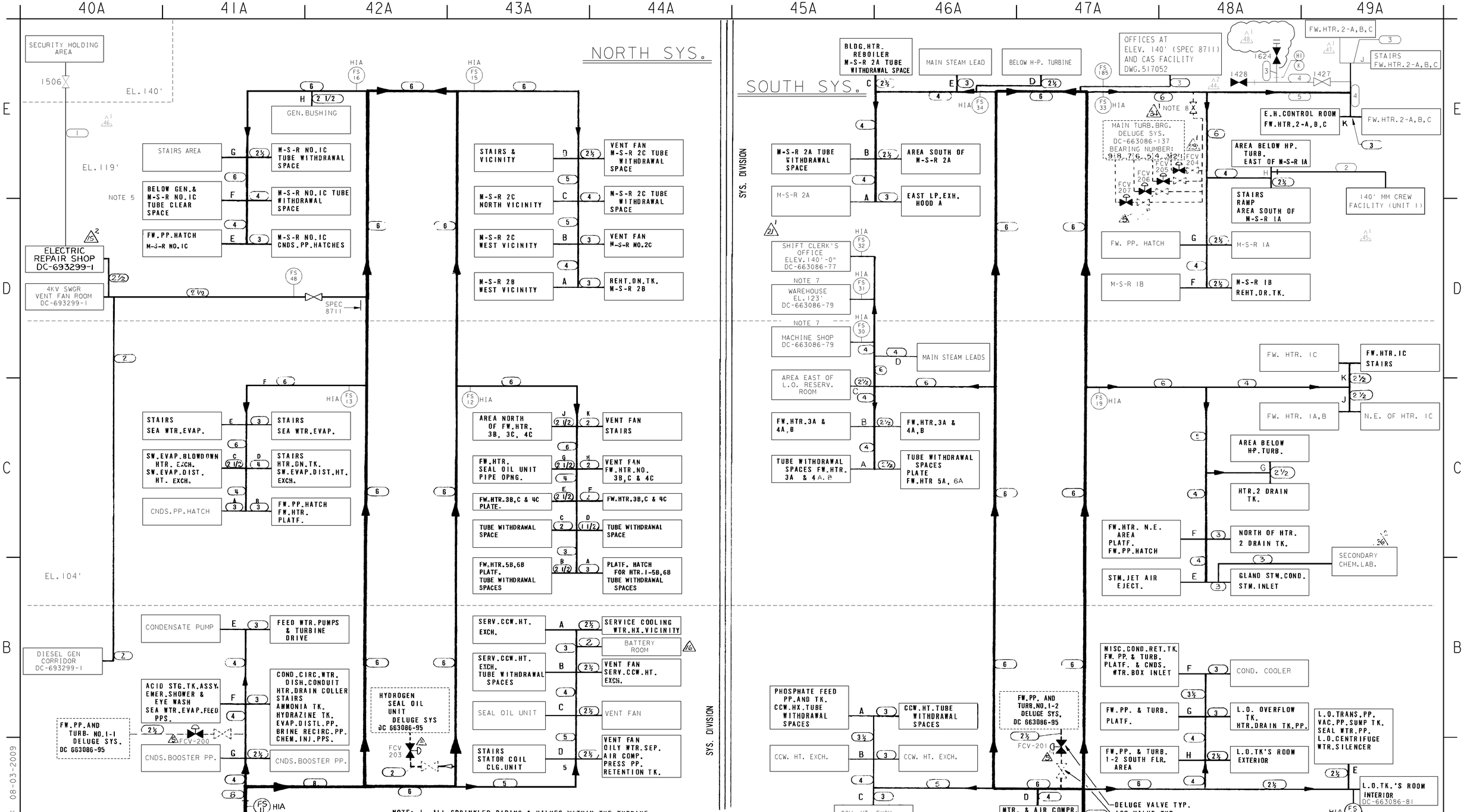

NOTE: 1. ALL SPRINKLER PIPING & VALVES WITHIN THE TURBINE BLDG. ARE P.G.&E. CODE CLASS "G1", SPEC. 8724, EXCEPT AS NOTED
2. PIPING INDICATED BY BROKEN LINES ARE DELUGE SYS.
3. DELETED
4. DELETED
5. M-S-R MOISTURE SEPARATORS REHEATER. (40A-E)
6 FLOW SWITCH CONNECTION SEE D.C.663086-86

REFERENCE: DC 663086-80,81 EL.85'
DC 663086-98,99 EL.119'
DC 663086-110 EL.104'

7. INST. REPAIR RM., WAREHOUSE, AND MACHINE SHOP ARE COMMON TO BOTH UNITS (45A-D)
8. KENNEDY 2½" CAST IRON GATE VALVE FIG.68 (48A-E)

TURBINE BLDG. UNIT 1

WET & DELUGE
AUTOMATIC FIRE SPRINKLERS SYS.

DIABLO CANYON POWER PLANT - PG&E CO.
FIRE PROTECTION SYSTEMS

DRAWING	SHEET	PAGE	REV
102018	4A	0	48

DATE	DWN	RE	IV	PROFESSIONAL ENGINEER	PE DISC.	PE#	PE EXP.	
08-03-2009	RxG2	FxC2		KERSI J. DALAL	MECHANICAL	M 16690	3/31/2010	REVISED PER DAS-6*193

RASTER=2018s4a.dgn
DGN=2018s4a.dgn
CAD User:RxG2 Date: 08-03-2009
3 Size

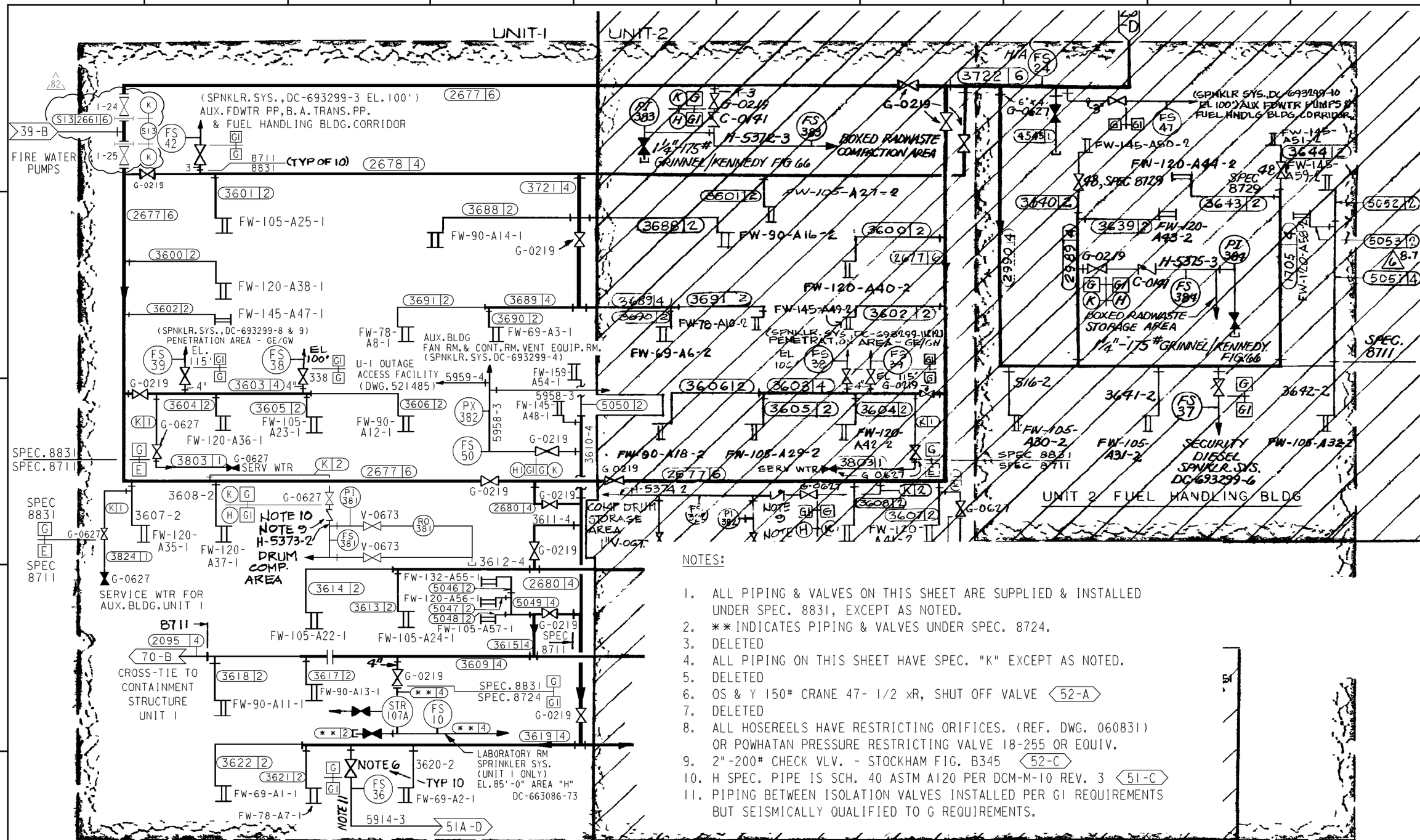

NOTES:

1. ALL PIPING & VALVES ON THIS SHEET ARE SUPPLIED & INSTALLED UNDER SPEC. 8831, EXCEPT AS NOTED.
2. ** INDICATES PIPING & VALVES UNDER SPEC. 8724.
3. DELETED
4. ALL PIPING ON THIS SHEET HAVE SPEC. "K" EXCEPT AS NOTED.
5. DELETED
6. OS & Y 150# CRANE 47- 1/2 xR, SHUT OFF VALVE 52-A
7. DELETED
8. ALL HOSEREELS HAVE RESTRICTING ORIFICES. (REF. DWG. 060831) OR POWHATAN PRESSURE RESTRICTING VALVE 18-255 OR EQUIV.
9. 2"-200# CHECK VLV. - STOCKHAM FIG. B345 52-C
10. H SPEC. PIPE IS SCH. 40 ASTM A120 PER DCM-M-10 REV. 3 51-C
11. PIPING BETWEEN ISOLATION VALVES INSTALLED PER GI REQUIREMENTS BUT SEISMICALLY QUALIFIED TO G REQUIREMENTS.

UNIT 1 & 2 AUXILIARY BUILDING

UNIT 1

DIABLO CANYON POWER PLANT - PG&E CO.
FIRE PROTECTION SYSTEMS

DRAWING	SHEET	PAGE	REV
102018	5	0	82

RASTER=2018s5.dgn
DGN=2018s5.dgn
CAD User: MNRU Date: 09-17-2013

INPGIC
1 Size

DATE	DWN	RE	IV	PROFESSIONAL ENGINEER	PE DISC.	PE#	PE EXP.	
09-17-2013	MNRU	FxC2	KJD3	NOT REQUIRED	N/A	N/A	N/A	REVISED PER DDN-2*426

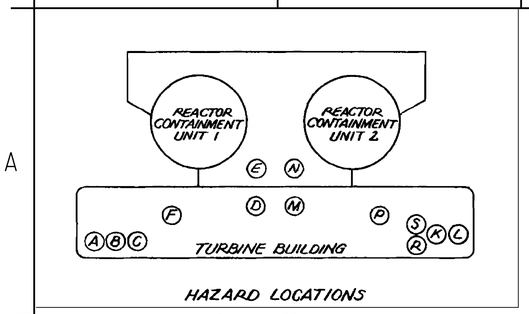

PLOT PLAN

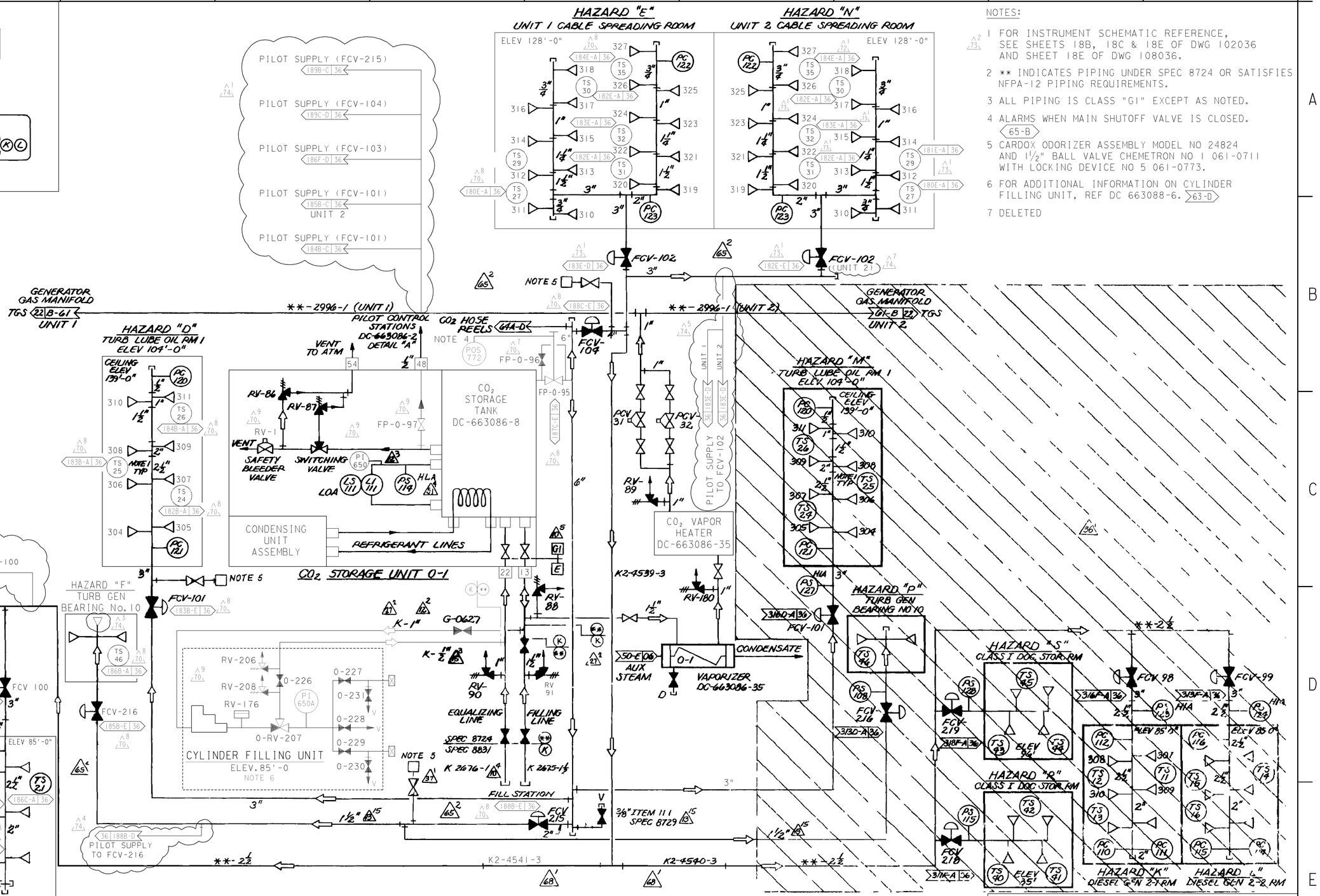

NOTES:

1 FOR INSTRUMENT SCHEMATIC REFERENCE, SEE SHEETS 18B, 18C & 18E OF DWG 102036 AND SHEET 18E OF DWG 108036.

2 ** INDICATES PIPING UNDER SPEC 8724 OR SATISFIES NFPA-12 PIPING REQUIREMENTS.

3 ALL PIPING IS CLASS "G1" EXCEPT AS NOTED.

4 ALARMS WHEN MAIN SHUTOFF VALVE IS CLOSED. 65-B

5 CARDOX ODORIZER ASSEMBLY MODEL NO 24824 AND 1½" BALL VALVE CHEMETRON NO 1 061-0711 WITH LOCKING DEVICE NO 5 061-0773.

6 FOR ADDITIONAL INFORMATION ON CYLINDER FILLING UNIT, REF DC 663088-6. 63-D

7 DELETED

CARBON DIOXIDE FIRE PROTECTION SYSTEM

HAZARD SPRAY HEADS

REF DC-663086-1&2

UNIT 1

DIABLO CANYON POWER PLANT - PG&E CO.
FIRE PROTECTION SYSTEMS

DRAWING	SHEET	PAGE	REV
102018	6	0	74

DATE	DWN	RE	IV	PROFESSIONAL ENGINEER	PE DISC.	PE#	PE EXP.	
03-31-2011	JBMX	FxC2		KERSI J. DALAL	MECHANICAL	M 16690	3/31/2012	REVISED PER DFT-7*1100

RASTER=2018s6.dgn
DGN=2018s6.dgn
CAD User=JBMX DGN=: 03-31-2011

Model: 3 Size

NOTES:

1. ALL PIPING WITH PG&E CLASS 'G' IS UNDER SPEC. 8831, EXCEPT AS NOTED.
2. ALL PIPING WITH PG&E CLASS 'B', 'E' & 'G1' IS UNDER SPEC. 8711.
3. EACH RCP HAS 5 SPRINKLER HEADS FOR FIRE PROTECTION (T5-C)
4. ALL HOSEREELS HAVE RESTRICTING ORIFICES (REF. DWG. 060831.), OR POWHATAN PRESSURE RESTRICTING VALVE 18-255 OR EQUIV.
5. 3/4" GATE VALVE, VELAN, DWG. NO 6006473-166, STOCK CODE 93-6841 (72-C)

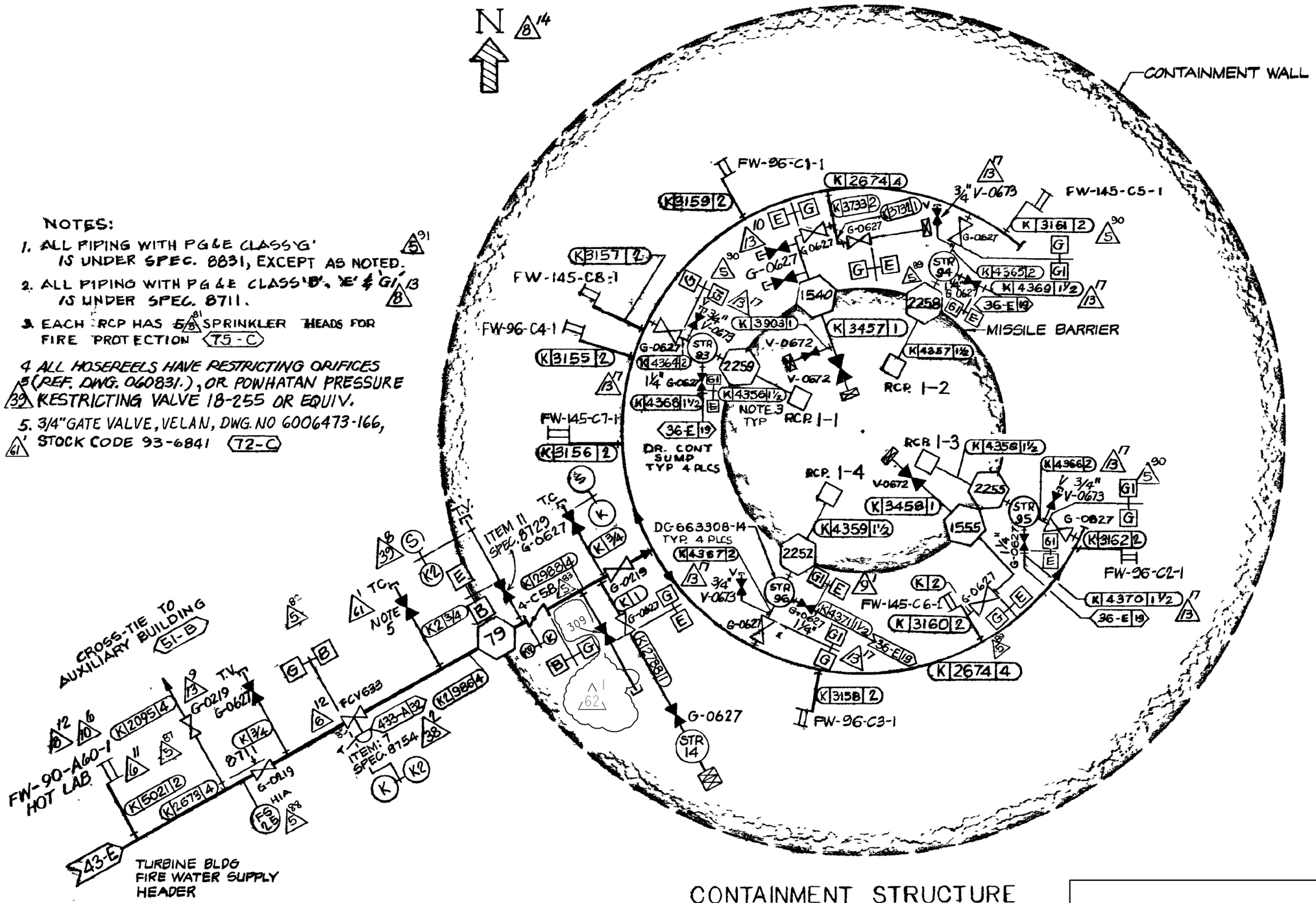

CONTAINMENT STRUCTURE

UNIT-1

P G & E CO.		102018	REV. 62
SHEET 7	PAGE 0		

9/14/04	AJL2	CDP3	-	KERSI J. DALAL	MECHANICAL	M 16690	3/31/2006	Revised per FCT 029317
DATE	DWN	RE	IV	PROFESSIONAL ENGINEER	PE DISC.	PE#	PE EXP.	

CAD User: AJL2 Date: 9-10-2004
DGN=ERU84471.DGN
RASTER=ERU84471.TIF

INPG2ND

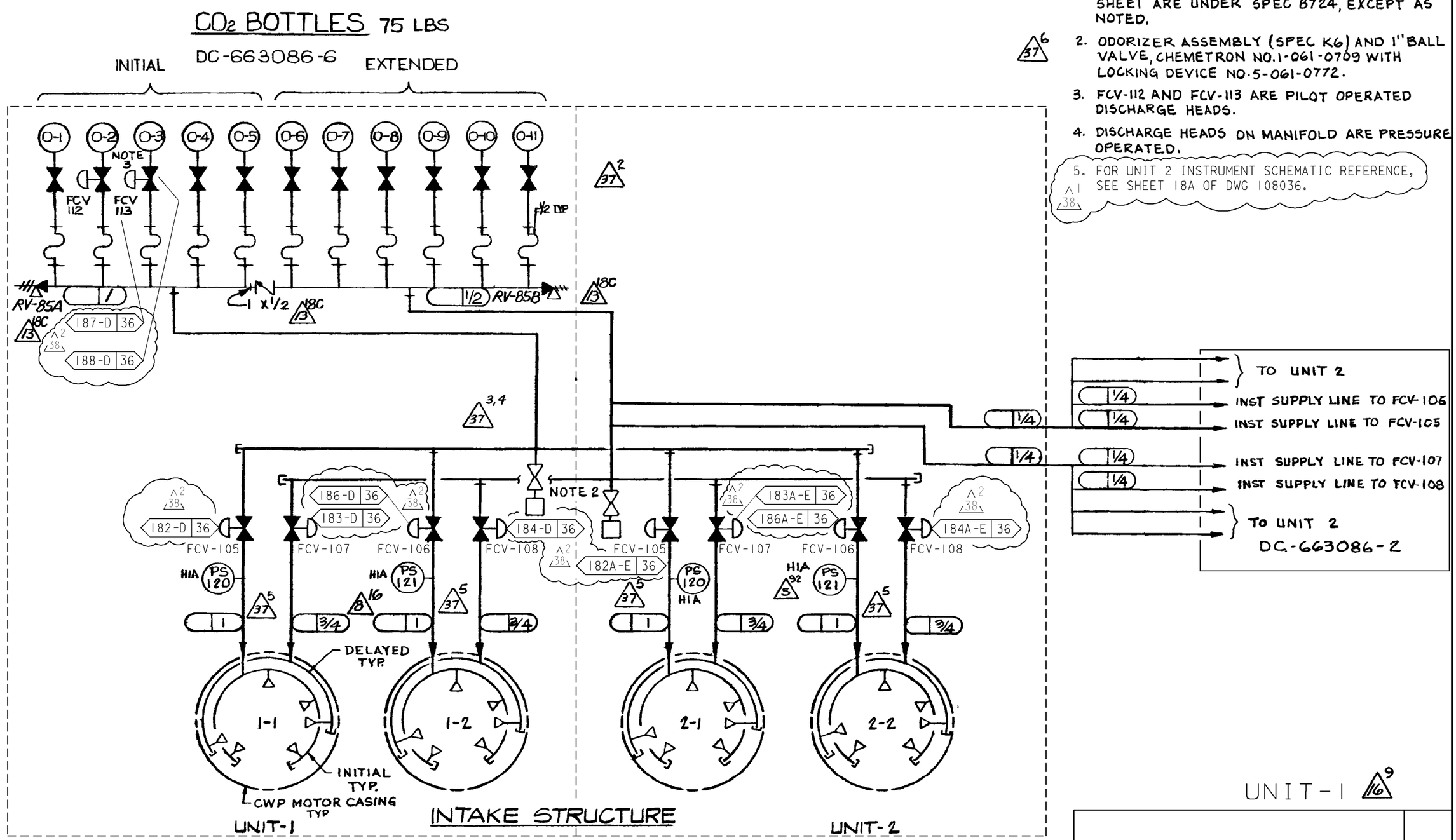

NOTES:

1. VALVES, PIPING AND INSTRUMENTS ON THIS SHEET ARE UNDER SPEC 8724, EXCEPT AS NOTED.
2. ODORIZER ASSEMBLY (SPEC K6) AND 1" BALL VALVE, CHEMETRON NO.1-061-0709 WITH LOCKING DEVICE NO.5-061-0772.
3. FCV-112 AND FCV-113 ARE PILOT OPERATED DISCHARGE HEADS.
4. DISCHARGE HEADS ON MANIFOLD ARE PRESSURE OPERATED.
5. FOR UNIT 2 INSTRUMENT SCHEMATIC REFERENCE, SEE SHEET 18A OF DWG 108036.

CO_2 PROTECTION SYSTEM FOR INTAKE STRUCTURE

P G & E CO.		102018	REV. 38
SHEET 8	PAGE 0		

9/22/04	AJL2	FXC2	-	KERSI J. DALAL	MECHANICAL	M 16690	3/31/2006	Revised per FCT 029332
DATE	DWN	RE	IV	PROFESSIONAL ENGINEER	PE DISC.	PE#	PE EXP.	

CAD User: AJL2 Date: 9-21-2004
DGN=102018S8.DGN
RASTER=102018S8.TIF

TNPG2ND

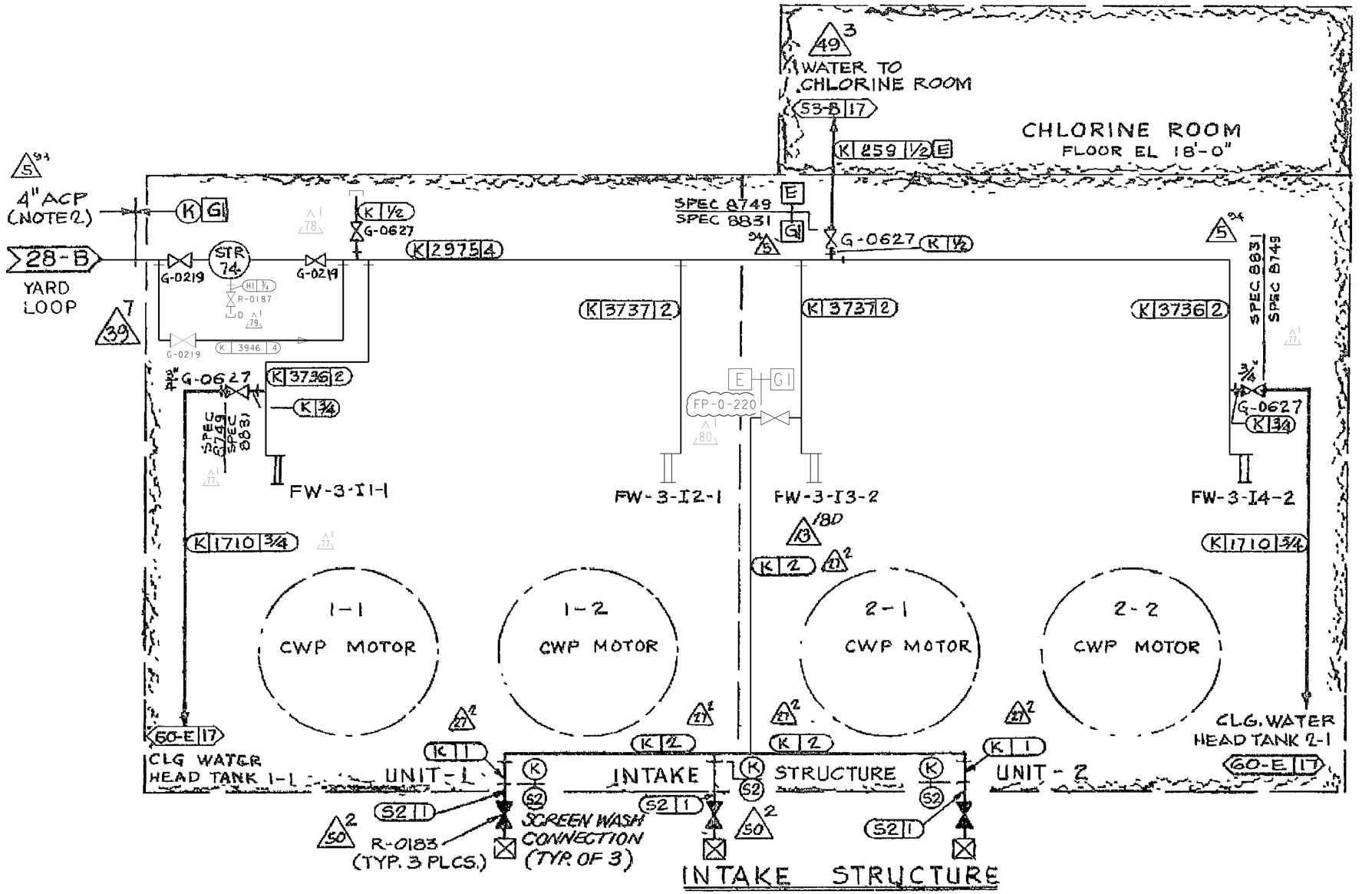

FIREWATER PROTECTION SYSTEM

NOTES:

1. DELETED
2. ASBESTOS CEMENT PIPE BY CIVIL, REF DWG. 438146.
3. ALL HOSEREELS HAVE RESTRICTING ORIFICES. (REF. DWG. 060831)
4. DELETED

UNIT 1

DIABLO CANYON POWER PLANT - PG&E CO.

DRAWING	SHEET	PAGE	REV
102018	9	0	80

DATE	DWN	RE	IV	PROFESSIONAL ENGINEER	PE DISC.	PE#	PE EXP.	
03-09-2006	AJL2	RMDI		KERSI J. DALAL	MECHANICAL	M 16690	3/31/2006	REVISED PER FCT-031146

RASTER-102018s9.dgn
DGN-102018s9.dgn 03-09-2006
CAD User:AJL2 DGNs:
Sheet: 1 Size

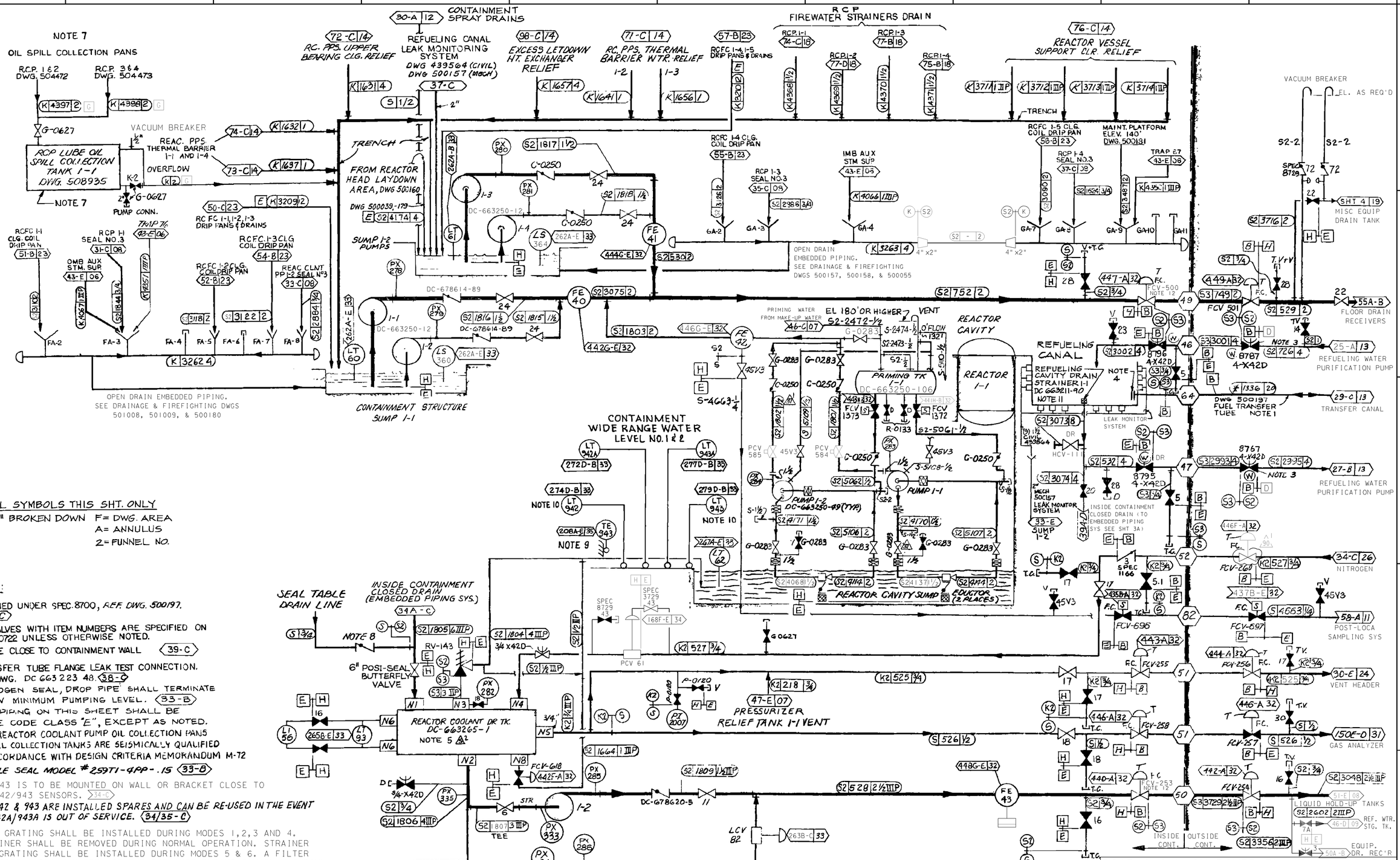

DATE	DWN	RE	IV	PROFESSIONAL ENGINEER	PE DISC.	PE#	PE EXP.	
10-15-2013	MNRU	FXC2	KJD3	NOT REQUIRED	N/A	N/A	N/A	REVISED PER DDN-2*1115

RASTER=002el357.DGN
DGN=002el357.DGN
CAD User=MNRU Date: 10-15-2013

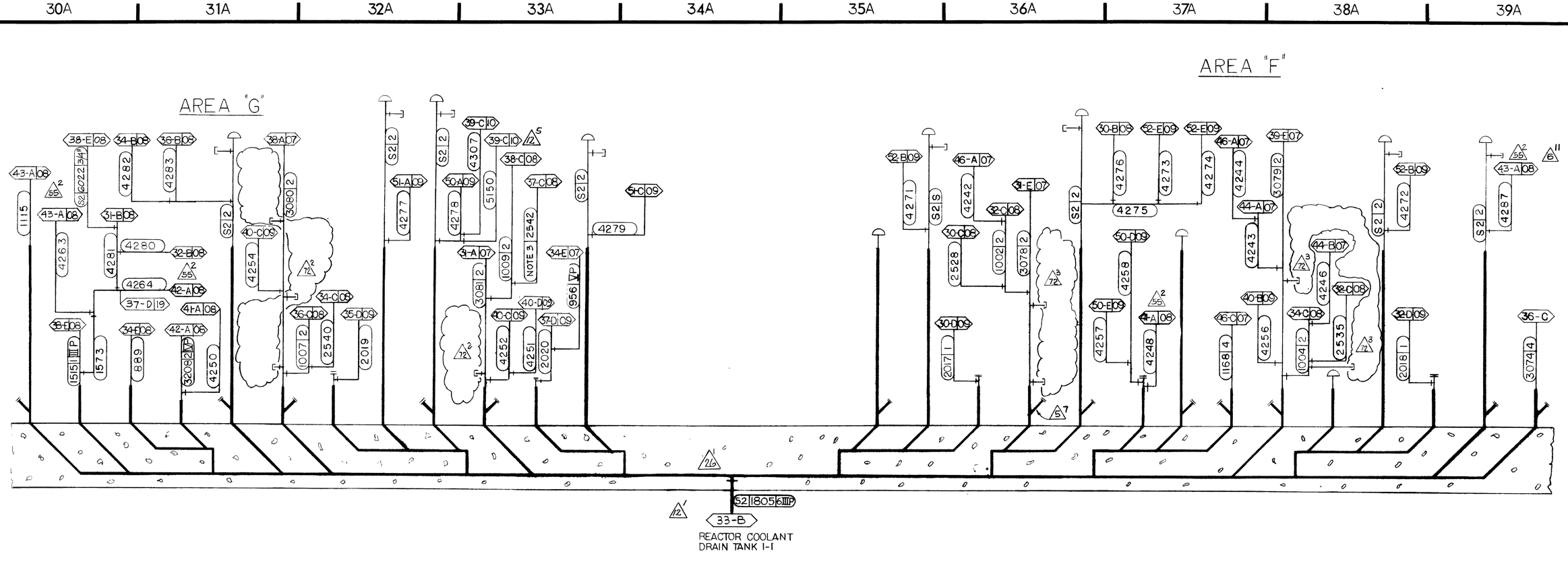

NOTES:
1. ALL DRAIN PIPING ON THIS DRAWING SHALL BE S2-3/4, CODE CLASS "E", UNLESS NOTED.
2. EMBEDDED PIPING IS INDICATED BY HEAVY LINES REF. DWG. No. 500157 & 500158
3. USE SCHEDULE 160 IN LINE 2542, ON UNIT 1 ONLY. (33A-D)

INSIDE CONTAINMENT
CLOSED DRAIN TO EMBEDDED
PIPING SYSTEM.

UNIT - 1 RM INDEXED REV.

P. G. & E. CO.	102019	CHANGE
SHEET 3A OF SHEETS		72

35 M/M NEG SCAN 72 IC

NOTES:

1. VALVES WITH ITEM NUMBERS 16 ARE SPECIFIED ON SPEC.0722 UNLESS OTHERWISE NOTED
2. FOR DRAIN COLLECTION PIPING TO AND INCLUDING HEADERS P TO Z REFER TO PG&E DRAINAGE AND FIRE FIGHTING DRAWINGS 500121 TO 500132; 500994 TO 500996 & 500998 TO 501005 AND 501012
3. ALL PIPING ON THIS SHEET IS PG&E CODE CLASS E EXCEPT AS NOTED

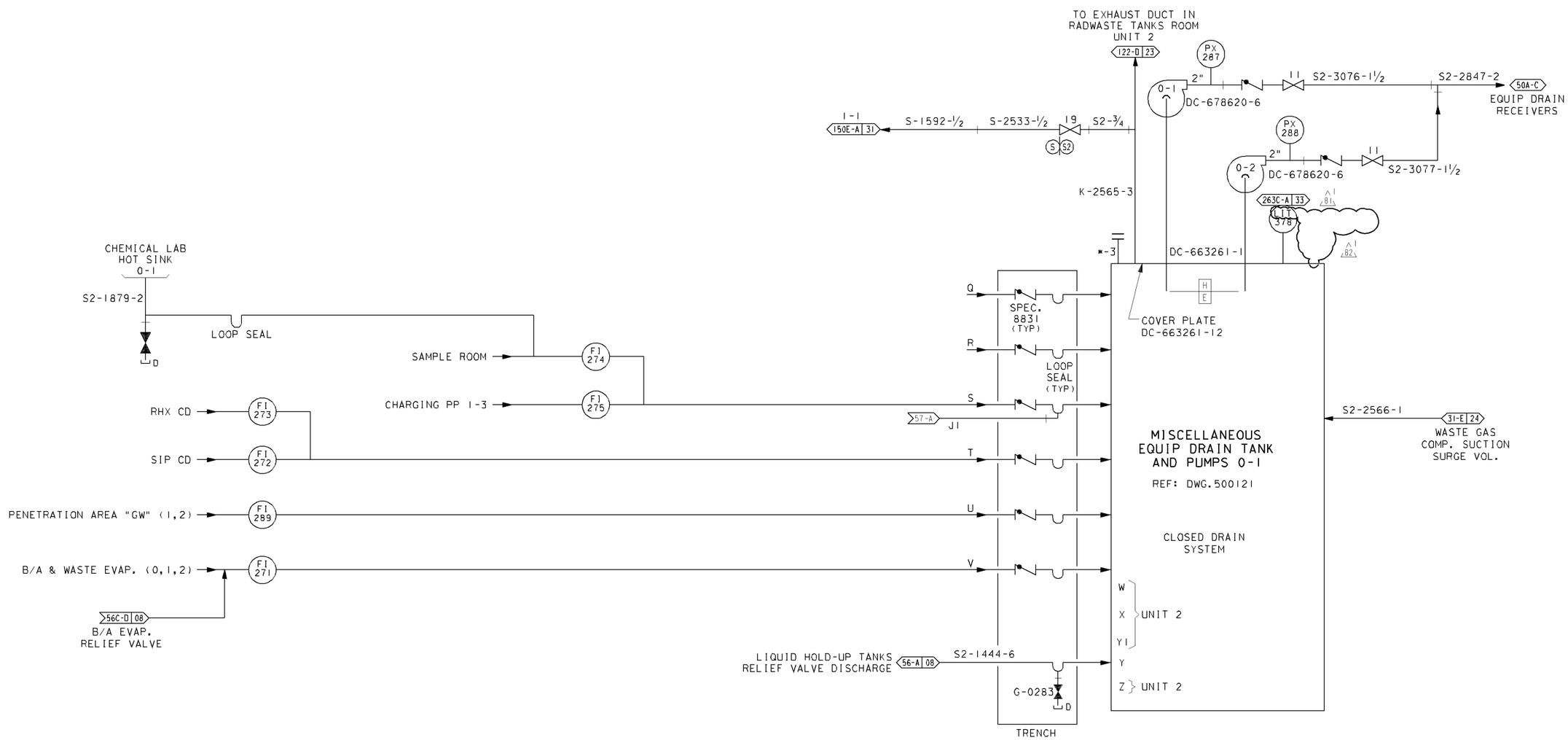

UNIT 1

DIABLO CANYON POWER PLANT - PG&E CO.
LIQUID RADWASTE SYSTEM

DRAWING	SHEET	PAGE	REV
102019	4	0	82

DATE	DWN	RE	IV	PROFESSIONAL ENGINEER	PE DISC.	PE#	PE EXP.	
08-30-2011	AJFJ	FxC2		KERSI J. DALAL	MECHANICAL	M 16690	3/31/2012	REVISED PER DAS-6#432

RASTER=102019s4.dgn
DGN=102019s4.dgn
CAD User: AJFJ Date: 08-30-2011

TMPRIC
1 5:20

NOTES:

1. VALVES WITH ITEM NUMBERS 24 ARE SPECIFIED ON SPEC.0722 UNLESS OTHERWISE NOTED
2. FOR DRAIN COLLECTION PIPING TO AND INCLUDING HEADERS A TO N REFER TO PG&E DRAINAGE AND FIRE FIGHTING DRAWINGS 500121 TO 500132; 500994 TO 500996 & 500998 TO 501005
3. ALL PIPING ON THIS SHEET IS PG&E CODE CLASS E EXCEPT AS NOTED
4. OIL ABSORBENT BOOMS (NOCHAR) HAVE BEEN INSTALLED IN THE SUMP. LANYARD FOR BOOMS IS ATTACHED TO MANWAY. REF. AT-MM AR A0540057 AND CIVIL DWGS 438426 AND 439510.

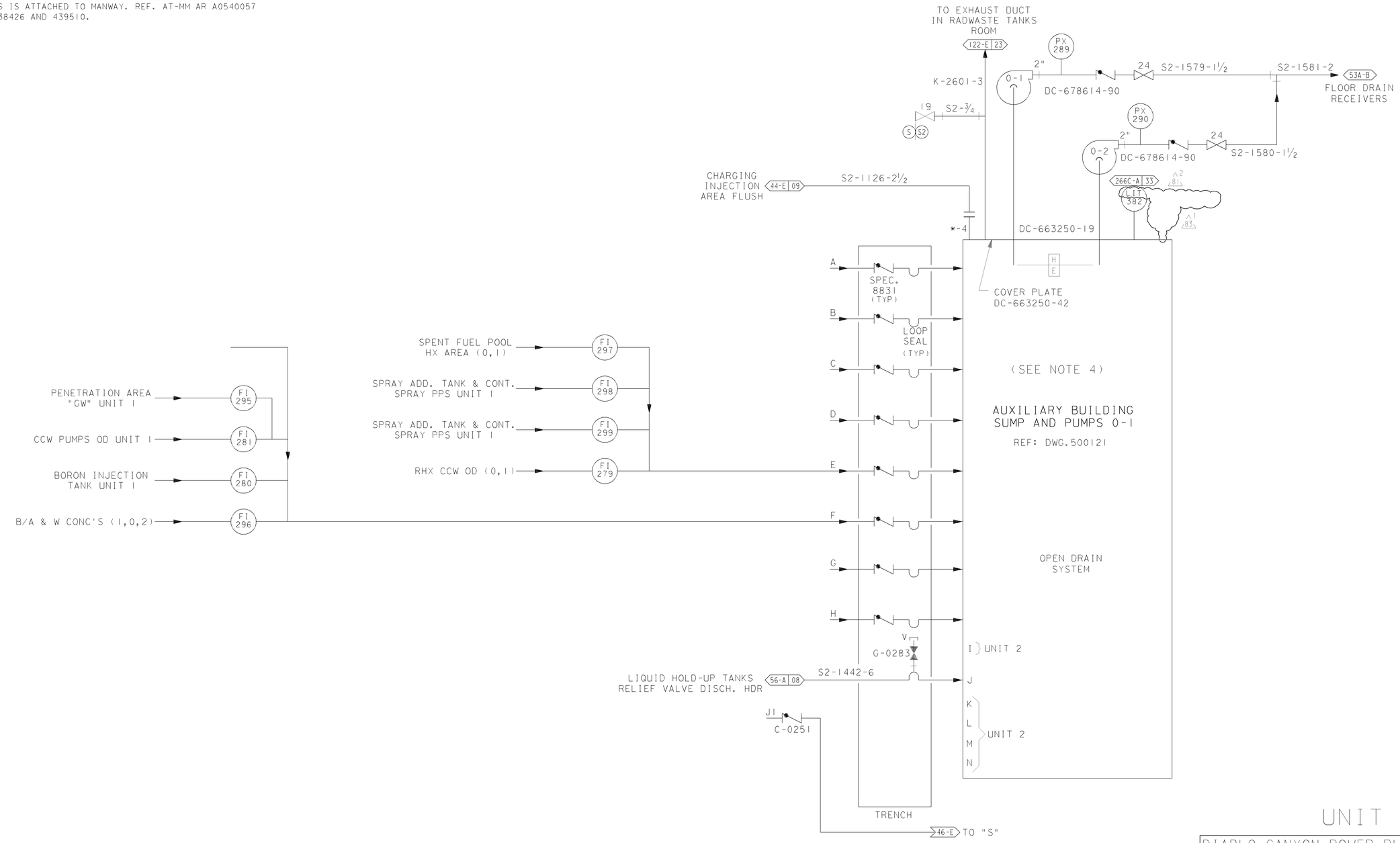

UNIT 1

DIABLO CANYON POWER PLANT - PG&E CO.
LIQUID RADWASTE SYSTEM

DRAWING	SHEET	PAGE	REV
102019	5	0	83

DATE	DWN	RE	IV	PROFESSIONAL ENGINEER	PE DISC.	PE#	PE EXP.	
08-30-2011	AJFJ	FxC2		KERSI J. DALAL	MECHANICAL	M 16690	3/31/2012	REVISED PER DAS-6*432

RASTER=102019s5.dgn
DGN=102019s5.dgn
CAD User: AJFJ Date: 08-30-2011

SIZE: 3 Size

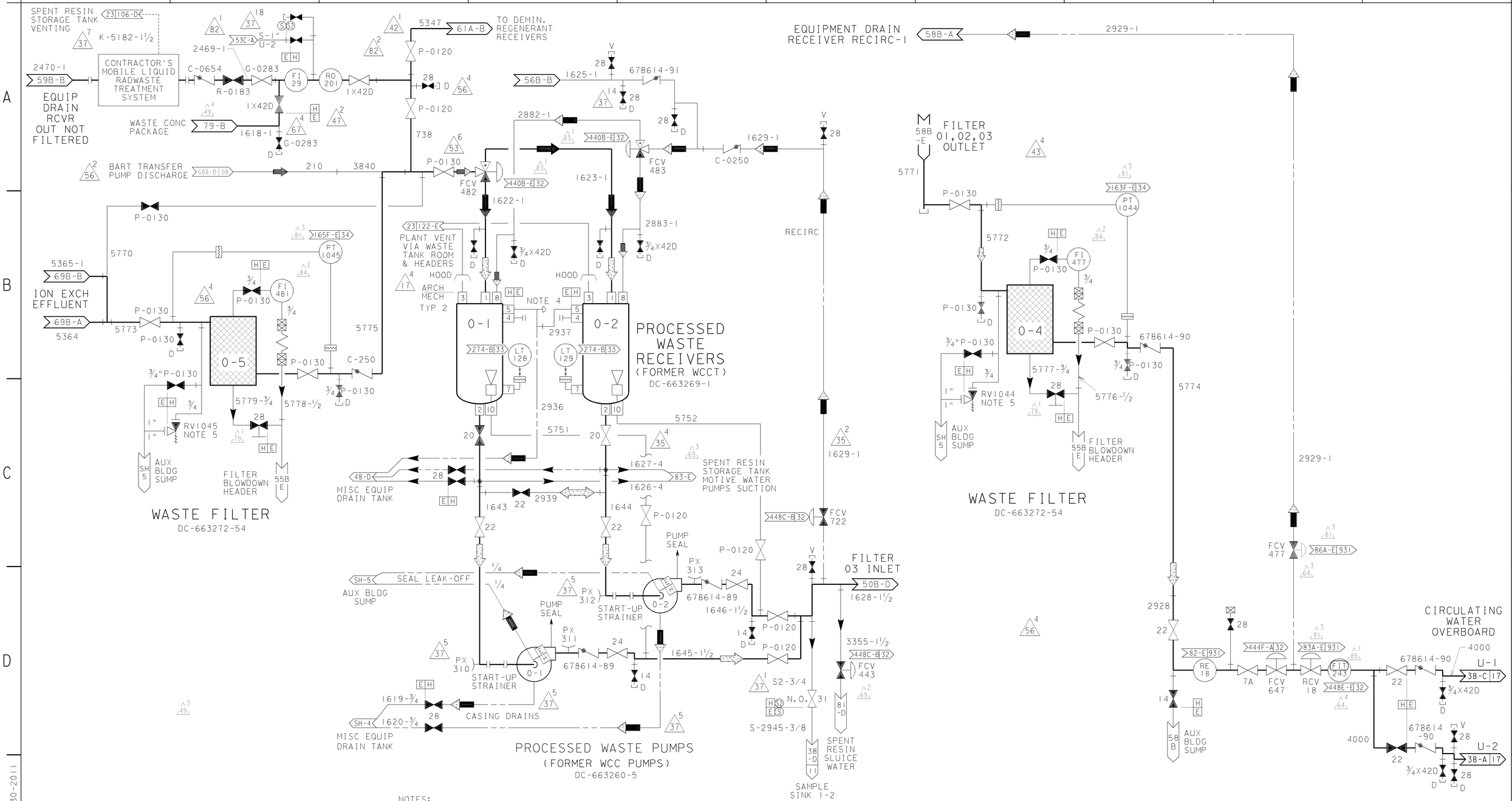

NOTES:

1. ALL PIPING IS S2 SPEC. AND 2" EXCEPT AS NOTED.
2. VALVES WITH ITEM NUMBERS ARE SPECIFIED ON SPEC. 0722, UNLESS OTHERWISE NOTED.
3. ALL PIPING SHOWN ON THIS SHEET SHALL BE PG&E CODE CLASS "H", EXCEPT AS NOTED.
4. LOOP SEAL TO PREVENT FLOW BETWEEN TANKS. 63-B
5. LONERGAN LCT-14, DC-6001876 WITH FLANGED CONNECTION ADDED. 61,66-C

UNIT 1

DIABLO CANYON POWER PLANT - PG&E CO.
LIQUID RADWASTE SYSTEM

DRAWING	SHEET	PAGE	REV
102019	6	0	85

DATE	DWN	RE	IV	PROFESSIONAL ENGINEER	PE DISC.	PE#	PE EXP.	
08-30-2011	AJFJ	F×C2		KERSI J. DALAL	MECHANICAL	M 16690	3/31/2012	REVISED PER DAS-6×432

RASTER=102019S6.dgn
DGN=102019S6.dgn
CAD User: AJFJ Date: 08-30-2011

3 Size

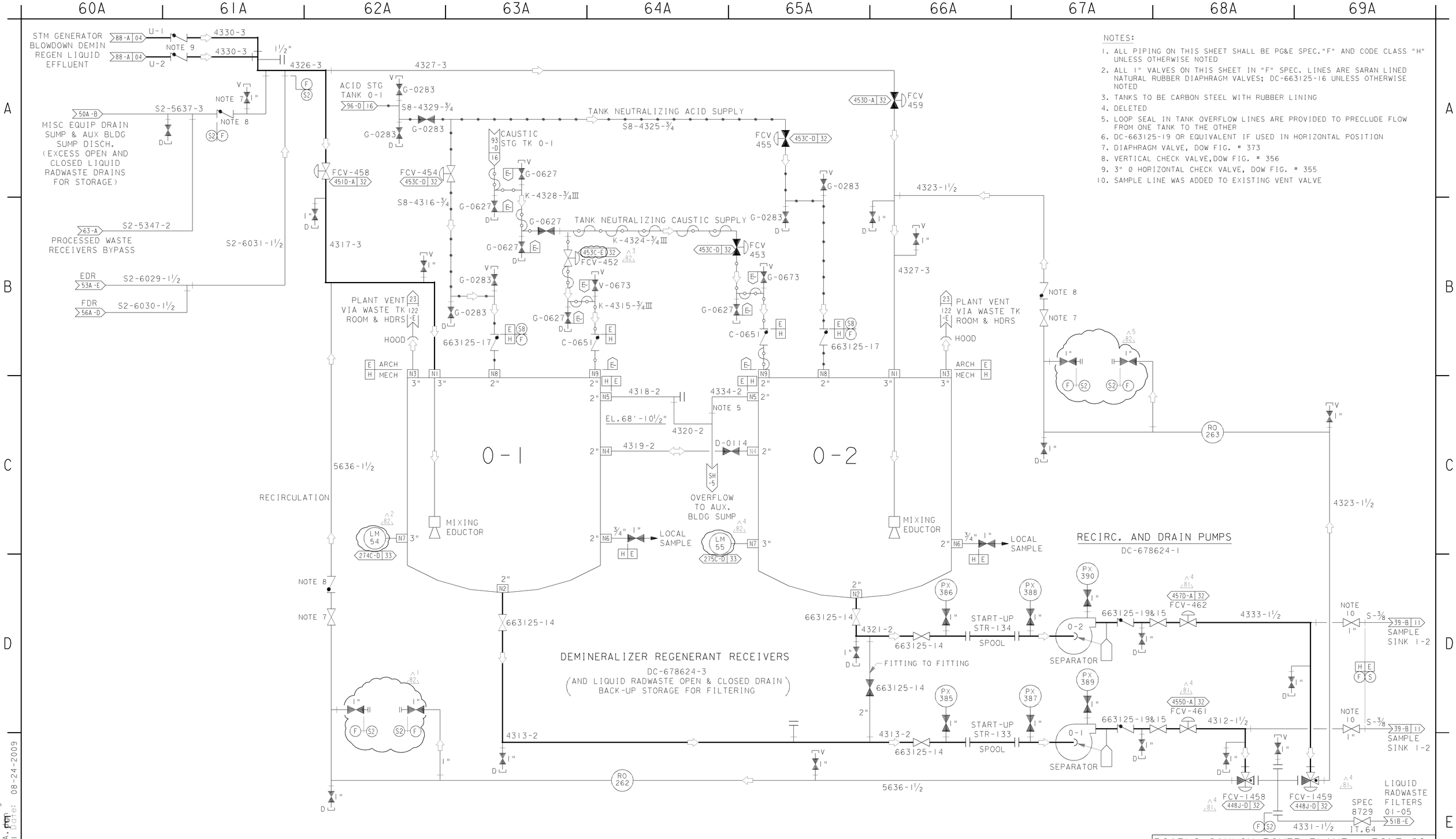

NOTES:

1. ALL PIPING ON THIS SHEET SHALL BE PG&E SPEC."F" AND CODE CLASS "H" UNLESS OTHERWISE NOTED
2. ALL 1" VALVES ON THIS SHEET IN "F" SPEC. LINES ARE SARAN LINED NATURAL RUBBER DIAPHRAGM VALVES; DC-663125-16 UNLESS OTHERWISE NOTED
3. TANKS TO BE CARBON STEEL WITH RUBBER LINING
4. DELETED
5. LOOP SEAL IN TANK OVERFLOW LINES ARE PROVIDED TO PRECLUDE FLOW FROM ONE TANK TO THE OTHER
6. DC-663125-19 OR EQUIVALENT IF USED IN HORIZONTAL POSITION
7. DIAPHRAGM VALVE, DOW FIG. # 373
8. VERTICAL CHECK VALVE,DOW FIG. # 356
9. 3" 0 HORIZONTAL CHECK VALVE, DOW FIG. # 355
10. SAMPLE LINE WAS ADDED TO EXISTING VENT VALVE

DIABLO CANYON POWER PLANT - PG&E CO.
LIQUID RADWASTE SYSTEM

DRAWING	SHEET	PAGE	REV
102019	6A	0	82

UNIT 1

DATE	DWN	RE	IV	PROFESSIONAL ENGINEER	PE DISC.	PE#	PE EXP.	
08-24-2009	ADMI	FxC2		KERSI J. DALAL	MECHANICAL	M 16690	3/31/2010	REVISED PER DDN-2*150 & DAS-6*192

RASTER-102019s6A.dgn
DGN-102019s6A.dgn
CAD User:ADMI DGN: 08-24-2009

Size
3

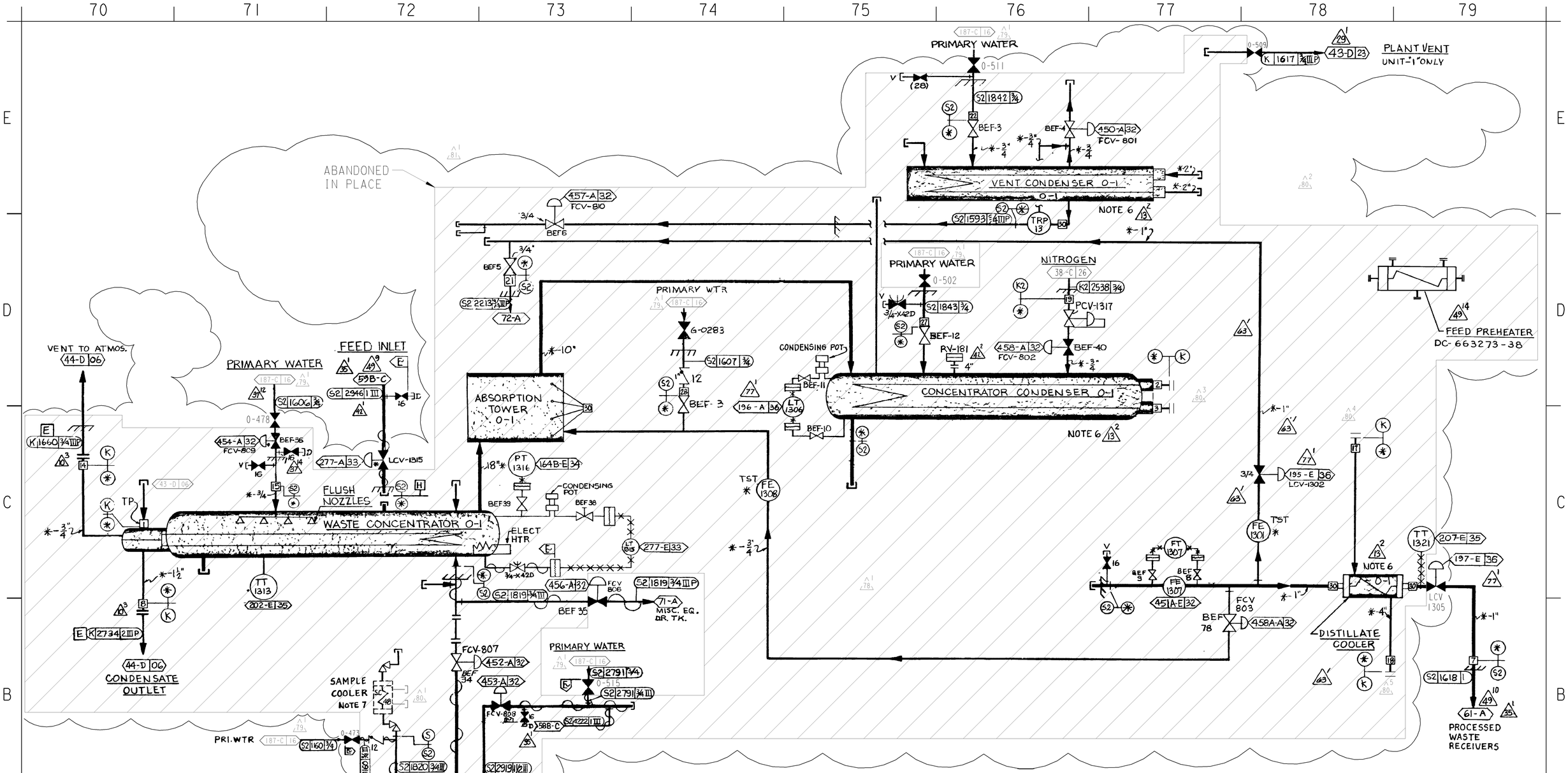

NOTES:

1. [7] ITEM NO. FOR WESTINGHOUSE TERMINAL POINTS. FOR DESCRIPTION SEE REFERENCE DWG. DC-663273-4 (79-8)
2. VALVES WITH ITEM NO'S. ARE SPECIFIED ON SPEC. 0722
3. DELETED.
4. ALL PIPING ON THIS SHEET (47) SHALL BE PG&E CODE CLASS "E", EXCEPT AS NOTED
5. WASTE CONCENTRATOR PACKAGE IS NOT IN USE. (47)
6. VENT CONDENSER, CONCENTRATOR CONDENSER & DISTILLATE COOLER ARE DESIGN CLASS II & SEISMICALLY ANALYZED BY THE SUPPLIER. (13)
7. SC 48 IS DESIGN CLASS II & SEISMICALLY ANALYZED PER DESIGN CRITERIA MEMORANDUM M-61.

UNIT 1

DIABLO CANYON POWER PLANT - PG&E CO.
LIQUID RADWASTE SYSTEM

DRAWING	SHEET	PAGE	REV
102019	7	0	81

DATE	DWN	RE	IV	PROFESSIONAL ENGINEER	PE DISC.	PE#	PE EXP.	
12-03-2010	AJFJ	FxC2		KERSI J. DALAL	MECHANICAL	M 16690	3/31/2012	REVISED PER DFT-7*997

RASTER=00008114.DGN
DGN=00008114.DGN
CAD User: AJFJ Date: 12-03-2010

Metric
3 Size

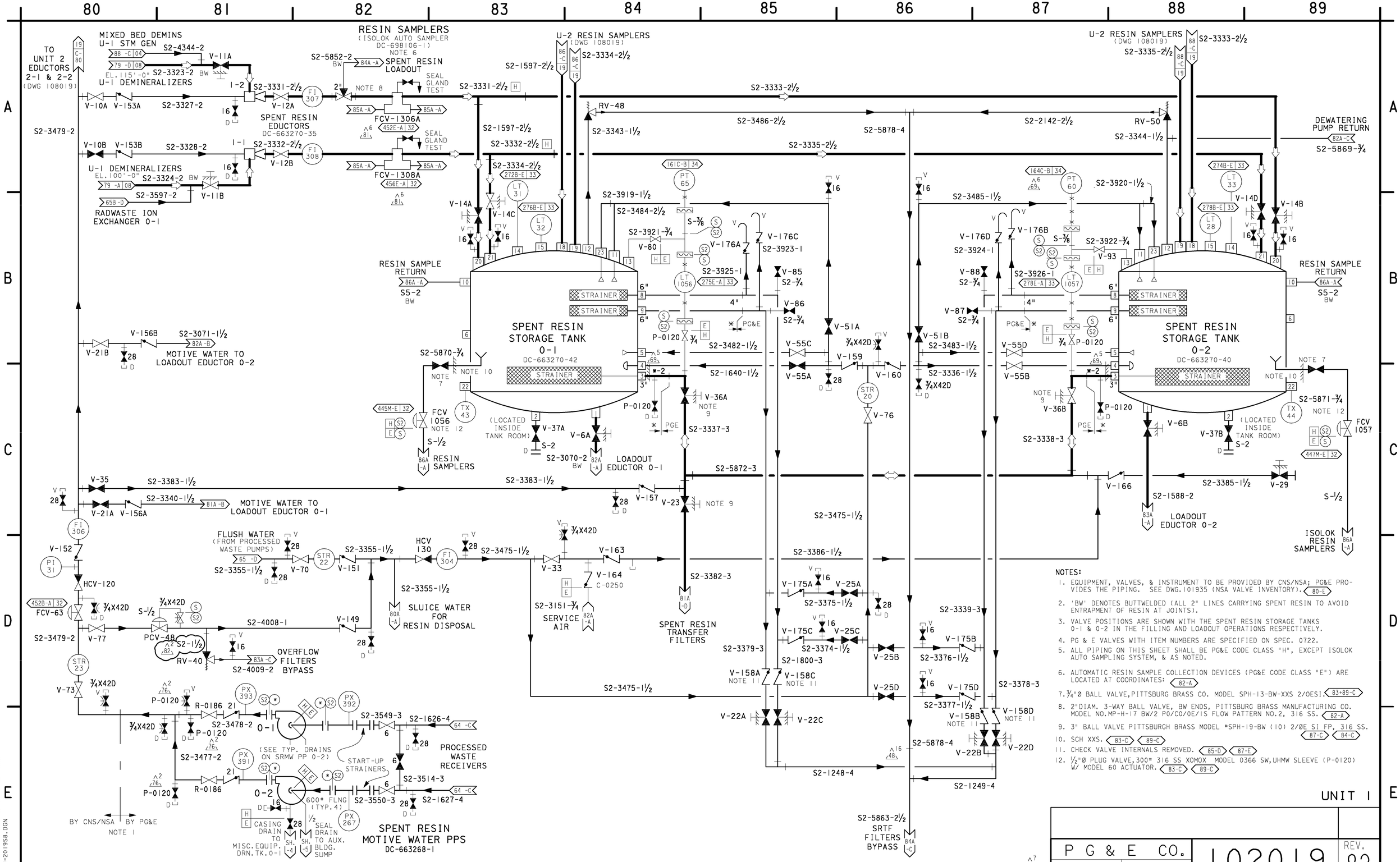

DATE	DWN	RE	IV	PROFESSIONAL ENGINEER	PE DISC.	PE#	PE EXP.	
6/11/98	CMG9	BSGI	-	KERSI J. DALAL	MECHANICAL	M 16690	3/31/00	Revised per FCT 023040

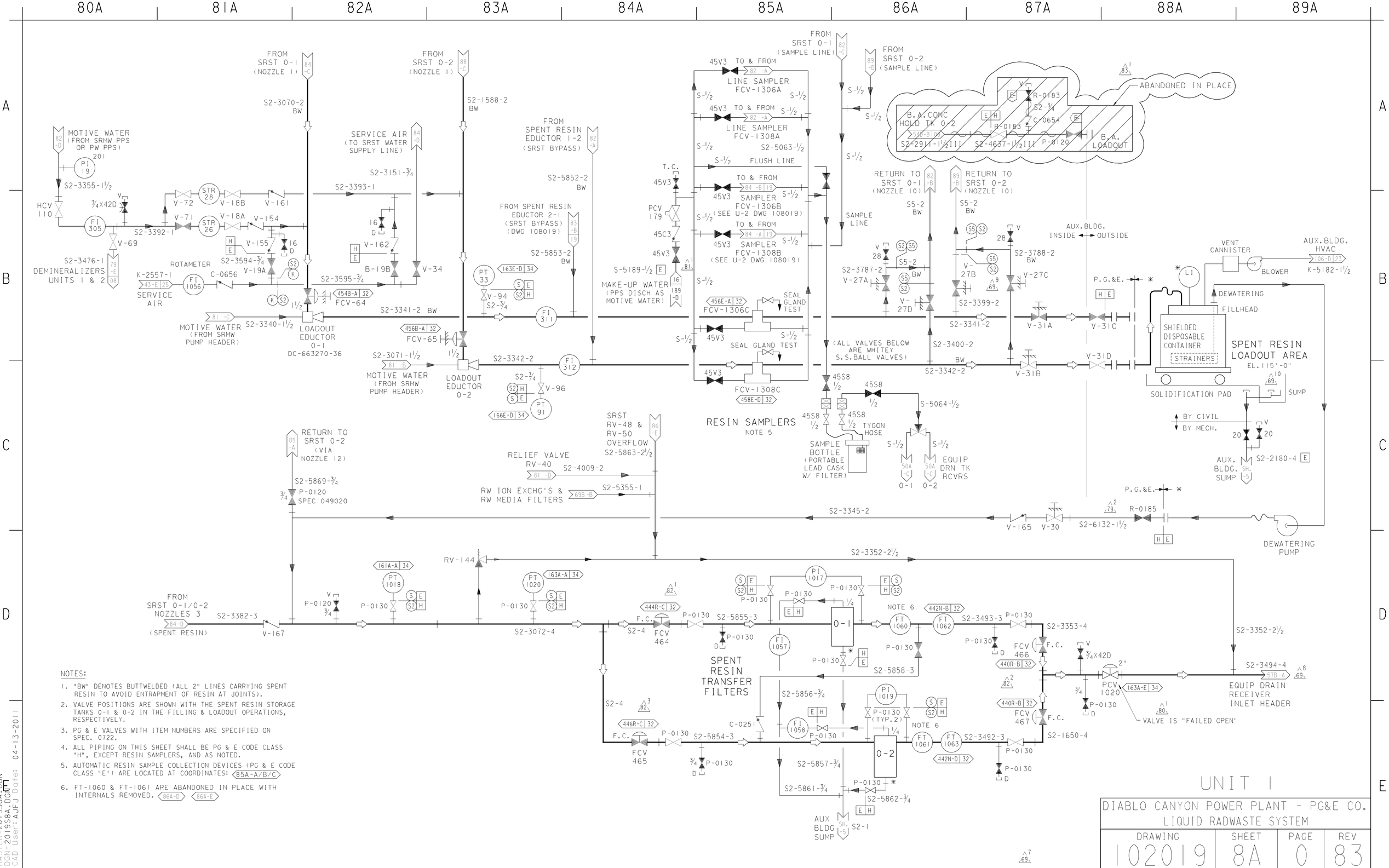

NOTES:

1. "BW" DENOTES BUTTWELDED (ALL 2" LINES CARRYING SPENT RESIN TO AVOID ENTRAPMENT OF RESIN AT JOINTS).
2. VALVE POSITIONS ARE SHOWN WITH THE SPENT RESIN STORAGE TANKS 0-1 & 0-2 IN THE FILLING & LOADOUT OPERATIONS, RESPECTIVELY.
3. PG & E VALVES WITH ITEM NUMBERS ARE SPECIFIED ON SPEC. 0722.
4. ALL PIPING ON THIS SHEET SHALL BE PG & E CODE CLASS "H", EXCEPT RESIN SAMPLERS, AND AS NOTED.
5. AUTOMATIC RESIN SAMPLE COLLECTION DEVICES (PG & E CODE CLASS "E") ARE LOCATED AT COORDINATES: 85A-A/B/C
6. FT-1060 & FT-1061 ARE ABANDONED IN PLACE WITH INTERNALS REMOVED. 86A-D 86A-E

UNIT 1

DIABLO CANYON POWER PLANT - PG&E CO.
LIQUID RADWASTE SYSTEM

DRAWING	SHEET	PAGE	REV
102019	8A	0	83

DATE	DWN	RE	IV	PROFESSIONAL ENGINEER	PE DISC.	PE#	PE EXP.	
04-13-2011	AJFJ	FxC2		KERSI J. DALAL	MECHANICAL	M 16690	3/31/2012	REVISED PER DDN-2*560

RASTER=201958A.DGN
DGN=201958A.DGN
CAD User: AJFJ Date: 04-13-2011

INPG1C
3 Size

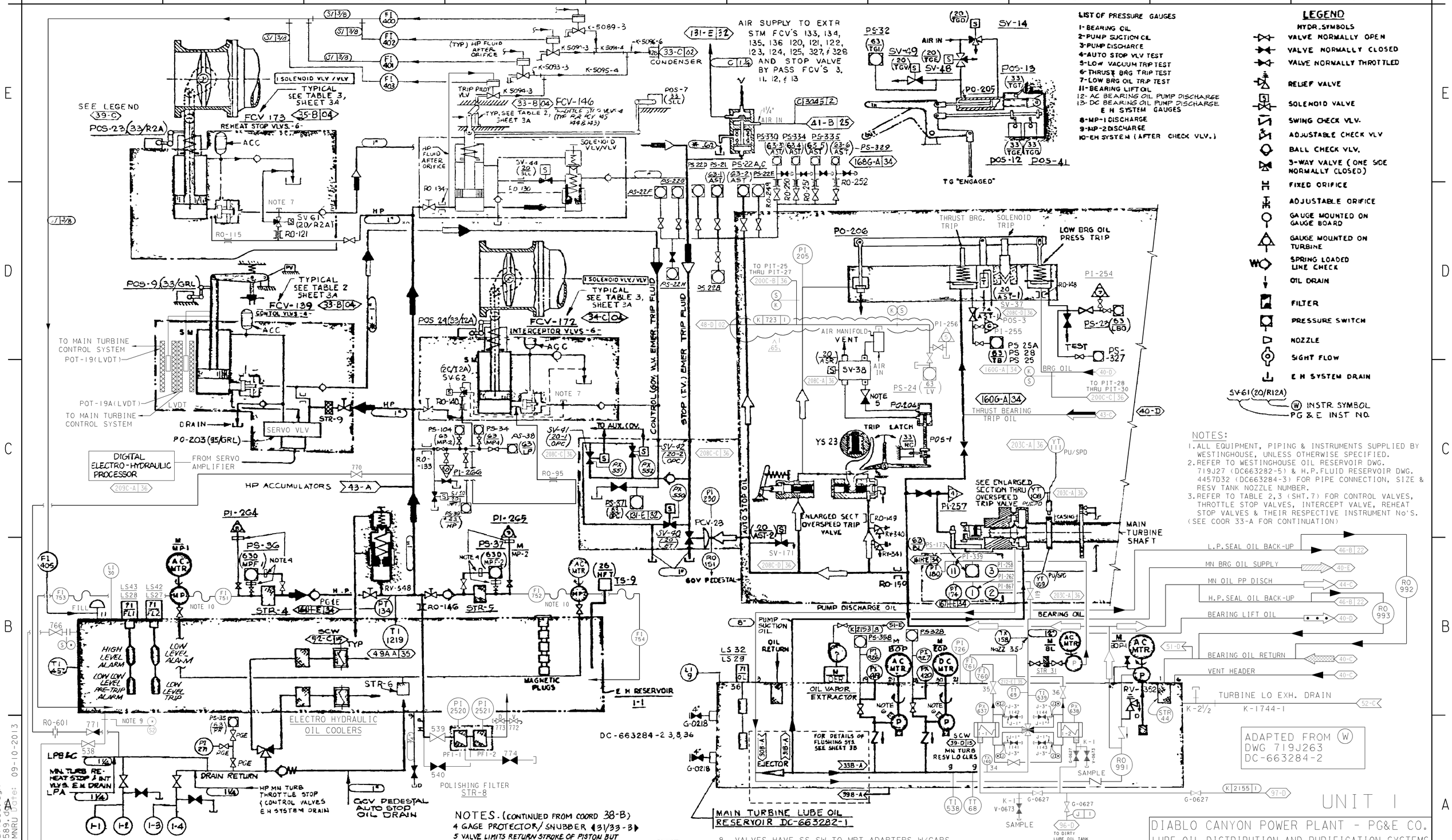

NOTES:
1. ALL EQUIPMENT, PIPING & INSTRUMENTS SUPPLIED BY WESTINGHOUSE, UNLESS OTHERWISE SPECIFIED.
2. REFER TO WESTINGHOUSE OIL RESERVOIR DWG. 719J27 (DC663282-5) & H.P. FLUID RESERVOIR DWG. 4457D32 (DC663284-3) FOR PIPE CONNECTION, SIZE & RESV TANK NOZZLE NUMBER.
3. REFER TO TABLE 2,3 (SHT.7) FOR CONTROL VALVES, THROTTLE STOP VALVES, INTERCEPT VALVE, REHEAT STOP VALVES & THEIR RESPECTIVE INSTRUMENT No'S. (SEE COOR 33-A FOR CONTINUATION)

NOTES. (CONTINUED FROM COORD 38-B)
4 GAGE PROTECTOR/SNUBBER ◀31/33-B▶
5 VALVE LIMITS RETURN STROKE OF PISTON BUT DOES NOT AFFECT LATCH STROKE ASCO MODEL V0222A1 (36-C)
6 1/8"Φ VENT ORIFICE DRILLED IN 3/8" NPT PIPE PLUG (36-A)
7. PLUG OR ABANDON PRESSURE SWITCH.
8. VALVES HAVE SS SW TO MPT ADAPTERS W/CAPS.
9. 3/4" FPT TO 1 1/2" SW ADAPTER 3000# SS W/SEAL WELDED THREADS.
10. EH PUMP, DISCHARGE, SUCTION & CASE DRAIN LINES AND ASSOCIATED INSTRUMENTS - 663284-61.

DIABLO CANYON POWER PLANT - PG&E CO.
LUBE OIL DISTRIBUTION AND PURIFICATION SYSTEMS

DRAWING	SHEET	PAGE	REV
102020	3	0	65

DATE	DWN	RE	IV	PROFESSIONAL ENGINEER	PE DISC.	PE#	PE EXP.	
09-10-2013	MNRU	FxC2	RxG2	NOT REQUIRED	N/A	N/A	N/A	REVISED PER DFT-7*2291

RASTER-erul1589.dgn
DGN=erul1589.dgn
CAD User: MNRU DGTe: 09-10-2013
3 Size

MAIN TURBINE-GENERATOR BEARING LUBRICATION SYSTEM

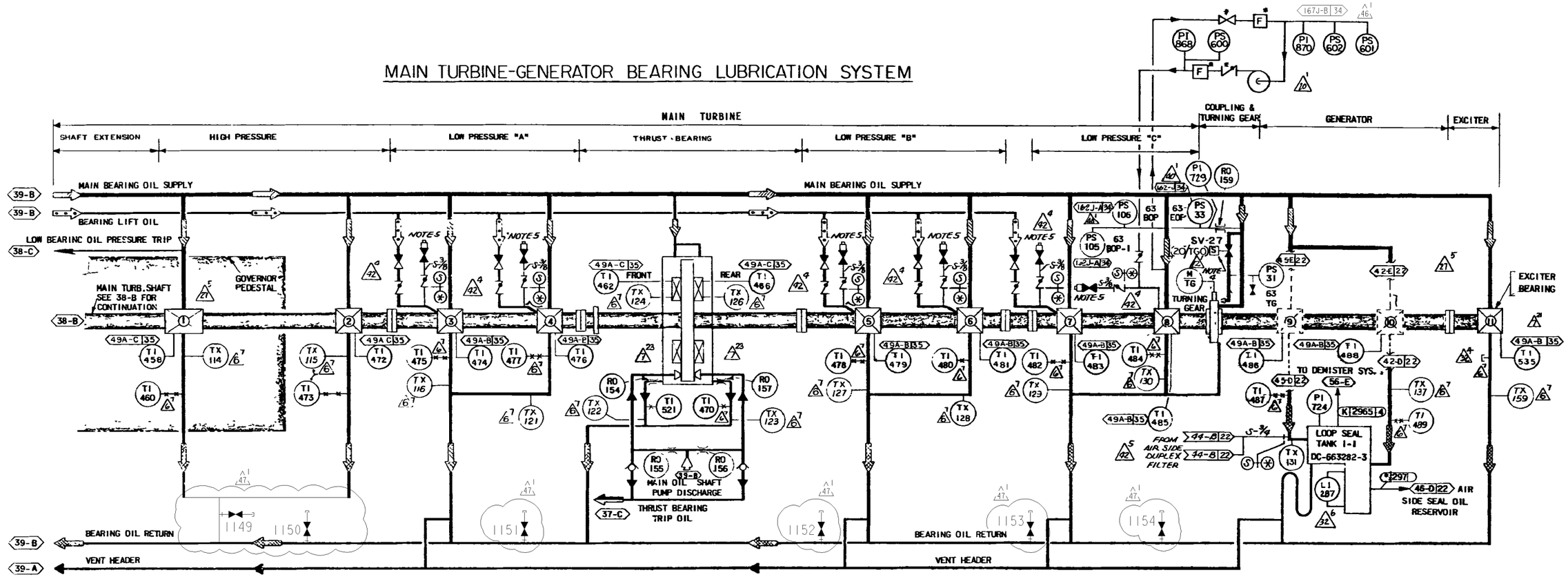

NOTES:

1. FOR BEARING SEQUENCE SEE DWG. NO. 663280-17 AND WESTINGHOUSE INSTRUCTION BOOK DC-663280-37, TAB 2.
2. FOR PIPING OIL CLEARANCES & EQUIPMENT LOCATION SEE DC-663282-4
3. ALL PIPING & INSTRUMENTS BY (W), UNLESS OTHERWISE NOTED.

4 SOLENOID VALVE WITH MANUAL OPERATOR. C.W. ROTATION FOR MANUAL OPENING C.C.W. FOR ELECTRIC OPERATION (47-D)

5 END CONNECTION IS A BUTTON HEAD GREASE FITTING FOR MANUALLY PUMPED LIFT OIL, DC-663282-83 (42/47-D)

HP ACCUMULATORS

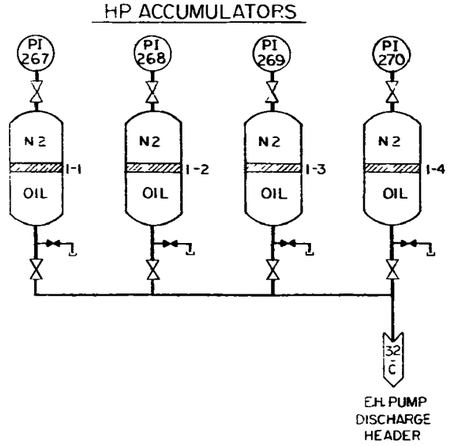

TURBINE SUPERVISORY INSTRUMENTATION

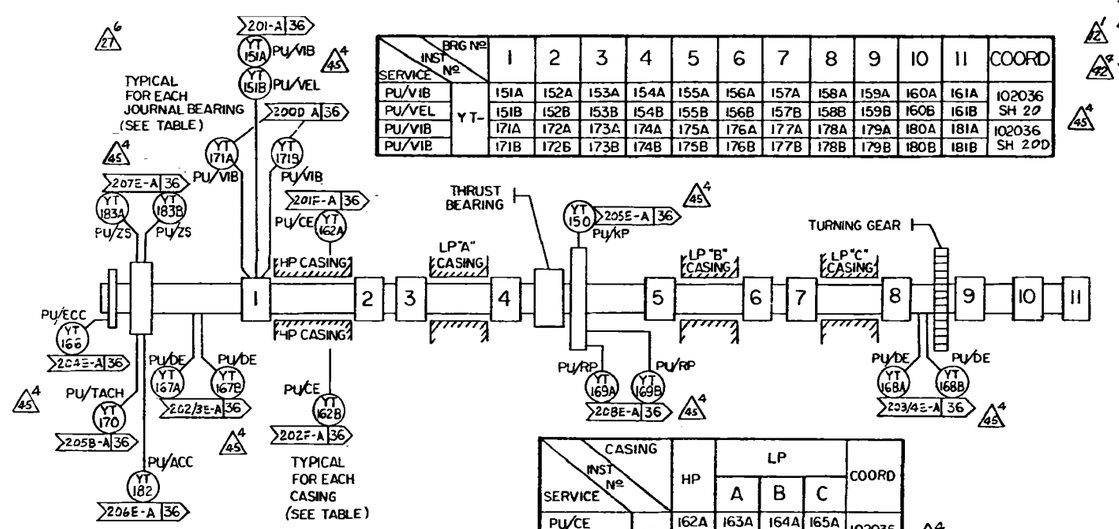

SERVICE \ INST Nº \ BRG Nº		1	2	3	4	5	6	7	8	9	10	11	COORD
PU/VIB	YT-	151A	152A	153A	154A	155A	156A	157A	158A	159A	160A	161A	102036 SH 20
PU/VEL		151B	152B	153B	154B	155B	156B	157B	158B	159B	160B	161B	
PU/VIB		171A	172A	173A	174A	175A	176A	177A	178A	179A	180A	181A	102036 SH 20D
PU/VIB		171B	172B	173B	174B	175B	176B	177B	178B	179B	180B	181B	

SERVICE \ INST Nº \ CASING		HP	LP A	LP B	LP C	COORD
PU/CE	YT-	162A	163A	164A	165A	102036 SH. 20F
PU/CE		162B	163B	164B	165B	

UNIT 1

DIABLO CANYON POWER PLANT - PG&E CO.
LUBE OIL DISTRIBUTION AND PURIFICATION SYSTEMS

DRAWING	SHEET	PAGE	REV
102020	4	0	47

DATE	DWN	RE	IV	PROFESSIONAL ENGINEER	PE DISC.	PE#	PE EXP.	
03-20-2009	ADMI	FxC2		KERSI J. DALAL	MECHANICAL	M 16690	3/31/2010	REVISED PER DDT-4*162

INPGIC
1 Size

RASTER=102020s4.dgn
DGN=102020s4.dgn
CAD User: ADMI Date: 03-20-2009

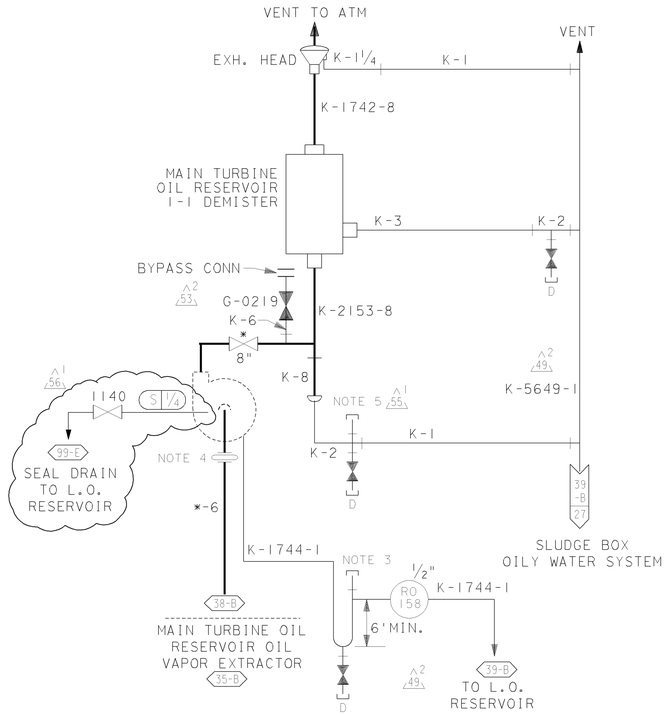

MAIN TURBINE OIL RESERVOIR VAPOR EXTRACTOR AND DEMISTER SYSTEM

DC-663282-1

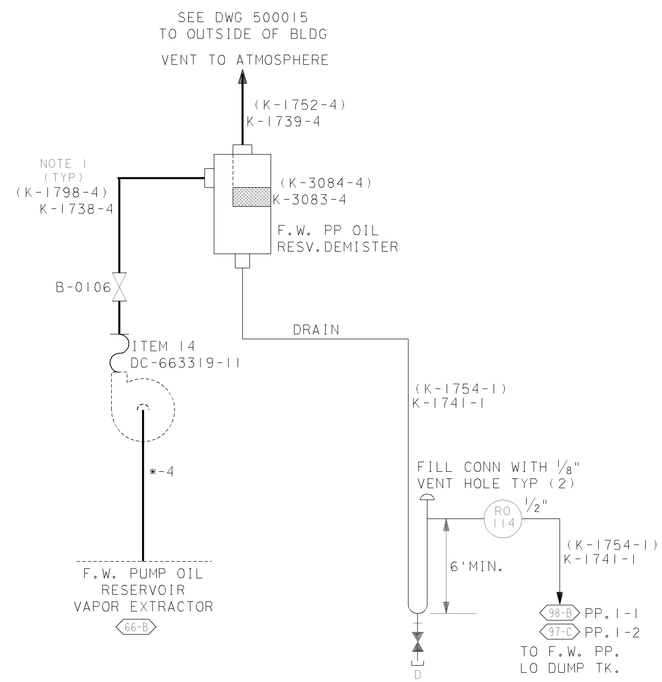

FEEDWATER PUMP OIL RESERVOIR 1-1 VAPOR EXTRACTOR AND DEMISTER SYSTEM

FOR FEEDWATER PUMP 1-2 REFER TO NOTES 1 & 2

DC-663300-5
DC-663300-11 TAB 44

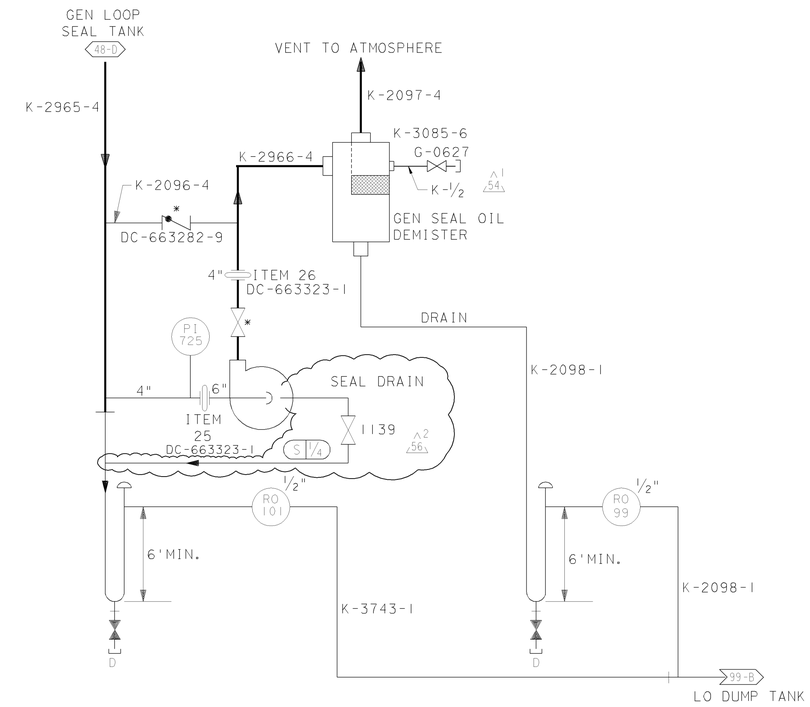

GENERATOR LOOP SEAL OIL TANK VAPOR EXTRACTOR AND DEMISTER SYSTEM

DC-663282-3

NOTES:

1. ALL LINE NUMBERS IN PARENTHESIS ARE FOR FEEDWATER PUMP 1-2 (53-E)
2. INSTRUMENT NUMBERS FOR FW. PP. OIL RESERVOIR 1-2 ARE ON SHEET 7 TABLE 4 (54-B)
3. FILL CONN WITH 1/4" VENT HOLE (52-D)
4. 8" EXPANSION JOINT, STOCK CODE 77-66111 (51-D) 49
5. FILL CONN ONLY, NO VENT HOLE (52-D) 55

48

UNIT 1

DIABLO CANYON POWER PLANT - PG&E CO.

DRAWING	SHEET	PAGE	REV
102020	5	0	56

DATE	DWN	RE	IV	PROFESSIONAL ENGINEER	PE DISC.	PE#	PE EXP.	
12-07-2005	MIBF	RMDI		KERSI J. DALAL	MECHANICAL	M 16690	3/31/2006	REVISED PER FCT-029947

RASTER=2020s5.dgn
DGN=2020s5.dgn
CAD User:MIBF Date: 12-07-2005

Generic 3 Size

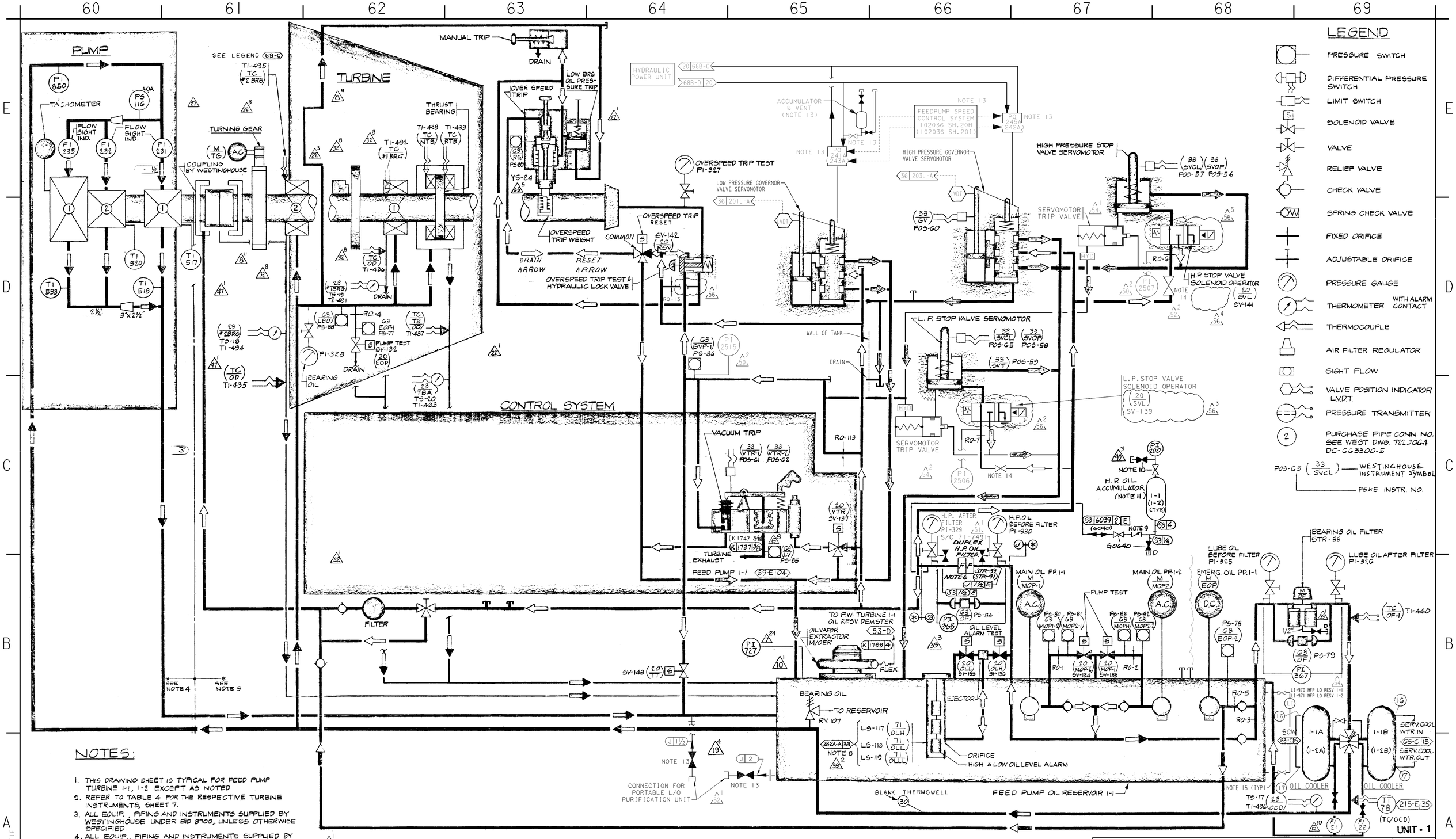

NOTES:

1. THIS DRAWING SHEET IS TYPICAL FOR FEED PUMP TURBINE 1-1, 1-2 EXCEPT AS NOTED
2. REFER TO TABLE 4 FOR THE RESPECTIVE TURBINE INSTRUMENTS, SHEET 7.
3. ALL EQUIP., PIPING AND INSTRUMENTS SUPPLIED BY WESTINGHOUSE UNDER BID 8700, UNLESS OTHERWISE SPECIFIED.
4. ALL EQUIP., PIPING AND INSTRUMENTS SUPPLIED BY BYRON JACKSON UNDER BID 8702, UNLESS OTHERWISE SPECIFIED. (61-B)
5. REFER TO TABLE 1 FOR RESPECTIVE PUMP INSTRUMENTS SHEET 7 (61-B)
6. (97) 6. HP OIL DUPLEX FILTER SUPPLIED BY PTI. (66-B)

(39) 2 8. SUPPLIED BY PG & E. (65-A)

(55) 1 7. DELETED.

(40) 3 9. 2" CHECK VALVE S.S. (75-2904) WITH 3/16" PASS HOLE.
10. NUPRO 6S-6 P4T (68-C)
11. ACCUMULATOR, PI, SUPPLIED BY OILAIR, DC 663301-30. (68-C)

(55) 1 12. DELETED.

(55) 2 13. PROVIDED BY WOODWARD.
(52) 2 14. WHITEY MODEL SS-45F8
(54) 2 15. WHITEY MODEL B-45F8, DWG 698106-26.

F. W. PUMP TURBINE CONTROL OIL SYSTEM

REF. DWGS. (W) 7LJ0G0 DC-663301-1
(W) 7LJ852 DC-663301-2

5/28/02	PMH2	JCN3	RGJI	JAMES C. NELSON	MECHANICAL	M 19424	9/30/2003	Revised per AR A0541295 & FCT-25933
DATE	DWN	RE	IV	PROFESSIONAL ENGINEER	PE DISC.	PE#	PE EXP.	

P G & E CO. | SHEET 6 | PAGE 0 | 102020 | REV. 56

CAD User:PMH2 Date:10-05-2001 DGN=ERU11593.DGN RASTER=ERU11593.TIF

FEEDWATER PUMP TURBINE DRIVE TABLE 4

DESCRIPTIONS				PG & E INSTR. FWP 1-1	PG & E INSTR. FWP 1-2	102020 COORD.	(W) DEV. NO.
LINE BEARING		DRAIN OIL	NO. 1	TI-436	TI-447	62-D	TC/OD
				TI-491	TI-497	62-D	23/1BRG
				TS-19	TS-28	62-E	23/1BRG
		METAL		TI-492	TI-498	63-E	TC/#1 BRG
				T2345A ⊛	T2352A ⊛		
THRUST BEARING	NORMAL DIRECTION	METAL		TI-438	TI-449	63-E	TC/NTB
				T2347A ⊛	T2354A ⊛		
	REVERSE DIRECTION			TI-439	TI-536	63-F	TC/RTB
				T2348A ⊛	T2355A ⊛		
		DRAIN OIL		TI-437	TI-448	63-D	TC/TB/OD
				TI-493	TI-499	63-D	23/TBA
				TS-20	TS-33	63-D	23/TBA
LINE BEARING		DRAIN OIL	NO. 2	TI-435	TI-446	61-E	TC/OD
				TI-494	TI-500	61-D	23/2BRG
				TS-18	TS-34	61-D	23/2BRG
		METAL		TI-495	TI-501	61-E	TC/#2 BRG
				T2346A ⊛	T2353A ⊛		
LUBE OIL COOLERS	INLET	BEFORE FILTER		STR-38 / PI-367	STR-40 / PI-369	69-B / 69-B	FILTER / -
				PS-79	PS-92	69-B	63/OF
		AFTER FILTER		PI-325	PI-331	68-B	-
				PI-326	PI-332	69-B	-
				TI-440	TI-443	69-B	TC/OF-1
	OUTLET			TI-496	TI-502	69-A	23/OCD
				TS-17	TS-36	69-A	23/OCD
				TT-78	TT-79	69-A	TC/OCD
				RV-107	RV-108	65-A	-
				~~PT-19~~	~~PT-21~~	~~64-A~~	~~63/LOTR~~
BEARING OIL SUPPLY				PI-328	PI-334	62-D	-
				PS-88	PS-101	62-D	63/LBO
				FI-21	FI-70	69-B	-
				FI-22	FI-25	69-B	-
MAIN OIL PUMP	NO. 1	START & TEST		RO-1	RO-14	67-B	-
				PS-83	PS-96	67-B	63/MP01-1
				SV-134	SV-147	67-B	20/MOP-1
		RUNNING		PS-80	PS-93	67-B	63/MOP 1-2
	NO. 2	START & TEST		RO-2	RO-15	67-B	-
				PS-81	PS-94	67-B	63/MOP2-1
				SV-133	SV-148	67-B	20/MOP 2
		RUNNING		PS-82	PS-95	67-B	63/MOP 2-2
	DISCH. TO BRG.			RO-3	RO-16	68-B	-

DESCRIPTIONS			PG & E INSTR. NO. FWP 1-1	PG & E INSTR. NO. FWP 1-2	102020 COORD.	(W) DEV. NO.
EMERGENCY OIL PUMP	NO. 1	START & TEST	PS-77	PS-90	62-D	63/EOP 1
			SV-132	SV-146	62-C	20/EOP
			RO-4	RO-17	62-D	-
		RUNNING	PS-78	PS-91	68-B	63/EOP 2
			RO-5	RO-18	68-B	-
RESERVOIR OIL LEVEL		HIGH	LS-117	LS-123	66-A	71/OLH
		HIGH TEST	SV-136	SV-150	67-B	20/OLH
		LOW	LS-118	LS-124	66-A	71/OLL
		LOW TEST	SV-135	SV-128	66-B	20/OLL
		LOW-LOW	LS-119	LS-125	66-A	71/OLLL
H.P. OIL SYSTEM		BEFORE FILTER	PI-330	PI-347	66-B	-
		AFTER FILTER	PI-329	PI-335	66-B	-
			STR-39 / PI-368	STR-41 / PI-370	66-B / 66-B	FILTER
			PS-84	PS-97	66-B	63/OF
			~~PT-20~~	~~PT-22~~	~~67-C~~	~~63/OGTR~~
			TI-434	TI-445	66-B	
HIGH PRESSURE SERVOMOTOR		STOP VALVE	RO-6	RO-19	67-D	—
			POS-56&57	POS-70&71	68-D	
			SV-141	SV-155	68-D	33/SVOP&SVCL
						20/SVL
		GOV V.	PI-2507	PI-2509	67-D	
			POI-20	POI-22	66-D	63/GV
			POT-20	POT-22	66-D	-
			POS-60	POS-74	66-D	
			PO-245A	PO-242A	66-E	33/GV

FEEDWATER PUMP TABLE 1

DESCRIPTION			FWP 1-1	FWP 1-2	102020 COORD.
LINE BEARING	DRAIN OIL	NO. 1	TI-518	TI-523	61-D
	METAL		TI-517	TI-522	61-D
			T2349A ⊛	T2356A ⊛	
	OIL SUPPLY		FI-231	FI-233	61-D
	METAL	NO. 2	TI-520	TI-525	61-D
			T2350A ⊛	T2357A ⊛	
	OIL SUPPLY		FI-232	FI-234	60-D
THRUST BEARING	DRAIN OIL	NO. 1	TI-533	TI-534	60-D
			T2351A ⊛	T2358A ⊛	
	OIL SUPPLY		FI-235	FI-236	60-D
BEARING OIL SUPPLY			PI-850	PI-851	60-E
			PS-116	PS-119	60-E

DESCRIPTIONS		PG & E INSTR. NO. FWP 1-1	PG & E INSTR. NO. FWP 1-2	102020 COORD.	WOODWARD NO.
HYDRAULIC POWER UNIT (HPU)	PRESS CONTROL VALVE NO.1	PCV-1551	PCV-1561	64B-D	RV-1
	PRESS CONTROL VALVE NO.2	PCV-1552	PCV-1562	64B-C	RV-2
	FILTER NO.1	HPU1F1	HPU2F1	65B-D	NA
	FILTER NO.2	HPU1F2	HPU2F2	65B-C	NA
	OIL TEMPERATURE GAUGE	TI-1509	TI-1519	65B-B	NA
	OIL LEVEL GAUGE	LI-1509	LI-1519	65B-B	NA
	HPU DISCH PRESSURE GAUGE	PI-1509	PI-1519	64B-E	NA
	OIL TEMP HIGH SWITCH	TS-1509	TS-1519	61B-B	NA
	LOW OIL LEVEL SWITCH	LS-1509	LS-1519	61B-B	NA
	FILTER 1 HIGH DIFF PRESS	PS-1514	PS-1524	65B-D	DS-1
	FILTER 2 HIGH DIFF PRESS	PS-1515	PS-1525	65B-C	DS-2
	HPU DISCH PRESS LOW/LO-LO	PS-1510	PS-1520	66B-D	PS 3-1, PS3-2
	HPU PUMP 1 LOW DISCH PRESS	PS-1512	PS-1522	63B-D	PS-1
	HPU PUMP 2 LOW DISCH PRESS	PS-1513	PS-1523	63B-C	PS-2
	HPU LOW DISCH PRESS TRIP	PS-1511A	PS-1521A	67B-D	NA
	HPU LOW DISCH PRESS TRIP	PS-1511B	PS-1521B	68B-D	NA
	HPU LOW DISCH PRESS TRIP	PS-1511C	PS-1521C	68B-D	NA

DESCRIPTION		PG & E INSTR NO FWP 1-1	PG & E INSTR NO FWP 1-2	102020 COORD	(W) DEV NO
THRUST BEARING WEAR		YT-70A YT-70B	YT-80A YT-80B	65A-D 66A-D	
KEY PHASOR		YT-71	YT-81	67A-B	
FW TURBINE BEARING	NO. 1	YT-72A YT-72B YT-73	YT-82A YT-82B YT-83	68A-D 68A-D 68A-B	
	NO. 2	YT-74A YT-74B YT-75	YT-84A YT-84B YT-85	64A-D 64A-D 64A-B	
FW PUMP BEARING	NO 1	YT-76A YT-76B YT-77	YT-86A YT-86B YT-87	61A-D 61A-D 61A-B	
	NO. 2	YT-78A YT-78B YT-79	YT-88A YT-88B YT-89	60A-D 60A-D 60A-B	
LOW PRESSURE SERVOMOTOR	GOV V	PO-241A POT-21 POI-21	PO-243A POT-23 POI-23	65-E 65-D 65-D	- - 63/GV
LOW PRESSURE SERVOMOTOR	STOP VALVE	POS 58&65 POS-59	POS-72 & 79 POS-73	66-D 66-D	33/SVOP/SVCL 33/SVT
		SV-139 RO-7 PI-2506	SV-153 RO-20 PI-2508	67-C 66-C 66-C	20/SVL -
SPEED PICKUP MPU 1		YE1509A	YE1519A	65A-B	LCC DEV NO. PU/SP
SPEED PICKUP MPU 2		YE1509B	YE1519B	66A-B	PU/SP
SPEED PICKUP MPU 3		YE-1509C	YE-1519C	66A-B	
H.P. OIL ACCUMULATOR		PI-200	PI-201	68-C	
PROTECTIVE DEVICE	VACUUM TRIP	POS-61 POS-62 PS-85 SV-137	POS-75 POS-76 PS-98 SV-151	65-C 65-C 65-B 65-C	33/VTR 1 33/VTR 2 63/LV 20/VTR
	OVERSPEED TRIP	PI-327 PS-89 SV-142 YS-24 RO-13	PI-333 PS-102 SV-156 YS-25 RO-26	64-D 63-D 64-D 63-E 64-D	- 63/RS 20/RSV - -
PICK-UP	ROTOR BEARING NO.1				
	ROTOR BEARING NO.2				
	THRUST BRG.WEAR				
	ROTOR ECCENTRICITY			62-D	PU/RX
	TURBINE SPEED ZERO	YT-20	YT-22	62A-B	PU/ZSD
OIL VAPOR EXTRACTION VENT		RO-114	RO-38	55-D	-
TRIP OIL		RO-113 PS-86 SV-143 PI-2515	RO-37 PS-99 SV-157 PI-2516	65-C 64-C 64-B 65-D	- 63/GVP-1 20/TT
L.O. VAPOR EXTRACTOR VAC		PI-727	PI-728	65-B	

NOTE
⊛ INDICATES COMPUTER POINT

UNIT 1

DIABLO CANYON POWER PLANT - PG&E CO.
LUBE OIL DISTRIBUTION AND PURIFICATION SYSTEMS

DRAWING	SHEET	PAGE	REV
102020	7	0	53

DATE	DWN	RE	IV	PROFESSIONAL ENGINEER	PE DISC.	PE#	PE EXP.	
03-31-2010	GN07	RHS1		KERSI J. DALAL	MECHANICAL	M 16690	3/31/2012	REVISED PER DFT-7*756

RASTER=erul595.dgn
DGN=erul595.dgn
CAD User: GN07 Date: 03-31-2010

UNPRINT
3 Size

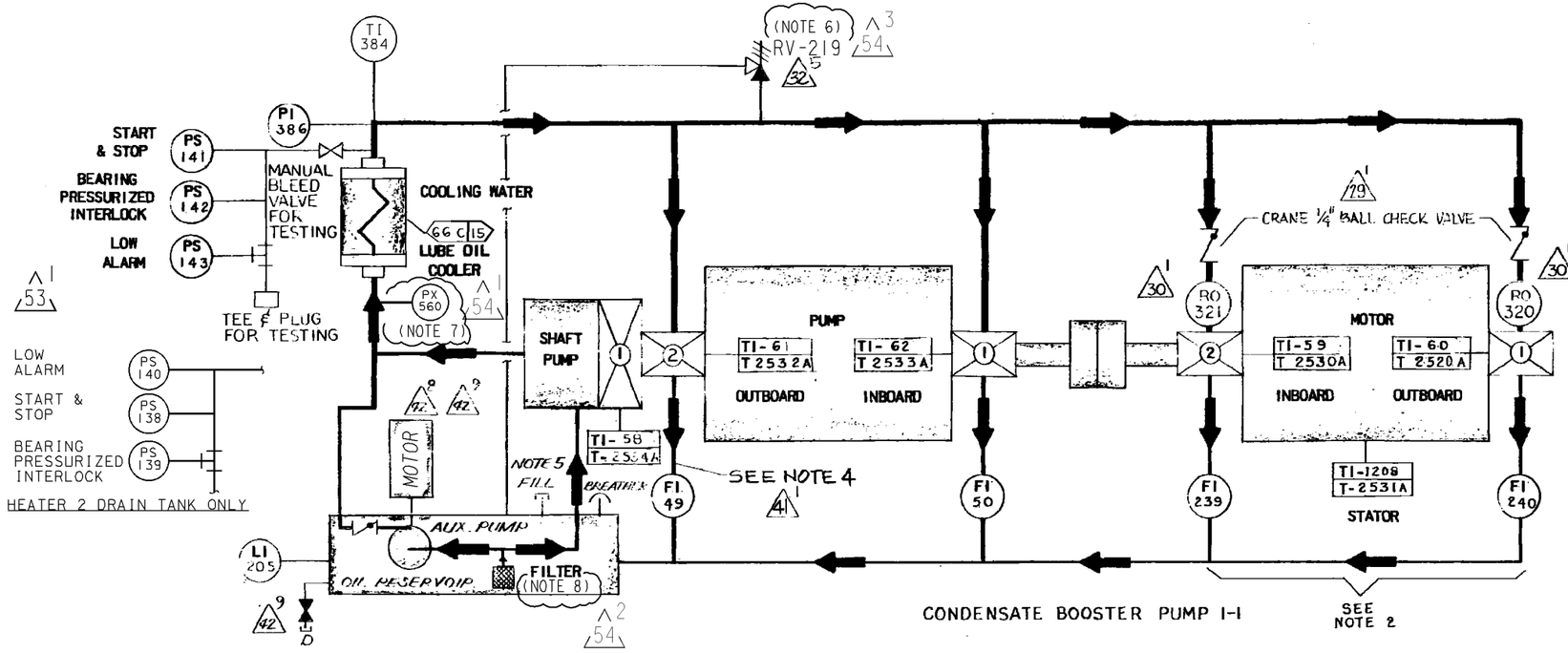

NOTES

1. ALL PIPING AND INSTRUMENTS ARE FURNISHED BY THE EQUIP VENDOR
2. COMPONENT COOLING WATER PUMP MOTORS AND HEATER 2 DRAIN TANK PUMP MOTOR ARE EQUIPPED WITH BEARING AUTOMATIC OILERS.
3. COMPONENT COOLING WATER PUMP LUBE OIL SYSTEMS ARE DESIGN CLASS I.
4. CONDENSATE BOOSTER PUMPS DRAIN LINE EQUIPPED WITH FLEXIBLE HOSE.
5. FILL CONNECTIONS: CCW USES 2" SAFETY LOCK FILL CAP HINGED COVER; HEATER 2 DRAIN TANK PUMP USES 2" SAFETY LOCK FILL CAP; CONDENSATE BOOSTER PUMPS USE 6"x10" REMOVABLE COVER AND 2" SAFETY LOCK FILL CAP WITH HINGED COVER
6. RV-218 IS CONNECTED INTO THE SYSTEM UPSTREAM OF THE L.O. COOLER, SEE DWG 106720 SHT 9 FOR MORE DETAILS.
7. PX-560 IS FOR THE HEATER 2 DRAIN TANK L.O. PUMP SYSTEM ONLY
8. FILTER IS OPTIONAL FOR HTR 2 DRAIN PUMP L.O. RESERVOIR.

LUBE OIL PUMP SYS.		MOTOR BRG. OIL RO OUTBOARD	MOTOR BRG. OIL RO INBOARD
BSTR. PUMP	1-1	320	321
	1-2	322	323
	1-3	324	325

INSTRUMENT NUMBERS

LUBE OIL PUMP SYSTEM		LUBE OIL COOLER WATER SUPPLY CROSS REF. COOR-SCHEM. 1020 XX	OIL RESEV. LEVEL	PUMPING SYSTEM: AUXILIARY LUBE OIL PUMP: RELIEF VALVE	START & STOP	INTRL. PRESS-URIZE BRGS. BEFORE ROLLING	HEADER: PRESSURE: LO ALARM	INDIC.	TEMP. XCH'GR OUT	DISTRIBUTION & RETURN SYSTEM: PUMP: BEARING: BRG. METAL: 1 THRUST	2 OUTBOARD	1 INBOARD	BRG. OIL RETURN: 2 OUTBRD.	1 INBOARD	2 INBOARD	1 OUTBRD.	MOTOR: BRG. METAL: 2 INBOARD	1 OUTBRD.	STATOR
			LI	RV	PS	PS	PS	PI	TI	TEMP. INDIC. / COMPUTER POINT = TIXXXX / TXXXXA			FI				TEMP. INDIC. / COMPUTER POINT = TIXXXX / TXXXXA		
COMPONENT COOLING WATER DC 663213-4	1-1	53A-C-14	201	233	322	244	321	859	1256	1257/0640	1258/0639	1259/0638	245	246	SELF-LUBRICATED BEARING SEE NOTE NO. 2		1269/0637	1268/0636	1024/0641
	1-2	54A-C-14	202	234	324	245	323	860	1260	1261/0646	1262/0645	1263/0644	247	248			1271/0643	1270/0642	1025/0647
	1-3	57A-C-14	203	235	326	246	325	861	1264	1265/0652	1266/0651	1267/0650	249	250			1273/0649	1272/0648	1026/0653
HEATER 2 DRAIN TANK DC 663043-1		55-C-15	204	218	138	139	140	385	683	NONE	57/2433	56/2434	47	45			55/2431	54/2430	1232/2432
CONDENSATE BOOSTER DC 663046-16	1-1	66-C-15	205	219	141	142	143	386	684	58/2534	61/2532	62/2533	49	50	239	240	59/2530	60/2529	1238/2531
	1-2	67-C-15	206	220	144	145	146	387	685	63/2540	66/2538	67/2539	51	52	241	242	64/2536	65/2535	1244/2537
	1-3	69-C-15	207	221	147	148	149	388	686	68/2546	71/2544	72/2545	53	54	243	244	69/2542	70/2541	1250/2543

UNIT 1

P G & E CO. | 102020 | REV. 54
SHEET 8 | PAGE 0

DATE	DWN	RE	IV	PROFESSIONAL ENGINEER	PE DISC.	PE#	PE EXP.	
12/13/02	PMH2	RMD1	-	ERBAN L. GREEN	MECHANICAL	M 20917	6/30/2005	Revised per FCT 027057-01

CAD User:PMH2 Date:12-12-2002
DGN=999C0014.DGN
RASTER=999C0014.TIF

INPGIC

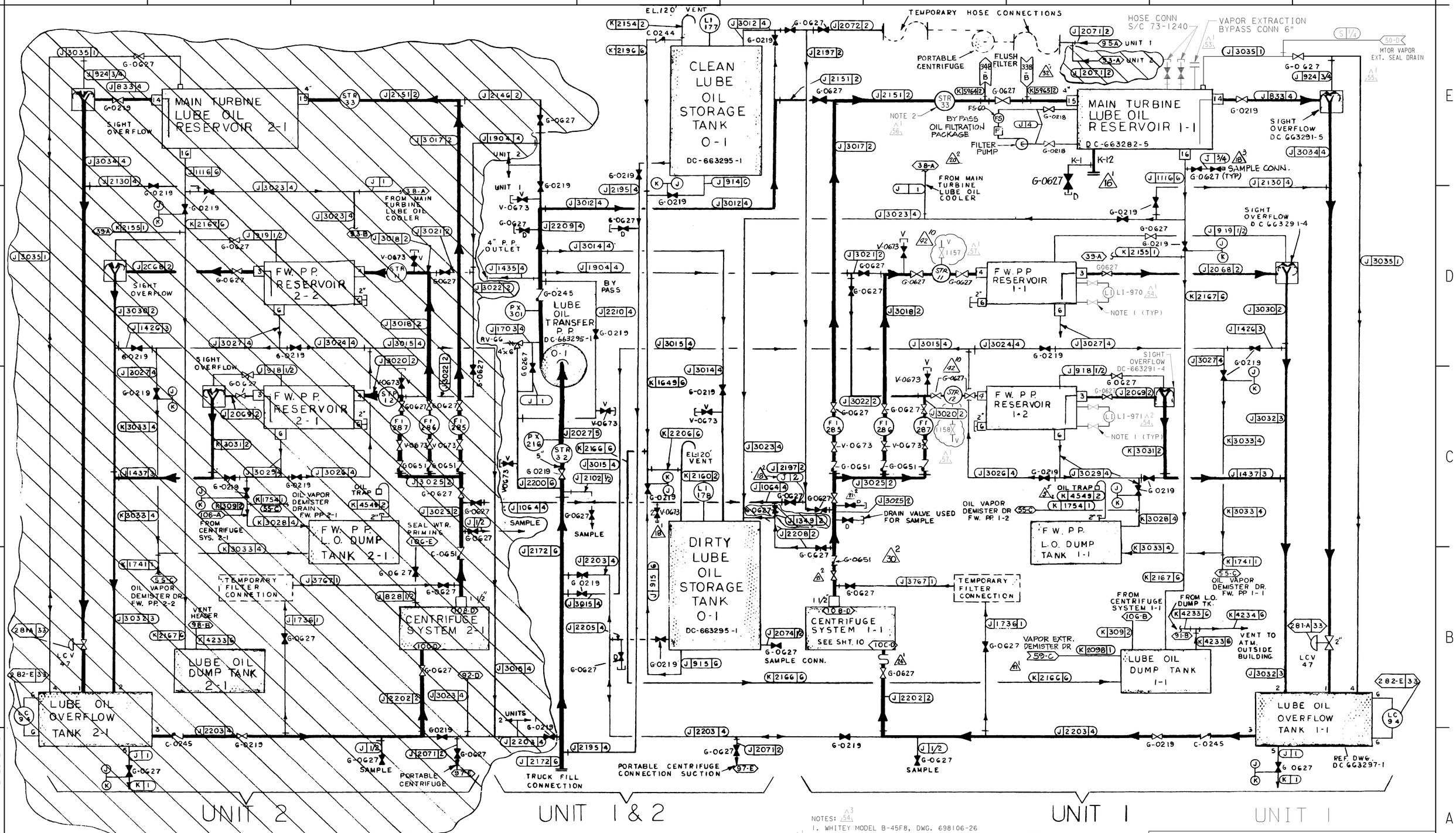

NOTES:
1. WHITEY MODEL B-45F8, DWG. 698106-26
2. SCREEN REMOVED FROM STR-33 PER AR# A0607305. 96-E

LUBE OIL SYSTEM

DIABLO CANYON POWER PLANT - PG&E CO.
LUBE OIL DISTRIBUTION AND PURIFICATION

DRAWING	SHEET	PAGE	REV
102020	9	0	57

DATE	DWN	RE	IV	PROFESSIONAL ENGINEER	PE DISC.	PE#	PE EXP.	
02-25-2009	RxG2	FxC2		KERSI J. DALAL	MECHANICAL	M 16690	3/31/2010	REVISED PER DFT-7*267

RASTER=999c0008.dgn
DGN=999c0008.dgn
CAD User:RxG2 Date: 02-25-2009

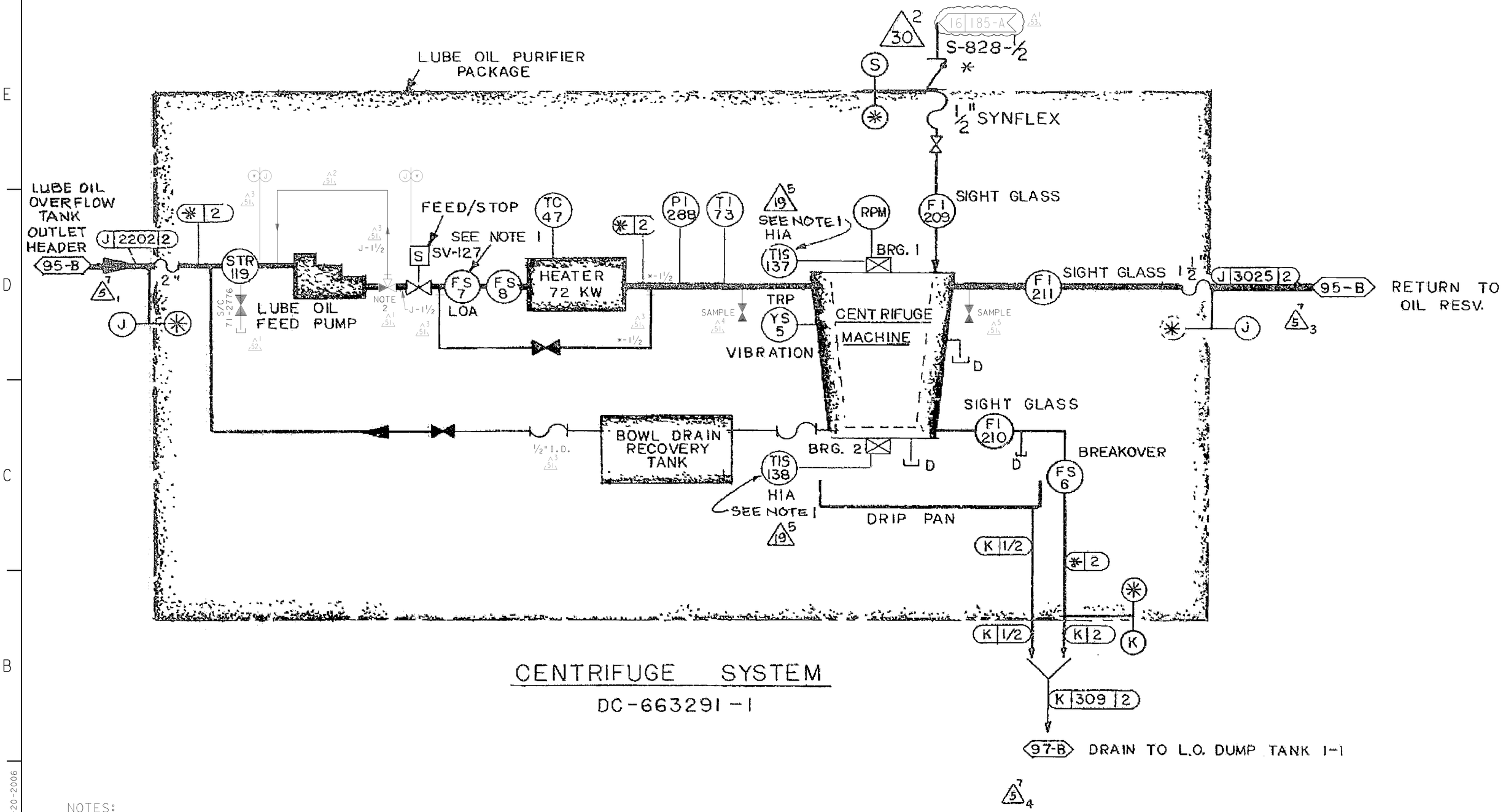

CENTRIFUGE SYSTEM

DC-663291-1

NOTES:

1. SUPPLIED BY P.G.&E.
2. JAMESBURY 3-WAY MANUAL FLOW CONTROL VALVE, MODEL AM150FD2236MT (102-D)

UNIT 1

DIABLO CANYON POWER PLANT - PG&E CO.

DRAWING	SHEET	PAGE	REV
102020	10	0	53

DATE	DWN	RE	IV	PROFESSIONAL ENGINEER	PE DISC.	PE#	PE EXP.	
01-20-2006	MIBF	RHSI		FRANCIS C. LING	MECHANICAL	M 16098	12/31/2007	REVISED PER FCT-030760

RASTER=2020s10.dgn
DGN=2020s10.dgn
CAD User: MIBF Date: 01-20-2006

3MPGIC 3 Size

110 111 112 113 114 115 116 117 118 119

1 NORMAL OPERATION

CENTRIFUGE SYSTEM CONTINUOUSLY RECIRCULATES AND CLEANS LUBE OIL THRU THE 3 RESERVOIRS.

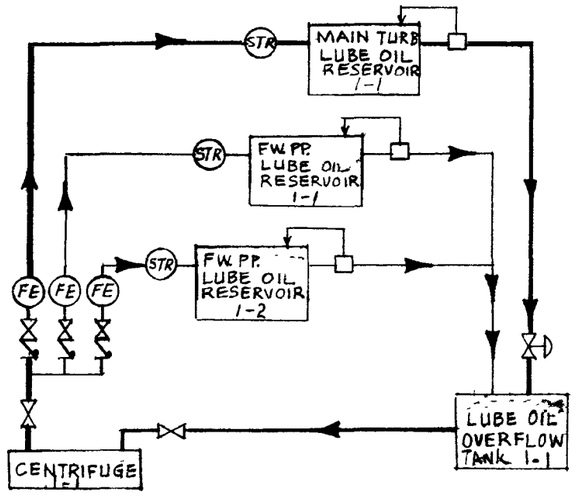

2 DRAIN RESERVOIRS

DRAIN MAIN TURBINE LUBE OIL RESERVOIR TO DIRTY LUBE OIL TANK BY GRAVITY
DRAIN FWPP RESERVOIRS TO DIRTY LUBE OIL STORAGE TANK BY USING TRANSFER PUMP.

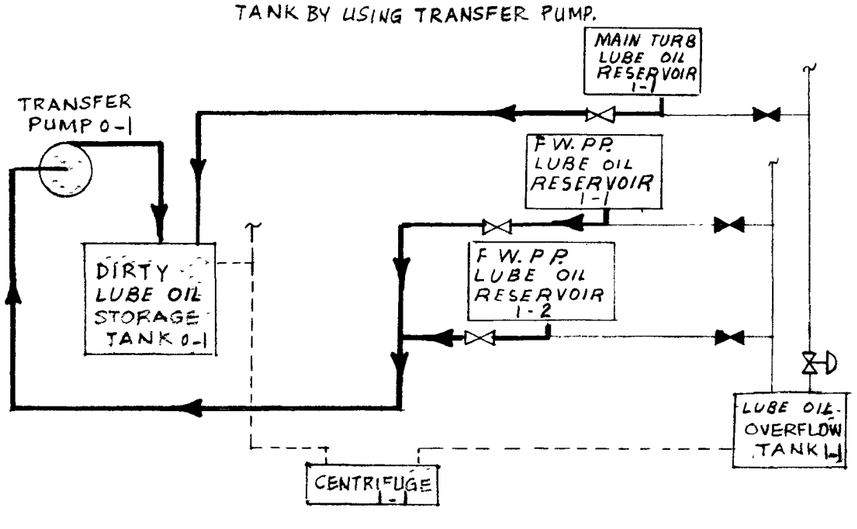

3 START UP

FILL MAIN TURBINE & FWPP 1 & 2 LUBE OIL RESERVOIRS FROM CLEAN OIL TANK, USING TRANSFER PUMP.

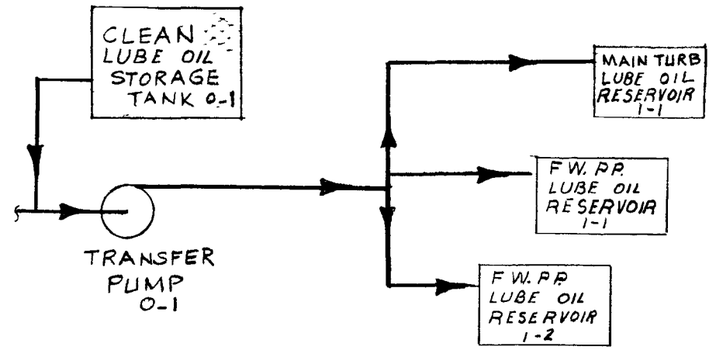

4 EMERGENCY DUMP

MANUALLY OPEN DRAIN VALVES TO DUMP TANKS

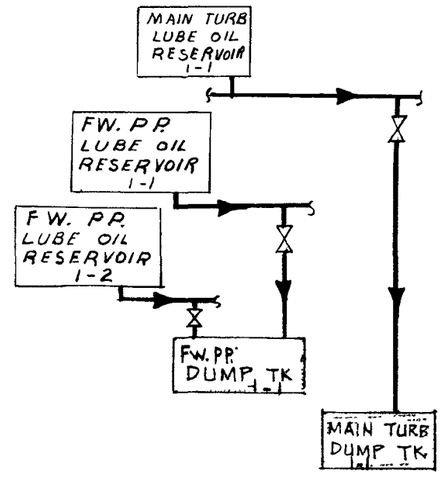

5 TRUCK FILL

USE BY-PASS AROUND TRANSFER PUMP WHEN TRUCK PUMP IS USED. TRANSFER PUMP MAYBE USED AS AN ALTERNATE TO TRUCK PUMP.

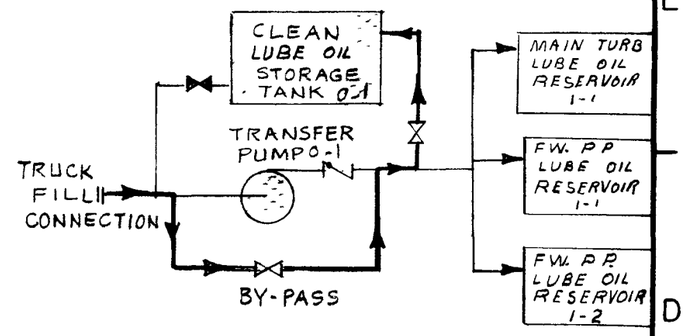

6 CLEANING DIRTY OIL

DIRTY OIL DRAINS TO CENTRIFUGE, OIL IS RECYCLED TO DIRTY OIL TANK. AFTER SEVERAL CYCLES CENTRIFUGE DISCHARGE IS ROUTED TO CLEAN OIL TANK.

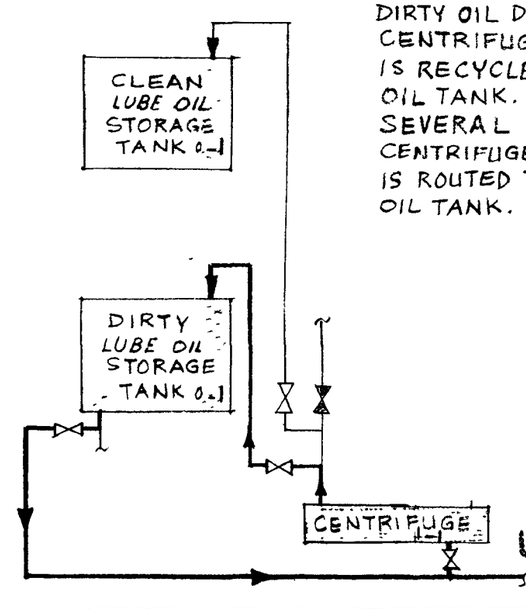

UNIT - 1

SCAN | | IC |

RM INDEXED REV. 1

P.G.&E.CO.

SHEET NO 11 OF SHEETS

DRAWING NUMBER 102020

CHANGE 1

35 M/M Neg. 1

DIESEL FUEL OIL SYSTEM

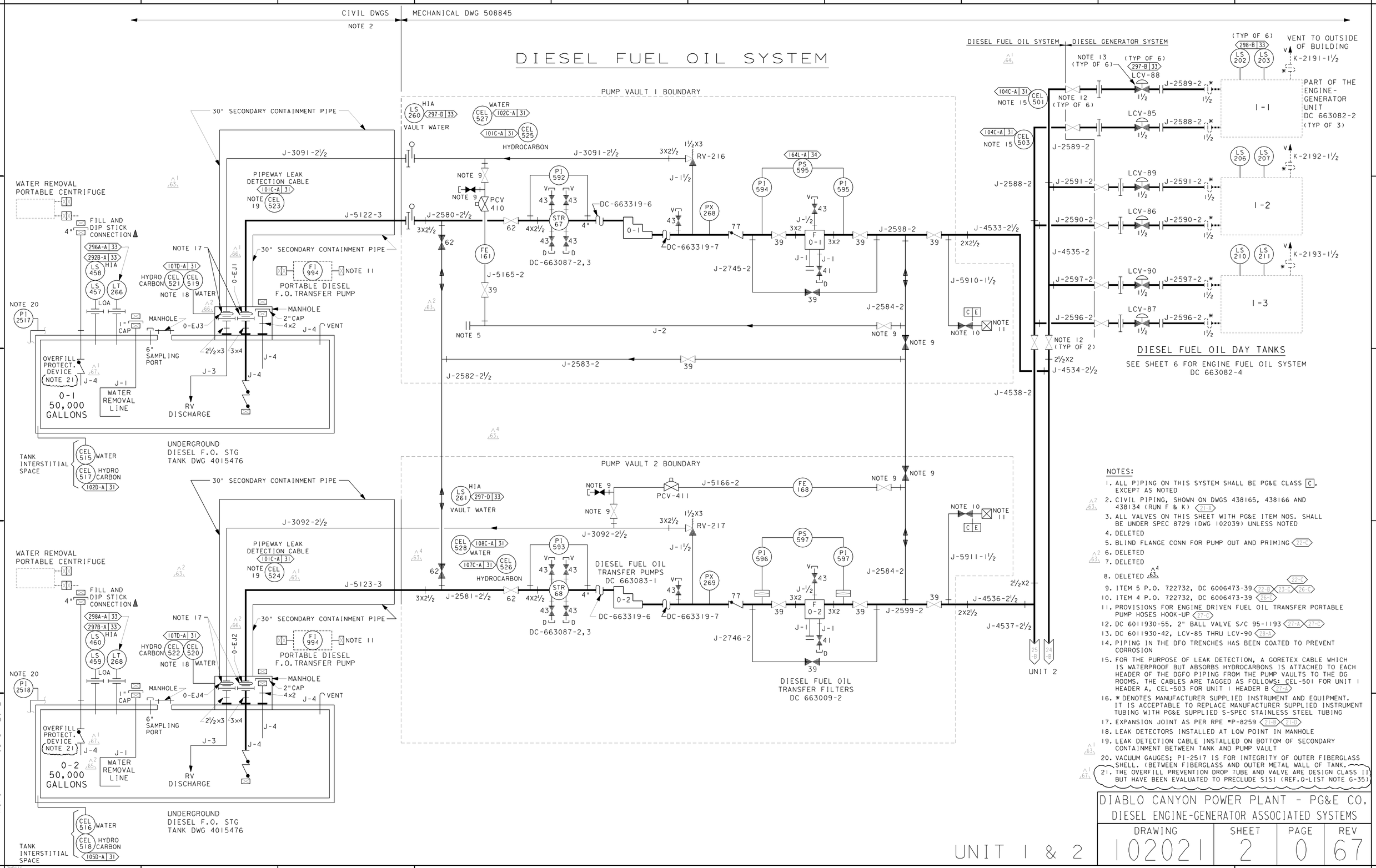

NOTES:

1. ALL PIPING ON THIS SYSTEM SHALL BE PG&E CLASS C, EXCEPT AS NOTED
2. CIVIL PIPING, SHOWN ON DWGS 438165, 438166 AND 438134 (RUN F & K) 21-A
3. ALL VALVES ON THIS SHEET WITH PG&E ITEM NOS. SHALL BE UNDER SPEC 8729 (DWG 102039) UNLESS NOTED
4. DELETED
5. BLIND FLANGE CONN FOR PUMP OUT AND PRIMING 22-C
6. DELETED
7. DELETED
8. DELETED
9. ITEM 5 P.O. 722732, DC 6006473-39 22-B 23-C 26-C 22-C
10. ITEM 4 P.O. 722732, DC 6006473-39 26-C
11. PROVISIONS FOR ENGINE DRIVEN FUEL OIL TRANSFER PORTABLE PUMP HOSES HOOK-UP 27-C
12. DC 6011930-55, 2" BALL VALVE S/C 95-1193 27-A 27-C
13. DC 6011930-42, LCV-85 THRU LCV-90 28-A
14. PIPING IN THE DFO TRENCHES HAS BEEN COATED TO PREVENT CORROSION
15. FOR THE PURPOSE OF LEAK DETECTION, A GORETEX CABLE WHICH IS WATERPROOF BUT ABSORBS HYDROCARBONS IS ATTACHED TO EACH HEADER OF THE DGFO PIPING FROM THE PUMP VAULTS TO THE DG ROOMS. THE CABLES ARE TAGGED AS FOLLOWS: CEL-501 FOR UNIT 1 HEADER A, CEL-503 FOR UNIT 1 HEADER B 27-A
16. * DENOTES MANUFACTURER SUPPLIED INSTRUMENT AND EQUIPMENT. IT IS ACCEPTABLE TO REPLACE MANUFACTURER SUPPLIED INSTRUMENT TUBING WITH PG&E SUPPLIED S-SPEC STAINLESS STEEL TUBING
17. EXPANSION JOINT AS PER RPE #P-8259 21-B 21-D
18. LEAK DETECTORS INSTALLED AT LOW POINT IN MANHOLE
19. LEAK DETECTION CABLE INSTALLED ON BOTTOM OF SECONDARY CONTAINMENT BETWEEN TANK AND PUMP VAULT
20. VACUUM GAUGES; PI-2517 IS FOR INTEGRITY OF OUTER FIBERGLASS SHELL. (BETWEEN FIBERGLASS AND OUTER METAL WALL OF TANK.
21. THE OVERFILL PREVENTION DROP TUBE AND VALVE ARE DESIGN CLASS II BUT HAVE BEEN EVALUATED TO PRECLUDE SIS) (REF.Q-LIST NOTE G-35)

DIABLO CANYON POWER PLANT - PG&E CO.
DIESEL ENGINE-GENERATOR ASSOCIATED SYSTEMS

DRAWING	SHEET	PAGE	REV
102021	2	0	67

UNIT 1 & 2

DATE	DWN	RE	IV	PROFESSIONAL ENGINEER	PE DISC.	PE#	PE EXP.	
05-31-2012	AJFJ	FxC2		KERSI J. DALAL	MECHANICAL	M 16690	3/31/2014	REVISED PER DFT-7*1670

RASTER-erul9961.DGN
DGN erul9961.DGN
CAD User: AJFJ Date: 05-31-2012
Digital Size

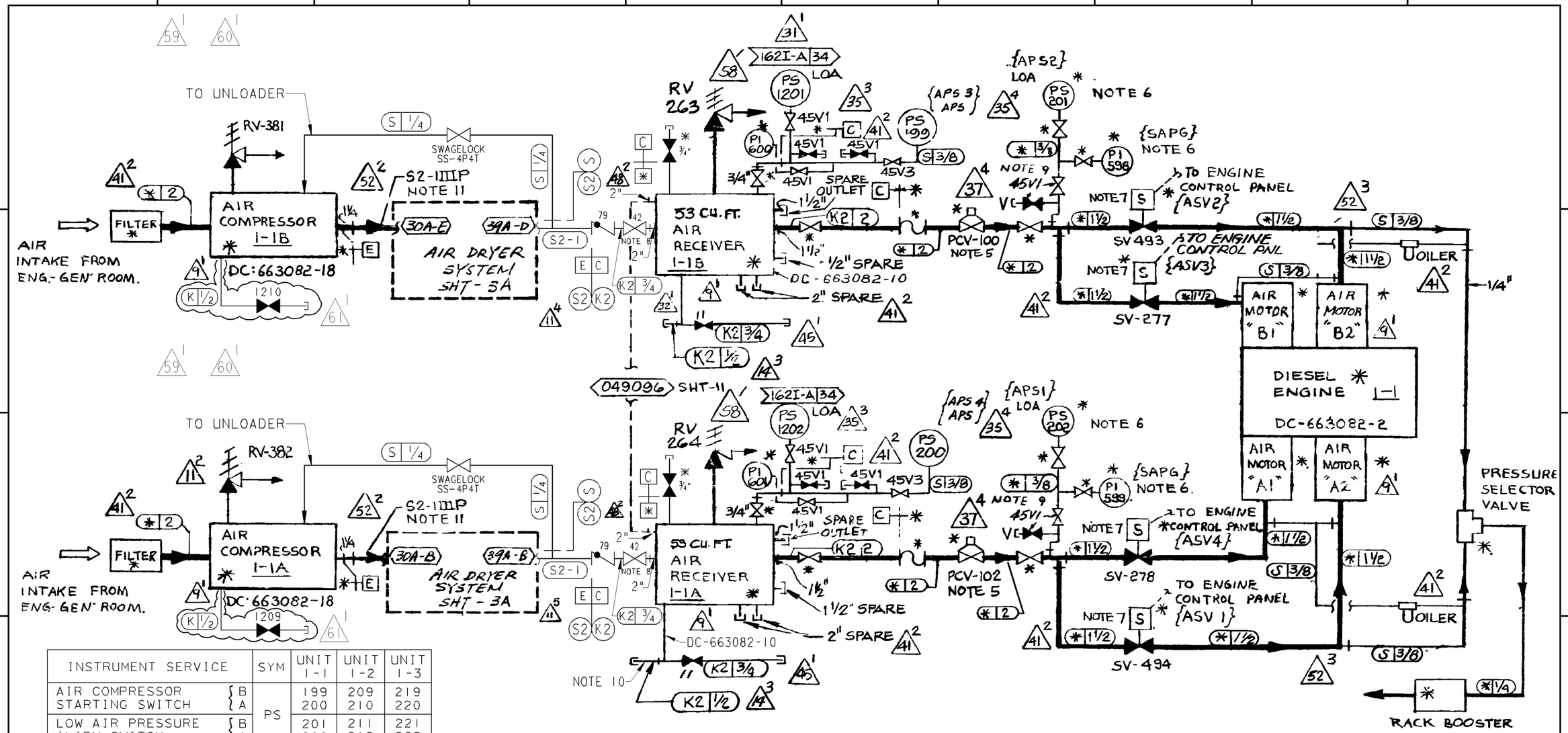

INSTRUMENT SERVICE		SYM	UNIT 1-1	UNIT 1-2	UNIT 1-3
AIR COMPRESSOR STARTING SWITCH	B	PS	199	209	219
	A		200	210	220
LOW AIR PRESSURE ALARM SWITCH	B	PS	201	211	221
	A		202	212	222
STARTING AIR PRESSURE INDICATOR	B	PT	598	620	640
	A		599	621	641
AIR RECEIVER PRESSURE INDICATOR	B	PT	600	622	633
	A		601	623	644
AIR RECEIVER RELIEF VALVE	B	RV	263	265	272
	A		264	269	273
AIR COMP. DISCH. HEAD RELIEF VALVE	B	RV	381	383	385
	A		382	384	386
AIR RECVR, LOW AIR PRESS. ALRM SWITCH	B	PS	1201	1211	1221
	A		1202	1212	1222
START AIR MOTOR PRESS REDUC VALVES	B	PCV	100	103	105
	A		102	104	106
START AIR MOTOR SOLENOID VALVE	B1	SV	277	281	283
	A1		278	282	284
START AIR MOTOR SOLENOID VALVE	B2	SV	493	495	497
	A2		494	496	498
AIR COMPRESSOR LUBE OIL DRAIN VALVE	B		1210	1213	1216
	A		1209	1212	1215

NOTES:

1. * DENOTES MANUFACTURER-SUPPLIED INSTRUMENTS AND EQUIPMENT. IT IS ACCEPTABLE TO REPLACE MANUFACTURER SUPPLIED INSTRUMENT TUBING WITH PG&E SUPPLIED S-SPEC STAINLESS STEEL TUBING.
2. FIELD PIPING THIS SYSTEM SHALL BE PG&E CLASS "C" UNLESS OTHERWISE NOTED.
3. { } MANUFACTURER NUMBER.
4. ALL VALVES THIS SHEET WITH PG&E ITEM NO. SHALL BE UNDER SPEC 8729 (DWG 102039), UNLESS NOTED.
5. (36-C/D) PRESSURE REDUCING VALVE PROVIDED WITH STRAINER.
6. (37-C/D) MOUNTED ON ENGINE CONTROL PANEL.
7. (37-C/D) STARTING AIR SOLENOID VALVES AIR EQUIPPED WITH AN EMERGENCY MANUAL OPENING DEVICE.
8. (33-D/C) IF GLOBE VALVES ARE INSTALLED, THE PREFERRED ORIENTATION IS WITH THE FLOW ARROW INDICATING FLOW TOWARDS THE AIR COMPRESSOR.
9. (36-C) VALVE TAG 45VI SPECS ARE IN DWG 053479.
10. (33-B) THIS LINE IS K2-3/4" ON AIR RECEIVER 1-1A.
11. FIBERGLASS BLANKET-TYPE PERSONNEL PROTECTION INSULATION.

STARTING AIR SYSTEM

TYPICAL FOR THREE ENGINE-GEN UNITS
REF DC-663082-5

UNIT 1

DIABLO CANYON POWER PLANT - PG&E CO.
DIESEL ENGINE-GENERATOR ASSOCIATED SYSTEMS

DRAWING	SHEET	PAGE	REV
102021	3	0	61

DATE	DWN	RE	IV	PROFESSIONAL ENGINEER	PE DISC.	PE#	PE EXP.	
10-10-2011	AJFJ	RxG2		KERSI J. DALAL	MECHANICAL	M 16690	3/31/2012	REVISED PER DFT-7*1303

RASTER=102021s3.dgn
DGN=102021s3.dgn
CAD User: AJFJ Date: 10-10-2011

INPGIC
I Size

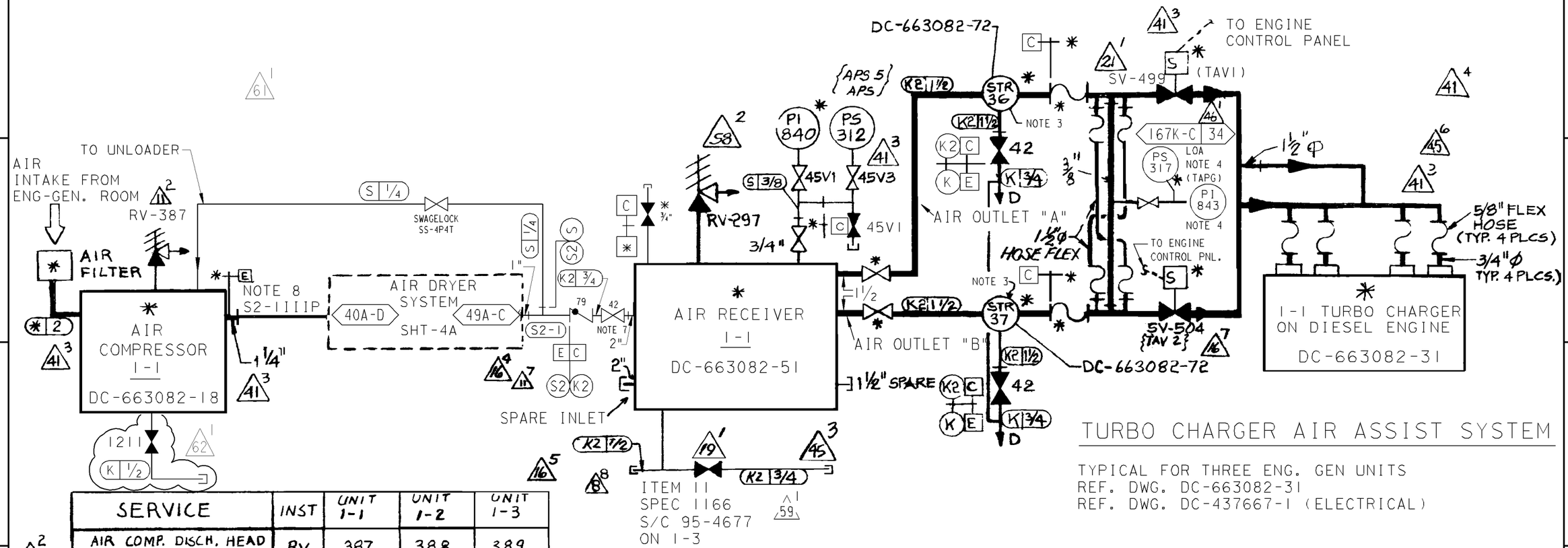

TURBO CHARGER AIR ASSIST SYSTEM

TYPICAL FOR THREE ENG. GEN UNITS
REF. DWG. DC-663082-31
REF. DWG. DC-437667-1 (ELECTRICAL)

SERVICE	INST	UNIT 1-1	UNIT 1-2	UNIT 1-3
AIR COMP. DISCH. HEAD RELIEF VALVE	RV	387	388	389
LOW AIR PRESS. ALM. SW.	PS	317	318	319
AIR RECEIVER PRESSURE INDICATORS	PI	840	841	842
TURBO CHARGER AIR ASSIST INLET PRESS. INDICATOR		843	844	845
AIR COMPRESSOR START PRESS. SWITCH	PS	312	313	314
AIR RECEIVER RELIEF VALVES	RV	297	298	299
TURBO CHARGER INLET SOLENOID VALVES A	SV	499	505	501
TURBO CHARGER INLET SOLENOID VALVES B		504	500	506
AIR COMPRESSOR LUBE OIL DRAIN VALVE		1211	1214	1217
AIR RECEIVER OUTLET STRAINER A	STR	36	44	83
AIR RECEIVER OUTLET STRAINER B		37	45	84

1.* DENOTES MANUFACTURER SUPPLIED INSTRUMENTS AND EQUIPMENT. IT IS ACCEPTABLE TO REPLACE MANUFACTURER SUPPLIED INSTRUMENT TUBING WITH PG&E SUPPLIED S-SPEC STAINLESS STEEL TUBING

2. FIELD PIPING THIS SYSTEM SHALL BE PG&E CLASS C UNLESS NOTED

3. AIR RECEIVER OUTLET STRAINERS BE INSTALLED HORIZONTALLY 46-D/E

4. MOUNTED ON ENGINE CONTROL PANEL 47-D

5. ALL VALVE ON THIS SHEET WITH PG&E ITEM NOS. SHALL BE UNDER SPEC. 8729 (DWG 102039). UNLESS NOTED. 41/45/46-C&D

6. DELETED

7. IF GLOBE VALVES ARE INSTALLED THE PREFERRED ORIENTATION IS WITH THE FLOW ARROW INDICATING FLOW TOWARDS THE AIR COMPRESSOR. 43-D

8. FIBERGLASS BLANKET TYPE PERSONNEL PROTECTION INSULATION.

UNIT 1

DIABLO CANYON POWER PLANT - PG&E CO.
DIESEL ENGINE-GENERATOR ASSOCIATED SYSTEMS

DRAWING	SHEET	PAGE	REV
102021	4	0	62

DATE	DWN	RE	IV	PROFESSIONAL ENGINEER	PE DISC.	PE#	PE EXP.	
10-10-2011	AJFJ	RxG2		KERSI J. DALAL	MECHANICAL	M 16690	3/31/2012	REVISED PER DFT-7*1303

RASTER=102021s4.dgn
DGN=102021s4.dgn
CAD User: AJFJ Date: 10-10-2011

INPGIC
1 Size

LINE DESCRIPTION	UNIT 1-1	UNIT 1-2	UNIT 1-3
AIR INTAKE	**-2182-22	**-2185-22	**-2188-22
ENGINE EXHAUST	**-2183-20VI	**-2186-20VI	**-2189-20VI
SILENCER EXHAUST	K-4413-22VI	**-2187-22VI	**-2190-22VI
CRANKCASE EXH.	K-2173-5IIIP	K-2586-5IIIP	K-2587-5IIIP
EXHAUST RISEN DRN	K-4410-2	K-4411-2	K-4412-2
SILENCER (EXH.)	K-4403-24VP	K-4404-24VP	K-4405-24VP

EXHAUST SILENCERS		
UNIT 1-1	UNIT 1-2	UNIT 1-3
RIGHT ANGLE	STRAIGHT THRU	STRAIGHT THRU
DC-663082-13	DC-663082-26	DC-663082-26

INST. SERVICE	INST	TANK 1-1	TANK 1-2	TANK 1-3
TURBO CHARGER DISCHARGE	PI	822	826	827
AIR MANIFOLD RELIEF VALVES	RV	860	861	862

1 44

NOTES:

1. [ ] INDICATES PG&E PIPING CODE CLASS
2. * DENOTES MANUFACTURER SUPPLIED INSTRUMENTS AND EQUIPMENT. IT IS ACCEPTABLE TO REPLACE MANUFACTURER SUPPLIED INSTRUMENT TUBING WITH P G & E SUPPLIED S-SPEC STAINLESS STEEL TUBING (1 / 57)
3. [] MANUFACTURER NUMBER IDENTIFICATION
4. ** PIPING TO BE INSTALLED UNDER SPEC.8711 & PROVIDED UNDER DC-663084-1
5. MOUNTED ON ENGINE CONTROL PANEL 58-C
6. DIESEL GENERATOR EXHAUST SILENCER SEISMICALLY QUALIFIED FOR HOSGRI CRITERIA. EQUIPMENT SUPPORTS FOR THE DIESEL GENERATOR EXHAUST SILENCER SEISMICALLY QUALIFIED IN ACCORDANCE WITH DESIGN CRITERIA MEMORANDUM M-72
7. THE MODIFIED DRAIN PER AS-BUILT CONDITIONS IS APPLICABLE TO UNIT 1-1 ONLY
8. PG&E CODE CLASS "J" PIPING HAS BEEN DESIGNATED AS DESIGN CLASS I FOR HOSGRI SEISMIC QUALIFICATION PURPOSES ONLY. THERE ARE NO SYSTEM DESIGN REQUIREMENTS FOR ISOLATION VALVES TO ISOLATE CODE CLASS "J" PIPING FROM CODE CLASS "E" PIPING

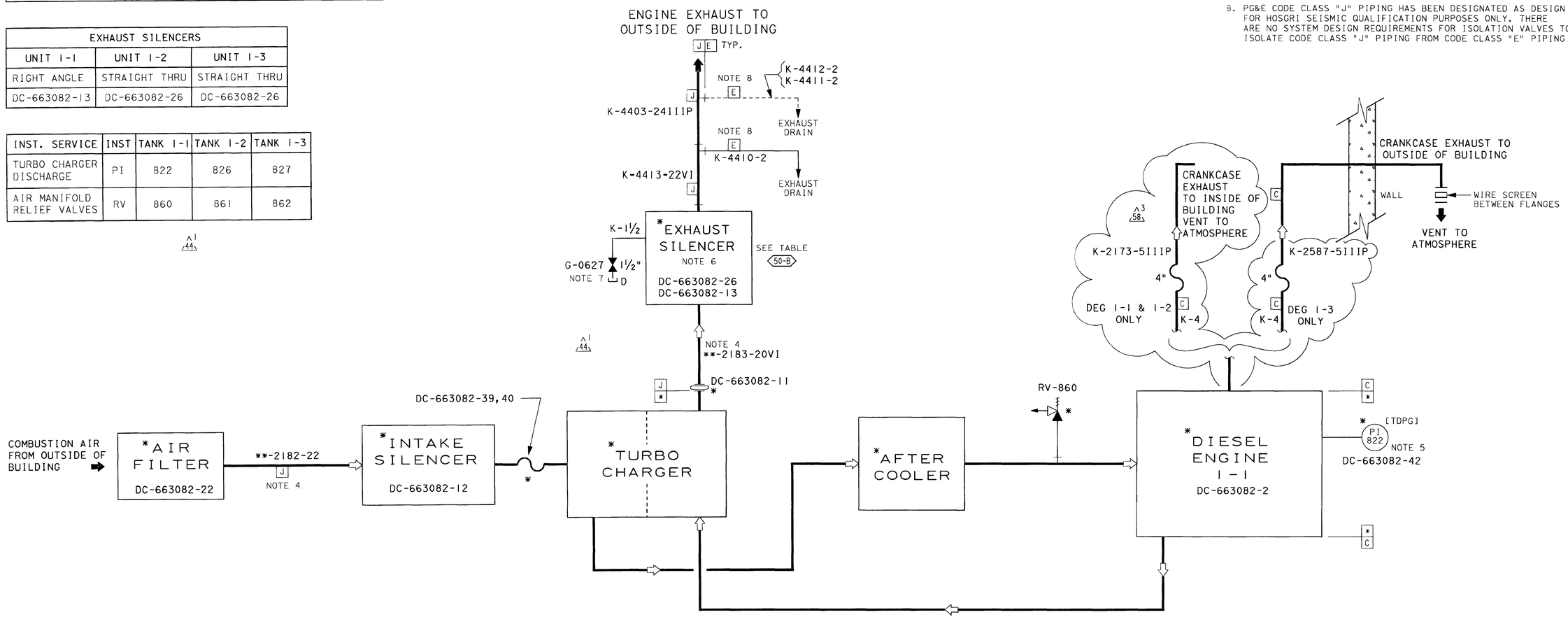

COMBUSTION AIR AND EXHAUST SYSTEM

TYPICAL FOR THREE ENGINE-GENERATOR UNITS, EXCEPT AS NOTED

UNIT 1

P.G.&E. CO.	DRAWING NUMBER	REV
SHEET 5 OF SHEETS	102021	58
	MICROFILM	

202155.M01 12-6-95 1:00 RJN

HOME3/...DC3.FMT 5/94

SCAN 58 IC

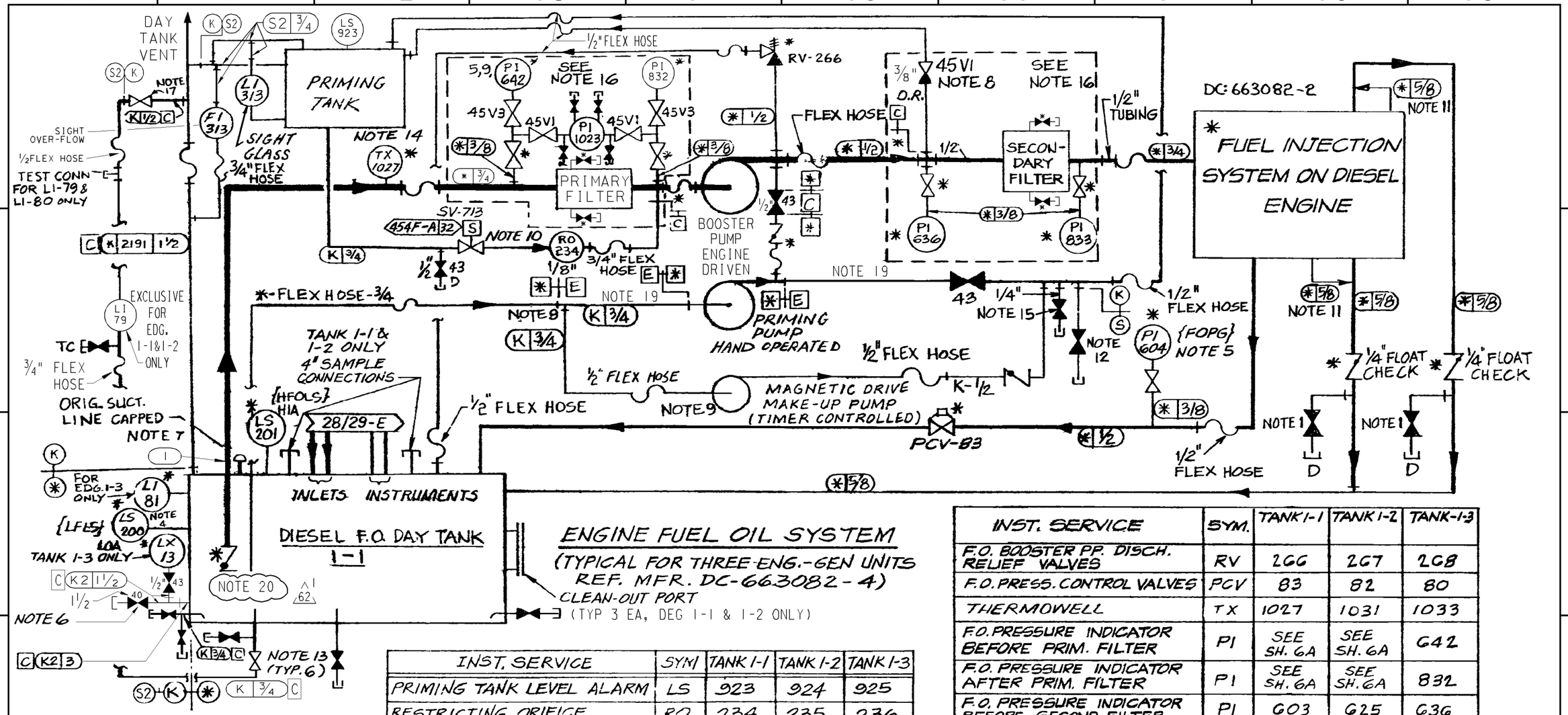

INST. SERVICE	SYM.	TANK 1-1	TANK 1-2	TANK 1-3
F.O. BOOSTER PP. DISCH. RELIEF VALVES	RV	266	267	268
F.O. PRESS. CONTROL VALVES	PCV	83	82	80
THERMOWELL	TX	1027	1031	1033
F.O. PRESSURE INDICATOR BEFORE PRIM. FILTER	PI	SEE SH. 6A	SEE SH. 6A	642
F.O. PRESSURE INDICATOR AFTER PRIM. FILTER	PI	SEE SH. 6A	SEE SH. 6A	832
F.O. PRESSURE INDICATOR BEFORE SECOND-FILTER	PI	603	625	636
F.O. PRESSURE INDICATOR AFTER SECOND-FILTER	PI	829	831	833
F O PRESSURE INDICATOR	PI	604	626	637
F.O. DIP INDICATOR PRIMARY FLTR	PI	SEE SH. 6A	SEE SH. 6A	1023
HIGH F.O. LEVEL ALARM SW.	LS	201	205	209
LOW F.O. LEVEL ALARM SW.	LS	200	204	208
F.O. LEVEL INDICATOR DAY TK / PRIM. TK.	LI	79 / 313	80 / 314	81 / 315
F.O. DAY TK. LEVEL TEST CONNECTION	LX	—	—	13
PRIMING TK F.O. SOLENOID VLV	SV	713	714	715
PRIMING TK F.O. FLOW INDICATOR	FI	313	314	315

INST. SERVICE	SYM.	TANK 1-1	TANK 1-2	TANK 1-3
PRIMING TANK LEVEL ALARM	LS	923	924	925
RESTRICTING ORIFICE	RO	234	235	236

LINE DESCRIPTION	TANK 1-1	TANK 1-2	TANK 1-3
FUEL OIL DAY TK VENT	K-2191-1 1/2	K-2192-1 1/2	K-2123-1 1/2

NOTES

1. 1/2" FPT WHITEY BALL VLV MODEL #SS-45F8
2. { } MANUFACTURER NO. IDENTIFICATION.
3. (64-D) MANUALLY OPERATED. USED ON INITIAL START ONLY.
4. (61-C) SEE MFR DWG 663082-4.
5. (67-D) MOUNTED ON ENGINE CONTROL PANEL.
6. (60-C) MANUAL VALVES WITH ITEM NO. SHALL BE UNDER SPEC. 8729. (FOR TK 1-3 ONLY).
7. (61-C) BY SUPPLIER UNDER SPEC. 8735 WISMER & BECKER.
8. (65-E) VALVE TAG 45VI SPECS. ARE IN DWG. 053479.
9. (63-D) PUMP AND TEE LOCATED AT SUCTION BELOW LOWEST DAY TANK FUEL OIL LEVEL.
10. (63-D) OPEN-0 TO 100 RPM, CLOSED-ABOVE 100 RPM.
11. ADDITIONAL LEAKOFF ON DIESEL GENERATOR 1-1 ONLY.
12. (67-D) 3/8" NUPRO PLUG VALVE MODEL #SS-6P4T.
13. (61-B) MANUAL VALVES PER DWG. 6006473-222 FOR TANK 1-1 & 1-2 ONLY.
14. (62-E) TI NOT INSTALLED ON TANK 1-2.
15. (66-D) NUPRO CO. #SS-6P4T.
16. (63/66-E) D/G 1-3 ONLY; FOR D/G 1-1 & 1-2 SEE SHT 6A.
17. 1/2" VELAN GATE VALVE STOCK NO 93-6840.
18. *DENOTES MANUFACTURER SUPPLIED INSTRUMENTS AND EQUIPMENT. IT IS ACCEPTABLE TO REPLACE MANUFACTURER SUPPLIED INSTRUMENT TUBING w/PG&E SUPPLIED S-SPEC STAINLESS STEEL TUBING.
19. CODE CLASS E PIPING IS QUALITY CLASS "S" AND SEISMICALLY EVALUATED FOR HOSGRI.
20. (1 / 62) DISTANCE FROM BOTTOM OF FOOT VALVE TO BOTTOM OF DAY TANK = 11/16" (DEG 1-1), 1 1/4" (DEG 1-2), 11/16" (DEG 1-3).

DIABLO CANYON POWER PLANT - PG&E CO.
DIESEL ENGINE-GENERATOR ASSOCIATED SYSTEMS

UNIT 1

DRAWING	SHEET	PAGE	REV
102021	6	0	62

DATE	DWN	RE	IV	PROFESSIONAL ENGINEER	PE DISC.	PE#	PE EXP.	
05-29-2013	ZNS4	FxC2	KJD3	NOT REQUIRED	N/A	N/A	N/A	REVISED PER DFT-7*2180

RASTER=102021s6.DGN
DGN=102021s6.DGN
CAD User: ZNS4 Date: 05-29-2013

INPGIC
1 Size

NOTES:

1. THIS SYSTEM PROVIDED COMPLETELY INSTALLED WITH ENGINE-GENERATOR UNIT
2. [ ] MANUFACTURER NUMBER
3. RELIEF VALVE BUILT-IN TO PUMP >74-B<
4. ENGINE DRIVEN LUBE OIL PUMP >73-B<
5. PRE-CIRC. L.O. PUMP IS ELECTRIC MOTOR DRIVEN >73-C<
6. MOUNTED ON ENGINE CONTROL PANEL >71/77-B< ^1 /64
7. BALL VALVES >73-D,77-D< ^1 /71 ^7 /55
8. * DENOTES MANUFACTURER SUPPLIED INSTRUMENTS AND EQUIPMENT. IT IS ACCEPTABLE TO REPLACE MANUFACTURER SUPPLIED INSTRUMENT TUBING WITH PG&E SUPPLIED S-SPEC STAINLESS STEEL TUBING ^1 /57
9. LUBE OIL HEATER (LOH) REPLACED WITH A NEW HEATER, LOH11, (WATLOW PART NO. 7-10-567-1) AND INSTALLED OUTSIDE THE DIESEL ENGINE SKID. ^1 /70
10. J-SPEC PIPING PROVIDED WITH THREADED CONNECTIONS AND PIPE FITTINGS PER RPE #P-6687.
11. PIPING QA CLASS "S", SEISMICALLY ANALYZED.

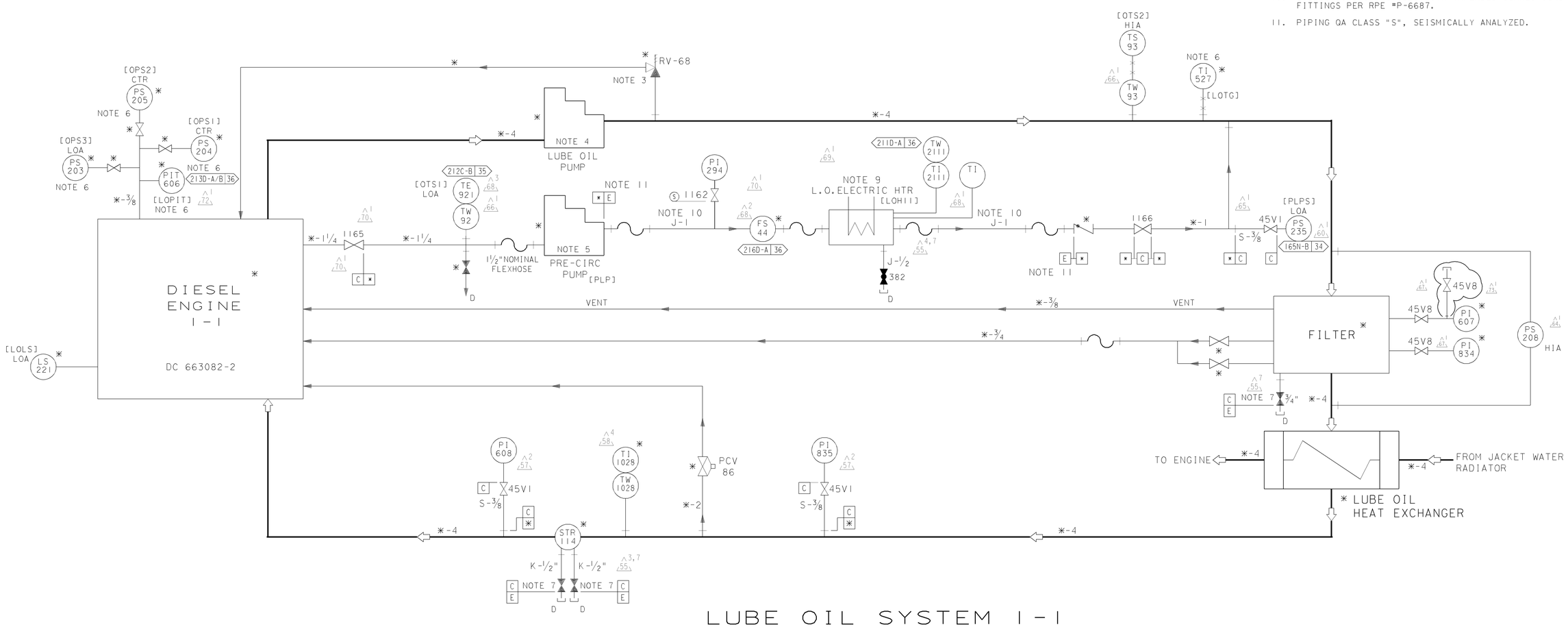

LUBE OIL SYSTEM 1-1

REFERENCE MFR DWG DC 663082-16

UNIT 1

DIABLO CANYON POWER PLANT - PG&E CO.
DIESEL ENGINE-GENERATOR ASSOCIATED SYSTEMS

DRAWING	SHEET	PAGE	REV
102021	7	0	73

DATE	DWN	RE	IV	PROFESSIONAL ENGINEER	PE DISC.	PE#	PE EXP.	
03-05-2010	JBMX	FxC2		KERSI J. DALAL	MECHANICAL	M 16690	3/31/2010	REVISED PER DAS-6*291

RASTER=2021s7.dgn
DGN=2021s7.dgn
CAD User: JBMX Date: 03-05-2010

DNPGIC
3 Size

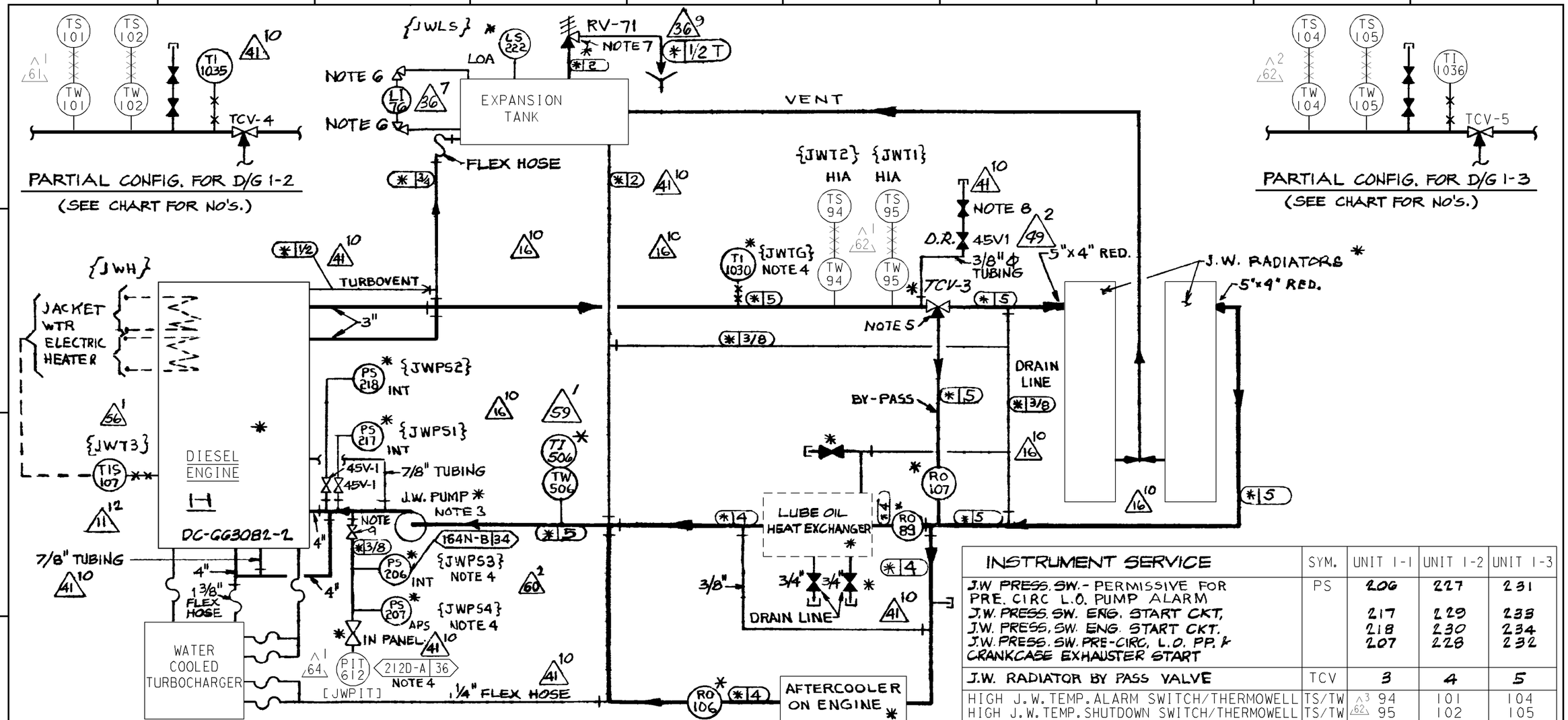

ENGINE JACKET WATER COOLING SYSTEM

TYPICAL FOR THREE ENG-GEN UNITS

REF. DWG DC-663082-17

NOTES:

1. THIS SYSTEM PROVIDED COMPLETELY INSTALLED WITH ENGINE-GEN. UNITS.
2. { } MANUFACTURER NO.
3. ENGINE DRIVEN JACKET WATER PUMP. (82-C)
4. MOUNTED ON ENGINE CONTROL PANEL. (81-B, 82-B & 85-D)
5. SELF-CONTAINED CONTROL VALVE, FOR OPERATION SEE MANUFACTURER TECHNICAL MANUAL DC-GG3082-80 (85-D) (VALVE SHOWN IN HOT POSITION.)
6. PENBERTHY N7B-STS TUBULAR GAUGE GLASS VALVES (82-E)
7. CAP WITH SPRING RELIEF FOR VENT/VACUUM (84-E)
8. WALWORTH CO. MOD. #14 FOR D/G 1-1 & 1-2; 45V1 FOR D/G 1-3 (86-E)
9. LUNKENHEIMER MOD. #123 FOR D/G 1-2 & 1-3 ONLY (82-C)
10. * DENOTES MANUFACTURER SUPPLIED INSTRUMENTS AND EQUIPMENT. IT IS ACCEPTABLE TO REPLACE MANUFACTURER SUPPLIED INSTRUMENT TUBING WITH PG&E SUPPLIED S-SPEC STAINLESS STEEL TUBING.

INSTRUMENT SERVICE	SYM.	UNIT 1-1	UNIT 1-2	UNIT 1-3
J.W. PRESS. SW. - PERMISSIVE FOR PRE. CIRC L.O. PUMP ALARM	PS	206	227	231
J.W. PRESS. SW. ENG. START CKT.		217	229	233
J.W. PRESS. SW. ENG. START CKT.		218	230	234
J.W. PRESS. SW. PRE-CIRC. L.O. PP. & CRANKCASE EXHAUSTER START		207	228	232
J.W. RADIATOR BY PASS VALVE	TCV	3	4	5
HIGH J.W. TEMP. ALARM SWITCH/THERMOWELL	TS/TW	94	101	104
HIGH J.W. TEMP. SHUTDOWN SWITCH/THERMOWELL	TS/TW	95	102	105
J.W. TEMP. INDICATOR HEATER START SWITCH	TIS	107	108	109
J.W. FLOW BALANCING ORIFICE	RO	89	90	91
		106	108	110
		107	109	111
J.W. EXPANSION TK. PRESS. RELIEF CAP	RV	71	72	75
LOW J.W. EXPANSION TK. LEVEL ALARM SW.	LS	222	229	230
J.W. PRESSURE (INDICATING TRANSMITTER)	PIT	612	643	645
J.W. EXPANSION TK. LEVEL IND	LI	76	77	78
J.W. TEMP INDICATOR/THERMOWELL	TI/TW	506	507	508
J.W. TEMP INDICATOR	TI	1030	1035	1036

UNIT 1

DIABLO CANYON POWER PLANT - PG&E CO.
DIESEL ENGINE-GENERATOR ASSOCIATED SYSTEMS

DRAWING	SHEET	PAGE	REV
102021	8	0	65

DATE	DWN	RE	IV	PROFESSIONAL ENGINEER	PE DISC.	PE#	PE EXP.	
02-17-2009	ADMI	FxC2		ALAN GLEN BARTA	ELECTRICAL	E 9271	9/30/2009	REVISED PER DDN-2*91-0

RASTER=102021s8.dgn
DGN=102021s8.dgn
CAD User: ADMI Date: 02-17-2009

INPG2ND
I Size

INSTRUMENT SERVICE	SYM.	UNIT 1-1	UNIT 1-2	UNIT 1-3
CRANKCASE VACUUM ALARM SWITCH	PS	331	332	333
DIESEL GEN. STATOR TEMP. ELEMENT	TE	71	72	73
	COMP	T-2802A	T-2803A	T2804A
ENGINE TACHOMETER TRANSMITTER	YT	1	2	3
ENGINE OVERSPEED TRIP SWITCH (54 3)	YS	6	7	8
RADIATOR DISCH. TEMP. INDICATOR	TI	528	529	540
HI ROOM AIR TEMP ALARM SWITCH	TS	141	142	143
HI RADIATOR DISCH. TEMP. ALARM SW.		144	145	146
PYROMETER-CYLINDER TEMP (36PT)	TI	94	95	96
ROOM AIR TEMP. INDICATOR	TI	97	98	99
ENGINE OVERSPEED TRIP DEVICE	YS	106	107	108

(54 2) (41 11)

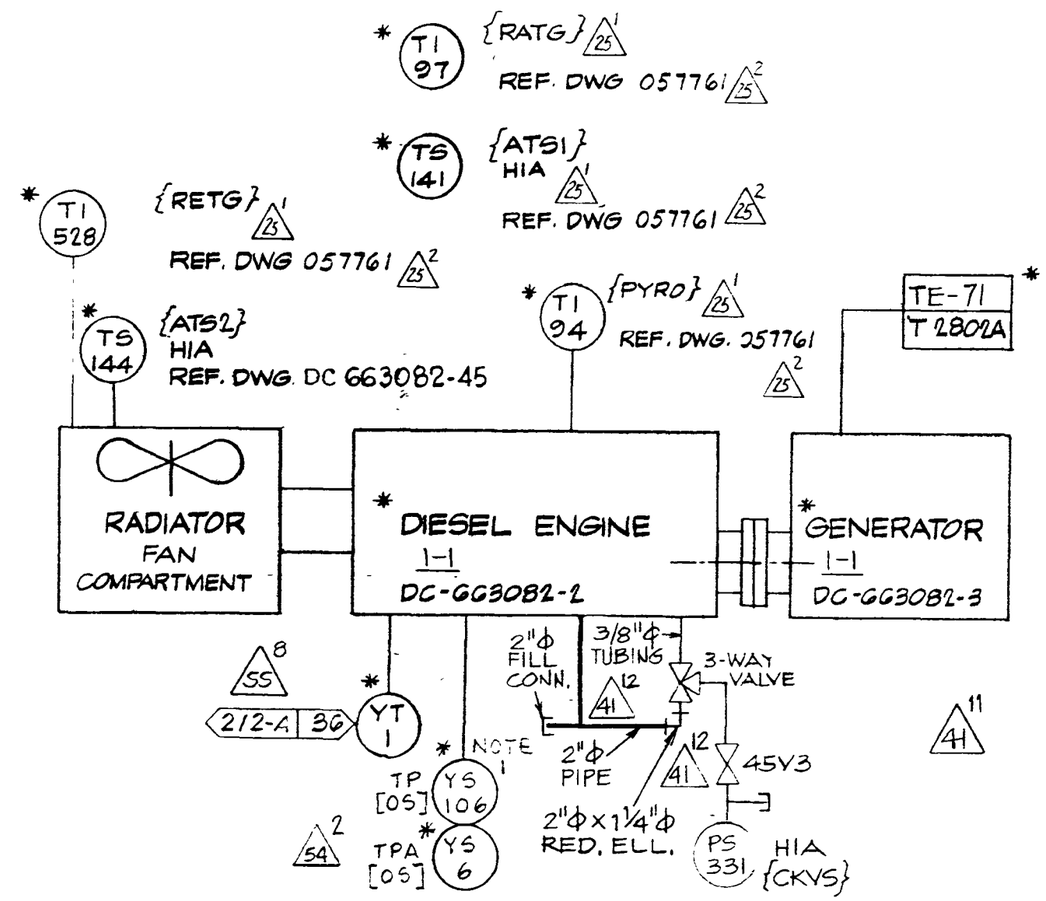

NOTE

(54 2) 1. YS-106, 107 AND 108 ARE MECHANICAL OVERSPEED TRIP DEVICES (96-B)

(57 1) 2. * DENOTES MANUFACTURER SUPPLIED INSTRUMENTS AND EQUIPMENT. IT'S ACCEPTABLE TO REPLACE MANUFACTURER SUPPLIED INSTRUMENT TUBING WITH PG&E SUPPLIED S-SPEC STAINLESS STEEL TUBING

MISC. INSTRUMENTS FOR ENGINE GENERATOR UNITS
TYPICAL FOR THREE ENG. GEN. UNITS (20 3)

UNIT - 1

35 MM NEG

SCAN 57

P.G.&E.CO.

SHEET NO 9 OF SHEETS

DRAWING NUMBER 102021

CHANGE 57

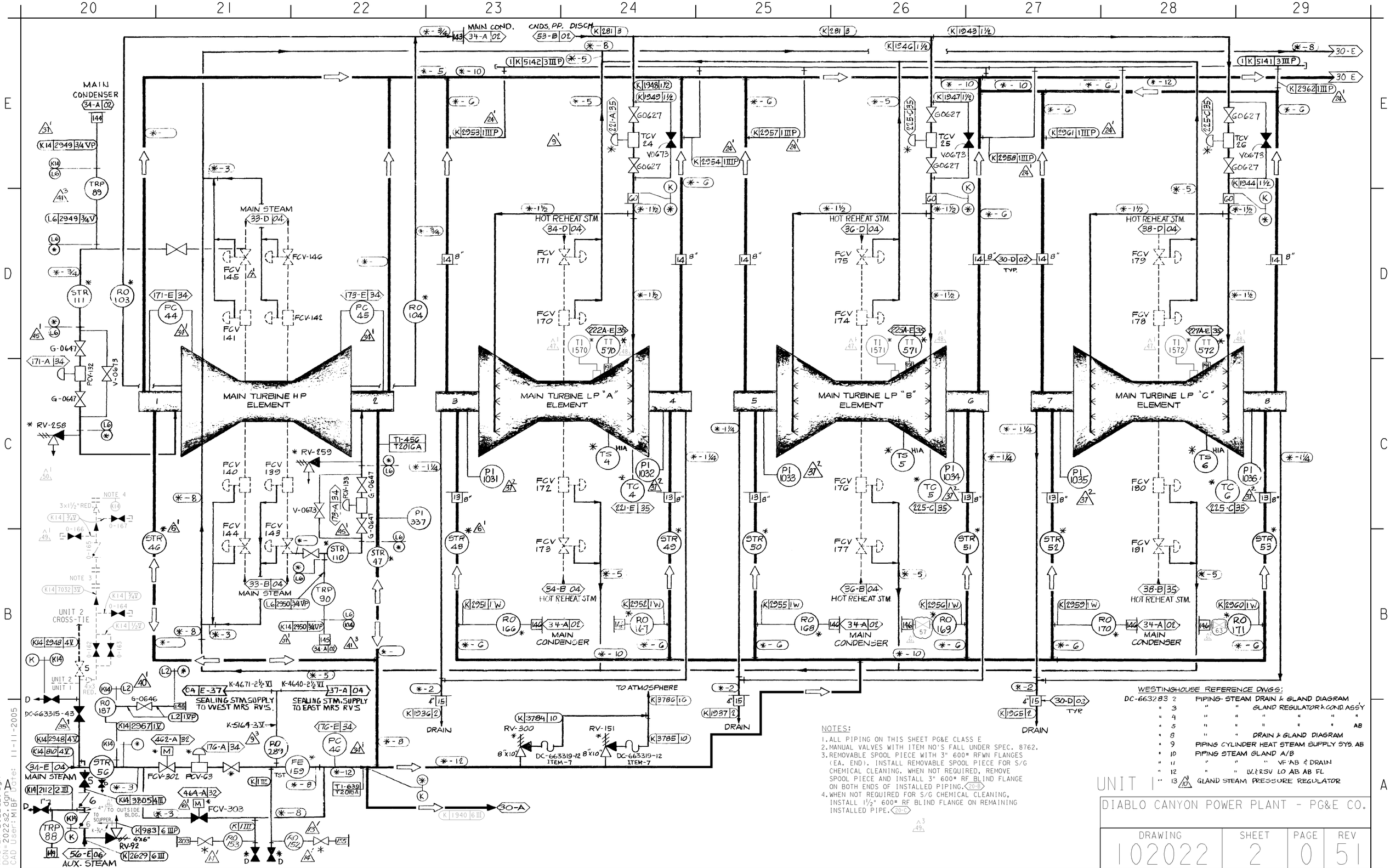

NOTES:

1. ALL PIPING ON THIS SHEET PG&E CLASS E
2. MANUAL VALVES WITH ITEM NO'S FALL UNDER SPEC. 8762.
3. REMOVABLE SPOOL PIECE WITH 3" 600# RFWN FLANGES (EA. END). INSTALL REMOVABLE SPOOL PIECE FOR S/G CHEMICAL CLEANING. WHEN NOT REQUIRED, REMOVE SPOOL PIECE AND INSTALL 3" 600# RF BLIND FLANGE ON BOTH ENDS OF INSTALLED PIPING. 20-B
4. WHEN NOT REQUIRED FOR S/G CHEMICAL CLEANING, INSTALL 1½" 600# RF BLIND FLANGE ON REMAINING INSTALLED PIPE. 20-C

WESTINGHOUSE REFERENCE DWGS:

DC-663283	2	PIPING- STEAM DRAIN & GLAND DIAGRAM
"	3	" " GLAND REGULATOR & COND. ASS'Y
"	4	" " " " " "
"	5	" " " " " AB
"	8	" " DRAIN & GLAND DIAGRAM
"	9	PIPING CYLINDER HEAT STEAM SUPPLY SYS. AB
"	10	PIPING STEAM GLAND A/B
"	11	" " " VF AB & DRAIN
"	12	" " LV. & RSV LO AB AB FL
"	13	GLAND STEAM PRESSURE REGULATOR

UNIT 1

DIABLO CANYON POWER PLANT - PG&E CO.

DRAWING	SHEET	PAGE	REV
102022	2	0	51

DATE	DWN	RE	IV	PROFESSIONAL ENGINEER	PE DISC.	PE#	PE EXP.	
11-11-2005	MIBF	RMDI		KERSI J. DALAL	MECHANICAL	M 16690	3/31/2006	REVISED PER FCT-030688 AND FCT-030692

RASTER-2022s2.dgn
DGN-2022s2.dgn
CAD User: MIBF Date: 11-11-2005

DIBGAE
3 S120

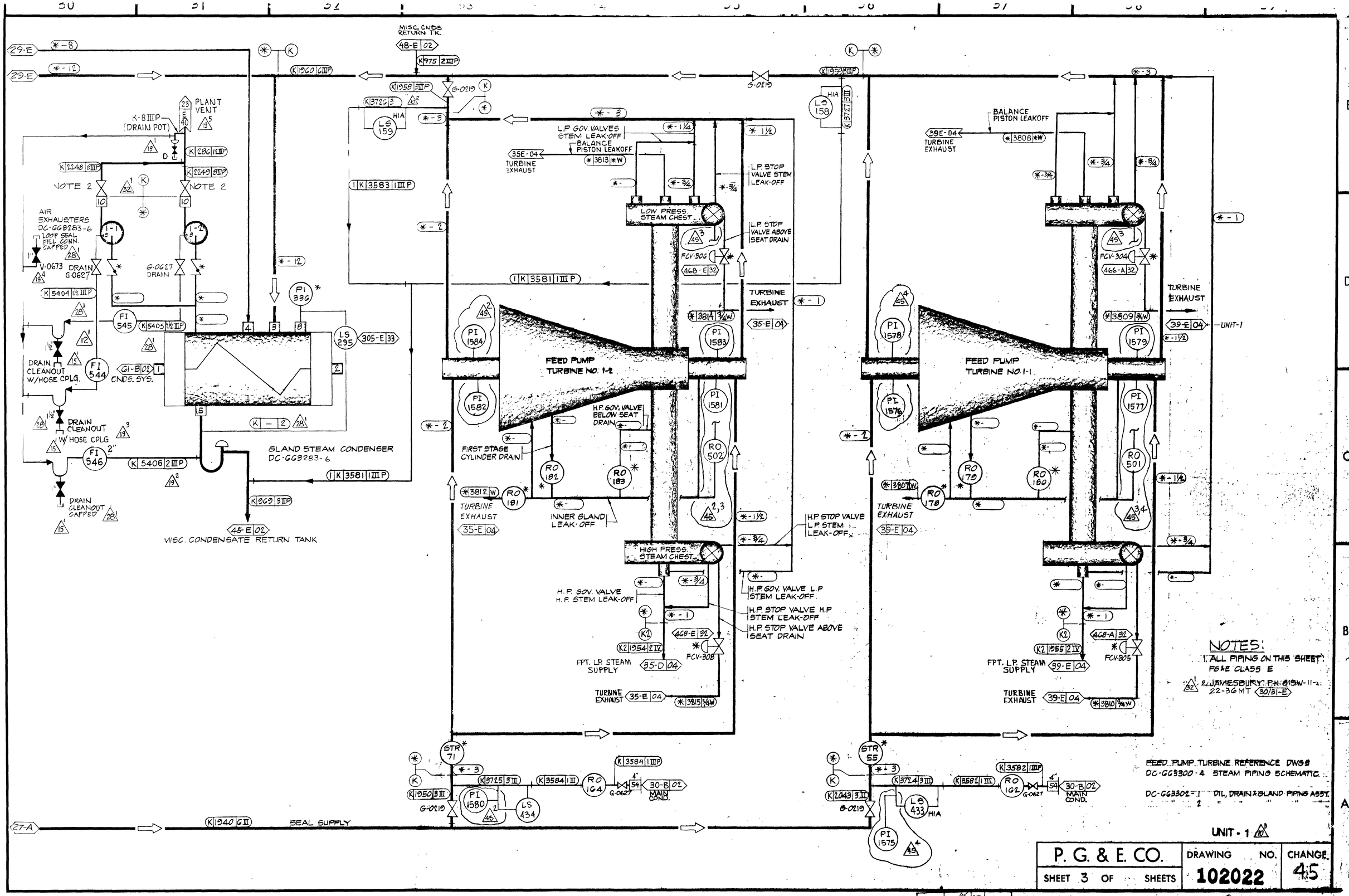
MISC. CNDS RETURN TK.
PLANT VENT
K-8 III P (DRAIN POT)
NOTE 2
AIR EXHAUSTERS DC-GG8283-6
LOOP SEAL FILL CONN. CAPPED
V-0673 DRAIN
G-0627 DRAIN
G-0627 DRAIN
DRAIN CLEANOUT W/HOSE CPLG.
DRAIN CLEANOUT W/ HOSE CPLG
DRAIN CLEANOUT CAPPED
GLAND STEAM CONDENSER DC-GG3283-6
MISC. CONDENSATE RETURN TANK
SEAL SUPPLY
L.P. GOV. VALVES STEM LEAK-OFF
BALANCE PISTON LEAKOFF
TURBINE EXHAUST
L.P. STOP VALVE STEM LEAK-OFF
LOW PRESS. STEAM CHEST
L.P. STOP VALVE ABOVE SEAT DRAIN
FCV-306
FCV-304
TURBINE EXHAUST
FEED PUMP TURBINE NO. 1-2
FEED PUMP TURBINE NO. 1-1
H.P. GOV. VALVE BELOW SEAT DRAIN
FIRST STAGE CYLINDER DRAIN
INNER GLAND LEAK-OFF
HIGH PRESS. STEAM CHEST
H.P. GOV. VALVE H.P. STEM LEAK-OFF
H.P. STOP VALVE L.P STEM LEAK-OFF
H.P. GOV. VALVE L.P STEM LEAK-OFF
H.P. STOP VALVE H.P STEM LEAK-OFF
H.P. STOP VALVE ABOVE SEAT DRAIN
FCV-308
FCV-305
FPT. L.P. STEAM SUPPLY
UNIT-1
G-0219
G-0627
MAIN COND.
NOTES:
1. ALL PIPING ON THIS SHEET: PG&E CLASS E
2. JAMESBURY P.N. 815W-11-2 22-36 MT
FEED PUMP TURBINE REFERENCE DW98
DC-GG3300-4 STEAM PIPING SCHEMATIC
DC-GG3302-1 DTL, DRAIN & GLAND PIPING ASSY.
UNIT - 1
P. G. & E. CO.
SHEET 3 OF SHEETS
DRAWING NO. 102022
CHANGE 45
RM INDEXED REV. 132

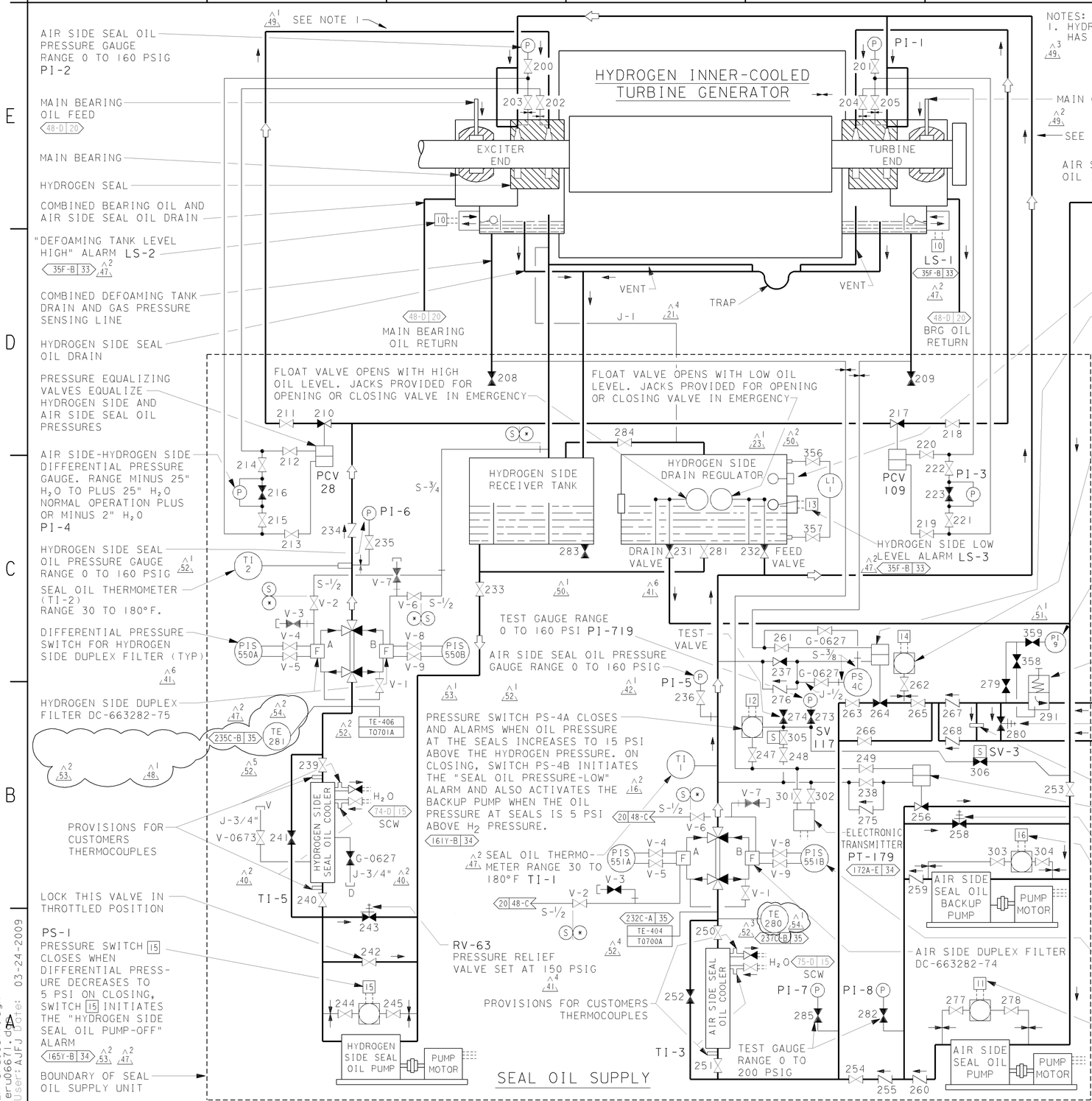

NOTES:
1. HYDROGEN SIDE & AIR SIDE SEAL OIL PIPING HAS BEEN INSULATED. SEE AR A0543807.

LEGEND

- VALVE (NORMALLY OPEN)
- VALVE (NORMALLY CLOSED)
- VALVE (NORMALLY THROTTLED)
- CHECK VALVE
- RELIEF VALVE
- ORIFICE
- PRESSURE GAUGE
- THERMOMETER
- ELECTRICAL CONNECTION
- PRESSURE SWITCH
- SOLENOID VALVE

OIL ALARMS

10	DEFOAMING TANK LEVEL-HIGH
11	AIR SIDE SEAL OIL PUMP-OFF
12	SEAL OIL PRESSURE-LOW
13	HYDROGEN SIDE LEVEL-LOW
14	SEAL OIL TURBINE BACKUP PRESSURE-LOW
15	HYDROGEN SIDE SEAL OIL PUMP-OFF
16	AIR SIDE SEAL OIL BACKUP PUMP-RUNNING

CONDENSED OPERATING INSTRUCTIONS

SEE INSTRUCTION BOOK FOR COMPLETE OPERATING INSTRUCTIONS

GENERAL-SEAL OIL PRESSURE MUST BE MAINTAINED AT THE HYDROGEN SEALS WHEN HYDROGEN IS IN THE GENERATOR OR WHEN THE SHAFT IS TURNING.

THE HYDROGEN PRESSURE MAY BE VARIED UP TO 75 PSIG. SEAL OIL PRESSURE IS NORMALLY MAINTAINED AT 12 PSI ABOVE THE HYDROGEN PRESSURE. 3 PSI IS REQUIRED TO MAINTAIN A SEAL WHEN RUNNING.

THE VAPOR EXTRACTORS SHOULD BE OPERATED CONTINUOUSLY WHEN THE GENERATOR IS FILLED WITH HYDROGEN.

HYDROGEN SHOULD BE PURGED FROM THE GENERATOR BEFORE MAIN OIL RESERVOIR IS DRAINED.

THE GENERATOR CAN BE OPERATED WITH THE HYDROGEN SIDE SEAL OIL PUMP OFF.

DUPLEX FILTERS PROVIDE FOR ON-LINE FILTER ELEMENT REPLACEMENT. REFER TO INSTRUCTION MANUAL DC-663280-41

SEAL OIL SUPPLY-EMERGENCY SOURCES

- MAIN OIL PUMP ON TURBINE SHAFT
- SEAL OIL BACKUP PUMP ON MAIN OIL RESERVIOR
- AIR SIDE SEAL OIL BACKUP PUMP

} WILL MAINTAIN 75 PSIG HYDROGEN PRESSURE

- TURNING GEAR BEARING OIL PUMPS-WILL MAINTAIN 2 PSIG HYDROGEN PRESSURE

THE TURBINE BACKUP REGULATOR VALVE 264 OPENS WHEN THE DIFFERENTIAL PRESSURE AT THE SEALS DECREASES TO 8 PSI. THEN IF THE SEAL DIFFERENTIAL PRESSURE DECREASES TO 5 PSI, PRESSURE SWITCH 12 ACTIVATES THE AIR SIDE SEAL OIL BACKUP PUMP ON THE SEAL OIL UNIT AND THE DIFFERENTIAL PRESSURE IS RESTORED TO 12 PSI.

THE NEXT AVAILABLE SOURCES OF EMERGENCY OIL AFTER THE AIR SIDE SEAL OIL BACKUP PUMP ARE THE TURNING GEAR BEARING OIL PUMPS ON THE MAIN OIL RESERVIOR. THESE CAN MAINTAIN A HYDROGEN PRESSURE OF 2 PSIG ONLY. WHEN THE AIR SIDE SEAL OIL BACKUP PUMP IS RUNNING, HYDROGEN PRESSURE SHOULD BE REDUCED TO 2 PSIG IF THE SEAL OIL BACKUP PUMP ON THE RESERVIOR IS NOT AVAILABLE.

TO PLACE EQUIPMENT IN OPERATION-SET VALVES AS INDICATED. START AIR SIDE SEAL OIL PUMP AND FILL DEFOAMING TANKS AND HYDROGEN SIDE DRAIN REGULATOR. START HYDROGEN SIDE SEAL OIL PUMP. EQUIPMENT IS THEN IN NORMAL OPERATION.

SEAL OIL DIAGRAM

UNIT 1

DIABLO CANYON POWER PLANT - PG&E CO.
TURBINE AND GENERATOR ASSOCIATED SYSTEMS

DRAWING	SHEET	PAGE	REV
102022	4	0	54

DATE	DWN	RE	IV	PROFESSIONAL ENGINEER	PE DISC.	PE#	PE EXP.	
03-24-2009	AJFJ	KJD3		ALAN GLEN BARTA	ELECTRICAL	E 9271	9/30/2009	REVISED PER DDN-2*207

RASTER=eru06671.dgn
DGN=eru06671.dgn
CAD User: AJFJ Date: 03-24-2009

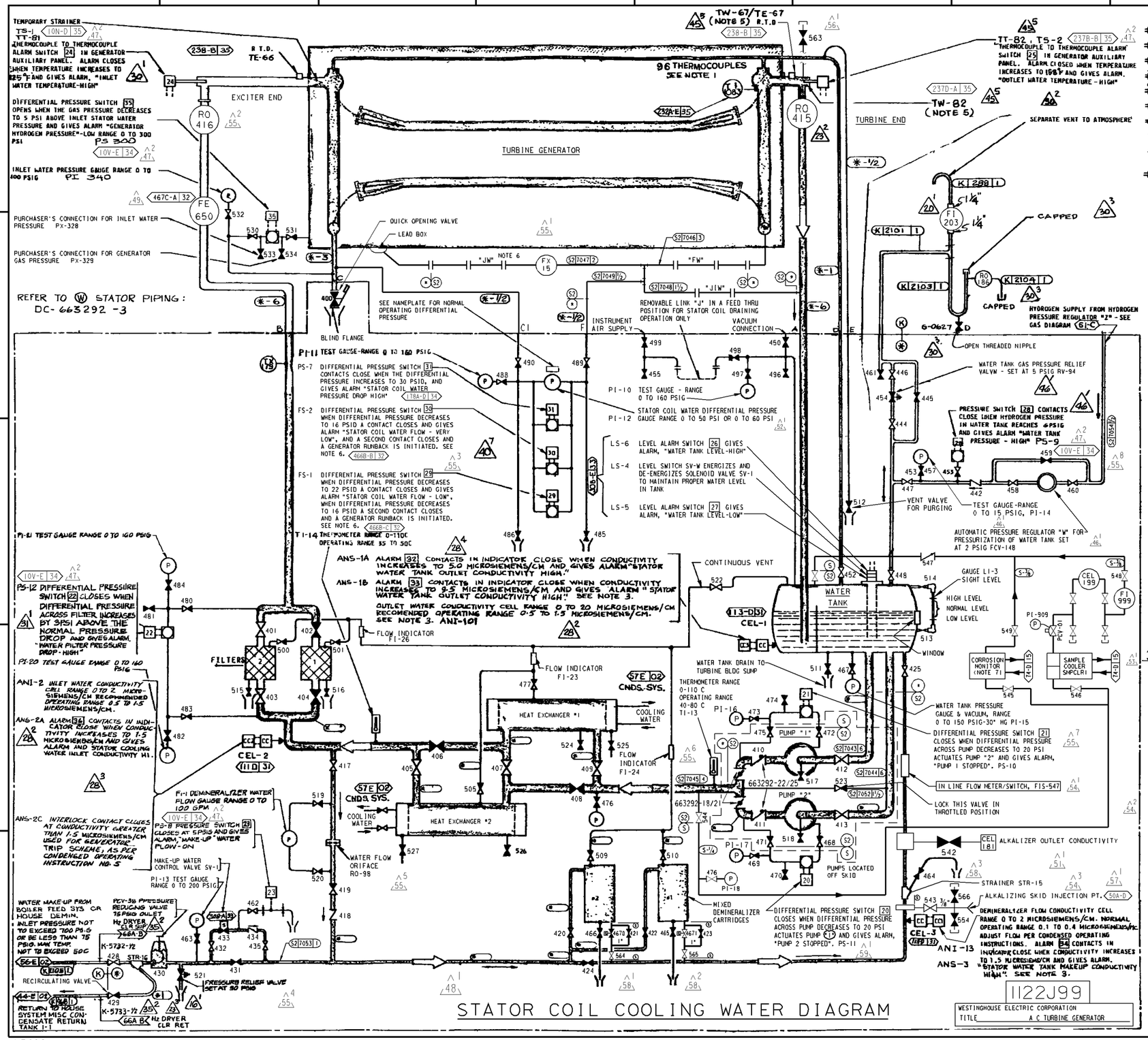

LEGEND

VALVE NORMALLY OPEN	FLOW LINE
VALVE NORMALLY CLOSED	SENSING LINE
VALVE NORMALLY THROTTLED	DRAIN LINE
CHECK VALVE	PRESSURE GAUGE
	PRESSURE SWITCH
SOLENOID VALVE	CONDUCTIVITY CELL
STOP CHECK VALVE	THERMOMETER
OPEN DRAIN	ELECTRICAL CONNECTION
ORIFICE	STRAINER
RELIEF VALVE	PLUG

WATER ALARMS

20	PUMP 2 STOPPED	28	WATER TANK PRESSURE - HIGH
21	PUMP 1 STOPPED	29	STATOR COIL WATER FLOW - LOW
22	WATER FILTER PRESSURE DROP - HIGH	30	STATOR COIL WATER FLOW - VERY LOW
23	MAKE-UP WATER FLOW - ON	31	STATOR COIL WATER PRESSURE DROP - HIGH
24	INLET WATER TEMPERATURE - HIGH	32	STATOR WTR TK OUTLET CONDUCTIVITY - HIGH
25	OUTLET WATER TEMPERATURE - HIGH	33	STATOR WTR TK OUTLET CONDUCTIVITY - HIGH HIGH
26	WATER TANK LEVEL - HIGH	34	STATOR WTR TK MAKEUP CONDUCTIVITY - HIGH
27	WATER TANK LEVEL - LOW	35	GENERATOR HYDROGEN PRESSURE - LOW
		36	STATOR COOLING WTR INLET CONDUCTIVITY - HIGH

NOTES:

1. 96 THERMOCOUPLES LOCATED RADIALLY IN STATOR COIL WATER DISCHARGE HDR. THEY ARE CONSECUTIVELY NUMBERED TI-1083 TO TI-1130 AND TI-230 TO TI-277.
2. PG&E PIPING THIS SHEET - PG&E CLASS E
3. ALL CONDUCTIVITY CELLS ARE TEMPERATURE COMPENSATED TO 25 C. ALL CONDUCTIVITY CELLS ARE CONNECTED TO INDICATORS WITH RANGES OF 0 TO 2 AND 0 TO 20 MICROSIEMENS/CM.
4. FOR OUTLINE SEE DC-663292-10.
5. THERMOWELLS TW-67 AND TW-82 ARE SEAL WELDED TO THE PIPING.
6. REMOVABLE SPOOL PIECES "JW" AND "FW" ARE FOR FLUSHING/DRYING. SPOOL PIECE "JIW" IS NOT INSTALLED DURING NORMAL OPERATIONS AND IS USED DURING FLUSHING/DRYING DURING OUTAGE.
7. CORROSION MONITOR/SAMPLER IS CHEMISTRY DEPT. CONTROLLED AND MAY BE REMOVED AND INSTALLED AS NEEDED.

CONDENSED OPERATING INSTRUCTIONS

SEE INSTRUCTION BOOK FOR COMPLETE OPERATING AND FLUSHING INSTRUCTIONS

1. THE WATER SYSTEM IS PRESSURIZED WITH HYDROGEN ABOVE THE WATER LEVEL IN THE WATER TANK. AN AUTOMATIC HYDROGEN PRESSURE REGULATOR MAINTAINS THE HYDROGEN PRESSURE AT 2 PSIG. A RELIEF VALVE WILL PREVENT HYDROGEN PRESSURE BUILD UP IN EXCESS OF 5 PSIG IN THE WATER TANK.
2. THE SYSTEM MAY BE OPERATED WITHOUT HYDROGEN PRESSURIZATION. THIS MODE OF OPERATION IS NOT RECOMMENDED SINCE CORROSION ACTIVITY WILL BE ACCELERATED IN THE PRESENCE OF ATMOSPHERIC OXYGEN.
3. THE GENERATOR CAN BE OPERATED AT ALL HYDROGEN PRESSURES BETWEEN MAXIMUM GAS PRESSURE AND 45 PSIG. THE MACHINE GAS PRESSURE MUST BE MAINTAINED HIGHER THAN STATOR COIL INLET WATER PRESSURE.
4. STATOR COIL COOLING WATER SHOULD BE CIRCULATED WHENEVER THE GENERATOR IS CARRYING LOAD. EITHER PUMP IS CAPABLE TO PRODUCE NORMAL WATER FLOW.
5. WITHOUT STATOR COIL WATER CIRCULATION AND WITH THE COILS FILLED WITH WATER. THE GENERATOR CAN SAFELY CARRY STATION AUXILIARY LOAD FOR A MAXIMUM TIME OF ONE HOUR IF THE INITIAL CONDUCTIVITY OF INLET WATER DOES NOT EXCEED 1.5 μSIEMENS/CM. IF THE INITIAL CONDUCTIVITY EXCEEDS 1.5 μSIEMENS/CM. THE GENERATOR LOAD SHOULD BE REDUCED TO ZERO AND ITS EXCITATION REMOVED WITHIN THREE MINUTES.
6. IF WATER FLOW STOPS, THE SECOND CONTACT ON SW29 AND/OR SW30 WILL INITIATE THE AUTOMATIC RUNBACK THROUGH A FIVE-SECOND DELAY RELAY. THE FIVE-SECOND DELAY IS TO PERMIT ALTERNATE CIRCULATING PUMP TO COME UP TO SPEED. THE GENERATOR RUNBACK CAN BE ACCOMPLISHED AT A MAXIMUM RATE OF 200% PER MINUTE. IF THE GENERATOR RUNBACK FAILS TO START IN 45 SECONDS, THE GENERATOR WILL BE TRIPPED. THE GENERATOR RUNBACK WILL BE PULSED WITH AN ON-OFF CYCLIC RELAY TO ASSURE GRADUAL LOAD REDUCTION.
7. MANUAL RUNBACK MAY BE USED TO AVOID TRIP, PROVIDED STATOR AMPERES CAN BE REDUCED 40% PER MINUTE DOWN TO THE STATION AUXILIARY LOAD IN 2-1/4 MINUTES.
8. THE GENERATOR CAN CARRY 75% OF RATED STATOR AMPERES WITH ONE COOLER OUT OF SERVICE.
9. ONE MIXED BED DEMINERALIZER IS NORMALLY IN SERVICE AT A TIME. THE OTHER BEING HELD AS A SPARE. MAXIMUM FLOW THROUGH ONE DEMINERALIZER IS 50 GPM. TEMPERATURE OF WATER SHOULD NOT EXCEED 60°C MAXIMUM. SET DEMINERALIZER FLOW RATE AS REQUIRED TO MAINTAIN LOOP CONDUCTIVITY AS SPECIFIED AT "CC2". THIS FLOW MAY BE CHANGED BY ALTERING THE POSITION OF VALVE 419. REPLACE DEMINERALIZER BED WHENEVER THE INDICATION ON CONDUCTIVITY METER "CC1" INCREASES TO 1.5 μSIEMENS/CM AT 25°C WITH CONSTANT FLOW RATE.
10. ONE FILTER IS NORMALLY IN SERVICE, THE OTHER HELD AS A SPARE. WHENEVER PRESSURE DROP ACROSS THE FILTER INCREASES 3 PSI ABOVE THE NORMAL PRESSURE DROP, REPLACE FILTER.
11. GENERATOR MUST BE PRESSURIZED WITH GAS BEFORE WATER FILLING OR CIRCULATION IS STARTED.
12. CARE SHOULD BE TAKEN TO PREVENT CO_2 FROM COMING INTO CONTACT WITH WATER SINCE ITS PRESENCE WILL DRASTICALLY INCREASE THE STATOR COIL WATER CONDUCTIVITY.
13. "OPERATION OF THE GENERATOR WITHOUT STATOR COIL WATER CIRCULATION IS PERMISSIBLE AS OUTLINED IN THE ABOVE INSTRUCTIONS, PROVIDING NO OTHER OPERATING CONDITION ON THE TURBINE OR GENERATOR REQUIRES THAT THE UNIT BE TRIPPED. REFER TO THE TURBINE INSTRUCTION BOOK FOR TURBINE UNITS ON AUXILIARY LOAD OPERATION."

FILLING INSTRUCTIONS

1. OPEN VALVE 512. CLOSE 448, 424, AND 400, AND BOLT ON BLIND FLANGE. CLOSE 498, 499, AND DISCONNECT REMOVABLE LINK "H" WHICH IS LOCATED ON THE GAS DIAGRAM
2. CLOSE VALVE 78 ON GAS DIAGRAM
3. OPEN 420, 421, 422, 509 AND 510 TO FILL DEMINERALIZERS
4. OPEN 424, CLOSE 420, 421, 422 AND 423,
5. OPEN VALVES 402, 404, 406 AND 408. ADMIT WATER FROM BOILER FEED SYSTEM OR HOUSE DEMINERALIZED WATER SYSTEM BY OPENING VALVE 431. FILL SYSTEM UNTIL A FULL STREAM OF WATER FLOWS FROM VALVE 512.
6. START EITHER PUMP #1 OR PUMP #2 AND CONTINUE TO VENT SYSTEM. WATER PRESSURE AT PUMP DISCHARGE SHOULD NOT EXCEED GENERATOR GAS PRESSURE. CLOSE VALVE 431.
7. OPEN MOMENTARILY AND CLOSE VALVE 470, 474, 481, 485, AND 486. THROTTLE VENT VALVE 477, 505, 501, 500, 510, AND 509.
8. OPEN VALVE 431 UNTIL A FULL STREAM OF WATER FLOWS OUT OF VALVE 512. CLOSE VALVE 431 AND 512

FOR PRESSURIZATION OF WATER SYSTEM WITH HYDROGEN

1. INSTALL REMOVABLE LINK "H" AS SHOWN ON GAS DIAGRAM
2. CLOSE VALVES 444, 448, 459 AND 460
3. OPEN VALVE 78, ON GAS DIAGRAM, TO PROVIDE H_2 TO WATER SYSTEM
4. ADJUST PRESSURE REGULATOR "Z", ON GAS DIAGRAM, TO DELIVER HYDROGEN AT RANGE OF 3 TO 5 PSIG
5. OPEN VALVE 447, 448, 458 AND 460 AND ADMIT HYDROGEN.
6. DRAIN OFF EXCESS WATER UNTIL WATER LEVEL IS AT HIGH LEVEL IN SIGHT GLASS BY OPENING VALVE 511
7. START PUMP #1 OR #2 AND ADJUST WATER LEVEL IN WATER TANK TO NORMAL LEVEL
8. OPEN VALVE 444
9. CIRCULATE WATER THROUGH DEMINERALIZER UNTIL PROPER CONDUCTANCE IS OBTAINED ON INLET CONDUCTIVITY CELL "CC2"
10. CLOSE VALVES 402, 404, 406, 408, 422 AND 423
11. THROTTLE VALVE 419 TO MAINTAIN DESIRED CONDUCTIVITY

ADAPTED FROM DC-663292-1

UNIT 1

DIABLO CANYON POWER PLANT - PG&E CO.
TURBINE AND GENERATOR ASSOCIATED SYSTEMS

DRAWING	SHEET	PAGE	REV
102022	5	0	59

1122J99

WESTINGHOUSE ELECTRIC CORPORATION
TITLE A C TURBINE GENERATOR

DATE	DWN	RE	IV	PROFESSIONAL ENGINEER	PE DISC.	PE#	PE EXP.	
03-04-2009	AJFJ	FxC2		KERSI J. DALAL	MECHANICAL	M 16690	3/31/2010	REVISED PER DFT-7*276-00

RASTER=102022s5.dgn
DGN=102022s5.dgn
CAD User:AJFJ Date:03-04-2009

INPGIC
I Size

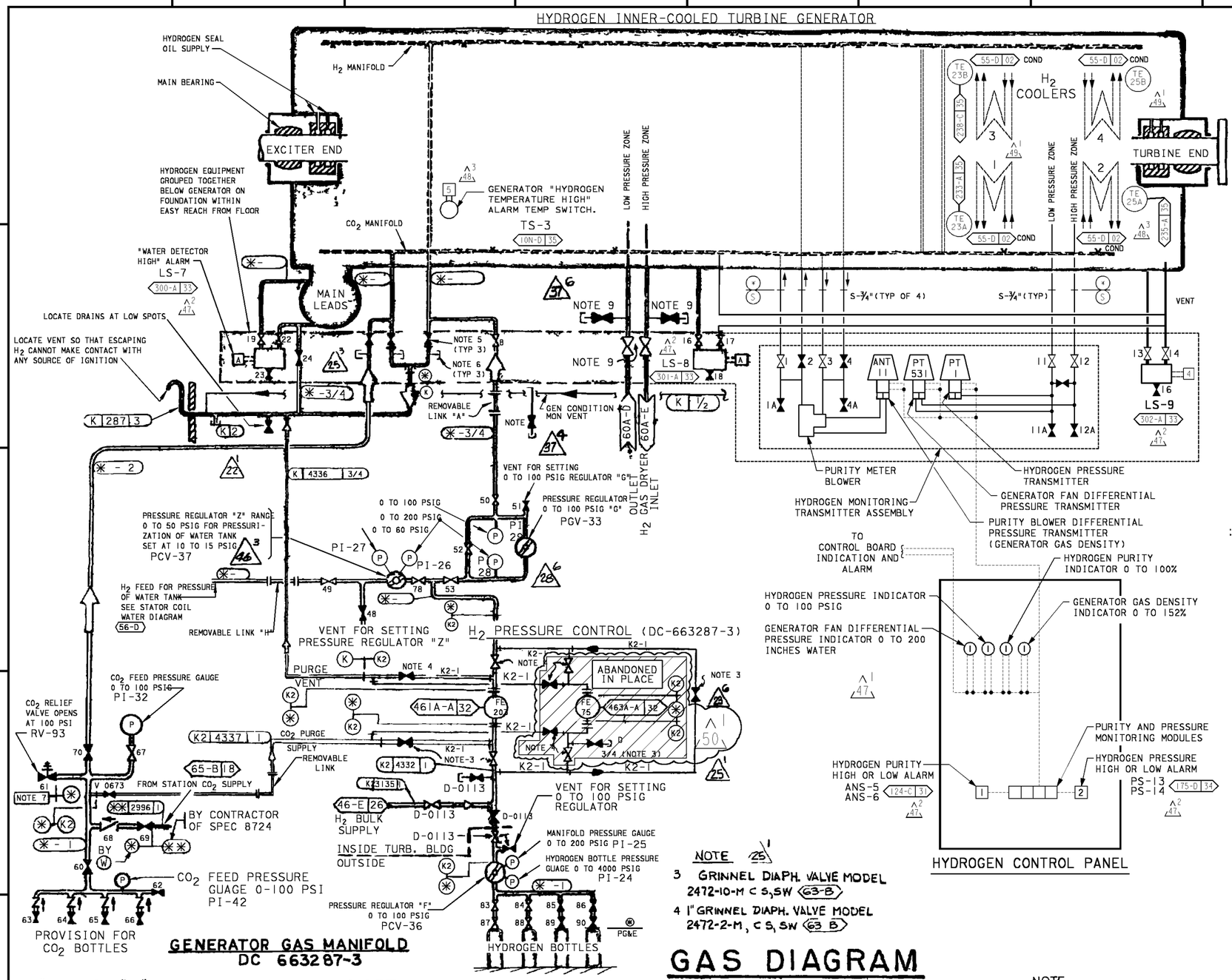

GENERATOR GAS MANIFOLD
DC 663287-3

7 "AQUATROL" 1" BRONZE VALVE (MODEL 89) SET TO OPEN AT 100 PSIG

8 KEROTEST PACKLESS GLOBE VALVE MODEL # R42C06 SW (63-D) (37 4)

9 ¾"ϕ SS PACKLESS METAL DIAPHRAGM GLOBE VALVE 300# SW ENDS, KEROTEST MODEL R42U06SW (63-D) (37 6)

0 KEROTEST PACKLESS GLOBE VALVES MODEL R42X24 WC (65-D) (37 4)

NOTE CONT

5 KEROTEST 2" GLOBE VALVE CS SW MODEL 99105 (62-D)

6 PLUGGED THREADOLETS, ½" 3000 # LOCATED LESS THAN 6" BELOW VALVES FOR LEAK CHECK (62-D)

NOTE (25 1)

3 GRINNEL DIAPH. VALVE MODEL 2472-10-M C S,SW (63-B)

4 1" GRINNEL DIAPH. VALVE MODEL 2472-2-M, C S, SW (63 B)

GAS DIAGRAM

ADAPTED FROM DC-663287-17

HYDROGEN CONTROL PANEL

NOTE

1 ALL PIPING ON THIS SHEET PG&E CLASS E

2 FOR PRESSURE MEASURING STATION CONFIGURATION REFER TO DC-663287-15 (18 1)

LEGEND

- PRESSURE SWITCH
- PRESSURE GAUGE
- VALVE NORMALLY CLOSED
- VALVE NORMALLY OPEN
- RELIEF VALVE
- TWO WAY VALVE
- ELECTRICAL CONNECTION
- PRESSURE REGULATOR

GAS ALARMS

1	HYDROGEN PURITY	- HIGH OR LOW
2	HYDROGEN PRESSURE	- HIGH OR LOW
3	HYDROGEN SUPPLY PRESSURE	- LOW
4	WATER DETECTOR	- HIGH
5	HYDROGEN TEMPERATURE	- HIGH

CONDENSED OPERATING INSTRUCTIONS

GENERAL

1 THE GAS CHANGING OPERATION MAY BE PERFORMED WITH THE GENERATOR AT STANDSTILL, ON TURNING GEAR, OR ROLLING AT SPEED NOT EXCEEDING 1000 RPM.

2 SHAFT SEAL OIL PRESSURE MUST BE MAINTAINED

3 THE NORMAL SETTING OF VALVES IS INDICATED ON THE DIAGRAM

REPLACING AIR AND CO_2

1 DISCONNECT THE REMOVABLE LINKS "A" & "H". DISCONNECT REMOVABLE LINK "J" ON WATER DIAGRAM.

2 CLOSE VALVES 1, 3, 8, 50, & 78. OPEN VALVES 2, 4, 5, 7, 60 & 70.

USING CYLINDERS:

3 ADMIT CO_2 BY OPENING BOTTLE VALVES 63 TO 66. OPEN VALVES WIDE AND DO NOT THROTTLE. OBSERVE CO_2 RELIEF VALVE OR PRESSURE GAUGE TO DETERMINE THE NUMBER OF BOTTLES THAT MAY BE OPENED. BOTTLES ARE EMPTY WHEN FROST DISAPPEARS FROM THE FLEXIBLE LEADERS. ONE AND ONE-HALF VOLUMES OF CO_2 ARE REQUIRED. STANDARD CO_2 BOTTLES CONTAIN 440 CUBIC FEET. PURITY SHOULD READ 95% GREATER IN CO_2.

USING BULK SUPPLY:

BULK CO_2 SUPPLY MAY BE USED FOR PURGING. CLOSE VALVE 60. OPEN VALVES 69 & 70. ADMIT CO_2 PER SAME INSTRUCTIONS AS FOR CYLINDERS.

4 WHEN FINISHED, CHANGE FOLLOWING VALVES BACK TO NORMAL. CLOSE VALVES 2, 4, 5, 7, 60 AND 70. OPEN VALVES 1 AND 3.

REPLACING CO_2 WITH H_2

1 REPLACE REMOVABLE LINK "A" AND OPEN VALVES 6, 8, & 50.

USING CYLINDERS:

2 OPEN VALVES 81, 83, 84, 87 AND 88. OPEN PRESSURE REGULATOR "F" AT BOTTLES. HYDROGEN MAY THEN BE FED BY ADJUSTING PRESSURE REGULATOR "G" AT HYDROGEN PRESSURE CONTROL. FOR MORE RAPID PURGING OPEN VALVE 52. WHEN BOTTLE PRESSURE AT THE HYDROGEN BOTTLE PRESSURE GAUGE DROPS TO 200 PSIG. CLOSE VALVES 83, 84, 87 AND 88. OPEN VALVES 85, 86, 89 AND 90 AND CONTINUE. TWO AND ONE-HALF VOLUMES OF H_2 ARE REQUIRED TO REPLACE CO_2 IN THE GENERATOR AT ONE-HALF PSIG. ONE ADDITIONAL VOLUME IS REQUIRED FOR EACH 15 PSIG INCREASE IN PRESSURE. STANDARD H_2 BOTTLES CONTAIN 190 CUBIC FEET. PURITY METER SHOULD READ 95% GREATER IN H_2.

USING BULK SUPPLY:

BULK H_2 SUPPLY MAY BE USED FOR PURGING AND FILLING. CLOSE VALVE 81 AND OPEN VALVE 79. ADMIT H_2 PER SAME INSTRUCTIONS AS FOR CYLINDERS.

3 CLOSE VALVE 52 IF USED, THEN CLOSE VALVE 6.

4 OPEN VALVE 24 FOR APPROXIMATELY TWO MINUTES TO PURGE LOW AREAS, THEN CLOSE VALVE 24.

5 MAINTAIN DESIRED PRESSURE IN GENERATOR BY MEANS OF THE PRESSURE REGULATOR "G" AT THE HYDROGEN PRESSURE CONTROL.

6 OPERATION IS THEN NORMAL AS INDICATED ON DIAGRAM.

7 OPEN VALVE 78 PER INSTRUCTIONS ON WATER DIAGRAM.

8 INSTALL REMOVABLE LINK "H" PER WATER DIAGRAM.

NORMAL H_2 OPERATION

SET PRESSURE REGULATOR "G" ON THE HYDROGEN PRESSURE CONTROL TO MAINTAIN THE DESIRED HYDROGEN PRESSURE IN THE GENERATOR. THE PRESSURE MAY BE VARIED TO 75 PSIG.

REPLACING H_2 WITH CO_2

1 CLOSE VALVES 8, 50, 53 & 78. OPEN VALVE 7 AND VENT HYDROGEN PRESSURE.

2 DISCONNECT REMOVABLE "LINK A".

3 THIS-OPERATION IS THE SAME AS REPLACING AIR WITH CO_2 EXCEPT THAT TWO VOLUMES OF CO_2 ARE REQUIRED.

PRESSURIZATION OF STATOR COIL WATER SYSTEM

FOR PRESSURIZATION OF THE STATOR COIL WATER SYSTEM, SEE STATOR COIL WATER DIAGRAM.

UNIT 1

P G & E CO.	102022	REV. 50
SHEET 6 PAGE 0		

1/25/00	PMH2	FXC2	-	ALAN GLEN BARTA	ELECTRICAL	E 9271	9/30/2001	Revised per FCT 024322
DATE	DWN	RE	IV	PROFESSIONAL ENGINEER	PE DISC.	PE#	PE EXP.	

CAD User:PMH2 Date: 1-25-2000
DGN=002E1295.DGN
RASTER=002E1295.TIF

INPGIC

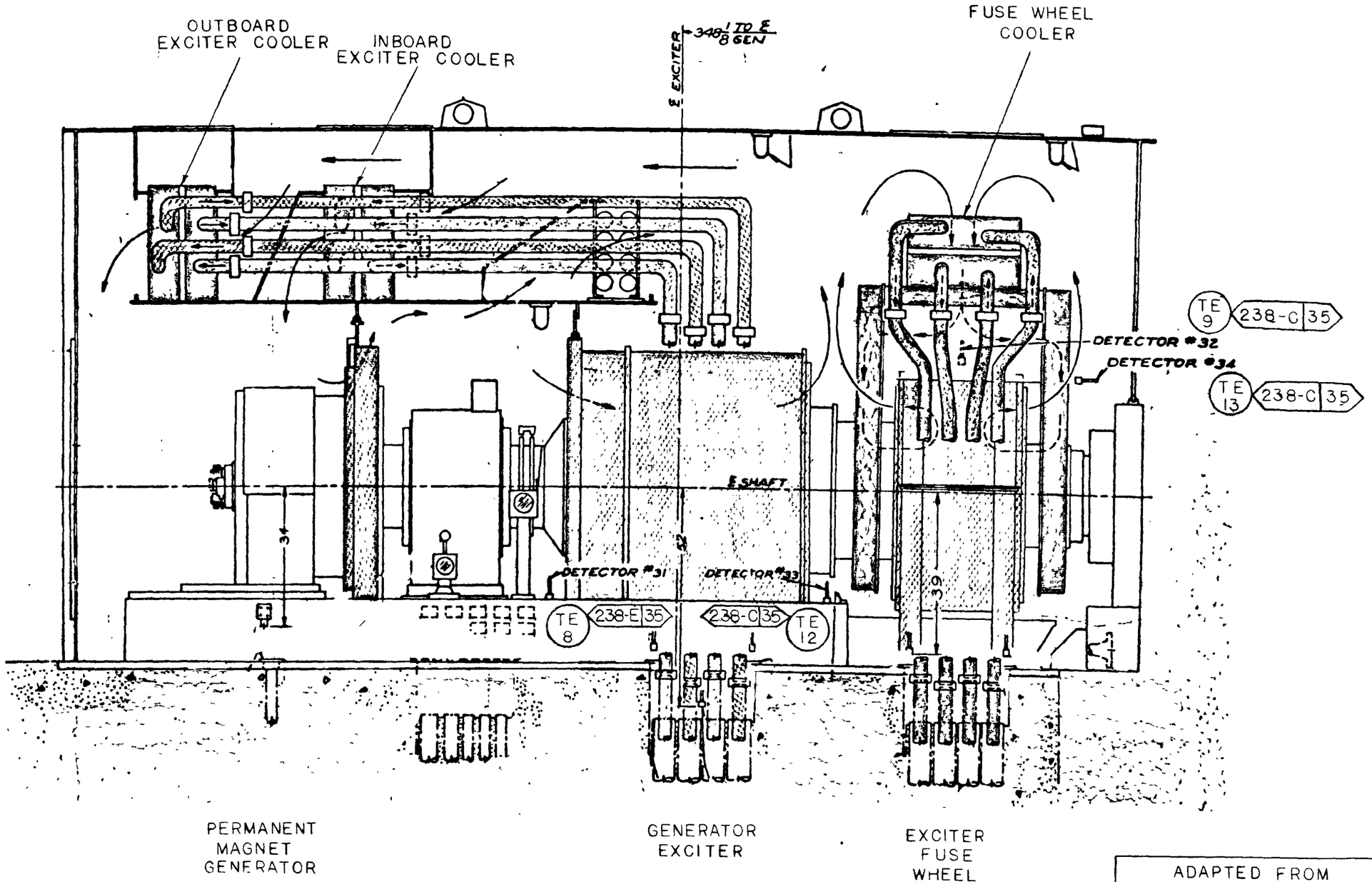

ADAPTED FROM WESTINGHOUSE DWG. 687J819 DC-663293-1

UNIT - 1

EXCITER COOLERS AIR TEMPERATURE DETECTORS

35 M/M Neg. 10

P.G.&E.C.O.

SHEET NO 7 OF SHEETS

DRAWING NUMBER 102022

CHANGE 10

LEGEND

HVAC UNIQUE SYMBOLS
(SEE DWG #102001 SHEET 3 FOR PIPING SYMBOLS)

- CENTRIFUGAL FAN
- CENTRIFUGAL FAN (WITH INLET VANES)
- PP — PUMP
- CP — COMPRESSOR
- VANEAXIAL FAN
- PROPELLER OR TUBEAXIAL FAN
- H/E — HEATING COIL
  - E - ELECTRIC
  - S - STEAM
  - (ELECTRIC SHOWN)
- C/W — COOLING COIL
  - W - WATER
  - DX - DIRECT EXPANSION
  - CD - CONDENSER
  - (WATER SHOWN)
- ROUGHING FILTER (PRE-FILTER)
- HEPA FILTER
- CHARCOAL FILTER
- LOUVRE
- DEMISTER (MOISTURE SEPARATOR)

- SUPPLY AIR DUCT - CLASS II & III (PIPING WHEN LINE NUMBER IS PRESENT)
- SUPPLY AIR DUCT - CLASS I SAFETY RELATED VENTILATION SYSTEM.
- EXHAUST OR RETURN AIR DUCT - CLASS II & III VENTILATION
- EXHAUST OR RETURN AIR DUCT - CLASS I SAFETY RELATED VENTILATION SYSTEM.
- IMAGINARY BOUNDARY FOR SYSTEMS, FUTURE EQUIPMENT OUTLINE, OR PROPOSED PIPING LINE.
- CHANGE OF ELEVATION OR LEVEL PROJECTION LINE WITH ORIGIN & DESTINATION
- PROJECTION LINE (SEE PRECEDING) CROSS REFERENCES:
  - ALPHA CHARACTER = RETURN AIR
  - NUMERIC CHARACTER = SUPPLY AIR
- SUPPLY AIR DIFFUSER
- EXHAUST OR RETURN REGISTER
- SUPPLY AIR FLOW
- EXHAUST AIR FLOW
- F — (F) FLOOR OR (C) CEILING OPENING
  E.G.: C+F MEANS OPENINGS BOTH ON CEILING AND ON FLOOR.
- "WINDOW" OPENING OR OPENING IN WALL
- E — ELECTRIC OPERATOR (SOLID STATE)
- M — MOTOR OPERATOR
- PNEUMATIC OPERATOR
- MANUAL OPERATOR
- CW — COUNTERWEIGHT

- BUTTERFLY VALVE OR POSITIVE SHUT-OFF DAMPER
- DAMPERS (IN WALL & IN DUCTING, RESPECTIVELY)
- BACK DRAFT DAMPER
- FIRE OR SMOKE DAMPER
- EXPANSION VALVE
- THERMOSTATIC AIR VENT
- SIGHT GLASS
- CHARGING VALVE
- FLOW ELEMENT (AIR MONITOR)
- SMOKE DETECTOR
- RUC — RECORDING USAGE CLOCK
- CEL — ANALYSIS SENSOR
  - HVAC: TEMPERATURE & HUMIDITY
  - PIPING: CONDUCTIVITY ELEMENT

HVAC UNIQUE ABBREVIATIONS
(SEE DWG #102001 SHEET 3 FOR PIPING ABBREVIATIONS)

BD OR BDD-___ (3/57)	BACK DRAFT DAMPER
C-___	COOLING COIL
CH-___	CHILLER
CNTMT	CONTAINMENT
CP-___	COMPRESSOR
CR-___	CONDENSER
CROM	CONTROL ROD DRIVE MECHANISM
DX	DIRECT EXPANSION COIL
E-___	EXHAUST FAN
EFB-___	EXHAUST FILTER BANK
EFC-___	EXHAUST FILTER CHARCOAL
EFH-___	EXHAUST FILTER HEPA
EFR-___	EXHAUST FILTER ROUGHING
EH-___	ELECTRIC HEATER
EXH.	EXHAUST
F.A.I.	FAIL AS IS
FB-___	FILTER BANK
FC-___	FLEXIBLE CONNECTOR
F.C.	FAIL CLOSE
FD-___	FIRE DAMPER
F.O.	FAIL OPEN
FU-___	FILTER UNIT
HVAC	HEATING, VENTILATION, & AIR CONDITIONING
M-___	MODE DAMPER
MD-___	MANUAL DAMPER
35 MOD-___	MOTOR OPERATED DAMPER
O/A	OUTSIDE AIR
PP	PUMP
S-___	SUPPLY FAN
SD-___	SMOKE DAMPER
SG-___	SIGHT GLASS
SUP.	SUPPLY
45 TV-___	FIRE DAMPER OR SMOKE DAMPER

UNIT 1

P.G.&E. CO.	DRAWING NUMBER	REV
SHEET 2 OF SHEETS	102023	57
RMS INDEXED REV 57	MICROFILM	57

SCAN 57 IC

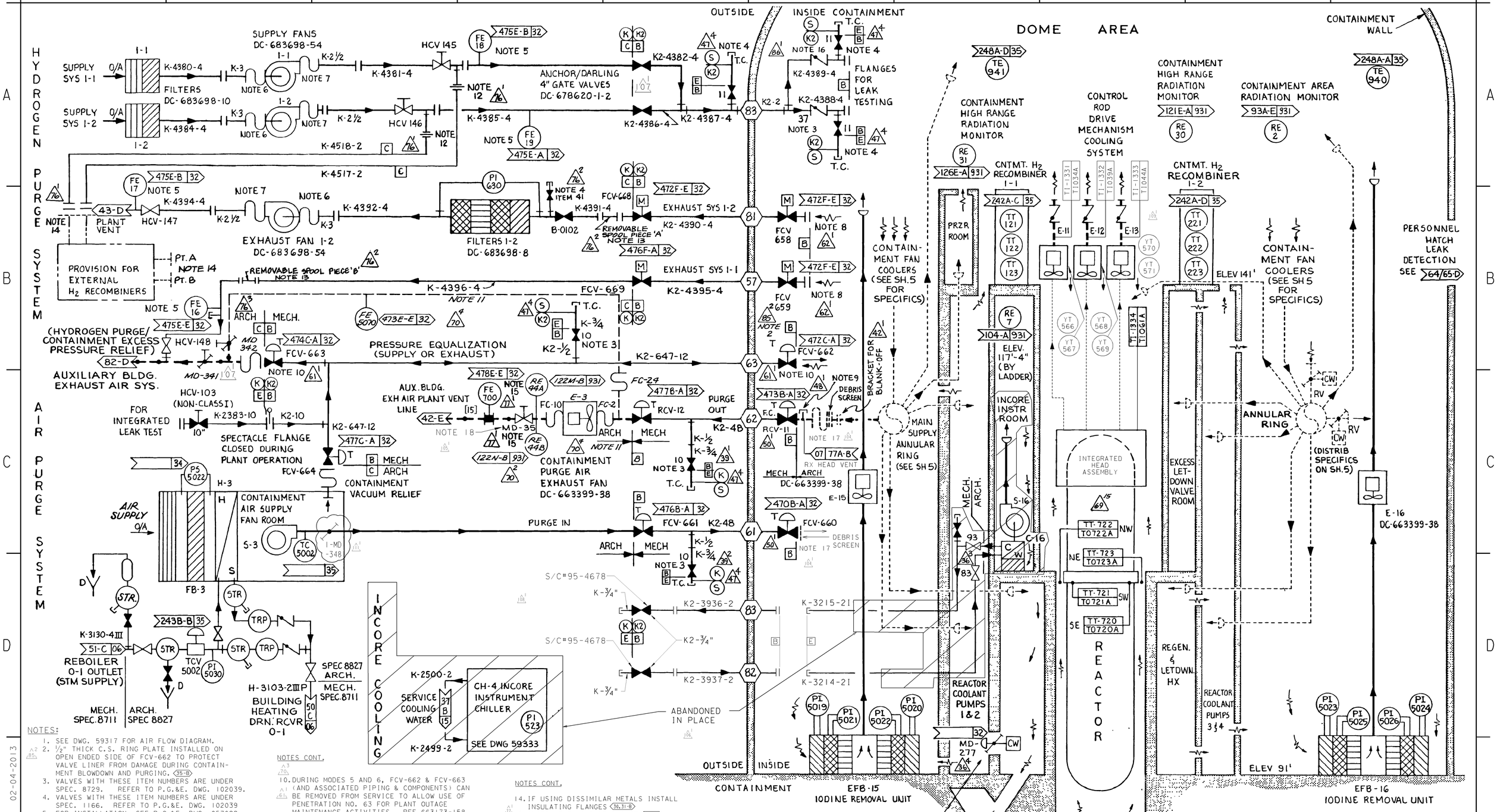

NOTES:

1. SEE DWG. 59317 FOR AIR FLOW DIAGRAM.
2. 1/2" THICK C.S. RING PLATE INSTALLED ON OPEN ENDED SIDE OF FCV-662 TO PROTECT VALVE LINER FROM DAMAGE DURING CONTAIN-MENT BLOWDOWN AND PURGING. (35-B)
3. VALVES WITH THESE ITEM NUMBERS ARE UNDER SPEC. 8729. REFER TO P.G.&E. DWG. 102039.
4. VALVES WITH THESE ITEM NUMBERS ARE UNDER SPEC. 1166. REFER TO P.G.&E. DWG. 102039
5. FOR INSTALLATION, SEE P.G.&E. DWG. 053092, FIG. 224.
6. 3 1/2" I.D. RUBBER HOSE 4R55145.
7. 2 3/4" I.D. RUBBER HOSE 4R95247.
8. FLANGE WITH PROVISION FOR LEAK RATE TEST OF ISOLATION VALVE SHALL BE REMOVABLE & READILY AVAILABLE FOR PERIODIC TESTS. FLANGES UPSTREAM OF FCV-658/659 TO BE 150# RATING PER "K" SPEC.
9. (6)-5" PORTS WITH COVERPLATES USED FOR VENTING GASES DURING OUTAGES POSITIONED RADIALLY ON 48"Ø DUCT; FOR DETAIL SEE DWG. 59453.

NOTES CONT.

10. DURING MODES 5 AND 6, FCV-662 & FCV-663 (AND ASSOCIATED PIPING & COMPONENTS) CAN BE REMOVED FROM SERVICE TO ALLOW USE OF PENETRATION NO. 63 FOR PLANT OUTAGE MAINTENANCE ACTIVITIES. REF.663173-158 FOR FABRICATION/INSTALLATION DETAILS AND REQUIREMENTS.
11. DUCT (INCLUDING FAN E-3 HOUSING) FROM RCV-12 TO MD-35 AND TO MD-342 IS DESIGN CLASS II, SEISMIC CATEGORY I.
12. SYMBOL INDICATES BLANKED FLANGE, REMOVE OBSTRUCTION WHEN RECOMBINER IS CONNECTED TO OUTLET LINES (32,33-B)
13. REMOVABLE SPOOL PIECES 'A' AND 'B' ALLOW FOR CONNECTION OF CONTAINMENT EXHAUST PIPING TO POINTS 'A' AND 'B' OF PORTABLE EXTERNAL HYDROGEN RECOMBINERS. (31-B)

NOTES CONT.

14. IF USING DISSIMILAR METALS INSTALL INSULATING FLANGES (30,31-B)
15. INSTRUMENT IS PIMS SYS 39. (33-C)
16. DC 663317-183, S/C 94-2436 (35-A)
17. DEBRIS SCREENS FOR VALVES FCV-660 AND RCV-11 ARE DESIGN CLASS I. DUCTING AND FLEXIBLE CONNECTION BETWEEN DEBRIS SCREEN AND VALVE RCV-11 ARE DESIGN CLASS I.
18. DAMPER MD-35 IS DESIGN CLASS I AND IS THE BOUNDARY BETWEEN THE PLANT VENT AND THE PURGE DUCTWORK.

CONTAINMENT ATMOSPHERE VENTILATION AND A/C PENETRATIONS

DIABLO CANYON POWER PLANT - PG&E CO.
VENTILATION & AIR CONDITIONING SYSTEMS

DRAWING	SHEET	PAGE	REV
102023	3	0	111

DATE	DWN	RE	IV	PROFESSIONAL ENGINEER	PE DISC.	PE#	PE EXP.	
02-04-2013	MNRU	FxC2		KERSI J. DALAL	MECHANICAL	M 16690	3/31/2014	REVISED PER DFT-7*1949

RASTER=102023s3.dgn
DGN=102023s3.dgn
CAD User: MNRU Date: 02-04-2013

3NDSIC
3 Size

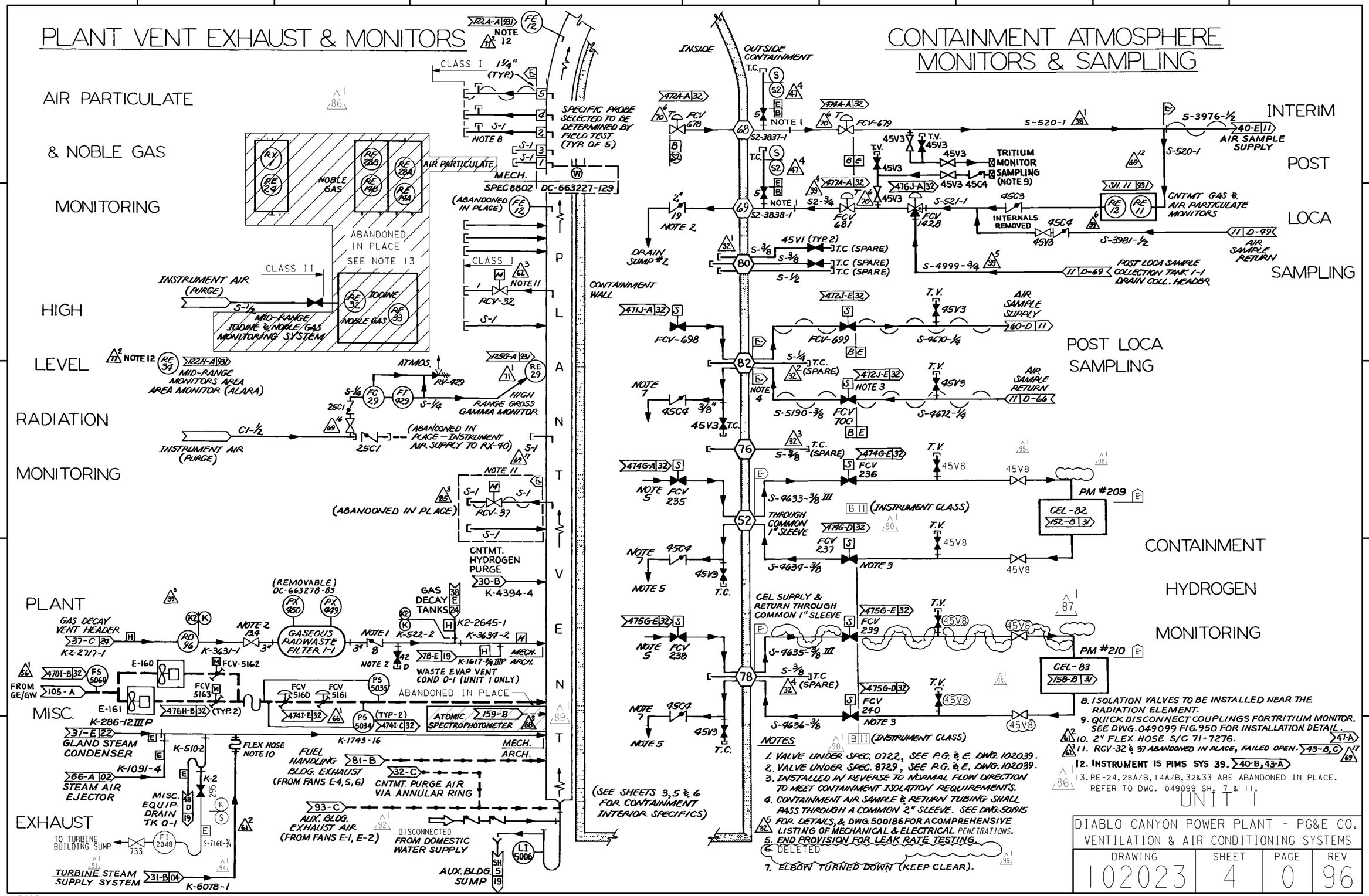
PLANT VENT EXHAUST & MONITORS
AIR PARTICULATE & NOBLE GAS MONITORING
HIGH LEVEL RADIATION MONITORING
PLANT EXHAUST
MISC.
CONTAINMENT ATMOSPHERE MONITORS & SAMPLING
INTERIM POST LOCA SAMPLING
POST LOCA SAMPLING
CONTAINMENT HYDROGEN MONITORING
INSIDE
OUTSIDE CONTAINMENT
CONTAINMENT WALL
PLANT VENT
SPECIFIC PROBE SELECTED TO BE DETERMINED BY FIELD TEST (TYP. OF 5)
ABANDONED IN PLACE SEE NOTE 13
MID-RANGE IODINE & NOBLE GAS MONITORING SYSTEM
MID-RANGE MONITORS AREA AREA MONITOR (ALARA)
HIGH RANGE GROSS GAMMA MONITOR
(ABANDONED IN PLACE — INSTRUMENT AIR SUPPLY TO RX-40)
CNTMT. HYDROGEN PURGE
GAS DECAY VENT HEADER
GASEOUS RADWASTE FILTER 1-1
GAS DECAY TANKS
WASTE EVAP VENT COND 0-1 (UNIT 1 ONLY)
GLAND STEAM CONDENSER
STEAM AIR EJECTOR
MISC. EQUIP. DRAIN TK 0-1
FUEL HANDLING BLDG. EXHAUST (FROM FANS E-4,5,6)
CNTMT. PURGE AIR VIA ANNULAR RING
AUX. BLDG. EXHAUST AIR (FROM FANS E-1, E-2)
DISCONNECTED FROM DOMESTIC WATER SUPPLY
AUX. BLDG. SUMP
TURBINE STEAM SUPPLY SYSTEM
TO TURBINE BUILDING SUMP
FROM GE/GW
TRITIUM MONITOR SAMPLING (NOTE 9)
INTERNALS REMOVED
CNTMT GAS & AIR PARTICULATE MONITORS
AIR SAMPLE SUPPLY
AIR SAMPLE RETURN
POST LOCA SAMPLE COLLECTION TANK 1-1 DRAIN COLL. HEADER
CEL SUPPLY & RETURN THROUGH COMMON 1" SLEEVE
THROUGH COMMON 1" SLEEVE
(INSTRUMENT CLASS)
PM #209
PM #210
CEL-82
CEL-83
(SEE SHEETS 3,5 & 6 FOR CONTAINMENT INTERIOR SPECIFICS)
NOTES
1. VALVE UNDER SPEC. 0722, SEE P.G. & E. DWG. 102039.
2. VALVE UNDER SPEC. 8729, SEE P.G. & E. DWG. 102039.
3. INSTALLED IN REVERSE TO NORMAL FLOW DIRECTION TO MEET CONTAINMENT ISOLATION REQUIREMENTS.
4. CONTAINMENT AIR SAMPLE & RETURN TUBING SHALL PASS THROUGH A COMMON 2" SLEEVE. SEE DWG. 501915 FOR DETAILS, & DWG. 500186 FOR A COMPREHENSIVE LISTING OF MECHANICAL & ELECTRICAL PENETRATIONS.
5. END PROVISION FOR LEAK RATE TESTING.
6. DELETED
7. ELBOW TURNED DOWN (KEEP CLEAR).
8. ISOLATION VALVES TO BE INSTALLED NEAR THE RADIATION ELEMENT.
9. QUICK DISCONNECT COUPLINGS FOR TRITIUM MONITOR. SEE DWG. 049099 FIG. 950 FOR INSTALLATION DETAIL.
10. 2" FLEX HOSE S/C 71-7276.
11. RCV-32 & 37 ABANDONED IN PLACE, FAILED OPEN.
12. INSTRUMENT IS PIMS SYS 39.
13. RE-24, 28A/B, 14A/B, 32&33 ARE ABANDONED IN PLACE. REFER TO DWG. 049099 SH. 7 & 11.
UNIT 1
DIABLO CANYON POWER PLANT - PG&E CO.
VENTILATION & AIR CONDITIONING SYSTEMS
DRAWING 102023
SHEET 4
PAGE 0
REV 96
10-04-2010 AJFJ FxC2 KERSI J. DALAL MECHANICAL M 16690 3/31/2012 REVISED PER DDN-2*229, DDN-2*381, & DAS-6*323
DATE DWN RE IV PROFESSIONAL ENGINEER PE DISC. PE# PE EXP.
RASTER=ERU87024.DGN
DGN=ERU87024.DGN
CAD User: AJFJ Date: 10-04-2010
INPGIC
I Size

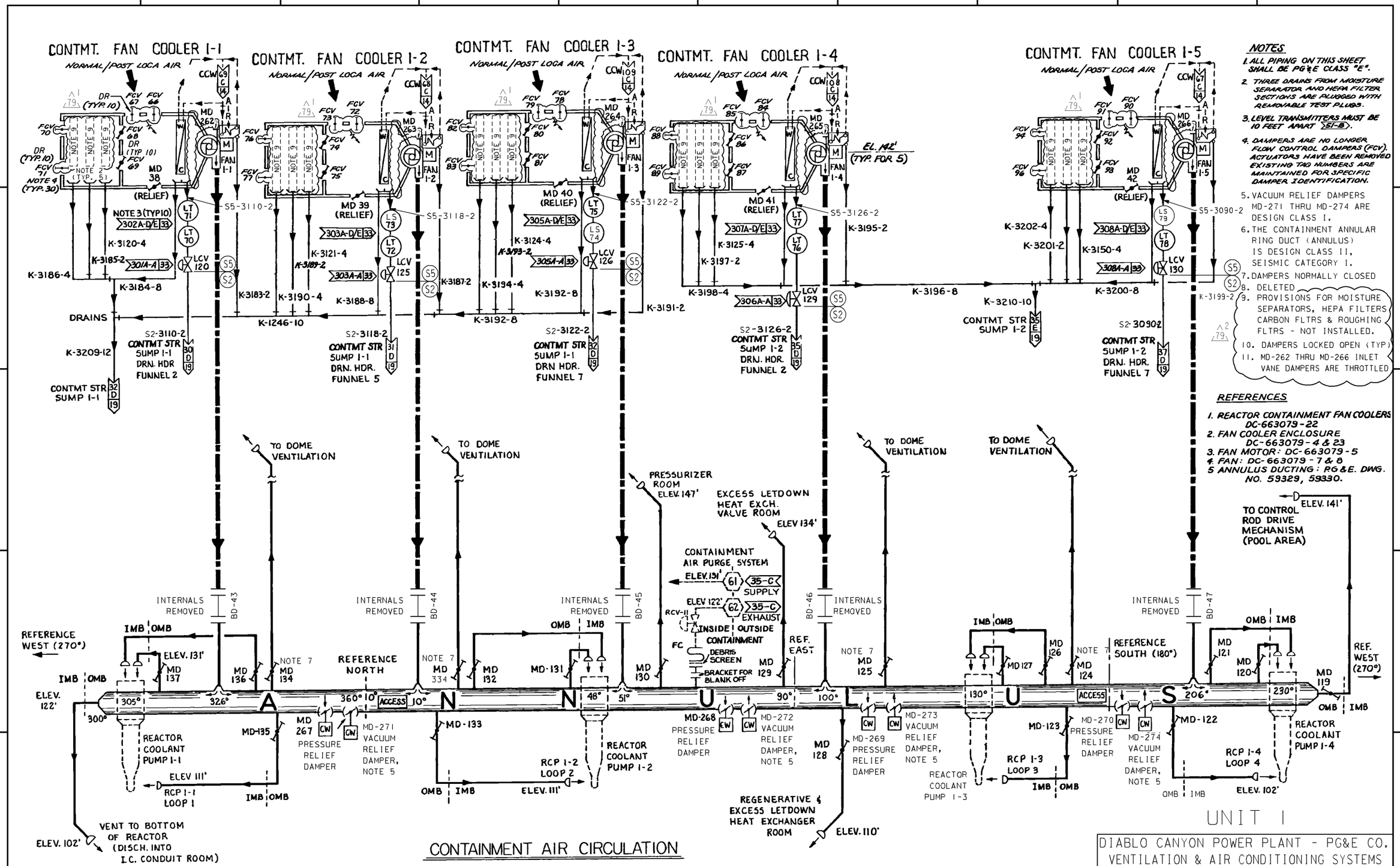

NOTES

1. ALL PIPING ON THIS SHEET SHALL BE PG&E CLASS "E".
2. THREE DRAINS FROM MOISTURE SEPARATOR AND HEPA FILTER SECTIONS ARE PLUGGED WITH REMOVABLE TEST PLUGS.
3. LEVEL TRANSMITTERS MUST BE 10 FEET APART (S1-B).
4. DAMPERS ARE NO LONGER FLOW CONTROL DAMPERS (FCV). ACTUATORS HAVE BEEN REMOVED. EXISTING TAG NUMBERS ARE MAINTAINED FOR SPECIFIC DAMPER IDENTIFICATION.
5. VACUUM RELIEF DAMPERS MD-271 THRU MD-274 ARE DESIGN CLASS I.
6. THE CONTAINMENT ANNULAR RING DUCT (ANNULUS) IS DESIGN CLASS II, SEISMIC CATEGORY I.
7. DAMPERS NORMALLY CLOSED
8. DELETED
9. PROVISIONS FOR MOISTURE SEPARATORS, HEPA FILTERS CARBON FLTRS & ROUGHING FLTRS - NOT INSTALLED.
10. DAMPERS LOCKED OPEN (TYP)
11. MD-262 THRU MD-266 INLET VANE DAMPERS ARE THROTTLED

REFERENCES

1. REACTOR CONTAINMENT FAN COOLERS DC-663079-22
2. FAN COOLER ENCLOSURE DC-663079-4 & 23
3. FAN MOTOR: DC-663079-5
4. FAN: DC-663079-7 & 8
5. ANNULUS DUCTING: PG&E. DWG. NO. 59329, 59330.

CONTAINMENT AIR CIRCULATION

DIABLO CANYON POWER PLANT - PG&E CO.
VENTILATION & AIR CONDITIONING SYSTEMS

DRAWING	SHEET	PAGE	REV
102023	5	0	79

DATE	DWN	RE	IV	PROFESSIONAL ENGINEER	PE DISC.	PE#	PE EXP.	
10-07-2013	MNRU	FxC2	KJD3	NOT REQUIRED	N/A	N/A	N/A	REVISED PER DFT-7*2260

RASTER=002el279.DGN
DGN=002el279.DGN
CAD User: MNRU Date: 10-07-2013

INPGIC
1 Size

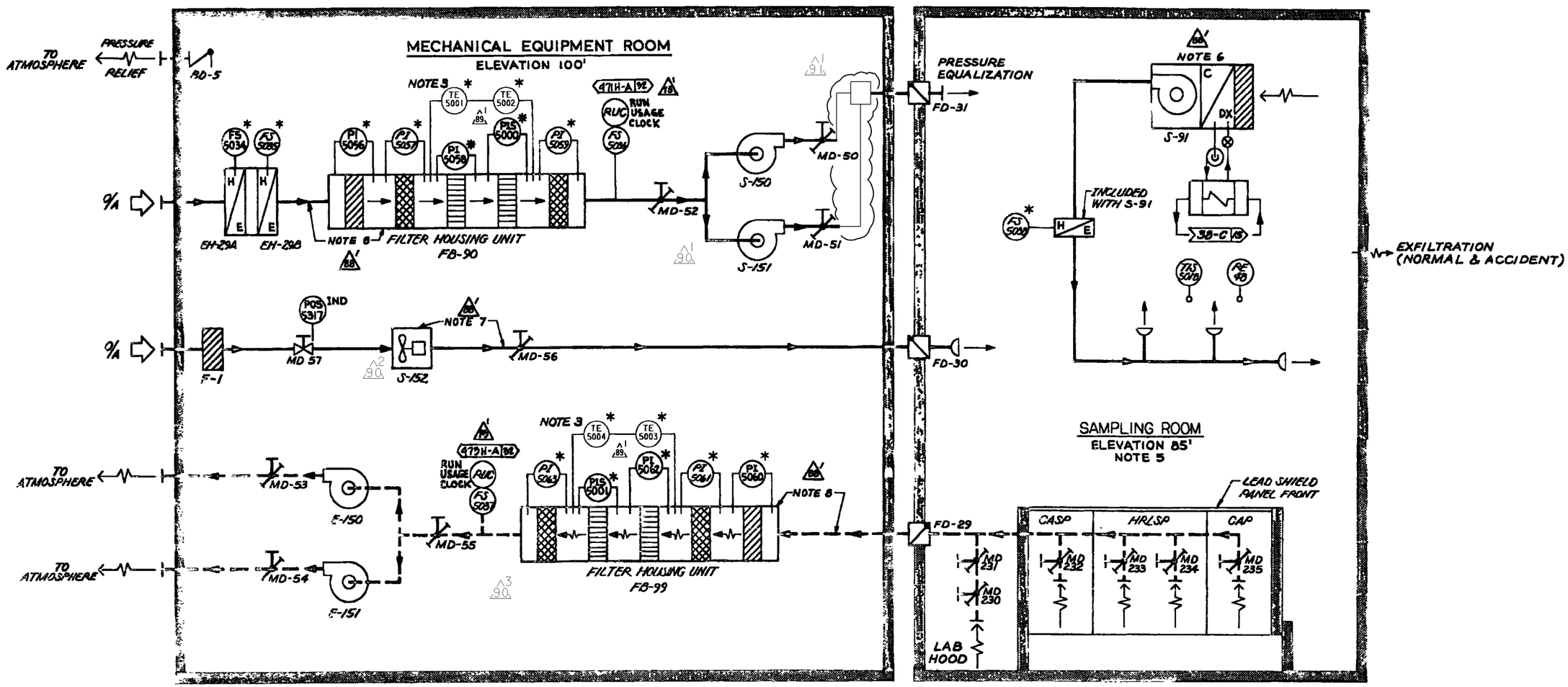

NOTES

1. FOR LEGEND, ABBREVIATIONS, INDEX, AND GENERAL NOTES, SEE 102023 SHEET 2 AND 102001 SHEET 3
2. SEE DRAWING 512904 FOR AIR FLOW DIAGRAM
3. CONAX RTD ASSEMBLY (RTD-43Y2-SS25TD) IS PROVIDED WITH MOORE RBA/2W ALARM SWITCH FOR FIRE PROTECTION. LOCAL ALARM IS INITIATED WITH A TEMPERATURE RISE TO 150°F. "RTD" = RESISTANCE TEMPERATURE DETECTOR. SEE DC-663278-622 FOR REFERENCE 72/73-A 73/74-C
4.
5. SEE DRAWING 102011 SHEET 6 68-B11 FOR SAMPLING ROOM PHYSICAL LAYOUT
6. FOR NORMAL A/C SYSTEM, EQUIPMENT ARE DESIGNATED DESIGN CLASS II, BUT SUPPORTED SO THAT THEY WILL REMAIN IN PLACE AFTER A HOSGRI EVENT NOT NECESSARY TO FUNCTION AFTER THE EARTHQUAKE 77-A
7. FOR NORMAL SUPPLY AIR SYSTEM DUCT AND DUCT SUPPORTS ARE QUALIFIED TO SEISMIC CLASS I CRITERIA, EQUIPMENT ARE DESIGNATED DESIGN CLASS II, BUT SUPPORTED SO THAT THEY WILL REMAIN IN PLACE AFTER A HOSGRI EVENT NOT NECESSARY TO FUNCTION AFTER THE EARTHQUAKE 75-C
8. FOR EMERGENCY VENTILATION SYSTEM, EQUIPMENT ARE EVALUATED TO REMAIN INTACT AFTER BEING SUBJECTED TO A POSTULATED HOSGRI EVENT CALCULATED STRESSES ARE TO BE WITHIN THE ALLOWABLES FOR DESIGN CLASS I EQUIPMENT FOR EMERGENCY DUCTWORK, DUCT AND DUCT SUPPORTS ARE QUALIFIED TO SEISMIC CLASS I CRITERIA 72-B 75-C

5 SHEET 7 CHANGE 26 DAMPER/EQUIP NUMBERS

UNIT 1

POST LOCA SAMPLING SYSTEM HVAC

DIABLO CANYON POWER PLANT - PG&E CO.
VENTILATION & AIR CONDITIONING SYSTEMS

DRAWING	SHEET	PAGE	REV
102023	7	0	91

DATE	DWN	RE	IV	PROFESSIONAL ENGINEER	PE DISC.	PE#	PE EXP.	
01-15-2008	JARO	FxC2		STEPHEN PERRY BAKER	MECHANICAL	M 27135	6/30/2009	REVISED PER FCT-33147

RASTER=eru04915.DGN
DGN=eru04915.DGN
CAD User: JARO Date: 01-15-2008

INPG2ND
I Size

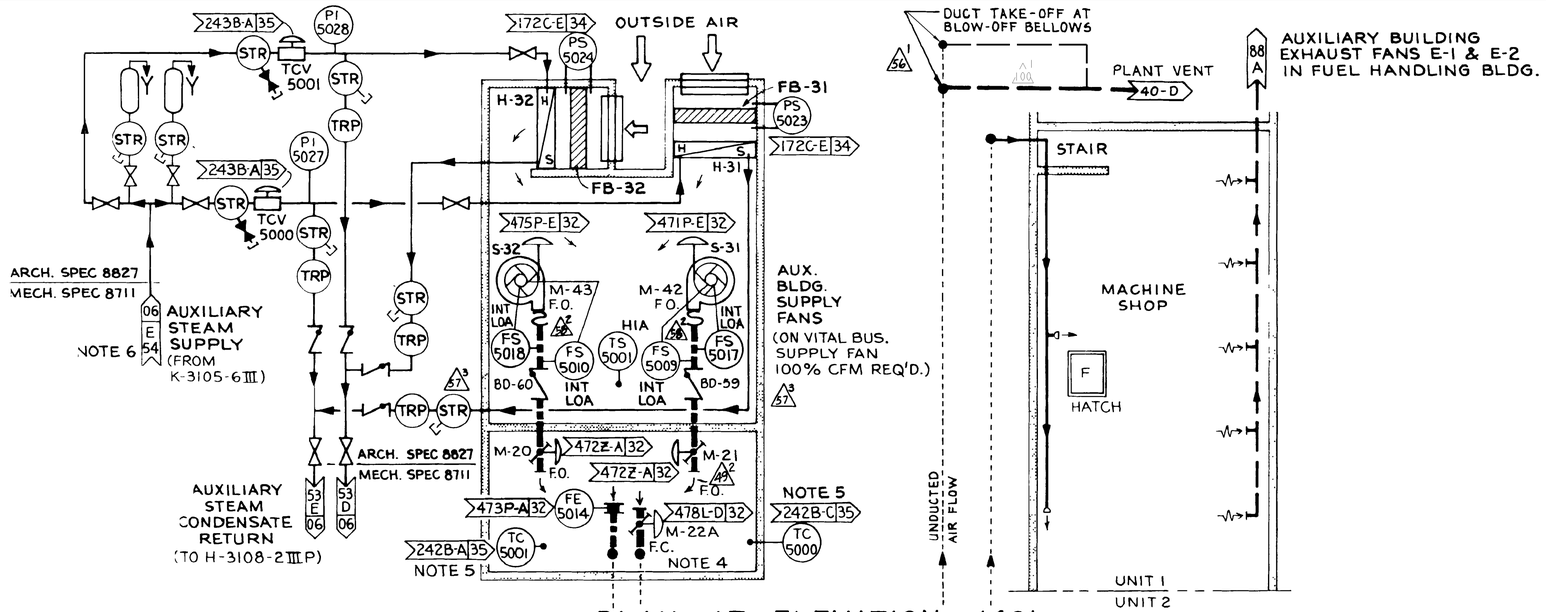

PLAN AT ELEVATION 140'

PLAN AT ELEVATIONS 115' & 128'

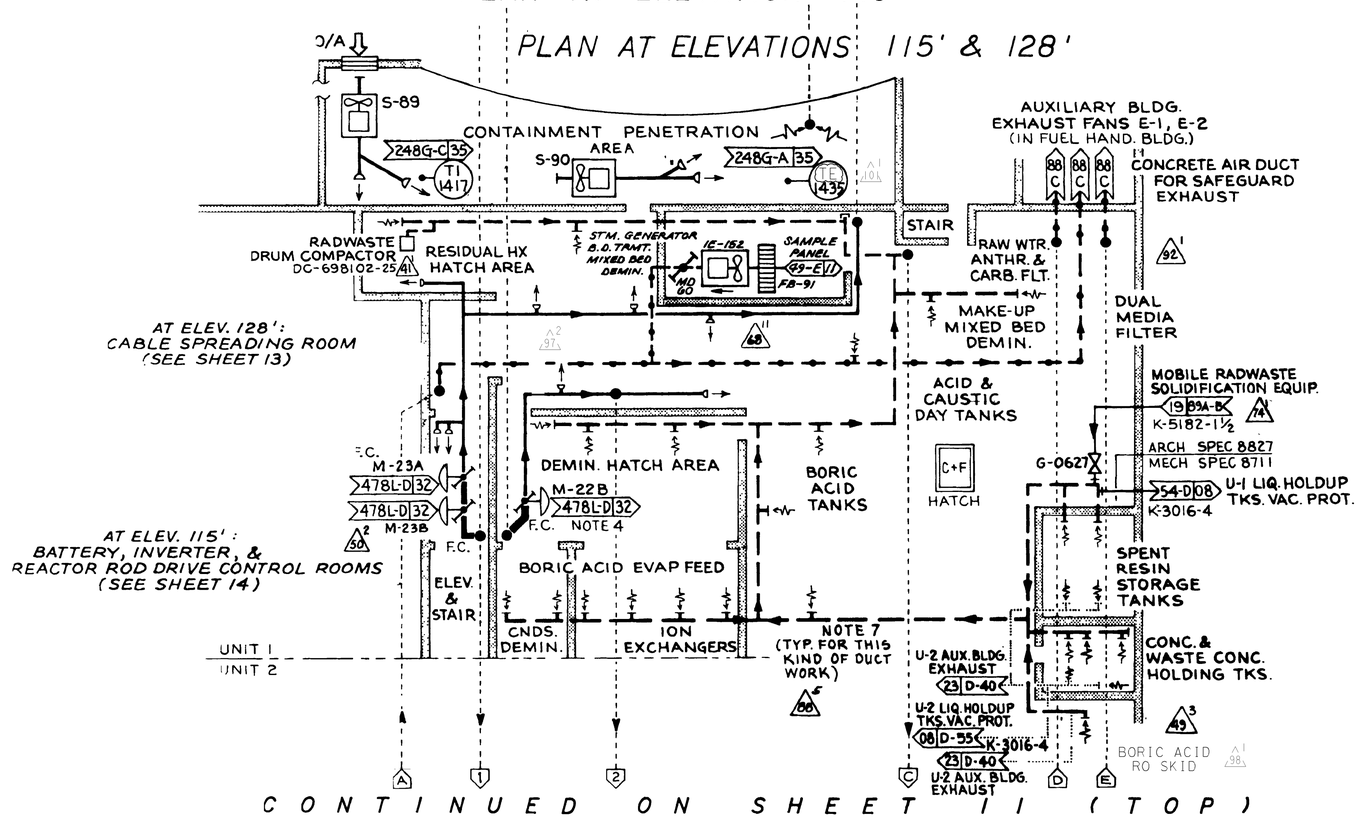

CONTINUED ON SHEET 11 (TOP)

NOTES:

1. FOR LEGEND, ABBREVIATIONS, INDEX, AND GENERAL NOTES, SEE SHEET 2 (102023) OR SHEET 3 (102001).
2. 36
3. SEE DRAWING 59316 FOR AIR FLOW DIAGRAM. SEE DRAWINGS 59361, 59362, & 59363 FOR DUCT LAYOUT.
4. OPEN ONLY WHEN SAFEGUARDS AND BUILDING VENTILATION SYSTEMS ARE OPERATING SIMULTANEOUSLY (SUPPLY FAN S-32 WITH EXHAUST FAN E-1, AND SUPPLY FAN S-31 WITH EXHAUST FAN E-2, RESPECTIVELY.) 103-B 104-D
5. TEMPERATURE CONTROLLERS ARE LOCATED IN SUPPLY FAN ROOMS. ONLY TEMPERATURE BULB IS LOCATED IN THIS AIR PLENUM 103-B 104-B.
6. SEE DWG. 59437 DETAIL 3 FOR HEATING COIL PIPING. 101-B
7. 86 DUCTWORK IS DESIGN CLASS II; DUCT AND DUCT SUPPORTS ARE QUALIFIED TO SEISMIC CLASS I CRITERIA. 105-E

AUXILIARY BUILDING HVAC (ENGINEERED SAFETY EQUIPMENT AREA)

UNIT 1

DIABLO CANYON POWER PLANT - PG&E CO.
VENTILATION & AIR CONDITIONING SYSTEMS

DRAWING	SHEET	PAGE	REV
102023	10	0	01

DATE	DWN	RE	IV	PROFESSIONAL ENGINEER	PE DISC.	PE#	PE EXP.	
08-16-2011	AJFJ	FxC2		KERSI J. DALAL	MECHANICAL	M 16690	3/31/2012	REVISED PER DAS-6*428

RASTER=2023s10.dgn
DGN=2023s10.dgn
CAD User: AJFJ Date: 08-16-2011
3 Size

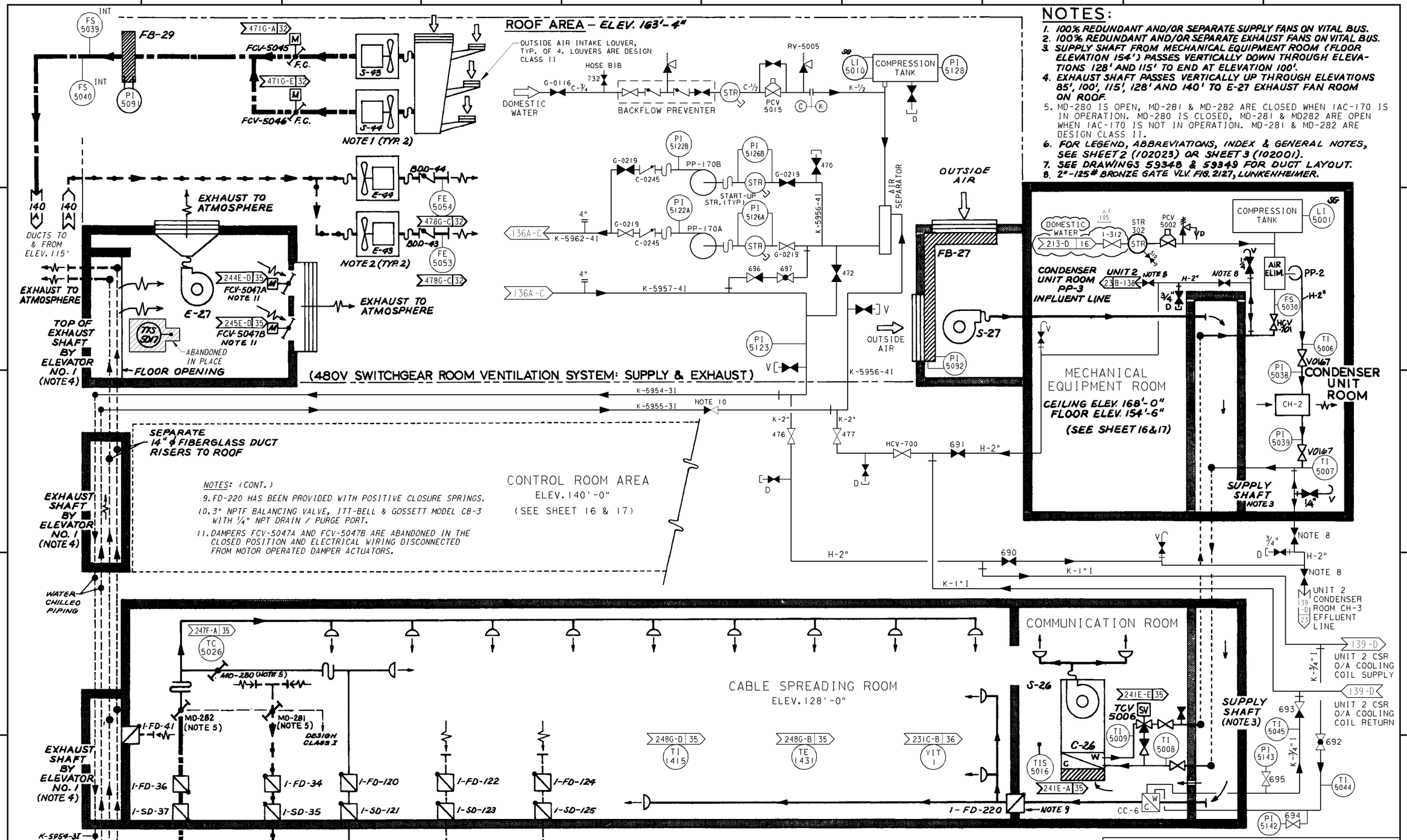

NOTES:

1. 100% REDUNDANT AND/OR SEPARATE SUPPLY FANS ON VITAL BUS.
2. 100% REDUNDANT AND/OR SEPARATE EXHAUST FANS ON VITAL BUS.
3. SUPPLY SHAFT FROM MECHANICAL EQUIPMENT ROOM (FLOOR ELEVATION 154') PASSES VERTICALLY DOWN THROUGH ELEVATIONS 128' AND 115' TO END AT ELEVATION 100'.
4. EXHAUST SHAFT PASSES VERTICALLY UP THROUGH ELEVATIONS 85', 100', 115', 128' AND 140' TO E-27 EXHAUST FAN ROOM ON ROOF.
5. MD-280 IS OPEN, MD-281 & MD-282 ARE CLOSED WHEN IAC-170 IS IN OPERATION. MD-280 IS CLOSED, MD-281 & MD282 ARE OPEN WHEN IAC-170 IS NOT IN OPERATION. MD-281 & MD-282 ARE DESIGN CLASS II.
6. FOR LEGEND, ABBREVIATIONS, INDEX & GENERAL NOTES, SEE SHEET 2 (102023) OR SHEET 3 (102001).
7. SEE DRAWINGS 59348 & 59349 FOR DUCT LAYOUT.
8. 2"-125# BRONZE GATE VLV. FIG. 2127, LUNKENHEIMER.

NOTES: (CONT.)

9. FD-220 HAS BEEN PROVIDED WITH POSITIVE CLOSURE SPRINGS.
10. 3" NPTF BALANCING VALVE, ITT-BELL & GOSSETT MODEL CB-3 WITH 1/4" NPT DRAIN / PURGE PORT.
11. DAMPERS FCV-5047A AND FCV-5047B ARE ABANDONED IN THE CLOSED POSITION AND ELECTRICAL WIRING DISCONNECTED FROM MOTOR OPERATED DAMPER ACTUATORS.

DIABLO CANYON POWER PLANT - PG&E CO. VENTILATION & AIR CONDITIONING SYSTEMS			
DRAWING	SHEET	PAGE	REV
102023	13	0	105

DATE	DWN	RE	IV	PROFESSIONAL ENGINEER	PE DISC.	PE#	PE EXP.	
06-13-2013	ZNS4	FxC2	KJD3		N/A	N/A	N/A	REVISED PER DFT-7*2150

RASTER=102023s13.dgn
DGN=102023s13.dgn
CAD User: ZNS4 Date: 06-13-2013

INPGIC
I Size

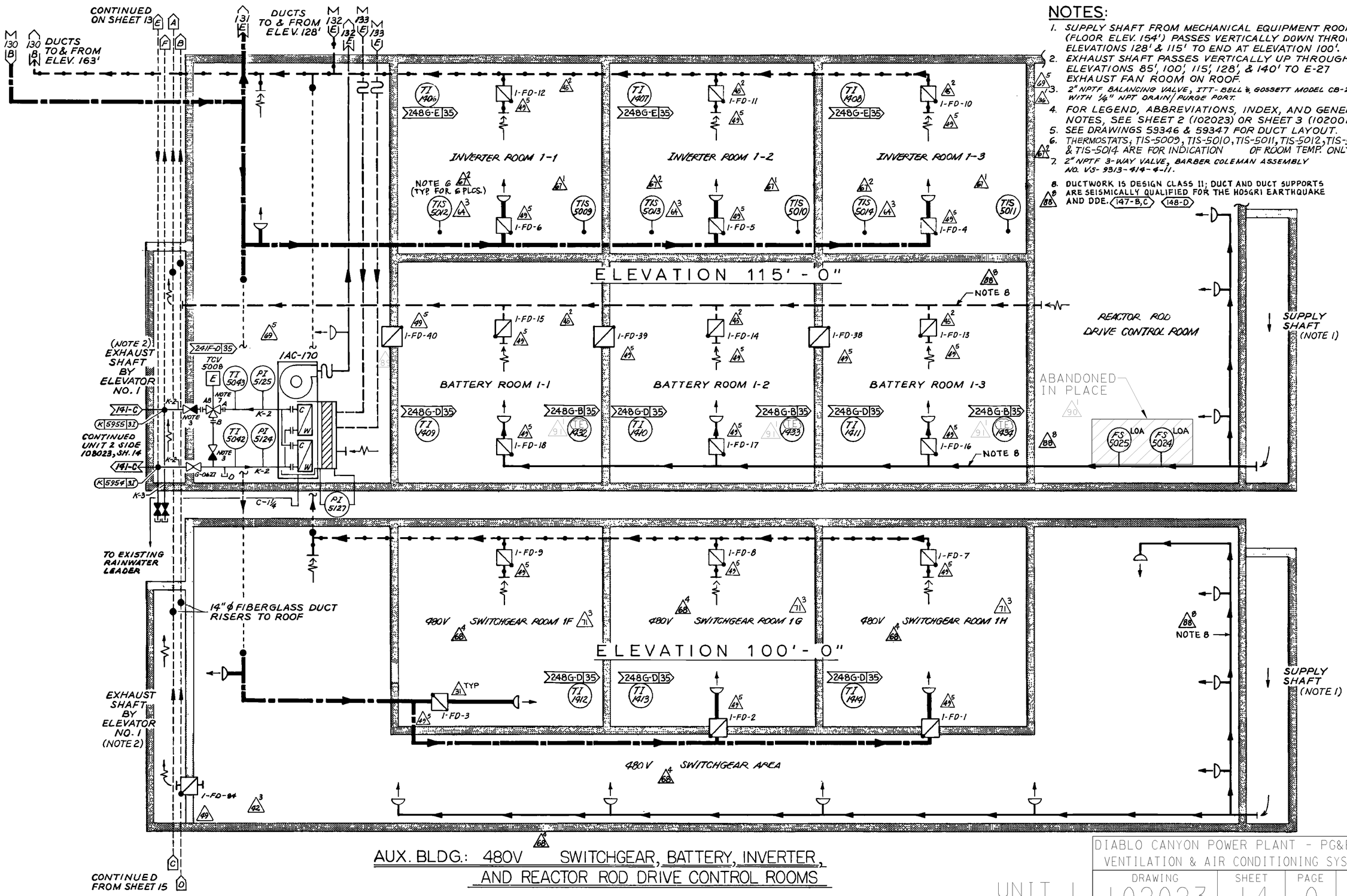

NOTES:

1. SUPPLY SHAFT FROM MECHANICAL EQUIPMENT ROOM (FLOOR ELEV. 154') PASSES VERTICALLY DOWN THROUGH ELEVATIONS 128' & 115' TO END AT ELEVATION 100'.
2. EXHAUST SHAFT PASSES VERTICALLY UP THROUGH ELEVATIONS 85', 100', 115', 128', & 140' TO E-27 EXHAUST FAN ROOM ON ROOF.
3. 2" NPTF BALANCING VALVE, ITT-BELL & GOSSETT MODEL CB-2 WITH 1/4" NPT DRAIN/PURGE PORT.
4. FOR LEGEND, ABBREVIATIONS, INDEX, AND GENERAL NOTES, SEE SHEET 2 (102023) OR SHEET 3 (102001).
5. SEE DRAWINGS 59346 & 59347 FOR DUCT LAYOUT.
6. THERMOSTATS, TIS-5009, TIS-5010, TIS-5011, TIS-5012, TIS-5013 & TIS-5014 ARE FOR INDICATION OF ROOM TEMP. ONLY.
7. 2" NPTF 3-WAY VALVE, BARBER COLEMAN ASSEMBLY NO. VS-9313-414-4-11.
8. DUCTWORK IS DESIGN CLASS II; DUCT AND DUCT SUPPORTS ARE SEISMICALLY QUALIFIED FOR THE HOSGRI EARTHQUAKE AND DDE. 147-B,C 148-D

AUX. BLDG.: 480V SWITCHGEAR, BATTERY, INVERTER, AND REACTOR ROD DRIVE CONTROL ROOMS

UNIT 1

DIABLO CANYON POWER PLANT - PG&E CO.
VENTILATION & AIR CONDITIONING SYSTEMS

DRAWING	SHEET	PAGE	REV
102023	14	0	91

DATE	DWN	RE	IV	PROFESSIONAL ENGINEER	PE DISC.	PE#	PE EXP.	
08-16-2011	AJFJ	FXC2		KERSI J. DALAL	MECHANICAL	M 16690	3/31/2012	REVISED PER DAS-6*428

RASTER=102023s14.dgn
DGN=102023s14.pm
CAD User: AJFJ Date: 08-16-2011

NOTES:

1. EXHAUST SHAFT PASSES VERTICALLY UP THROUGH ELEVATIONS 85' (THIS SHEET), 100' & 115' (SHEET 14), AND 128' & 140' (SHEET 13) TO E-27 EXHAUST FAN ROOM ON ROOF (SHEET 13).
2. EXHAUST BACKDRAFT DAMPER IS DESIGN CLASS I. 159-B
3. FOR LEGEND, ABBREVIATIONS, INDEX, AND GENERAL NOTES, SEE SHEET 2 (102023) OR SHEET 3 (102001).
4.
5. SEE DRAWINGS 516103 & 59318 FOR AIR FLOW DIAGRAM.
6. AUXILIARY BUILDING ACCESS CONTROL AREA IS COMMON TO BOTH UNIT 1 & UNIT 2, & IS UNDER SPECIFICATION 8828.
7. ASHCROFT MODEL 30 EI INDICATING-THERMOMETER.
8. ASHCROFT MODEL 1009 PRESSURE GAUGES.

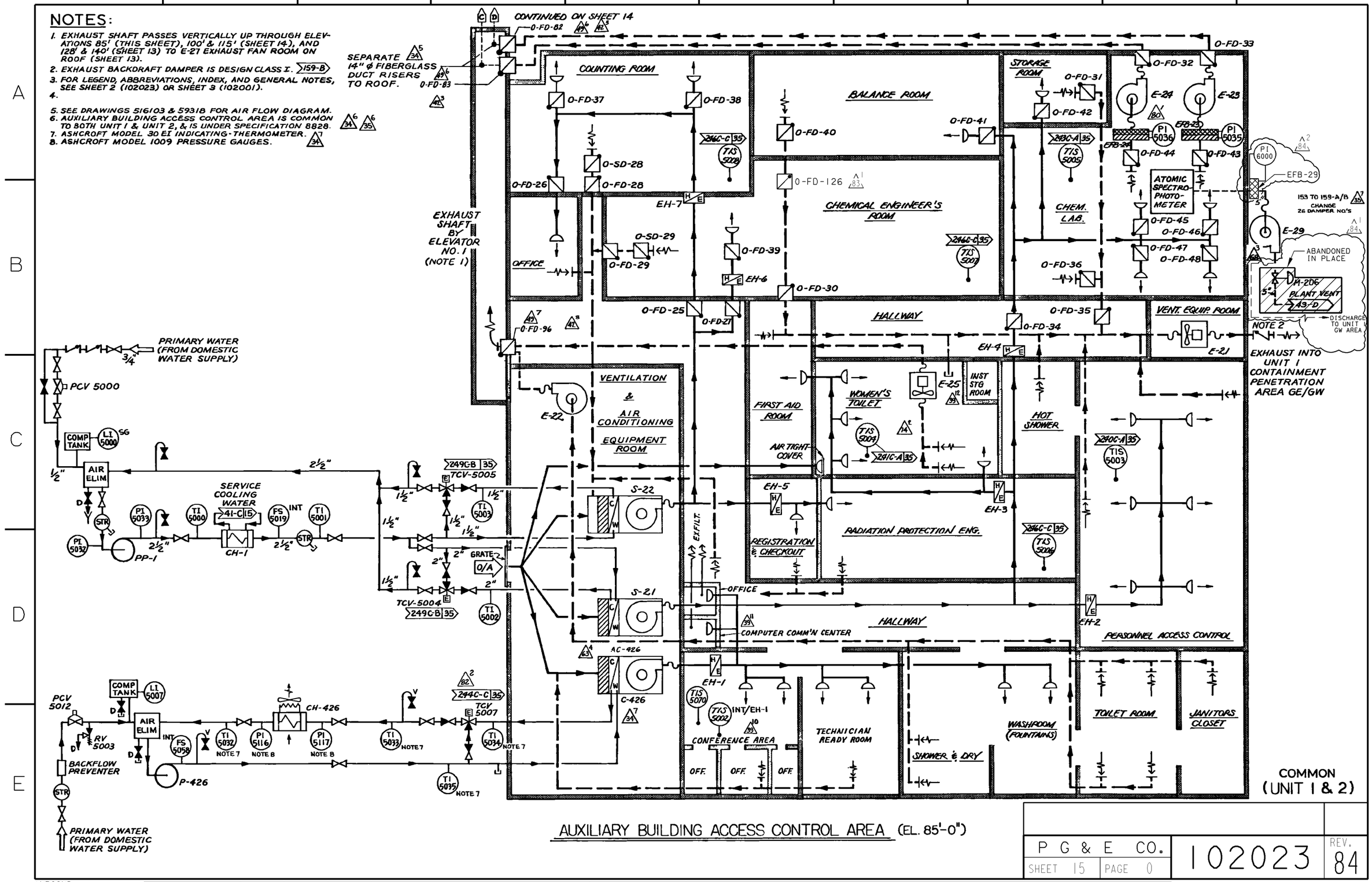

AUXILIARY BUILDING ACCESS CONTROL AREA (EL. 85'-0")

P G & E CO.		102023	REV. 84
SHEET 15	PAGE 0		

3/31/04	MIBF	FXC2	-	KERSI J. DALAL	MECHANICAL	M 16690	3/31/2006	Revised per FCT 025875-01
DATE	DWN	RE	IV	PROFESSIONAL ENGINEER	PE DISC.	PE#	PE EXP.	

CAD User: Date: 3-31-2004
DGN=2023S15.DGN
RASTER=2023S15.TIF

1NPG2ND

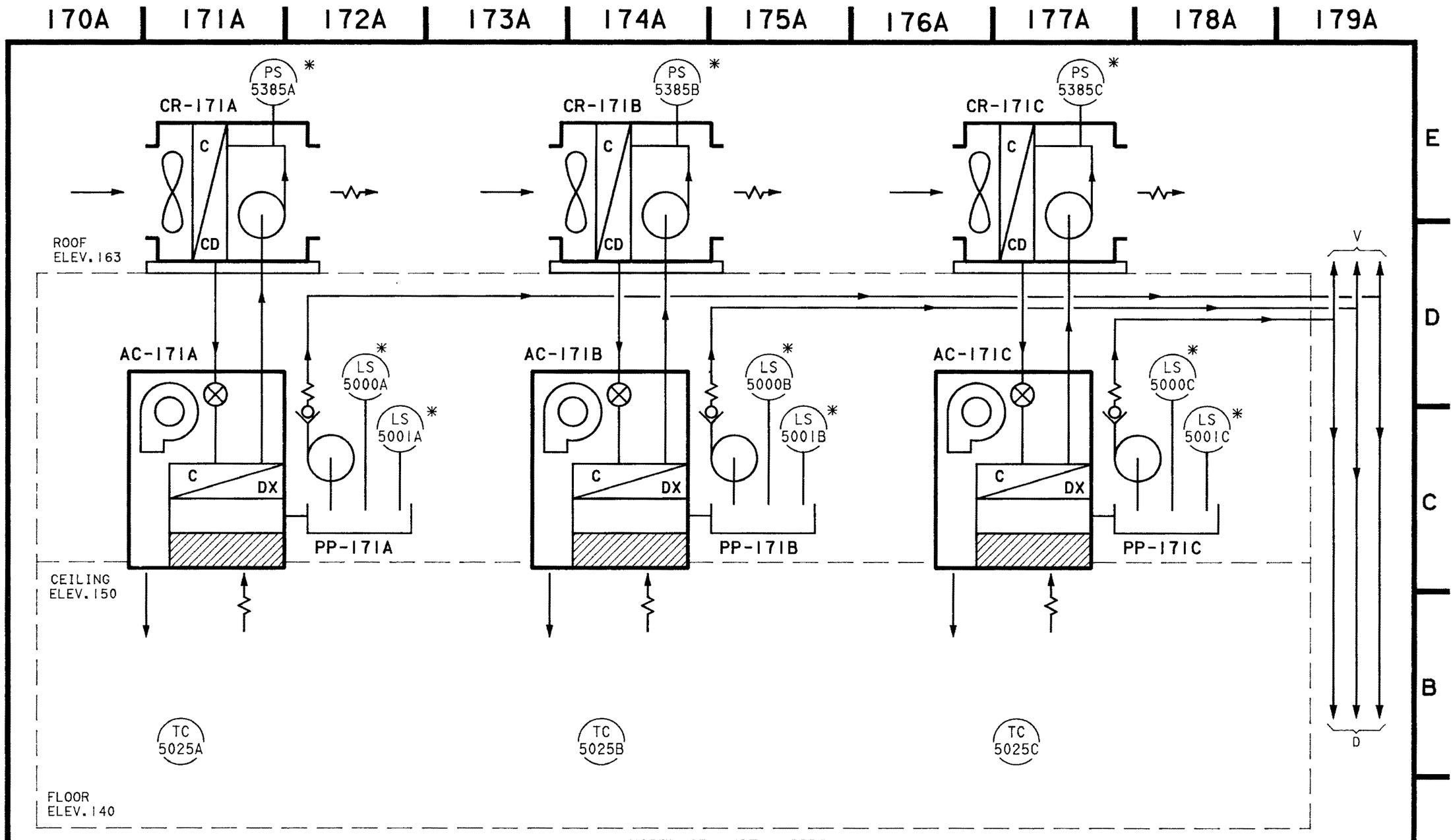

NOTE
1. COMPUTER ROOM IS LOCATED IN CONTROL ROOM ON SHEET 17 AT 178-D/E

CONTROL ROOM COMPUTER ROOM (ELEVATION)

COMMON (UNIT 1&2)

P G & E CO.	102023	REV 48
SHEET 17A OF SHEETS	MICROFILM	

2023S17A.M01 3-2-90 02:10 ROA
HP1SZSH2.FMT

SCAN 48 IC

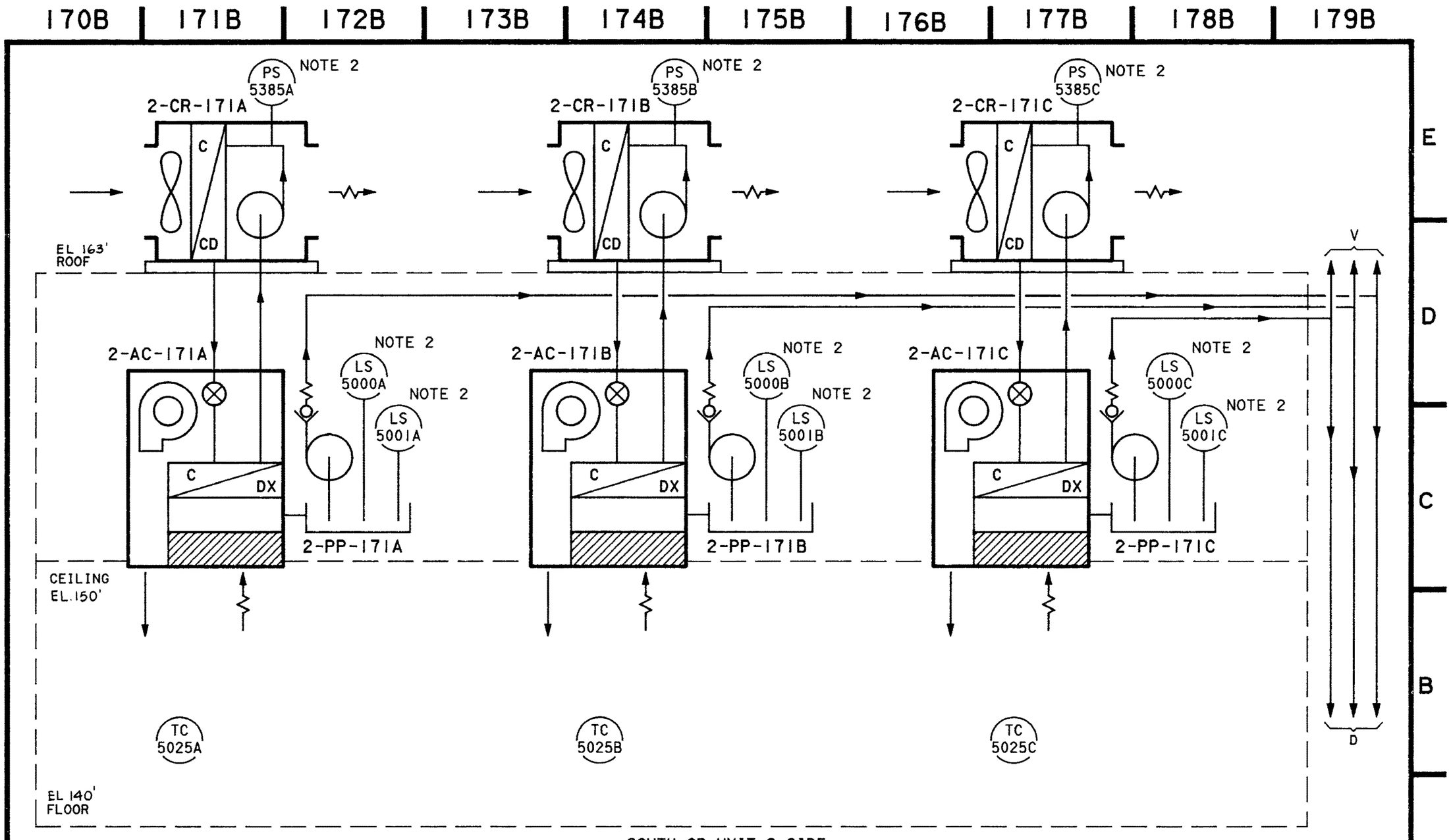

NOTE
1. COMPUTER ROOM IS LOCATED IN CONTROL ROOM ON SHEET 16 AT >168-A/B>
2. INSTRUMENT INTEGRAL TO EQUIPMENT

2023S17B.M01 5-30-90 03:10 ROA

HP1SZSH2.FMT

CONTROL ROOM COMPUTER ROOM (ELEVATION)

COMMON (UNIT 1&2)

4 50

P G & E CO.	102023	REV 50
SHEET 17B OF SHEETS	MICROFILM	

SCAN 50 IC

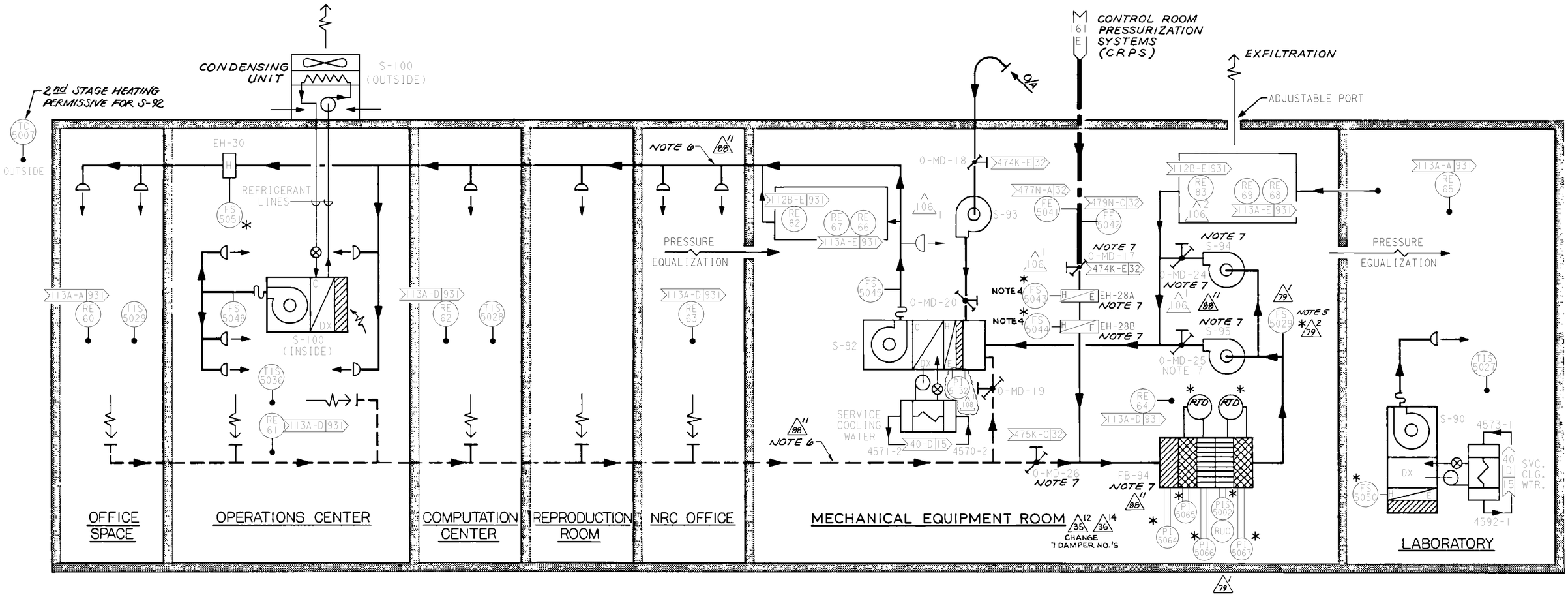

NOTES:

1.

2. FOR LEGEND, ABBREVIATIONS, & GENERAL NOTES, SEE SHEET 2 (102023) OR SHEET 3 (102001).
3. SEE DRAWING 512904 FOR TECHNICAL SUPPORT CENTER FLOW DIAGRAM.
4. ABANDONED IN PLACE.
5. FLOW SWITCH FS-5029 OPERATES THE LOW FLOW ALARM. 19B-C
6. DUCTWORK IS DESIGN CLASS II; DUCT AND DUCT SUPPORTS ARE QUALIFIED TO SEISMIC CLASS I CRITERIA.
7. EMERGENCY FILTRATION EQUIPMENT IS DESIGN CLASS II; SUPPORTS FOR EMERGENCY FILTRATION EQUIPMENT ARE ANALYZED TO SEISMIC CLASS I CRITERIA.

TECHNICAL SUPPORT CENTER HVACS

(COMMON AREA)
EL. 104'-0"

(UNITS 1 & 2)

P G & E CO.	102023	REV. 108
SHEET 19	PAGE 0	

DATE	DWN	RE	IV	PROFESSIONAL ENGINEER	PE DISC.	PE#	PE EXP.	
4/10/04	MIBF	CDP3	-	KERSI J. DALAL	MECHANICAL	M 16690	3/31/2006	Revised per FCT 028099

CAD User:AJL2 Date: 4-09-2004
DGN=2023S19.DGN
RASTER=2023S19.TIF

NOTE:
1. THE VENTILATION COAXIAL PIPE (VENT SHAFT EXTENSION) IS DESIGN CLASS II, SEISMIC CATEGORY I (202-C)

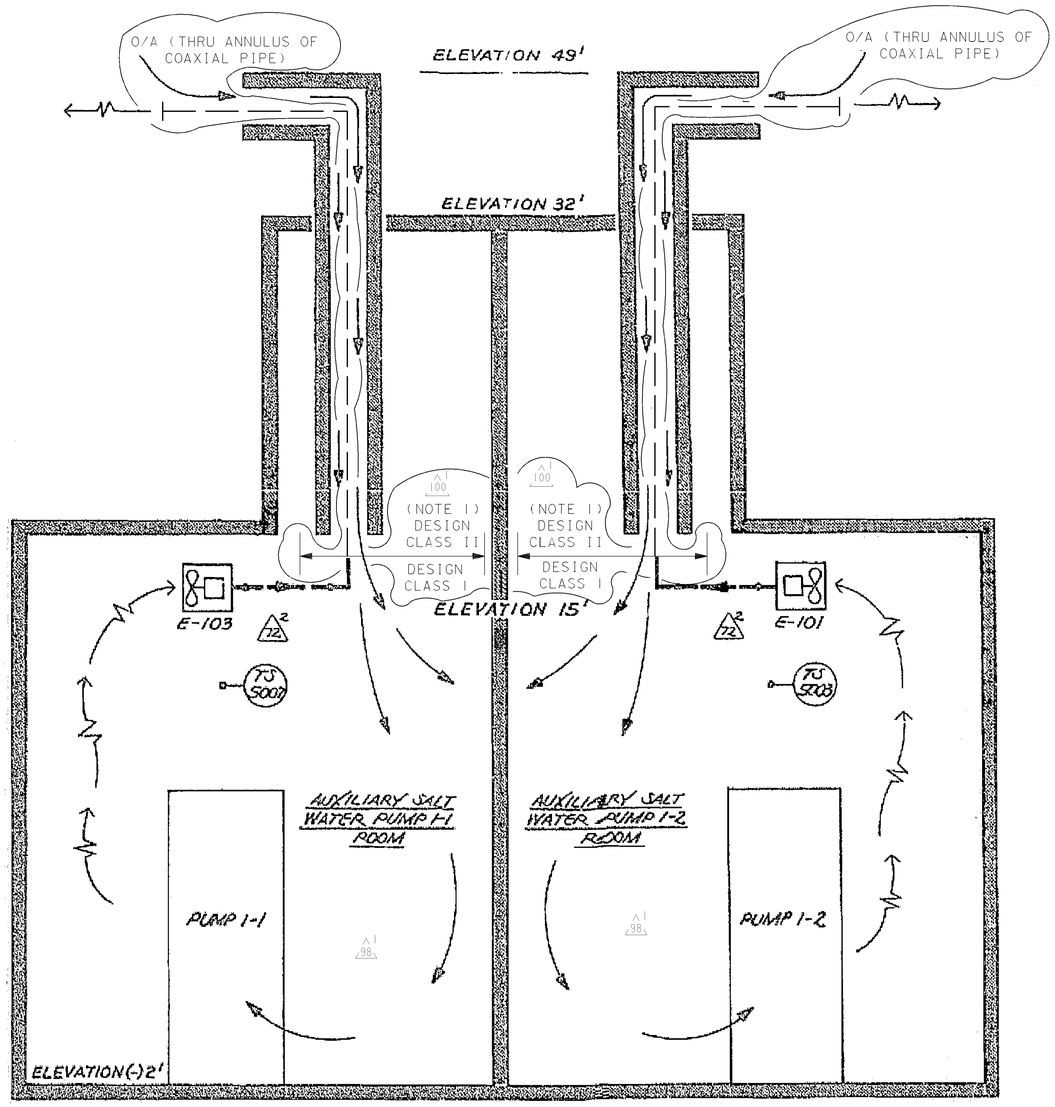

INTAKE STRUCTURE (UNIT 1)
AUXILIARY SALTWATER PUMP ROOM VENTILATION

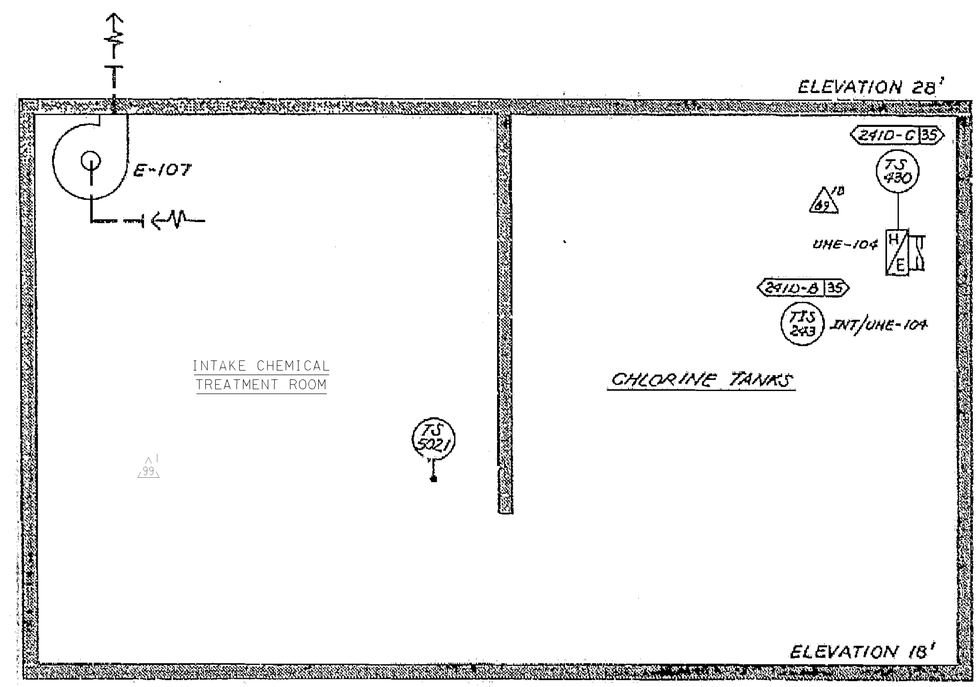

INTAKE STRUCTURE (COMMON-UNIT 1 & 2)
CHLORINATOR, EVAPORATOR, & CHLORINE TANKS ROOM
(ELEVATION 18'-0")

P G & E CO.	102023	REV. 100
SHEET 20 OF SHEETS		

CAD User:NSPI Date: 4-21-1997
DGN=2023S20.DGN
RASTER=2023S20.TIF

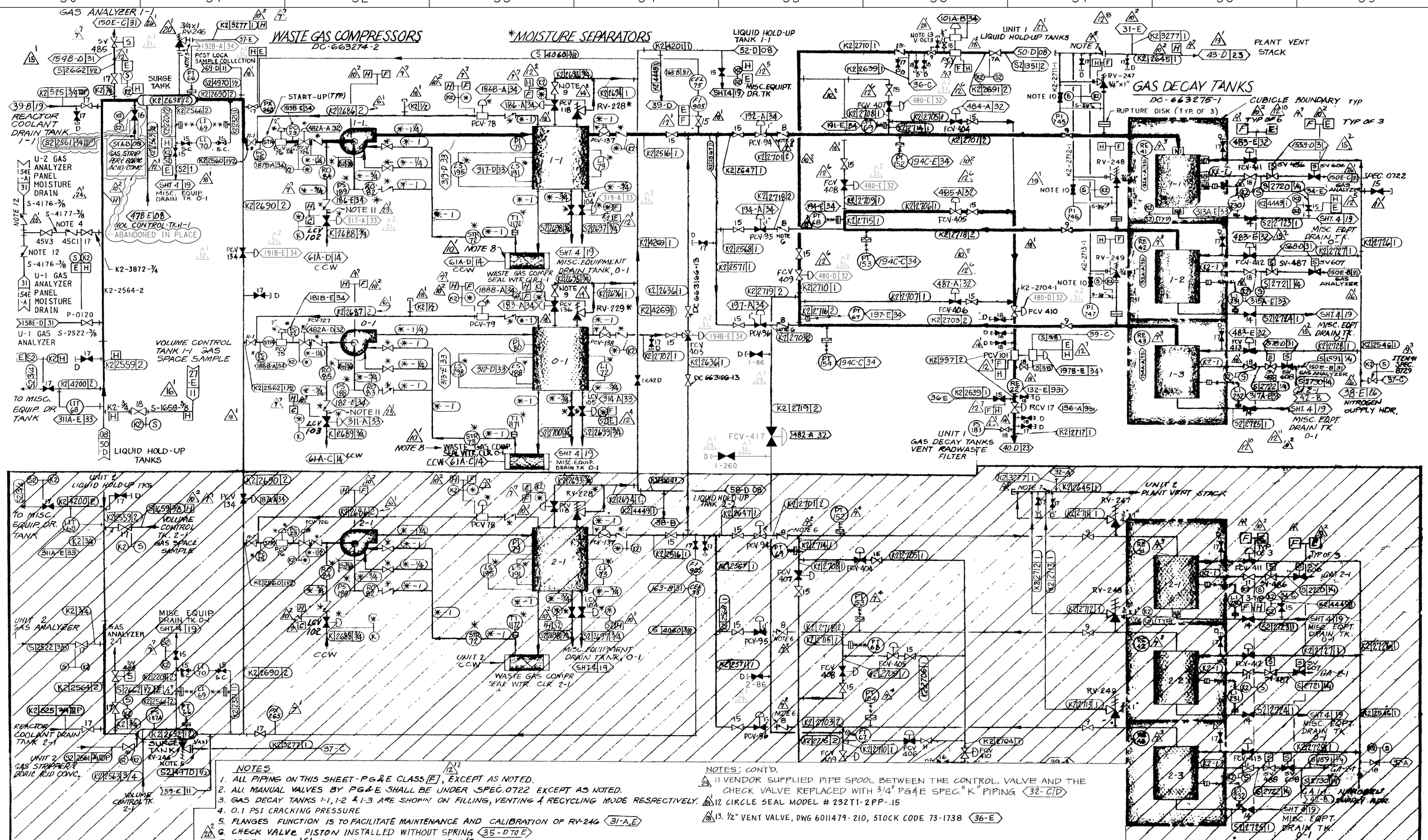

NOTES

1. ALL PIPING ON THIS SHEET - PG&E CLASS [F], EXCEPT AS NOTED.
2. ALL MANUAL VALVES BY PG&E SHALL BE UNDER SPEC. 0722 EXCEPT AS NOTED.
3. GAS DECAY TANKS 1-1, 1-2 & 1-3 ARE SHOWN ON FILLING, VENTING & RECYCLING MODE RESPECTIVELY.
4. 0.1 PSI CRACKING PRESSURE
5. FLANGES FUNCTION IS TO FACILITATE MAINTENANCE AND CALIBRATION OF RV-246 (31-A,E)
6. CHECK VALVE PISTON INSTALLED WITHOUT SPRING (35-D TO E)
7. CODE CLASS 'E', 300-LB FLANGE CODE 37-C/E.
8. WASTE GAS COMPRESSOR SEAL WATER COOLERS ARE DESIGN CLASS II AND ARE SEISMICALLY ANALYZED IN ACCORDANCE WITH DESIGN CRITERIA MEMORANDUM M-61.
9. 3/4" Φ GRINNELL DIAPHRAGM VALVE C.S FIG. 2472-813 M. (4R-71229) (33-D/E) /14
10. NUPRO VALVE MODEL SS-DLTW6 (37-D/E)

NOTES: CONT'D.

11 VENDOR SUPPLIED PIPE SPOOL BETWEEN THE CONTROL VALVE AND THE CHECK VALVE REPLACED WITH 3/4" PG&E SPEC. "K" PIPING (32-C/D)

12 CIRCLE SEAL MODEL # 232T1-2PP-.15

13. 1/2" VENT VALVE, DWG 6011479-210, STOCK CODE 73-1738 (36-E)

DIABLO CANYON POWER PLANT - PG&E CO.
GASEOUS RADWASTE SYSTEM

DRAWING	SHEET	PAGE	REV
102024	3	0	32

DATE	DWN	RE	IV	PROFESSIONAL ENGINEER	PE DISC.	PE#	PE EXP.	
04-13-2011	AJFJ	FxC2		KERSI J. DALAL	MECHANICAL	M 16690	3/31/2012	REVISED PER DDN-2*560

RASTER=10202453.dgn
DGN=10202453.dgn
CAD User: AJFJ Date: 04-13-2011

3NPOIC
3 Size

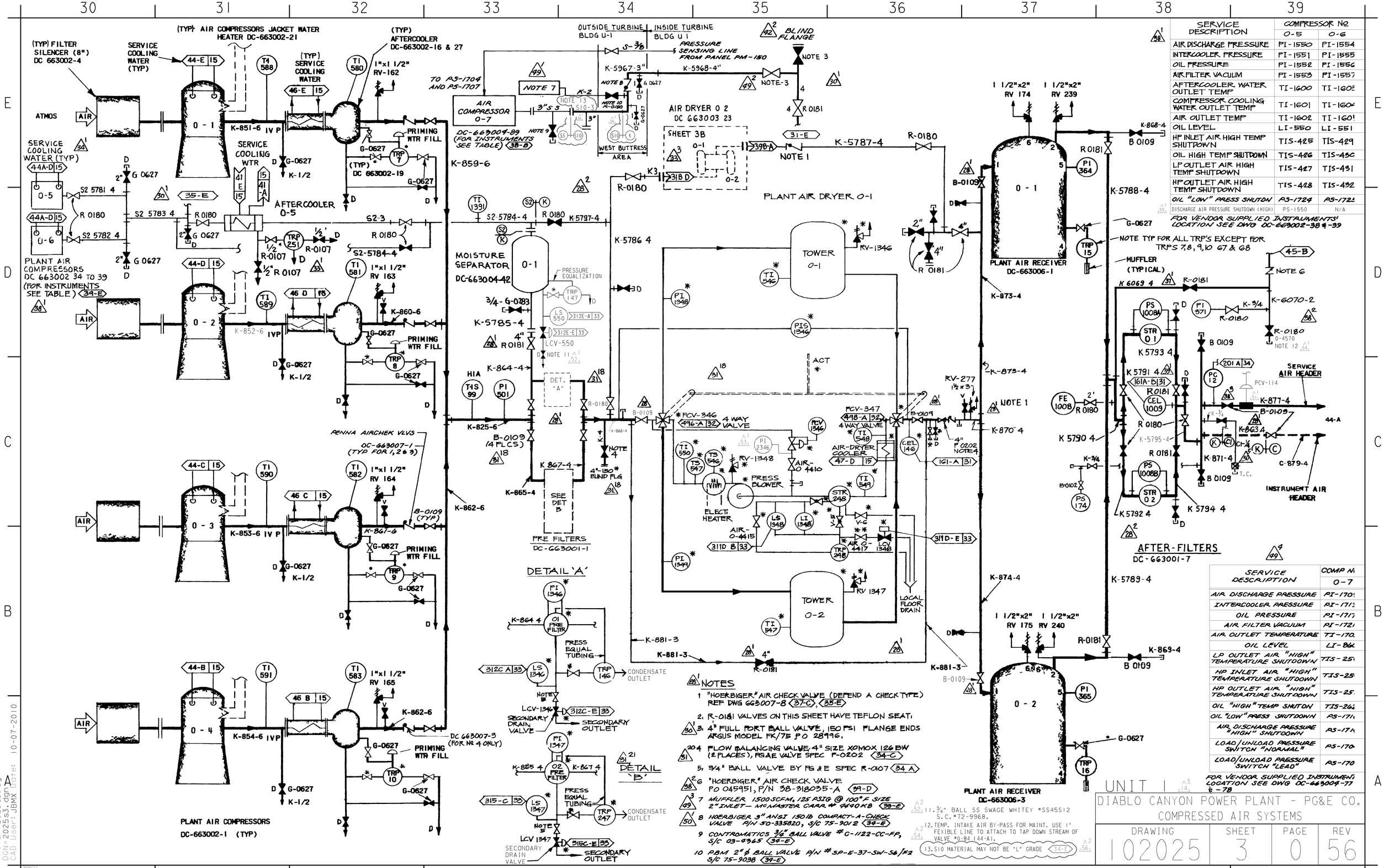

SERVICE DESCRIPTION	COMPRESSOR Nº 2	
	0-5	0-6
AIR DISCHARGE PRESSURE	PI-1550	PI-1554
INTERCOOLER PRESSURE	PI-1551	PI-1555
OIL PRESSURE	PI-1552	PI-1556
AIR FILTER VACUUM	PI-1553	PI-1557
AFTERCOOLER WATER OUTLET TEMP	TI-1600	TI-1603
COMPRESSOR COOLING WATER OUTLET TEMP	TI-1601	TI-1604
AIR OUTLET TEMP	TI-1602	TI-1601
OIL LEVEL	LI-550	LI-551
HP INLET AIR HIGH TEMP SHUTDOWN	TIS-425	TIS-429
OIL HIGH TEMP SHUTDOWN	TIS-426	TIS-430
LP OUTLET AIR HIGH TEMP SHUTDOWN	TIS-427	TIS-431
HP OUTLET AIR HIGH TEMP SHUTDOWN	TIS-428	TIS-432
OIL "LOW" PRESS SHUTDN	PS-1724	PS-1725
DISCHARGE AIR PRESSURE SHUTDOWN (HIGH)	PS-1550	N/A

SERVICE DESCRIPTION	COMP Nº 0-7
AIR DISCHARGE PRESSURE	PI-1701
INTERCOOLER PRESSURE	PI-1715
OIL PRESSURE	PI-1717
AIR FILTER VACUUM	PI-1721
AIR OUTLET TEMPERATURE	TI-1703
OIL LEVEL	LI-864
LP OUTLET AIR "HIGH" TEMPERATURE SHUTDOWN	TIS-251
HP INLET AIR "HIGH" TEMPERATURE SHUTDOWN	TIS-255
HP OUTLET AIR "HIGH" TEMPERATURE SHUTDOWN	TIS-257
OIL "HIGH" TEMP SHUTDN	TIS-264
OIL "LOW" PRESS SHUTDOWN	PS-1714
AIR DISCHARGE PRESSURE "HIGH" SHUTDOWN	PS-1711
LOAD/UNLOAD PRESSURE SWITCH "NORMAL"	PS-1703
LOAD/UNLOAD PRESSURE SWITCH "LEAD"	PS-1703

FOR VENDOR SUPPLIED INSTRUMENT LOCATION SEE DWG DC-663004-77 & -78

NOTES

1. "HOERBIGER" AIR CHECK VALVE (DEPEND A CHECK TYPE) REF DWG 663007-8 (37-C), (35-E)
2. R-0181 VALVES ON THIS SHEET HAVE TEFLON SEAT.
3. 4" FULL PORT BALL VALVE, 150 PSI FLANGE ENDS ARGUS MODEL FK/75 PO 28996.
4. FLOW BALANCING VALVE 4" SIZE XOMOX 126 BW (2 PLACES), PG&E VALVE SPEC F-0202 (34-C)
5. 3/4" BALL VALVE BY PG & E SPEC R-0107 (34 A)
6. "HOERBIGER" AIR CHECK VALVE PO 045951, P/N 38-318035-A (39-D)
7. MUFFLER 1500 SCFM, 125 PSIG @ 100°F SIZE 2" INLET — MCMASTER CARR # 4440K8 (39-E)
8. HOERBIGER 3" ANSI 150 lb COMPACT-A-CHECK VALVE P/N 50-335820, S/C 75-9012 (34-E)
9. CONTROMATICS 3/4" BALL VALVE # G-1122-CC-FP, S/C 03-4365 (34-E)
10. P.B.M. 2" ϕ BALL VALVE P/N # SP-E-37-SW-56/F2 S/C 75-9038 (39-E)
11. 3/4" BALL SS SWAGE WHITEY #SS45S12 S.C. #72-9968.
12. TEMP. INTAKE AIR BY-PASS FOR MAINT. USE 1" FEXIBLE LINE TO ATTACH TO TAP DOWN STREAM OF VALVE #0-84 (44-A).
13. S10 MATERIAL MAY NOT BE "L" GRADE (34-E)

UNIT 1

DIABLO CANYON POWER PLANT - PG&E CO.
COMPRESSED AIR SYSTEMS

DRAWING	SHEET	PAGE	REV
102025	3	0	56

DATE	DWN	RE	IV	PROFESSIONAL ENGINEER	PE DISC.	PE#	PE EXP.	
10-07-2010	JBMX	FxC2		KERSI J. DALAL	MECHANICAL	M 16690	3/31/2012	REVISED PER DDT-4*355

RASTER=2025s3.dgn
DGN=2025s3.dgn
CAD User: JBMX Date: 10-07-2010

INGRID 3 Size

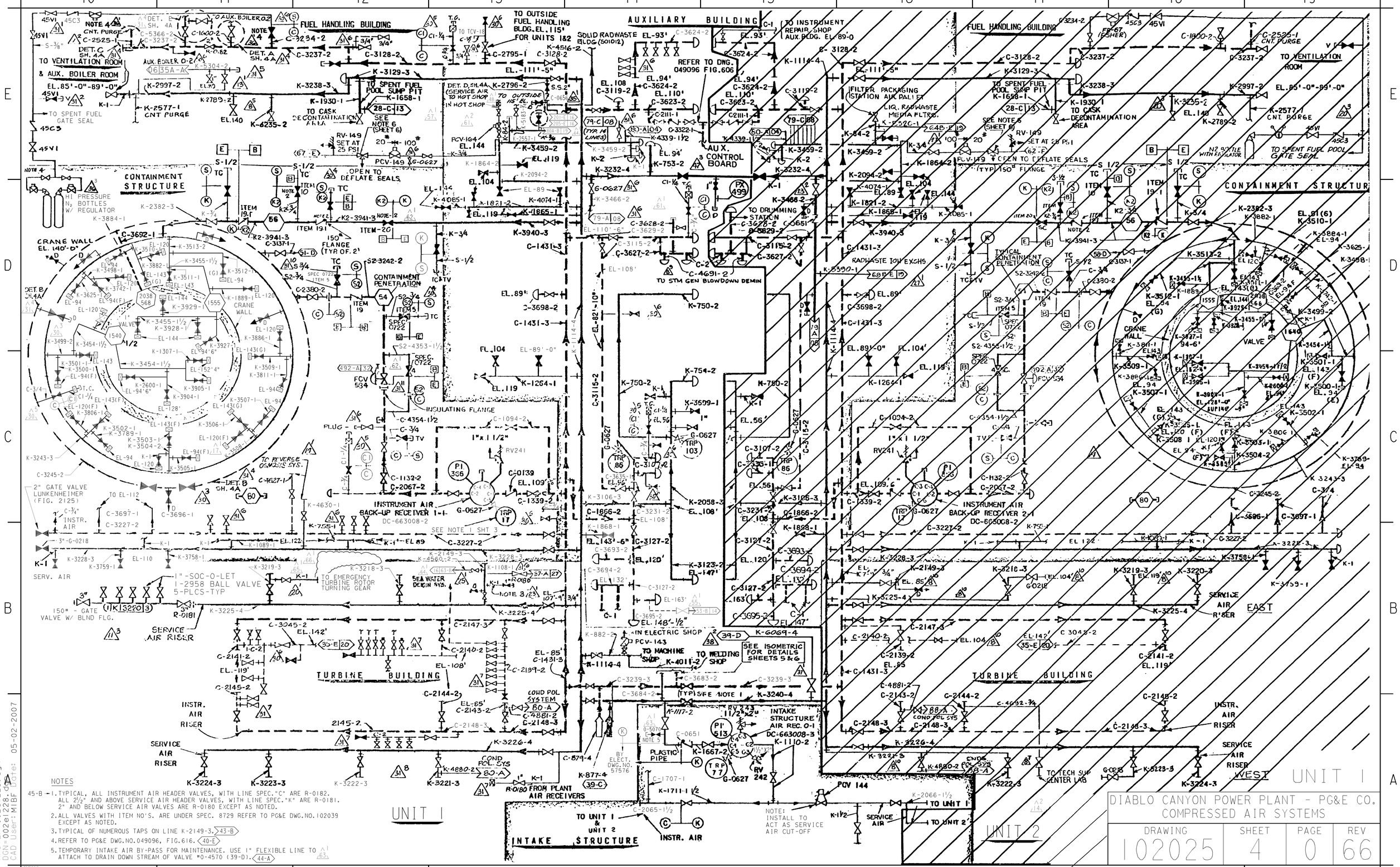

NOTES

45-B -1. TYPICAL, ALL INSTRUMENT AIR HEADER VALVES, WITH LINE SPEC."C" ARE R-0182. ALL 2½" AND ABOVE SERVICE AIR HEADER VALVES, WITH LINE SPEC."K" ARE R-0181. 2" AND BELOW SERVICE AIR VALVES ARE R-0180 EXCEPT AS NOTED.

2. ALL VALVES WITH ITEM NO'S. ARE UNDER SPEC. 8729 REFER TO PG&E DWG.NO.102039 EXCEPT AS NOTED.

3. TYPICAL OF NUMEROUS TAPS ON LINE K-2149-3. 43-B

4. REFER TO PG&E DWG.NO.049096, FIG.616. 40-E

5. TEMPORARY INTAKE AIR BY-PASS FOR MAINTENANCE. USE 1" FLEXIBLE LINE TO ATTACH TO DRAIN DOWN STREAM OF VALVE #0-4570 (39-D). 44-A

DIABLO CANYON POWER PLANT - PG&E CO.
COMPRESSED AIR SYSTEMS

DRAWING	SHEET	PAGE	REV
102025	4	0	66

DATE	DWN	RE	IV	PROFESSIONAL ENGINEER	PE DISC.	PE#	PE EXP.	
05-02-2007	MIBF	FxC2		KERSI J. DALAL	MECHANICAL	M 16690	3/31/2008	REVISED PER FCT-32137

RASTER=002el228.dgn
DGN=002el228.dgn
CAD User=MIBF DGNet 05-02-2007

ANSI/D
3 Size

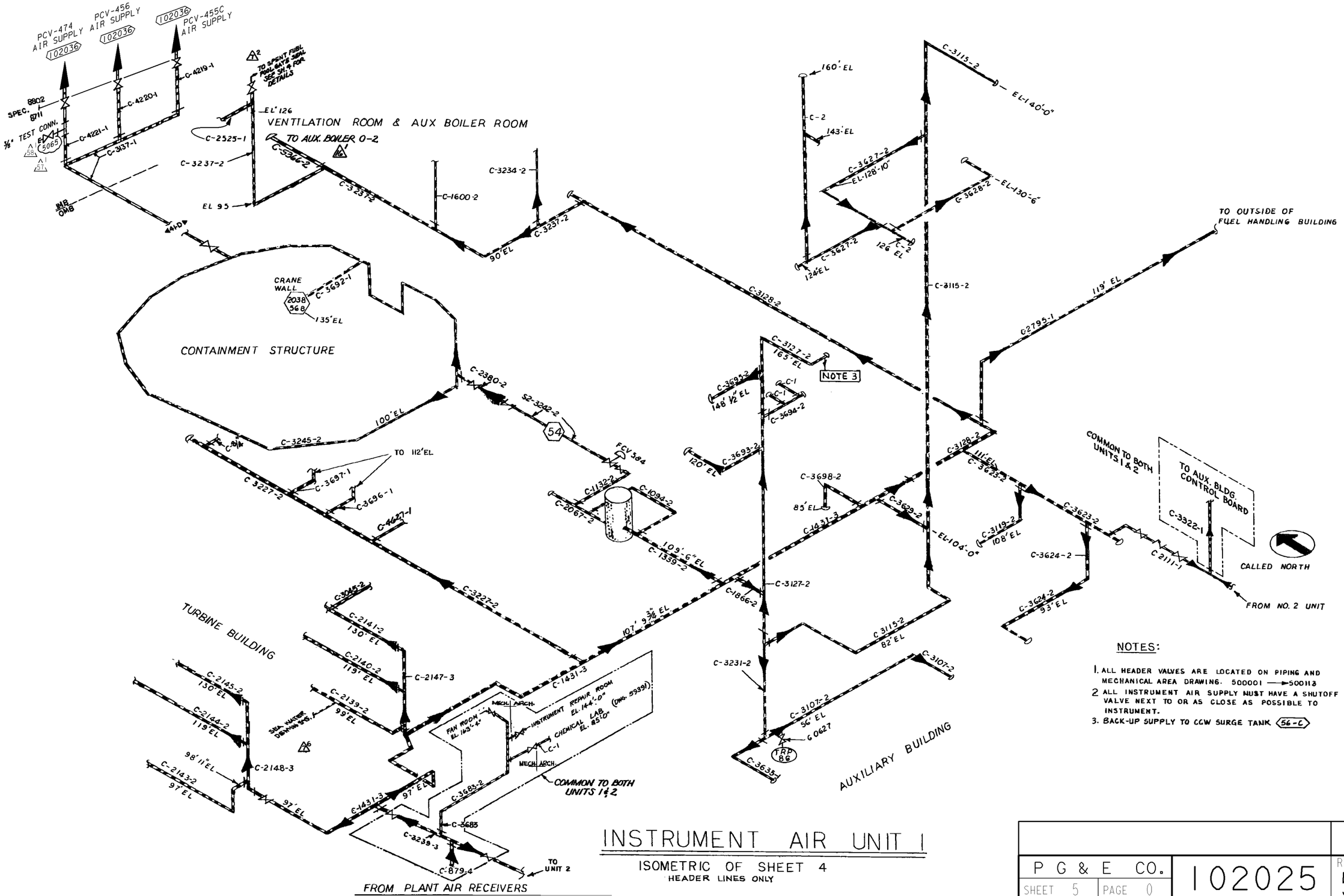

NOTES:

1. ALL HEADER VALVES ARE LOCATED ON PIPING AND MECHANICAL AREA DRAWING. 500001 ⟶ 500113
2. ALL INSTRUMENT AIR SUPPLY MUST HAVE A SHUTOFF VALVE NEXT TO OR AS CLOSE AS POSSIBLE TO INSTRUMENT.
3. BACK-UP SUPPLY TO CCW SURGE TANK 56-C

INSTRUMENT AIR UNIT 1

ISOMETRIC OF SHEET 4
HEADER LINES ONLY

P G & E CO.	102025	REV. 58
SHEET 5	PAGE 0	

DATE	DWN	RE	IV	PROFESSIONAL ENGINEER	PE DISC.	PE#	PE EXP.	
5/12/04	MIBF	LAL3	-	KERSI J. DALAL	MECHANICAL	M 16690	3/31/2006	Revised per FCT 028740

CAD User:MIBF Date: 5-11-2004
DGN=002E1226.DGN
RASTER=002E1226.TIF

INPGIC

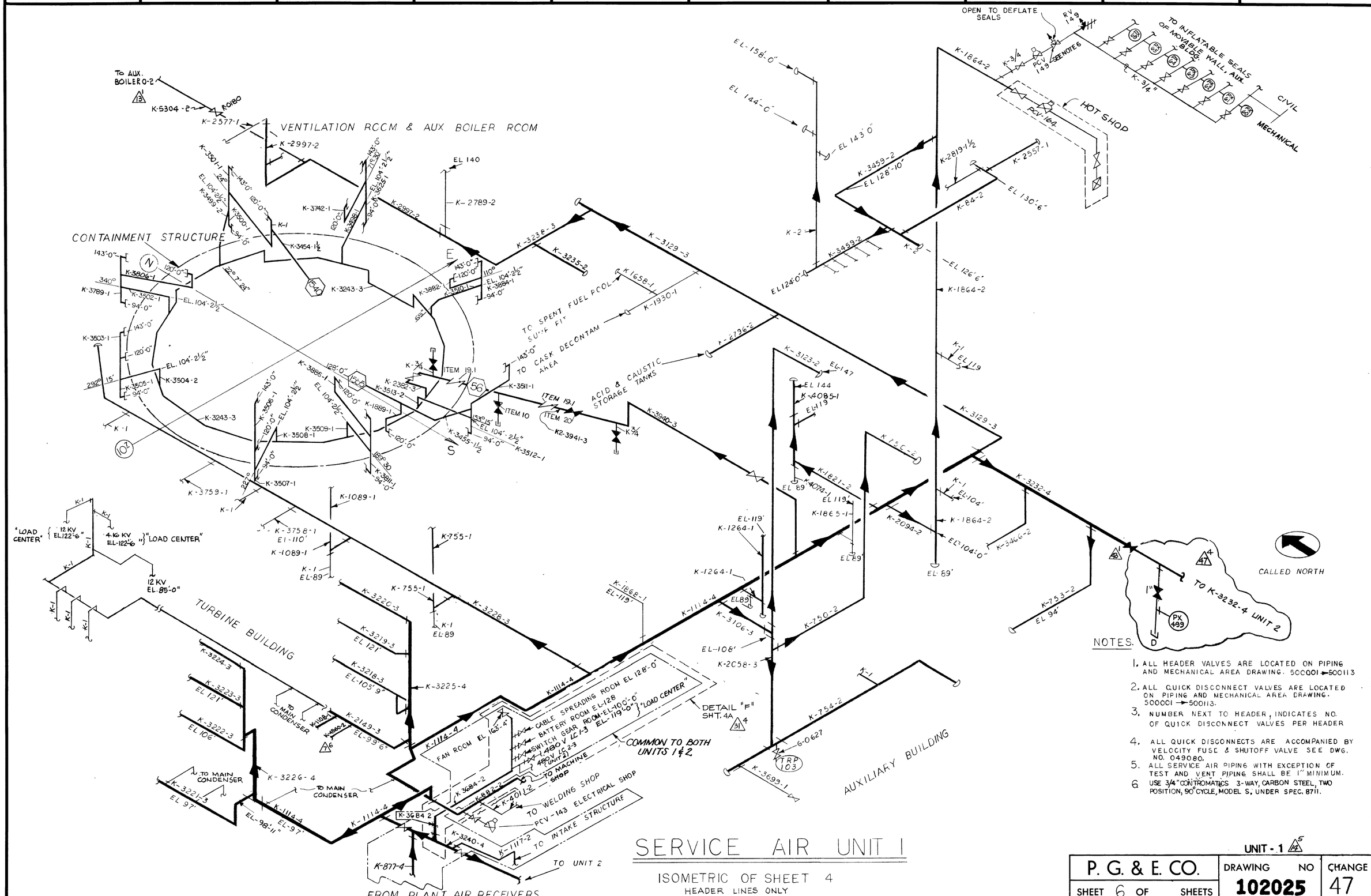

NOTES.

1. ALL HEADER VALVES ARE LOCATED ON PIPING AND MECHANICAL AREA DRAWING. 500001 → 500113
2. ALL QUICK DISCONNECT VALVES ARE LOCATED ON PIPING AND MECHANICAL AREA DRAWING. 500001 → 500113.
3. NUMBER NEXT TO HEADER, INDICATES NO. OF QUICK DISCONNECT VALVES PER HEADER
4. ALL QUICK DISCONNECTS ARE ACCOMPANIED BY VELOCITY FUSE & SHUTOFF VALVE SEE DWG. NO. 049080.
5. ALL SERVICE AIR PIPING WITH EXCEPTION OF TEST AND VENT PIPING SHALL BE 1" MINIMUM.
6. USE 3/4" CONTROMATICS 3-WAY, CARBON STEEL, TWO POSITION, 90° CYCLE, MODEL S, UNDER SPEC. 8711.

SERVICE AIR UNIT 1

ISOMETRIC OF SHEET 4
HEADER LINES ONLY

UNIT - 1

P. G. & E. CO.	DRAWING NO	CHANGE
SHEET 6 OF SHEETS	102025	47

SCAN 47 | 1C | 35 M/M Neg.

RM INDEXED REV.

NITROGEN SUPPLY SYSTEM

NOTES:

1. ALL PIPING ON THIS SHEET SHALL BE PG&E CLASS 'E' EXCEPT AS NOTED.
2. MANUAL VALVES:
   WITH ITEM No. SHALL BE UNDER SPEC. 0722.
   WITH PG&E MARK No. SHALL BE UNDER SPEC. 8711.
3. VALVES WITH THIS NOTE (PCV-150, 153, 154, 155 & 156) SHALL BE LOCATED AS CLOSE TO THE TANKS AS POSSIBLE. 38-D/E
4. PCV WITH THIS NOTE HAS AN INTEGRAL RELIEF VALVE. (PCV-145, 146, & 147) 32/34-B
5. PRESSURE GAUGE INTEGRAL WITH PCV's
   PRESSURE DOWNSTREAM OF PCV-146=115 PSIG
   PRESSURE DOWNSTREAM OF PCV-145=115 PSIG 34-B
6. 4R2 BALL VALVES DWG. 053479. 34,35,36,37 -C/D
7. SEE DWG 341001.
8. INSTR. CLASS II; 3/4"× 0.065 WALL, SS TUBING.
9. SUPERIOR AIR HANDLING CO. MODEL No. 9. 31-B
10. CONTROMATICS 3/4" BALL VALVE 3/4-B/C-16-22-B-C-FP.
11. CONTROMATICS 1" BALL VALVE 1-B/C-16-22-B-C-FP.
12. DELETED
13. 3/4" WHITEY MODEL #SS-63ES12.
14. FILTRITE LMO-10S- 3/4"F DUO-FINE DFN 0.45 10UN. 37-C
15. 1" SPRING LOADED CHECK VALVE, CIRCLE SEAL 249T-8PP-6. 37-D

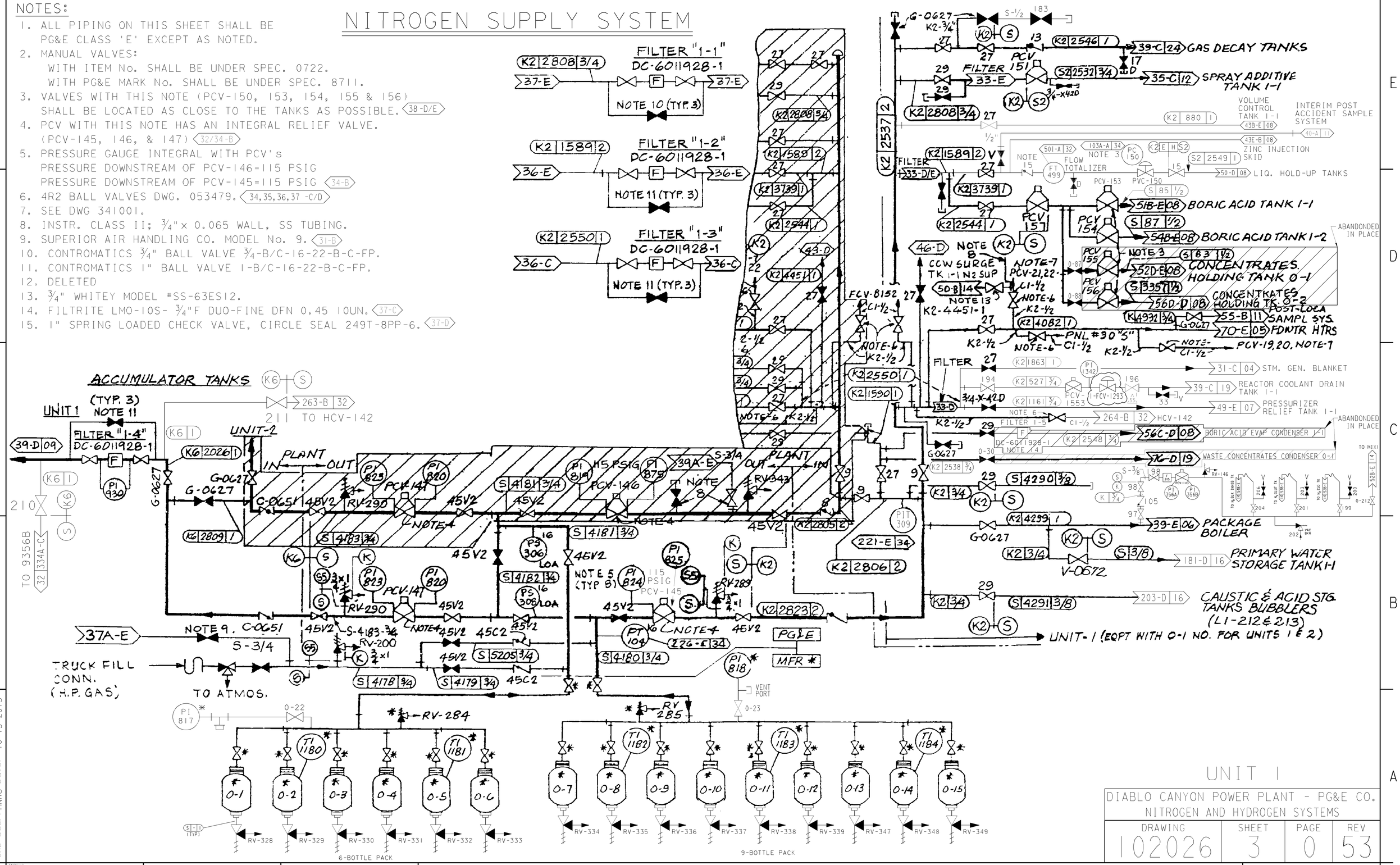

UNIT 1

DIABLO CANYON POWER PLANT - PG&E CO. NITROGEN AND HYDROGEN SYSTEMS			
DRAWING	SHEET	PAGE	REV
102026	3	0	53

DATE	DWN	RE	IV	PROFESSIONAL ENGINEER	PE DISC.	PE#	PE EXP.	
10-15-2013	MNRU	FxC2	KJD3	NOT REQUIRED	N/A	N/A	N/A	REVISED PER DDN-2*1115

RASTER=2026s3.dgn
DGN=2026s3.dgn
CAD User: MNRU Date: 10-15-2013

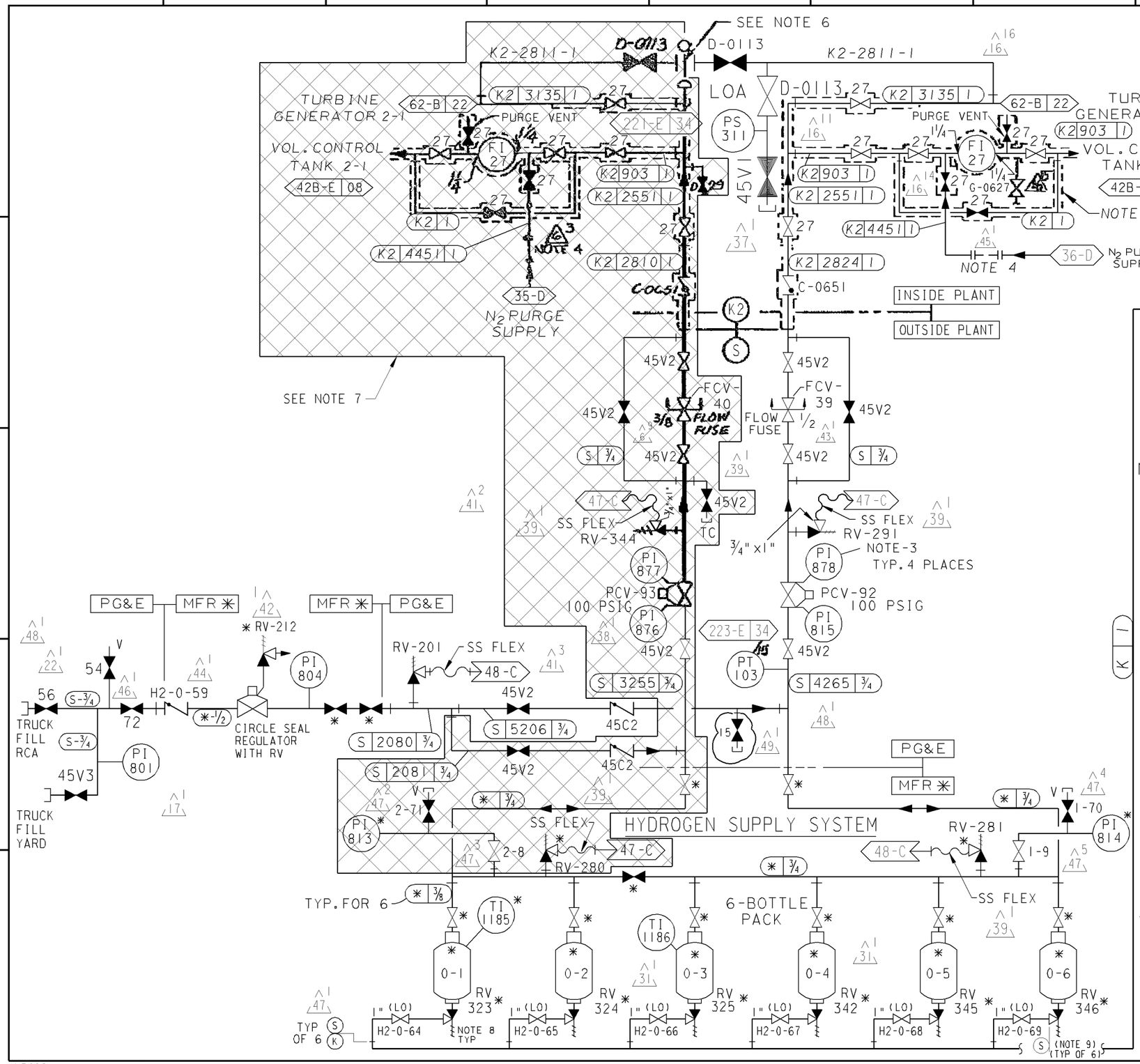

NOTES:

1. ALL PIPING ON THIS SHEET SHALL BE PG&E CLASS E.
2. MANUAL VALVES:
   WITH ITEM NO. SHALL BE UNDER SPEC. 0722.
   WITH PG&E MARK NO. SHALL BE UNDER SPEC. 8711.
3. PRESSURE GAGE INTEGRAL WITH PCV 44-C
   PRESSURE DOWNSTREAM OF PCV-92-100 PSIG
   PRESSURE DOWNSTREAM OF PCV-93-100 PSIG
4. REMOVABLE SPOOL USED TO PURGE LINE. NORMAL LINE UP IS SPOOL REMOVED AND BLIND FLANGES INSTALLED. 45-D
5. DASHED LINES INDICATE GUARD ON PIPING. GUARD PIPING ON HYDROGEN LINES IS SEISMICALLY QUALIFIED (REF AR# A0629995 & A0642979).
6. SPECTACLE BL. IS 1/8" THICK
7. CROSS HATCH AREA REPRESENTS UNIT-2 PIPING, SEE DWG. 108026-4.
8. RUPTURE DISCS REPLACED WITH SPRING LOADED RELIEF VALVES. PER AT-MM A0634377, REF. DWG. 225608.
9. SEE DWG. 678612-2 FOR DETAILS.

UNIT 1

DIABLO CANYON POWER PLANT - PG&E CO.
NITROGEN AND HYDROGEN SYSTEM

DRAWING	SHEET	PAGE	REV
102026	4	0	49

DATE	DWN	RE	IV	PROFESSIONAL ENGINEER	PE DISC.	PE#	PE EXP.	
08-24-2009	ADMI	FxC2		KERSI J. DALAL	MECHANICAL	M 16690	3/31/2010	REVISED PER DDN-2*150-0

RASTER=2026s4.dgn
DGN=2026s4.dgn
CAD User: ADMI
Date: 08-24-2009

INPGIC
1 Size

NOTES:

1. ALL PIPING ON THIS SHEET SHALL BE PG&E CLASS "E"
2. ALL PIPING TO BE "K" SPEC. UNLESS NOTED
3. COMPONENT COOLING HEAT EXCHANGER SUMP DISCHARGE HEADER LINE 2986 TO SLOPE DOWN LIQUID RADWASTE (38-D)
4. TO BE USED ONLY AS STANDBY (35-D)
5. DELETED
6. K-5728-4 INSTALLED TO DRAIN FW HEATERS. HOSE REQUIRED TO DRAIN INTO TURBINE BLDG SUMP
7. 3"-150# FLANGED SWING CHECK VALVES, PACIFIC VALVE FIG.NO. 180-12H-CF8M OR EQUAL
8. DELETED
9. 4" C.S.150# PPL PLUG VALVE
10. 4" C.S.150# FEP LINED 2-WAY PLUG VALVE, TUFLINE MOD. 061
11. 4" S.S.300# CHECK VALVE, CHEXTER FIG. 1603-C (WAFER)
12. 3/8" REGULATING VALVE, WHITEY, B-1KS6 OR EQUAL (39-A)
13. 4" C.S. BUTTERFLY VALVES, TEFLON LINED, 150# RATING, POSACON PART #NT100-4-SPI-BPI-GEI-FA-1-A (WATER TYPE)
14. 1" C.S.PLUG VALVE, POLYPROPYLENE LINED, ANSI 150# FLANGE RATING DOW MODEL 060201
15. 3/8" HOKE, MODEL NO.3852 G 6Y NEEDLE VALVE
16. 1/2" REGULATING VALVE, WHITEY, MODEL SS-7VS8
17. 1/2",3-WAY BALL VALVE, WHITEY, MODEL SS-45XS8
18. CAP IS ORIFICED TO PROVIDE APPROX. 2 GPM MIN. FLOW AND TO PREVENT SEDIMENT BUILD-UP
19. EXTEND PURGE LINE BELOW SUMP LOW WATER LEVEL. (SAME AS UNIT 2)
20. VELAN MODEL 0114C, S/C 76-5333 (36-C)
21. CHECK VALVE STOCK CODE 70-0968 (37-D)
22. 1/2" BALL VALVE, WHITEY, MODEL SS-45S8, STOCK CODE 72-9690.
23. 1/2" BALL VALVE, WHITEY, MODEL SS-45F8, STOCK CODE 73-0154.
24. PORTIONS OF LINE ARE AL-6XN MATERIAL SCH. 40 PER NMOD 60025381.

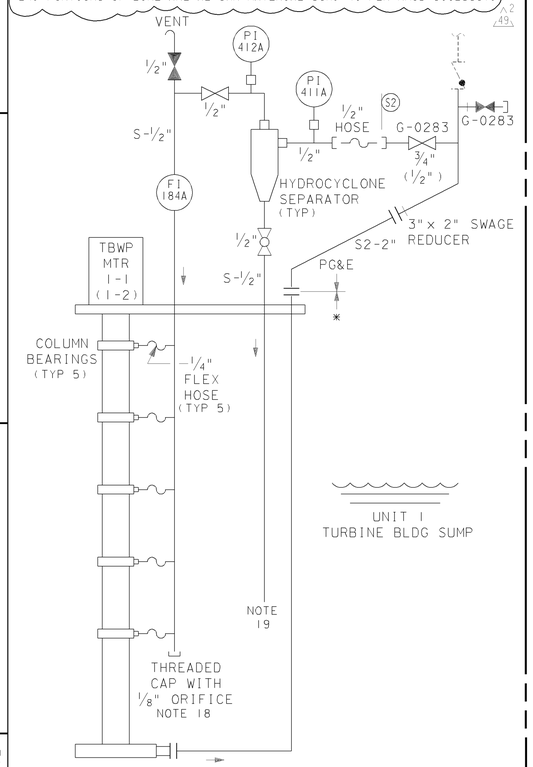

DETAIL "A"

TBWP BEARING LUBE WATER SYSTEM

(TYPICAL FOR TBWP 1-1 & 1-2)

TBWP 1-1	TBWP 1-2
PI-411A	PI-411B
PI-412A	PI-412B
FI-184A	FI-184B

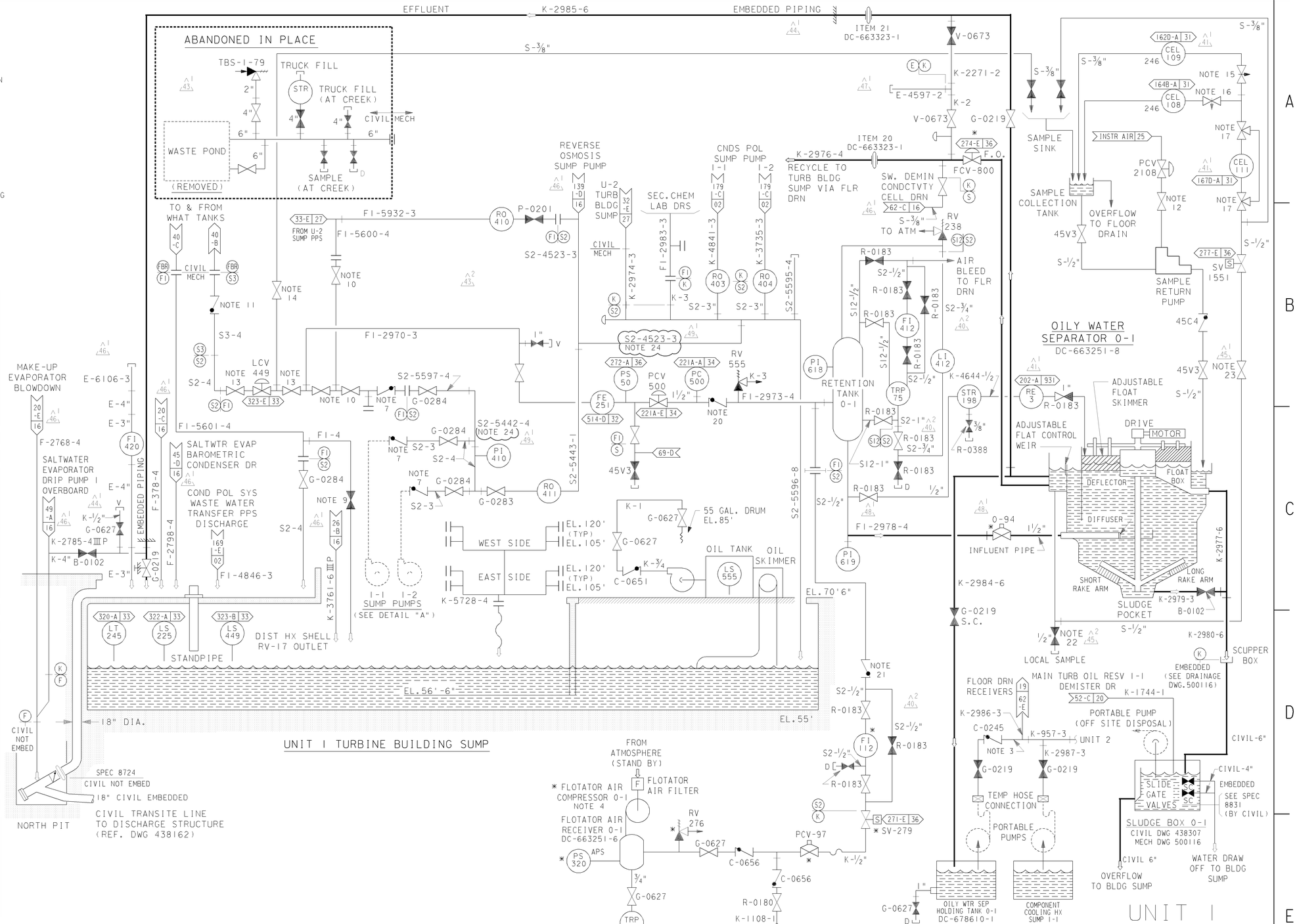

TURBINE BUILDING SUMP
OILY WATER SEPARATOR

(MAXIMUM CAPACITY 100 GPM)

DIABLO CANYON POWER PLANT - PG&E CO.			
OILY WATER SEPARATOR AND TURBINE BLDG. SUMP SYSTEM			
DRAWING	SHEET	PAGE	REV
102027	3	0	49

DATE	DWN	RE	IV	PROFESSIONAL ENGINEER	PE DISC.	PE#	PE EXP.	
12-04-2012	MNRU	FxC2		KERSI J. DALAL	MECHANICAL	M 16690	3/31/2014	REVISED PER DDT-4*390

RASTER=102027s3.dgn
DGN=102027s3.dgn
CAD User: MNRU Date: 12-04-2012

3NPGIC
3 Size

102787

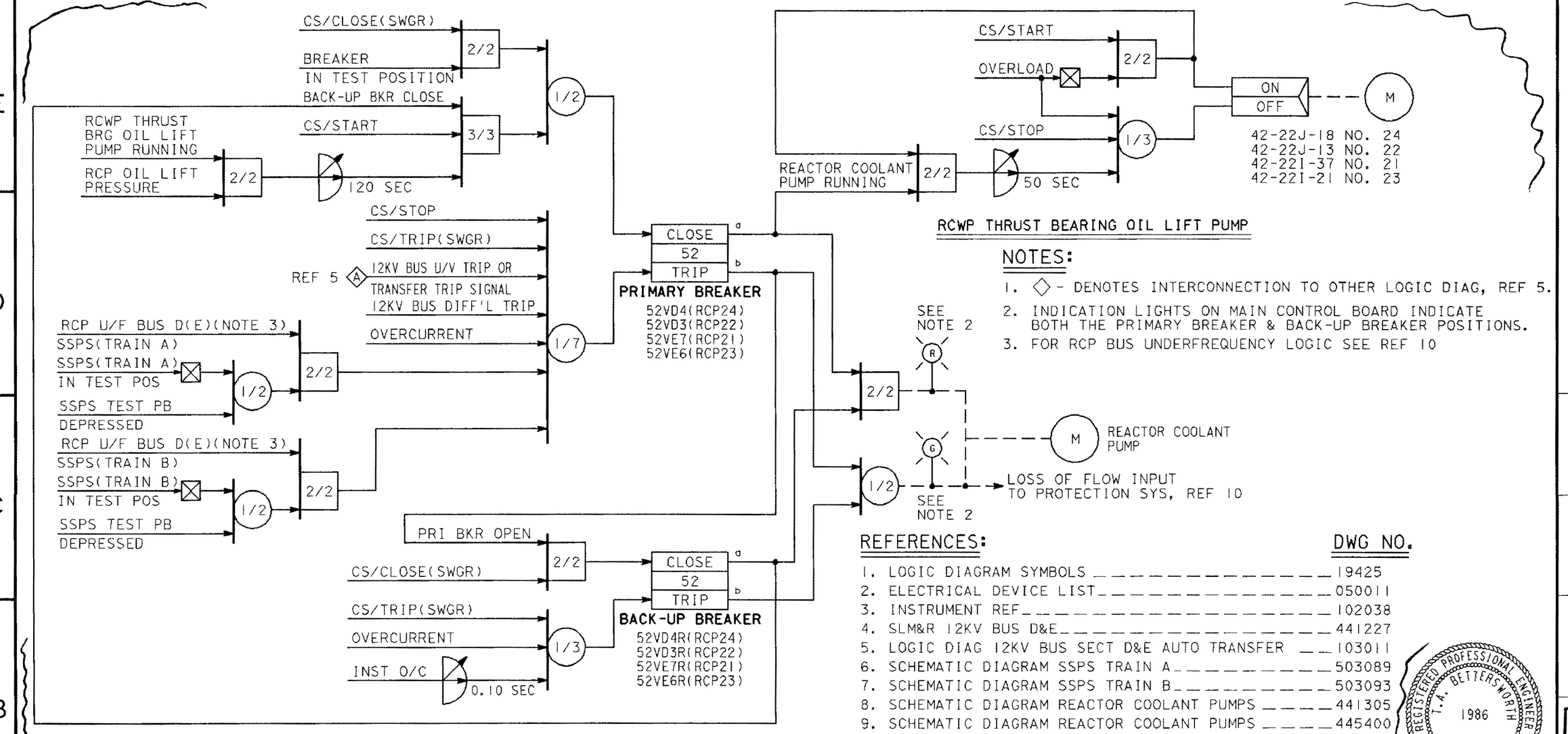

NOTES:

1. ◇ - DENOTES INTERCONNECTION TO OTHER LOGIC DIAG, REF 5.
2. INDICATION LIGHTS ON MAIN CONTROL BOARD INDICATE BOTH THE PRIMARY BREAKER & BACK-UP BREAKER POSITIONS.
3. FOR RCP BUS UNDERFREQUENCY LOGIC SEE REF 10

REFERENCES:

		DWG NO.
1.	LOGIC DIAGRAM SYMBOLS	19425
2.	ELECTRICAL DEVICE LIST	050011
3.	INSTRUMENT REF	102038
4.	SLM&R 12KV BUS D&E	441227
5.	LOGIC DIAG 12KV BUS SECT D&E AUTO TRANSFER	103011
6.	SCHEMATIC DIAGRAM SSPS TRAIN A	503089
7.	SCHEMATIC DIAGRAM SSPS TRAIN B	503093
8.	SCHEMATIC DIAGRAM REACTOR COOLANT PUMPS	441305
9.	SCHEMATIC DIAGRAM REACTOR COOLANT PUMPS	445400
10.	FUNCTIONAL LOGIC DIAGRAM PRIMARY COOLANT SYSTEM TRIP SIGNALS	495875

REGISTERED PROFESSIONAL ENGINEER T.A. BETTERSWORTH 1986 ELECTRICAL STATE OF CALIFORNIA

REV	REGISTERED ENGINEER	SIGNATURE	CA REG NO.	EXP DATE
4	M Bass		C12314	12/31/94

KEY ELEC SECT 3

RM INDEXED REV ___

COAST VALLEYS DIVISION

UNIT 2

NO	DATE	DESCRIPTION	GM	DWN.	CHKD.	SUPV.	APVD.
4	1-14-94	REDRAWN; MODIFIED SCHEME(DWG CHG ONLY); REV NOTES & REF (FCT-16395)	—	WAA	WG	RH	
1	9-30-75	APPROVED FOR CONSTRUCTION	169972		EZ		LRW

REVISIONS

APPROVED BY	
LRW	GM 169972
	SUPV. H HERTING
DN	DSGN. E ZEITER
	DWN.
JWC	CHKD. E ZEITER
	O.K. HH / DPJ
TAB	DATE 9-30-75
	SCALES NONE

LOGIC DIAGRAM
REACTOR COOLANT PUMPS

DIABLO CANYON
DEPARTMENT OF ENGINEERING
PACIFIC GAS AND ELECTRIC COMPANY
SAN FRANCISCO, CALIFORNIA

MICROFILM 4
BILL OF MATL
DWG LIST
SUPSDS
SUPSD BY
SHEET NO. SHEETS
102787 REV. 4

SCAN 4 IC

102787D.E62 01-06-94 WAA

DWG TYPE	DWG SUBJECT	DRAWING TITLE	UNIT No.	PROJECT LOCATION	INSTALLATION TYPE	DIVISION NAME	MISC	DD CODE	MAN HOURS	CADD	DRAWING SOURCE
4		REACTOR COOLANT PUMPS	2	DIABLO	L	B		GD		C	A
14	15	16–21 16–44	42 44	45–50	51	52	53	55 56	57 59	60	70

U#1-338070

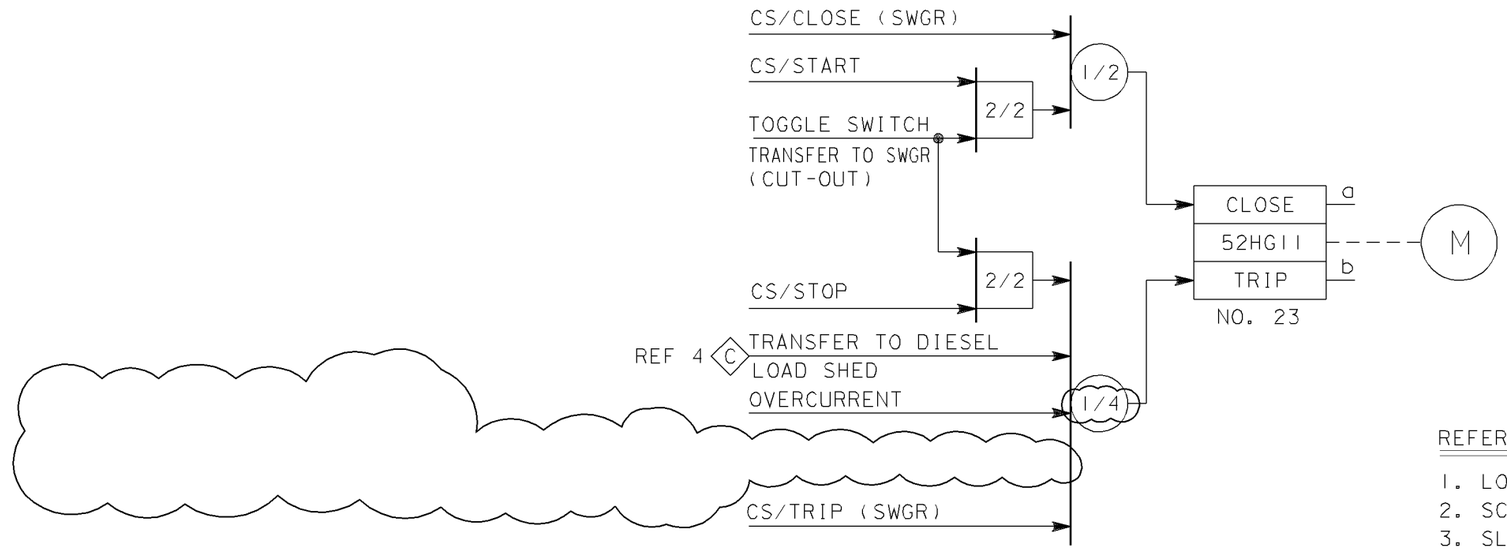

REFERENCES: DWG NO.

1. LOGIC DIAGRAM SYMBOLS _____ 19425
2. SCH DIAG CHARGING PUMP #23 _____ 4008751
3. SLM&R DIAG 4KV BUS G & H _____ 441230
4. LOGIC DIAG 4KV BUS SECT G TRANS __ 441297

NUCLEAR SAFETY RELATED

KEY DWG. SECTION 3

UNIT 2

DATE	
04-09-2008	
D.D.	FAZ1
R.E.	FxC2
I.V.	
P.E.	AGB2

REGISTERED PROFESSIONAL ENGINEER
ALAN GLEN BARTA
E 9271
Exp. 9/30/2009
ELECTRICAL
STATE OF CALIFORNIA

REVISION DESCRIPTION

REVISED PER DC2-SE-50704-01

I & C
LOGIC DIAGRAM
CENTRIFUGAL CHARGING PUMP 2-3

DIABLO CANYON POWER PLANT
PACIFIC GAS AND ELECTRIC COMPANY
SAN FRANCISCO, CALIFORNIA

DWG SCALE:
BILL OF MATL:
SUPSDS:
SUPSD BY:

DRAWING	SHEET	PAGE	REV
102788	1	0	5

RASTER=102788.dgn
DGN=102788.dgn
CAD User:FAZ1 Date: 04-09-2008

INPG
1 Size

U#1 - 19404

102789

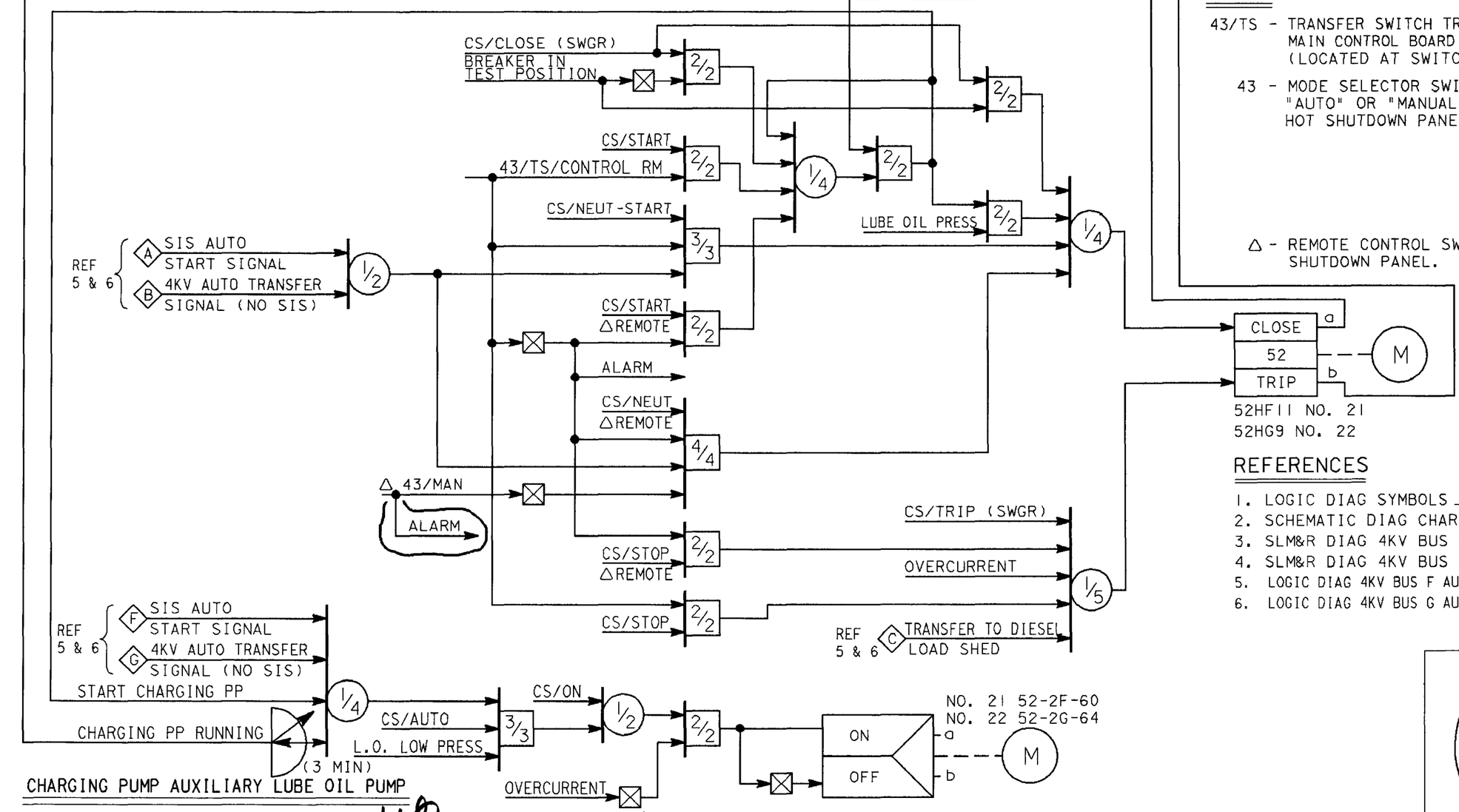

CHARGING PUMP AUXILIARY LUBE OIL PUMP

NOTES

43/TS - TRANSFER SWITCH TRANSFERS CONTROL FROM MAIN CONTROL BOARD TO HOT SHUTDOWN PANEL (LOCATED AT SWITCHGEAR).

43 - MODE SELECTOR SWITCH FOR SELECTING "AUTO" OR "MANUAL" MODE (LOCATED AT HOT SHUTDOWN PANEL).

△ - REMOTE CONTROL SWITCH LOCATED AT HOT SHUTDOWN PANEL.

52HF11 NO. 21
52HG9 NO. 22

REFERENCES

		DWG NO.
1.	LOGIC DIAG SYMBOLS	19425
2.	SCHEMATIC DIAG CHARGING PP	441312
3.	SLM&R DIAG 4KV BUS F	441229
4.	SLM&R DIAG 4KV BUS G & H	441230
5.	LOGIC DIAG 4KV BUS F AUTO TRANSFER	441286
6.	LOGIC DIAG 4KV BUS G AUTO TRANSFER	441297

REGISTERED PROFESSIONAL ENGINEER T.A.Bettersworth No. 1986 ELECTRICAL STATE OF CALIFORNIA

COAST VALLEYS DIVISION

REV	REGISTERED ENGINEER	SIGNATURE	CA REG NO.	EXP DATE
5	M Basu		C12314	12/31/94

NUCLEAR SAFETY RELATED

102789D.E62 04-27-94 WAA

KEY DWG--SECTION 3 UNIT 2

NO.	DATE	DESCRIPTION	GM/SPEC	DWN	CHKD	SUPV	APVD BY	
5	5-5-94	ADD ALARM INPUT AT 43/MAN INPUT (FCT 17116)	—	WAA	WG	JRN	MH	MB
4	1-20-94	REV LOGIC; DEL STAR NOTE; ADD REF 5 & 6 (FCT-16395)	—	DWL	WG	KS	MH/FDK	MB
1	9-30-75	APPROVED FOR CONSTRUCTION	169972		EZ		LRW	DN

REVISIONS

APPROVED BY	
LRW	GM 169972
DN	SUPV H. HERTING
JWC	DSGN E. ZEITER
TAB	DWN
	CHKD EZ
	OK HH DPJ
	DATE 9-23-75
	SCALES NONE

LOGIC DIAGRAM
CENTRIFUGAL CHARGING PUMPS

DIABLO CANYON
DEPARTMENT OF ENGINEERING
PACIFIC GAS AND ELECTRIC COMPANY
SAN FRANCISCO, CALIFORNIA

MICROFILM	5
BILL OF MATL	
DWG LIST	
SUPSDS	
SUPSD BY	
SHEET NO.	SHEETS
102789	REV 5

DRAWING SOURCE A 70 | CADD C 60 | MAN HOURS 57 59 | DD CODE G D 55 56 | MISC 53 | DIVISION NAME B 52 | INSTALLATION TYPE L 51 | PROJECT LOCATION D I A B L Ø 45-50 | UNIT No. 2 44 | DRAWING TITLE C E N T R I F U G A L C H A R G I N G P U M P S 16-44 21 | DWG SUBJECT 15 | DWG TYPE 4 14

N1805

U1-194101

102790

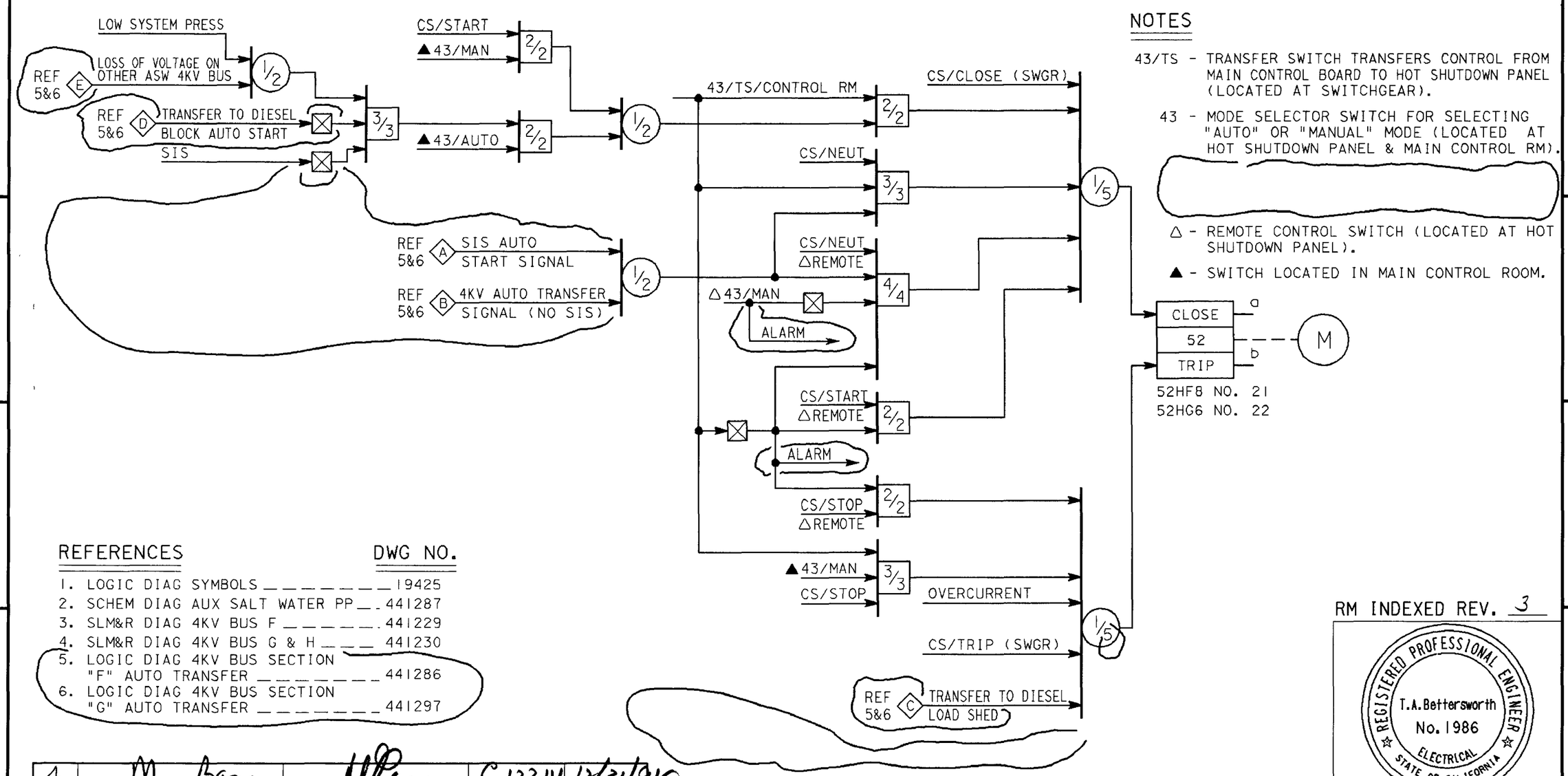

NOTES

43/TS - TRANSFER SWITCH TRANSFERS CONTROL FROM MAIN CONTROL BOARD TO HOT SHUTDOWN PANEL (LOCATED AT SWITCHGEAR).

43 - MODE SELECTOR SWITCH FOR SELECTING "AUTO" OR "MANUAL" MODE (LOCATED AT HOT SHUTDOWN PANEL & MAIN CONTROL RM).

△ - REMOTE CONTROL SWITCH (LOCATED AT HOT SHUTDOWN PANEL).

▲ - SWITCH LOCATED IN MAIN CONTROL ROOM.

REFERENCES

	DWG NO.
1. LOGIC DIAG SYMBOLS	19425
2. SCHEM DIAG AUX SALT WATER PP	441287
3. SLM&R DIAG 4KV BUS F	441229
4. SLM&R DIAG 4KV BUS G & H	441230
5. LOGIC DIAG 4KV BUS SECTION "F" AUTO TRANSFER	441286
6. LOGIC DIAG 4KV BUS SECTION "G" AUTO TRANSFER	441297

REV	REGISTERED ENGINEER	SIGNATURE	CA REG NO.	EXP DATE
4	M Basu		C 12314	12/31/94

RM INDEXED REV. 3

REGISTERED PROFESSIONAL ENGINEER T.A. Bettersworth No. 1986 ELECTRICAL STATE OF CALIFORNIA

NUCLEAR SAFETY RELATED

COAST VALLEYS DIVISION

102790D.E62 01-14-94 DWL

KEY DWG--SECTION 3 UNIT 2

NO.	DATE	DESCRIPTION	GM/SPEC	DWN	CHKD	SUPV	APVD BY	
4	1-19-94	REV LOGIC, NOTES; ADDED REF 5 & 6 (FCT-16395)	—	WWL				
3	5-20-93	REDRAWN; ADD DEVICE 43; RETAG 43R AS 43/TS; REV NOTES & LOGIC (DC2-EE-48591) (DC2-EE-48593)	—	DWL	WG	KS	MH	
2	2-16-90	REV NOTE (FCT-010370)	169972	TE	VL	LCV	SLW	KAW
1	9-30-75	APPROVED FOR CONSTRUCTION	169972		EZ		LRW	

REVISIONS

APPROVED BY	
LRW	GM 169972
DN	SUPV H. HERTING
JWC	DSGN E. ZEITER
TAB	DWN
	CHKD EZ
	OK HH DPJ
	DATE 9-30-75
	SCALES NONE

LOGIC DIAGRAM
AUXILIARY SALT WATER PUMPS

DIABLO CANYON

DEPARTMENT OF ENGINEERING
PACIFIC GAS AND ELECTRIC COMPANY
SAN FRANCISCO, CALIFORNIA

MICROFILM	4
BILL OF MATL	
DWG LIST	
SUPSDS	
SUPSD BY	
SHEET NO.	SHEETS
102790	REV 4

DRAWING SOURCE A 70 | CADD C 60 | MAN HOURS 57 59 | DD CODE G D 55 56 | MISC 53 | DIVISION NAME B 52 | INSTALLATION TYPE L 51 | PROJECT LOCATION D I A B L 0 45-50 | UNIT No. 2 42 44 | DRAWING TITLE A U X S A L T W A T E R P U M P S 16-44 | DWG SUBJECT 15 | DWG TYPE 4 14

N1805 UI = 19406

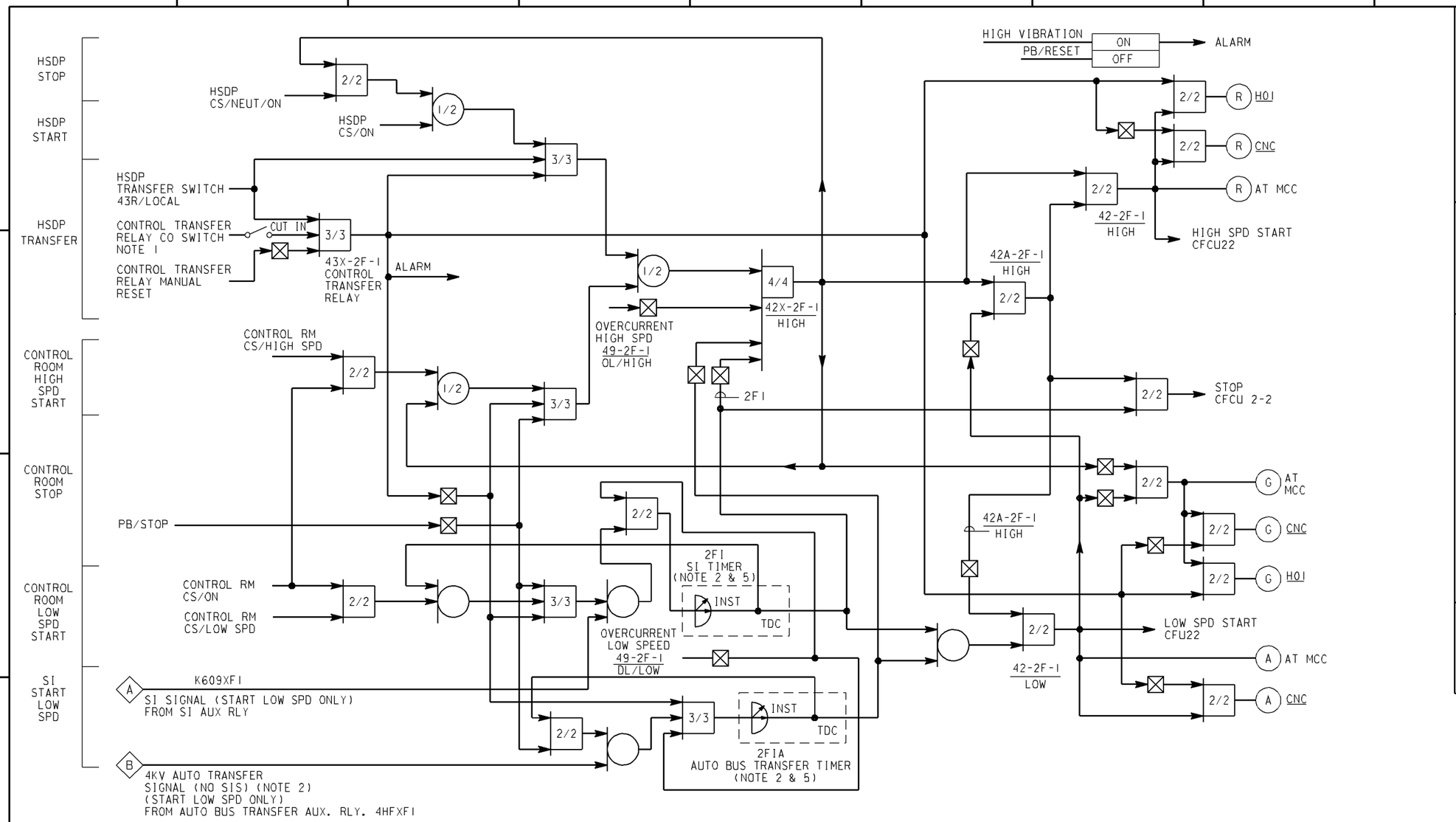

TABLE A

CFCU	DEVICE	DESCRIPTION	SETTING
22	2F1	SI TIMER	REF 2
22	2F1A	AUTO XFR TIMER	REF 2
21	2F2	SI TIMER	REF 2
21	2F2A	AUTO XFR TIMER	REF 2
23	2G1	SI TIMER	REF 3
23	2G1A	AUTO XFR TIMER	REF 3
24	2H1	SI TIMER	REF 4
24	2H1A	AUTO XFR TIMER	REF 4
25	2G2	SI TIMER	REF 3
25	2G2A	AUTO XFR TIMER	REF 3

REFERENCES:

	DWG NO.
1. LOGIC DIAGRAM SYMBOLS	19425
2. LOGIC DIAG 4KV "F" AUTO XFR	441286
3. LOGIC DIAG 4KV "G" AUTO XFR	441297
4. LOGIC DIAG 4KV "H" AUTO XFR	441337
5. LIST OF ELEC DEVICES FOR PROT & CONTROL	SAP
6. SCH DIAG FAN COOLERS	441313

NOTES:

1. CONTROL TRANSFER RELAY C.O. SWITCH FANS 21, 23 & 24 - NORMALLY CUT IN FANS 22, 25 - NORMALLY CUT OUT ALARM WHEN NOT IN NORMAL POSITION
2. THE PREFIX 2 REFERS TO IEEE DEVICE #2 WHICH IS A TIME DELAY STARTING OR CLOSING RELAY. IT'S NOT REFERRING TO UNIT 2
3. DELETED
4. 480V AC IS REQUIRED FOR 120V CONTROL POWER.
5. SINGLE RELAYS HAVE BEEN REPLACED WITH TWO (2) RELAYS. ONE (1) RELAY HAS INSTANTANEOUS CONTACTS AND ONE (1) RELAY HAS THE TIME DELAY CONTACTS. THE LOGIC IS THE SAME.

LEGEND:

43R - TRANSFERS CONTROL FROM CONTROL BOARD TO HOT SHUTDOWN PANEL (HSDP)

◇ - DENOTES INTERCONNECTION TO OTHER LOGIC DIAG. REF 2, 3 & 4

NUCLEAR SAFETY RELATED

KEY DWG. SECTION 3

UNIT 2

DATE	
09-05-2012	
D.D.	MNRU
R.E.	FxC2
I.V.	
P.E.	AGB2

REGISTERED PROFESSIONAL ENGINEER ALAN GLEN BARTA E 9271 Exp. 9/30/2013 ELECTRICAL STATE OF CALIFORNIA

REVISION DESCRIPTION

REVISED PER DDN-2*933

ELECTRICAL
LOGIC DIAGRAM
CONTAINMENT FAN COOLERS

DIABLO CANYON POWER PLANT
PACIFIC GAS AND ELECTRIC COMPANY
SAN FRANCISCO, CALIFORNIA

DWG SCALE:
BILL OF MATL:
SUPSDS:
SUPSD BY:

DRAWING	SHEET	PAGE	REV
102791	1	0	16

RASTER=102791.dgn
DGN=102791.dgn
CAD User:MNRU Date: 09-05-2012

INPG
1 Size

102792

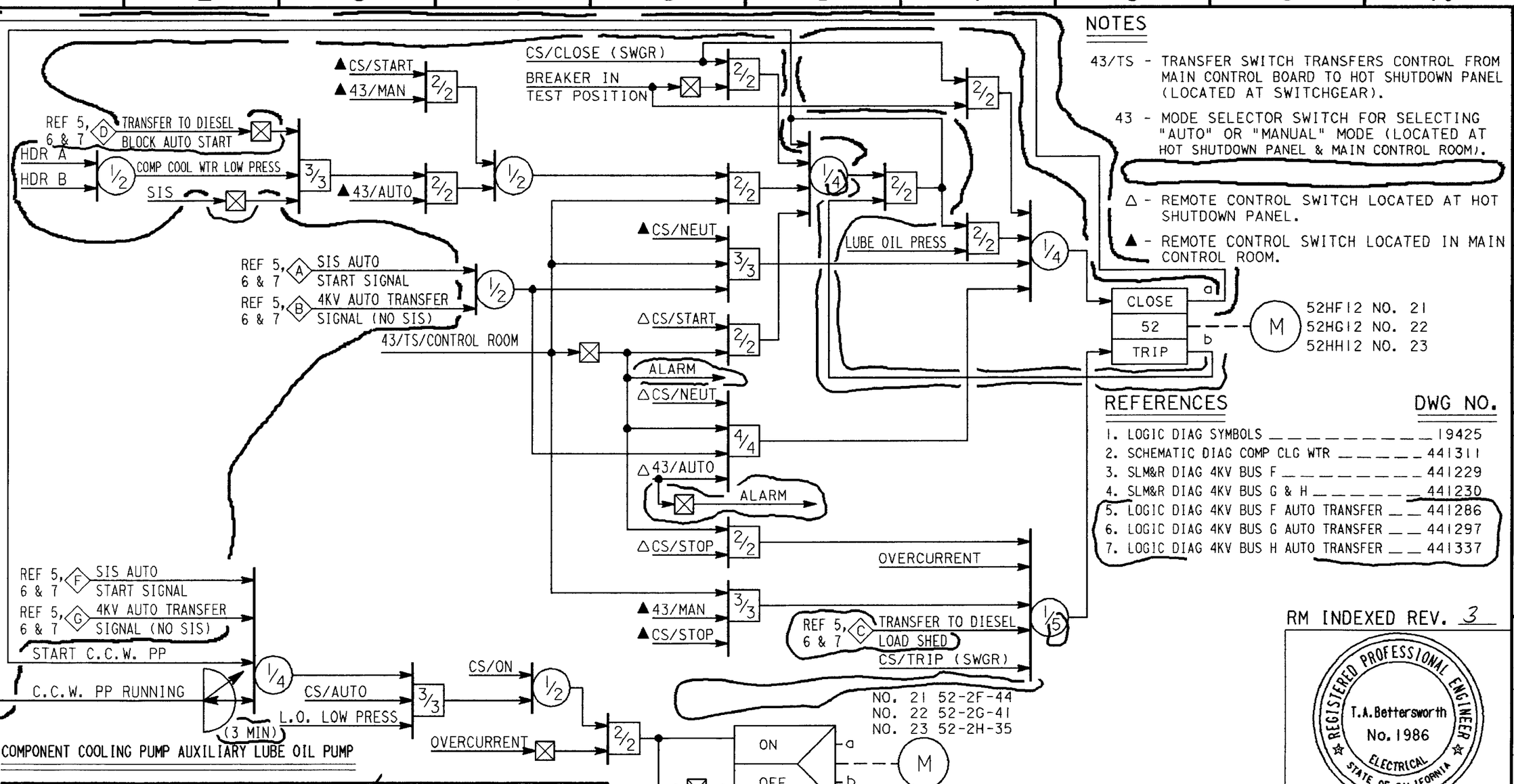

NOTES

43/TS - TRANSFER SWITCH TRANSFERS CONTROL FROM MAIN CONTROL BOARD TO HOT SHUTDOWN PANEL (LOCATED AT SWITCHGEAR).

43 - MODE SELECTOR SWITCH FOR SELECTING "AUTO" OR "MANUAL" MODE (LOCATED AT HOT SHUTDOWN PANEL & MAIN CONTROL ROOM).

△ - REMOTE CONTROL SWITCH LOCATED AT HOT SHUTDOWN PANEL.

▲ - REMOTE CONTROL SWITCH LOCATED IN MAIN CONTROL ROOM.

REFERENCES

	DWG NO.
1. LOGIC DIAG SYMBOLS	19425
2. SCHEMATIC DIAG COMP CLG WTR	441311
3. SLM&R DIAG 4KV BUS F	441229
4. SLM&R DIAG 4KV BUS G & H	441230
5. LOGIC DIAG 4KV BUS F AUTO TRANSFER	441286
6. LOGIC DIAG 4KV BUS G AUTO TRANSFER	441297
7. LOGIC DIAG 4KV BUS H AUTO TRANSFER	441337

RM INDEXED REV. 3

REGISTERED PROFESSIONAL ENGINEER T.A. Bettersworth No. 1986 ELECTRICAL STATE OF CALIFORNIA

COAST VALLEYS DIVISION

COMPONENT COOLING PUMP AUXILIARY LUBE OIL PUMP

REV	REGISTERED ENGINEER	SIGNATURE	CA REG NO.	EXP DATE
4	Bruce M Grosse	Bruce M Grosse	E9988	9/30/75

NUCLEAR SAFETY RELATED

102792D.E62 01-18-94 DWL

KEY DWG--SECTION 3 UNIT 2

NO.	DATE	DESCRIPTION	GM/SPEC	DWN	CHKD	SUPV	APVD BY	
4	2-24-94	REV LOGIC; DEL STAR NOTE; ADD REF 5,6 & 7 (FCT-16395)	—	WWL DWL	JJ	LL	LRW	DN
1	9-30-75	APPROVED FOR CONSTRUCTION	169972		EZ		LRW	DN

REVISIONS

APPROVED BY: LRW, DN, JWC, TAB

GM 169972
SUPV H. HERTING
DSGN E. ZEITER
DWN
CHKD EZ
OK HH DPJ
DATE 9-23-75
SCALES NONE

LOGIC DIAGRAM
COMPONENT COOLING WATER PUMPS

DIABLO CANYON
DEPARTMENT OF ENGINEERING
PACIFIC GAS AND ELECTRIC COMPANY
SAN FRANCISCO, CALIFORNIA

MICROFILM 4
BILL OF MATL
DWG LIST
SUPSDS
SUPSD BY
SHEET NO. SHEETS

102792 REV 4

N1805

SCAN 4

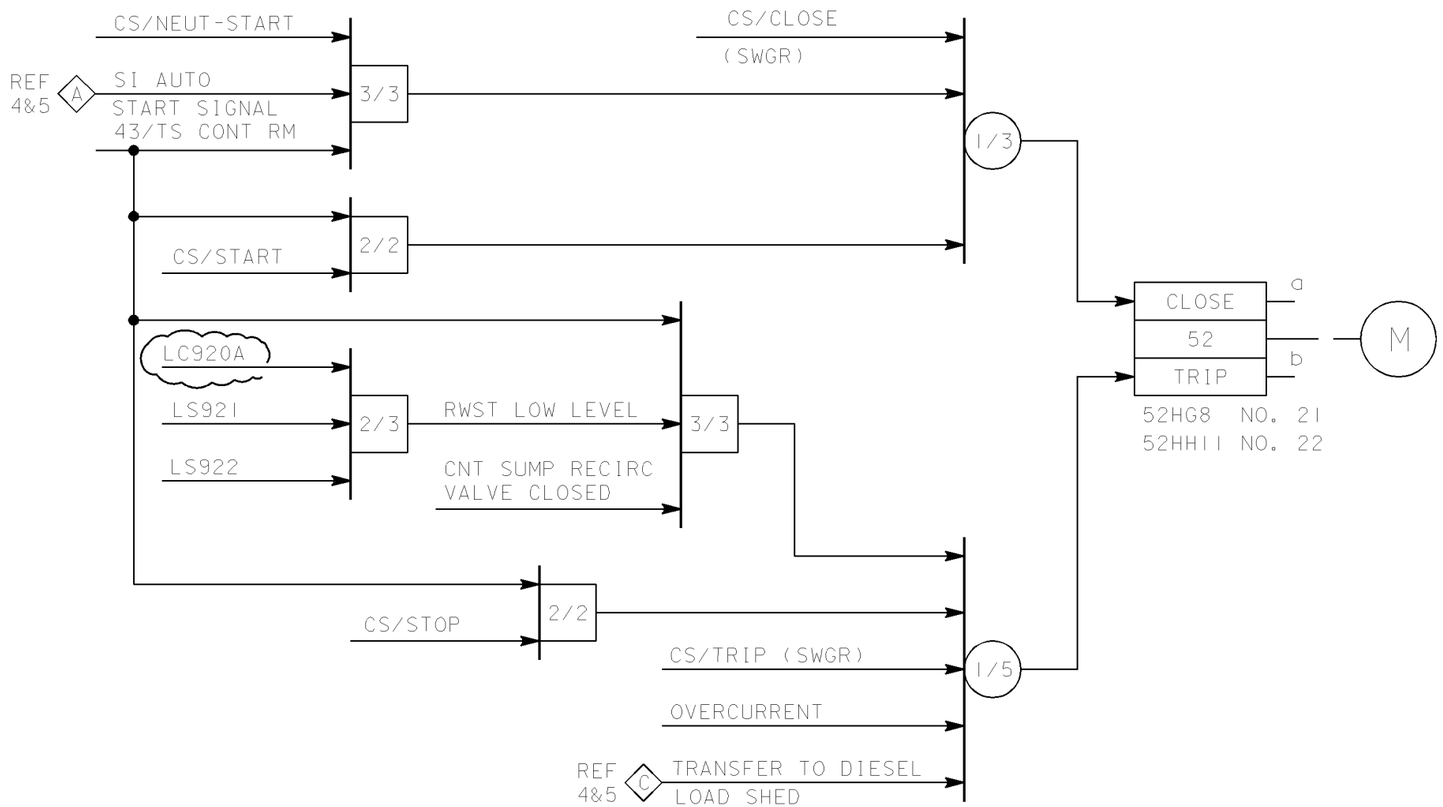

NOTE

1. 43/TS-TRANSFERS CONTROL FROM LOCAL TO CONTROL ROOM (SW LOC AT SWGR)

REFERENCES:	DWG NO.
1. SCH DIAG RES HEAT REM	441309
2. LOG DIAG SYMBOLS	19425
3. S.L. M&R DIAG 4KV G&H	441230
4. LOGIC DIAGRAM 4KV BUS "G" AUTO TRANSFER	441297
5. LOGIC DIAGRAM 4KV BUS "H" AUTO TRANSFER	441337

REGISTERED PROFESSIONAL ENGINEER
ALBERT Y. WONG
E 9822
Exp. 9/30/98
ELECTRICAL
STATE OF CALIFORNIA

KEY DWG--SECTION 3

NUCLEAR SAFETY RELATED

UNIT 2

DATE 3/4/98		DESCRIPTION	COORDINATION	
DWN.	JDP7	Revised per FCT 022816	NUCL.	-
R.E.	KMSI		MECH.	-
INDEP. VERIFIER	-		ELEC.	-
			CIVIL	-
			PIPING	-
P.E.	AYWI		I&C	-

REVISION INFORMATION

LOGIC DIAGRAM
RESIDUAL HEAT REMOVAL PUMPS

DIABLO CANYON POWER PLANT
PACIFIC GAS AND ELECTRIC COMPANY
SAN FRANCISCO, CALIFORNIA

DWG SCALE	
BILL OF MATL	
SUPSDS	
SUPSD BY	
SHEET NO. 1 OF	
102793	REV 5

CAD User: JDP7 Date: 3-03-1998
DGN=102793D.E62

INPG

U#1-19410

102794

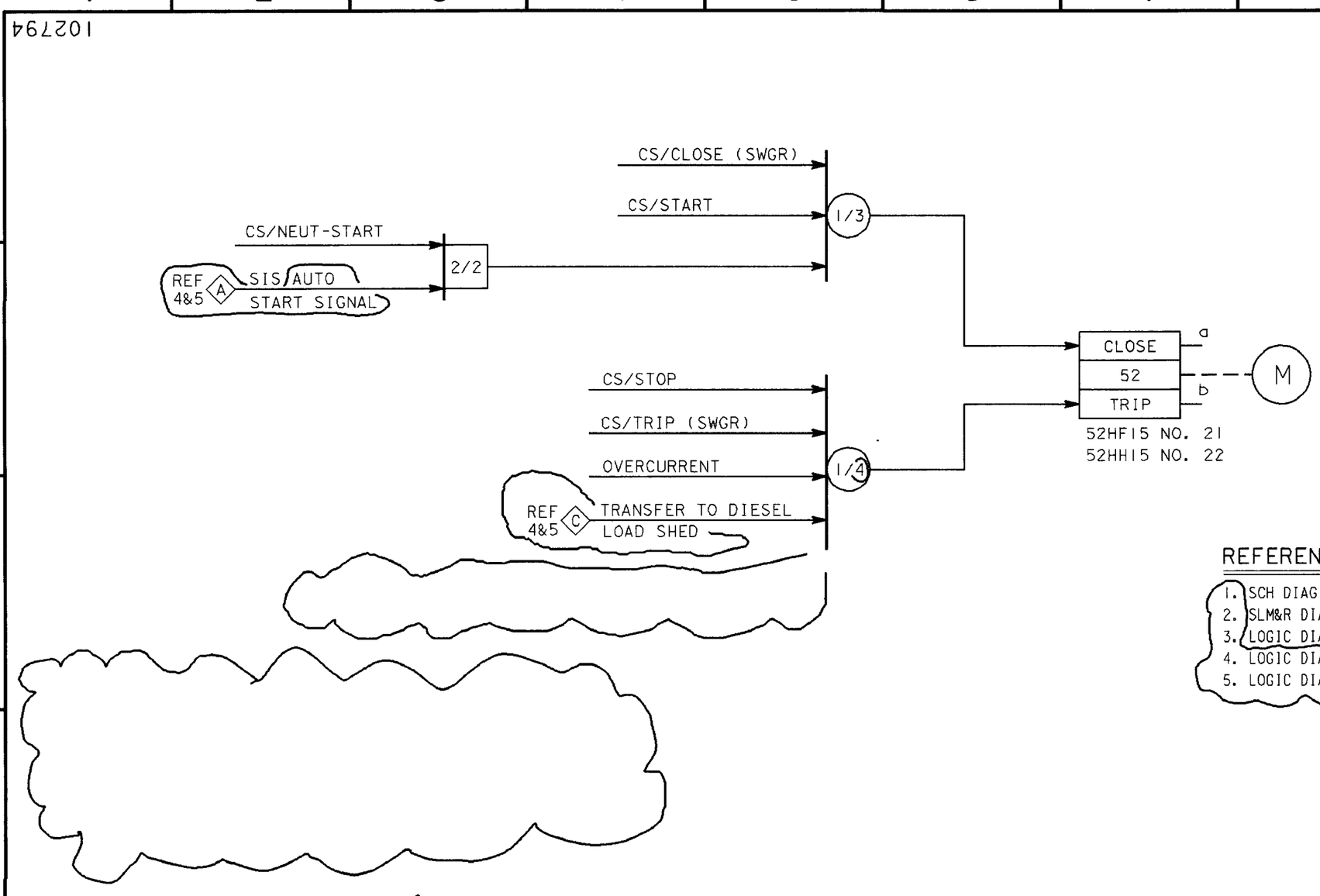

REFERENCES	DWG NO.
1. SCH DIAG SAFETY INJ PP	441315
2. SLM&R DIAG 4KV BUS F, G & H	441229 & 441230
3. LOGIC DIAG SYMBOLS	19425
4. LOGIC DIAG 4KV BUS "F" AUTO TRANSFER	441286
5. LOGIC DIAG 4KV BUS "H" AUTO TRANSFER	441337

RM INDEXED REV. 2

REV	REGISTERED ENGINEER	SIGNATURE	CA REG NO.	EXP DATE
3	M Bam		C12314	12/31/94

NO.	DATE	DESCRIPTION	GM	DWN.	CHKD.	SUPV.	APVD.
3	1-19-94	REDRAWN; REV LOGIC; DEL NOTE; ADD	—	WWL			
		REF 4 & 5 (FCT-16395)		DWL			
2	2-16-90	REV NOTE (FCT-10370)	169972	TC	VL/LCV		SLW
1	9-30-75	APPROVED FOR CONSTRUCTION	169972		EZ		LRW

REVISIONS

KEY DWG--SECTION 3

NUCLEAR SAFETY RELATED

UNIT 2

APPROVED BY	
LRW	GM 169972
	SUPV. H HERTING
DN	DSGN. E ZEITER
	DWN.
JWC	CHKD. E ZEITER
	O.K. HH / DPJ
TAB	DATE 9-30-75
	SCALES NONE

LOGIC DIAGRAM
SAFETY INJECTION PUMPS

DIABLO CANYON

DEPARTMENT OF ENGINEERING
PACIFIC GAS AND ELECTRIC COMPANY
SAN FRANCISCO, CALIFORNIA

COAST VALLEYS DIVISION

MICROFILM	3
BILL OF MATL	
DWG LIST	
SUPSDS	
SUPSD BY	
SHEET NO.	SHEETS
102794	REV. 3

102794D.E62 01-18-94 DWL

U#1-19411

102795

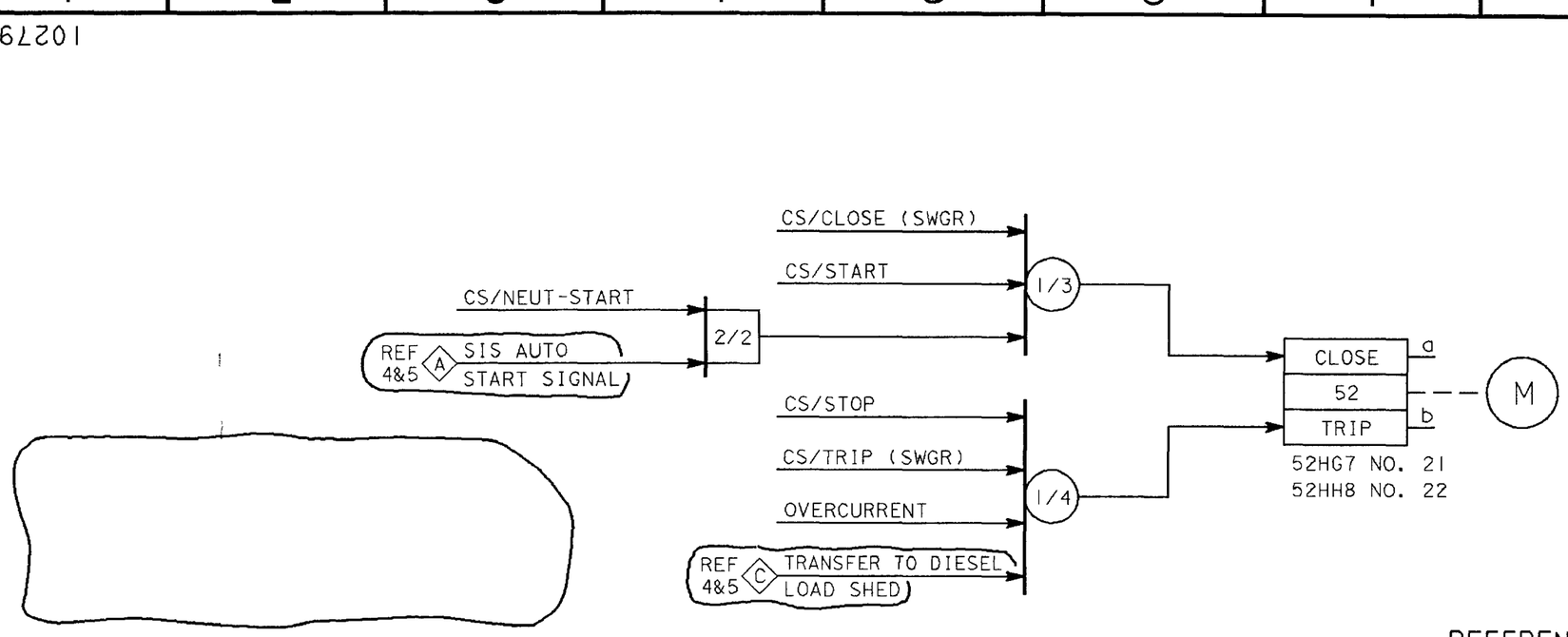

REFERENCES

		DWG NO.
1.	SCH DIAG CONTAINMENT SPRAY	441307
2.	LOGIC DIAG SYMBOLS	19425
3.	SLM&R DIAG 4KV BUS G & H	441230
4.	LOGIC DIAG 4KV BUS G AUTO TRANSFER	441297
5.	LOGIC DIAG 4KV BUS H AUTO TRANSFER	441337

RM INDEXED REV. 2

REGISTERED PROFESSIONAL ENGINEER
T.A. Bettersworth
No. 1986
ELECTRICAL
STATE OF CALIFORNIA

REV	REGISTERED ENGINEER	SIGNATURE	CA REG NO.	EXP DATE
3	M Bass		C12314	12/31/94

NUCLEAR SAFETY RELATED

UNIT 2

COAST VALLEYS DIVISION

NO.	DATE	DESCRIPTION	GM/SPEC	DWN	CHKD	SUPV	APVD BY
3	1-14-94	REDRAWN; REV LOGIC; DEL NOTE; ADD REF 4 & 5 (FCT-16395)	—	DWL	wg	LD	MT NP
2	3-2-83	RES LOGIC INPUT CNT SPRAY (DC2-EE-4377) SAN 281	169972	WC	LCV II	JC	JEH SA
1	9-30-75	APPROVED FOR CONSTRUCTION	169972		EZ		LRW

REVISIONS

KEY DWG--SECTION 3

APPROVED BY	
	GM 169972
	SUPV H. HERTING
LRW	DSGN E. ZEITER
	DWN
DN	CHKD EZ
	OK HH DPJ
JWC	DATE 9-23-75
TAB	SCALES NONE

LOGIC DIAGRAM
CONTAINMENT SPRAY PUMPS

DIABLO CANYON

DEPARTMENT OF ENGINEERING
PACIFIC GAS AND ELECTRIC COMPANY
SAN FRANCISCO, CALIFORNIA

MICROFILM	3
BILL OF MATL	
DWG LIST	
SUPSDS	
SUPSD BY	
SHEET NO.	SHEETS
102795	REV 3

DRAWING SOURCE A 70 | CADD C 60 | MAN HOURS 57 59 | DD CODE G D 55 56 | MISC 53 | DIVISION NAME B 52 | INSTALLATION TYPE L 51 | PROJECT LOCATION D I A B L 0 45-50 | UNIT No. 2 42 44 | DRAWING TITLE C Ø N T A I N M E N T S P R A Y P U M P S 16-44 | 16 21 | DWG SUBJECT 15 | DWG TYPE 4 14

102795D.E62 01-13-94 DWL

U#1=19411

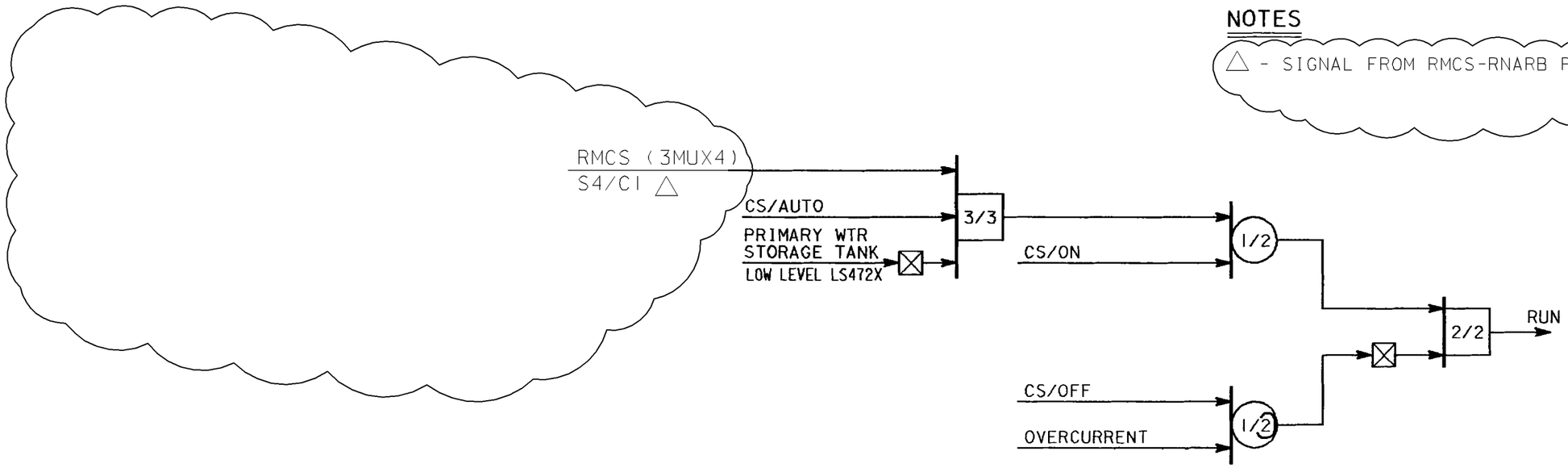

NOTES

△ - SIGNAL FROM RMCS-RNARB PLC OUTPUT S4/C1.

REFERENCE	DWG NO.
1. SCH DIAG CHEM & VOL CONT SYS	441321
2. SCH. DIAG. RC M-U SYST.	441320

NUCLEAR SAFETY RELATED

KEY DWG. SECTION 3

UNIT 2

DATE	
04-14-2008	
D.D.	ADMI
R.E.	FxC2
I.V.	
P.E.	RWB7

REGISTERED PROFESSIONAL ENGINEER
RICHARD WILLIAM BECKER
E 9776
Exp. 9/30/2008
ELECTRICAL
STATE OF CALIFORNIA

REVISION DESCRIPTION

REVISED PER DC2-SE-50779-01

ELECTRICAL
LOGIC DIAGRAM
MAKE-UP WATER PUMPS

DIABLO CANYON POWER PLANT
PACIFIC GAS AND ELECTRIC COMPANY
SAN FRANCISCO, CALIFORNIA

DWG SCALE:			
BILL OF MATL:			
SUPSDS:			
SUPSD BY:			
DRAWING	SHEET	PAGE	REV
102796	1	0	3

RASTER=102796.dgn
DGN=102796.dgn
CAD User:ADMI Date: 04-14-2008

INPG
1 Size

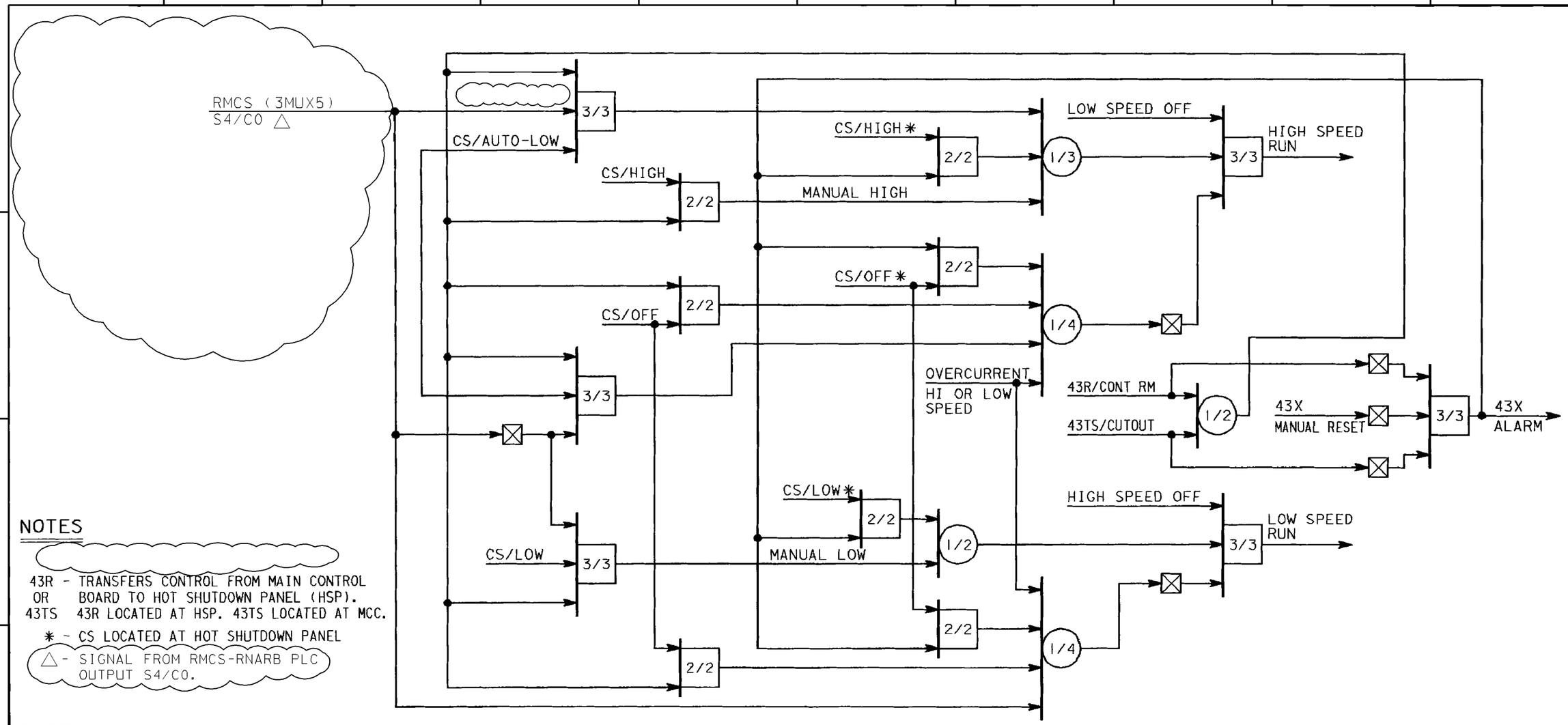

NOTES

43R - TRANSFERS CONTROL FROM MAIN CONTROL
OR BOARD TO HOT SHUTDOWN PANEL (HSP).
43TS 43R LOCATED AT HSP. 43TS LOCATED AT MCC.

* - CS LOCATED AT HOT SHUTDOWN PANEL

△ - SIGNAL FROM RMCS-RNARB PLC OUTPUT S4/CO.

REFERENCE	DWG NO.
1. SCH DIAG CHEM & VOL CONT SYS	441321
2. SCH. DIAG. RC M-U SYST.	441320

NUCLEAR SAFETY RELATED

KEY DWG. SECTION 3

UNIT 2

DATE	
04-14-2008	
D.D.	ADMI
R.E.	FxC2
I.V.	
P.E.	RWB7

REGISTERED PROFESSIONAL ENGINEER
RICHARD WILLIAM BECKER
E 9776
Exp. 9/30/2008
ELECTRICAL
STATE OF CALIFORNIA

REVISION DESCRIPTION

REVISED PER DC2-SE-50779-01

ELECTRICAL
LOGIC DIAGRAM
BORIC ACID TRANSFER PUMPS

DIABLO CANYON POWER PLANT
PACIFIC GAS AND ELECTRIC COMPANY
SAN FRANCISCO, CALIFORNIA

DWG SCALE:
BILL OF MATL:
SUPSDS:
SUPSD BY:

DRAWING	SHEET	PAGE	REV
102797	1	0	3

RASTER=102797.dgn
DGN=102797.dgn
CAD User:ADMI Date: 04-14-2008

INPG
1 Size

102800

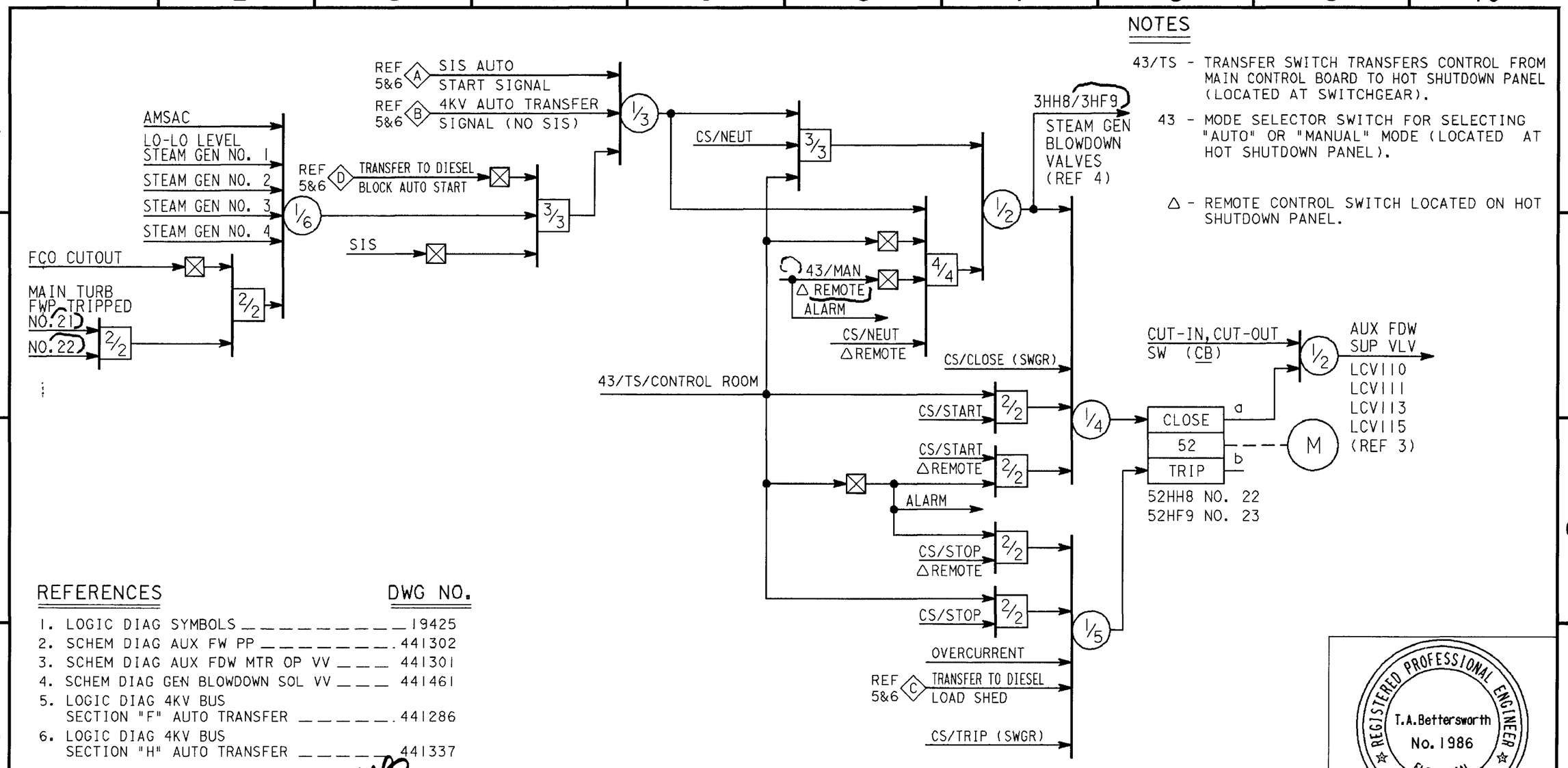

NOTES

43/TS - TRANSFER SWITCH TRANSFERS CONTROL FROM MAIN CONTROL BOARD TO HOT SHUTDOWN PANEL (LOCATED AT SWITCHGEAR).

43 - MODE SELECTOR SWITCH FOR SELECTING "AUTO" OR "MANUAL" MODE (LOCATED AT HOT SHUTDOWN PANEL).

△ - REMOTE CONTROL SWITCH LOCATED ON HOT SHUTDOWN PANEL.

REFERENCES

	DWG NO.
1. LOGIC DIAG SYMBOLS	19425
2. SCHEM DIAG AUX FW PP	441302
3. SCHEM DIAG AUX FDW MTR OP VV	441301
4. SCHEM DIAG GEN BLOWDOWN SOL VV	441461
5. LOGIC DIAG 4KV BUS SECTION "F" AUTO TRANSFER	441286
6. LOGIC DIAG 4KV BUS SECTION "H" AUTO TRANSFER	441337

REV	REGISTERED ENGINEER	SIGNATURE	CA REG NO.	EXP DATE
8	M Bass		C12314	12/31/94

NUCLEAR SAFETY RELATED

REGISTERED PROFESSIONAL ENGINEER T.A. Betterworth No. 1986 ELECTRICAL STATE OF CALIFORNIA

COAST VALLEYS DIVISION

102800D.E62 04-28-94 WAA

KEY DWG--SECTION 3

UNIT 2

NO.	DATE	DESCRIPTION	GM/SPEC	DWN	CHKD	SUPV	APVD BY	
8	5-5-94	REV LOGIC INPUT DESCRIPTIONS (FCT 17116)	—	WAA	WG	JRN	MH/RNT	MB
7	4-28-94	REV LOGIC; DEL STAR NOTE; ADD	—	WWL	WG	KS	MH/RNT	MB
		REF 5 & 6 (FCT-16395)		DWL				
1	9-30-75	APPROVED FOR CONSTRUCTION	169972		EZ		LRW	DN

REVISIONS

APPROVED BY	
LRW	GM 169972
DN	SUPV H. HERTING
JWC	DSGN E. ZEITER
TAB	DWN
	CHKD EZ
	OK HH / DPJ
	DATE 9-23-75
	SCALES NONE

LOGIC DIAGRAM
AUXILIARY FEEDWATER PUMPS

DIABLO CANYON

DEPARTMENT OF ENGINEERING
PACIFIC GAS AND ELECTRIC COMPANY
SAN FRANCISCO, CALIFORNIA

MICROFILM	8
BILL OF MATL	
DWG LIST	
SUPSDS	
SUPSD BY	
SHEET NO.	SHEETS
102800	REV 8

N1805

DRAWING SOURCE A 70 | CADD C 60 | MAN HOURS 59 | DD CODE G D 55 56 | MISC 53 | DIVISION NAME B 52 | INSTALLATION TYPE L 51 | PROJECT LOCATION D I A B L Ø 45-50 | UNIT No. 2 44 42 | DRAWING TITLE A U X F E E D W A T E R P U M P S 16-44 21 16 | DWG SUBJECT 15 | DWG TYPE 4 14

ICL

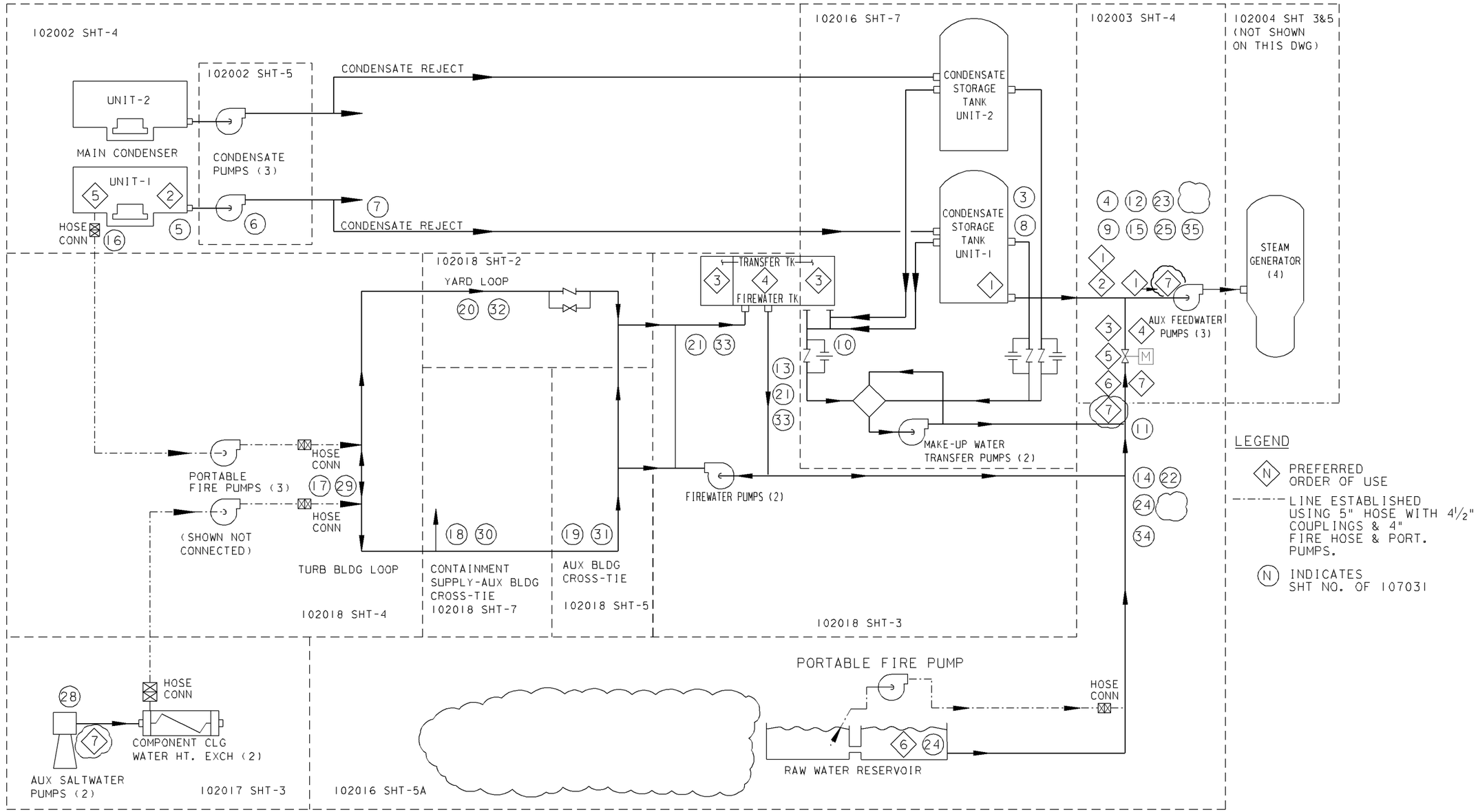

LONG TERM COOLING WATER SYSTEM PIPING SCHEM INTERFACE

NOTE 1. DISTRIBUTION LIST SAME AS DISTRIBUTION LIST FOR LAST ISSUED PIPE SCHEMATIC 102027 CHG. 7 OF 8-6-81

UNIT 1

DIABLO CANYON POWER PLANT - PG&E CO.
LONG TERM COOLING WATER SYSTEMS

DRAWING	SHEET	PAGE	REV
107031	1A	0	6

DATE	DWN	RE	IV	PROFESSIONAL ENGINEER	PE DISC.	PE#	PE EXP.	
11-01-2010	JBMX	FxC2		KERSI J. DALAL	MECHANICAL	M 16690	3/31/2012	REVISED PER DDN-2*715

RASTER=107031SH1A.dgn
DGN=107031SH1A.dgn
CAD User: JBMX Date: 11-01-2010

INPGIC
1 Size

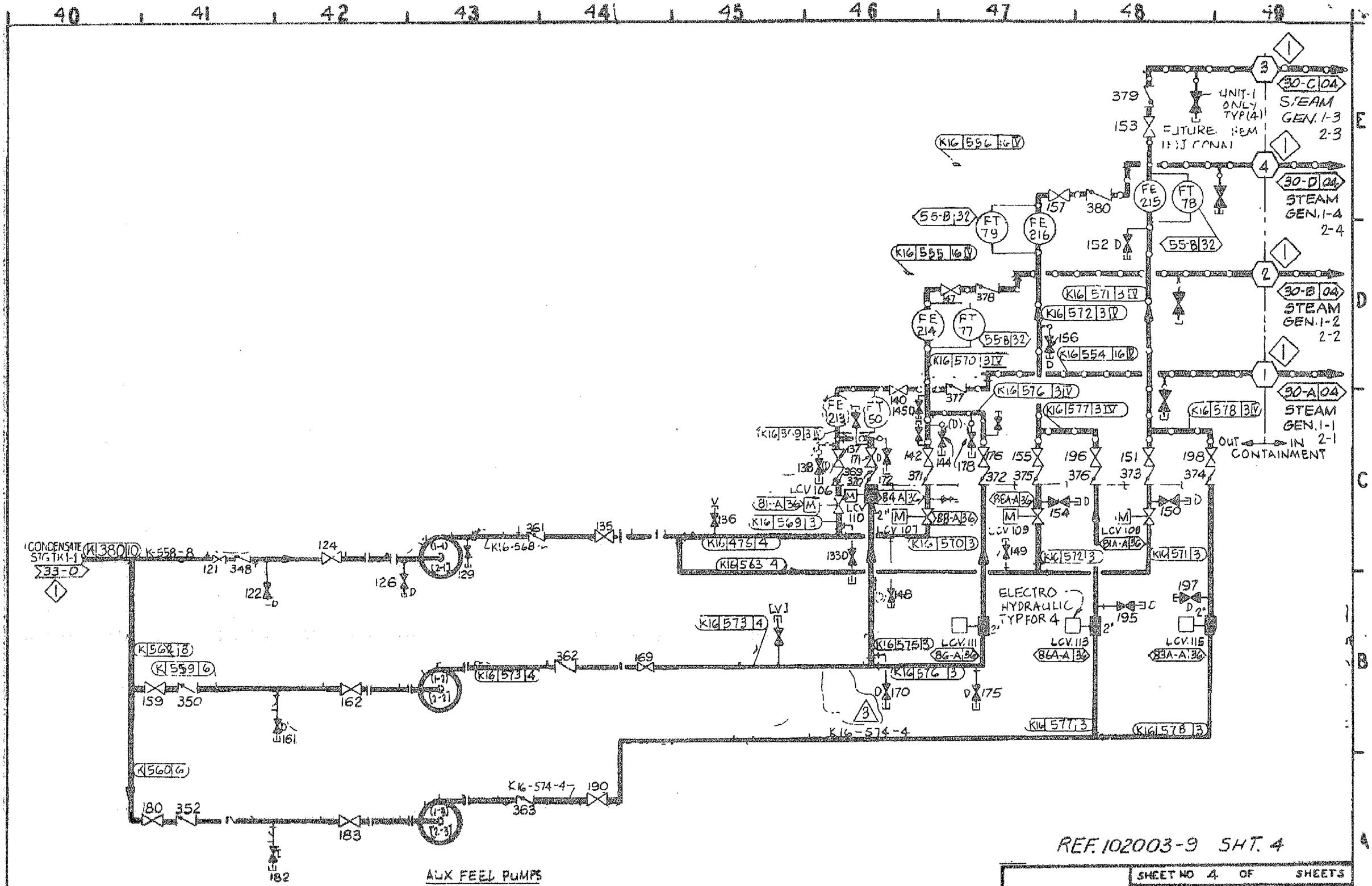
CONDENSATE STG TK 1-1
K-558-8
K16-568
K16-574-4
K16-574-4
AUX FEED PUMPS
STEAM GEN. 1-3 2-3
STEAM GEN. 1-4 2-4
STEAM GEN. 1-2 2-2
STEAM GEN. 1-1 2-1
OUT
IN
CONTAINMENT
UNIT-1 ONLY TYP(4)
FUTURE ITEM
ELECTRO HYDRAULIC TYP FOR 4
REF. 102003-9 SHT. 4
P.G.&E.CO.
SHEET NO 4 OF SHEETS
DRAWING NUMBER
107031
CHANGE
3

30 | 31 | 32 | 33 | 34 | 35 | 36 | 37 | 38 | 39

VALVE SYMBOLS

PGE & COMMON (NOTE 7) TITLE WESTINGHOUSE

10 — G-0627-D
NON-CONTROLLED (MANUAL)
SEE VALVE SPEC. - DWG..049020
ADDITIONAL VALVE DESCRIPTION
SERIES NO.
PRESSURE RATING
TYPE
SIZE (SHOWN ONLY IF DIFF. FROM LINE SIZE)
FOR TUBING VALVE IDENTIFICATION SEE DWG 053479
VALVE TYPE
VALVE SIZE
(SPECIFIED ON VALVE REFERENCE GUIDE) DC-663219-30 — 3/4-T58
ITEM NO. SEE DWG. 102039 (ALTERNATE SPEC)

MODULATING VALVE
NORMALLY CLOSED VALVE (ON-OFF)
NORMALLY OPEN VALVE (ON-OFF)
THROTTLED VALVE (MANUAL)
(W) USES THE VALVE TYPE DESIGNATION SHOWN BELOW
EXCESS FLOW CHECK VALVE

PG&E USES THE FUNCTIONAL DESIGNATION SHOWN ABOVE
GATE VALVE
GATE VALVE (DOUBLE DISC)
NEEDLE VALVE
GLOBE VALVE
BALL VALVE
DIAPHRAGM VALVE
BUTTERFLY VALVE
THREEWAY VALVE
NORMALLY CLOSED PORT
NORMALLY OPEN PORT
ALWAYS OPEN (COMMON) PORT
CHECK VALVE
CHECK VALVE WITH OPERATOR
DAMPER
SEE ABBREVIATION
AIR OPERATOR
AIR OPERATOR (WITH POSITIONER)
INSTRUMENT ACTUATED OPERATOR WITH VALVE POSITIONER
PROCESS ACTUATED OPERATOR VALVE WITH VALVE POSITIONER
PROCESS ACTUATED VALVE OPERATOR WITH PILOT (DOWNSTREAM BLEED)
DOUBLE DISC GATE VALVE WITH THERMAL RELIEF CONNECTION
ELECTRIC SOLENOID OPERATOR
ELECTRIC MOTOR OPERATOR
MANUAL REGULATOR OR SELF CONTAINED REGULATOR
PRESSURE REDUCING REGULATOR WITH EXTERNAL PRESSURE TAP
RUPTURE DISC
RELIEF VALVE
2X3
VACUUM BREAKER
STEM LEAKOFF
ANGLE VALVE
OR EXTENSION STEM OPERATOR THRU WALL PENETRATION

EQUIPMENT SYMBOLS

PGE & COMMON (NOTE 7) TITLE WESTINGHOUSE

HEAT EXCHANGER (ANY TYPE)
HEAT EXCHANGER (ALTERNATE)
FLOW STRAIGHTENING VANE
PULSATION DAMPENER
POSITIVE DISPLACEMENT PUMP
BLENDER
CENTRIFUGAL PUMP
SMALL CANNED MOTOR PUMP
FAN, BLOWER OR COMPRESSOR
JOHNSON SCREEN
MIXER
EJECTOR, EDUCTOR
RO — RESTRICTING ORIFICE
FE — FLOW PRIMARY ELEMENT
TRP — STEAM TRAP (SEE DWG. 049063 FOR DETAILS)
F — FILTER
STR — STRAINER (NUMBER IS NOT NEEDED FOR START-UP STRAINER)
CONICAL STRAINER (FOR START-UP ONLY)
EXPANSION JOINT
FLEXIBLE CONNECTION
FLEXIBLE HOSE
DISCONNECT COUPLING
OR BLIND PIPE END (PLUG OR CAP)
BLIND FLANGE
FIRE HOSE CONNECTION
8" 25 NOZZLE TERMINAL (SIZE SHOWN ONLY IF DIFF. FROM PIPE)
A — MFR. NOZZLE IDENTIFICATION (IF AVAILABLE)
REDUCER
FLANGE CONNECTION (PIPING OR EQUIPMENT)
HEATER (STEAM OR ELECTRICAL)
OR LOOP SEAL (TRAP)
SPRAY NOZZLES
SPARGER (INSIDE VESSEL)
SPECTACLE FLANGE
THERMAL SLEEVE

INSTRUMENT SYMBOLS

COMMON (NOTE 7) TITLE

PI 16 — 22-A34
INSTRUMENT NO IDENTIFICATION BALLOON (SEE TABLE BELOW)
INSTRUMENT SCHEMATIC REFERENCE — USED FOR ALL MULTIPLE DEVICE INSTRUMENT LOOPS.
TIC 781 / T2410A — INSTRUMENT NO.
(H) COMPUTER INPUT NO.

PI 6 — 14 MECHANICAL PANEL NO. (SEE DWG. 101904)
PS 6 — HIA INST. FUNCTION - SEE LISTING BELOW (USED FOR SINGLE DEVICE INSTRUMENT ONLY)

DEVELOPMENT OF TAG NO. DESIGNATION (SEE ALSO SPECIAL TAGS)

INSTRUMENT FUNCTION (ATTACHED TO PIPE ONLY)

PROCESS VARIABLE (1)	THERMOWELL FOR THE SENSOR	ABBREVIATION	CONTROL VALVE	INDICATOR	SENSOR OR ELEMENT	SWITCH BLIND	SWITCH W/INDICATOR	TEST	TRANSMITTER	CONTROL BLIND	CONTROL W/INDICATOR
ANALYSIS	–	AN	–	ANI	CEL	ANS	–	ANX	ANT	–	–
FLOW	–	F	FCV	FI	FE	FS	FIS	FX	FT	FC	FIC
LEVEL	–	L	LCV	LI	–	LS	LIS	LX	LT	LC	LIC
NUCLEAR	–	N	–	NI	NE	–	–	–	–	NC	NIC
PRESSURE	–	P	PCV	PI	–	PS	PIS	PX	PT	PC	PIC
RADIATION	–	R	RCV	RI	RE	RS	RIS	RX	RT	RC	RIC
TEMPERATURE	TW	T	TCV	TI●	TE○	TS	TIS	TX	TT	TC	TIC
POSITION	–	PO	PO▲	POI	–	POS	–	–	POT		–
MISC. (VIBRATION SW. SPEED CONTROL, ETC.)	–	Y	YCV	YI	YE	YS	YIS	YX	YT	YC	YIC

▲ POSITIONER
● TI - USED FOR THERMOCOUPLE ELEMENT ALSO
○ TE - USED FOR RTD ELEMENT ONLY

INST. FUNCTION LEGEND

APS-AUTOMATIC PUMP START/STOP
HIA-HIGH ALARM
LOA-LOW ALARM
INT-INTERLOCK
TST-TEST
HLA-HIGH/LOW ALARM

SPECIAL TAG:

RV-RELIEF VALVE
SC-SAMPLE COOLER
SV-SOLENOID VALVE
STR-STRAINER
TRP-TRAP
HCV-HAND CONTROL VALVE
RTD-RESISTANCE TEMPERATURE DETECTOR
5 FY-SAMPLE PUMP

GENERAL NOTES: 2

1. FOR UNIT LINE NO. SEE LINE DESIGNATION (108040)
2. SEE INDIVIDUAL SCHEMATIC FOR SPECIAL SYMBOLS NOT SHOWN ON THIS LEGEND.
3. ON VENTS AND DRAINS WHERE A DOUBLE BARRIER IS REQUIRED REFER TO DWG. 049066 NOTE 4.
4. DC-663211 - 16 → SHEET NUMBER, RECORD NUMBER
5. ALL VALVES SHOWN TO HAVE LEAKOFF CONNECTIONS SHALL BE PERMANENTLY PIPED TO THE APPROPRIATE DRAIN POINT. ALL OTHER VALVES WITH LEAKOFF WILL HAVE LEAKOFF CONNECTIONS CAPPED.
6. (*--) SUPPLIED WITH ASSOCIATED EQUIPMENT. (SEE PIPING SCHEMATIC FOR SPECIFIC INFO.)
   (**--) INDICATES PIPE NOT SUPPLIED BY KELLOGG (8711) OR SCOTT (8831) (SEE PIPING SCHEMATIC FOR SPECIFIC INFORMATION)
7. COMMON-INDICATES THAT SAME SYMBOL IS USED FOR (W) OR PG&E. (30-E)
8. (W) SYMBOLS USED ON THIS SHEET EXTRACTED FROM DC-663200-10.
9. EQUIPMENT NUMBERING:
   0-1 - FOR UNITS 1 & 2 (COMMON)
   1-1 - FOR UNIT 1 ONLY
   2-1 - FOR UNIT 2 ONLY
   → EQUIPMENT NUMBER, UNIT NUMBER

LINE CODING

COMMON (NOTE 7) TITLE

S2 36 4111
INSULATION SPECIFICATION (101905)
LINE SIZE (INCHES)
LINE NO. (OMITTED FOR <2-1/2" SHORT RUN)
PIPING SPECIFICATION (049021)
S2-36-4111 ALTERNATE 7
INSULATING FLANGE (SEE DWG. 065645)
MAIN FLOW LINES
SECONDARY FLOW LINES
INSTRUMENT LINES (PROCESS)
MAIN HEADER (AIR)
BELLOWS SENSOR FILLED SEALED SYSTEM (CAPILLARY)
INDICATES CHANGE OF LINE SPEC. SIZE OR NO. AND EQUIP. BOUNDARY
2 — PIPE PENETRATION NO.
INSIDE CONTAINMENT | OUTSIDE CONTAINMENT
S6 S2 — S2 S
CHANGE OF PIPING SPEC.
INSIDE OUTSIDE
SHIELD WALL PENETRATION
B E
CHANGE OF PG&E CLASS
E E
HEAT TRACING AND BOUNDARY

PG & E CODE CLASS	APPLICABLE CODES **	DESIGN CLASS 3	SEISMIC CLASSIFICATION 2 1
A	DESIGN - B31.1, FABRICATION, ERECT., NDE - B31.7 CLASS I	I	I
B	DESIGN, FABRICATION, ERECTION, NDE - B31.7 CLASS II	I	I
C	DESIGN, FABRICATION, ERECTION, NDE - B31.7 CLASS III	I	I
2 1 D	DESIGN, FABRICATION, ERECTION NDE-B31.7 CLASS III FOR NEW WORK DESIGN, FABRICATION, ERECTION NDE, B31.1 FOR WORK PERFORMED PRIOR TO UPGRADE	I	I
2 3 E	DESIGN, FABRICATION, ERECTION NDE-B31.1	II	NON I
2 2 F	PIPING DESIGN, NDE; FABRICATION & ERECTION, ANSI 31.1 - 1967 WITH ADDENDA & SHALL BE SEISMICALLY QUALIFIED FOR DESIGN EARTHQUAKE (DE) CONDITION	II 6 2	NON I (DE)
G	NFPA AND ALSO COMPLIES WITH B31.1*	II	I
G1	NFPA STANDARDS * 6 3	II	NON I
2 2 H	PIPING DESIGN, NDE; FABRICATION & ERECTION, ANSI B31.1 - 1967 WITH ADDENDA	II	NON I
2 J	OPTIONAL INSTALLATION - PG&E CODE CLASS E. NEW CONSTRUCTION - ANSI B31.7 CLASS II, WITH 1970 ADDENDA	I	I

* 10CFR50 APPENDIX B OR ALTERNATE QUALITY ASSURANCE PROGRAM APPLICABLE TO THESE CODE CLASSES.
** REFER TO PG&E SPECIFICATION 8707 AND 8711 TO DETERMINE THE PIPING CODES AND STANDARDS APPLICABLE TO A PARTICULAR PG&E CODE CLASS, NOT LISTED ABOVE.

VENT, DRAIN, TELL TALE SYSTEM IDENTIFICATION

TEST VENT
VENT
VENT (EQUIPMENT)
TV V V
(SEE DWG. 049066 FOR V, D&TT VALVE DETAILS. ALL OTHER VALVES TO BE IDENTIFIED.
TT TC D D
DRAIN FUNNEL
DRAIN
TEST CONN.
TELL TALE

REFERENCE BLOCK COMMON (NOTE 7)

42-D 02 — PIPING OR INSTR. SCHEM. "FLAG"
DWG. NO. (LAST TWO DIGITS) NO. OMITTED FOR THE SAME DWG.
DWG. COORDINATE (SIDE)
DWG. COORDINATE (TOP)
42-D-02 ALTERNATE

ABBREVIATION & DESCRIPTION

NFPA	NATIONAL FIRE PROTECTION ASSOCIATION
RWST	REFUELING WATER STORAGE TANK
SRST	SPENT RESIN STORAGE TANK
PRT	PRESSURIZER RELIEF TANK
PRL	PRESSURE RELIEF LINE
ATM	ATMOSPHERE
PW	PRIMARY WATER
FAI	FAIL AS IS
FC	FAIL CLOSED
FO	FAIL OPEN
SC	SEALED CLOSED
SO	SEALED OPEN 2
DH	DRAIN HEADER
GA	GAS ANALYZER
HT	HOLD-UP TANK (LIQUID)
NO	NORMALLY OPEN
NC	NORMALLY CLOSED
ECC	EMERGENCY COOLING CONNECTION
PP	PUMP
VH	VENT HEADER
DW	DEMINERALIZED WATER
D	LOCAL DRAIN
V	VENT TO ATMOSPHERE
N_2	NITROGEN
H_2	HYDROGEN
T	CONTAINMENT ISOLATION SIGNAL (PHASE A)
S	SAFETY INJECTION SIGNAL
P	CONTAINMENT SPRAY SIGNAL & CONTAINMENT ISOLATION SIGNAL (PHASE B)
RCDT	REACTOR COOLANT DRAIN TANK
IMB	INSIDE MISSILE BARRIER
OMB	OUTSIDE MISSILE BARRIER
RR	REACH ROD
PG	INDICATE PG&E SCOPE WITH A (H) SYSTEM
WM	WALL MOUNTED
(W)	WESTINGHOUSE ELECTRIC CO.
*	SUPPLIED WITH ASSOCIATED EQUIPMENT.
M	MAIN STEAM ISOLATION SIGNAL 8 1
DR	DESIGN REQUIREMENT. SEE SYSTEM DCM (DESIGN CRITERIA MEMORANDUM) FOR DESIGN REQUIREMENTS/LIMITATIONS. 10 1

UNIT - 2

P.G.&E. CO.	DRAWING NO.	CHANGE
SHEET 3 OF 3 SHEETS	108001	11

SCAN IC AFD 10 35 M/M NEG

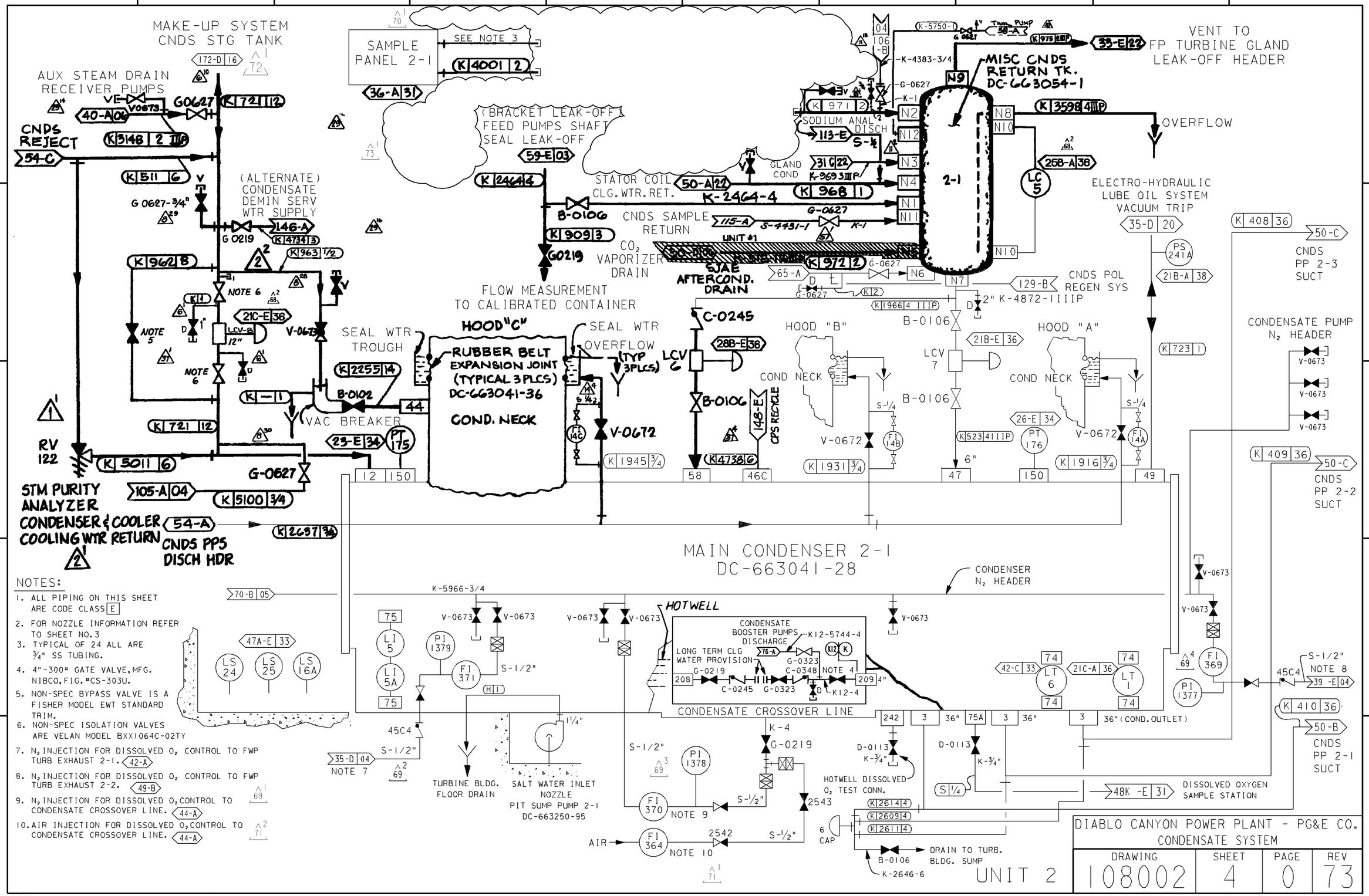

NOTES:

1. ALL PIPING ON THIS SHEET ARE CODE CLASS E
2. FOR NOZZLE INFORMATION REFER TO SHEET NO. 3
3. TYPICAL OF 24 ALL ARE ¾" SS TUBING.
4. 4"-300# GATE VALVE, MFG. NIBCO, FIG. #CS-303U.
5. NON-SPEC BYPASS VALVE IS A FISHER MODEL EWT STANDARD TRIM.
6. NON-SPEC ISOLATION VALVES ARE VELAN MODEL BXX1064C-02TY
7. N_2 INJECTION FOR DISSOLVED O_2 CONTROL TO FWP TURB EXHAUST 2-1. (42-A)
8. N_2 INJECTION FOR DISSOLVED O_2 CONTROL TO FWP TURB EXHAUST 2-2. (49-B)
9. N_2 INJECTION FOR DISSOLVED O_2 CONTROL TO CONDENSATE CROSSOVER LINE. (44-A)
10. AIR INJECTION FOR DISSOLVED O_2 CONTROL TO CONDENSATE CROSSOVER LINE. (44-A)

DIABLO CANYON POWER PLANT - PG&E CO.
CONDENSATE SYSTEM

DRAWING	SHEET	PAGE	REV
108002	4	0	73

DATE	DWN	RE	IV	PROFESSIONAL ENGINEER	PE DISC.	PE#	PE EXP.	
09-30-2009	AJFJ	FxC2		KERSI J. DALAL	MECHANICAL	M 16690	3/31/2010	REVISED PER DDN-2*171

RASTER=eru10723.DGN
DGN=eru10723.DGN
CAD User: AJFJ Date: 09-30-2009

INPGIC
I Size

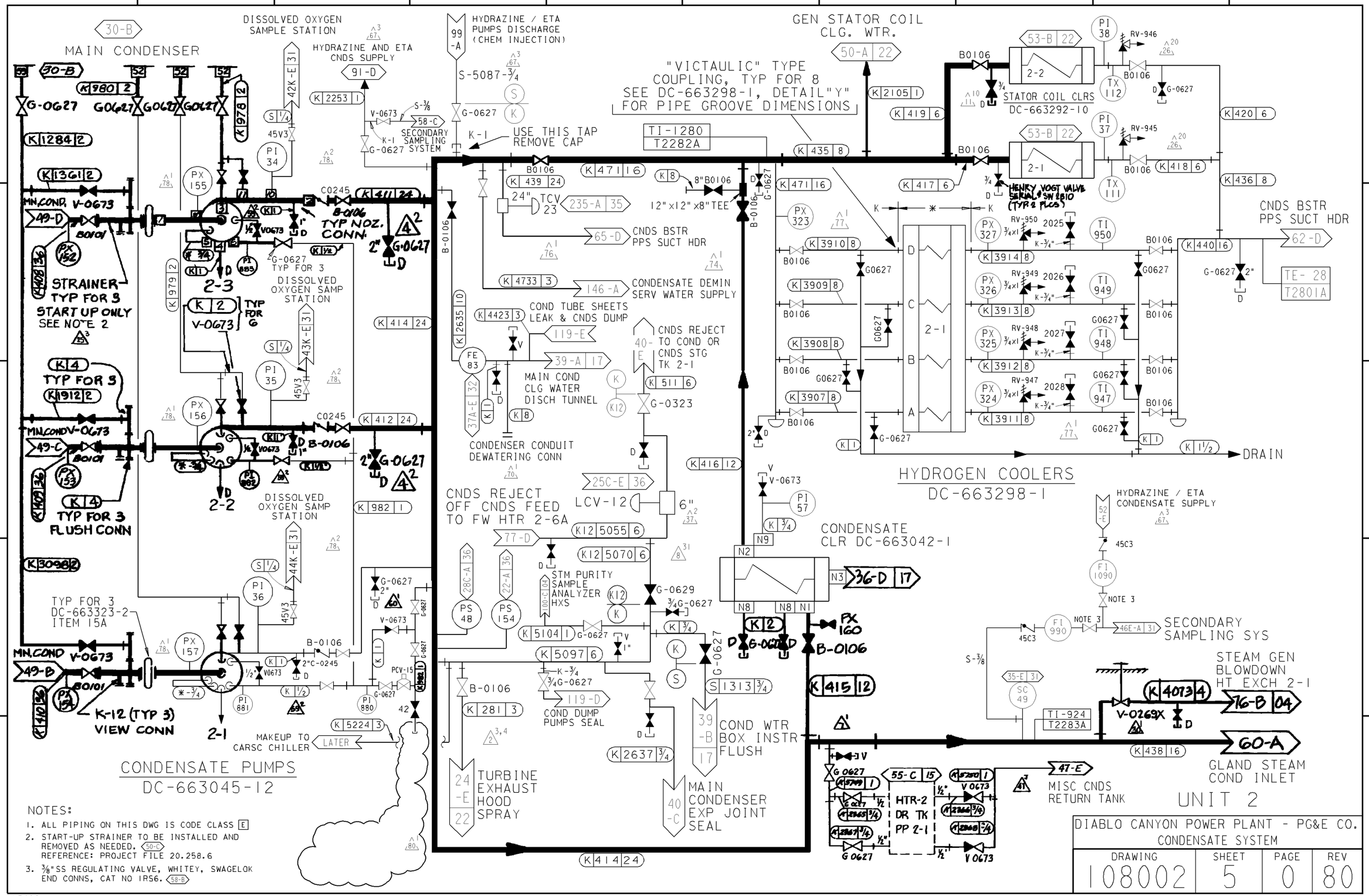

NOTES:

1. ALL PIPING ON THIS DWG IS CODE CLASS E
2. START-UP STRAINER TO BE INSTALLED AND REMOVED AS NEEDED. 50-C REFERENCE: PROJECT FILE 20.258.6
3. 3/8" SS REGULATING VALVE, WHITEY, SWAGELOK END CONNS, CAT NO 1RS6. 58-B

DIABLO CANYON POWER PLANT - PG&E CO.
CONDENSATE SYSTEM

DRAWING	SHEET	PAGE	REV
108002	5	0	80

DATE	DWN	RE	IV	PROFESSIONAL ENGINEER	PE DISC.	PE#	PE EXP.	
01-24-2008	JAR0	FxC2		KERSI J. DALAL	MECHANICAL	M 16690	3/31/2008	REVISED PER FCT-32251

INPGIC
1 Size

RASTER=108002s5.dgn
DGN=108002s5.dgn
CAD User: JAR0 Date: 01-24-2008

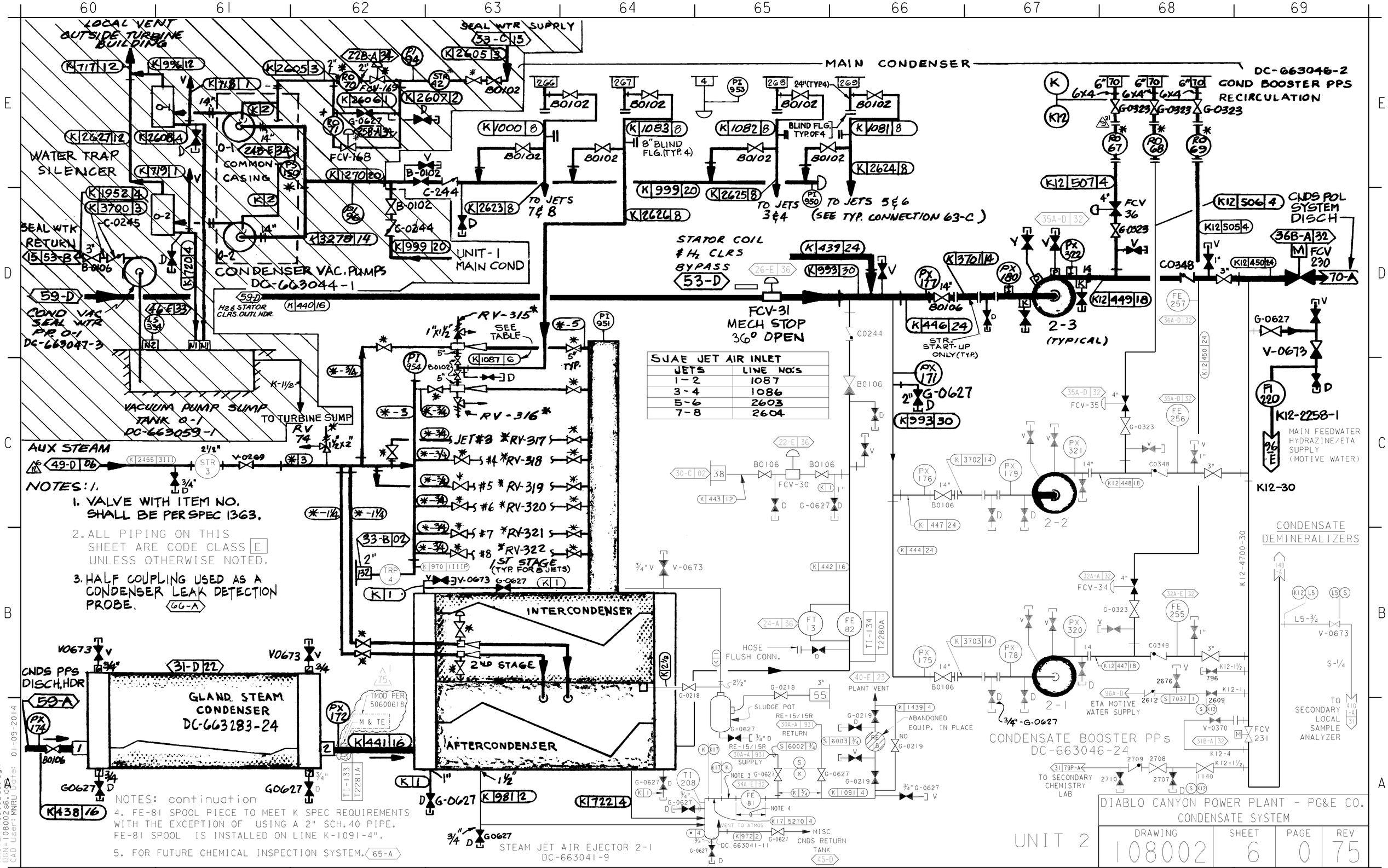
LOCAL VENT OUTSIDE TURBINE BUILDING
SEAL WTR SUPPLY
MAIN CONDENSER
DC-663046-2 COND BOOSTER PPS RECIRCULATION
WATER TRAP SILENCER
COMMON CASING
CONDENSER VAC. PUMPS DC-663044-1
UNIT-1 MAIN COND
TO JETS 7 & 8
TO JETS 3 & 4
TO JETS 5 & 6 (SEE TYP. CONNECTION 63-C)
8" BLIND FLG. (TYP. 4)
BLIND FLG. TYP. OF 4
24" (TYP. 4)
STATOR COIL & H2 CLRS BYPASS 53-D
FCV-31 MECH STOP 36° OPEN
CNDS POL SYSTEM DISCH
SEAL WTR RETURN
COND VAC SEAL WTR P.P. 0-1 DC-663047-3
VACUUM PUMP SUMP TANK 0-1 DC-663059-1
TO TURBINE SUMP
AUX STEAM
SJAE JET AIR INLET
JETS | LINE NO.'S
1-2 | 1087
3-4 | 1086
5-6 | 2603
7-8 | 2604
SEE TABLE
JET #3 RV-317
#4 RV-318
#5 RV-319
#6 RV-320
#7 RV-321
#8 RV-322
1ST STAGE (TYP FOR 8 JETS)
INTERCONDENSER
2ND STAGE
AFTERCONDENSER
GLAND STEAM CONDENSER DC-663283-24
CNDS PPS DISCH. HDR
TMOD PER 50600618
M & TE
STEAM JET AIR EJECTOR 2-1 DC-663041-9
2-3 (TYPICAL)
2-2
2-1
CONDENSATE BOOSTER PPs DC-663046-24
ETA MOTIVE WATER SUPPLY
TO SECONDARY CHEMISTRY LAB
MAIN FEEDWATER HYDRAZINE/ETA SUPPLY (MOTIVE WATER)
K12-2258-1
K12-30
CONDENSATE DEMINERALIZERS
TO SECONDARY LOCAL SAMPLE ANALYZER
HOSE FLUSH CONN.
SLUDGE POT
ABANDONED EQUIP. IN PLACE
PLANT VENT
MISC CNDS RETURN TANK
NOTES: 1.
1. VALVE WITH ITEM NO. SHALL BE PER SPEC 1363.
2. ALL PIPING ON THIS SHEET ARE CODE CLASS E UNLESS OTHERWISE NOTED.
3. HALF COUPLING USED AS A CONDENSER LEAK DETECTION PROBE.
NOTES: continuation
4. FE-81 SPOOL PIECE TO MEET K SPEC REQUIREMENTS WITH THE EXCEPTION OF USING A 2" SCH. 40 PIPE. FE-81 SPOOL IS INSTALLED ON LINE K-1091-4".
5. FOR FUTURE CHEMICAL INSPECTION SYSTEM.
DIABLO CANYON POWER PLANT - PG&E CO.
CONDENSATE SYSTEM
UNIT 2
DRAWING 108002
SHEET 6
PAGE 0
REV 75
01-09-2014 MNRU FxC2 KJD3 NOT REQUIRED N/A N/A N/A REVISED PER DFT-7*2443
DATE DWN RE IV PROFESSIONAL ENGINEER PE DISC. PE# PE EXP.
RASTER=108002s6.dgn DGN=108002s6.dgn CAD User=MNRU Date: 01-09-2014

NOTES 1 ALL PIPING ON THIS SHEET ARE CODE CLASS E

2 VALVES WITH ITEM NO SHOULD BE UNDER SPEC 1363

3 3/8" SS REGULATING VALVE, WHITEY, SWAGELOK END CONNS, CAT NO 1RS6 (73 B)

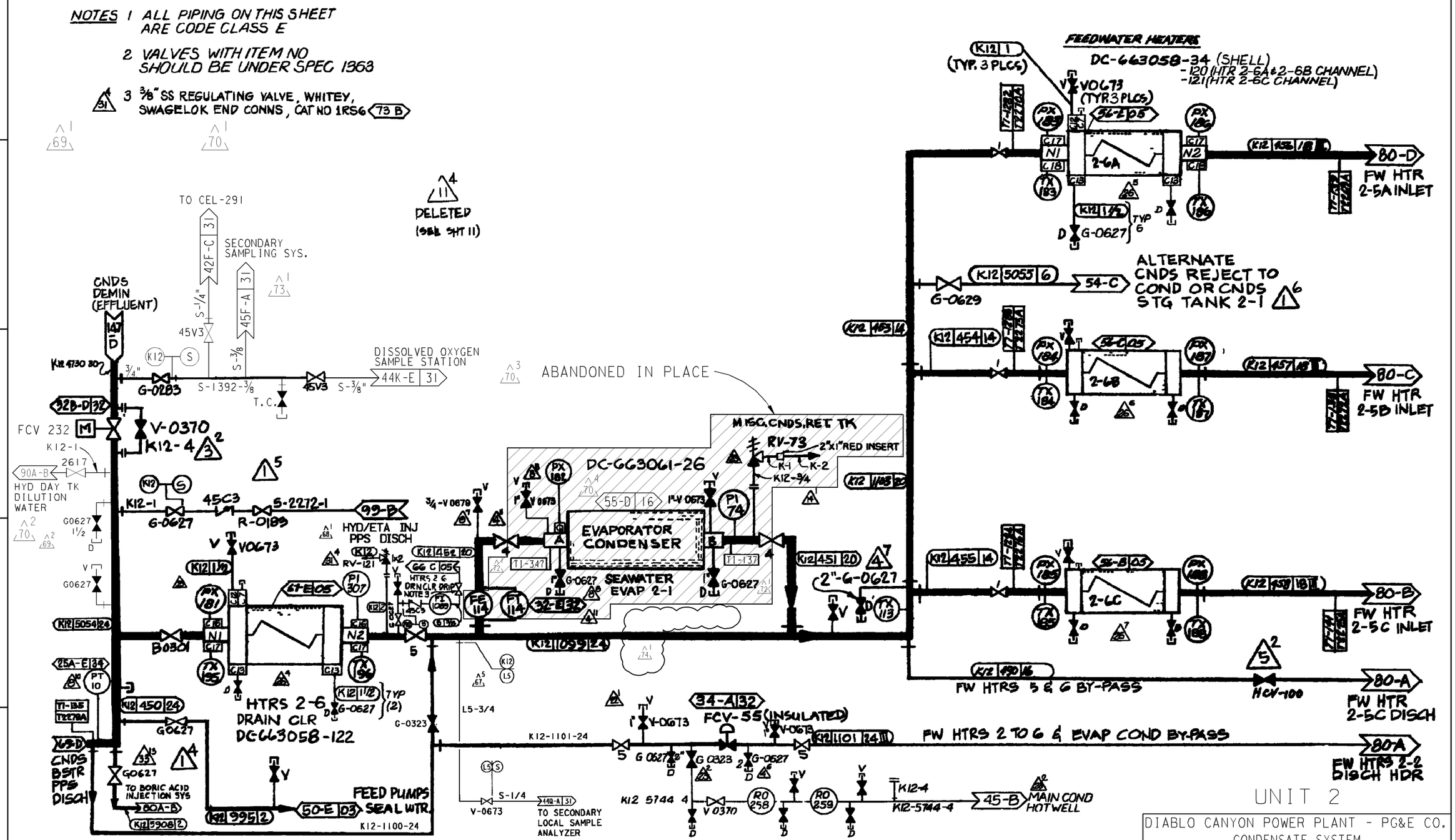

DIABLO CANYON POWER PLANT - PG&E CO.
CONDENSATE SYSTEM

DRAWING	SHEET	PAGE	REV
108002	7	0	74

DATE	DWN	RE	IV	PROFESSIONAL ENGINEER	PE DISC.	PE#	PE EXP.	
05-23-2011	JBMX	FxC2		KERSI J. DALAL	MECHANICAL	M 16690	3/31/2012	REVISED PER DDN-2*620

INPG2ND
1 Size

RASTER=108002s7.dgn
DGN=108002s7.dgn
CAD User: JBMX Date: 05-23-2011

FEEDWATER HEATERS

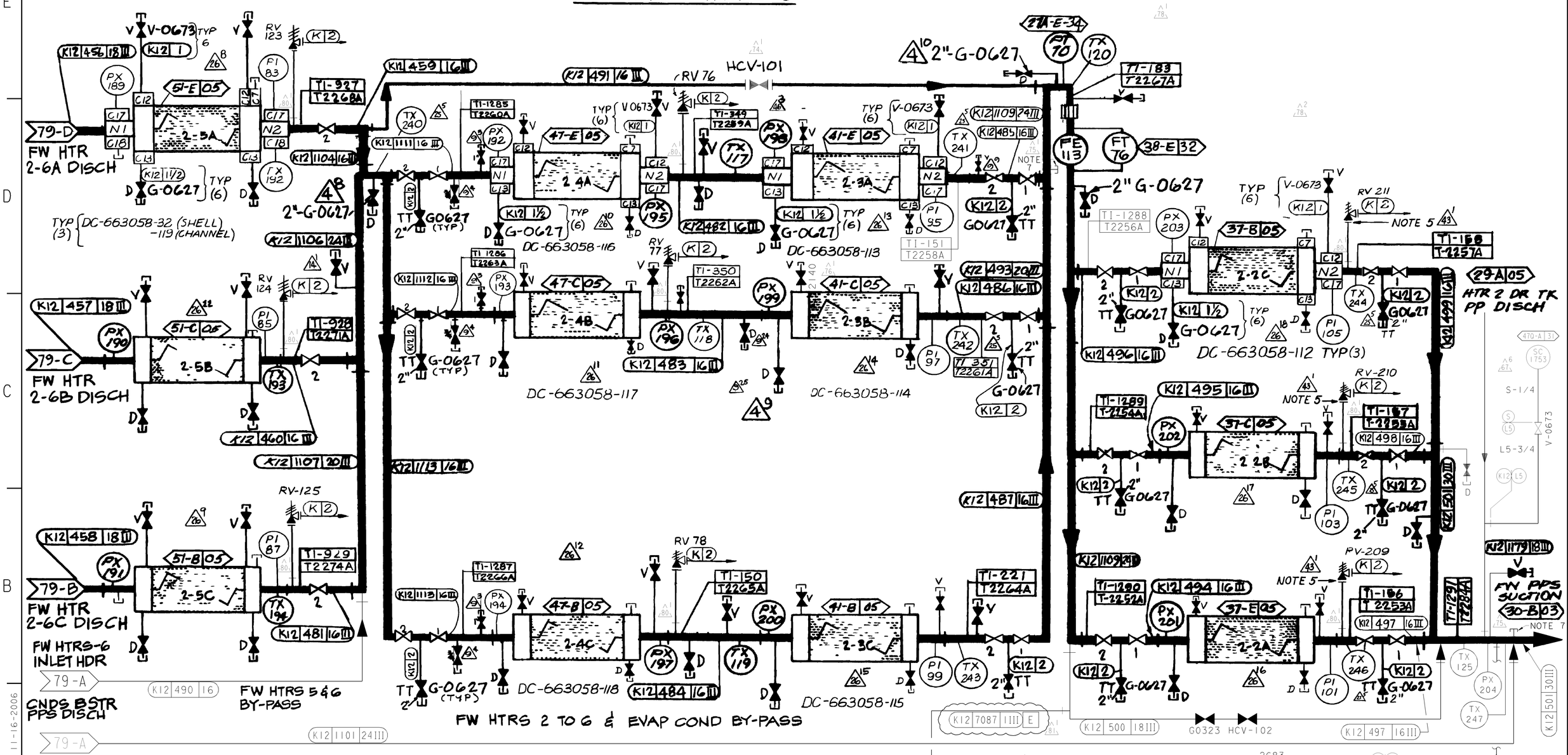

NOTES:
1. ALL VENT VALVES SHOULD BE V0673.
2. ALL DRAIN VALVES SHOULD BE G0627.
3. VALVES WITH ITEM No.1 SHALL BE PER PO 4R-1276. VALVES WITH ITEM No.2 SHALL BE PER PO 4R-A1363.
4. ALL THERMAL RV's IN THIS SHT. SHALL BE: 1" x 2"
5. FLANGES ARE 600 LB 1/4" RAISED FACE ASTM A105.
6. DELETED
7. 1" BORESCOPE PORT 86-D 89-B
8. FOR FUTURE CHEMICAL INJECTION SYSTEM

HYDRAZINE AND BORIC ACID INJECTION 97A-A

UNIT 2

DIABLO CANYON POWER PLANT - PG&E CO.
CONDENSATE SYSTEM

DRAWING	SHEET	PAGE	REV
108002	8	0	81

DATE	DWN	RE	IV	PROFESSIONAL ENGINEER	PE DISC.	PE#	PE EXP.	
11-16-2006	AJL2	RMDI		KERSI J. DALAL	MECHANICAL	M 16690	3/31/2008	REVISED PER FCT-031680

RASTER-108002s8.dgn
DGN-108002s8.dgn
CAD User: AJL2 Date: 11-16-2006

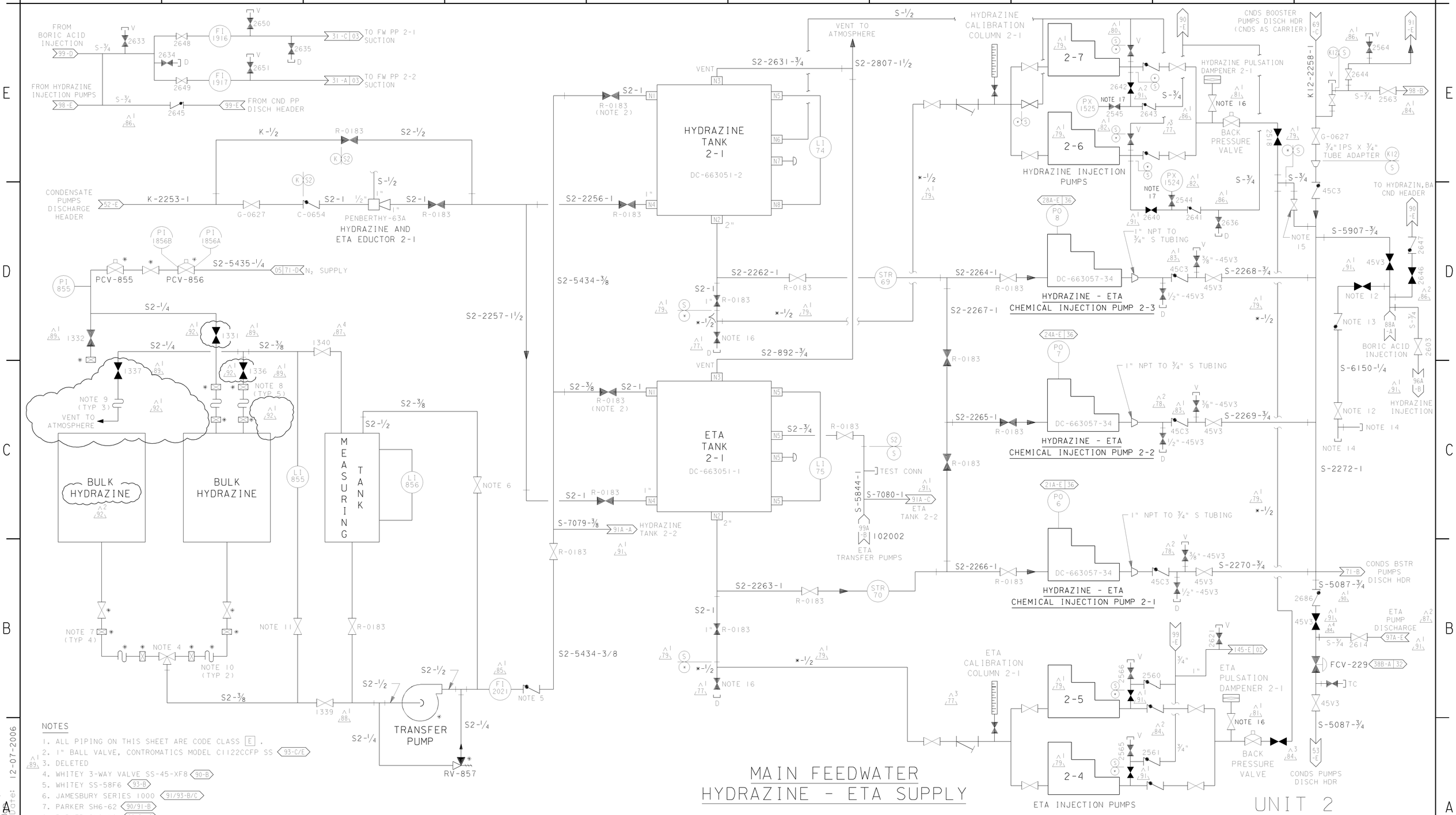

MAIN FEEDWATER HYDRAZINE - ETA SUPPLY

NOTES

1. ALL PIPING ON THIS SHEET ARE CODE CLASS E .
2. 1" BALL VALVE, CONTROMATICS MODEL C1122CCFP SS (93-C/E)
3. DELETED
4. WHITEY 3-WAY VALVE SS-45-XF8 (90-B)
5. WHITEY SS-58F6 (93-B)
6. JAMESBURY SERIES 1000 (91/93-B/C)
7. PARKER SH6-62 (90/91-B)
8. PARKER SH2-62 (90/91-C)
9. 1/4" DIAMETER POLY TUBING (90/91-C)
10. 1/2" TEFLON HOSE WITH SS BRAIDING (90/91-B)
11. CONTROMATICS C-1122-C PFR RPE P-6407 (91-B)
12. NUPRO P/N SS-4P4TI (99-D)
13. NUPRO P/N SS-4C4-10 (99-D)
14. CONNECTION FOR CHEMICAL INJECTION (99-D)
15. WHITEY P/N SS-45S16 (98-D)
16. APOLLO #76-103 (98-A) (98-E) (94-D) (94-B)
17. WHITEY P/N SS-45S8 (97-E)
18. FOR FUTURE CHEMICAL INJECTION SYSTEM

REFERENCES

1. PIPING SCHEMATIC AND BILL OF MATERIAL _____ DC-663057-73
2. GENERAL ARRANGEMENT _____ DC-663057-75

DIABLO CANYON POWER PLANT - PG&E CO.
CONDENSATE SYSTEM

DRAWING	SHEET	PAGE	REV
108002	9	0	92

DATE	DWN	RE	IV	PROFESSIONAL ENGINEER	PE DISC.	PE#	PE EXP.	
12-07-2006	AJL2	ELGI		KERSI J. DALAL	MECHANICAL	M 16690	3/31/2008	REVISED PER FCT-031559

RASTER=108002S9.dgn
DGN=108002S9.dgn
CAD User: AJL2 Date: 12-07-2006
3 Size

CORRESPONDING INSTRUMENT NOS.

	PUMP # 2-1		PUMP # 2-2		PUMP # 2-3	
	PG&E NO	WESTINGHOUSE COMPUTER PT.	PG&E NO.	WESTINGHOUSE COMPUTER PT	PG&E NO.	WESTINGHOUSE COMPUTER PT
UPPER BEARING	TI-29	T2520A	TI-32	T2523A	TI-35	T2526A
LOWER BEARING	TI-30	T2521A	TI-33	T2524A	TI-36	T2527A
STATOR	TI-31	T2522A	TI-34	T2525A	TI-37	T2528A

CORRESPONDING UPPER BEARING COOLING WATER LINE NOS.

PUMP 2-1	PUMP 2-2	PUMP 2-3
2492	2493	2494
2495	2496	2497

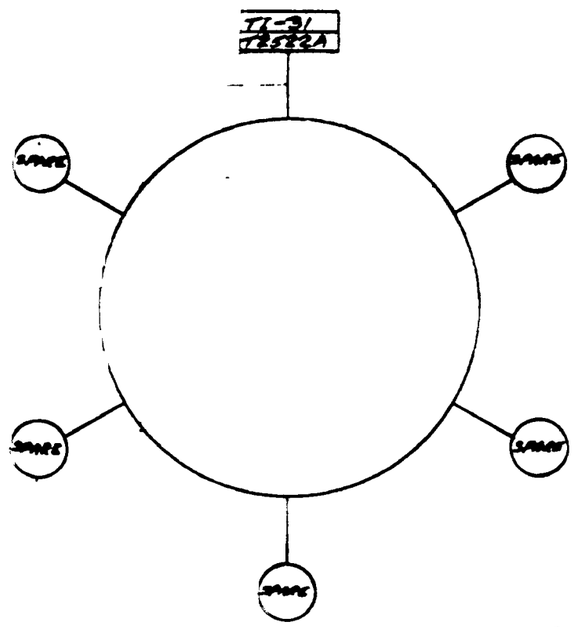

STATOR WINDING THERMOCOUPLE
COMPUTER TEMPERATURE DETECTOR
DC-663045-2

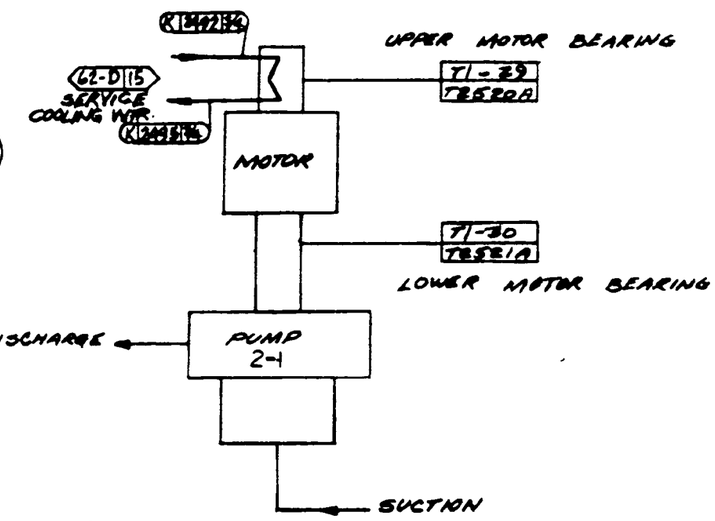

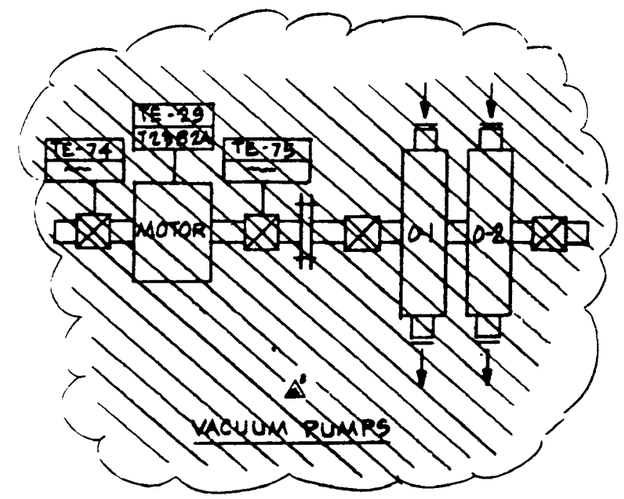

CONDENSATE PUMP MOTOR

TYP FOR (3)

UNIT - 2

P.G. & E. CO.	DRAWING NUMBER	REVISION
SHEET 10 OF . SHEETS	108002	48
	MICROFILM	

RM INDEXED REV. 48

MAIN CONDENSER TUBE SHEET SALT WATER LEAK DETECTION SYSTEM

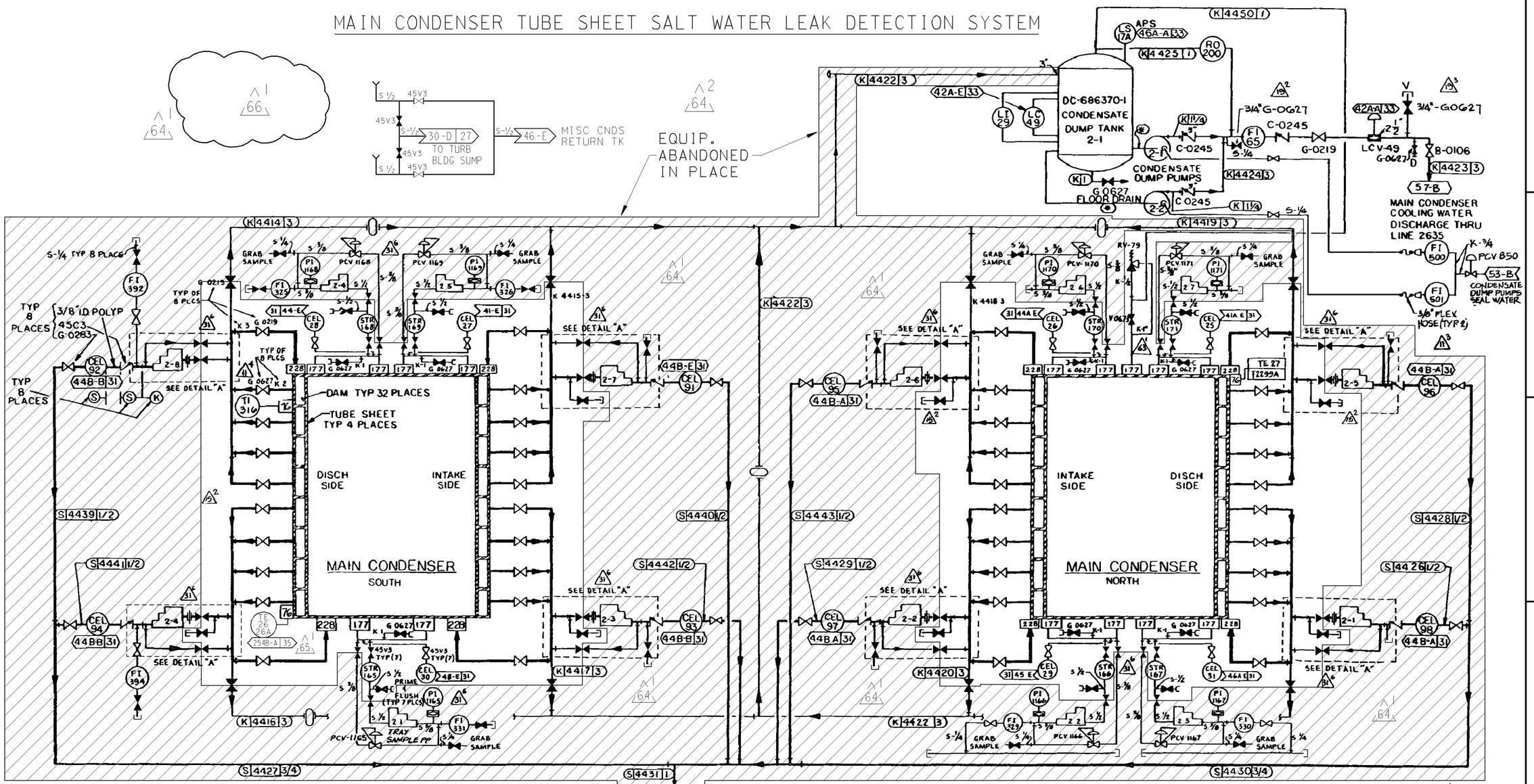

CONDENSER SAMPLE PUMP	CONDENSER ACCESS	INSTRUMENTS					GRAVITY SAMPLE INSTRUMENTS	
2-1	NW	CEL 98	FI 398	PI 1172	PCV 1172	STR 172	CEL 198	FI 1198
2-2	NW	CEL 97		PI 1173	PCV 1173	STR 173	CEL 197	FI 1197
2-3	SW	CEL 93		PI 1174	PCV 1174	STR 174	CEL 193	FI 1193
2-4	SW	CEL 94	FI 394	PI 1175	PCV 1175	STR 175	CEL 194	FI 1194
2-5	NE	CEL 96		PI 1176	PCV 1176	STR 176	CEL 196	FI 1196
2-6	NE	CEL 95		PI 1177	PCV 1177	STR 177	CEL 195	FI 1195
2-7	SE	CEL 91		PI 1178	PCV 1178	STR 178	CEL 191	FI 1191
2-8	SE	CEL 92	FI 392	PI 1179	PCV 1179	STR 179	CEL 192	FI 1192

CONDENSER TUBESHEET SAMPLES

DETAIL "A"

NOTES
1. ALL PIPING SHOWN ON THIS SHEET SHALL BE PG&E CODE CLASS E
2. ALL ANALYZER SENSORS (CEL) SHALL BE INSTALLED AS CLOSE AS POSSIBLE TO INSTR SUPPLY PUMPS
3. THE WORD "TYPICAL" AS USED ON THIS SHEET DENOTES VALVES, PIPING, ETC WITH THE SAME SPECIFICATION AND FUNCTION
4. FOR CONDENSER TRAY CONNECTIONS SEE DC 663041 13 (113-D)

UNIT 2

DIABLO CANYON POWER PLANT - PG&E CO.
CONDENSATE SYSTEM

DRAWING	SHEET	PAGE	REV
108002	11	0	66

DATE	DWN	RE	IV	PROFESSIONAL ENGINEER	PE DISC.	PE#	PE EXP.	
12-09-2008	RxG2	FxC2		ALAN GLEN BARTA	ELECTRICAL	E 9271	9/30/2009	REVISED PER DDN-2*24-0

RASTER=108002s11.dgn
DGN=108002s11.dgn
CAD User:RxG2 Date:12-09-2008

INPG1C
I Size

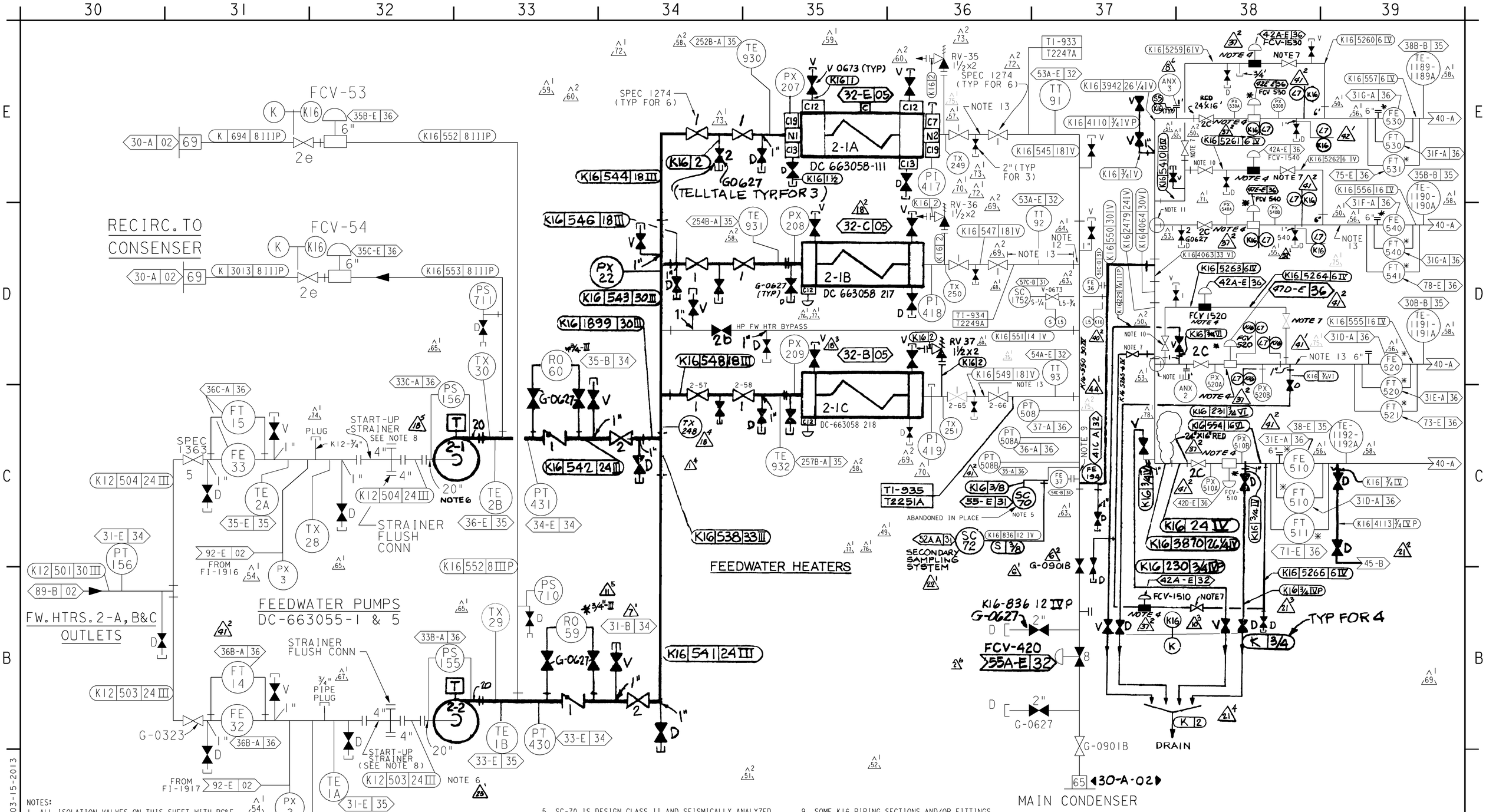

NOTES:

1. ALL ISOLATION VALVES ON THIS SHEET WITH PG&E MARK NO. SHALL BE UNDER SPEC. 8711 (KELLOGG) EXCEPT AS NOTED.
2. ALL PIPING ON THIS SHEET SHALL BE PG&E CODE CLASS E
38 ALL MAIN FEEDWATER AND FEEDWATER BYPASS PIPING FROM THE CODE CLASS BREAK CHECK VALVE TO THE G-LINE ANCHOR AT THE TURBINE BUILDING WALL IS SEISMICALLY ANALYZED.
3. ALL VALVES WITH ITEM NO. SHALL BE UNDER SPEC. 8762 EXCEPT AS NOTED.
4. VALVES FCV-510, 520, 530, 540, 1510, 1520, 1530, AND 1540 ARE "Q" SAFETY RELATED DESIGN CLASS I. 37

5. SC-70 IS DESIGN CLASS II AND SEISMICALLY ANALYZED IN ACCORDANCE WITH DESIGN CRITERIA MEMORANDUM M-61. 37-D 4
6. FEEDWATER PUMP SUPERVISORY INSTRUMENTATION SHOWN ON 108020. 33-B/C 23
7. VELAN VALVE PER PO 4R-67229 (DC 663317-173-1).
8. START-UP STRAINERS TO BE INSTALLED AND REMOVED AS NEEDED. REF PROJECT FILE 20 258 6. 32-B/C 18

9. SOME K16 PIPING SECTIONS AND/OR FITTINGS HAVE BEEN REPLACED WITH ALTERNATE 37-D 46 MATERIALS TO REDUCE EROSION/CORROSION OF THE PIPING. SEE DWG.500562 FOR DETAILS.
10. BORG WAGNER VALVE PER PO 4R 67228 (DC 6000235-42-11). 50
11. LATERAL BRANCH I.D. CLAD WITH INCONEL. 37-D 53
12. BRANCH CONNECTION I.D. CLAD WITH INCONEL REF. MMD M000039-1. 37-D 64
13. PIPE SECTION CONTAINS A MIN. OF 0.10% CHROMIUM. 36-C 36-E 37-D 39-D 75

UNIT 2

DIABLO CANYON POWER PLANT - PG&E CO.
FEEDWATER SYSTEM

DRAWING	SHEET	PAGE	REV
108003	3	0	78

DATE	DWN	RE	IV	PROFESSIONAL ENGINEER	PE DISC.	PE#	PE EXP.	
03-15-2013	MNRU	FAZI		KERSI J. DALAL	MECHANICAL	M 16690	3/31/2014	REVISED PER DFT-7*2072

RASTER=8003-3.dgn
DGN=8003-3.dgn
CAD User: MNRU Date: 03-15-2013
Width: 3 Size

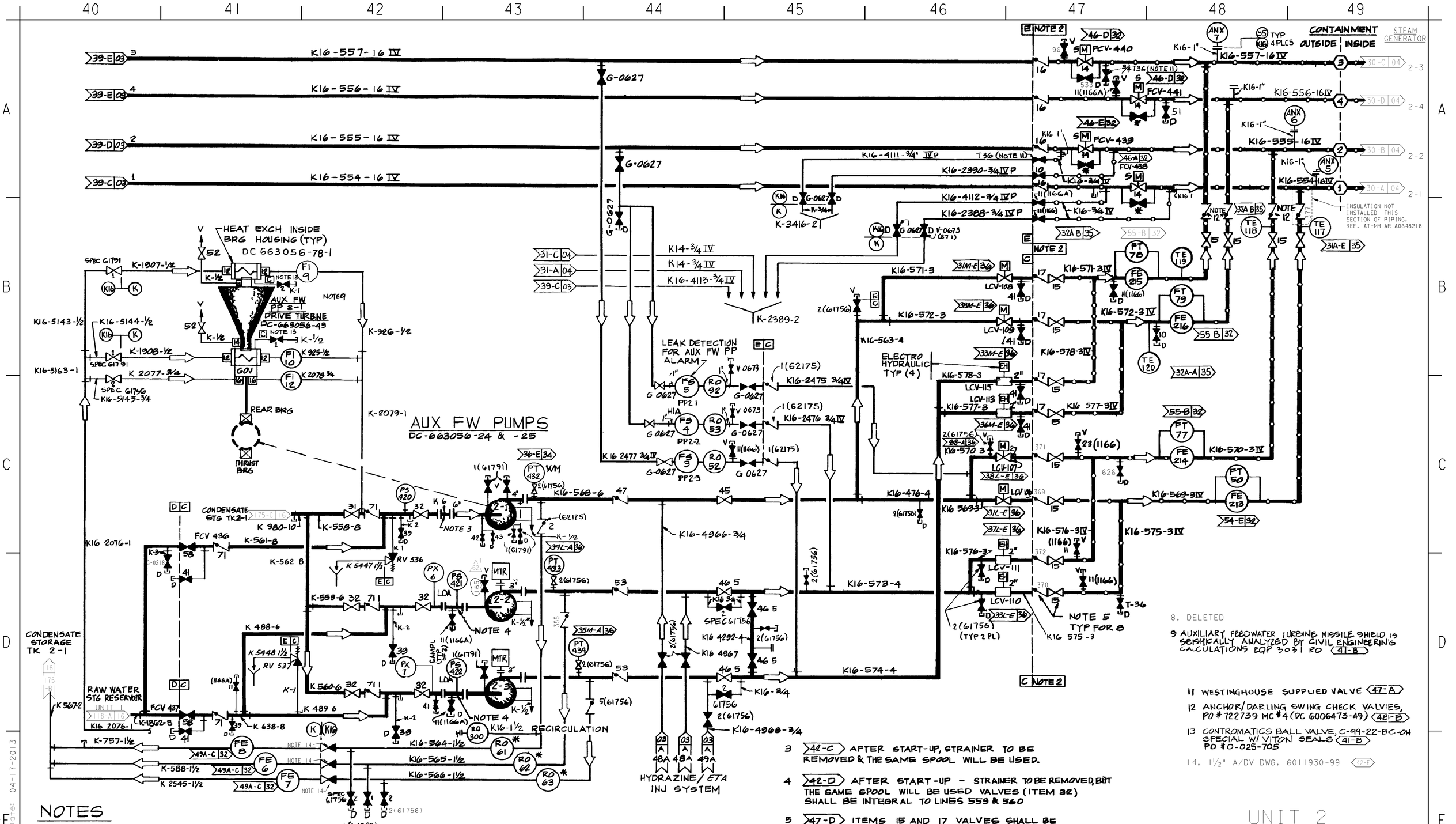

NOTES

1. ALL MANUAL AND MOTOR OPERATED VALVES ON THIS SHEET WITH ITEM NO'S ARE PER SPEC 8729, (REF DWG 108039) EXCEPT AS NOTED VALVES PER PG&E MARK NO ARE PER SPEC 8711 (KELLOGG)

2. MANUAL AND CONTROL VALVES AND PIPING REPRESENTED AS O—O—O UNDER THIS NOTE ARE SUBJECT TO ASME BOILER AND PRESSURE VESSEL CODE SECT I 1968, DESIGN TO ANSI B31.1 (1967)

3. 42-C AFTER START-UP, STRAINER TO BE REMOVED & THE SAME SPOOL WILL BE USED.

4. 42-D AFTER START-UP - STRAINER TO BE REMOVED, BUT THE SAME SPOOL WILL BE USED VALVES (ITEM 32) SHALL BE INTEGRAL TO LINES 559 & 560

5. 47-D ITEMS 15 AND 17 VALVES SHALL BE INSULATED

6. DELETED

7. DELETED

8. DELETED

9. AUXILIARY FEEDWATER TURBINE MISSILE SHIELD IS SEISMICALLY ANALYZED BY CIVIL ENGINEERING CALCULATIONS EQP 3031 R0 (41-B)

11. WESTINGHOUSE SUPPLIED VALVE (47-A)

12. ANCHOR/DARLING SWING CHECK VALVES, PO # 722739 MC #4 (DC 6006473-49) (48F-B)

13. CONTROMATICS BALL VALVE, C-99-22-BC-OH SPECIAL W/ VITON SEALS (41-B) PO #0-025-705

14. 1½" A/DV DWG. 6011930-99 (42-E)

UNIT 2

DIABLO CANYON POWER PLANT - PG&E CO.
FEEDWATER SYSTEM

DRAWING	SHEET	PAGE	REV
108003	4	0	62

DATE	DWN	RE	IV	PROFESSIONAL ENGINEER	PE DISC.	PE#	PE EXP.	
04-17-2013	ZNS4	FxC2	KJD3	NOT REQUIRED	N/A	N/A	N/A	REVISED PER DFT-7*2066

RASTER=8003s4.dgn
DGN=8003s4.dgn
CAD User: ZNS4 DGN Date: 04-17-2013

DWG/TC
3 size

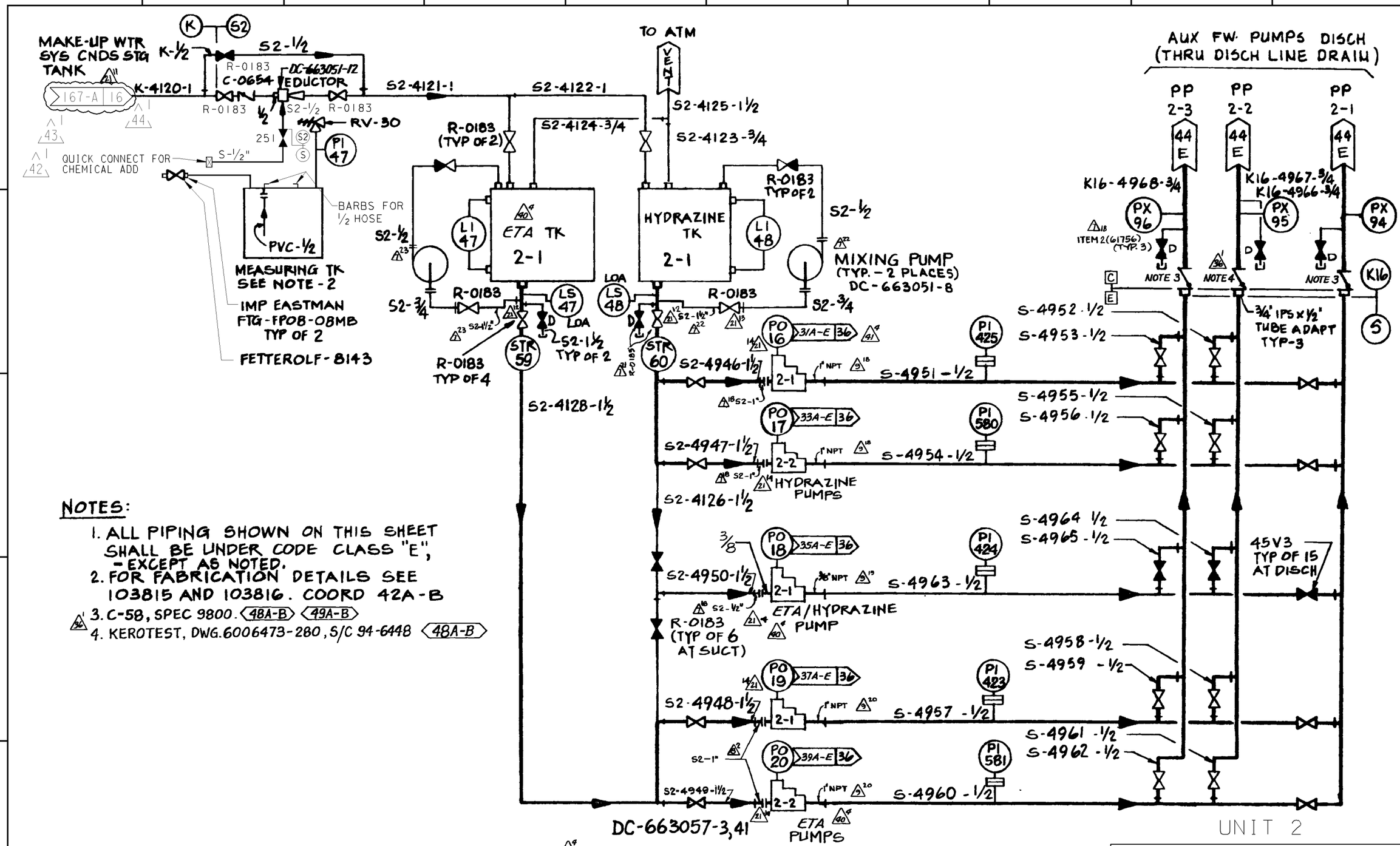

NOTES:

1. ALL PIPING SHOWN ON THIS SHEET SHALL BE UNDER CODE CLASS "E", - EXCEPT AS NOTED.
2. FOR FABRICATION DETAILS SEE 103815 AND 103816. COORD 42A-B
3. C-58, SPEC 9800. 48A-B 49A-B
4. KEROTEST, DWG.6006473-280, S/C 94-6448 48A-B

AUX. FEEDWATER — ETA/HYDRAZINE INJECTION SYSTEM

DIABLO CANYON POWER PLANT - PG&E CO.

DRAWING	SHEET	PAGE	REV
108003	4A	0	44

DATE	DWN	RE	IV	PROFESSIONAL ENGINEER	PE DISC.	PE#	PE EXP.	
02-01-2006	MIBF	KJD3		FRANCIS C. LING	MECHANICAL	M 16098	12/31/2007	REVISED PER FCT-030760

RASTER=8003s4a.dgn
DGN=8003s4a.dgn
CAD User: MIBF
Date: 02-01-2006
INPGIC
I Size

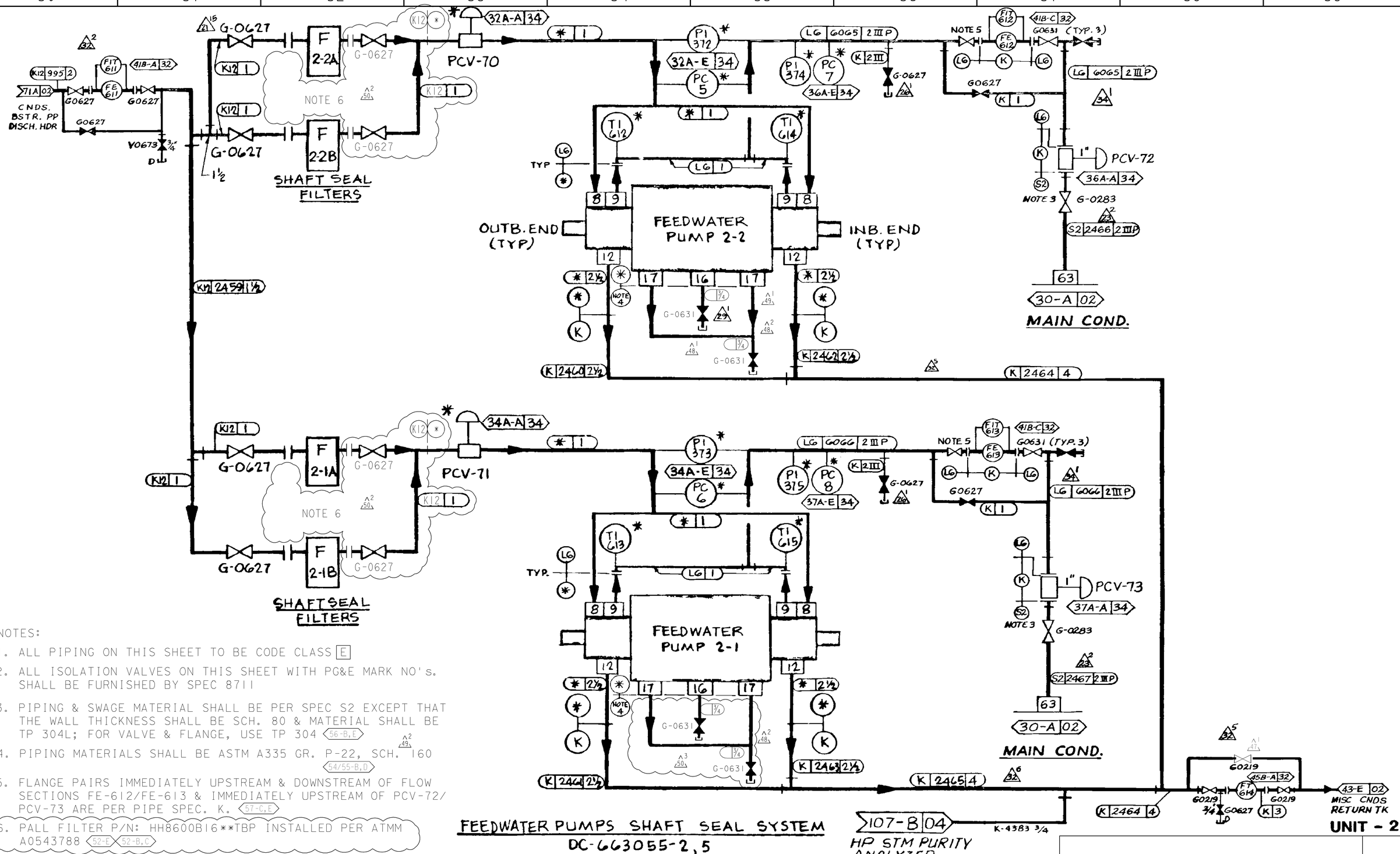

NOTES:

1. ALL PIPING ON THIS SHEET TO BE CODE CLASS E
2. ALL ISOLATION VALVES ON THIS SHEET WITH PG&E MARK NO's. SHALL BE FURNISHED BY SPEC 8711
3. PIPING & SWAGE MATERIAL SHALL BE PER SPEC S2 EXCEPT THAT THE WALL THICKNESS SHALL BE SCH. 80 & MATERIAL SHALL BE TP 304L; FOR VALVE & FLANGE, USE TP 304 (56-B,E)
4. PIPING MATERIALS SHALL BE ASTM A335 GR. P-22, SCH. 160 (54/55-B,D)
5. FLANGE PAIRS IMMEDIATELY UPSTREAM & DOWNSTREAM OF FLOW SECTIONS FE-612/FE-613 & IMMEDIATELY UPSTREAM OF PCV-72/ PCV-73 ARE PER PIPE SPEC. K. (57-C,E)
6. PALL FILTER P/N: HH8600B16**TBP INSTALLED PER ATMM A0543788 (52-E)(52-B,C)

FEEDWATER PUMPS SHAFT SEAL SYSTEM
DC-663055-2,5

3/5/03	RXG2	RHS1	KJD3	KERSI J. DALAL	MECHANICAL	M 16690	3/31/2004	Revised per AR A0543788, FCT-26712
DATE	DWN	RE	IV	PROFESSIONAL ENGINEER	PE DISC.	PE#	PE EXP.	& A0526769, FCT-25539-02

P G & E CO. | SHEET 5 | PAGE 0 | 108003 | REV. 50

CAD User:rxg2 Date:10-16-2002 DGN=ERU09579.DGN RASTER=ERU09579.TIF

UNIT 2

NOTES

1. LIMITS OF ASME BOILER AND PRESSURE VESSEL CODE SECTION I (1968) JURISDICTION.
   MANUAL AND MOTOR OPERATED VALVES WITH ITEM NUMBER AND WITHIN THE LIMITS ARE UNDER SPEC 8729.
2. MANUAL VALVES WITH ITEM NUMBER ON CLASS E LINES ARE UNDER SPEC 8762 EXCEPT AS NOTED.
   MANUAL VALVES WITH ITEM NUMBER ON CLASS C LINES ARE UNDER SPEC 8729
3. ON ALL TRAPS & LCV DRAINS FULL INSULATION IS USED UPSTREAM & PERSONNEL PROTECTION DOWNSTREAM
4. DELETED
5. ALL STEAM TRAPS ARE TO HAVE INTEGRAL STEAM STRAINERS
6. CHECK VALVE IS QA CLASS 'Q', DESIGN CLASS I AND WELDED TO ISOLATION VALVE. BOTH ARE UNDER SPEC. 8721. (31-E) (31-D)
7. MANUAL VALVES WITH THIS NOTE SHALL BE DC-663125-8 (4R-68314) (31-D)
8. SC-59 AND SC-60 ARE DESIGN CLASS II AND ARE SEISMICALLY ANALYZED IN ACCORDANCE WITH DESIGN CRITERIA MEMORANDUM M-61 (32-D/E)
9. VALVES PER P.O. 4R-59911, M.C. #7 (31-D/E)
10. VOGT #SW2821, GLOBE, 3/4" (33-E)
11. VELAN B-12-205-4P-02TS (33-D)
12. N_2 BLANKETING TUBING SEISMICALLY SUPPORTED (30-D) CONTINUED ON (30-E)
13. HANCOCK, MOD. 950W (32-C/D/E)
14. VELAN VALVE, S/C93-6846 DWG.6006473-269 (30-E)
15. DELETED (30-C)
16. DC-6006473-39, S/C 93-6840 (30-D)
17. 3/4" GLOBE VALVE, S/C 93-6846 AND DWG.6006473-40 (30-C)
18. 1"-600# GLOBE VALVE, RECORD No.6006473-40 (31-D)
19. DELETED
20. MAIN STEAM PIPING DOWNSTREAM OF MSIV'S (FCV-41, 42, 43, & 44) TO THE G-LINE ANCHOR AT THE TURBINE BUILDING WALL IS SEISMICALLY ANALYZED
21. ROCKWELL MODEL 848YT2, DWG.DC-663164-10
22. CAL SIL INSULATION REPLACED WITH BLANKET INSULATION FOR 90° ELBOWS AT ELEV. 129' (LINE 556 & 557) AND FROM THE FEEDWATER NOZZLE TO JUST BELOW THE FIRST 90° ELBOW (LINE 556 & 557). (30-C/D)
23. VALVE, DWG.6000235-71 (30-C/D/E)
24. DELETED
25. 3/4" GLOBE VALVE S/C 95-4677 AND DWG. 6011929-42 (30-D) (32-E)
26. 3" GATE VALVE S/C 71-8125 (31-E)
27. R.O. DISCHARGE IMPACT ZONES CLAD WITH INCONEL (33-D) (33-E)
28. SG NOZZLE NUMBERS ARE FOR THE REPLACEMENT SG'S. REFER TO DWG DC 6021772-7D FOR A CROSS-REFERENCE TABLE FOR THE ORIGINAL SG NOZZLE NUMBERS.

NOTE (CONT.):

29. FOR SPECTACLE PLATE DETAIL SEE DRAWING 066142.

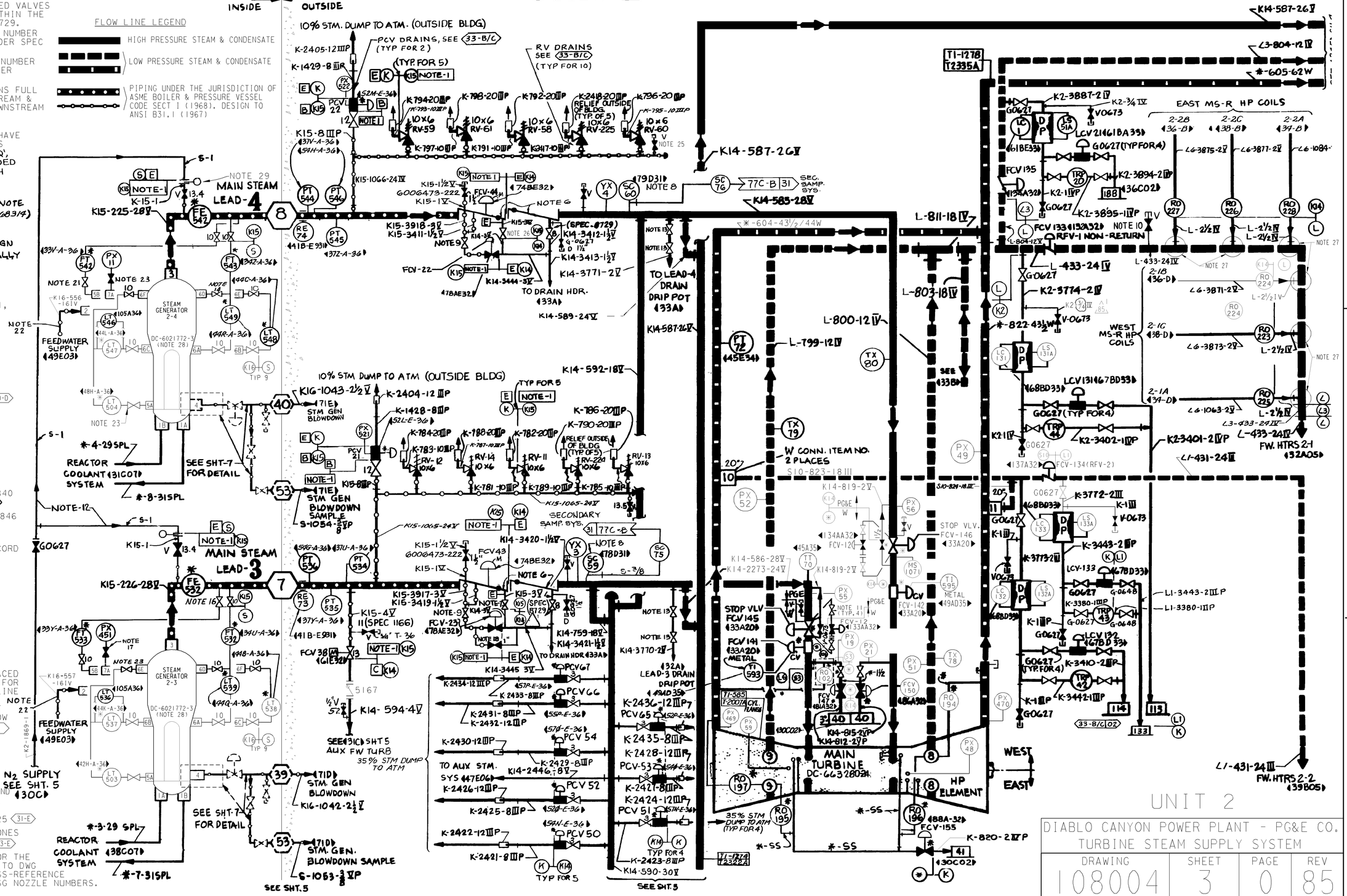

DIABLO CANYON POWER PLANT - PG&E CO. TURBINE STEAM SUPPLY SYSTEM			
DRAWING	SHEET	PAGE	REV
108004	3	0	85

DATE	DWN	RE	IV	PROFESSIONAL ENGINEER	PE DISC.	PE#	PE EXP.	
04-17-2013	ZNS4	FxC2	KJD3	NOT REQUIRED	N/A	N/A	N/A	REVISED PER DFT-7*2086

RASTER=108004s3.dgn DGN=108004s3.dgn CAD User: ZNS4 Date: 04-17-2013

SMPGLCK 3 Size

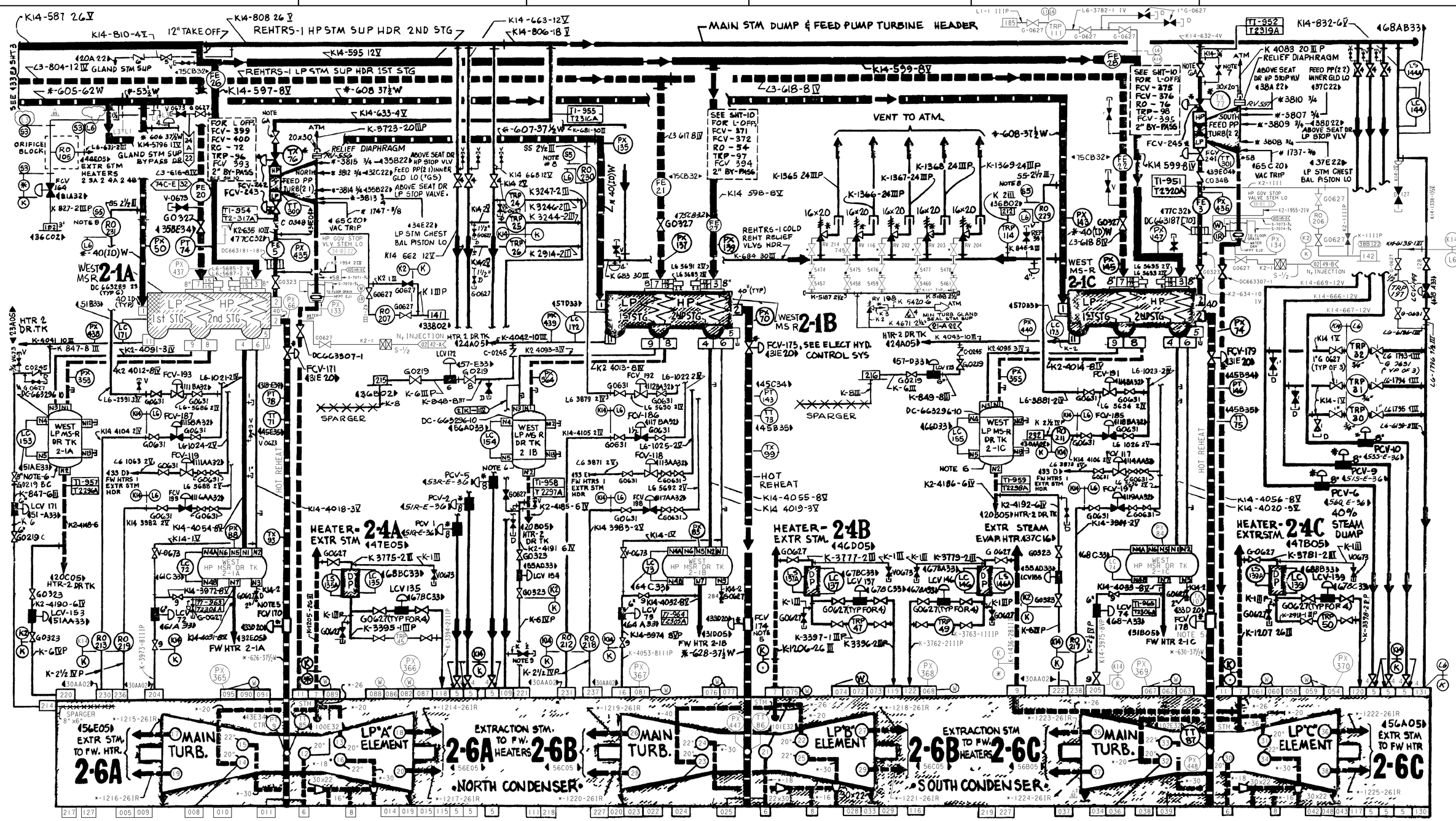

NOTES

1. PG&E CLASS CODE E MANUAL VALVES WITH ITEM NOS ARE UNDER SPEC 8762 EXCEPT AS NOTED
2. ON ALL TRAPS AND LCV DRAINS, FULL INSULATION IS USED UPSTREAM AND PERSONNEL PROTECTION DOWNSTREAM
3. (W) DENOTES WESTINGHOUSE NOZZLE
4. ALL PIPING THIS SHEET PG&E CLASS CODE E
5. REFER TO E-H SYS. DWG 108020 GHTS 3&3A
6. ADDITIONAL INST & NOZZLES FOR LP MS-R DRAIN TANK

LP MS-R DRAIN TK	LI	LS (LOA)	LS (HIA)
	NOZ N6/N7	NOZ N8/N9	NOZ N10/N11
2-1A	253	253 A	253 B
2-1B	254	254 A	254 B
2-1C	255	255 A	255 B

6A. 4"-600# GATE VALVE VELAN MOD # B12-2054P-02TS WITH ½" BYPASS VALVE STOCK CODE 85-1109 (34 38-E)

7. 3/4"-1200# GLOBE VALVE, WALWORTH MODEL 5585 (39-E)

8. 2½" PIPING DENOTED IS PG&E PIPING SPEC S6 EXCEPT MATERIAL IS 304L AND SOCKET WELDING ENDS ARE USED AT ELBOWS (34, 36, 38 E)

9. ½" SW GLOBE VALVE, VOGT SW-12141 FHF (35-C)

10. CONDENSER N_2 INJECTION FOR DISSOLVED O_2 CONTROL IS THROUGH PX-367 AND PX-369. FOR N_2 SUPPLY, SEE DWG 108005 COORD 79-C. (36-C) (38-C)

11. DELETED

FLOW LINE LEGEND

- HIGH PRESSURE STEAM AND CONDENSATE
- LOW PRESSURE STEAM AND CONDENSATE

DIABLO CANYON POWER PLANT - PG&E CO.
TURBINE STEAM SUPPLY SYSTEM

DRAWING	SHEET	PAGE	REV
108004	4	0	89

DATE	DWN	RE	IV	PROFESSIONAL ENGINEER	PE DISC.	PE#	PE EXP.	
04-17-2013	ZNS4	FxC2	KJD3	NOT REQUIRED	N/A	N/A	N/A	REVISED PER DFT-7*2075

RASTER=001G1003.DGN
DGN=001G1003.DGN
CAD User: ZNS4 Date: 04-17-2013

STM GEN NOZZLES	
PG&E	MFR.
1-A	1A
1-B	1B
3	2
4	3
5-A	4A
5-B	4B
6	5
7	6
8D-1	7B
8D-2	7A
9A-1	8A
9A-2	8D
9B-1	8B
9B-2	8E
9C-1	8C
9C-2	8F
ABOVE NOZ EQUIV TYP FOR ALL GENS SEE NOTE 8	

FLOW LINE LEGEND

- HIGH PRESSURE STEAM & CONDENSATE
- LOW PRESSURE STEAM & CONDENSATE
- PIPING UNDER THE JURISDICTION OF ASME BOILER & PRESSURE VESSEL CODE SECT I (1968) DESIGN TO ANSI B31 (1967)

NOTES

1. LIMITS OF ASME BOILER AND PRESSURE VESSEL CODE SECTION I (1968) JURISDICTION. MANUAL AND MOTOR OPERATED VALVES WITH ITEM NUMBER AND WITHIN THE LIMITS ARE UNDER SPEC. 8729.
2. MANUAL VALVES WITH ITEM NUMBER ON CLASS E LINES ARE UNDER SPEC. 8762, EXCEPT AS NOTED. MANUAL VALVES WITH ITEM NUMBER ON CLASS B OR C LINES ARE UNDER SPEC. 8729, EXCEPT AS NOTED.
3. ON ALL TRAPS & LCV DRAINS FULL INSULATION IS USED UPSTREAM & PERSONNEL PROTECTION DOWNSTREAM.
4. 1" GREENWOOD SPECTACLE FLANGE, ANSI 600#, DC-6012369-1.
5. ALL TEAM TRAPS ARE TO HAVE INTEGRAL STEAM STRAINERS.
6. CHECK VALVE IS QA CLASS 'Q', DESIGN CLASS I AND WELDED TO ISOLATION VALVE, BOTH ARE UNDER SPEC. 8721. (31-B) (31-A)
7. MANUAL VALVES WITH THIS NOTE SHALL BE DC-663125-8 (4R-68314).
8. (SEE TABLE ◀30C▶) SUBSCRIPTS A,B,A-1,A-2 ETC WERE ADDED TO NOZZLE NOS TO DIFFERENTIATE SERVICE & INSTRUMENT TAGGING, REF. DWG. DC-663206-3,-44 TO -51.
9. (FE-1) ORIFICE PLATE REMOVED, ORIFICE FLANGES WITH VALVES RETAINED. (31-B)
10. DELETED
11. SC-57 AND SC-58 ARE DESIGN CLASS II AND ARE SEISMICALLY ANALYZED IN ACCORDANCE WITH DESIGN CRITERIA MEMORANDUM M-61 (32-A) (B)
12. ¾"-2500# OBERT GATE VALVE SUPPLIED BY WESTINGHOUSE P4 MATERIAL. (32-A)
13. VALVES PER PO 4R-599II, MC #7 (31-A) (B)
14. MAIN STEAM LEAD DRIP POT DRAIN PIPING SHALL BE IN ACCORDANCE WITH DC 049063 TYPE V
15. VELAN B 12 205 4F 02TS (33-B)
16. N_2 BLANKETING TUBING SEISMICALLY SUPPORTED (30-B)
17. VELAN W04 2054B 02MS DWG DC 6006473 39 (31-B)
18. HANCOCK MOD 950W (32-A) (B)
19. 1" VELAN CHECK VALVE DWG # DC 6006473-169 STOCK #94-2915. (31-B)
20. PORTIONS OF LINE 2416 DESIGNATED AS SPEC K2 MAY BE ASTM A53 OR ASTM A106 GR B, FUTURE INSTALLATION SHALL BE TO K2 SPEC. (31-B)
21. VELAN W05-2054B-02MS, DWG DC 6006473-39. (30-A)
22. DC-6006473-40, S/C 93-6847. (30-C/B)
23. ¾" GLOBE VALVE, S/C 93-6846 AND DWG 6006473-269. (30-A/B)

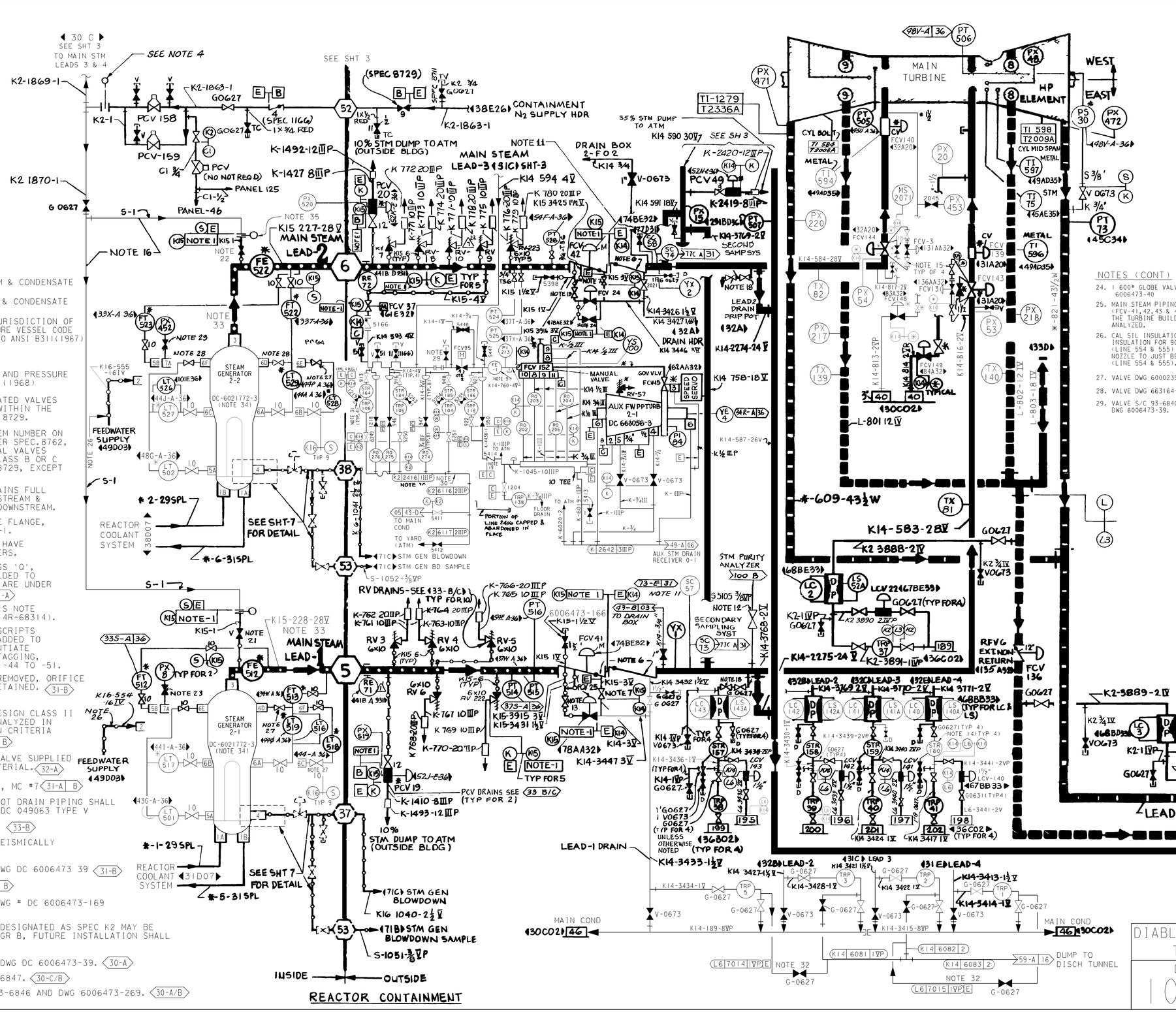

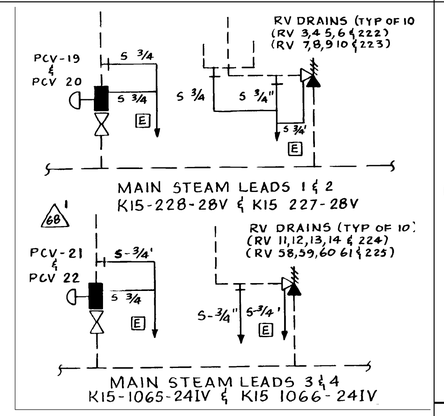

NOTES (CONT)

24. 1 600# GLOBE VALVE, RECORD NO 6006473-40
25. MAIN STEAM PIPING DOWNSTREAM OF MSIV'S (FCV-41,42,43 & 44) TO THE G-LINE ANCHOR AT THE TURBINE BUILDING WALL IS SEISMICALLY ANALYZED.
26. CAL SIL INSULATION REPLACED WITH BLANKET INSULATION FOR 90° ELBOWS AT ELEV 129' (LINE 554 & 555) AND FROM THE FEEDWATER NOZZLE TO JUST BELOW THE FIRST 90° ELBOW (LINE 554 & 555). (30-B/A)
27. VALVE DWG 6000235-71. (30-B/A)
28. VALVE DWG 663164-10. (30-B)
29. VALVE S/C 93-6840, DWG 6006473-39. (31-B)
30. A PORTION OF LINE 2416 PER SPEC "L". (31-B)
31. VALVE S/C 93-6845, DWG 6006473-40
32. PORTIONS OF LINES 3414, 3434, 6081 AND 6082 INCLUDE "L6" PIPE FOR ENHANCED EROSION/CORROSION. REFER TO APPLICABLE PIPING ISOMETRIC DRAWINGS FOR LOCATIONS. (32-A) (33-A)
33. CAL SIL INSULATION REPLACED WITH PAD INSULATION PER MMD M000022. (REF. FCT-31458 FOR DETAILS). (30-A) (30-B)
34. SG NOZZLE NUMBERS ARE FOR THE REPLACEMENT SG'S. REFER TO DWG DC 6021772-7D FOR A CROSS-REFERENCE TABLE FOR THE ORIGINAL SG NOZZLE NUMBERS.
35. FOR SPECTACLE PLATE DETAIL, SEE DRAWING 066142.

UNIT 2

DIABLO CANYON POWER PLANT - PG&E CO.
TURBINE STEAM SUPPLY SYSTEM

DRAWING	SHEET	PAGE	REV
108004	5	0	98

DATE	DWN	RE	IV	PROFESSIONAL ENGINEER	PE DISC.	PE#	PE EXP.	
04-17-2013	ZNS4	FxC2	KJD3	NOT REQUIRED	N/A	N/A	N/A	REVISED PER DFT-7*2075

RASTER=ru08107.dgn
DGN=ru08107.dgn
CAD User: ZNS4 Date: 04-17-2013

3 Size

NOTES CONT.:

7. CONDENSER N_2 INJECTION FOR DISSOLVED O_2 CONTROL IS THROUGH PX-372 AND PX-374 FOR N_2 SUPPLY, SEE DWG 108005 COORD 79-C. (35-C) (37-C)

8. DELETED

9. DELETED

UNIT-2

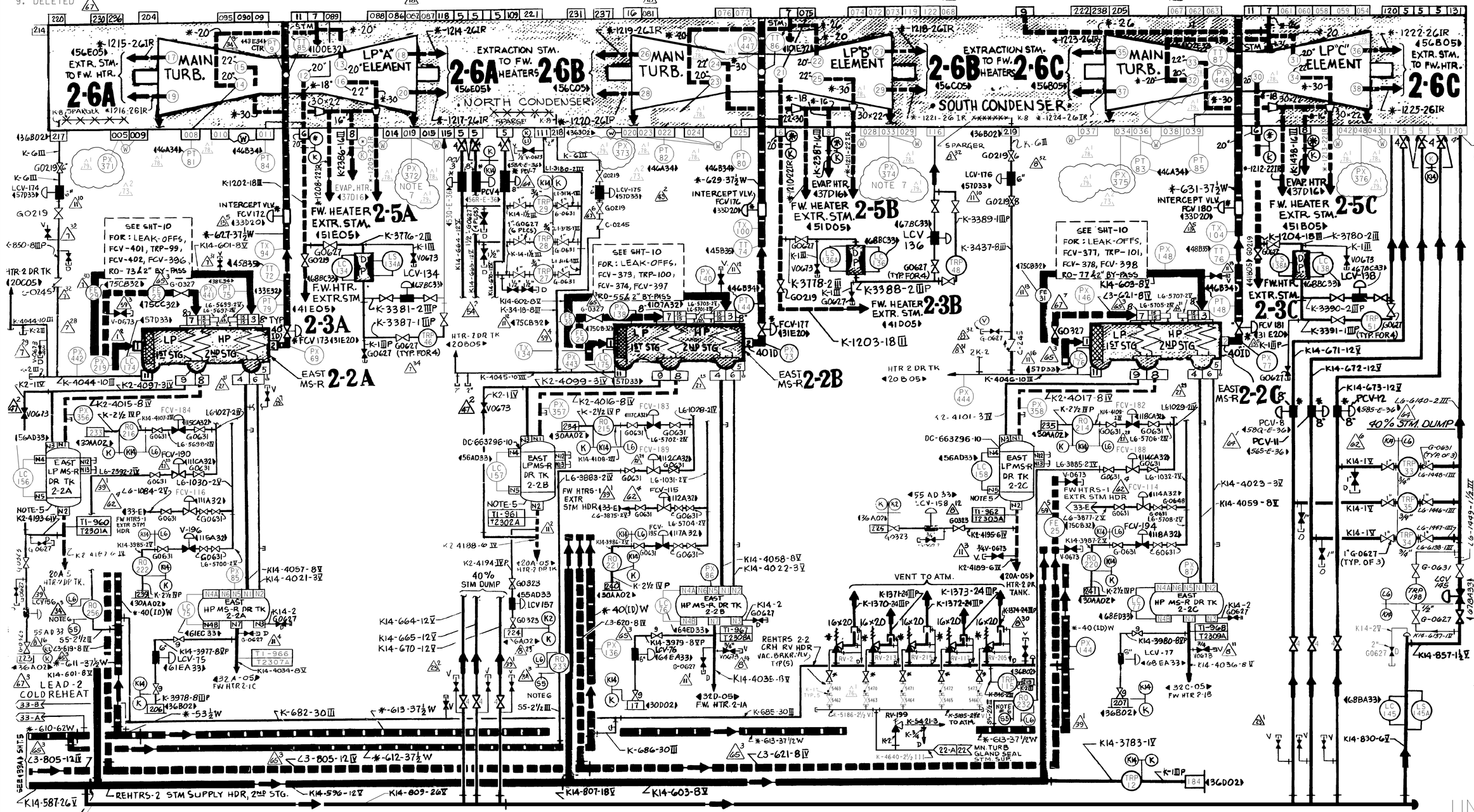

FLOW LINE LEGEND

- HIGH PRESSURE STEAM & CONDENSATE
- LOW PRESSURE STEAM & CONDENSATE

NOTES: 1. PG&E CLASS CODE [E] MANUAL & MOTOR OPERATED VALVES WITH ITEM NO. ARE UNDER SPEC. 8762.

2. ON ALL TRAP & LCV DRAINS, FULL INSULATION IS USED UPSTREAM & PERSONNEL PROTECTION DOWNSTREAM.

3. (W) DENOTES WESTINGHOUSE NOZZLE.

4. ALL PIPING THIS SHEET: PG&E CLASS CODE [E].

5. ADDITIONAL INST. & NOZZLES FOR LP MS-R DRAIN TANK.

LP MS-R DRAIN TK.	LI NOZ. N7/N8	LS (LOA) NOZ. N8/N9	LS (LIA) NOZ. N10/N11
2-2A	256	256A	256B
2-2B	257	257A	257B
2-2C	258	258A	258B

6. 2½" PIPING DENOTED IS PG&E PIPING SPEC. SS EXCEPT MATERIAL IS 304L & SOCKET WELDING ENDS ARE USED AT ELBOWS (34,36,38-A)

FOR NOTES CONTINUATION SEE 34-C

DIABLO CANYON POWER PLANT - PG&E CO.
TURBINE STEAM SUPPLY SYSTEM

DRAWING	SHEET	PAGE	REV
108004	6	0	79

DATE	DWN	RE	IV	PROFESSIONAL ENGINEER	PE DISC.	PE#	PE EXP.	
10-10-2006	AJL2	LAL3		KERSI J. DALAL	MECHANICAL	M 16690	9/31/2008	REVISED PER DC2-SJ-050670-00

RASTER=8004s6.dgn
DGN=8004s6.dgn
CAD User=AJL2 Date: 10-10-2006

SNPGICA
S Size

STEAM GENERATORS BLOWDOWN SYSTEM

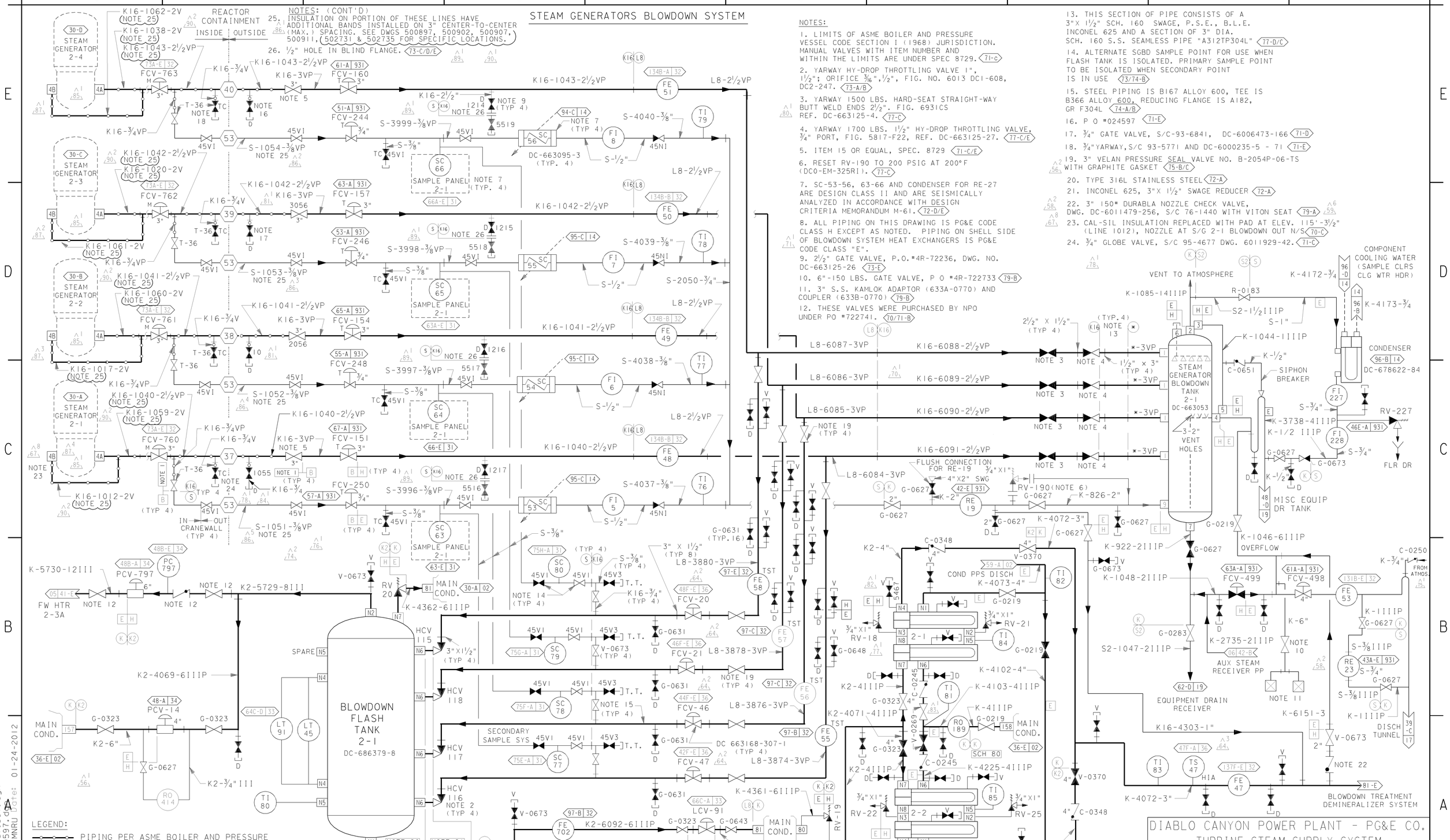

NOTES: (CONT'D)

25. INSULATION ON PORTION OF THESE LINES HAVE ADDITIONAL BANDS INSTALLED ON 3" CENTER-TO-CENTER (MAX.) SPACING. SEE DWGS 500897, 500902, 500907, 500911, 502731 & 502735 FOR SPECIFIC LOCATIONS.

26. 1/2" HOLE IN BLIND FLANGE. (73-C/D/E)

NOTES:

1. LIMITS OF ASME BOILER AND PRESSURE VESSEL CODE SECTION I (1968) JURISDICTION. MANUAL VALVES WITH ITEM NUMBER AND WITHIN THE LIMITS ARE UNDER SPEC 8729. (71-c)

2. YARWAY HY-DROP THROTTLING VALVE 1", 1 1/2"; ORIFICE 3/16",1/2", FIG. NO. 6013 DC1-608, DC2-247. (73-A/B)

3. YARWAY 1500 LBS. HARD-SEAT STRAIGHT-WAY BUTT WELD ENDS 2 1/2". FIG. 6931CS REF. DC-663125-4. (77-C)

4. YARWAY 1700 LBS. 1 1/2" HY-DROP THROTTLING VALVE, 3/4" PORT, FIG. 5817-F22, REF. DC-663125-27. (77-C/E)

5. ITEM 15 OR EQUAL, SPEC. 8729 (71-C/E)

6. RESET RV-190 TO 200 PSIG AT 200°F (DCO-EM-325R1). (77-C)

7. SC-53-56, 63-66 AND CONDENSER FOR RE-27 ARE DESIGN CLASS II AND ARE SEISMICALLY ANALYZED IN ACCORDANCE WITH DESIGN CRITERIA MEMORANDUM M-61. (72-D/E)

8. ALL PIPING ON THIS DRAWING IS PG&E CODE CLASS H EXCEPT AS NOTED. PIPING ON SHELL SIDE OF BLOWDOWN SYSTEM HEAT EXCHANGERS IS PG&E CODE CLASS "E".

9. 2 1/2" GATE VALVE, P.O.#4R-72236, DWG. NO. DC-663125-26 (73-E)

10. 6"-150 LBS. GATE VALVE, P O #4R-722733 (79-B)

11. 3" S.S. KAMLOK ADAPTOR (633A-0770) AND COUPLER (633B-0770) (79-B)

12. THESE VALVES WERE PURCHASED BY NPO UNDER PO #722741. (70/71-B)

13. THIS SECTION OF PIPE CONSISTS OF A 3"X 1 1/2" SCH. 160 SWAGE, P.S.E., B.L.E. INCONEL 625 AND A SECTION OF 3" DIA. SCH. 160 S.S. SEAMLESS PIPE "A312TP304L" (77-D/C)

14. ALTERNATE SGBD SAMPLE POINT FOR USE WHEN FLASH TANK IS ISOLATED. PRIMARY SAMPLE POINT TO BE ISOLATED WHEN SECONDARY POINT IS IN USE (73/74-B)

15. STEEL PIPING IS B167 ALLOY 600, TEE IS B366 ALLOY 600, REDUCING FLANGE IS A182, GR F304L (74-A/B)

16. P O #024597 (71-E)

17. 3/4" GATE VALVE, S/C-93-6841, DC-6006473-166 (71-D)

18. 3/4"YARWAY,S/C 93-5771 AND DC-6000235-5 - 71 (71-E)

19. 3" VELAN PRESSURE SEAL VALVE NO. B-2054P-06-TS WITH GRAPHITE GASKET (75-B/C)

20. TYPE 316L STAINLESS STEEL (72-A)

21. INCONEL 625, 3"X 1 1/2" SWAGE REDUCER (72-A)

22. 3" 150# DURABLA NOZZLE CHECK VALVE, DWG. DC-6011479-256, S/C 76-1440 WITH VITON SEAT (79-A)

23. CAL-SIL INSULATION REPLACED WITH PAD AT ELEV. 115'-3 1/2" (LINE 1012), NOZZLE AT S/G 2-1 BLOWDOWN OUT N/S (70-C)

24. 3/4" GLOBE VALVE, S/C 95-4677 DWG. 6011929-42. (71-C)

LEGEND:

PIPING PER ASME BOILER AND PRESSURE VESSEL CODE SECTION I(1968) JURISDICTION DESIGN TO ANSI B31.1(1967)

EQUIPMENT SHOWN ON OTHER SHEET AS INDICATED

DIABLO CANYON POWER PLANT - PG&E CO.
TURBINE STEAM SUPPLY SYSTEM

DRAWING	SHEET	PAGE	REV
108004	7	0	90

UNIT 2

DATE	DWN	RE	IV	PROFESSIONAL ENGINEER	PE DISC.	PE#	PE EXP.	
01-24-2012	MNRU	RxG2		KERSI J. DALAL	MECHANICAL	M 16690	3/31/2012	REVISED PER DFT-7*1374-0

RASTER=eru10597.dgn
DGN=eru10597.dgn
CAD User: MNRU Date: 01-24-2012

SIZE: 3 Size

STEAM GENERATORS BLOWDOWN TREATMENT DEMINERALIZER SYSTEM

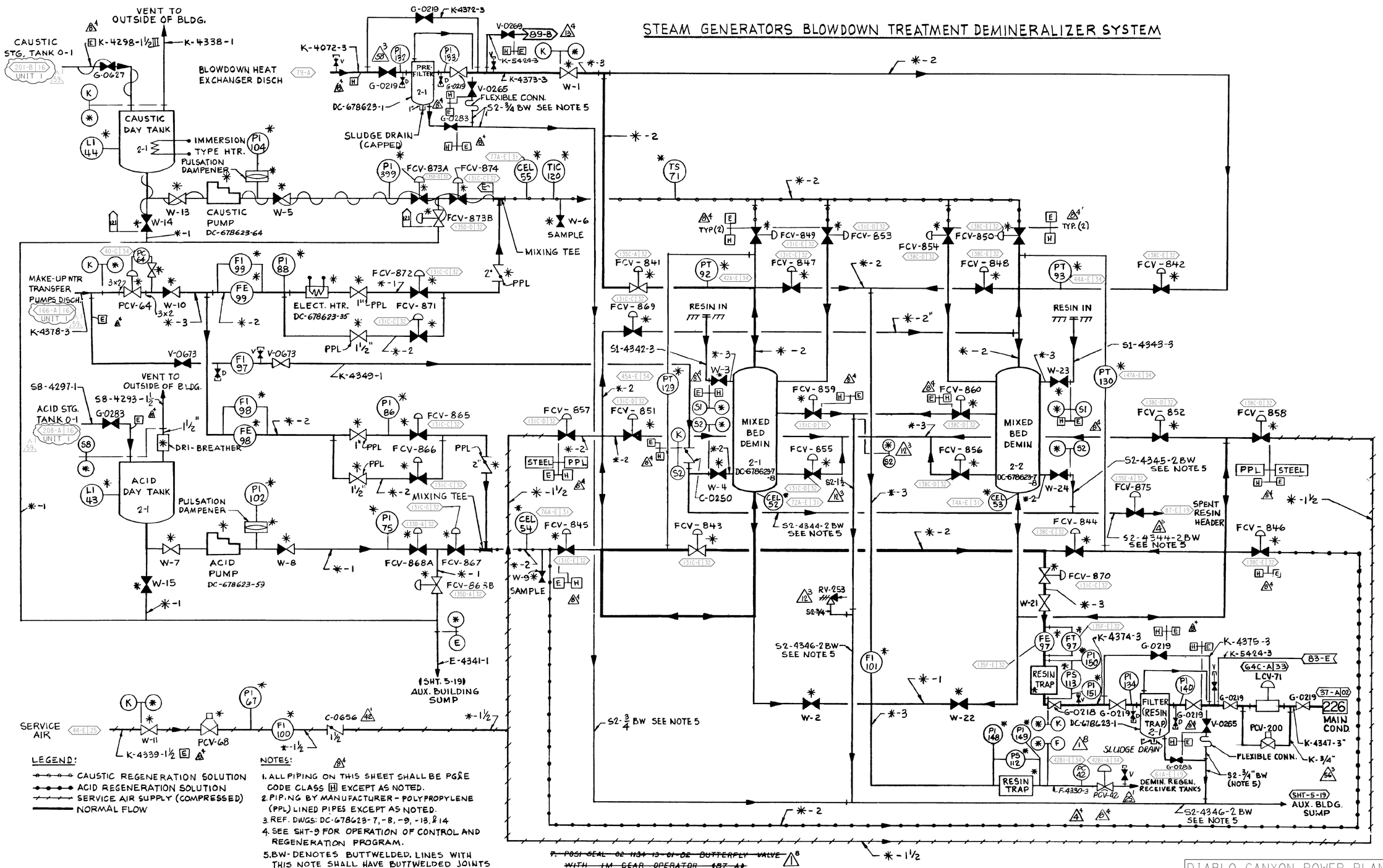

LEGEND:

- CAUSTIC REGENERATION SOLUTION
- ACID REGENERATION SOLUTION
- SERVICE AIR SUPPLY (COMPRESSED)
- NORMAL FLOW

NOTES:

1. ALL PIPING ON THIS SHEET SHALL BE PG&E CODE CLASS H EXCEPT AS NOTED.
2. PIPING BY MANUFACTURER - POLYPROPYLENE (PPL) LINED PIPES EXCEPT AS NOTED.
3. REF. DWGS: DC-678623-7, -8, -9, -13, & 14
4. SEE SHT-9 FOR OPERATION OF CONTROL AND REGENERATION PROGRAM.
5. BW - DENOTES BUTTWELDED. LINES WITH THIS NOTE SHALL HAVE BUTTWELDED JOINTS TO AVOID ENTRAPMENT OF RESIN. (83E, 84B, 85B, 88A/B)

~~7. POSI-SEAL 02-1134-13-01-02 BUTTERFLY VALVE WITH IM GEAR OPERATOR 487 A1~~

UNIT 2

DIABLO CANYON POWER PLANT - PG&E CO.

DRAWING	SHEET	PAGE	REV
108004	8	0	59

DATE	DWN	RE	IV	PROFESSIONAL ENGINEER	PE DISC.	PE#	PE EXP.	
02-01-2006	MIBF	KJD3		FRANCIS C. LING	MECHANICAL	M 16098	12/31/2007	REVISED PER FCT-030760

RASTER=108004s8.dgn
DGN=108004s8.dgn
CAD User: MIBF Date: 02-01-2006

3 Size

OPERATION OF CONTROL AND REGENERATION PROGRAM FOR STEAM GENERATORS BLOWDOWN CLEAN-UP MIXED BED DEMINERALIZERS

STEP	FUNCTION AND DESCRIPTION	RATE (GPM)	SOURCE	TIME (MIN)	FLOW CONTROL VALVE (MIXED BED DEMINERALIZERS: 2-1 & 2-2) SERVICE INLET (FCV-841, FCV-842)	SERVICE OUTLET (FCV-843, FCV-844)	BACKWASH A ACID INLET (FCV-845, FCV-846)	BACKWASH B OUTLET (FCV-847, FCV-848)	RINSE E INLET (FCV-849, FCV-850)	RINSE F OUTLET (FCV-851, FCV-852)	C CAUSTIC INLET (FCV-853, FCV-854)	D INTER-FACE OUTLET (FCV-855, FCV-856)	G AIR INLET (FCV-857, FCV-858)	H VENT (FCV-859, FCV-860)	SERIES (FCV-869)	I	ISO-LATION (FCV-870)	FLOW CONTROL VALVE (ACID SOLUTION) K DI-LUTION WATER (FCV-865)	L BACK-WASH (FCV-866)	M SHUT-OFF WATER (FCV-867)	M SHUT-OFF ACID (FCV-868A)	M LEAK OFF (FCV-868B)	M PUMP (-)	FLOW CONTROL VALVE (CAUSTIC SOLUTION) N DILUTION WATER COLD (FCV-871)	O DILUTION WATER HOT (FCV-872)	P SHUT-OFF CAUSTIC (FCV 873A)	P CAUSTIC TEMP CONTROL (-)	P PUMP (-)	P SHUT OFF WATER (FCV-874)	P LEAK OFF (FCV 873B)	J REGEN COM-PLETE RESET	Q FINAL RINSE COND CHECK	R TIMER RESET	S REGEN COM-PLETE ALARM	T REGEN RESET
1	LAG			0.5																		○								○			⊗		
2	BACKWASH	60	RI	15			○	○											○			○								○					
3	LAG			0.5																		○								○					
4	ACID DRAW	0.58	H_2SO_4	20			○				○	○						○		○	○		R		○	○	○	R	○						
		24.5	RI																																
	CAUSTIC DRAW	0.9	NaOH																																
		16	RI																																
5	ACID DISPLACE	24.5	RI	20			○				○	○						○				○			○	○	○	R	○						
	CAUSTIC DRAW	0.9	NaOH																																
		16	RI																																
6	CATION RINSE	24.5	RI	16			○				○	○						○				○			○					○					
	CAUSTIC DISPLACE	14.2	RI																																
7	CATION RINSE	24.5	RI	19			○		○			○						○				○		○						○					
	ANION RINSE	75	RI																																
8	BED LEVEL DRAIN			10				○		○		○		○								○								○					
9	BACKFILL (12")	24.5	RI	6			○							○				○				○								○					
10	AIR MIX (NO 1)	147 SCFM		10									○	○								○								○					
11	LAG			0.5																		○								○			⊗		
12	BED LEVEL DRAIN			5				○		○		○		○								○								○					
13	AIR MIX (NO. 2)	147 SCFM		10									○	○								○								○					
14	REFILL	75	RI	12					○					○								○		○						○					
15	FINAL RINSE	75	RI	5					○	○												○		○						○					
16	CONDUCTIVITY CHECK	5	RI	2					○	○												○								○		⊗			
17																															⊗			⊗	
18	SERVICE		SI																			○								○					⊗
MANUAL	SERVICE RINSE	75	RI	5					○	○												○		○						○					
MANUAL	CONDUCTIVITY CHECK	5	RI	2					○													○		○						○					

BY SELECTOR SWITCH

BY SELECTOR SWITCH

ON HIGH CONDUCTIVITY

LEGEND: ○ VALVE OPEN (PIN INSERTED)
● VALVE CLOSED
R PUMP RUNNING
RI REGENERANT INLET WATER
SI SERVICE INLET
⊗ PIN INSERTED
H_2SO_4 - 98% ACID
NaOH - 50% CAUSTIC

THIS DRAWING HAS BEEN REPRODUCED WITHOUT CHANGE FROM ORIGINAL DRAWING CHANGE NO. 1 DATE 12-84 APPROVED 12-25

UNIT - 2

P.G. & E. CO.	DRAWING NUMBER	REVISION
SHEET 9 OF SHEETS	108004	1
	MICROFILM	

SCAN | IC | RM INDEXED REV. 1

APPD. I&C S-1

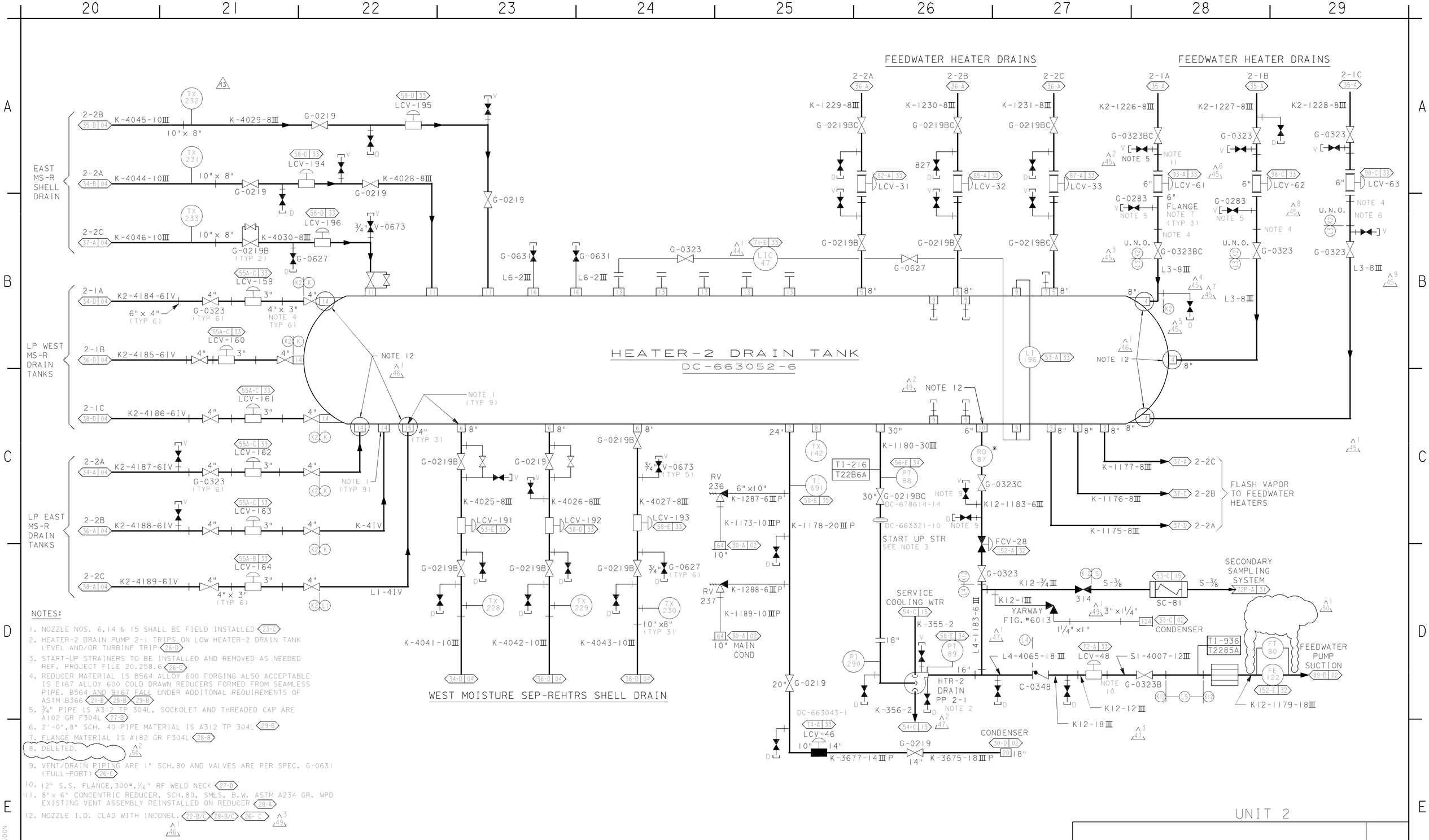

NOTES:

1. NOZZLE NOS. 6,14 & 15 SHALL BE FIELD INSTALLED 23-C
2. HEATER-2 DRAIN PUMP 2-1 TRIPS ON LOW HEATER-2 DRAIN TANK LEVEL AND/OR TURBINE TRIP 26-D
3. START-UP STRAINERS TO BE INSTALLED AND REMOVED AS NEEDED REF. PROJECT FILE 20.258.6 26-C
4. REDUCER MATERIAL IS B564 ALLOY 600 FORGING ALSO ACCEPTABLE IS B167 ALLOY 600 COLD DRAWN REDUCERS FORMED FROM SEAMLESS PIPE. B564 AND B167 FALL UNDER ADDITONAL REQUIREMENTS OF ASTM B366 21-B 28-B 29-B
5. ¾" PIPE IS A312 TP 304L, SOCKOLET AND THREADED CAP ARE A102 GR F304L 27-B
6. 2'-0",8" SCH. 40 PIPE MATERIAL IS A312 TP 304L 29-B
7. FLANGE MATERIAL IS A182 GR F304L 28-B
8. DELETED. 2 50
9. VENT/DRAIN PIPING ARE 1" SCH.80 AND VALVES ARE PER SPEC. G-0631 (FULL-PORT) 26-C
10. 12" S.S. FLANGE,300#,1/16" RF WELD NECK 27-D
11. 8"x 6" CONCENTRIC REDUCER, SCH.80, SMLS, B.W. ASTM A234 GR. WPD EXISTING VENT ASSEMBLY REINSTALLED ON REDUCER 28-A
12. NOZZLE I.D. CLAD WITH INCONEL. 22-B/C 28-B/C 26- C 3 49 1 46

UNIT 2

MOISTURE SEPARATOR-REHEATER AND FEEDWATER HEATER DRAINS

P G & E CO.		108005	REV. 50
SHEET 2	PAGE 0		

DATE	DWN.	RE	IV	PROFESSIONAL ENGINEER	PE DISC.	PE#	PE EXP.	
12/23/04	RHS1	BLF1	-	KERSI J. DALAL	MECHANICAL	M 16690	3/31/2006	Revised per FCT 026778

CAD User:MIBF Date: 12-7-2004
DGN=ERU10720.DGN

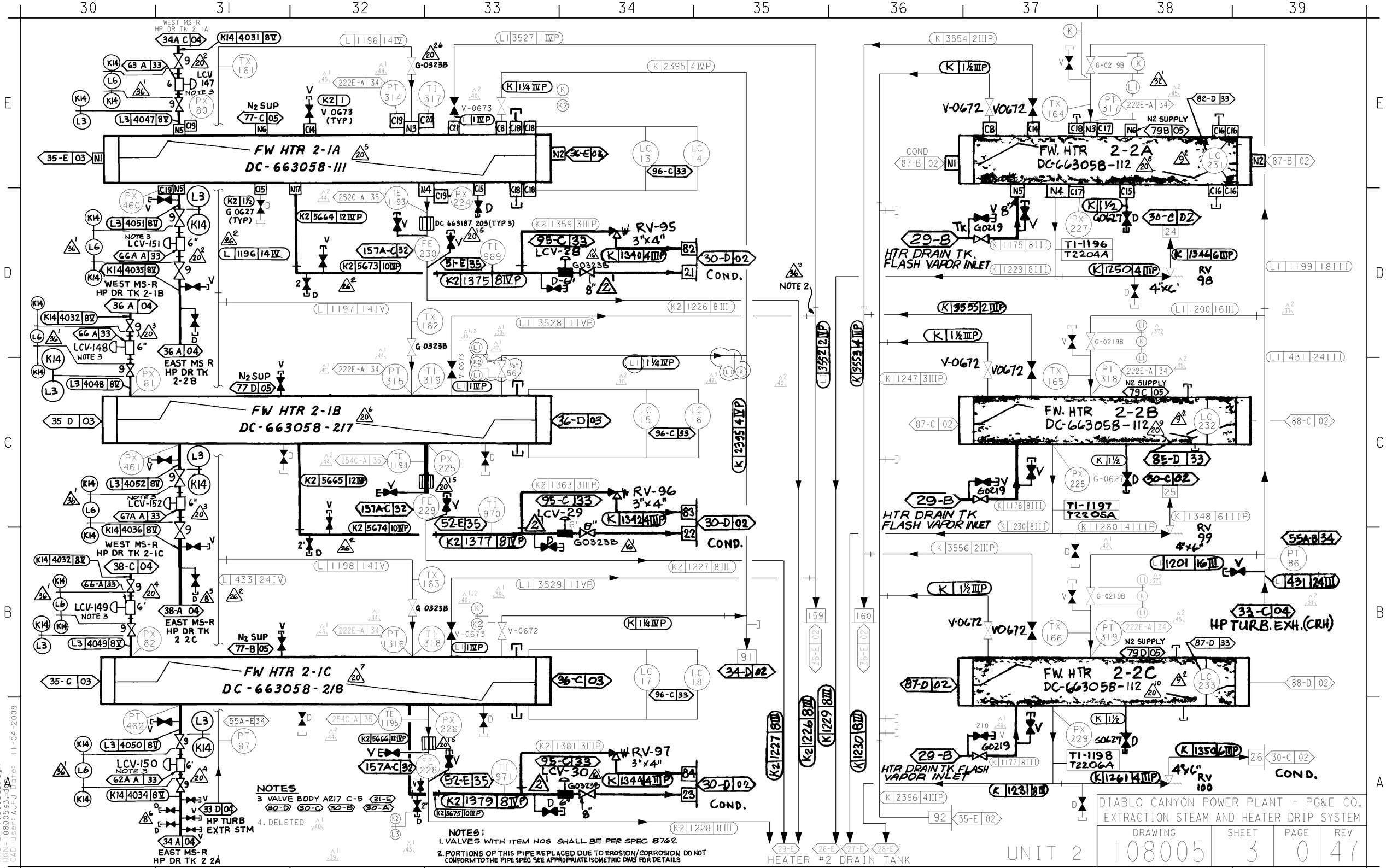
FW HTR 2-1A
DC-663058-111
FW HTR 2-1B
DC-663058-217
FW HTR 2-1C
DC-663058-218
FW. HTR 2-2A
DC-663058-112
FW. HTR 2-2B
DC-663058-112
FW. HTR 2-2C
DC-663058-112
HP TURB. EXH. (CRH)
HTR DRAIN TK. FLASH VAPOR INLET
HTR DRAIN TK FLASH VAPOR INLET
HTR DRAIN TK FLASH VAPOR INLET
COND.
HEATER #2 DRAIN TANK
UNIT 2
NOTES
3 VALVE BODY A217 C-5
4. DELETED
NOTES:
1. VALVES WITH ITEM NOS SHALL BE PER SPEC 8762
2. PORTIONS OF THIS PIPE REPLACED DUE TO EROSION/CORROSION DO NOT CONFORM TO THE PIPE SPEC SEE APPROPRIATE ISOMETRIC DWG FOR DETAILS
DIABLO CANYON POWER PLANT - PG&E CO.
EXTRACTION STEAM AND HEATER DRIP SYSTEM
DRAWING 108005
SHEET 3
PAGE 0
REV 47
11-04-2009 AJFJ FxC2 KERSI J. DALAL MECHANICAL M 16690 3/31/2010 REVISED PER DFT-7*629
DATE DWN RE IV PROFESSIONAL ENGINEER PE DISC. PE# PE EXP.

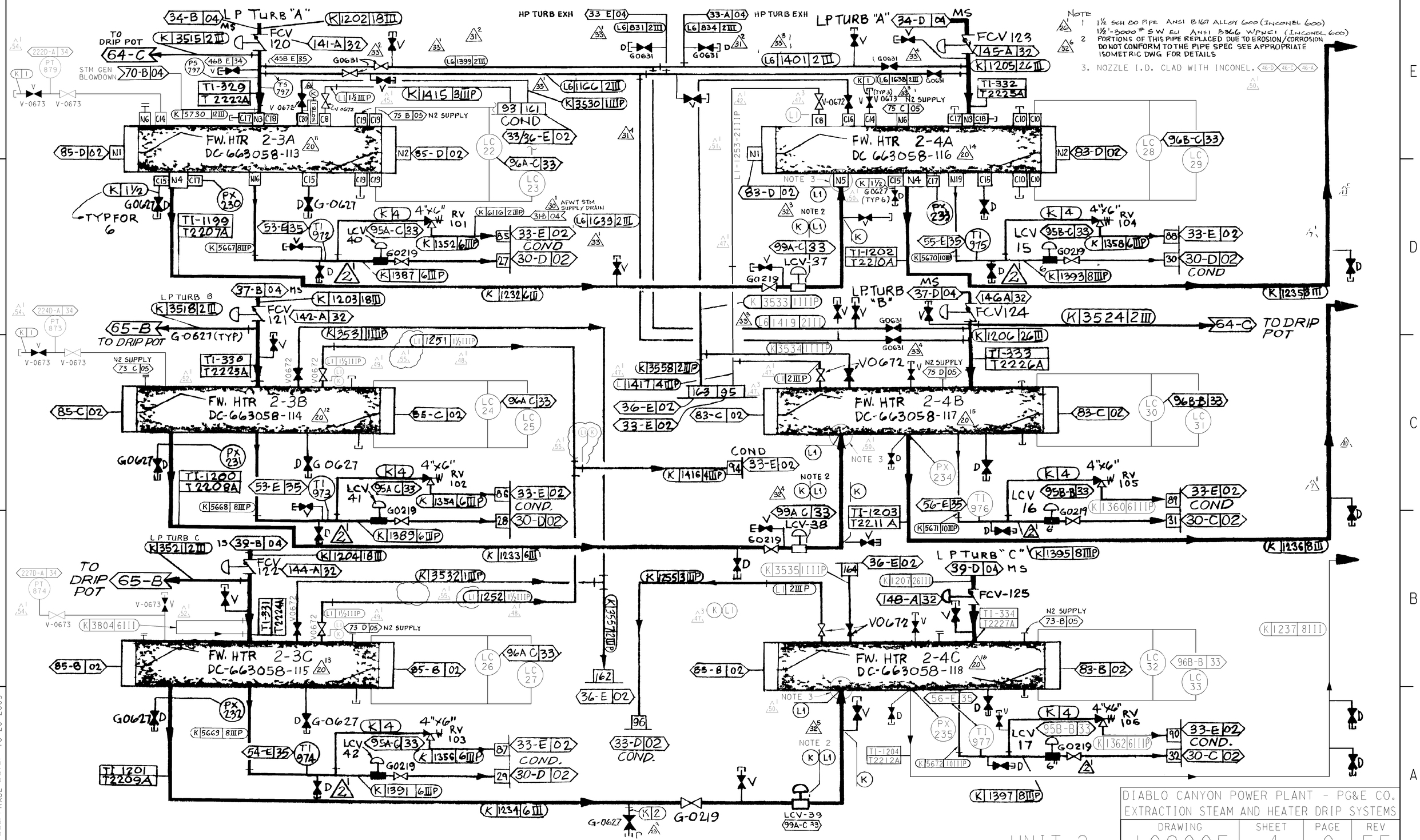

DIABLO CANYON POWER PLANT - PG&E CO.
EXTRACTION STEAM AND HEATER DRIP SYSTEMS

DRAWING	SHEET	PAGE	REV
108005	4	0	55

DATE	DWN	RE	IV	PROFESSIONAL ENGINEER	PE DISC.	PE#	PE EXP.	
10-20-2009	RxG2	FxC2		KERSI J. DALAL	MECHANICAL	M 16690	3/31/2010	REVISED PER DFT-7*586

RASTER=108005s4XX.dgn
DGN=108005s4XX.dgn
CAD User: RxG2 Date: 10-20-2009

DNPGIC
3 Size

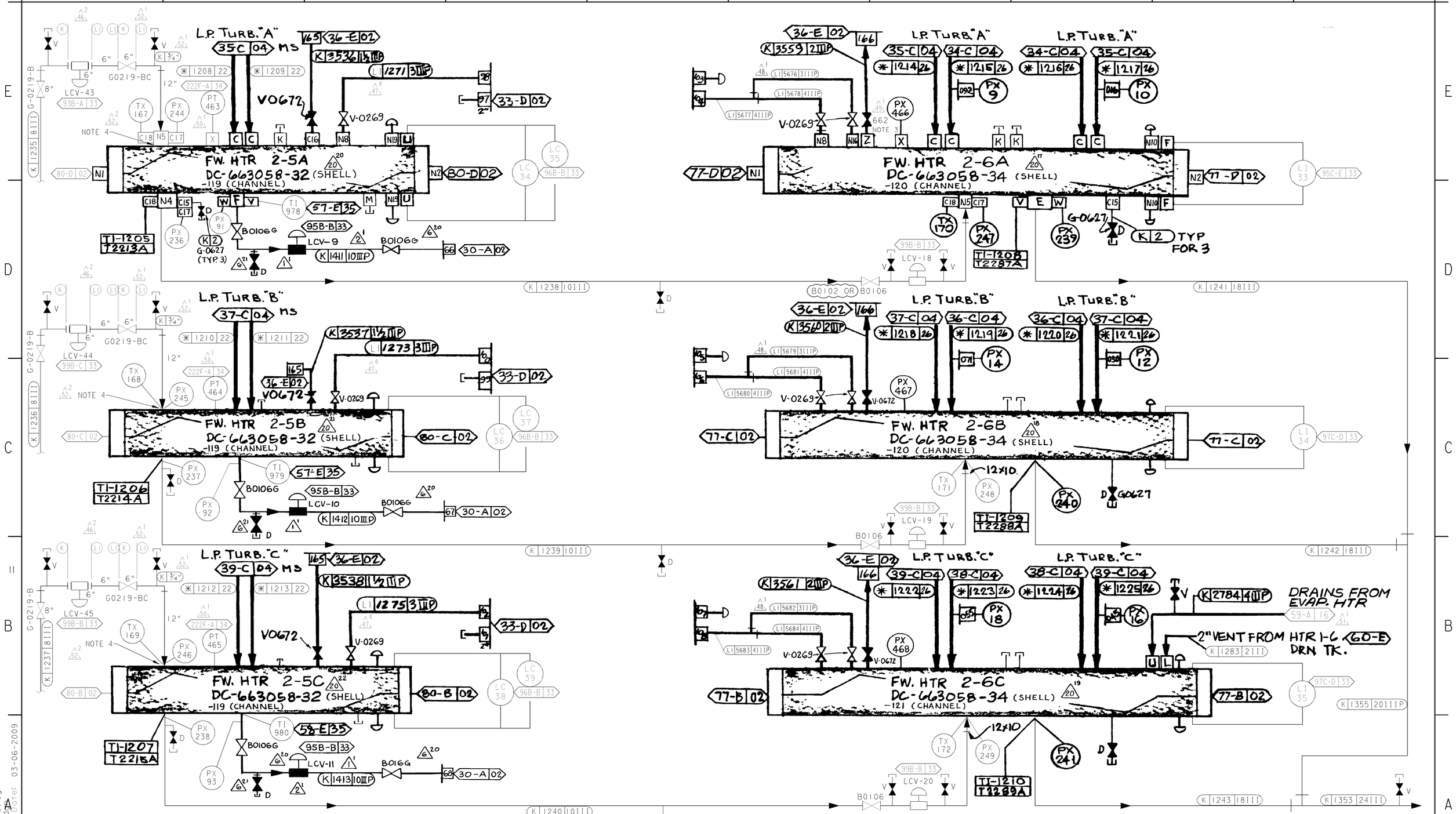

NOTE:

1. HTRS 5 & 6 ARE LOCATED IN CONDENSER NECK.
2. * INDICATES PIPING BY IR (INGERSOLL RAND) UNDER SPEC. 8701.
3. FIRST LENGTH OF PIPE AND ELBOW DOWNSTREAM OF XS-2-662 IS PIPE SPEC L1.(REF. C0182595)
4. FAC - RESISTANT CLADDING ALLIED INSIDE NOZZLE N5 REF. ATMM AR# A0638404. 50-B 50-D 50-E

DIABLO CANYON POWER PLANT - PG&E CO.
EXTRACTION STEAM AND HEATER DRIP SYSTEMS

UNIT 2

DRAWING	SHEET	PAGE	REV
108005	5	0	53

DATE	DWN	RE	IV	PROFESSIONAL ENGINEER	PE DISC.	PE#	PE EXP.	
03-06-2009	ADMI	FxC2		KERSI J. DALAL	MECHANICAL	M 16690	3/31/2010	REVISED PER DDT-4*273-0

RASTER=108005S5.dgn
DGN=108005S5.dgn
CAD User=ADMI Date: 03-06-2009

3 Size

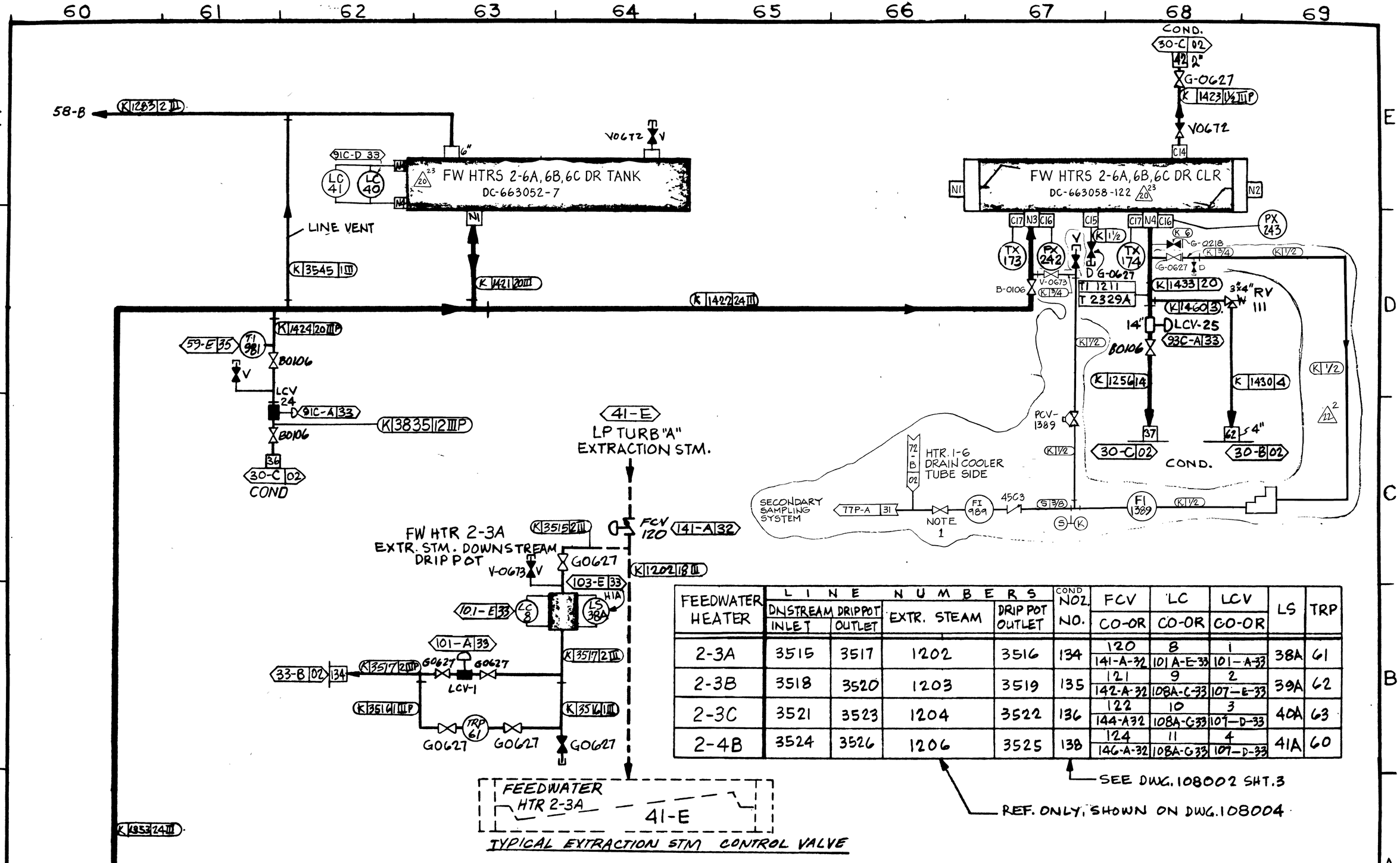

FEEDWATER HEATER	LINE NUMBERS: DNSTREAM DRIPPOT INLET	DNSTREAM DRIPPOT OUTLET	EXTR. STEAM	DRIP POT OUTLET	COND NOZ. NO.	FCV CO-OR	LC CO-OR	LCV CO-OR	LS	TRP
2-3A	3515	3517	1202	3516	134	120 141-A-32	8 101-A-33	1 101-A-33	38A	61
2-3B	3518	3520	1203	3519	135	121 142-A-32	9 108A-C-33	2 107-E-33	39A	62
2-3C	3521	3523	1204	3522	136	122 144-A-32	10 108A-C-33	3 107-D-33	40A	63
2-4B	3524	3526	1206	3525	138	124 146-A-32	11 108A-C-33	4 107-D-33	41A	60

SEE DWG. 108002 SHT. 3

REF. ONLY, SHOWN ON DWG. 108004

NOTES:
1. 3/8" SS REGULATING VALVE, WHITEY, SWAGELOK END CONNS., CAT NO. 1RS6 (66-C) [22]

THIS DRAWING HAS BEEN REPRODUCED WITHOUT CHANGE FROM ORIGINAL DRAWING CHANGE NO. ___ DATE 8-7-84 APPROVED RLS

UNIT - 2 [15]

PG. & E. CO.	DRAWING NUMBER	REVISION
SHEET 6 OF [15] SHEETS	108005	22
	MICROFILM	22

SCAN 22 IC

APPD. HRC 22 S22 RM INDEXED REV. 22

FEEDWATER HEATERS NITROGEN SUPPLY SYS

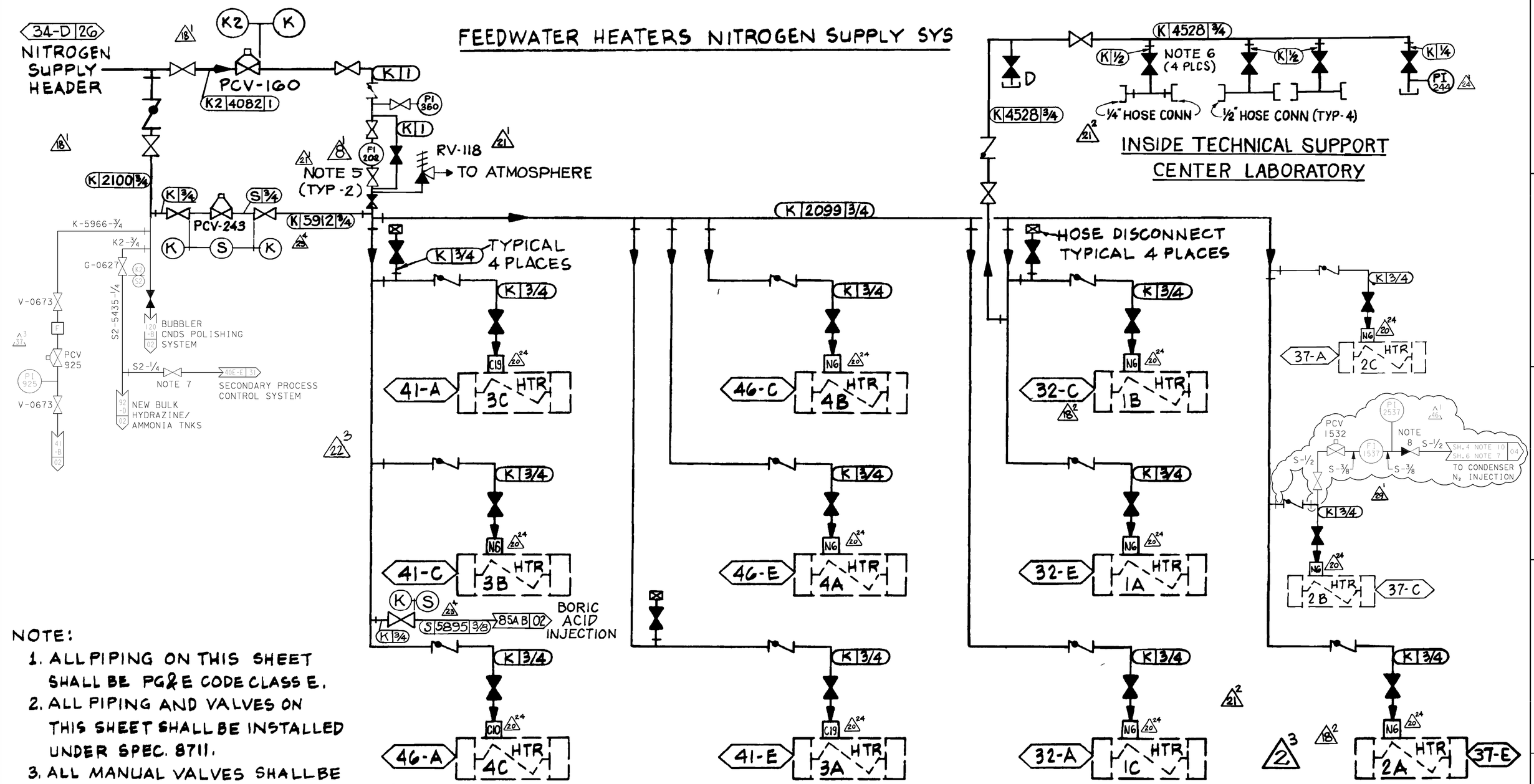

NOTE:

1. ALL PIPING ON THIS SHEET SHALL BE PG&E CODE CLASS E.
2. ALL PIPING AND VALVES ON THIS SHEET SHALL BE INSTALLED UNDER SPEC. 8711.
3. ALL MANUAL VALVES SHALL BE V-0673 UNLESS OTHERWISE NOTED
4. ALL CHECK VALVES SHALL BE C-0651
5. 1" VOGT GLOBE, SW-3241 <72-E>
6. IDEAL AREOSMITH NEEDLE VALVES, V-51-12-43 (1/2") & 51-4-23 (1/4"), CAST BRONZE BODY WITH SS NEEDLE <77-E>
7. 1/4" 150 #G SS, SOCKET-WELD ENDS (FOR 405 PIPE) GLOBE VALVE, (PACIFIC MODEL # G-62-108 OR EQUAL) <70-C>
8. REGULATING VALVE, WHITEY SS-6NRF4 <79->

FEEDWATER HEATERS

UNIT - 2

P G & E CO.		108005	REV. 46
SHEET 7	PAGE 0		

DATE	DWN	RE	IV	PROFESSIONAL ENGINEER	PE DISC.	PE#	PE EXP.
6/1/1998	RJN3	JXI2	-	JORGE R. DEL MAZO	MECHANICAL	M 17606	3/31/00

CAD User:RJN3 Date: 4-24-1998 DGN=8005S7.DGN RASTER=8005S7.TIF

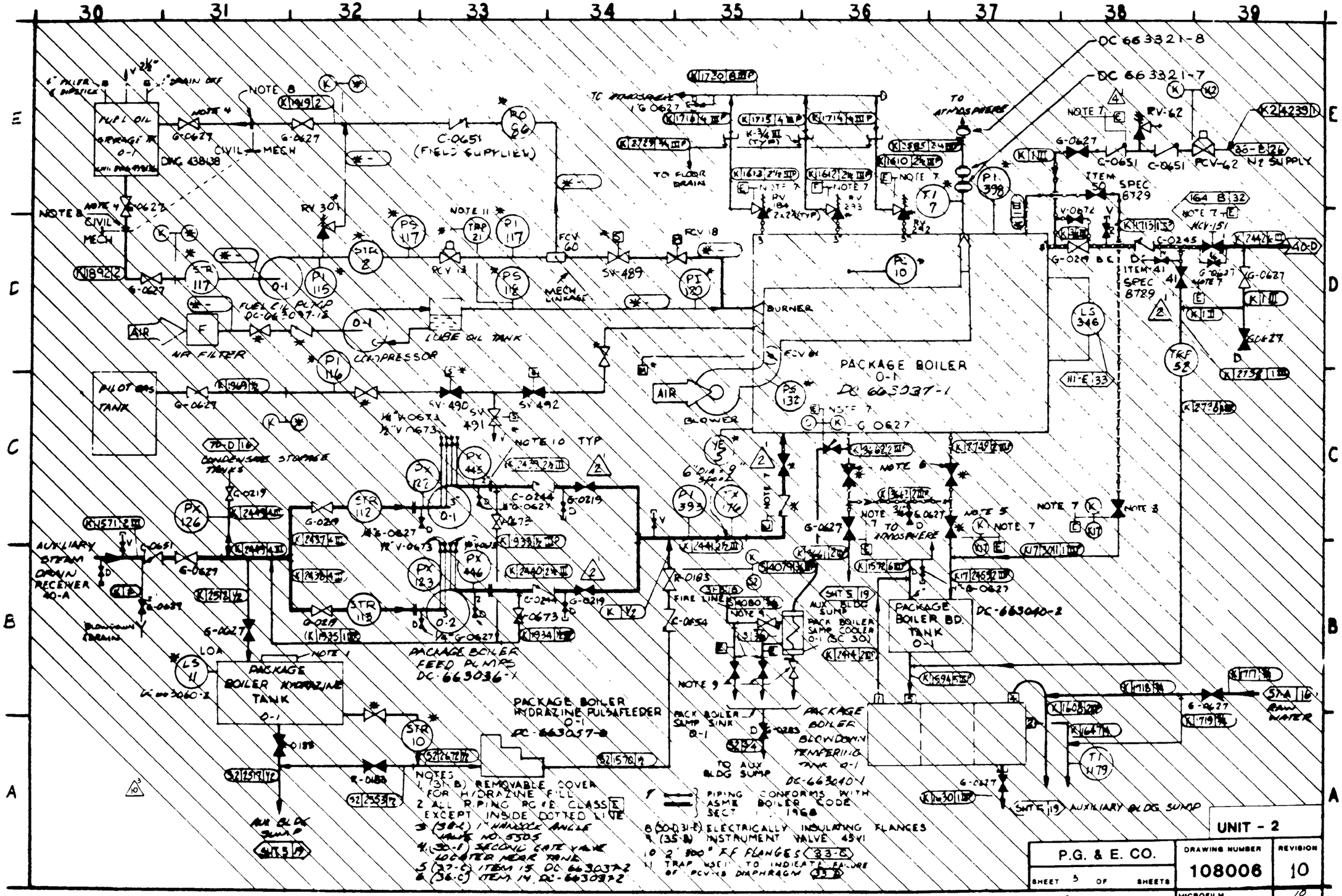
PACKAGE BOILER
O-1
DC 663037-1
PACKAGE BOILER FEED PUMPS
DC-663036-X
PACKAGE BOILER HYDRAZINE PULSAFEEDER
O-1
DC-663057-B
PACKAGE BOILER HYDRAZINE TANK
O-1
PACKAGE BOILER BD. TANK
O-1
DC-663040-2
PACKAGE BOILER BLOWDOWN TEMPERING TANK O-1
DC-663040-1
FUEL OIL SERVICE
O-1
DWG. 43838
FUEL OIL PUMP
DC-663037-1B
LUBE OIL TANK
COMPRESSOR
AIR FILTER
BLOWER
BURNER
PILOT AIR TANK
CONDENSATE STORAGE TANKS
AUXILIARY STEAM DRAIN RECEIVER 40-A
PACK BOILER SUMP COOLER O-1 (SC 30)
AUX BLDG SUMP
PACK BOILER SUMP SINK O-1
TO AUX BLDG SUMP
AUXILIARY BLDG SUMP
RAW WATER
TO ATMOSPHERE
TO FLOOR DRAIN
FIRE LINE
DC 663321-8
DC 663321-7
N2 SUPPLY
C-0651 (FIELD SUPPLIED)
NOTES
1 (3-B) REMOVABLE COVER FOR HYDRAZINE FILL
2 ALL PIPING PG&E CLASS E EXCEPT INSIDE DOTTED LINE
3 (30-C) 1" HANDLE ANGLE VALVE NO. 5305
4 (30-I) SECONDARY GATE VALVE LOCATED NEAR TANK
5 (37-C) ITEM 15 DC 663037-2
6 (36-C) ITEM 14 DC-663037-2
8 (30-D 31-E) ELECTRICALLY INSULATING FLANGES
9 (35-B) INSTRUMENT VALVE 45VI
10 2" 300# RF FLANGES (33-E)
11 TRAP USED TO INDICATE FAILURE OF PCV-18 DIAPHRAGM (33-B)
PIPING CONFORMS WITH ASME BOILER CODE SECT I 1968
UNIT - 2
P.G. & E. CO.
SHEET 3 OF SHEETS
DRAWING NUMBER 108006
REVISION 10
MICROFILM 10
RM INDEXED REV 10
SCAN 10

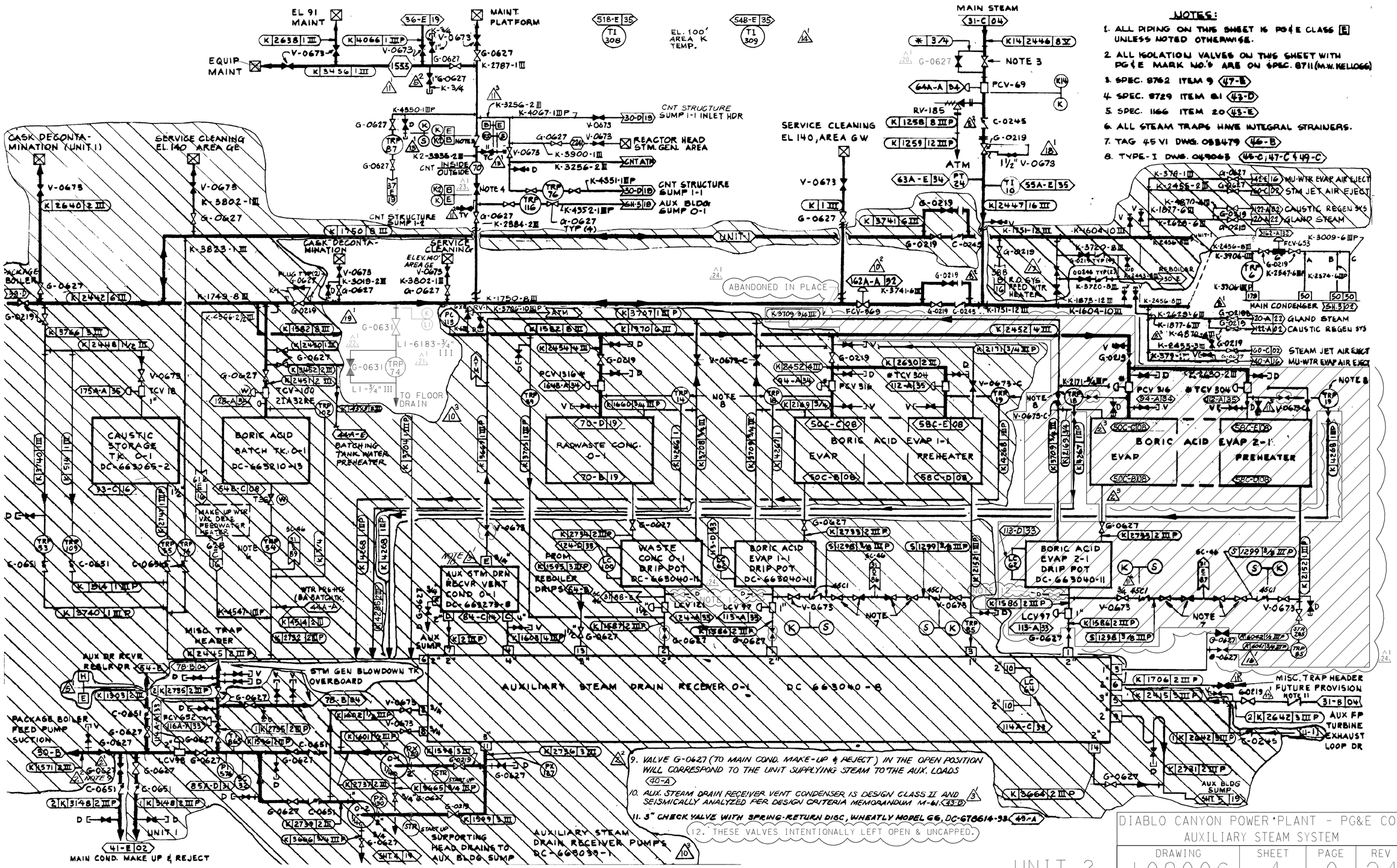

NOTES:

1. ALL PIPING ON THIS SHEET IS PG&E CLASS E UNLESS NOTED OTHERWISE.
2. ALL ISOLATION VALVES ON THIS SHEET WITH PG&E MARK NO.'S ARE ON SPEC. 8711 (M.W. KELLOGG)
3. SPEC. 8762 ITEM 9 (47-B)
4. SPEC. 8729 ITEM 81 (43-D)
5. SPEC. 1166 ITEM 20 (43-E)
6. ALL STEAM TRAPS HAVE INTEGRAL STRAINERS.
7. TAG 45 VI DWG. 083479 (46-B)
8. TYPE-I DWG. 049063 (45-C, 47-C & 49-C)

9. VALVE G-0627 (TO MAIN COND. MAKE-UP & REJECT) IN THE OPEN POSITION WILL CORRESPOND TO THE UNIT SUPPLYING STEAM TO THE AUX. LOADS (40-A)

10. AUX. STEAM DRAIN RECEIVER VENT CONDENSER IS DESIGN CLASS II AND SEISMICALLY ANALYZED PER DESIGN CRITERIA MEMORANDUM M-61. (43-B)

11. 3" CHECK VALVE WITH SPRING-RETURN DISC, WHEATLY MODEL 66, DC-678614-33 (48-A)

12. THESE VALVES INTENTIONALLY LEFT OPEN & UNCAPPED.

DIABLO CANYON POWER PLANT - PG&E CO.
AUXILIARY STEAM SYSTEM

DRAWING	SHEET	PAGE	REV
108006	4	0	24

DATE	DWN	RE	IV	PROFESSIONAL ENGINEER	PE DISC.	PE#	PE EXP.	
04-22-2011	AJFJ	FxC2		KERSI J. DALAL	MECHANICAL	M 16690	3/31/2012	REVISED PER DDN-2*560

RASTER-001f1152.dgn
DGN-001f1152.dgn
CAD User: AJFJ Date: 04-22-2011

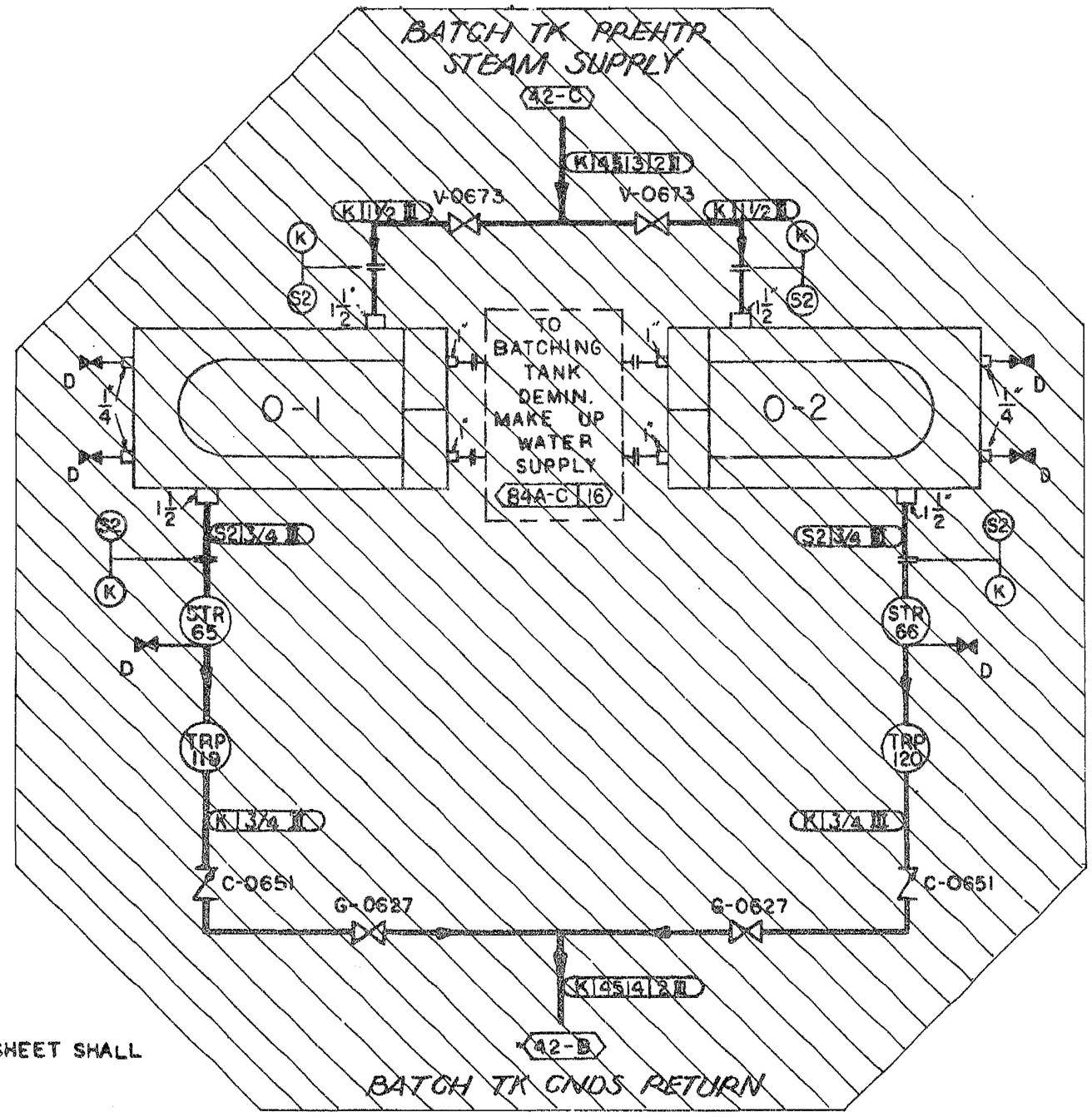

NOTE:

ALL PIPING IN THIS SHEET SHALL BE PG&E CLASS [E]

B. A. BATCHING TANK WATER PREHEATER

UNIT - 2

P.G. & E. CO.	DRAWING	REVISION
SHEET 4A OF SHEETS	108006	10
	MICROFILM	10

RM INDEXED REV 10

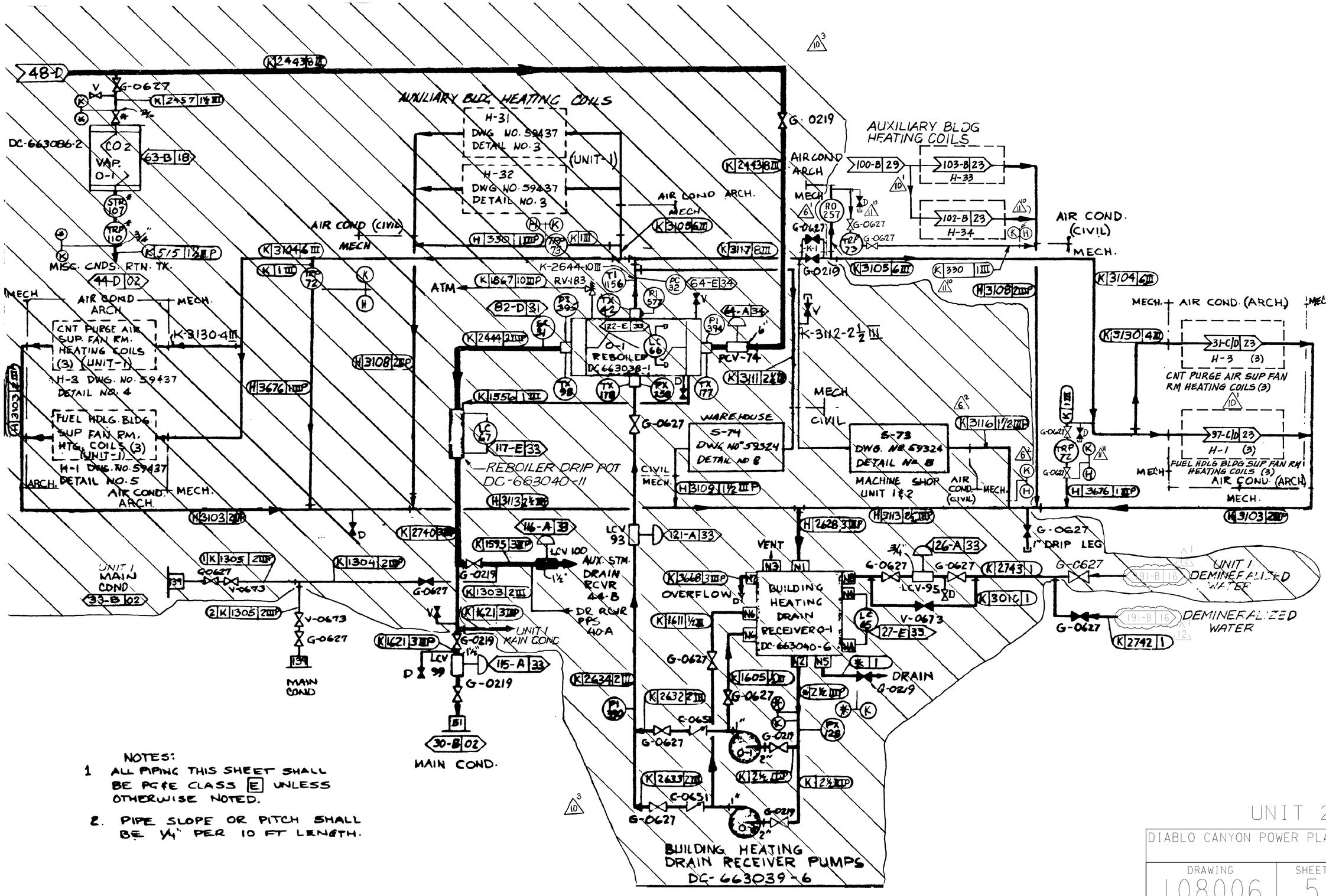

NOTES:

1. ALL PIPING THIS SHEET SHALL BE PG&E CLASS E UNLESS OTHERWISE NOTED.
2. PIPE SLOPE OR PITCH SHALL BE 1/4" PER 10 FT LENGTH.

UNIT 2

DIABLO CANYON POWER PLANT - PG&E CO.

DRAWING	SHEET	PAGE	REV
108006	5	0	12

DATE	DWN	RE	IV	PROFESSIONAL ENGINEER	PE DISC.	PE#	PE EXP.	
02-01-2006	MIBF	KJD3		FRANCIS C. LING	MECHANICAL	M 16098	12/31/2007	REVISED PER FCT-030760

RASTER=108006s5.dgn
DGN=108006s5.dgn
CAD User: MIBF Date: 02-01-2006

3NPOIC
3 Size

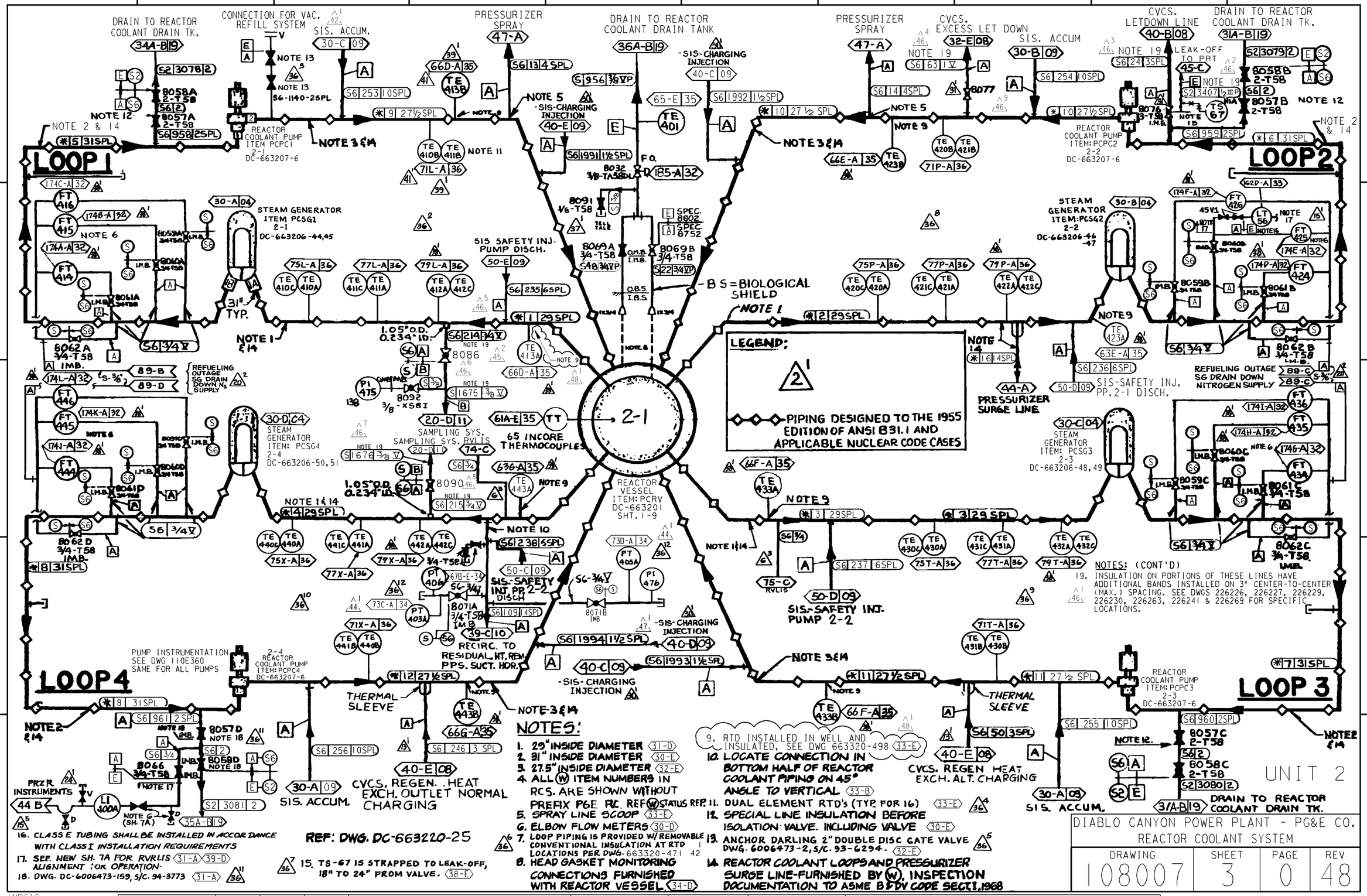

NOTES:

1. 29" INSIDE DIAMETER (31-D)
2. 31" INSIDE DIAMETER (30-E)
3. 27.5" INSIDE DIAMETER (32-E)
4. ALL (W) ITEM NUMBERS IN RCS. ARE SHOWN WITHOUT PREFIX P&E RC. REF (W) STATUS REP. 11.
5. SPRAY LINE SCOOP (33-E)
6. ELBOW FLOW METERS (30-D)
7. LOOP PIPING IS PROVIDED W/ REMOVABLE CONVENTIONAL INSULATION AT RTD LOCATIONS PER DWG. 663320-471 42
8. HEAD GASKET MONITORING CONNECTIONS FURNISHED WITH REACTOR VESSEL. (34-D)
9. RTD INSTALLED IN WELL AND INSULATED, SEE DWG 663320-498 (33-E)
10. LOCATE CONNECTION IN BOTTOM HALF OF REACTOR COOLANT PIPING ON 45° ANGLE TO VERTICAL (33-B)
11. DUAL ELEMENT RTD's (TYP. FOR 16) (33-E)
12. SPECIAL LINE INSULATION BEFORE ISOLATION VALVE. INCLUDING VALVE (30-E)
13. ANCHOR DARLING 2" DOUBLE DISC GATE VALVE DWG. 6006473-2, S/C. 93-6294. (32-E)
14. REACTOR COOLANT LOOPS AND PRESSURIZER SURGE LINE FURNISHED BY (W). INSPECTION DOCUMENTATION TO ASME B&PV CODE SECT I, 1968

NOTES: (CONT'D)

19. INSULATION ON PORTIONS OF THESE LINES HAVE ADDITIONAL BANDS INSTALLED ON 3" CENTER-TO-CENTER (MAX.) SPACING. SEE DWGS 226226, 226227, 226229, 226230, 226263, 226241 & 226269 FOR SPECIFIC LOCATIONS.

16. CLASS E TUBING SHALL BE INSTALLED IN ACCORDANCE WITH CLASS I INSTALLATION REQUIREMENTS
17. SEE NEW SH. 7A FOR RVRLIS ALIGNMENT FOR OPERATION. (31-A) (39-D)
18. DWG. DC-6006473-159, S/C. 94-3773 (31-A) (36)

REF: DWG. DC-663220-25

15. TS-67 IS STRAPPED TO LEAK-OFF, 18" TO 24" FROM VALVE. (38-E)

DIABLO CANYON POWER PLANT - PG&E CO.
REACTOR COOLANT SYSTEM

DRAWING	SHEET	PAGE	REV
108007	3	0	48

DATE	DWN	RE	IV	PROFESSIONAL ENGINEER	PE DISC.	PE#	PE EXP.	
06-14-2011	CNHK	FxC2		KERSI J. DALAL	MECHANICAL	M 16690	3/31/2012	REVISED PER DFT-7*1192-0

INPGIC
I Size

RASTER=eru10713.DGN
DGN=eru10713.DGN
CAD User: CNHK Date: 06-14-2011

LEGEND: VALVE LEAK-OFF
PIPING DESIGNED TO THE 1955 EDITION OF ANSI B31.1 AND APPLICABLE NUCLEAR CODE CASES.

NOTES CONT'D:
27. ANCHOR DARLING #1878 1" DOUBLE DISC SW SS GATE VALVE. (42-E)
28. INSULATION ON PORTIONS OF THESE LINES HAVE ADDITIONAL BANDS INSTALLED ON 3" CENTER-TO-CENTER (MAX.) SPACING. SEE DWG 226254, 226258, 226259, 226267, 226269 & 449343 FOR SPECIFIC LOCATIONS:

NOTES CONT'D:
18. DELETED
19. SEE NEW SHT 7A FOR RVRLIS ALIGNMENT FOR OPERATION.
20. USE ¾-X42D, ITT VALVE #2471-10-M-¾".
DWG No. 663219-267, S/C 42-2543 FOR THE TEST CONN.
21. 3"-150#. ITT BALL BALVE DWG No. 6006473-236.
22. REMOVE OPERATORS DISCONNECTED AND ABANDONED IN PLACE. (15/46-A)
23. GLOBE VALVE, VELAN, 6011929-3.
24. VALVES 8000A,B&C HAVE 1/8"Ø HOLE DRILLED IN THE UPSTREAM SIDE OF THE DISK; 663219-388. (41-C/B)
25. VALVES PCV-455C,456&474 ARE 2" SIZE WITH ENDS PREPARED TO MATCH 3" PIPE. (40-C/B)
26. ¾" GLOBE VALVE, VELAN, 6011929-3, S/C 95-1989. (45-A)

NOTES:
1. HOLE PROVIDED. (45-D)
2. SLOPE SPRAY PIPE DOWNWARD TO PROVIDE WATER SEAL BETWEEN PRESSURIZER AND SPRAY VALVES. (44-B)
3. ACTUATED AUTOMATICALLY BY GAS ANALYZER CONTROLLER. (49-E)
4. PLACE DETECTORS 3 TO 5 FT. DOWNSTREAM OF RELIEF VALVES.
5. SLOPE PIPE DOWNWARD TO PROVIDE WATER SEAL ON RELIEF VALVES. (41-C.B)
6. LOCATE APPROX. MIDWAY BETWEEN LOOP AND PRESSURIZER. (43-A)
7. ALL (W) ITEM NUMBERS IN RCS ARE SHOWN W/O PREFIX PEGPC. REF. DWG. 663200-47.
8. SPECIAL INSULATION ON POWER RELIEF PIPING IS LIMITED TO & INCLUDES ISOLATION MOTORIZED VALVES. (41-B,C)
9. DR. LINE TO BE SLOPED DOWN FROM LOOP SEALS TO CONN. WITH PRT HDR. LINE. (44-C)
10. PART OR ALL OF PIPE TO BE SCH. 80/S TYP. (42-E)
11. PRESSURIZER RELIEF NOZZLE NOs. REF. DC-663208-17. (43-C)
12. TO INSTR FLUSHING WTR STATION, AREA 'G' (47-E)
13. TO INSTR FLUSHING WTR STATION, WEST HALF OF AREA 'F'. (47-D)
14. TO INSTR. FLUSHING WTR STATION, WEST HALF OF AREA 'F'. (47-E)
15. TS-53 THRU 58 ARE STRAPPED TO LEAK-OFF PIPE, REF. DWG. #054174, FIG. 910. (45-A)
16. WASHDOWN CONNECTION. (48-C)
17. LOOP SEALS ARE INSULATED FROM PRESS. NOZZLES TO SAFETY VALVES WITH REFLECTIVE AND FIBERGLASS INSULATION PER 663320-96. (43-C)

INSTR. NOZZLE CROSS REFERENCE.			
THIS DRAWING		MFR. DRAWING	
NOZ.	INSTR.	NOZZLE ITEM NO.	RECORD DWG.
5-1A	LT-459	5A	DC-663208-17
5-1B	LT-460	5B	
5-1C	LT-461	5C	
5-2A	LT-459	5D	
5-2B	LT-460	5E	
5-2C	LT-461	5F	
5-3	TE-454	5H	
5-4	TE-453	5G	

DIABLO CANYON POWER PLANT - PG&E CO.
REACTOR COOLANT SYSTEM

DRAWING	SHEET	PAGE	REV
108007	4	0	56

UNIT 2

DATE	DWN	RE	IV	PROFESSIONAL ENGINEER	PE DISC.	PE#	PE EXP.	
04-18-2013	ZNS4	FxC2	KJD3	NOT REQUIRED	N/A	N/A	N/A	REVISED PER DFT-7*2081

RASTER=8007s4.dgn
DGN=8007s4.dgn
CAD User: ZNS4 Date: 04-18-2013

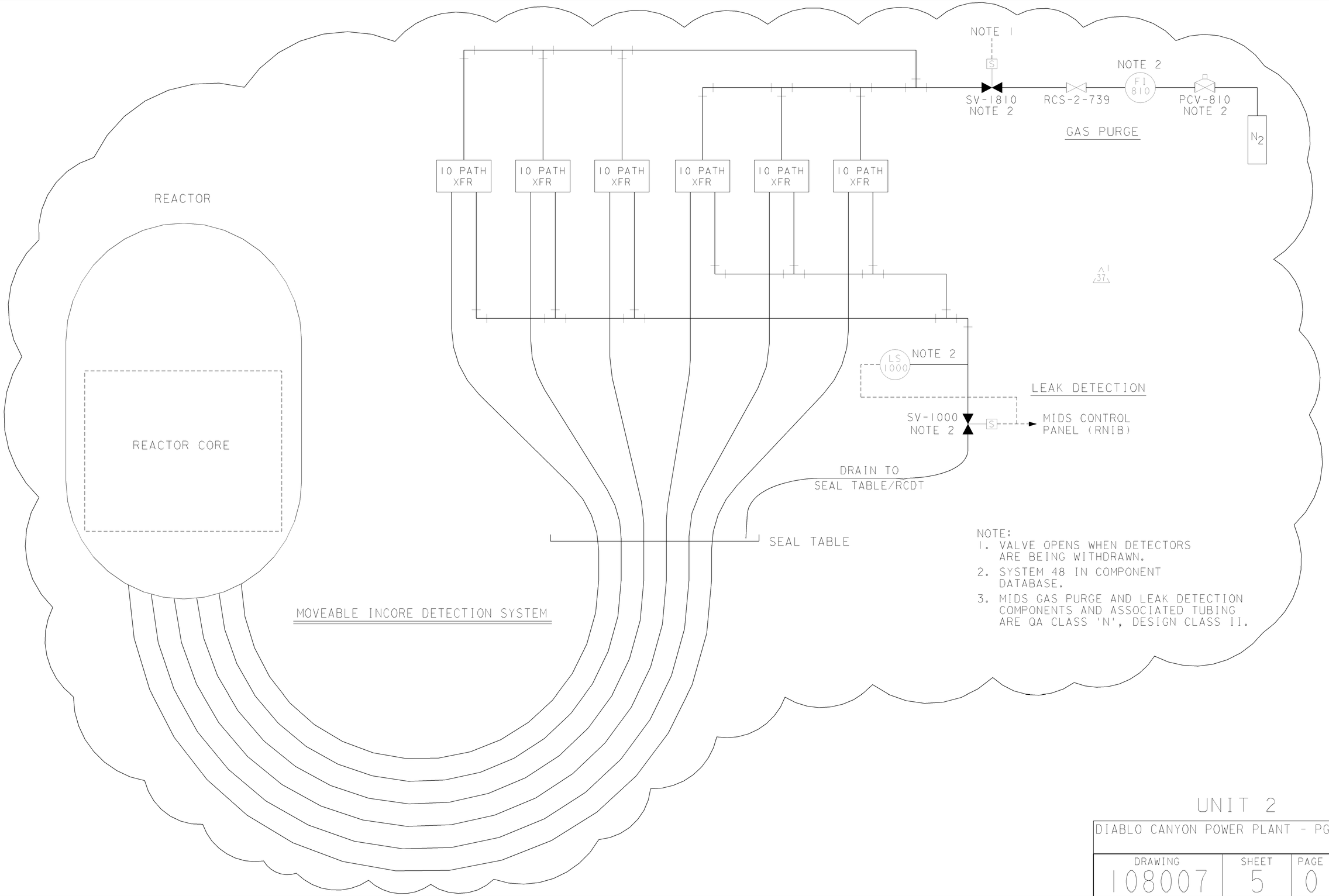

NOTE:
1. VALVE OPENS WHEN DETECTORS ARE BEING WITHDRAWN.
2. SYSTEM 48 IN COMPONENT DATABASE.
3. MIDS GAS PURGE AND LEAK DETECTION COMPONENTS AND ASSOCIATED TUBING ARE QA CLASS 'N', DESIGN CLASS II.

UNIT 2

DIABLO CANYON POWER PLANT - PG&E CO.

DRAWING	SHEET	PAGE	REV
108007	5	0	37

DATE	DWN	RE	IV	PROFESSIONAL ENGINEER	PE DISC.	PE#	PE EXP.	
02-22-2006	AJL2	LAL3		KERSI J. DALAL	MECHANICAL	M 16690	3/31/2006	REVISED PER FCT-031027

RASTER=108007s5.dgn
DGN=108007s5.dgn
CAD User: AJL2 Date: 02-22-2006

DNPGIC
3 Size

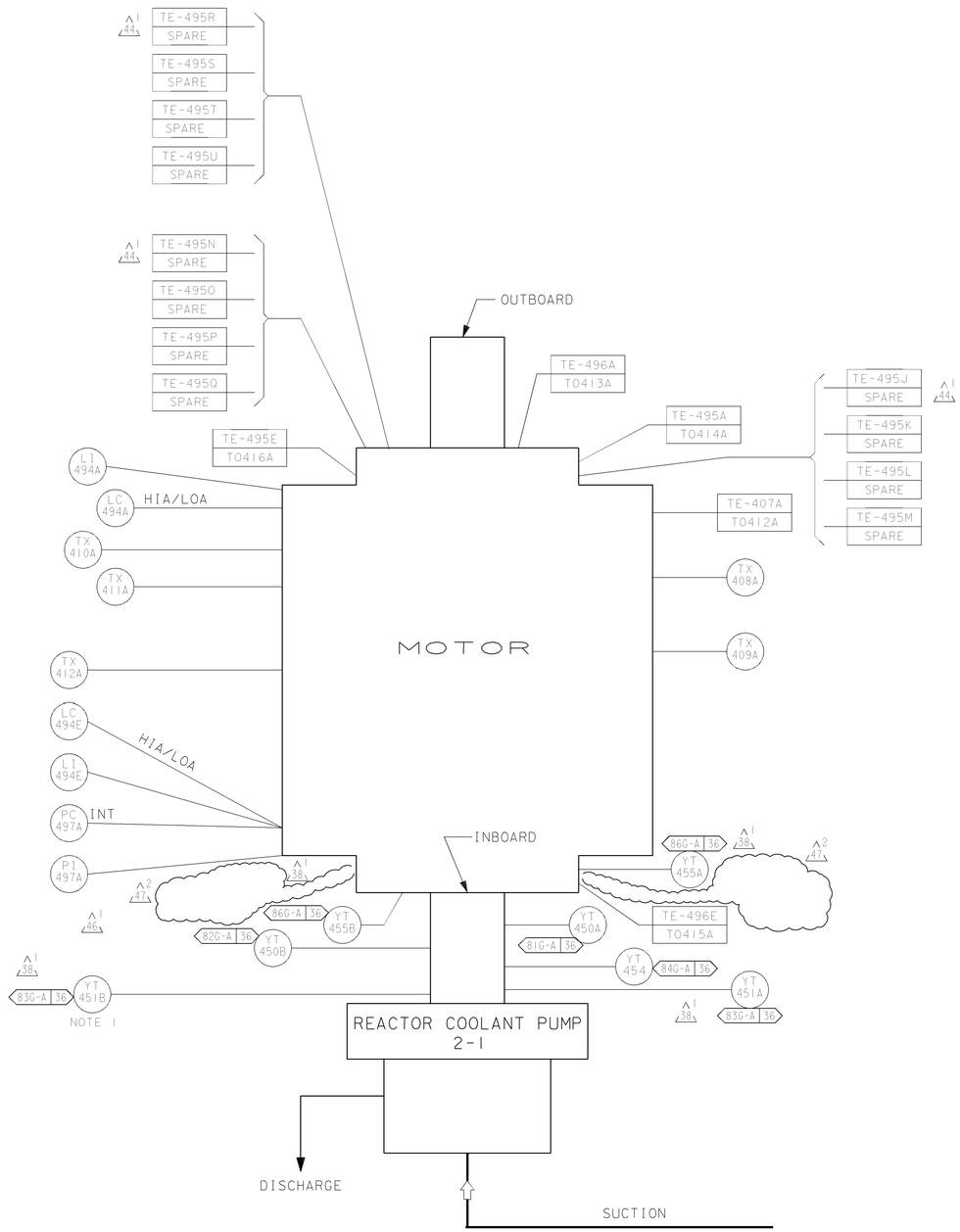

INSTRUMENT		PUMP 2-1	PUMP 2-2	PUMP 2-3	PUMP 2-4
UPPER OIL RESERVOIR FOR UPPER RADIAL AND THRUST BEARING		LC-494A	LC-494B	LC-494C	LC-494D
		LI-494A	LI-494B	LI-494C	LI-494D
LOWER OIL RESERVOIR		LC-494E	LC-494F	LC-494G	LC-494H
		LI-494E	LI-494F	LI-494G	LI-494H
STATOR WINDING COMPUTER POINT NO.	SLOT 52	TE-407A T0412A	TE-407B T0432A	TE-407C T0452A	TE-407D T0472A
STATOR WINDING	SLOT 64	TX-408A	TX-408B	TX-408C	TX-408D
	SLOT 76	TX-409A	TX-409B	TX-409C	TX-409D
	SLOT 106	TX-410A	TX-410B	TX-410C	TX-410D
	SLOT 10	TX-411A	TX-411B	TX-411C	TX-411D
	SLOT 22	TX-412A	TX-412B	TX-412C	TX-412D
THRUST BEARING UPPER SHOE. COMPUTER POINT NO.		TE-495A	TE-495K 1/45	TE-495C	TE-495D
		T0414A	T0434A	T0454A	T0474A
THRUST BEARING LOWER SHOE. COMPUTER POINT NO.		TE-495E	TE-495F	TE-495G	TE-495H
		T0416A	T0436A	T0456A	T0476A
UPPER RADIAL BEARING COMPUTER POINT NO.		TE-496A	TE-496B	TE-496C	TE-496D
		T0413A	T0433A	T0453A	T0473A
LOWER RADIAL BEARING COMPUTER POINT NO.		TE-496E	TE-496F	TE-496G	TE-496H
		T0415A	T0435A	T0455A	T0475A
THRUST BEARING UPPER SHOE		TE-495J	TE-495B 1/45	TE-495L	TE-495M
		SPARE	FAILED SPARE	SPARE	SPARE
THRUST BEARING LOWER SHOE 16/36 1/44		TE-495N	TE-495O	TE-495P	TE-495Q 2/40
		SPARE	SPARE	SPARE	SPARE
UPPER RADIAL BEARING		TE-495R	TE-495S	TE-495T	TE-495U
		SPARE	SPARE	SPARE	SPARE
3/47					
OIL LIFT PUMP PRESSURE		PC-497A	PC-497B	PC-497C	PC-497D
		PI-497A	PI-497B	PI-497C	PI-497D
MOTOR SHAFT RADIAL VIBRATION	X-PROBE	YT-450A	YT-460A	YT-470A	YT-480A
	Y-PROBE	YT-450B	YT-460B	YT-470B	YT-480B
PUMP SHAFT RADIAL VIBRATION	X-PROBE	YT-451A	YT-461A	YT-471A	YT-481A
	Y-PROBE	YT-451B	YT-461B	YT-471B	YT-481B
KEYPHASOR		YT-454	YT-464	YT-474	YT-484
					1/46
VELOCITY-X (CHANNEL A)		YT-455A	YT-465A	YT-475A	YT-485A
VELOCITY-Y (CHANNEL B)		YT-455B	YT-465B	YT-475B	YT-485B

NOTE 3

NOTE 4 1/38

NOTES:

1. TEMPORARY READOUT FOR SELECTED PUMP MONITORING CONNECT TO VIBRATION TRANSMITTER AS REQUIRED. 51A-D
2. DELETED 1/47
3. FOR INSTRUMENT ORIENTATION, SEE DWG NO.054174,FIG.926,SHT.29. 55A-D
4. INSTRUMENT SCHEMATIC COORDINATES OF VIBRATION TRANSMITTERS FOR PUMPS 2, 3 & 4 ARE NOT PROVIDED ON THIS SHEET; SEE SHEETS 8H, 8I & 8J OF DWG 108036 58D-D 1/38

UNIT 2

REACTOR COOLANT PUMPS INSTRUMENTATION

1/46

P G & E CO.		108007	REV. 47
SHEET 5A	PAGE 0		

2/13/03	RHSI	FXC2	-	FRANCIS C. LING	MECHANICAL	M 16098	12/31/2003	Revised per FCT 027276
DATE	DWN	RE	IV	PROFESSIONAL ENGINEER	PE DISC.	PE#	PE EXP.	

CAD User:RHSI Date: 2-12-2003
DGN=8007S5A.DGN

NOTES: (CONT'D)

12. 1" GLOBE VALVE, ANCHOR DARLING 1878, STOCK CODE #94-3771, DWG.6006473-157 (30-B), (37-B), (35-B) (33-B)

13. 3/4" GLOBE VALVE, ANCHOR DARLING 1878 GB STOCK CODE # 94-2820, DWG.6006473-97 (32-D), (34-A)

14. 3/4" GLOBE VALVE, ANCHOR DARLING 1878 GB STOCK CODE # 95-2755, DWG.6006473-97 (32-D)

15. 3/4" CHECK VALVE, ANCHOR DARLING 1878 RC, S/C #95-2827, DWG. 6011930-80 (38-D)

16. 3/4" GLOBE VALVE, ANCHOR DARLING 1878 S/C 95-2755, DWG 6011930-79 (30-A) (34-A)

17. 3/4" GLOBE VALVE, VELAN W04 9076Z-13AA S/C 95-1989 DWG. 6011929-3 (32-D)

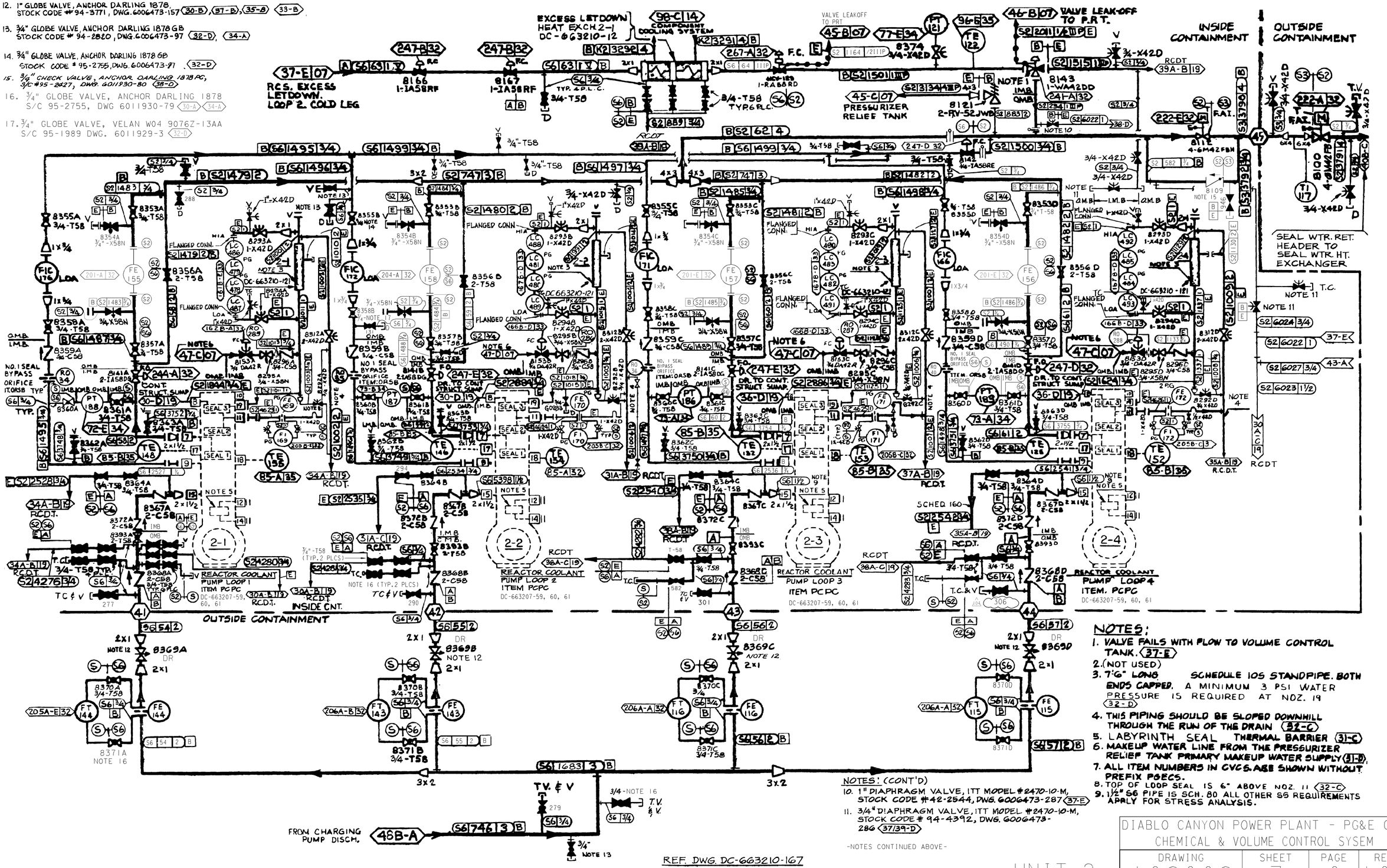

NOTES:

1. VALVE FAILS WITH FLOW TO VOLUME CONTROL TANK. (37-E)
2. (NOT USED)
3. 7'6" LONG SCHEDULE 105 STANDPIPE. BOTH ENDS CAPPED. A MINIMUM 3 PSI WATER PRESSURE IS REQUIRED AT NOZ. 19 (32-D)
4. THIS PIPING SHOULD BE SLOPED DOWNHILL THROUGH THE RUN OF THE DRAIN (32-C)
5. LABYRINTH SEAL THERMAL BARRIER (31-C)
6. MAKEUP WATER LINE FROM THE PRESSURIZER RELIEF TANK PRIMARY MAKEUP WATER SUPPLY (31-D)
7. ALL ITEM NUMBERS IN CVCS ARE SHOWN WITHOUT PREFIX P6EC5.
8. TOP OF LOOP SEAL IS 6" ABOVE NOZ. 11 (32-C)
9. 1½" S6 PIPE IS SCH. 80 ALL OTHER S6 REQUIREMENTS APPLY FOR STRESS ANALYSIS.

NOTES: (CONT'D)

10. 1" DIAPHRAGM VALVE, ITT MODEL #2470-10-M, STOCK CODE #42-2544, DWG. 6006473-287 (37-E)
11. 3/4" DIAPHRAGM VALVE, ITT MODEL #2470-10-M, STOCK CODE # 94-4392, DWG. 6006473-286 (37/39-D)

-NOTES CONTINUED ABOVE-

DIABLO CANYON POWER PLANT - PG&E CO.
CHEMICAL & VOLUME CONTROL SYSEM

DRAWING	SHEET	PAGE	REV
108008	3	0	104

UNIT 2

DATE	DWN	RE	IV	PROFESSIONAL ENGINEER	PE DISC.	PE#	PE EXP.	
04-18-2013	ZNS4	FxC2	KJD3	NOT REQUIRED	N/A	N/A	N/A	REVISED PER DFT-7*2077

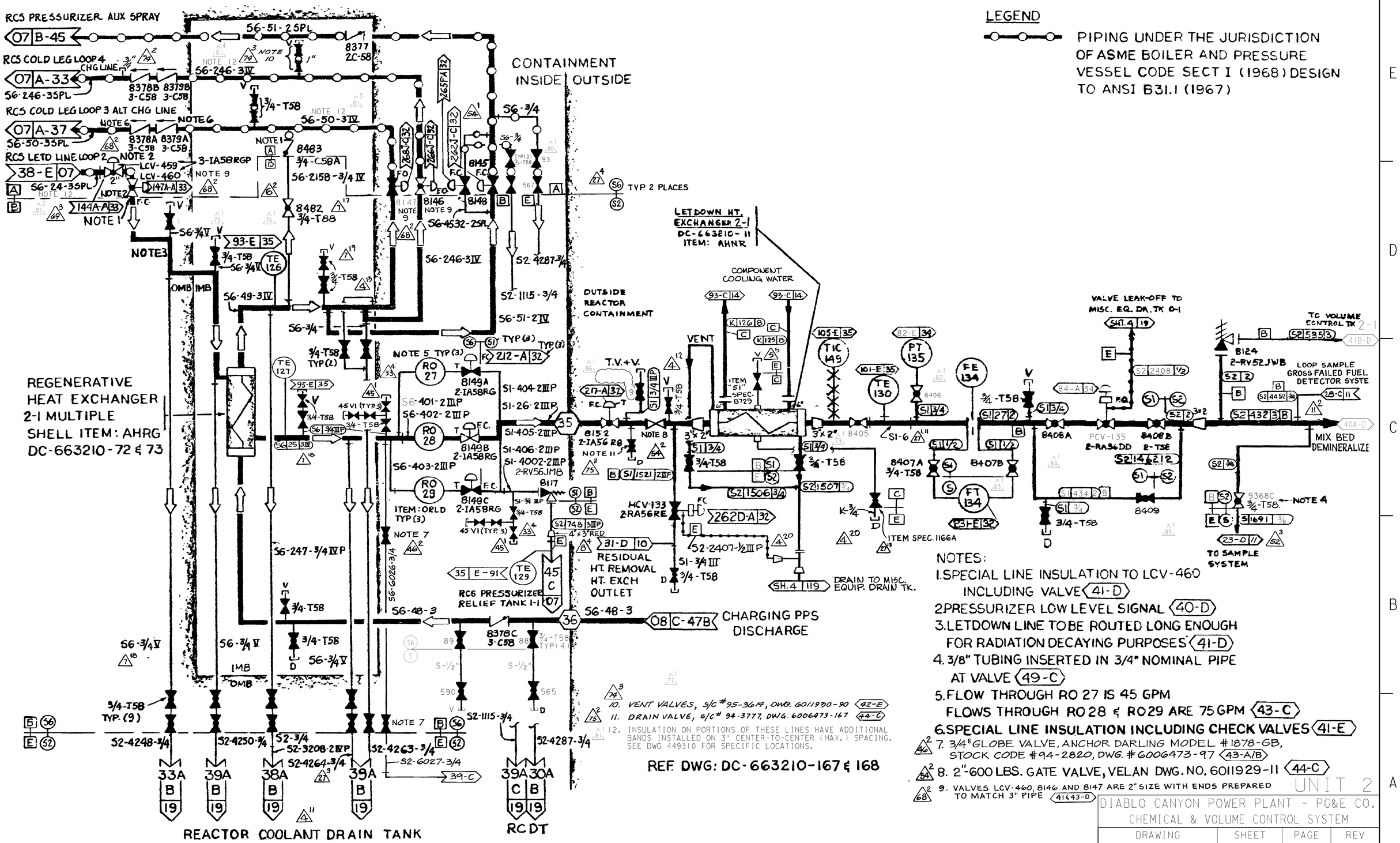

LEGEND

PIPING UNDER THE JURISDICTION OF ASME BOILER AND PRESSURE VESSEL CODE SECT I (1968) DESIGN TO ANSI B31.1 (1967)

NOTES:

1. SPECIAL LINE INSULATION TO LCV-460 INCLUDING VALVE (41-D)
2. PRESSURIZER LOW LEVEL SIGNAL (40-D)
3. LETDOWN LINE TO BE ROUTED LONG ENOUGH FOR RADIATION DECAYING PURPOSES (41-D)
4. 3/8" TUBING INSERTED IN 3/4" NOMINAL PIPE AT VALVE (49-C)
5. FLOW THROUGH RO 27 IS 45 GPM FLOWS THROUGH RO 28 & RO 29 ARE 75 GPM (43-C)
6. SPECIAL LINE INSULATION INCLUDING CHECK VALVES (41-E)
7. 3/4" GLOBE VALVE, ANCHOR DARLING MODEL #1878-GB, STOCK CODE #94-2820, DWG. #6006473-97 (43-A/B)
8. 2"-600 LBS. GATE VALVE, VELAN DWG. NO. 6011929-11 (44-C)
9. VALVES LCV-460, 8146 AND 8147 ARE 2" SIZE WITH ENDS PREPARED TO MATCH 3" PIPE (41&43-D)

10. VENT VALVES, S/C #95-3614, DWG. 6011930-90 (42-E)
11. DRAIN VALVE, S/C# 94-3777, DWG. 6006473-167 (44-C)
12. INSULATION ON PORTIONS OF THESE LINES HAVE ADDITIONAL BANDS INSTALLED ON 3" CENTER-TO-CENTER (MAX.) SPACING. SEE DWG 449310 FOR SPECIFIC LOCATIONS.

REF. DWG: DC-663210-167 & 168

UNIT 2

DIABLO CANYON POWER PLANT - PG&E CO.
CHEMICAL & VOLUME CONTROL SYSTEM

DRAWING	SHEET	PAGE	REV
108008	4	0	86

DATE	DWN	RE	IV	PROFESSIONAL ENGINEER	PE DISC.	PE#	PE EXP.	
12-02-2009	RHSI	FxC2		KERSI J. DALAL	MECHANICAL	M 16690	3/31/2010	REVISED PER DFT-7*661

RASTER=00052019.DGN
DGN=00052019.DGN
CAD User: RHSI Date: 12-02-2009

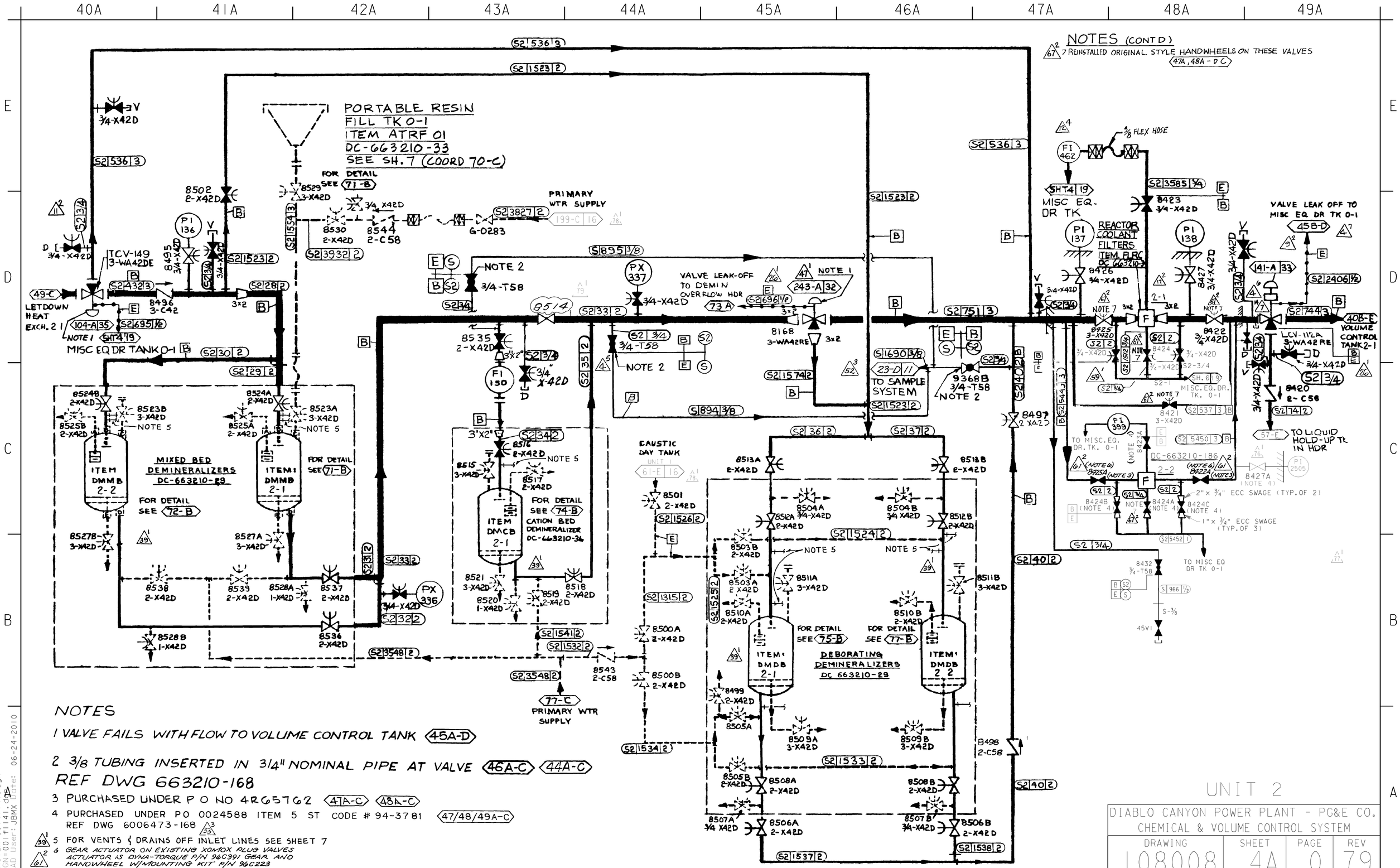
40A
41A
42A
43A
44A
45A
46A
47A
48A
49A
PORTABLE RESIN FILL TK 0-1
ITEM ATRF 01
DC-663210-33
SEE SH. 7 (COORD 70-C)
PRIMARY WTR SUPPLY
LETDOWN HEAT EXCH. 2-1
MISC EQ DR TANK 0-1
MIXED BED DEMINERALIZERS
DC-663210-89
ITEM DMMB 2-2
ITEM DMMB 2-1
ITEM DMCB 2-1
CATION BED DEMINERALIZER
DC-663210-36
CAUSTIC DAY TANK
VALVE LEAK-OFF TO DEMIN OVERFLOW HDR
TO SAMPLE SYSTEM
REACTOR COOLANT FILTERS
VALVE LEAK OFF TO MISC EQ DR TK 0-1
VOLUME CONTROL TANK 2-1
TO LIQUID HOLD-UP TK IN HDR
DEBORATING DEMINERALIZERS
DC 663210-89
ITEM DMDB 2-1
ITEM DMDB 2-2
PRIMARY WTR SUPPLY
TO MISC EQ DR TK 0-1
NOTES (CONT'D)
7 REINSTALLED ORIGINAL STYLE HANDWHEELS ON THESE VALVES
NOTES
1 VALVE FAILS WITH FLOW TO VOLUME CONTROL TANK
2 3/8 TUBING INSERTED IN 3/4" NOMINAL PIPE AT VALVE
REF DWG 663210-168
3 PURCHASED UNDER P O NO 4R65762
4 PURCHASED UNDER PO 0024588 ITEM 5 ST CODE # 94-3781
REF DWG 6006473-168
5 FOR VENTS & DRAINS OFF INLET LINES SEE SHEET 7
6 GEAR ACTUATOR ON EXISTING XOMOX PLUG VALVES ACTUATOR IS DYNA-TORQUE P/N 96C391 GEAR AND HANDWHEEL W/MOUNTING KIT P/N 96C223
UNIT 2
DIABLO CANYON POWER PLANT - PG&E CO.
CHEMICAL & VOLUME CONTROL SYSTEM
DRAWING 108008
SHEET 4A
PAGE 0
REV 79
06-24-2010 JBMX AGB2 KERSI J. DALAL MECHANICAL M 16690 3/31/2012 REVISED PER DFT-7*829
DATE DWN RE IV PROFESSIONAL ENGINEER PE DISC. PE# PE EXP.

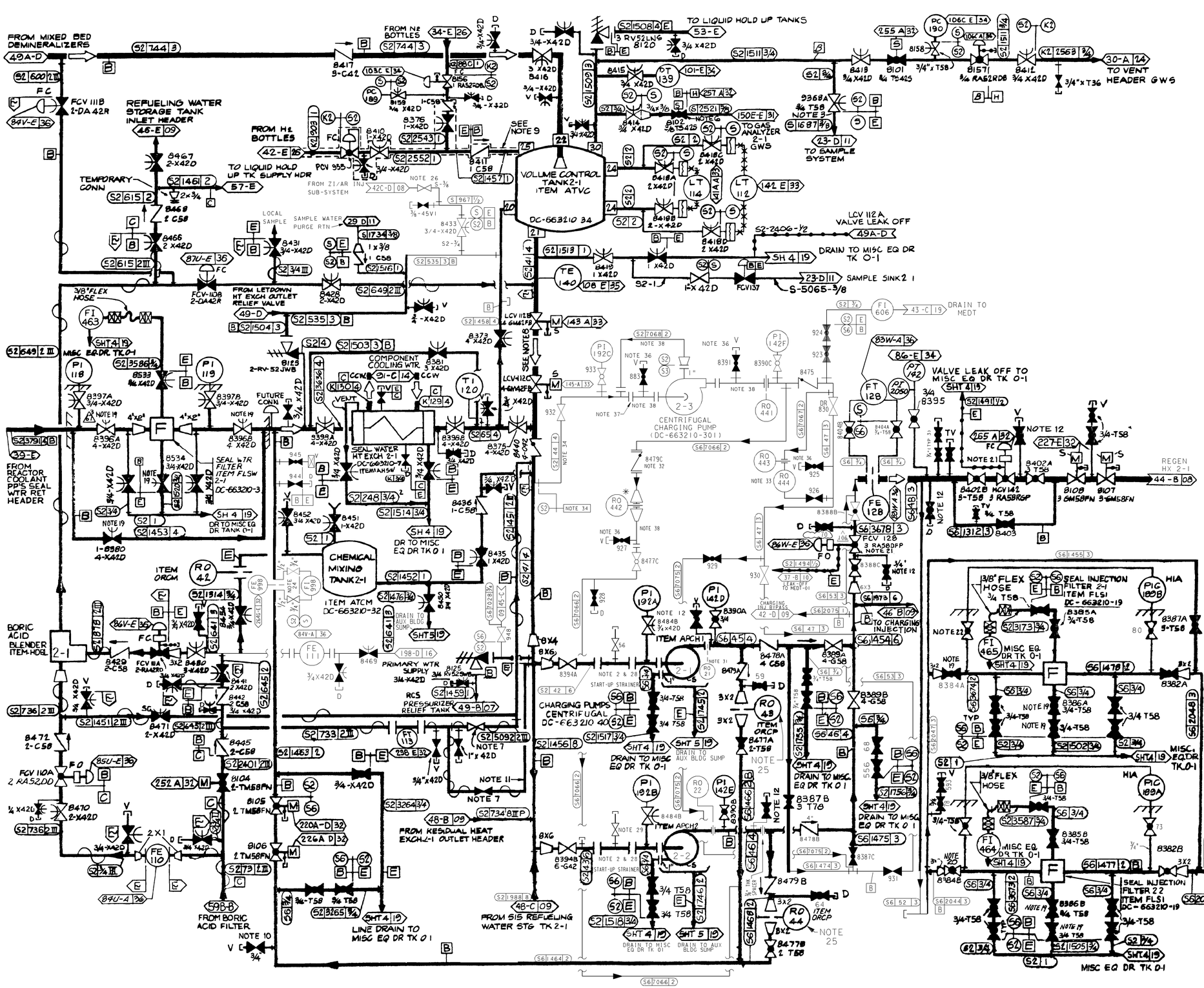

NOTES

1. SPECIAL SPRING LOADED CHECK VALVE (42B-D)
2. TEMPORARY STRAINER IS PLACED IN THE SPOOL PIECE DURING FLUSHING OPERATIONS STRAINER MUST BE REMOVED BEFORE PLANT START-UP (44B-C)
3. 3/8" TUBING INSERTED IN 3/4" NOMINAL PIPE AT VALVE (45B-E)
4. SPECIAL LINE INSULATION, INCL CHK VLV (49B-D)
5. DELETED
6. VALVE ACTUATED AUTOMATICALLY BY GAS ANALYZER 1 & 6 CHANNEL AC 1067, (44B-E)
7. BALL VALVE, DC-6011927-23, S/C 95-5002 (COORD 43B-B)
8. PIPE BETWEEN LCV-112 B AND LCV-112 C (43B-D) IS SCH 40S PER SPEC S3
9. DASHED LINES INDICATE GUARD ON PIPING (43B-E) GUARD PIPE ON HYDROGEN LINES IS SEISMICALLY QUALIFIED (REF. AR#A0629995 AND A0642979.)
10. ANCHOR/DARLING, MODEL 1878, BOLTED BONNET, GATE VALVE, P O # 722739 ITEM 3, DC 6006473 7 (41B A)
11. THE SECTION OF LINE S2-733-2 III WHICH PENETRATES THE RHR HX ROOM HAS AN ADDITIONAL 2" OF FIBERGLASS INSULATION (43B-B)
12. 3/4" ANCHOR DARLING, MODEL 1878GB, S/C #94 2820 DC 6006473-97 (44B-B) (46B-C) (45B-C)
13. DELETED
14. 3/4 - 600# VELAN S W GATE VALVE, DC-6006473-167
15. DELETED
17. DELETED
18. DELETED
19. REINSTALLED ORIGINAL STYLE HANDWHEELS ON THESE VALVES (40B, 41B-C), (46B, 8A)
20. 2" ANCHOR DARLING MODEL 1878 GB, S/C # 94-3773 DC-6006473-159 (REACH ROD DELETED) (46B-A)
21. VALVES HCV-142 AND FCV 128 ARE 2 SIZE WITH ENDS PREPARED TO MATCH 3" PIPE (45B-C) (46B-C)
22. VALVE, S/C # 95 2755 DWG 6011930 79 (46B B)
23. DELETED
24. 3/4" VALVES (NORMALLY OPEN) STOCK CODE 94-4955 (42B-C)
25. RESTRICTING ORIFICES RO-43 AND RO-44 RECORD DWG. DC-663210-277 (44B-B) (45B-A)
26. STOCK CODE 77-7585
27. DELETED
28. SPOOL PIECE AND FLANGES ARE "S2" SCH 40.
29. 3/4" -600# GLOBE VALVE (VELAN) S/C 95-5897 (DC 6006473-168). (44B-B)
30. DELETED
31. RO-21 RESTRICTING ORIFICE FOR CCP 2-1 WITH SERIAL NO. 49766 (BRAIDWOOD SPARE) IMPELLER ONLY (DWG. 6015597-2)
32. NOZZLE CHECK VALVE FROM FLOWSERVE: DC-6011930-128 (44B-C)
33. THE LTOP PRO ASSEMBLY CONSISTS OF A PRESSURE REDUCING ORIFICE (PRO), A SWAGE-TYPE REDUCER, AND A FLOW BAFFLE PER DRAWING 460584 (45B-C)
34. CCP 2-3 SUCTION PIPING FROM INSIDE THE RHR HX ROOM TO THE PUMP CONNECTION IS S2 PIPE CLASS EXCEPT THE WALL THICKNESS IS SCHEDULE 40S (43B-C)
35. SEE 108008, SHEET 9 FOR PUMP VENTS AND DRAINS (44B-C)
36. QUICK DISCONNECT FITTINGS FOR VENTS IN ACCORDANCE WITH THE MAINTENANCE MODIFICATION PACKAGE (MMP) M000031, REV. 4 (44B-C) (45B-C) (2 PLACES)
37. 3/16" THK SS. SPACER
38. REMOVABLE SPOOLS FOR USE OF OVERHEAD MONORAIL (44B-C) (45B-C) (3 PLACES)

DIABLO CANYON POWER PLANT - PG&E CO.
CHEMICAL & VOLUME CONTROL SYSTEM

DRAWING	SHEET	PAGE	REV
108008	4B	0	06

DATE	DWN	RE	IV	PROFESSIONAL ENGINEER	PE DISC.	PE #	PE EXP.	
04-01-2013	ZNS4	FxC2	KJD3	NOT REQUIRED	N/A	N/A	N/A	REVISED PER DFT-7*2091

RASTER=eru10638.dgn
DGN=eru10638.dgn
CAD User-ZNS4 Date: 04-01-2013

3 Size

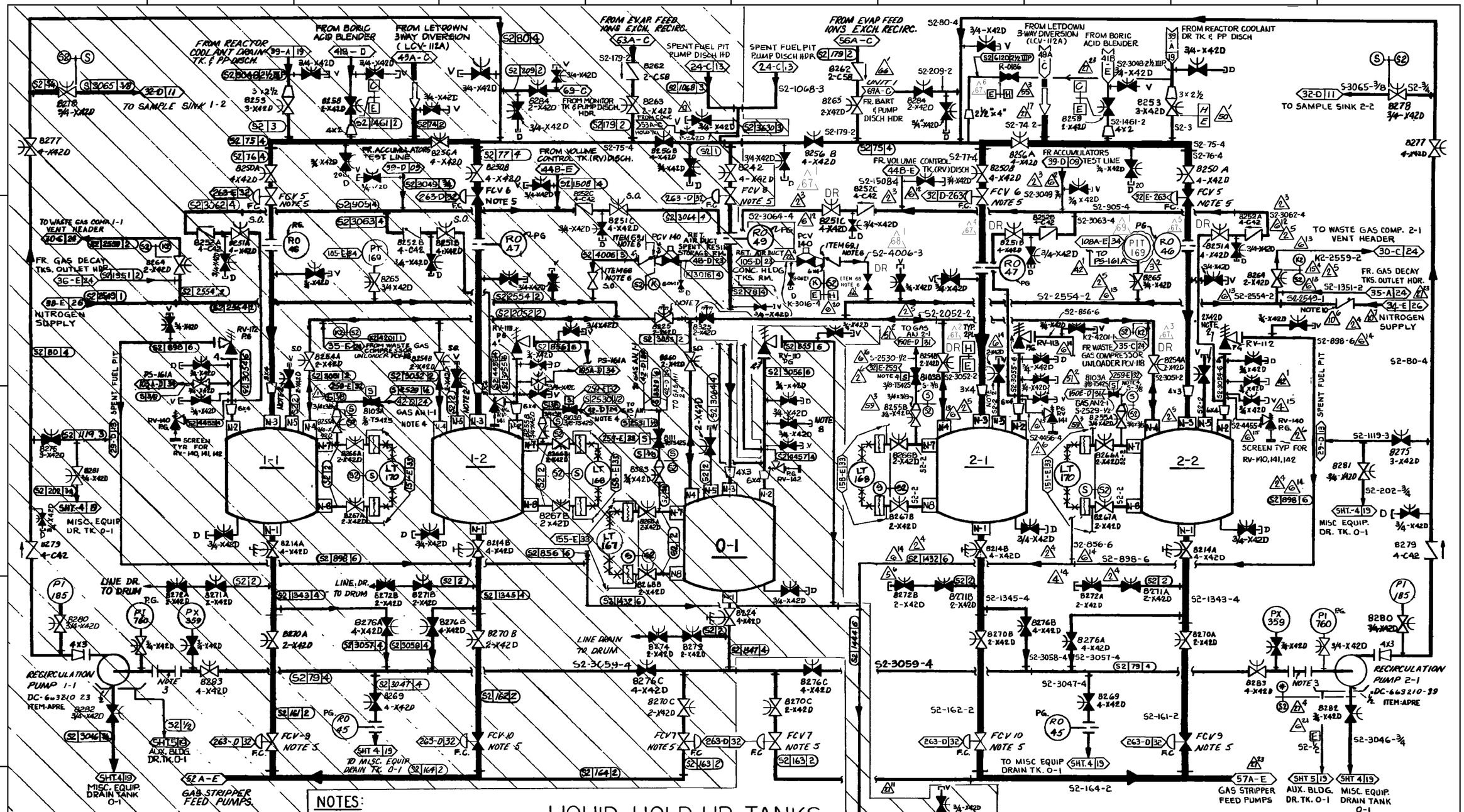

NOTES:

1. TANKS BY PG&E (54-A)
2. TO BE USED FOR START-UP, THEN CAPPED (51-C)
3. TEMPORARY STRAINER IS PLACED IN THE SPOOL PIECE DURING INITIAL FLUSHING OPERATIONS. STRAINER MUST BE REMOVED BEFORE PLANT START UP. (51-B)
4. VALVE ACTUATED AUTOMATICALLY BY GAS ANALYZER, I&C CHANNEL NO. AC-1067. (52-C)
5. PG&E VALVES COVERED BY SPEC. 0732. (51-E)
6. P.G.&E. VALVES COVERED BY SPEC. 8729. (54-D)
7. INTERLOCKED REACH RODS WILL BE USED TO ENSURE ONE VALVE REMAINS OPEN AT ALL TIMES. (54-D)
8. FUTURE CONNECTION TO PS-161 IF OPERATING CONDITION REQUIRES (55-C)
9. ALL PIPING IS PG&E CLASS E, EXCEPT AS NOTED (26)
10. KEROTEST MODEL 30608 OR EQUIV. 1", 600# CARBON STEEL CHECK VALVE WITH SOFT SEATS (V.TON) FOR GAS SERVICE VALVE TYPE TO BE DOCUMENTED ON AS-BUILT. (50-D)

LIQUID HOLD-UP TANKS

NOTE 1 DC-663233-3

REF. DWG.: DC-663210-169

UNIT 2

DIABLO CANYON POWER PLANT - PG&E CO.
CHEMICAL & VOLUME CONTROL SYSTEM

DRAWING	SHEET	PAGE	REV
108008	5	0	69

DATE	DWN	RE	IV	PROFESSIONAL ENGINEER	PE DISC.	PE#	PE EXP.	
07-27-2011	AJFJ	RxG2		KERSI J. DALAL	MECHANICAL	M 16690	3/31/2012	REVISED PER DAS-6*421

RASTER=108008s5.dgn
DGN=108008s5.dgn
CAD User:AJFJ Date:07-27-2011

INPG2ND
I Size

50A | 51A | 52A | 53A | 54A | 55A | 56A | 57A | 58A | 59A

NOTES:

1. FOR DETAILS REFER TO SHEET 5C (52A-B)
2. STRAINER REQUIRES FLANGE AND SUCTION PIPING FLEXIBLE ENOUGH TO FACILITATE INSTALLATION OF PANCAKE STRAINERS FOR START-UP. (51A-E) (54A-L)
3. FOR VENTS & DRAINS OFF INLET LINES SEE SHEET 7 (39)
4. SPEC 0722, ITEM 21 (51A-A) (58A-A)
5. ALL PIPING ON THIS DRAWING IS PG&E CODE CLASS E, EXCEPT AS NOTED.
6. BLANK PLATE INSTALLED PER "S2" SPEC, CODE CLASS E. (58A-B)

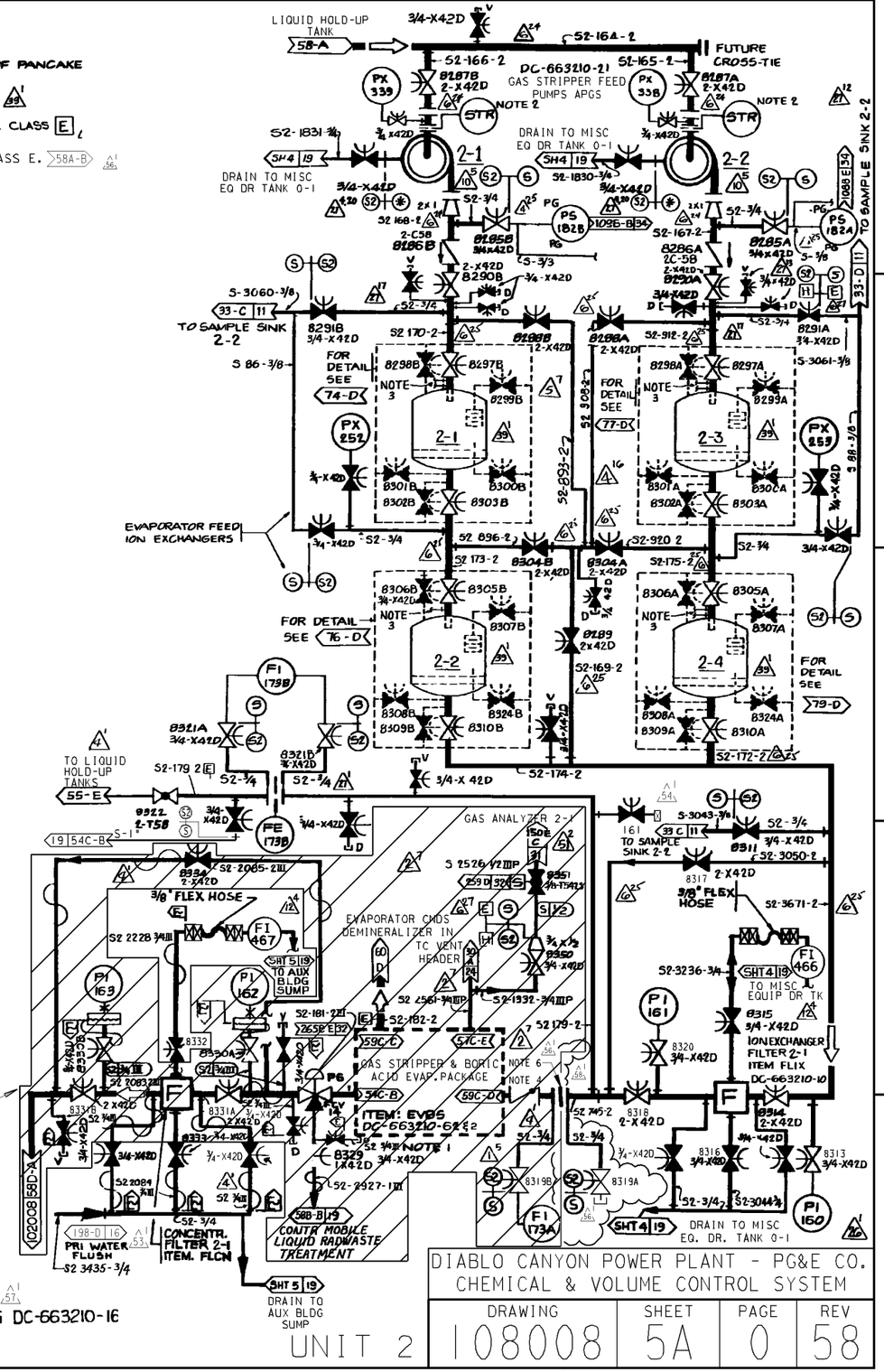

DIABLO CANYON POWER PLANT - PG&E CO.
CHEMICAL & VOLUME CONTROL SYSTEM

DRAWING	SHEET	PAGE	REV
108008	5A	0	58

RASTER=8008s5a.dgn
DGN=8008s5a.dgn
CAD User: CNHK Date: 07-21-2011

INPGIC
1 Size

07-21-2011	CNHK	RxG2		KERSI J. DALAL	MECHANICAL	M 16690	3/31/2012	REVISED PER DFT-7*1265-0
DATE	DWN	RE	IV	PROFESSIONAL ENGINEER	PE DISC.	PE#	PE EXP.	

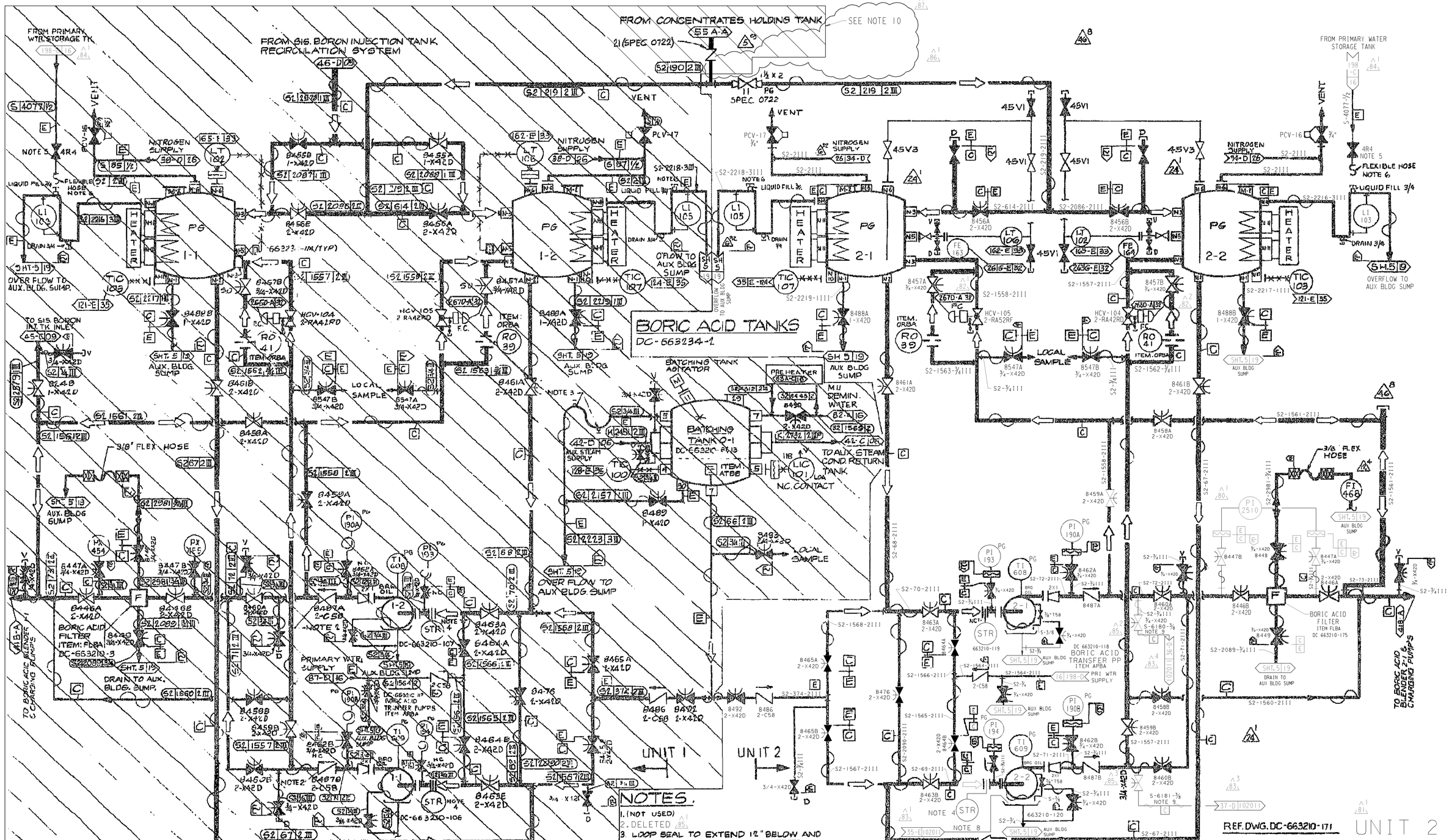

NOTES.

1. (NOT USED)
2. DELETED
3. LOOP SEAL TO EXTEND 12" BELOW AND ABOVE OVERFLOW NOZZLE
4. STRAINER REQUIRES FLANGE AND SUCTION PIPING FLEXIBLE ENOUGH TO FACILITATE INSTALLATION OF PANCAKE STRAINERS FOR START-UP
5. SEE VALVE SPEC. DWG. 053479 & BID SPEC. 8802
6. BORIC ACID TANKS #1 & 2 LOOP SEALS ARE SERVICED BY A COMMON FLEXIBLE HOSE
7. THROTTLE TO MAINTAIN BORIC ACID TRANSFER PUMP FLOW BELOW 85 GPM.
8. 1" x .065 WALL SS TUBING FROM SAMPLE SINK 0-1.
9. INSULATE WITH 2 LAYERS OF LEWCO FT60 OR EQUIV. INSULATION
10. FOR HATCHED AREAS, SEE UNIT 1 DRAWING.

DIABLO CANYON POWER PLANT - PG&E CO.
CHEMICAL & VOLUME CONTROL SYSTEM

DRAWING	SHEET	PAGE	REV
108008	5B	0	87

DATE	DWN	RE	IV	PROFESSIONAL ENGINEER	PE DISC.	PE #	PE EXP.	
07-21-2011	CNHK	RxG2		KERSI J. DALAL	MECHANICAL	M 16690	3/31/2012	REVISED PER DFT-7*1265-0

RASTER:8008s5b.dgn
DGN:8008s5b.dgn
CAD User: CNHK Date: 07-21-2011
GRAPHIC 3 Size

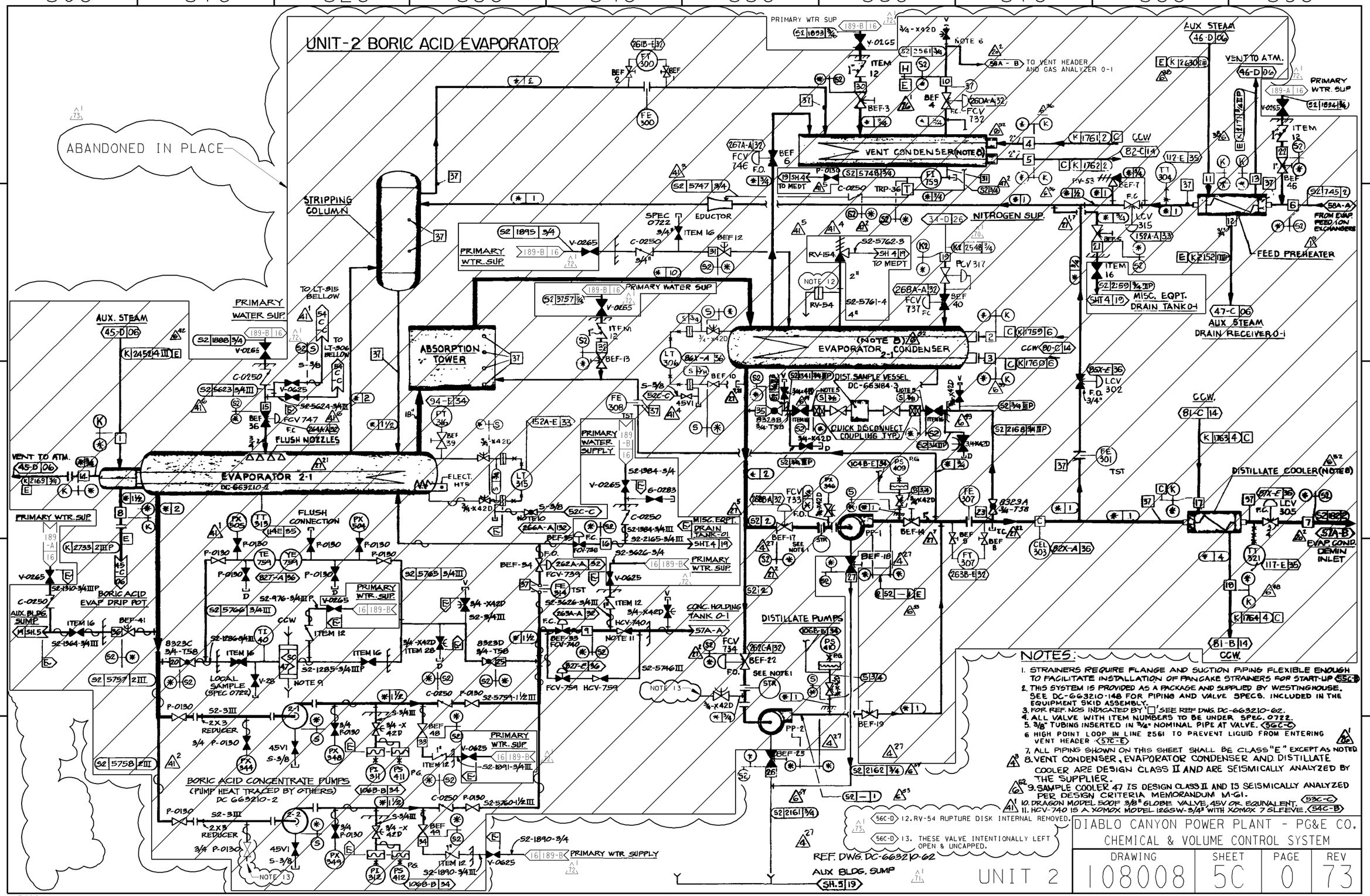

NOTES:

1. STRAINERS REQUIRE FLANGE AND SUCTION PIPING FLEXIBLE ENOUGH TO FACILITATE INSTALLATION OF PANCAKE STRAINERS FOR START-UP (55C-B)
2. THIS SYSTEM IS PROVIDED AS A PACKAGE AND SUPPLIED BY WESTINGHOUSE. SEE DC-663210-148 FOR PIPING AND VALVE SPECS. INCLUDED IN THE EQUIPMENT SKID ASSEMBLY.
3. FOR REF. NOS INDICATED BY '□' SEE REF DWG. DC-663210-62.
4. ALL VALVE WITH ITEM NUMBERS TO BE UNDER SPEC. 0722.
5. 3/8" TUBING INSERTED IN 3/4" NOMINAL PIPE AT VALVE. (56C-C)
6. HIGH POINT LOOP IN LINE 2561 TO PREVENT LIQUID FROM ENTERING VENT HEADER (57C-E)
7. ALL PIPING SHOWN ON THIS SHEET SHALL BE CLASS "E" EXCEPT AS NOTED
8. VENT CONDENSER, EVAPORATOR CONDENSER AND DISTILLATE COOLER ARE DESIGN CLASS II AND ARE SEISMICALLY ANALYZED BY THE SUPPLIER.
9. SAMPLE COOLER 47 IS DESIGN CLASS II AND IS SEISMICALLY ANALYZED PER DESIGN CRITERIA MEMORANDUM M-61.
10. DRAGON MODEL 800F 3/8" GLOBE VALVE, 45V OR EQUIVALENT. (53C-C)
11. HCV-740 IS A XOMOX MODEL 126SW-3/4" WITH XOMOX 7 SLEEVE. (54C-B)
12. RV-54 RUPTURE DISK INTERNAL REMOVED. (56C-D)
13. THESE VALVE INTENTIONALLY LEFT OPEN & UNCAPPED. (56C-D)

DIABLO CANYON POWER PLANT - PG&E CO.
CHEMICAL & VOLUME CONTROL SYSTEM

DRAWING	SHEET	PAGE	REV
108008	5C	0	73

DATE	DWN	RE	IV	PROFESSIONAL ENGINEER	PE DISC.	PE#	PE EXP.	
04-22-2011	AJFJ	FxC2		KERSI J. DALAL	MECHANICAL	M 16690	3/31/2012	REVISED PER DDN-2*560

RASTER=eru10634.DGN
DGN=eru10634.DGN
CAD User: AJFJ Date: 04-22-2011

INPGIC
I Size

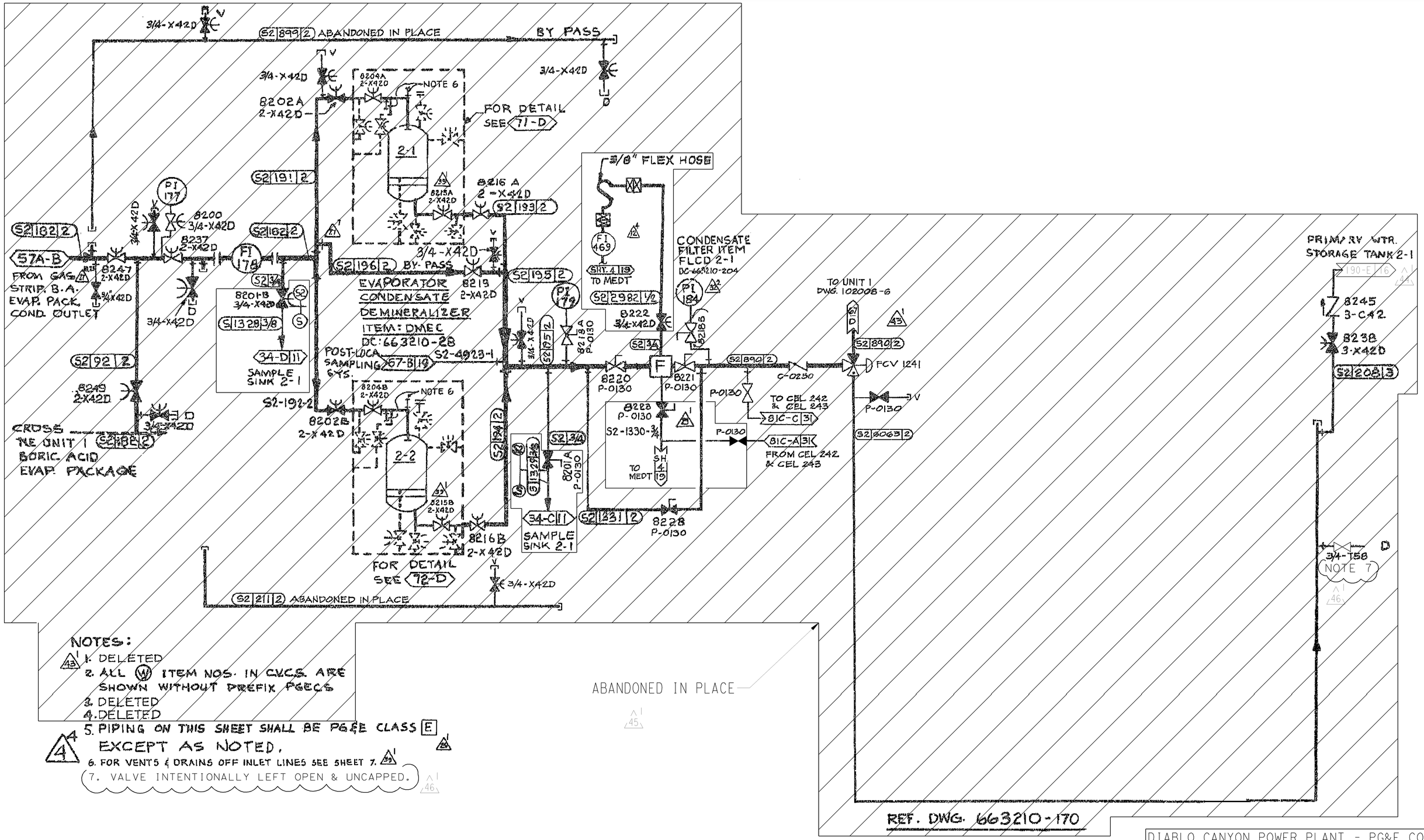

NOTES:

1. DELETED
2. ALL (W) ITEM NOS. IN CVCS ARE SHOWN WITHOUT PREFIX PGECS
3. DELETED
4. DELETED
5. PIPING ON THIS SHEET SHALL BE PG&E CLASS E EXCEPT AS NOTED.
6. FOR VENTS & DRAINS OFF INLET LINES SEE SHEET 7.
7. VALVE INTENTIONALLY LEFT OPEN & UNCAPPED.

DIABLO CANYON POWER PLANT - PG&E CO.
CHEMICAL & VOLUME CONTROL SYSTEM

UNIT 2

DRAWING	SHEET	PAGE	REV
108008	6	0	46

DATE	DWN	RE	IV	PROFESSIONAL ENGINEER	PE DISC.	PE#	PE EXP.	
2011-07-20	CNHK	RxG2		KERSI J. DALAL	MECHANICAL	M 16690	3/31/2012	REVISED PER DFT-7*1265-0

RASTER=108008s6.dgn
DGN=108008s6.dgn
CAD User: CNHK Date: 2011-07-21

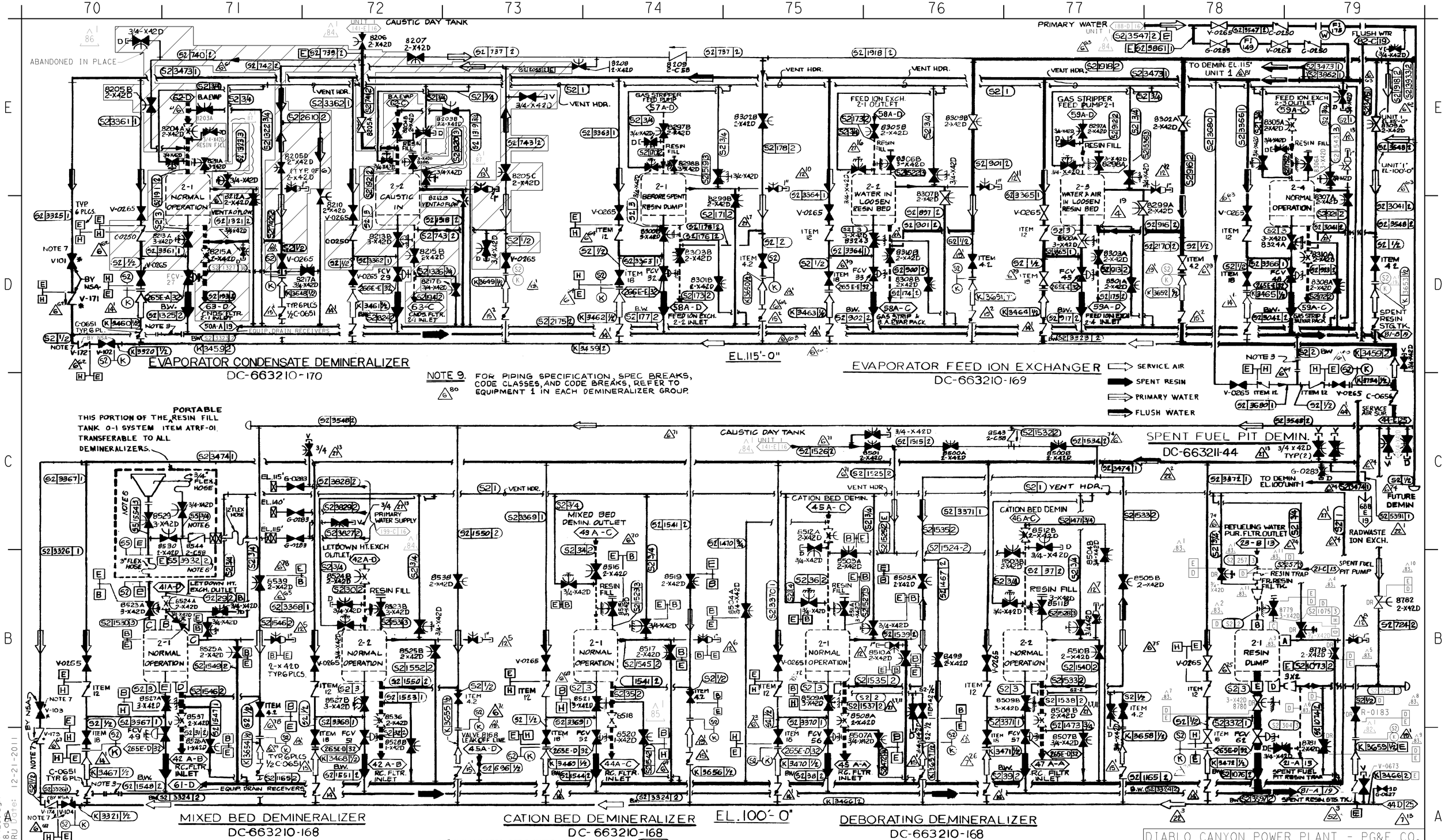

DIABLO CANYON POWER PLANT - PG&E CO.
CHEMICAL & VOLUME CONTROL SYSTEM

DRAWING	SHEET	PAGE	REV
108008	7	0	87

UNIT 2

DATE	DWN	RE	IV	PROFESSIONAL ENGINEER	PE DISC.	PE#	PE EXP.	
12-21-2011	MNRU	FxC2		KERSI J. DALAL	MECHANICAL	M 16690	3/31/2012	REVISED PER DFT-7*1399-0

RASTER=eru11428.dgn
DGN=eru11428.dgn
CAD User: MNRU Date: 12-21-2011

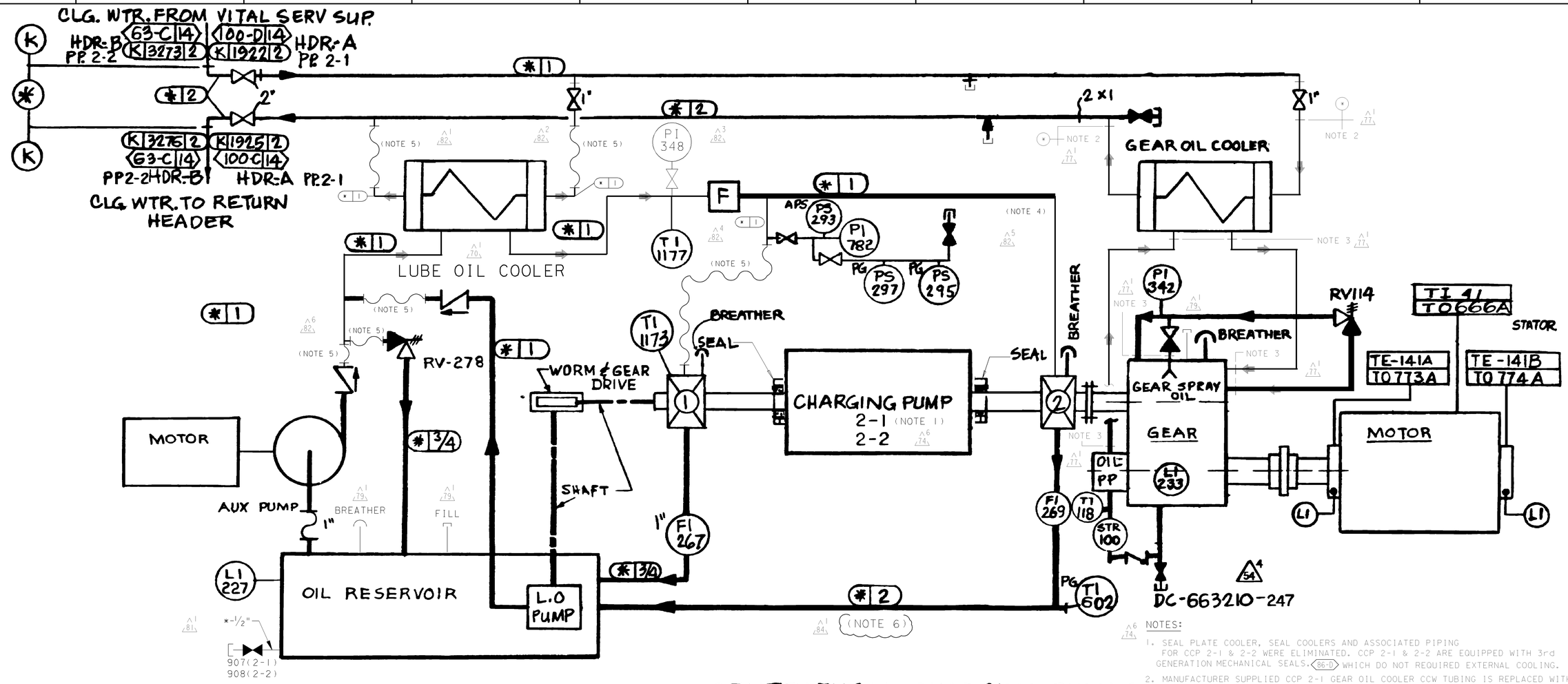

DC-663210-50

CENTRIFUGAL CHARGING PUMPS

LUBE OIL, GEAR OIL, AND SEAL FLUSH & CLR. PIPING

CHARGING PUMP	INSTRUMENT ON LUBE OIL SYSTEM										INSTRUMENT ON GEAR OIL SYSTEM					
	OIL RESEV LEVEL	RELIEF VALVE AFTER PUMP	LUBE OIL COOLER OUT	PRES BEFORE FILTER	PRES AFTER FILTER	AUTO PUMP START.	THRUST BRG. IND (1)	THRUST BRG. OUT (1)	RAD BRG OUT (2)	LUBE OIL COOLER WTR SUPPLY CROSS REF CO-ORD SCHEM.	OIL RESEV LEVEL	OIL RESEV TEMP	OIL PUMP DISCH STR	PRES. AFTER COOLER	RELIEF VALVE AFTER COOLER	GEAR COOLER WTR. SUPPLY CROSS REF CO-ORD-SCHEM.
	L1	RV	T1	P1	P1	PS	T1	F1	F1		L1	T1	STR	P1	RV	
2-1	227	278	1177	348	782	293	1173	267	269	101-B 14	233	118	100	342	114	102-B 14
2-2	228	279	1178	349	783	294	1174	268	270	63-B 14	234	119	101	343	115	64-B 14

	INBD. MOTOR BRG.	OUTBD. MOTOR BRG.	PUMP INBD. BRG. OIL	STATOR WINDING
2-1	TE 141A/T0773A	TE 141B/T0774A	TI-602	TI 41/ T0666A
2-2	TE 141C/T0775A	TE 141D/T0776A	TI-603	TI 42 / T0667A

NOTES:

1. SEAL PLATE COOLER, SEAL COOLERS AND ASSOCIATED PIPING FOR CCP 2-1 & 2-2 WERE ELIMINATED. CCP 2-1 & 2-2 ARE EQUIPPED WITH 3rd GENERATION MECHANICAL SEALS. 86-D WHICH DO NOT REQUIRED EXTERNAL COOLING.
2. MANUFACTURER SUPPLIED CCP 2-1 GEAR OIL COOLER CCW TUBING IS REPLACED WITH 1" O.D.,0.065" WALL STAINLESS STEEL TUBING. MATERIAL AND FITTINGS MEET "S" SPECIFICATION REQUIREMENTS. THE REPLACED TUBING IS CLASSIFIED AS PG&E PIPING CODE CLASS "C". 86-E 88-E

NOTES CONT.

3. MANUFACTURER SUPPLIED CCP 2-1 GEAR OIL TUBING IS REPLACED WITH 5/8" O.D.,0.049" WALL STAINLESS STEEL TUBING. MATERIAL AND FITTINGS MEET "S" SPECIFICATION REQUIREMENTS. THE REPLACED TUBING IS CLASSIFIED AS PG&E PIPING CODE CLASS "C". 86-C 87-D
4. MANUFACTURER SUPPLIED INBOARD SUPPLY TUBING IS REPLACED WITH 3/4" OD, .049" WALL STAINLESS STEEL TUBING. MATERIAL AND FITTINGS MEET "S" SPECIFICATION REQUIREMENTS.
5. TUBING HAS BEEN CHANGED TO ALL STAINLESS STEEL FLEXIBLE STYLE. FITTINGS CONFORM TO MET "S" SPECIFICATION REQUIREMENTS. (SWAGELOK OR EQUAL)
6. FOR CCP 2-1 ONLY: PORTIONS OF PIPING HAVE BEEN REPLACED WITH 2" PIPE PER PIPE SPEC."J". THE REPLACED PIPING IS CLASSIFIED AS PG&E PIPING CODE CLASS "C". REFERENCE AT-MM A0641489.

UNIT 2

DIABLO CANYON POWER PLANT - PG&E CO.
CHEMICAL & VOLUME CONTROL SYSTEM

DRAWING	SHEET	PAGE	REV
108008	8	0	84

DATE	DWN	RE	IV	PROFESSIONAL ENGINEER	PE DISC.	PE#	PE EXP.	
05-22-2006	MIBF	RMDI		KERSI J. DALAL	MECHANICAL	M 16690	3/31/2008	REVISED PER FCT-030318

RASTER=8008s8.dgn
DGN=8008s8.dgn
CAD User: MIBF Date: 05-22-2006

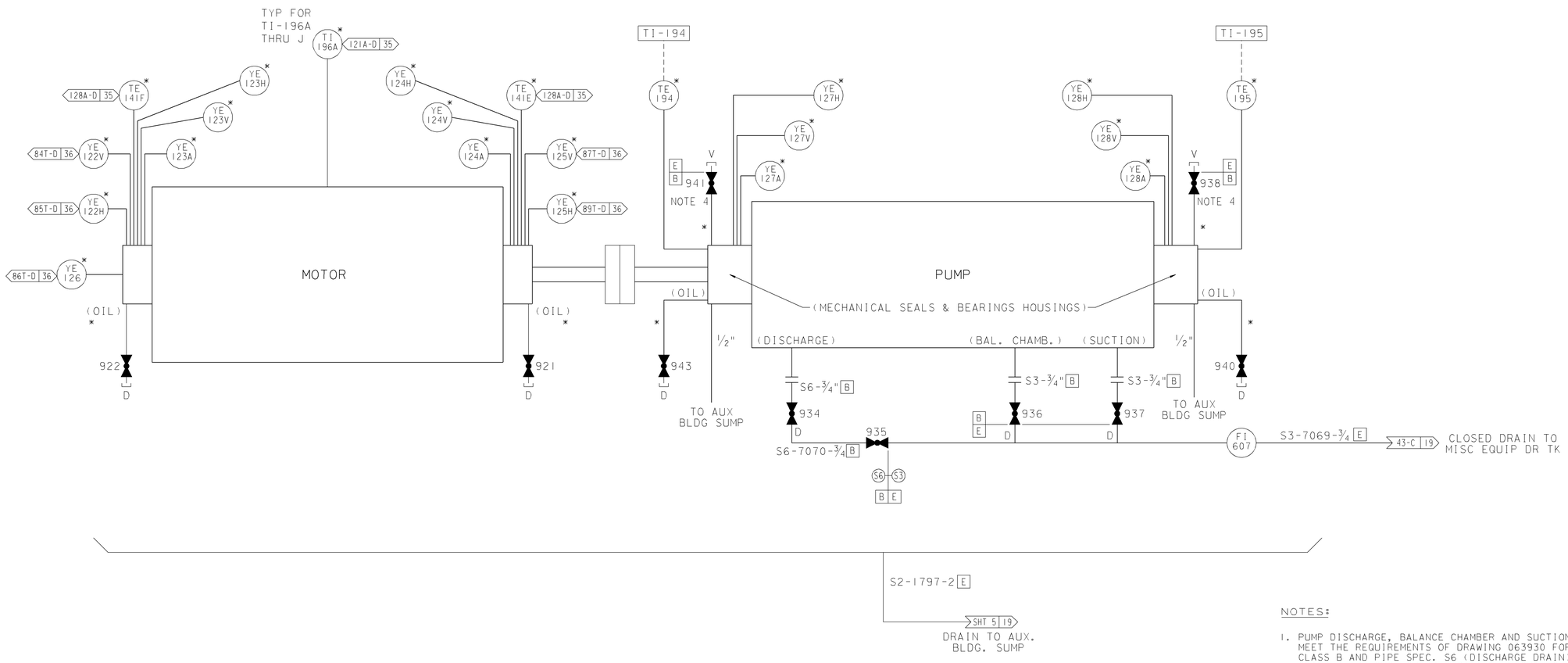

78

CENTRIFUGAL CHARGING PUMP 2-3

REF DWG DC-663210-301

NOTES:

1. PUMP DISCHARGE, BALANCE CHAMBER AND SUCTION DRAIN VALVES MEET THE REQUIREMENTS OF DRAWING 063930 FOR PIPE CODE CLASS B AND PIPE SPEC. S6 (DISCHARGE DRAIN); S3 (BALANCE CHAMBER AND SUCTION DRAINS). THE MECHANICAL SEAL HOUSING VENTS IS INSTALLED PER REQUIREMENTS OF 047282, 049238, & 053479.

2. ALL PIPING AND VALVES CONNECTED TO THE PUMP BEARING OIL HOUSINGS, PUMP MECHANICAL SEAL HOUSING DRAINS AND MOTOR BEARING OIL HOUSINGS ARE PIPE CLASS E. VENDOR SUPPLIED PIPE NIPPLES CONNECTED FROM THE PUMP BEARING OIL HOUSING AND PUMP MECH. SEAL HOUSING DRAINS TO DRAIN VALVES PER DRAWING 047282 AND 053479 SHT. 32. DRAIN VALVES CONNECTED TO MOTOR BEARING OIL HOUSING PER DRAWING 047282 AND 053479 SHT 32.

3. ALL VIBRATION, SPEED, AND TEMPERATURE MONITORING INSTRUMENTATION IS INSTRUMENT CLASS II. SEE VENDOR DRAWINGS 663210-321, -334A, & -339 FOR ADDITIONAL INSTRUMENTATION INFORMATION. 79

4. VALVES 938 AND 941 ARE SWAGELOK #SS-6NBS6-G-SH-440C, STOCK CODE 95-6447. 94-B 97-B

79 5. * - SUPPLIED WITH ASSOCIATED EQUIPMENT.
FOR LEGEND SEE PIPING SCHEMATIC LEGEND DWG. 108001-3.

UNIT 2

DIABLO CANYON POWER PLANT - PG&E CO.
CHEMICAL & VOLUME CONTROL SYSTEM

DRAWING	SHEET	PAGE	REV
108008	9	0	79

DATE	DWN	RE	IV	PROFESSIONAL ENGINEER	PE DISC.	PE#	PE EXP.	
07-22-2009	RxG2	FxC2		KERSI J. DALAL	MECHANICAL	M 16690	3/31/2010	REVISED PER DFT-7*491

RASTER=108008s9.dgn
DGN=108008s9.dgn
CAD User: RxG2 Date: 07-22-2009

UNPGEC
3 Size

NOTES: (CONT'D)

14. INSULATION ON PORTIONS OF THESE LINES HAVE ADDITIONAL BANDS INSTALLED ON 3" CENTER-TO-CENTER (MAX.) SPACING. SEE DWG 226607, 226608, 226609, 226610 & 226573 FOR SPECIFIC LOCATIONS.

15. MECHANICAL TRAVEL STOP INSTALLED ON VALVES 302A-D & 303A-D TO LIMIT OPEN STEM TRAVEL (REF. DWG# 6011930-140, PAGE 3).

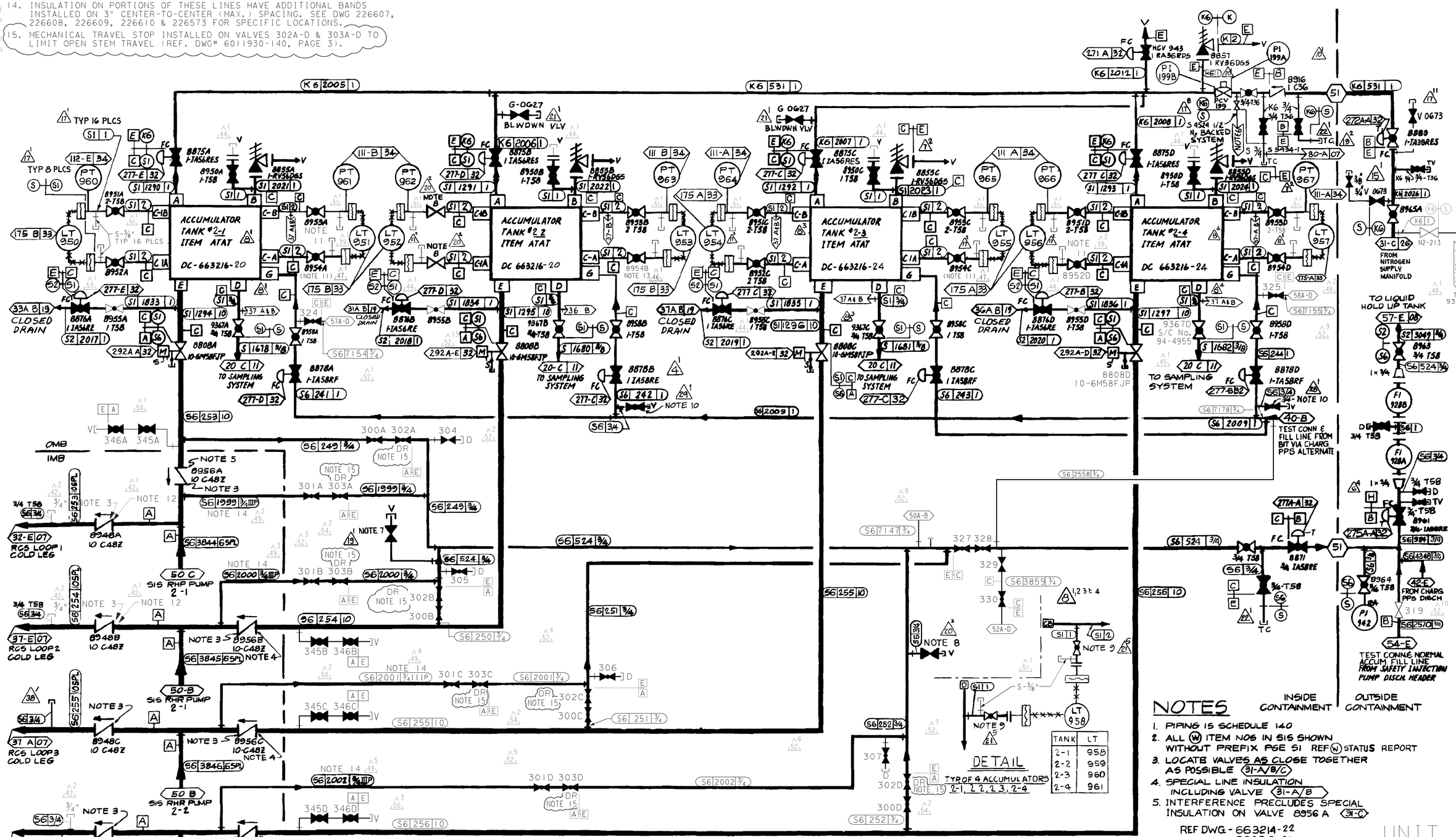

NOTES

1. PIPING IS SCHEDULE 140
2. ALL (W) ITEM NOS IN SIS SHOWN WITHOUT PREFIX PGE SI REF (W) STATUS REPORT
3. LOCATE VALVES AS CLOSE TOGETHER AS POSSIBLE (31-A/B/C)
4. SPECIAL LINE INSULATION INCLUDING VALVE (31-A/B)
5. INTERFERENCE PRECLUDES SPECIAL INSULATION ON VALVE 8956 A (31-C)

REF DWG. - 663214-22
- 663216 G1

UNIT 2

9. PO # O 024388 ITEM 6 ST CODE 94-3782 DC-6006473-168 (36 37-B)
10. ANCHOR/DARLING MODEL 1878 GB DC 6006473 97 (38 C)
11. 2" VELAN, STOCK CODE 94-3784, DC-6006473-168 (32-D) (37-D)
12. NO INSULATION ON CHECK VALVE (30-B) (30-C)
13. 2" ANCHOR DARLING, STOCK CODE 94-3773, (DC 6006473-159). (34-D)

6. TERMINATES AT 4 N_2 ACCUMULATORS PIPED TO 2 PRESSURIZER, PORV'S AND 4 RCS CHARGING CONTROL VALVE OPERATORS COORD 1-C OF 341002 AND PIPED TO ACCUMULATORS FOR VALVES 9356A & 9351A & B (COORD 334A-D, 333A-C, DWG 108032-33A.
7. 3/4" ANCHOR/DARLING, MODEL 1878, BOLTED BONNET GATE VALVE, PO # 013201 ITEM 1 (32 C)
8. ANCHOR/DARLING, MODEL 1878, BOLTED BONNET GATE VALVE, PO # 722739 ITEM 1, DC 6006473 7 (3/4) AND DC 600 6473 2 (2) (33 D 36 B)

DIABLO CANYON POWER PLANT - PG&E CO.
SAFETY INJECTION SYSTEM

DRAWING	SHEET	PAGE	REV
108009	3	0	54

DATE	DWN	RE	IV	PROFESSIONAL ENGINEER	PE DISC.	PE#	PE EXP.	
05-16-2011	AJFJ	FxC2	-	KERSI J. DALAL	MECHANICAL	M 16690	3/31/2012	REVISED PER DDN-2*704

RASTER-eru04924.dgn
DGN-eru04924.dgn
CAD User-AJFJ Date: 05-16-2011

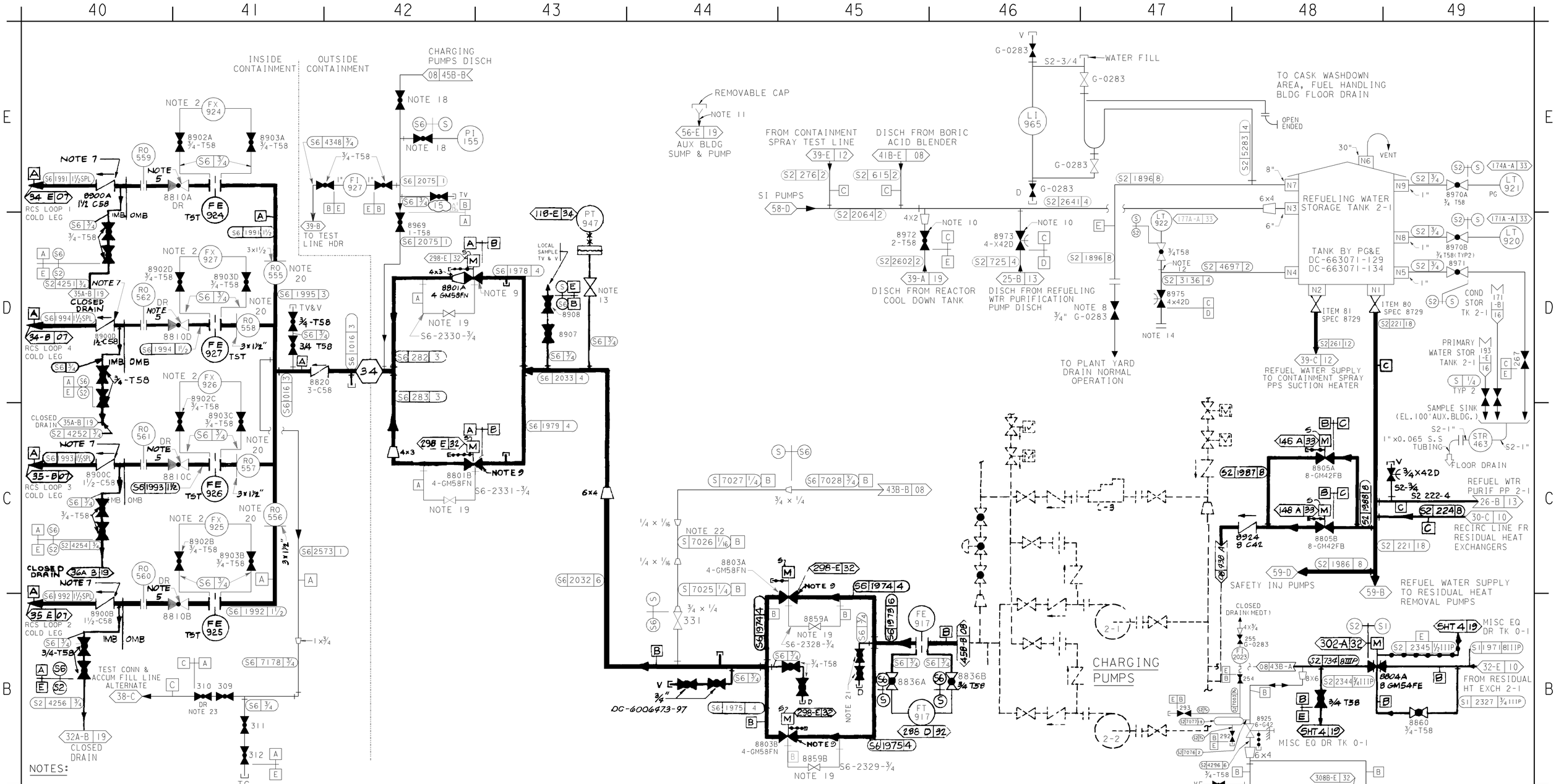

NOTES:

1. DELETED
2. FLOWW METERING ORIFICE TO VERIFY FLOW DURING PRE OPERATIONAL TESTING (41-C/D)
3. DELETED
4. PG INDICATES PG&E CO SCPOE
5. VALVES ARE SET TO BALANCE ECCS INJECTION FLOWS AND TO PREVENT PUMP RUNOUT, THEN CONTROLLED IN THE THROTTLED POSITION. (40-C) (40-D)
6. ALL WESTINGHOUSE ITEM NUMBERS IN SIS ARE SHOWN WITHOUT PREFIX PG&E SI
7. SPECIAL LINE INSULATION INCLUDING CHECK (40-C/D)
8. WHEN WATER IS CONTAMINATED BLIND FLANNGE WITH HOSE BIBB MUST BE INSTALLED DRAINING TO MISC EQUIP DRAIN TANK 0-1 (47-D)
9. VELAN MNF VALVE (42,43-D) (42,43-C) (45-B,C)
10. CHAIN OPERATED (46-D) (47-D)
11. EMBEDDED PIPE, NO LINE NUMBER (44-E)
12. FIELD TO INSTALL BOSS PER FIG-343, DWG 053093 (47-D)
13. ¾ ANCHOR/DARLING, MODEL 1878, BOLTED BONNET, GATE VALVE, PO# 722739 ITEM 3, DC-6006473-7 (44-D)
14. BLANK FLANGE IS PG&E PIPE CODE CLASS "C". (41-D)
15. DELETED
16. DELETED
17. DELETED
18. 1" ANCHOR DARLING GLOBE VALVE 1878, STOCK CODE 94-3771 DC-6006473-157 (42-E)
19. ¾" ANCHOR DARLING GLOBE VALVE, STOCK CODE 94-2820 DC-6006473-97 (42-D/C) (45-C/B)
20. THE RESTRICTING ORIFICE ASSEMBLY CONSISTS OF A PRESSURE REDUCING ORIFICE (PRO), A SWAGE TYPE REDUCER AND A FLOW BAFFLE PER DRAWING DC 663230-409 (41-D/C)
21. ¾" ANCHOR DARLING GLOBE VALVE, S/C 95-2755, DC 6011930-79. (45-B)
22. FOR LINE 7026-1/16:
    PG&E S-SPEC WITH THE FOLLOWING SPECIAL REQUIREMENTS:
    -TUBING SIZE SHALL BE 1/16" OD WITH WALL THICKNESS OF 0.020"
    -SEAMLESS STAINLESS STEEL TUBING MATERIAL GRADE TP304 MAY BE SUBSTITUTED FOR GRADE TP316. ALL OTHER REQUIREMENTS OF S-SPEC SHALL APPLY.
    -LENGTH OF LINE 7026-1/16: 24 FEET +/- 2 FEET (REF. DCP N-50631)
23. MECHANICAL TRAVEL STOP INSTALLED ON VALVE 310 TO LIMIT OPEN STEM TRAVEL (REF: DWG# 6011930-140, PAGE 3)

DATE	DWN	RE	IV	PROFESSIONAL ENGINEER	PE DISC.	PE#	PE EXP.	
04-17-2013	ZNS4	FxC2	KJD3	NOT REQUIRED	N/A	N/A	N/A	REVISED PER DFT 7*2088

DIABLO CANYON POWER PLANT - PG&E CO.
SAFETY INJECTION SYSTEM

DRAWING	SHEET	PAGE	REV
108009	4	0	75

RASTER=108009S4.dgn
DGN=108009S4.dgn
CAD User: ZNS4 Date: 04-17-2013

3NPOTC
3 Size

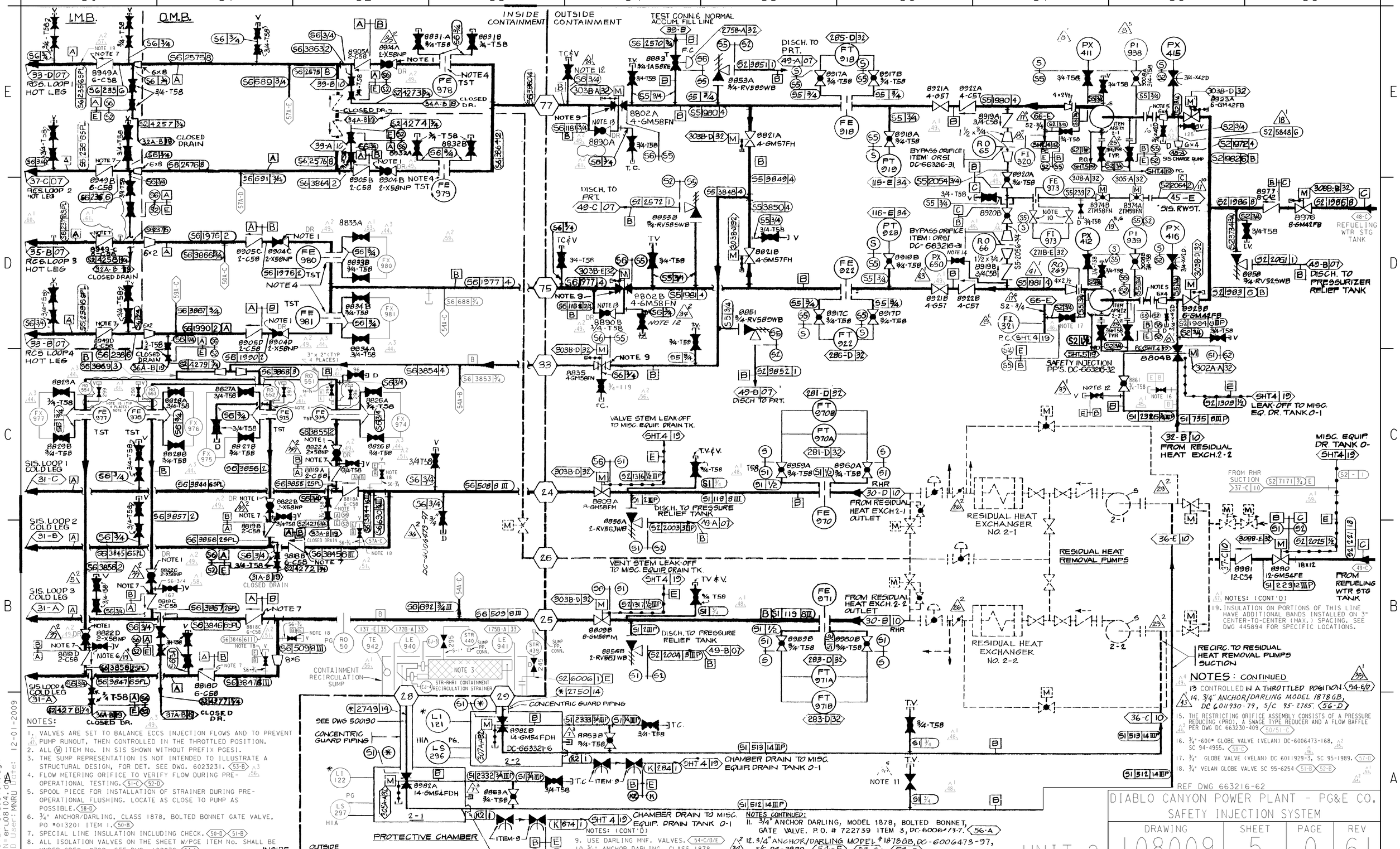

NOTES:

1. VALVES ARE SET TO BALANCE ECCS INJECTION FLOWS AND TO PREVENT PUMP RUNOUT, THEN CONTROLLED IN THE THROTTLED POSITION.
2. ALL (W) ITEM No. IN SIS SHOWN WITHOUT PREFIX PGES1.
3. THE SUMP REPRESENTATION IS NOT INTENDED TO ILLUSTRATE A STRUCTURAL DESIGN, FOR DET. SEE DWG. 602323I. (53-B)
4. FLOW METERING ORIFICE TO VERIFY FLOW DURING PRE-OPERATIONAL TESTING. (51-C) (52-D)
5. SPOOL PIECE FOR INSTALLATION OF STRAINER DURING PRE-OPERATIONAL FLUSHING. LOCATE AS CLOSE TO PUMP AS POSSIBLE. (58-D)
6. ¾" ANCHOR/DARLING, CLASS 1878, BOLTED BONNET GATE VALVE, PO #013201 ITEM 1. (50-B)
7. SPECIAL LINE INSULATION INCLUDING CHECK. (50-D) (51-B)
8. ALL ISOLATION VALVES ON THE SHEET W/PGE ITEM No. SHALL BE UNDER SPEC. 8729. SEE DWG. 102039. (54-A)

NOTES: (CONT'D)

9. USE DARLING MNF. VALVES. (54-C/D/E)
10. ¾" ANCHOR DARLING, CLASS 1878, PO #20699, ITEM 1 (57-B)

NOTES CONTINUED:

11. ¾" ANCHOR DARLING, MODEL 1878, BOLTED BONNET, GATE VALVE. P.O. # 722739 ITEM 3, DC-6006473-7. (56-A)
12. ¾" ANCHOR/DARLING MODEL #1878GB, DC-6006473-97, S/C 94-2820 (54-E) (57-C) (54-D)

NOTES: (CONT'D)

19. INSULATION ON PORTIONS OF THIS LINE HAVE ADDITIONAL BANDS INSTALLED ON 3" CENTER-TO-CENTER (MAX.) SPACING. SEE DWG 445894 FOR SPECIFIC LOCATIONS.

NOTES: CONTINUED

13. CONTROLLED IN A THROTTLED POSITION. (54-E/D)
14. ¾" ANCHOR/DARLING MODEL 1878GB, DC 6011930-79, S/C 95-2755. (56-D)
15. THE RESTRICTING ORIFICE ASSEMBLY CONSISTS OF A PRESSURE REDUCING (PRO), A SWAGE TYPE REDUCER AND A FLOW BAFFLE PER DWG DC 663230-409 (50/51-C)
16. ¾"-600# GLOBE VALVE (VELAN) DC-6006473-168, SC 94-4955. (58-D)
17. ¾" GLOBE VALVE (VELAN) DC 6011929-3, SC 95-1989. (57-D)
18. ¾" VELAN GLOBE VALVE SC 95-6254 (51-B) (52-B)

REF DWG 663216-62

DIABLO CANYON POWER PLANT - PG&E CO.
SAFETY INJECTION SYSTEM

DRAWING	SHEET	PAGE	REV
108009	5	0	61

DATE	DWN	RE	IV	PROFESSIONAL ENGINEER	PE DISC.	PE#	PE EXP.	
12-01-2009	MNRU	FxC2		KERSI J. DALAL	MECHANICAL	M 16690	3/31/2010	REVISED PER DFT-7*636-0 7*644-0 AND DAS-6*256-0

RASTER=eru08104.dgn
DGN=eru08104.dgn
CAD User: MNRU Date: 12-01-2009

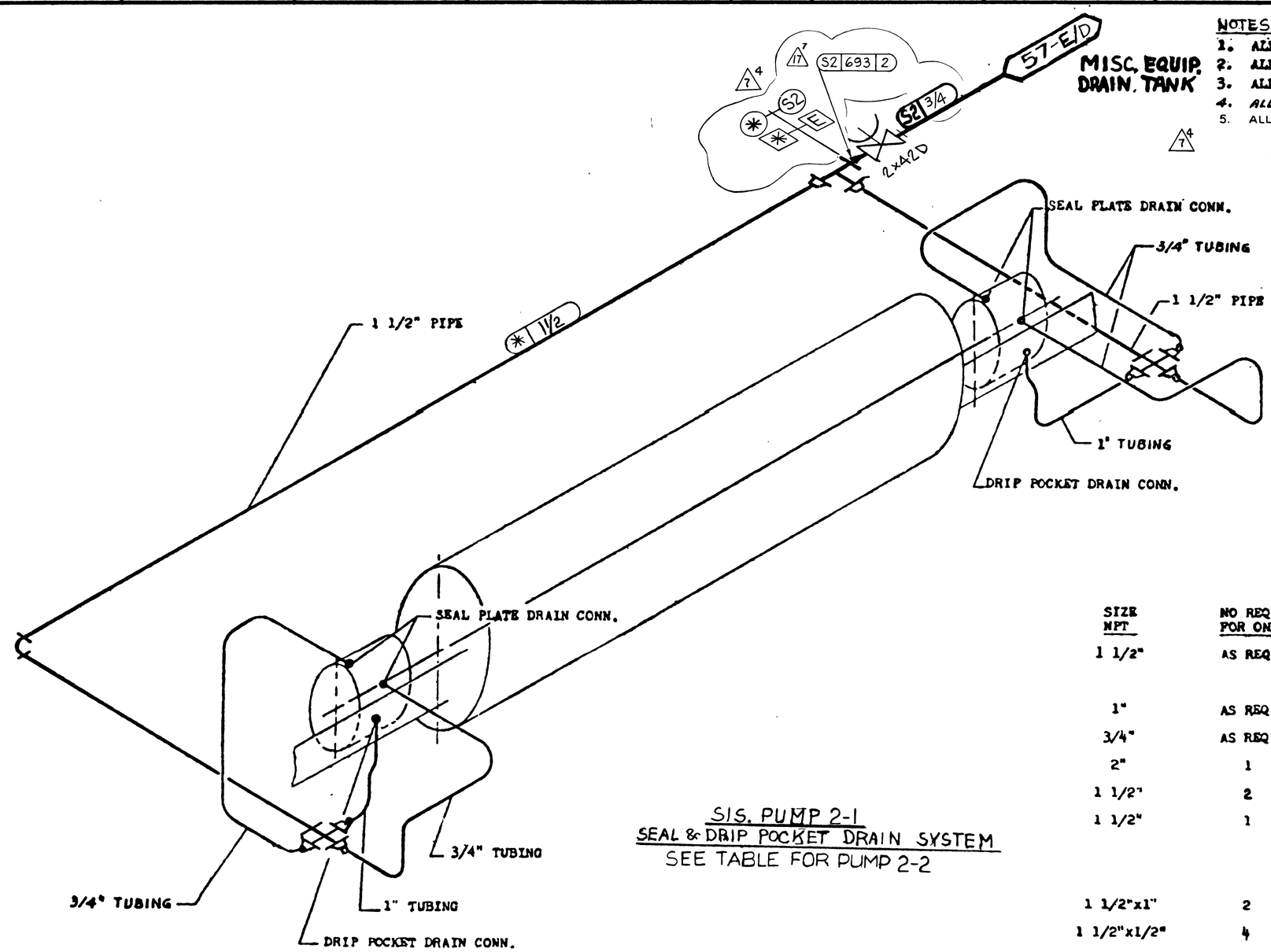

NOTES:
1. ALL TUBING STEEL
2. ALL PIPE SCH40 - ASTM A53
3. ALL CONNECTORS - S.S.
4. ALL PIPE FITTINGS - ASTM A-105 GR.2
5. ALL PIPING ON THIS SHEET IS CONSIDERED CODE CLASS "E"

SIS PUMP	2-1	2-2
DRAIN LINE NUMBER	S2 693 2	S2 1614 2

SIS. PUMP 2-1
SEAL & DRIP POCKET DRAIN SYSTEM
SEE TABLE FOR PUMP 2-2

SIZE NPT	NO REQ'D. FOR ONE	DESCRIPTION
1 1/2"	AS REQ'D.	PIPE - C.T.S.
1"	AS REQ'D.	TUBING .049 WALL THICKNESS
3/4"	AS REQ'D.	TUBING .049 WALL THICKNESS
2"	1	TEE - 2000#
1 1/2"	2	CROSS - 2000#
1 1/2"	1	ELBOW - 2000#
1 1/2"x1"	2	HEX BUSHING
1 1/2"x1/2"	4	HEX BUSHING
2"x1 1/2"	2	HEX BUSHING
1"	4	16-16 FBZ-SS - OR EQUAL (1)
1/2"	8	12-8 FBZ -SS - OR EQUAL (1)

WESTINGHOUSE EL. CORP. - APD.

PUMP NO.	SPIN NO.
(2) 45493/99	PSE SIAPSI - 1/2
45491/92	AEP SIAPSI - 1/2
45490/94	AMP SIAPSI - 1/2
45495/96	PNJ SIAPSI - 1/2
45497/98	PGE SIAPSI - 1/2
45489/500	PEG SIAPSI - 1/2

SAFETY INJECTION
CUST. OR. NO. 54-E-705-03B SUPP
DATE: 6-25-69

DC-663216-28

UNIT - 2

BUR OR. NO. 346-864
8 1/2" - JTCH-10 ST64

P G & E CO.	DRAWING NUMBER	REVISION
SHEET 6 OF SHEETS	108009	17
	MICROFILM	17

RM INDEXED REV 17

THIS DRAWING HAS BEEN REPRODUCED WITHOUT CHANGE FROM ORIGINAL DRAWING CHANGE NO. 1 DATE APPROVED

SCANNED APPD 17

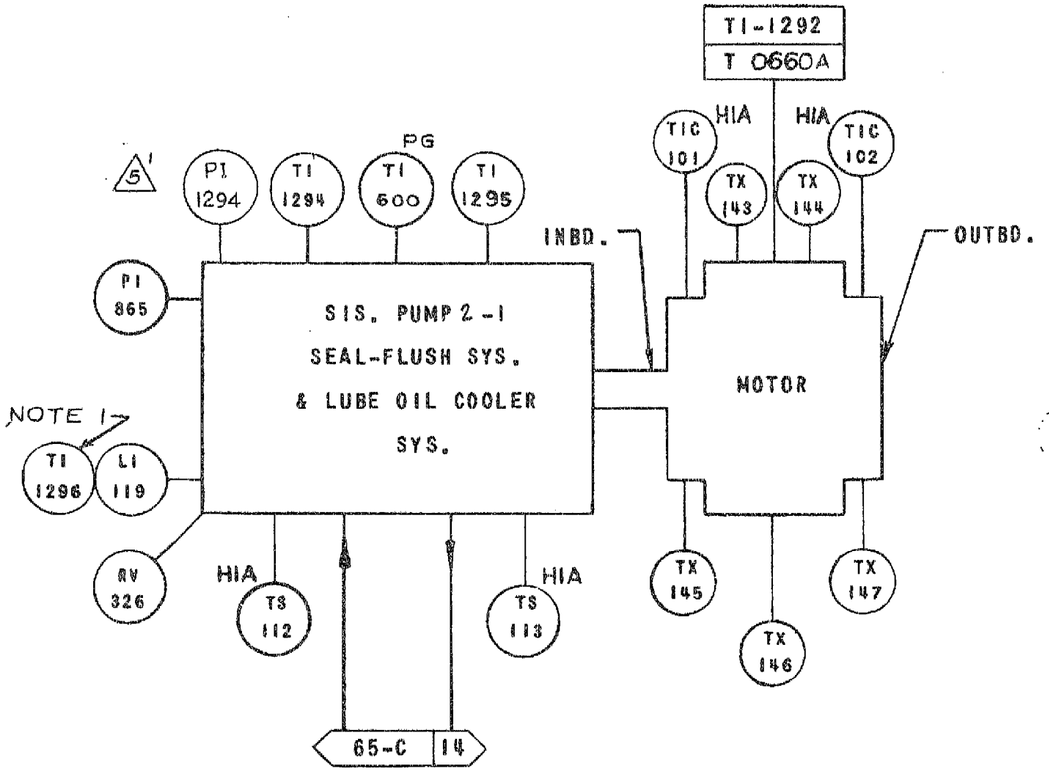

SIS. PUMP INSTR.
TYP.

SERVICE	ITEM NO. (W)	PG&E INSTR. NO. PUMP 1	PG&E INSTR. NO. PUMP 2	
L.O. COOLER RELIEF VALVE	S13	RV-326	RV-327	
PUMP THRUST BRG. L.O. SUPPLY	S11	PI-865	PI-866	
PUMP L.O. RESERVOIR	S09	LI-119 TI-1296	LI-120 TI-1299	
L.O. CLR. OUTLET L.O. TEMP.	S06	TI-1294	TI-1297	
PUMP THRUST BRG. L.O. TEMP.	S03	TI-1295	TI-1298	
PUMP OUTBD. SEAL-FLUSH TEMP.	G15	TS-112	TS-114	
PUMP INBD. SEAL-FLUSH TEMP.	G15	TS-113	TS-115	
PUMP INBD. BRG. TEMP.	———	TI-600	TI-601	BY PGE
L.O. FILTER OUTLET PRESS.	T42	PI-1294	PI-1297	
MOTOR STATOR TEMP.	SLOT 1	TI-1292 T 0660A	TI-1293 T 0661A	
MOTOR STATOR TEMP.	SLOT 7	TX-143	TX-148	
MOTOR STATOR TEMP.	SLOT 13	TX-144	TX-149	
MOTOR STATOR TEMP.	SLOT 19	TX-145	TX-150	
MOTOR STATOR TEMP.	SLOT 25	TX-146	TX-151	
MOTOR STATOR TEMP	SLOT 31	TX-147	TX-152	
MOTOR INBD. BRG. TEMP.		TIC-101	TIC-104	
MOTOR OUTBD. BRG. TEMP.		TIC-102	TIC-105	

REF:
DC-663216-27
DC-663216-32
DC-663216-33
DC-663216-43

NOTE:
1. ABANDON TI-1296 & TI-1299 IN PLACE

UNIT - 2

P.G. & E. CO.	DRAWING NUMBER	REVISION
SHEET 7 OF	108009	5
	MICROFILM	5

RM INDEXED REV. 5

THIS DRAWING HAS BEEN REPRODUCED WITHOUT CHANGE FROM ORIGINAL DRAWING
CHANGE NO. 2 DATE 2 24 APPROVED 8/6

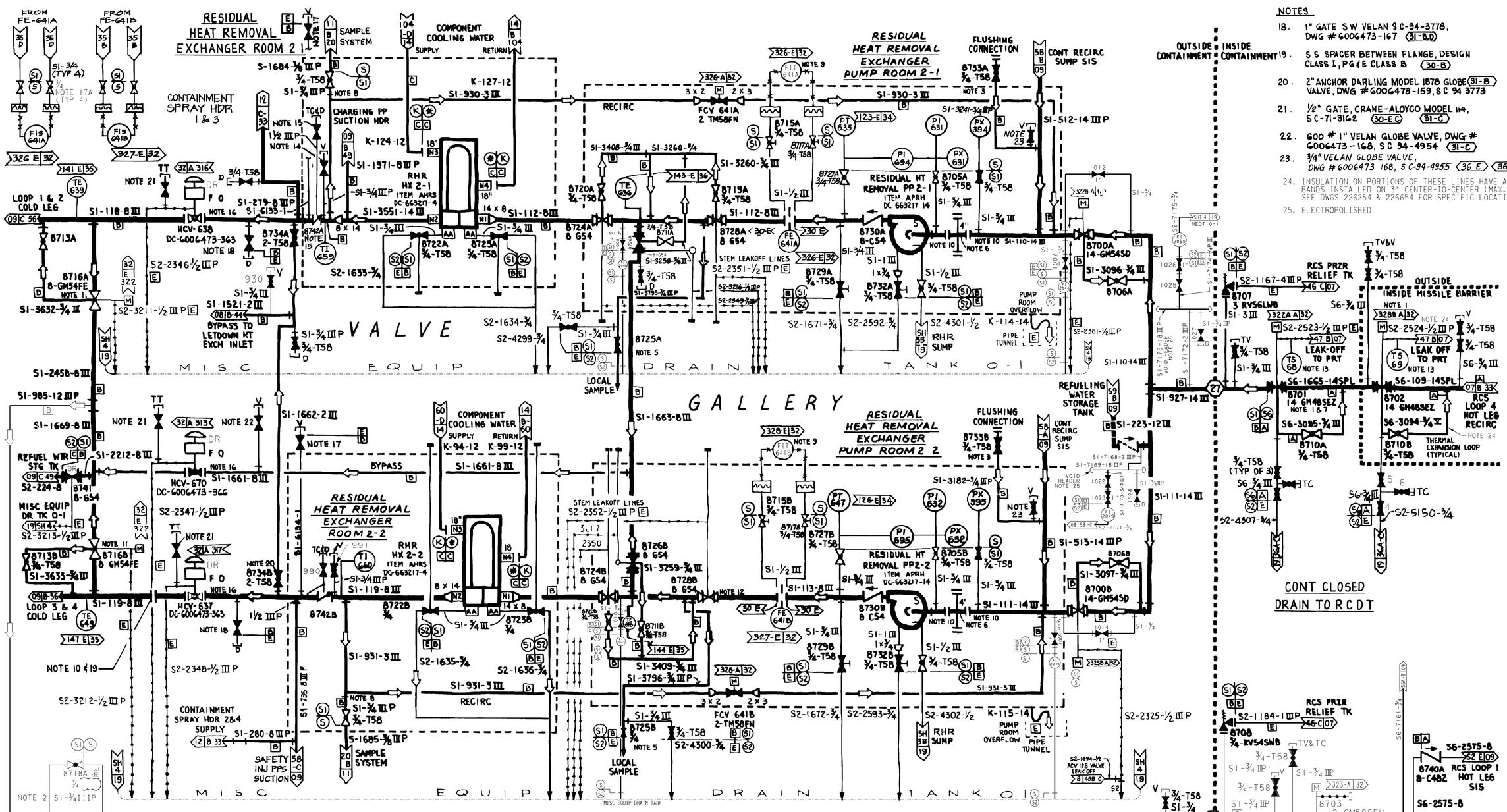

REF DWG DC-663217-5

NOTES

18. 1" GATE S-W VELAN S C-94-3778, DWG # 6006473-167 (31-B,D)
19. S S SPACER BETWEEN FLANGE, DESIGN CLASS I, PG&E CLASS B (30-B)
20. 2" ANCHOR DARLING MODEL 1878 GLOBE VALVE, DWG # 6006473-159, S C 94 3773 (31-B)
21. 1/2" GATE, CRANE-ALOYCO MODEL 114, S C-71-3162 (30-E C) (31-C)
22. 600 # 1" VELAN GLOBE VALVE, DWG # 6006473-168, S C 94-4954 (31-C)
23. 3/4" VELAN GLOBE VALVE, DWG # 6006473 168, S C-94-4955 (36 E) (36-C)
24. INSULATION ON PORTIONS OF THESE LINES HAVE ADDITIONAL BANDS INSTALLED ON 3" CENTER-TO-CENTER (MAX.) SPACING. SEE DWGS 226254 & 226654 FOR SPECIFIC LOCATIONS.
25. ELECTROPOLISHED

NOTES

1. VALVE INTERLOCKED WITH REACTOR COOLANT SYSTEM PRESSURE SIGNAL (38 C) (39 D)
2. ELBOW TAPS FOR FLOW METER (30-A)
3. LOCATE ABOVE RESIDUAL HEAT REMOVAL PUMP SHIELDING (36 C,E)
4. ALL (W) ITEM NOS ARE SHOWN WITHOUT PREFIX PGE-AC, REFER TO (W) STATUS REPORT DC 663200 47
5. LOCATE VALVE OUTSIDE SHIELD WALL SAMPLE LINE MUST BE AT A LOWER ELEVATION THAN THE 8 INCH PIPE BEING SAMPLED (34 B,C)
6. TEMPORARY STRAINER IS PLACED IN THE SPOOL PIECE DURING INITIAL FLUSHING OPERATIONS STRAINER MUST BE REMOVED BEFORE PLANT START UP (36 B,D)
7. SPECIAL LINE INSULATION INCLUDING VALVE (38-C)
8. LOCATE SAMPLE LINE CONNECTION AS CLOSE AS POSSIBLE TO THE 8 INCH RHR HX DISCHARGE LINE (32 B,E)
9. LOCATE ORIFICE FLOW METER INDICATION OUTSIDE OF SHIELD WALL (35 C,E)
10. 300# 316 SS FLANGES (36 B,D) & (31-B) AND 4 PCS FLUSHING SPOOLS FLANGES ON LINE NO 110 & 111
11. VALVES 8716 A & B ARE ALOYCO DC-663219-593 (30 D,C)
12. USE CRANE VALVE WITH SOLID DISK DC-663219-440 (34 B)
13. T5 68 AND T5 69 ARE TO BE STRAPPED TO PIPE 18'-24' FROM VALVE (38 (39 D)
14. ANCHOR DARLING MODEL 1878 DWG #6006473-97 (32-D) (31-E) (38/39-A)
15. ANCHOR DARLING, PO 37211, TC/D DWG #6006473-260 DWG #6006473-254, 8742A (32-D)
16. 600# SS FLANGES (31 B,C,D)
17. 1" ANCHOR DARLING MODEL 1878 GLOBE VALVE DWG # 6006473-157 (32-E,C)

17A. VELAN MODEL NO W04-2071 B-19M9 DWG# 6006473-221 (30-E)

- NOTES CONTINUED ABOVE -

DIABLO CANYON POWER PLANT - PG&E CO.
RESIDUAL HEAT REMOVAL SYSTEM

DRAWING	SHEET	PAGE	REV
108010	3	0	30

DATE	DWN	RE	IV	PROFESSIONAL ENGINEER	PE DISC.	PE#	PE EXP.	
06-11-2013	MNRU	FxC2	KJD3	NOT REQUIRED	N/A	N/A	N/A	REVISED PER DFT-7*2137

RASTER=801053.dgn
DGN=801053.dgn
CAD User: MNRU Date: 06-11-2013

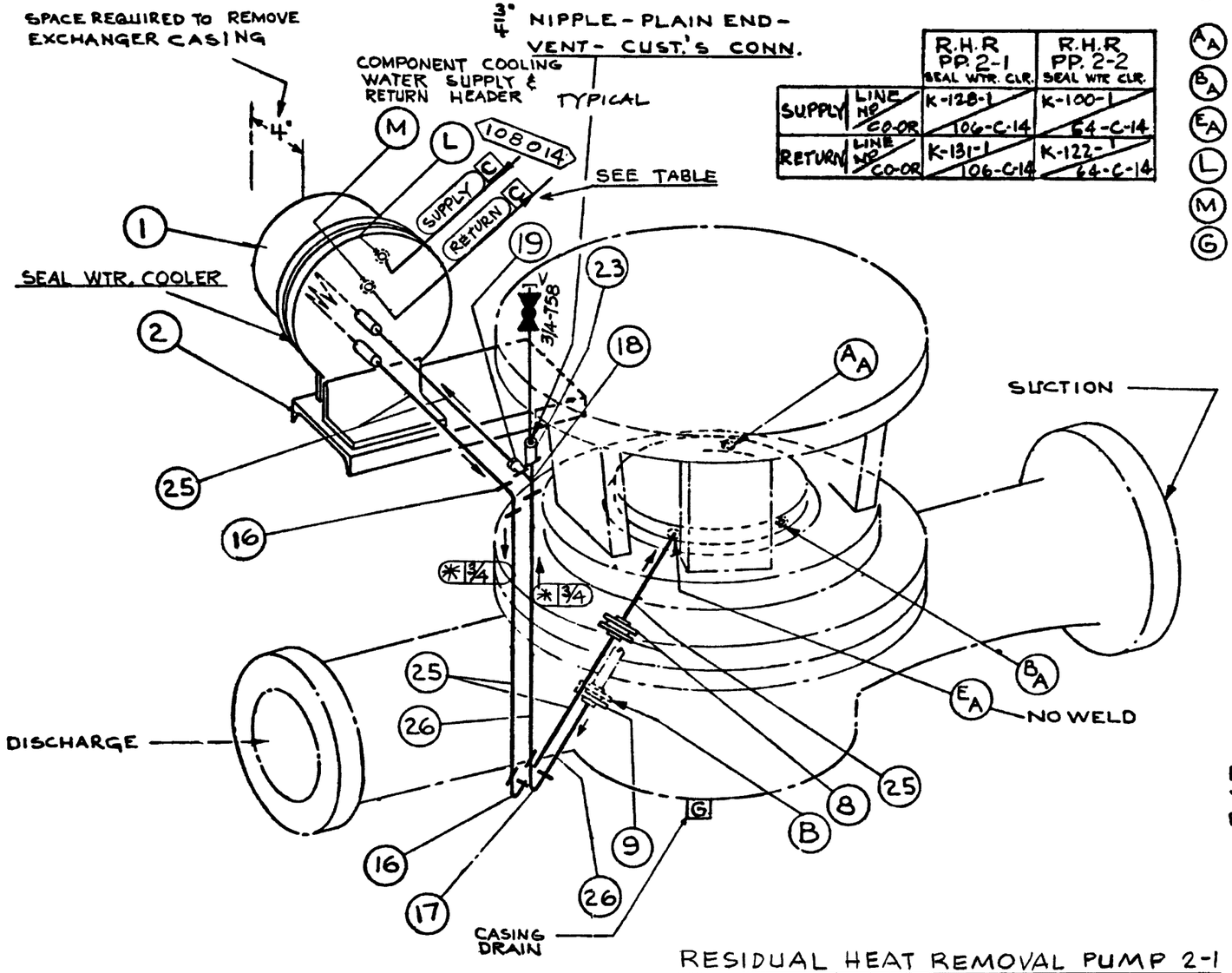

		R.H.R PP. 2-1 SEAL WTR. CLR.	R.H.R PP. 2-2 SEAL WTR CLR.
SUPPLY	LINE NO / CO-OR	K-128-1 / 106-C-14	K-100-1 / 64-C-14
RETURN	LINE NO / CO-OR	K-131-1 / 106-C-14	K-122-1 / 64-C-14

(B) 3/4" - 300# RAISED FACE FLANGE - PUMPING RING OUTLET - PIPED TO HEAT EXCHANGER - PRESSURE DROP 1 PSI.

(AA) 1/2" P.T. - VENT OR QUENCH

(BA) 1/2" P.T. - DRAIN (GLAND DRAIN)

(EA) 1/2" P.T. - FLUSHING CONN. - PIPED FROM HEAT EXCHANGER

(L) 1/2" P.T. - COOLING LIQUID - IN

(M) 1/2" P.T. - COOLING LIQUID - OUT

- HEAT EXCHANGER 10 G.P.M. REQUIRED

(G) 1" 300# RF FLANGE - CASING DRAIN

DYE PENETRATE TEST REQUIRED.
ALL SEALWELDS PER PT ASME-3
NO POSTWELD HEAT TREATMENT REQUIRED.

RECIRCULATION OF LIQUID FROM SEAL WITH PUMPING RING - THRU COOLER & BACK TO SEAL.

RESIDUAL HEAT REMOVAL PUMP 2-1
SHAFT SEAL (TYP); REF DWG DC-663217-25

UNIT 2

P G & E CO.	108010	REV. 16
SHEET 4	PAGE 0	

DATE	DWN	RE	IV	PROFESSIONAL ENGINEER	PE DISC.	PE#	PE EXP.	
10/6/00	RXG2	NDN1	-	KERSI J. DALAL	MECHANICAL	M 16690	3/31/2004	Revised per FCT 025183

CAD User: RXG2 Date: 10-06-2000
DGN=8010S4.DGN
RASTER=8010S4.TIF

INPGIC

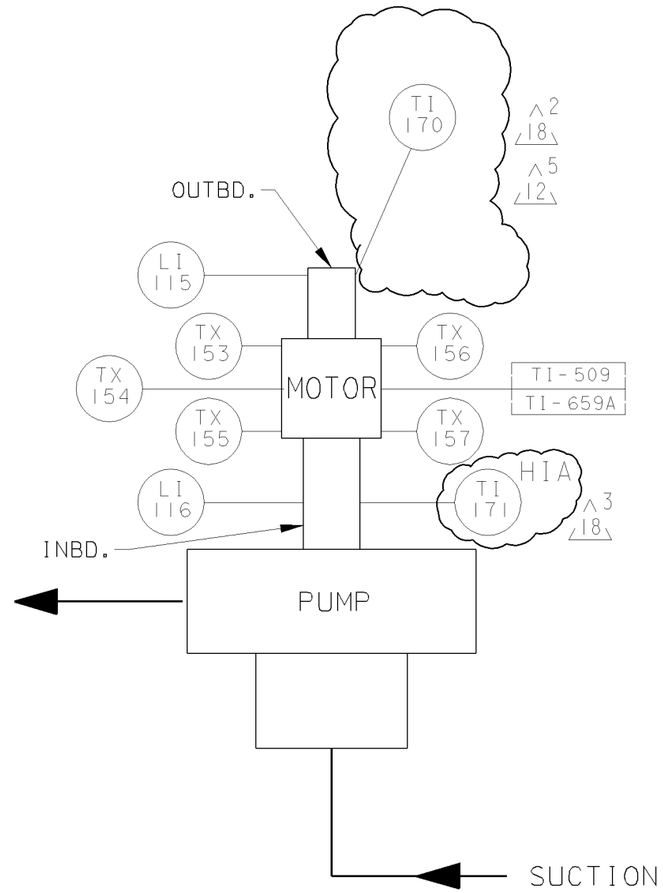

SERVICE		PG&E INSTR. NO. PUMP 1	PG&E INSTR. NO. PUMP 2
MOTOR OUTBD. BRG. TEMP./COORD. (1 18)		TI-170 148E-35	TI-172 148E-35 (148-E 35)
MOTOR INBD. BRG. TEMP.		TI-171 148E-35	TI-173 (148-B 35) (6 12)
MOTOR OUTBD. L.O. GAGE		LI-115	LI-117
MOTOR INBD. L.O. GAGE		LI-116	LI-118
MOTOR STATOR TEMP.		TI-509 TO-659A	TI-514 TO-665A
MOTOR STATOR TEMP.		TX-153	TX-223
MOTOR STATOR TEMP.		TX-154	TX-224
MOTOR STATOR TEMP.		TX-155	TX-225
MOTOR STATOR TEMP.		TX-156	TX-226
MOTOR STATOR TEMP.		TX-157	TX-227

3 17

REFERENCE DRAWING DC-663217-24

RESIDUAL HEAT REMOVAL
PUMP TYP.

UNIT 2

DIABLO CANYON POWER PLANT - PG&E CO.
RESIDUAL HEAT REMOVAL SYSTEM

DRAWING	SHEET	PAGE	REV
108010	5	0	18

RASTER=8010s5.dgn
DGN=8010s5.dgn
CAD User: MIBF Date: 05-25-2006

INPGIC
1 Size

DATE	DWN	RE	IV	PROFESSIONAL ENGINEER	PE DISC.	PE#	PE EXP.	
05-25-2006	MIBF	RMDI		KERSI J. DALAL	MECHANICAL	M 16690	3/31/2008	REVISED PER DC2-SJ-044087-00 AND DC2-SJ-048036-00

NUCLEAR STEAM SUPPLY SAMPLING SYSTEM

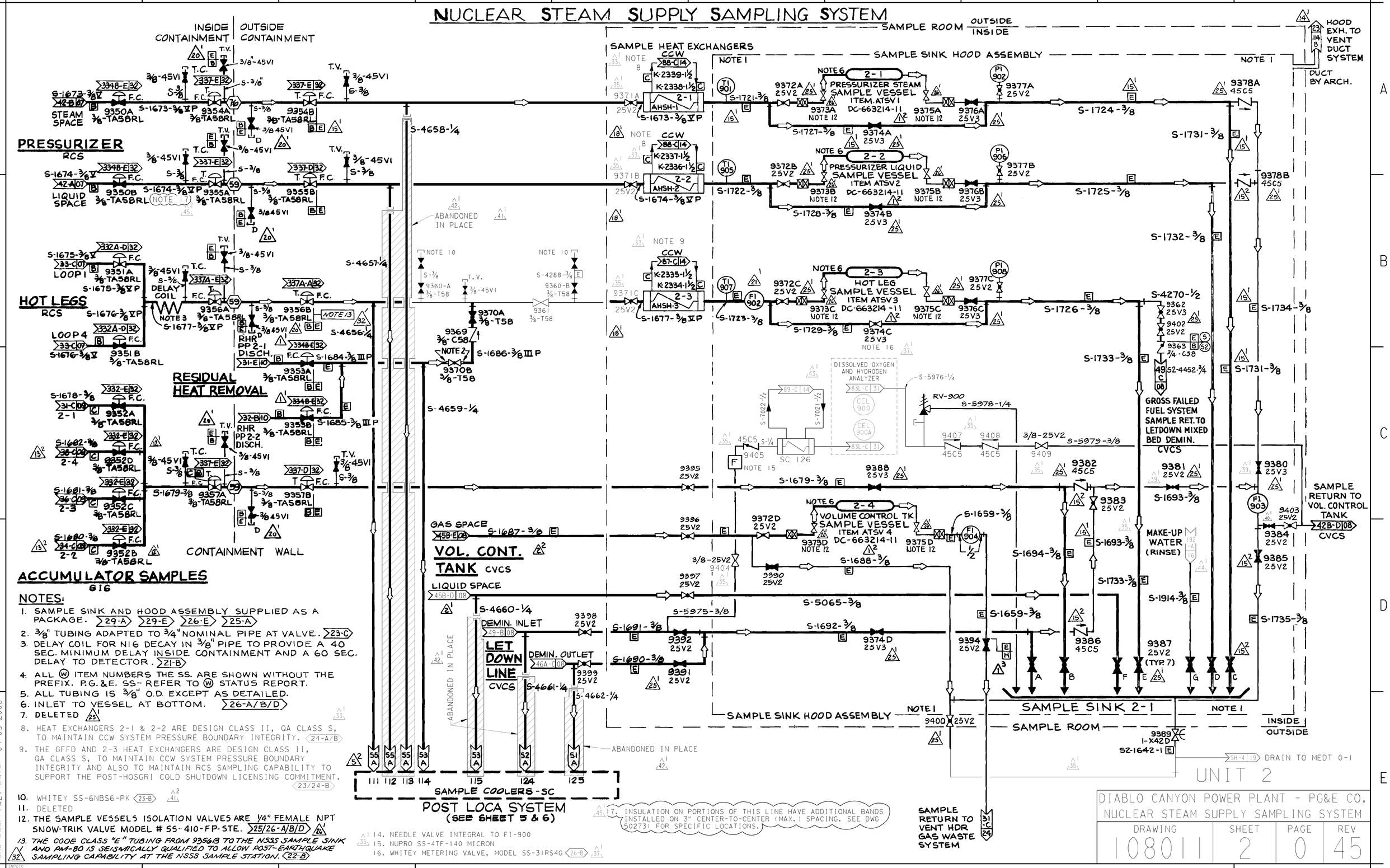

NOTES:

1. SAMPLE SINK AND HOOD ASSEMBLY SUPPLIED AS A PACKAGE. >29-A> >29-E> >26-E> >25-A>
2. 3/8" TUBING ADAPTED TO 3/4" NOMINAL PIPE AT VALVE. >23-C>
3. DELAY COIL FOR N16 DECAY IN 3/8" PIPE TO PROVIDE A 40 SEC. MINIMUM DELAY INSIDE CONTAINMENT AND A 60 SEC. DELAY TO DETECTOR. >21-B>
4. ALL (W) ITEM NUMBERS THE SS. ARE SHOWN WITHOUT THE PREFIX. P.G.&E. SS- REFER TO (W) STATUS REPORT.
5. ALL TUBING IS 3/8" O.D. EXCEPT AS DETAILED.
6. INLET TO VESSEL AT BOTTOM. >26-A/B/D>
7. DELETED
8. HEAT EXCHANGERS 2-1 & 2-2 ARE DESIGN CLASS II, QA CLASS S, TO MAINTAIN CCW SYSTEM PRESSURE BOUNDARY INTEGRITY. <24-A/B>
9. THE GFFD AND 2-3 HEAT EXCHANGERS ARE DESIGN CLASS II, QA CLASS S, TO MAINTAIN CCW SYSTEM PRESSURE BOUNDARY INTEGRITY AND ALSO TO MAINTAIN RCS SAMPLING CAPABILITY TO SUPPORT THE POST-HOSGRI COLD SHUTDOWN LICENSING COMMITMENT. <23/24-B>
10. WHITEY SS-6NBS6-PK <23-B>
11. DELETED
12. THE SAMPLE VESSELS ISOLATION VALVES ARE 1/4" FEMALE NPT SNOW-TRIK VALVE MODEL # SS-410-FP-STE. >25/26-A/B/D>
13. THE CODE CLASS "E" TUBING FROM 9356B TO THE NSSS SAMPLE SINK AND PM-80 IS SEISMICALLY QUALIFIED TO ALLOW POST-EARTHQUAKE SAMPLING CAPABILITY AT THE NSSS SAMPLE STATION. <22-B>
14. NEEDLE VALVE INTEGRAL TO FI-900
15. NUPRO SS-4TF-140 MICRON
16. WHITEY METERING VALVE, MODEL SS-31RS4G <26-B>
17. INSULATION ON PORTIONS OF THIS LINE HAVE ADDITIONAL BANDS INSTALLED ON 3" CENTER-TO-CENTER (MAX.) SPACING. SEE DWG 502731 FOR SPECIFIC LOCATIONS.

DIABLO CANYON POWER PLANT - PG&E CO.
NUCLEAR STEAM SUPPLY SAMPLING SYSTEM

DRAWING	SHEET	PAGE	REV
108011	2	0	45

DATE	DWN	RE	IV	PROFESSIONAL ENGINEER	PE DISC.	PE#	PE EXP.	
04-09-2008	FAZI	FxC2		KERSI J. DALAL	MECHANICAL	M 16690	3/31/2010	REVISED PER FCT-32283

RASTER-eru10398.dgn
DGN-eru10398.dgn
CAD User-FAZI Date: 04-09-2008

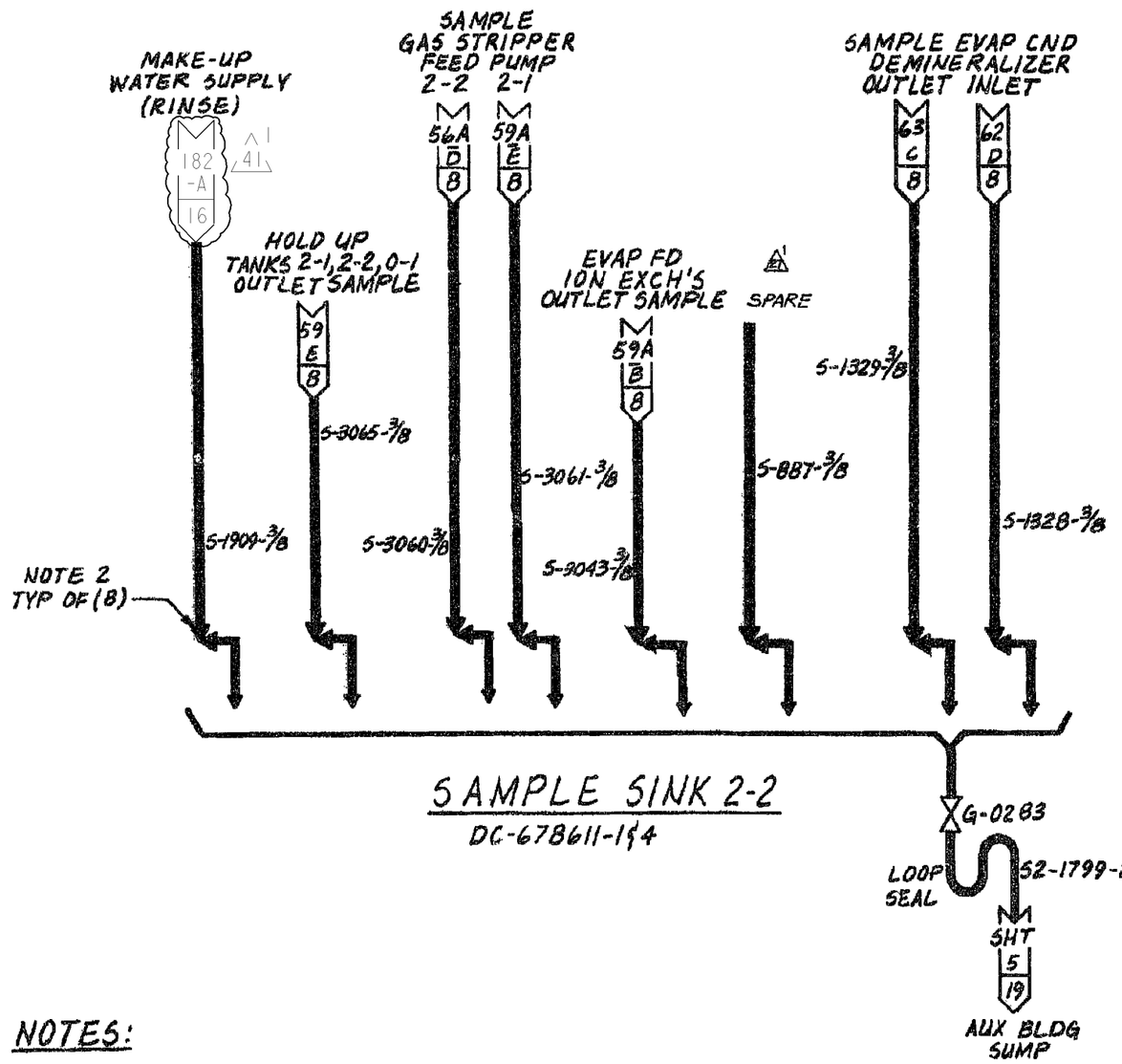

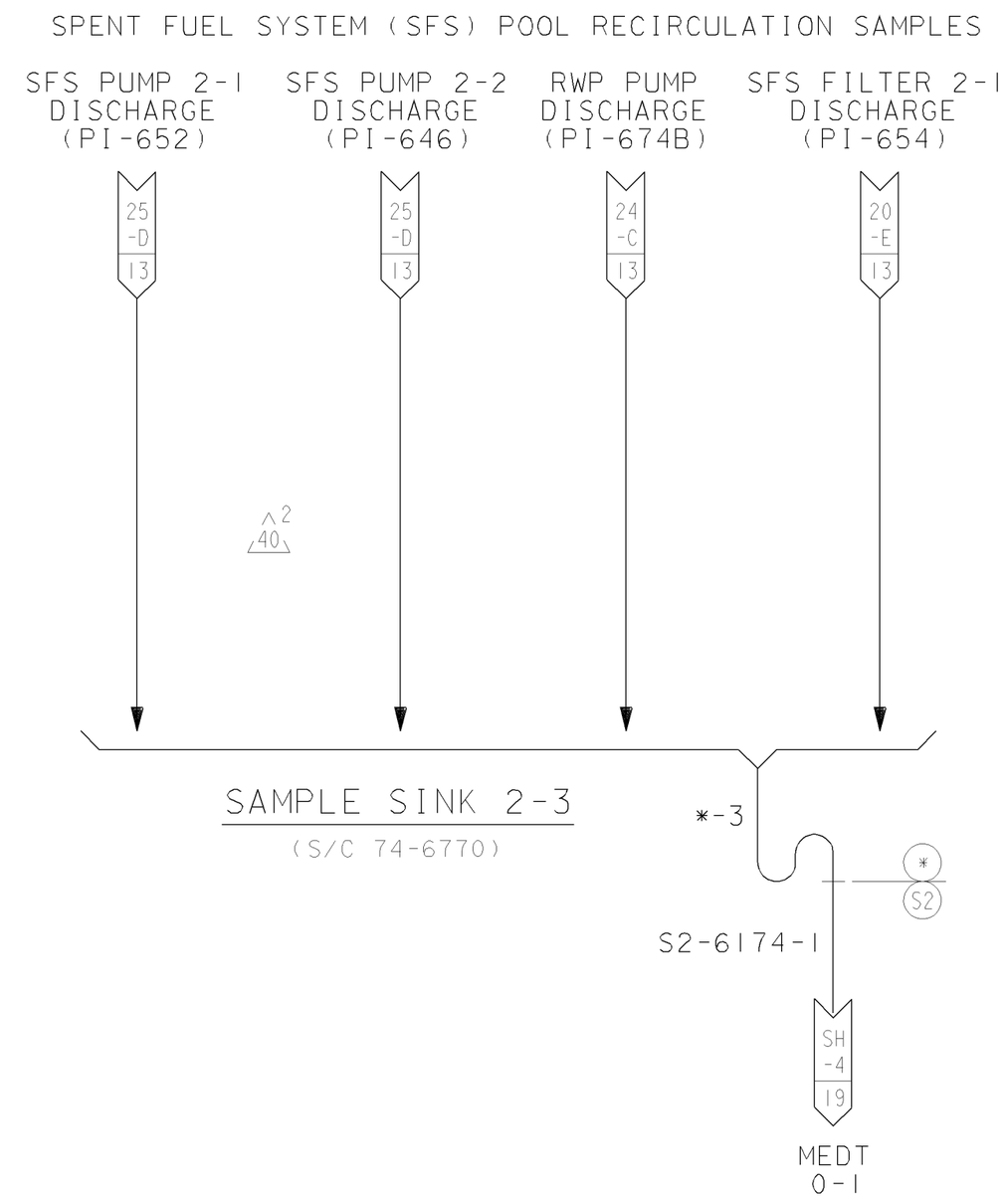

NOTES:

1. ALL PIPE & TUBING ON THIS SHEET SHALL BE PG&E CLASS "E" & INSTRUMENT CLASS II RESPECTIVELY.
2. ALL VALVES EXCEPT AS NOTED SHALL BE "WHITEY" 6LR56 SPEC. 8802

UNIT 2

DIABLO CANYON POWER PLANT - PG&E CO.

DRAWING	SHEET	PAGE	REV
108011	3	0	41

02-01-2006	MIBF	KJD3		FRANCIS C. LING	MECHANICAL	M 16098	12/31/2007	REVISED PER FCT-030760
DATE	DWN	RE	IV	PROFESSIONAL ENGINEER	PE DISC.	PE#	PE EXP.	

RASTER=001f1108.dgn
DGN=001f1108.dgn
CAD User: MIBF Date: 02-01-2006

INPGIC
I Size

40 41 42 43 44 45 46 47 48 49

A

B

THIS SHEET IS LEFT BLANK INTENTIONALLY

UNIT 1 HAS AN INTERIM POST LOCA SAMPLING SYSTEM INSTALLED AND THE SCHEMATIC IS SHOWN ON SHEET 4 OF 102011.

UNIT 2 WILL NOT HAVE AN INTERIM POST LOCA SAMPLING SYSTEM. THIS SHEET IS LEFT BLANK TO PRESERVE IDENTICAL DRAWING SHEET COORDINATES FOR IDENTICAL SYSTEM COMPONENTS IN BOTH UNITS.

C

D

E

UNIT-2

RM INDEXED REV 1

P.G.& E. CO.	DRAWING NUMBER	REVISION
SHEET 4 OF SHEETS	108011	1
	MICROFILM	1

61-1140 (REV 1-80)

SCANNED: 1

AP C 1

SCAN 1 IC

POST LOCA SAMPLING SYSTEM

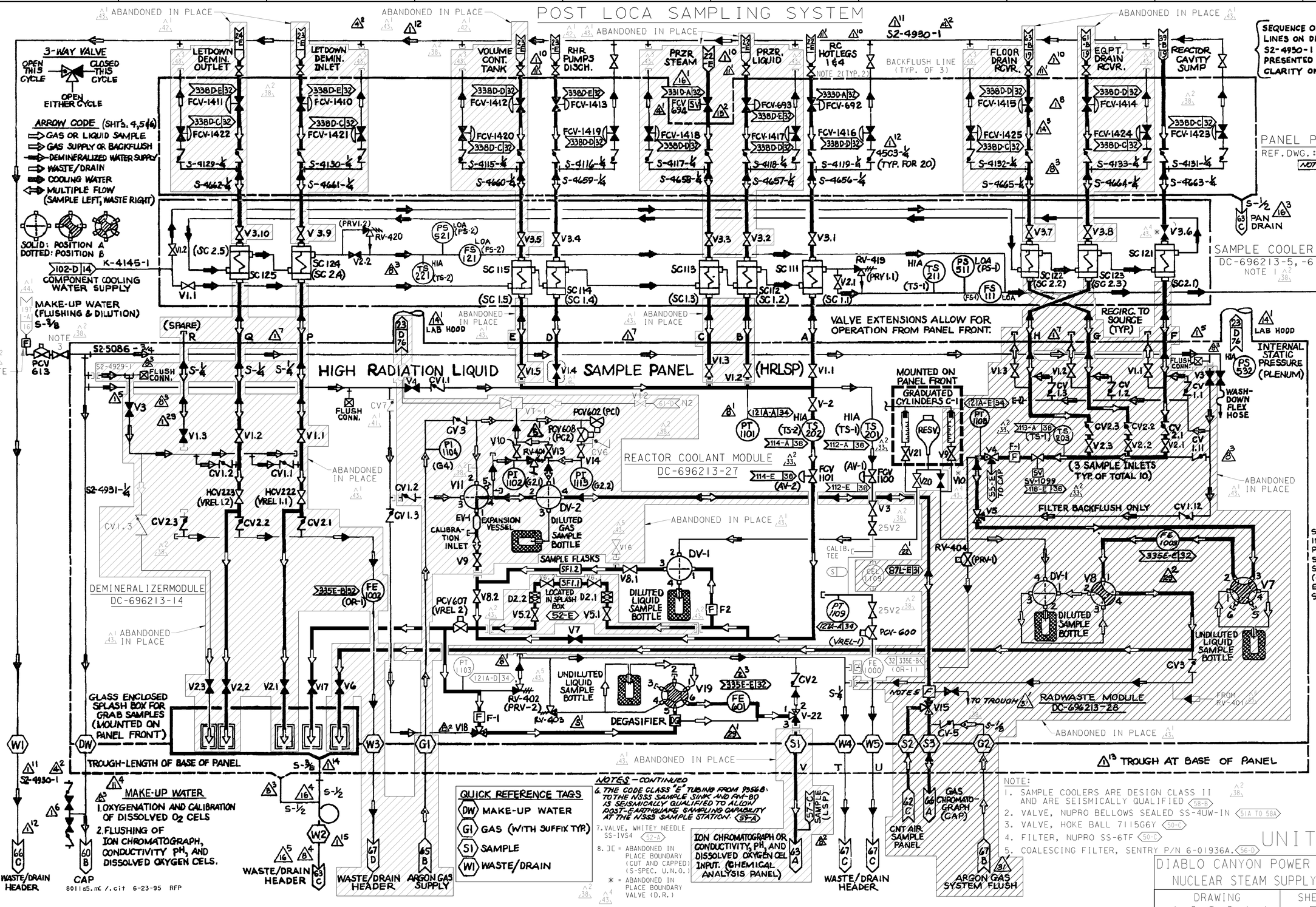

POST-LOCA SAMPLING SYSTEM

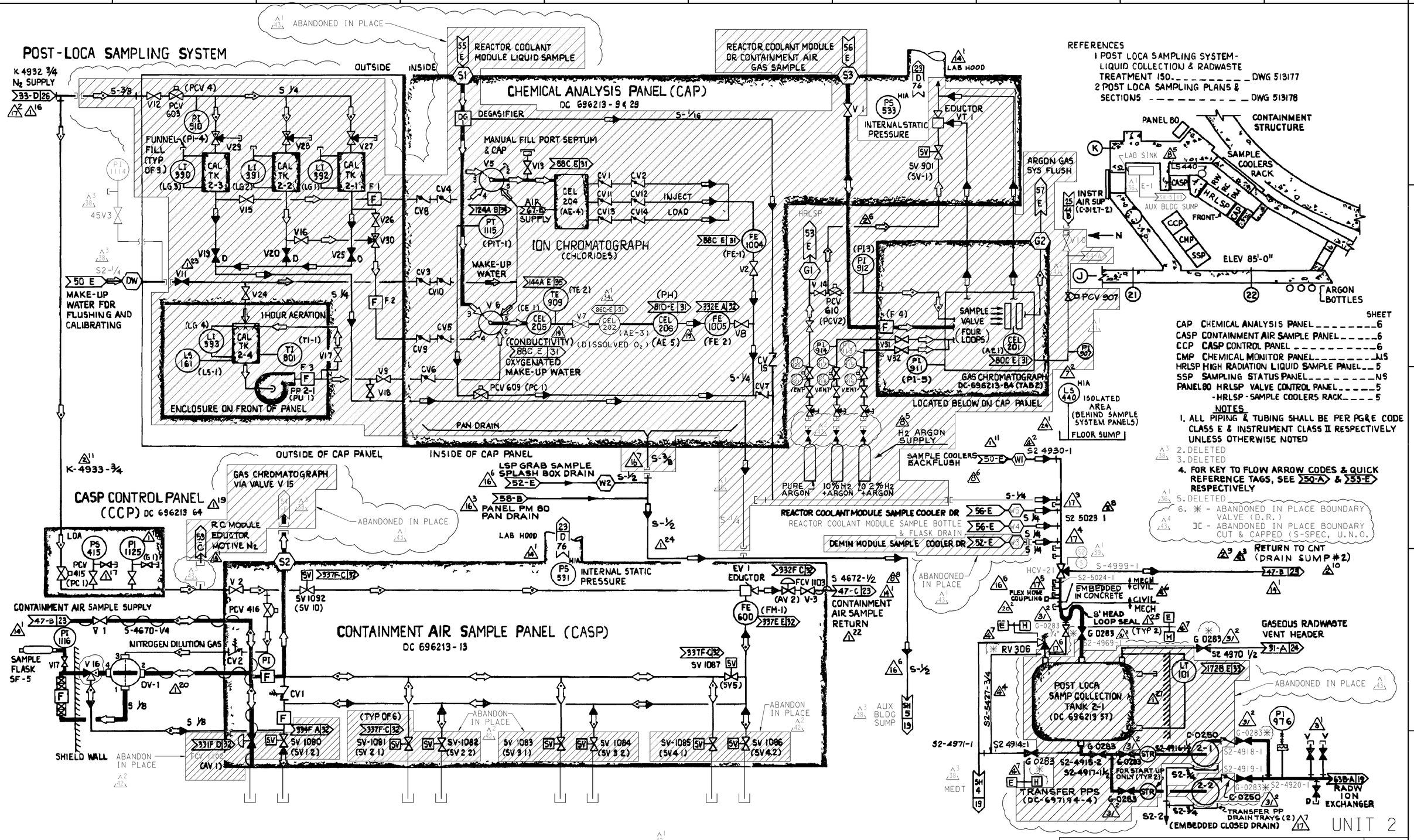

6/10/03	AJL2	RXG2	KJD3	KERSI J. DALAL	MECHANICAL	M 16690	3/31/2004	Revised per DC2-SN-050588-00
DATE	DWN	RE	IV	PROFESSIONAL ENGINEER	PE DISC.	PE#	PE EXP.	

P G & E CO. | SHEET 6 | PAGE 0 | 108011 | REV. 43

CAD User:rxg2 Date: 6-10-2003
DGN=ERU11545.DGN
RASTER=ERU11545.TIF

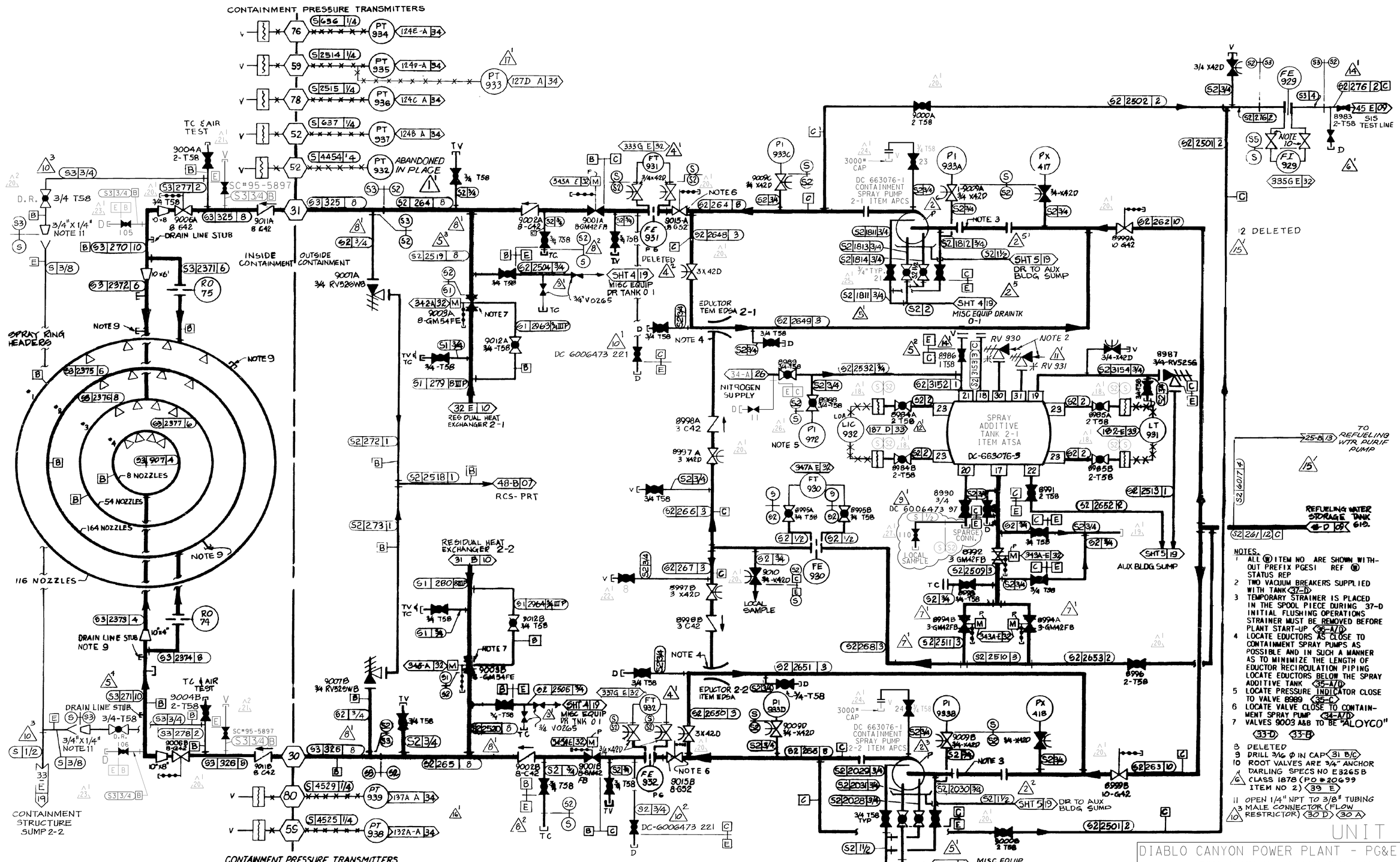

REF DWG DC-663076-21

NOTES.

1 ALL (W) ITEM NO ARE SHOWN WITHOUT PREFIX PGESI REF (W) STATUS REP
2 TWO VACUUM BREAKERS SUPPLIED WITH TANK 37-D
3 TEMPORARY STRAINER IS PLACED IN THE SPOOL PIECE DURING 37-D INITIAL FLUSHING OPERATIONS STRAINER MUST BE REMOVED BEFORE PLANT START-UP 36-A/D
4 LOCATE EDUCTORS AS CLOSE TO CONTAINMENT SPRAY PUMPS AS POSSIBLE AND IN SUCH A MANNER AS TO MINIMIZE THE LENGTH OF EDUCTOR RECIRCULATION PIPING LOCATE EDUCTORS BELOW THE SPRAY ADDITIVE TANK 35-A/D
5 LOCATE PRESSURE INDICATOR CLOSE TO VALVE 8989 35-C
6 LOCATE VALVE CLOSE TO CONTAINMENT SPRAY PUMP 34-A/D
7 VALVES 9003 A&B TO BE "ALOYCO" 33-D 33-E
8 DELETED
9 DRILL 3/16 Φ IN CAP 31 B/C
10 ROOT VALVES ARE 3/4" ANCHOR DARLING SPECS NO E3265B
G CLASS 187B (PO #20699 ITEM NO 2) 39 E
11 OPEN 1/4" NPT TO 3/8" TUBING
3 MALE CONNECTOR (FLOW RESTRICTOR) 30 D 30 A

UNIT 2

DIABLO CANYON POWER PLANT - PG&E CO.
CONTAINMENT SPRAY SYSTEM

DRAWING	SHEET	PAGE	REV
108012	3	0	27

DATE	DWN	RE	IV	PROFESSIONAL ENGINEER	PE DISC.	PE#	PE EXP.	
03-23-2011	AJFJ	FXC2		KERSI J. DALAL	MECHANICAL	M 16690	3/31/2012	REVISED PER DDT-4*488-01

RASTER=108012s3.dgn
DGN=108012s3.dgn
CAD User=AJFJ Date: 03-23-2011

3 Size

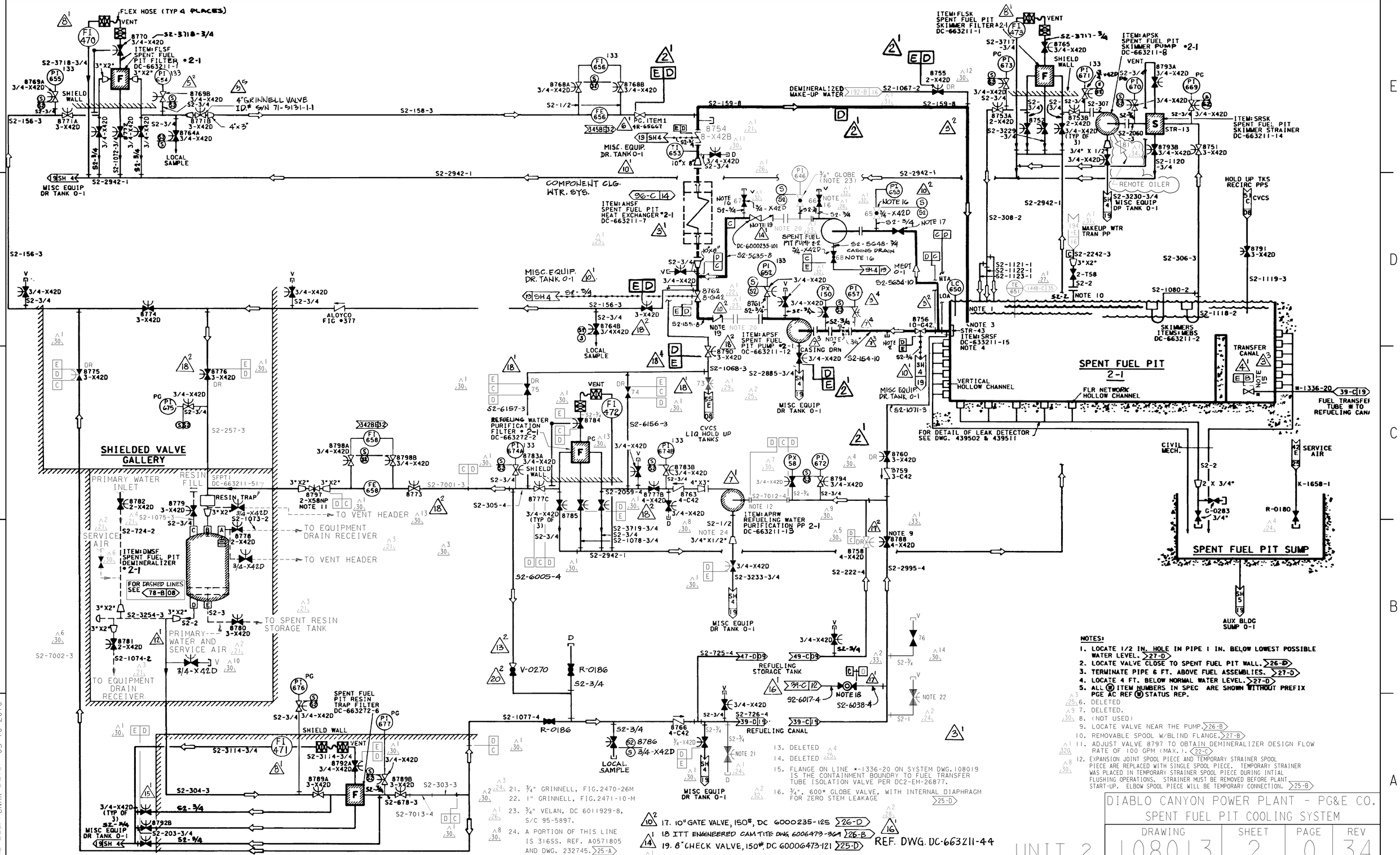

NOTES:

1. LOCATE 1/2 IN. HOLE IN PIPE 1 IN. BELOW LOWEST POSSIBLE WATER LEVEL. 27-D
2. LOCATE VALVE CLOSE TO SPENT FUEL PIT WALL. 26-D
3. TERMINATE PIPE 6 FT. ABOVE FUEL ASSEMBLIES. 27-D
4. LOCATE 4 FT. BELOW NORMAL WATER LEVEL. 27-D
5. ALL (W) ITEM NUMBERS IN SPEC ARE SHOWN WITHOUT PREFIX PGE AC REF (W) STATUS REP.
6. DELETED
7. DELETED.
8. (NOT USED)
9. LOCATE VALVE NEAR THE PUMP. 26-B
10. REMOVABLE SPOOL W/BLIND FLANGE. 27-B
11. ADJUST VALVE 8797 TO OBTAIN DEMINERALIZER DESIGN FLOW RATE OF 100 GPM (MAX.). 22-C
12. EXPANSION JOINT SPOOL PIECE AND TEMPORARY STRAINER SPOOL PIECE ARE REPLACED WITH SINGLE SPOOL PIECE. TEMPORARY STRAINER WAS PLACED IN TEMPORARY STRAINER SPOOL PIECE DURING INTIAL FLUSHING OPERATIONS. STRAINER MUST BE REMOVED BEFORE PLANT START-UP. ELBOW SPOOL PIECE WILL BE TEMPORARY CONNECTION. 25-B
13. DELETED
14. DELETED
15. FLANGE ON LINE *-1336-20 ON SYSTEM DWG. 108019 IS THE CONTAINMENT BOUNDRY TO FUEL TRANSFER TUBE ISOLATION VALVE PER DC2-EM-26877.
16. 3/4", 600# GLOBE VALVE, WITH INTERNAL DIAPHRAGM FOR ZERO STEM LEAKAGE 25-D
17. 10" GATE VALVE, 150#, DC 6000235-125 26-D
18. ITT ENGINEERED CAM-TITE DWG 6006473-364 26-B
19. 8" CHECK VALVE, 150#, DC 6000G473-121 25-D
20. 1/4" SPACER, S/C 94-3686
21. 3/4" GRINNELL, FIG.2470-26M
22. 1" GRINNELL, FIG.2471-10-M
23. 3/4" VELAN, DC 6011929-8, S/C 95-5897.
24. A PORTION OF THIS LINE IS 316SS. REF. A0571805 AND DWG. 232745. 25-A

DIABLO CANYON POWER PLANT - PG&E CO.
SPENT FUEL PIT COOLING SYSTEM

DRAWING	SHEET	PAGE	REV
108013	2	0	34

UNIT 2

DATE	DWN	RE	IV	PROFESSIONAL ENGINEER	PE DISC.	PE#	PE EXP.	
05-10-2010	CNHK	RxG2		KERSI J. DALAL	MECHANICAL	M 16690	3/31/2012	REVISED PER DDT-4*224-1

RASTER=108013s2.dgn
DGN=108013s2.dgn
CAD User: CNHK Date: 05-10-2010

3 Size

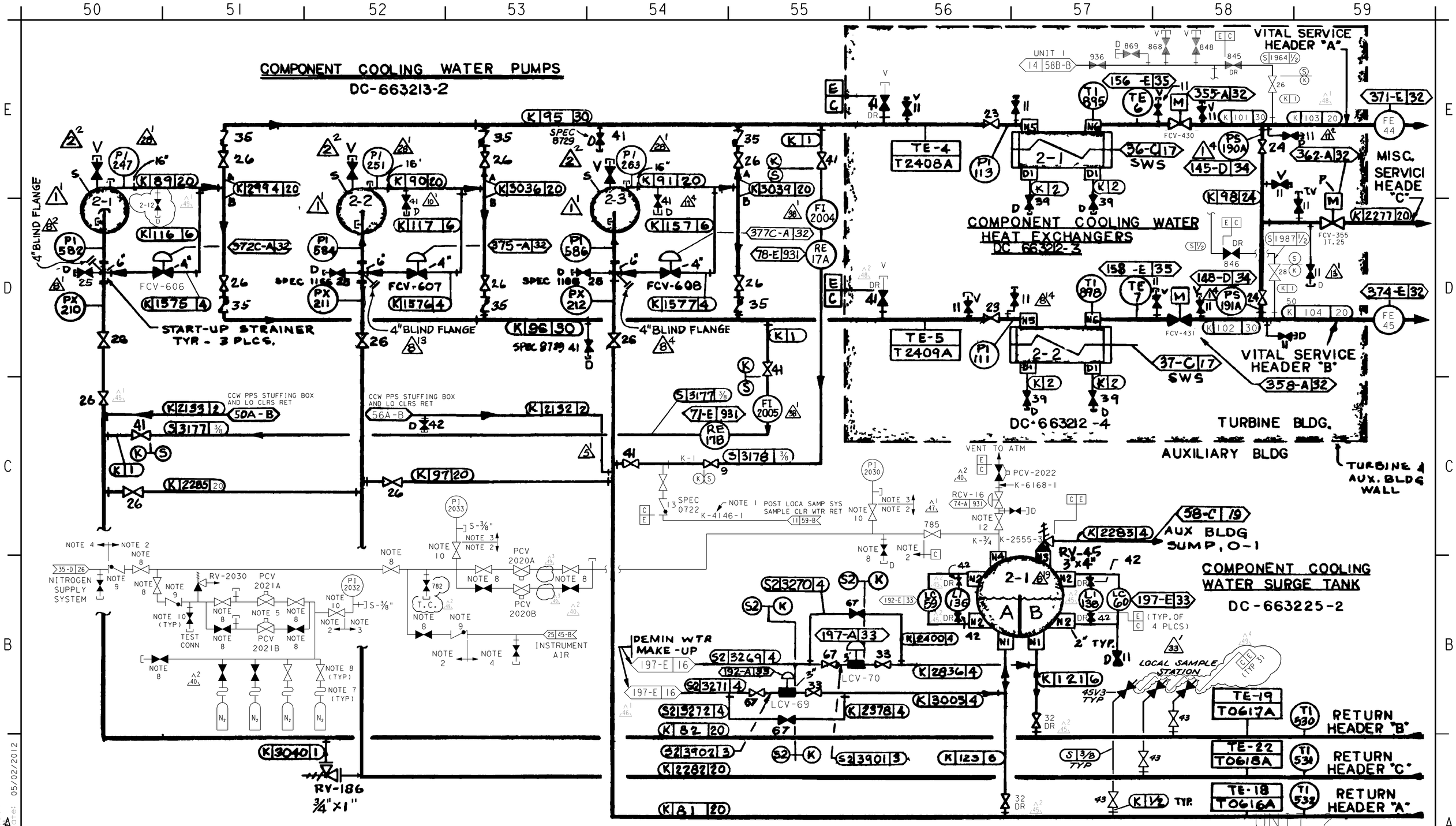

NOTES:

1. CODE CLASS "E" PORTION OF LINE 4146 SHALL BE SEISMICALLY ANALYZED TO DESIGN CLASS I CRITERIA (55-C)
2. INSTRUMENT DESIGN CLASSIFICATION ID (53-B) (56-C)
3. INSTRUMENT DESIGN CLASSIFICATION IC (53-C) (56-C)
4. INSTRUMENT DESIGN CLASSIFICATION II (53-B)
5. PCV HAS AN INTEGRAL RELIEF VALVE
6. UNLESS SPECIFIED OTHERWISE THE SURGE TANK PRESSURIZATION LINES ARE ¾"× 0.065" WALL SS TUBING
7. ½" FLEXIBLE TUBING, SWAGELOK NO. 8R-8
8. WHITEY MODEL NO. SS-63ES12 (53-B) (56-C)
9. NUPRO MODEL NO. SS-CH16S12-1 (53-B)
10. ⅜" WHITEY MODEL NO. SS-43ES6-SH (53-B) (56-C)
11. DELETED
12. VALVE, PG&E DWG.6011929-34, S/C 95-4119 (56-C)
13. VALVE (SEALED CLOSED) REC. DWG. 6006473-40, S/C 93-6847 (58-E)

DIABLO CANYON POWER PLANT - PG&E CO.
COMPONENT COOLING WATER SYSTEM

DRAWING	SHEET	PAGE	REV
108014	5	0	49

DATE	DWN	RE	IV	PROFESSIONAL ENGINEER	PE DISC.	PE#	PE EXP.	
05/02/2012	AJFJ	FXC2		KERSI J. DALAL	MECHANICAL	M 16690	3/31/2014	REVISED PER DFT-7*1528

RASTER=001f1089.DGN
DGN=001f1089.DGN
CAD User: AJFJ Date: 05/02/2012
3 size

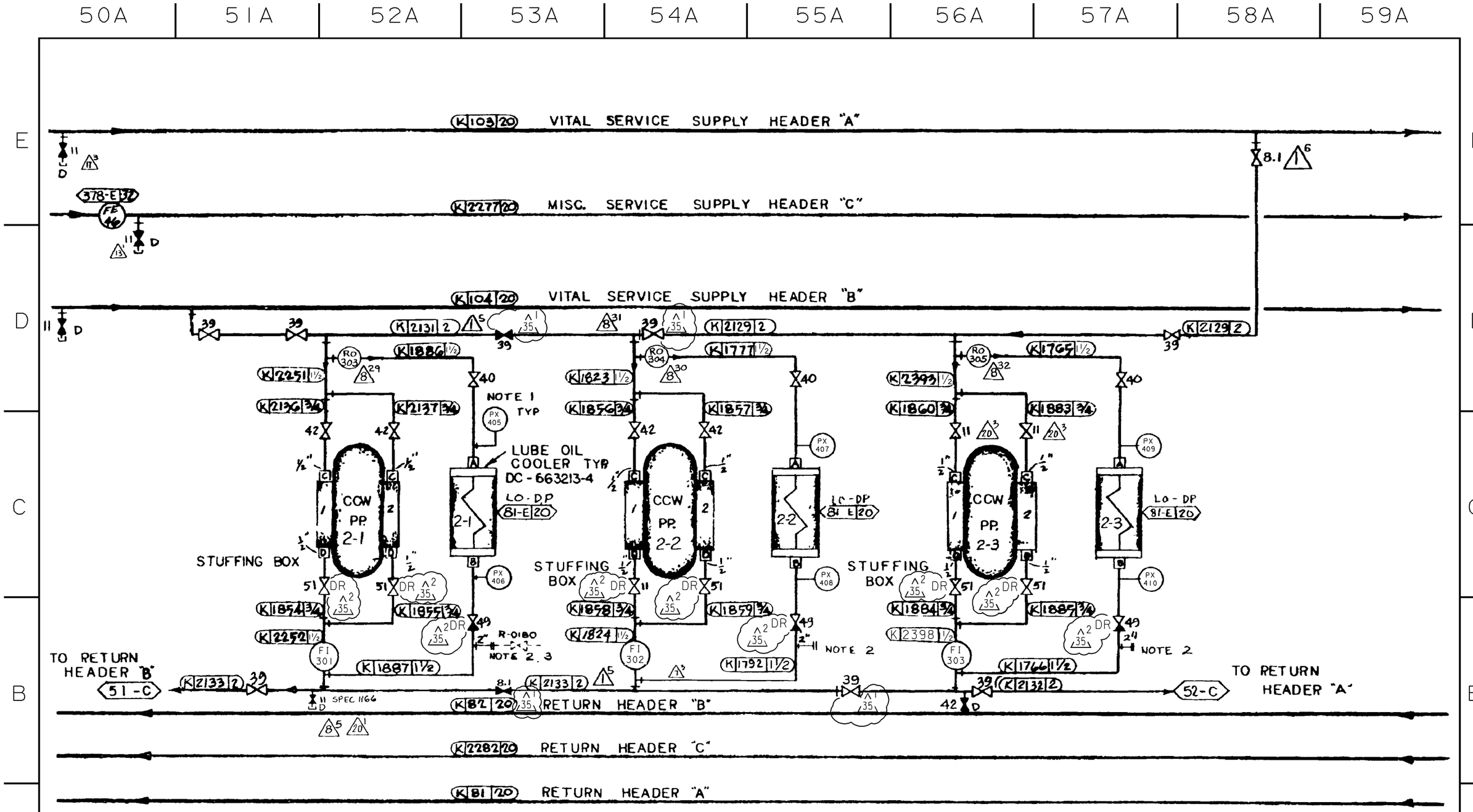

COMPONENT COOLING WATER PUMPS COOLING REQUIREMENTS

DC-663213-2

NOTES:

1. PXS TO BE LOCATED WITHIN 1' OF HEAT EXCHANGER (53A-D)
2. LOCATE FLANGE FOR EASY CONNECTION OF TEMPORARY VALVE AND PRESSURE TEST GAGE. REPLACE WITH BLIND FLANGE AFTER TEST (53A-B)
3. VALVE IS NON-CLASS I. 2" BALL VALVE WITH 2" FLANGE AT ONE END AND 2" MALE NIPPLE AT OTHER END. ONLY ONE VALVE WILL BE USED AT SEVERAL

3 (CONT.) TEST POINTS, REMOVE VALVE PRIOR TO OPERATION. SYS IS CLASS I (53A-B)

UNIT 2

P G & E CO.		108014	REV. 35
SHEET 5A	PAGE 0		

DATE	DWN	RE	IV	PROFESSIONAL ENGINEER	PE DISC.	PE#	PE EXP.	
3/2/01	PMH2	FXC2	-	KERSI J. DALAL	MECHANICAL	M 16690	3/31/2004	Revised per FCT 025489

INPGIC

CAD User: FXC2 Date: 3-02-2001
DGN=8014S5A.DGN
RASTER=8014S5A.TIF

NOTES CON'T: 6. DRAIN W/ QUICK-DISCONNECT COUPLING W/ INTEGRAL CHECK VALVE FOR EMERGENCY TIE-IN TO FIRE PROTECTION SYS. (108018-5A). COUPLING TO BE REMOVED WHEN DRAINING IS REQUIRED.

7. DRAIN W/ QUICK-DISCONNECT COUPLING W/ INTEGRAL CHECK VALVE. DRAIN HOSE TO BE ATTACHED FOR ROUTING FLOW TO FLOOR DRAINS WHEN FPS TIE-IN (NOTE 6) IS OPERATIONAL. COUPLING TO BE REMOVED WHEN DRAINING IS REQUIRED.

8. THE INSTRUMENT AIR TO FCV-360 AND TCV-27 HAS BEEN ISOLATED. BOTH VALVES ARE FULLY OPEN. (66-B)

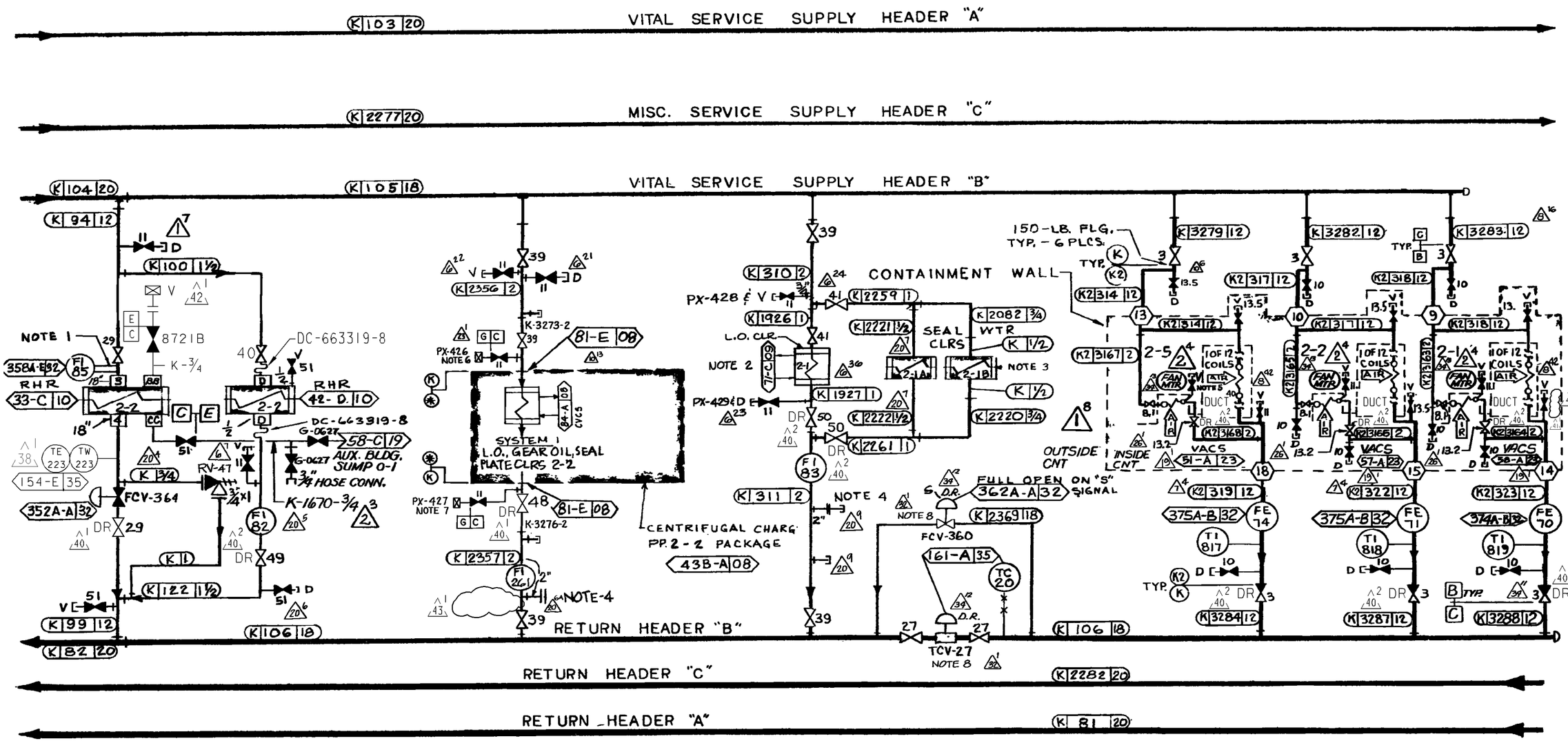

RESIDUAL H.X. 2-2
DC-663217-4

RES. HEAT REM. PP2-2 SEAL WTR. CLR.
DC-663217-9, 16

CENTRIFUGAL CHARGING PUMP 2-2 PACKAGE CLRS.
DC-663210-40, 47, 48, 49, 50

SAFETY INJECTION PP 2-1 COOLER
DC-663216-26, 32

REACTOR CONTAINMENT FAN COOLERS
DC-663079-1, 8, 9 (FAN COILS & FAN MOTORS HX)

NOTES:
1. ELBOW TAPS FOR FLOW INDICATION. (60-D)
2. REFER TO S.I.S. PUMP LUBE OIL COOLING SYSTEM. P.G.&E RECORD NO. D.C.-663216-26 (65-C)
3. REFER TO S.I.S. PP. SEAL FLUSH SYSTEM DIAGRAM, PG&E RECORD NO. D.C.-663216-27 (66-C)
4. TEST POINT, SEE NOTES 2 & 3 SHT-5A, COORD 63-B
5. 1/2"-600# GATE VALVE PURCHASED UNDER P.O.# 4R-63771 (67-C)

HEADER "B" COMPONENTS

UNIT 2

DIABLO CANYON POWER PLANT - PG&E CO.
COMPONENT COOLING WATER SYSTEM

DRAWING	SHEET	PAGE	REV
108014	6	0	43

RASTER=eru17621.DGN
DGN=eru17621.DGN
CAD User: MNRU Date: 10-12-2012

INPGIC
I Size

DATE	DWN	RE	IV	PROFESSIONAL ENGINEER	PE DISC.	PE#	PE EXP.	
10-12-2012	MNRU	FxC2		KERSI J. DALAL	MECHANICAL	M 16690	3/31/2014	REVISED PER DFT-7*1813

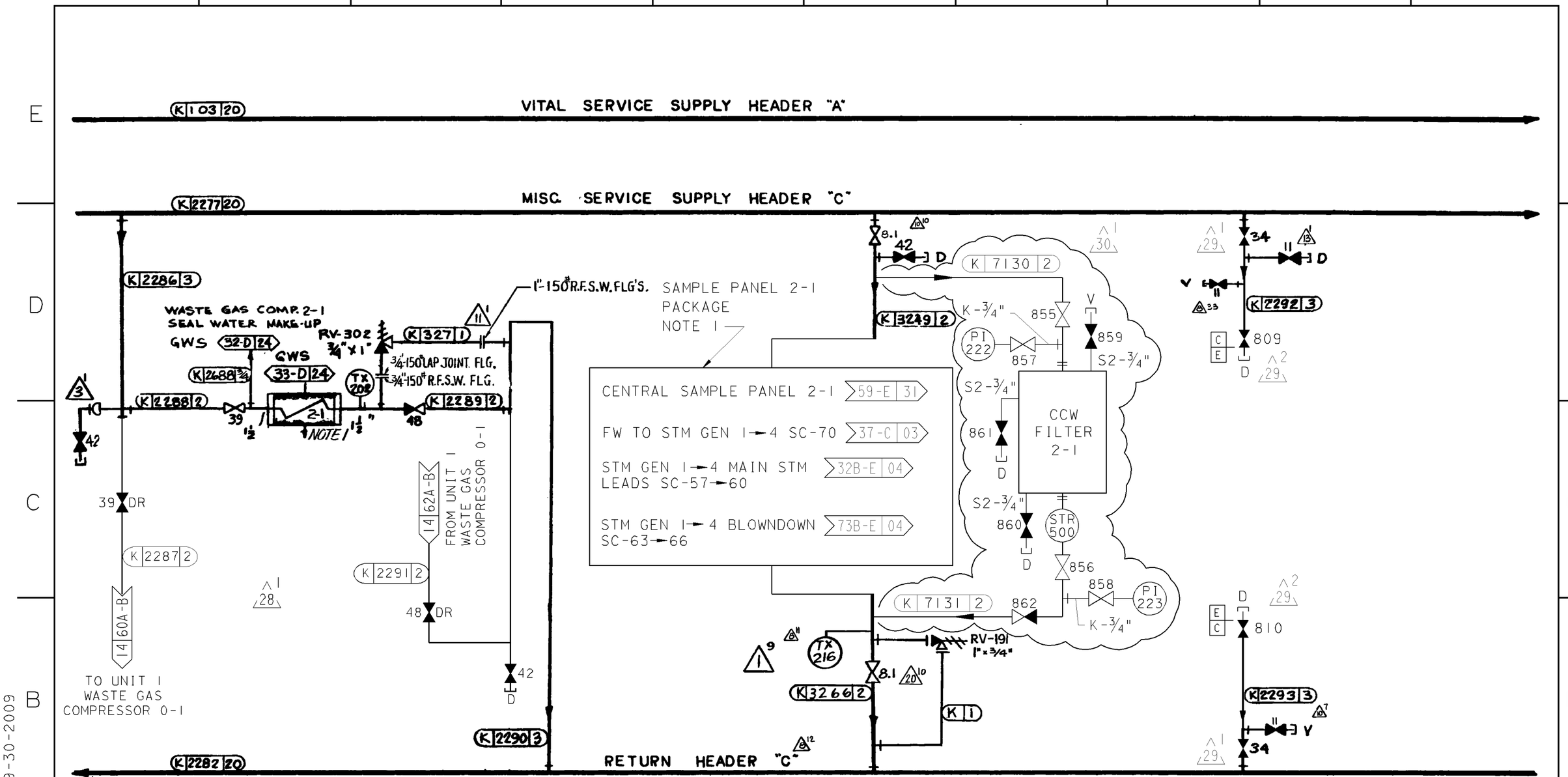
60A 61A 62A 63A 64A 65A 66A 67A 68A 69A
VITAL SERVICE SUPPLY HEADER "A"
K 10320
MISC. SERVICE SUPPLY HEADER "C"
K 22770 20
K 22863
WASTE GAS COMP. 2-1
SEAL WATER MAKE-UP
GWS 32-D 24
GWS 33-D 24
K 2688 3/4
RV-302 3/4"x1"
K 3271
1"-150# R.F.S.W. FLG'S.
3/4"-150# LAP JOINT FLG.
3/4"-150# R.F.S.W. FLG.
TX 202
K 22882
K 22892
39
48
NOTE 1
42
39 DR
K 22872
60A-B
TO UNIT 1 WASTE GAS COMPRESSOR 0-1
K 22912
48 DR
62A-B
FROM UNIT 1 WASTE GAS COMPRESSOR 0-1
K 22903
RETURN HEADER "C"
K 22820 20
RETURN HEADER "A"
K 81 20
SAMPLE PANEL 2-1 PACKAGE NOTE 1
CENTRAL SAMPLE PANEL 2-1 59-E 31
FW TO STM GEN 1→4 SC-70 37-C 03
STM GEN 1→4 MAIN STM LEADS SC-57→60 32B-E 04
STM GEN 1→4 BLOWNDOWN SC-63→66 73B-E 04
K 32492
K 7130 2
K 7131 2
K-3/4"
855
857
859
S2-3/4"
PI 222
861
860
CCW FILTER 2-1
STR 500
856
858
862
PI 223
RV-191 1"x3/4"
TX 216
K 32662
K 1
K 22923
K 22933
809
810
34
8.1
42
WASTE GAS COMPRESSOR 2-1
SEAL WATER COOLER
DC-663274-2
CENTRAL SAMPLE PANEL 2-1
COOLERS
DC-663108-5,42
NOTE: 1. WASTE GAS COMPRESSOR SEAL WATER COOLER & CENTRAL SAMPLE PANEL COOLERS ARE DESIGN CL. II & SEISMICALLY ANALYZED IN ACCORDANCE WITH DESIGN CRITERIA MEMORANDUM T-10 (formerly M-61) 61A-B C
HEADER "C" COMPONENTS
UNIT 2
DIABLO CANYON POWER PLANT - PG&E CO.
COMPONENT COOLING WATER SYSTEM
DRAWING 108014 SHEET 6A PAGE 0 REV 30
RASTER=108014s6A.dgn
DGN=108014s6A.dgn
CAD User: AJFJ Date: 09-30-2009
INPGIC
1 Size
09-30-2009 AJFJ FxC2 KERSI J. DALAL MECHANICAL M 16690 3/31/2010 REVISED PER DDN-2*171
DATE DWN RE IV PROFESSIONAL ENGINEER PE DISC. PE# PE EXP.

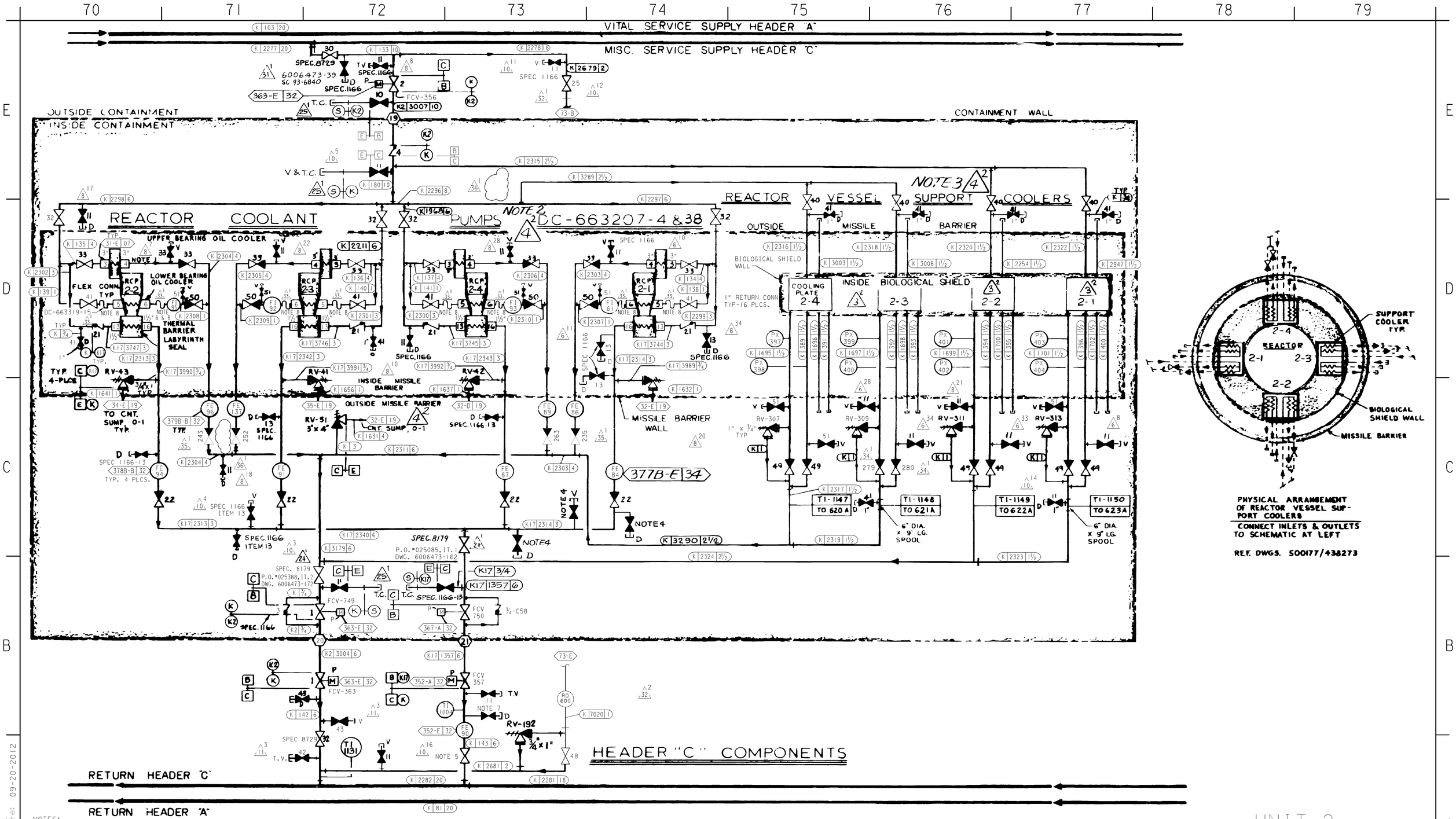

NOTES:

1. REACTOR COOLANT PUMP 2-2 HAS SHORT PIPE (K-3) BETWEEN UPPER BEARING OIL COOLER OUTLET NOZZLE NO. 4 AND LINE NUMBER 2304. RCP 2-2 ONLY (70-D)
2. REACTOR COOLANT PUMP L.O. COOLERS ARE DESIGN CLASS II & SEISMICALLY ANALYZED BY THE SUPPLIER. (73-D)
3. REACTOR VESSEL SUPPORT COOLERS AND CCW SIDE OF GFFD SAMPLE COOLER ARE DESIGN CLASS II AND SEISMICALLY ANALYZED PER DESIGN CRITERIA MEMORANDUM T-10 (FORMERLY M-61) (76-D) (74-B)
4. THESE VALVES PURCHASED UNDER P.O. #4R-64932 (73/74-C)
5. 6" BUTTERFLY VALVE PURCHASED UNDER P.O. 4R-35040 (73-A)
6. FLEX HOSE FOR THIS LOCATION ONLY IS ITEM 1 ON P.O. 4R-70415 DWG. #DC-663319-33 (71-D)
7. 3/4"Ø GATE VALVE, 600# VELAN MODEL NO. W04-2054B-02MS ASME SECT. III ND MAT'L, VALVE BODY MAT'L A105, WCB (73-B)
8. ISOLATION KIT INSTALLED AT ONE END OF FLEX LINE MIN.

UNIT 2

DIABLO CANYON POWER PLANT - PG&E CO.
COMPONENT COOLING WATER SYSTEM

DRAWING	SHEET	PAGE	REV
108014	7	0	36

DATE	DWN	RE	IV	PROFESSIONAL ENGINEER	PE DISC.	PE #	PE EXP.	
09-20-2012	MNRU	RxG2		KERSI J. DALAL	MECHANICAL	M 16690	3/31/2014	REVISED PER DFT-7*1814

RASTER=80143T.dgn
DGN=80143T.dgn
CAD User: MNRU Date: 09-20-2012

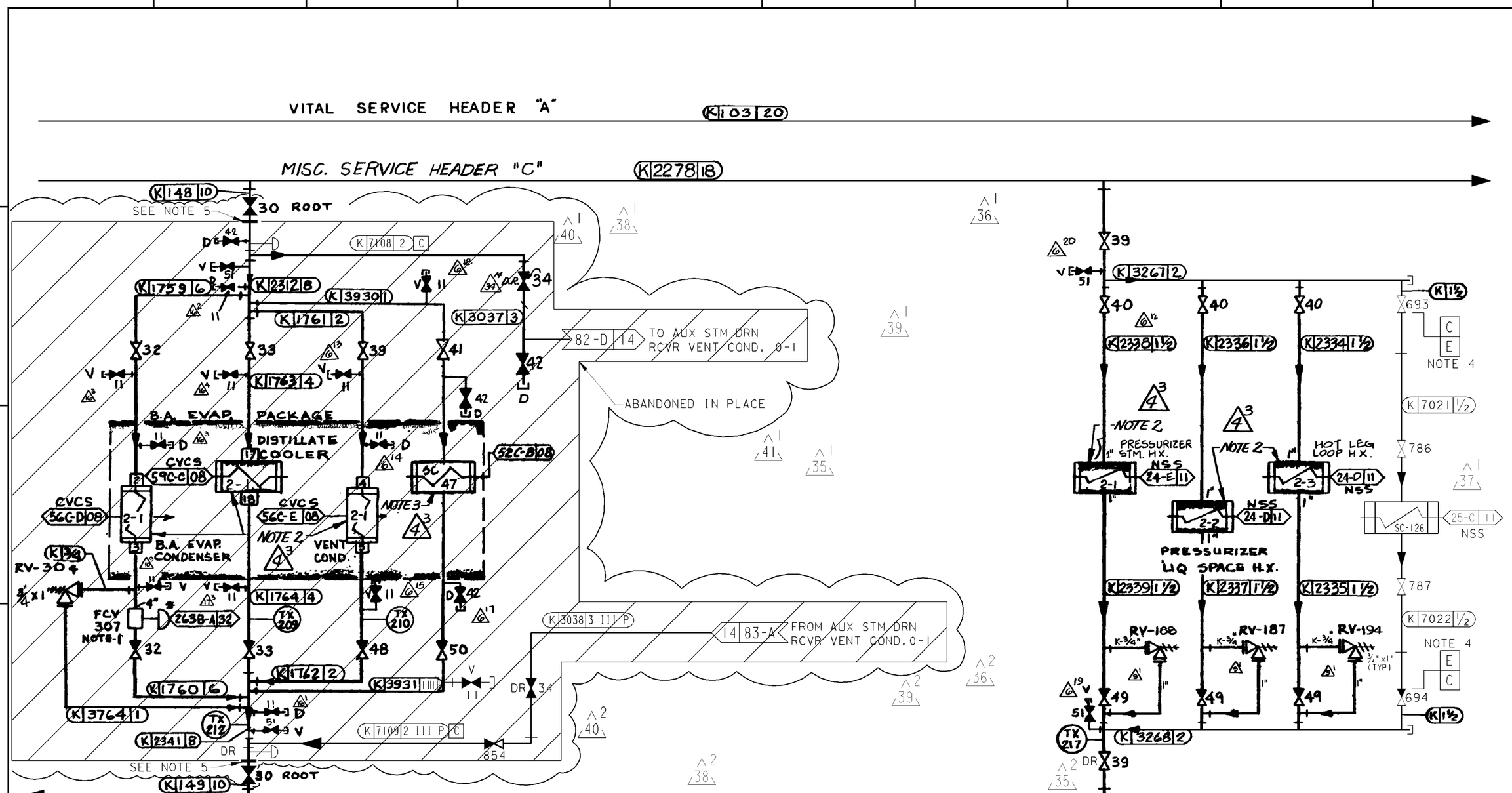

HEADER "C" COMPONENTS

NOTES

1. VALVE PLACED OUTSIDE EVAPORATOR AREA DUE TO HIGH RADIATION LEVEL. (80-B)
2. BORIC ACID EVAP.PKG.COOLERS (EXCEPT SAMPLE COOLER) & NSSS SAMPLE HX.CCW.SIDE ARE DESIGN CLASS II & SEISMICALLY ANALYZED BY THE SUPPLIER. (81-C,85-C,87/88-C)
2. BORIC ACID EVAP.PKG.COOLERS (EXCEPT SAMPLE COOLER) & NSSS SAMPLE HX.CCW.SIDE ARE DESIGN CLASS II & SEISMICALLY ANALYZED BY THE SUPPLIER.
3. B.A.E. PKG. SAMPLE COOLER (SC47) IS DESIGN CLASS II & SEISMICALLY ANALYZED PER DESIGN CRITERIA MEMORANDUM T-10 (FORMERLY M-61) (82/83-C,86-C)
4. PIPING CODE CLASS BOUNDRY IS CLASS II (QA CLASS S).
5. BLANK PLATE INSTALLED MATERIAL PER "K" SPEC, CLASS C. (81-D) (81-B)

UNIT 2

DIABLO CANYON POWER PLANT - PG&E CO.
COMPONENT COOLING WATER SYSTEM

DRAWING	SHEET	PAGE	REV
108014	8	0	41

DATE	DWN	RE	IV	PROFESSIONAL ENGINEER	PE DISC.	PE#	PE EXP.	
04-11-2011	AJFJ	FxC2		KERSI J. DALAL	MECHANICAL	M 16690	3/31/2012	REVISED PER DDN-2*560

RASTER=8014s8.dgn
DGN=8014s8.dgn
CAD User: AJFJ Date: 04-11-2011

INPGIC
I Size

NOTES:

1. ST. GEN. BLOWDOWN SAMPLE COOLERS & COND. FOR SGBDTV SAMPLE ARE DESIGN CLASS II & SEISMICALLY ANALYZED PER DESIGN CRITERIA MEMORANDUM T-10 (FORMERLY M-61) (95/96-C)
2. DELETED
3. CODE CLASS "E" PORTIONS OF LINES 4172 & 4173 SHALL BE SEISMICALLY ANALYZED TO DESIGN CLASS I CRITERIA. (95-B,D)
4. S/C 93-5909, DWG. 6006473-8 (92-B)
5. S/C 94-3774, DWG. 6006473-141 (93-B)
6. S/C 93-6841, DWG. 6006473-166 (93-B)
7. 1/4" THICK BLIND PLATE INSTALLED BETWEEN FLANGES.

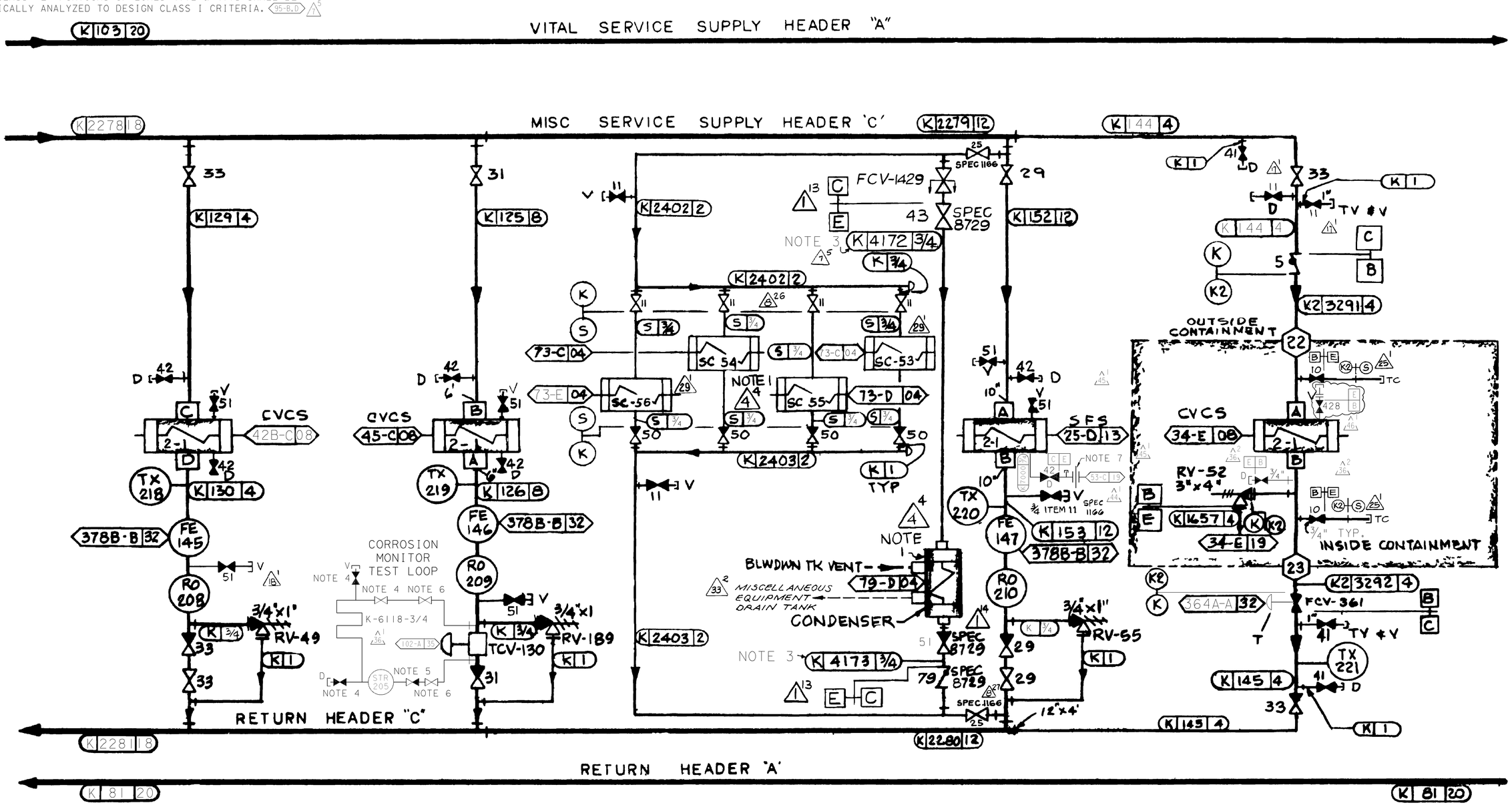

SEAL WATER HEAT EXCHANGER DC-663210-7

LETDOWN HEAT EXCHANGER DC-663210-11

STEAM GENERATOR BLOWDOWN SAMPLE COOLERS FOR RADIATION MONITORS DC-663095-3

SPENT FUEL PIT HEAT EXCHANGER DC-663211-7

EXCESS LETDOWN HEAT EXCHANGER DC-663210-12

UNIT - 2

HEADER "C" COMPONENTS

P G & E CO.	108014	REV. 46
SHEET 9	PAGE 0	

DATE	DWN	RE	IV	PROFESSIONAL ENGINEER	PE DISC.	PE#	PE EXP.	
12/9/04	MIBF	RMDI	-	KERSI J. DALAL	MECHANICAL	M 16690	3/31/2006	Revised per FCT 029238

CAD User:MIBF Date: 12-6-2004
DGN=ERU08102.DGN
RASTER=ERU08102.TIF

NOTES CON'T: 8. DRAIN W/ QUICK-DISCONNECT COUPLING W/ INTEGRAL CHECK VALVE FOR EMERGENCY TIE-IN TO FIRE PROTECTION SYSTEM (108018-5A). COUPLING TO BE REMOVED WHEN DRAINING IS REQUIRED.

9. DRAIN W/ QUICK-DISCONNECT COUPLING W/ INTEGRAL CHECK VALVE. DRAIN HOSE TO BE ATTACHED FOR ROUTING FLOW TO FLOOR DRAINS WHEN FPS TIE-IN (NOTE 8) IS OPERATIONAL. COUPLING TO BE REMOVED WHEN DRAINING IS REQUIRED.

10. THE INSTRUMENT AIR TO FCV-366 AND TCV-28 HAS BEEN ISOLATED. BOTH VALVES ARE FULLY OPEN. (106-B)

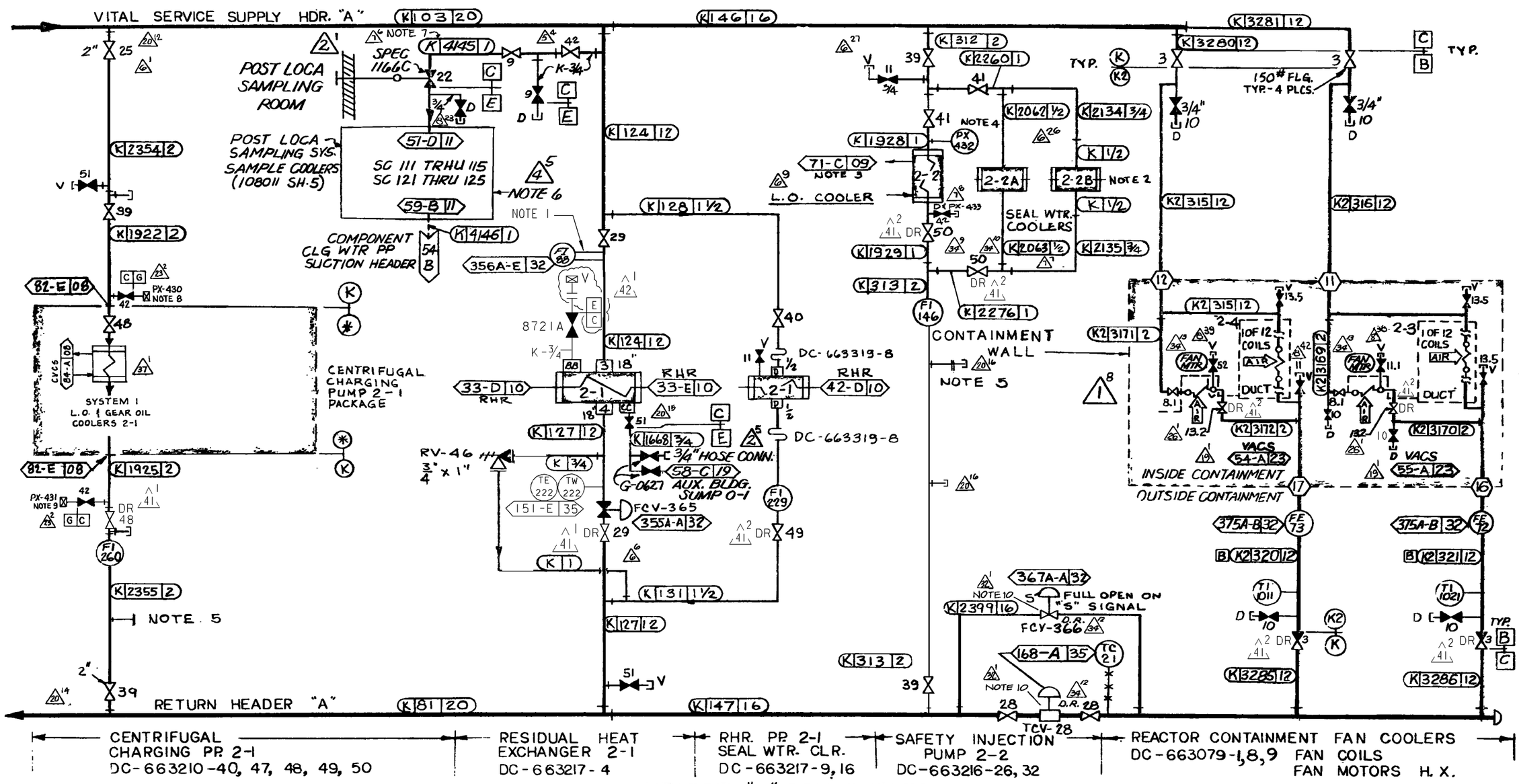

HEADER "A" COMPONENTS

NOTES:

1. ELBOW TAPS FOR FLOW INDICATION (104-D)
2. REFER TO SIS PP. SEAL FLUSH SYSTEM DIAGRAM, PG&E RECORD NO. DC-663216-27 (107-D)
3. REFER TO SIS PP LUBE OIL COOLER SYSTEM MFR. DWG., PG&E RECORD NO. DC-663216-26 (105-D)
4. PX'S TO BE LOCATED WITHIN 1' OF H.X. (106-E)
5. 2" BLIND FLANGE SEE NOTES 2 & 3 SH.5A (100-B)
6. POST-LOCA SAMPLE COOLERS ARE DESIGN CLASS II & SEISMICALLY ANALYZED PER DCM M-45 (103-D)
7. CODE CLASS "E" PORTION OF LINE 4145 SHALL BE SEISMICALLY ANALYZED TO DESIGN CLASS I CRITERIA. (102-E)

UNIT 2

DIABLO CANYON POWER PLANT - PG&E CO.
COMPONENT COOLING WATER SYSTEM

DRAWING	SHEET	PAGE	REV
108014	10	0	42

DATE	DWN	RE	IV	PROFESSIONAL ENGINEER	PE DISC.	PE#	PE EXP.	
01-29-2008	JAR0	FxC2		KERSI J. DALAL	MECHANICAL	M 16690	3/31/2008	REVISED PER FCT-30442

RASTER=erul7622.DGN
DGN=erul7622.DGN
CAD User: JAR0 Date: 01-29-2008

INPGIC
I Size

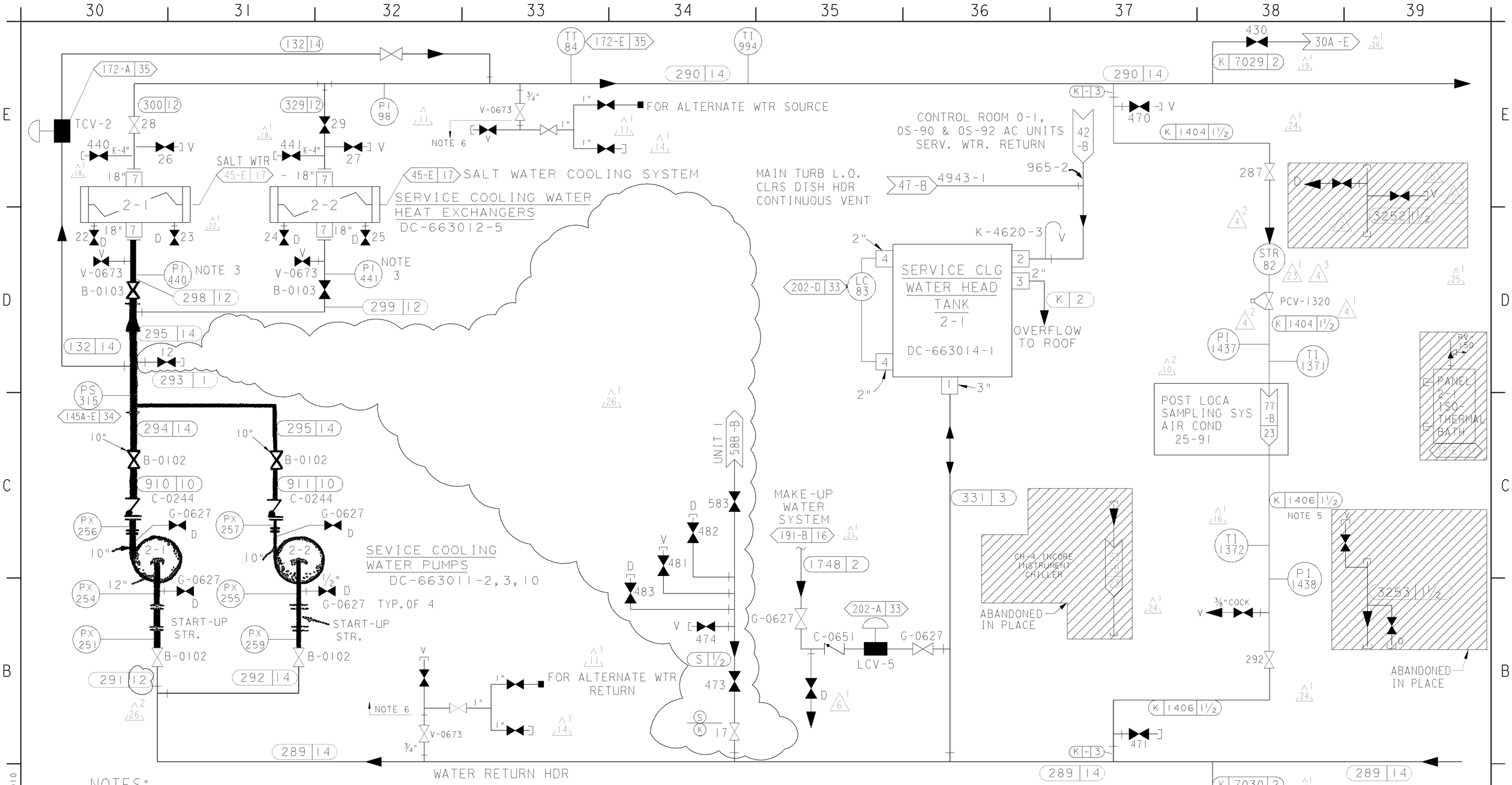

NOTES:

1. ALL PIPING ON THIS DWG. SHALL BE "K" SPEC., P.G.&E. CLASS "E".
2. ALL DRAIN AND VENT VALVES, DESIGNATED "D" & "V", ARE ¾".
3. INSTALL PI NEXT TO INLET VALVE IN ORDER TO MONITOR PLACING HX IN SERVICE. (31-D)
4. DELETED
5. FOR "K" CLASS PIPE, ANY NEW THREADED CONNECTIONS ADDED AFTER 12-15.83 SHALL HAVE PRIOR APPROVAL FROM PROJECT ENGINEERING. (38-C)
6. 1" PIPING TO AND FROM TEMPORARY COMPRESSOR AFTER COOLER IS SCH.80 WITH THREADED ENDS. ISOLATION VALVES ARE 1"-150# GATE VALVES (THREADED ENDS)

UNIT 2

DIABLO CANYON POWER PLANT - PG&E CO.
SERVICE COOLING WATER SYSTEM

DRAWING	SHEET	PAGE	REV
108015	3	0	26

DATE	DWN	RE	IV	PROFESSIONAL ENGINEER	PE DISC.	PE#	PE EXP.	
09-22-2010	JBMX	FxC2		KERSI J. DALAL	MECHANICAL	M 16690	3/31/2012	REVISED PER DDT-4*084 DFC-3*998, 3*1054 & DFT-7*881

RASTER=108015s3.dgn
DGN=108015s3.dgn
CAD User: JBMX Date: 09-22-2010

SHEETS: 3 Size

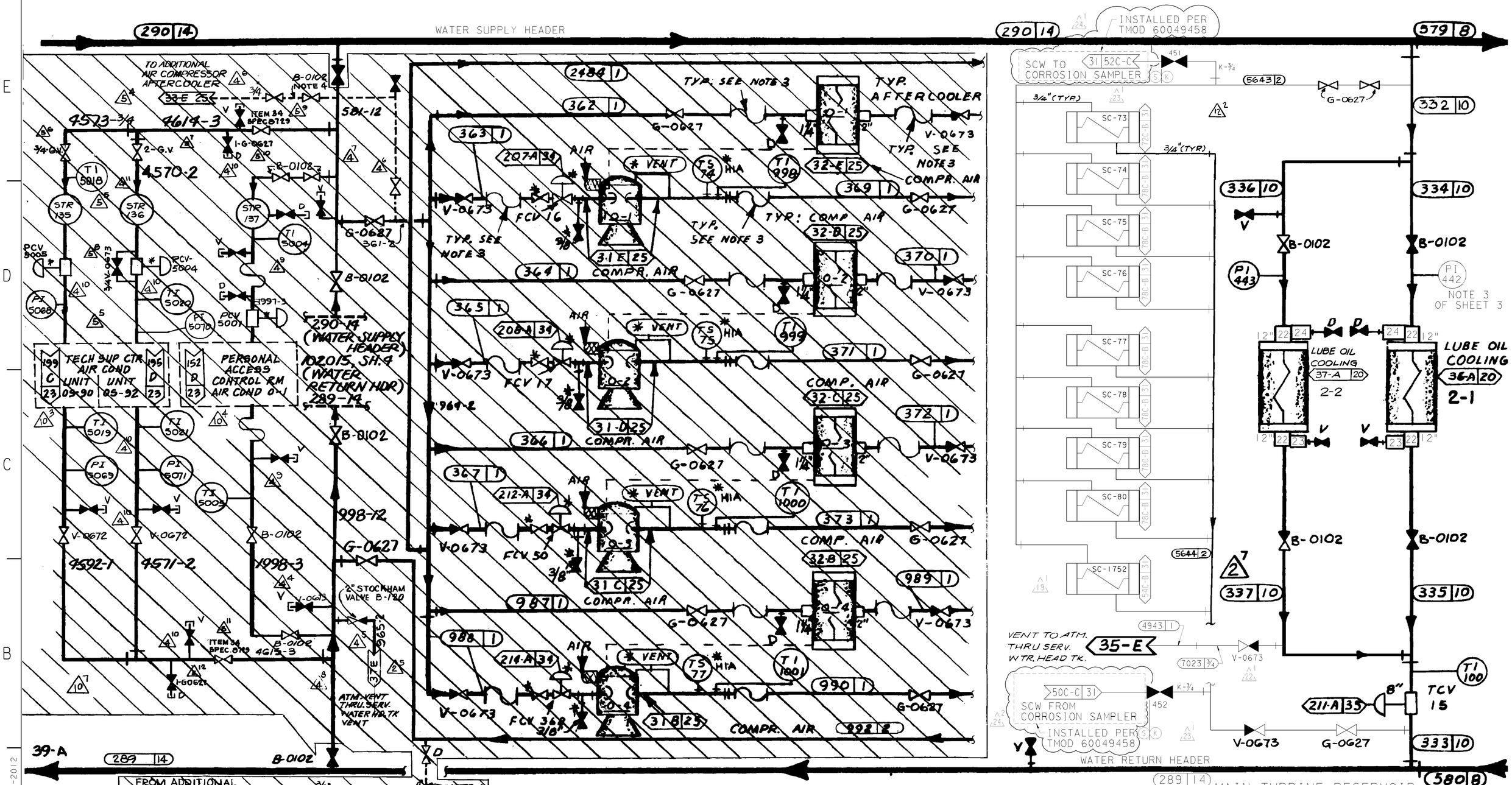

NOTES:

1. ALL PIPING THIS SHEET SHALL BE PG&E CLASS "E"
2. PIPING LINE DESIGNATION NOS. TO BE "K" SPECS.
3. FLEXIBLE HOSE TO BE PURCHASED UNDER EMM DCI-266 (44-E)
4. TEMPORARY PIPING INCLUDES CARBON STEEL PIPE & MISCELLANEOUS GATE VALVES. (41-E, 43-A)

PLANT AIR COMPRESSORS & AFTER COOLERS
COMMON FACILITIES UNIT 1 & 2

AIR COMPRESSORS
DC-663002-1

DC-663002-16

PLANT AIR DRYER COOLER

DC-663003-5

MAIN TURBINE RESERVOIR LUBE OIL COOLERS

DC-663282-12

UNIT 2

DIABLO CANYON POWER PLANT - PG&E CO.
SERVICE COOLING WATER SYSTEM

DRAWING	SHEET	PAGE	REV
108015	4	0	24

DATE	DWN	RE	IV	PROFESSIONAL ENGINEER	PE DISC.	PE#	PE EXP.	
09-05-2012	MNRU	RxG2		KERSI J. DALAL	MECHANICAL	M 16690	3/31/2014	REVISED PER DDT-4*764

RASTER=8015s4.DGN
DGN=8015s4.DGN
CAD User: MNRU Date: 09-05-2012

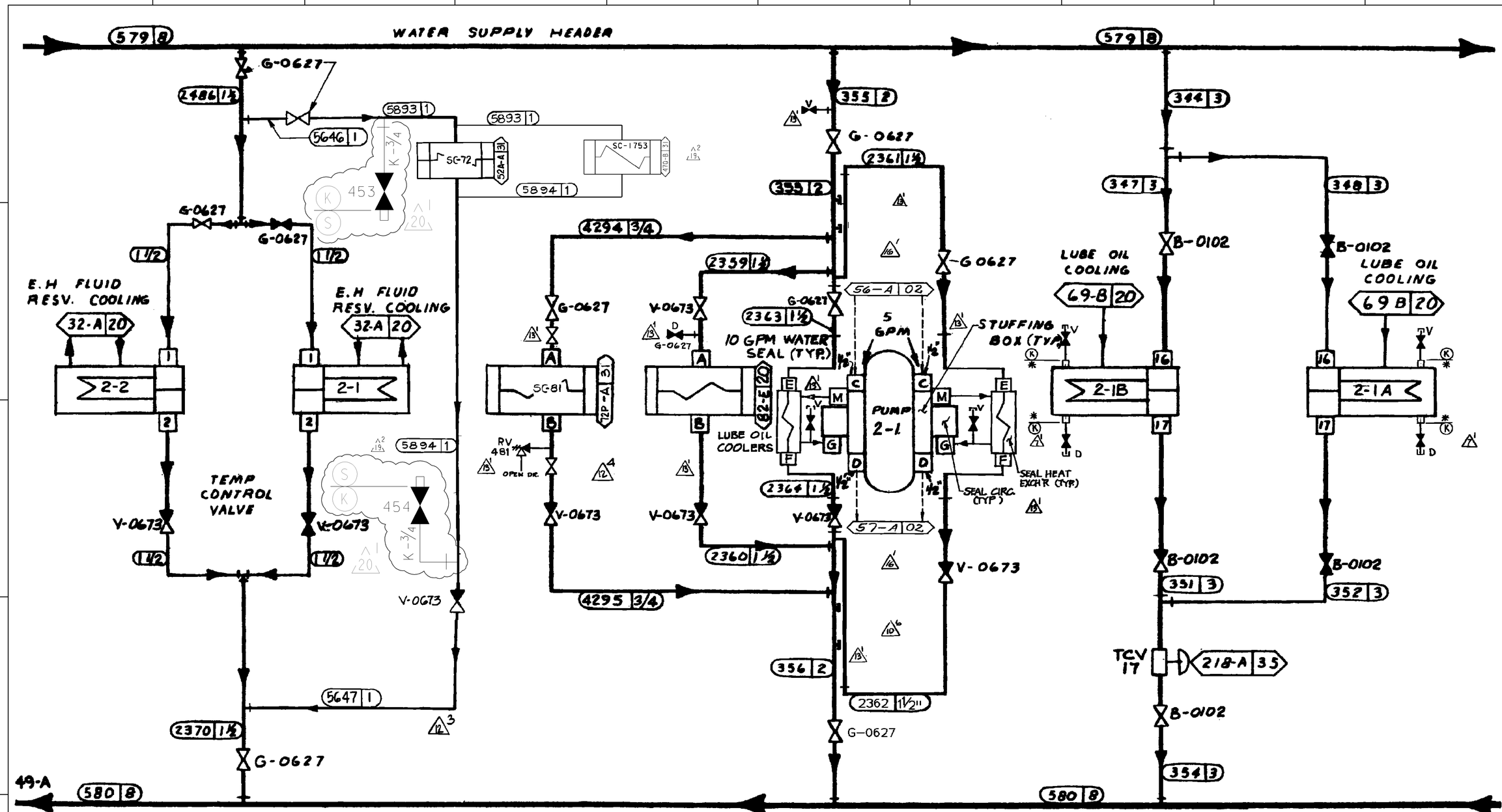

DC-663284-3
DC-663280-36 TAB 14 PAGE 13 & FIG 1
ELECTRO-HYDRAULIC CONTROL COOLERS

DC-663043-1
HEATER #2 DRAIN TK. PUMP

DC-663300-12
FEED PUMP TURBINE LUBE OIL COOLERS

NOTES
1.- PIPING LINE DESIGNATION NOS TO BE "K" SPECS.
2 - ALL PIPING THIS SHEET SHALL BE P.G & E CLASS E.

UNIT 2

DIABLO CANYON POWER PLANT - PG&E CO.
SERVICE COOLING WATER SYSTEM

DRAWING	SHEET	PAGE	REV
108015	5	0	20

DATE	DWN	RE	IV	PROFESSIONAL ENGINEER	PE DISC.	PE#	PE EXP.	
05-22-2006	MIBF	RMDI		KERSI J. DALAL	MECHANICAL	M 16690	3/31/2008	REVISED PER FCT-031440

RASTER=108015s5.dgn
DGN=108015s5.dgn
CAD User: MIBF Date: 05-22-2006

INPGIC
3 Size

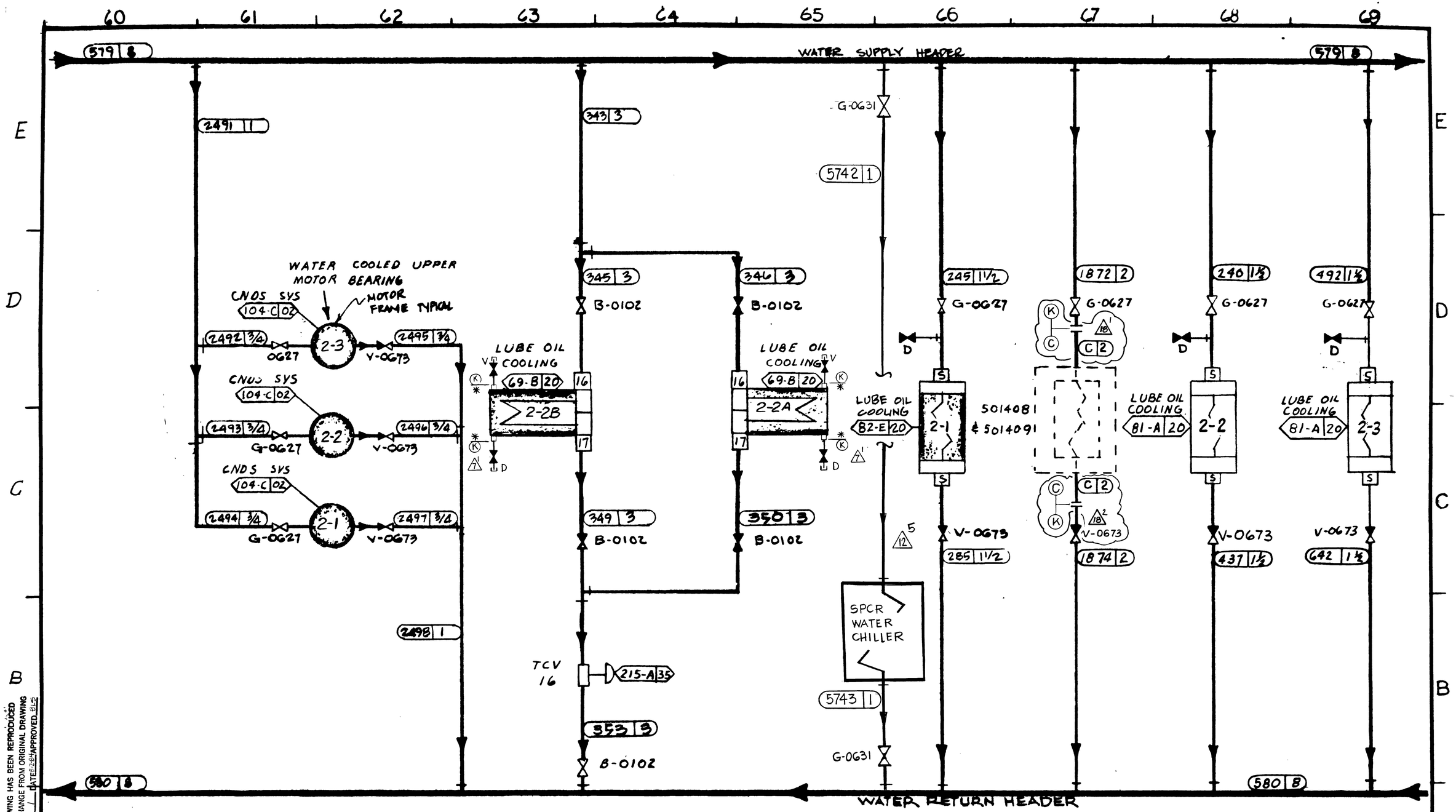
60
61
62
63
64
65
66
67
68
69
E
D
C
B
A
579 8
WATER SUPPLY HEADER
580 8
WATER RETURN HEADER
2491 1
343 3
G-0631
5742 1
WATER COOLED UPPER MOTOR BEARING
MOTOR FRAME TYPICAL
CNDS SYS
104-C 02
2-3
2-2
2-1
2492 3/4
2495 3/4
2493 3/4
2496 3/4
2494 3/4
2497 3/4
0627
G-0627
V-0673
2498 1
345 3
346 3
B-0102
LUBE OIL COOLING
69-B 20
2-2B
2-2A
349 3
350 3
TCV 16
215-A 35
353 3
5743 1
SPCR WATER CHILLER
82-E 20
245 1 1/2
1872 2
240 1 1/2
492 1 1/2
G-0627
501408 & 501091
81-A 20
285 1 1/2
1874 2
437 1 1/2
642 1 1/2
C 2
DC-663045-2
CONDENSATE PUMP MOTOR UPPER BEARING
DC-663300-12
FEED PUMP TURBINE LUBE OIL COOLERS
AIR CONDITIONING FOR TRAVELING CREW FACILITIES LUNCH ROOM -2AC-3 AREA-A, EL.119'-0' 501408 & 501909
DC-663046-24
CONDENSATE BOOSTER PPS LUBE OIL SUPPLY
NOTES
1. PIPING LINE DESIGNATION NOS. TO BE "K" SPECS. UNLESS OTHERWISE SPECIFIED.
2. ALL PIPING THIS SHEET SHALL BE PG&E CLASS "E".
UNIT - 2
P.G. & E.CO.
SHEET 6 OF 8
DRAWING NUMBER 108015
REVISION 18
RM INDEXED REV
S-18
SCAN 18
THIS DRAWING HAS BEEN REPRODUCED WITHOUT CHANGE FROM ORIGINAL DRAWING
CHANGE NO. DATE APPROVED

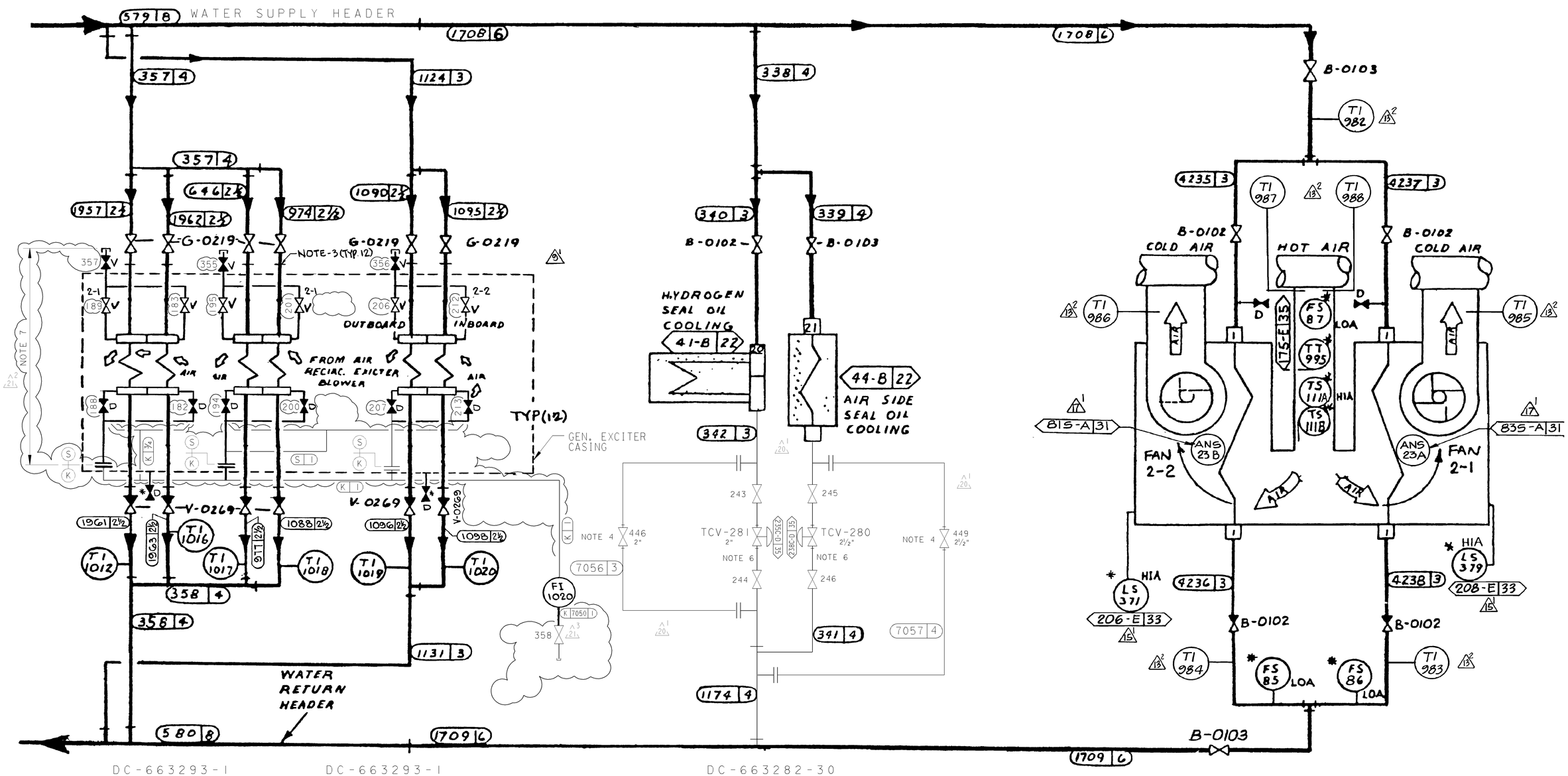

DC-663293-1
GENERATOR EXCITER
2 COILS PER COOLER

DC-663293-1
FUSE WHEEL
2 COILS PER COOLER

DC-663282-30
GENERATOR SEAL OIL COOLERS

DC-663326-55
ISO-PHASE BUS COOLERS
1 COIL PER COOLER

NOTES:

1. PIPING LINE DESIGNATION NO'S TO BE "K" SPEC.
2. ALL PIPING THIS SHEET SHALL BE P G & E CLASS "E".
3. "VICTAULIC" TYPE COUPLING TYP. OF 12. SEE DC 663293-1 (7|-D)
4. FISHER CLASS 150 RF FLANGED WITH 1008/40 ACTUATOR. 2" S.C. 78-9003. 2½" S.C. 78-9002.
5. 3" BTFL VALVE S.C. 75-5546. 4" BTFL VALVE S.C. 72-9649.
6. THE REDUCERS ARE 4"x2½" AND 3"x2" REDUCING ELBOWS. (REF. A0610663)
7. SS TUBING FOR COOLER VENTS AND DRAINS BY PG&E; SEE N-MOD A0703483.

UNIT 2

DIABLO CANYON POWER PLANT - PG&E CO.
SERVICE COOLING WATER SYSTEM

DRAWING	SHEET	PAGE	REV
108015	7	0	21

DATE	DWN	RE	IV	PROFESSIONAL ENGINEER	PE DISC.	PE#	PE EXP.	
04-10-2008	FAZI	FxC2		KERSI J. DALAL	MECHANICAL	M 16690	3/31/2010	REVISED PER DC2-SM-50841-00, FCT-32707 & FCT-33530

RASTER=8015s7.dgn
DGN=8015s7.dgn
CAD User: FAZI Date: 04-10-2008

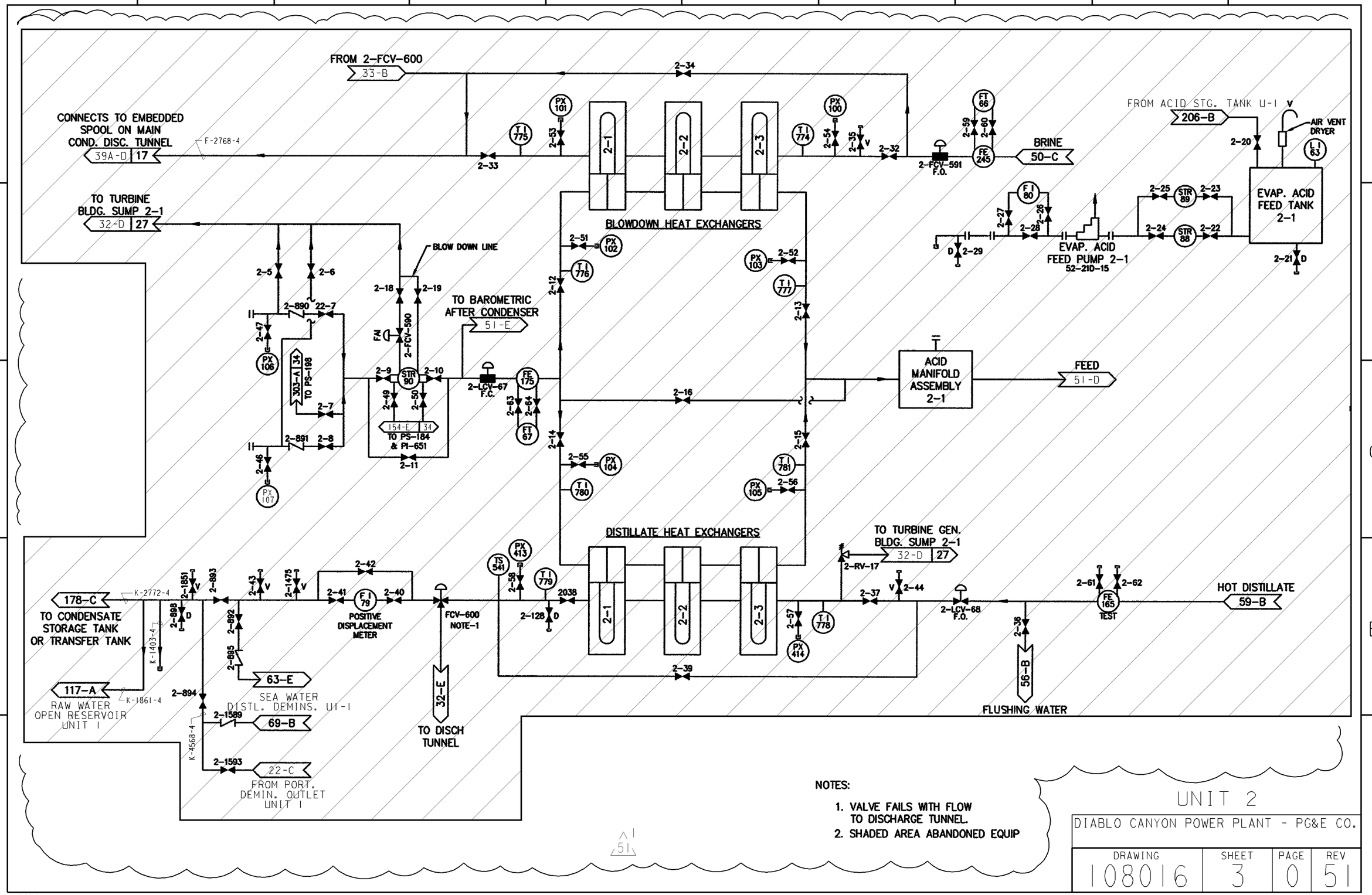

NOTES:

1. VALVE FAILS WITH FLOW TO DISCHARGE TUNNEL.
2. SHADED AREA ABANDONED EQUIP

UNIT 2

DIABLO CANYON POWER PLANT - PG&E CO.

DRAWING	SHEET	PAGE	REV
108016	3	0	51

DATE	DWN	RE	IV	PROFESSIONAL ENGINEER	PE DISC.	PE#	PE EXP.	
01-06-2006	MIBF	KJD3		FRANCIS C. LING	MECHANICAL	M 16098	12/31/2007	REVISED PER FCT-030760

RASTER=8016s03.dgn
DGN=8016s03.dgn
CAD User: MIBF Date: 01-06-2006

INPGIC
I Size

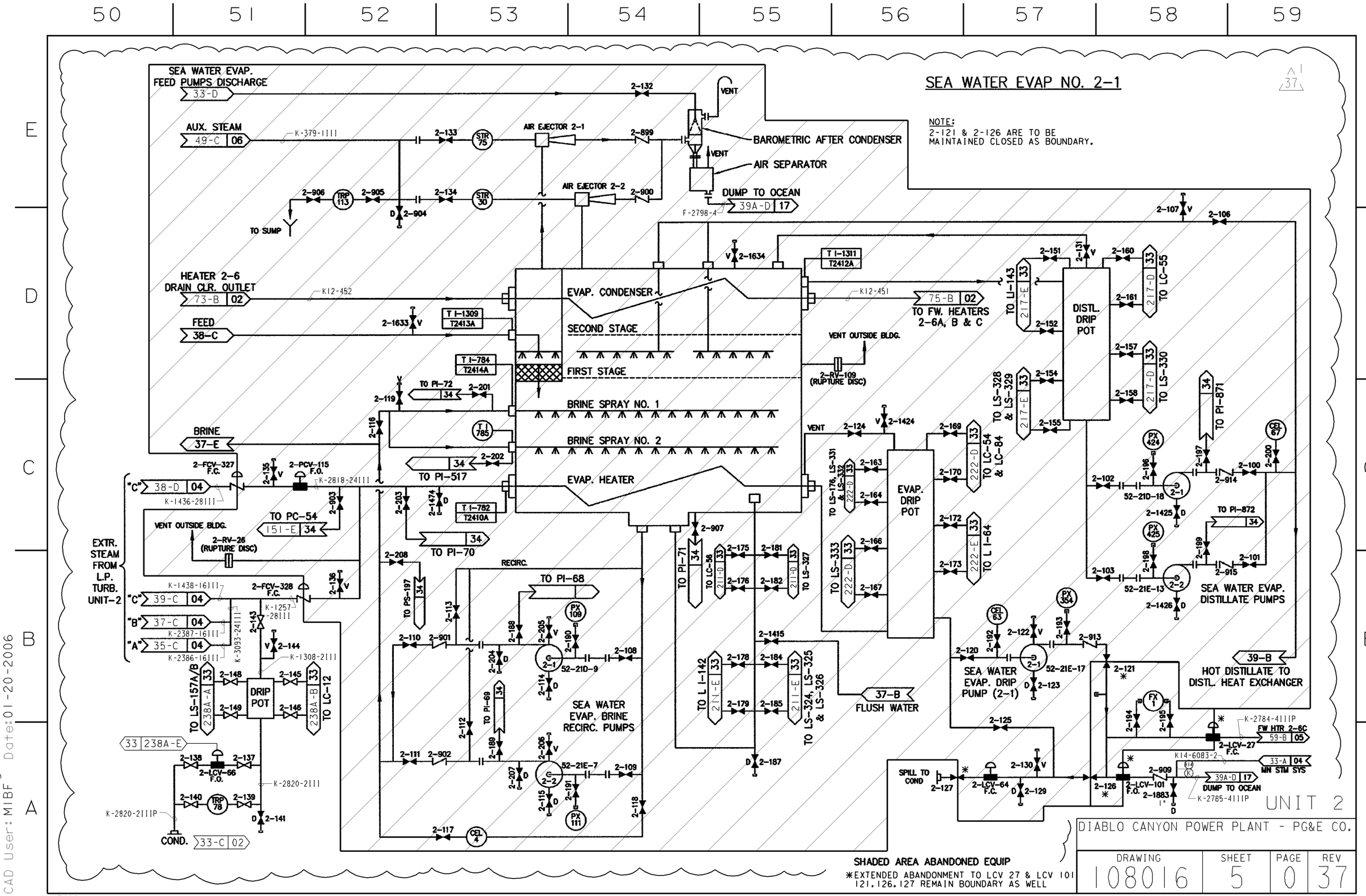
SEA WATER EVAP NO. 2-1
NOTE:
2-121 & 2-126 ARE TO BE MAINTAINED CLOSED AS BOUNDARY.
SEA WATER EVAP. FEED PUMPS DISCHARGE
33-D
AUX. STEAM
49-C 06
K-379-1111
2-132
2-133
STR 75
AIR EJECTOR 2-1
2-899
VENT
BAROMETRIC AFTER CONDENSER
AIR SEPARATOR
DUMP TO OCEAN
39A-D 17
F-2798-4
2-906
TRP 113
2-905
2-134
STR 30
AIR EJECTOR 2-2
2-900
2-904
TO SUMP
HEATER 2-6 DRAIN CLR. OUTLET
73-B 02
K12-452
FEED
38-C
2-1633
T I-1309
T2413A
EVAP. CONDENSER
SECOND STAGE
FIRST STAGE
T I-784
T2414A
TO PI-72
34
2-201
2-119
BRINE SPRAY NO. 1
BRINE SPRAY NO. 2
BRINE
37-E
2-116
T I 785
2-202
TO PI-517
EVAP. HEATER
2-FCV-327 F.C.
2-135
2-PCV-115 F.O.
K-2818-24111
"C" 38-D 04
K-1436-28111
2-903
TO PC-54
151-E 34
VENT OUTSIDE BLDG.
2-RV-26 (RUPTURE DISC)
EXTR. STEAM FROM L.P. TURB. UNIT-2
2-203
2-1474
T I-782
T2410A
TO PI-70
2-208
RECIRC.
TO PI-68
TO PS-197
2-113
2-136
2-FCV-328 F.C.
K-1438-16111
"C" 39-C 04
K-1257-28111
"B" 37-C 04
K-2387-16111
"A" 35-C 04
K-2386-16111
K-3093-24111
2-143
2-144
K-1308-2111
2-110
2-901
2-188
2-205
2-180
PX 109
52-21D-9
2-108
2-204
2-114
TO PI-69
2-112
SEA WATER EVAP. BRINE RECIRC. PUMPS
TO LS-157A/B
238A-A 33
2-148
2-149
DRIP POT
2-145
2-146
238A-B 33
TO LC-12
33 238A-E
2-138
2-137
2-LCV-66 F.O.
K-2820-2111
2-111
2-902
2-189
2-206
52-21E-7
2-109
2-207
2-115
2-191
PX 111
2-118
2-140
TRP 78
2-139
2-141
K-2820-2111P
COND. 33-C 02
2-117
CEL 4
2-907
TO PI-71
34
TO LC-56
211-D 33
2-175
2-176
2-181
2-182
211-D 33
TO LS-327
2-1415
TO L I-142
211-E 33
2-178
2-179
2-184
2-185
211-E 33
TO LS-324, LS-325 & LS-326
2-187
37-B
FLUSH WATER
2-1634
T I-1311
T2412A
K12-451
75-B 02
TO FW. HEATERS 2-6A, B & C
VENT OUTSIDE BLDG.
2-RV-109 (RUPTURE DISC)
VENT
2-124
2-1424
TO LS-176, LS-331 & LS-332
222-D 33
2-163
2-164
TO LS-333
222-D 33
2-166
2-167
EVAP. DRIP POT
2-169
2-170
222-D 33
TO LC-54 & LC-84
2-172
2-173
222-E 33
TO L I-64
2-107
2-106
2-151
2-131
2-160
TO LI-143
217-E 33
2-152
DISTL. DRIP POT
2-161
217-D 33
TO LC-55
2-157
2-154
TO LS-328 & LS-329
217-E 33
2-158
217-D 33
TO LS-330
2-155
34
TO PI-871
CEL 67
PX 424
2-196
2-197
2-100
2-200
2-102
52-21D-18
2-1
2-914
2-1425
TO PI-872
34
PX 425
2-198
2-199
2-101
2-103
52-21E-13
2-2
2-915
2-1426
SEA WATER EVAP. DISTILLATE PUMPS
CEL 63
PX 354
2-122
2-193
2-913
2-192
2-120
52-21E-17
2-123
SEA WATER EVAP. DRIP PUMP (2-1)
2-121
39-B
HOT DISTILLATE TO DISTL. HEAT EXCHANGER
FX 1
2-194
2-195
K-2784-4111P
FW HTR 2-6C
59-B 05
2-LCV-27 F.C.
K14-6083-2
33-A 04
MN STM SYS
2-125
SPILL TO COND
2-127
2-LCV-64 F.C.
2-130
2-129
2-126
2-LCV-101 F.C.
2-909
39A-D 17
DUMP TO OCEAN
2-1883
K-2785-4111P
UNIT 2
SHADED AREA ABANDONED EQUIP
*EXTENDED ABANDONMENT TO LCV 27 & LCV 101
121, 126, 127 REMAIN BOUNDARY AS WELL
DIABLO CANYON POWER PLANT - PG&E CO.
DRAWING 108016
SHEET 5
PAGE 0
REV 37
01-20-2006 MIBF KJD3 FRANCIS C. LING MECHANICAL M 16098 12/31/2007 REVISED PER FCT-030760
DATE DWN RE IV PROFESSIONAL ENGINEER PE DISC. PE# PE EXP.
RASTER=8016s05.dgn
DGN=8016s05.dgn
CAD User:MIBF Date:01-20-2006
INPGIC
1 Size

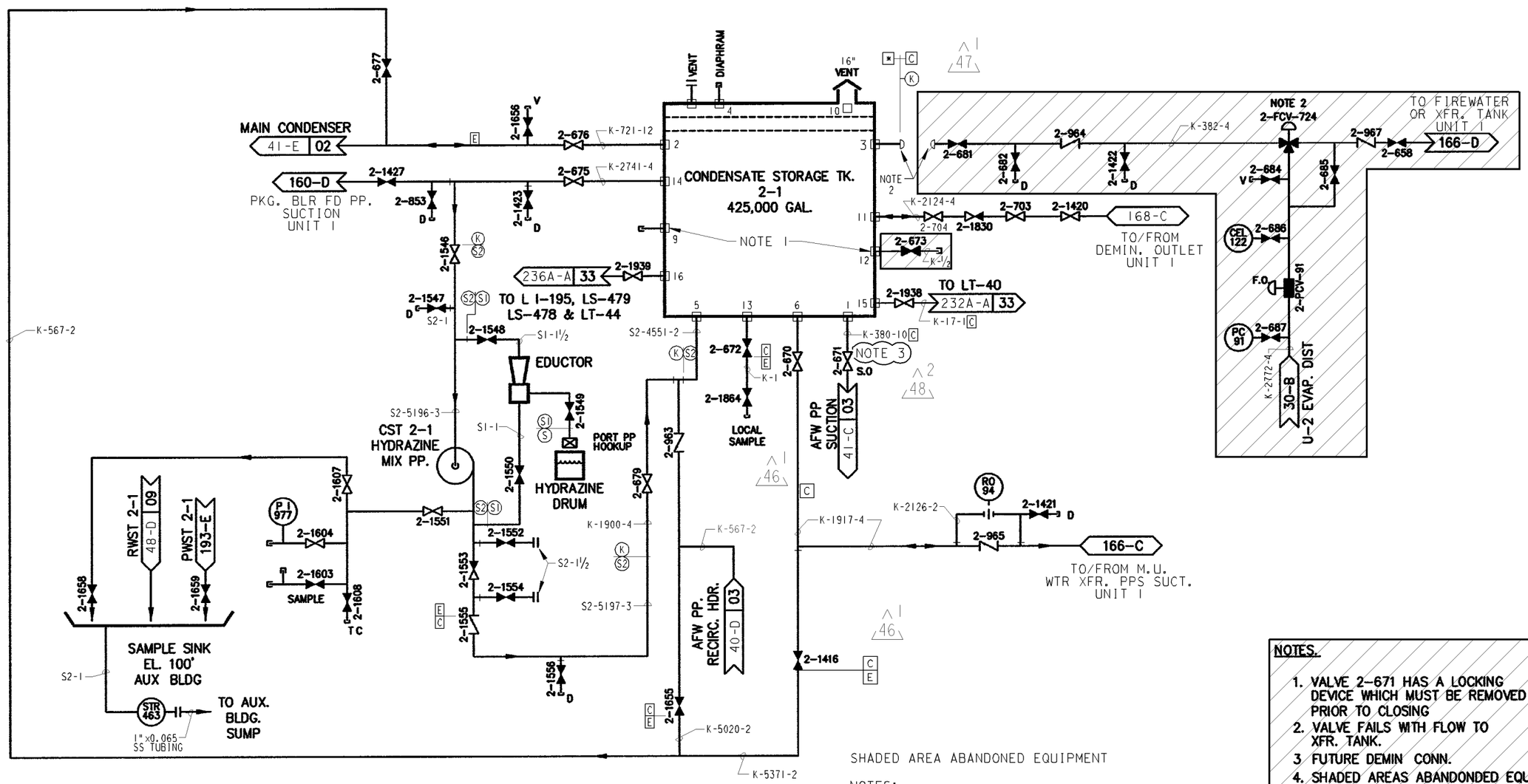

SHADED AREA ABANDONED EQUIPMENT

NOTES:
1. NOZZLES 9 & 12 ARE PLUGGED INSIDE TANK
2. NOZZLE N3 IS PLUGGED (BLIND PLATE WELDED INSIDE PIPE) AND ABANDONED LINE K-382-4 IS CAPPED AND BOTH ARE EMBEDDED.
3. VALVE 2-671 HAS A LOCKING DEVICE WHICH MUST BE REMOVED PRIOR TO CLOSING.

NOTES.
1. VALVE 2-671 HAS A LOCKING DEVICE WHICH MUST BE REMOVED PRIOR TO CLOSING
2. VALVE FAILS WITH FLOW TO XFR. TANK.
3 FUTURE DEMIN CONN.
4. SHADED AREAS ABANDONDED EQUIP

UNIT 2

DIABLO CANYON POWER PLANT - PG&E CO.
MAKE-UP WATER SYSTEM

DRAWING	SHEET	PAGE	REV
108016	17	0	48

DATE	DWN	RE	IV	PROFESSIONAL ENGINEER	PE DISC.	PE#	PE EXP.	
08-29-2012	AJFJ	FxC2		KERSI J. DALAL	MECHANICAL	M 16690	3/31/2014	REVISED PER DFT-7*1715

RASTER=8016s17.dgn
DGN=8016s17.dgn
CAD User: AJFJ Date: 08-29-2012

INPGIC
I Size

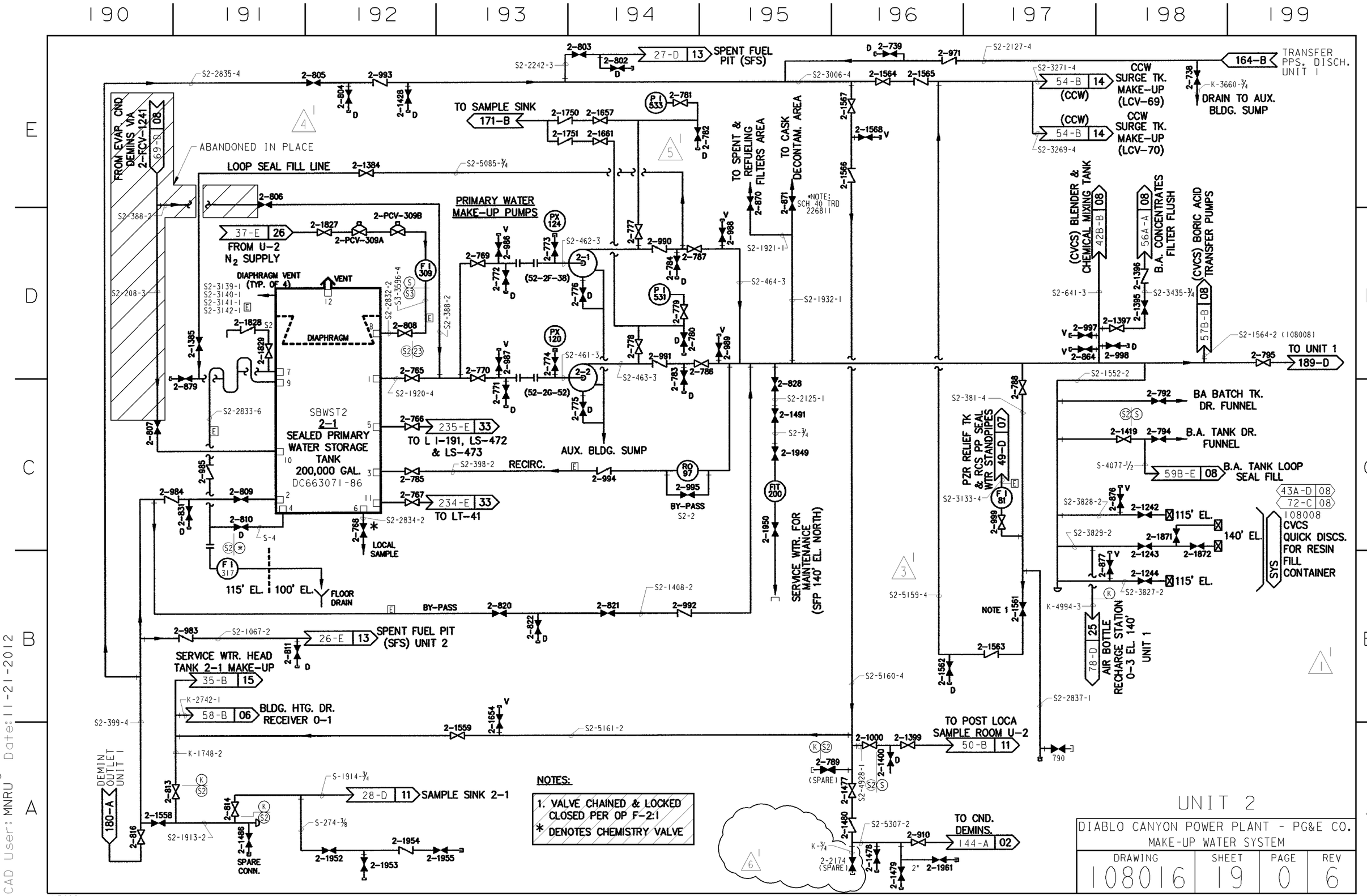
190
191
192
193
194
195
196
197
198
199
E
D
C
B
A
FROM EVAP. CND DEMINS VIA 2-FCV-1241
69-B 08
ABANDONED IN PLACE
LOOP SEAL FILL LINE
TO SAMPLE SINK
171-B
27-D 13 SPENT FUEL PIT (SFS)
TO SPENT & REFUELING FILTERS AREA
TO CASK DECONTAM. AREA
*NOTE: SCH 40 TRD 226811
54-B 14 (CCW) CCW SURGE TK. MAKE-UP (LCV-69)
54-B 14 (CCW) CCW SURGE TK. MAKE-UP (LCV-70)
164-B TRANSFER PPS. DISCH. UNIT 1
DRAIN TO AUX. BLDG. SUMP
PRIMARY WATER MAKE-UP PUMPS
37-E 26 FROM U-2 N2 SUPPLY
2-PCV-309B
2-PCV-309A
DIAPHRAGM VENT (TYP. OF 4)
VENT
DIAPHRAGM
SBWST2 2-1 SEALED PRIMARY WATER STORAGE TANK 200,000 GAL. DC663071-86
235-E 33 TO L I-191, LS-472 & LS-473
AUX. BLDG. SUMP
RECIRC.
BY-PASS
234-E 33 TO LT-41
LOCAL SAMPLE
115' EL.
100' EL.
FLOOR DRAIN
SERVICE WTR. FOR MAINTENANCE (SFP 140' EL. NORTH)
(CVCS) BLENDER & CHEMICAL MIXING TANK
42B-B 08
56A-A 08 B.A. CONCENTRATES FILTER FLUSH
(CVCS) BORIC ACID TRANSFER PUMPS
57B-B 08
TO UNIT 1
189-D
BA BATCH TK. DR. FUNNEL
B.A. TANK DR. FUNNEL
59B-E 08 B.A. TANK LOOP SEAL FILL
PZR RELIEF TK & RCS PP SEAL WTR STANDPIPES
49-D 07
43A-D 08
72-C 08
108008 CVCS QUICK DISCS. FOR RESIN FILL CONTAINER
115' EL.
140' EL.
AIR BOTTLE RECHARGE STATION 0-3 EL. 140' UNIT 1
78-D 25
NOTE 1
SPENT FUEL PIT (SFS) UNIT 2
26-E 13
SERVICE WTR. HEAD TANK 2-1 MAKE-UP
35-B 15
BLDG. HTG. DR. RECEIVER 0-1
58-B 06
TO POST LOCA SAMPLE ROOM U-2
50-B 11
DEMIN. OUTLET UNIT 1
180-A
SAMPLE SINK 2-1
28-D 11
SPARE CONN.
TO CND. DEMINS.
144-A 02
NOTES:
1. VALVE CHAINED & LOCKED CLOSED PER OP F-2:1
* DENOTES CHEMISTRY VALVE
UNIT 2
DIABLO CANYON POWER PLANT - PG&E CO.
MAKE-UP WATER SYSTEM
DRAWING 108016
SHEET 19
PAGE 0
REV 6
RASTER=8016s19.dgn
DGN=8016s19.dgn
CAD User: MNRU Date: 11-21-2012
INPGIC
I Size
11-21-2012 | MNRU | FxC2 | KERSI J. DALAL | MECHANICAL | M 16690 | 3/31/2014 | REVISED PER DDN-2*971
DATE | DWN | RE | IV | PROFESSIONAL ENGINEER | PE DISC. | PE# | PE EXP.

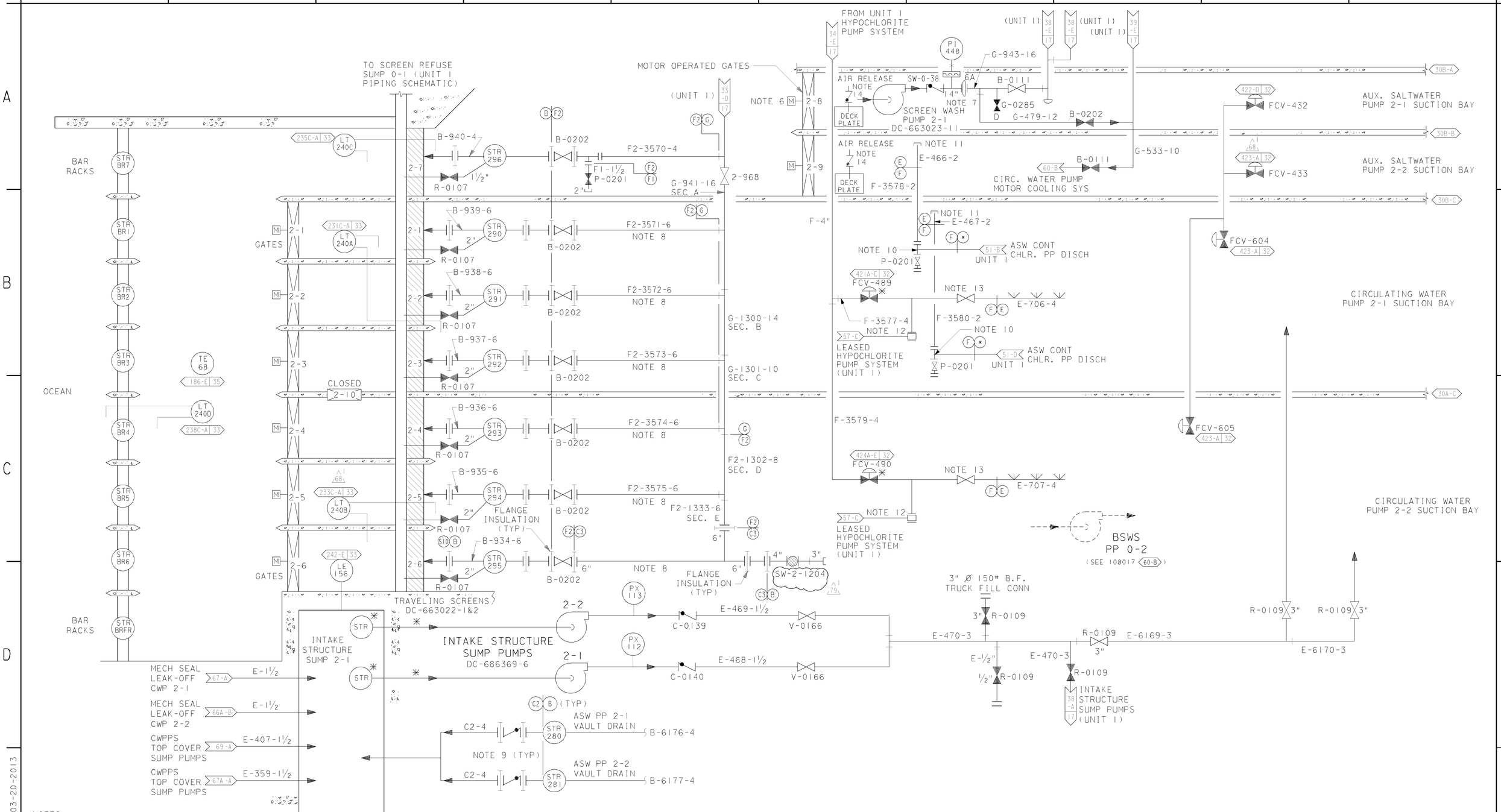

NOTES

1. ALL PIPES ON THIS SHEET ARE P.G.&E. CLASS 'E', UNLESS OTHERWISE NOTED.
2. VALVES WITH ITEM NOS. FALL UNDER SPEC.8729,UNLESS REFERRED TO NOTE 3.
3. VALVES REFERRED TO THIS NOTE FALL UNDER SPEC.0722.
4. VALVES IN THE INTAKE STRUCTURE WITH P.G.&E. MARK NOS. ARE FURNISED BY SPEC. 8749, UNLESS OTHERWISE NOTED.
5. NOT USED
6. ASW GATE MOTOR IS REMOTELY OPERATED FROM INTAKE . (35-A)
7. FOR RUBBER EXPANSION JOINTS SEE P.G.&E. RECORD NO. DC-663323-2 (36-A)
8. PORTIONS OF THIS PIPING MAY INCLUDE PIPE SPEC. "C3", SEE PIPING ISOMETRIC FOR DETAILS (34-B THRU C)
9. SWING CHECK VALVE, EAGLE SERIES 10, AL-BR OR STAINLESS STEEL (33-E)
10. PVDF SPACER WITH PORTING TO ALLOW CHLORINATION BY EITHER INTERMITTANT OR CONTINUOS SUPPLY VIA 2" PIPE AND ½" TUBING RESPECTIVELY; ½" HASTELLOY TUBING IS INSIDE 2" PIPE BETWEEN SPACER AND (-) 4 EL. (36-B)
11. ½" HASTELLOY TUBING RUNS ADJACENT TO 2" PVC IN BAY TEN ½" DIA HOLES IN 2" PIPE SEE NOTE 10 (36-A/B)
12. 2" THICK PVDF SPACER/INJECTOR (35-B/C)
13. 4"-150# FLANGED DIAPHRAGM VALVE DOW MODEL #373 (36-B/C)
14. 2" GOLDEN ANDERSON, AIR RELEASE/VACUUM VALVE (35-A)

UNIT 2

DIABLO CANYON POWER PLANT - PG&E CO.
SALTWATER SYSTEMS

DRAWING	SHEET	PAGE	REV
108017	3	0	79

DATE	DWN	RE	IV	PROFESSIONAL ENGINEER	PE DISC.	PE#	PE EXP.	
03-20-2013	MNRU	FxC2	KJD3	NOT REQUIRED	N/A	N/A	N/A	REVISED PER DFT-7*2012

RASTER=eru09572.dgn
DGN=eru09572.dgn
CAD User: MNRU Date: 03-20-2013

NOTES:

1. ALL PIPING ON THIS SHEET IS P.G.&E. CLASS E UNLESS OTHERWISE NOTED.
2. DEMUSSELING PROCEDURE STARTS AFTER THE SCREENS OF BOTH UNITS HAVE BEEN WASHED (42-C).

3 SEAL INJECTION 3/4" FLEXHOSE CROSS TIE (44-B)

31 2 4 TEMPORARY CONNECTION INSTALLED AT FX FOR FRESH WATER DEMUSSELING PROCESS, WHICH IS USED AS ALTERNATIVE TO H T DEMUSSELING (46-C)

36 3 5 COMPLIES WITH "S" SPECIFICATION EXCEPT TUBING IS 3/4", WALL IS 0.065" & FLANGES ARE 2" 150 #FFSW A182 GR F304. (45,46,47,48 E)

DEMUSSELING FLOW SCHEME

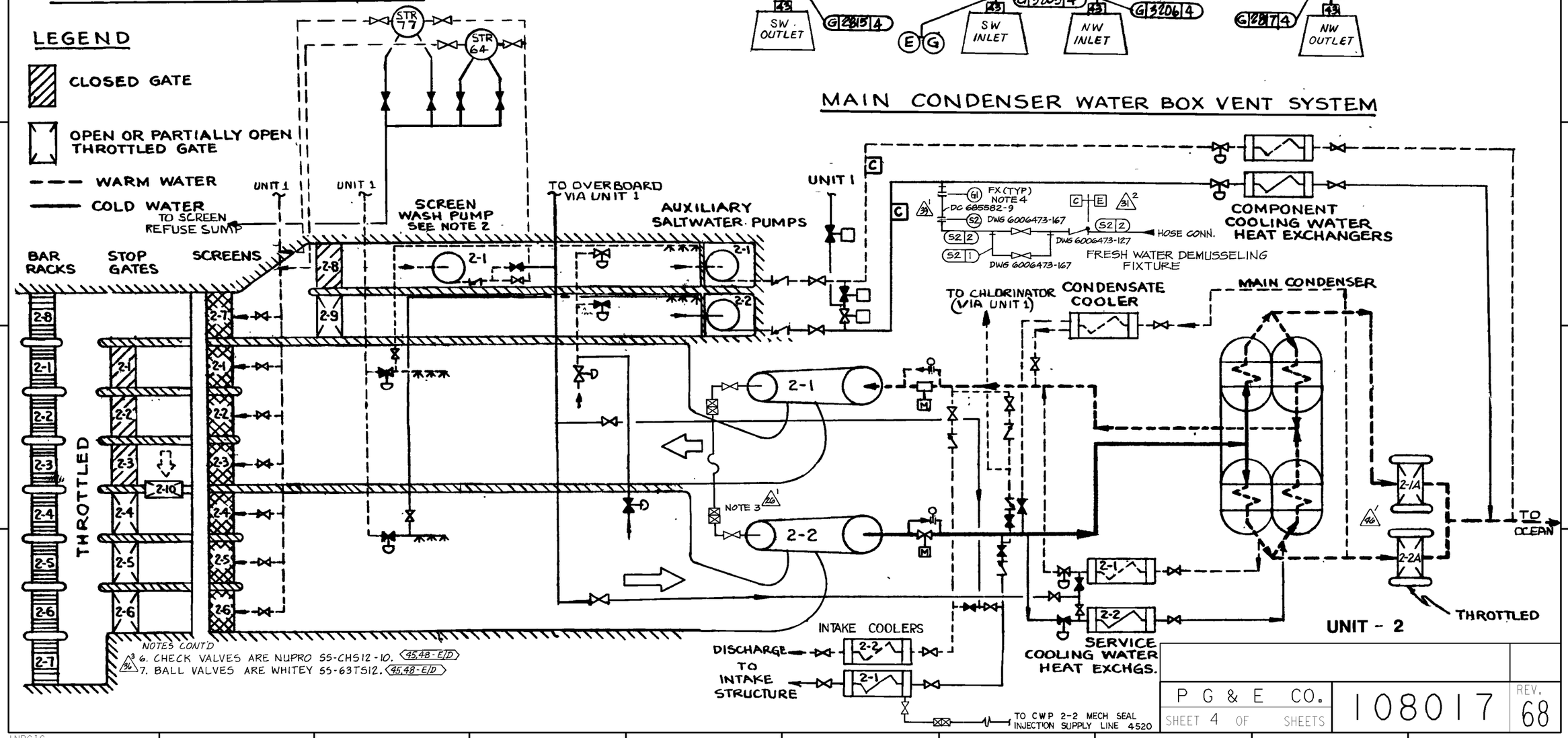

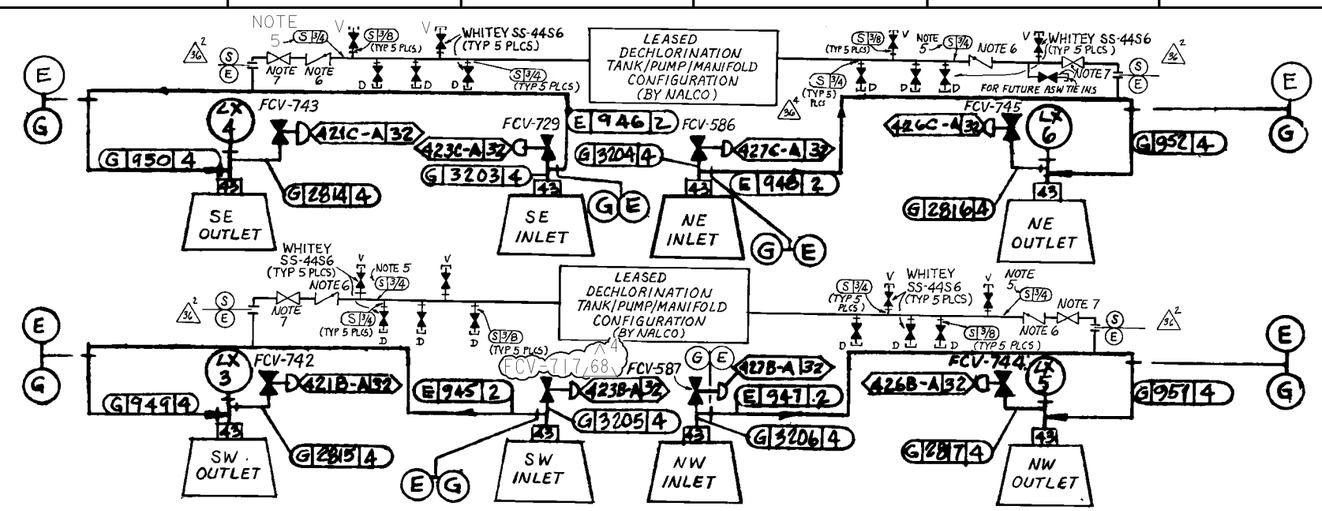

MAIN CONDENSER WATER BOX VENT SYSTEM

P G & E CO.	108017	REV. 68
SHEET 4 OF SHEETS		

DATE 12/23/97 DWN RJN3 IV — RE CAC6 PE JXD7

CAD User:RJN3 Date:12-05-1997 DGN=8017S4.DGN RASTER=8017S4.TIF

INPGIC

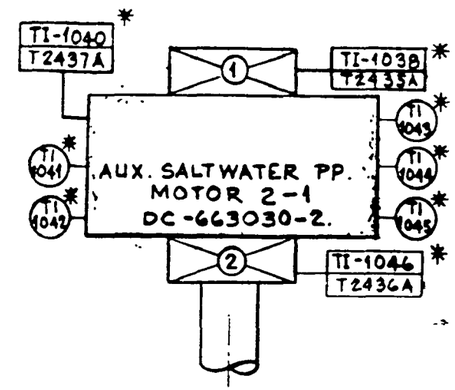

NOTE: CHLORINATION SYSTEM IS COMMON TO BOTH UNITS. SEE UNIT-1 – DWG. 102017 SH.-5

AUXILIARY SALTWATER PUMP MOTOR INSTRUMENT NOS.		
LOCATION	PP. MOTOR 2-1	PP. MOTOR 2-2
UPPER BEARING (1)	TI-1038 T2435A	TI-1047 T2439A
LOWER BEARING (2)	TI-1046 T2436A	TI-1055 T2440A
MOTOR STATOR WINDING	TI-1040 T2437A	TI-1049 T2441A
	TI-1041	TI-1050
	TI-1042	TI-1051
	TI-1043	TI-1052
	TI-1044	TI-1053
	TI-1045	TI-1054

AUXILIARY SALTWATER PP.
MOTOR INSTRUMENTATION

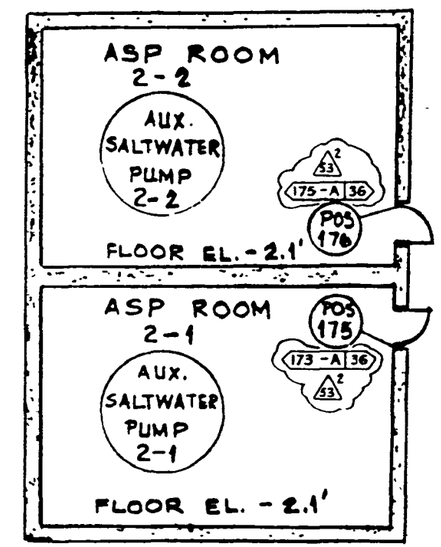

AUXILIARY SALTWATER PUMP
WATERTIGHT ROOMS

UNIT- 2

P.G. & E. CO.	DRAWING NUMBER	REVISION
SHEET 5 OF SHEETS	108017	53
	MICROFILM	

SCAN 53 iC

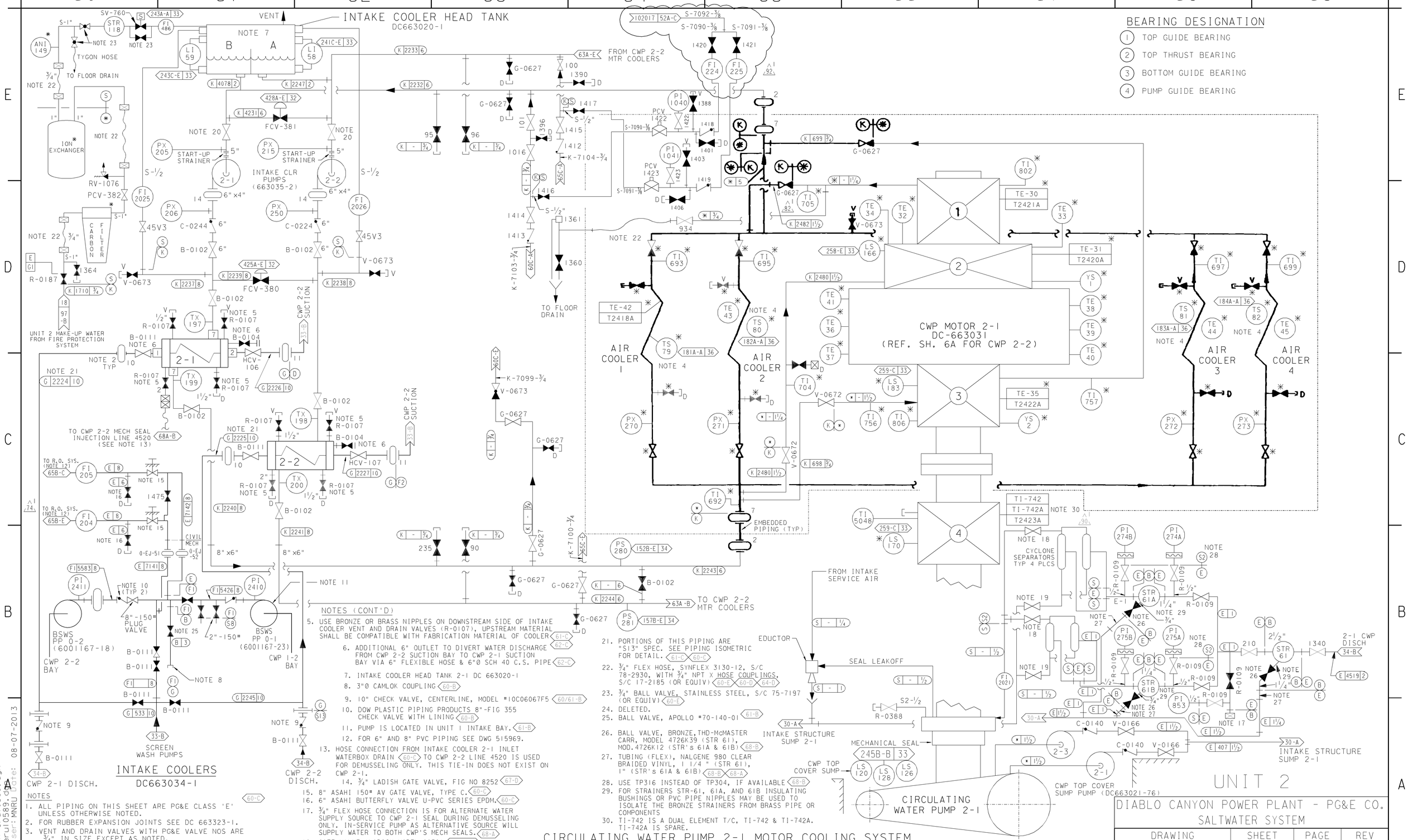

INTAKE COOLERS

DC663034-1

NOTES

1. ALL PIPING ON THIS SHEET ARE PG&E CLASS 'E' UNLESS OTHERWISE NOTED.
2. FOR RUBBER EXPANSION JOINTS SEE DC 663323-1.
3. VENT AND DRAIN VALVES WITH PG&E VALVE NOS ARE ¾" IN SIZE EXCEPT AS NOTED.
4. USED FOR CARDOX FIRE PROTECTION SYSTEM, PG&E RECORD NO DC-663086 AND MULTIVARIABLE INST. SYSTEM DWG 108036, SH'S 31B AND 31C.

NOTES (CONT'D)

5. USE BRONZE OR BRASS NIPPLES ON DOWNSTREAM SIDE OF INTAKE COOLER VENT AND DRAIN VALVES (R-0107), UPSTREAM MATERIAL SHALL BE COMPATIBLE WITH FABRICATION MATERIAL OF COOLER. (61-C) (62-C)
6. ADDITIONAL 6" OUTLET TO DIVERT WATER DISCHARGE FROM CWP 2-2 SUCTION BAY TO CWP 2-1 SUCTION BAY VIA 6" FLEXIBLE HOSE & 6"Ø SCH 40 C.S. PIPE. (62-C)
7. INTAKE COOLER HEAD TANK 2-1 DC 663020-1
8. 3"Ø CAMLOK COUPLING (60-B)
9. 10" CHECK VALVE, CENTERLINE, MODEL #10C06067F5 (60/61-B)
10. DOW PLASTIC PIPING PRODUCTS 8"-FIG 355 CHECK VALVE WITH LINING (60-B)
11. PUMP IS LOCATED IN UNIT 1 INTAKE BAY. (61-B)
12. FOR 6" AND 8" PVC PIPING SEE DWG 515969.
13. HOSE CONNECTION FROM INTAKE COOLER 2-1 INLET WATERBOX DRAIN (60-C) TO CWP 2-2 LINE 4520 IS USED FOR DEMUSSELING ONLY. THIS TIE-IN DOES NOT EXIST ON CWP 2-1.
14. ¾" LADISH GATE VALVE, FIG NO 8252 (67-D)
15. 8" ASAHI 150# AV GATE VALVE, TYPE C. (60-C)
16. 6" ASAHI BUTTERFLY VALVE U-PVC SERIES EPDM. (60-C)
17. ¾" FLEX HOSE CONNECTION IS FOR ALTERNATE WATER SUPPLY SOURCE TO CWP 2-1 SEAL DURING DEMUSSELING ONLY. IN-SERVICE PUMP AS ALTERNATIVE SOURCE WILL SUPPLY WATER TO BOTH CWP'S MECH SEALS. (68-A)
18. GATE VALVE (LADISH MODEL 8252) (67/68-B)
19. BALL VALVE (WHITEY-4456) (67-B)
20. KEYSTONE FIG. 122 (61/62-E)
21. PORTIONS OF THIS PIPING ARE "S13" SPEC. SEE PIPING ISOMETRIC FOR DETAIL. (61-C) (60-C)
22. ¾" FLEX HOSE, SYNFLEX 3130-12, S/C 78-2930, WITH ¾" NPT X HOSE COUPLINGS, S/C 17-2185 (OR EQUIV) (60-E) (60-D) (64-D)
23. ¾" BALL VALVE, STAINLESS STEEL, S/C 75-7197 (OR EQUIV) (60-E)
24. DELETED.
25. BALL VALVE, APOLLO #70-140-01 (61-B)
26. BALL VALVE, BRONZE, THD-McMASTER CARR, MODEL 4726K39 (STR 61), MOD. 4726K12 (STR's 61A & 61B) (68-B)
27. TUBING (FLEX), NALGENE 980 CLEAR BRAIDED VINYL, 1 1/4" (STR 61), 1" (STR's 61A & 61B) (68-B) (68-A)
28. USE TP316 INSTEAD OF TP304, IF AVAILABLE (68-B)
29. FOR STRAINERS STR-61, 61A, AND 61B INSULATING BUSHINGS OR PVC PIPE NIPPLES MAY BE USED TO ISOLATE THE BRONZE STRAINERS FROM BRASS PIPE OR COMPONENTS
30. TI-742 IS A DUAL ELEMENT T/C, TI-742 & TI-742A. TI-742A IS SPARE.

CIRCULATING WATER PUMP 2-1 MOTOR COOLING SYSTEM AND CWP TOP COVER DRAINAGE SYSTEM

(REFER TO SH.6A FOR CWP 2-2 SYS)

DIABLO CANYON POWER PLANT - PG&E CO.
SALTWATER SYSTEM

DRAWING	SHEET	PAGE	REV
108017	6	0	92

DATE	DWN	RE	IV	PROFESSIONAL ENGINEER	PE DISC.	PE#	PE EXP.	
08-07-2013	MNRU	FxC2	KJD3	NOT REQUIRED	N/A	N/A	N/A	REVISED PER DDN-2*1043

RASTER=eru10589.dgn
DGN=eru10589.dgn
CAD User: MNRU Date: 08-07-2013
DWG#C
3 Size

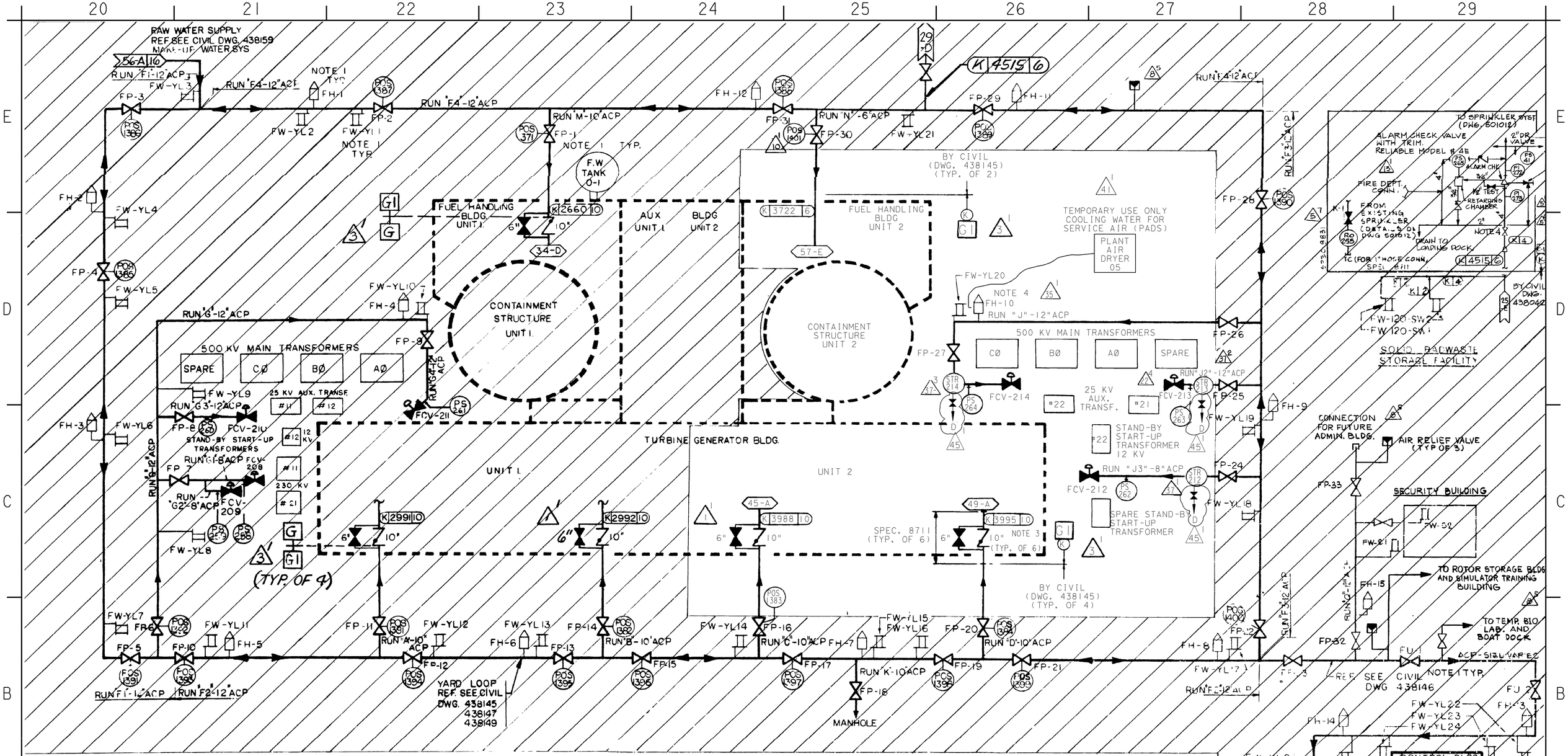

YARD LOOP

NOTES

1. LEGEND: ACP ASBESTOS CEMENT PIPE
   - FIRE HYDRANT: FH (26-D)
   - FIREWATER HOSEREEL: FW (26-D)
   - POST INDICATOR ISOLATION VALVE: FP (26-D)
   - ~~UNDERGROUND VALVE: FU (29-B)~~
2. ALL OUTDOOR PIPING AND VALVES ON THIS SHEET ARE BY CIVIL UNDER SPEC 8831 EXCEPT TRANS. DELUGE SYSTEMS (FCV ~~208, 209, 210, 211,~~ 212, 213, & 214) WHICH ARE UNDER SPEC 8724 OR AS NOTED MECH PIPING AND VALVES.

REFERENCE DRAWINGS:
TRANSFORMER DELUGE SYSTEM: DC-663086-113, 115, 222, 223, 224, 227 & 229 (42, 44, 43)

FIREWATER HOSEREEL STATION DETAILS: 064358 AND 064359 (38)

NOTES (CONT.)

3. CHECK-VALVES ARE CRANE 150#, 147-1/2"
   GATE VALVES ARE CRANE 150#, 47-1/2"
4. TEMPORARY CONNECTION FROM HYDRANT PROVIDES COOLING WATER FOR AIR-DRYER 0-5 AFTERCOOLER DURING OUTAGES. (26-D) (35)

UNIT 2

P G & E CO.		108018	REV. 45
SHEET 2	PAGE 0		

DATE	DWN	RE	IV	PROFESSIONAL ENGINEER	PE DISC.	PE#	PE EXP.	
8/23/01	NDNI	FXC2	-	KERSI J. DALAL	MECHANICAL	M 16690	3/31/2004	Revised per FCT 025942

CAD User:NDNI Date: 8-23-2001
DGN=001F1037.DGN
RASTER=001F1037.TIF

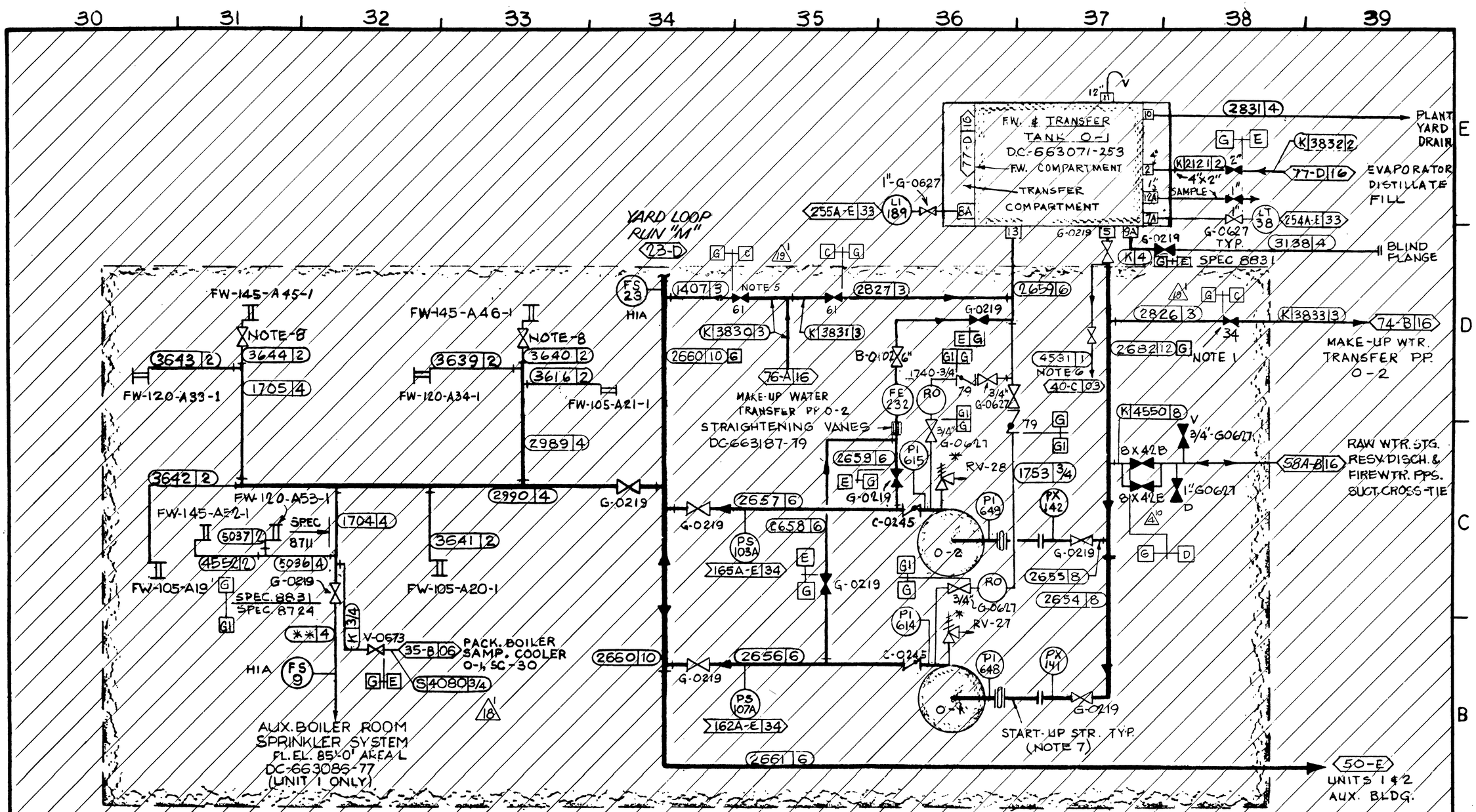

UNIT 1 FUEL HANDLING BLDG.

NOTES:

1. VALVE IT NOS. 34 & 79 ARE UNDER SPEC. 8729 AND INSTALLED UNDER SPEC. 8831 (38-D)
2. ALL PIPING WITH PG&E CLASS "C" & "E" ARE UNDER 8711 EXCEPT AS NOTED.
3. ALL PIPING & VALVES WITH P.G.&E. CLASS "G" ARE UNDER SPEC. 8831, AND WITH ** INDICATE UNDER SPEC. 8724.
4. ALL PIPING ON THIS SHEET IS PIPING SPEC. "K", EXCEPT AS NOTED.
5. VALVES ITEM NOS. 61 ARE UNDER SPEC. 8729 AND INSTALLED UNDER SPEC. 8711 (35-D)
6. LINE NO. 4531 HAS SPECIAL ARMSTRONG ARMAFLEX INSULATION (37-D)
7. THIS SPOOL SHALL BE REPLACED BY EXPANSION JOINT (BELLOWS)
8. BONNEY FORGE 2" SW GATE VLV CAT # HCW-108 (BODY A-105, SEAT/STEM/DISC-13CR, WP-800, TEMP-850°F) COORD-31/33-D
9. ALL HOSEREELS HAVE RESTRICTING ORIFICES REF. DWG. 060831.

UNIT -2

P.G. & E. CO.	DRAWING NUMBER	REVISION
SHEET 3 OF SHEETS	108018	20
	MICROFILM	20

THIS DRAWING HAS BEEN REPRODUCED WITHOUT CHANGE FROM ORIGINAL DRAWING
CHANGE NO. ___ DATE ___ APPROVED ___

RM INDEXED REV. 20
SCANNED 20
APPD. I&C 20
SCAN 20

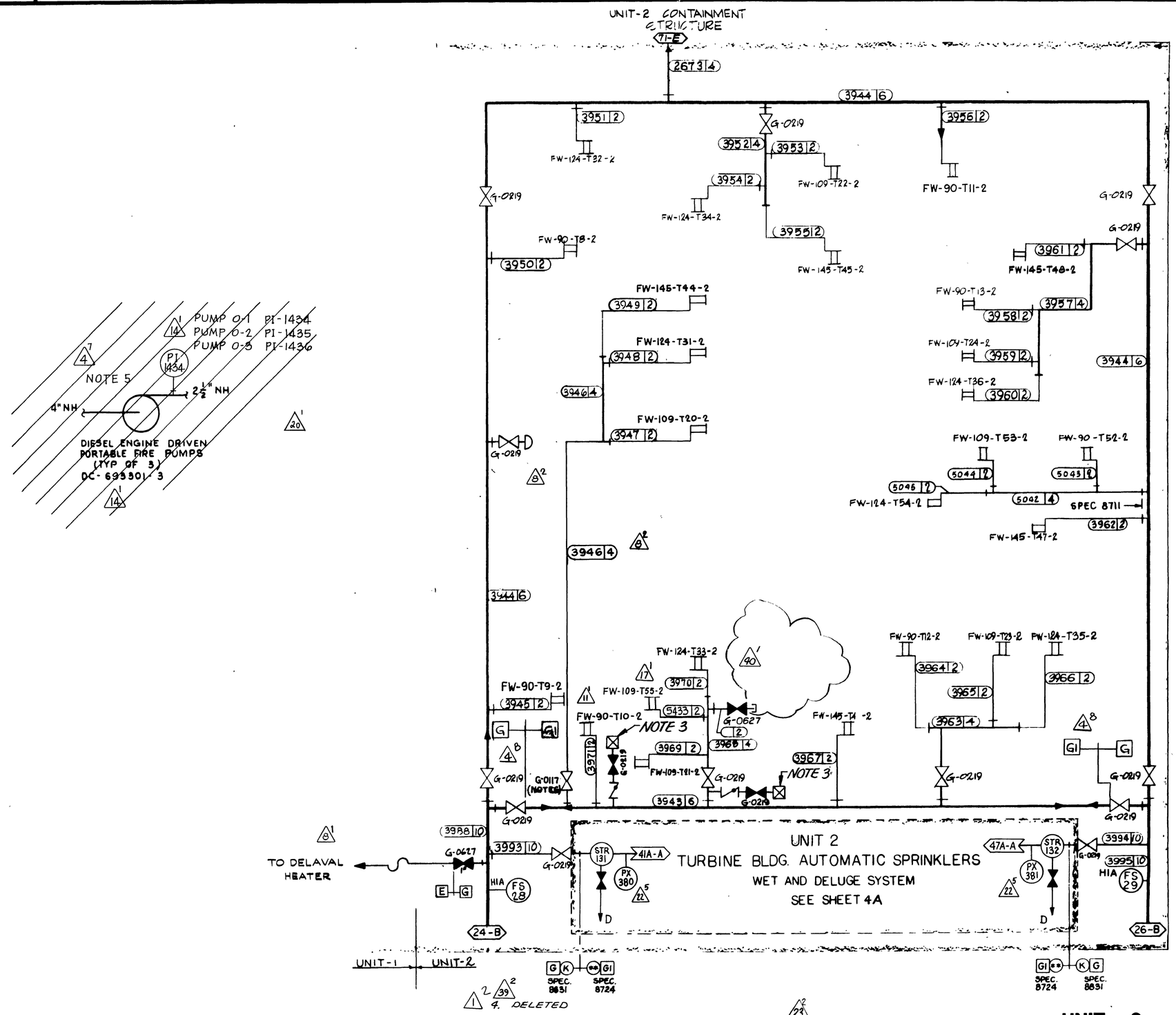

NOTES

1. ALL PIPING ON THIS SHEET IS UNDER SPEC. 8831 AND PG&E CLASS "G" EXCEPT AS NOTED. UNLESS OTHERWISE NOTED, PIPING INSIDE TURBINE BUILDING IS SPEC. "K"
2. PIPING WITH DOUBLE ASTERISKS ARE UNDER SPEC. 8724
3. 2½" NATIONAL HOSE THREADED CONNECTION (CAPPED) FOR PORTABLE DIESEL ENGINE DRIVEN FIRE PUMPS. SPEC 8711. CHECK VALVES ARE LUNKENHEIMER MODEL NO. 157 3C. (46-B) (47-B)
4. DELETED
5. ~~THE PORTABLE FIRE PUMPS ARE SEISMICALLY ANALYZED IN ACCORDANCE WITH DESIGN CRITERIA MEMORANDUM M-45.~~
6. THE VALVE IS PROVIDED WITH CHAIN OPERATOR FOR ACCESSIBILITY.

TURBINE BUILDING

UNIT - 2

P. G. & E. CO.	DRAWING NUMBER	REVISION
SHEET 4 OF SHEETS	108018	40

MICROFILM SCAN 40 IC

RM INDEXED REV: 23

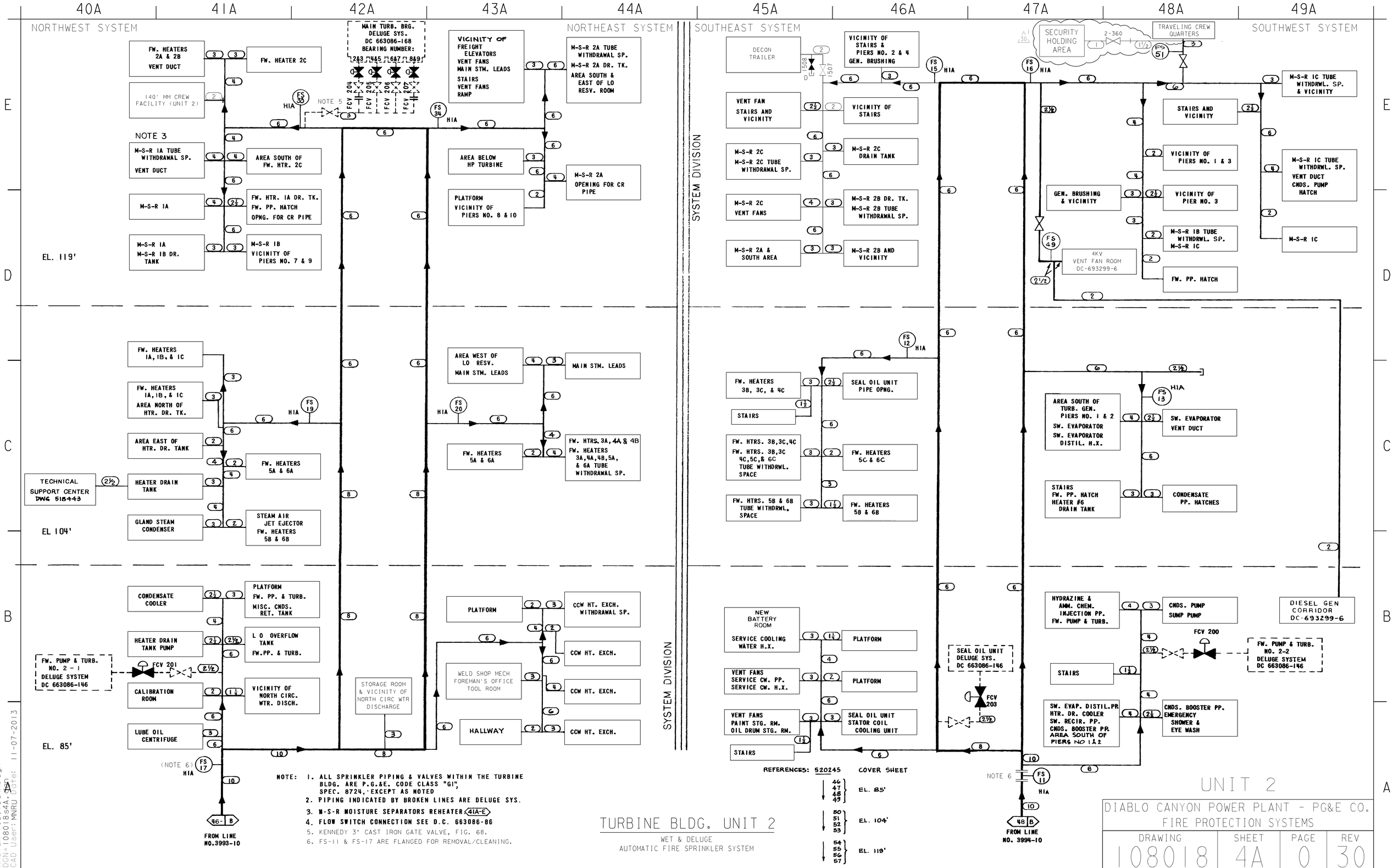
40A
41A
42A
43A
44A
45A
46A
47A
48A
49A
NORTHWEST SYSTEM
NORTHEAST SYSTEM
SOUTHEAST SYSTEM
SOUTHWEST SYSTEM
SYSTEM DIVISION
SYSTEM DIVISION
MAIN TURB. BRG. DELUGE SYS. DC 663086-168 BEARING NUMBER: 243 445 647 849
FCV 204
FCV 205
FCV 206
FCV 207
FW. HEATERS 2A & 2B VENT DUCT
FW. HEATER 2C
140' MM CREW FACILITY (UNIT 2)
NOTE 3
M-S-R 1A TUBE WITHDRAWAL SP. VENT DUCT
AREA SOUTH OF FW. HTR. 2C
M-S-R 1A
FW. HTR. 1A DR. TK. FW. PP. HATCH OPNG. FOR CR PIPE
M-S-R 1A M-S-R 1B DR. TANK
M-S-R 1B VICINITY OF PIERS NO. 7 & 9
EL. 119'
VICINITY OF FREIGHT ELEVATORS VENT FANS MAIN STM. LEADS STAIRS VENT FANS RAMP
M-S-R 2A TUBE WITHDRAWAL SP.
M-S-R 2A DR. TK.
AREA SOUTH & EAST OF LO RESV. ROOM
AREA BELOW HP TURBINE
M-S-R 2A OPENING FOR CR PIPE
PLATFORM VICINITY OF PIERS NO. 8 & 10
DECON TRAILER
VICINITY OF STAIRS & PIERS NO. 2 & 4 GEN. BRUSHING
VENT FAN STAIRS AND VICINITY
VICINITY OF STAIRS
M-S-R 2C M-S-R 2C TUBE WITHDRAWAL SP.
M-S-R 2C DRAIN TANK
M-S-R 2C VENT FANS
M-S-R 2B DR. TK. M-S-R 2B TUBE WITHDRAWAL SP.
M-S-R 2A & SOUTH AREA
M-S-R 2B AND VICINITY
SECURITY HOLDING AREA
TRAVELING CREW QUARTERS
M-S-R 1C TUBE WITHDRWL. SP. & VICINITY
STAIRS AND VICINITY
VICINITY OF PIERS NO. 1 & 3
M-S-R 1C TUBE WITHDRWL. SP. VENT DUCT CNDS. PUMP HATCH
GEN. BRUSHING & VICINITY
VICINITY OF PIER NO. 3
M-S-R 1B TUBE WITHDRWL. SP. M-S-R 1C
M-S-R 1C
4KV VENT FAN ROOM DC-693299-6
FW. PP. HATCH
FW. HEATERS 1A, 1B, & 1C
FW. HEATERS 1A, 1B, & 1C AREA NORTH OF HTR. DR. TK.
AREA EAST OF HTR. DR. TANK
FW. HEATERS 5A & 6A
TECHNICAL SUPPORT CENTER DWG 518443
HEATER DRAIN TANK
GLAND STEAM CONDENSER
STEAM AIR JET EJECTOR FW. HEATERS 5B & 6B
EL 104'
AREA WEST OF LO RESV. MAIN STM. LEADS
MAIN STM. LEADS
FW. HEATERS 5A & 6A
FW. HTRS. 3A, 4A & 4B FW. HEATERS 3A, 4A, 4B, 5A, & 6A TUBE WITHDRAWAL SP.
FW. HEATERS 3B, 3C, & 4C
SEAL OIL UNIT PIPE OPNG.
STAIRS
FW. HTRS. 3B, 3C, 4C FW. HTRS. 3B, 3C 4C, 5C, & 6C TUBE WITHDRWL. SPACE
FW. HEATERS 5C & 6C
FW. HTRS. 5B & 6B TUBE WITHDRWL. SPACE
FW. HEATERS 5B & 6B
AREA SOUTH OF TURB. GEN. PIERS NO. 1 & 2 SW. EVAPORATOR SW. EVAPORATOR DISTIL. H.X.
SW. EVAPORATOR VENT DUCT
STAIRS FW. PP. HATCH HEATER #6 DRAIN TANK
CONDENSATE PP. HATCHES
CONDENSATE COOLER
PLATFORM FW. PP. & TURB. MISC. CNDS. RET. TANK
HEATER DRAIN TANK PUMP
L O OVERFLOW TANK FW.PP. & TURB.
FW. PUMP & TURB. NO. 2-1 DELUGE SYSTEM DC 663086-146
FCV 201
CALIBRATION ROOM
VICINITY OF NORTH CIRC. WTR. DISCH.
LUBE OIL CENTRIFUGE
EL. 85'
STORAGE ROOM & VICINITY OF NORTH CIRC WTR DISCHARGE
PLATFORM
CCW HT. EXCH. WITHDRAWAL SP.
CCW HT. EXCH.
WELD SHOP MECH FOREMAN'S OFFICE TOOL ROOM
CCW HT. EXCH.
HALLWAY
CCW HT. EXCH.
NEW BATTERY ROOM SERVICE COOLING WATER H.X.
PLATFORM
VENT FANS SERVICE CW. PP. SERVICE CW. H.X.
PLATFORM
VENT FANS PAINT STG. RM. OIL DRUM STG. RM.
SEAL OIL UNIT STATOR COIL COOLING UNIT
STAIRS
SEAL OIL UNIT DELUGE SYS. DC 663086-146
FCV 203
HYDRAZINE & AMM. CHEM. INJECTION PP. FW. PUMP & TURB.
CNDS. PUMP SUMP PUMP
DIESEL GEN CORRIDOR DC-693299-6
FCV 200
FW. PUMP & TURB. NO. 2-2 DELUGE SYSTEM DC 663086-146
STAIRS
SW. EVAP. DISTIL. PR. HTR. DR. COOLER SW. RECIR. PP. CNDS. BOOSTER PP. AREA SOUTH OF PIERS NO 1 & 2
CNDS. BOOSTER PP. EMERGENCY SHOWER & EYE WASH
REFERENCES: 520245 COVER SHEET
46 47 48 49 EL. 85'
50 51 52 53 EL. 104'
54 55 56 57 EL. 119'
FROM LINE NO.3993-10
FROM LINE NO. 3994-10
NOTE: 1. ALL SPRINKLER PIPING & VALVES WITHIN THE TURBINE BLDG. ARE P.G.&E. CODE CLASS "GI", SPEC. 8724, EXCEPT AS NOTED
2. PIPING INDICATED BY BROKEN LINES ARE DELUGE SYS.
3. M-S-R MOISTURE SEPARATORS REHEATER 41A-E
4. FLOW SWITCH CONNECTION SEE D.C. 663086-86
5. KENNEDY 3" CAST IRON GATE VALVE, FIG. 68.
6. FS-11 & FS-17 ARE FLANGED FOR REMOVAL/CLEANING.
TURBINE BLDG. UNIT 2
WET & DELUGE AUTOMATIC FIRE SPRINKLER SYSTEM
UNIT 2
DIABLO CANYON POWER PLANT - PG&E CO.
FIRE PROTECTION SYSTEMS
DRAWING 108018
SHEET 4A
PAGE 0
REV 30
11-07-2013 MNRU FxC2 FAZI NOT REQUIRED N/A N/A N/A REVISED PER DDN-2*1166
DATE DWN RE IV PROFESSIONAL ENGINEER PE DISC. PE# PE EXP.
RASTER=108018s4A.dgn
DGN=108018s4A.dgn
CAD User: MNRU Date: 11-07-2013
3NPGIC 3 Size

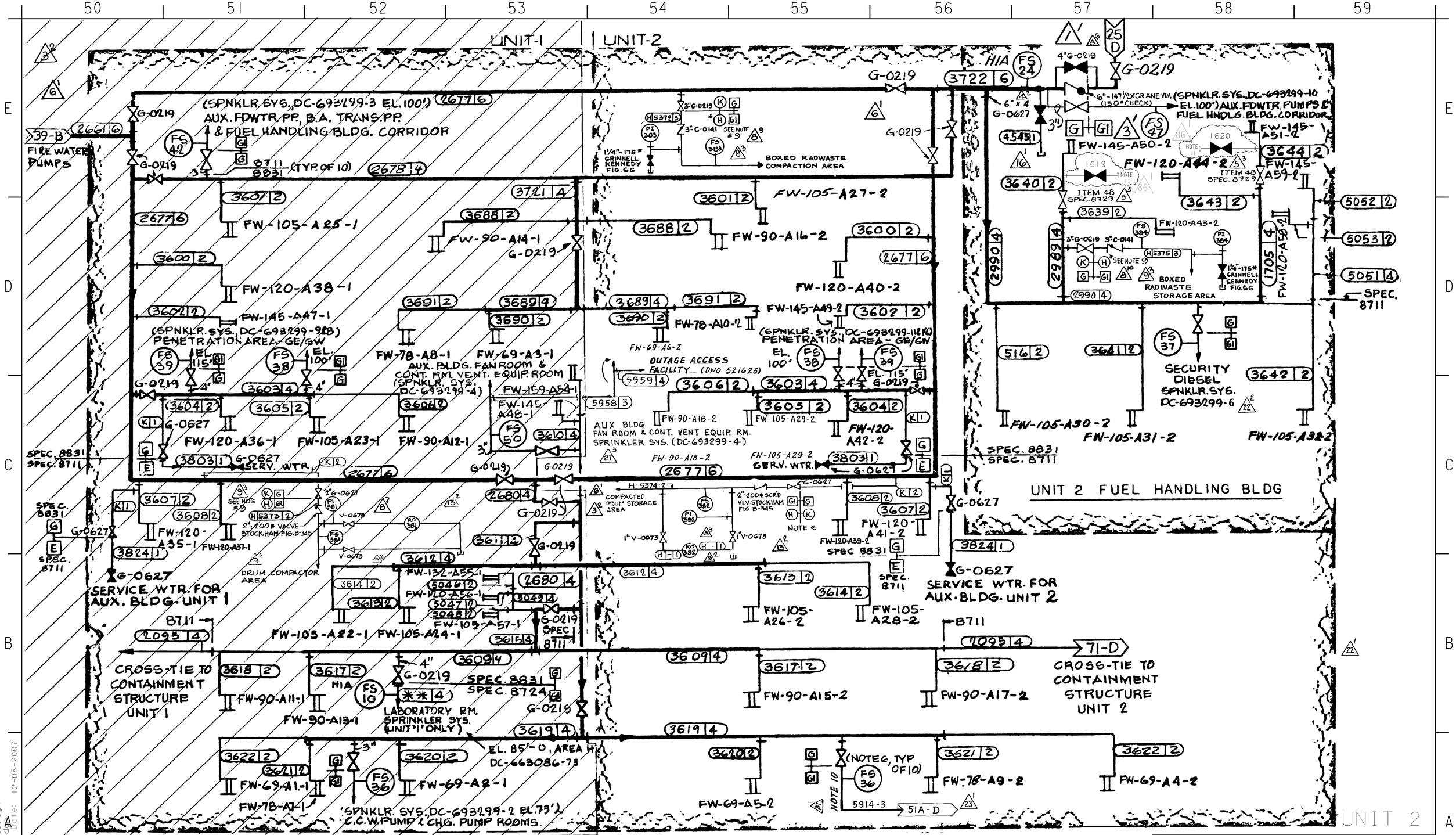

UNIT 2 FUEL HANDLING BLDG.

NOTES:

1. ALL PIPING & VALVES ON THIS SHEET ARE SUPPLIED & INSTALLED UNDER SPEC 8831 EXCEPT AS NOTED.
2. ** INDICATES PIPING AND VALVES UNDER SPEC 8724
3. DELETED
4. ALL PIPING ON THIS SHEET IS "K" SPEC EXCEPT AS NOTED
5. DELETED
6. OS&Y 150# CRANE 47-1/2 XR SHUT-OFF VALVE. 56-A
7. ALL HOSEREELS HAVE RESTRICTING ORIFICES (REF. 060831) OR POWHATAN PRESSURE RESTRICTING VALVE 18-255 OR EQUIV.
8. DELETED
9. "H" SPEC PIPE IS SCH. 40 ASTM A120 PER DCM-M-10 REV. 3
10. PIPING BETWEEN ISOLATION VALVES INSTALLED PER GI REQUIREMENTS BUT SEISMICALLY QUALIFIED TO G REQUIREMENTS. 27
11. CONNECTOR W/CAP. 86

DIABLO CANYON POWER PLANT - PG&E CO.
FIRE PROTECTION SYSTEMS

DRAWING	SHEET	PAGE	REV
108018	5	0	28

DATE	DWN	RE	IV	PROFESSIONAL ENGINEER	PE DISC.	PE#	PE EXP.	
12-05-2007	JAR0	FxC2		KERSI J. DALAL	MECHANICAL	M 16690	3/31/2008	REVISED PER FCT-32320 FCT-32890

RASTER=108018s5.dgn DGN=108018s5.dgn CAD User=JAR0 DGNet 12-05-2007

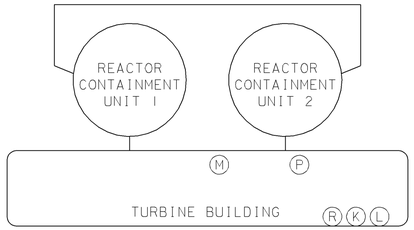

HAZARDS LOCATIONS

PLOT PLAN

NOTES:

1. ** INDICATES PIPING UNDER SPEC.8724
2. ALL PIPING IS CLASS "G1" EXCEPT AS NOTED
3. CARDOX ODORIZER ASSEMBLY MODEL NO.24824 AND 1½" BALL VALVE, CHEMETRON NO.1-061-0711 WITH LOCKING DEVICE NO.5-061-0773.

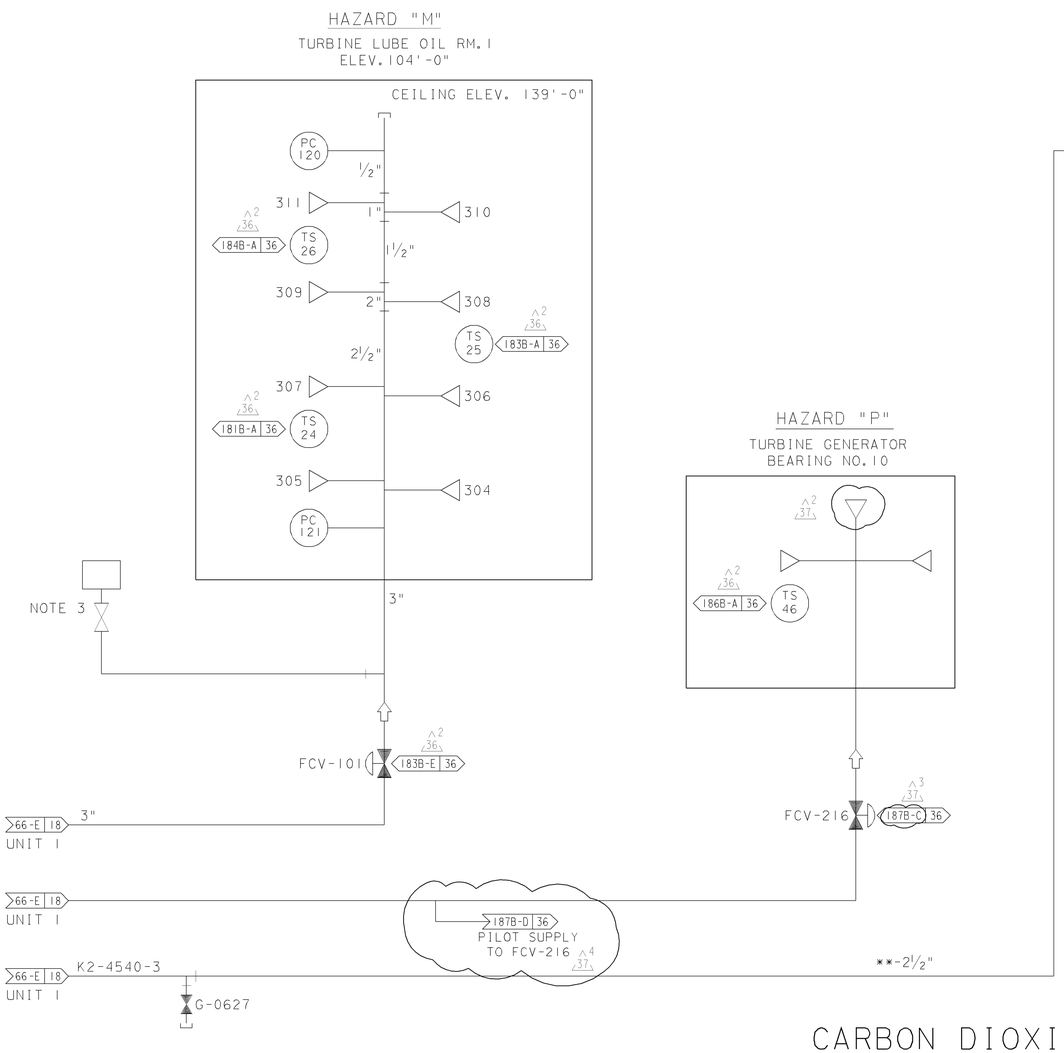

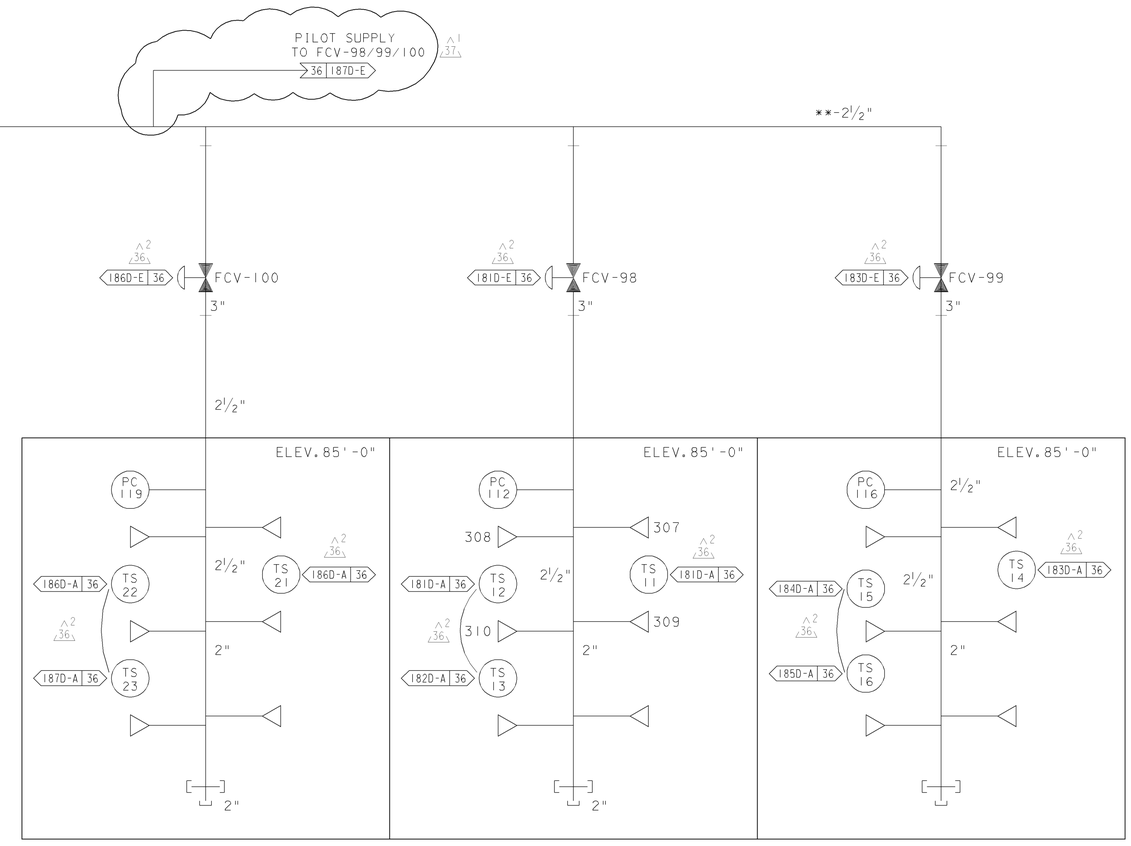

CARBON DIOXIDE FIRE PROTECTION SYSTEM
HAZARD SPRAY HEADS

REFERENCE: DC-663086-1&2

UNIT 2

DIABLO CANYON POWER PLANT - PG&E CO.
FIRE PROTECTION SYSTEMS

DRAWING	SHEET	PAGE	REV
108018	6	0	37

DATE	DWN	RE	IV	PROFESSIONAL ENGINEER	PE DISC.	PE#	PE EXP.	
03-31-2011	JBMX	FxC2		KERSI J. DALAL	MECHANICAL	M 16690	3/31/2012	REVISED PER DFT-7*1100

RASTER=108018S6.dgn
DGN=108018S6.dgn
CAD User: JBMX Date: 03-31-2011

3NPOIC
3 Size

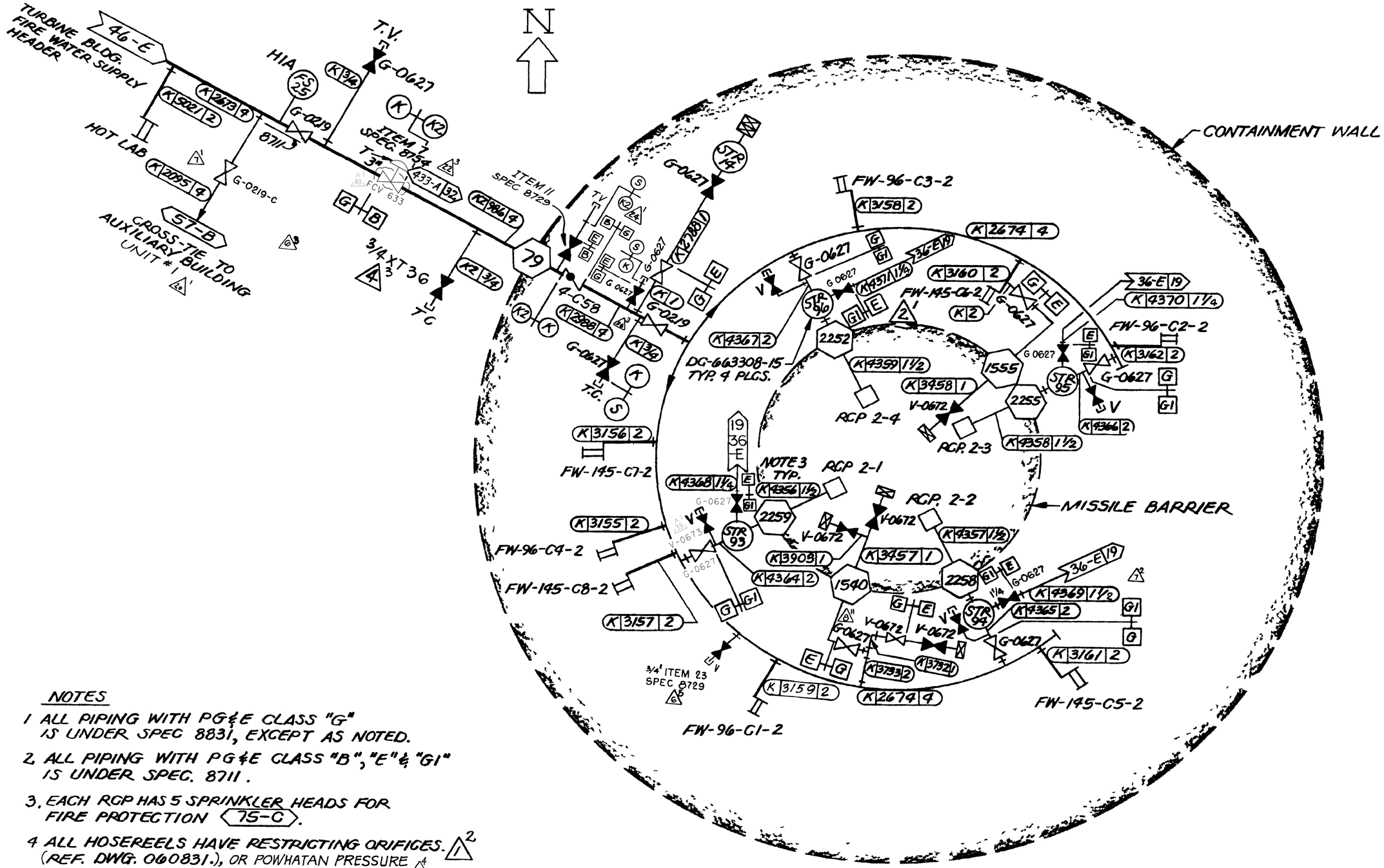

NOTES

1 ALL PIPING WITH PG&E CLASS "G" IS UNDER SPEC 8831, EXCEPT AS NOTED.

2. ALL PIPING WITH PG&E CLASS "B", "E" & "G1" IS UNDER SPEC. 8711.

3. EACH RCP HAS 5 SPRINKLER HEADS FOR FIRE PROTECTION 75-C.

4 ALL HOSEREELS HAVE RESTRICTING ORIFICES. (REF. DWG. 060831.), OR POWHATAN PRESSURE RESTRICTING VALVE 18-255 OR EQUIV

5 DELETED

CONTAINMENT STRUCTURE

UNIT 2

DIABLO CANYON POWER PLANT - PG&E CO.
FIRE PROTECTION SYSTEM

DRAWING	SHEET	PAGE	REV
108018	7	0	40

DATE	DWN	RE	IV	PROFESSIONAL ENGINEER	PE DISC.	PE#	PE EXP.	
05-03-2006	MIBF	RMDI		KERSI J. DALAL	MECHANICAL	M 16690	3/31/2008	REVISED PER FCT-030782

RASTER=801837.dgn
DGN=801837.dgn
CAD User: MIBF Date: 05-03-2006

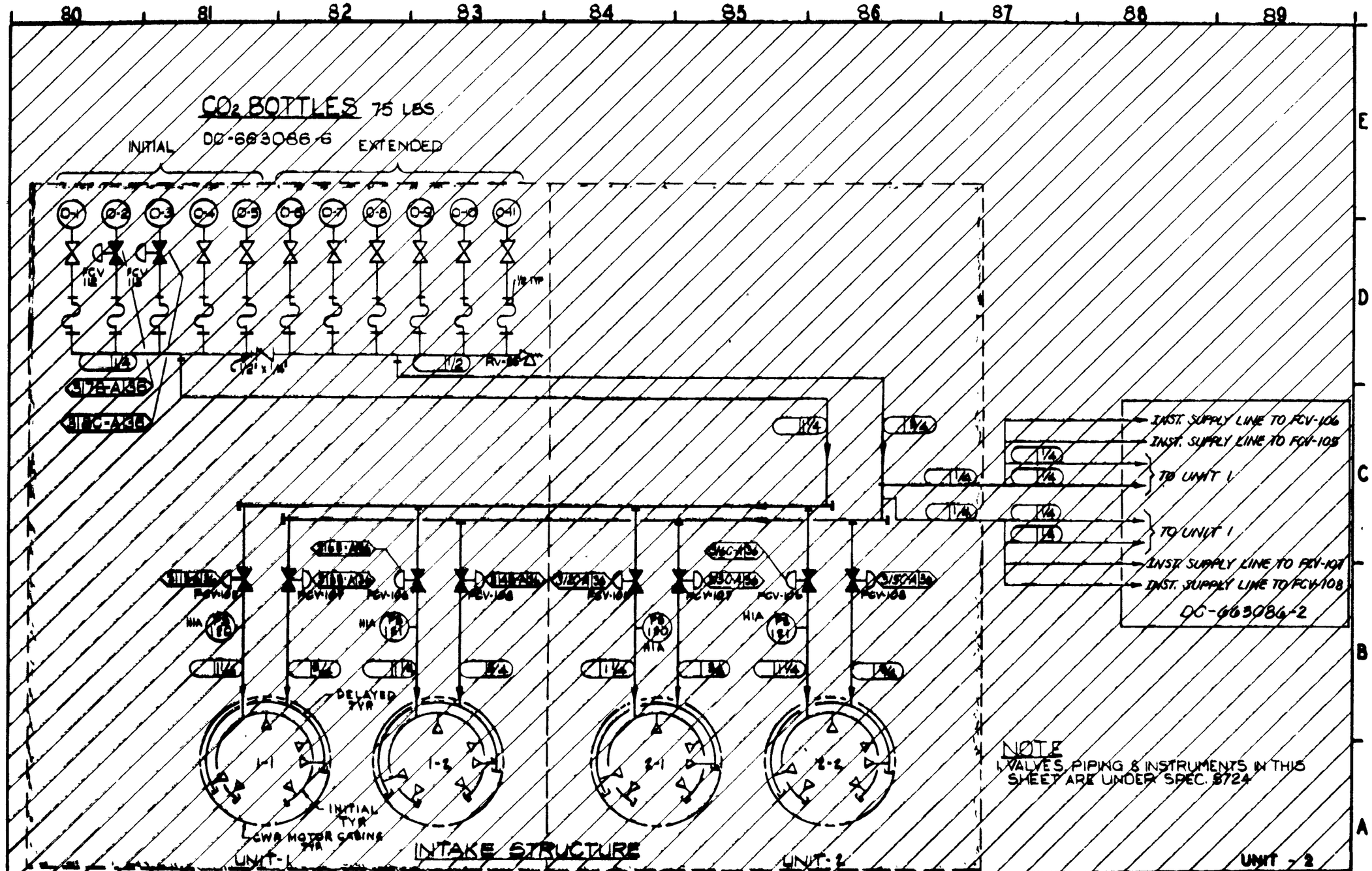
80
81
82
83
84
85
86
87
88
89
E
D
C
B
A
CO2 BOTTLES 75 LBS
DC-663086-6
INITIAL
EXTENDED
O-1
O-2
O-3
O-4
O-5
O-6
O-7
O-8
O-9
O-10
O-11
FCV 112
FCV 113
1/2 TYP
1/4
1/2
RV-
1/2" x 1/4"
1/2-A-4-B
1/2-C-A-4-B
1 1/4
INST. SUPPLY LINE TO FCV-106
INST. SUPPLY LINE TO FCV-105
TO UNIT 1
TO UNIT 1
INST. SUPPLY LINE TO FCV-107
INST. SUPPLY LINE TO FCV-108
DC-663086-2
3/4-A-4-B
3/4-C-A-4-B
FCV-107
FCV-108
HIA
PS 121
PS 120
DELAYED TYR
1-1
1-2
2-1
2-2
INITIAL TYR
CWR MOTOR CABINE TYR
INTAKE STRUCTURE
UNIT-1
UNIT-2
NOTE
1. VALVES, PIPING & INSTRUMENTS IN THIS SHEET ARE UNDER SPEC. 8724
UNIT - 2
P.G. & E. CO.
SHEET 9 OF SHEETS
DRAWING NUMBER
108018
REVISION
20
MICROFILM
20
CO2 PROTECTION SYSTEM FOR INTAKE STRUCTURE
INDEXED REV. 20
THIS DRAWING HAS BEEN REPRODUCED WITHOUT CHANGE FROM ORIGINAL DRAWING
CHANGE NO.
DATE
SCAN 20

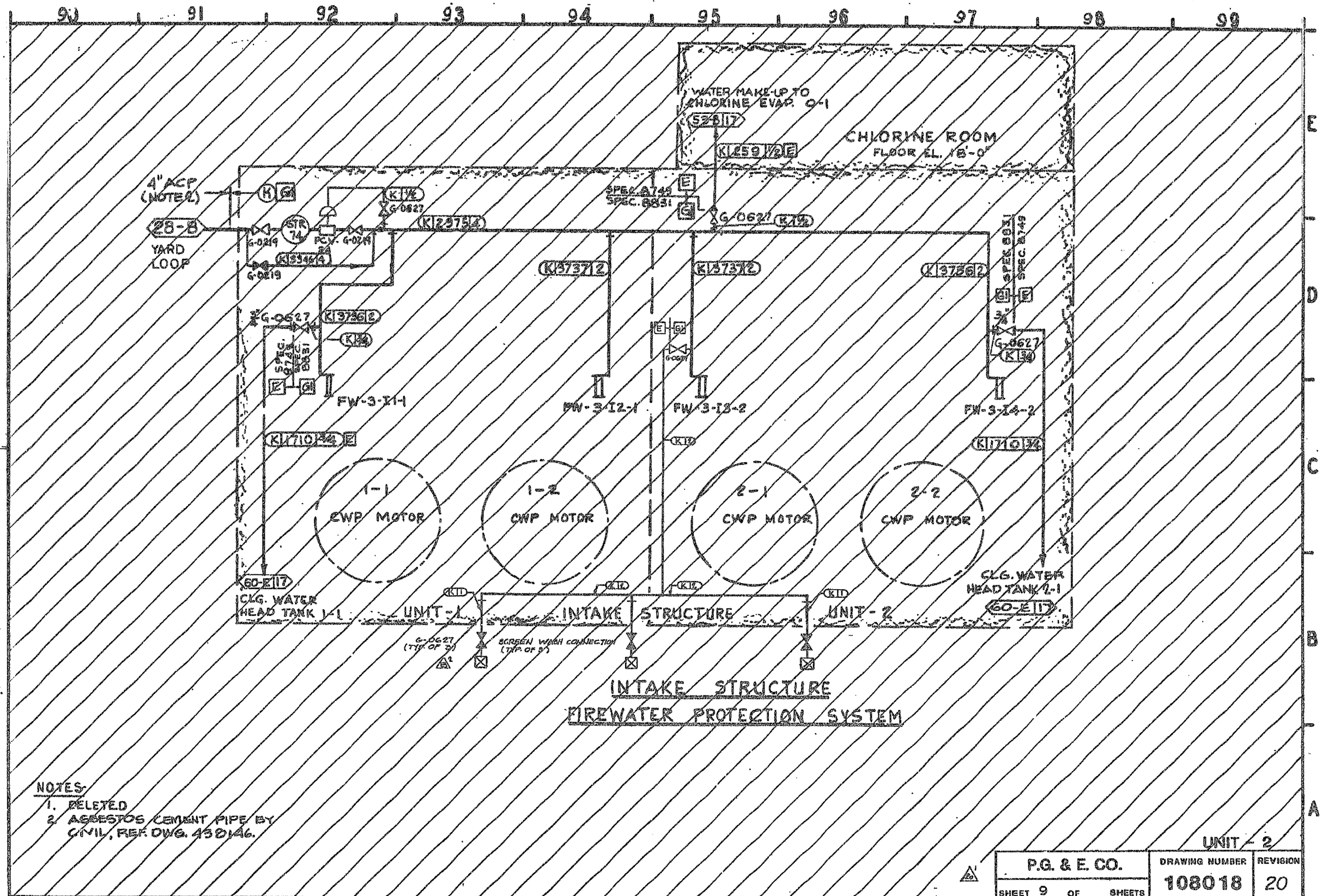

108 018 CHANGE 1
SH. 9

RM INDEXED REV. 20

SCANNED: 20

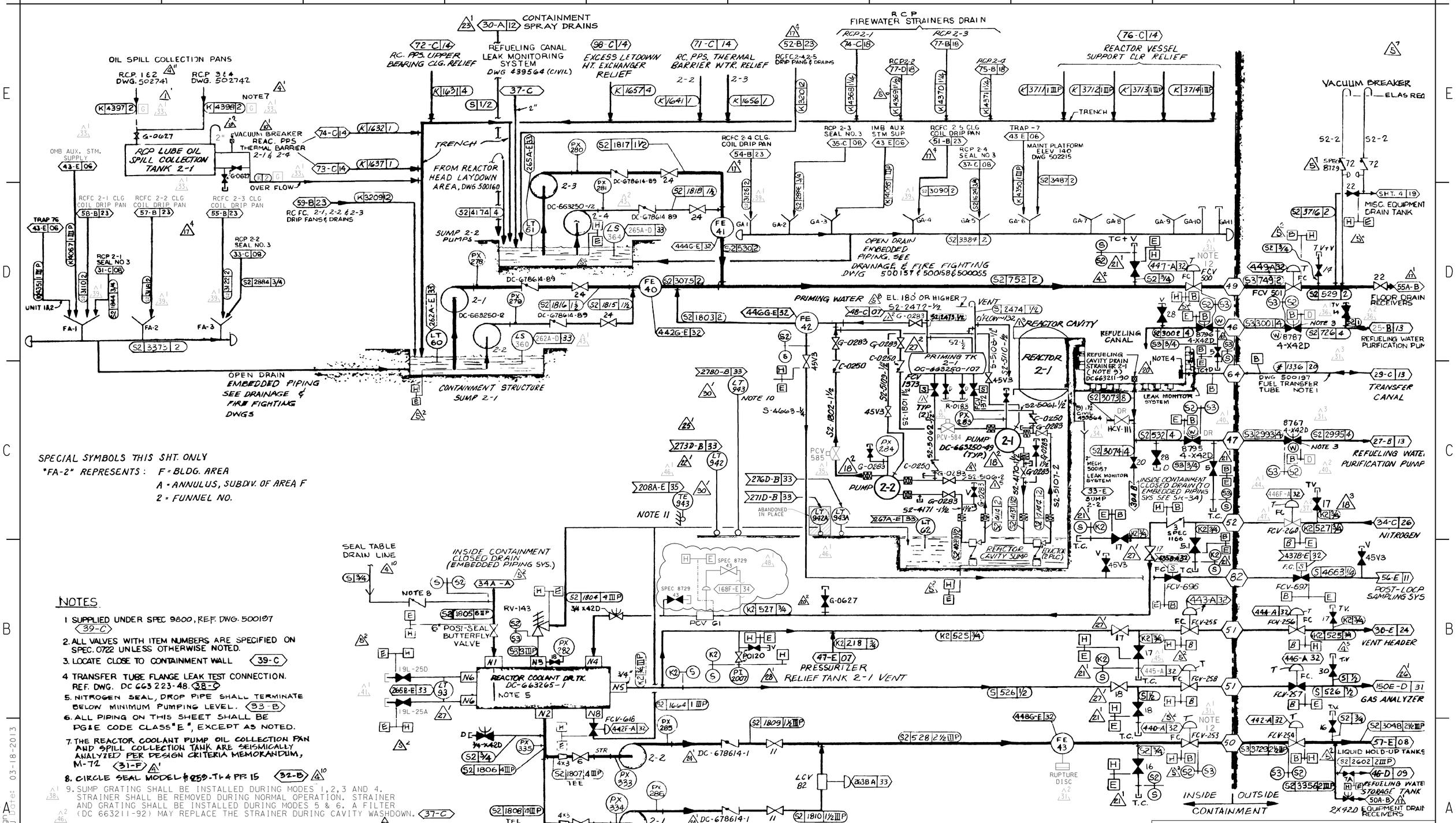

NOTES

1. SUPPLIED UNDER SPEC 9800, REF. DWG. 500107 (39-C)
2. ALL VALVES WITH ITEM NUMBERS ARE SPECIFIED ON SPEC. 0722 UNLESS OTHERWISE NOTED.
3. LOCATE CLOSE TO CONTAINMENT WALL (39-C)
4. TRANSFER TUBE FLANGE LEAK TEST CONNECTION. REF. DWG. DC 663223-48. (38-C)
5. NITROGEN SEAL, DROP PIPE SHALL TERMINATE BELOW MINIMUM PUMPING LEVEL. (33-B)
6. ALL PIPING ON THIS SHEET SHALL BE PG&E CODE CLASS "E", EXCEPT AS NOTED.
7. THE REACTOR COOLANT PUMP OIL COLLECTION PAN AND SPILL COLLECTION TANK ARE SEISMICALLY ANALYZED PER DESIGN CRITERIA MEMORANDUM, M-72 (31-F)
8. CIRCLE SEAL MODEL #259-T14 PF 15 (32-B)
9. SUMP GRATING SHALL BE INSTALLED DURING MODES 1, 2, 3 AND 4. STRAINER SHALL BE REMOVED DURING NORMAL OPERATION. STRAINER AND GRATING SHALL BE INSTALLED DURING MODES 5 & 6. A FILTER (DC 663211-92) MAY REPLACE THE STRAINER DURING CAVITY WASHDOWN. (37-C)
10. LT-943 IS INSTALLED SPARE AND CAN BE USED IF LT-943A IS OUT OF SERVICE. (34-C) (35-C)
11. TE-943 MOUNTED ON WALL CLOSE TO LT-942/943. (34-C)
12. THE VALVE BALLS FOR FCV-253 AND FCV-500 HAVE A PRESSURE RELIEF HOLE DRILLED IN THE UPSTREAM SIDE WHEN THE VALVE IS IN THE CLOSED POSITION. SEE DC-663166-7, -8 RESPECTIVELY FOR DETAILS. (38-D) (38-A)

UNIT 2

DIABLO CANYON POWER PLANT - PG&E CO.
LIQUID RADWASTE SYSTEM

DRAWING	SHEET	PAGE	REV
108019	3	0	48

DATE	DWN	RE	IV	PROFESSIONAL ENGINEER	PE DISC.	PE#	PE EXP.	
03-18-2013	MNRU	FAZI	N/A	NOT REQUIRED	N/A	N/A	N/A	REVISED PER DDT-4*226

RASTER=8019s3.dgn
DGN=8019s3.dgn
CAD User: MNRU Date: 03-18-2013

SIZE 3 Size

NOTES:
1. ALL DRAIN PIPING ON THIS DRAWING SHALL BE S2-3/4, CODE CLASS "E" UNLESS NOTED.
2. EMBEDDED PIPING IS INDICATED BY HEAVY LINES REF. DWG. No. 501008 & 501009

INSIDE CONTAINMENT
CLOSED DRAIN TO EMBEDDED
PIPING SYSTEM.

UNIT 2

DIABLO CANYON POWER PLANT - PG&E CO.
LIQUID RADWASTE SYSTEM

DRAWING	SHEET	PAGE	REV
108019	3A	0	31

DATE	DWN	RE	IV	PROFESSIONAL ENGINEER	PE DISC.	PE#	PE EXP.	
06-02-2010	GN07	F×C2		KERSI J. DALAL	MECHANICAL	M 16690	3/31/2012	REVISED PER DFT-7*808

RASTER=108019s3A.dgn
DGN=108019s3A.dgn
CAD User: GN07 Date: 06-02-2010

3NPGIC
3 Size

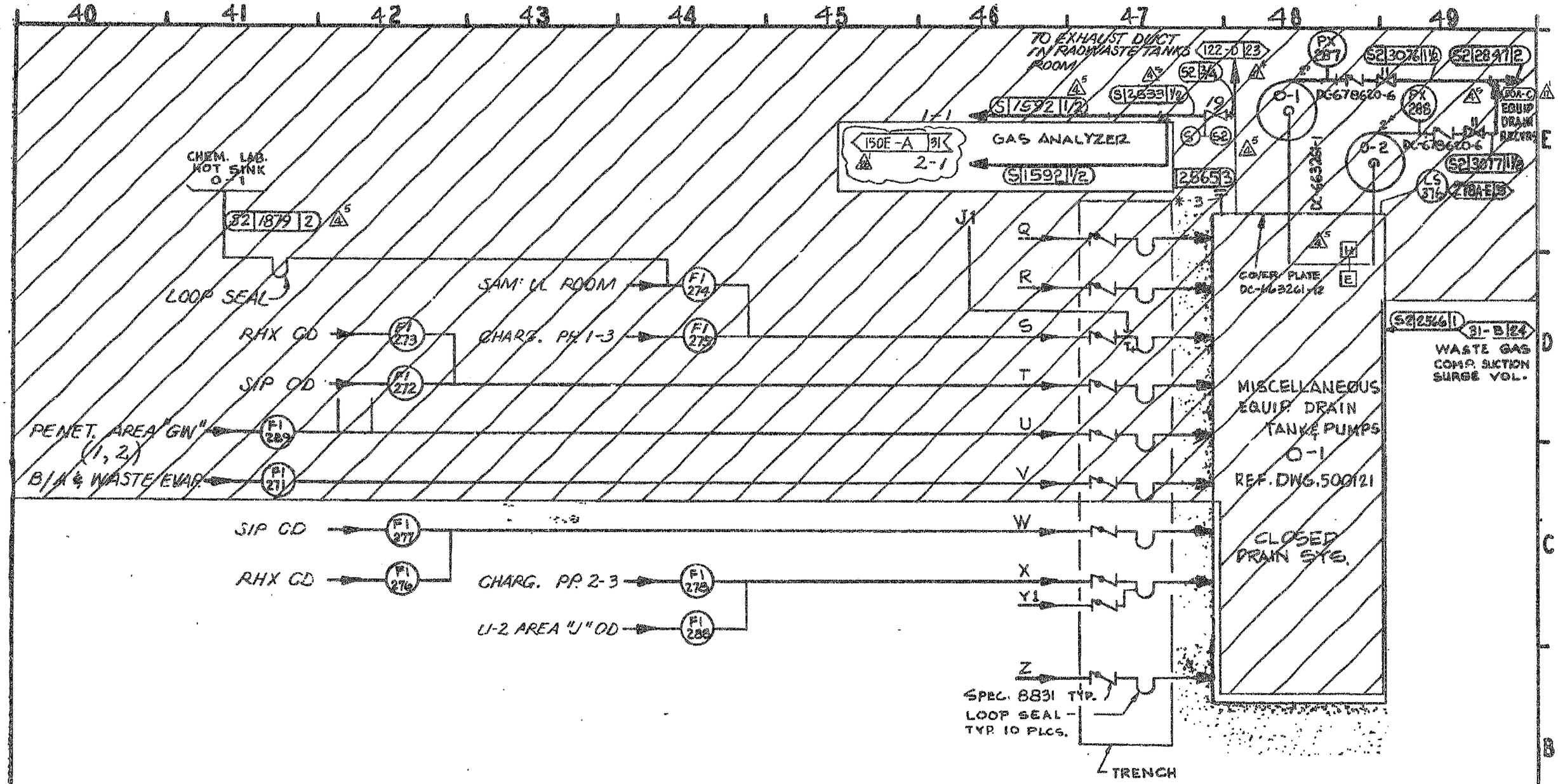

NOTES

1. VALVES WITH ITEM NOS ⋈ 16 ARE SPECIFIED ON SPEC. 0722 UNLESS OTHERWISE NOTED
2. FOR DRAIN COLLECTION PIPING TO AND INCLUDING HEADERS P TO Z REFER TO PG&E DRAINAGE AND FIRE FIGHTING DRAWINGS 500121 TO 500152; 500994 TO 500996 & 500998 TO 501005 AND 501012
3. ALL PIPING ON THIS DRAWING SHALL BE PG&E CODE CLASS "E", EXCEPT AS NOTED.

UNIT - 2

P.G. & E. CO.	DRAWING NUMBER	REVISION
SHEET 4 OF SHEETS	108019	26
	MICROFILM	

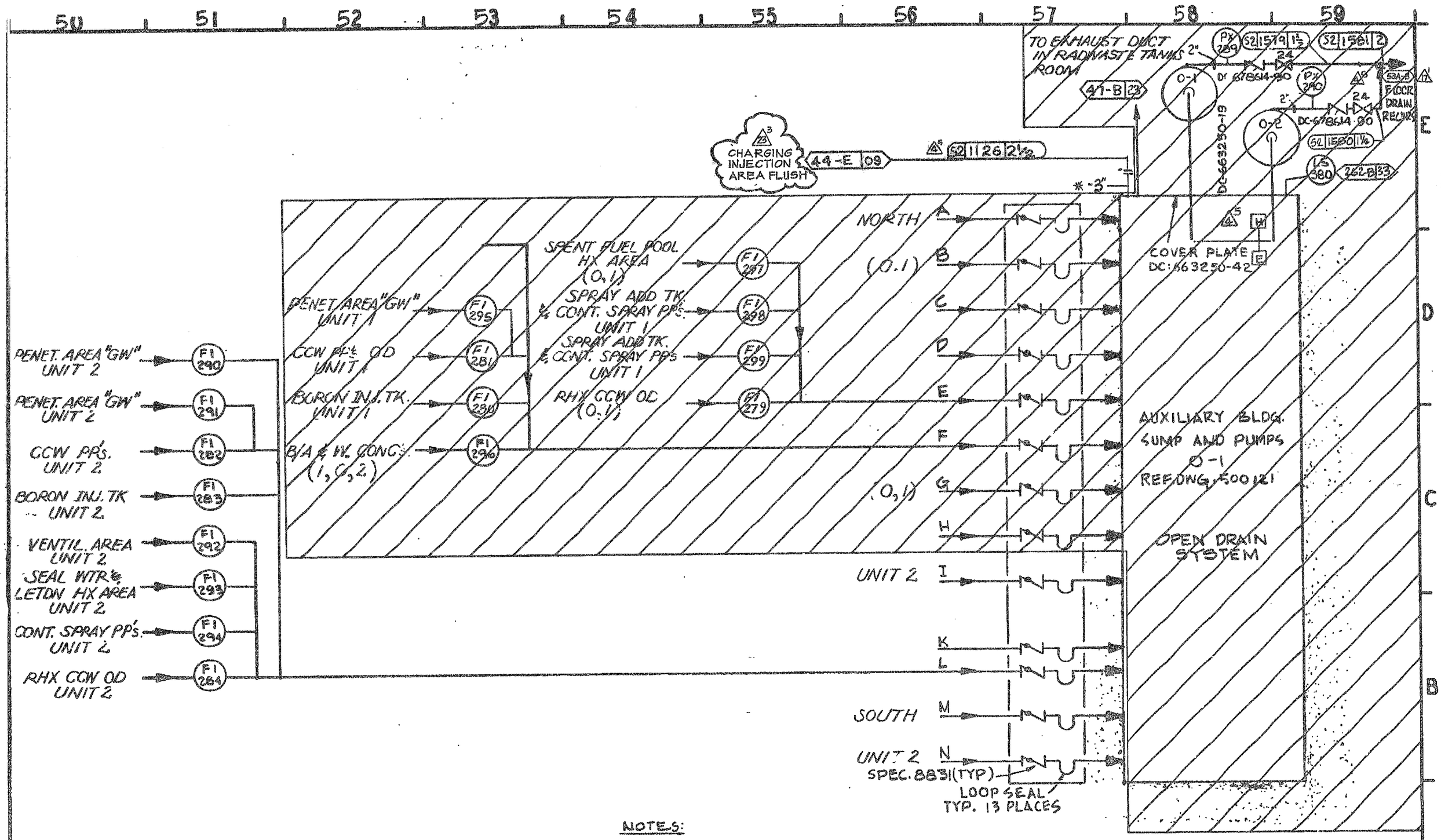

NOTES:

1. VALVES WITH ITEM NOS. 24 ARE SPECIFIED ON SPEC 0722 UNLESS OTHERWISE NOTED
2. FOR DRAIN COLLECTION PIPING TO AND INCLUDING HEADERS A TO N, REFER TO PG&E DRAINAGE AND FIRE FIGHTING DRAWINGS 500121 TO 500132; 500994 TO 500996 AND 500998 TO 501005
3. ALL PIPING ON THIS DRAWING SHALL BE PG&E CODE CLASS 'E' EXCEPT AS NOTED.

UNIT - 2

P.G. & E. CO.	DRAWING NUMBER	REVISION
SHEET 5 OF SHEETS	108019	23
	MICROFILM	23
	SCANNED: 23	

RM INDEXED REV 23

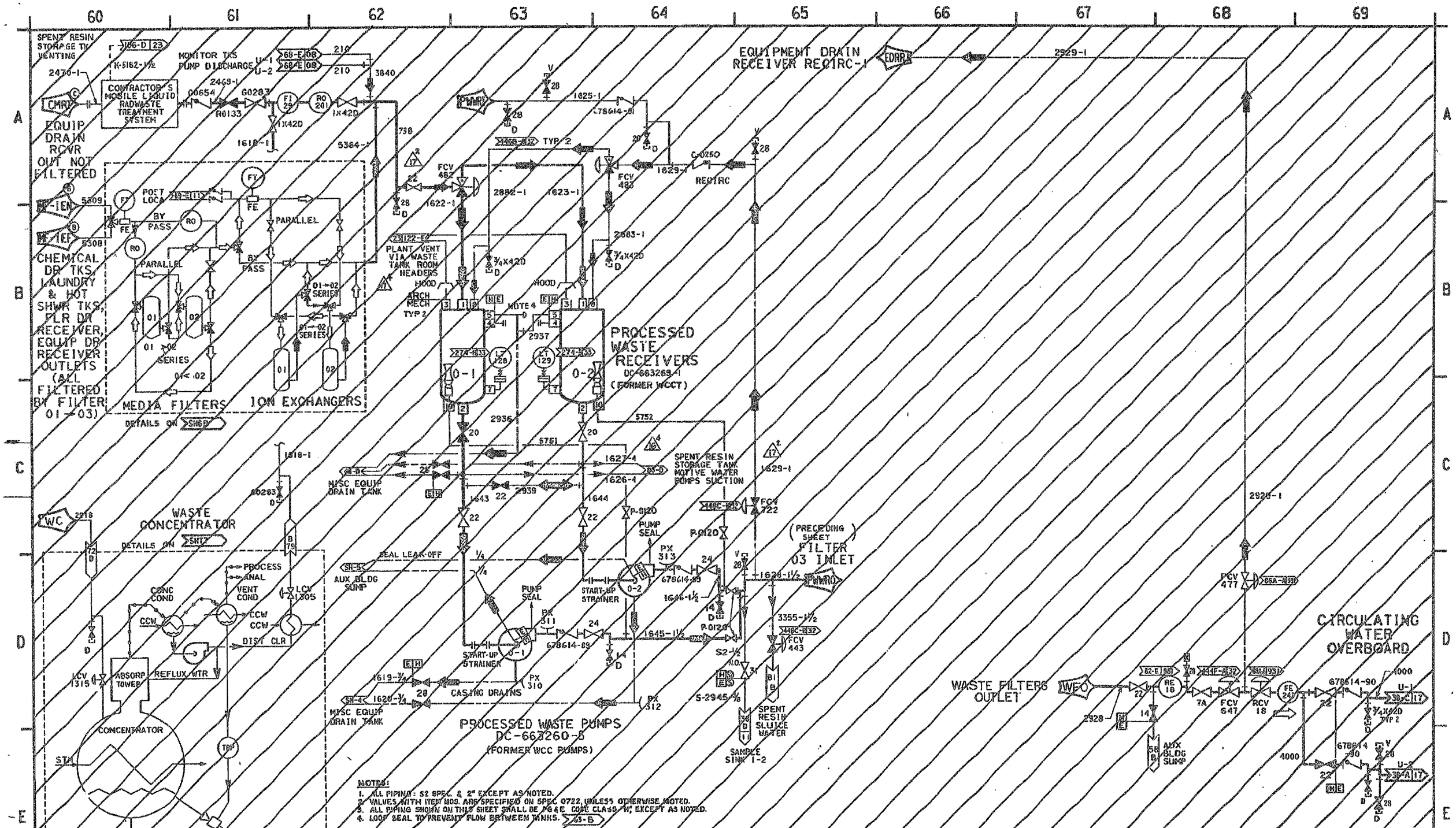
SPENT RESIN STORAGE TK VENTING
CONTRACTOR'S MOBILE LIQUID RADWASTE TREATMENT SYSTEM
MONITOR TKS PUMP DISCHARGE
EQUIP DRAIN RCVR OUT NOT FILTERED
CHEMICAL DR TKS, LAUNDRY & HOT SHWR TKS, FLR DR RECEIVER, EQUIP DR RECEIVER OUTLETS (ALL FILTERED BY FILTER 01-03)
POST LOCA
BY PASS
PARALLEL
01-02 SERIES
MEDIA FILTERS
ION EXCHANGERS
DETAILS ON SH6B
PLANT VENT VIA WASTE TANK ROOM HEADERS
HOOD
ARCH MECH TYP 2
PROCESSED WASTE RECEIVERS
DC-663269-1
(FORMER WCCT)
EQUIPMENT DRAIN RECEIVER RECIRC-1
RECIRC
MISC EQUIP DRAIN TANK
SPENT RESIN STORAGE TANK MOTIVE WATER PUMPS SUCTION
PUMP SEAL
START-UP STRAINER
CASING DRAINS
PROCESSED WASTE PUMPS
DC-663260-5
(FORMER WCC PUMPS)
(PRECEDING SHEET) FILTER 03 INLET
SPENT RESIN SLUICE WATER
SAMPLE SINK T-2
WASTE CONCENTRATOR
DETAILS ON SH12
PROCESS
ANAL
VENT COND
CONC COND
CCW
DIST CLR
ABSORP TOWER
REFLUX WTR
CONCENTRATOR
CONC HOLD TANK
WASTE FILTERS OUTLET
AUX BLDG SUMP
CIRCULATING WATER OVERBOARD
UNIT 2
NOTES:
1. ALL PIPING: S2 SPEC. & 2" EXCEPT AS NOTED.
2. VALVES WITH ITEM NOS. ARE SPECIFIED ON SPEC 0722, UNLESS OTHERWISE NOTED.
3. ALL PIPING SHOWN ON THIS SHEET SHALL BE M4E CODE CLASS "M" EXCEPT AS NOTED.
4. LOOP SEAL TO PREVENT FLOW BETWEEN TANKS.
P.G.&E. CO.
SHEET 6 OF SHEETS
DRAWING NUMBER
108019
REV
18
RMS INDEXED REV 10
MICROFILM

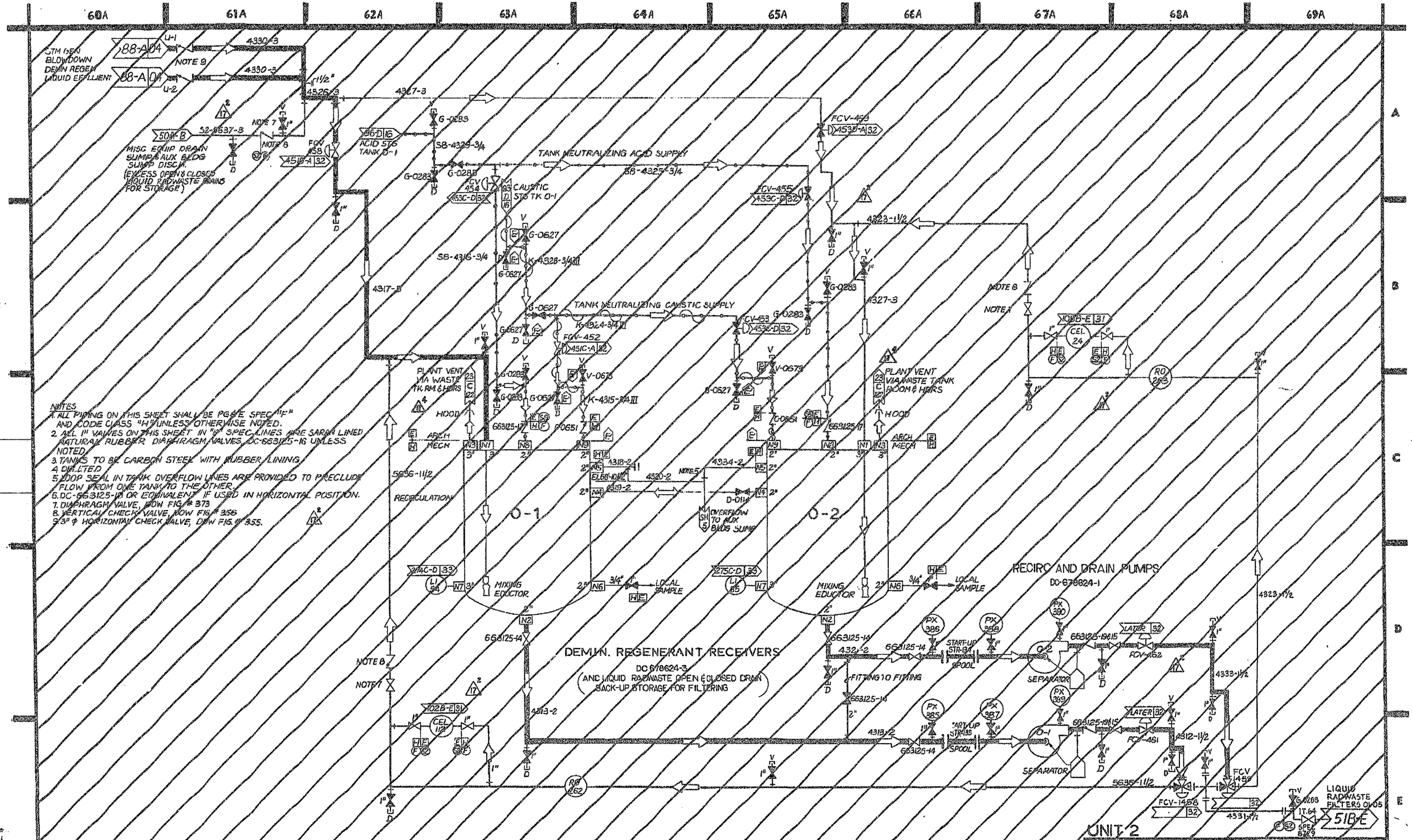
60A
61A
62A
63A
64A
65A
66A
67A
68A
69A
STM GEN BLOWDOWN
DEMIN REGEN LIQUID EFFLUENT
88-A 04
88-A 04
4330-3
NOTE 9
4330-3
4326-3
4327-3
MISC EQUIP DRAIN SUMPS AUX BLDG SUMP DISCH. (EXCESS OPEN & CLOSED LIQUID RADWASTE DRAINS FOR STORAGE)
ACID STG TANK 0-1
TANK NEUTRALIZING ACID SUPPLY
SB-4325-3/4
CAUSTIC STG TK 0-1
TANK NEUTRALIZING CAUSTIC SUPPLY
FCV-452
FCV-453
FCV-454
FCV-455
FCV-456
4323-1 1/2
4327-3
4317-B
PLANT VENT VIA WASTE TK RM & HDRS
PLANT VENT VIA WASTE TANK ROOM & HDRS
HOOD
ARCH MECH
NOTES
1. ALL PIPING ON THIS SHEET SHALL BE PG&E SPEC "F" AND CODE CLASS "H" UNLESS OTHERWISE NOTED.
2. ALL 1" VALVES ON THIS SHEET IN "F" SPEC LINES ARE SARAN LINED NATURAL RUBBER DIAPHRAGM VALVES, DC-663125-16 UNLESS NOTED.
3. TANKS TO BE CARBON STEEL WITH RUBBER LINING.
4. DELETED
5. LOOP SEAL IN TANK OVERFLOW LINES ARE PROVIDED TO PRECLUDE FLOW FROM ONE TANK TO THE OTHER.
6. DC-663125-16 OR EQUIVALENT IF USED IN HORIZONTAL POSITION.
7. DIAPHRAGM VALVE, SEE FIG. # 373
8. VERTICAL CHECK VALVE, SEE FIG. # 355
9. 3/4" Φ HORIZONTAL CHECK VALVE, SEE FIG. # 355.
RECIRCULATION
0-1
0-2
OVERFLOW TO AUX BLDG SUMP
MIXING EDUCTOR
LOCAL SAMPLE
RECIRC AND DRAIN PUMPS
DC-678624-1
DEMIN. REGENERANT RECEIVERS
DC 678624-3
(AND LIQUID RADWASTE OPEN & CLOSED DRAIN BACK-UP STORAGE FOR FILTERING)
START-UP STR-18A SPOOL
START-UP STR-18B SPOOL
SEPARATOR
FITTING TO FITTING
LIQUID RADWASTE FILTERS 0-1 & 0-5
UNIT 2
P. G. & E. CO.
SHEET 6A OF SHEETS
DRAWING NUMBER
108019
REVISION
18
MICROFILM
SCANNED

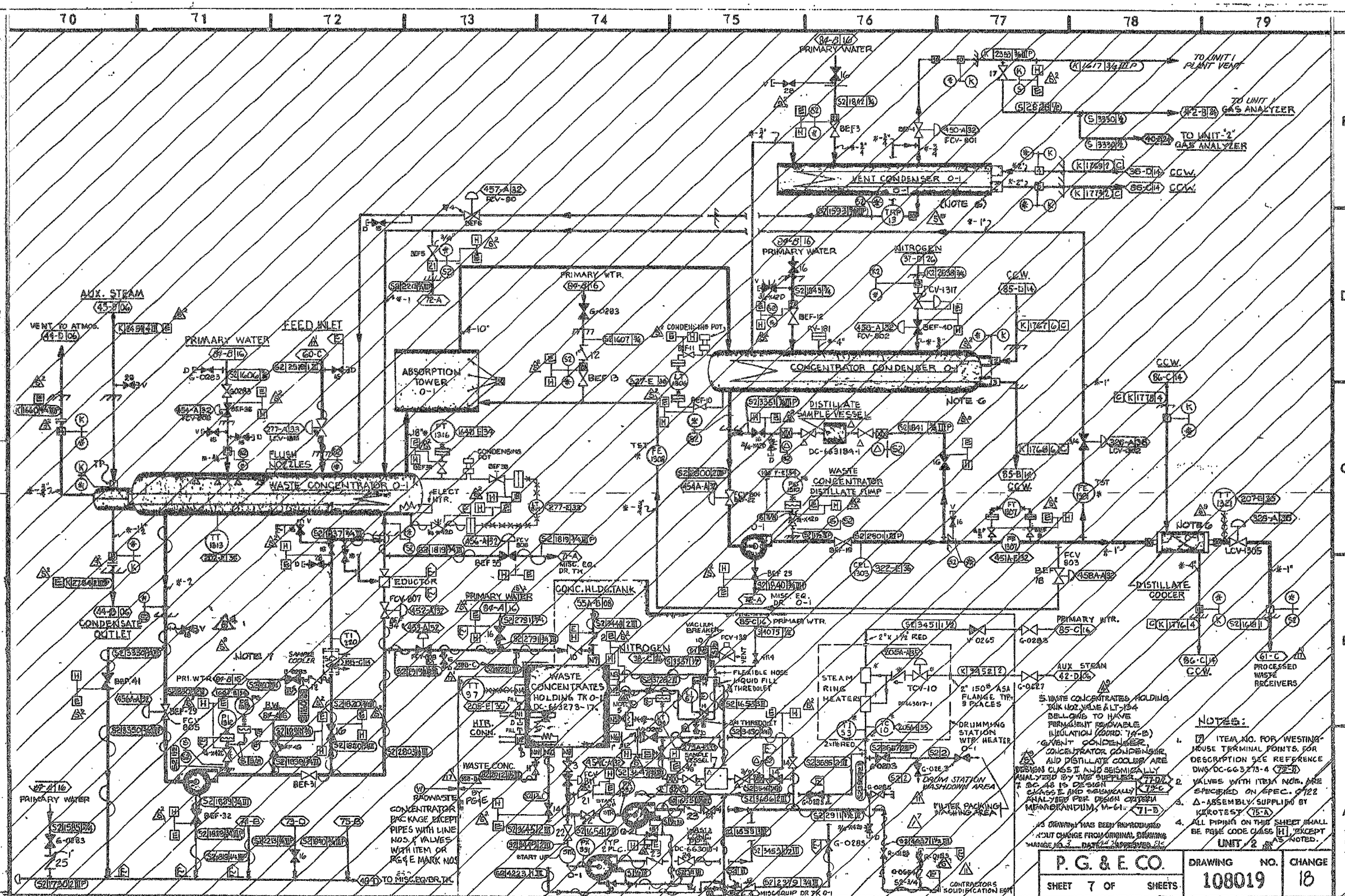
70
71
72
73
74
75
76
77
78
79
E
D
C
B
PRIMARY WATER
TO UNIT 1 PLANT VENT
TO UNIT 1 GAS ANALYZER
TO UNIT "2" GAS ANALYZER
VENT CONDENSER O-1
C.C.W.
NITROGEN
CONCENTRATOR CONDENSER O-1
DISTILLATE SAMPLE VESSEL
WASTE CONCENTRATOR DISTILLATE PUMP
DISTILLATE COOLER
PROCESSED WASTE RECEIVERS
AUX. STEAM
VENT TO ATMOS.
FEED INLET
FLUSH NOZZLES
WASTE CONCENTRATOR O-1
ABSORPTION TOWER O-1
ELECT. HTR.
EDUCTOR
CONDENSATE OUTLET
CONC. HLDG. TANK
WASTE CONCENTRATES HOLDING TK O-1
STEAM RING HEATERS
DRUMMING STATION WTR. HEATER O-1
DRUM STATION WASHDOWN AREA
FILTER PACKING WASHING AREA
CONTRACTORS SOLIDIFICATION EQPT
MISC. EQUIP. DR. TK. O-1
TO MISC. EQ. DR. TK.
RADWASTE CONCENTRATOR PACKAGE EXCEPT PIPES WITH LINE NOS. & VALVES WITH ITEM OR P.G.&E. MARK NOS.
NOTES:
1. [7] ITEM NO. FOR WESTINGHOUSE TERMINAL POINTS. FOR DESCRIPTION SEE REFERENCE DWG. DC-663273-4 (72-B)
2. VALVES WITH ITEM NOS. ARE SPECIFIED ON SPEC. 9122
3. Δ-ASSEMBLY SUPPLIED BY KEROTEST (75-A)
4. ALL PIPING ON THIS SHEET SHALL BE PG&E CODE CLASS [H], EXCEPT AS NOTED.
UNIT 2
P. G. & E. CO.
SHEET 7 OF SHEETS
DRAWING NO. 108019
CHANGE 18

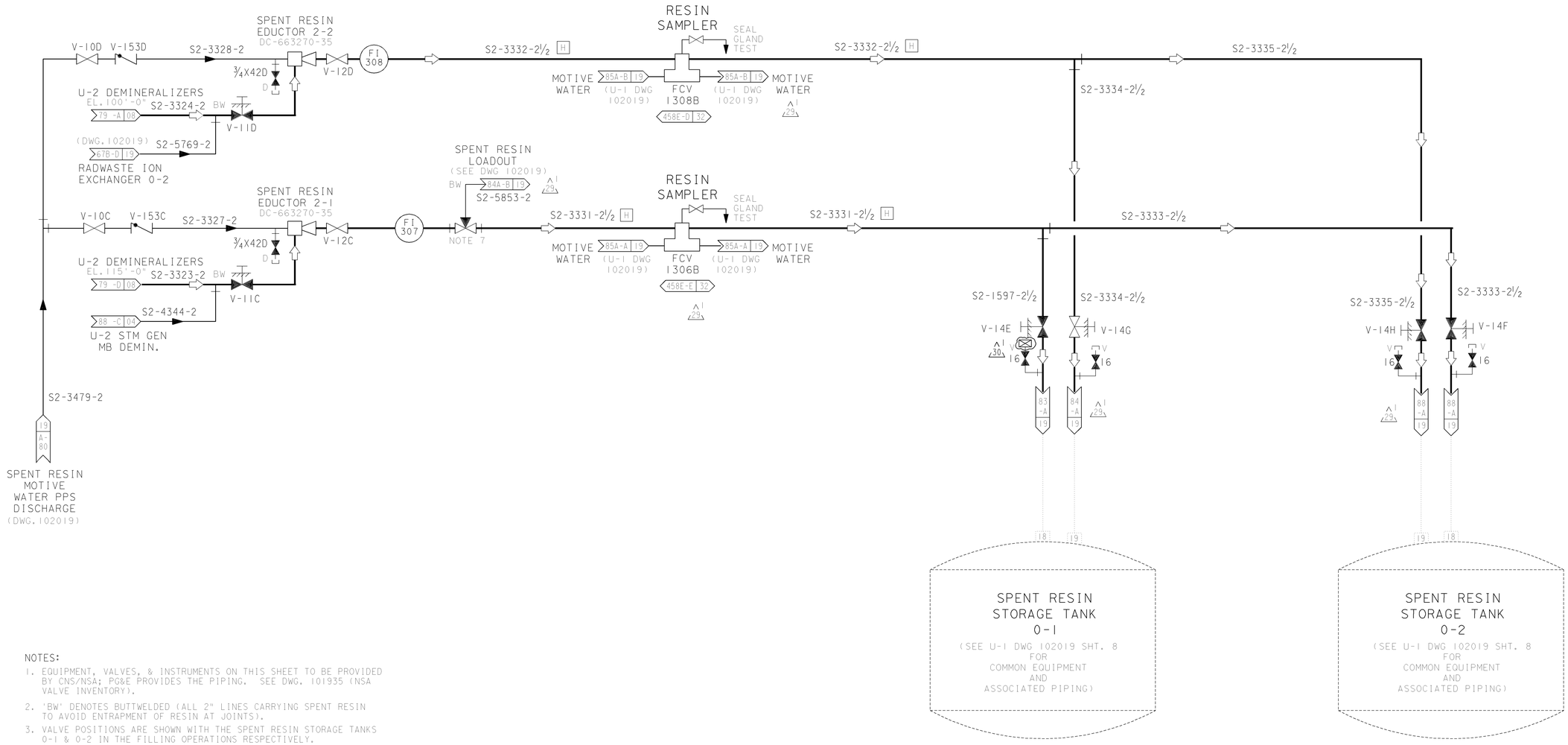

NOTES:

1. EQUIPMENT, VALVES, & INSTRUMENTS ON THIS SHEET TO BE PROVIDED BY CNS/NSA; PG&E PROVIDES THE PIPING. SEE DWG. 101935 (NSA VALVE INVENTORY).
2. 'BW' DENOTES BUTTWELDED (ALL 2" LINES CARRYING SPENT RESIN TO AVOID ENTRAPMENT OF RESIN AT JOINTS).
3. VALVE POSITIONS ARE SHOWN WITH THE SPENT RESIN STORAGE TANKS 0-1 & 0-2 IN THE FILLING OPERATIONS RESPECTIVELY.
4. PG & E VALVES WITH ITEM NUMBERS ARE SPECIFIED ON SPEC. 0722.
5. ALL PIPING ON THIS SHEET SHALL BE PG & E CODE CLASS "H", EXCEPT RESIN SAMPLING SYSTEM, AND AS NOTED.
6. AUTOMATIC RESIN SAMPLE COLLECTION DEVICES (PG & E CODE CLASS "E") ARE LOCATED AT COORDINATES: 84-A/B
7. 2" DIAM. 3-WAY BALL VALVE, BW ENDS. PITTSBURG BRASS MANUFACTURING CO. MODEL NO. MP-H-17BW/2 PO/CO/OE/IS FLOW PATTERN NO.2, 316 SS. 83-B

29

UNIT 2

P G & E CO.		108019	REV. 30
SHEET 8	PAGE 0		

6/19/03	RHSI	RXG2	-	KERSI J. DALAL	MECHANICAL	M 16690	3/31/2004	Revised per FCT 027618
DATE	DWN	RE	IV	PROFESSIONAL ENGINEER	PE DISC.	PE#	PE EXP.	

CAD User:RHSI Date: 6-18-2003
DGN=801958.DGN

SNPG1C

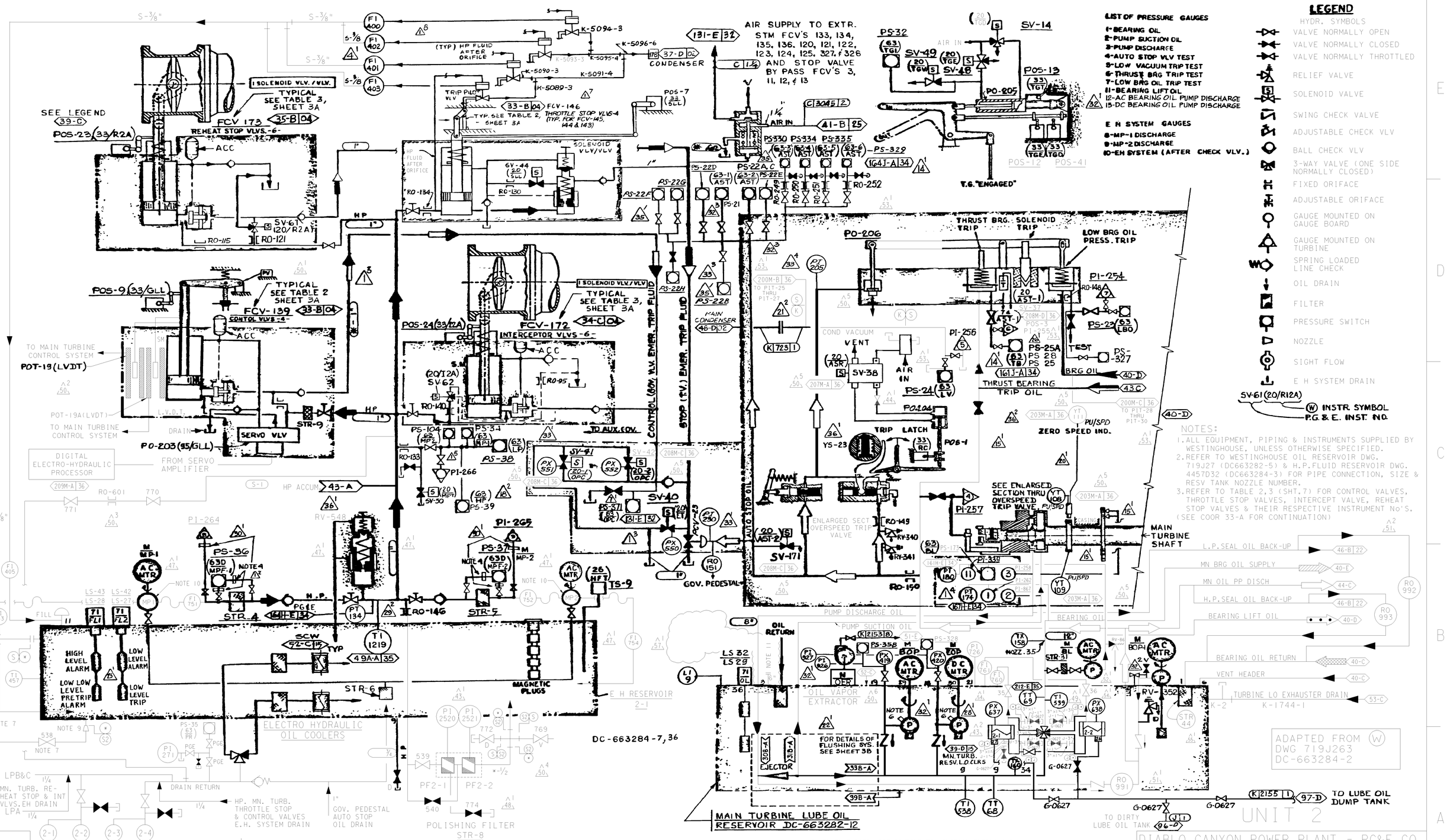
AIR SUPPLY TO EXTR. STM FCV'S 133, 134, 135, 136, 120, 121, 122, 123, 124, 125, 327, & 326 AND STOP VALVE BY PASS FCV'S 3, 11, 12, & 13
LIST OF PRESSURE GAUGES
1-BEARING OIL
2-PUMP SUCTION OIL
3-PUMP DISCHARGE
4-AUTO STOP VLV TEST
5-LOW VACUUM TRIP TEST
6-THRUST BRG TRIP TEST
7-LOW BRG OIL TRIP TEST
11-BEARING LIFT OIL
12-AC BEARING OIL PUMP DISCHARGE
13-DC BEARING OIL PUMP DISCHARGE
E H SYSTEM GAUGES
8-MP-1 DISCHARGE
9-MP-2 DISCHARGE
10-EH SYSTEM (AFTER CHECK VLV.)
LEGEND
HYDR. SYMBOLS
VALVE NORMALLY OPEN
VALVE NORMALLY CLOSED
VALVE NORMALLY THROTTLED
RELIEF VALVE
SOLENOID VALVE
SWING CHECK VALVE
ADJUSTABLE CHECK VLV
BALL CHECK VLV
3-WAY VALVE (ONE SIDE NORMALLY CLOSED)
FIXED ORIFACE
ADJUSTABLE ORIFACE
GAUGE MOUNTED ON GAUGE BOARD
GAUGE MOUNTED ON TURBINE
SPRING LOADED LINE CHECK
OIL DRAIN
FILTER
PRESSURE SWITCH
NOZZLE
SIGHT FLOW
E H SYSTEM DRAIN
SV-61 (20/R12A)
INSTR. SYMBOL
P.G. & E. INST. NO.
NOTES:
1. ALL EQUIPMENT, PIPING & INSTRUMENTS SUPPLIED BY WESTINGHOUSE, UNLESS OTHERWISE SPECIFIED.
2. REFER TO WESTINGHOUSE OIL RESERVOIR DWG. 719J27 (DC663282-5) & H.P. FLUID RESERVOIR DWG. 4457D32 (DC663284-3) FOR PIPE CONNECTION, SIZE & RESV TANK NOZZLE NUMBER.
3. REFER TO TABLE 2,3 (SHT.7) FOR CONTROL VALVES, THROTTLE STOP VALVES, INTERCEPT VALVE, REHEAT STOP VALVES & THEIR RESPECTIVE INSTRUMENT No'S. (SEE COOR 33-A FOR CONTINUATION)
SEE LEGEND
POS-23 (33/R2A)
REHEAT STOP VLVS.-6-
FCV 173
TYPICAL SEE TABLE 3, SHEET 3A
POS-9 (33/GLL)
FCV-139
CONTROL VLVS.-4-
TYPICAL SEE TABLE 2 SHEET 3A
TO MAIN TURBINE CONTROL SYSTEM
POT-19 (LVDT)
SERVO VLV
PO-203 (95/GLL)
FROM SERVO AMPLIFIER
DIGITAL ELECTRO-HYDRAULIC PROCESSOR
FCV-146
THROTTLE STOP VLVS-4 (TYP. FOR FCV-145, 144 & 143)
FCV-172
INTERCEPTOR VLVS-6-
TO AUX. EQV.
CONTROL (60%) VLV. EMER. TRIP FLUID
STOP (F.V.) EMER. TRIP FLUID
CONDENSER
MAIN CONDENSER
HP ACCUM
GOV. PEDESTAL
MAGNETIC PLUGS
E H RESERVOIR 2-1
ELECTRO HYDRAULIC OIL COOLERS
POLISHING FILTER STR-8
DC 663284-60 ELECTRO-HYDRAULIC VACUUM DEHYDRATOR
HP. MN. TURB. THROTTLE STOP & CONTROL VALVES E.H. SYSTEM DRAIN
GOV. PEDESTAL AUTO STOP OIL DRAIN
MN. TURB. RE-HEAT STOP & INT VLVS. EH DRAIN
DRAIN RETURN
DC-663284-7,36
THRUST BRG. TRIP
SOLENOID TRIP
LOW BRG OIL PRESS. TRIP
THRUST BEARING TRIP OIL
ZERO SPEED IND.
TRIP LATCH
SEE ENLARGED SECTION THRU OVERSPEED TRIP VALVE
MAIN TURBINE SHAFT
T.G. "ENGAGED"
L.P. SEAL OIL BACK-UP
MN BRG OIL SUPPLY
MN OIL PP DISCH
H.P. SEAL OIL BACK-UP
BEARING LIFT OIL
BEARING OIL RETURN
VENT HEADER
TURBINE LO EXHAUSTER DRAIN
TO LUBE OIL DUMP TANK
TO DIRTY LUBE OIL TANK
OIL VAPOR EXTRACTOR
FOR DETAILS OF FLUSHING SYS. SEE SHEET 3B
MAIN TURBINE LUBE OIL RESERVOIR DC-663282-12
ADAPTED FROM (W) DWG 719J263 DC-663284-2
UNIT 2
NOTES: (CONTINUED FROM COORD. 38-B)
4. GAGE PROTECTOR/SNUBBER. ◀51/33-B▶
5. DELETED
6. 1/8"Ø VENT ORIFICE DRILLED IN 3/8" NPT PIPE PLUG. (36-A)
7. VALVE SPEC. NO. R-0388 W/ TEFLON SEATS, SEALS AND O-RINGS. (30-A/B)
8. VALVES HAVE SS SW TO MPT ADAPTERS W/ SS CAPS. (30-A)
9. 3/4" FPT TO 1 1/2" SW ADAPTER 3000# SS W/ SEAL WELDED THREADS. (30-A)
10. EH PUMP DISCHARGE COMPONENTS, SUCTION TUBING AND CASE DRAIN LINE COMPONENTS SUPPLIED BY PACIFIC FLUID SYSTEMS, DC 663284-61. (31-B) (33-B)
11. TEMPORARY VAPOR EXTRACTOR BY-PASS CONNECTION (SUCTION) (35-B)
DIABLO CANYON POWER PLANT - PG&E CO.
LUBE OIL DISTRIBUTION AND PURIFICATION SYSTEM
DRAWING 108020
SHEET 3
PAGE 0
REV 57
08-12-2009 AJFJ FxC2 KERSI J. DALAL MECHANICAL M 16690 3/31/2010 REVISED PER DDT-4*298
DATE DWN RE IV PROFESSIONAL ENGINEER PE DISC. PE# PE EXP.
RASTER-erul0668.dgn
DGN-erul0668.dgn
CAD User-AJFJ DGTe: 08-12-2009

MAIN TURBINE-GENERATOR BEARING LUBRICATION SYSTEM

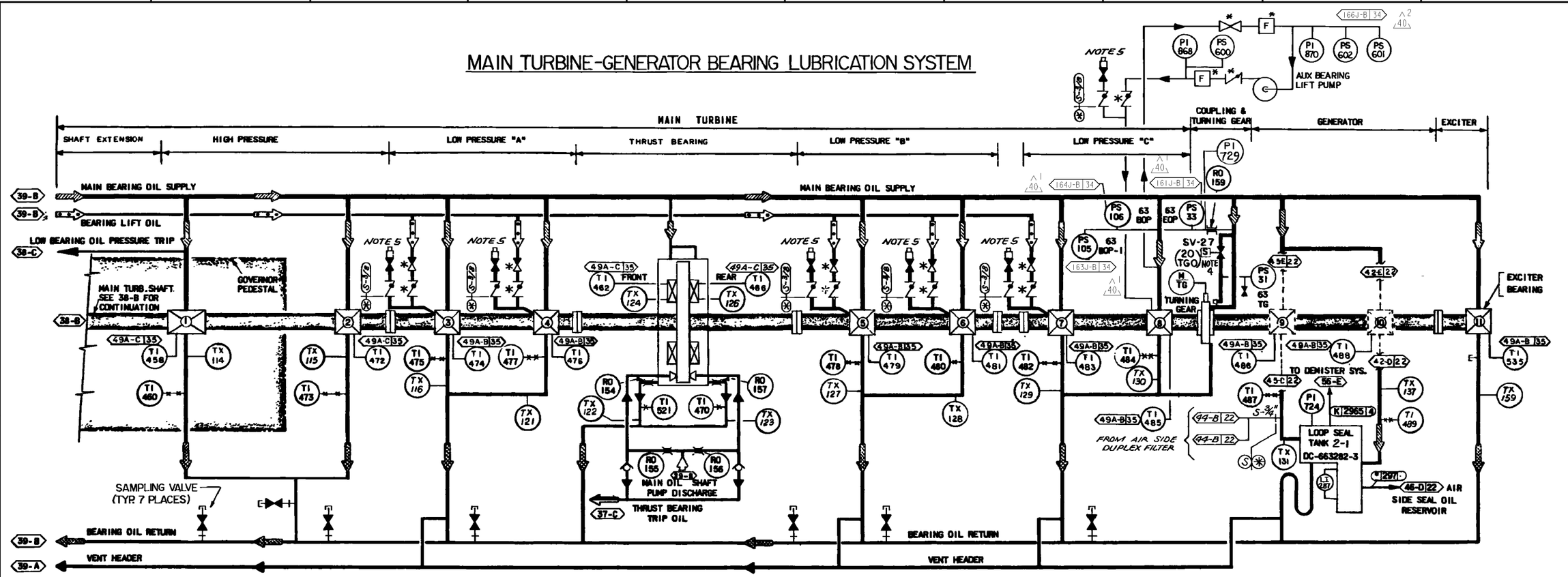

NOTES:

1. FOR BEARING SEQUENCE SEE DWG. NO. 663280-17 AND WESTINGHOUSE INSTRUCTION BOOK DC-663280-37, TAB 2.
2. FOR PIPING OIL CLEARANCES & EQUIPMENT LOCATION SEE DC-663282-4
3. ALL PIPING & INSTRUMENTS BY (B), UNLESS OTHERWISE NOTED.
4. SOLENOID VALVE WITH MANUAL OPERATOR, C.W. ROTATION FOR MANUAL OPENING, C.C.W. FOR ELECTRIC OPERATION (47-D)
5. END CONNECTION IS A GREASE FITTING FOR MANUALLY PUMPED LIFT OIL, DC-663282-90 (42/46-D) (46/47-E)

TURBINE SUPERVISORY INSTRUMENTATION

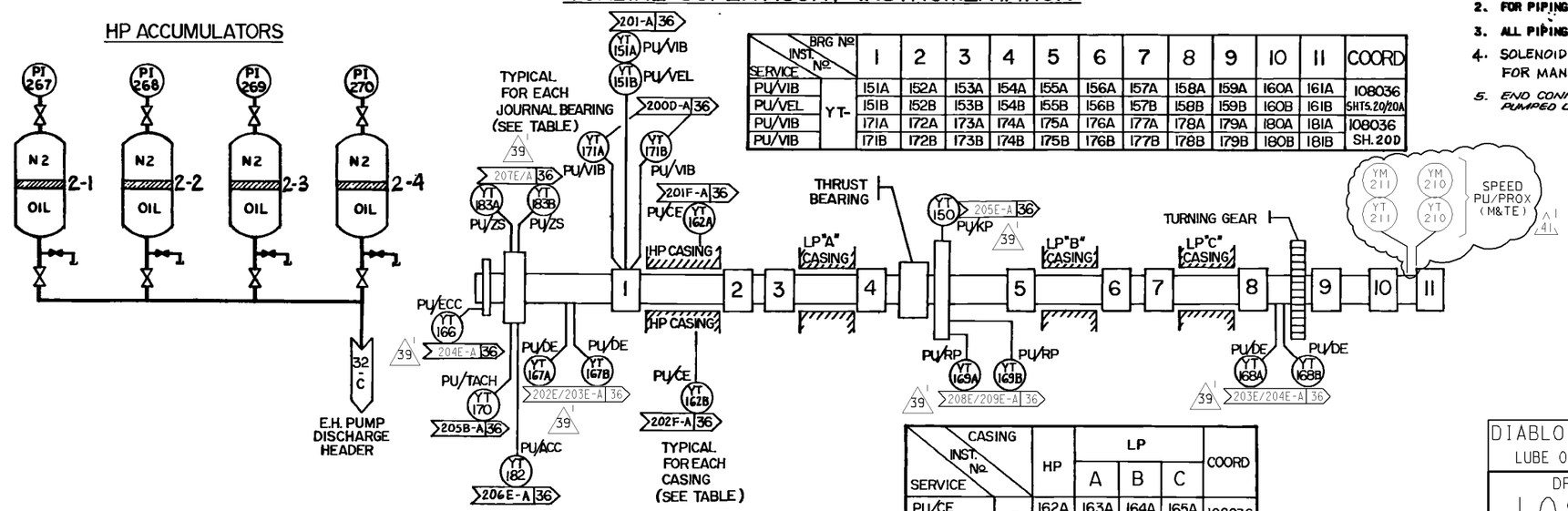

SERVICE \ INST. Nº \ BRG Nº		1	2	3	4	5	6	7	8	9	10	11	COORD
PU/VIB	YT-	151A	152A	153A	154A	155A	156A	157A	158A	159A	160A	161A	108036
PU/VEL	YT-	151B	152B	153B	154B	155B	156B	157B	158B	159B	160B	161B	SHTS. 20/20A
PU/VIB	YT-	171A	172A	173A	174A	175A	176A	177A	178A	179A	180A	181A	108036
PU/VIB	YT-	171B	172B	173B	174B	175B	176B	177B	178B	179B	180B	181B	SH. 20D

SERVICE \ INST. Nº \ CASING		HP	LP A	LP B	LP C	COORD
PU/CE	YT-	162A	163A	164A	165A	108036
PU/CE	YT-	162B	163B	164B	165B	SH. 20F

UNIT 2

DIABLO CANYON POWER PLANT - PG&E CO.
LUBE OIL DISTRIBUTION AND PURIFICATION SYSTEM

DRAWING	SHEET	PAGE	REV
108020	4	0	41

DATE	DWN	RE	IV	PROFESSIONAL ENGINEER	PE DISC.	PE#	PE EXP.	
05-31-2006	MIBF	RMDI		KERSI J. DALAL	MECHANICAL	M 16690	3/31/2008	REVISED PER FCT-031242

RASTER=1080204.dgn
DGN=1080204.dgn
CAD User: MIBF Date: 05-31-2006

INPGIC
1 Size

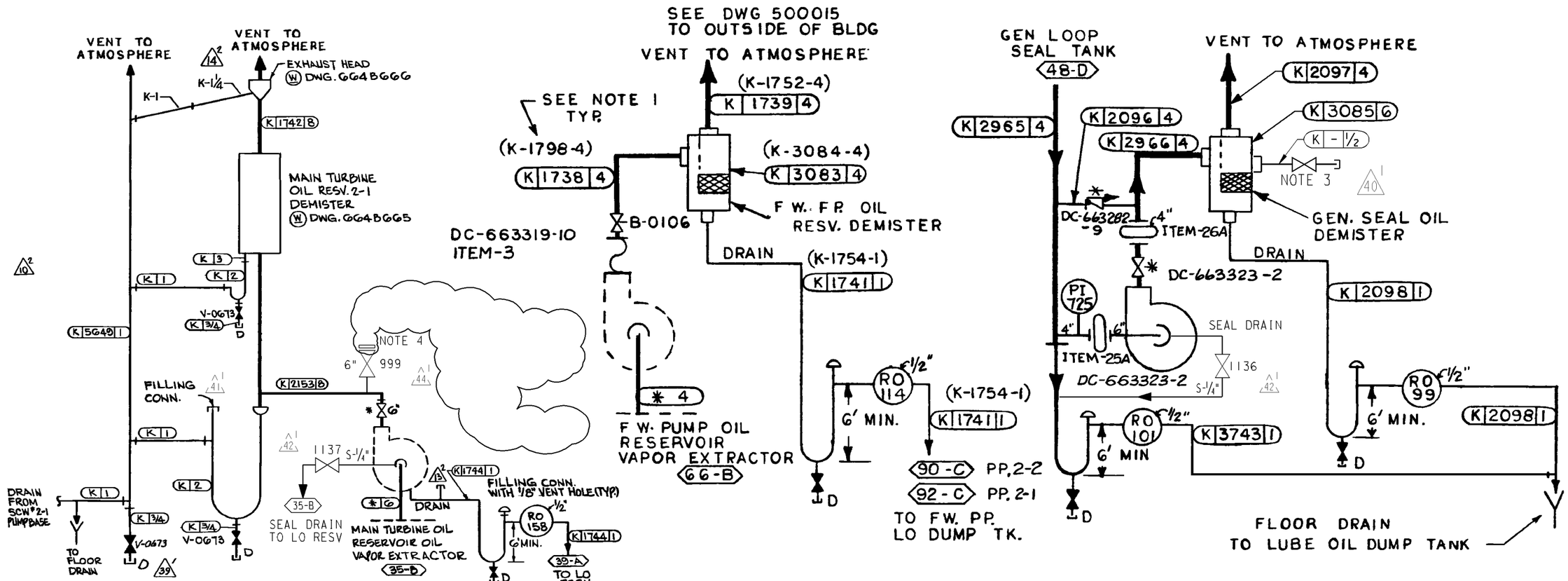

MAIN TURBINE OIL RESERVOIR VAPOR EXTRACTOR & DEMISTER SYSTEM

DC-663282-1

FEEDWATER PUMP OIL RESERVOIR 2-2 VAPOR EXTRACTOR & DEMISTER SYSTEM

FOR FEEDWATER PUMP 2-1 REFER TO NOTES 1 AND 2

DC-663300-5
DC-663300-11 TAB-44

GENERATOR LOOP SEAL OIL TANK VAPOR EXTRACTOR & DEMISTER SYSTEM

DC-663282-3

NOTES:

1. ALL LINE NUMBERS IN PARENTHESIS ARE FOR FEEDWATER PUMP 2-1 (53-E)
2. INSTRUMENT NUMBERS FOR F.W. PP. OIL RESV. 2-1 ARE ON SHEET 7 TABLE 4 (54-B)
3. NIBCO BALL VALVE S/C 78-1246, DWG. #6611479-402. (40)
4. TEMPORARY VAPOR EXTRACTOR CONNECTION (DISCHARGE) (43)

UNIT 2

DIABLO CANYON POWER PLANT - PG&E CO.
LUBE OIL DISTRIBUTION AND PURIFICATION SYSTEMS

DRAWING	SHEET	PAGE	REV
108020	5	0	44

DATE	DWN	RE	IV	PROFESSIONAL ENGINEER	PE DISC.	PE#	PE EXP.	
08-12-2009	AJFJ	FxC2		KERSI J. DALAL	MECHANICAL	M 16690	3/31/2010	REVISED PER DDT-4*298

RASTER=108020s5.dgn
DGN=108020s5.dgn
CAD User: AJFJ Date: 08-12-2009

INPG1C
1 Size

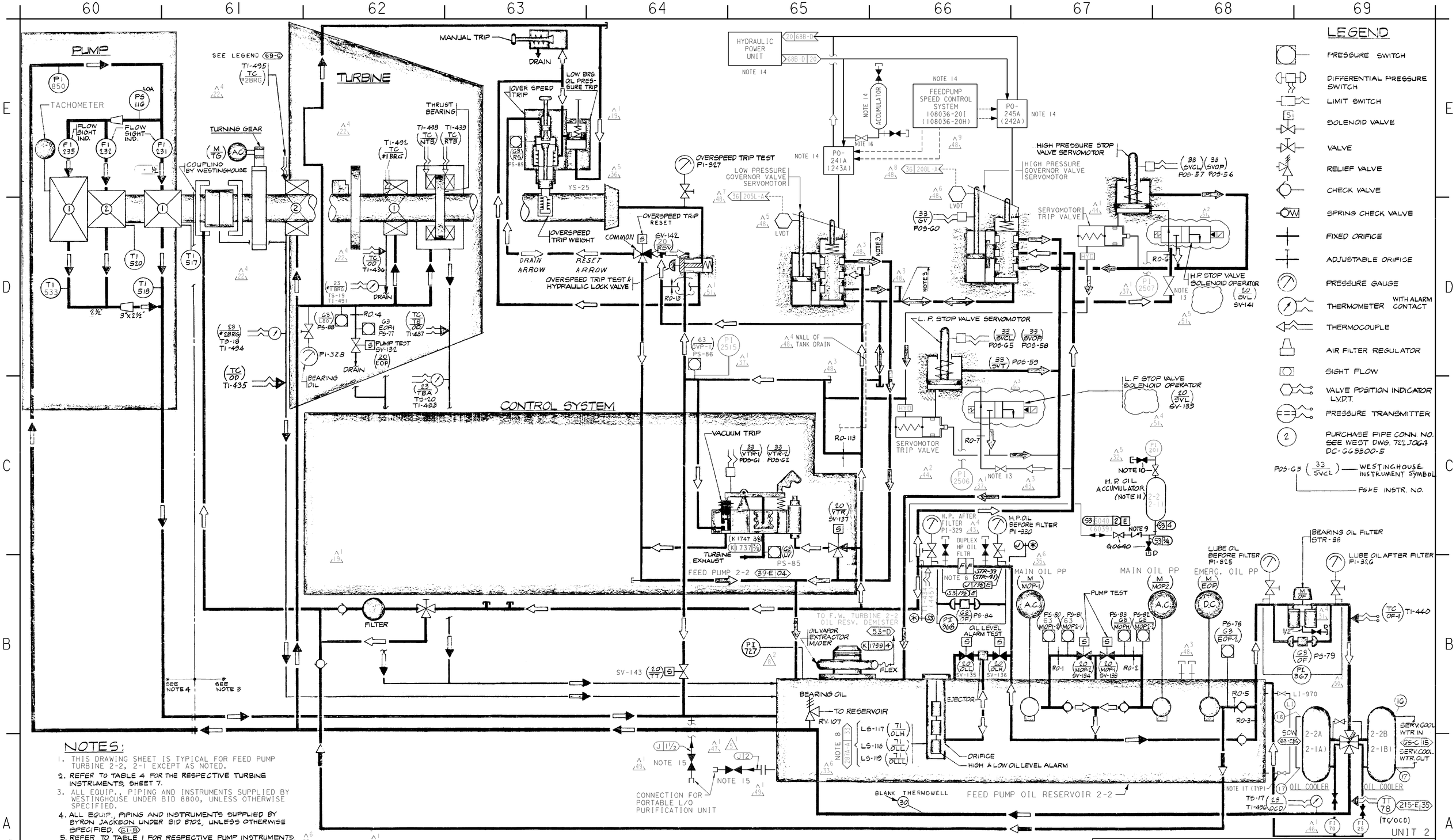

NOTES:

1. THIS DRAWING SHEET IS TYPICAL FOR FEED PUMP TURBINE 2-2, 2-1 EXCEPT AS NOTED.
2. REFER TO TABLE 4 FOR THE RESPECTIVE TURBINE INSTRUMENTS, SHEET 7.
3. ALL EQUIP., PIPING AND INSTRUMENTS SUPPLIED BY WESTINGHOUSE UNDER BID 8800, UNLESS OTHERWISE SPECIFIED.
4. ALL EQUIP., PIPING AND INSTRUMENTS SUPPLIED BY BYRON JACKSON UNDER BID 8702, UNLESS OTHERWISE SPECIFIED. (61-B)
5. REFER TO TABLE 1 FOR RESPECTIVE PUMP INSTRUMENTS SHEET 7. (61-B)
6. HP OIL DUPLEX FILTER SUPPLIED BY PTI. (66-B)
7. DELETED
8. SUPPLIED BY PG & E. (65-A)
9. 2" CHECK VALVE S.S. (75-2904) WITH 3/16" PASS HOLE. (67-C)
10. NUPRO 6S-6 P4T (68-C)
11. ACCUMULATOR SUPPLIED BY OILAIR, DC 663301-25. (68-C)
12. DELETED
13. WHITEY MODEL SS-45F8. (66-C)
14. PROVIDED BY WOODWARD.
15. WHITEY MODEL S68TSW32P (2") & S-67TSW24P (1½") BALL VLVS. (64-A)
16. WHITEY MODEL SS-45S8. (65-E)
17. WHITEY MODEL B-45F8, DWG 698106-26. (68-A) (68-B)

F. W. PUMP TURBINE CONTROL OIL SYSTEM

REF. DWGS. (W) 722J060 DC-663301-2
(W) 724J852 DC-663300-8

3/12/03	PMH2	JCN3	RGJI	JAMES C. NELSON	MECHANICAL	M 19424	9/30/2003	Revised per AR A0560263 & FCT-26744
DATE	DWN	RE	IV	PROFESSIONAL ENGINEER	PE DISC.	PE#	PE EXP.	

P G & E CO. | SHEET 6 | PAGE 0 | 108020 | REV. 51

CAD User:PMH2 Date: 7-11-2002
DGN=8020S6.DGN
RASTER=8020S6.TIF

NOTES: (41)

1. TI-446 IS DOWNSTREAM OF TS-34/TI-500 IN 2-1 TURBINE IN BOARD BEARING OIL DRAIN LINE.

DESCRIPTIONS				PG & E INSTR FWP 2-2	PG & E INSTR FWP 2-1	108020 COORD	(W) DEV.NO.
LINE BEARING		DRAIN OIL	NO 1	TI-436	TI-447	62-D	TC/OD
				TI-491	TI-497	62-D	23/1BRG
				TS-19	TS-28	62-E	23/1BRG
		METAL		TI-492 ⊛ / T2345A	TI-498 ⊛ / T2352A	63-E	TC/#1 BRG
THRUST BEARING	NORMAL DIRECTION	METAL		TI-438 ⊛ / T2347A	TI-449 ⊛ / T2354A	63-E	TC/NTB
	REVERSE DIRECTION			TI-439 ⊛ / T2348A	TI-536 ⊛ / T2355A	63-F	TC/RTB
		DRAIN OIL		TI-437	TI-448	63-D	TC/TB/OD
				TI-493	TI-499	63-D	23/TBA
				TS-20	TS-33	63-D	23/TBA
LINE BEARING		DRAIN OIL	NO 2	TI-435	TI-446 (SEE NOTE 1)	61-E	TC/OD
				TI-494	TI-500	61-D	23/2BRG
				TS-18	TS-34	61-D	23/2BRG
		METAL		TI-495 ⊛ / T2346A	TI-501 ⊛ / T2353A	61-E	TC/#2 BRG
LUBE OIL COOLERS	INLET		FILTER (9)(33)	STR-38 / ~~PI-367~~ / PS-79	STR-40 / ~~PI-369~~ / PS-92	69-B / ~~66-B~~ / 69-B	FILTER / ~~-~~ / 63/OF
		BEFORE		PI-325	PI-331	68-B	-
		AFTER		PI-326	PI-332	69-B	-
				TI-440	TI-443	69-B	TC/OF-1
	OUTLET			TI-496	TI-502	69-A	23/OCD
				TS-17	TS-36	69-A	23/OCD
				TT-78	TT-79	69-A	TC/OCD
				RV-107	RV-108	65-A	- (5)(1)
BEARING OIL SUPPLY (13)(1)				PI-328	PI-334	62-D	-
				PS-88	PS-101	62-D	63/LBO
				FI-70	FI-21	69-A	-
				FI-25	FI-22	69-A	-
MAIN OIL PUMP	NO 1	START & TEST (42)		RO-1	RO-14	67-B	-
				PS-83	PS-96	67-B	63/MPO1-1
		RUNNING		SV-133	SV-148	67-B	20/MOP-1
				PS-80	PS-93	67-B	63/MOP 1-2
	NO 2	START & TEST		RO-2	RO-15	67-B	-
				PS-81	PS-94	67-B	63/MOP2-1
		RUNNING		SV-134	SV-147	67-B	20/MOP 2
				PS-82	PS-95	67-B	63/MOP 2-2
	DISCH TO BRG			RO-3	RO-16	68-B	-
HYDRAULIC POWER UNIT (HPU) (43)(4)	PRESS CONTROL VALVE NO. 1			PCV-1561	PCV-1551	648-D	RV-1
	PRESS CONTROL VALVE NO. 2			PCV-1562	PCV-1552	648-C	RV-2
	FILTER NO. 1			HPU2F1	HPU1F1	658-D	NA
	FILTER NO. 2			HPU2F2	HPU1F2	658-C	NA
	OIL TEMPERATURE GAUGE			TI-1519	TI-1509	658-B	NA
	OIL LEVEL GAUGE			LI-1519	LI-1509	658-B	NA
	HPU DISCH PRESSURE GAUGE			PI-1519	PI-1509	648-E	NA
	OIL TEMP HIGH SWITCH			TS-1519	TS-1509	618-B	NA
	LOW OIL LEVEL SWITCH			LS-1519	LS-1509	618-B	NA
	FILTER 1 HIGH DIFF PRESS			PS-1524	PS-1514	658-D	DS-1
	FILTER 2 HIGH DIFF PRESS			PS-1525	PS-1515	658-C	DS-2
	HPU DISCH PRESS LOW/LO-LO			PS-1520	PS-1510	668-D	PS 3-1, PS 3-2
	HPU PUMP 1 LOW DISCH PRESS			PS-1522	PS-1512	638-D	PS-1
	HPU PUMP 2 LOW DISCH PRESS			PS-1523	PS-1513	638-C	PS-2
	HPU LOW DISCH PRESS TRIP			PS-1521A	PS-1511A	678-D	NA
	HPU LOW DISCH PRESS TRIP			PS-1521B	PS-1511B	688-D	NA
	HPU LOW DISCH PRESS TRIP			PS-1521C	PS-1511C	688-D	NA

FEEDWATER PUMP TURBINE DRIVE TABLE 4

DESCRIPTIONS				PG & E INSTR NO. FWP 2-2	PG & E INSTR NO. FWP 2-1	108020 COORD	(W) DEV NO.
EMERGENCY OIL PUMP	NO 1	START & TEST		PS-77	PS-90	62-D	63/EOP 1
				SV-132	SV-146	62-C	20/EOP
				RO-4	RO-17	62-D	-
		RUNNING		PS-78	PS-91	68-B	63/EOP 2
				RO-5	RO-18	68-B	-
RESERVOIR OIL LEVEL		HIGH		LS-117	LS-123	66-A	71/OLH
			TEST	SV-136	SV-150	67-B	20/OLH
		LOW		LS-118	LS-124	66-A	71/OLL
			TEST	SV-135	SV-128	66-B	20/OLL
		LOW-LOW		LS-119	LS-125	66-A	71/OLLL
				LI-970	LI-971	68-B	(44)(1)
H P OIL SYSTEM (33)(1)		BEFORE	FILTER	PI-330	PI-347	66-B	-
		AFTER		PI-329	PI-335	66-B	-
				STR-39	STR-41	66-B	FILTER
				PS-84	PS-97	66-B	63/OF
				PI-368	PI-370	66-B	—
				TI-434	TI-445	66-B	
HIGH PRESSURE SERVOMOTOR	STOP VALVE (45)(1)			RO-6	RO-19	67-D	—
				POS-56&57	POS-70&71	68-D	33/SVOP&SVCL
				SV-141	SV-155	68-D	20/SVL
				PI-2507	PI-2509	68-D	—
	GOV V (43)(3)			PO1-20	PO1-22	66-D	DELETED
				POT-20	POT-22	66-D	63/GV
				POS-60	POS-74	66-D	33/GV
				PO-245A	PO-242A	66-E	

FEEDWATER PUMP TABLE 1

DESCRIPTION				FWP 2-2	FWP 2-1	108020 COORD.
LINE BEARING	DRAIN OIL		NO 1	TI-518	TI-523	61-D
	METAL			TI-517 ⊛ / T2349A	TI-522 ⊛ / T2356A	61-D
	OIL SUPPLY			FI-231	FI-233	61-D
	METAL		NO 2	TI-520 ⊛ / T2350A	TI-525 ⊛ / T2357A	61-D
	OIL SUPPLY			FI-232	FI-234	60-D
THRUST BEARING	DRAIN OIL		NO. 1	TI-533 ⊛ / T2351A	TI-534 ⊛ / T2358A	60-D
	OIL SUPPLY			FI-235	FI-236	60-D
BEARING OIL SUPPLY				PI-850	PI-851	60-E
				PS-116	PS-119	60-E

DESCRIPTION			PG&E INSTR NO FWP 2-2	PG&E INSTR NO FWP 2-1	108020 COORD	(W) DEV NO
PICK-UP	THRUST BRG WEAR		YT-80A	YT-70A	66A-C	
			YT-80B	YT-70B	66A-C	
	KEY PHASOR		YT-81	YT-71	69A-B	
	FW TURBINE BRG	NO 1	YT-82A	YT-72A	68A-C	
			YT-82B	YT-72B	68A-C	
			YT-83	YT-73	68A-B	
		NO 2	YT-84A	YT-74A	64A-C	
			YT-84B	YT-74B	64A-C	
			YT-85	YT-75	64A-B	
	FW PUMP BRG	NO 1	YT-86A	YT-76A	61A-C	
			YT-86B	YT-76B	61A-C	
			YT-87	YT-77	61A-B	
		NO 2	YT-88A	YT-78A	60A-C	
			YT-88B	YT-78B	60A-C	
			YT-89	YT-79	60A-B	
	SPEED PICKUP MPU1 (43)(2)		YE-1519A	YE-1509A	65A-B	
	SPEED PICKUP MPU2		YE-1519B	YE-1509B	66A-B	
	SPEED PICKUP MPU3		YE-1519C	YE-1509C	66A-B	
		ZERO	YT-20	YT-22	62A-B	
	ROTOR BEARING	NO 1	YT-2014	YT-2012	67A-B	PU/VB
		NO 2	YT-2015	YT-2013	63A-B	PU/VB
	ROTOR ECCENTRICITY		—	—	—	—
(43)(1) LOW PRESSURE SERVOMOTOR		60V V	PO-241A	PO-243A	65-E	
			POT-21	POT-23	65-D	-
			PO1-21	PO1-23	65-D	63/GV
LOW PRESSURE SERVOMOTOR		STOP VALVE	POS 58&65	POS-72&79	66-D	33/SVOP/SVCL
			POS-59	POS-73	66-D	33/SVT
			SV-139	SV-153	67-C	20/SVL (45)(2)
			RO-7	RO-20	66-C	-
			PI-2506 (37)(2)	PI-2508	66-C	—
(22)(4) PROTECTIVE DEVICE	VACUUM TRIP		POS-61	POS-75	65-C	33/VTR 1
			POS-62	POS-76	65-C	33/VTR 2
			PS-85	PS-98	65-B	63/LV
			SV-137	SV-151	65-C	20/VTR
	OVERSPEED TRIP (36)(5)		PI-327	PI-333	64-D	-
(3)(1) (3)(2)			PS-89	PS-102	63-D	63/RS
			SV-142	SV-156	64-D	20/RSV
			YS 25	YS-24	64-E	
			RO-13	RO-26	64-D	-
(22)(4) (32)(5) H P OIL ACCUMULATOR			PI-201	PI-200	67-C	
OIL VAPOR EXTRACTION VENT			RO-114	RO-38	55-D	- (19)(6)
TRIP OIL (37)(2)			RO-113	RO-37	65-C	-
			PS-86	PS-99	64-C	63/GVP-1
			SV-143	SV-157	64-B	20/TT
			PI-2515	PI-2516	65-D	—
L.O. VAPOR EXTRACTOR VAC			PI-727	PI-726	65-B	

NOTE
⊛ INDICATES COMPUTER POINT

UNIT 2

P G & E CO.
SHEET 7 PAGE 0

108020

REV. 45

DATE	DWN	RE	IV	PROFESSIONAL ENGINEER	PE DISC.	PE#	PE EXP.	
3/12/03	PMH2	JCN3	RGJ1	JAMES C. NELSON	MECHANICAL	M 19424	9/30/2003	Revised per AR A0560263 & FCT-26744

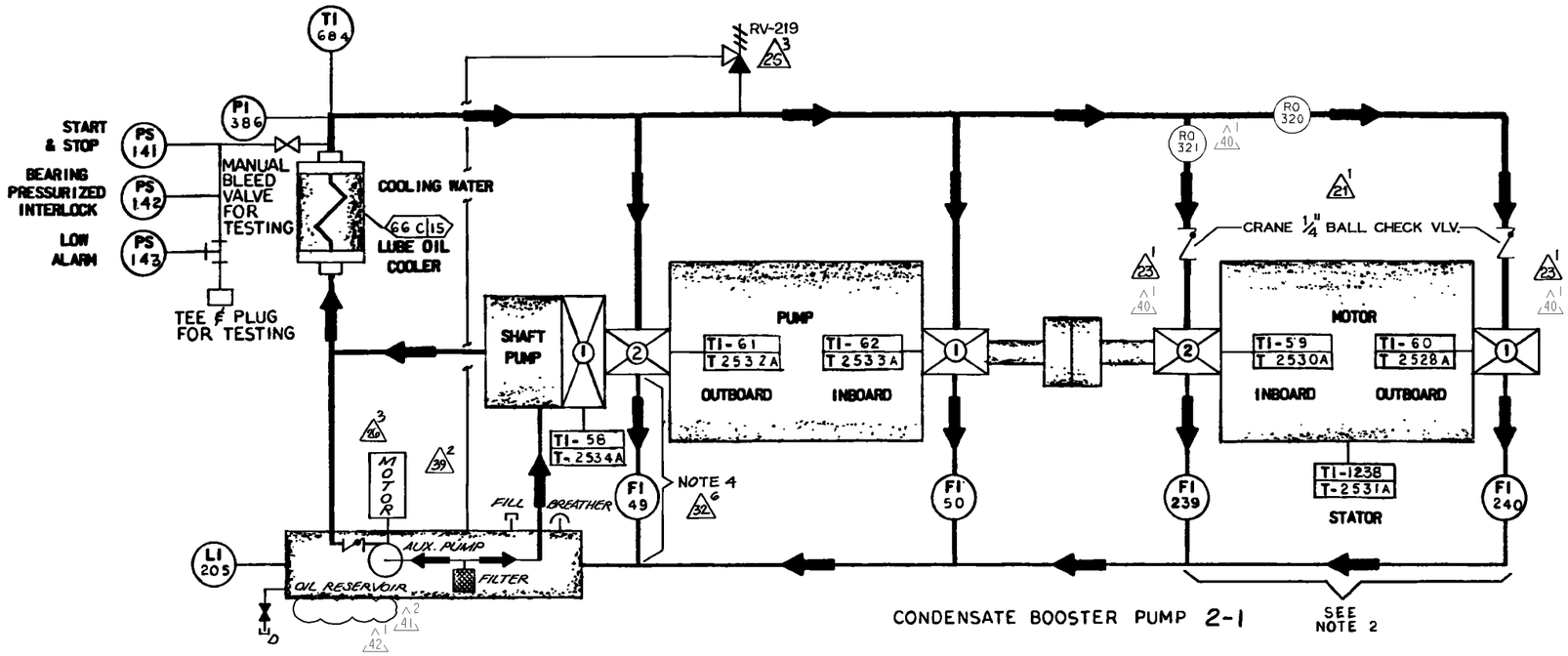

INSTRUMENT NUMBERS																						
LUBE OIL PUMP SYSTEM		PUMPING SYSTEM								DISTRIBUTION & RETURN SYSTEM												
		LUBE OIL COOLER WATER SUPPLY CROSS REF. COOR-SCHEM. 1020 XX	OIL RESEV. LEVEL	AUXILIARY LUBE OIL PUMP			HEADER			PUMP					MOTOR						
				RELIEF VALVE	START & STOP	INTRL. PRESS-URIZE BRGS. BEFORE ROLLING	PRESSURE		TEMP.	BEARING											STATOR	
							LO ALARM	INDIC.	XCH'GR OUT	BRG. METAL			BRG. OIL RETURN				BRG. METAL					
										1 THRUST	2 OUTBOARD	1 INBOARD	2 OUTBRD.	1 INBOARD	2 INBOARD	1 OUTBRD.	2 INBOARD	1 OUTBRD.				
			LI	RV	PS	PS	PS	PI	TI	TEMP. INDIC. / COMPUTER POINT = TIXXXX / TXXXXA			FI				TEMP. INDIC. / COMPUTER POINT = TIXXXX / TXXXXA					
COMPONENT COOLING WATER DC 663213-4	2-1	53A-C-14	201	233	322	244	321	859	1256	1257/0640	1258/0639	1259/0638	245	246	SELF-LUBRICATED BEARING SEE NOTE NO. 2		1269/0637	1268/0636	1024/0641			
	2-2	54A-C-14	202	234	324	245	323	860	1260	1261/0646	1262/0645	1263/0644	247	248			1271/0643	1270/0642	1025/0647			
	2-3	57A-C-14	203	235	326	246	325	861	1264	1265/0652	1266/0651	1267/0650	249	250			1273/0649	1272/0648	1026/0653			
HEATER 2 DRAIN TANK DC 663043-1		55-C-15	204	218	138	139	140	385	683	NONE	57/2433	56/2434	47	45			55/2431	54/2430	1232/2432	MOTOR BRG. OIL RO		
																				OUTBOARD	INBOARD	
CONDENSATE BOOSTER DC 663046-16	2-1	66-C-15	205	219	141	142	143	386	684	58/2534	61/2532	62/2533	49	50	239	240	59/2530	60/2529	1238/2531	320	321	
	2-2	67-C-15	206	220	144	145	146	387	685	63/2540	66/2538	67/2539	51	52	241	242	64/2536	65/2535	1244/2537	322	323	
	2-3	69-C-15	207	221	147	148	149	388	686	68/2546	71/2544	72/2545	53	54	243	244	69/2542	70/2541	1250/2543	324	325	

NOTES

31 2 1. ALL PIPING AND INSTRUMENTS ARE FURNISHED BY THE EQPT. VENDOR.

2. COMPONENT COOLING WATER PUMP MOTORS AND HEATER 2 DRAIN TANK PUMP MOTOR ARE EQUIPPED WITH BEARING AUTOMATIC OILERS.

31 3 3. COMPONENT COOLING WATER PUMP LUBE OIL SYSTEMS ARE DESIGN CLASS I.

32 6 4. CONDENSATE BOOSTER PUMPS DRAIN LINE EQUIPPED WITH FLEXIBLE HOSE. 83-D

23 1 41 1 42 1

UNIT 2

DIABLO CANYON POWER PLANT - PG&E CO.
LUBE OIL DISTRIBUTION AND PURIFICATION SYSTEMS

DRAWING	SHEET	PAGE	REV
108020	8	0	42

DATE	DWN	RE	IV	PROFESSIONAL ENGINEER	PE DISC.	PE#	PE EXP.	
01-08-2009	FAZI	RHSI		KERSI J. DALAL	MECHANICAL	M 16690	3/31/2010	REVISED PER DDT-4*205

INPG2ND
1 Size

RASTER=108020s8.dgn
DGN=108020s8.dgn
CAD User: FAZI Date: 01-08-2009

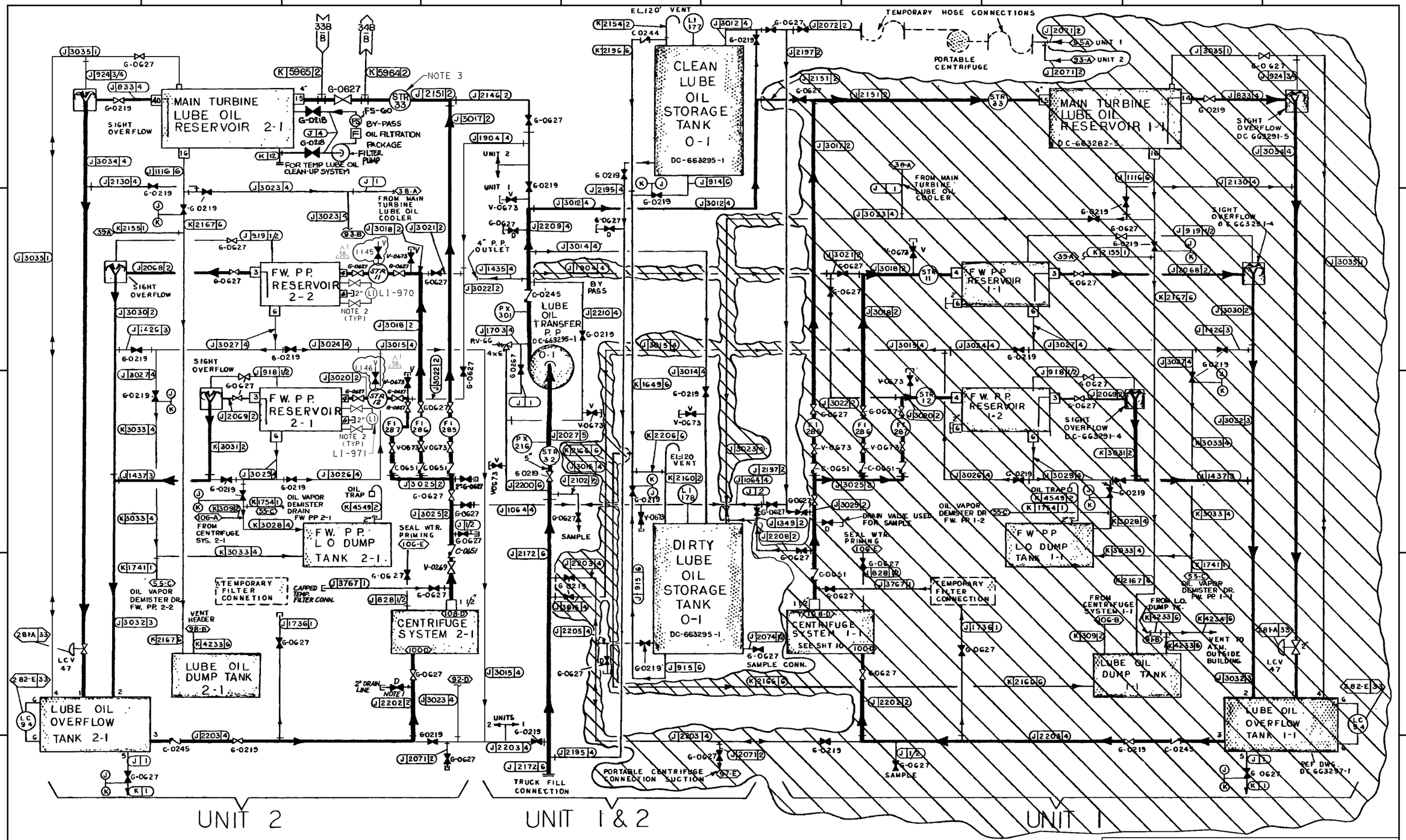

NOTES:

1. 2" THREADED STOCKHAM FIG. B 150S.
2. WHITEY MODEL B-45F8, DWG. 698106-26. 92-C 92-D
3. SCREEN REMOVED FROM STR-33 PER AR# A0607305. 93-E

LUBE OIL SYSTEM

UNIT 2

DIABLO CANYON POWER PLANT - PG&E CO.
LUBE OIL DISTRIBUTION AND PURIFICATION

DRAWING	SHEET	PAGE	REV
108020	9	0	38

DATE	DWN	RE	IV	PROFESSIONAL ENGINEER	PE DISC.	PE#	PE EXP.	
10-14-2013	MNRU	RxG2	KJD3	NOT REQUIRED	N/A	N/A	N/A	REVISED PER DDT-4*202

INPGIC
I Size

RASTER=108020s9.dgn
DGN=108020s9.dgn
CAD User: MNRU Date: 10-14-2013

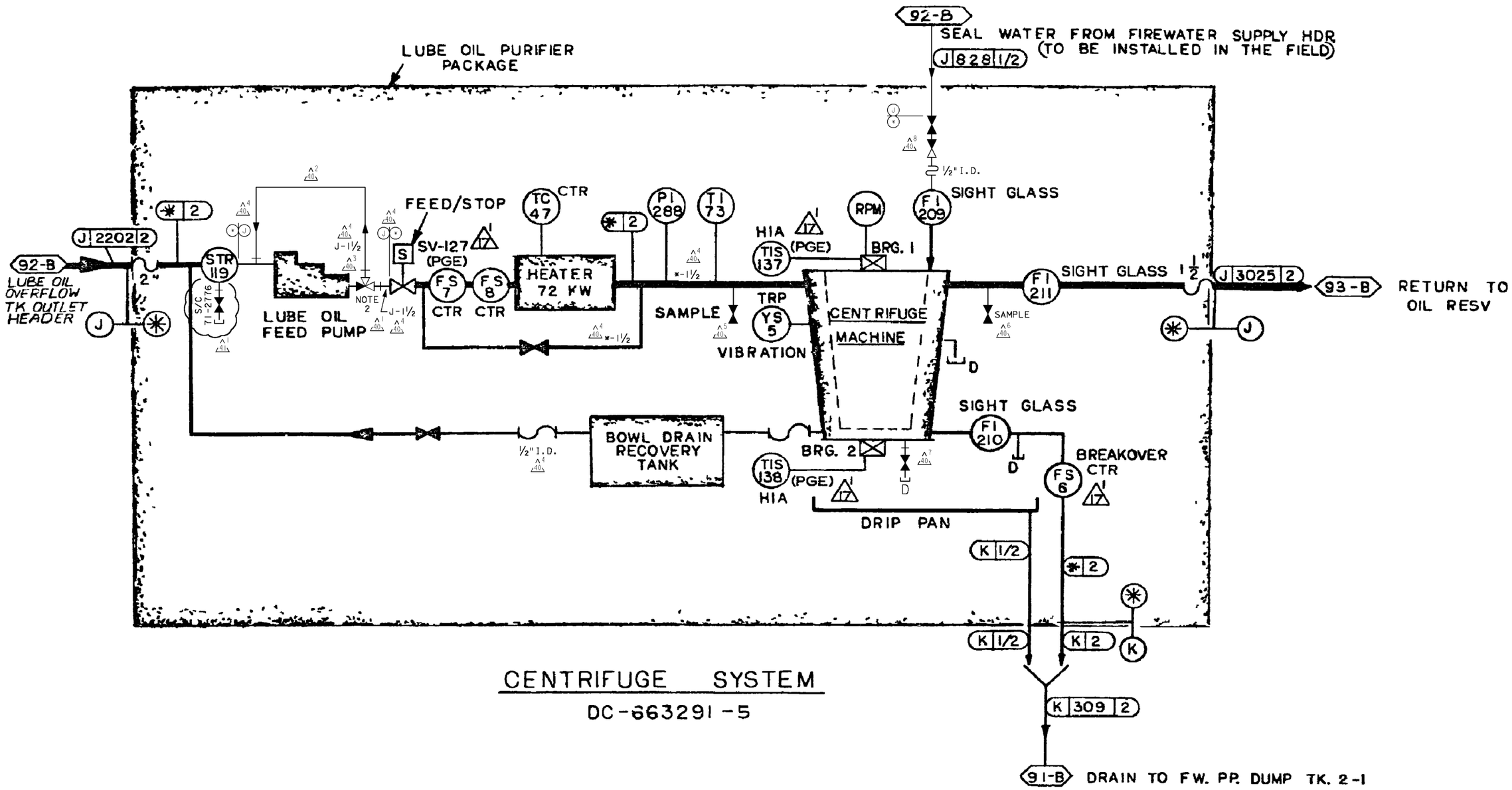

CENTRIFUGE SYSTEM

DC-663291-5

NOTES:

1. ALL INSTRUMENTS ARE SUPPLIED BY THE EQUIPMENT VENDOR EXCEPT AS NOTED.
2. JAMESBURY 3-WAY MANUAL FLOW CONTROL VALVE, MODEL AM150FD2236MT. 102-B

UNIT 2

P G & E CO.		108020	REV. 41
SHEET 10	PAGE 0		

6/24/99	CRC2	RMD1	-	LARRY DEAN SMITH	MECHANICAL	M 14568	12/31/1999	Revised per FCT 024057
DATE	DWN	RE	IV	PROFESSIONAL ENGINEER	PE DISC.	PE#	PE EXP.	

CAD User:CRC2 Date: 6-23-1999
DGN=8020S10.DGN
RASTER=8020S10.TIF

INPGIC

110 111 112 113 114 115 116 117 118 119

1 NORMAL OPERATION

CENTRIFUGE SYSTEM CONTINUOUSLY RECIRCULATES AND CLEANS LUBE OIL THRU THE 3 RESERVOIRS.

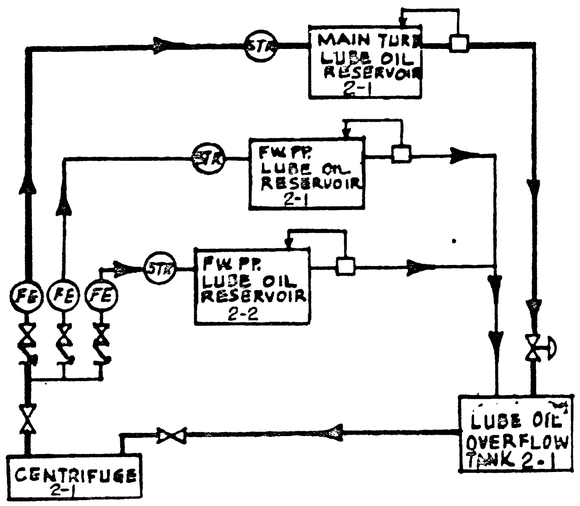

2 DRAIN RESERVOIRS

DRAIN MAIN TURBINE LUBE OIL RESERVOIR TO DIRTY LUBE OIL TANK BY GRAVITY
DRAIN FWPP RESERVOIRS TO DIRTY LUBE OIL STORAGE TANK BY USING TRANSFER PUMP.

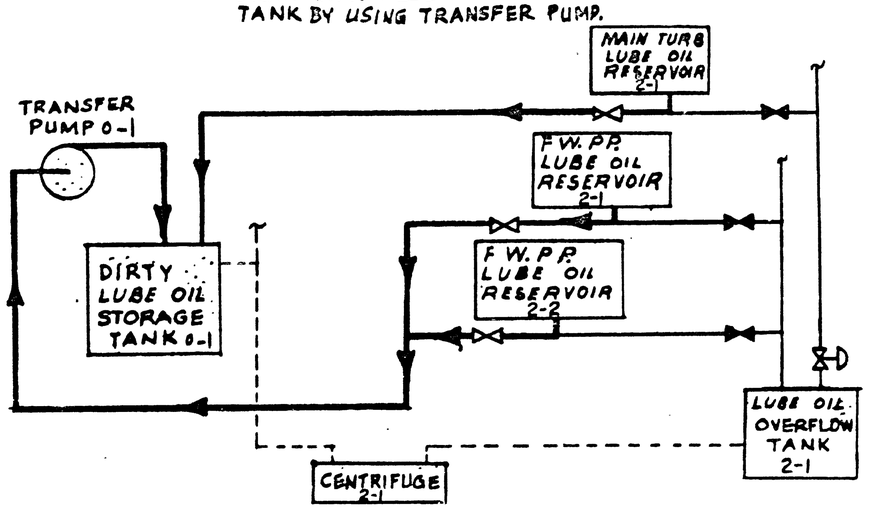

3 START UP

FILL MAIN TURBINE & FWPP 1/2 LUBE OIL RESERVOIRS FROM CLEAN OIL TANK, USING TRANSFER PUMP.

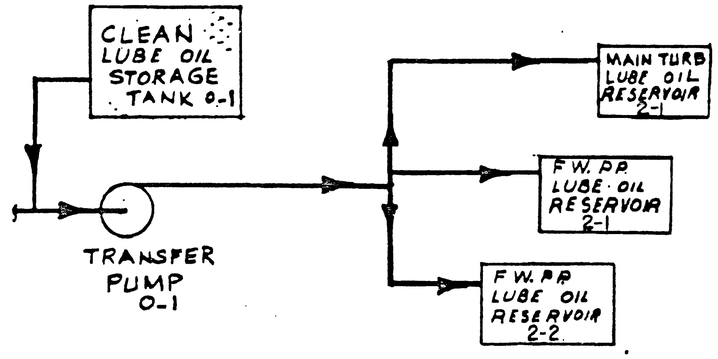

4 EMERGENCY DUMP

MANUALLY OPEN DRAIN VALVES TO DUMP TANKS

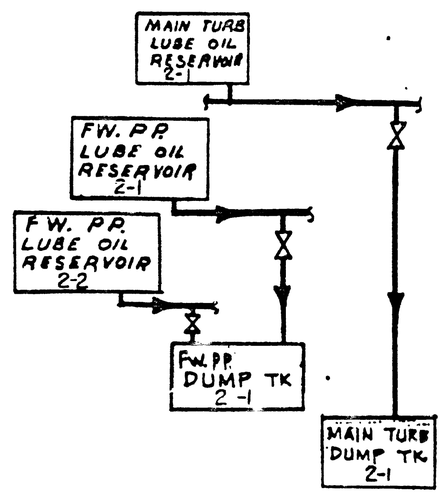

5 TRUCK FILL

USE BY-PASS AROUND TRANSFER PUMP WHEN TRUCK PUMP IS USED. TRANSFER PUMP MAYBE USED AS AN ALTERNATE TO TRUCK PUMP.

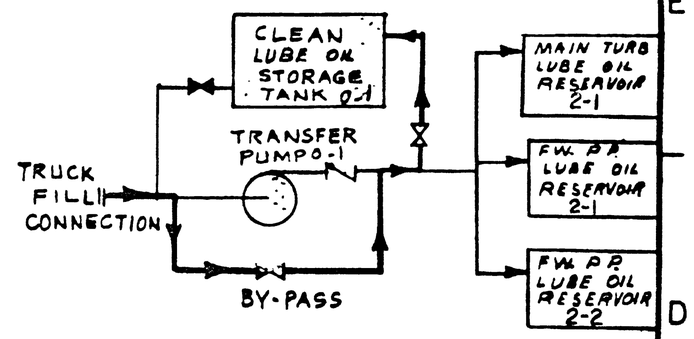

6 CLEANING DIRTY OIL

DIRTY OIL DRAINS TO CENTRIFUGE. OIL IS RECYCLED TO DIRTY OIL TANK. AFTER SEVERAL CYCLES CENTRIFUGE DISCHARGE IS ROUTED TO CLEAN OIL TANK.

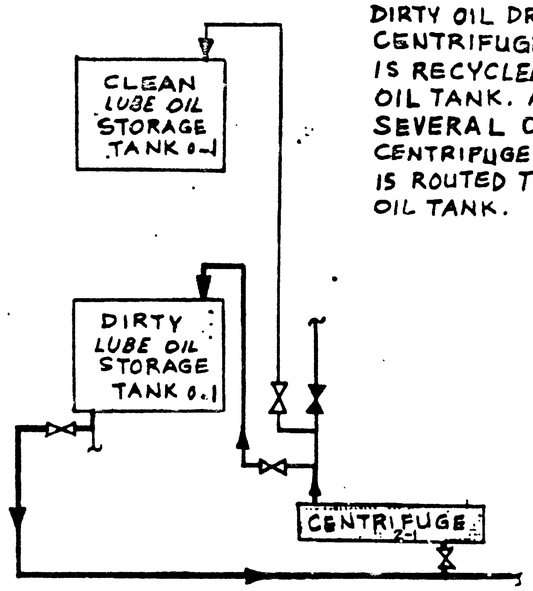

UNIT - 2

P.G. & E. CO.	DRAWING NUMBER	REVISION
SHEET 11 OF 33 SHEETS	108020	10
	MICROFILM	10

RM INDEXED REV. 10

SCANNED 10

SCAN 10 IC

NOTES:

1. ALL PIPING ON THIS SYSTEM SHALL BE PG&E CLASS C, EXCEPT AS NOTED.
2. GATE VALVE PER DWG DC-6006473-166, S/C 93-6844
3. ✱ DENOTES MANUFACTURER SUPPLIED INSTRUMENTS AND EQUIPMENT. IT IS ACCEPTABLE TO REPLACE MANUFACTURER SUPPLIED INSTRUMENT TUBING WITH PG&E SUPPLIED S-SPEC STAINLESS STEEL TUBING (1/32)
4. 2½" BALL VALVE PER DWG DC-6011930-56, S/C 95-1194
5. 2" BALL VALVE PER DWG DC-6011930-55, S/C 95-1193 (3/32)
6. LCV-85, LCV-86, LCV-88 AND LCV-89 PER DWG DC-6011930-42
7. PIPING IN THE DFO TRENCHES, EXCEPT FOR SUPPLY LINES TO DIESEL 2-3, HAS BEEN COATED TO PREVENT CORROSION (1/33)
8. FOR THE PURPOSE OF LEAK DETECTION, A GORE-TEX CABLE WHICH IS WATERPROOF BUT ABSORBS HYDROCARBONS IS ATTACHED TO EACH HEADER OF THE DGFO PIPING FROM THE PUMP VAULTS TO THE DG ROOMS. THE CABLES ARE TAGGED AS FOLLOWS: CEL-502 FOR UNIT 2 HEADER A, CEL-504 FOR UNIT 2 HEADER B. (1/34)

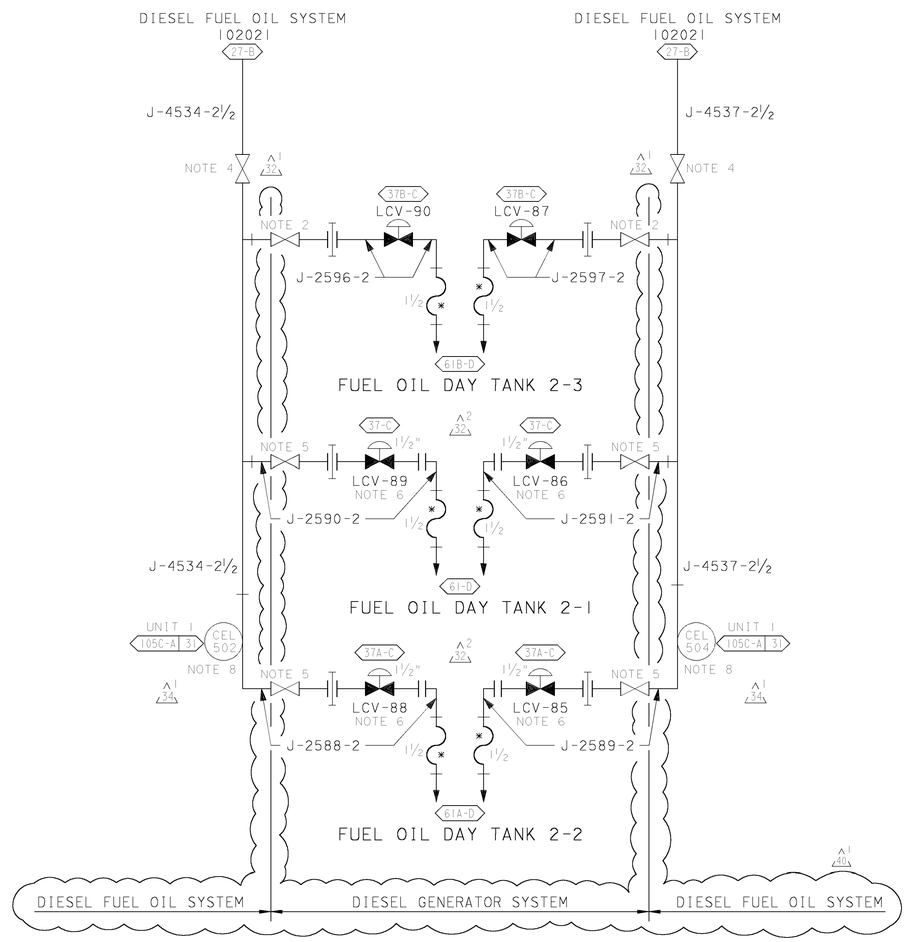

DIESEL FUEL OIL SYSTEM

UNIT 2

P G & E CO.	108021	REV. 40
SHEET 2 PAGE 0		

3/22/00	RXG2	FXC2	-	KERSI J. DALAL	MECHANICAL	M 16690	3/31/2000	Revised per FCT 024733
DATE	DWN	RE	IV	PROFESSIONAL ENGINEER	PE DISC.	PE#	PE EXP.	

CAD User:RXG2 Date: 3-22-2000
DGN=802152.DGN

NOTES:

1. * DENOTES MANUFACTURER SUPPLIED INSTRUMENTS & EQUIPMENT. IT IS ACCEPTABLE TO REPLACE MANUFACTURER SUPPLIED INSTRUMENT TUBING WITH PG&E SUPPLIED S-SPEC STAINLESS STEEL TUBING
2. FIELD PIPING ON THIS SYSTEM SHALL BE PG&E CLASS C UNLESS OTHERWISE NOTED
3. [ ] MANUFACTURER NUMBER
4. ALL VALVES ON THIS SHEET WITH PG&E ITEM NO. SHALL BE UNDER SPEC. 8729 (DWG 108039), UNLESS OTHERWISE NOTED
5. PRESSURE REDUCING VALVE PROVIDED WITH STRAINER > 36-C,E
6. MOUNTED ON ENGINE CONTROL PANEL > 37-B,D
7. STARTING AIR SOLENOID VALVES AIR EQUIPPED WITH AN EMERGENCY MANUAL OPENING DEVICE > 37-B,C,D,&E
8. 2" A.W. CASH MODEL E-55 > 37-C,E
9. VALVE TAG 45VI SPECS. ARE IN DWG 053479 > 37-B,D
10. NORGREN MICRO-FOG LUBRICATOR > 38-C,E
11. ORIFICED SLIDER SHOWN IN POSITION CONTROLLING FLOWRATE FOR DRYER REGENERATION > 32-B,D
12. N.O. - AIR TO CLOSE
    N.C. - AIR TO OPEN > 32-B,D
13. IF GLOBE VALVES ARE INSTALLED, THE PREFFERED ORIENTATION IS WITH THE FLOW ARROW INDICATING FLOW TOWARDS THE AIR COMPRESSOR. > 35-C,E
14. FIBERGLASS BLANKET TYPE PERSONNEL PROTECTION INSULATION. > 30-B,D

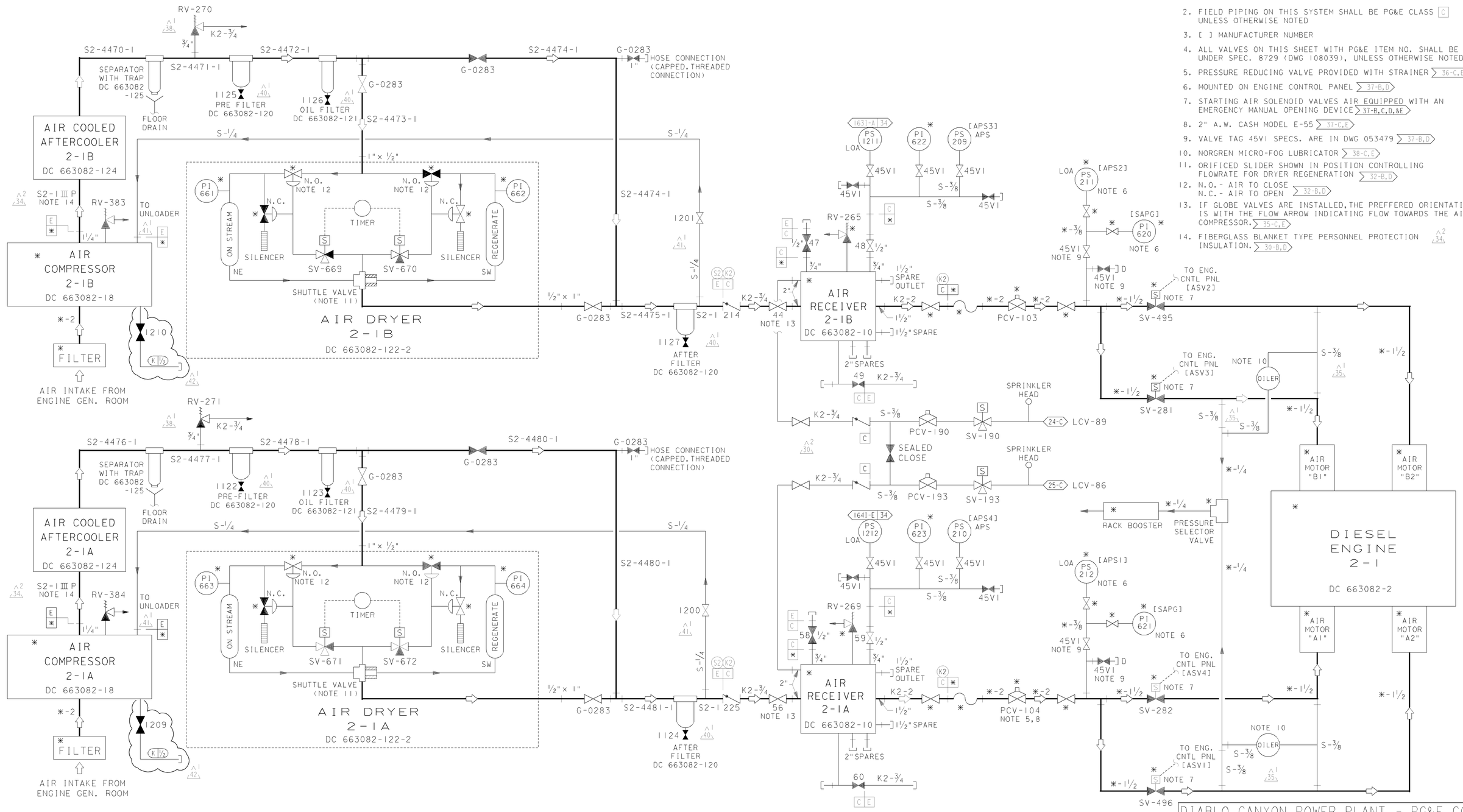

STARTING AIR SYSTEM 2-1

REFERENCE MFR. DWG. DC-663082-5

UNIT 2

DIABLO CANYON POWER PLANT - PG&E CO.
DIESEL ENGINE-GENERATOR ASSOCIATED SYSTEMS

DRAWING	SHEET	PAGE	REV
108021	3	0	42

DATE	DWN	RE	IV	PROFESSIONAL ENGINEER	PE DISC.	PE#	PE EXP.	
10-10-2011	AJFJ	RxG2		KERSI J. DALAL	MECHANICAL	M 16690	3/31/2012	REVISED PER DFT-7*1303

RASTER=802133.dgn
DGN=802133.dgn
CAD User: AJFJ Date: 10-10-2011

3NPG1C
3 Size

NOTES:

1. * DENOTES MANUFACTURER SUPPLIED INSTRUMENTS & EQUIPMENT. IT IS ACCEPTABLE TO REPLACE MANUFACTURER SUPPLIED INSTRUMENT TUBING WITH PG&E SUPPLIED S-SPEC STAINLESS STEEL TUBING (39 1)
2. FIELD PIPING ON THIS SYSTEM SHALL BE PG&E CLASS C UNLESS OTHERWISE NOTED
3. AIR RECEIVER OUTLET STRAINERS BE INSTALLED HORIZONTALLY 47-B,C
4. MOUNTED ON ENGINE CONTROL PANEL 48-C
5. ALL VALVES ON THIS SHEET WITH PG&E ITEM NOS. SHALL BE UNDER SPEC. 8729 (DWG 108039), UNLESS OTHERWISE NOTED 45/46/47-B,C&D
6. ORIFICED SLIDER SHOWN IN POSITION CONTROLLING FLOWRATE FOR DRYER REGENERATION. 42-C
7. N.O. AIR TO CLOSE
   N.C. AIR TO OPEN 42-C
8. IF GLOBE VALVES ARE INSTALLED. THE PREFFERED ORIENTATION IS WITH THE FLOW ARROW INDICATING FLOW TOWARDS THE AIR COMPRESSOR. 45-C
9. CHECK VALVE PER DC 6006473-169, S/C 94-3815 45-C (29 1)
10. FIBERGLASS BLANKET TYPE PERSONNEL PROTECTION INSULATION. 40-C (34 4)

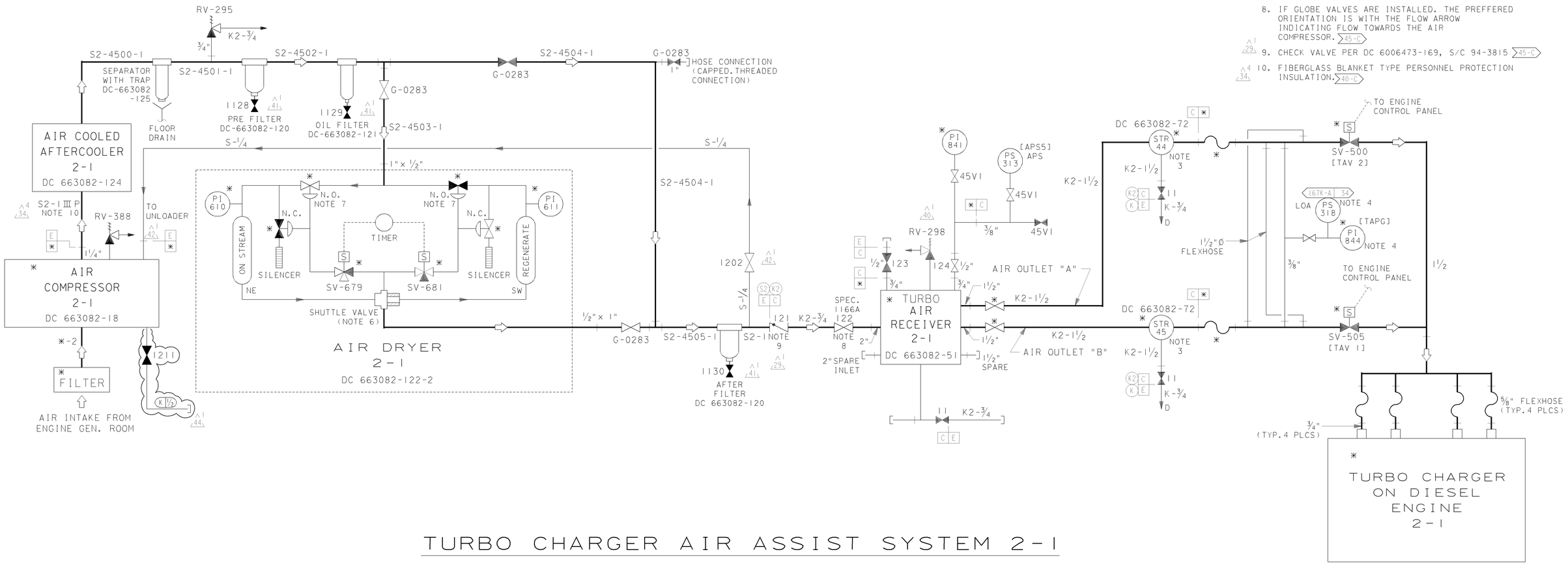

TURBO CHARGER AIR ASSIST SYSTEM 2-1

REFERENCE MFR. DWG. DC-663082-31

UNIT 2

DIABLO CANYON POWER PLANT - PG&E CO.
DIESEL ENGINE-GENERATOR ASSOCIATED SYSTEMS

DRAWING	SHEET	PAGE	REV
108021	4	0	44

DATE	DWN	RE	IV	PROFESSIONAL ENGINEER	PE DISC.	PE#	PE EXP.	
10-10-2011	AJFJ	RxG2		KERSI J. DALAL	MECHANICAL	M 16690	3/31/2012	REVISED PER DFT-7*1303

RASTER=108021s4.dgn
DGN=108021s4.dgn
CAD User: AJFJ Date: 10-10-2011

3NPGIC
3 Size

NOTES:

1. ☐ INDICATES PG&E PIPING CODE CLASS
2. * DENOTES MANUFACTURER SUPPLIED INSTRUMENTS & EQUIPMENT. IT IS ACCEPTABLE TO REPLACE MANUFACTURER SUPPLIED INSTRUMENT TUBING WITH PG&E SUPPLIED S-SPEC STAINLESS STEEL TUBING (39)
3. [] MANUFACTURER NUMBER IDENTIFICATION
4. ** PIPING TO BE INSTALLED UNDER SPEC.8711 & PROVIDED UNDER DC-663084-1 >51/52-B,C&D<
5. MOUNTED ON ENGINE CONTROL PANEL >58-C<
6. DIESEL GENERATOR EXHAUST SILENCER SEISMICALLY QUALIFIED FOR HOSGRI CRITERIA. EQUIPMENT SUPPORTS FOR THE DIESEL GENERATOR EXHAUST SILENCER SEISMICALLY QUALIFIED IN ACCORDANCE WITH DESIGN CRITERIA MEMORANDUM M-72 >54-C<

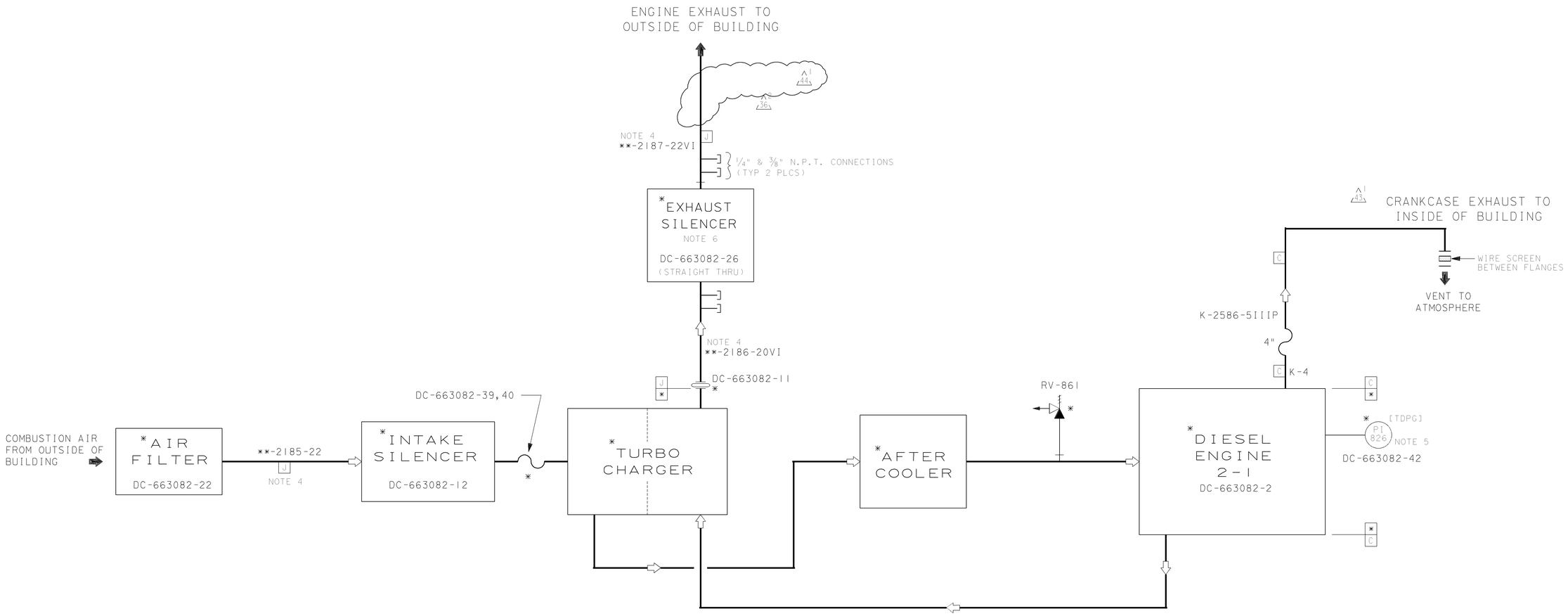

COMBUSTION AIR AND EXHAUST SYSTEM 2-1

UNIT 2

P G & E CO.	108021	REV. 44
SHEET 5	PAGE 0	

(28)

12/17/03	AJL2	RMD1	-	KERSI J. DALAL	MECHANICAL	M 16690	3/31/2004	Revised per FCT 028077
DATE	DWN	RE	IV	PROFESSIONAL ENGINEER	PE DISC.	PE#	PE EXP.	

CAD User:AJL2 Date:12-16-2003
DGN=802155.DGN

INPGIC

NOTES:

1. [ ] MANUFACTURER NO. IDENTIFICATION
2. MANUALLY OPERATED USED ON INITIAL START ONLY >63-B>
3. SEE MANUFACTURER DWG. 663082-4 >60-D>
4. MOUNTED ON ENGINE CONTROL PANEL >67-D>
5. BY SUPPLIER UNDER SPEC.8735 WISMER AND BECKER >62-D>
6. VALVE TAG 45VI SPECS ARE IN DWG 053479 >66-C>
7. OPEN 0 TO 100 RPM, CLOSED-ABOVE 100 RPM >64-C>
8. 1/2"FPT WHITEY BALL VALVE MODEL #SS-45F8 >69-D>
9. 3/8"NUPRO PLUG VALVE MODEL #SS-6P4T >65-B>
10. PUMP AND TEE LOCATED AT SUCTION BELOW LOWEST DAY TANK FUEL OIL LEVEL >62-B>
11. WHITEY CO. SS-3NTRF4-A >63-C,65-B>
12. MANUAL VALVES PER DWG 6006473-222 >61-E>
13. 1/2"VELAN GATE VALVE STOCK NO.93-6840 >60-B>
14. * DENOTES MANUFACTURER SUPPLIED INSTRUMENTS AND EQUIPMENT. IT IS ACCEPTABLE TO REPLACE MANUFACTURER SUPPLIED INSTRUMENT TUBING WITH PG&E SUPPLIED S-SPEC STAINLESS STEEL TUBING (39)
15. CODE CLASS E PIPING IS QUALITY CLASS 'S' AND SEISMICALLY EVALUATED FOR HOSGRI.
16. EAST AND WEST PRIMARY AND SECONDARY FILTER VENTS HAVE A BLEEDER. (48)
17. EAST AND WEST PRIMARY AND SECONDARY FILTER DRAINS HAVE A PLUG.
18. DISTANCE FROM BOTTOM OF FOOT VALVE TO BOTTOM OF DAY TANK = 15/16 " >62-D> (49)

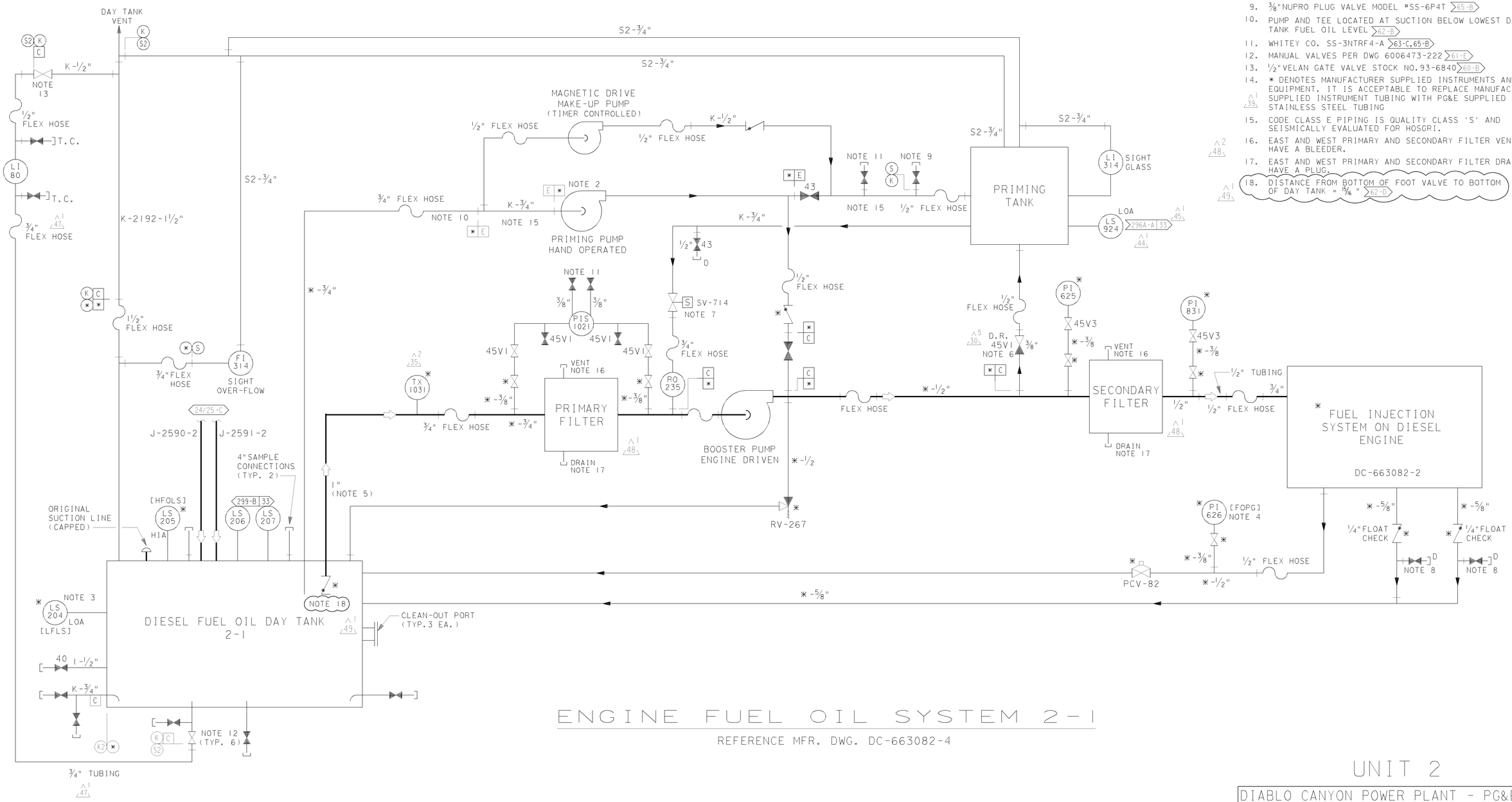

ENGINE FUEL OIL SYSTEM 2-1

REFERENCE MFR. DWG. DC-663082-4

UNIT 2

DIABLO CANYON POWER PLANT - PG&E CO.
DIESEL ENGINE-GENERATOR ASSOCIATED SYSTEMS

DRAWING	SHEET	PAGE	REV
108021	6	0	49

DATE	DWN	RE	IV	PROFESSIONAL ENGINEER	PE DISC.	PE#	PE EXP.	
01-03-2013	AJFJ	FxC2		KERSI J. DALAL	MECHANICAL	M 16690	3/31/2014	REVISED PER DFT-7*1941

RASTER=108021s6.dgn
DGN=108021s6.dgn
CAD User: AJFJ Date: 01-03-2013

3NPGIC
3 Size

NOTES:

1. THIS SYTEM PROVIDED COMPLETELY INSTALLED WITH ENGINE-GENERATOR UNITS
2. [ ] MANUFACTURER NUMBER
3. RELIEF VALVE BUILT-IN TO PUMP >74 -B<
4. ENGINE DRIVEN LUBE OIL PUMP >73-B<
5. PRE-CIRC. L.O. PUMP IS ELECTRIC MOTOR DRIVEN >73-C<
6. MOUNTED ON ENGINE CONTROL PANEL >71/77-B,79-C<
7. BALL VALVES CONTROMATICS #C-1111-BC, DC-6006473-217. >77-C,73-D< 49
8. * DENOTES MANUFACTURER SUPPLIED INSTRUMENTS AND EQUIPMENT. IT IS ACCEPTABLE TO REPLACE MANUFACTURER SUPPLIED INSTRUMENT TUBING WITH PG&E SUPPLIED S-SPEC STAINLESS STEEL TUBING 39
9. LUBE OIL HEATER (LOH) REPLACED WITH A NEW HEATER, (WATLOW PART NO. 7-10-567-1) AND INSTALLED OUTSIDE THE DIESEL ENGINE SKID. 49
10. J-SPEC PIPING PROVIDED WITH THREADED CONNECTIONS AND PIPE FITTINGS PER RPE #P-6687.
11. PIPING QA CLASS "S", SEISMICALLY ANALYZED.

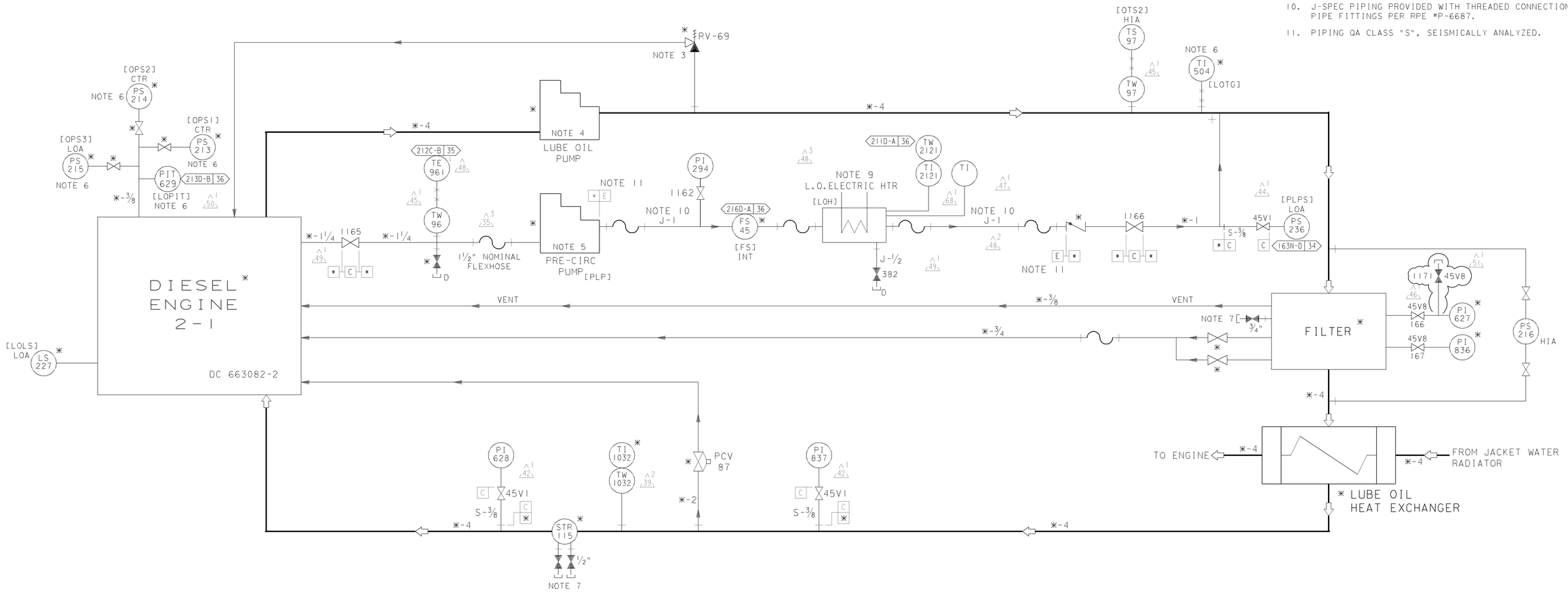

LUBE OIL SYSTEM 2-1

REFERENCE MFR. DWG. DC 663082-16

UNIT 2

DIABLO CANYON POWER PLANT - PG&E CO.
DIESEL ENGINE GENERATOR SYSTEMS

DRAWING	SHEET	PAGE	REV
108021	7	0	51

DATE	DWN	RE	IV	PROFESSIONAL ENGINEER	PE DISC.	PE#	PE EXP.	
04-09-2010	GN07	AJL2		KERSI J. DALAL	MECHANICAL	M 16690	3/31/2012	REVISED PER DAS-6*298

RASTER=108021S7.DGN
DGN=108021S7.DGN
CAD User:GN07 Date: 04-09-2010

INFOTC 3 Size

NOTES:

1. THIS SYTEM PROVIDED COMPLETELY INSTALLED WITH ENGINE-GENERATOR UNITS
2. [ ] MANUFACTURER NUMBER
3. ENGINE DRIVEN JACKET WATER PUMP 83-C
4. MOUNTED ON ENGINE CONTROL PANEL 83-D & 86-B
5. SELF-CONTAINED CONTROL VALVE, FOR OPERATION SEE MANUFACTURER TECHNICAL MANUAL DC-663082-80 87-B (VALVE SHOWN IN HOT POSITION)
6. PENBERTHY N7B-STS TUBULAR GAUGE GLASS VALVES 84-C
7. CAP WITH SPRING RELIEF FOR VENT/VACUUM 85-B
8. LUNKENHEIMER MODEL #123 83-D
9. * DENOTES MANUFACTURER SUPPLIED INSTRUMENTS AND EQUIPMENT. IT IS ACCEPTABLE TO REPLACE MANUFACTURER SUPPLIED INSTRUMENT TUBING WITH PG&E SUPPLIED S-SPEC STAINLESS STEEL TUBING

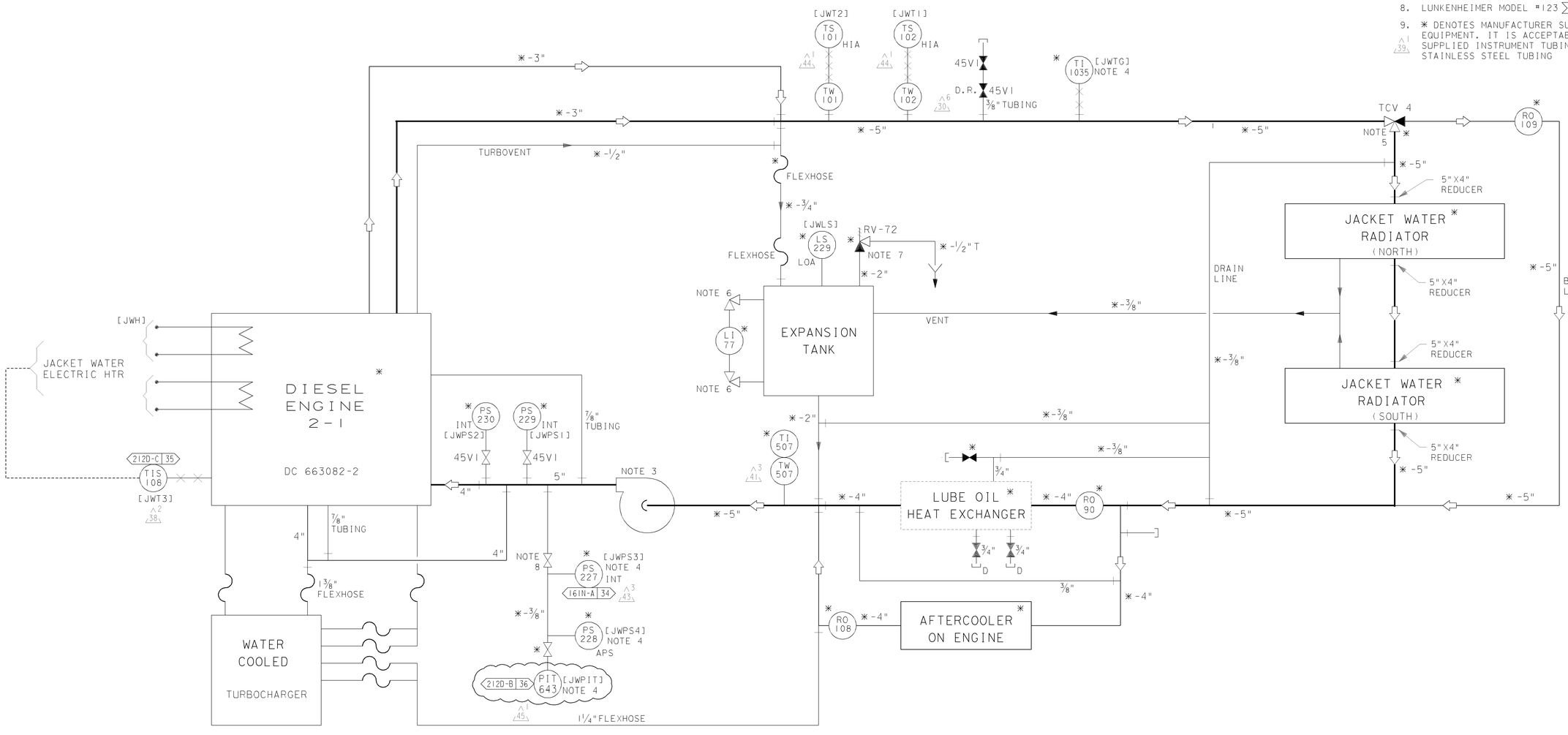

ENGINE JACKET WATER COOLING SYSTEM 2-1

REFERENCE MFR. DWG. DC-663082-17

UNIT 2

DIABLO CANYON POWER PLANT - PG&E CO.
DIESEL ENGINE-GENERATOR ASSOCIATED SYSTEMS

DRAWING	SHEET	PAGE	REV
108021	8	0	45

DATE	DWN	RE	IV	PROFESSIONAL ENGINEER	PE DISC.	PE #	PE EXP.	
11-06-2008	RxG2	FxC2		ALAN GLEN BARTA	ELECTRICAL	E 9271	9/30/2009	REVISED PER DDN-2*77-0

RASTER=108021S8.DGN
DGN=108021S8.DGN
CAD User: RxG2 Date: 11-06-2008

NOTE:

1. YS-107 IS MECHANICAL OVERSPEED TRIP DEVICE. 95-D (35.4)
2. * DENOTES MANUFACTURER SUPPLIED INSTRUMENTS AND EQUIPMENT. IT IS ACCPETABLE TO REPLACE MANUFACTURER SUPPLIED INSTRUMENT TUBING WITH PG&E SUPPLIED S-SPEC STAINLESS STEEL TUBING (39.1)

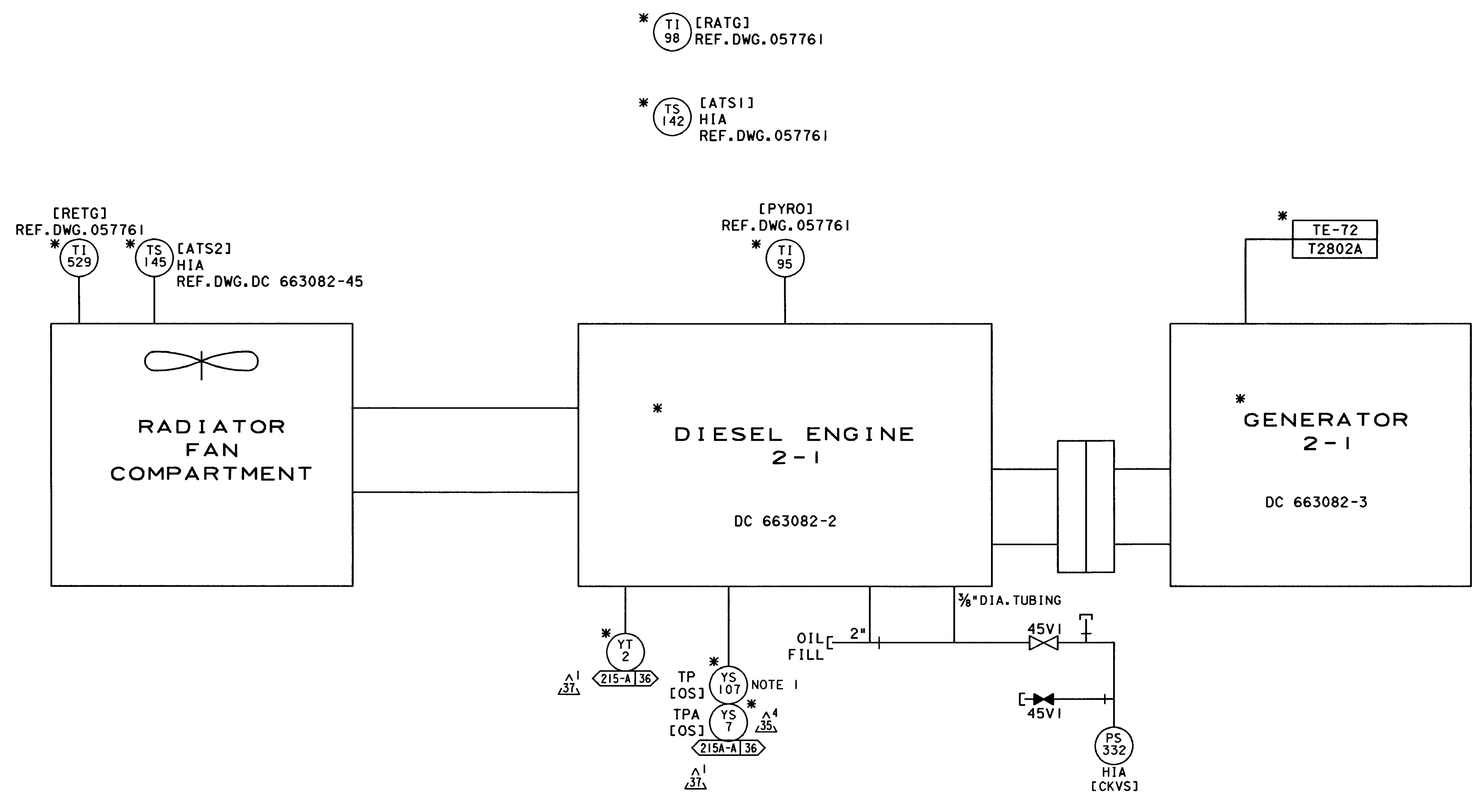

MISC. INSTRUMENTS FOR ENGINE GENERATOR 2-1

UNIT 2

P.G.&E. CO.	DRAWING NUMBER	REV
SHEET 9 OF SHEETS	108021	39
RMS INDEXED REV ____	MICROFILM	

SCAN 39 JC

802159.M01 11-06-95 ROA

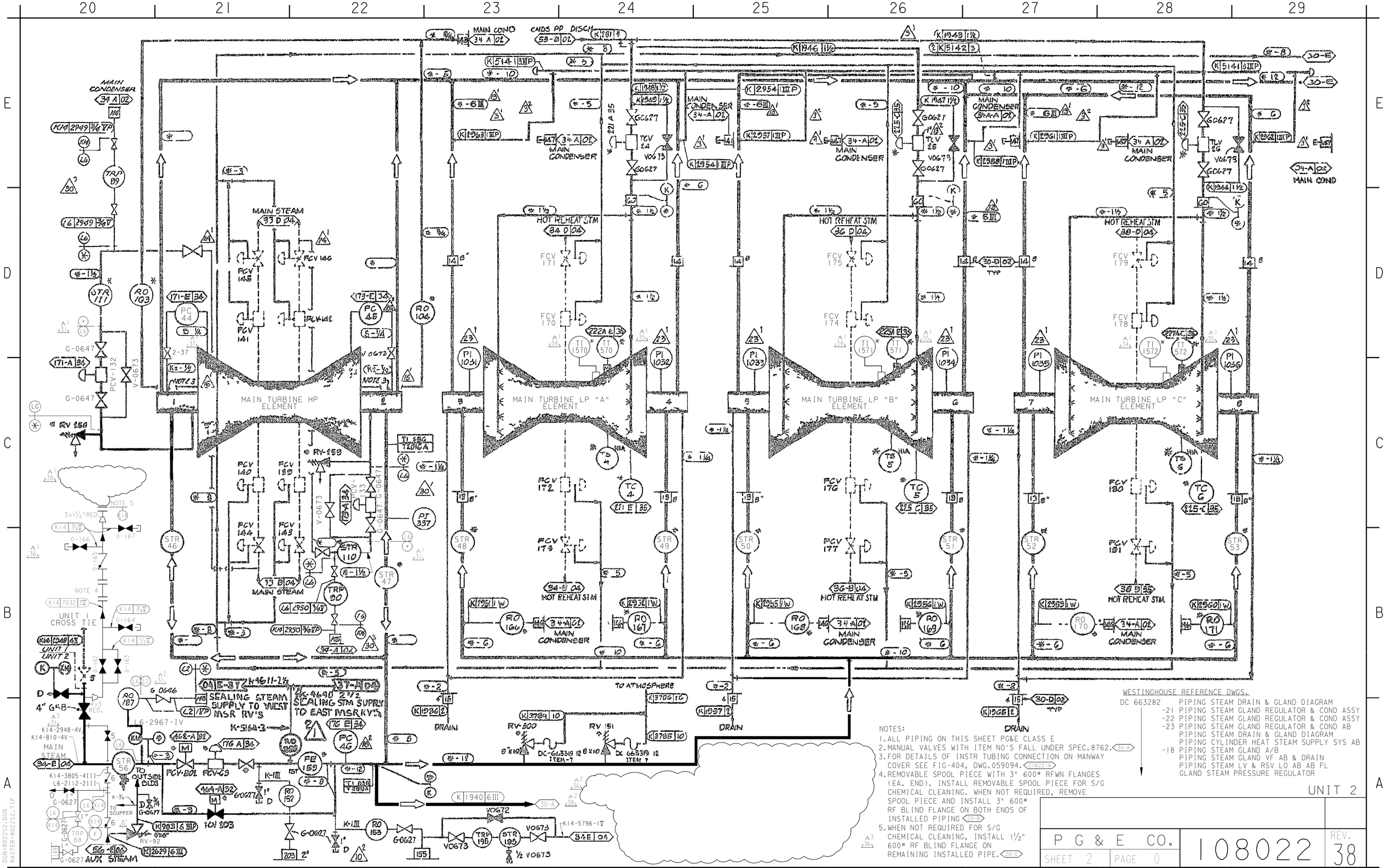

WESTINGHOUSE REFERENCE DWGS.

DC 663282 PIPING STEAM DRAIN & GLAND DIAGRAM
-21 PIPING STEAM GLAND REGULATOR & COND ASSY
-22 PIPING STEAM GLAND REGULATOR & COND ASSY
-23 PIPING STEAM GLAND REGULATOR & COND AB
PIPING STEAM DRAIN & GLAND DIAGRAM
PIPING CYLINDER HEAT STEAM SUPPLY SYS AB
-18 PIPING STEAM GLAND A/B
PIPING STEAM GLAND VF AB & DRAIN
PIPING STEAM LV & RSV LO AB AB FL
GLAND STEAM PRESSURE REGULATOR

NOTES:

1. ALL PIPING ON THIS SHEET PG&E CLASS E
2. MANUAL VALVES WITH ITEM NO'S FALL UNDER SPEC. 8762. 30-A
3. FOR DETAILS OF INSTR TUBING CONNECTION ON MANWAY COVER SEE FIG-404, DWG. 059094. 71622-A
4. REMOVABLE SPOOL PIECE WITH 3" 600# RFWN FLANGES (EA. END). INSTALL REMOVABLE SPOOL PIECE FOR S/G CHEMICAL CLEANING. WHEN NOT REQUIRED, REMOVE SPOOL PIECE AND INSTALL 3" 600# RF BLIND FLANGE ON BOTH ENDS OF INSTALLED PIPING 20-D
5. WHEN NOT REQUIRED FOR S/G CHEMICAL CLEANING, INSTALL 1½" 600# RF BLIND FLANGE ON REMAINING INSTALLED PIPE. 20-D

UNIT 2

P G & E CO.		108022	REV. 38
SHEET 2	PAGE 0		

DATE	DWN	RE	IV	PROFESSIONAL ENGINEER	PE DISC.	PE#	PE EXP.	
12/17/04	MIBF	RMDI	-	KERSI J. DALAL	MECHANICAL	M 16690	3/31/2006	Revised per FCT 027975

CAD User=MIBF Date: 12-17-2004
DGN=802252.DGN
RASTER=802252.TIF

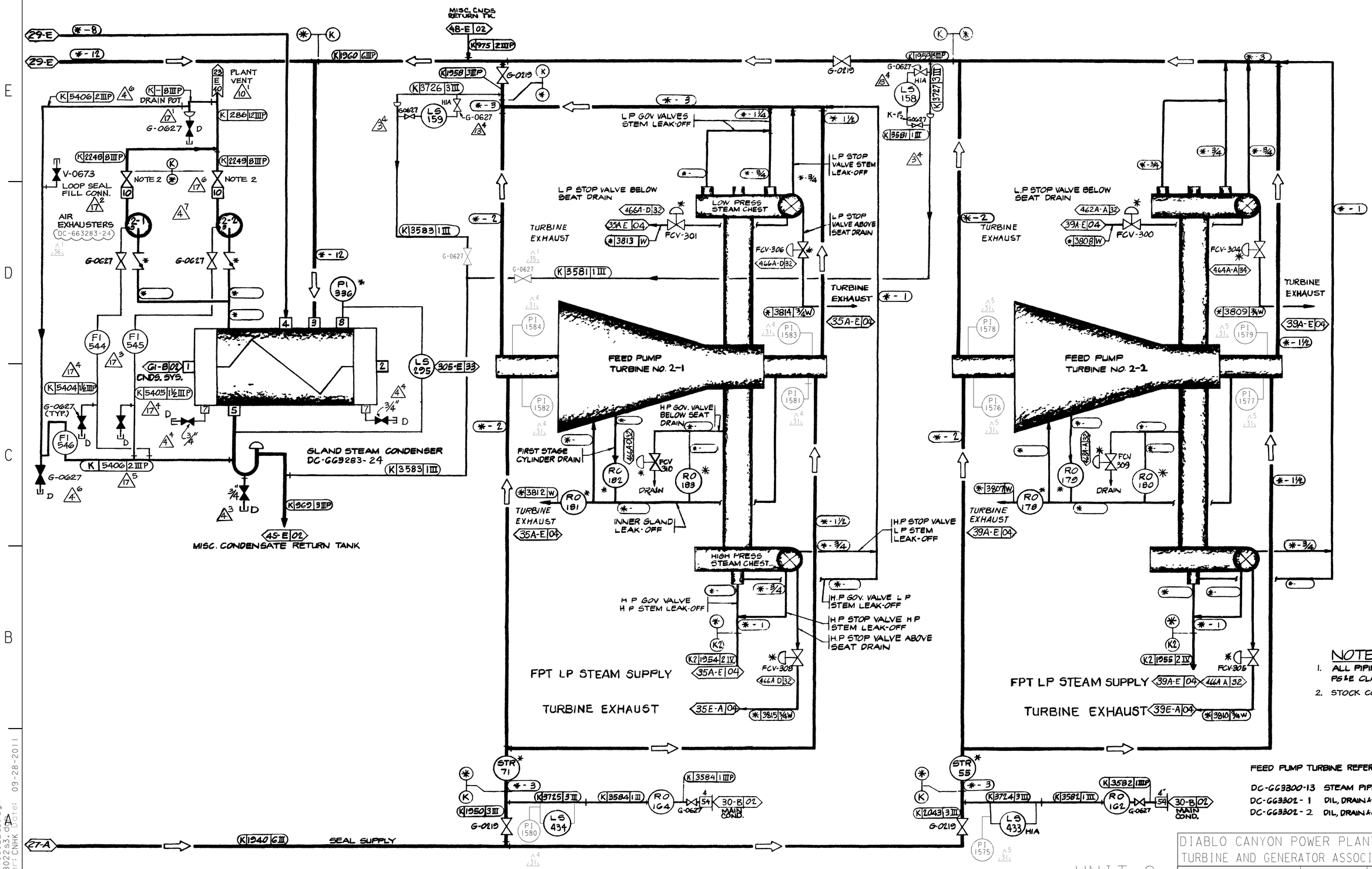

NOTES:

1. ALL PIPING ON THIS SHEET: PG&E CLASS E
2. STOCK CODE 74-2931

FEED PUMP TURBINE REFERENCE DWGS:

DC-GG3300-13 STEAM PIPING SCHEMATIC
DC-GG3302-1 OIL, DRAIN & GLAND PIPING ASSY.
DC-GG3302-2 OIL, DRAIN & GLAND PIPING ASSY.

UNIT 2

DIABLO CANYON POWER PLANT - PG&E CO. TURBINE AND GENERATOR ASSOCIATED SYSTEMS			
DRAWING	SHEET	PAGE	REV
108022	3	0	36

DATE	DWN	RE	IV	PROFESSIONAL ENGINEER	PE DISC.	PE#	PE EXP.	
09-28-2011	CNHK	FxC2		KERSI J. DALAL	MECHANICAL	M 16690	3/31/2012	REVISED PER DDT-4*604-0

RASTER=108022s3.dgn
DGN=108022s3.dgn
CAD User: CNHK DGN: 09-28-2011

INPGIC 3 Size

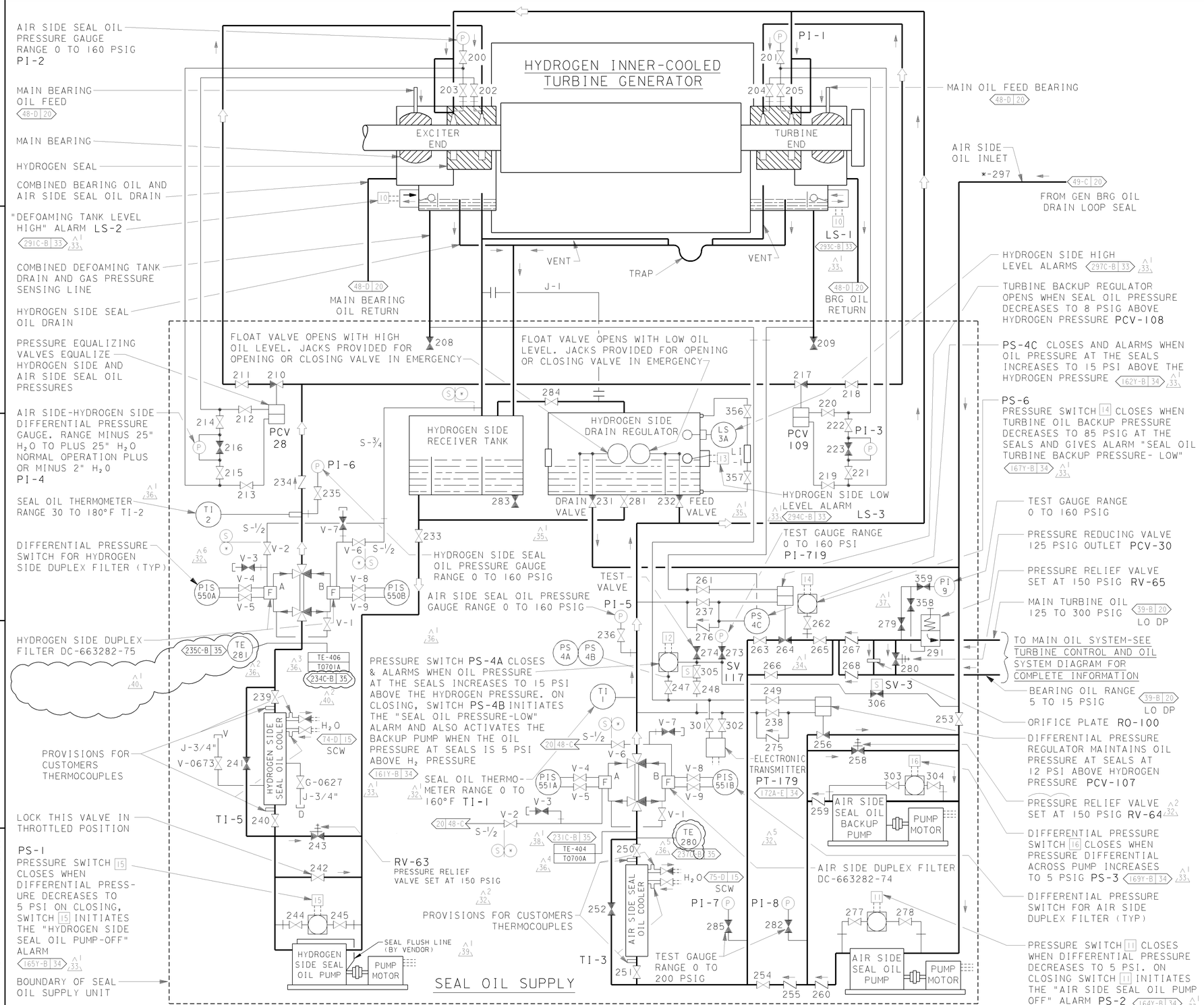

LEGEND

- VALVE (NORMALLY OPEN)
- VALVE (NORMALLY CLOSED)
- VALVE (NORMALLY THROTTLED)
- CHECK VALVE
- RELIEF VALVE
- ORIFICE
- PRESSURE GAUGE
- THERMOMETER
- ELECTRICAL CONNECTION
- PRESSURE SWITCH
- SOLENOID VALVE

OIL ALARMS

10 DEFOAMING TANK LEVEL-HIGH
11 AIR SIDE SEAL OIL PUMP-OFF
12 SEAL OIL PRESSURE-LOW
13 HYDROGEN SIDE LEVEL-LOW
14 SEAL OIL TURBINE BACKUP PRESSURE-LOW
15 HYDROGEN SIDE SEAL OIL PUMP-OFF
16 AIR SIDE SEAL OIL BACKUP PUMP-RUNNING

CONDENSED OPERATING INSTRUCTIONS

SEE INSTRUCTION BOOK FOR COMPLETE OPERATING INSTRUCTIONS

GENERAL-SEAL OIL PRESSURE MUST BE MAINTAINED AT THE HYDROGEN SEALS WHEN HYDROGEN IS IN THE GENERATOR OR WHEN THE SHAFT IS TURNING.

THE HYDROGEN PRESSURE MAY BE VARIED UP TO 75 PSIG. SEAL OIL PRESSURE IS NORMALLY MAINTAINED AT 12 PSI ABOVE THE HYDROGEN PRESSURE. 3 PSI IS REQUIRED TO MAINTAIN A SEAL WHEN RUNNING.

THE VAPOR EXTRACTORS SHOULD BE OPERATED CONTINUOUSLY WHEN THE GENERATOR IS FILLED WITH HYDROGEN.

HYDROGEN SHOULD BE PURGED FROM THE GENERATOR BEFORE MAIN OIL RESERVOIR IS DRAINED.

DUPLEX FILTERS PROVIDE FOR ON-LINE FILTER ELEMENT REPLACEMENT. REFER TO INSTRUCTION MANUAL DC-663280-48

SEAL OIL SUPPLY-EMERGENCY SOURCES

MAIN OIL PUMP ON TURBINE SHAFT
SEAL OIL BACKUP PUMP ON MAIN OIL RESERVIOR
AIR SIDE SEAL OIL BACKUP PUMP
} WILL MAINTAIN 75 PSIG HYDROGEN PRESSURE

TURNING GEAR BEARING OIL PUMPS-WILL MAINTAIN 2 PSIG HYDROGEN PRESSURE

THE TURBINE BACKUP REGULATOR VALVE 264 OPENS WHEN THE DIFFERENTIAL PRESSURE AT THE SEALS DECREASES TO 8 PSI. THEN IF THE SEAL DIFFERENTIAL PRESSURE DECREASES TO 5 PSI, PRESSURE SWITCH 12 ACTIVATES THE AIR SIDE SEAL OIL BACKUP PUMP ON THE SEAL OIL UNIT AND THE DIFFERENTIAL PRESSURE IS RESTORED TO 12 PSI.

THE NEXT AVAILABLE SOURCES OF EMERGENCY OIL AFTER THE AIR SIDE SEAL OIL BACKUP PUMP ARE THE TURNING GEAR BEARING OIL PUMPS ON THE MAIN OIL RESERVIOR. THESE CAN MAINTAIN A HYDROGEN PRESSURE OF 2 PSIG ONLY. WHEN THE AIR SIDE SEAL OIL BACKUP PUMP IS RUNNING, HYDROGEN PRESSURE SHOULD BE REDUCED TO 2 PSIG IF THE SEAL OIL BACKUP PUMP ON THE RESERVIOR IS NOT AVAILABLE.

TO PLACE EQUIPMENT IN OPERATION-SET VALVES AS INDICATED. START AIR SIDE SEAL OIL PUMP AND FILL DEFOAMING TANKS AND HYDROGEN SIDE DRAIN REGULATOR. START HYDROGEN SIDE SEAL OIL PUMP. EQUIPMENT IS THEN IN NORMAL OPERATION.

SEAL OIL DIAGRAM

UNIT 2

DIABLO CANYON POWER PLANT - PG&E CO.
TURBINE AND GENERATOR ASSOCIATED SYSTEMS

DRAWING	SHEET	PAGE	REV
108022	4	0	40

DATE	DWN	RE	IV	PROFESSIONAL ENGINEER	PE DISC.	PE#	PE EXP.	
04-09-2008	ADMI	FxC2		ALAN GLEN BARTA	ELECTRICAL	E 9271	9/30/2009	REVISED PER DC2-SJ-50835-0

RASTER=108022s4.dgn
DGN=108022s4.dgn
CAD User:ADMI Date: 04-09-2008

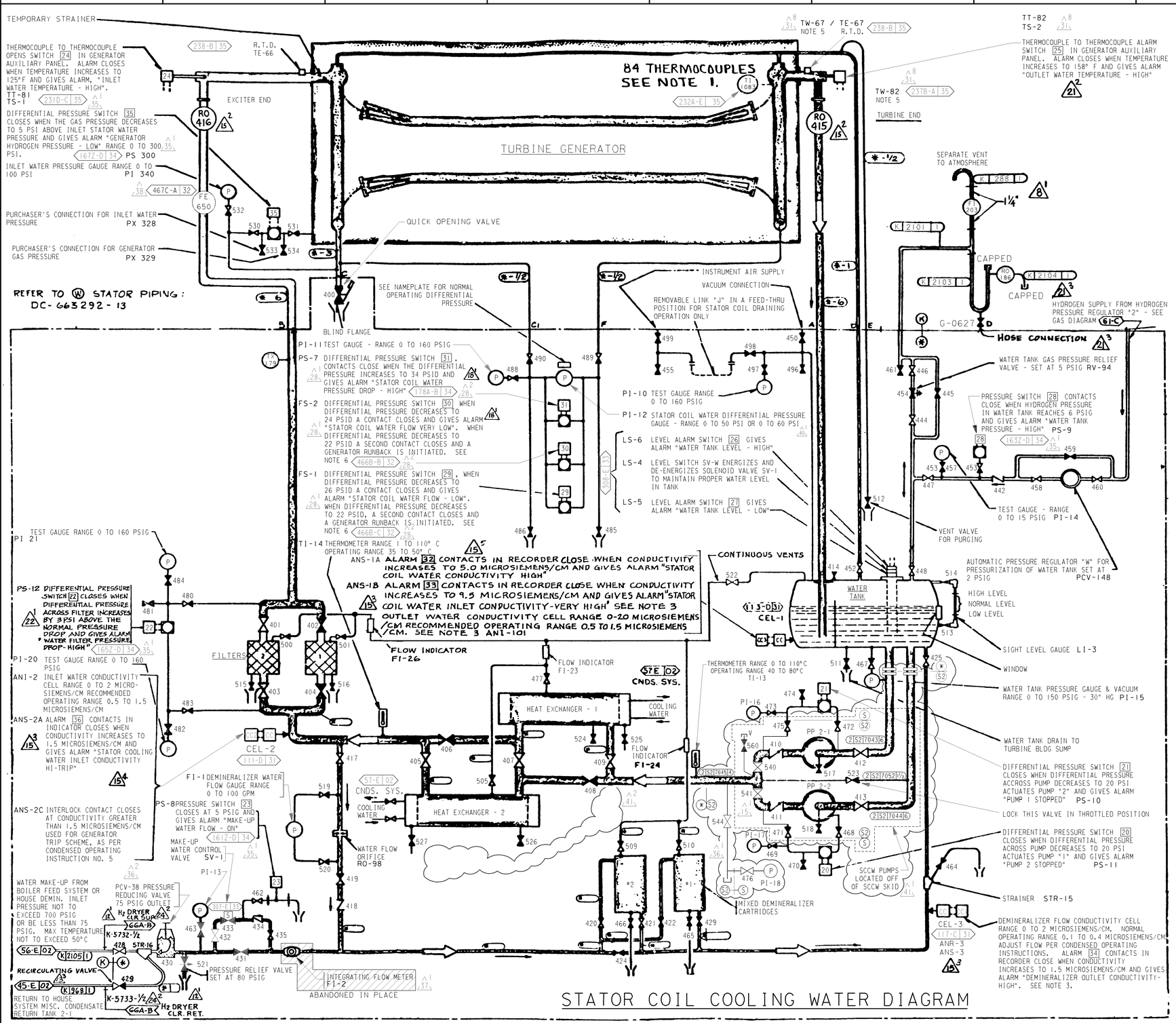

STATOR COIL COOLING WATER DIAGRAM

LEGEND

VALVE NORMALLY OPEN	FLOW LINE
VALVE NORMALLY CLOSED	SENSING LINE
VALVE NORMALLY THROTTLED	DRAIN LINE
CHECK VALVE	PRESSURE GAUGE
QUICK OPENING VALVE	PRESSURE SWITCH
SOLENOID VALVE	CONDUCTIVITY CELL
STOP CHECK VALVE	THERMOMETER
OPEN DRAIN	ELECTRICAL CONNECTION
ORIFICE	STRAINER
RELIEF VALVE	PLUG

WATER ALARMS

20	PUMP 2 STOPPED	28	WATER TANK PRESSURE - HIGH
21	PUMP 1 STOPPED	29	STATOR COIL WATER FLOW - LOW
22	WATER FILTER PRESSURE DROP - HIGH	30	STATOR COIL WATER FLOW - VERY LOW
23	MAKE-UP WATER FLOW - ON	31	STATOR COIL WATER PRESSURE DROP - HIGH
24	INLET WATER TEMPERATURE - HIGH	32	STATOR COIL WATER INLET CONDUCTIVITY - HIGH
25	OUTLET WATER TEMPERATURE - HIGH	33	STATOR COIL WATER INLET CONDUCTIVITY - VERY HIGH
26	WATER TANK LEVEL - HIGH	34	DEMINERALIZER OUTLET CONDUCTIVITY - HIGH
27	WATER TANK LEVEL - LOW	35	GENERATOR HYDROGEN PRESSURE - LOW

CONDENSED OPERATING INSTRUCTIONS

SEE INSTRUCTION BOOK FOR COMPLETE OPERATING AND FLUSHING INSTRUCTIONS

1. THE WATER SYSTEM IS PRESSURIZED WITH HYDROGEN ABOVE THE WATER LEVEL IN THE WATER TANK. AN AUTOMATIC HYDROGEN PRESSURE REGULATOR MAINTAINS THE HYDROGEN PRESSURE AT 2 PSIG. A RELIEF VALVE WILL PREVENT HYDROGEN PRESSURE BUILD UP IN EXCESS OF 5 PSIG IN THE WATER TANK.
2. THE SYSTEM MAY BE OPERATED WITHOUT HYDROGEN PRESSURIZATION. THIS MODE OF OPERATION IS NOT RECOMMENDED SINCE CORROSION ACTIVITY WILL BE ACCELERATED IN THE PRESENCE OF ATMOSPHERIC OXYGEN.
3. THE GENERATOR CAN BE OPERATED AT ALL HYDROGEN PRESSURES BETWEEN MAXIMUM GAS PRESSURE AND 45 PSIG. THE MACHINE GAS PRESSURE MUST BE MAINTAINED HIGHER THAN STATOR COIL INLET WATER PRESSURE.
4. STATOR COIL COOLING WATER SHOULD BE CIRCULATED WHENEVER THE GENERATOR IS CARRYING LOAD. EITHER PUMP IS CAPABLE TO PRODUCE NORMAL WATER FLOW.
5. WITHOUT STATOR COIL WATER CIRCULATION AND WITH THE COILS FILLED WITH WATER. THE GENERATOR CAN SAFELY CARRY STATION AUXILIARY LOAD FOR A MAXIMUM TIME OF ONE HOUR IF THE INITIAL CONDUCTIVITY OF INLET WATER DOES NOT EXCEED 1.5 MICROMHOS/CM. IF THE INITIAL CONDUCTIVITY EXCEEDS 1.5 MICROMHOS/CM, THE GENERATOR LOAD SHOULD BE REDUCED TO ZERO AND ITS EXCITATION REMOVED WITHIN THREE MINUTES.
6. IF THE WATER FLOW STOPS, THE SECOND CONTACTS ON SW29 AND/OR SW30 WILL INITIATE THE AUTOMATIC RUNBACK THROUGH A FIVE SECOND DELAY RELAY. (THE FIVE SECOND DELAY IS TO PERMIT ALTERNATE CIRCULATING PUMP TO COME UP TO SPEED.) THE GENERATOR RUNBACK CAN BE ACCOMPLISHED AT A MAXIMUM RATE OF 200% PER MINUTE. IF THE GENERATOR RUNBACK FAILS TO START IN 45 SECONDS, THE GENERATOR WILL BE TRIPPED. THE GENERATOR RUNBACK WILL BE PULSED WITH AN ON-OFF CYCLIC RELAY TO ASSURE GRADUAL LOAD REDUCTION.
7. MANUAL RUNBACK MAY BE USED TO AVOID TRIP PROVIDED STATOR AMPERES CAN BE REDUCED 40% PER MINUTE DOWN TO THE STATION AUXILIARY LOAD IN 2¼ MINUTES.
8. THE GENERATOR CAN CARRY 75% OF RATED STATOR AMPERES WITH ONE COOLER OUT OF SERVICE.
9. ONE MIXED BED DEMINERALIZER IS NORMALLY IN SERVICE AT A TIME; THE OTHER BEING HELD AS A SPARE. MAXIMUM FLOW THROUGH THE DEMINERALIZER IS 50 GPM. TEMPERATURE OF WATER SHOULD NOT EXCEED 60°C MAXIMUM. SET DEMINERALIZER FLOW RATE AS REQUIRED TO MAINTAIN LOOP CONDUCTIVITY AS SPECIFIED AT "CC2". THIS FLOW MAY BE CHANGED BY ALTERNATING THE POSITION OF VALVE 419. REPLACE DEMINERALIZER BED WHENEVER THE INDICATION ON CONDUCTIVITY METER "CC1" INCREASES TO 1.5 MICROMHOS/CM AT 25°C WITH CONSTANT FLOW RATE.
10. ONE FILTER IS NORMALLY IN SERVICE; THE OTHER HELD AS A SPARE. WHENEVER PRESSURE DROP ACROSS THE FILTER INCREASES 3 PSI ABOVE THE NORMAL PRESSURE DROP, REPLACE THE FILTER.
11. GENERATOR MUST BE PRESSURIZED WITH GAS BEFORE WATER FILLING OR CIRCULATION IS STARTED.
12. CARE SHOULD BE TAKEN TO PREVENT CO_2 FROM COMING INTO CONTACT WITH WATER SINCE ITS PRESENCE WILL DRASTICALLY INCREASE THE STATOR COIL WATER CONDUCTIVITY.
13. OPERATION OF THE GENERATOR WITHOUT STATOR COIL WATER CIRCULATION IS PERMISSIBLE AS OUTLINED IN THE ABOVE INSTRUCTIONS PROVIDING NO OTHER OPERATING CONDITION ON THE TURBINE OR GENERATOR REQUIRES THAT THE UNIT BE TRIPPED. REFER TO THE TURBINE INSTRUCTION BOOK FOR TURBINE LIMITS ON AUXILIARY LOAD OPERATION.

FILLING INSTRUCTIONS

1. OPEN VALVE 512. CLOSE 448, 424, AND 400, AND BOLT ON BLIND FLANGE. CLOSE 498 AND 499, AND DISCONNECT REMOVABLE LINK "H", WHICH IS LOCATED ON THE GAS DIAGRAM. 61-C
2. CLOSE VALVE 78 ON GAS DIAGRAM.
3. OPEN 420, 421, 422, 509, AND 510 TO FILL DEMINERALIZERS.
4. OPEN 424, CLOSE 420, 421, 422, AND 423.
5. OPEN VALVES 402, 404, 406, AND 408. ADMIT WATER FROM BOILER FEED SYSTEM OF HOUSE DEMINERALIZER WATER SYSTEM BY OPENING VALVE 431. FILL SYSTEM UNTIL A FULL STREAM OF WATER FLOWS FROM VALVE 512.
6. START EITHER PUMP "1" OR PUMP "2" AND CONTINUE TO VENT SYSTEM. WATER PRESSURE AT PUMP DISCHARGES SHOULD NOT EXCEED GENERATOR GAS PRESSURE. CLOSE VALVE 431.
7. OPEN MOMENTARILY AND CLOSE VALVE 476, 474, 481, 485, AND 486. THROTTLE VENT VALVE 477, 505, 501, 500, 510, AND 509.
8. OPEN VALVE 431 UNTIL A FULL STREAM OF WATER FLOWS OUT OF VALVE 512. CLOSE VALVE 431 AND 512.

FOR PRESSURIZATION OF WATER SYSTEM WITH HYDROGEN

1. INSTALL REMOVABLE LINK "H" AS SHOWN ON GAS DIAGRAM.
2. CLOSE VALVES 444, 448, 459, AND 460.
3. OPEN VALVES 78, ON GAS DIAGRAM, TO PROVIDE H_2 TO WATER SYSTEM.
4. ADJUST PRESSURE REGULATOR "2", ON GAS DIAGRAM, TO DELIVER HYDROGEN AT RANGE OF 3 TO 5 PSIG.
5. OPEN VALVES 447, 448, 458, AND 460 AND ADMIT HYDROGEN.
6. DRAIN OFF EXCESS WATER UNTIL WATER LEVEL IS AT HIGH LEVEL IN SIGHT GLASS OPENING VALVE 511.
7. START PUMP "1 OR "2 AND ADJUST WATER LEVEL IN WATER TANK TO NORMAL LEVEL.
8. OPEN VALVE 444.
9. CIRCULATE WATER THROUGH DEMINERALIZER UNTIL PROPER CONDUCTANCE IS OBTAINED ON INLET CONDUCTIVITY CELL "CC2".
10. CLOSE VALVES 402, 404, 406, 408, 422, AND 423.
11. THROTTLE VALVE 419 TO MAINTAIN DESIRED CONDUCTIVITY.

ADAPTED FROM DC-663292-1

NOTES

1. 84 THERMOCOUPLES LOCATED RADIALLY IN STATOR COIL WATER DISCHARGE HEADER. THEY ARE CONSECUTIVELY NUMBERED TI-1083 TO TI-1130 AND TI-230 TO TI-265. 232A-B 35 54-E
2. PG&E PIPING THIS SHEET - PG&E CLASS E
3. ALL CONDUCTIVITY CELLS ARE TEMPERATURE CONDENSATED TO 25°C. ALL CONDUCTIVITY CELLS ARE CONNECTED TO INDICATORS WITH DUAL RANGES OF 0 TO 2 AND 0 TO 20 MICROSIEMENS/CM.
4. FOR OUTLINE SEE DC-663292-10.
5. THERMOWELLS TW-67 AND TW-82 ARE SEAL WELDED TO THE PIPING. 54/55-E

DIABLO CANYON POWER PLANT - PG&E CO.
TURBINE AND GENERATOR ASSOCIATED SYSTEMS

UNIT 2	DRAWING	SHEET	PAGE	REV
	108022	5	0	41

DATE	DWN	RE	IV	PROFESSIONAL ENGINEER	PE DISC.	PE#	PE EXP.	
04-10-2008	FAZI	FxC2		KERSI J. DALAL	MECHANICAL	M 16690	3/31/2010	REVISED PER DC2-SM-50841-00

RASTER=8022S5.dgn
DGN=8022S5.dgn
CAD User: FAZI Date: 04-10-2008

3 size

HYDROGEN INNER-COOLED TURBINE GENERATOR

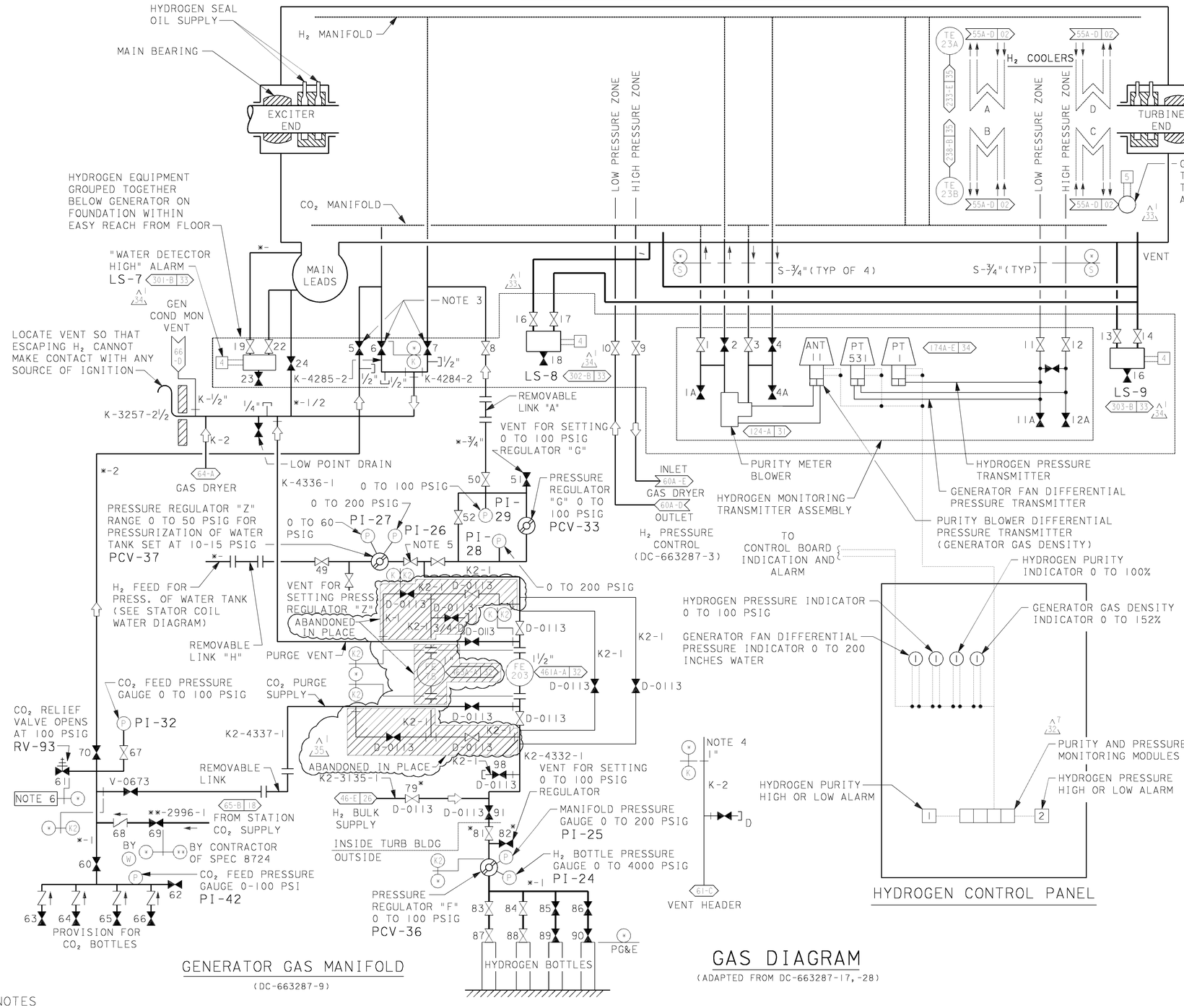

GENERATOR GAS MANIFOLD

(DC-663287-9)

GAS DIAGRAM

(ADAPTED FROM DC-663287-17,-28)

HYDROGEN CONTROL PANEL

GAS ALARMS

1. HYDROGEN PURITY - HIGH OR LOW
2. HYDROGEN PRESSURE - HIGH OR LOW
3. HYDROGEN SUPPLY PRESSURE - LOW
4. WATER DETECTOR - HIGH
5. HYDROGEN TEMPERATURE - HIGH

LEGEND

- PRESSURE SWITCH
- PRESSURE GAUGE
- VALVE (NORMALLY CLOSED)
- VALVE (NORMALLY OPEN)
- RELIEF VALVE
- TWO-WAY VALVE
- ELECTRICAL CONNECTION
- PRESSURE REGULATOR

CONDENSED OPERATING INSTRUCTIONS

GENERAL

1. THE GAS CHANGING OPERATION MAY BE PERFORMED WITH THE GENERATOR AT STANDSTILL, ON TURNING GEAR, OR ROLLING AT SPEED NOT EXCEEDING 1000 RPM.
2. SHAFT SEAL OIL PRESSURE MUST BE MAINTAINED.
3. THE NORMAL SETTING OF VALVES IS INDICATED ON THE DIAGRAM.

REPLACING AIR WITH CO_2

1. DISCONNECT THE REMOVABLE LINKS "A" & "H". DISCONNECT REMOVABLE LINK "J" ON WATER DIAGRAM.
2. CLOSE VALVES 1, 3, 8, 50 & 78 OPEN VALVES 2, 4, 5, 7, 60 & 70.

   USING CYLINDERS:

3. ADMIT CO_2 BY OPENING BOTTLE VALVES 63 TO 66. OPEN VALVES WIDE AND DO NOT THROTTLE. OBSERVE CO_2 RELIEF VALVE OR PRESSURE GAUGE TO DETERMINE THE NUMBER OF BOTTLES THAT MAY BE OPENED. BOTTLES ARE EMPTY WHEN FROST DISAPPEARS FROM THE FLEXIBLE LEADERS. ONE AND ONE-HALF VOLUMES OF CO_2 ARE REQUIRED. STANDARD CO_2 BOTTLES CONTAIN 440 CUBIC FEET. PURITY SHOULD READ 95% GREATER IN CO_2.

   USING BULK SUPPLY:

   BULK CO_2 SUPPLY MAY BE USED FOR PURGING. CLOSE VALVE 60. OPEN VALVES 69 AND 70. ADMIT CO_2 PER SAME INSTRUCTIONS AS FOR CYLINDERS.

4. WHEN FINISHED, CHANGE FOLLOWING VALVES BACK TO NORMAL. CLOSE VALVES 2, 4, 5, 7, 60 AND 70. OPEN VALVES 1 AND 3.

REPLACING CO_2 WITH H_2

1. REPLACE REMOVABLE LINK "A" AND OPEN VALVES 6, 8 & 50.

   USING CYLINDERS:

2. OPEN VALVES 81, 83, 84, 87 AND 88. OPEN PRESSURE REGULATOR "F" AT BOTTLES. HYDROGEN MAY THEN BE FED BY ADJUSTING PRESSURE REGULATOR "G" AT HYDROGEN PRESSURE CONTROL. FOR MORE RAPID PURGING OPEN VALVE 52. WHEN BOTTLE PRESSURE AT THE HYDROGEN BOTTLE PRESSURE GAUGE DROPS TO 200 PSIG. CLOSE VALVES 83, 84, 87 AND 88. OPEN VALVES 85, 86, 89 AND 90 AND CONTINUE. TWO AND ONE-HALF VOLUMES OF H_2 ARE REQUIRED TO REPLACE CO_2 IN THE GENERATOR AT ONE-HALF PSIG. ONE ADDITIONAL VOLUME IS REQUIRED FOR EACH 15 PSIG INCREASE IN PRESSURE. STANDARD H_2 BOTTLES CONTAIN 190 CUBIC FEET. PURITY METER SHOULD READ 95% GREATER IN H_2.

   USING BULK SUPPLY:

   BULK H_2 SUPPLY MAY USED BE FOR PURGING AND FILLING. CLOSE VALVE 81 AND OPEN VALVE 79. ADMIT H_2 PER SAME INSTRUCTIONS AS FOR CYLINDERS.

3. CLOSE VALVE 52 IF USED, THEN CLOSE VALVE 6.
4. OPEN VALVE 24 FOR APPROXIMATELY TWO MINUTES TO PURGE LOW AREAS, THEN CLOSE VALVE 24.
5. MAINTAIN DESIRED PRESSURE IN GENERATOR BY MEANS OF THE PRESSURE REGULATOR "G" AT THE HYDROGEN PRESSURE CONTROL.
6. OPERATION IS THEN NORMAL AS INDICATED ON DIAGRAM.
7. OPEN VALVE 78 PER INSTRUCTIONS ON WATER DIAGRAM.
8. INSTALL REMOVABLE LINK "H" PER WATER DIAGRAM.

NORMAL H_2 OPERATION

SET PRESSURE REGULATOR "G" ON THE HYDROGEN PRESSURE CONTROL TO MAINTAIN THE DESIRED HYDROGEN PRESSURE IN THE GENERATOR. THE PRESSURE MAY BE VARIED TO 75 PSIG.

REPLACING H_2 WITH CO_2

1. CLOSE VALVES 8, 50, 53 & 78 OPEN VALVE 7 AND VENT HYDROGEN PRESSURE.
2. DISCONNECT REMOVABLE LINK "A".
3. THIS OPERATION IS THE SAME AS REPLACING AIR WITH CO_2 EXCEPT THAT TWO VOLUMES OF CO_2 ARE REQUIRED.

PRESSURIZATION OF STATOR COIL WATER SYSTEM

FOR PRESSURIZATION OF THE STATOR COIL WATER SYSTEM, SEE STATOR COIL WATER DIAGRAM.

UNIT-2

NOTES

1. ALL PIPING ON THIS SHEET PG&E CLASS "E".
2. REFER TO DC-663287-16 FOR PRESSURE MEASURING STATION CONFIGURATION.
3. VALVES 5, 6 & 7 SUPPLIED BY PG&E; PACKLESS METAL DIAPHRAGM WITH SOFT SEAT KEROTEST OR EQUIVALENT.
4. THIS PIPE SECTION USED TO CONNECT TO THE REPLACED GAS DRYER AND SHALL BE ABANDONED IN PLACE FOR FUTURE USE. (64-B)
5. EXISTING VALVE REPLACED WITH CRANE MODEL NO.384P (62-C)
6. "AQUATROL" 1" BRONZE VALVE (MODEL 89) SET TO OPEN AT 100 PSIG.

1/25/00	PMH2	FXC2	-	ALAN GLEN BARTA	ELECTRICAL	E 9271	9/30/2001	Revised per FCT 024323
DATE	DWN	RE	IV	PROFESSIONAL ENGINEER	PE DISC.	PE#	PE EXP.	

P G & E CO.	108022	REV. 35
SHEET 6	PAGE 0	

CAD User:PMH2 Date: 1-25-2000
DGN=001E1299.DGN

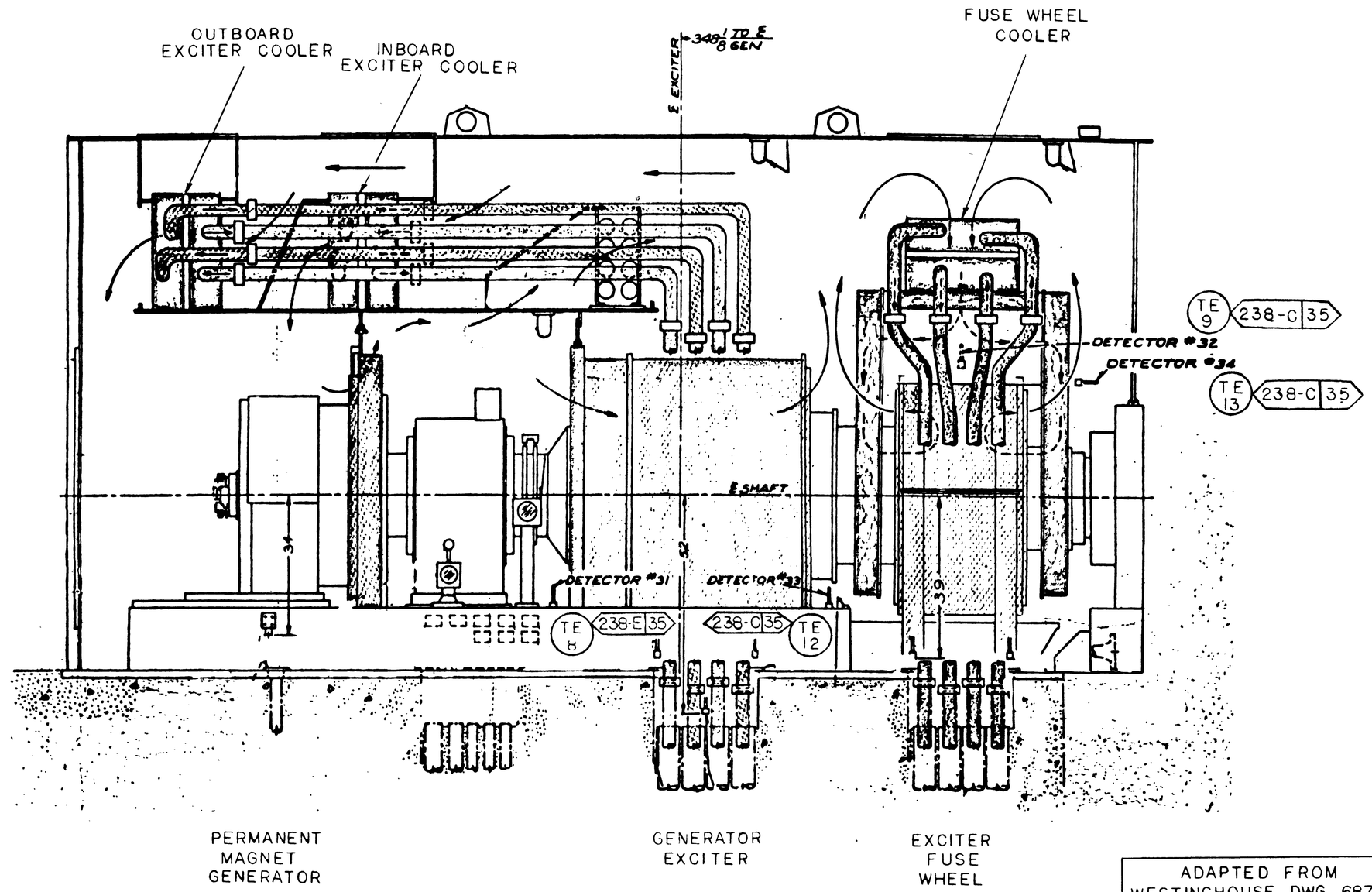

ADAPTED FROM
WESTINGHOUSE DWG. 687J819
DC-663293-1

EXCITER COOLERS AIR TEMPERATURE DETECTORS

UNIT - 2

P.G. & E. CO.	DRAWING NUMBER	REVISION
SHEET 7 OF ___ SHEETS	108022	1
	MICROFILM S	1

RM INDEXED REV. 1

THIS DRAWING HAS BEEN REPRODUCED WITHOUT CHANGE FROM ORIGINAL DRAWING
CHANGE NO. ___ DATE 10/8/82 APPROVED ___

LEGEND

HVAC UNIQUE SYMBOLS

(SEE DWG 108001 SHEET 3 FOR PIPING SYMBOLS)

- CENTRIFUGAL FAN
- CENTRIFUGAL FAN (WITH INLET VANES)
- PP — PUMP
- CP — COMPRESSOR
- VANEAXIAL FAN
- PROPELLER OR TUBEAXIAL FAN
- H/E — HEATING COIL
  - E - ELECTRIC
  - S - STEAM
  - (ELECTRIC SHOWN)
- C/W — COOLING COIL
  - W - WATER
  - DX - DIRECT EXPANSION
  - CD - CONDENSER
  - (WATER SHOWN)
- ROUGHING FILTER (PRE-FILTER)
- HEPA FILTER
- CHARCOAL FILTER
- LOUVRE
- DEMISTER (MOISTURE SEPARATOR)

- SUPPLY AIR DUCT - CLASS II & III (PIPING WHEN LINE NUMBER IS PRESENT)
- SUPPLY AIR DUCT - CLASS I SAFETY RELATED VENTILATION SYSTEM.
- EXHAUST OR RETURN AIR DUCT - CLASS II & III VENTILATION
- EXHAUST OR RETURN AIR DUCT - CLASS I SAFETY RELATED VENTILATION SYSTEM.
- IMAGINARY BOUNDARY FOR SYSTEMS, FUTURE EQUIPMENT OUTLINE, OR PROPOSED PIPING LINE.
- CHANGE OF ELEVATION OR LEVEL PROJECTION LINE WITH ORIGIN & DESTINATION
- PROJECTION LINE (SEE PRECEDING) CROSS REFERENCES:
  - ALPHA CHARACTER = RETURN AIR
  - NUMERIC CHARACTER = SUPPLY AIR
- SUPPLY AIR DIFFUSER
- EXHAUST OR RETURN REGISTER
- SUPPLY AIR FLOW
- EXHAUST AIR FLOW
- F — (F) FLOOR OR (C) CEILING OPENING
  - E.G. · C+F MEANS OPENINGS BOTH ON CEILING AND ON FLOOR.
- "WINDOW" OPENING OR OPENING IN WALL
- E — ELECTRIC OPERATOR (SOLID STATE)
- M — MOTOR OPERATOR
- PNEUMATIC OPERATOR
- MANUAL OPERATOR
- CW — COUNTERWEIGHT

- BUTTERFLY VALVE OR POSITIVE SHUT-OFF DAMPER
- DAMPERS (IN WALL & IN DUCTING, RESPECTIVELY)
- BACK DRAFT DAMPER
- FIRE OR SMOKE DAMPER
- EXPANSION VALVE
- THERMOSTATIC AIR VENT
- SIGHT GLASS
- CHARGING VALVE
- FLOW ELEMENT (AIR MONITOR)
- SMOKE DETECTOR
- RUC — RECORDING USAGE CLOCK
- CEL — ANALYSIS SENSOR
  - HVAC: TEMPERATURE & HUMIDITY
  - PIPING: CONDUCTIVITY ELEMENT

HVAC UNIQUE ABBREVIATIONS

(SEE DWG 108001 SHEET 3 FOR PIPING ABBREVIATIONS)

BD OR BDD-___ (4, 36)	BACK DRAFT DAMPER
C-___	COOLING COIL
CH-___	CHILLER
CNTMT	CONTAINMENT
CP-___	COMPRESSOR
CR-___	CONDENSER
CRDM	CONTROL ROD DRIVE MECHANISM
DX	DIRECT EXPANSION COIL
E-___	EXHAUST FAN
EFB-___	EXHAUST FILTER BANK
EFC-___	EXHAUST FILTER CHARCOAL
EFH-___	EXHAUST FILTER HEPA
EFR-___	EXHAUST FILTER ROUGHING
EH-___	ELECTRIC HEATER
EXH.	EXHAUST
F.A.I.	FAIL AS IS
FB-___	FILTER BANK
FC-___	FLEXIBLE CONNECTOR
F.C.	FAIL CLOSE
FD-___	FIRE DAMPER
F.O.	FAIL OPEN
FU-___	FILTER UNIT
HVAC	HEATING, VENTILATION, & AIR CONDITIONING
M-___	MODE DAMPER
MD-___	MANUAL DAMPER
MOD-___	MOTOR OPERATED DAMPER
O/A	OUTSIDE AIR
PP	PUMP
S-___	SUPPLY FAN
SD-___	SMOKE DAMPER
SG-___	SIGHT GLASS
SUP.	SUPPLY
(26) TV-___	FIRE DAMPER OR SMOKE DAMPER

UNIT 2

P.G.&E. CO.	DRAWING NUMBER	REV
SHEET 2 OF SHEETS	108023	36
RMS INDEXED REV ___	MICROFILM	

SCAN 36 JC APPD. JC 36 SCANNED: 36

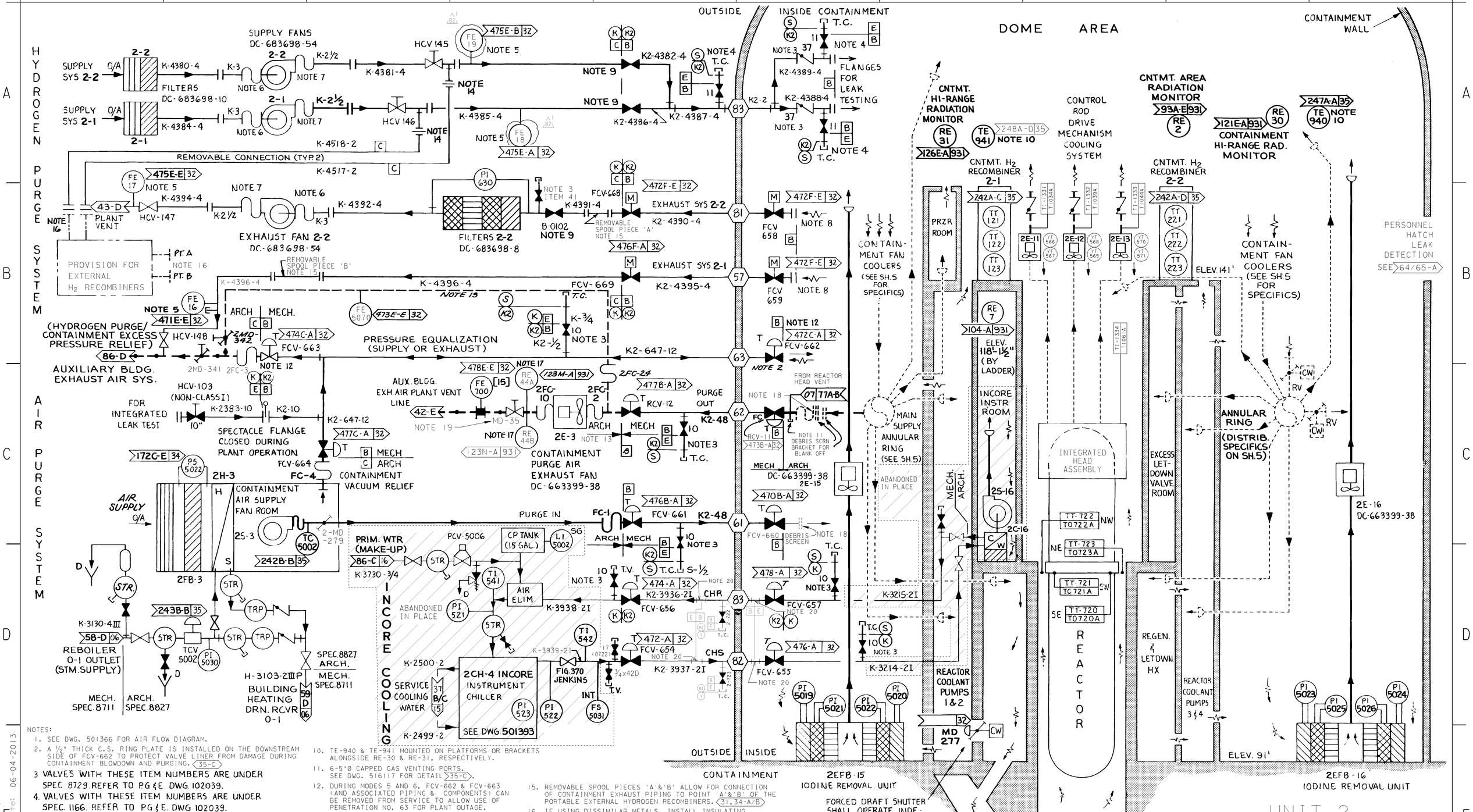

NOTES:

1. SEE DWG. 501366 FOR AIR FLOW DIAGRAM.
2. A ½" THICK C.S. RING PLATE IS INSTALLED ON THE DOWNSTREAM SIDE OF FCV-662 TO PROTECT VALVE LINER FROM DAMAGE DURING CONTAINMENT BLOWDOWN AND PURGING. (35-C)
3. VALVES WITH THESE ITEM NUMBERS ARE UNDER SPEC. 8729. REFER TO P.G.&E. DWG. 102039.
4. VALVES WITH THESE ITEM NUMBERS ARE UNDER SPEC. 1166. REFER TO P.G.&E. DWG. 102039.
5. FOR INSTALLATION, SEE P.G.&E. DWG. 053092, FIG. 224.
6. 3½" I.D. RUBBER HOSE 4R55145.
7. 2¾" I.D. RUBBER HOSE 4R95247.
8. FLANGE WITH PROVISION FOR LEAK RATE TEST OF ISOLATION VALVE SHALL BE REMOVABLE & READILY AVAILABLE FOR PERIODIC TESTS.
9. ANCHOR/DARLING 4" GATE VALVES. (34-A) (33-B) SEE DC-678620-1-2.
10. TE-940 & TE-941 MOUNTED ON PLATFORMS OR BRACKETS ALONGSIDE RE-30 & RE-31, RESPECTIVELY.
11. 6-5"Ø CAPPED GAS VENTING PORTS. SEE DWG. 516117 FOR DETAIL (35-C).
12. DURING MODES 5 AND 6, FCV-662 & FCV-663 (AND ASSOCIATED PIPING & COMPONENTS) CAN BE REMOVED FROM SERVICE TO ALLOW USE OF PENETRATION NO. 63 FOR PLANT OUTAGE. MAINTENACE ACTIVITIES. REF. 663173-158 FOR FABRICATION/INSTALLATION DETAILS AND REQUIREMENTS. (31, 35-C)
13. DUCT (INCLUDING FAN 2E-3 HOUSING) FROM RCV-12 TO MD-35 AND TO 2MD-342 IS DESIGN CLASS II, SEISMIC CATEGORY I.
14. SYMBOL INDICATES BLANKED FLANGE. REMOVE CONSTRUCTION WHEN RECOMBINER IS CONNECTED TO OUTLET LINES. (30/32-A/B)
15. REMOVABLE SPOOL PIECES 'A'&'B' ALLOW FOR CONNECTION OF CONTAINMENT EXHAUST PIPING TO POINT 'A'&'B' OF THE PORTABLE EXTERNAL HYDROGEN RECOMBINERS. (31, 34-A/B)
16. IF USING DISSIMILAR METALS, INSTALL INSULATING FLANGES. (30/31-B)
17. INSTRUMENT IS PIMS SYS. 39. (33-C)
18. DEBRIS SCREENS FOR VALVES FCV-660 AND RCV-11 ARE DESIGN CLASS I. DUCTING AND FLEXIBLE CONNECTION BETWEEN DEBRIS SCREEN AND VALVE RCV-11 ARE DESIGN CLASS I.
19. DAMPER MD-35 IS DESIGN CLASS I AND IS THE BOUNDARY BETWEEN THE PLANT VENT AND THE PURGE DUCTWORK.
20. 2" SW CPLNG'S CONNECTED BY 2⅜" RD STK ASTM A695, ASTM A696 OR EQ.

CONTAINMENT ATMOSPHERE VENTILATION AND A/C PENETRATIONS

DIABLO CANYON POWER PLANT - PG&E CO.
VENTILATION & AIR CONDITIONING SYSTEMS

DRAWING	SHEET	PAGE	REV
108023	3	0	82

DATE	DWN	RE	IV	PROFESSIONAL ENGINEER	PE DISC.	PE#	PE EXP.	
06-04-2013	MNRU	FxC2	FAZI	NOT REQUIRED	N/A	N/A	N/A	REVISED PER DDT-4*87

RASTER=108023s3.dgn
DGN=108023s3.dgn
CAD User: MNRU Date: 06-04-2013
3NPGIC
3 Size

PLANT VENT EXHAUST & MONITORS

AIR PARTICULATE & NOBLE GAS MONITORING

HIGH LEVEL RADIATION MONITORING

PLANT MISC. EXHAUST

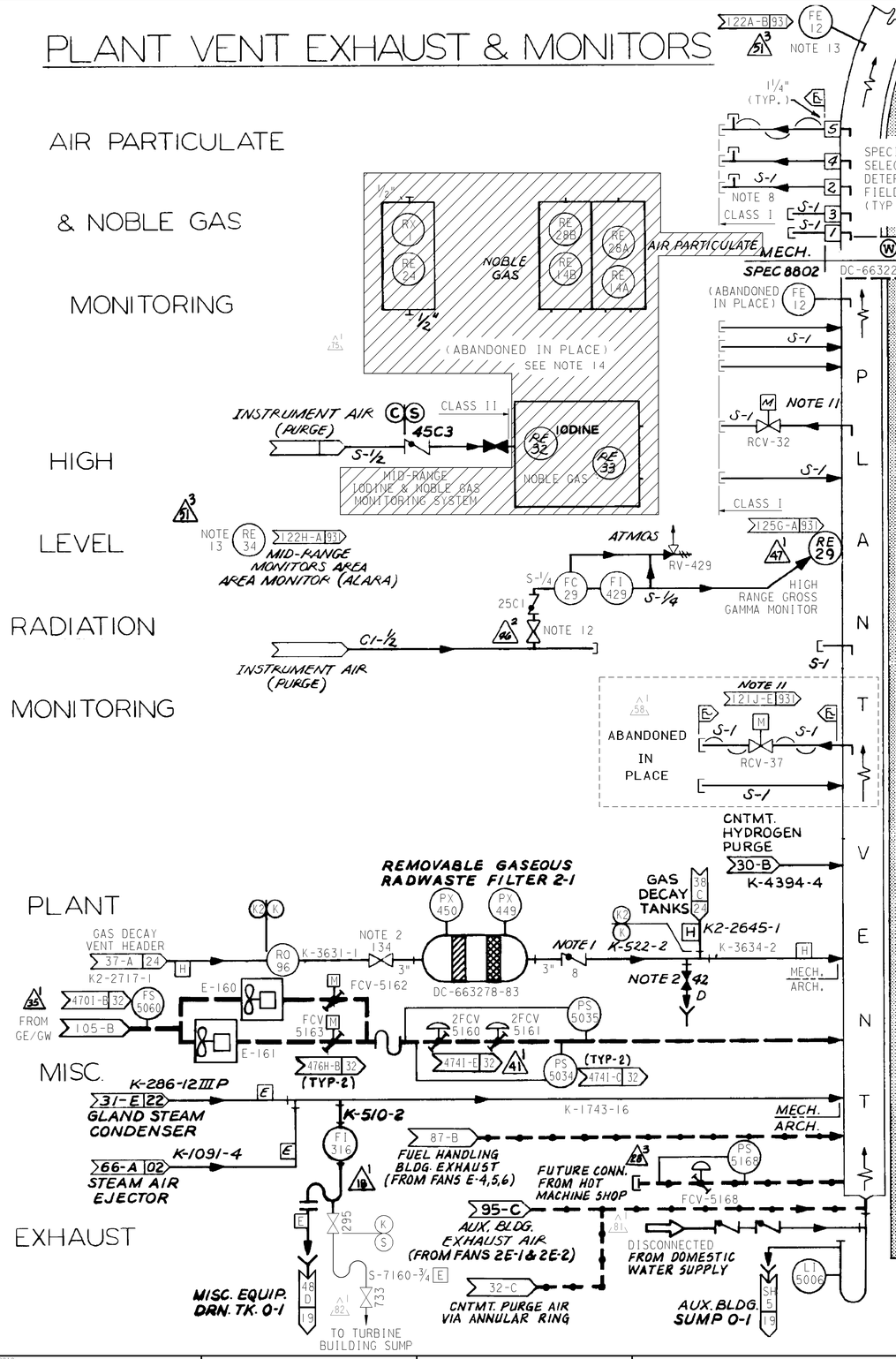

CONTAINMENT ATMOSPHERE MONITORS & SAMPLING

NOTES:

1. VALVE UNDER SPEC 0722, SEE PG&E DWG 102039
2. VALVE UNDER SPEC 8729, SEE PG&E DWG 102039
3. INSTALLED IN REVERSE TO NORMAL FLOW DIRECTION TO MEET CONTAINMENT ISOLATION REQUIREMENTS
4. CONTAINMENT AIR SAMPLE & RETURN TUBING SHALL PASS THROUGH A COMMON 2 " SLEEVE SEE DWG 501915 FOR DETAILS, DWG 501035 FOR A COMPREHENSIVE LISTING OF MECHANICAL & ELECTRICAL PENETRATIONS
5. END PROVISION FOR LEAK RATE TESTING
6. DELETED
7. ELBOW TURNED DOWN (KEEP, CLEAR)
8. ISOLATION VALVES TO BE INSTALLED NEAR RADIATION ELEMENTS
9. QUICK DISCONNECT COUPLINGS FOR TRITIUM MONITOR 47A SEE DWG 049099 FIG 950 FOR INSTALLATION DETAIL
10. VALVE UNDER SPEC 8179, PO #013226, DC 663316-111
11. RCV-32 AND RCV-37 ARE ABANDONED IN PLACE, FAILED OPEN 43-B/C
12. WHITEY VALVE MODEL B44F4 42-C
13. INSTRUMENT IS PIMS SYS 39 43-A 41-C
14. RE-24, RE-28A/B, RE-14A/B, RE-32 & RE-33 ARE ABANDONED IN PLACE. REFER TO DWG. 049099 SH.7A, 7B & 11. 42-A

UNIT 2

DIABLO CANYON POWER PLANT - PG&E CO.
VENTILATION & AIR CONDITIONING SYSTEMS

DRAWING	SHEET	PAGE	REV
108023	4	0	85

DATE	DWN	RE	IV	PROFESSIONAL ENGINEER	PE DISC.	PE#	PE EXP.	
08-03-2010	MNRU	FxC2		KERSI J. DALAL	MECHANICAL	M 16690	3/31/2012	REVISED PER DFT-7*850-0

RASTER=8023s4.dgn
DGN=8023s4.dgn
CAD User: MNRU Date: 08-03-2010

MODEL 3 Size

NOTES

1. ALL PIPING ON THIS SHEET SHALL BE PG&E CLASS "E"
2. THREE DRAINS FROM MOISTURE SEPARATOR AND HEPA FILTER SECTIONS ARE PLUGGED WITH REMOVABLE TEST PLUG (52,55,56,58,59-B)
3. LEVEL TRANSMITTERS MUST BE 10 FEET APART (58-B)
4. DAMPERS ARE NO LONGER FLOW CONTROL DAMPERS (FCV) ACTUATORS HAVE BEEN REMOVED EXISTING TAG NUMBERS ARE MAINTAINED FOR SPECIFIC DAMPER IDENTIFICATION. (52-A)
5. VACUUM RELIEF DAMPERS MD-271 THRU MD-274 ARE DESIGN CLASS I
6. THE CONTAINMENT ANNULAR RING DUCT (ANNULUS) IS DESIGN CLASS II, SEISMIC CATEGORY I.
7.
8. PROVISION FOR QUICK REMOVAL OF DUCT (53-C)
9. PROVISIONS FOR MOISTURE SEPARATORS, HEPA FILTERS CARBON FLTRS & ROUGHING FLTRS - NOT INSTALLED.
10. DAMPERS NORMALLY CLOSED.
11. DAMPERS LOCKED OPEN (TYP)
12. MD-262 THRU MD-266 INLET VANE DAMPERS ARE THROTTLED

REFERENCES

1. REACTOR CONTAINMENT FAN COOLERS = DC-663079-22
2. FAN COOLER ENCLOSURE = DC-663079-4 & 23
3. FAN MOTOR = DC-663079-7 & 8
4. FAN = DC-663079-7 & 8
5. ANNULUS DUCT LAYOUT = PG&E DWG NO 501389 & 501390
6. BACKDRAFT DAMPERS MD 262 THRU MD-266 = DC-663079-37

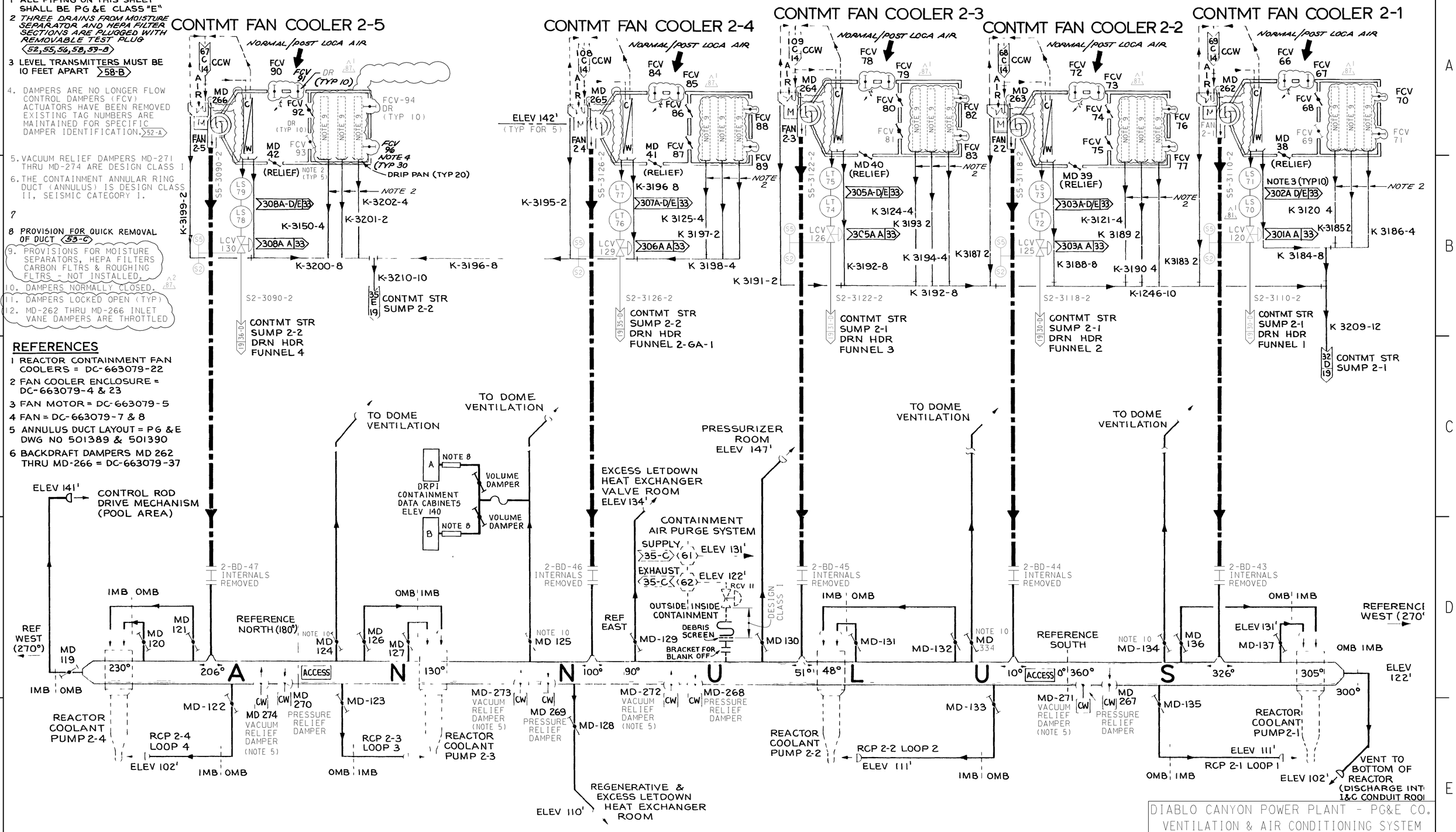

CONTAINMENT AIR CIRCULATION

UNIT 2

DIABLO CANYON POWER PLANT - PG&E CO.
VENTILATION & AIR CONDITIONING SYSTEM

DRAWING	SHEET	PAGE	REV
108023	5	0	87

DATE	DWN	RE	IV	PROFESSIONAL ENGINEER	PE DISC.	PE#	PE EXP.	
10-07-2013	MNRU	FxC2	KJD3	NOT REQUIRED	N/A	N/A	N/A	REVISED PER DFT-7*2260

RASTER=802355.dgn
DGN=802355.dgn
CAD User: MNRU Date: 10-07-2013

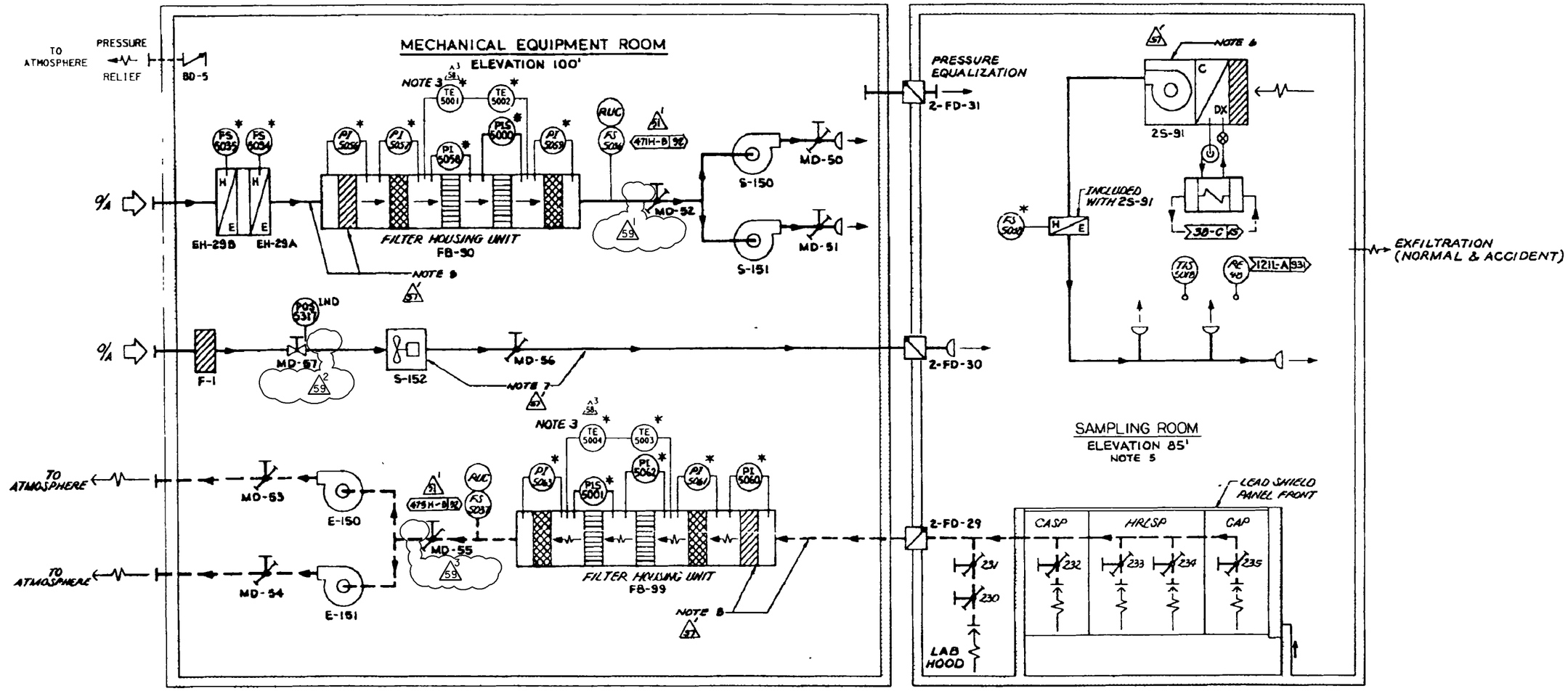

NOTES

1. FOR LEGEND, ABBREVIATIONS, INDEX, AND GENERAL NOTES, SEE 108023 SHEET 2 AND 108001 SHEET 3
2. SEE DRAWING 512904 FOR AIR FLOW DIAGRAM
3. CONAX "RTD" ASSEMBLY (RTD-43Y2-SS25TD) IS PROVIDED WITH MOORE RBA/2W ALARM SWITCH FOR FIRE DETECTION. LOCAL ALARM IS INITIATED WITH A TEMPERATURE RISE TO 150°F. "RTD" - RESISTANCE TEMPERATURE DETECTOR SEE DC-663278-622 FOR REFERENCE (72/73-A) (73/74-C)
4.
5. SEE DRAWING 108011 SHEET 6 (60-B11) FOR SAMPLING ROOM PHYSICAL LAYOUT
6. FOR NORMAL A/C SYSTEM, EQUIPMENT ARE DESIGNATED DESIGN CLASS II, BUT SUPPORTED SO THAT THEY WILL REMAIN IN PLACE AFTER A HOSGRI EVENT, NOT NECESSARY TO FUNCTION AFTER THE EARTHQUAKE (77-A)
7. FOR NORMAL SUPPLY AIR SYSTEM, DUCT AND DUCT SUPPORTS ARE QUALIFIED TO SEISMIC CLASS I CRITERIA, EQUIPMENT ARE DESIGNATED DESIGN CLASS II, BUT SUPPORTED SO THAT THEY WILL REMAIN IN PLACE AFTER A HOSGRI EVENT NOT NECESSARY TO FUNCTION AFTER THE EARTHQUAKE (78-C)
8. FOR EMERGENCY VENTILATION SYSTEM, EQUIPMENT ARE EVALUATED TO REMAIN INTACT AFTER BEING SUBJECTED TO A POSTULATED HOSGRI EVENT. CALCULATED STRESSES ARE TO BE WITHIN THE ALLOWABLES FOR DESIGN CLASS I EQUIPMENT. FOR EMERGENCY OUTDOOR, DUCT AND DUCT SUPPORTS ARE QUALIFIED TO SEISMIC CLASS I CRITERIA 72-B (79-D)

POST LOCA SAMPLING SYSTEM HVAC

UNIT 2

P G & E CO.		108023	REV. 59
SHEET 7	PAGE 0		

5/12/01	ADMI	RHSI	-	RANJIT A. LOVELL	MECHANICAL	M 22233	12/31/2003	Revised per FCT 025595
DATE	DWN	RE	IV	PROFESSIONAL ENGINEER	PE DISC.	PE#	PE EXP.	

1NPG2ND

CAD User:ADMI Date: 5-07-2001
DGN=001E1283.DGN
RASTER=001E1283.TIF

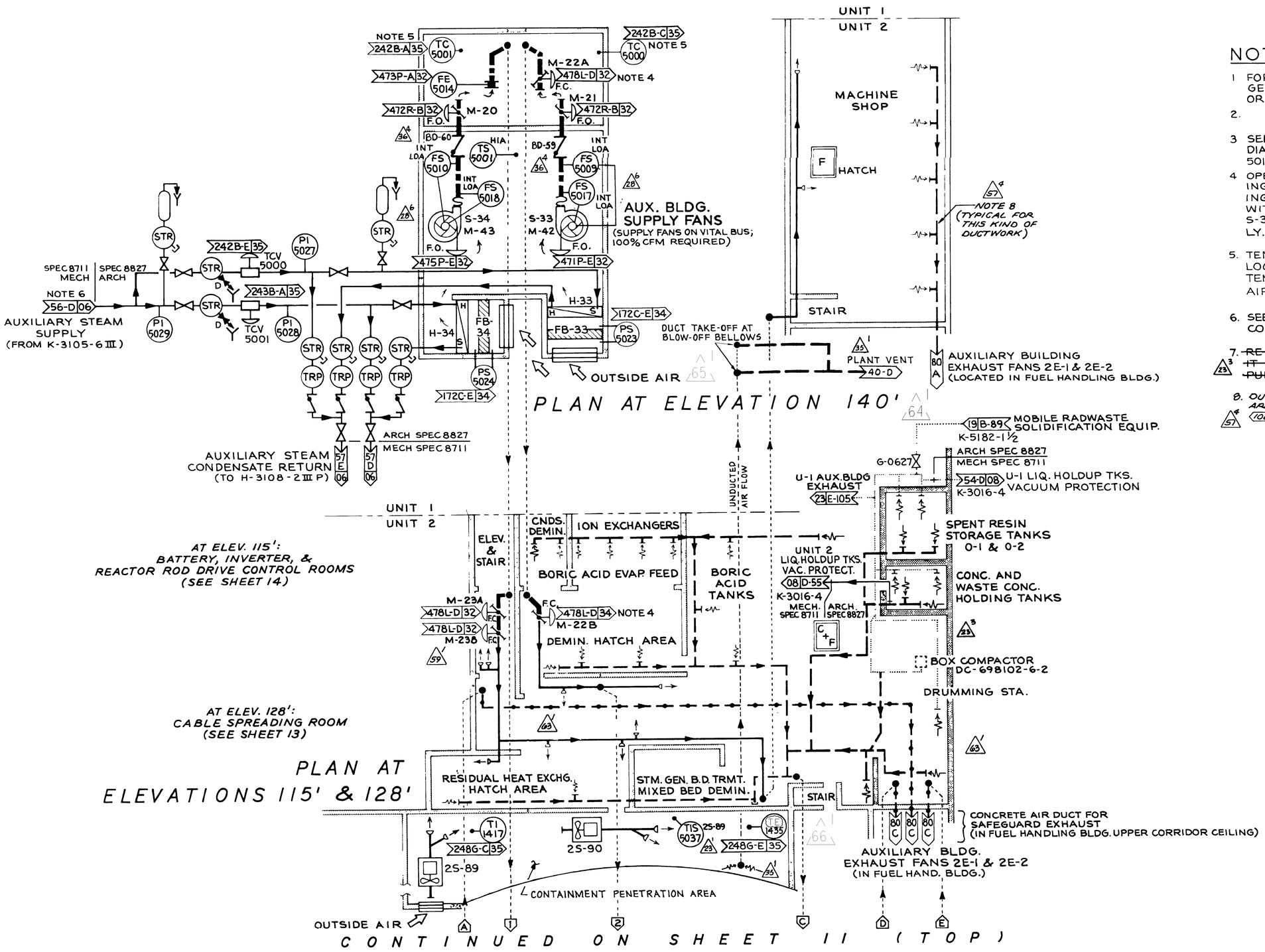

NOTES:

1. FOR LEGEND, ABBREVIATIONS, INDEX, AND GENERAL NOTES, SEE SHEET 2 (108023) OR SHEET 3 (108001).
2.
3. SEE DRAWING 501365 FOR AIR FLOW DIAGRAM. SEE DRAWINGS 59361, 59363, 501370 & 501372 FOR DUCT LAYOUT.
4. OPEN ONLY WHEN SAFEGUARDS AND BUILDING VENTILATION SYSTEMS ARE OPERATING SIMULTANEOUSLY (SUPPLY FAN S-34 WITH EXHAUST FAN 2E-1, & SUPPLY FAN S-33 WITH EXHAUST FAN 2E-2, RESPECTIVELY.) >103-A> >103-D>
5. TEMPERATURE CONTROLLERS ARE LOCATED IN SUPPLY FAN ROOMS. ONLY TEMPERATURE BULB IS LOCATED IN THIS AIR PLENUM >102-A> >104-A>.
6. SEE DWG. 59437 DETAIL 3 FOR HEATING COIL PIPING. >100-B>
7. ~~RE-8 IS COMMON AND IS SHOWN ON UNIT 1. IT IS SHOWN HERE ON UNIT 2 FOR REFERENCE PURPOSES ONLY. >106-D>~~
8. DUCTWORK IS DESIGN CLASS II; DUCT AND DUCT SUPPORTS ARE QUALIFIED TO SEISMIC CLASS I CRITERIA. <106-8>

AUXILIARY BUILDING HVAC (ENGINEERED SAFETY EQUIPMENT AREA)

UNIT 2

DIABLO CANYON POWER PLANT - PG&E CO.
VENTILATION & AIR CONDITIONING SYSTEMS

DRAWING	SHEET	PAGE	REV
108023	10	0	66

DATE	DWN	RE	IV	PROFESSIONAL ENGINEER	PE DISC.	PE#	PE EXP.	
08-16-2011	AJFJ	FxC2		KERSI J. DALAL	MECHANICAL	M 16690	3/31/2012	REVISED PER DAS-6*428

RASTER=108023s10p0.dgn
DGN=108023s10p0.dgn
CAD User: AJFJ Date: 08-16-2011

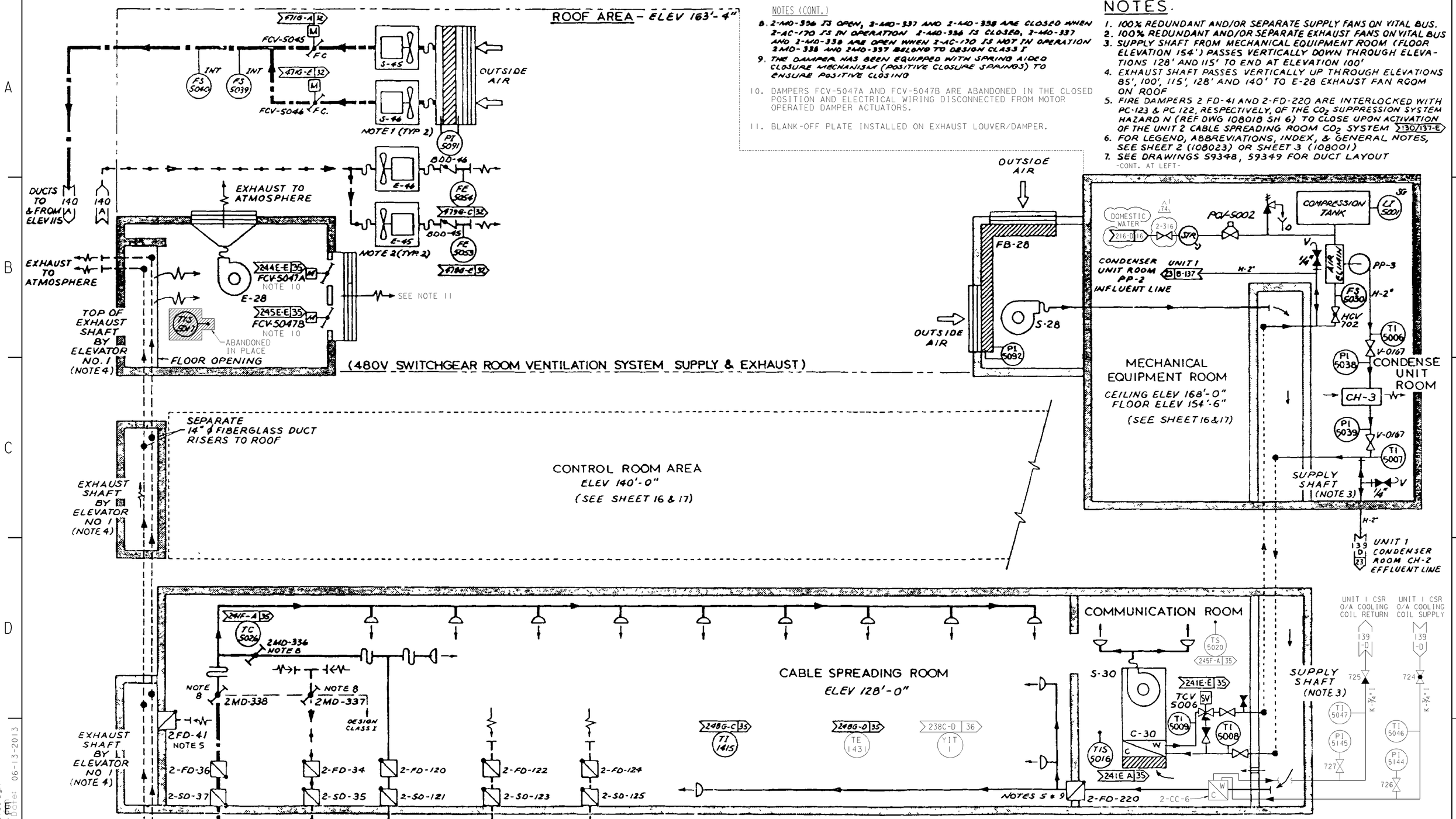

NOTES (CONT.)

8. 2-MD-336 IS OPEN, 2-MD-337 AND 2-MD-338 ARE CLOSED WHEN 2-AC-170 IS IN OPERATION 2-MD-336 IS CLOSED, 2-MD-337 AND 2-MD-338 ARE OPEN WHEN 2-AC-170 IS NOT IN OPERATION 2MD-338 AND 2MD-337 BELONG TO DESIGN CLASS I
9. THE DAMPER HAS BEEN EQUIPPED WITH SPRING AIDED CLOSURE MECHANISM (POSITIVE CLOSURE SPRINGS) TO ENSURE POSITIVE CLOSING
10. DAMPERS FCV-5047A AND FCV-5047B ARE ABANDONED IN THE CLOSED POSITION AND ELECTRICAL WIRING DISCONNECTED FROM MOTOR OPERATED DAMPER ACTUATORS.
11. BLANK-OFF PLATE INSTALLED ON EXHAUST LOUVER/DAMPER.

NOTES.

1. 100% REDUNDANT AND/OR SEPARATE SUPPLY FANS ON VITAL BUS.
2. 100% REDUNDANT AND/OR SEPARATE EXHAUST FANS ON VITAL BUS
3. SUPPLY SHAFT FROM MECHANICAL EQUIPMENT ROOM (FLOOR ELEVATION 154') PASSES VERTICALLY DOWN THROUGH ELEVATIONS 128' AND 115' TO END AT ELEVATION 100'
4. EXHAUST SHAFT PASSES VERTICALLY UP THROUGH ELEVATIONS 85', 100', 115', 128' AND 140' TO E-28 EXHAUST FAN ROOM ON ROOF
5. FIRE DAMPERS 2 FD-41 AND 2-FD-220 ARE INTERLOCKED WITH PC-123 & PC 122, RESPECTIVELY, OF THE CO_2 SUPPRESSION SYSTEM HAZARD N (REF DWG 108018 SH 6) TO CLOSE UPON ACTIVATION OF THE UNIT 2 CABLE SPREADING ROOM CO_2 SYSTEM 130/137-E
6. FOR LEGEND, ABBREVIATIONS, INDEX, & GENERAL NOTES, SEE SHEET 2 (108023) OR SHEET 3 (108001)
7. SEE DRAWINGS 59348, 59349 FOR DUCT LAYOUT

-CONT. AT LEFT-

AUX BLDG : CONDENSER UNIT ROOM, CABLE SPREADING ROOM, 480V SWITCHGEAR ROOM SUPPLY & EXHAUST

UNIT 2

DIABLO CANYON POWER PLANT - PG&E CO.
VENTILATION & AIR CONDITIONING SYSTEMS

DRAWING	SHEET	PAGE	REV
108023	13	0	74

DATE	DWN	RE	IV	PROFESSIONAL ENGINEER	PE DISC.	PE #	PE EXP.	
06-13-2013	ZNS4	FxC2	KJD3	NOT REQUIRED	N/A	N/A	N/A	REVISED PER DFT-7*2150

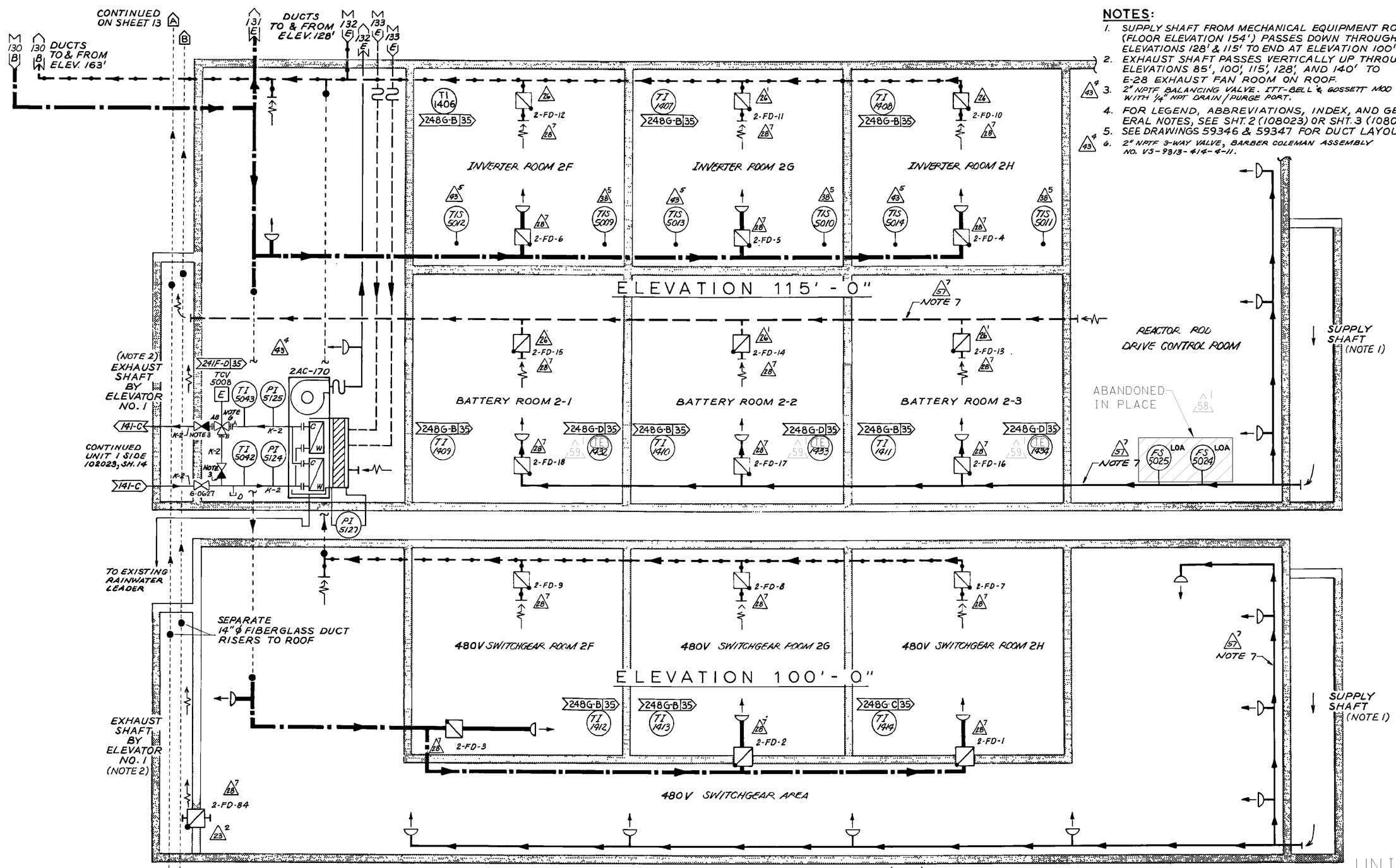

NOTES:

1. SUPPLY SHAFT FROM MECHANICAL EQUIPMENT ROOM (FLOOR ELEVATION 154') PASSES DOWN THROUGH ELEVATIONS 128' & 115' TO END AT ELEVATION 100'.
2. EXHAUST SHAFT PASSES VERTICALLY UP THROUGH ELEVATIONS 85', 100', 115', 128', AND 140' TO E-28 EXHAUST FAN ROOM ON ROOF.
3. 2" NPTF BALANCING VALVE. ITT-BELL & GOSSETT MOD CB-2, WITH 1/4" NPT DRAIN/PURGE PORT.
4. FOR LEGEND, ABBREVIATIONS, INDEX, AND GENERAL NOTES, SEE SHT. 2 (108023) OR SHT. 3 (108001).
5. SEE DRAWINGS 59346 & 59347 FOR DUCT LAYOUT.
6. 2" NPTF 3-WAY VALVE, BARBER COLEMAN ASSEMBLY NO. V3-9313-414-4-11.

AUXILIARY BUILDING: 480V SWITCHGEAR, BATTERY, INVERTER, AND REACTOR ROD DRIVE CONTROL ROOMS

NOTES (CON'T.)

7. DUCTWORK IS DESIGN CLASS II; DUCT AND DUCT SUPPORTS ARE SEISMICALLY QUALIFIED FOR THE HOSGRI EARTHQUAKE AND DDE.

UNIT 2

DIABLO CANYON POWER PLANT - PG&E CO.
COMPONENT COOLING WATER SYSTEM

DRAWING	SHEET	PAGE	REV
108023	14	0	59

DATE	DWN	RE	IV	PROFESSIONAL ENGINEER	PE DISC.	PE#	PE EXP.	
08-16-2011	AJFJ	FxC2		KERSI J. DALAL	MECHANICAL	M 16690	3/31/2012	REVISED PER DAS-6*428

RASTER=108023s14.dgn
DGN=108023s14.dgn
CAD User: AJFJ Date: 08-16-2011

NOTE:
1. THE VENTILATION COAXIAL PIPE (VENT SHAFT EXTENSION) IS DESIGN CLASS II, SEISMIC CATEGORY I (202-C)

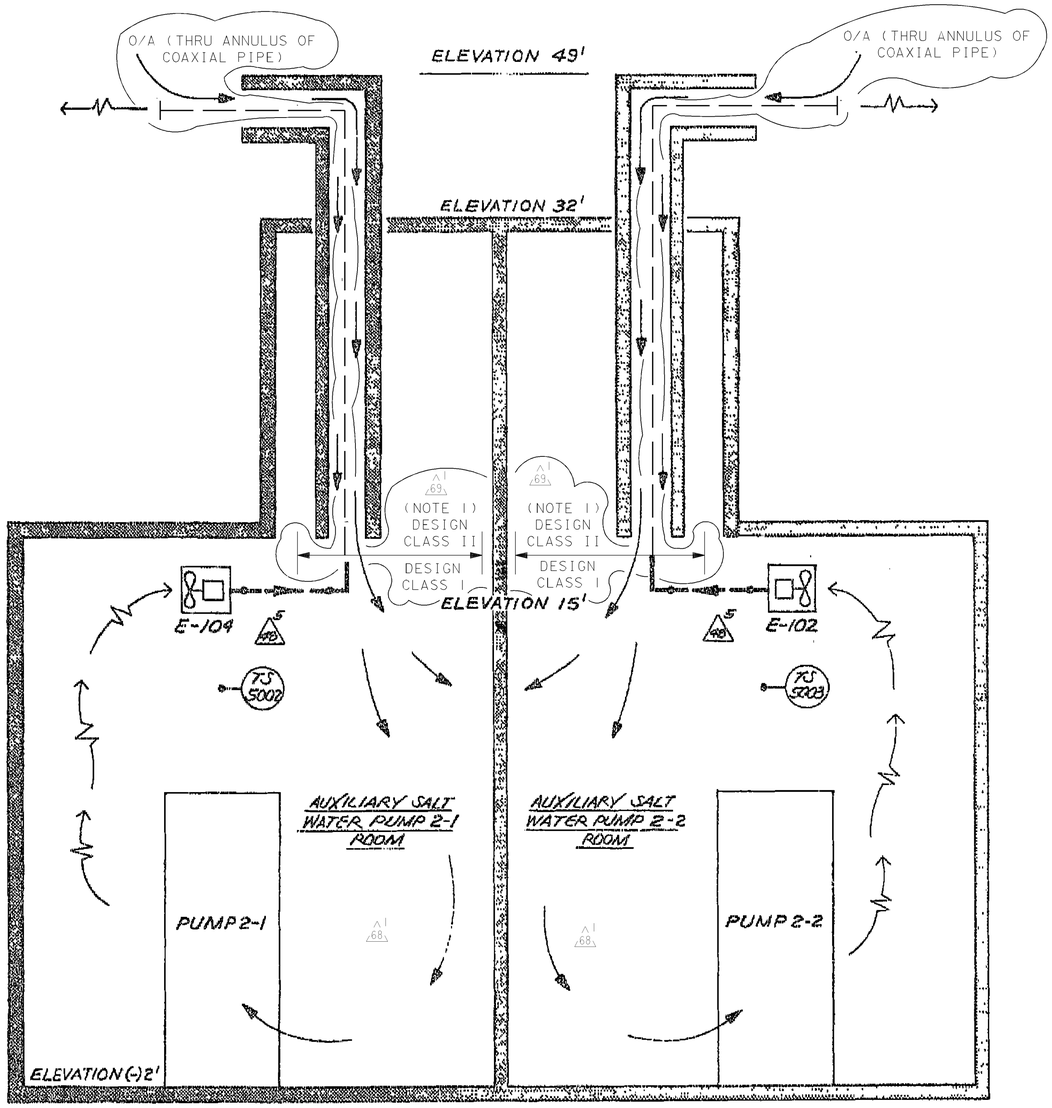

INTAKE STRUCTURE (UNIT 2)

AUXILIARY SALTWATER PUMP ROOM VENTILATION

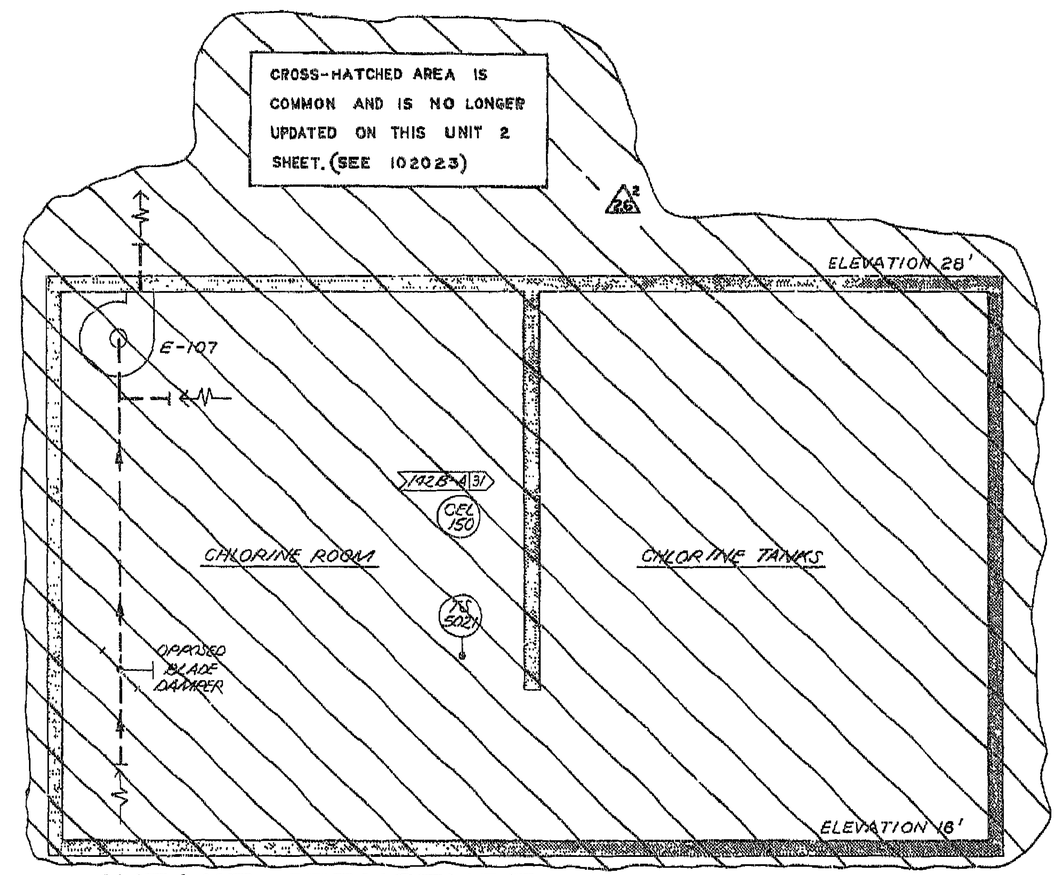

INTAKE STRUCTURE (COMMON - UNIT 1 & 2)

CHLORINATOR, EVAPORATOR, & CHLORINE TANKS ROOM

(ELEVATION 18'-0")

UNIT 2

P G & E CO.	108023	REV. 69
SHEET 20 OF SHEETS		

CAD User:ROAI Date: 4-16-1997
DGN-001E1267.DGN
RASTER-001E1267.TIF

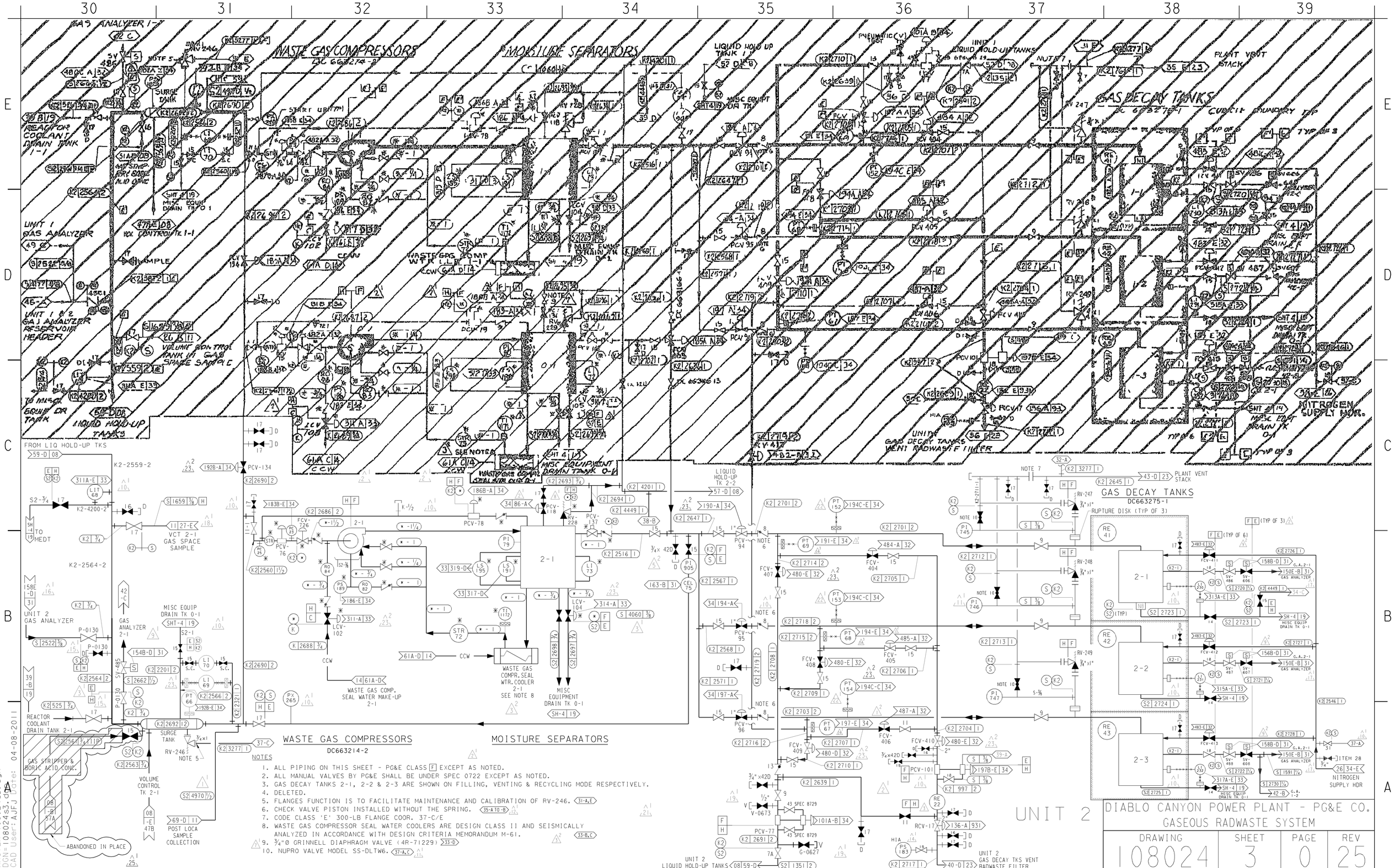

DATE	DWN	RE	IV	PROFESSIONAL ENGINEER	PE DISC.	PE#	PE EXP.	
04-08-2011	AJFJ	FXC2		KERSI J. DALAL	MECHANICAL	M 16690	3/31/2012	REVISED PER DDN-2*560

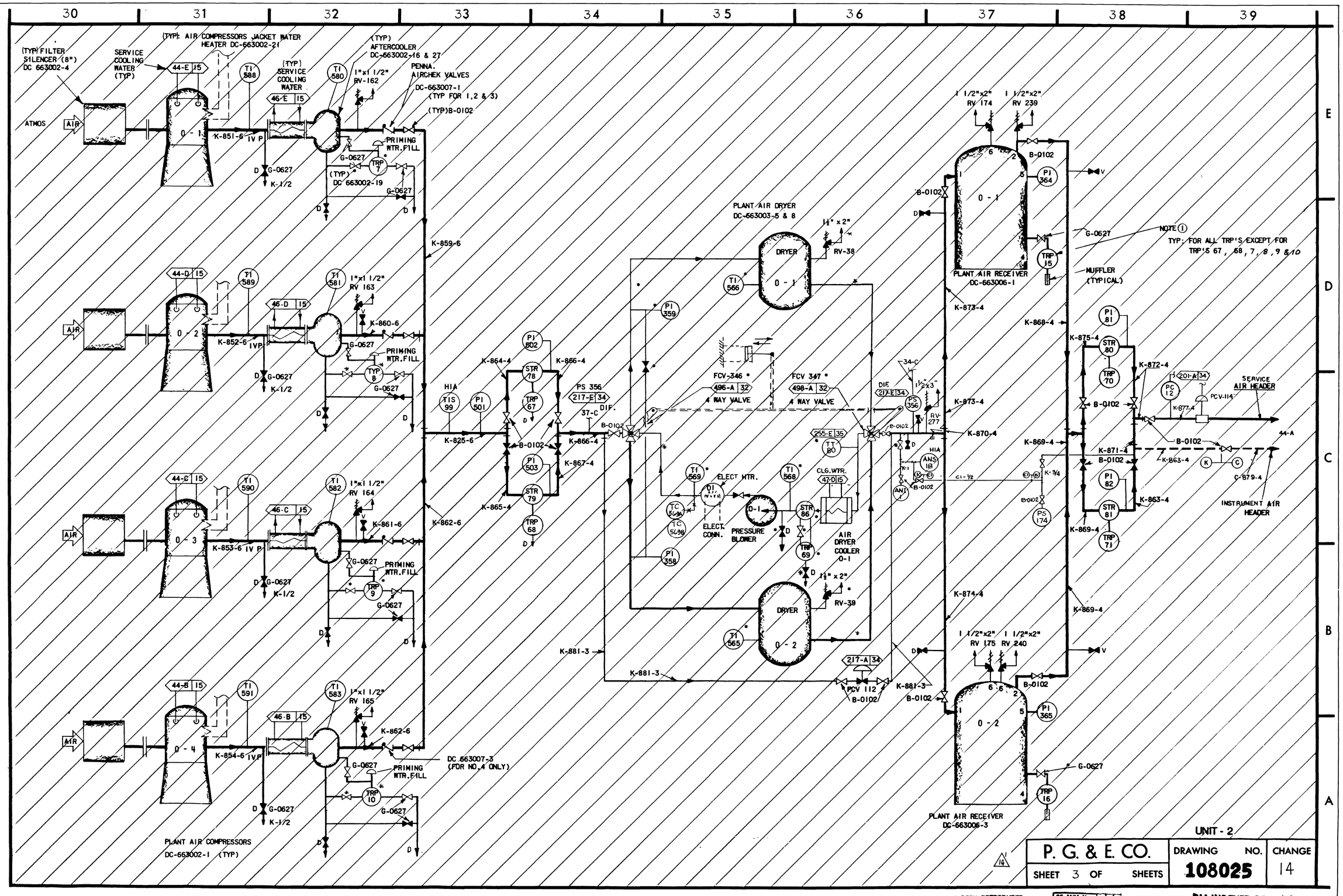
30
31
32
33
34
35
36
37
38
39
E
D
C
B
A
(TYP) FILTER SILENCER (8") DC 663002-4
SERVICE COOLING WATER (TYP)
(TYP): AIR COMPRESSORS JACKET WATER HEATER DC-663002-21
(TYP) SERVICE COOLING WATER
(TYP) AFTERCOOLER DC-663002-16 & 27
PENNA. AIRCHEK VALVES DC-663007-1 (TYP FOR 1,2 & 3)
(TYP)B-0102
1"x1 1/2" RV-162
1"x1 1/2" RV 163
1"x1 1/2" RV 164
1"x1 1/2" RV 165
PRIMING WTR. FILL
(TYP) DC 663002-19
DC 663007-3 (FOR NO. 4 ONLY)
PLANT AIR COMPRESSORS DC-663002-1 (TYP)
PLANT AIR DRYER DC-663003-5 & 8
DRYER
PLANT AIR RECEIVER DC-663006-1
PLANT AIR RECEIVER DC-663006-3
1 1/2"x2" RV 174
1 1/2"x2" RV 239
1 1/2"x2" RV 175
1 1/2"x2" RV 240
1 1/2" x 2"
RV-38
RV-39
FCV-346
4 WAY VALVE
FCV 347
ELECT. HTR.
ELECT. CONN.
PRESSURE BLOWER
CLG. WTR.
AIR DRYER COOLER 0-1
PCV 112
SERVICE AIR HEADER
INSTRUMENT AIR HEADER
MUFFLER (TYPICAL)
NOTE (1) TYP: FOR ALL TRP'S EXCEPT FOR TRP'S 67, 68, 7, 8, 9 & 10
UNIT - 2
P. G. & E. CO.
SHEET 3 OF SHEETS
DRAWING NO. 108025
CHANGE 14
RM INDEXED REV. 14
THIS DRAWING HAS BEEN REPRODUCED WITHOUT CHANGE FROM ORIGINAL DRAWING
CHANGE NO. 1 DATE 5-4-14 APPROVED SIC
35 M/M Neg. 14
APPD I&C 14
SCAN 14 IC

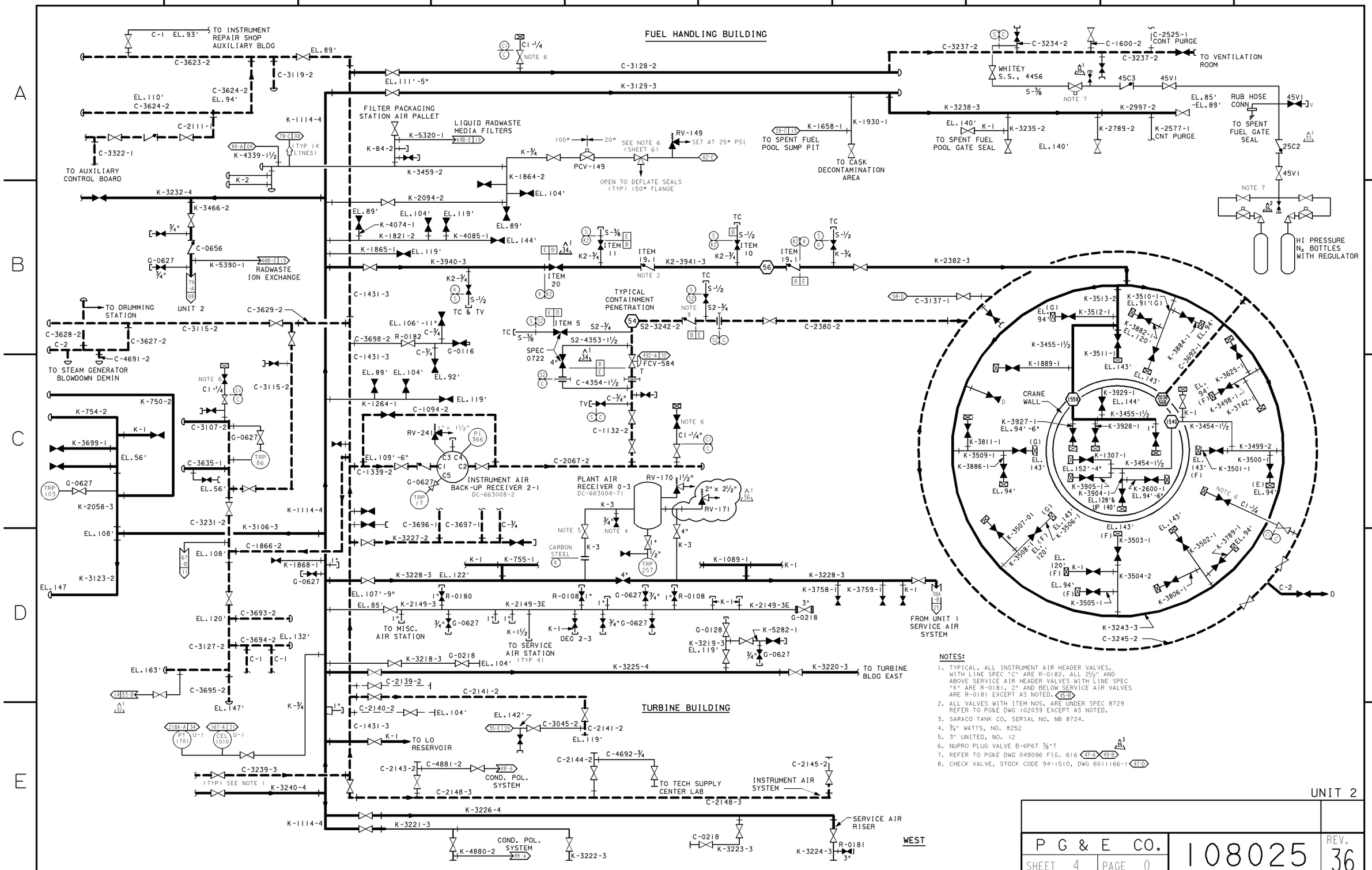

NOTES:

1. TYPICAL, ALL INSTRUMENT AIR HEADER VALVES, WITH LINE SPEC "C" ARE R-0182. ALL 2½" AND ABOVE SERVICE AIR HEADER VALVES WITH LINE SPEC "K" ARE R-0181. 2" AND BELOW SERVICE AIR VALVES ARE R-0181 EXCEPT AS NOTED. 15-B
2. ALL VALVES WITH ITEM NOS. ARE UNDER SPEC 8729 REFER TO PG&E DWG 102039 EXCEPT AS NOTED.
3. SARACO TANK CO. SERIAL NO. NB 8724.
4. ¾" WATTS, NO. 8252
5. 3" UNITED, NO. 12
6. NUPRO PLUG VALVE B-6P6T ⅜"T
7. REFER TO PG&E DWG 049096 FIG. 616 47-A 49-B
8. CHECK VALVE, STOCK CODE 94-1510, DWG 6011166-1 47-D

UNIT 2

P G & E CO.		108025	REV. 36
SHEET 4	PAGE 0		

DATE	DWN	RE	IV	PROFESSIONAL ENGINEER	PE DISC.	PE#	PE EXP.	
5/2/02	RXG2	RHSI	-	KERSI J. DALAL	MECHANICAL	M 16690	3/31/2004	Revised per FCT 026461

CAD User:rxg2 Date: 5-02-2002
DGN=8025S4.DGN

INPGIC

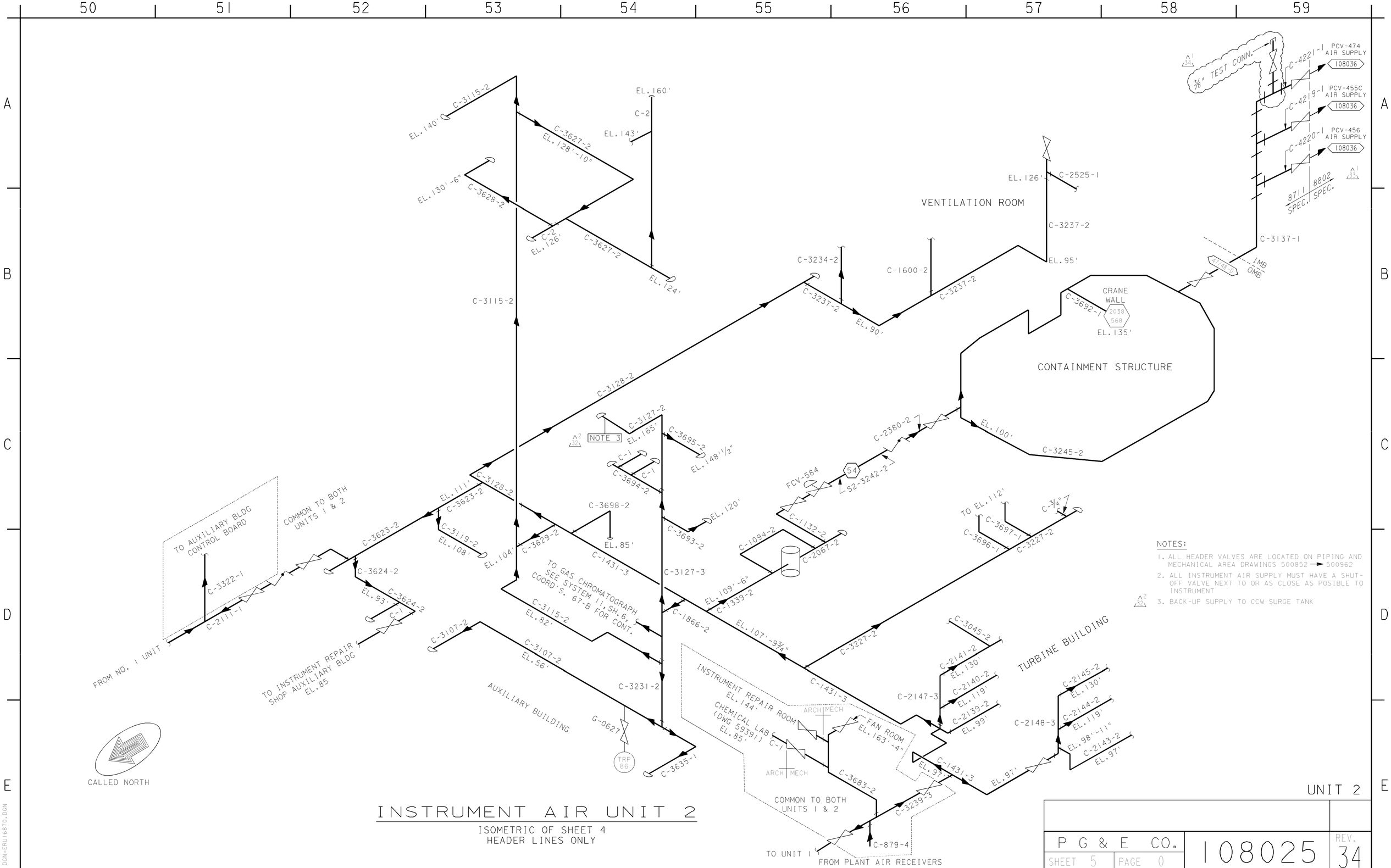

NOTES:

1. ALL HEADER VALVES ARE LOCATED ON PIPING AND MECHANICAL AREA DRAWINGS 500852 → 500962
2. ALL INSTRUMENT AIR SUPPLY MUST HAVE A SHUT-OFF VALVE NEXT TO OR AS CLOSE AS POSIBLE TO INSTRUMENT
3. BACK-UP SUPPLY TO CCW SURGE TANK

INSTRUMENT AIR UNIT 2

ISOMETRIC OF SHEET 4
HEADER LINES ONLY

UNIT 2

P G & E CO.		108025	REV. 34
SHEET 5	PAGE 0		

2/13/03	RHSI	FXC2	-	FRANCIS C. LING	MECHANICAL	M 16098	12/31/2003	Revised per FCT 027273
DATE	DWN.	RE	IV	PROFESSIONAL ENGINEER	PE DISC.	PE#	PE EXP.	

CAD User:RHSI Date: 2-12-2003
DGN=ERU16870.DGN

INPGIC

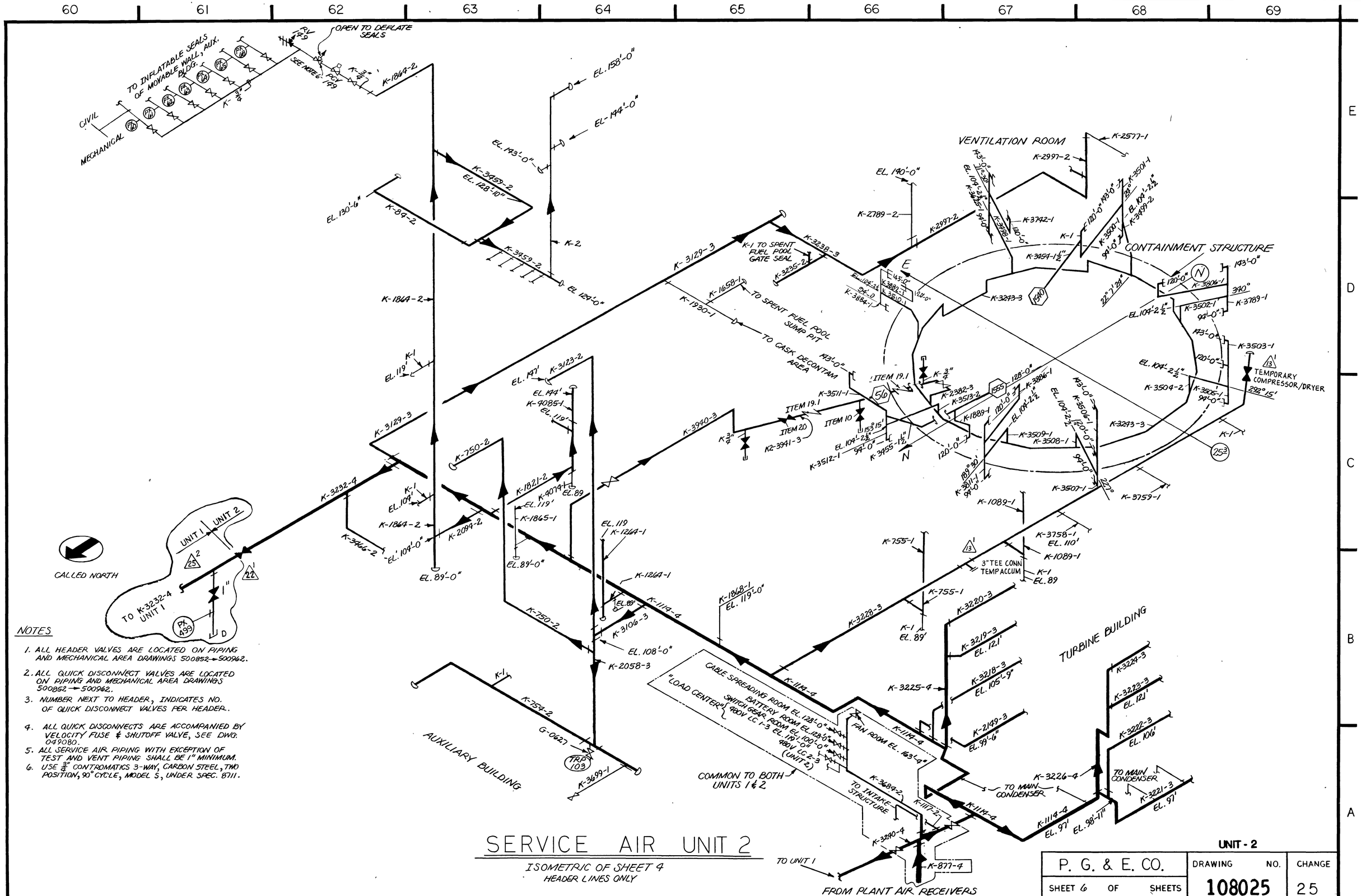
60
61
62
63
64
65
66
67
68
69
E
D
C
B
A
OPEN TO DEFLATE SEALS
TO INFLATABLE SEALS OF MOVABLE WALL, AUX. BLDG.
CIVIL
MECHANICAL
SEE NOTE 6
EL. 158'-0"
EL. 144'-0"
EL. 143'-0"
EL. 128'-10"
EL. 130'-6"
EL. 129'-0"
EL. 119'
EL. 104'
EL. 89'-0"
EL. 108'-0"
EL. 119
EL. 89'
EL. 119'-0"
EL. 105'-9"
EL. 121'
EL. 106'
EL. 97'
EL. 98'-11"
EL. 110'
EL. 99'-6"
EL. 190'-0"
VENTILATION ROOM
CONTAINMENT STRUCTURE
TEMPORARY COMPRESSOR/DRYER
K-1 TO SPENT FUEL POOL GATE SEAL
TO SPENT FUEL POOL SUMP PIT
TO CASK DECONTAM AREA
ITEM 19.1
ITEM 10
ITEM 20
3" TEE CONN TEMP ACCUM
TURBINE BUILDING
AUXILIARY BUILDING
CABLE SPREADING ROOM EL. 128'-0"
BATTERY ROOM EL. 128'-0"
SWITCH GEAR ROOM EL. 100'-0"
"LOAD CENTER" 480V LC 1-3 EL. 119'-0"
480V LC 2-3 (UNIT 2)
FAN ROOM EL. 163'-4"
COMMON TO BOTH UNITS 1 & 2
TO INTAKE STRUCTURE
TO MAIN CONDENSER
TO UNIT 1
FROM PLANT AIR RECEIVERS
UNIT 1
UNIT 2
TO K-3232-4 UNIT 1
CALLED NORTH
K-2577-1
K-2997-2
K-2789-2
K-3742-1
K-3499-2
K-3806-1
K-3789-1
K-3503-1
K-3504-2
K-3505-1
K-3506-1
K-3509-1
K-3508-1
K-3507-1
K-3759-1
K-3758-1
K-1089-1
K-3243-3
K-3232-4
K-3129-3
K-3238-3
K-3235-2
K-1658-1
K-1930-1
K-3940-3
K-3941-3
K-2941-3
K-3511-1
K-3512-1
K-3455-1½"
K-2382-3
K-3513-2
K-1889-1
K-3886-1
K-3811-1
K-3459-2
K-84-2
K-1864-2
K-750-2
K-3123-2
K-9085-1
K-1821-2
K-9074-1
K-1865-1
K-2094-2
K-3466-2
K-1264-1
K-1119-4
K-1868-1
K-3106-3
K-2058-3
K-3228-3
K-3220-3
K-3219-3
K-3218-3
K-2149-3
K-3225-4
K-3224-3
K-3223-3
K-3222-3
K-3226-4
K-3221-3
K-3689-2
K-1117-2
K-3290-4
K-877-4
K-754-2
G-0627
K-3699-1
K-755-1
K-1089-1
K-1
PX 499
PX 129
PCV 129
TRP 103
NOTES
1. ALL HEADER VALVES ARE LOCATED ON PIPING AND MECHANICAL AREA DRAWINGS 500852→500962.
2. ALL QUICK DISCONNECT VALVES ARE LOCATED ON PIPING AND MECHANICAL AREA DRAWINGS 500852→500962.
3. NUMBER NEXT TO HEADER, INDICATES NO. OF QUICK DISCONNECT VALVES PER HEADER.
4. ALL QUICK DISCONNECTS ARE ACCOMPANIED BY VELOCITY FUSE & SHUTOFF VALVE, SEE DWG. 049080.
5. ALL SERVICE AIR PIPING WITH EXCEPTION OF TEST AND VENT PIPING SHALL BE 1" MINIMUM.
6. USE ¾" CONTROMATICS 3-WAY, CARBON STEEL, TWO POSITION, 90° CYCLE, MODEL S, UNDER SPEC. 8711.
SERVICE AIR UNIT 2
ISOMETRIC OF SHEET 4
HEADER LINES ONLY
UNIT - 2
P. G. & E. CO.
SHEET 6 OF SHEETS
DRAWING NO. 108025
CHANGE 25
SCAN 25 IC
THIS DRAWING HAS BEEN REPRODUCED WITHOUT CHANGE FROM ORIGINAL DRAWING
CHANGE NO. DATE APPROVED
RM INDEXED REV
S-25
APPD. I&C 25
35 M/M NEG

NOTES:

1. ALL PIPING ON THIS SHEET SHALL BE PG&E CLASS E EXCEPT AS NOTED
2. MANUAL VALVES:
   WITH ITEM NUMBER SHALL BE UNDER SPEC. 0722
   WITH PG&E MARK NUMBER SHALL BE UNDER SPEC. 8711
3. VALVES WITH THIS NOTE (PCV-150,153,154,155 & 156) SHALL BE LOCATED AS CLOSE TO THE TANKS AS POSSIBLE (34-B)(38-C)
4. PCV WITH THIS NOTE HAS AN INTEGRAL RELIEF VALVE (PCV-146 & 147) (34-E)(35-E)
5. PRESSURE GAGE INTEGRAL WITH PCVs PRESSURE DOWNSTREAM OF PCV-146=115 PSIG (35-E)
6. 4R2 BALL VALVES DWG 053479 (34-C)(35-D)
7. SEE DWG 341001 (34-C)(35-B)
8. CONTROMATICS ¾" BALL VALVE ¾-B/C-16-22-B-C-FP (38-A)
9. CONTROMATICS 1" BALL VALVE 1-B/C-16-22-B-C-FP (31-D)(38-B)
10. DELETED
11. VALVES ARE ¾" WHITEY SS-L63TSW12T (36-E)
12. INSTRUMENT DESIGN CLASSIFICATION II; ¾"x 0.065" WALL SS TUBING (36-C)
13. ¾" WHITEY MODEL #SS-63ES12 (36-C)
14. 1" SPRING LOADED CHECK VALVE, CIRCLE SEAL 249T-8PP-6. (35-B)

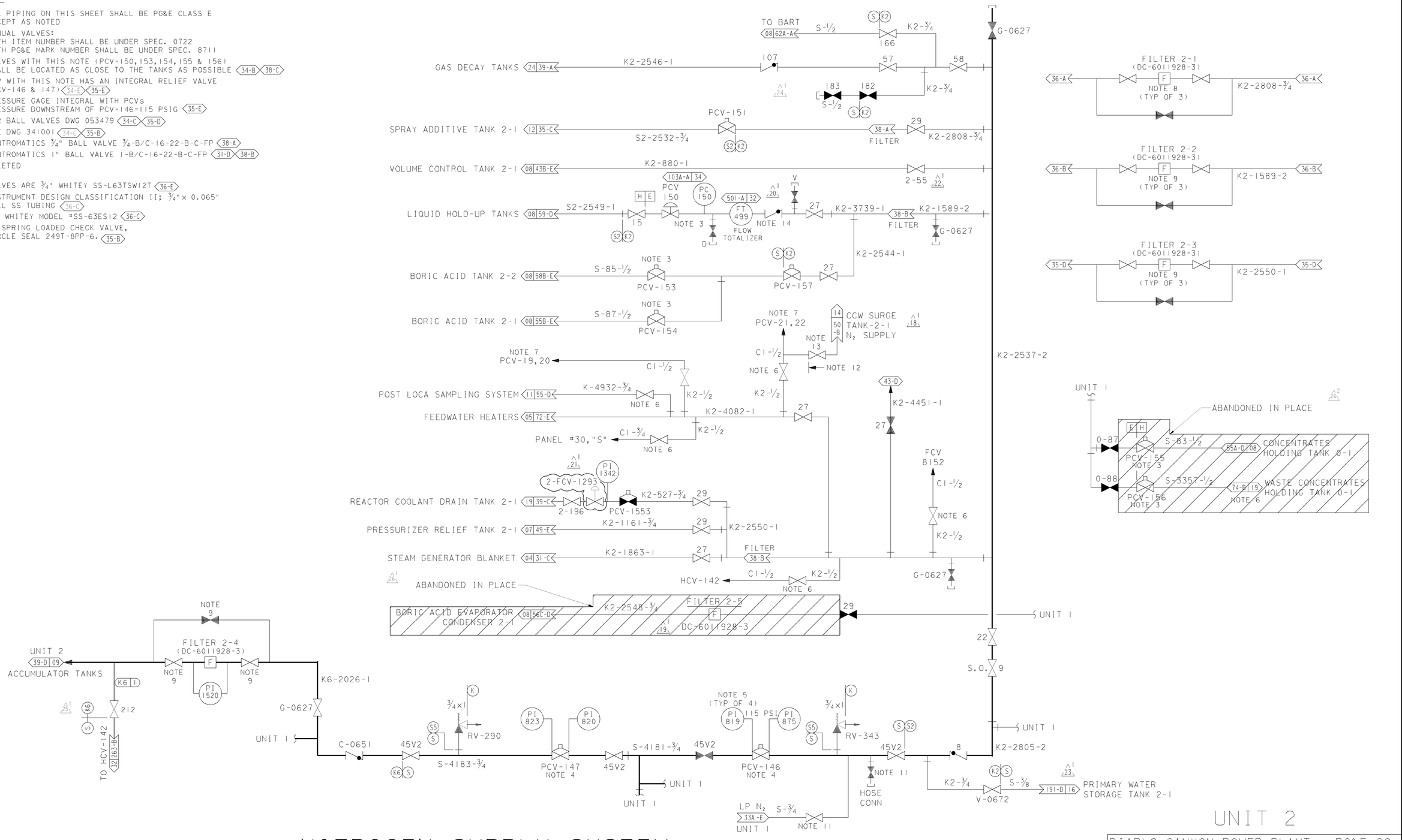

NITROGEN SUPPLY SYSTEM

UNIT 2

DIABLO CANYON POWER PLANT - PG&E CO. NITROGEN AND HYDROGEN SYSTEMS			
DRAWING	SHEET	PAGE	REV
108026	3	0	27

DATE	DWN	RE	IV	PROFESSIONAL ENGINEER	PE DISC.	PE#	PE EXP.	
01-24-2013	MNRU	F×C2		KERSI J. DALAL	MECHANICAL	M 16690	3/31/2014	REVISED PER DDN-2*961

RASTER=001el246.DGN
DGN=001el246.DGN
CAD User: MNRU Date: 01-24-2013

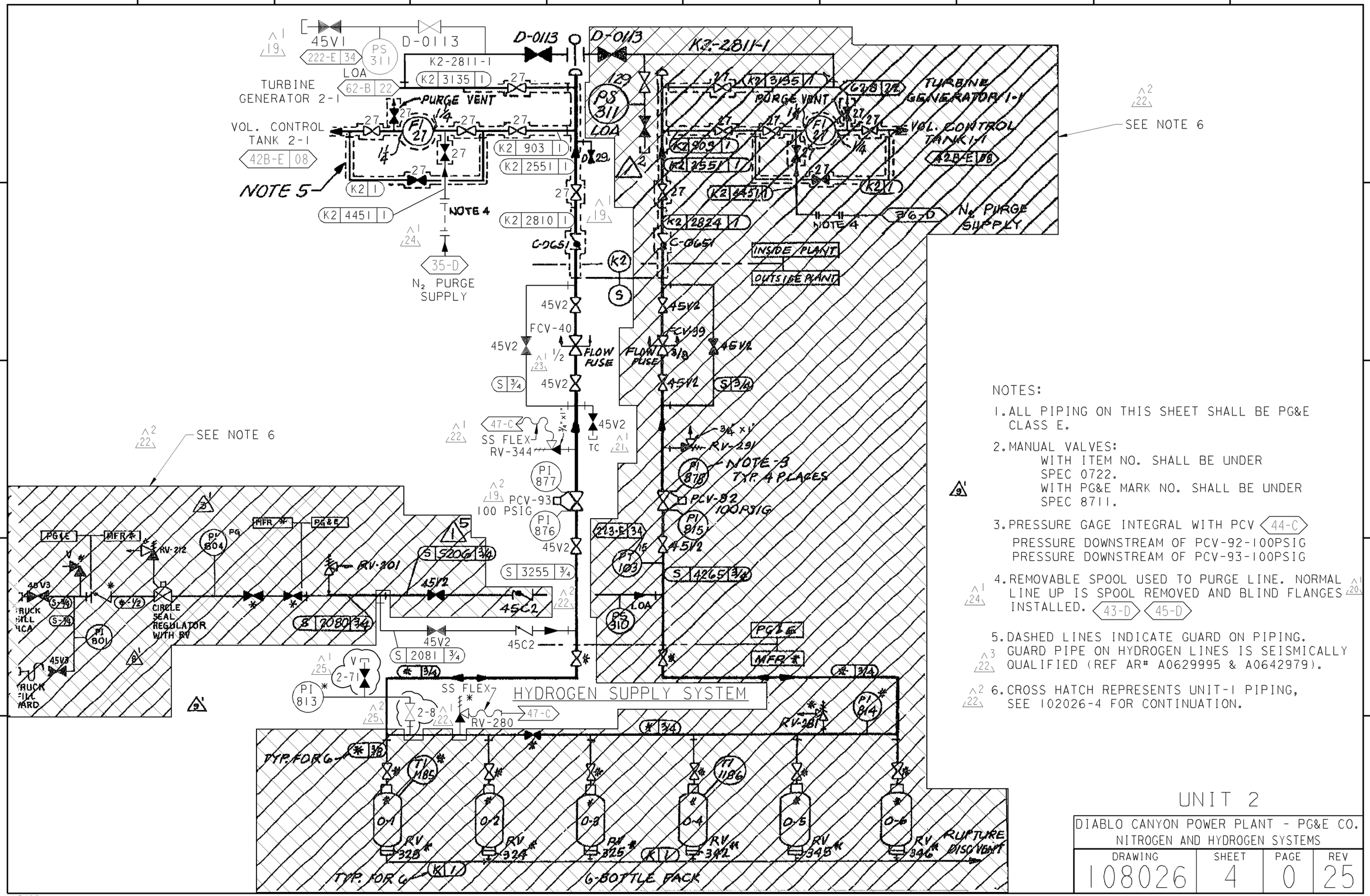

NOTES:

1. ALL PIPING ON THIS SHEET SHALL BE PG&E CLASS E.
2. MANUAL VALVES:
   WITH ITEM NO. SHALL BE UNDER SPEC 0722.
   WITH PG&E MARK NO. SHALL BE UNDER SPEC 8711.
3. PRESSURE GAGE INTEGRAL WITH PCV 44-C
   PRESSURE DOWNSTREAM OF PCV-92-100PSIG
   PRESSURE DOWNSTREAM OF PCV-93-100PSIG
4. REMOVABLE SPOOL USED TO PURGE LINE. NORMAL LINE UP IS SPOOL REMOVED AND BLIND FLANGES INSTALLED. 43-D 45-D
5. DASHED LINES INDICATE GUARD ON PIPING. GUARD PIPE ON HYDROGEN LINES IS SEISMICALLY QUALIFIED (REF AR# A0629995 & A0642979).
6. CROSS HATCH REPRESENTS UNIT-1 PIPING, SEE 102026-4 FOR CONTINUATION.

UNIT 2

DIABLO CANYON POWER PLANT - PG&E CO.
NITROGEN AND HYDROGEN SYSTEMS

DRAWING	SHEET	PAGE	REV
108026	4	0	25

DATE	DWN	RE	IV	PROFESSIONAL ENGINEER	PE DISC.	PE#	PE EXP.	
08-16-2007	FAZI	FxC2		STEPHEN PERRY BAKER	MECHANICAL	M 27135	6/30/2009	REVISED PER FCT-30297

RASTER=108026s4.dgn
DGN=108026s4.dgn
CAD User: FAZI Date: 08-16-2007

INPGIC
1 Size

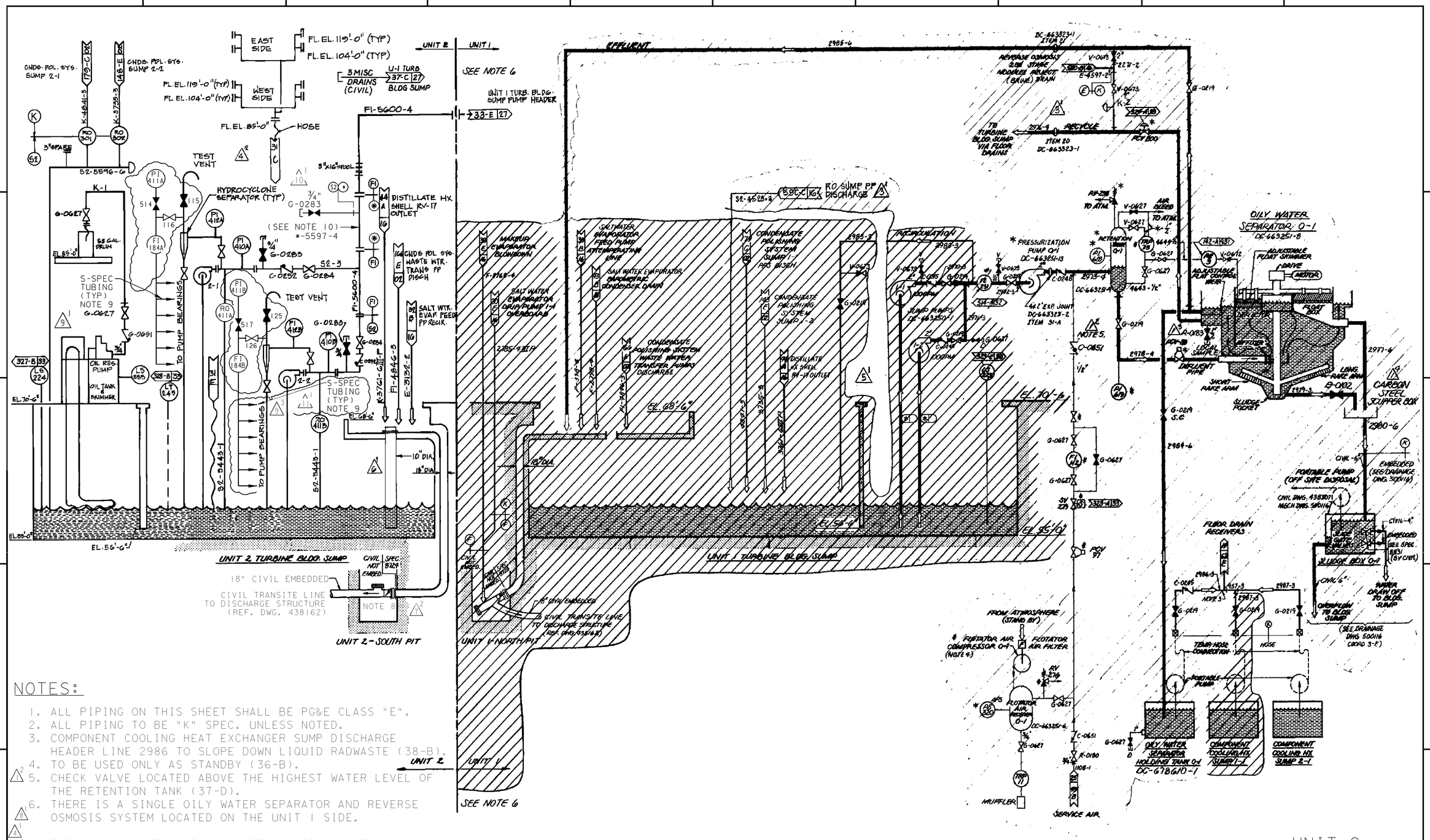

NOTES:

1. ALL PIPING ON THIS SHEET SHALL BE PG&E CLASS "E".
2. ALL PIPING TO BE "K" SPEC. UNLESS NOTED.
3. COMPONENT COOLING HEAT EXCHANGER SUMP DISCHARGE HEADER LINE 2986 TO SLOPE DOWN LIQUID RADWASTE (38-B).
4. TO BE USED ONLY AS STANDBY (36-B).
5. CHECK VALVE LOCATED ABOVE THE HIGHEST WATER LEVEL OF THE RETENTION TANK (37-D).
6. THERE IS A SINGLE OILY WATER SEPARATOR AND REVERSE OSMOSIS SYSTEM LOCATED ON THE UNIT 1 SIDE.
8. EXPANSION JOINT, GARLOCK MODEL 204SP, S/C 78-1490.
9. 1/4" FLEX HOSE IS ALSO ACCEPTABLE. (30-D)
10. LINE 5597 HAS BEEN REPLACED WITH LINED CARBON STEEL PIPE MADE BY CRANE-RESISTOFLEX. REF. AR A0536427 (32-D)

TURBINE BUILDING SUMP OILY WATER SEPARATOR

(MAXIMUM CAPACITY 100 GPM)

UNIT 2

P G & E CO.		108027	REV.
SHEET 3	PAGE 0		11

10/17/03	AJL2	CDP3	-	KERSI J. DALAL	MECHANICAL	M 16690	3/31/2004	Revised per FCT 025843
DATE	DWN	RE	IV	PROFESSIONAL ENGINEER	PE DISC.	PE#	PE EXP.	

CAD User:AJL2 Date:10-17-2003
DGN=8027S3.DGN
RASTER=8027S3.TIF

INPGIC

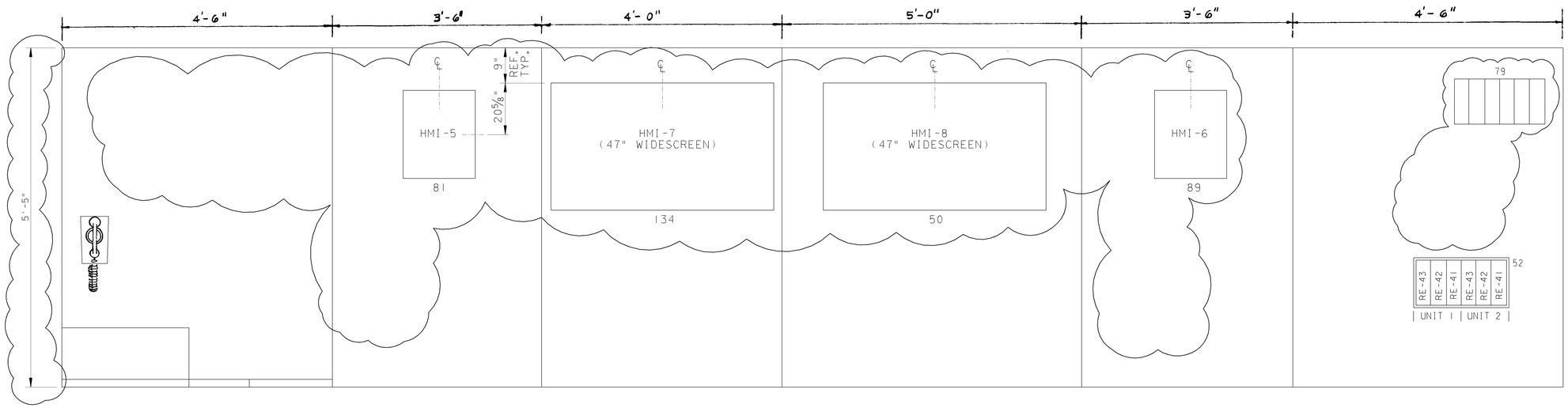

POB1 ②

POCV1 CHEMICAL and VOLUME CONTROL SYSTEM ③

POWE ④

POEC ⑤

POCV2 CHEMICAL and VOLUME CONTROL SYSTEM ③

POB2 ②

UNIT 1

UNIT 2

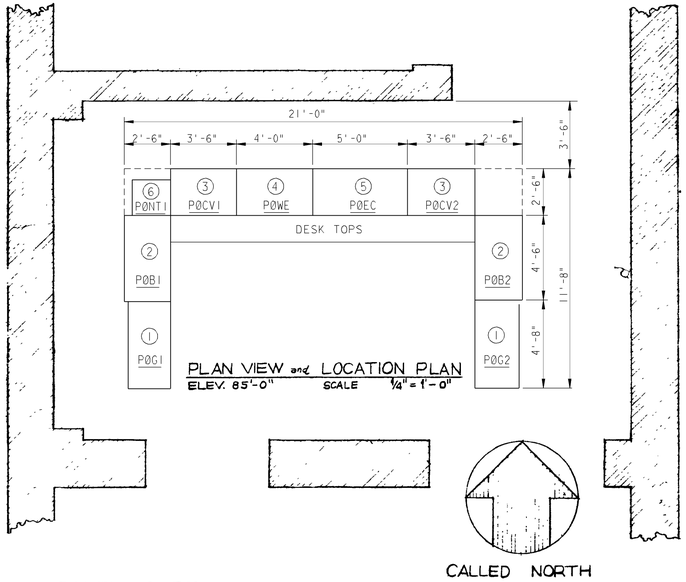

PLAN VIEW and LOCATION PLAN
ELEV. 85'-0" SCALE ¼" = 1'-0"

PANEL CODE

① GAS ANALYZER
② MISCELLANEOUS RADWASTE (POB1 & POB2)
③ CHEMICAL VOLUME CONTROL SYSTEM (POCV1 & POCV2)
④ GASEOUS RADWASTE (POWE)
⑤ LIQUID RADWASTE (POEC)
⑥ HEAT TRACING CABINET

REFERENCES

1. DELETED
2. DELETED
3. AUXILIARY BUILDING CONTROL PANEL 1-2 ARRANGEMENT_____ DWG# 334420
4. AUXILIARY BUILDING CONTROL PANEL 2-2 ARRANGEMENT_____ DWG# 334421
5. AUXILIARY BUILDING CONTROL PANEL 5. CUTOUTS & DIMENSIONS - DWG# 334426
6. AUXILIARY BUILDING CONTROL PANEL MISCELLANEOUS DETAILS_____ DWG# 334428

KEY DWG. SECTION 13

UNIT 1 & 2

DATE	
11-21-2011	
D.D.	AJFJ
R.E.	FXC2
I.V.	
P.E.	AGB2

REGISTERED PROFESSIONAL ENGINEER ALAN GLEN BARTA E 9271 Exp. 9/30/2012 ELECTRICAL STATE OF CALIFORNIA

REVISION DESCRIPTION
REVISED PER DAS-6*434 & DDN-2*564

I & C
AUXILIARY BUILDING
CONTROL PANEL
ARRANGEMENT

DIABLO CANYON POWER PLANT
PACIFIC GAS AND ELECTRIC COMPANY
SAN FRANCISCO, CALIFORNIA

DWG SCALE:			
BILL OF MATL:			
SUPSDS:			
SUPSD BY:			
DRAWING	SHEET	PAGE	REV
330557	1	0	29

DRAWING NUMBER 330557 1

RASTER=002c1078.DGN
DGN=002c1078.DGN
CAD User:AJFJ Date: 11-21-2011

DNPG 3 Size

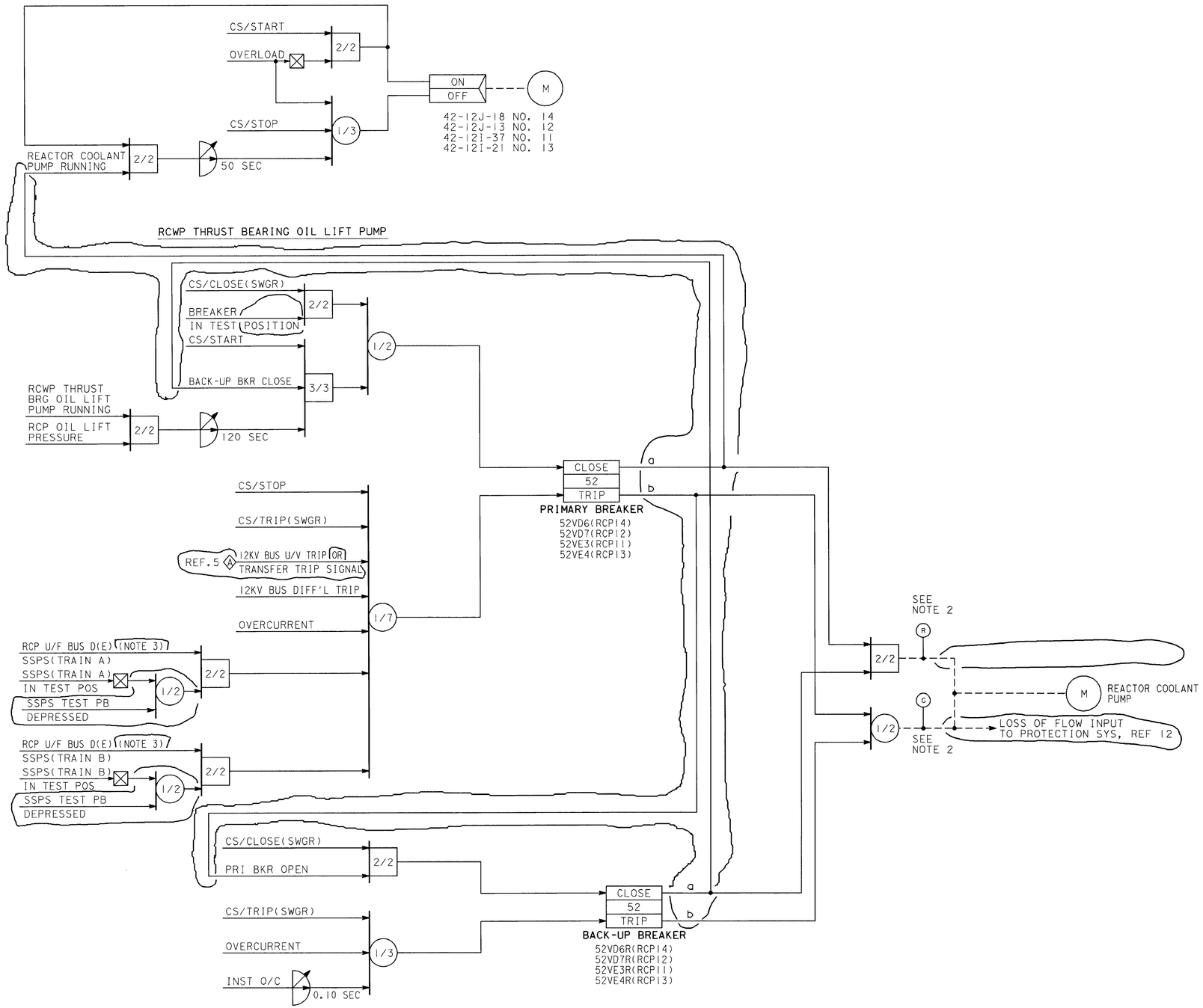

NOTES:

1. ◇ - DENOTES INTERCONNECTION TO OTHER LOGIC DIAGRAM, REF 5.
2. INDICATION LIGHTS ON MAIN CONTROL BOARD INDICATE BOTH THE PRI BREAKER & B-U BREAKER POSITIONS.
3. FOR RCP BUS UNDERFREQUENCY LOGIC SEE REF. 12.

REFERENCES:

		DWG NO.
1.	LOGIC SYMBOLS	19425
2.	ELECTRICAL DEVICE LIST	050024
3.	INSTRUMENT REF	102038
4.	SLM&R 12KV BUS D&E	437531
5.	LOGIC DIAG 12KV BUS SECT D&E AUTO TRANSFER	19423
6.	SCHEMATIC DIAGRAM SSPS TRAIN A	501869
7.	SCHEMATIC DIAGRAM SSPS TRAIN B	503088
8.	SCHEMATIC DIAGRAM REACTOR COOLANT PUMP 11	477846
9.	SCHEMATIC DIAGRAM REACTOR COOLANT PUMP 12	477847
10.	SCHEMATIC DIAGRAM REACTOR COOLANT PUMP 13	477848
11.	SCHEMATIC DIAGRAM REACTOR COOLANT PUMP 14	477849
12.	FUNCTIONAL LOGIC DIAGRAM PRIMARY COOLANT SYSTEM TRIP SIGNAL	495845

DWG TYPE: 4 (14) | DWG SUBJECT: (15) | DRAWING TITLE: REACTOR COOLANT PUMP # 1 (16-44) | UNIT No. (42-44)

PROJECT LOCATION: DIABLO (45-50) | INSTALLATION TYPE: L (51) | DIVISION NAME: B (52) | MISC: (53) | QQ CODE: GD (55 56) | MAN HOURS: (57-59) | CADD: C (60) | DRAWING SOURCE: A (70)

RM INDEXED REV ____

REGISTERED PROFESSIONAL ENGINEER Wm. R. Johnson No. 163 ELECTRICAL STATE OF CALIFORNIA

COAST VALLEY DIVISION

MICROFILM 3

REV	REGISTERED ENGINEER	SIGNATURE	CA REG NO.	EXP DATE
3	M Baan		C 12314	12/31/94

NUCLEAR SAFETY RELATED

KEY DWG SECT 3

UNIT 1

NO.	DATE	DESCRIPTION	GM/SPEC	DWN	CHKD	SUPV	APVD BY
3	1-14-94	ADD NOTE 3, REF 12, REV REF DWG NO 1,6,7 & REV LOGIC DIAGRAM (FCT-16395)	—	CAR			
2	4-6-87	REV LOGIC ACCORD TO SCHEME; ADD BACK-UP OC PROT LOGIC(DCI-EE-5415)AS BUILT	167027	DWL / NAA	LCV	JC	KC/SWC / SA
1	10-7-77	REVISED & REDRAWN (ECO E189)	167027	ELJ	EZ	HH	FJM DN / JWC

REVISIONS

APPROVED BY: FJM, DN, JWC, JRH

GM 167027 | SUPV H HERTING | DSGN E ZEITER | DWN E JOHNSON | CHKD E ZEITER | OK HH WV | DATE 9-14-77 | SCALES NONE

LOGIC DIAGRAM
REACTOR COOLANT PUMP

DIABLO CANYON
DEPARTMENT OF ENGINEERING
PACIFIC GAS AND ELECTRIC COMPANY
SAN FRANCISCO, CALIFORNIA

BILL OF MATL
DWG LIST
SUPSDS 19403
SUPSD BY
SHEET NO. | SHEETS
338070 | REV 3

SCAN 3 | IC

338070D.E62 01-11-94 CAR

N1808

DRAWING NUMBER 338070

U#2-102787

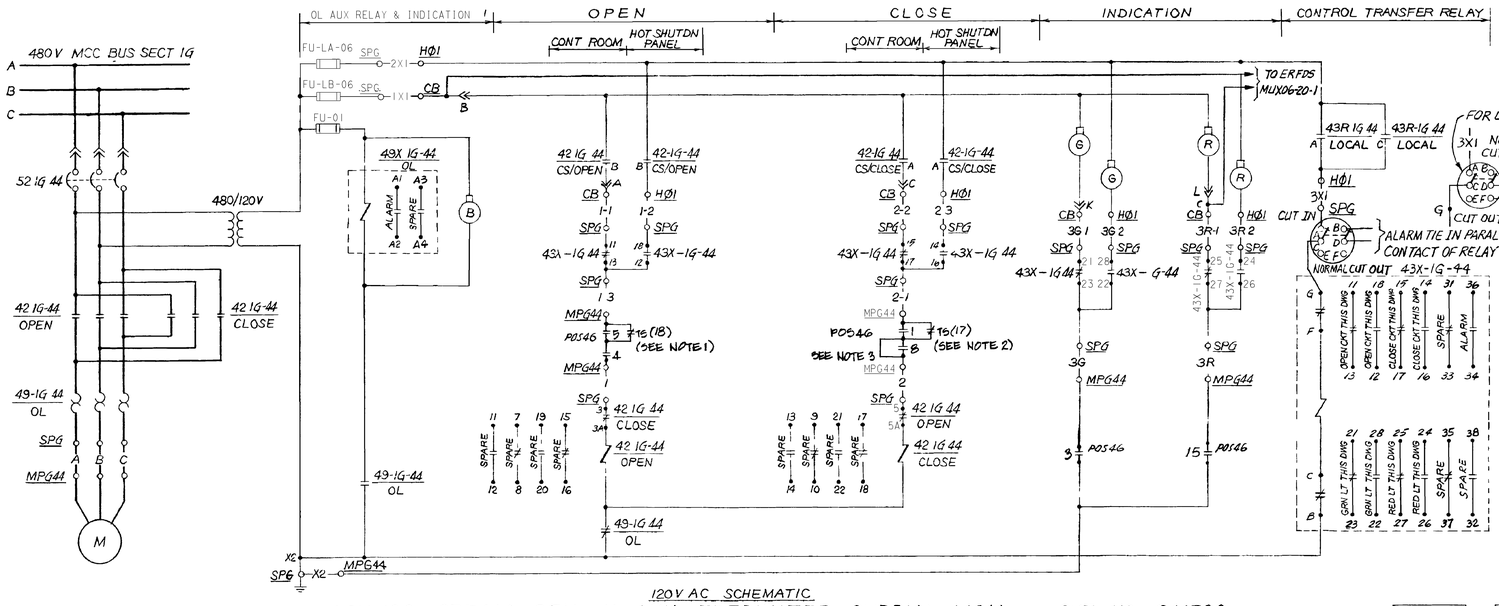

LCV 106 STEAM GEN 11 AUX FEEDWATER SUPPLY MOV - CKT Nº G44P00

STEAM GEN AUX FEEDWATER SUPPLY MOV'S SIMILAR EXCEPT AS SHOWN IN TABLE

VALVE Nº	DESCRIPTION	FW PUMP DISCH	MOTOR LOC	CIRCUIT BREAKER Nº	CIRCUIT BREAKER LOC	BUS SECT	CIRCUIT Nº	VALVE POS SWITCH Nº	ALARM CKT Nºs OVER-CURRENT	ALARM CKT Nºs TRANSFER OF CONT	C O SW POSITION (CONTROL TRANSFER RELAY CUT-OUT SW)	ERFDS INPUT	FUSE NO'S
LCV 106	STM GEN 11 AUX FW SUPPLY MOV	11	MPG44	52-1G-44	SPG	1G	G44P00	46	A14308DG	AY5066DG	NORMAL CUT OUT	MUX06-20-1	FU-LA-06 FU-LB-06
LCV 107	12		MPG68	52-1G-68	SPG	1G	G68P00	47	A14308DG	AY5066DG	NORMAL CUT OUT	MUX06-20-2	FU-LA-07 FU-LB-07
LCV 108	13		MPG69	52-1G-69	SPG	1G	G69P00	48	A14308DG	AY5066DG	NORMAL CUT IN	MUX06-20-3	FU-LA-08 FU-LB-08
LCV 109	14		MPG70	52-1G-70	SPG	1G	G70P00	49	A14308DG	AY5066DG	NORMAL CUT IN	MUX06-20-4	FU-LA-09 FU-LB-09

CONTACTS		POSITION CLOSE	STOP	OPEN	REMARKS
—||—	A	X			THIS DWG
—||—	B			X	THIS DWG

CONTROL SWITCH - 42-1G 44, 42-1G-68, 42-1G 69, 42 1G 70 CS

USED AT LOCATION CB, HØ1

SPRING RETURN TO STOP

CONTACTS		POSITION CONT ROOM	LOCAL	REMARKS
—||—	A		X	THIS DWG
—||—	B	X		SPARE
—||—	C		X	THIS DWG
—||—	D	X		SPARE

TRANSFER SWITCH 43R 1G-44, 43R-1G 68, 43R 1G 69, 43R 1G-70

USED AT LOCATION HØ1

NO SPRING RETURN

TABLE OF DEVICES

DEVICE Nº	FUNCTION	RATING	MFR	TYPE	CAT/DWG#	REMARKS
52HH8/AS 52HF9/AS	4160V AIR CIRCUIT BREAKER	—	—	—	REF DWG 11	VALVE FAIL OPEN WHEN PUMP IS NOT RUNNING
42-1G-44, -68 42 1G-69, -70	480V AC MOTOR STARTER REVERSING	—	W.E. CORP	—	REF DWG# 10	
43X-1G-44, -68 43X-1G-69, -70	CONTROL TRANSFER RELAY	120V AC	ELECTRO SW CORP	SERIES 24 LOR	7803 F	HAND RESET
42-1H-62 42-1F-54	AC CONTACTOR	120V AC	W.E. Corp	A201	A201K2BA	EMM NO-DC-1-1G5-EWL
49-1G-44, -68 49-1G-69, -70	MOTOR OVERLOAD RELAY	—	WE CORP	—	—	PART OF MOTOR STARTER
49X-1G-44, -68 49X-1G-69, -70	MOTOR OVERLOAD AUXILIARY RELAY	—	W.E. CORP	—	—	PART OF MOTOR STARTER
52-1G-44, -68 52-1G-69, -70	480 V AC AIR CIRCUIT BKR	—	W.E. CORP	—	REF DWG# 10	
LCV 106, 107, 108 109, 110, 111, 113, 115	STM GEN AUX FW SUPPLY LEVEL CONT V'V	—	—	—	—	
HIC	HAND INDICATING CONTROLLER				6	SEE TABLE FOR Nº
POS	LCV POSITION SWITCH				6	SEE TABLE FOR SW Nºs
TS	TORQUE SWITCH	—	—	—	—	
POM 110, 111, 113, 115	LCV POSITION MONITOR	120 VAC	—	—	6	
HC86X, 87X, 88X, 89X	AUX FW FAIL TO MANUAL AUX RLY	24VDC	P & B	KUP	KUP-14D15-24	
cHC86FTM cHC87FTM cHC88FTM cHC89FTM	FAIL TO MANUAL SIGNAL TO AUX FW HAND CONTROLLERS	24VDC	TRICONEX		14	CONTACTS OPEN TO FAIL THE HAND CONTROLLER TO MANUAL

CONTACTS		VALVE POSITION FULL OPEN					FULL CLOSED	FUNCTION CONTACTS 1-8	FUNCTION CONTACTS 9-16
—||—	1 9	■						1 BYPASS INTLK	9 SPARE
—||—	2 10	■						2 SPARE	10 SPARE
—||—	3 11		■	■	■	■	■	3 GREEN LIGHT	11 SPARE
—||—	4 12		■	■	■	■	■	4 OPEN LIMIT	12 SPARE
—||—	5 13						■	5 BYPASS INTLK	13 SPARE
—||—	6 14						■	6 SPARE	14 SPARE
—||—	7 15						■	7 SPARE	15 RED LT
—||—	8 16						■	8 NOTE 3	16 SPARE

TYPICAL VALVE POSITION SWITCH CONTACT DEVELOPMENT

"ACTUAL SETPOINTS ARE IN PIMS"

EQUIPMENT LOCATION NUMBERS

SPG 480V MOTOR CONTROL CENTER BUS SECTION 1G
MPG44 - MOTOR OPERATED VALVE LCV106
CB - CONTROL BOARD, CONDENSATE & FEEDWATER
HØ1 - HOT SHUTDOWN CONTROL PANEL, FEEDWATER
XLCV110 - INSTR Nº LCV110, TERM. BOX ELECTRO HYDRAULIC ACTUATOR
XPOM110 - INSTR POM110 LOCAL MOUNTED

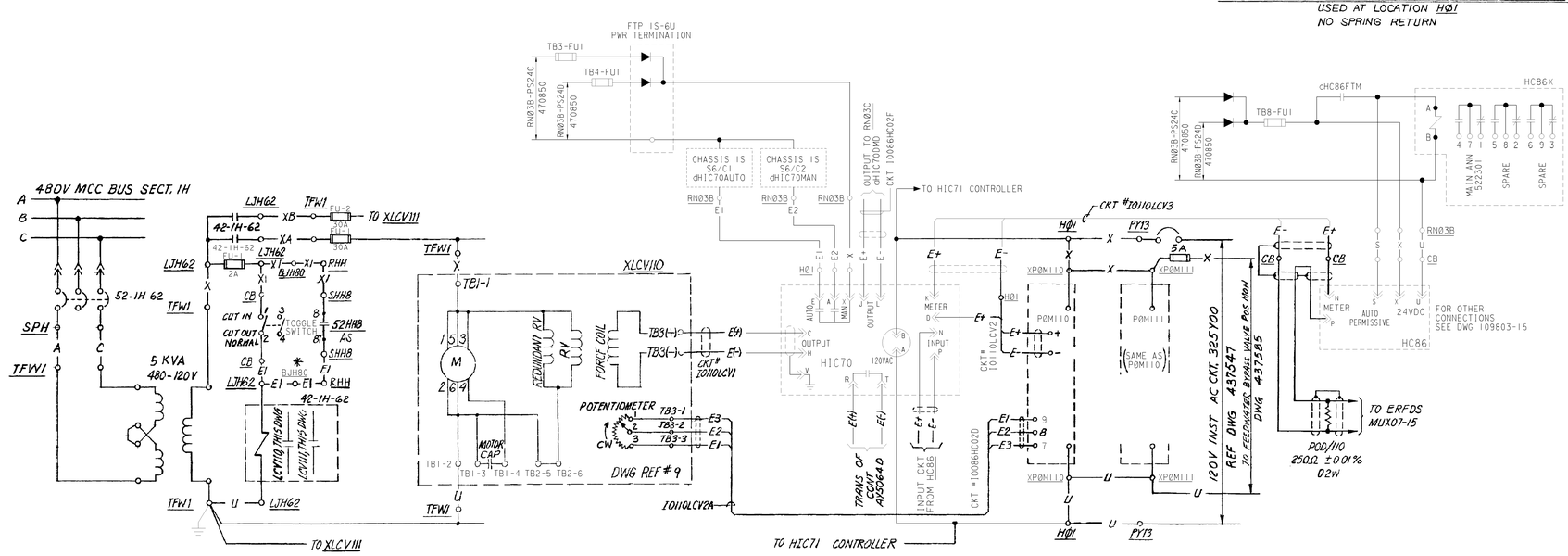

LCV 110 STEAM GEN 11 AUX FEEDWATER SUPPLY VALVE

STEAM GEN AUX FEEDWATER SUPPLY VALVES SIMILAR EXCEPT AS SHOWN IN TABLE

* BJH80 FOR LCV110, LCV111 & BJH16 FOR LCV113, LCV115

VALVE Nº	DESCRIPTION	FW PUMP DISCH	VALVE LOC	120V INSTR AC CKT Nº	120V INSTR AC LOC	CONTROLLER DEVICE Nº	CONTROLLER INPUT CKT	CONTROLLER OUTPUT CKTS	ELECTRO-HYDRAULIC OPERATOR MODULATING SIGNAL CKT	120VAC PWR	CIRCUIT BREAKER Nº	CIRCUIT BREAKER LOC	LOCAL CONTACTOR	ALARM CKT. Nº TRAN. OF CONT. ALM	AUX FW PUMP INTLK.	VALVE POS. MONITOR 120VAC PWR	OUTPUT CKT TO IND @ HØ1, CB	ERFDS INPUT
LCV 110	STM GEN 11 AUX FW SUPPLY	12	XLCV110	325Y00A	PY13	HIC 70	I0086HC02D	I0086HC02F	I0110 LCV1, 2A	H62P00A	TFW1	52-1H-62	SPH	LJH62	AX5064D	52HH8	325Y00B	I0110LCV2,3	MUX 07-15
LCV 111	12	12	XLCV111	325Y00A	PY13	HIC 71	I0087HC02D	I0087HC02F	I0111 LCV1, 2A	H62P00B	TFW1	52-1H-62	SPH	↓	↓	↓	325Y00C	I0111LCV2,3	MUX 07-16
LCV 115	13	13	XLCV115	122Y00	PY11A	HIC 72	I0088HC02D	I0088HC02F	I0115 LCV1, 2A	F54P00A	TFW2	52-1F-54	SPF	LJF54		52HF9	122Y01A	I0115LCV2,3	MUX 01-19
LCV 113	14	14	XLCV113	122Y00	PY11A	HIC 73	I0089HC02D	I0089HC02F	I0113 LCV1, 2A	F54P00B	TFW2	52-1F 54	SPF	↓	↓	↓	122Y01	I0113LCV2,3	MUX 01-20

VALVE NO.	FAIL TO MANUAL AUX RLY	PCS RLY OUTPUT	PCS RACK	FUSES	24VDC PWR SUPPLY	FTP	FUSES	SOFTWARE TAG	CHASSIS/SLOT/CHANNEL	SOFTWARE TAG	CHASSIS/SLOT/CHANNEL
LCV110	HC86X	cHC86FTM	RN03B	TB8-FU1	RN03B-PS24C/D	1S-6U	TB3-FU1/TB4-FU1	dHIC70AUTO	1S/S6/C1	dHIC70MAN	1S/S6/C2
LCV111	HC87X	cHC87FTM	RN03B	TB8-FU2		2S-2U	TB3-FU2/TB4-FU2	dHIC71AUTO	2S/S2/C1	dHIC71MAN	2S/S2/C2
LCV115	HC88X	cHC88FTM	RN01B	TB8-FU1	RN01B-PS24C/D	2S-2U	TB3-FU2/TB4-FU2	dHIC72MAN	2S/S2/C1	dHIC72MAN	2S/S2/C2
LCV113	HC89X	cHC89FTM	RN01B	TB8-FU2		1S-6U	TB3-FU1/TB4-FU1	dHIC73AUTO	1S/S6/C1	dHIC73MAN	1S/S6/C2

NOTES

1. SWITCH OPENS ON MECHANICAL TORQUE DURING OPENING CYCLE
2. " " " " " " CLOSING CYCLE OR FULLY CLOSED VALVE
3. FIELD TO INSTALL JUMPER FOR TORQUE SEATING

REFERENCE DRAWINGS

1 DESCRIPTION OF ELECT SCHEMATIC DIAG'S SYMBOLS & CKT DESIG	DWG #	050003
2 EQUIPMENT LOCATION NUMBER LIST		101900
3 SINGLE LINE METER & RELAY DIAG, 480V SYSTEM BUS SECT 1F		437316
4 SINGLE LINE METER & RELAY DIAG, 480V SYSTEM BUS SECT 1H		437543
5 PIPING SCHEMATIC FEEDWATER SYSTEM		102003
6 INSTRUMENT SCHEMATIC MULTIVARIABLE INSTRUMENT SYSTEMS		102036
7 SCHEMATIC DIAGRAM MAIN ANNUNCIATOR Sh. 1		501121
8 SINGLE LINE METER & RELAY DIAG, 120V INSTR AC SYSTEM		437547, 3
9 LCV 110, 111, 113 & 115 ELECTRO-HYDRAULIC ACTUATOR-SHT. 51	REC #	663165
10 SINGLE LINE METER & RELAY DIAG, 480V SYSTEM BUS SECT 1G	DWG	437542
11. SCHEMATIC DIAG AUX FEEDWATER PUMPS		437583
12 BLOCK DIAG-ERFDS TECH SUPPORT CTR & CONTROL ROOM		445278
13 SCHEMATIC DIAG FEEDWATER MOTOR OPERATED ISOL VALVES		437585
14. SAFETY RELATED PROCESS CONTROL SYS RACKS FRS		663195-41
15. MAIN ANNUNCIATOR SCHEMATIC		522301
16. FUNCTIONAL LOOP DIAGRAM STM GEN 1 AUX FW SUPP LC-86		109803-15
17. FUNCTIONAL LOOP DIAGRAM STM GEN 2 AUX FW SUPP LC-87		109803-16
18. FUNCTIONAL LOOP DIAGRAM STM GEN 3 AUX FW SUPP LC-88		109803-18
19. FUNCTIONAL LOOP DIAGRAM STM GEN 4 AUX FW SUPP LC-89		109803-19

VALVE Nºs LCV106, LCV107, LCV108, LCV109
LCV110, LCV111, LCV113, LCV115

NUCLEAR SAFETY RELATED

UNIT 1

P.G.&E. SYSTEM PHASE SEQUENCE A-C-B

KEY DWG. SECTION 6

DATE	
12-11-2013	ZNS4
D.D.	
R.E.	RxG2
I.V.	FxC2
P.E.	N/A

REVISED PER DFT-7-2413

ELECTRICAL
SCHEMATIC DIAGRAM
AUXILIARY FEEDWATER
MOTOR OPERATED VALVES

DIABLO CANYON POWER PLANT
PACIFIC GAS AND ELECTRIC COMPANY
SAN FRANCISCO, CALIFORNIA

DWG SCALE:
BILL OF MATL:
SUPSDS:
SUPSD BY:

DRAWING	SHEET	PAGE	REV
437507	1	0	25

RASTER=437507s1.dgn
DGN=437507s1.dgn
CAD User=ZNS4 Date: 12-11-2013

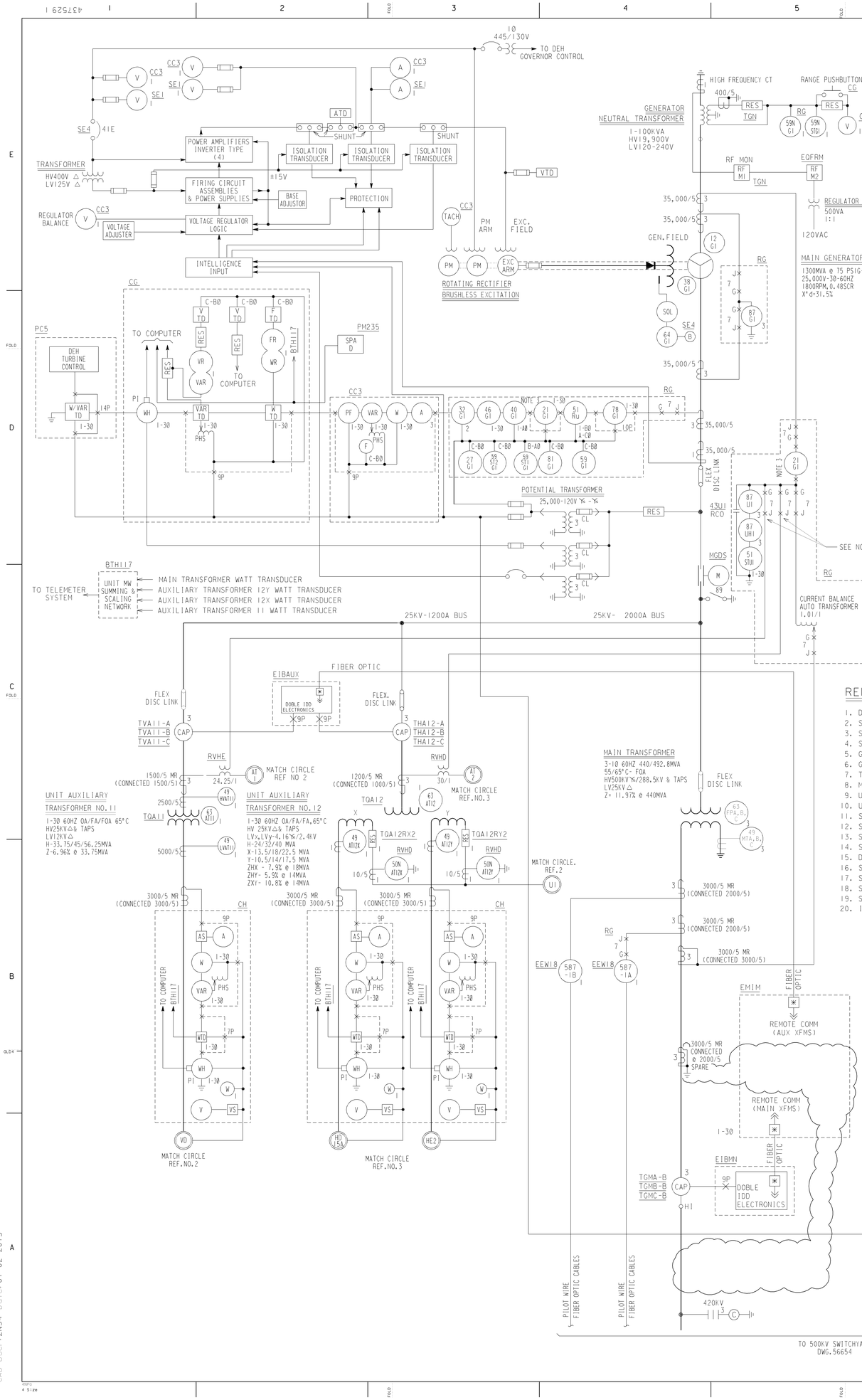

LEGEND

- AS — AMMETER TRANSFER SWITCH
- VS — VOLTMETER TRANSFER SWITCH
- TEST SWITCH
- LIGHTNING ARRESTER & OPERATOR COUNTER
- CAP — BUSHING CAPACITANCE & POWER FACTOR TAP
- ✳ — FIBER/ETHERNET MEDIA CONVERTER

EQUIPMENT LOCATIONS

CC3 --- CONTROL CONSOLE - GENERATOR CONTROL
CG ---- MAIN GENERATOR CONTROL BOARD
CH ---- STATION ELECTRIC CONTROL BOARD
EEW16 -- COMMUNICATION TONE RECEIVER EQUIPMENT RACK 16
MGDS -- 25KV ISO-PHASE BUS DISCONNECT SWITCH MOTOR
PC5 --- MAIN TURBINE CONTROL SYSTEM CABINET
PM235 - MECHANICAL PANEL NO. 235
RG ---- GENERATOR RELAY BOARD
RVHD -- STATION ELECTRICAL RELAY BOARD "D"
SEI --- EXCITATION SWITCHGEAR CUBICLE 1
TGN --- GENERATOR NEUTRAL TRANSFORMER CUBICLE
TGA11 - AUXILIARY TRANSFORMER 11 CONTROL CABINET
TGA12 - AUXILIARY TRANSFORMER 12 CONTROL CABINET
EEW18 - MAIN TRANSFORMER BANK 500KV LINES PILOT WIRE SUPERVISION EQUIPMENT
TGA12RX2 - GROUND RESISTOR CAB 4KV AUX TRANSF 12X
TGA12RY2 - GROUND RESISTOR CAB 4KV AUX TRANSF 12Y
EMIM -- ISO METERING CABINET
TGMA-B --- MAIN TRANSFORMER ØA HV BUSHING ADAPTOR
TGMB-B --- MAIN TRANSFORMER ØB HV BUSHING ADAPTOR
TGMC-B --- MAIN TRANSFORMER ØC HV BUSHING ADAPTOR
EIBAUX --- DOBLE INTELL DIAGNOSTIC DEVICE FOR AUX XFMRS HV BUSHINGS
EIBMN --- DOBLE INTELL DIAGNOSTIC DEVICE FOR MAIN XFMRS HV BUSHINGS
TVA11-A, B & C --- AUX 11 TRANSFORMER HV BUSHING ADAPTORS PHASE A, B & C
THA12-A, B & C --- AUX 12 TRANSFORMER HV BUSHING ADAPTORS PHASE A, B & C

NOTES

1. XLW3K5A2 DOES NOT REQUIRE THE USE OF AN EXTERNAL PHASE SHIFTING TRANSFORMER FOR VAR METERING.
2. TEST SWITCHES FOR 24.25/1A & 30/1A AUX CT'S ARE IN "ISOLATE" POSITION. THERE ARE NO CURRENT CONTRIBUTIONS FROM AUX XFMR'S 11 & 12 TO THE UNIT OVERALL DIFFERENTIAL RELAYS 87U1 & 87UH1.
3. 21G1 IS ONE RELAY WITH TWO SEPARATE 3 PHASE CURRENT INPUTS.

✳ SC-SCIENTIFIC COLUMBUS,AN ESTERLINE CO.

REFERENCES

	REFERENCES	DWG. NO.
1.	DESCRIPTION OF ELEC.SCHEMATIC DIAG.SYMBOLS & EQUIPMENT LOCATION	050003
2.	SINGLE LINE METER & RELAY DIAG.12KV SYSTEM	437531
3.	SINGLE LINE METER & RELAY DIAG.4.16KV SYSTEM SH.1	437532
4.	SINGLE LINE METER & RELAY DIAG.4.16KV SYSTEM SH.2	437533
5.	GENERATOR EXCITATION SYSTEM	663293
6.	GENERATOR ELECTRICAL SYSTEM	663293
7.	TURBINE ELECTRICAL SYSTEM	663285
8.	MAIN TRANSFORMER SYSTEM	663555
9.	UNIT AUXILIARY TRANSFORMER NO.11 (25/12KV)	6015580
10.	UNIT AUXILIARY TRANSFORMER NO.12 (25/4.16KV)	663334
11.	SCHEMATIC DIAG.BRUSHLESS EXCITATION CONTROL SH.1	437555
12.	SCHEMATIC DIAG.BRUSHLESS EXCITATION CONTROL SH.2	437556
13.	SCHEMATIC DIAG.GENERATOR & MAIN TRANSFORMER	437548
14.	SCHEMATIC DIAG.GENERATOR CONTROL SH.1	437557
15.	DEVICE LIST & SUPPLEMENT FOR 500KV SWYD SCHEMATIC DIAGRAMS	036764
16.	SCHEMATIC DIAG.AUX.TRANSF.NO.11	437661
17.	SCHEMATIC DIAG.AUX.TRANSF.NO.12	437663
18.	SCHEMATIC DIAG.AUX.TRANSF.NO.11	437662
19.	SCHEMATIC DIAG.AUX.TRANSF.NO.12	437664
20.	ISO METERING MFG DWGS	6015585

TABLE OF DEVICES

DEVICE	DESCRIPTION	RATING	MFR	TYPE	CATALOG OR REF DWG	REMARKS
A	GENERATOR AMMETER	0-35KA	WESTINGHOUSE	KA-241	291B46A36	
A	GENERATOR EXCITATION FIELD AMMETER	0-1500A				100MV SHUNT DC
A	GENERATOR EXCITATION FIELD AMMETER	0-1500A				100MV SHUNT DC
A	AUX TRANSFORMER NO.11 AMMETER	0-3000A				
A	AUX TRANSFORMER NO.12 AMMETER	0-3000A				
F	UNIT FREQUENCY METER	50-70HZ	WESTINGHOUSE	KR3-241	714B538A10	
PF	UNIT POWER FACTOR METER	0-1-0	WESTINGHOUSE	KI-241	186A237A01	
SYN	SYNCHROSCOPE	120V-60HZ	WESTINGHOUSE	KI-241	186A235A01	
V	GENERATOR NEUTRAL VOLTMETER	0-10V,0-100V				EXTERNAL RES AC
V	GENERATOR EXCITATION FIELD VOLTMETER	0-150				
V	GENERATOR EXCITATION FIELD VOLTMETER	0-150				
V	GENERATOR PM GENERATOR VOLTMETER	0-600V				
V	GENERATOR PM GENERATOR VOLTMETER	0-600V				
V	REGULATOR BALANCE VOLTMETER	15-0-15V				
V	SYNCHRONIZING (RUN) BUS/LINE VOLTMETER	0-150V	WESTINGHOUSE	KA-241	291B46A12	
V	SYNCRONIZING (INCOMING) GEN VOLTMETER	0-150V	WESTINGHOUSE	KA-241	291B46A12	
V	AUX TRANSFORMER NO.11 VOLTMETER	0-150V				
V	AUX TRANSFORMER NO.12 VOLTMETER	0-150V				(2 FOR AUX TRANSFORMER 22)
PI	PULSE INITIATOR	120V AC	WESTINGHOUSE	CD-21	111C285	BUILT-IN POWER SUPPLY
VAR	GENERATOR VARMETER	1000-0-1000MVAR	WESTINGHOUSE	KP-241	409C711A62	2 ELEMENT,3Ø
VAR	AUX TRANSFORMER NO.11 VARMETER	0-40MVAR				2 ELEMENT,3Ø
VAR	AUX TRANSFORMER NO.12 VARMETER	0-15MVAR				2 ELEMENT,3Ø
W	GENERATOR WATTMETER	0-1500MW	WESTINGHOUSE	KP-241	409C711A37	2 ELEMENT,3Ø
W	AUX TRANSFORMER NO.11 WATTMETER	0-60MW				2 ELEMENT,3Ø
W	AUX TRANSFORMER NO.12 WATTMETER	0-25MW				2 ELEMENT,3Ø
WH	GENERATOR WATTHOUR METER	57.7-240V,2.5A	ASEA BROWN BOVERI	ALPHA	P3FB0100	3 ELEMENT,4 WIRE
WH	AUX TRANSFORMER NO.11 WATTHOUR METER	120V,2.5A	WESTINGHOUSE	D2B-2F		2 ELEMENT,3 WIRE
WH	AUX TRANSFORMER NO.12 WATTHOUR METER	120V,2.5A	WESTINGHOUSE	D2B-2F		(2 FOR AUX XFMR 22)
F & WR	UNIT FREQUENCY & WATT RECORDER					USED WITH FTD & WTD
V & VAR R	UNIT VOLT & VAR RECORDER					USED WITH VTD & WTD
PHS	PHASE SHIFTING TRANSFORMER	120V AC	WESTINGHOUSE	MV-832	292B048G09	(FOR GEN VAR METER)
PHS	PHASE SHIFTING TRANSFORMER	120V AC	WESTINGHOUSE	MV-832	292B048G09	(FOR GEN VAR XDUCER)
SOL	BRUSH OPERATOR SOLENOID	115V AC				GEN FIELD GROUND DETECTOR
APT	AUXILIARY POTENTIAL TRANSFORMER	115-115/66.5V	GE	YT-1557	760X99G1	3Ø Δ-%
FTD	UNIT FREQUENCY TRANSDUCER	55-65HZ	SCIENTIFIC COLUMBUS		5684	
VTD	UNIT VOLTAGE TRANSDUCER	0-150V	✳		0001288 OR VT110A2	1 ELEMENT
VTD	GENERATOR VOLTAGE TRANSDUCER	0-150V	✳		0001288 OR VT110A2	1 ELEMENT
VARTD	GENERATOR VAR TRANSDUCER	120V,5A	✳		000759 OR XLW3K5A2	2 ELEMENT,3Ø WATT/VAR COMB
WTD	GENERATOR WATT TRANSDUCER	120V,5A	✳		000759 OR XL3K5A2	2 ELEMENT,3Ø
WTD	AUX TRANSFORMER NO.11 WATT TRANSDUCER	120V,5A	✳		000759 OR XL3K5A2	2 ELEMENT,3Ø
WTD	AUX TRANSFORMER NO.12 WATT TRANSDUCER	120V,5A	✳		000759 OR XL3K5A2	2 ELEMENT,3Ø
VTD	EXCITATION FIELD VOLTAGE TRANSDUCER					(NOT USED)
ATD	EXCITATION FIELD CURRENT TRANSDUCER					(NOT USED)
TACH	TURBINE SHAFT SPEED	10VDC		KX-241	4116A8803	
RES	AUX TRANSFORMER 22 GROUND RESISTOR BANK	4160V,340Ω	WESTINGHOUSE			
W/VAR TD	DEH INPUT GENERATOR WATT/VAR TRANSDUCER	120V,5A	MOORE INDUSTRIES	PWV	PWV/120AC,5A/2-20mA/3E/120AC/SPC/5M	3 ELEMENT,3Ø DWG. 6020501-54
21G1	GENERATOR BACKUP RELAY		BECKWITH	M-3425A		
27G1	GENERATOR UNDERVOLTAGE RELAY	55-140V	WESTINGHOUSE	CV-2	1875508	SHORT TIME
43PW	MAIN TRANSFORMER TEST SWITCH		GE	SB-1	CPD11D	
40G2	GENERATOR LOSS OF FIELD RELAY	2.08-56Ω,0.79-18Ω	WESTINGHOUSE	KLF-1	292B333A10	
41E	AIR CIRCUIT BREAKER EXCITER FIELD	600V,1600A	WESTINGHOUSE	DB-50		EXCITATION CUBICLE
46G1	GENERATOR PHASE BALANCING CURRENT RELAY	3-5A	WESTINGHOUSE	COQ	3499A08A11	TRIPS UNITS 500KV BKRS
49HVAT11	WINDING TEMP DETECTOR AUX TRANSFORMER 11 H.V.					REC NO.6015580
49LVAT11	WINDING TEMP DETECTOR AUX TRANSFORMER 11 L.V.					REC NO.6015580
49AT12X,Y	WINDING TEMP DETECTOR AUX TRANSFORMER 12					REC NO.663334
49MTA,B,C	WINDING TEMP DETECTOR MAIN TRANSFORMER					
50NAT12X	INSTRUMENT NEUTRAL OVERCURRENT RELAY	1-4A	WESTINGHOUSE	SC	1876047	AUX TRANSFORMER 12X
50NAT12Y	INSTRUMENT NEUTRAL OVERCURRENT RELAY	1-4A	WESTINGHOUSE	SC	1876047	AUX TRANSFORMER 12Y
51STU1	UNIT STARTUP OVERCURRENT RELAY	0.5-2A	WESTINGHOUSE	SC	1878393	STARTUP ONLY
59NG1	GENERATOR NEUTRAL OVERVOLTAGE RELAY	5.4-20V	WESTINGHOUSE	CV-8	183A205A15	RUNNING
59NSTG1	GENERATOR NEUTRAL OVERVOLTAGE RELAY	7-16V	WESTINGHOUSE	SV	1956708	STARTUP ONLY
59STG1	UNIT STARTUP OVERVOLTAGE RELAY	70-160V	WESTINGHOUSE	SV	1876094	STARTUP ONLY
59ST2G1	UNIT STARTUP V/HZ OVERVOLTAGE ALARM RELAY	120V,2-70HZ 1.8-2.5V/HZ	GE	STV	12STV11A2A	ALARM ONLY
59G1	GENERATOR OVERVOLTAGE RELAY	55-140V 120-200V INST	WESTINGHOUSE	CV-25	290B572A22	SHORT TIME
63AT11	SUDDEN PRESSURE DEVICE		QUALITROL	900-009-01	6015580-12	AUX TRANSFORMER 11
63AT12	SUDDEN PRESSURE DEVICE					AUX TRANSFORMER 12
63FPA,B,C	SUDDEN PRESSURE DEVICE					MAIN TRANSFORMER
64G1	GENERATOR FIELD GROUND DETECTOR		WESTINGHOUSE	D-3	663293-26	
81G1	GENERATOR UNDERFREQUENCY RELAY	100/120V AC 40-70HZ	BASLER	T3E-E1J A8N0F	BE1-81O/U	TRIPS UNIT'S 500KV BKRS
87G1	GENERATOR DIFFERENTIAL OVERCURRENT RELAY	5A,60HZ	WESTINGHOUSE	SA-1	290B225A10	0.14A MIN PICKUP
87U1	UNIT OVERALL DIFFERENTIAL OVERCURRENT RELAY	0.5-2.5A TIME 10-40A INST	WESTINGHOUSE	CO-9	1875376	
87UH1	UNIT OVERALL DIFFERENTIAL OVERCURRENT HARMONIC RESTRAINT RELAY	4.0A H.R. 4-16A INST	WESTINGHOUSE	HRU	292B024A09	
89	25KV ISOPHASE BUS MOTOR OPERATED DISCONNECT SW		HKP			
51RU	UNIT RUNBACK RELAY	0-5.0A	ROCHESTER	ET-1200 L/U		PART OF GEN STATOR COOLING PROTECTION
32G1A,B	GENERATOR REVERSE POWER RELAY	120V AC	WESTINGHOUSE	CRN-1	290B038A09	0.023A MIN.PICKUP 2 TO 40 SEC.ADJ. WITH REMOTE PANEL
RFM1,2	RADIO FREQUENCY MONITOR		WESTINGHOUSE		663293-71	
38G1	TURBINE THRUST BEARING WEAR	120V AC	WESTINGHOUSE	ARD	ARD660SR	
SPA-D	STEAM PURITY ANALYZER DATA LOGGER	0-1VDC	MEMODYNE	MODEL 3243	663280-69	UNIT LOAD SIGNAL CORRESPONDING TO 0-100% GEN.LOAD
587-1A,1B	500KV TIE LINE DIFFERENTIAL RELAY		GE ALSTHOM	LFCB102		
78G1	GENERATOR OUT OF STEP RELAY		GE	OST	663102-64	
TVA11-A,B,C	AUX 11 HV BUSHING CAP TAP ADAPTOR		DOBLE		03C-1450-01	BTA GDM CONN IEEE TYPE T
THA12-A,B,C	AUX 12 HV BUSHING CAP TAP ADAPTOR		DOBLE		030-1523-01	BTA GDM CONN LAPP PRC
TGMA-B TGMB-B TGMC-B	MAIN TRANSFORMERS HV BUSHING CAP TAP ADAPTOR FOR PHASE A, B & C		DOBLE		03C-1451-01	BTA GDM CONN IEEE TYPE A

KEY DWG. SECTION IC

DATE	07-02-2013
D.D.	ZN54
R.E.	FXC2
I.V.	FAZ1
P.E.	N/A

REGISTERED PROFESSIONAL ENGINEER — SEAL REQUIRED — N/A — No. N/A — STATE OF CALIFORNIA

REVISION DESCRIPTION: REVISED PER DFT-7*2242

UNIT 1

ELECTRICAL
SINGLE LINE METER & RELAY DIAGRAM
GENERATION EXCITATION
MAIN & AUXILIARY TRANSFORMERS

DIABLO CANYON POWER PLANT
PACIFIC GAS AND ELECTRIC COMPANY
SAN FRANCISCO, CALIFORNIA

DWG SCALE:
BILL OF MATL:
SUPSDS:
SUPSD BY:

DRAWING	SHEET	PAGE	REV
437529	1	0	43

DRAWING NUMBER 437529 1

RASTER: 437529.dgn
PLOT: 437529.dgn
CAD User: ZN54 Date: 07-02-2013

4 Size

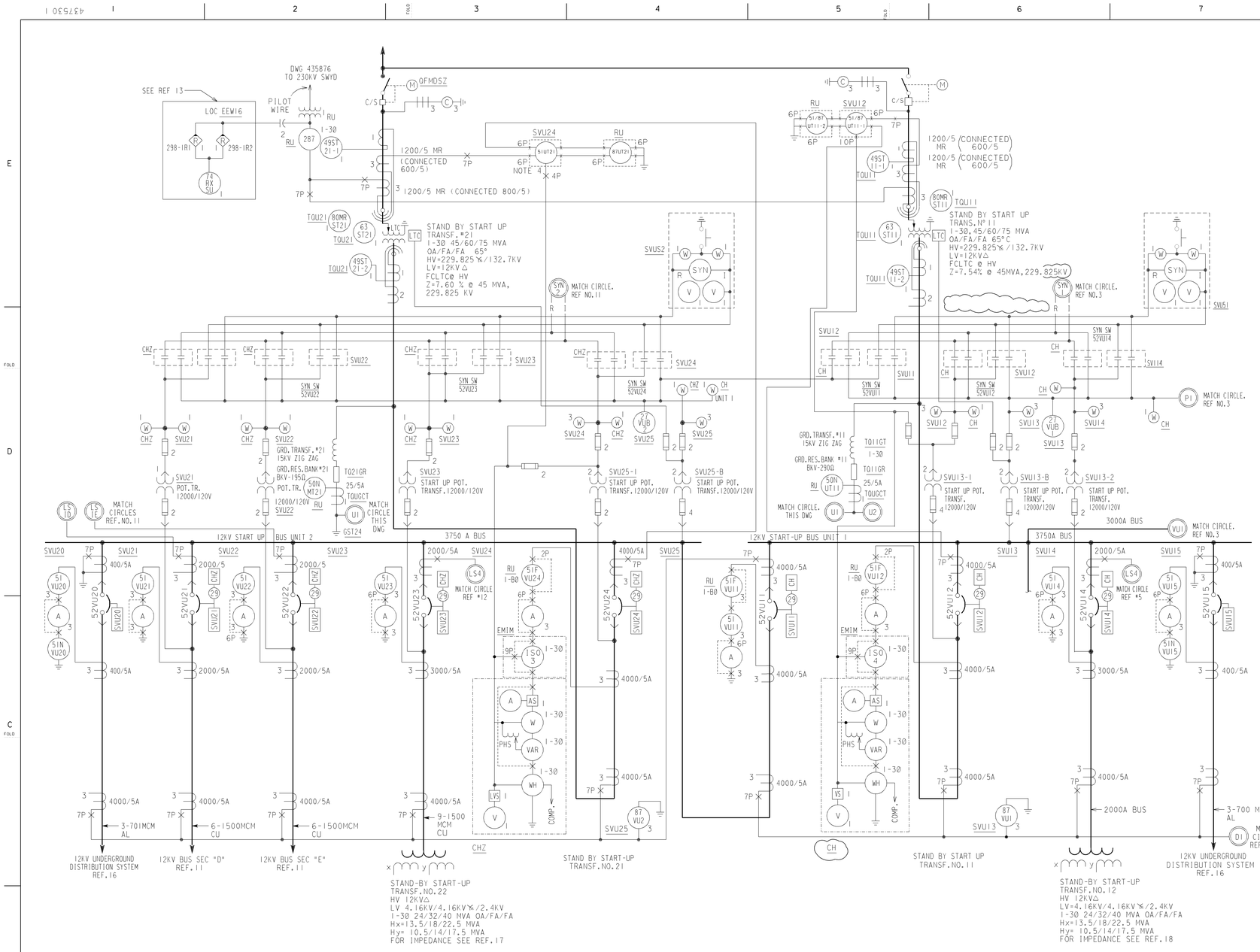

TABLE OF DEVICES

DEVICE NO.	DESCRIPTION	RATING	RATING	MFR	TYPE	CATALOG OR REF DWG	REMARKS
A	AMMETER CELL VU21,22	5A	0-2000A	G.E.CO.	AB-40	501031 31LSTM2	AT SWGR
A	AMMETER CELL VU14,23		0-3000A		AB-40	501031 31LSUA2	
A	AMMETER CELL VU11,12,24		0-4000A		AB-40	501031 31LSUE2	
A	AMMETER CELL VU12,24		0-4000A				AT STA ELECT BD
A	AMMETER CELL VU20,15		0-4000A	G.E.CO.	AB-40	501031 31LSSC2	AT SWGR
PHS	PHASE SHIFTING TRANSF	120V		W.E.	MV-832	292B048B09	3-PHASE, 3-WIRE
CBT	CURRENT BALANCING TRANSF	100V		W.E.	A	608A938G02	
SYN	SYNCHROSCOPE	120V-60Hz		G.E.CO.	AB16	50120452AAAA2	AT SWGR
V	VOLTMETER SYNCHRONIZING	150V	0-15KV	G.E.CO.	AB16	50120021P2WZ2	
V	VOLTMETER START-UP TRANSF						
VAR	VARMETER START-UP TRANSF #11	120V,5A	0-60MVAR	W.E.			2 ELEMENT,3 PHASE
VAR	VARMETER START-UP TRANSF #21		0-60MVAR				
W	WATTMETER START-UP TRANSF #11		0-80MW				
W	WATTMETER START-UP TRANSF #21		0-80MW				
WH	WATTHOUR METER START-UP TRANSF #11				D2B-2F		WITH CD-21 PULSE INIT
WH	WATTHOUR METER START-UP TRANSF #21				D2B-2F		
80MRST11,80MRST21	LTC PROTECTION RELAY	250V DC	3A	M.R.	IP54	RS 2001	
49ST11-1,49ST21-1	THERMAL RLY START-UP TRANSFORMER	0-180° C		*			* QUALITROL CORP
ISO-3	ISO METER STAND BY START-UP TRANSF #21	120V,4 WIRE,30		PSI	QUAD 4 +	I9	
ISO-4	ISO METER STAND BY START-UP TRANSF #11	120V,4 WIRE,30		PSI	QUAD 4 +	I9	
63ST11,63ST21	SUDDEN PRESSURE RELAY			*			* QUALITROL CORP
27VU11,2	UNDERVOLTAGE RLY START-UP BUS			G.E.CO.	IAV54F	208A8215G1	SEE NOTE 1
49ST11-2,49ST21-2	THERMAL RLY START-UP TRANSFORMER	0-180° C		*			* QUALITROL CORP
50NUT11,21	STBY START-UP TRANSF GRD OC RELAY	1-4A		W.E.	SC	1876047	
74-RX/SU		125VDC		W.E.	AR		PILOT WIRE ALARM RELAY
51VU14,23	OVERCURRENT RLY START UP TRANSFORMER	1.5-6A,V.INV.		G.E.CO.	IAC53	121AC53B26A	20-80A I.T.
51VU11	OVERCURRENT RLY 12KV SECTIONALIZING BKR	4-16A,V.INV			IAC53	121AC53A101A	NO L.T. UNIT
51VU20	OVERCURRENT RLY 12KV UNDERGROUND FDR	4-16A,V.INV			IAC53	121AC53B104A	20-80A I.T.
51VU21	OVERCURRENT RLY 12KV BUS SECT "D"	4-16A,V.INV			IAC53	121AC53A101A	NO I.T. UNIT
51VU22	OVERCURRENT RLY 12KV BUS SECT "E"	4-16A,V.INV					
51FVU11,12 & 24	OVERCURRENT RLY FAN CONTROL	5A,60Hz			PJC	20848397	SET P/U AT 4 AMP (1-30 RLY)
52VU11,12	CKT BKR 12KV SWGR	3750A		CH		AM 13.8-VR1000-3750A	I.C.1000MVA
52VU14	CKT BKR 12KV SWGR	2000A		CH		AM 13.8-VR750TU-2000A	I.C.1000MVA
52VU15	CKT BKR 12KV SWGR	1200A		CH		AM 13.8-VR750TU-1200A	I.C.1000MVA
52VU20	CKT BKR 12KV SWGR	1200A		CH		AM 13.8-VR750TU-1200A	I.C.1000MVA
52VU21,22 & 23	CKT BKR 12KV SWGR	2000A		CH		AM 13.8-VR750TU-2000A	I.C.1000MVA
52VU24	CKT BKR 12KV SWGR	3750A		CH		AM 13.8-VR1000-3750A	I.C.1000MVA
287	230KV TIE LINE DIFFERENTIAL RELAY	5A.60Hz		G.E.CO.	CPD11	12CPD11D2A	T.D.O.MONITOR BBA11A2
87VU1,VU2	DIFFERENTIAL START-UP BUS	4-16A,V.INV			IAC53	121AC53A101A	NO I.T. UNIT
298-121,1R2	PILOT WIRE MONITORING SYSTEM TONE RECEIVER				I9	I9AM	LOCATED IN UNIT-1 P.P.COMM.ROOM
51VU15	OVERCURRENT RLY 12KV UNDERGROUND FDR	1.5-12A,V.INV		G.E.CO.	IAC53	121AC53B811A	1.0-80A I.T.
51NVU20,15	GND OC RLY 12KV UNDERGROUND FDR	0.1-0.8A INV		G.E.CO.	SFC	12SFC151D1A	NO I.T. UNIT
51/87UT11-1	OVERCURRENT/DIFFERENTIAL RLY START-UP TRANSF. 11			SEL	387E	SEL-387E	SEE NOTE 2
51/87UT11-2	OVERCURRENT/DIFFERENTIAL RLY START-UP TRANSF. 11			G.E.CO.	T60	T60	SEE NOTE 2
51UT21	OVERCURRENT RLY START-UP TRANSF. 21			SEL	387E	SEL-387E	SEE NOTE 3
87UT21	DIFFERENTIAL RLY START-UP TRANSF. 21			G.E.	T60	T60	SEE NOTE 3

REFERENCES

	DWG
1. DESCRIPTION OF ELECT SCHEM DIAG SYMBOLS & CKTS DESIG.	050003
2. SINGLE LINE METER & RELAY DIAG GEN & MAIN TRANSF.	437529
3. SINGLE LINE METER & RELAY DIAG 12KV SYSTEM,UNIT #1	437531
4. SINGLE LINE METER & RELAY DIAG 4160V SWGR BUS SECT F,G & H	437533
5. SINGLE LINE METER & RELAY DIAG 4160V SWGR BUS SECT D & E,U#1	437532
6. SCHEMATIC DIAG 12KV BUS POT & SYNCHRO START UP BUS	437611
7. SCHEMATIC DIAG AUTOMATIC TRANSFER	437623
8. SCHEMATIC DIAG BUS DIFFERENTIAL	437615
9. SCHEMATIC DIAG STAND BY START-UP TRANSF.NO.11	437618,19 & 434100
10. SCHEMATIC DIAG STAND BY START-UP TRANSF.NO.12	437620 & 21
11. SINGLE LINE METER & RELAY DIAG,12KV SYSTEM,UNIT #2	441227
12. SINGLE LINE METER & RELAY DIAG,4160V SWGR BUS SECT D & E,UNIT #2	441228
13. DEVICE LIST AND SUPPLEMENT FOR 500KV SWYD.SCHEM.DIAG.	036764
14. SCHEMATIC DIAG STAND BY START-UP TRANSF.NO.21	437659 & 60
15. LIST OF EQUIPMENT LOCATION CODES	101900
16. SINGLE LINE DIAG 12KV DISTRIBUTION SYSTEM	445387
17. SINGLE LINE DIAG FOR STATION AUXILIARIES	441220
18. SINGLE LINE DIAG FOR STATION AUXILIARIES	437518
19. ISO METERING MFR DWGS.	6016585-1 THRU 12

LOCATIONS

CHZ	CONTROL BOARD STA.ELECTRONIC UNIT #2
TQU11	ST-UP TRANSF.11 CONT.CAB
TQU12	ST-UP TRANSF.21 CONT.CAB
EEW16	COMM.TONE REC EQUIP RACK 16
CH	CONTROL BOARD STA.ELECTRIC
SVU11	START-UP SWGR CUBICLE 11
RU	RELAY BOARD START-UP
TQ11GT	GROUNDING TRANSFORMER NO.11 CAB
TQ21GT	GROUNDING TRANSFORMER NO.21 CAB
TQ11GR	GROUNDING RESISTOR BANK NO.11 CAB
TQ21GR	GROUNDING RESISTOR BANK NO.21 CAB
TQUGCT	GROUNDING TRANSFORMER NO.11 & NO.21 CAB
EMIM	ISO METERING CABINET

NOTE:

1. FOR ELECTRICAL DEVICES TECH DATA AND SETPOINTS SEE PIMS COMPONENT DATABASE.
2. RELAYS 51/87UT11-1 AND 51/87UT11-2 ARE WIRED AND PROGRAMMED FOR ACB PHASE ROTATION.
3. RELAYS 51UT21 AND 87UT21 ARE WIRED AND PROGRAMMED FOR ACB PHASE ROTATION.
4. RELAYS 51/87UT11-1 AND 51UT21 ALSO HAVE AN OVERVOLTAGE (59) FUNCTION USED FOR ALARM.

LEGEND

- CH — CONTROL STATION AT LOC CH
- COMP. — COMPUTER
- LIGHTNING ARRESTOR
- C — COUNTER
- MR — MULTI-RATIO CT
- 29 — ISOLATION SWITCH AT SWITCHGEAR (DISC.BKR.CONTROL FROM CONTROL ROOM)
- AS — SWITCH,AMMETER
- VS — SWITCH,VOLTMETER
- SWITCH,TEST
- W — LAMP INDICATING WHITE

P.G.&E. SYSTEM PHASE SEQUENCE A-C-B

KEY DWG--SECTION 1C

UNIT 1 & 2

DATE 09-07-2012	
D.D.	MNRU
R.E.	RxG2
I.V.	
P.E.	R2M5

REVISION DESCRIPTION: REVISED PER DFT-7*1716

ELECTRICAL
SINGLE LINE
METER & RELAY DIAGRAM
12KV START-UP SYSTEM

DIABLO CANYON POWER PLANT
PACIFIC GAS AND ELECTRIC COMPANY
SAN FRANCISCO, CALIFORNIA

DWG SCALE:			
BILL OF MATL:			
SUPSDS:			
SUPSD BY:			
DRAWING	SHEET	PAGE	REV
437530	1	0	38

RASTER=437530.dgn DGN=437530.dgn CAD User:MNRU Date: 09-07-2012

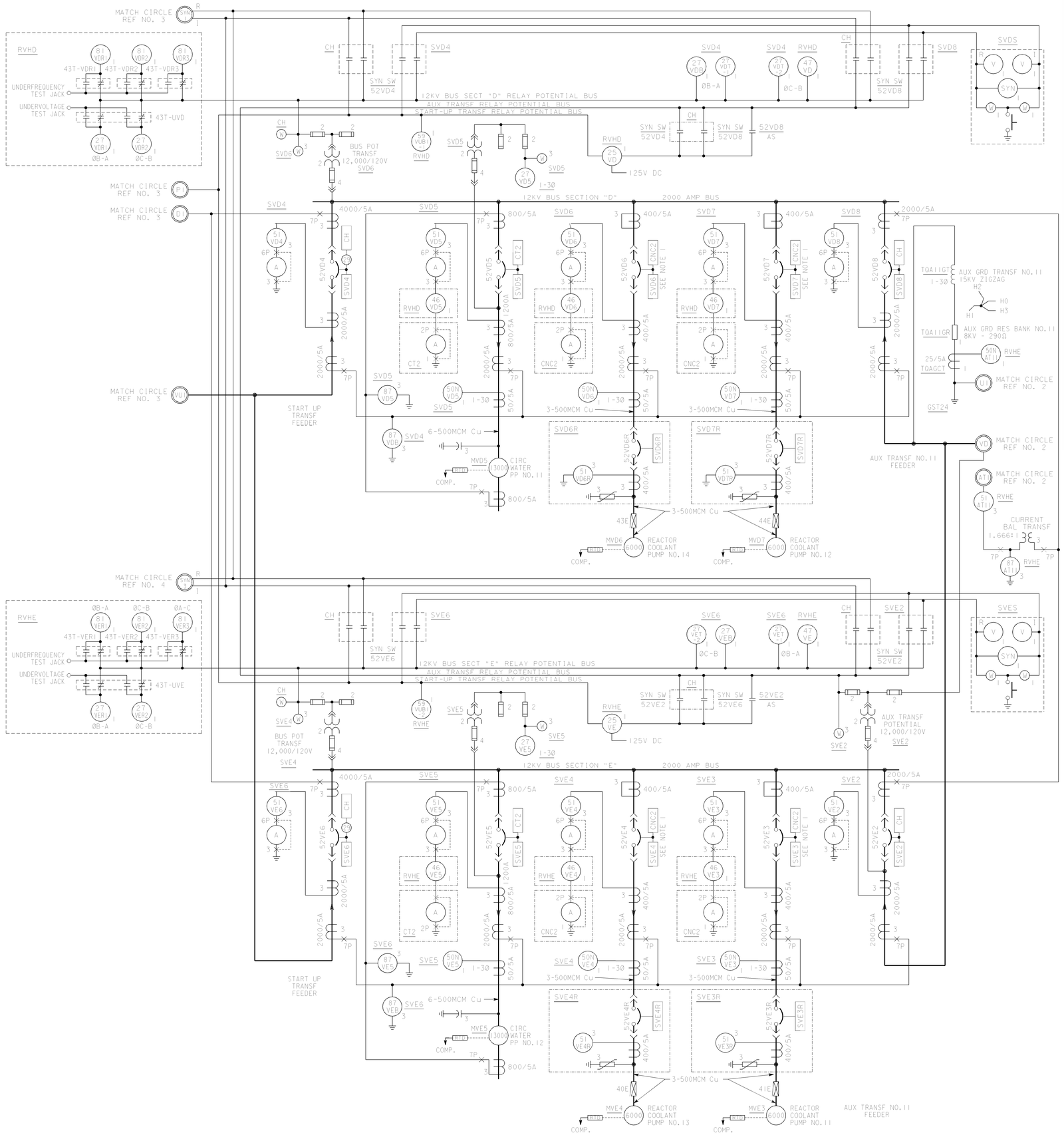

TABLE OF DEVICES

DEVICE NO.	DESCRIPTION	RATING	SCALE OR RANGE	MFR	TYPE	CATALOG NO.OR REF DWG NO.	REMARKS
A	AMMETER CELL VD6,VD7,VE3,VE4	5A	0-400A	GE CO	AB40	50103131LSSC2	AT SWGR
A	AMMETER CELL VD5,VE5	5A	0-800A	GE CO	AB40	50103131LSSN2	AT SWGR
A	AMMETER CELL VD4,VD8,VE6,VE2 (A0 & C0)	5A	0-2000A	GE CO	AB40	50103131LSTM2	AT SWGR
A	AMMETER CELL VD6,VD7,VE3,VE4 (A0)	5A	0-400A	WE	GA-332	644B637A19	REACTOR COOLANT BD
A	AMMETER CELL VD5,VE5	5A	0-800A	WE	GA-332	644B637A22	MISC SERVICE CONT BD
A	AMMETER CELL VE2 (B0)	5A	0-2000A	YOKOGAWA	AB40	10313ILSTM7	AT SWGR
A	AMMETER CELL VE4 (C0 & B0)	5A	0-400A	YOKOGAWA	AB40	10313ILSSC7	AT SWGR
SYN	SYNCHROSCOPE	115V-60HZ		GE CO	AB-16	50-120452AAAA	AT SWGR
V	VOLTMETER SYNCHRONIZING	150V	0-15KV	GE CO	AB-16	50-120021PZWZ	AT SWGR
25VD,VE	SYNCHRONISM CHECK RELAY	120V	10°-60°	GE CO	SLJ	12SLJ21A1A	30+ @ 5 SEC
27VDT2,VET2	UNDERVOLTAGE TRIP REL 12KV BUS	60-140V		WE	SSV-T	1321D79A01	
27VDB,VEB	UNDERVOLTAGE RELAY 12KV BUS	25-50V		GE CO	RAV	12RAV11B2A	AUTO-TRANSFER
27VDT1,VET1	UNDERVOLTAGE TRIP REL 12KV BUS	55-140V		GE CO	IAV54	121AV54F1A	
27VDR1,VDR2	UNDERVOLTAGE RLY,REACT COOL PP	55-160V		BASLER	BEI	BE1-27	STYLE A3G-E1J-N0B2F SEE NOTE 2(TYP)
27VER1,VER2	UNDERVOLTAGE RLY,REACT COOL PP	55-160V		BASLER	BEI	BE1-27	STYLE A3G-E1J-N0B2F SEE NOTE 2(TYP)
27VD5,VE5	UNDERVOLTAGE COND CIRC WTR PP	25-50V		GE CO	RAV	12RAV11B2A	
46VD5,VE5	PHASE BALANCE CUR RLY CWP	1A,125% SL		WE	CM	290B960A09	ALARM ONLY
46VD6,7,NVE3,4	PHASE BALANCE CUR REAC COOLANT PP	1A,125% SL		WE	CM	290B960A09	ALARM ONLY
47VD,VE	AC VOLTAGE BALANCE RELAY	55-140V		WE	CVQ	293B146A09	ALARM ONLY
50NVD5,NVE5	GRD CUR SENSOR CWPP	8A CONT	.4-40A	ITE	50D	468S2275	ALARM ONLY, TIMER RANGE 0.1 - 3 SEC, SET @ 0.5 SEC
50NVD6,7,NVE3,4	GRD CUR SENSOR REACTOR COOLANT PP	0.177A-0.2A		S.DUNN		112XAX11G10	ALARM ONLY
50NAT11	GRD OC RELAY AUX TRANSF #11	1-4A		WE	SC	1876047	ALARM ONLY
51VE3R,4R	OVERCURRENT RELAY,RCP BACK-UP PROT			GE CO	IFC66B	(3)	
51VD6R,7R	OVERCURRENT RELAY,RCP BACK-UP PROT			GE CO	IFC66B	(3)	
51VD4,VE6	OVERCURRENT RELAY, 12KV BUS	4-16A V.INV		GE CO	IAC53	121AC53A101A	NO I.T. UNIT
51VD5,VE5	OVERCURRENT RELAY, COND CWP	2-6A LT		WEST	COM5	287B456A15	20-80A INST NO
51VD6,7,VE3,4	OVERCURRENT RELAY, REAC COOLANT PP	2-6A LT		WEST	COM5	289B456A15	30A @ ~ DELAY
51VD8,VE2	OVERCURRENT RELAY, AUX TRANSF FEED	4-16A V.INV		GE CO	IAC53	121AC53A101A	NO I.T. UNIT
51AT11	OVERCURRENT RELAY, AUX TRANSF #11	5-12A V.INV		WE	CO-9	1875383	40-160A I.T. (2 I.T.CONT)
52VD5,6 & 7	CKT BKR 12KV SWGR, BUS "D"	1200A		CH		AM 13.8-VR750TU-1200A	IC 1000 MVA
52VE3,4 & 5	CKT BKR 12KV SWGR, BUS "E"	1200A		CH		AM 13.8-VR750TU-1200A	IC 1000 MVA
52VD4,8	CKT BKR 12KV SWGR, BUS "D"	2000A		CH		AM 13.8-VR750TU-2000A	IC 1000 MVA
52VE2,6	CKT BKR 12KV SWGR, BUS "E"	2000A		CH		AM 13.8-VR750TU-2000A	IC 1000 MVA
59VUB1-1,2	OVERVOLTAGE RELAY ST-UP BUS	60-140V		WE	SSV-T	1321D79A01	
52VE3R,4R	VAC CKT BKR, RCP BACK-UP OC PROT, BUS "E"	1200A		GE CO		VB 13.8-1000-3	IC 1000 MVA
52VD6R,7R	VAC CKT BKR, RCP BACK-UP OC PROT, BUS "D"	1200A		GE CO		VB 13.8-1000-3	IC 1000 MVA
81VDR1,2,3	12KV BUS D REACT COOL PP UF RLY			BASLER	DIG FREQ	BEI-81 O/U	
81VER1,2,3	12KV BUS E REACT COOL PP UF RLY			BASLER	DIG FREQ	BEI-81 O/U	
87AT11	DIFF RELAY AUX TRANSF NO.11	0.5 - 2.5A		WE	CO-9	1875376	10-40A I.T. (2 I.T.CONT)
87VD5,VE5	DIFF RELAY COND CIRC WATER PP	5A 60HZ		GE CO	CFD	12CFD12B2A	0.2 AMP TARGET
87VDB	DIFF RELAY 12KV BUS D	4-16A V.INV		GE CO	IAC53	121AC53A101A	NO I.T. UNIT
87VEB	DIFF RELAY 12KV BUS E	4-16A V.INV		GE CO	IAC53	121AC53A101A	NO I.T. UNIT

LOCATIONS

CNC2	CONTROL BOARD REACTOR COOLANT
CT2	CONTROL BOARD TURBINE AUX
CH	CONTROL BOARD STA ELECTRIC
SVD5	12KV SWGR BUS D CUBICLE 5
RVHD & E	RELAY BOARD STATION ELECTRIC
TQA11GF	AUX GRD TRANSF 11 DISC SW CAB
TQA11GT	AUX GRD TRANSF 11 CABINET
TQAGCT	GROUNDING CT 12, 14 CABINET
TQA11GR	AUX GRD RESISTOR BANK 11
GST24	GROUNDING STATION T24
SVD6R	12KV SWGR BUS D CUB 6R, BACK UP OC

LEGEND

—×—	TEST SWITCH
(W)	LAMP INDICATING WHITE
CH	CONTROL STATION AT LOC CH
RTD	RESISTIVE TEMPERATURE DEVICE
COMP	COMPUTER
44E	CONTAINMENT PENETRATION WITH PENETRATION NUMBER
29	ISOLATION SWITCH AT SWITCHGEAR (DISC BKR CONTROL FROM CONTROL ROOM)

REFERENCES

		DWG NO.
1.	DESCRIPTION OF ELECT SCHEM DIAGRAM SYMBOLS & EQUIP LOCATION NO'S	050003
2.	SINGLE LINE MTR & RLY DIAG GEN & MAINT TRANSF	437529
3.	SINGLE LINE MTR & RLY DIAG START-UP SYS UNITS 1 & 2	437530
4.	SINGLE LINE MTR & RLY DIAG 4160V SYS BUS SECT D & E	437532
5.	DELETED	
6.	SCHEMATIC DIAG CIRCULATING WATER PUMPS	437565
7.	SCHEMATIC DIAG REACTOR COOLANT PUMP 11	477846
8.	SCHEMATIC DIAG REACTOR COOLANT PUMP 12	477847
9.	SCHEMATIC DIAG REACTOR COOLANT PUMP 13	477848
10.	SCHEMATIC DIAG REACTOR COOLANT PUMP 14	477849
11.	MAIN CONTROL BOARD MATERIAL LIST	101941
12.	SCHEMATIC DIAG BUS POTENTIAL & SYNCHRONIZING 12KV SYS	437612

NOTE

1. BACK-UP BREAKER TO BE CLOSED BEFORE CLOSING PRIMARY BREAKER.
2. FOR ELECTRICAL DEVICES TECH DATA AND SETPOINTS SEE PIMS COMPONENT DATABASE.

REGISTERED PROFESSIONAL ENGINEER RICHARD WILLIAM WEBER E 9776 Exp. 6/30/06 ELECTRICAL STATE OF CALIFORNIA

KEY DWG. SECTION IC

UNIT 1

DATE	6/1/04	DESCRIPTION	COORDINATION	
DWN.	MIBF	Revised per DCI-SE-049636-00, DCI-SE-049637-00 & DCI-SE-049638-00	NUCL.	-
R.E.	SMB5		MECH.	-
INDEP. VERIFIER	RWB7		ELEC.	-
			CIVIL	-
P.E.	RWB7		PIPING	-
			I&C	-

REVISION INFORMATION

ELECTRICAL
SINGLE LINE METER AND RELAY DIAGRAM
12KV SYSTEM

DIABLO CANYON POWER PLANT
PACIFIC GAS AND ELECTRIC COMPANY
SAN FRANCISCO, CALIFORNIA

DWG SCALE
BILL OF MATL
SUPSDS
SUPSD BY
SHEET NO. 1 OF

437531 REV. 27

U2- 441227

DRAWING NUMBER 437531

CAD User:MIBF Date: 5-13-2004
DGN:437531.DGN

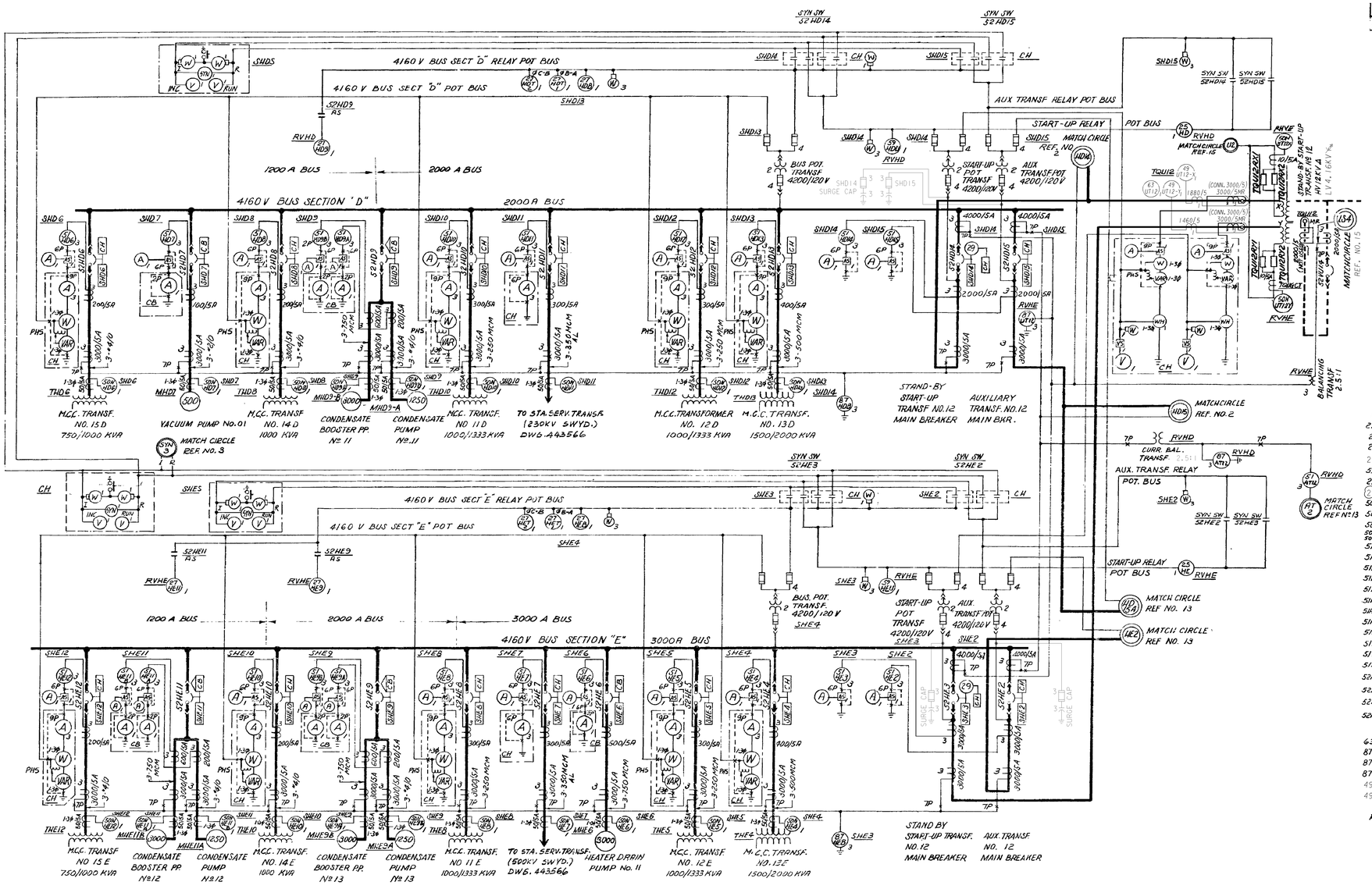

TABLE OF DEVICES

DEVICE NO.	DESCRIPTION	RATING OR RANGE	MFR	TYPE	CAT. NO. OR REF. DWG.	REMARKS
A	AMMETER, CELL HD7	0-100A	GE.Co	AB40	50-103131159K	AT SWGR.
A	CELL HD8, HE10	0-200A			50-103131159Z	
A	CELL HD6, 9; HE9, 11, 12	0-200A			50103131159Z	
A	CELL HD10, 11, 12; HE5, 7, 8	0-300A			50103131159Z	
A	CELL HD13, HE4	0-400A			50103131155Z	
A	CELL HE6	0-500A			50103131155Z	
A	CELL HD3, HE3, 11	0-600A			50-103131155Z	
A	CELL HD14, 15	0-2000A			80103131157M2	
A	CELL HE2, 3	0-3000A			50103131159Z	
A	CELL HD8, HE10	0-200A				STATION EL. CONT. BD.
A	CELL HD6, HE12	0-200A				
A	CELL HD10, 11, 12; HE5, 7, 8	0-300A				
A	CELL HD13, HE4	0-400A				
SYN	SYNCHROSCOPE SYNCH PANEL	115V, 60Hz	GE.Co	AB16	50-120452AAAA	AT SWGR
SYN	SYNCH PANEL					
V	VOLTMETER STDBY ST-UP TRANSF. NO. 12 (E)	0-150V				
V	STDBY ST-UP TRANSF. NO. 12 (D, F, G, H)	0-150V				
V	SYNCH. PANEL	0-150V	GE.Co.	AB16	50120021P2102	AT SWGR SCALE 0-5250V
V	SYNCH. PANEL	0-150V				
W	WATTMETER STANDBY ST-UP TRANSF. #12(E)	0-20MW				2-ELEMENT, 3-PHASE
W	STANDBY ST-UP TRANSF. #12(D, F, G, H)	0-25MW				
W	L.C. TRANSF 14, 15D, 14, 15E	0-1.5 MW				
W	11D, 11E	0-2 MW				
W	13D, 13E	0-3 MW				
PHS	PHASE SHIFTING TRANSFORMER	120V	WE	HY-832	292B048G09	3-PHASE, 3-WIRE
WH	WATTHOUR METER STDBY ST-UP TRANSF #12(E)	120V, 2.5A	WE	20B-P		2-ELEMENT, 3-PHASE.
WH	STDBY ST-UP TRANSF #12(D, F, G, H)	120V, 2.5A				
VAR	VARMETER STDBY ST-UP TRANSF. #12(E)	0-15MVAR				2-ELEMENT, 3-PHASE
VAR	STDBY ST-UP TRANSF. #12(D, F, G, H)	0-20MVAR				
VAR	L.C. TRANSF. 14, 15D, 14, 15E	0-1MVAR				
VAR	11D, 11E, 12E, 12D	0-1.5MVAR				
VAR	13D, 13E	0-2MVAR				
25 HD, HE	SYNCH CHECK RELAY 4KV BUS D & E	120V	GE.Co	IJS	12IJS51A93A	20°-60°
27HD7, HE7	UNDERVOLTAGE TRIP REL. 4KV BUS D&E	60-143V	WE	SSVT	1321D79A01	
27HD8	RELAY 4KV BUS D	25-50V	GE.Co	RAL	12RAV11B2A	AUTO TRANSFER
27HD7	TRIP RELAY 4KV BUS D	55-140V	GE.Co	IAV	12IAV56F1A	
27HE11	UNDERVOLTAGE TRIP RELAY 4KV BUS E	55-240V	GE CO.	IAV	208A8215	SEE NOTE 1 (TYP.)
59 HD4, HE11	OVERVOLTAGE RELAY START-UP 4KV BUS D&E	60-140V	WE	SSVT	1321D79A15	
27HD3, HE3, 11	UNDERVOLTAGE RELAY COND. PP. STD BY START	55-140V	WE	CV-7	1875524	UNDER- & OVERVOLTAGE RELAY
27HE2	UNDERVOLTAGE RELAY 4KV BUS E	18-50V	GE CO.	HGA	12HGA14B11A	AUTO TRANSFER
50HVDE-13	GROUND CURRENT SENSOR RELAY	0-177-0.2A	S-DUMM		112XAXII61G10	ALARM ONLY
50N HE 6-12		0-177-0.2A	S-DUMM		112XAXII61G10	
50NUT-12X, Y	OVERCURRENT RELAY - START UP TRANSF. GRD.	1-4A	WE	SC	1876047	
50HND7A, E9A, B9A, 50HND8, E7B, E8B	GROUND CURRENT SENSOR. RELAY	1V, 60Hz	S-DUMM		112XRXII61G10	
51UT12	OVER CURRENT RELAY AUX TRANSF. NO. 12	4-12A, 10Hz	WE.	CO-9	1875393	49-160A. I.T WITH 2 N.O. & 2 I.T CONTACTS
51HD7	VACUUM PUMP	25-5A	GE Co	IAC66B	112IAC66B3A	20-80A. I.T
51HD6, 8, 11E12	L.C. TRANSF. 14 D, 15D, 15E	4-12A, 10Hz	GE Co	IAC53B	12IAC53B104A	20-80A. I.T
51HD10, 12, 13	11D, 12D, 13D,			IAC53B		
51HE9, 5, 8, 10	11E, 12E, 13E, 14E			IAC53B		
51HD9A, E9B, E11A	CONDENSATE PUMP	2-6A	L.T	WE	COM-5	289B456A15 20-80A INST. & 10-30A & 4-20 DELAY
51HD9B, E9A, E11B	COND. BOOSTER PUMP			WE	COM-5	289B456A15
51HD11	230 KV SWYD. STA. SERV. TRANSF.	4-12A	10Hz	GE.Co	IAC53B	12IAC53B104A20-80A INST
51HE7	500 KV				IAC53B	
51HD14, HE3	STDBY START-UP TRANSF. MAIN BKR.	4-10A	10Hz		IAC53A	12IAC53A101A NO I.T. UNIT
51HD15, HE2	AUX. TRANSF. MAIN BKR.				IAC53A	12IAC53A101A NO I.T. UNIT
51HE6	HEATER DRIP PUMP	2-6A	L.T	WE.	COM-5	289B456A15 20-80A INST. & 10-30 & 4-20 DELAY
52HD6 to 13	SF6 CKT. BKR. 4160V SWGR.	1200A	NTS/PDS	INC SF6		IC 350 MVA
52HE4 to 12		1200A	NTS/PDS	INC SF6		350 MVA
52HD14 & 15		2000A	NTS/PDS	INC SF6		350 MVA
52HE2 & 3		3000A	NTS/PDS	INC SF6		350 MVA
63UT12	SUDDEN PRESS SW. ST-UP TRANSF. NO. 12					
87HD8, HE8	DIFFERENTIAL O/C RELAY 4KV BUS D&E	1.5-6A	GE.Co	IAC53A	12IAC53A2A	No I.T.
87AT12	AUX. TRANSF. NO. 12	0.5-2.5A	WE	CO-9	1875376	10-40A I.T. (2 I.T. CONT)
87UT12	STDBY ST-UP TRANSF NO. 12	0.5-2.5A	WE	CO-9	1875286	10-40A I.T
49UT12-X	X-WINDING TEMP, ST-UP TRANSF. No. 12					
49UT12-Y	Y-WINDING TEMP, ST-UP TRANSF. No. 12					
RES	STD-BY ST-UP TRANSF. 12 GRD. RES. BANK	4160V 340-Ω	WE			
A	AMMETER, CELL HD7	0-100A	WE	GA-332	644B637A15	AT CONTROL BOARD
A	CELL HD9, HE9, HE11	0-200A			644B637A17	
A	CELL HE6	0-500A			644B637A20	
A	CELL HD9, HE9, HE11	0-600A			644B637A21	

NOTES:

1. FOR ELECTRICAL DEVICES TECH DATA AND SETPOINTS, SEE PIMS COMPONENT DATABASE.

LEGEND

- AM — AMMETER
- VM — VOLTMETER
- SWITCH
- TEST
- W — WHITE LAMP INDICATION

SPECIAL SYMBOL

- CB — CONTROL STATION AT LOC. CB WITH AUTO START DEVICE
- CB — CONTROL STATION AT LOC CB
- COMP. COMPUTER
- 29 — ISOLATION SW. AT SWGR (DISC. BKR, CONTROL FROM CONTROL ROOM)
- MR — MULTI-RATIO CT

REFERENCES

		DWG NO.
1	DESCRIPTION OF ELECTRICAL SCHEMATIC DIAGRAM SYMBOLS & EQUIP. LOCATION	DS0003
2	SINGLE LINE METER & RELAY DIAGRAM 4160 V SWITCHGEAR BUS SECT F, G & H	437533
3	12 KV SWITCHGEAR	437531
4	DIAGRAM 480 V SYSTEM (SHEET 1)	437537
5	SCHEMATIC DIAGRAM CONDENSATE & CONDENSATE BOOSTER PUMPS	437566
6	HEATER NO. 2 DRAIN TANKS PUMP NO 11	437570
7	BUS DIFFERENTIAL (SHEET 1)	437616
8	AUTOMATIC TRANSFER	437624
9	4160 V BUS POT. & SYNCH. BUS SECTION D & E	437613
10	AUXILIARY TRANSFORMER NO. 12	437663
11	START-UP TRANSFORMER NO. 12	437620
12	MCC TRANSFORMERS	437628
13	SINGLE LINE METER & RELAY DIAGRAM GEN, MAIN TRANSF & EXCITATION	437529
14.	SINGLE LINE METER & REL. DIAG. 230 & 500 KV SWYDS AC STA. POWER	443566
15.	12 kV START-UP SYSTEM	437530
16.	SCHEMATIC DIAG. VACUUM PUMP	437574
17.	DELETED	
18.	FUSE LIST	066144

LOCATION

- CB — CONTROL BOARD, CONDENENSATE & FEEDWATER
- CH — STATION ELECTRICAL CONTROL BOARD
- RVHD — STATION ELECTRICAL RELAY BOARD, SECTION D
- SHD6 — 4160V SWITCHGEAR, CUBICLE No, BUS SECT D
- SHE2 — " " " No 2 " E
- TQU12 — STANDBY START-UP TRANSF. No 12
- TQU2RX1, RX2 — AB-, GND RES. ST-UP TRANSF. 12 X WINDING
- TQU2RY1, RY2 — " " " " " Y
- TQUCT — GRD CT 11, 21, 12X, 12Y CABINET

KEY DWG. SECTION IC

UNIT 1

DATE 06-21-2012		REVISION DESCRIPTION
D.D.	JBMX	REVISED PER DFT-7-1725
R.E.	FAZI	
I.V.		
P.E.	AGB2	

REGISTERED PROFESSIONAL ENGINEER — ALBERT G. BARTA, E 9271, Exp. 9/30/2013, ELECTRICAL, STATE OF CALIFORNIA

ELECTRICAL
SINGLE LINE METER & RELAY DIAGRAM
4160 VOLT SYSTEM

DIABLO CANYON POWER PLANT
PACIFIC GAS AND ELECTRIC COMPANY
SAN FRANCISCO, CALIFORNIA

DWG SCALE:			
BILL OF MATL:			
SUPSDS:			
SUPSD BY:			
DRAWING	SHEET	PAGE	REV
437532	1	0	28

DRAWING NUMBER 437532 1

RASTER: eru14272.DGN
CELL: eru14272.DGN
CAD User: JBMX Date: 06-21-2012

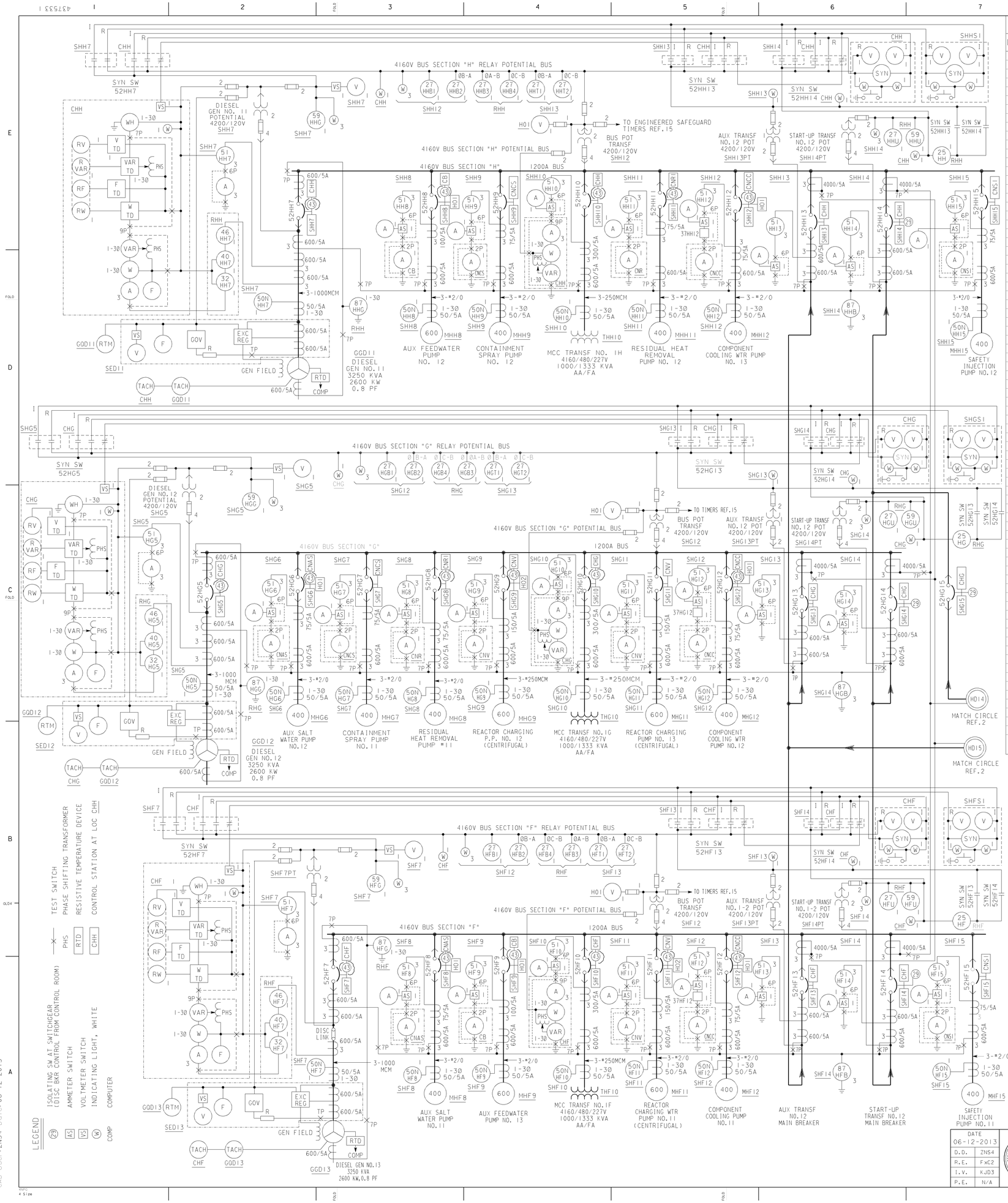

TABLE OF DEVICES

DEVICE NUMBERS	DESCRIPTION	RATING	MFR	TYPE	CATALOG OR REF DWG	REMARKS
A	AMMETER, CELL G11	0-50A	W.E.	GA-332	6443637A12	AT CONTROL BOARD
A	AMMETER, CELL G11	0-50A	G.E.CO	AB-40	50-103131LSNT2	AT SWITCHGEAR
A	AMMETER, CELL F8,12,15;G6,7,8,12;H9,11,12,15	0-75A	G.E.CO	AB-40	50-103131LSPB2	AT SWITCHGEAR
A	AMMETER, CELL F9,H8	0-100A	G.E.CO	AB-40	50-103131LSPK	AT SWITCHGEAR
A	AMMETER, CELL F11,G9	0-150A	G.E.CO	AB-40	50-103131LSPZ2	AT SWITCHGEAR
A	AMMETER, CELL H10,F10,G10	0-300A	G.E.CO	AB-40	50-103131LSRX2	AT SWITCHGEAR
A	AMMETER, CELL H7,13,14;F7,13,14;G5,13,14	0-600A	G.E.CO	AB-40	50-103131LSSJ2	AT SWITCHGEAR
A	AMMETER, CELL F8,12,15;G6,7,8,12;H9,11,12,15	0-75A	W.E.	GA-332	644B637A32	AT CONTROL BOARD
A	AMMETER, CELL F9,H8	0-100A	W.E.	GA-332	644B637A15	AT CONTROL BOARD
A	AMMETER, CELL F11,G9	0-150A	W.E.	GA-332	644B637A16	AT CONTROL BOARD
A	AMMETER, CELL H10,F10,G10	0-300A	W.E.	VC-252		AT CONTROL BOARD
A	AMMETER, CELL H7,F7,G5	0-600A	W.E.	KA241	291B461A26	AT CONTROL BOARD
V	VOLTMETER SYNCH	0-150V	G.E.CO	AB-16	50-120021PZUL2	AT SWGR RM (EAST SIDE WALL) SCALE 0-5250V
V	VOLTMETER SYNCH	0-150V				AT LOC. CHF, CHG, CHH
F	FREQUENCY METER,DIESEL GEN	50-70Hz				
FTD	FREQUENCY TRANSDUCER, DIESEL GEN	55-65Hz	EST-ANG		6284B	
RF	RECORDER FREQ, DIESEL GEN		YOKOGAWA	DX1004N		
RV	RECORDER VOLT, DIESEL GEN		YOKOGAWA	DX1004N		
RVAR	RECORDER VARS, DIESEL GEN		YOKOGAWA	DX1004N		
RW	RECORDER WATTS, DIESEL GEN		YOKOGAWA	DX1004N		
SYN	SYNCHROSCOPE	60Hz	G.E.CO	AB-16	50-120452AAAA2	AT SWGR RM (EAST SIDE WALL)
SYN	SYNCHROSCOPE	60Hz	W.E.	K124I	186A235A01	AT CONTROL BOARD
V	VOLTMETER,DIESEL GENERATOR	150V	G.E.CO	AB-40		AT SWGR,SCALE 0-5250V
WTD	WATT TRANSDUCER,DIESEL GENERATOR	120V,3Ø	NOLLER OR SC▲		000759 OR XL31K5A2	2 ELEMENT 3Ø
VAR	VARMETER,DIESEL GENERATOR	0-3.0MVAR	W.E.	K241		2 ELEMENT 3Ø
VAR	VARMETER,LC TRANSF.1H,1F,1G	0-1.5MVAR	W.E.	K241		
VARTD	VAR TRANSDUCER,DIESEL GENERATOR	120V,5A	NOLLER OR SC▲		000759 OR XLWV31K5A2	WATT/VAR COMBINATION,NOTE 1
VR	VOLT REGULATOR,DIESEL GENERATOR					
VTD	VOLT TRANSDUCER,DIESEL GENERATOR	120V	NOLLER OR SC▲		0001288 OR VT11CA2	1 ELEMENT 1Ø
W	WATTMETER,DIESEL GENERATOR	120V,5A				2 ELEMENT 3Ø
WH	WATTHOUR METER,DIESEL GENERATOR	120V,2.5A	WE	D2B-2F		2 ELEMENT 3Ø
W	WATTMETER,LC TRANSF.1H,1F,1G	120V,5A				2 ELEMENT 3Ø
25HF,HG,HH	SYNCH CHECK RELAY,4KV BUS F,G & H	120V,60Hz	G.E.CO	1JS	121JS51A3A	20°-60°
59HFU,HGU,HHU	O/V RELAY,ST-UP FDR,4KV BUS F,G & H	60-140V	W.E.	SSVT	132ID79A01	
27HFB1,GB1,HB1	U/V RELAY,4KV BUS F,G & H, (TRANSFER)	30-60%PU	ABB	47H	412N0275-V	P/U 90-120V D/OUT 30-60%PU
27HFB2,GB2,HB2	U/V RELAY,4KV BUS F,G & H(ST.DIESEL)	55-140V	BASLER ELEC CO	BE1	BE1-GPS100-E4NIH0	SEE NOTE 2
59HFG,GG,HG	O/V RELAY, DIESEL GEN	60-140V	ABB	SSV-T	1338D83A01	INSTANTANEOUS(CLOSE ON NORM V)
32HF7,G5,H7	DIRECTIONAL POWER RELAY,DIESEL GEN	120V,5A	W.E.	CRN-1	290B038A09	
40HF7,G5,H7	LOSS OF FIELD RELAY,DIESEL GEN	120V,5A	W.E.	KLF	290B481A09	
46HF7,G5,H7	UNIT NEGATIVE SEQUENCE RELAY,DIESEL GEN	3-5A	W.E.	COQ	1956207	30 ALARM ONLY
27HFT2,HGT2,HHT2	U/V TRIP RELAY 4KV BUS F,G & H	60-140V	W.E.	SSVT	132ID79A15	
27HFT1,HGT1,HHT1	U/V TRIP RELAY 4KV BUS F,G & H	55-140V	BASLER ELEC CO	BE1	BE1-27-AE3-C2J-B0B1F	SEE NOTE 2
50NHF7,G5,H7	GND CURRENT SENSOR,DIESEL GEN	0.177A-0.2A	STRUTHERS/DUNN		112XAX11G10	ALARM ONLY
50NHF8,G6	GND CURRENT AUX.SALTWATER PUMP	0.177A-0.2A	STRUTHERS/DUNN		112XAX11G10	ALARM ONLY
50NHF9,H8	GND CURRENT AUX.FEEDWATER PUMP	0.177A-0.2A	STRUTHERS/DUNN		112XAX11G10	ALARM ONLY
50NHH11,G8	GND CURRENT RESIDUAL HEAT REMOVAL PUMP	0.177A-0.2A	STRUTHERS/DUNN		112XAX11G10	ALARM ONLY
50NHG7,H9	GND CURRENT CONTAINMENT SPRAY PUMP	0.177A-0.2A	STRUTHERS/DUNN		112XAX11G10	ALARM ONLY
50NHF10,G10,H10	GND CURRENT LC TRANSF.1F,1G,1H	0.177A-0.2A	STRUTHERS/DUNN		112XAX11G10	ALARM ONLY
50NHF11,G11,G9	GND CURRENT REACTOR CHARGING PUMP	0.177A-0.2A	STRUTHERS/DUNN		112XAX11G10	ALARM ONLY
50NHF12,G12,H12	GND CURRENT COMPONENT COOL WATER PUMP	0.177A-0.2A	STRUTHERS/DUNN		112XAX11G10	ALARM ONLY
50NHF15,H15	GND CURRENT SAFETY INJECTION PUMP	0.177A-0.2A	STRUTHERS/DUNN		112XAX11G10	ALARM ONLY
27HFU,HGU,HHU	U/V RELAY ST-UP FEEDER 4KV BUS F,G & H	55-140V	W.E.	CV-2	1875508	START DIESEL
27HFB3,GB3,HB3	U/V TRIP RELAY 4KV BUS F,G & H(2ND LEVEL)	60-140V	W.E.	SSV-T		
27HFB4,GB4,HB4	U/V TRIP RELAY 4KV BUS F,G & H(2ND LEVEL)	60-140V	W.E.	SSV-T		
37HF12,G12,H12	AC CURRENT/VOLTAGE ALARM MODULE	120V	ROCHESTER	1200L		AT SWGR,USED FOR RECIRC.VLV CONTROL
51HF7,G5,H7	OC RELAY DIESEL GENERATOR	.5-12A	BASLER ELECTRIC	BE1-51/27R	9 1372 00 129	WITH VOLTAGE RESTRAINT
51HF8,G6	OC RELAY AUX SALTWATER PUMP	.5-15.9A	BASLER ELECTRIC	BE1-50/51B	BE1-50/51B-107	1-99A INST.
51HF9,H8	OC RELAY AUX FEEDWATER PUMP	.5-15.9A	BASLER ELECTRIC	BE1-50/51B	BE1-50/51B-107	1-99A INST.
51HH11,G8	OC RELAY RESIDUAL HEAT REMOVAL PUMP	2.5-5A	G.E.CO	IAC66B	121AC66B3A	20-80A INST.
51HG7,H9	OC RELAY CONTAINMENT SPRAY PUMP	2.5-5A	G.E.CO	IAC66B	121AC66B3A	20-80A INST.
51HF10,G10,H10	OC RELAY LC TRANSFORMER 1F, 1G, 1H	.5-15.9A	BASLER ELECTRIC	BE1-50/51B	BE1-50/51B-107	1-99A INST.
51HF11,G9	OC RELAY REACTOR CHARGING PUMP	.5-15.9A	BASLER ELECTRIC	BE1-50/51B	BE1-50/51B-107	1-99A INST.
51HF12,G12,H12	OC RELAY COMPONENT COOL WATER PUMP	.5-15.9A	BASLER ELECTRIC	BE1-50/51B	BE1-50/51B-107	1-99A INST.
51HF14,G14,H14	OC RELAY ST-UP TRANSF.MAIN BREAKER	.5-15.9A	BASLER ELECTRIC	BE1-50/51B	BE1-50/51B-107	I.T.UNIT NOT USED
51HF15,HH15	OC RELAY SAFETY INJECTION PUMP	.5-15.9A	BASLER ELECTRIC	BE1-50/51B	BE1-50/51B-107	1-99A INST.
51HF13,G13,H13	OC RELAY AUX TRANSF.MAIN BREAKER	.5-15.9A	BASLER ELECTRIC	BE1-50/51B	BE1-50/51B-107	I.T.UNIT NOT USED
51HG11	OC RELAY REACTOR CHARGING PUMP	2.5-5A	G.E.CO	IAC66B	121AC66B3A	20-80A INST.
52HG15	AIR CIRCUIT BKR 4160V SWGR	2000A	G.E.CO.			IC 250MVA
52HF7 TO 15	CIRCUIT BKR 4160V SWGR	1200A	NTS/PDS INC.	SF6		IC 350MVA
52HG5 TO 14	CIRCUIT BKR 4160V SWGR	1200A	NTS/PDS INC.	SF6		IC 350MVA
52HH7 TO 15	CIRCUIT BKR 4160V SWGR	1200A	NTS/PDS INC.	SF6		IC 350MVA
RTM	RUNNING TIME METER,DIESEL GEN					
TACH	TACHOMETER,DIESEL GEN					
V	VOLTMETER BUS POTENTIAL	0-150	WE			
PHS	PHASE SHIFTING TRANSFORMER	120V	WE	MV-832	292B04BG09	3-PHASE,3-WIRE
87HFG,GG,HG	DIFF.O.C.RELAY,DIESEL GEN.	5A,60Hz	WE	SA-1	290B225A10	0.14A MINIMUM PICK-UP
87HFB,GB,HB	DIFF.O.C.RELAY,4KV BUS F,G,H	.5-15.9A	BASLER ELECTRIC	BE1-50/51B	BE1-50/51B-107	I.T.UNIT NOT USED
43XXX/TS	CONTROL TRANSFER SW.					FOR DETAILS SEE ASSOCIATED REF. SCHEMATIC

▲ SC = SCIENTIFIC COLUMBUS (AN ESTERLINE CO.)
SEE DWG 663100-245

REFERENCES

	DWG NO.
1. DESCRIPTION OF ELECT SCHEM DIAGRAM SYMBOLS & EQUIP LOCATION NO'S	050003
2. SINGLE LINE METER & RELAY DIAG 4160V BUS SECTION D & E	437532
3. SINGLE LINE METER & RELAY DIAG, 12KV SYSTEM	437531
4. SINGLE LINE DIAGRAM 480V SYSTEM SHEET 1	437542
5. SINGLE LINE DIAGRAM 480V SYSTEM SHEET 2	437543
6. SCHEMATIC DIAGRAM 4160V BUS POT & SYNCH, BUS SECTION F,G & H	437614
7. SCHEMATIC DIAGRAM AUX SALT WATER PUMP	437594
8. SCHEMATIC DIAGRAM CONTAINMENT SPRAY PUMP	437590
9. SCHEMATIC DIAGRAM COMPONENT COOLING WATER PUMP	437593
10. SCHEMATIC DIAGRAM REACTOR CHARGING PUMP	437595
11. SCHEMATIC DIAGRAM RESIDUAL HEAT REMOVAL PUMP	437591
12. SCHEMATIC DIAGRAM AUX FEEDWATER PUMP SHEET 1	437583
13. SCHEMATIC DIAGRAM AUX FEEDWATER PUMP SHEET 2	437584
14. SCHEMATIC DIAGRAM BUS DIFFERENTIAL PUMP SHEET 2	437617
15. SCHEMATIC DIAGRAM AUTOMATIC TRANSFER	437625,6&7
16. SCHEMATIC DIAGRAM SAFETY INJECTION PUMP	437589
17. SCHEMATIC DIAGRAM AUX TRANSFORMER NO.12	437663
18. SCHEMATIC DIAGRAM START-UP TRANSFORMER NO.12	437620
19. SCHEMATIC DIAGRAM MCC TRANSFORMERS	437629
20. SCHEMATIC DIAGRAM 4KV DIESEL GEN & ASSOC.CKT.BREAKERS SHEET 1	437665
21. SCHEMATIC DIAGRAM 4KV DIESEL GEN & ASSOC.CKT.BREAKERS SHEET 2	437666
22. SCHEMATIC DIAGRAM 4KV DIESEL GEN & ASSOC.CKT.BREAKERS SHEET 3	437676
23. DELETED	
24. FUSE LIST	066144

EQUIPMENT LOCATIONS

CB	CONTROL BOARD, CONDENSATE & FEEDWATER	CNCS	CONTROL BOARD, CONTAINMENT SPRAY
CHF	CONTROL BOARD, ENG SAFEGUARD 4KV BUS F	CNR	CONTROL BOARD, RESIDUAL HEAT
CNCC	CONTROL BOARD, COMPONENT COOLING	SHF13PT	SWGR 4KV BUS F CUBICLE 13 POT TRANSF
CNV	CONTROL BOARD, CHEM & VOL CONTROL SYSTEM	SHFS1	SWGR 4KV BUS F SYNCHRONIZING PANEL 1
CNAS	CONTROL BOARD, AUX SALTWATER	GGD11	DIESEL GENERATOR NO.11
CNS1	CONTROL BOARD, SAFETY INJ & ACC DISCHARGE	GGD11	DIESEL GENERATOR NO.11 GAUGE PANEL
RHF	RELAY BOARD, ENG SAFEGUARD 4KV BUS F	SED11	DIESEL GENERATOR NO.11 EXCITATION CUBICLE
SHF8	4160V SWGR BUS SECT F, CUBICLE NO. 8	HO2	HOT SHUTDOWN REMOTE CONTROL PNL 2 (CHARGING)
HO1	HOT SHUTDOWN REMOTE CONTROL PNL 1 (FEEDWATER)		

NOTE:

1. XLWV31K5A2 DOES NOT REQUIRE THE USE OF AN EXTERNAL PHASE SHIFTING TRANSFORMER FOR VAR METERING.
2. FOR ELECTRICAL DEVICES TECH DATA AND SETPOINTS SEE PIMS COMPONENT DATABASE.

KEY DWG. SECTION IC

NUCLEAR SAFETY RELATED

UNIT 1

DATE	
06-12-2013	
D.D.	ZNS4
R.E.	FXC2
I.V.	KJD3
P.E.	N/A

REGISTERED PROFESSIONAL ENGINEER — NOT REQUIRED — N/A — STATE OF CALIFORNIA

REVISION DESCRIPTION: REVISED PER DFT-7•2032

ELECTRICAL
SINGLE LINE DIAGRAM
SINGLE LINE METER & RELAY DIAGRAM
4160 VOLT SYSTEM

DIABLO CANYON POWER PLANT
PACIFIC GAS AND ELECTRIC COMPANY
SAN FRANCISCO, CALIFORNIA

DWG SCALE:
BILL OF MATL:
SUPSDS:
SUPSD BY:

DRAWING	SHEET	PAGE	REV
437533	1	0	42

U2- 441229, 441230

RASTER:437533.dgn
DGN:437533.dgn
CAD User:ZNS4 Date:06-12-2013

4 Size

437533 1

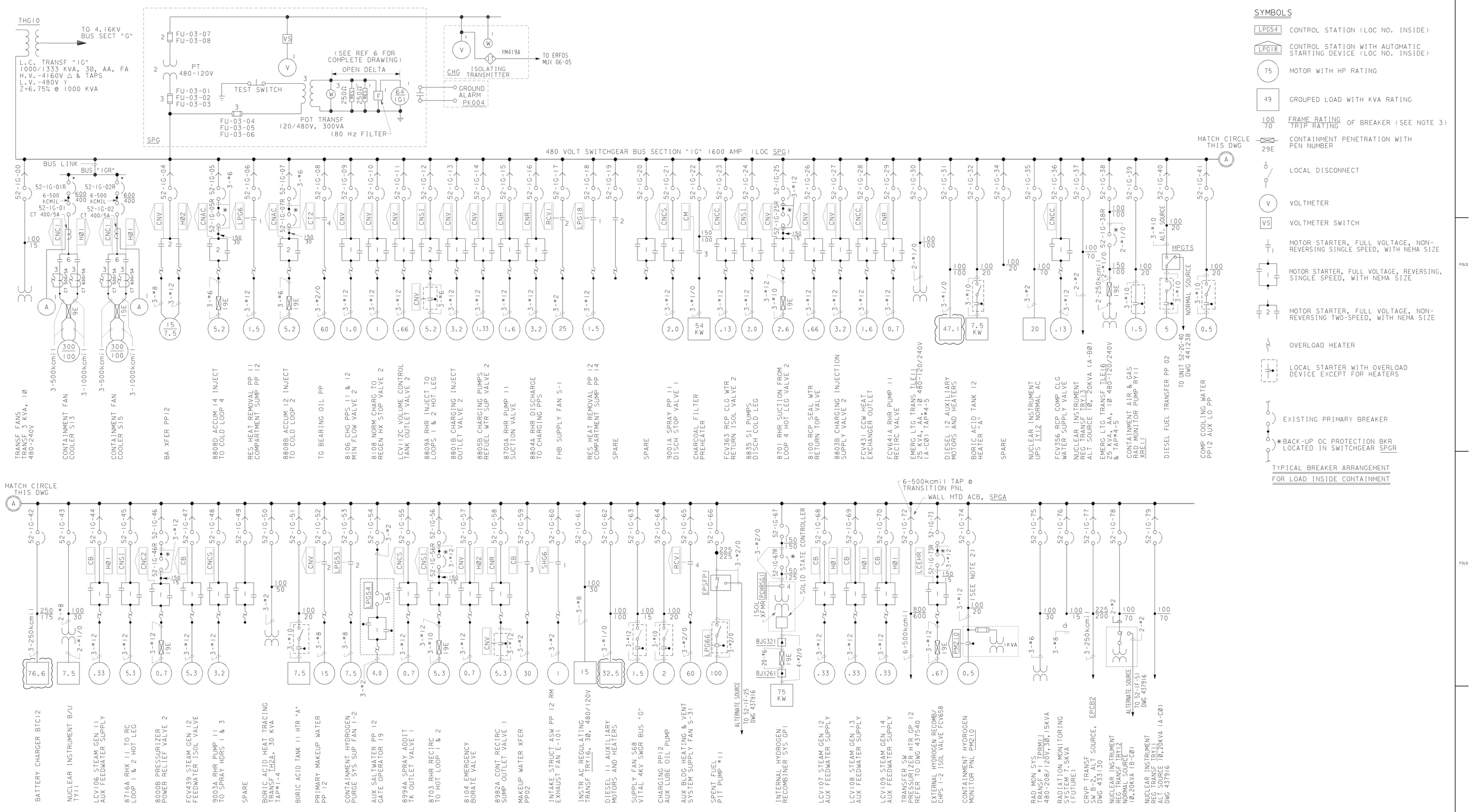

NOTES

1. ALL BREAKERS 25,000 A.I.C. (ASYMMETRICAL)
2. BKR 52-IG-74 IS USED IN PLACE OF BKR 52-IG-33.
3. THE CONTINUOUS AND TRIP RATING AS SHOW IN THIS DWG ARE FOR "THERMAL-MAGNETIC" BREAKERS ONLY. FOR "MAGNETIC" ONLY BREAKERS, THE RATINGS ARE SHOWN IN SETPOINT DATA SHEET.

REFERENCES

	DWG NO.
1. LIST OF EQUIPMENT LOCATION CODES	101900
2. PURCHASE ORDER 4R-8803 & 4R-41619,	ITEM 2B
3. RECORD DWG	663336
4. CIRCUIT SCHEDULE (480V VITAL SYSTEM)	103058
5. DELETED	
6. SCHEMATIC DIAGRAM 480V MCC GROUND DETECTION SYSTEM	437788
7. ARRG'T & DIAGRAM OF CONN. - ERFDS	445077

NUCLEAR SAFETY RELATED

KEY DWG. SECTION IC

DATE	
03-07-2013	
D.D.	IAZI
R.E.	KJD3
I.V.	
P.E.	LAL3

REVISION DESCRIPTION: REVISED PER DFT-7*1942

UNIT 1

ELECTRICAL
SINGLE LINE METER AND RELAY DIAGRAM
480 VOLT SYSTEM BUS SECTION IG

DIABLO CANYON POWER PLANT
PACIFIC GAS AND ELECTRIC COMPANY
SAN FRANCISCO, CALIFORNIA

DWG SCALE:			
BILL OF MATL:			
SUPSDS:			
SUPSD BY:			
DRAWING	SHEET	PAGE	REV
437542	1	0	54

RASTER=437542.dgn
DGN=437542.dgn
CAD User:IAZI Date:03-07-2013

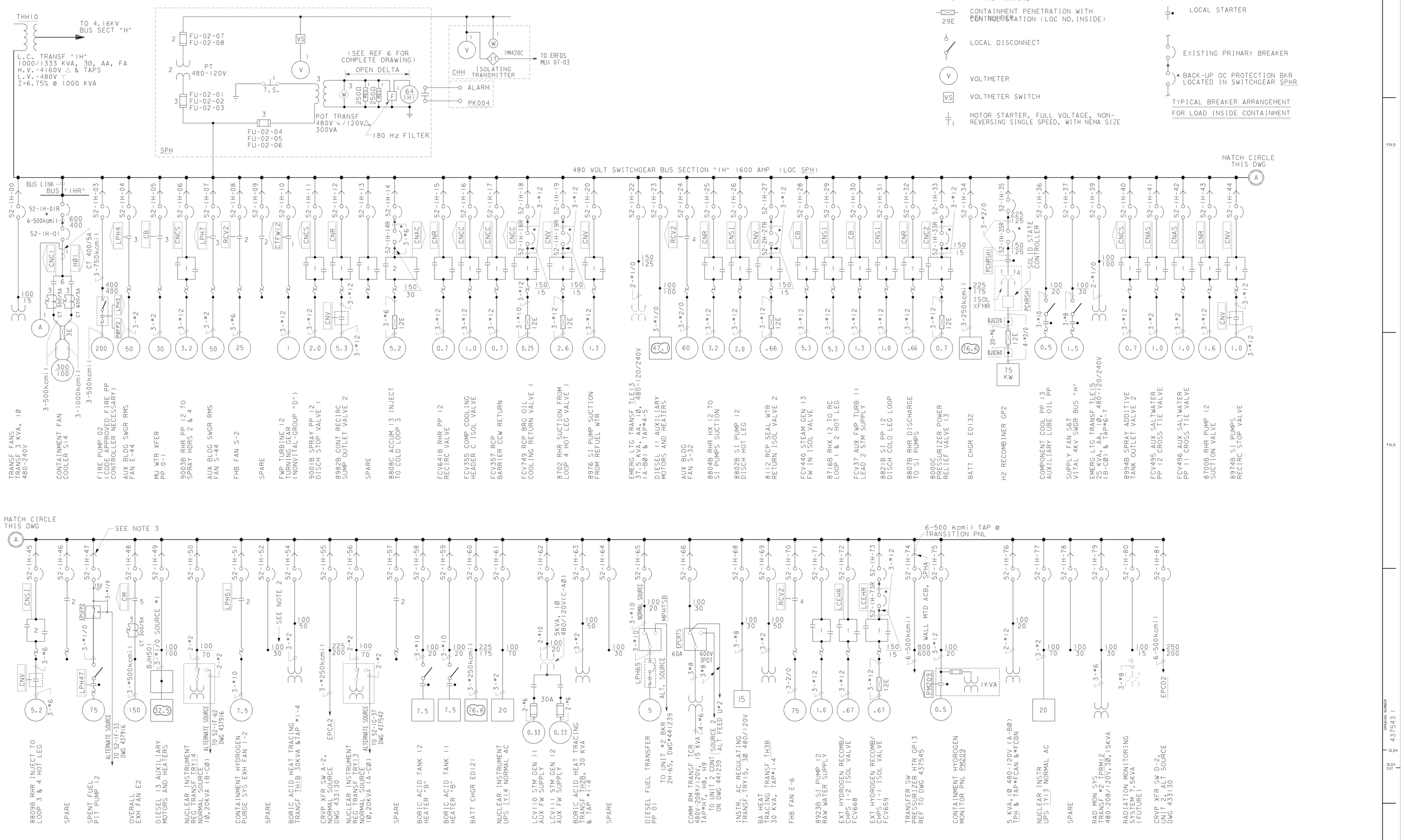

NOTES

1. ALL BREAKERS 25,000A I.C. (ASYMMETRICAL)
2. THE BKRS 1H-52 & 1G-33 SHOULD BE SWAPPED BY FIELD, BKR 1G-33 SHOWN ON DWG 437542.
3. BOTH BREAKER STAB ASSEMBLIES OF 1H-47 ARE USED FOR THE 150A BREAKER.
4. BKRS 52-1H-75 & 76 ARE USED IN PLACE OF BKRS 52-1H-53 & 38 RESPECTIVELY.

REFERENCES

	DWG NO.
1. LOCATION NUMBER SCHEDULE	101900
2. PURCHASE ORDER	4R8803 & 4R-41619
3. RECORD DWG	663336-ITEM "3B"
4. CIRCUIT SCHEDULE (480V VITAL SYSTEM)	103058
5. DELETED	
6. SCHEMATIC DIAGRAM 480V MCC GROUND DETECTION SYSTEM	437788
7. SLD CONTROL RM PRESSURIZATION SYSTEM	433130
8. BLOCK DIAGRAM - ERFDS - TECH SUPPORT CENTER	445278
9. ARRG'T & DIAGRAM OF CONN. - ERFDS	445077

NUCLEAR SAFETY RELATED

KEY DWG. SECTION IC

UNIT 1

DATE	
03-07-2013	
D.D.	IAZI
R.E.	KJD3
I.V.	
P.E.	LAL3

REVISION DESCRIPTION: REVISED PER DFT-7×1943

ELECTRICAL
SINGLE LINE METER & RELAY DIAGRAM
480 V SYSTEM
BUS SECTION H

DIABLO CANYON POWER PLANT
PACIFIC GAS AND ELECTRIC COMPANY
SAN FRANCISCO, CALIFORNIA

DWG SCALE:			
BILL OF MATL:			
SUPSDS:			
SUPSD BY:			
DRAWING	SHEET	PAGE	REV
437543	1	0	50

RASTER=002c1005.dgn
DGN=002c1002.dgn
CAD User:IAZI Date:03-07-2013

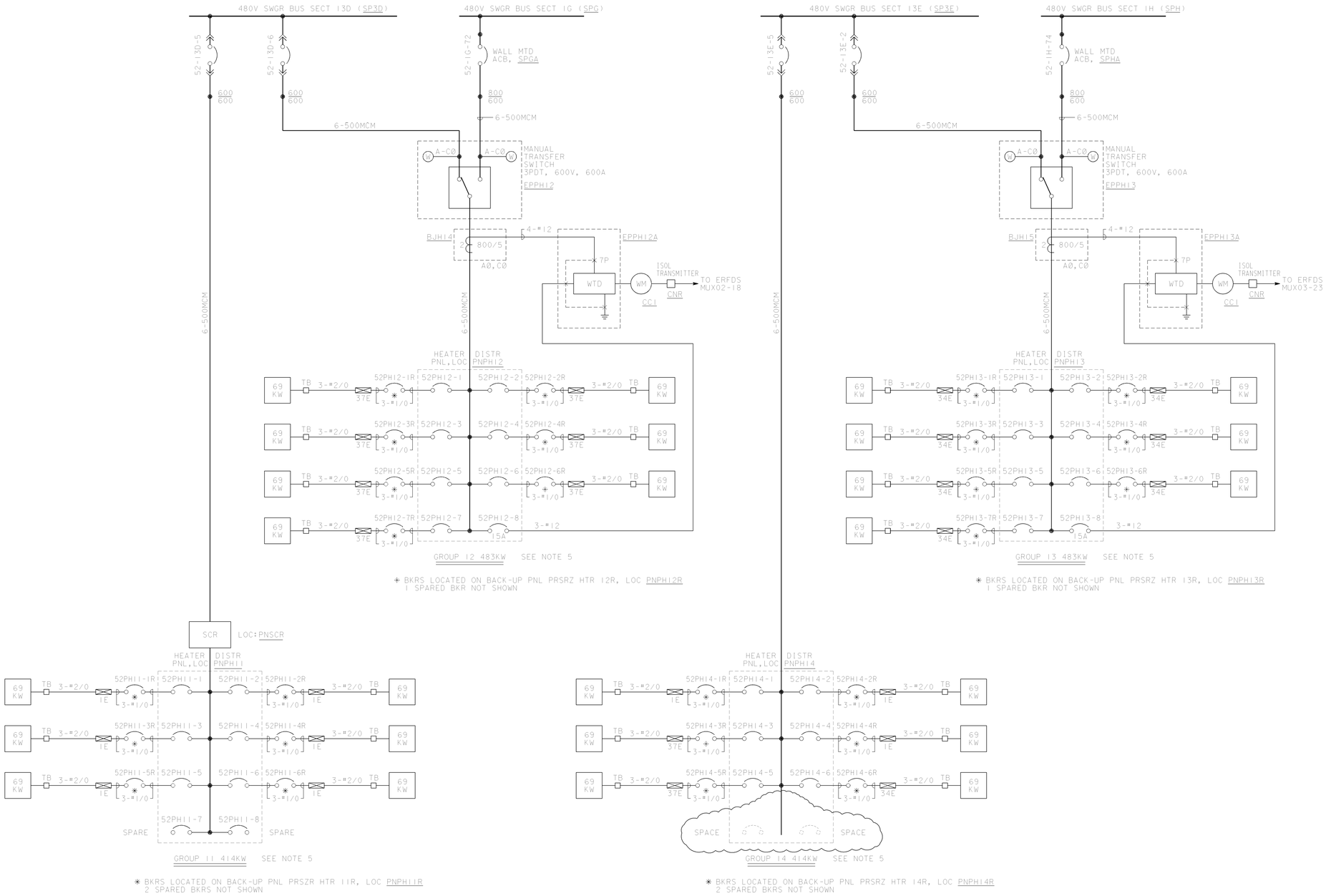

GROUP	BREAKER NO.	DISCONNECTED HEATERS	BREAKER CONNECTED LOAD	TOTAL GROUP CONNECTED LOAD
11				414KW
12	52PH12-1	#5	46KW	460KW
13	52PH13-1	#13	46KW	437KW
	52PH13-7	#28	46KW	
14				414KW

TABLE A
DETERMINATED HEATERS

SYMBOLS

- CURRENT & POTENTIAL TEST SWITCH
- WM — WATTMETER
- W — WHITE LIGHT
- 600/600 — CONTINUOUS RATING / TRIP RATING OF BREAKER
- SCR — SILICON CONTROLLED RECTIFIER
- IE — CONTAINMENT PENETRATION WITH PEN. NUMBER
- TB — TERMINAL BOX
- * — BACK-UP OVERCURRENT PROTECTION BREAKER

NOTES

1. ALL CIRCUIT BREAKERS LOCATED AT HEATER DISTR. PNLS. & BACK-UP PANELS HAVE A 125A TRIP EXCEPT AS NOTED.
2. PEN. NO. 1E HAS 9 CKTS; 6 OF GR. 11 & 3 OF GR. 14.
3. PEN. NO. 37E HAS 9 CKTS;7 OF GR. 12 & 2 OF GR. 14.
4. PEN. NO. 34E HAS 8 CKTS;7 OF GR. 13 & 1 OF GR. 14.
5. THE LOAD KW (69KW) SHOWN FOR EACH BREAKER AND THE GROUP LOADS (414KW FOR GROUP 11 & 14 AND 483KW FOR GROUP 12 & 13) ARE TOTAL CAPACITY AND INCLUDE HEATERS THAT HAVE BEEN DETERMINATED. SEE TABLE A FOR DISCONNECTED HEATERS AND THE REMAINING CONNECTED LOAD.

REFERENCES

	DWG NO.
1. SINGLE LINE METER & RELAY DIAG., 480V SYSTEM BUS SECT 13D,13E,131 & 13J	437540
2. SINGLE LINE METER & RELAY DIAG., 480V SYSTEM BUS SECT 1G	437542
3. SINGLE LINE METER & RELAY DIAG., 480V SYSTEM BUS SECT 1H	437543
4. SCHEMATIC DIAGRAM, PRESSURIZER HEATERS	437602
5. DIAGRAM OF CONNECTIONS PRESSURIZER HEATERS	437852
6. DIAGRAM OF CONNECTIONS PRESSURIZER HEATERS PANEL	437853
7. DIAGRAM OF CONNECTIONS BACK-UP PRESSURIZER HEATERS PANEL	429078
8. LIST OF EQUIPMENT LOCATION CODES	067997
9. DESCRIPTION OF ELECT. SCHEMATIC DIAGS.; SYMBOLS & CKT. DESIGNATIONS	050003

REGISTERED PROFESSIONAL ENGINEER ROBERT MARTIN SR. E-16911 Exp. 06/30/07 ELECTRICAL STATE OF CALIFORNIA

KEY DWG. SECTION IC

UNIT 1

DATE 9/10/04	DESCRIPTION	COORDINATION	
DWN. AJL2	Revised per FCT 029269	NUCL.	-
R.E. SMB5		MECH.	-
INDEP. VERIFIER -		ELEC.	-
		CIVIL	-
		PIPING	-
P.E. RZM5		I&C	-

REVISION INFORMATION

ELECTRICAL
SINGLE LINE DIAGRAM
PRESSURIZED HEATERS

DIABLO CANYON POWER PLANT
PACIFIC GAS AND ELECTRIC COMPANY
SAN FRANCISCO, CALIFORNIA

DWG SCALE
BILL OF MATL
SUPSDS
SUPSD BY
SHEET NO. 1 OF

437545 REV 10

DRAWING NUMBER 437545

CAD User:AJL2 Date: 9-10-2004
DGN:437545.DGN

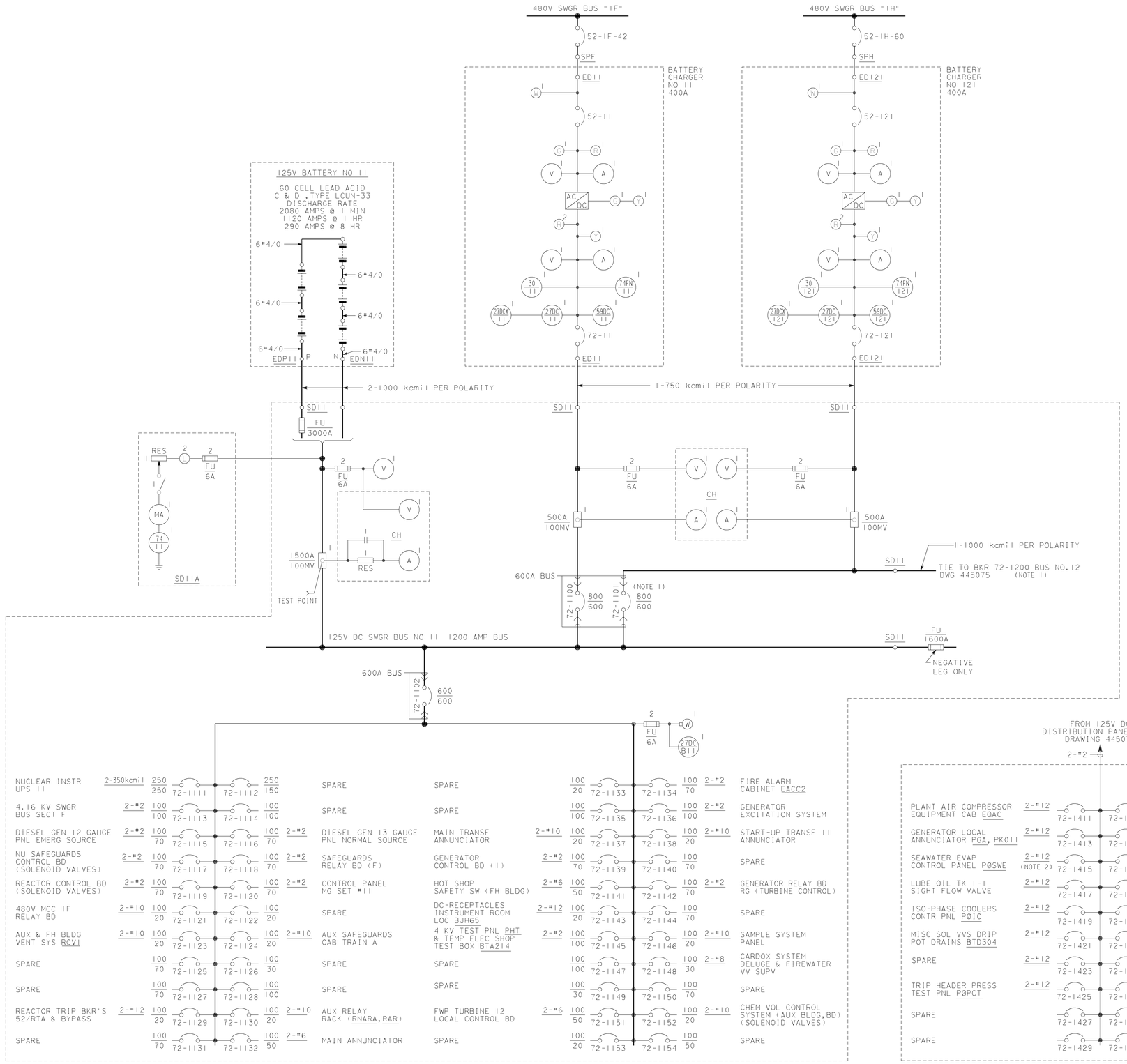

125V DC DISTRIBUTION PANEL 11

LOC: SD11

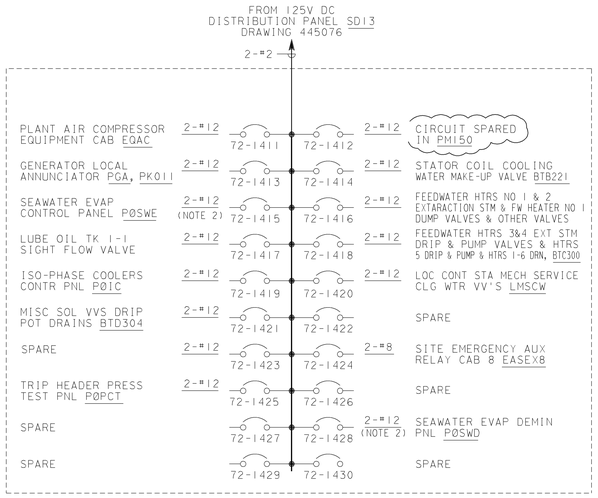

125V DC DISTRIBUTION PANEL 14

LOC: SD14

(LOCATED IN TURBINE AREA)
(ALL C/B ARE 15A,2P)

ALL BREAKERS ARE 2P, 15A EXCEPT 72-1422, 72-1424 & 72-1427 WHICH ARE 2P, 30A.

NOTES

1. KEY INTERLOCK ALLOWS ONLY ONE CIRC BREAKER TO BE CLOSED AT A TIME
2. FEEDS "ABANDONED IN PLACE" EQUIPMENT

ALL BREAKERS IN DIST PANELS TO BE EQUIP W/3/16" ID BRASS EYE BOLTS
INTERRUPTING CAPACITY OF CIRCUIT BREAKERS SHALL BE NOT LESS THAN 20,000 AMP AT 250V.D.C.

INTERRUPTING CAPACITY OF ALL FUSES SHALL BE NOT LESS THAN 50,000 AMP AT 250V.D.C., BUSSMAN TYPE KTN OR KRP-C

BATTERIES ---------- 4R-0132
ALL DC SWGR ---------- 4R-8804
EXIDE BATTERY CHARGER ---------- 4R-8800
SOLIDSTATE CONTROLS INCORPORATED BATTERY CHARGER ----- 10008-E-NPG

REFERENCES

	DWG NO.
1. REC DWG BATTERY	663343
2. REC DWG DC SWGR	663345
3. REC DWG BATT CHARGER	663344
4. LIST OF ELECTRICAL DEVICES FOR PROTECTION & CONTROL CIRCUITS	050024
5. SINGLE LINE METER AND RELAY DIAG 125VDC SYSTEM SH 2	445075
6. SINGLE LINE METER AND RELAY DIAG 125VDC SYSTEM SH 3	445076
7. SINGLE LINE METER AND RELAY DIAG 480V SYSTEM BUS SECT "1F"	437916
8. SINGLE LINE METER AND RELAY DIAG 480V SYSTEM BUS SECT "1H"	437543

NUCLEAR SAFETY RELATED

KEY DWG. SECTION 1C

UNIT 1

DATE		REVISION DESCRIPTION
12-30-2013		REVISED PER DFT-7*2432
D.D.	ZNS4	
R.E.	FAZI	
I.V.	KJD3	
P.E.	N/A	

REGISTERED PROFESSIONAL ENGINEER — NOT REQUIRED — N/A — STATE OF CALIFORNIA

ELECTRICAL
SINGLE LINE METER AND RELAY DIAGRAM
125 VOLT DC SYSTEM

DIABLO CANYON POWER PLANT
PACIFIC GAS AND ELECTRIC COMPANY
SAN FRANCISCO, CALIFORNIA

DWG SCALE:			
BILL OF MATL:			
SUPSDS:			
SUPSD BY:			
DRAWING	SHEET	PAGE	REV
437546	1	0	46

DRAWING NUMBER 437546 1

RASTER=437546.dgn
DGN=437546.dgn
CAD User:ZNS4 Date: 12-30-2013

TABLE OF DEVICES

DEVICE (1Y12)	DEVICE (1Y14)	DESCRIPTION	CATALOG/TYPE	CONTACT	REMARKS
X12	X12	UPS COMMON ALARM		LATCH	COMMON ALARMS FOR X7, X13, X18, X19, X20, X203 & X404
X7	X7	OUT OF SYNC/COMMON ALARM		NON-LATCH	CONTACT CLOSES TO ENERGIZE X12
X13	X13	UPS FAN FAILURE/COMMON ALARM		LATCH	CONTACT CLOSES TO ENERGIZE X12
X18	X18	UPS OVER TEMP/COMMON ALARM		LATCH	CONTACT CLOSES TO ENERGIZE X12
X19	X19	REG XFMR OVER TEMP/COM ALM		LATCH	CONTACT CLOSES TO ENERGIZE X12
X20	X20	REG XFMR FAN FAILURE/COM ALM		LATCH	CONTACT CLOSES TO ENERGIZE X12
X203	X203	LOSS OF BYPASS SOURCE/COM ALM		NON-LATCH	CONTACT CLOSES TO ENERGIZE X12
X404	X404	AC INPUT/RECTIFIER FAIL/COM ALM		NON-LATCH	CONTACT CLOSES TO ENERGIZE X12
X4	X4	DC INPUT UNDERVOLTAGE RELAY		NON-LATCH	CONTACT CLOSES TO ENERGIZE X9
X6	X6	INVERTER OUTPUT UNDERVOLTAGE RELAY		NON-LATCH	CONTACT CLOSES TO ENERGIZE X10
X9	X9	LOSS OF BATTERY SOURCE ALARM		LATCH	N.C. - CONTACT OPENS TO ALARM
X10	X10	INVERTER FAILURE ALARM		LATCH	N.C. - CONTACT OPENS TO ALARM
X15	X15	LOSS OF AC OUTPUT VOLTAGE ALARM		LATCH	N.C. - CONTACT IN SERIES WITH X204
X16	X16	STATIC SW TRANSFERRED ALARM		LATCH	N.C. - CONTACT IN SERIES WITH X17
X17	X17	MAN BYP SW IN BYPASS POS ALARM		NON-LATCH	N.O. - CONTACT IN SERIES WITH X16
X204	X204	AC OUTPUT UNDERVOLTAGE RELAY		NON-LATCH	N.O. - CONTACT IN SERIES WITH X15
27PY12		PY12 UNDERVOLTAGE ALARM	P&B - TYPE CSJ MODEL 38-70010	NON-LATCH	N.C. - CONTACT CLOSES TO ALARM
	27PY14	PY14 UNDERVOLTAGE ALARM	P&B - TYPE CSJ MODEL 38-70010	NON-LATCH	N.C. - CONTACT CLOSES TO ALARM

TABLE OF DEVICES

DEVICE	DEVICE	DESCRIPTION	CATALOG/TYPE	CONTACT	REMARKS
XDCR1	XDCR1	DC INPUT CURRENT TRANSDUCER	RIS: 0 - 50mV DC		
XDCR2	XDCR2	DC INPUT VOLTAGE TRANSDUCER	RIS: 0 - 150VDC		
XDCR3	XDCR3	AC OUTPUT CURRENT TRANSDUCER	RIS: 0 - 5 AAC		
XDCR4	XDCR4	AC OUTPUT VOLTAGE TRANSDUCER	RIS: 0 - 130VAC		
72-12B1	72-14B1	DC INPUT BREAKER	G.E. TYPE TJK, 350A		
52-12B2	52-14B2	AC OUTPUT BREAKER	G.E. TYPE SE150, 100A		
52-12B3	52-14B3	AC OUTPUT BREAKER	G.E. TYPE SE150, 100A		
52-12B4	52-14B4	BYPASS SOURCE DISC SWITCH	G.E. TYPE TOD, 225A		
52-12B401	52-14B401	AC INPUT BREAKER	G.E. TYPE THED, 80A		
52-12B801	52-14B801	REG XFMR OUTPUT BREAKER	G.E. TYPE SF250, 250A		
29-12S801	29-14S801	REG XFMR TRANSFER SWITCH	600VAC, 75A, 3PDT		BREAK-BEFORE-MAKE SWITCH
F2	F2	INVERTER FUSE	250VAC, 600A		SEE DWG 066144
F204	F204	STATIC SWITCH FUSE	250VAC, 600A		SEE DWG 066144
F407	F407	RECTIFIER FUSE	250VAC, 400A		SEE DWG 066144
F408	F408	RECTIFIER FUSE	250VAC, 400A		SEE DWG 066144
F409	F409	RECTIFIER FUSE	250VAC, 400A		SEE DWG 066144

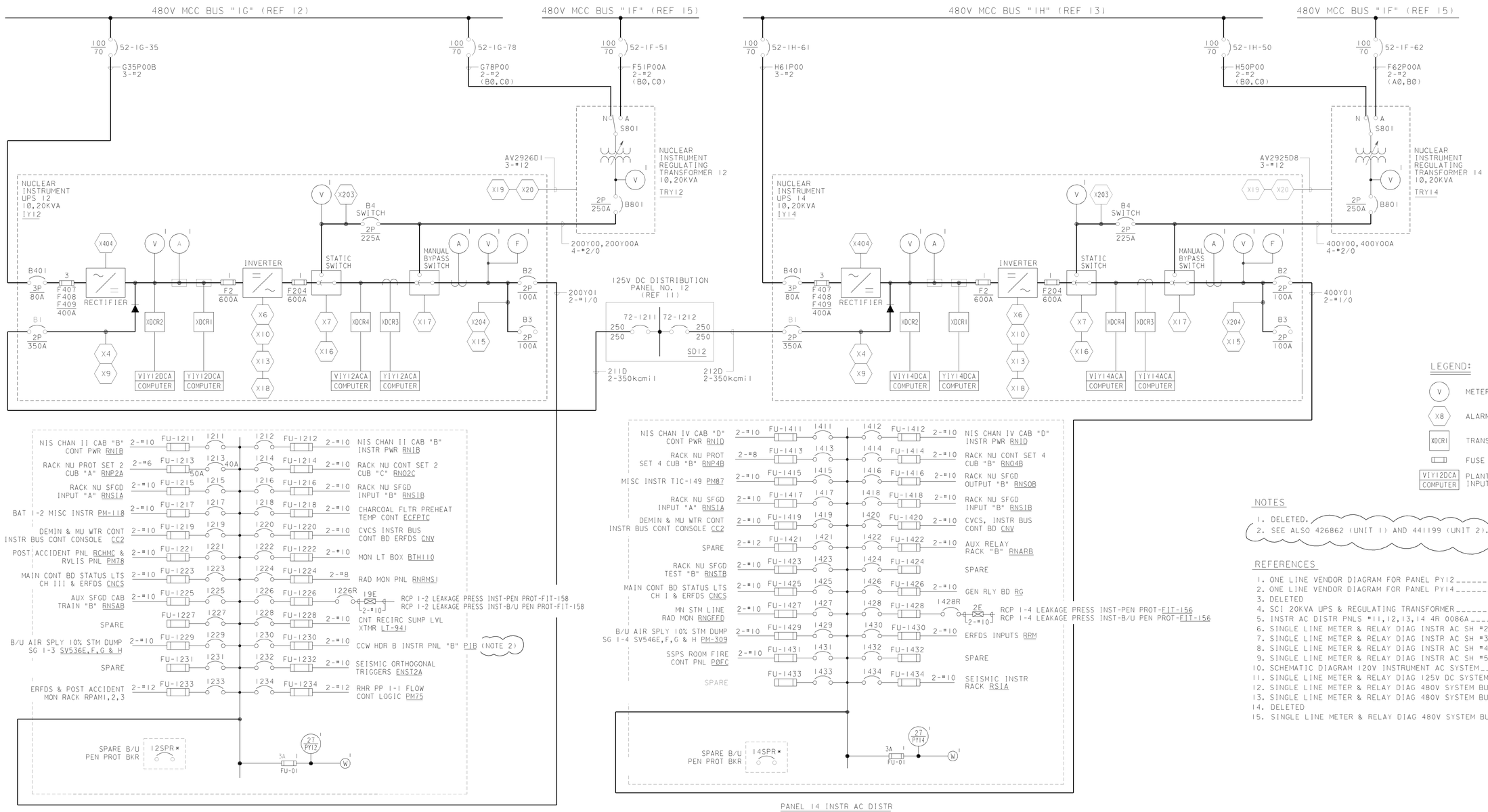

PANEL 12 INSTR AC DISTR

CHAN II
PY12

10, 2 WIRE, 120V
(ALL BKRS ARE 20A, 1P EXCEPT AS SHOWN.
ALL FUSES ARE 30A EXCEPT AS SHOWN.)
*NOTE: 12SPR IS A SPARE BKR FOR FUTURE PENETRATION REDUNDANCY, IT IS NOT CONNECTED ELECTRICALLY TO THE PANEL BUS.

PANEL 14 INSTR AC DISTR

CHAN IV
PY14

10, 2 WIRE, 120V
(ALL BKRS ARE 20A, 1P EXCEPT AS SHOWN.
ALL FUSES ARE 30A EXCEPT AS SHOWN.)
*NOTE: 14SPR IS A SPARE BKR FOR FUTURE PENETRATION REDUNDANCY, IT IS NOT CONNECTED ELECTRICALLY TO THE PANEL BUS.

LEGEND:

- (V) METER
- (X8) ALARM RELAY BOARD
- XDCR1 TRANSDUCER
- FUSE
- VIY12DCA / COMPUTER — PLANT COMPUTER INPUT NO.

NOTES

1. DELETED.
2. SEE ALSO 426862 (UNIT 1) AND 441199 (UNIT 2). 4-B

REFERENCES

	DWG NO.
1. ONE LINE VENDOR DIAGRAM FOR PANEL PY12	REC 6021760-117
2. ONE LINE VENDOR DIAGRAM FOR PANEL PY14	REC 6021760-135
3. DELETED	
4. SCI 20KVA UPS & REGULATING TRANSFORMER	REC 6013738
5. INSTR AC DISTR PNLS #11,12,13,14 4R 0086A	REC 663341
6. SINGLE LINE METER & RELAY DIAG INSTR AC SH #2	437549
7. SINGLE LINE METER & RELAY DIAG INSTR AC SH #3	445290
8. SINGLE LINE METER & RELAY DIAG INSTR AC SH #4	445291
9. SINGLE LINE METER & RELAY DIAG INSTR AC SH #5	445294
10. SCHEMATIC DIAGRAM 120V INSTRUMENT AC SYSTEM	4010036
11. SINGLE LINE METER & RELAY DIAG 125V DC SYSTEM SH #2	445075
12. SINGLE LINE METER & RELAY DIAG 480V SYSTEM BUS SECT 1G	437542
13. SINGLE LINE METER & RELAY DIAG 480V SYSTEM BUS SECT 1H	437543
14. DELETED	
15. SINGLE LINE METER & RELAY DIAG 480V SYSTEM BUS SECT 1F	437916

DRAWING NUMBER 437547 1

KEY DWG. SECTION 1C

NUCLEAR SAFETY RELATED

UNIT 1

DATE	
09-07-2012	
D.D.	MNRU
R.E.	FXC2
I.V.	
P.E.	AGB2

REGISTERED PROFESSIONAL ENGINEER — ALAN GABBARD E 9271 ELECTRICAL — STATE OF CALIFORNIA

REVISION DESCRIPTION: REVISED PER DFT-7*1822

ELECTRICAL
SINGLE LINE METER AND RELAY DIAGRAM
120V INSTRUMENT AC SYSTEM

DIABLO CANYON POWER PLANT
PACIFIC GAS AND ELECTRIC COMPANY
SAN FRANCISCO, CALIFORNIA

DWG SCALE:
BILL OF MATL:
SUPSDS:
SUPSD BY:

DRAWING	SHEET	PAGE	REV
437547	1	0	43

RASTER=437547.DGN
DGN=437547.DGN
CAD User=MNRU Date=09-07-2012

4 Size

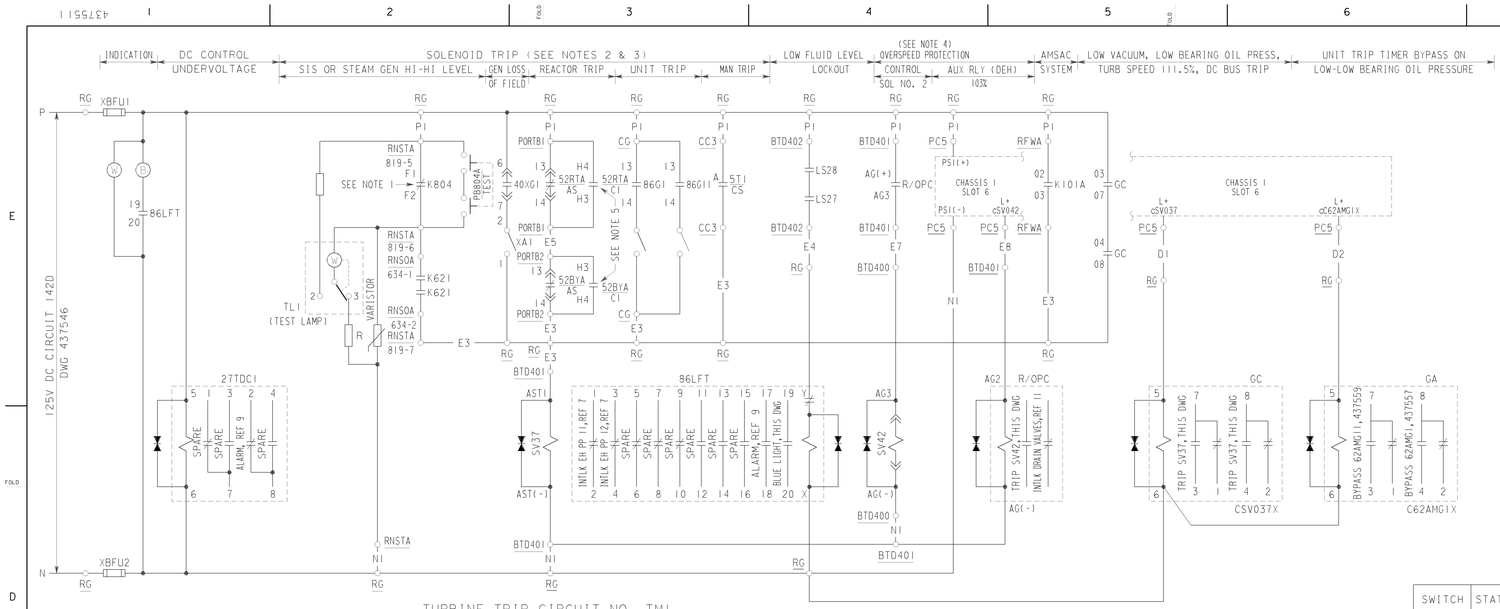

TURBINE TRIP CIRCUIT NO. TM1

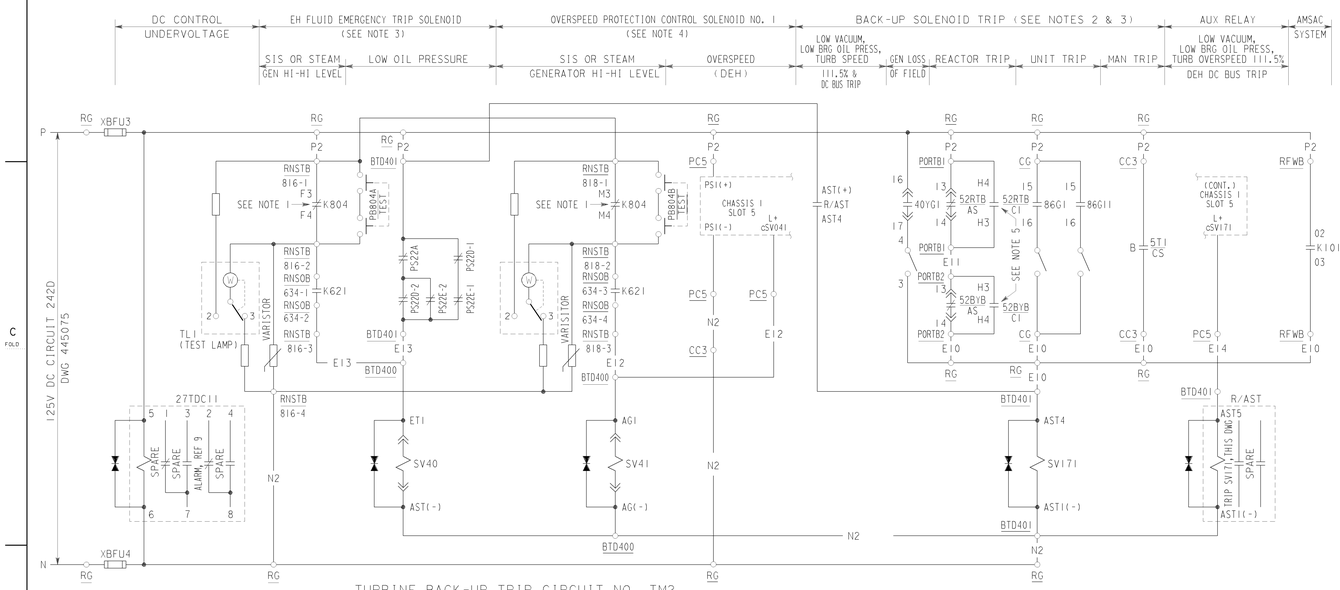

TURBINE BACK-UP TRIP CIRCUIT NO. TM2

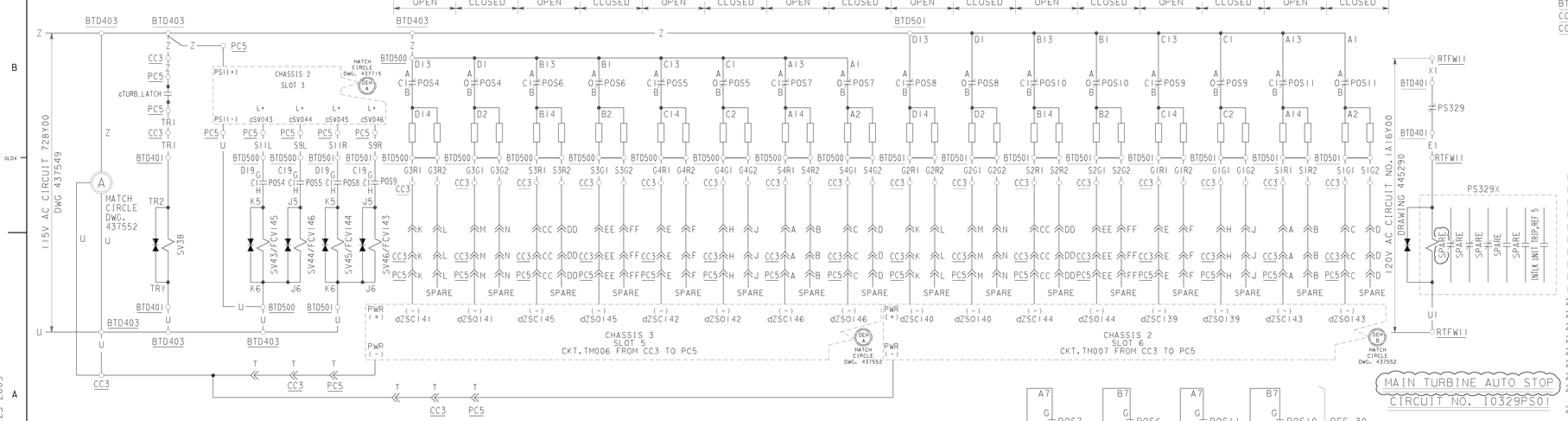

GOVERNOR AND MAIN STEAM STOP VALVES CIRCUIT NO. TM3

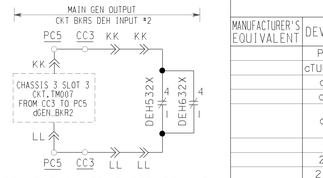

GEN BKR & MOD INTERLOCK #2
CIRCUIT NO. TM007

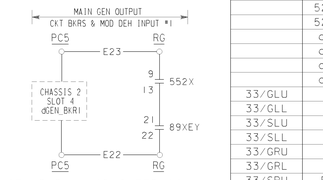

GEN BKR & MOD INTERLOCK #1
CIRCUIT NO. TM5039

TABLE OF DEVICES

MANUFACTURER'S EQUIVALENT	DEVICE NO.	FUNCTION	RATING	MFR	TYPE	CATALOG OR REF DWG	REMARKS
	PS329X	TURB AUTO STOP OIL TRIPPED PRESS AUX RLY	120V AC	CH	AR	D40RR33A	
	cTURB_LATCH	COND. VACUUM TRIP LATCH				15,23 & 25	DEH COMPUTER
	cSV041	TURB OVERSPEED PROTECTION				15,23 & 25	DEH COMPUTER
	cSV042	TURB OVERSPEED PROTECTION				15,23 & 25	DEH COMPUTER
	cSV171	TURB OVERSPEED PROTECTION, LOW VACUUM, OR LOW BRG OIL PRESS (DEH) OR DC STOP TRIP				15,23 & 25	DEH COMPUTER
	552Y1	500KV PCB AUX RELAY				6	CONTACT CLOSED WHEN BOTH 500KV BKRS OPEN
	27TDC1	TURB CONT DC UNDERVOLTAGE	125V DC	WE	SG	1342925	
	27TDC11	TURB CONT BACK-UP DC UNDERVOLTAGE	125V DC	WE	SG	1342925	
	86G1	UNIT TRIP LOCKOUT RELAY				5	
	86G11	UNIT TRIP LOCKOUT RELAY				6	
86LFT	86LFT	EH LOW FLUID LEVEL TRIP LOCKOUT RLY	125V DC	WE	WL	422D949G65	HAND RESET
	52RTA,B	REACTOR TRIP BREAKERS				8	
	52BYA,B	REACTOR BYPASS BREAKER				8	
	cSV046	MAIN STEAM LEAD 1 STOP VALVE TEST				15,23 & 25	DEH COMPUTER
	cSV045	MAIN STEAM LEAD 2 STOP VALVE TEST				15,23 & 25	DEH COMPUTER
	cSV043	MAIN STEAM LEAD 3 STOP VALVE TEST				15,23 & 25	DEH COMPUTER
	cSV044	MAIN STEAM LEAD 4 STOP VALVE TEST				15,23 & 25	DEH COMPUTER
33/GLU	POS4	GOVERNOR VALVE LEFT UPPER LIMIT SW				13	
33/GLL	POS5	GOVERNOR VALVE LEFT LOWER LIMIT SW				13	
33/SLU	POS6	MAIN STEAM STOP VALVE LEFT UPPER LIMIT SW				13	
33/SLL	POS7	MAIN STEAM STOP VALVE LEFT LOWER LIMIT SW				13	
33/GRU	POS8	GOVERNOR VALVE RIGHT UPPER LIMIT SW				13	
33/GRL	POS9	GOVERNOR VALVE RIGHT LOWER LIMIT SW				13	
33/SRU	POS10	MAIN STEAM STOP VALVE RIGHT UPPER LIMIT SW				13	
33/SRL	POS11	MAIN STEAM STOP VALVE RIGHT LOWER LIMIT SW				13	
R/OPC	R/OPC	TURB OVERSPEED PROTECTION AUX RLY	120V DC				ENERGIZED BY DEH COMPUTER
R/AST	R/AST	TURB OVERSPEED TRIP AUX RLY	120V DC				ENERGIZED BY DEH COMPUTER
63/AST-2	PS22A	TURB AUTO STOP OIL TRIPPED PRESS SW		CCS	646GZE	13	CONTACT CLOSES DECREASING
	PS22C	AUTO STOP OIL TO DRAIN VALVE INTERLOCK		CCS	646GZE	11 & 13	CONTACT OPENS DECREASING
	PS22D,E	TURB AUTO STOP OIL TRIPPED PRESS SW		CCS	646GZE	13	CONTACT CLOSES DECREASING
	PS22B,F,G	DEH AUTO STOP LATCH SIGNAL		CCS	646GZE	13 & 18	CONTACT OPENS DECREASING
71/FL2	LS27	EH RESERVOIR LOW FLUID TRIP LOCKOUT				13	CONTACT CLOSES @ 7.63 INCH DECREASING
20/AST-1	SV37	TURB AUTO STOP TRIP SOLENOID VALVE	125V DC			13	
20/AST-2	SV171	TURB AUTO STOP TRIP BACK-UP SOLENOID VALVE	125V DC			13	
20/ASR	SV38	TURB AUTO STOP RESET SOLENOID VALVE	115V AC			13	
20/ET	SV40	EH FLUID EMERGENCY TRIP SOLENOID VALVE	120V DC			13	
20-1/OPC	SV41	EH FLUID AUX GOVERNOR SOLENOID VALVE	120V DC			13	
20-2/OPC	SV42	EH FLUID AUX GOVERNOR SOLENOID VALVE	120V DC			13	
20/SLU	SV43	MAIN STEAM LEAD 3 STOP VALVE SV (ULH)	115V AC			13	
20/SLL	SV44	MAIN STEAM LEAD 4 STOP VALVE SV (LLH)	115V AC			13	
20/SRU	SV45	MAIN STEAM LEAD 2 STOP VALVE SV (URH)	115V AC			13	
20/SRL	SV46	MAIN STEAM LEAD 1 STOP VALVE SV (LRH)	115V AC			13	
	40XG1,40YG1	GENERATOR LOSS OF FIELD AUX RELAY				5	
63/AST-6	PS329	TURB AUTO STOP OIL TRIPPED PRESS SW				18	CONTACT CLOSES @ 5PSIG DECREASING
	K621	SIS OR STEAM GENERATOR HI-HI LEVEL AUX RLY				15,16,17,23	
	DEH532X	DEH GEN.BREAKER 532 AUX RLY				27	
	DEH632X	DEH GEN.BREAKER 632 AUX RLY				28	
	K101A	AMSAC SYSTEM (TRAIN A)		WE		20	
	K101B	AMSAC SYSTEM (TRAIN B)		WE		20	
71/FL1	LS28	EH RESERVOIR LOW FLUID TRIP LOCKOUT				13	CONTACT CLOSES @ 12.63 INCH DECREASING REF DWG 437551 FOR PRETRIP ALARM
	552X	500KV PCB'S 532 & 632 AUX RLY				6	
	89XEY	25KV ISO PHASE DISCONNECT SW AUX RLY				29	
	10TX	OVERTEMPERATURE △T				31	
	10PX	OVERPOWER △T				31	
	cSV037	TURB OVERSPEED PROTECTION, LOW VACUUM, OR LOW BRG OIL PRESS (DEH) OR DC BUS TRIP					DEH COMPUTER
	CSV037X	TURB OVERSPEED PROTECTION, LOW VACUUM, OR LOW BRG OIL PRESS (DEH) OR DC BUS TRIP AUX RELAY	125V DC	WE	SG	1342925	
	C62AMG1X	UNIT TRIP TIMER BYPASS AUX RLY	125V DC	WE	SG	1342925	
	cC62AMG1X	UNIT TRIP TIMER BYPASS					DEH COMPUTER

SWITCH	STATION	TERM MARK	VALVE POSITION OPEN	INTER	CLOSED	REMARKS
OPEN (O)		A-B		X	X	DEH
		C-D	X			SPARE
		E-F		X	X	SPARE
		G-H	X			SPARE
		J-K		X	X	SPARE
		L-M	X			SPARE
CLOSED (C)	1	A-B	X	X		DEH
		C-D			X	SPARE
		E-F	X	X		SPARE
		G-H			X	INTLK,THIS DWG
		J-K	X	X		SPARE
		L-M			X	SPARE
	2	A-B	X	X		SPARE
		C-D			X	SPARE
		E-F	X	X		SPARE
		G-H			X	SPARE
		J-K	X	X		SPARE
		L-M			X	SPARE

GOVERNOR VALVE LIMIT SWITCH
POS4, POS5, POS8 & POS9

SWITCH	STATION	TERM MARK	VALVE POSITION OPEN	INTER	CLOSED	REMARKS
OPEN (O)		A-B		X	X	DEH
		C-D	X			SPARE
		E-F		X	X	SPARE
		G-H	X			SPARE DEH INPUT THIS DWG
		J-K		X	X	SPARE
		L-M	X			SPARE
CLOSED (C)	1	A-B	X	X		DEH
		C-D			X	SPARE
		E-F	X	X		REACTOR TRIP LOGIC
		G-H			X	SPARE
		J-K	X	X		REACTOR TRIP LOGIC
		L-M			X	SPARE
	2	A-B	X	X		SPARE
		C-D			X	SPARE
		E-F	X	X		SPARE
		G-H			X	SPARE
		J-K	X	X		SPARE
		L-M			X	SPARE

MAIN STEAM STOP VALVE LIMIT SWITCH
POS6, POS7, POS10 & POS11

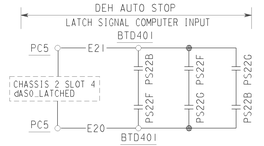

CONTACTS		POSITION TRIP	NORMAL	REMARKS
—||—	A	X		THIS DWG
—||—	B	X		THIS DWG
—||—	C	X		ALARM,REF 21
—||—	D	X		SPARE
—||—	E	X		SPARE
—||—	F	X		SPARE

TURBINE TRIP CONTROL SWITCH: 5TI CS
WITH RED OVAL HANDLE
SPRING RETURN TO NORMAL
USED AT LOCATION CC3

EQUIPMENT LOCATIONS

BTD400 - TURBINE EQUIPMENT TERMINAL BOX B
BTD401 - TURBINE EQUIPMENT TERMINAL BOX A
BTD402 - TURBINE EQUIPMENT TERMINAL BOX ER
BTD403 - TERMINAL BOX D 403
BTD500 - TURBINE EQUIPMENT TERMINAL BOX D
BTD501 - TURBINE EQUIPMENT TERMINAL BOX E
CC3 - GENERATOR CONTROL CONSOLE
CG - GENERATOR CONTROL BOARD
PC5 - MAIN TURBINE CONTROL SYSTEM CABINET
PORTB1 - CONTROL PANEL REACTOR TRIP BREAKERS
PORTB2 - CONTROL PANEL REACTOR BYPASS BREAKERS
RG - GENERATOR RELAY BOARD
RNSOA - NUCLEAR SAFEGUARD OUTPUT RACK A
RNSTA - NUCLEAR SAFEGUARD TEST RACK A
RTFW11 - FWP11 SPEED CONTROL PANEL

REFERENCES

	DWG NO.
1. DESCRIPTION OF ELEC SCHEM DIAG SYMBOLS & CKT DESIGNATIONS	050003
2. LIST OF EQUIPMENT LOCATION CODES	101900
3. SINGLE LINE METER & RELAY DIAG 125V DC SYSTEM	437546
4. SINGLE LINE METER & RELAY DIAG INSTRUMENT AC SYSTEM, SH 2	437549
5. SCHEM DIAG GENERATOR CONTROL, SH 1	437557
6. SCHEM DIAG GENERATOR CONTROL, SH 2	437558
7. SCHEM DIAG TURBINE LUBE OIL PUMPS, SH 1	437563
8. SCHEM DIAG REACTOR TRIP BREAKERS	437610
9. SCHEM DIAG MAIN ANNUNCIATOR	501132
10. DIAG OF CONN P250 COMPUTER TERMINAL	437864
11. SCHEM DIAG TURBINE CONTROL, SH 2	437552
12. SCHEM DIAG TURBINE CONTROL, SH 3	437553
13. INSTRUMENT REFERENCE	102038
14. SCHEM DIAG DDC HAND CONTROLLER MAN-AUTO STATIONS	437725
15. SCHEM DIAG SSPS OUTPUT RELAYS, TRAIN A	501869
16. SOLID STATE PROTECTION SYSTEM MANUFACTURER'S DWG	663231
17. FUNCTIONAL DIAGRAM MANUFACTURER'S DWG	495841
18. TURBINE ELECTRICAL SYSTEM MANUFACTURER'S DWG	663285-31,76
19. DELETED	
20. ADVANCE DIGITAL FEEDWATER SYSTEM (AMSAC)	6008434
21. SCHEM DIAG MAIN ANNUNCIATOR	501141
22. SINGLE LINE METER & RELAY DIAG INSTRUMENT AC SYSTEM, SH 2	445075
23. SCHEM DIAG SSPS OUTPUT RELAYS, TRAIN B	503088
24. SCHEM DIAG MAIN ANNUNCIATOR	501131
25. TURBINE CONTROL SYSTEM BASIS OF DESIGN DOCUMENT MANUAL	6020501-1
26. SCHEM DIAG TURBINE CONTROL	437715
27. SCHEM DIAG 125VDC MANUAL CONTROL & RELAY TRIP BAY-3 PCB 532 500KV SWITCHYARD	435807
28. SCHEM DIAG 125VDC MANUAL CONTROL & RELAY TRIP BAY-3 PCB 632 500KV SWITCHYARD	4012514
29. SCHEM DIAG GENERATOR CONTROL	437559
30. SCHEM STEAM VALVE TEST	663285-80
31. ELEMENTARY WIRING DIAG AUX RELAYS UNITS 1 & 2	663193-250

UNIT 1

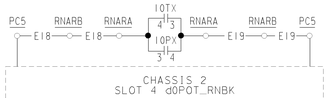

OVERTEMPERATURE OVERPOWER △T RUNBACK
CIRCUIT TM5

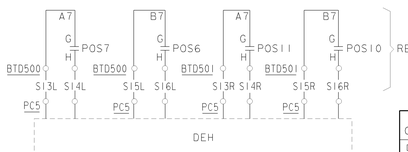

MAIN STEAM STOP VALVES SPARE INPUTS INTO DEH
CIRCUIT TM5

MAIN TURBINE AUTO STOP
CIRCUIT NO. 10329PS01

KEY DWG. SECTION 5

NOTES

1. TEST RELAY OPEN DURING TEST.
2. TURBINE WILL ALSO TRIP MECHANICALLY UPON OPERATION OF THE FOLLOWING PROTECTIVE DEVICES: OVERSPEED, LOW BEARING OIL PRESSURE, THRUST BEARING FAILURE.
3. THIS SOLENOID VALVE WILL TRIP GOVERNOR, INTERCEPTOR, REHEAT STOP & MAIN STEAM STOP VALVES.
4. THIS SOLENOID VALVE WILL TRIP GOVERNOR & INTERCEPTOR VALVES ONLY.
5. CELL INTERLOCK SWITCHES ARE SHOWN WITH BREAKER IN OPERATING POSITION.

	DATE
	03-25-2009
D.D.	RxG2
R.E.	FxC2
I.V.	
P.E.	RWB7

REGISTERED PROFESSIONAL ENGINEER RICHARD WAYNE BEVEN E 9776 Exp. 9/30/09 ELECTRICAL STATE OF CALIFORNIA

REVISION DESCRIPTION
REVISED PER DDN-2*199 & DFC-3*568

ELECTRICAL
SCHEMATIC DIAGRAM
TURBINE CONTROL

DIABLO CANYON POWER PLANT
PACIFIC GAS AND ELECTRIC COMPANY
SAN FRANCISCO, CALIFORNIA

DWG SCALE:
BILL OF MATL:
SUPSDS:
SUPSD BY:

DRAWING	SHEET	PAGE	REV
437551	1	0	23

DRAWING NUMBER 437551

RASTER=437551.dgn
DGN=437551.dgn
CAD User:RxG2 Date: 03-25-2009

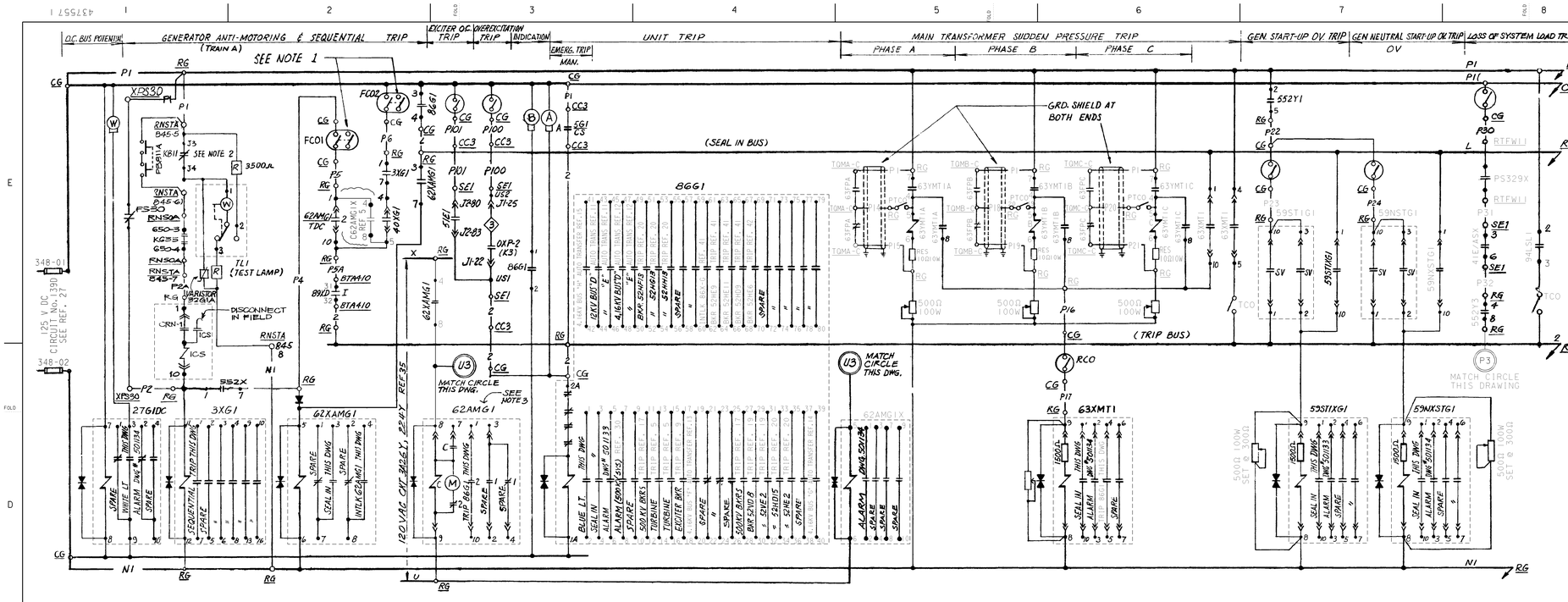

CKT Nº GM1

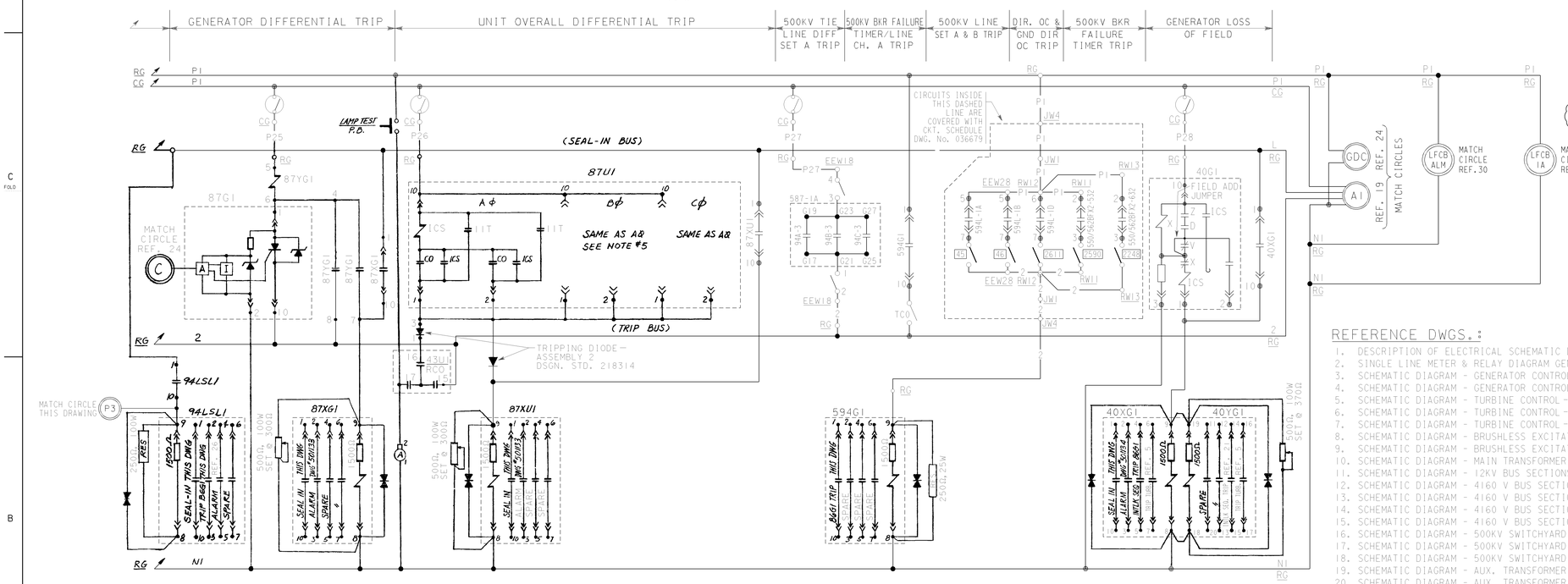

CKT Nº GM1

REFERENCE DWGS.:

1. DESCRIPTION OF ELECTRICAL SCHEMATIC DIAG., SYMBOLS & CIRCUIT DESIGNATIONS-------DWG. No. 050003
2. SINGLE LINE METER & RELAY DIAGRAM GEN., MAIN TRANSFORMERS & EXCITATION---------DWG. No. 437529
3. SCHEMATIC DIAGRAM - GENERATOR CONTROL----------DWG. No. 437557
4. SCHEMATIC DIAGRAM - GENERATOR CONTROL----------DWG. No. 437558
5. SCHEMATIC DIAGRAM - TURBINE CONTROL----------DWG. No. 437551
6. SCHEMATIC DIAGRAM - TURBINE CONTROL----------DWG. No. 437552
7. SCHEMATIC DIAGRAM - TURBINE CONTROL----------DWG. No. 437553
8. SCHEMATIC DIAGRAM - BRUSHLESS EXCITATION CONTROL----------DWG. No. 437555
9. SCHEMATIC DIAGRAM - BRUSHLESS EXCITATION CONTROL----------DWG. No. 437556
10. SCHEMATIC DIAGRAM - MAIN TRANSFORMER COOLING----------DWG. No. 437669
11. SCHEMATIC DIAGRAM - 12KV BUS SECTIONS D & E AUTOMATIC TRANSFER----------DWG. No. 437623
12. SCHEMATIC DIAGRAM - 4160 V BUS SECTIONS D & E AUTOMATIC TRANSFER----------DWG. No. 437624
13. SCHEMATIC DIAGRAM - 4160 V BUS SECTION F AUTOMATIC TRANSFER----------DWG. No. 437625
14. SCHEMATIC DIAGRAM - 4160 V BUS SECTION G AUTOMATIC TRANSFER----------DWG. No. 437626
15. SCHEMATIC DIAGRAM - 4160 V BUS SECTION H AUTOMATIC TRANSFER----------DWG. No. 437627
16. SCHEMATIC DIAGRAM - 500kV SWITCHYARD-BREAKER FAILURE TIMING----------DWG. No. 4012509
17. SCHEMATIC DIAGRAM - 500kV SWITCHYARD-MAIN XFMR BANK 1 LINE PROTECTION----------DWG. No. 435817
18. SCHEMATIC DIAGRAM - 500kV SWITCHYARD-125VDC MANUAL CONTROL & RELAY TRIP PCB 532--DWG. No. 435807
19. SCHEMATIC DIAGRAM - AUX. TRANSFORMER No. 11 & ASSOC. CIRCUIT BREAKERS----------DWG. No. 437662
20. SCHEMATIC DIAGRAM - AUX. TRANSFORMER No. 12 & ASSOC. CIRCUIT BREAKERS----------DWG. No. 437664
21. SCHEMATIC DIAGRAM - GENERATOR CONTROL----------DWG. No. 437559
22. SCHEMATIC DIAGRAM - SEAL OIL, STATOR COOLING & HYDROGEN CONTROL SYSTEM----------DWG. No. 437571
23. SCHEMATIC DIAGRAM - SEAL OIL, STATOR COOLING & HYDROGEN CONTROL SYSTEM----------DWG. No. 437572
24. SCHEMATIC DIAGRAM - GENERATOR & MAIN TRANSFORMER----------DWG. No. 437548
25. SCHEMATIC DIAGRAM - 25KV ISO-PHASE BUS MOTOR OPERATED DISCONNECT SWITCH---------DWG. No. 437582
26. SCHEMATIC DIAGRAM - MAIN ANNUNCIATOR----------DWG. No. 501133, 34, 40 & 41
27. SINGLE LINE METER & RELAY DIAGRAM 125V DC SYSTEM----------DWG. No. 437546
28. FUNCTIONAL DIAGRAM - REACTOR/TURBINE/GENERATOR PROTECTION----------DWG. No. 500825
29. LIST OF EQUIPMENT LOCATION CODES----------DWG. No. 101900
30. SCHEMATIC DIAGRAM - 500KV SWITCHYARD SHEET No. 16 (ANN ALARMS)----------DWG. No. 442752
31. SCHEMATIC DIAGRAM - SSPS OUTPUT RELAYS, TRAIN A, TRAIN B----------DWG. No. 501869, 503088
32. FUNCTIONAL DIAGRAM - MFR. DWGS----------REC. No. 663195
33. SCHEMATIC DIAGRAM - DEH INPUTS AND OUTPUTS----------DWG. No. 437854, 437855
34. SCHEMATIC DIAGRAM - TURBINE GENERATOR INSTRUMENTATION----------DWG. No. 437577
35. SINGLE LINE METER & RELAY DIAGRAM 120V INSTR. AC SYSTEM----------DWG. No. 445291
36. SCHEMATIC DIAGRAM - TURBINE LUBE OIL PUMPS----------DWG. No. 437564
37. PIPING SCHEMATIC - TURBINE & GENERATOR ASSOCIATED SYSTEMS----------DWG. No. 102022
38. SCHEMATIC DIAGRAM - BRUSHLESS EXCITATION CONTROL----------DWG. No. 437581
39. SCHEMATIC DIAGRAM - ISO-PHASE BUS COOLER----------DWG. No. 437576
40. WIRING DIAGRAM - TURBINE ELECTRICAL SYSTEM----------DWG. No. 663286
41. SCHEMATIC DIAGRAM - CNDS & CNDS BOOSTER PUMPS----------DWG. No. 437566
42. SCHEMATIC DIAGRAM - HEATER 2 DRAIN TANK PUMP No. 11----------DWG. No. 437570
43. SCHEMATIC DIAGRAM - 500KV SWITCHYARD (500KV LINE PROTECTION DC CIRCUITS) -------DWG. No. 4022488

DEVICES	FUNCTION	RATING	MFR	TYPE	CAT./REF. DWG. No.	REMARKS
3XGI	SEQUENTIAL TRIP AUX. RELAY	125V DC	W	MG-6	289B360A20	
27GIDC	GEN. CONT. DC BUS UNDERVOLTAGE RELAY	125V DC	W	SG	293B254A20	
32GIA	GEN. REVERSE POWER RELAY	—	—	—	2	
40GI	GEN. LOSS OF FIELD RELAY	—	—	—	2	FOR COIL SEE REF. 24
40XGI 40YGI	GEN. LOSS OF FIELD AUX. RELAY	125V DC	W	AR	606B028A09	DOUBLE UNIT SEE NOTE 4
59STIGI	GEN. START-UP OVERVOLTAGE RELAY	—	—	—	2	FOR COIL SEE REF. 24
59STIXGI	GEN. START-UP OVERVOLTAGE AUX. RELAY	125V DC	W	AR	606B017A09	SEE NOTE 4
59NSTGI	GEN. NEUT. START-UP OVERVOLTAGE RELAY	—	—	—	2	FOR COIL SEE REF. 24
59NXSTGI	GEN. NEUT. START-UP OVERVOLTAGE AUX. RELAY	125V DC	W	AR	606B017A09	SEE NOTE 4
62AMGI	GEN. ANTI-MOTORING TIMER RELAY	115V AC	W	TK	1876014	2 SEC TO 50 MIN ADJUST
62XAMGI	GEN. ANTI-MOTORING TIMER AUX. RELAY	125V DC	W	SG	1342925	
51EI	EXCITER OVERCURRENT RELAY		W		663293	
63FPA,B,C	MAIN TRANSFORMER SUDDEN PRESSURE DEVICE	—	—	—	2	
63YMIA, IB, IC	MAIN TRANSFORMER SUDDEN PRESSURE DEVICE AUX. RELAY	0.2/2.0A	GE	HAA	12HAA15A4F	
63XMTI	MAIN TRANSFORMER SUDDEN PRESSURE DEVICE AUX. RELAY	125V DC	W	AR	606B017A09	SEE NOTE 4
86GI	UNIT TRIP LOCKOUT RELAY	125V DC	W	—		HAND RESET
87GI	GEN. DIFFERENTIAL RELAY	—	—	—	2	FOR COIL SEE REF. 24
87XGI	GEN. DIFFERENTIAL AUX. RELAY	125V DC	W	AR	606B017A09	SEE NOTE 4
87YGI	GEN. DIFFERENTIAL AUX. RELAY	0.2/2.0A	GE	HAA	12HAA15A4F	
87UI	UNIT OVERALL DIFFERENTIAL RELAY	—	—	—	2	FOR COIL SEE REF. 24
87XUI	UNIT OVERALL DIFFERENTIAL AUX. RELAY	125V DC	W	AR	606B017A09	SEE NOTE 4
552X	500KV P.C.B. AUX. RELAY				4	CONTACT CLOSED WHEN 500KV BKR CLOSED
552YI	500KV P.C.B. AUX. RELAY	—	—	—	4	CONTACT CLOSED WHEN BOTH 500KV BKRS OPEN
550/562 BFX2-532	500KV P.C.B. BREAKER FAILURE TIMER AUX. RELAY	—	—	—	16	
550/562 BFX2-632	500KV P.C.B. BREAKER FAILURE TIMER AUX. RELAY	—	—	—	16	
587-IA	500KV TIE LINE DIFF. RELAY SET A	—	—	—	2 & 24	UNIT 1 T-COM ROOM
594L-1D	DIR. OC & GN DIR. OC TRIP RELAY	—	—	—	17	500KV SWITCHYARD
K635	SEQUENTIAL TRIP AUX. RELAY	—	—	—	31 & 32	CONTACT IS CLOSED WHEN TURBINE STOP VALVES ARE CLOSED OR AUTO STOP OIL LO-PRESS
43UI/RCO	RELAY CUTOUT SWITCH	—	—	—	24	
594GI	500KV BKR FAILURE TIMER/ LINE CHANNEL "A" TRIP RELAY	125V DC	W	AR	606B017A09	SEE NOTE 4
89XD	25KV ISO-PHASE DISCONN. SW. AUX. SW.	—	—	—	25	
62AMGIX	HI PRESS. ANTI-MTR AUX. RELAY	120V AC	W	AR	AR440AR	
OXP2/K3	OVEREXCITATION TRIP RELAY		W		663293-36	
PS30	HI PRESS. ANTI-MTR PROTECTION	—	—	—	DWG 060836	CLOSE ON DECR. DIFF. PSID
41E/ASX	FIELD BREAKER AUX. RELAY	—	—	—	9	
94LSLI	LOSS OF SYSTEM LOAD RELAY	125V DC	W	AR		SEE NOTE 6
552Y3	500KV AIR CKT BKR AUX. RELAY	—	—	—	4	CONTACT CLOSED WHEN BOTH 500KV BKRS OPEN
PS329X	MAIN TURBINE AUTO STOP PRESS. AUX. RELAY	—	—	—	5	CONTACT CLOSED @ 45 PSIG DECREASING
594L-1A	500 KV LINE SET A TRIP RELAY				43	500KV SWITCHYARD
594L-1B	500 KV LINE SET B TRIP RELAY				43	500KV SWITCHYARD
C62AMGIX	UNIT TRIP TIMER BYPASS AUX RLY				5	

EQUIPMENT LOCATIONS:

XPS30	GEN. ANTI-MOTORING PRESS. SW., LOCALLY MOUNTED
BTA41I	TERM. BOX A41I FOR DEVICE 89XE
EW532	500KV PCB SW532 OPERATING MECH. CAB.
SEI	EXCITATION SWGR CUB. No. 1
CC3	GENERATOR CONTROL CONSOLE
RVHD	STATION ELECTRICAL RELAY BOARD
CG	CONTROL BOARD MAIN GENERATOR
RG	GENERATOR RELAY BOARD
JWI	TERMINAL BOX No. 1 500KV SWYD
RWI1	500KV RELAY BOARD No. 11 500KV SWYD
TQMA	MAIN TRANSFORMER 1A CONTROL CABINET
CWI1	500KV CONTROL BOARD No. 11 500KV SWYD
RNSOA	RACK NUCLEAR SAFEGUARD OUTPUT A
RNSTA	RACK NUCLEAR SAFEGUARD TEST A
RTFWI1	FWP11 SPEED CONTROL PANEL

NOTES:

1. FOR WIRING OF THESE POLES SEE DWG. 437559.
2. TEST RELAY CONTACT OPEN DURING TEST.
3. SET SEQUENTIAL CONTACTS 1 & 2 FOR SIMULTANEOUS OPERATION.
4. ADJUST MIN. PICKUP TO 70 VOLTS AT JOBSITE.
5. SET ICS TARGET ON 2 AMPS TO PREVENT ICS SEAL IN WHEN 43UI IS IN TEST.
6. ADJUST MIN. PICKUP TO GREATER THAN 70 VOLTS AT JOBSITE.

NORMAL
EMER. TRIP

CONTACTS		POSITION EMER. TRIP	POSITION NORM.	REMARKS
	A	X		UNIT TRIP (THIS DWG)
	B	X		UNIT TRIP REF. 4
	C	X		ALARM DWG# 501133
	D	X		SPARE
	E	X		SPARE
	F	X		SPARE

UNIT TRIP CONTROL SWITCH 5GI/CS
WITH RED OVAL HANDLE, SPRING RETURN TO NORMAL, USED AT LOC. CC3

TABLE OF ALARMS

ALARMS 500KV SYSTEM

	DC BUS POTENTIAL	GEN. ANTI-MOTORING TIMER	UNIT TRIP	MAIN TRANSF. SUDDEN PRESSURE TRIP	GEN. START-UP OV. TRIP	GEN. NEUTRAL START-UP OV. TRIP	GEN. DIFF. TRIP	UNIT OVERALL DIFF. TRIP	500KV LINE DIFF. TRIP	GEN. LOSS OF FIELD	GEN. EMERG TRIP	UNIT TRIP		LOSS OF SYS. LOAD
DEVICE	27GIDC	62AMGI	86GI	63XMTI	59STIXGI	59NXSTGI	87XGI	87XUI	587X	40XGI	5GI/CS	86GI	86GI	94LSLI
CKT. No.	AV2807D	AY2828D	AY2821D	AP2804D	AV2801D	AV2803D	AD2803D	AD2802D	AD2804D	AY2832D	AY2820D	SEE REF. 30		AY2860D

KEY DWG. SECTION 5

UNIT 1

DATE	REVISION DESCRIPTION
12-15-2005	REVISED PER DCI-SE-049665-00
D.D. AJL2	
R.E. SMB5	
I.V.	
P.E. R2M5	

ELECTRICAL
SCHEMATIC DIAGRAM
GENERATOR CONTROL

DIABLO CANYON POWER PLANT
PACIFIC GAS AND ELECTRIC COMPANY
SAN FRANCISCO, CALIFORNIA

DWG SCALE:
BILL OF MATL:
SUPSDS:
SUPSD BY:

DRAWING	SHEET	PAGE	REV
437557	1	0	36

REGISTERED PROFESSIONAL ENGINEER ROBERT MARTIN JR. E 16911 Exp. 6/30/2007 ELECTRICAL STATE OF CALIFORNIA

DRAWING NUMBER 437557 1

RASTER=437557.dgn
DGN=437557.dgn
CAD User=AJL2 Date: 12-15-2005

U2-441245

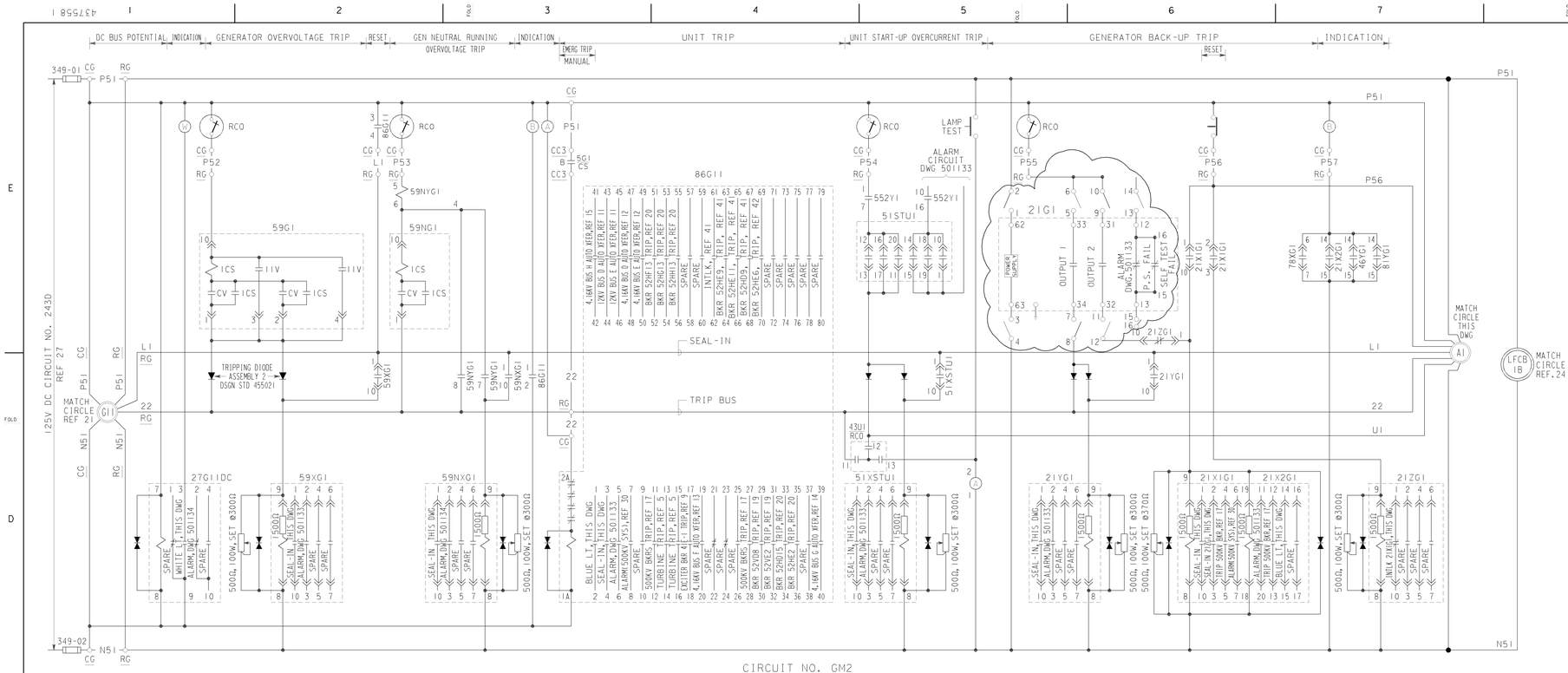

CIRCUIT NO. GM2

TABLE OF DEVICES

DEVICE NO.	FUNCTION	RATING	MFR	TYPE	CATALOG OR REF DWG	REMARKS
21G1	GENERATOR BACK-UP RELAY				2	FOR COIL SEE REF 24
21X1G1,21X2G1	GENERATOR BACK-UP AUX RELAY	125V DC	WESTINGHOUSE	AR	606B028A09	DOUBLE UNIT SEE NOTE 4
21YG1	GENERATOR BACK-UP AUX RELAY	125V DC	WESTINGHOUSE	AR	606B017A09	SEE NOTE 4
21ZG1	GENERATOR BACK-UP AUX RELAY	125V DC	WESTINGHOUSE	AR	606B017A15	SEE NOTE 4
78G1	GENERATOR OUT OF STEP RELAY				2	
78XG1,78YG1	GENERATOR OUT OF STEP AUX RELAY	125V DC	WESTINGHOUSE	AR	606B017A09	SEE NOTE 4
27G1IDC	GENERATOR DC CONT BUS UNDERVOLTAGE RLY	125V DC	WESTINGHOUSE	SG	293B254A20	
27G1	GENERATOR UNDERVOLTAGE RELAY				2	FOR COIL SEE REF 24
27XG1	GENERATOR UNDERVOLTAGE AUX RELAY	125V DC	WESTINGHOUSE	MG-6	289B360A20	
27YG1	GENERATOR UNDERVOLTAGE AUX RELAY	125V DC	WESTINGHOUSE	MG-6	289B360A20	
41E/ASX	GENERATOR EXCITER FIELD BREAKER AUX RLY				9	CONTACT IS CLOSED WHEN FIELD BKR IS CLOSED
43UI/RCO	RELAY CUTOUT SWITCH				24	
46G1	GENERATOR NEGATIVE SEQUENCE RELAY				2	FOR COIL SEE REF 24
46XG1	GENERATOR NEGATIVE SEQUENCE AUX RELAY	125V DC	WESTINGHOUSE	AR	606B028A09	DOUBLE UNIT SEE NOTE 4
46YG1	GENERATOR NEGATIVE SEQUENCE AUX RELAY					
51STU1	UNIT START-UP OVERCURRENT RELAY				2	FOR COIL SEE REF 24
51XSTU1	UNIT START-UP OVERCURRENT AUX RELAY	125V DC	WESTINGHOUSE	AR	606B017A09	SEE NOTE 4
59G1	GENERATOR OVERVOLTAGE RELAY				2	FOR COIL SEE REF 24
59XG1	GENERATOR OVERVOLTAGE AUX RELAY	125V DC	WESTINGHOUSE	AR	606B017A09	SEE NOTE 4
59NG1	GENERATOR NEUTRAL OVERVOLTAGE RELAY				2	FOR COIL SEE REF 24
59NXG1	GENERATOR NEUTRAL OVERVOLTAGE AUX RELAY	125V DC	WESTINGHOUSE	AR	606B017A09	SEE NOTE 4
59NYG1	GENERATOR NEUTRAL OVERVOLTAGE AUX RELAY	0.2/2A	GEN ELEC	HAA	12HAA15A4F	
69XIP	ISOPHASE BUS COOLING PERMISSIVE RELAY	125V DC	WESTINGHOUSE	SG	1342925	
69XMT1	MAIN TRANSFORMER COOLING PERMISSIVE RLY	125V DC	WESTINGHOUSE	MG-6	289B360A20	
69YMT1	MAIN TRANSFORMER COOLING PERMISSIVE RLY	125V DC	WESTINGHOUSE	SG	1342925	
81G1	GENERATOR UNDERFREQUENCY RELAY		BASLER		BE1-81O/U-T3EE1JA8N0F	FOR COIL SEE REF 24
81XG1	GENERATOR UNDERFREQUENCY AUX RELAY	125V DC	WESTINGHOUSE	AR	606B028A09	DOUBLE UNIT SEE NOTE 4
81YG1	GENERATOR UNDERFREQUENCY AUX RELAY					
86G11	UNIT TRIP LOCKOUT RELAY	125V DC	WESTINGHOUSE	WL		HAND RESET
87UH1	UNIT OVERALL DIFFERENTIAL (HARMONIC) RLY				2	FOR COIL SEE REF 24
87XUH1	UNIT OVERALL DIFFERENTIAL (HARMONIC) AUX RLY	125V DC	WESTINGHOUSE	AR	606B017A09	SEE NOTE 4
89XE	25KV MOTOR OPERATED DISCONNECT SW AUX SW				25	CONTACT IS CLOSED WHEN DISC. SW. IS CLOSED
552X	500KV PCB AUXILIARY RELAY	125V DC	WESTINGHOUSE	MG-6	289B360A20	
552Y1,2,3	500KV PCB AUXILIARY RELAY	125V DC	WESTINGHOUSE	MG-6	289B360A20	
552-532	500KV POWER CKT BREAKER AUX SWITCH				18	
552-632	500KV POWER CKT BREAKER AUX SWITCH				18	
550/562 BFX1-532	500KV PCB BREAKER FAILURE TIMER AUX RELAY				16	
550/562 BFX1-632	500KV PCB BREAKER FAILURE TIMER AUX RELAY				16	
594G11	500KV BKR FAILURE TIMER/LINE CHANNEL "A" TRIP RELAY	125V DC	WESTINGHOUSE	AR	606B017A09	SEE NOTE 4
594L-1D	DIR OC & GND DIR OC TRIP RELAY				17	500KV SWITCHYARD
587-1B	500KV TIE LINE DIFF. RELAY SET B				2 & 24	U1 T-COM ROOM
594L-1A	500KV LINE SET A TRIP RELAY				43	500KV SWITCHYARD
594L-1B	500KV LINE SET B TRIP RELAY				43	500KV SWITCHYARD

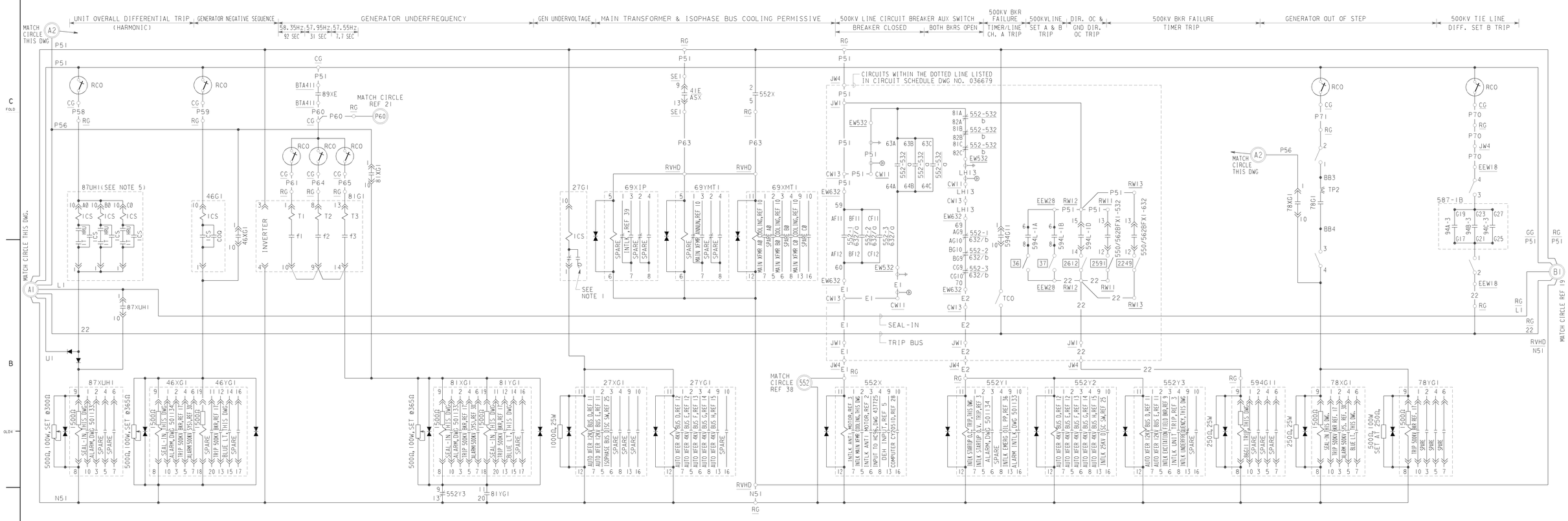

ALARM CIRCUIT TABLE

	DC BUS POTENTIAL	GEN O.V. TRIP	GEN NEUTRAL RUNNING O.V. TRIP	UNIT TRIP	UNIT START-UP		GENERATOR BACK-UP		UNIT OVERALL DIFFERENTIAL TRIP (HARMONIC)	GENERATOR NEGATIVE SEQUENCE	GENERATOR UNDER-FREQUENCY	500KV PCB TRIP
					OVERCURRENT	O.C. TRIP		TRIP				
DEVICE	27G1IDC	59XG1	59NXG1	86G11	51STU1	51XSTU1	21X2G1	21YG1	87XUH1	46XG1	81XG1	552Y1
CKT NO.	AV2808D	AV2805D	AV2804D	AY2821D	A12801D	A12802D	AY2825D	AY2826D	AD2801D	AY2827D	AY2824D	AY2843D

UNIT TRIP		UNIT BACK-UP		GENERATOR UNDERFREQUENCY		GENERATOR NEGATIVE SEQUENCE	
86G1	86G11	21X1G1	21X2G1	81XG1	81YG1	46XG1	46YG1
SEE REF 30		SEE REF 30		SEE REF 30		SEE REF 30	

NOTES

1. DISCONNECT ICS CONTACT IN FIELD.
2. DELETED
4. ADJUST MINIMUM PICK-UP TO 70 VOLTS AT JOBSITE.
5. SET ICS TARGET ON 2 AMPS TO PREVENT ICS SEAL-IN WHEN 43UI IS IN TEST.

REFERENCE DRAWINGS & EQUIPMENT LOCATIONS

SEE DRAWING NO. 437557

LEGEND

SHIELDED CABLE GROUNDED

SHIELDED CABLE UNGROUNDED

KEY DWG. SECTION 5

UNIT 1

DATE	
03-24-2009	
D.D.	AJFJ
R.E.	FXC2
I.V.	
P.E.	AGB2

REVISED PER DDN-2*445

ELECTRICAL
SCHEMATIC DIAGRAM
GENERATOR CONTROL

DIABLO CANYON POWER PLANT
PACIFIC GAS AND ELECTRIC COMPANY
SAN FRANCISCO, CALIFORNIA

DRAWING	SHEET	PAGE	REV
437558	1	0	33

DWG SCALE:
BILL OF MATL:
SUPSDS:
SUPSD BY:

U2-441246

RASTER=437558.dgn
DGN=437558.dgn
CAD User:AJFJ Date:03-24-2009
DGN=437558.DGN

437558 1

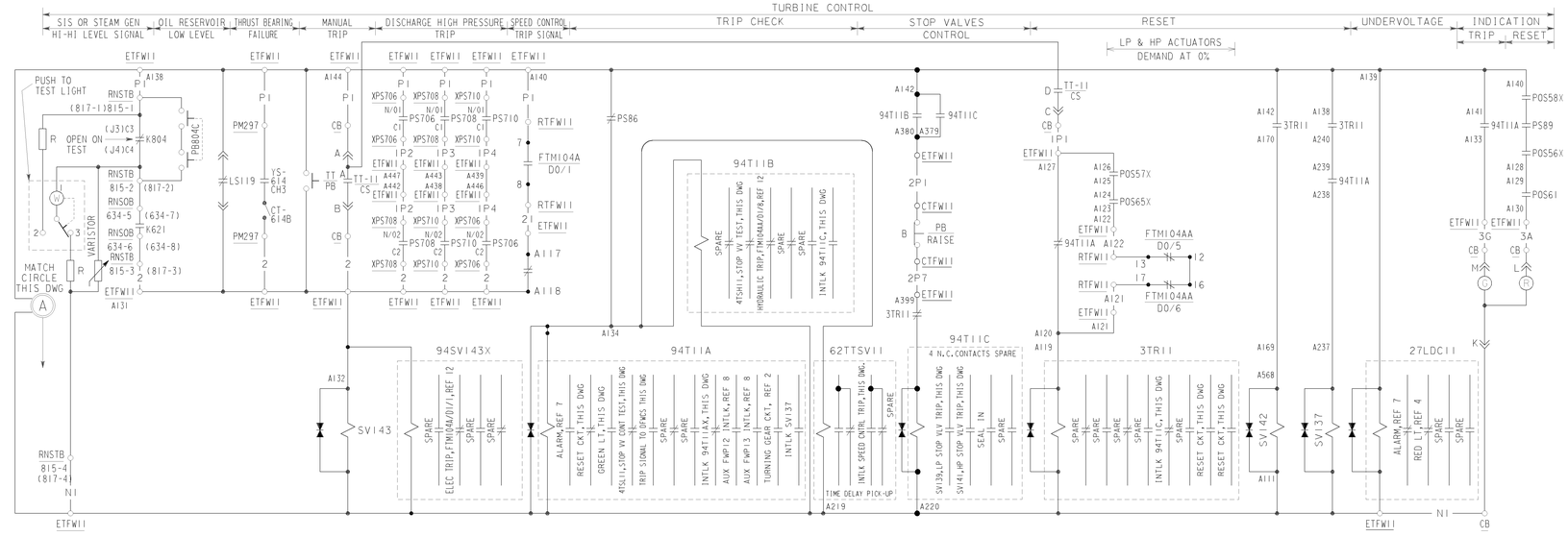

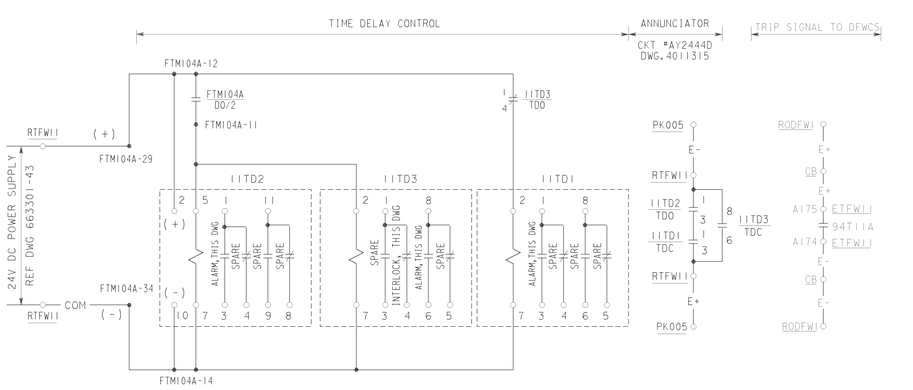

FEEDWATER PUMP NO.1-1 SPEED CONTROL ALARM CIRCUIT NO. FP11SC

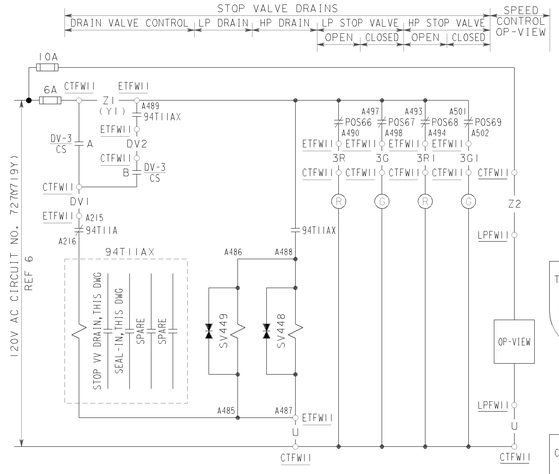

CIRCUIT NO. TF1122 (TF1222)

PUMP	TIME DELAY CONTROL ALARM					SPEED CONTROL ALARM		ANNUNCIATOR
	CIRCUIT NO.	RELAYS			LOC.		VENDOR DWG. NO.	CIRCUIT NO.
FEEDWATER PUMP NO.1	FP11SC	11TD1	11TD2	11TD3	RTFW11	WOODWARD GOVERNOR MICRONET TMR 5009 CONTACT FTM104A DO/2	663301-43	AY2444D
FEEDWATER PUMP NO.2	FP12SC	12TD1	12TD2	12TD3	RTFW12		663301-44	AY2446D

CONTACTS		POSITIONS CLOSED	INTER	OPEN	REMARKS
—||—	A			×	THIS DWG
—||—	B	×	×		SPARE

LIMIT SWITCHES: POS56 & POS58

CONTACTS		POSITIONS CLOSED	INTER	OPEN	REMARKS
—||—	A	×			THIS DWG
—||—	B		×	×	SPARE

LIMIT SWITCHES: POS57, POS60 & POS65

		ALARM CIRCUITS						COMPUTER CKTS.
FEEDWATER PUMP NO. 11	DEVICE	94T11A	27LDC11 & 2YFW11	PS85	LS119/b	PO562		POS56X & POS58X
	CKT. NO	AY2411D	AV2400D	AP2408D	AL2426D	AY2434D		CY2842D
FEEDWATER PUMP NO. 12	DEVICE	94T12A	27LDC12 & 2YFW12	PS98	LS125/b	PO576		POS70X & POS72X
	CKT. NO	AY2412D	AV2401D	AP2409D	AL2427D	AY2436D		CY2843D

CONTACTS		POSITIONS TRIP	NEUT	RESET	REMARKS
—||—	A	×			THIS DWG
—||—	B	×	×		SPARE
—||—	C		×	×	SPARE
—||—	D			×	THIS DWG

CONTROL SWITCH: TT-11 / CS
SPRING RETURN TO NEUTRAL
USED AT LOCATION CB
WESTINGHOUSE TYPE OT2A, CAM NO. 6

CONTACTS		POSITIONS CLOSE	NEUT	OPEN	REMARKS
—||—	A	×			THIS DWG
—||—	B	×	×		THIS DWG

CONTROL SWITCH: DV-3 / CS
SPRING RETURN FROM LEFT TO CENTER, RIGHT MAINTAINED
USED AT LOCATION CTFW11, (CTFW12)

CONTACTS		POSITIONS CLOSED	INTER	25% CLOSED	INTER	OPEN	REMARKS
—||—	A				×	×	THIS DWG
—||—	B	×	×	×			SPARE
—||—	C				×	×	SPARE
—||—	D	×	×	×			THIS DWG

LP STOP VALVE TEST LIMIT SWITCH: POS59

TABLE OF DEVICES

MANUFACTURER'S EQUIVALENT	DEVICE NO. PUMP NO. 11	DEVICE NO. PUMP NO. 12	FUNCTION	RATING	MFR	TYPE	CATALOG OR REF DWG	REMARKS
FTM104A	FTM104A/DO/1	FTM104A/DO/1	TRIPS TURBINE TRIP SV		WOODWARD		REF 12	
FTM104AA	FTM104AA/DO/5	FTM104AA/DO/5	LP ACTUATOR DEMAND AT 0%		WOODWARD		REF 12	
FTM104AA	FTM104AA/DO/6	FTM104AA/DO/6	HP ACTUATOR DEMAND AT 0%		WOODWARD		REF 12	
FTM104A	FTM104A/DO/2	FTM104A/DO/2	SPEED CONTROL ALARM		WOODWARD		REF 12	
R/SVOP(LP)	POS58X	POS72X	LP STOP VALVE OPEN RELAY	125VDC 12W	WE CORP		BFD44S	
R/SVOP(HP)	POS56X	POS70X	HP STOP VALVE OPEN RELAY	125VDC 12W	WE CORP		BFD44S	
R/SVT(LP)	4TSL11	4TSL12	LP STOP VALVE TEST RELAY	125VDC 12W	WE CORP		BFD62S	
R/SVCL(LP)	POS65X	POS79X	LP STOP VALVE CLOSED RELAY	125VDC 12W	WE CORP		BFD53S	
R/SVT(HP)	4TSH11	4TSH12	HP STOP VALVE TEST RELAY	125VDC 12W	WE CORP		BFD62S	
R/SVCL(HP)	POS57X	POS71X	HP STOP VALVE CLOSED RELAY	125VDC 12W	WE CORP		BFD53S	
R/PB/SVT(LP)	PBT11X	PBT12X	LP STOP VALVE TEST PB RELAY	125VDC 12W	WE CORP		BFD53S	
	YS614 CH3	YS614 CH7	FWP TURB THRUST BEARING RELAY	120V AC	BENTLY NEVADA	3500/ 33-01-00	60092999 (91) & 135	
	CT614B	CT614D	FWP TURB THRUST BRG TRIP C/O SWITCH		ALLEN BRADLEY	800T-H20D	60092999 (81) & 135	
	PB804C	PB804D	SSPS TEST PUSHBUTTON					
	11TD1, 11TD3	12TD1, 12TD3	SPEED CONTROL ALARM TIME DELAY RELAY	24V DC	POTTER & BRUMFIELD	CNS	CNS-35-92	11TD1-1 SEC DELAY, 11TD3-3 SEC DELAY
	~~11TD2~~	~~12TD2~~	~~SPEED CONTROL ALARM TIME DELAY RELAY~~	~~24V DC~~	~~POTTER & BRUMFIELD~~	~~CDD~~	~~CDD-38-30014~~	~~2 SEC DELAY~~
	94SV143X	94SV157X	ELECTRICAL TRIP	125V DC 12W	WE CORP		BFD22S	
R/RS	3TRI1	3TRI2	TURBINE RESET RELAY	125VDC 12W	WE CORP		BFD53S	
K621	K621	K621	TURB & MAIN FWP TRIP RELAY, TRAIN B				(9)	ESF "F" SIGNAL
K804	K804	K804	TURB & MAIN FWP TRIP TEST RELAY					
R/TT-1	94T11A	94T12A	TURBINE TRIP RELAY	125VDC 12W	WE CORP		BFD84S	
R/TT-2	94T11B	94T12B	TURBINE TRIP RELAY	120V DC 12W	WE CORP		BFD24S	
	94T11C	94T12C	TRIP SEAL IN RELAY	125V DC 12W	WE CORP		BFD44S	
	94T11AX	94T12AX	TURBINE TRIP RELAY	120V AC	WE CORP	AR	AR440A	
33/SVOP(HP)	POS56	POS70	HP STOP VALVE OPEN LIMIT SWITCH	125VDC 5A	NATIONAL ACME	SL-3		
33/SVCL(HP)	POS57	POS71	HP STOP VALVE CLOSED LIMIT SWITCH	125VDC 5A	NATIONAL ACME	SL-3		
33/SVOP(LP)	POS58	POS72	LP STOP VALVE OPEN LIMIT SWITCH	125VDC 5A	NATIONAL ACME	SL-3		
33/SVT(LP)	POS59	POS73	LP STOP VALVE TEST LIMIT SWITCH	125VDC 5A	NATIONAL ACME	SL-3		
33/GV(HP)	POS60	POS74	HP GOVERNOR VALVE CLOSED LIMIT SW	125VDC 5A	NATIONAL ACME	EA170-3510		
33/VTR-1	POS61	POS75	VACUUM TRIP RESET LIMIT SWITCH	115VDC 10A	MERCOID	9-51		
33/VTR-2	POS62	POS76	VACUUM TRIP RESET LIMIT SWITCH	115VDC 10A	MERCOID	9-51	(7)	ALARM ONLY
33/SVCL(LP)	POS65	POS79	LP STOP VALVE CLOSED	125VDC 5A	NATIONAL ACME	SL-3		
OP-VIEW	LPFW11	LPFW12	LOCAL SPEED CONTROL		WOODWARD			
63/GVP-1	PS86	PS99	GOVERNOR VALVE POSITIONER PRESS SW	115VDC 10A	MERCOID		DAW33-156	CONTACT CLOSES ON DECREASING PRESSURE @ 60PSI
63/GVP-2	PS87	PS100	GOVERNOR VALVE POSITIONER PRESS SW	115VDC 10A	MERCOID		DPAW33-2	RANGE 0-100LBS
63/LV	PS85	PS98	LOW VACUUM PRESSURE SWITCH	115VDC 10A	MERCOID		DAW33-2 (7)	ALARM ONLY
63/RS	PS89	PS102	RESET PRESSURE SWITCH	115VDC 10A	MERCOID		DAW33-103	RANGE 0-200LBS
	POS706,708 POS710	POS707,709, POS711	PUMP DISCHARGE PRESSURE SWITCH				102003	
71/OLLL	LS119	LS125	OIL LEVEL VERY LOW TRIP LEVEL SW	125VDC 0.4A	MAGTROL	C15	(7)	W.E. DWG 874C398 (CONTACT CLOSES ON LOW-LOW OIL LEVEL)
20/VTR	SV137	SV151	VACUUM TRIP RESET SOLENOID VALVE	125VDC 10W	AUTO-SW			W.E. DWG 390A685
20/SVL(LP)	SV139	SV153	LP STOP VALVE LOWER SOLENOID VALVE	115VDC 19W	PACIFIC FLUID		GS04-06-00VC	ENERGIZE TO CLOSE
20/SVL(HP)	SV141	SV155	HP STOP VALVE LOWER SOLENOID VALVE	115VDC 19W	PACIFIC FLUID		GS04-06-00VC	ENERGIZE TO CLOSE
20/RSV	SV142	SV156	TURBINE RESET SOLENOID VALVE	125VDC 10W	AUTO-SW			W.E. DWG 390A685
20/TT	SV143	SV157	TURBINE TRIP SOLENOID VALVE	110VDC 20W	SAVILLE		37-3A-110D	
20ASD/LPSV	SV449	SV450	LP ABOVE SEAT DRAIN SOLENOID VALVE	115VAC 10.5W	AUTO-SW		HT83146	ENERGIZE TO CLOSE DRAIN VALVE
20ASD/HPSV	SV448	SV451	HP ABOVE SEAT DRAIN SOLENOID VALVE	115VAC 10.5W	AUTO-SW		HT83146	
33ASDC/LPSV	POS66	POS131	LP ABOVE SEAT DRAIN CLOSED LIMIT SW	125VDC 5A	NATIONAL ACME	SL-3		
33ASDO/LPSV	POS67	POS132	LP ABOVE SEAT DRAIN OPEN LIMIT SW	125VDC 5A	NATIONAL ACME	SL-3		
33ASDC/HPSV	POS68	POS133	HP ABOVE SEAT DRAIN CLOSED LIMIT SW	125VDC 5A	NATIONAL ACME	SL-3		
33ASDO/HPSV	POS69	POS134	HP ABOVE SEAT DRAIN OPEN LIMIT SW	125VDC 5A	NATIONAL ACME	SL-3		
TDR/TT	62TTSV11	62TTSV12	TURBINE TRIP TIME DELAY RELAY	125VDC	POTTER & BRUMFIELD		CNS-35-92	5 SEC.DELAY ON PICK-UP

EQUIPMENT LOCATIONS

CB - CONTROL BOARD, CONDENSATE & FEEDWATER
CTFW11 - LOCAL CONTROL BOARD, FEEDWATER TURBINE PP NO. 11 (CTFW12)
ETFW11 - LOCAL CONTROL CONSOLE, FEEDWATER TURBINE PP NO. 11 (ETFW12)
RN01D - RACK NUCLEAR, CONTROL SET 1, CUBICLE D
RNSOB - RACK NUCLEAR, SAFEGUARD OUTPUT TRAIN B
RNSTB - RACK NUCLEAR, SAFEGUARD TEST B
PTFW11 - PNEUMATIC PANEL FEEDWATER PUMP NO. 11 SPEED
PM297 - FWP VIBRATION MONITOR MECHANICAL PANEL NO. 297
RTFW11 - FWP SPEED CONTROL SIGNAL PROCESSER PANEL NO. 11 (RTFW12)
RODFW1 - DIGITAL FEEDWATER CONTROL SYSTEM

NOTES

1. CIRCUIT AND LOCATION CODE IN PARENTHESIS APPLY FOR FWP #12
2. FUSE IS ADDED AS A MOTOR OVERLOAD PROTECTION TO PREVENT MOTOR DAMAGE IN CASE OF INCORRECTLY SET LIMIT SWITCHES.

REFERENCES

	DWG NO.
1. DESCRIPTION OF ELEC SCHEM DIAG SYMBOLS & CKT DESIGNATIONS	050003
2. SCHEM DIAG FEEDWATER PUMP TURBINE AUX MOTORS	437672 & 437673
3. SCHEM DIAG FEEDWATER ISOLATING VALVES	437585
4. SCHEM DIAG FWP TURBINE INSTRUMENTATION	437569
5. SINGLE LINE METER & RELAY DIAG 125V DC SYSTEM	437546,(445075)
6. SINGLE LINE METER & RELAY DIAG 120V AC SYSTEM	437549
7. SCHEM DIAG MAIN ANNUNCIATOR	501121, 501128, 501129 & 4011315
8. SCHEM DIAG AUX FEEDWATER PUMPS	437583
9. SCHEM DIAG SSPS OUTPUT RELAYS, TRAIN B	503088
10. FWP TURBINE WIRING EQUIP LIST OUTLINE (W.E. CORP)	663306
11. PIPING SCHEM FEEDWATER SYSTEM	102003
12. WOODWARD GOV.CO.FWR PP1-1(1-2)CONTROL WIRING (PG.1 THRU 15)	663301-43 (44)
13. FEEDWATER CONTROL SYSTEM	663195-27

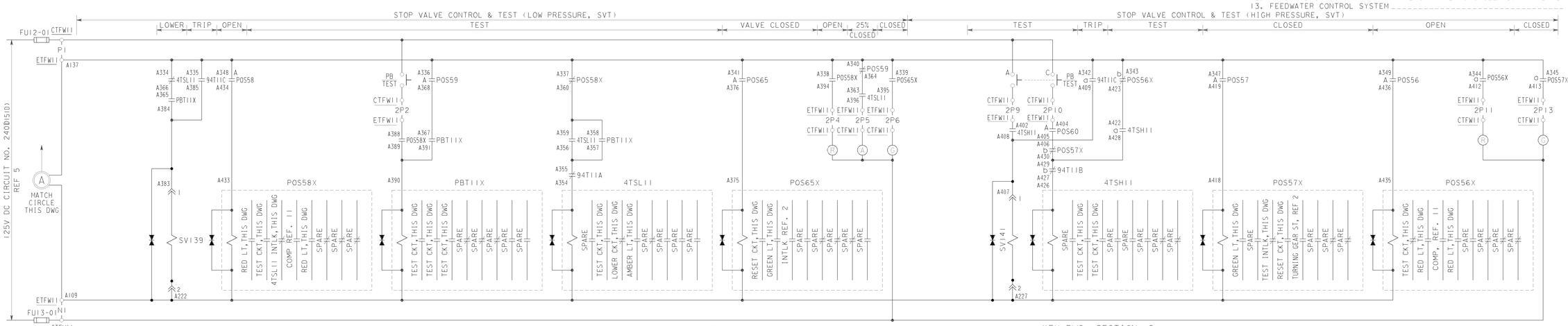

FEEDWATER PUMP NO. 11 CIRCUIT NO. TF11 (TF12)

FWP #11 CKTS. ARE ROUTED IN "E" TRAY & FWP #12 IN "D" TRAY

KEY DWG. SECTION 6

UNIT 1

DATE	
02-12-2008	
D.D.	ADM1
R.E.	FXC2
I.V.	
P.E.	RWB7

REVISION DESCRIPTION: REVISED PER FCT-33013-01

ELECTRICAL
SCHEMATIC DIAGRAM
FEEDWATER PUMP TURBINE CONTROL

DIABLO CANYON POWER PLANT
PACIFIC GAS AND ELECTRIC COMPANY
SAN FRANCISCO, CALIFORNIA

DWG SCALE:			
BILL OF MATL:			
SUPSDS:			
SUPSD BY:			
DRAWING	SHEET	PAGE	REV
437567	1	0	35

U2-441270

RASTER=437567.DGN
DGN=437567.DGN
CAD User:ADM1 Date: 02-12-2008

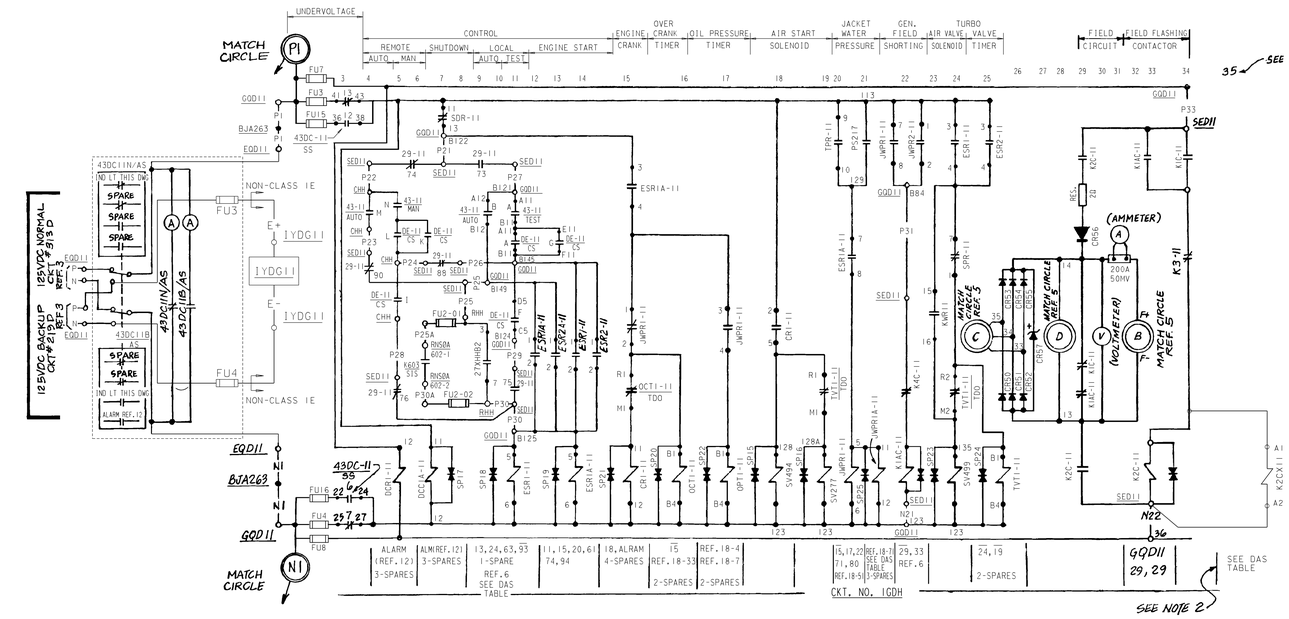

DIESEL GENERATOR NO. 11 CONTROL

(DIESEL GENERATOR NO. 12 IS SIMILAR)

DIESEL START TIMING DATA AQUISITION SYSTEM (DAS)

	ESRI CONTACT	K2CX CONTACT	K1CX CONTACT	JWPRIA CONTACT	TPRX CONTACT	TACK PACK CONTACT (K4)			REMARKS
GEN11	21⊢⊣⊢22	13⊢⊣⊢14	13⊢⊣⊢14	13⊢⊣⊢14	13⊢⊣⊢14	YM1	TBI-11⊢⊣⊢TBI-12	CLOSED @ ≥ 900RPM	INPUT TO DAS ONLY
GEN12	21⊢⊣⊢22	13⊢⊣⊢14	13⊢⊣⊢14	13⊢⊣⊢14	13⊢⊣⊢14	YM2	TBI-11⊢⊣⊢TBI-12	CLOSED @ ≥ 900RPM	INPUT TO DAS ONLY

DG START TIMING DATA AQUISITION SYSTEM (DAS)

	DAS (PANEL)	POWER SOURCE	HMI	REF.
GEN11	PM-DST11	1YDG11	DST-MNTR	
GEN12	PM-DST12	1YDG12	DST-MNTR	

(LRS) CONTINUED

CONT. Nº	POSITIONS LOCAL	INTER	REMOTE	CONTACT ARR.		REMARKS	
1	X			⊢⊣⊢	58	REF.1B	
2		X		⊢⊣⊢	60	REF.1B	
3	X			⊢⊣⊢		SPARE	
4		X		⊢⊣⊢		REF1B	
5	X			⊢⊣⊢	91	THIS DWG	
6		X		⊢⊣⊢		SPARE	
7	X			⊢⊣⊢	58	REF.1B	
8		X		⊢⊣⊢	60	REF.1B	
9	X			⊢⊣⊢		SPARE	
10		X		⊢⊣⊢	60	REF.1B	
11	X			⊢⊣⊢		SPARE	
12		X		⊢⊣⊢		SPARE	
13	X			⊢⊣⊢	78	REF.1B	
14		X		⊢⊣⊢		SPARE	
15	X			⊢⊣⊢		SPARE	
16		X		⊢⊣⊢		SPARE	
17	X			⊢⊣⊢		SPARE	
18		X		⊢⊣⊢		REF. 5	
19	X			⊢⊣⊢	78	REF.1B	
20		X		⊢⊣⊢		SPARE	
21	X			⊢⊣⊢		SPARE	
22		X		⊢⊣⊢		SPARE	
23	X			⊢⊣⊢		SPARE	
24		X		⊢⊣⊢		REF. 5	
25	X			⊢⊣⊢		SPARE	
26		X		⊢⊣⊢		SPARE	
27	X			⊢⊣⊢		SPARE	
28		X		⊢⊣⊢		SPARE	
29	X			⊢⊣⊢		SPARE	
30		X		⊢⊣⊢		THIS DWG	82
31	X			⊢⊣⊢		SPARE	
32		X		⊢⊣⊢		SPARE	
33	X			⊢⊣⊢		SPARE	
34		X		⊢⊣⊢		SPARE	
35	X			⊢⊣⊢		SPARE	
36		X		⊢⊣⊢		SPARE	
37	X			⊢⊣⊢	87	THIS DWG	
38		X		⊢⊣⊢	89	THIS DWG	
39	X			⊢⊣⊢	88	THIS DWG	
40		X		⊢⊣⊢	90	THIS DWG	
41	X			⊢⊣⊢		SPARE	
42		X		⊢⊣⊢	90	THIS DWG	
43	X			⊢⊣⊢		REF. 5	
44		X		⊢⊣⊢		REF. 5	
45	X			⊢⊣⊢		SPARE	
46		X		⊢⊣⊢		REF. 5	
47	X			⊢⊣⊢		SPARE	
48		X		⊢⊣⊢		REF. 5	
49	X	X		⊢⊣⊢		(SPARE)	
50		X		⊢⊣⊢		(BADJ)	
51	X	X		⊢⊣⊢		REF. 1B	43
52		X		⊢⊣⊢		REF. 1B	2
53	X	X		⊢⊣⊢		(REF. 5)	
54		X		⊢⊣⊢		(REF. 5)	
55	X	X		⊢⊣⊢		REF.1B	1
56		X		⊢⊣⊢		REF.1B	2
57	X	X		⊢⊣⊢		SPARE	
58		X		⊢⊣⊢		SPARE	
59	X	X		⊢⊣⊢		SPARE	
60		X		⊢⊣⊢		REF. 1B	2
61	X	X		⊢⊣⊢		THIS DWG	79
62		X	X	⊢⊣⊢		THIS DWG	81
63	X	X		⊢⊣⊢		SPARE	
64		X	X	⊢⊣⊢		THIS DWG	80
65	X	X		⊢⊣⊢		REF. 5	
66		X	X	⊢⊣⊢		REF. 5	
67	X	X		⊢⊣⊢		SPARE	
68		X	X	⊢⊣⊢		THIS DWG	83
69	X	X		⊢⊣⊢		THIS DWG	84
70		X	X	⊢⊣⊢		THIS DWG	83
71	X	X		⊢⊣⊢		ALREF.1C	
72		X	X	⊢⊣⊢		SPARE	
73	X	X		⊢⊣⊢		THIS DWG.	9
74		X	X	⊢⊣⊢		THIS DWG.	6
75	X	X		⊢⊣⊢		THIS DWG.	10
76		X	X	⊢⊣⊢		THIS DWG.	5
77	X	X		⊢⊣⊢		SPARE	
78		X	X	⊢⊣⊢		SPARE	
79	X	X		⊢⊣⊢		THIS DWG.	55
80		X	X	⊢⊣⊢		THIS DWG.	56
81	X	X		⊢⊣⊢		THIS DWG.	60
82		X	X	⊢⊣⊢		THIS DWG.	55
83	X	X		⊢⊣⊢		SPARE	
84		X	X	⊢⊣⊢		THIS DWG.	54
85	X	X		⊢⊣⊢		SPARE	
86		X	X	⊢⊣⊢		THIS DWG.	57
87	X	X		⊢⊣⊢		SPARE	
88		X	X	⊢⊣⊢		THIS DWG.	7
89	X	X		⊢⊣⊢		SPARE	
90		X	X	⊢⊣⊢		THIS DWG.	4

NOTE 4
NOTE 6
NOTE 5
NOTE 7
NOTE 6

ISOLATING SW. 29-11 & 29-12

USED AT LOCATIONS SED11 & SED12.

NORMAL BACKUP

ELECTROSWITCH SERIES 24

DECK	CONTACTS	POSITIONS NORMAL	INTER	BACKUP	REMARKS
1	11-11-11-13	X			SPARE
	12-11-11-14			X	THIS DWG
	15-11-11-17	X			THIS DWG
	16-11-11-18			X	THIS DWG
2	21-11-11-23	X			THIS DWG
	22-11-11-24			X	THIS DWG
	25-11-11-27	X			THIS DWG
	26-11-11-28			X	ALADJ.SEE 12.
3	31-11-11-33	X			REF. 1B
	32-11-11-34			X	REF. 1B
	35-11-11-37	X			SPARE
	36-11-11-38			X	THIS DWG
4	41-11-11-43	X			THIS DWG
	42-11-11-44			X	THIS DWG
	45-11-11-47	X			THIS DWG
	46-11-11-48			X	THIS DWG
5	51-11-11-53	X			THIS DWG
	52-11-11-54			X	REF. 1B
	55-11-11-57	X			REF. 1B
	56-11-11-58			X	SPARE
6	61-11-11-63	X			SPARE
	62-11-11-64			X	SPARE
	65-11-11-67	X			SPARE
	66-11-11-68			X	SPARE
7	71-11-11-73	X			SPARE
	72-11-11-74			X	SPARE
	75-11-11-77	X			SPARE
	76-11-11-78			X	SPARE

DC CONTROL SEL SW 43DC-11 SS, 43DC-12 SS

LOC: GQD11, GQD12

MAINTAINED POSITION

DEVICE Nº MFR.	DEVICE Nº DIESEL #11	DIESEL #12	FUNCTION	RATING OR RANGE	MFR	TYPE	CAT. & REF. DWG Nº	REMARKS
TACH	YI-1	YI-2	RPM METER - LOCAL					
TACH	YI-100	YI-101	RPM METER - CONTROL ROOM					
ASV1,3	SV494,277	SV496,281	AIR START SOLENOID VALVE	74 V DC	RD VALVE		2671A8011	
ASV2,4	SV493,278	SV495,282	AIR START SOLENOID VALVE	74	R.D. VALVE		2671A8011	
CR1,2	CR1-11,2-11	CR1-12,2-12	ENGINE CRANKING RELAY	125	W	MG-G	1163801	
	43DC1IN,B AS	43DC12IN,B AS	DC CONT. X-FER SW. AUX. CONTACT NORMAL, BACKUP	—	—	—	663082-199	
DCR1,2	DCR1-11 2-11	DCR1-12, 2-12	GEN FLD FLASH, SHUTDOWN UV RELAY	130V DC	W	ARD	ARD440UR	
DCF	DCF11	DCF12	GEN. BACKUP CONTROL UV RELAY	130V DC	W	ARD	ARD440UR	
DR-A DR-B	DR-A-11 DR-B-11	DR-A-12 DR-B-12	DROOP RELAY A DROOP RELAY B	120V DC	C-H	POWER RELAY	D40RR43	
ESR1,1A	ESR1-11 1A-11	ESR1-12, 1A-12	ENGINE START RELAY	130V DC	W	ARD	ARD660UR	
ESR2,2A	ESR2-11 2A-11	ESR2-12, 2A-12	ENGINE START RELAY	130V DC	W	ARD	ARD660UR	
DCC1-A	DCC1A11	DCC1A12	GEN. NORMAL CONTROL UV RELAY	130V DC	W	ARD	ARD440UR	
ERS	ER511	ER512	ENGINE RUN SOLENOID	120V DC	WOODWARD	-	663082-81	ENERGIZED TO SHUTDOWN
FST	FST11	FST12	GEN FIELD SHUTDOWN TIMER	125VDC	AGASTAT	ETR	ETR14D3G	10 to 300 Sec. Set to 120 Sec.
HCR	HCR11	HCR12	HEATER CUT OFF RELAY	130V DC	W	ARD	ARD440UR	
JWPR1,2	JWPR1-11,2-11	JWPR1-12,2-12	JACKET WATER PRESSURE RELAY (START CKT)	130V DC	W	ARD	ARD660UR	
JWPS1,2	PS217,218	PS229,230	JACKET WATER PRESSURE SWITCH (START CKT)		U E	J G	MODEL 15G	
JWPR1-A	JWPR1A11	JWPR1A12	RELAY	130V DC	W	ARD	ARD440UR	
JWPR2-A	JWPR2A11	JWPR2A12	RELAY	130V DC	W	ARD	ARD440UR	
K1C	K1C11	K1C12	GENERATOR FIELD SHORTING CONTACTOR	125V DC	W	M	493A570G03	
K1AC	K1AC11	K1AC12	GENERATOR FIELD SHORTING CONTACTOR		W	M	493A570G03	
K2C	K2C11	K2C12	GENERATOR FIELD FLASHING CONTACTOR		W	M	493A564G03	
K3	K3-11	K3-12	FIELD FLASH CUT-OUT RELAY	—	—	—	5	
K4C	K4C11	K4C12	GENERATOR VOLTAGE SHUTDOWN RELAY	110V DC	POTTER BRUMFIELD		PMI7DY	
TP	YM-1	YM-2	SWITCHING TACHOMETER (DCN PAK)		AIRPAX	TACH PAK	663082-309	SEE NOTE 3 (TYP)
OCT1,2	OCT1-11,2-11	OCT1-12,2-12	OVERCRANK TIMER	125VDC	AGASTAT	ETR	ETR14D3D	2-60 SEC. Set 10 Sec.
OPT1,2	OPT1-11,2-11	OPT1-12,2-12	OIL PRESSURE TIMER		AGASTAT	ETR	ETR14D3D	2-60 SEC. Set 20 Sec.
PDT	PDT11	PDT12	LUBE OIL PRESSURE DELAY TIMER		AGASTAT	ETR	ETR14D3D	2-60 SEC. Set 45 Sec.
TPR	TPR11	TPR12	TACHOMETER RELAY	130V DC	W	ARD	ARD440UR	
SDR	SDR11	SDR12	DIESEL SHUTDOWN RELAY	—	—	—	18	
SPR	SPR11	SPR12	SPEED RELAY	125 V DC	W	MG-G	1163801	
TVT1,2	TVT1-11,2-11	TVT1-12,2-12	TURBO VALVE TIMER	125VDC	AGASTAT	ETR	ETR14D3B	0.55-15 SEC. Set 3.0 Sec.
TAV1	SV499	SV500	TURBO AIR VALVE SOLENOID		ASCO		WPHCX8210B82-03074	
TAV2	SV504	SV505	TURBO AIR VALVE SOLENOID		ASCO		WPHCX8210B82-03074	
C1, D1	65-11/LS	65-12/LS	GOVERNOR LIMIT SWITCH				14	
SIS-A	K603/SIS	K604/SIS	SAFETY INJECTION AUX RELAY	—	—	—	(11)	
SIS B	K603/SIS	K604/SIS	↓ ↓ ↓ ↓	—	—	—	(11)	
	MASL11X	MASL12X	VOLTAGE REGULATION SELECT SW AUX RELAY	125VDC	W	S G	293B254A20	
—	27XHHB2	27XHGB2	4KV BUS UNDERVOLTAGE AUX. RELAY *	—	—	—	9	
—	27YHHB2	27YHGB2	4KV BUS UNDERVOLTAGE AUX. RELAY '	—	—	—	9	
DCCON	DCCON11	DCCON12	DC VOLTAGE CONVERTER	125VDC	DYNALCO	SOC	SDC2000	
KWR	KWR11	KWR12	KILOWATT RELAY	130V DC	W	ARD	ARD440UR	
KWT	KWT11	KWT12	KILOWATT TIMER	125VDC	AGASTAT	ETR	ETR14D3B	0.55-15 SEC. Set 3 Sec.
	SV713	SV714	PRIMING SOLENOID VALVE	125VDC	ASCO			
TPI	YM-1A	YM-2A	TACH PAK CURRENT/CURRENT ISOLATOR	120V AC	ACTION PAC INSTR	ISO. SMTR	AP4300	
—	YM-1B	YM-2B	DG EGA OUTPUT VOLTS SIGNAL ISOLATOR	—	MOORE IND	UB	FCT. 0-5V/0-5V/U	
—	YM-1C	YM-2C	DG EGA MOP INPUT SIGNAL ISOLATOR	—	MOORE IND	UB	FCT/ 0-5V/0-5V/U	
—	YM-1D	YM-2D	DG GEN VOLTS ADJ MOP SIGNAL ISOLATOR	—	MOORE IND	UB	FCT. 0-10V/0-10V/U	
TPRX	TPRX11	TPRX12	TACH AUX RELAY	125VDC	A/B	R	700-HLS1U1	INPUT TO DAS ONLY
K1CX	K1CX11	K1CX12	GEN FLD SHORTING AUX RLY	125VDC	A/B	R	700-HLS1U1	INPUT TO DAS ONLY
K2CX	K2CX11	K2CX12	GEN FLD SHORTING AUX RLY	125VDC	A/B	R	700-HLS1U1	INPUT TO DAS ONLY

CONTROL SW.-TYPE W-2 (DE/CS) DEVELOPMENT #26

CONTACTS	POSITION STOP	—	MOR	—	START	REMARKS	
A11-B11	A			X	X	THIS DWG.	10
A5-B5	B			X	X	THIS DWG.	60
A7-B7	C	X				SP	
C11-D11	D			X	X	THIS DWG	60
A1-B1	E	X				THIS DWG	78
C5-D5	F			X	X	THIS DWG	10
E11-F11	G		X	X	X	THIS DWG	12
E5-F5	H		X	X	X	THIS DWG	62
C1-D1	I	X				SP	
C7-D7	J	X				SP	
E12-F12	K						
E6-F6	L						

CS 3-POS. SPRING RETURN TO POS. (2) S*658A646G01 DIESEL ENGINE CONTROL SWITCH DE11 CS & DE12 CS AT LOC. CHH & CHG

SEE NOTE 1

(SSS) SPRING RETURN TO NORMAL DIESEL ENGINE CONTROL SWITCH AT LOC. GQD11 & GQD12 DE11 CS & DE12 CS

CONTACTS	STOP	START	REMARKS	
A11-B11	X		THIS DWG	82
A12-B12		X	SP	
A1-B1		X	THIS DWG	
A5-B5	X	X	SP	
A6-B6	X	X	THIS DWG	43
A7-B7	X	X	THIS DWG	55
C11-D11	X	X	SP	
C12-D12	X		ALARM REF.12	
C1-D1	X		SP	
C5-D5	X		SP	
C6-D6	X	X	SP	
C7-D7	X		SP	
E11-F11	X	X	THIS DWG	4
E12-F12	X	X	THIS DWG	4
E1-F1	X	X	SP	
E5-F5	X	X	THIS DWG	55
E6-F6	X	X	THIS DWG	55
E7-F7	X	X	SP	

SEE NOTE 1

(CS) TYPE W-2 DEVELOPMENT #25

CONTACTS	POSITIONS TEST	INTER	AUTO	REMARKS	
A	X	X		THIS DWG	10
B		X	X		60
C	X	X			
D	X	X		SPARE	
E		X	X	THIS DWG	33
F	X	X		SPARE	
G	X			THIS DWG	78
H			X	SPARE	
I	X			REF1B	43
J	X			ALARM REF.12	
K			X	SPARE	
L	X			THIS DWG	34

DIESEL ENGINE SELECTOR SW 43-11 & 43-12 AT LOC. CHH & CHG

2-POS. MAINTAINED S*505A788G021

SEE NOTE 1, TYP.

TYPE W-2 DEVELOPMENT #25

CONTACTS	MAN	AUTO	REMARKS	
A11-B11	A		SP	
A12-B12	B	X	THIS DWG	83
A1-B1	C		SP	
A5-B5	D		SP	
A6-B6	E	X	THIS DWG	83
A7-B7	F		SP	
C11-B11	G		SP	
C12-D12	H	X	ALARM REF.12	
C1-D1	I		SP	
C5-D5	J		SP	
C6-D6	K	X	SP	
C7-D7	L		SP	
E11-F11	M		THIS DWG	4
E12-F12	N	X	THIS DWG	4
E1-F1	O		SP	
E5-F5	P	X	THIS DWG	55
E6-F6	Q	X	THIS DWG	55
E7-F7	R		SP	

DIESEL ENGINE SELECTOR SW 43-11 & 43-12 AT LOC. GQD11 & GQD12

TYPE W-2 STYLE #807A116G01 MAINTAINED POS.

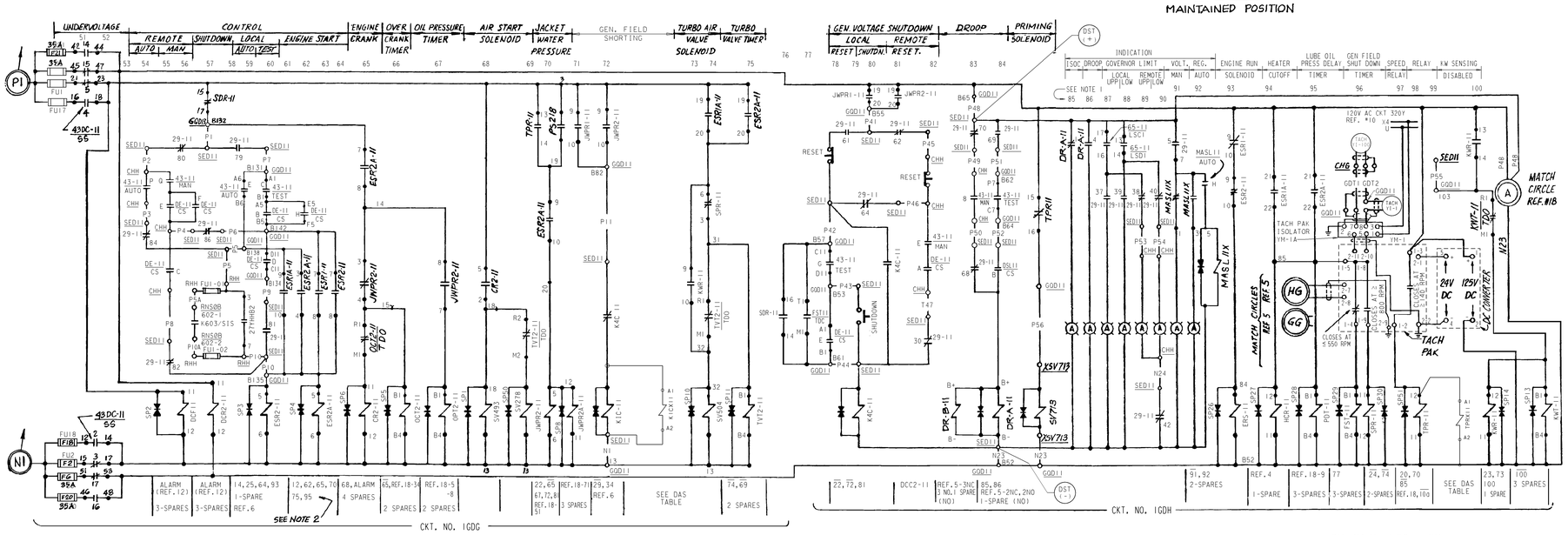

DIESEL GENERATOR NO. 11 CONTROL

(DIESEL GENERATOR NO. 12 IS SIMILAR)

(CKT NO. 1GGDG/2GDF)

CONTACTS		DROOP	ISOCHRONOUS	REMARKS	
⊣⊢	A		X	SPARE	
⊣⊢	B	X		THIS DWG.	84

DROOP SW DSL-11 CS & DSL-12 CS AT LOC. SED11 & SED12

	SPLICE PT.	DC CONT. X-FER. SW	125V DC SUPPLY CKT NORMAL	BACK-UP	CKT. NO. NORMAL	BACK-UP	TACH PAK ISOL. 120VAC SUPPL CKT	SIS SIGNAL UNIT No. 1 NORMAL RELAY	CONTACT	LOCATION	BACK-UP RELAY	CONTACT	LOCATION	U/V AUXILIARY RELAY NORMAL RELAY	CONTACT	LOCATION	BACK-UP RELAY	CONTACT	LOCATION
DSL GEN #11	BJA263	EQD11	313D (H)	219D (G)	1GDH	1GDG	320V	K603	602-1 / 602-2	RNS0A	K603	602-1 / 602-2	RNS0B	27XHHB2	3-7	RHH	27YHHB2	3-7	RHH
DSL GEN #12	BJA244	EQD12	214D (G)	115D (F)	2GDG	2GDF	220V	K604	604-3 / 604-4	RNS0B	K604	604-5 / 604-6	RNS0B	27XHGB2	3-7	RHG	27YHGB2	3-7	RHG

MAIN ANN. ALARM CKT. TABLE

	43 11&12	CR1, CR2	29	43	DCR1, DCR2, DCF, DCC1A	43DC11B AS	43DC12B AS
DSL #11	AY4220DH REF.501135	AY4202DH REF.501135	AY4203DH REF.501135	AY4220DH REF.501135	AY4201DH REF.501135	AY4208DH REF.501135	
DSL #12	AY4920DG REF.501136	AY4302DG REF.501136	AY4303DG REF.501136	AY4320DG REF.501136	AY4301DG REF.501136	AY4308DG REF.501136	

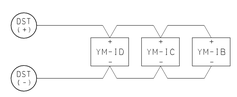

SIGNAL ISOLATOR

(DIESEL START DATA ACQUISITION SYSTEM)

NOTES

1. NUMBERS SHOWN INDICATE CONTACT LOCATION
2. NUMBERS INDICATE LOCATION & NUMBER OF CONTACT USED
3. FOR ELECTRICAL DEVICES TECH DATA AND SETPOINTS SEE PIMS COMPONENT DATABASE.
4. FOR ISOLATION SW 29-12 ONLY. FOR ISOLATION SW 29-11 DO NOT USE.
5. FOR ISOLATION SW 29-11 ONLY. FOR ISOLATION SW 29-12 THIS DWG. (4).
6. FOR ISOLATION SW 29-11 ONLY. FOR ISOLATION SW 29-12 DO NOT USE.
7. FOR ISOLATION SW 29-12 ONLY (THIS DWG. (80). FOR ISOLATION SW 29-11 SPARE.

REFERENCE DWGS

1. DESCRIPTION OF ELECTRICAL SCHEMATIC DIAG. SYMBOLS & CIRCUIT DESIGNATIONS 050003
2. SINGLE LINE METER & RELAY DIAGRAM 4160 V SYSTEM, BUS SECTIONS F, G & H 437533
3. SINGLE LINE METER 7 RELAY DIAGRAM 125 V DC, SYSTEM SD11 (SD12) (SD11) 445076, 445075, 437546
4. SCHEMATIC DIAGRAM 4 KV DIESEL GENERATOR AUXILIARY MOTORS 437674
5. AND ASSOCIATED CKT. BKRS. (DSL 11 & 12) 437665
6. AND ASSOCIATED CKT. BKRS. 437666
7. CONTROL NO. 13 437667
8. CONTROL NO. 13 437668
9. SCHEMATIC DIAGRAM 4160 V BUS SECTION "G" AUTOMATIC TRANSFER (BUS SECT."H") 437626, 437627
10. SINGLE LINE DIAGRAM MAIN CONTROL BOARD 1VB1 & 1VB2 FUSE PANEL 437895
11. SCHEMATIC DIAGRAM SSPS OUTPUT RELAYS, TRAIN A, TRAIN B 501869, 503086
12. SCHEMATIC DIAGRAM ANNUNCIATOR DIGITAL INPUTS 501135, 501136, 501137
13. LOGIC DIAGRAM 4160 V BUS SECTIONS F, G & H AUTOMATIC TRANSFER 458863, 458864, 458865
14. DIESEL GENERATOR MFR. DRAWINGS ..... REC.* DC663082
15. SCHEMATIC DIAGRAM DIESEL FUEL TRANSFER PUMPS 437657
16. LIST OF EQUIPMENT LOCATION CODES 101900
17. SCHEMATIC DIAGRAM 4 KV DIESEL GENERATOR CONTROL NO. 11 & 12 437579
18. SCHEMATIC DIAGRAM 4 KV DIESEL GENERATOR CONTROL NO. 11 & 12 437580
19. VENDOR DWG ..... 663082-362 THRU -376

EQUIPMENT LOCATION

RNS0A RACK NU SAFEGD OUTPUT
SED11 DIESEL GEN. 11 EXCITATION CUB.
GQD11 DIESEL GEN. 11 CONTROL PNL.
RHH ENG SFGRD RLY BOARD BUS H
CHH CONT BD ENG SFGRD BUSH
PM-DST11-DG11 START TIMING DATA ACQUISITION (DAS) PANEL.
PM-DST12-DG12 START TIMING DATA ACQUISITION (DAS) PANEL
1YDG11-STATIC INVERTER
1YDG12-STATIC INVERTER
DST-MNTR-DG11,12,13 DIESEL START DATA ACQUISITION SYSTEM, HMI

KEY DWG. SECTION 2

NUCLEAR SAFETY RELATED

P.G.&E. SYSTEM PHASE SEQUENCE A-C-B

DATE	
12-23-2013	
D.D.	PNWB
R.E.	FAZI
I.V.	KJD3
P.E.	N/A

REGISTERED PROFESSIONAL ENGINEER NOT REQUIRED N/A N/A STATE OF CALIFORNIA

REVISION DESCRIPTION: REVISED PER DFT-7*2433

UNIT 1

ELECTRICAL SCHEMATIC DIAGRAM 4KV DIESEL GENERATOR CONTROL NO. 11 & 12

DIABLO CANYON POWER PLANT

PACIFIC GAS AND ELECTRIC COMPANY
SAN FRANCISCO, CALIFORNIA

DWG SCALE:
BILL OF MATL:
SUPSDS:
SUPSD BY:

DRAWING	SHEET	PAGE	REV
437579	1	0	43

RASTER=437579.dgn DGN=437579.dgn CAD User:PNWB Date:12-23-2013