2014 Ginna Initial License NRC Examination

RO Written Examination

Applicant Information

Name:			
Date:	December, 2014	Facility/Unit:	R.E. Ginna
Region:	I	Reactor Type:	Westinghouse
Start Time:		Finish Time:	

Instructions

Use the answer sheets provided to document your answers. Staple this cover sheet on top of the answer sheets. To pass the examination, you must achieve a final grade of at least 80.00 percent overall, with 70.00 percent or better on the SRO-only items if given in conjunction with the RO exam; SRO-only exams given alone require a final grade of 80.00 percent to pass. You have 8 hours to complete the combined examination, and 3 hours if you are only taking the SRO portion.

Applicant Certification

All work done on this examination is my own. I have neither given nor received aid.

_____

Applicant's Signature

Results

RO -Only Examination Values	____ Points
Applicant's Score	____ Points
Applicant's Grade	____ Percent

0Examination Outline Cross-reference:

Level	RO	SRO
Tier #	1	
Group #	1	
K/A #	007 EA1.06	
Importance Rating	4.4.	

Ability to operate and monitor the following as they apply to a reactor trip: verification that the control and safety rods are in after the trip

RO Question #1

Given the following plant conditions:

- Manual reactor trip has just been actuated
- Reactor Trip Breaker 'A' Red indication is lit
- Reactor Trip Breaker 'B' Green indication is lit
- Reactor Power is 6% and lowering rapidly
- MRPI indicates all rods on bottom with the exception of TWO control bank D rods:
  - G-3 indicates "ERR"
  - K-7 indicates "ERR"

WHICH ONE of the following describes the condition of the reactor, and the action required?

A. The reactor is tripped; perform RCS boration for the 2 control rods as directed in ES-0.1, REACTOR TRIP RESPONSE

B. The reactor is tripped; go directly to ER-CVCS.1, REACTOR MAKEUP CONTROL MALFUNCTION, initiate an RCS boration for the 2 control rods.

C. The reactor is NOT tripped; manually insert control rods as directed by FR-S.1, NUCLEAR POWER GENERATION/ATWS

D. The reactor is NOT tripped; initiate boration for the 2 control rods in accordance with ER-CVCS.1, REACTOR MAKEUP CONTROL MALFUNCTION

Answer: A

Explanation:

A. CORRECT. Power level lowering with at least one reactor trip breaker open are valid indications that the reactor is tripped. ES-0.1 will take actions to address the potentially stuck control rods.

B. Incorrect. Plausible because the first part is correct, and the ER-CVCS.1 procedure is referenced as an RNO action in the ES-0.1 procedure if Boric Acid flow cannot be established but the information in the question does not imply that any malfunctions have occurred thus this is incorrect.

C. Incorrect. Plausible if the candidate believes that both reactor trip breakers are required to be opened – entry into FR-S.1 would be appropriate.

D. Incorrect. Plausible since both parts of the choice are correct per the explanations above.

Technical Reference(s): E-0 Background
ES-0.1 Background

Proposed references to be provided to applicants during examination: None

Learning Objective: REP00C, 2.01 (As available)

Question Source: Bank/VISION # _____
Modified Bank # _____ (Note changes or attach parent)
New X

Question History: Last NRC Exam _____

Question Cognitive Level: Memory or Fundamental Knowledge _____
Comprehension or Analysis X

10 CFR Part 55 Content: 55.41 .7, .10
55.43 _____

Justification for K/A Match:

The question matches the K/A by requiring a determination that the reactor is tripped by diverse indications of one at least one reactor trip breaker being open with neutron flux rapidly decreasing, then determining appropriate procedural actions based upon the "ERR" MRPI indication on two rods.

Examination Outline Cross-reference:	Level	RO	SRO
	Tier #	1	
	Group #	1	
	K/A #	008 AK2.03	
	Importance Rating	2.5	

Knowledge of the interrelations between the Pressurizer Vapor Space Accident and the following: Controllers and Positioners

RO Question #2

Given the following:

- With the plant at 100% power a Pressurizer PORV fails partially open.
- Two minutes has elapsed and the reactor has not tripped.

Assuming no operator action, which ONE of the following correctly completes the statements below?

It is expected that ____(1)____. When compared with the output of the Auto Charging Pump Controller, it is expected that the magnitude of the change of the 431K Master Pressure controller output will be ____(2) ___ that of the Auto Charging Pump Controller.

A. (1) both running Charging Pumps will speed up
(2) larger than

B. (1) both running Charging Pumps will speed up
(2) about the same as

C. (1) One running Charging Pump will speed up while one running Charging Pump speed will remain constant
(2) larger than

D. (1) one running Charging Pump will speed up while one running Charging Pump speed will remain constant
(2) about the same

Answer: C

Explanation:

A. **Incorrect.** 1st part wrong, 2nd part correct. This is incorrect because the Charging Pump that is running in MANUAL will NOT speed up. This is plausible because the operator may not know that the normal Charging Pump lineup is one pump running in AUTO, and one Charging Pump running in MANUAL.

B. **Incorrect.** 1st part wrong, 2nd part wrong. See A and D.

C. **Correct.** 1st part correct, 2nd part correct. According to S-3.2 (p7; Rev 02000) Step 6.4.1.5, the plant is operated with one Charging Pump in automatic operation, and a second Charging Pump running in Manual. According to Lesson Plan RTA04C (Rev 8), during the first two minutes of the slow developing Vapor Space Break Event, pressurizer pressure and level are expected to lower. When pressure lowers to saturation temperature of the water in the Reactor Vessel head, Pressurizer pressure will continue to lower, and pressure level will rise, as the hot water in the head flashes to steam. Note that this has not occurred because the plant has not tripped yet (i.e. pressure is still high). During this time it is expected that Tavg will remain constant, and therefore there will be no effect on Programmed Pressurizer Level. Consequently, during the first 2 minutes of the event, as the Pressurizer level lowers, the Charging Pump that is controlled in AUTO will speed up, while the pump that is in MANUAL will remain at the same speed. The vapor space break is characterized by a large loss of pressure and a smaller loss of inventory, when compared to a liquid space leak. Consequently, the when compared with the output of the Auto Charging Pump Controller, it is expected that the magnitude of the change of the 431K Master Pressure controller will be larger than that of the Auto Charging Pump Controller.

D. **Incorrect.** This is incorrect because when compared with the output of the Auto Charging Pump Controller, it is expected that the magnitude of the change of the 431K Master Pressure controller will be larger than, rather than about the same as, that of the Auto Charging Pump Controller. This is plausible because the operator may incorrectly believe that the vapor space break is similar to the liquid leak which the magnitude of the change of the controller outputs is similar.

Technical Reference(s): S-3.2 (p7; Rev 02000) (Attach if not previously provided)
RTA04C (Rev 8)

Proposed references to be provided to applicants during examination: None

Learning Objective: RTA04C, 1.01 (As available)

Question Source: Bank/VISION # _____
Modified Bank # _____ (Note changes or attach parent)
New X

Question History: Last NRC Exam _____

ıestion Cognitive Level:	Memory or Fundamental Knowledge	
	Comprehension or Analysis	X

10 CFR Part 55 Content:	55.41	.7
	55.43	

Justification for K/A Match:

The KA is matched because the operator must demonstrate knowledge of the interrelations between the Pressurizer Vapor Space Accident and the Auto Charging Pump and Master Pressure (431K) Controllers.

The question is at the Comprehension/Analysis cognitive level because the operator must recall bits of information (Normal Charging Pump Speed control) and then apply this information to determine how the charging Pumps speed will respond; and demonstrate an understanding of how the plant will react to a vapor space break, in order to answer the question correctly.

What MUST be known:

1. What is the normal alignment of the Charging Pump Speed Controllers at 100% power?
2. How will Pressurizer level vary during the first few minutes of a vapor space break with no operator action and the plant still at power?
3. How will Pressurizer pressure vary during the first few minutes of a vapor space break with no operator action and the plant still at power?
4. During the Vapor Space Break with the plant still at power, which plant parameter is impacted more, RCS pressure or inventory?

Examination Outline Cross-reference:	Level	RO	SRO
	Tier #	1	
	Group #	1	
	K/A #	009 EA2.08	
	Importance Rating	2.9	2.9

Ability to determine or interpret the following as they apply to a small break LOCA: Letdown isolation valve position indication

RO Question #3

Given the following plant conditions:

- Operators are responding to a small break LOCA which resulted in an Auto SI in accordance with E-1, LOSS OF REACTOR OR SECONDARY COOLANT
- Step 9, Establish IA to CNMT, has NOT yet been completed
- The control switches for AOV-294, CHARGING VLV RHX to LOOP B COLD, and AOV-427, LTDN LOOP B COLD LEG TO RHX, are in their normal pre-trip positions

WHICH ONE of the following identifies how the CVCS charging and letdown isolation valves respond to the given plant conditions?

	AOV-294	AOV-427
A.	OPEN	OPEN
B.	OPEN	CLOSED
C.	CLOSED	OPEN
D.	CLOSED	CLOSED

Answer: C

Explanation:

A. Incorrect. Plausible because the normal at-power alignment for both valves would be open, and a candidate who did not know the fail position of the valves on loss of IA would select this choice..

B. Incorrect. Plausible if a candidate did not know the correct loss of instrument air failed position of the valves and "reversed" their failed position.

C. CORRECT. Due to the SI signal, air to CNMT is isolated, and the fail position for the valves is AOV-294 failed CLOSED and AOV-427 failed OPEN. As given in the stem, IA has not yet been restored to CNMT.

D. Incorrect. Plausible if the candidate believes that the "fail safe" position of the valves on loss of IA is to fail CLOSED, since most CVCS valves fail closed on the CI signal.

Technical Reference(s): EOP Attachment 11.0 (Attach if not previously provided)

Proposed references to be provided to applicants during examination: None

Learning Objective: R1601C, 1.10

Question Source: Bank/VISION # _____
Modified Bank # X - Sequoyah (Note changes or attach parent)
New _____

Question History: Last NRC Exam _____

Question Cognitive Level: Memory or Fundamental Knowledge _____
Comprehension or Analysis X

10 CFR Part 55 Content: 55.41 .7
55.43 _____

Justification for K/A Match:

The question matches the K/A by requiring the candidate to identify the failure position of two charging/letdown isolation valves and to recognize that instrument air has not yet been restored following an SI/CI actuation signal.

Examination Outline Cross-reference:	Level	RO	SRO
	Tier #	1	
	Group #	1	
	K/A #	011 EK1.01	
	Importance Rating	4.1	

Knowledge of the operational implications of the following concepts as they apply to the Large Break LOCA: Natural circulation and cooling, including reflux boiling

RO Question #4

Given the following plant conditions:

- A LOCA has occurred 20 minutes ago
- RCPs are tripped
- None of the SI pumps are operating
- RCS pressure is 900 psig and slowly rising
- Steam generator pressures are approximately 800 psig and slowly rising
- Steam Generator narrow range levels are 25%
- RVLIS is indicating 60%
- Core Exit T/Cs are 705°F and slowly rising

WHICH ONE of the following describes the heat removal mechanism(s) currently occurring, and the operator action(s) that will be effective in enhancing the current core cooling mechanism(s)?

A. Break flow ONLY; ensure adequate ECCS flow for the current RCS pressure

B. Break flow ONLY; OPEN S/G ARVs to depressurize RCS to establish long term cooling

C. Break flow AND reflux boiling; maintain ECCS flow for the RCS pressure

D. Break flow AND reflux boiling; OPEN S/G ARVs to depressurize RCS to establish long term cooling

Answer: D

Explanation:

A. Incorrect. For large break LOCAs, break flow is the primary heat removal mechanism and the core will remain cool as long as the coolant boiling is replaced with SI or accumulator water. When the core starts to uncover the natural and two phase circulation stops and the mechanism in S/G for heat removal becomes the reflux/condensing steam in the u-tubessure.

B. Incorrect. Plausible because the first part is partially correct and steaming the S/Gs will enhance reflux cooling, but only after S/G's have become a heat sink.

C. Incorrect. Plausible as stated above, the ARVs must be opened to because the refluxing is needed to reduce RCS pressure to inject the accumulators and cause the pressure to reduce below the shutoff herad of the RHR pumps to restore injection flow cooling.

D. CORRECT.

Technical Reference(s): FR-C.2 Background Document (Attach if not previously provided)

Proposed references to be provided to applicants during examination: None

earning Objective: RES12C, 2.1 (As available)

Question Source: Bank/VISION # X – Wolf Creek

Modified Bank # _____ (Note changes or attach parent)

New _____

Question History: Last NRC Exam _____

Question Cognitive Level: Memory or Fundamental Knowledge _____

Comprehension or Analysis X

10 CFR Part 55 Content: 55.41 .5

55.43 _____

Justification for K/A Match:

he question matches the K/A by evaluation of the plant conditions following a LOCA and determining that S/Gs are not effective as a heat removal mechanism when S/G pressure is > RCS pressure.

Examination Outline Cross-reference:	Level	RO	SRO
	Tier #	1	
	Group #	1	
	K/A #	025 2.1.27	
	Importance Rating	3.9	

Loss of RHR: Knowledge of system purpose or function

RO Question #5

Given the following plant conditions:

- The RCS is at 110°F.
- The A RHR Train is in operation.
- The RCS is vented to atmosphere.
- Bus 17 is de-energized for electrical maintenance

Subsequently, the A RHR Pump electrical breaker trips on overcurrent.

WHICH ONE of the following identifies the preferred means to restore core cooling?

A. Align the RCDT for core cooling.

B. Place the B RHR Pump/ train in Operation

C. Align one SI Pump to the RCS and raise RCS loop level.

D. Raise RCS pressure and dump steam from an intact Steam Generator.

Answer: B

Explanation:

A. **Incorrect.** This is incorrect because the preferred method of restoring core cooling is with the RHR System. This is plausible because there is an electrical bus outage and the operator may incorrectly believe that the B Train of RHR is NOT available. If so, this method is a valid alternative.

B. **Correct.** The major action items of AP-RHR.1 are (1) Attempt to Restore RHR Cooling, (2) Protect Personnel/ Reduce Releases, and (3) Establish Alternate RCS Cooling. According to the AP-RHR.1 Background document. Therefore, if the operator can restore RHR, this will be the preferred method. According to AP-RHR.1 (p3-10, Rev 02200), the first several steps will attempt to restore the RHR system, before the selection of the other alternate means.

C. **Incorrect.** This is incorrect because the preferred method of restoring core cooling is with the RHR System. This is plausible because there is an electrical bus outage and the operator may incorrectly believe that the B Train of RHR is NOT available. If so, this method is a valid alternative.

D. **Incorrect.** This is incorrect because the preferred method of restoring core cooling is with the RHR System. This is plausible because there is an electrical bus outage and the operator may incorrectly believe that the B Train of RHR is NOT available. If so, this method is a valid alternative.

Technical Reference(s): AP-RHR.1 (p3-10, Rev 2200) (Attach if not previously provided)

Proposed references to be provided to applicants during examination: None

Learning Objective: R2501C 1.12 & 1.13 (As available)

Question Source: Bank/VISION # _____
Modified Bank # _____ (Note changes or attach parent)
New X

Question History: Last NRC Exam _____

Question Cognitive Level: Memory or Fundamental Knowledge X
Comprehension or Analysis _____

10 CFR Part 55 Content: 55.41 .10
55.43 _____

Justification for K/A Match:

ɔmments:

The KA is matched because the operator must demonstrate knowledge of the RHR system purpose (i.e. primary or preferred means of core cooling in Mode 5) during a Loss of Residual Heat Removal System (RHRS).

The question is at the Comprehension/Analysis cognitive level because the operator must recall bits of information (power supply to B RHR Pump) and then apply this information to select one of the procedurally identified alternative means to core cooling, to answer the question correctly.

What MUST be known:
1. What is the power supply to the B RHR Pump? 2. What is the preferred means of restoring core cooling in AP-RHR.1 when the operating train of RHR fails?

Examination Outline Cross-reference:	Level	RO	SRO
	Tier #	1	
	Group #	1	
	K/A #	026 AK3.02	
	Importance Rating	3.6	

Knowledge of the reasons for the following responses as they apply to the Loss of Component Cooling Water: The automatic actions (alignments) within the CCWS resulting from actuation of the ESFAS

RO Question #6

Given the following plant conditions:

- A Main Steamline Break inside containment occurred which resulted in Auto SI
- Containment pressure peaked at 26 psig
- No charging pumps are currently running
- The crew is attempting to establish charging flow in E-1, LOSS OF REACTOR OR SECONDARY COOLANT
- Safeguard buses are energized by the Emergency D/Gs
- RCP Seal Water Outlet temperatures are 255°F and slowly rising

WHICH ONE of the following describes why the local seal injection valves (V-300A & V-00B) are CLOSED at this time?

A. CCW flow to the RCP thermal barriers has been lost. RCP seals are heating up, and initiation of cold seal injection flow will cause RCP seal damage

B. CCW flow to the RCP thermal barriers has been lost. RCP seal temperatures are still within the allowed range, and maximum charging flow to the RCS loops via the normal charging path is required.

C. CCW flow to the RCP thermal barriers has NOT been interrupted. Seal injection is not needed to maintain seal integrity, and maximum charging flow to the RCS loops via the normal charging path is required.

D. CCW flow to the RCP thermal barriers has NOT been interrupted. Seal injection is not needed to maintain seal integrity, and initiation of cold seal injection flow could cause RCP seal damage.

Answer: A

Explanation:

A. CORRECT. An automatic SI has occurred, the EDGs have energized the busses which have stripped the CCW and charging pumps, causing a loss of seal cooling which has resulted in the RCP seals heating up.

B. Incorrect. Plausible because CCW has been lost, and E-1 does re-establish charging flow to restore PRZR level, but 235˚F is the maximum allowable seal temperature.

C. Incorrect. Plausible because the EDGs supplying the safeguards buses causes the CCW pumps to trip and, if the candidate does not recognize this, he may believe that restoration of seal injection is NOT required to maintain seal integrity.

D. Incorrect. Plausible because the EDGs supplying the safeguards buses causes the CCW pumps to trip and, if the candidate does recognize this, he may believe that restoration of seal injection is required to maintain seal integrity regardless of the risk associated with thermal shock to the RCP seal package.

Technical Reference(s): E-1, Step 11 (Attach if not previously provided)

Proposed references to be provided to applicants during examination: None

earning Objective: R3501C, 1.07; R2801C, 1.06

Question Source: Bank/VISION # _____
Modified Bank # 2010 Turkey Pt NRC (Note changes or attach parent)
New _____

Question History: Last NRC Exam _____

Question Cognitive Level: Memory or Fundamental Knowledge _____
Comprehension or Analysis X

10 CFR Part 55 Content: 55.41 .5
55.43 _____

Justification for K/A Match:

The question matches the K/A by requiring an evaluation of plant conditions and comprehension that an SI has occurred, EDGs have energized the Safeguards buses, CCW pumps have stripped, and the loss of charging pumps has resulted in a loss of seal cooling which has resulted in RCP seal heatup.

Examination Outline Cross-reference:	Level	RO	SRO
	Tier #	1	
	Group #	1	
	K/A #	EPE038 EA2.04	
	Importance Rating	3.9	

Ability to determine or interpret the following as they apply to a SGTR:
Radiation levels (MREM/hr)

RO Question #7

Given the following plant conditions:

- A large main steamline break on a common line downstream of MSIVs which resulted in reactor trip and SI
- The crew has implemented E-0, REACTOR TRIP OR SAFETY INJECTION
- S/G ARVs are controlling Tavg at 547°F
- E-16, RMS PROCESS MONITOR HIGH ACTIVITY, is in alarm
- RMS panel readings are as follows:
  - R-15, Air Ejector, 310 cpm
  - R-19, S/G Blowdown, 110 cpm
  - R-31, Steam Line 'A', 3.1 mr/hr
  - R-47, Air Ejector Noble Gas, 95 cpm

WHICH ONE of the monitor readings above is a valid indication of a SGTR event?

A. R-15

B. R-19

C. R-31

D. R-47

Answer: C

Explanation:

A. Incorrect. Plausible because while R-15 are used to detect noble gases resulting from effluent released through the air ejectors , the other conditions presented in the stem indicate that the MSIVs are closed and therefore R-15 is isolated from the S/Gs.

B. Incorrect. Plausible because while R-19 is a primary monitor for primary to secondaty leakage, the CI signal which accompanied the auto SI signal would have resulted in blowdown isolation.

C. CORRECT. R-31 is above its alarm setpoint and is the only detector NOT isolated.

D. Incorrect. Plausible because while R-47 directly monitors condenser off-gas and is more sensitive than either R-15 or R-48 , the other conditions presented in the stem indicate that the MSIVs are closed and therefore R-47 is isolated from the S/Gs.

Technical Reference(s): P-9, P-1, P&ID33013-1231,1 (Attach if not previously provided)

Proposed references to be provided to applicants during examination: None

Learning Objective: R3901C, 1.02 (As available)

Question Source: Bank/VISION # _____
Modified Bank # _____ (Note changes or attach parent)
New X

Question History: Last NRC Exam _____

Question Cognitive Level: Memory or Fundamental Knowledge _____
Comprehension or Analysis X

10 CFR Part 55 Content: 55.41 .11
55.43 _____

Justification for K/A Match:

The question matches the K/A by requiring assessment of plant conditions to determine that 3 of the 4 detectors have been isolated by the automatic SI/CI signals and the remaining R-31 monitor is above its alarm etpoint.

Examination Outline Cross-reference:	Level	RO	SRO
	Tier #	1	
	Group #	1	
	K/A #	040 AK2.02	
	Importance Rating	2.6	

Knowledge of the interrelations between the Steam Line Rupture and the following: Sensors and detectors

RO Question #8

Given the following plant conditions:

- The plant was at 100% power
- A Steam Line Break occurred down-stream of the MSIVs
- Both S/G pressures were initially lowering
- Both S/G steam flows reached 4.0×10^6 lbm/hr
- Both S/G pressures lowered to 595 psig and have stabilized
- Pressurizer pressure is 1720 psig and lowering
- Tavg is 540˚F and lowering

WHICH ONE of the following describes the expected ESF actuations?

	Safety Injection	Main Steam Isolation
A.	Low Steamline Pressure	High Steamline Flow
B.	Low Steamline Pressure	High-High Steamline Flow
C.	Low Pressurizer Pressure	High Steamline Flow
D.	Low Pressurizer Pressure	High-High Steamline Flow

Answer: C

Explanation:

A. Incorrect. Plausible if the candidate believes the given low steamline pressure condition is < the low steamline SI setpoint of 514 psig and because part 2 is correct.

B. Incorrect. Plausible if the candidate believes the low steamline pressure alarm condition is < the low steamline SI setpoint of 514 psig and overlooks the fact that while a MSLB of this magnitude would likely result in high CNMT pressure conditions, the location was downstream of the MSIVs.

C. CORRECT. The given RCS pressure is < the SI setpoint of 1750 psig and that caused the initial SI signal. With SI signal present, RCS Low Tavg (<545°F), and both S/G steam flows > 0.4×10^6 lbm/hr, steamline isolation will occur on BOTH S/Gs..

D. Incorrect. Plausible because the first part is correct and because the given high steamline flow value reached is above the design value of 3.94×10^6 lbm/hr, it is still less than the actual high-high steamflow isolation setpoint of 4.4×10^6 lbm/hr.

Technical Reference(s): P-1 Setpoints (Attach if not previously provided)

Proposed references to be provided to applicants during examination: None

Learning Objective: R3501C, 1.07; R2801C, 1.06

Question Source: Bank/VISION # _____
Modified Bank # X - Sequoyah (Note changes or attach parent)
New _____

Question History: Last NRC Exam _____

Question Cognitive Level: Memory or Fundamental Knowledge _____
Comprehension or Analysis X

10 CFR Part 55 Content: 55.41 .7
55.43 _____

Justification for K/A Match:

The question matches the K/A by requiring an evaluation of given plant parameters and a determination of which parameters (and their setpoint) would have resulted in steamline break-initiated SI and MSLI.

Examination Outline Cross-reference:	Level	RO	SRO
	Tier #	1	
	Group #	1	
	K/A #	054	AK3.02
	Importance Rating	3.4	

Loss of Main Feedwater: Knowledge of the reasons for the following responses as they apply to the Loss of Main Feedwater (MFW): Matching of feedwater and steam flows

Proposed Question: RO Question # 9

The plant is operating at 70% power when the following events occur:

- A Main Feedwater Pump trips.
- The crew has entered AP-FW.1, Abnormal MFW Pump Flow or NPSH.
- ALL AFW Pumps were started.
- A downpower was started per AP-TURB.5, Rapid Load Reduction.

WHICH ONE of the following correctly completes the statement below?

In accordance with AP-FW.1, the downpower will be terminated when feedwater flow is ____(1)____ steam flow so that ____(2)____.

A. (1) Equal to
(2) Steam Generator levels will rise and ultimately stabilize, while the AFW pumps remain running.

B. (1) Equal to
(2) Steam Generator levels will rise and ultimately stabilize and the AFW Pumps can be secured

C. (1) Greater than
(2) Steam Generator levels will rise and ultimately stabilize and the AFW Pumps can be secured

D. (1) Greater than
(2) Steam Generator levels will rise and ultimately stabilize, while the AFW pumps remain running.

Proposed Answer: C

Explanation (Optional):

A. **Incorrect.** 1st part wrong, 2nd part wrong. This is incorrect because AP-FW.1 clearly states that the load reduction is terminated when feed flow is greater than steam flow. This is plausible because matching steam flow and feed flow will tend to stabilize SG levels (or at least slow the drop in SG level), and the operator may incorrectly believe that this is the correct action and reason (Incorrectly believing that the AFW Pumps will remain operating).

B. **Incorrect.** 1st part wrong, 2nd part correct. This is incorrect because AP-FW.1 clearly states that the load reduction is terminated when feed flow is greater than steam flow. This is plausible because matching steam flow and feed flow will tend to stabilize SG levels (or at least slow the drop in SG level), and the operator may incorrect believe that this is the correct action and reason.

C. **Correct.** 1st part correct, 2nd part correct. According to AP-FW.1, Abnormal MFW Pump Flow or NPSH, Step 1.b RNO (p6; Rev 02000), if both MFW Pumps are NOT running, and power is less than 75%, the operator will be directed to start ALL AFW Pumps and initiate a downpower per AP-TURB.5. The operator is then instructed to terminate the load reduction when feed flow is greater than steam flow. The goal of AP-FW.1 is to restore inventory the Steam Generators, and ultimately stabilize SG levels. However, the AFW Pumps have been started and need to be stopped. According to the AP-FW.1 Background Document (p2; Rev 3) the AFW system may be operated for short periods to supplement flow from the MFW system. Provided that MFW pump suction can be maintained and SG level can be controlled, plant conditions are stabilized and attempts are made to return secondary conditions to normal. AFW, if started during the event is also restored to the normal configuration. Consequently, the load reduction is terminated when feedflow is greater than steam flow so that the AFW Pumps can be stopped.

D. **Incorrect.** 1st part correct, 2nd part wrong. This is incorrect because the reason for requiring that feed flow be greater than steam flow is also so the AFW can be secured. This is plausible because the operator may incorrectly believe that feedflow must be greater than steam flow to account for the loss of inventory in the Steam Generators caused by SG Blowdown, and that ultimately the AFW Pumps will remain operating to do this. However, this would be incorrect thinking because when the AFW Pumps are started, SG Blowdown will isolate.

Technical Reference(s): AP-FW.1 (p6; Rev 02000)
AP-FW.1 Background Document (p4; Rev 3) (Attach if not previously provided)

Proposed References to be provided to applicants during examination:

Learning Objective: RAP09C, Obj 2.01 (As available)

Question Source: Bank #

Modified Bank # (Note changes or attach parent)

New X

Question History: Last NRC Exam: NA

Question Cognitive Level: Memory or Fundamental Knowledge

Comprehension or Analysis X

10 CFR Part 55 Content: 55.41 10

55.43

Comments:

The KA is matched because the operator must demonstrate knowledge of why it is important to raise feed flow greater steam flow in a loss of main feedwater event. NOTE that AP-FW.1 does not have the operator match steam flow in these circumstances, but to actually adjust feed flow to greater than steam flow.

The question is at the Analysis/Comprehension cognitive level because the operator must demonstrate an understanding of why a specific action is taken, to answer the question correctly.

What MUST be known:
7. Under the stated conditions, how is Feed Flow adjusted? 8. Under the stated conditions, why is feed flow adjusted as it is?

Examination Outline Cross-reference:	Level	RO	SRO
	Tier #	1	
	Group #	1	
	K/A #	EPE055 2.4.06	
	Importance Rating	3.7	

Station Blackout: Knowledge of EOP mitigation strategies

RO Question #10

Given the following plant conditions:

- The crew is implementing ECA-0.0, Loss of All AC Power
- During the rapid depressurization of all intact S/Gs to less than 260 psig, an overshoot occurs
- S/Gs pressure reaches 150 psig before the depressurization is stabilized
- The RCS cooldown accompanying the depressurization did NOT result in a cooldown rate of > 100°F/hr

WHAT is the potential consequence that could result from this overshoot in the S/G depressurization?

A. RCP seals may be damaged

B. Natural circulation may be impeded

C. Unacceptable upper head voiding may occur

D. The integrity of the S/G U-tubes may be challenged

Answer: B

Explanation:

A. Incorrect. Plausible because it is possible to enter ECA-0.0 with both RCPs running, but they are secured early on (Step 4, before the depressurization occurs) and as long as the cooldown rate has not exceeded 100˚F/hr, thermal shock to the RCP seals is not a concern.

B. CORRECT. The concern with depressurizing excessively is that excessive N2 gas will be injected into the RCS by the accumulators during the depressurization, resulting in cessation of natural circulation cooling flow.

C. Incorrect. Plausible because upper head voiding will occur after the bubble is lost from the PRZR. This is an acceptable consequence to mitigate the effects of further inventory loss due to the continued degradation of RCP seals.

D. Incorrect. Plausible because the candidate may consider the high differential pressure between RCS and S/G pressure, but this is well within design limits.

Technical Reference(s): ECA-0.0 Step 20 Basis (Attach if not previously provided)

Proposed references to be provided to applicants during examination: None

Learning Objective: REC00C, 1.02

Question Source: Bank/VISION # X - Sequoyah
Modified Bank # _____ (Note changes or attach parent)
New _____

Question History: Last NRC Exam _____

Question Cognitive Level: Memory or Fundamental Knowledge X
Comprehension or Analysis _____

10 CFR Part 55 Content: 55.41 .10
55.43 _____

Justification for K/A Match:

The question matches the K/A by requiring knowledge of the basis for the RCS depressurization step and limits in the 160 psig CAUTION prior to this Major Action step.

Examination Outline Cross-reference:	Level	RO	SRO
	Tier #	1	
	Group #	1	
	K/A #	056 AK1.04	
	Importance Rating	3.1	3.2

Knowledge of the operational implications of the following concepts as they apply to the Loss of Offsite Power: Definition of saturation conditions, implications for the systems

RO Question #11

Given the following plant conditions:

- Offsite power has been lost
- A Small Break LOCA has occurred
- The operators have just initiated a 100°F/hr cooldown in accordance with ES-1.2 POST LOCA COOLDOWN AND DEPRESSURIZATION
- CETs are 550°F and stable
- RCS pressure is 1000 psig
- RVLIS level is 83% and stable

WHICH ONE of the following describes the condition of the RCS and a consequences associated with this condition if it continues?

A. 10°F Subcooled; Insufficient to satisfy pre-requisite for RCP restart when power restored

B. 10°F Subcooled; Boiling is now occurring in the core area which is uncovering the fuel and could lead to core damage over time

C. Saturated; Boiling is now occurring in the core area which will preclude starting RCPs when power is restored

D. Saturated; Boiling is now occurring in the core area which is uncovering the fuel and will result in core damage

Answer: C

Explanation:

A. Incorrect. Plausible if Fig-1.0 is read incorrectly and because having > 0°F Subcooling is a requirement for starting RCPs in ES-1.2.

B. Incorrect. Plausible if Fig-1.0 is read incorrectly and because the second part is partially correct in that boiling is occurring in the core.

C. CORRECT. Using FIG-1.0, the RCS is in the INADEQUATE SUBCOOLING region at 1000 psig and 550 °F. Per Step 12 of ES-1.2, subcooling must be >0°F to start a RCP when power is available. Since Safeguards equipment is functioning normally, adequate SI flow can be assumed, and while the RCS is saturated, inventory makeup is adequate and core uncovery is not an issue. The primary concern with boiling is actually boron precipitation and long-term reduced heat transfer, but that is not addressed by this question.

D. Incorrect. Plausible because the first part is correct (see above) and while boiling is occurring in the core, EDGs are supplying power to both trains of safeguards equipment.

Technical Reference(s): Fig-1.0, Subcooling (Attach if not previously provided)

Proposed references to be provided to applicants during examination: Fig-1.0, Subcooling

arning Objective: R3501C, 1.07

Question Source: Bank/VISION # 2011 Callaway NRC
Modified Bank # _____ (Note changes or attach parent)
New _____

Question History: Last NRC Exam _____

Question Cognitive Level: Memory or Fundamental Knowledge _____
Comprehension or Analysis X

10 CFR Part 55 Content: 55.41 .10
55.43 _____

Justification for K/A Match:

The question matches the K/A by requiring an evaluation of plant conditions to determine if saturated nditions exist and the associated operational concerns for this condition.

Examination Outline Cross-reference:	Level	RO	SRO
	Tier #	1	
	Group #	1	
	K/A #	057 AA2.18	
	Importance Rating	3.1	

Loss of Vital AC Electrical Instrument: Ability to determine and interpret the following as they apply to the Loss of Vital AC Instrument Bus: The indicator, valve, breaker, or damper position which will occur on a loss of power.

RO Question #12

The plant is operating at 100% power.

Subsequently, a loss of an Instrument Bus results in the following:

- The Main Feedwater Pump Suction Pressure Transmitters fail to 0 psig
- The Main Feedwater Pump Suction Flow Transmitters fail to 0 gpm
- The Main Feedwater Pump Discharge Pressure Transmitters fail to 0 psig
- The Main Feedwater Pump Recirc Valves (AOV 4147/4148) fail OPEN

WHICH ONE of the following identifies the Instrument Bus that has de-energized?

A. Instrument Bus 'A'

B. Instrument Bus 'B'

C. Instrument Bus 'C'

D. Instrument Bus 'D'

Answer: D

Explanation:

A. Incorrect. This is incorrect because Instrument Bus D powers these instruments/valves. This is plausible because Instrument Bus A powers Feedwater Control Rack (ADFCS).
B. Incorrect. This is incorrect because Instrument Bus D powers these instruments/valves. This is plausible because Instrument Bus B powers Reheater STM TC-3040, and other secondary plant contols/instruments.
C. Incorrect. This is incorrect because Instrument Bus D powers these instruments/valves. This is plausible because Instrument Bus C powers Feedwater Control Rack (ADFCS).
D. CORRECT. According to P-12, Attachment 8 (p26; Rev 02300), the D Instrument Bus powers the Feedwater Transmitter Panel.

Technical Reference(s): Drawing 33013-1236
Drawing 33013-1627
Drawing 21489-0565
P-12, Attachment 8 (p26; Rev 02300)
(Attach if not previously provided)

Proposed references to be provided to applicants during examination: None

Learning Objective: R0901C 1.06

Question Source: Bank/VISION # _____
Modified Bank # _____ (Note changes or attach parent)
New X

Question History: Last NRC Exam _____

Question Cognitive Level: Memory or Fundamental Knowledge X
Comprehension or Analysis _____

10 CFR Part 55 Content: 55.41 .4
55.43 _____

Justification for K/A Match:

The KA is matched because the operator must demonstrate the ability to determine and interpret the loss of power to several instruments and/or valves, associated with the Main Feedwater Pump, as they apply to the Loss of Vital AC Instrument Bus D.

The question is at the Memory cognitive level because the operator must simply recall bits of information (power supply to several Main Feedwater Pump instruments and/or valves) to answer the question correctly.

What MUST be known:
9. What is the instrument Bus that powers the Main Feedwater Pump Suction Pressure Transmitters? 10. What is the instrument Bus that powers the Main Feedwater Pump Suction Flow Transmitters? 11. What is the instrument Bus that powers the Main Feedwater Pump Discharge Pressure Transmitters? 12. What is the instrument Bus that powers the Main Feedwater Pump Recirculation Valves?

amination Outline Cross-reference:	Level	RO	SRO
	Tier #	1	
	Group #	1	
	K/A #	062 AA1.02	
	Importance Rating	3.2	3.3

Ability to operate and/or monitor the following as they apply to the Loss of Nuclear Service Water (SWS): Loads on the SWS in the control room

RO Question #13

Given the following plant conditions:

- The plant is initially at 100% power
- An inadvertent Aux Building Service Water Isolation signal is received

Which ONE of the following identifies Service Water loads that still have service water available following the isolation?

A. Safety Injection Bearing Coolers, ONLY.

B. Safety Injection Bearing Coolers and the SAFW pump coolers.

C. Safety Injection Bearing Coolers and the CCW Heat Exchangers.

D. Safety Injection Bearing Coolers and the Spent Fuel Pool heat exchangers.

Answer: A

Explanation:

A. CORRECT, since Aux Bldg SW isolation valves Loop A (MOV-4616A/MOV-4735) and Loop B (MOV-4615/MOV-4734) receive an isolation signal to isolate the non-critical loads: CCW, SFP, and SAFW; only the SI Pump coolers will remain unisolated.

B. Incorrect. Incorrect because SW to the SAFW Pumps is isolated. Plausible because the SAFW system is a backup for normal AFW, so it too is isolated on an SI signal or loss of offsite power to ensure the EDGs have adequate cooling.

C. Incorrect. Incorrect because SW to the CCW HXs is isolated. Plausible because the CCW heat exchangers are normally aligned for power operation and are needed for long-term cooling. They are not needed at the onset of an accident, and are isolated on an SI signal or loss of offsite power to ensure the EDGs have adequate cooling.

D. Incorrect. Incorrect because SW to the SFP HXs is isolated. Plausible because the SPF heat exchangers are normally aligned for power operation and are needed for long-term cooling. They are not needed at the onset of an accident, and are isolated on an SI signal or loss of offsite power to ensure the EDGs have adequate cooling.

Technical Reference(s): ATT-2.2, SW Isolation (Attach if not previously provided)
33013-1250 Sheets 1&2

. roposed references to be provided to applicants during examination: None

Learning Objective: R5101C, 1.07

Question Source: Bank/VISION # _____
Modified Bank # X – 2010 Seabrook (Note changes or attach parent)
New _____

Question History: Last NRC Exam _____

Question Cognitive Level: Memory or Fundamental Knowledge X
Comprehension or Analysis _____

10 CFR Part 55 Content: 55.41 .5
55.43 _____

Justification for K/A Match:

Examination Outline Cross-reference:	Level	RO	SRO
	Tier #	1	
	Group #	1	
	K/A #	065 AK3.03	
	Importance Rating	2.9	3.4

Knowledge of the reasons for the following responses as they apply to the Loss of Instrument Air: Knowing the effects on plant operation of isolating certain equipment from instrument air.

RO Question #14

Given the following plant conditions:

- The plant is initially at 100% power
- A leak developed on the Instrument Air line in Containment
- The crew has entered AP-IA.1, LOSS OF INSTRUMENT AIR, and are evaluating the need for a plant shutdown
- A CNMT entry was made and the leak is now isolated
- The following valves are impacted:
  - Letdown orifice valves AOV-200A, AOV-200B, and AOV-202
  - HCV-133, RHR LETDOWN TO CVCS
  - HCV-123, EXCESS LTDN FLOW CONTROL VALVE

ASSUMING NO OPERATOR ACTION, which of the following Reactor Trip signals, if any, will occur first over the next several hours?

A. No reactor trip

B. High PRZR Level

C. High PRZR Pressure

D. Low PRZR Pressure

Answer: B

Explanation:

A. Incorrect. Plausible if the candidate overlooks the "assume no operator actions" and recognizes that AP-IA.1 will direct, with no letdown available, that the charging pumps be cycled on/off to control RCS inventory and avoid a reactor trip on high PRZR level.

B. CORRECT. The orifice isolation valves closing will terminate L/D flow, and PRZR level will rise until the high Level trip setpoint is reached IF the operator actions directed by AP-IA.1 are not performed to cycle the charging pumps on/off to control PRZR level.

C. Incorrect. Plausible because V-7069 does not isolate air to the PRZR spray valves, and with no operator action PRZR level will rise, raising PRZR pressure. The pressure rise, however, will be controlled by automatic actions of HCV-431K..

D. Incorrect. Plausible if the candidate assumes that the L/D orifice valves will fail OPEN, resulting in an outsurge from the PRZR, heater trip, and reduction of RCS pressure to the trip setpoint.

Technical Reference(s): AP-IA.1 (Attach if not previously provided)
ATT-11.0, IA Concerns

Proposed references to be provided to applicants during examination: None

Learning Objective: R4701C, 1.06; RAP10C, 2.01

Question Source: Bank/VISION # 67373
Modified Bank # _____ (Note changes or attach parent)
New _____

Question History: Last NRC Exam Ginna 2006

Question Cognitive Level: Memory or Fundamental Knowledge _____
Comprehension or Analysis X

10 CFR Part 55 Content: 55.41 .5, .10
55.43 _____

Justification for K/A Match:

The question matches the K/A by requiring an evaluation of the fail position of the affected valves and the plant response resulting from those failures.

Examination Outline Cross-reference:	Level	RO	SRO
	Tier #	1	
	Group #	1	
	K/A #	E04 EK1.3	
	Importance Rating	3.5	3.9

Knowledge of the operational implications of the following concepts as they apply to the (LOCA Outside Containment): Annunciators and conditions indicating signals, and remedial actions associated with the LOCA Outside Containment

RO Question #15

Given the following plant conditions:

- D-19, PRESSURIZER LO PRESS SI 1750 PSIG, lit
- D-20, PRESSURIZER LO PRESS TRIP 1873 PSIG, lit
- R-10B, Plant Vent Iodine, and R-14, Plant Vent Gas, are in ALARM
- ECA-1.2, LOCA OUTSIDE CONTAINMENT, has been entered
- All isolation actions in ECA-1.2 have been directed.
- The HCO reports the following MCB indications now exist:
  - RCS pressure is 1100 psig and STABLE
  - ECCS flow remains STABLE at 400 gpm

WHICH ONE of the following describes the status of the LOCA and the required procedural transition?

A. The LOCA is isolated; transition to ES-1.1, SI TERMINATION

B. The LOCA is isolated; transition to E-1, LOSS OF REACTOR OR SECONDARY COOLANT

C. The LOCA is NOT isolated; transition to E-1, LOSS OF REACTOR OR SECONDARY COOLANT

D. The LOCA is NOT isolated; transition to ECA-1.1, LOSS OF EMERGENCY COOLANT RECIRCULATION

Answer: D

Explanation:

A. Incorrect. Plausible because with RCS pressure and ECCS flow both stable, candidate may interpret these indications as (additional) leakage has been isolated, in which case ES-1.1 would be the proper transition. Wrong because the procedure requires INCREASING RCS pressure to identify leak isolation.

B. Incorrect. Plausible because with RCS pressure and ECCS flow both stable, candidate may interpret these indications as (additional) leakage has been isolated. Since ECA-1.2 can be entered from both E-0 AND E-1, candidate might believe that "returning to the procedure in effect" would be appropriate for entry from E-1, the procedure from which the initial transition occurred.

C. Incorrect. Plausible because with RCS pressure not rising, the leak has not been isolated. Since ECA-1.2 can be entered from E-0 or E-1, a return to the procedure dealing with a LOCA might seem to be appropriate when no further actions are available in ECA-1.2. E-1 *is* entered if indications are that the leak has been isolated.

D. CORRECT. With RCS pressure NOT rising, the leak has not been isolated. Without isolation, entry into ECA-1.2 is directed because the contents of the RWST are not being emptied into the CNMT sump, and therefore a transition to ECA-1.1 is warranted.

Technical Reference(s): ECA-1.2, Steps 7 & 8 (Attach if not previously provided)

Proposed references to be provided to applicants during examination: None

Learning Objective: R3501C, 1.07; R2801C, 1.06

Question Source: Bank/VISION # 106494

Modified Bank # _____ (Note changes or attach parent)

New _____

Question History: Last NRC Exam _____

Question Cognitive Level: Memory or Fundamental Knowledge _____

Comprehension or Analysis X

'0 CFR Part 55 Content: 55.41 .10

55.43 _____

Stification for K/A Match:

The question matches the K/A by requiring an evaluation of plant conditions, diagnosing plant conditions for whether an RCS leak outside CNMT had been isolated, and then a transition to the appropriate procedure for mitigating the inability to isolate the leak outside CNMT.

Ginna's annunciator system contains only a single annunciator, L-10, AUX BLDG SUMP PUMP AUTO START, which is deliberately omitted from this question (although it would help to address the K/A) because its status would cue the candidate as to whether the leak had been isolated.

Examination Outline Cross-reference:	Level	RO	SRO
	Tier #	1	
	Group #	1	
	K/A #	WE11 2.1.07	
	Importance Rating	4.4	

Loss of Emergency Coolant Recirc: Ability to evaluate plant performance and make operational judgments based on operating characteristics, reactor behavior, and instrument interpretation

RO Question #16

Given the following:

- A large LOCA occurred 90 minutes ago.
- RCS pressure is 40 psig.
- The crew has entered ECA-1.1, Loss of Emergency Coolant Recirculation, due to an inability to establish Cold Leg Recirculation.
- The RWST level is 15%.
- The TSC has directed the crew to reduce ECCS injection flow to minimum required.

WHICH ONE (1) of the following correctly completes the statement below?

All pumps taking suction on the RWST have been placed to Pull-Stop except for one ___(1)____ Pump, and ECCS injection flow will be reduced to ____(2)____ gpm.

A. (1) SI Pump
(2) 90 gpm

B. (1) SI Pump
(2) 170 gpm

C. (1) RHR Pump
(2) 90 gpm

D. (1) RHR Pump
(2) 170 gpm

Answer: B

Explanation:

A. Incorrect. 1st part correct, 2nd part wrong. This is incorrect because the minimum injection flow using FIG-6.0 is 170 gpm. This is plausible because this would be the flow determination if the operator used the 900 minutes since Rx shutdown (One decade to the right) on the X-Axis of FIG-6.0, rather than 90 minutes.

B. CORRECT. 1st part correct, 2nd part correct. According to ES-1.3 (p3; Rev 04600), Step 1, if RWST level is < 15%, the operator will be directed to place all pumps taking suction on the RWST to Pull-Stop except for one SI Pump, and go to ECA-1.1. According to ECA-1.1 (p26-27; Rev 02801), Step 28, the operator will be directed to minimize RWST Outflow. During this step the operator will be required to determine the minimum ECCS Injection flow per FIG-6.0, Figure Min RCS Injection (Rev 1). Using the figure provided, the operator will determine that the minimum injection flow is 170 gpm, 90 minutes after the reactor trips.

C. Incorrect. 1st part wrong, 2nd part correct. This is incorrect because minimum injection flow is obtained using an SI pump rather than an RHR Pump. This is plausible because the RCS pressure is such that both an SI and an RHR Pump will be injecting.

. Incorrect. 1st part wrong, 2nd part wrong. See A and C.

Technical Reference(s): ES-1.3 (p3; Rev 04600)
ECA-1.1 (p26-27; Rev 02801)
FIG-6.0, Figure Min RCS Injection (Rev 1)
(Attach if not previously provided)

Proposed references to be provided to applicants during examination: FIG-6.0

Learning Objective: REC11C Objective 2.01

Question Source: Bank/VISION # _____
Modified Bank # _____ (Note changes or attach parent)
New X

Question History: Last NRC Exam _____

Question Cognitive Level: Memory or Fundamental Knowledge _____
Comprehension or Analysis X

10 CFR Part 55 Content: 55.41 41.10
55.43 _____

Justification for K/A Match:

The KA is matched because the operator must demonstrate the ability to evaluate plant performance and make operational judgments (Minimum Injection flow) based on operating characteristics (i.e. 90 minutes from shutdown).

The question is at the Comprehension/Analysis cognitive level because the operator must use provided information (i.e. time since shutdown), and apply it to a Figure, to answer the question correctly.

What MUST be known:
13. When minimizing RWST Outflow in ECA-1.1, which pump is left running taking a suction from the RWST? 14. What is the minimum ECCS Injection flow 90 minutes after reactor shutdown?

amination Outline Cross-reference:	Level	RO	SRO
	Tier #	1	
	Group #	1	
	K/A #	E05 EK2.02	
	Importance Rating	3.9	4.2

Knowledge of the interrelations between the (Loss of Secondary Heat Sink) and the Facility*s heat removal systems, including primary coolant, emergency coolant, the decay heat removal systems, and relations between the proper operation of these systems to the operation of the facility.

RO Question #17

WHAT is the consequence of having only a single PORV open during implementation of the bleed and feed steps of FR-H.1, RESPONSE TO LOSS OF SECONDARY HEAT SINK?

A. RCS pressure will continue to rise to the PRZR safety valve setpoint, leading to further loss of coolant inventory

B. Insufficient bleed flow will inhibit mixing of safety injection flow, leading to localized pressurized thermal shock conditions

C. The RCS will not depressurize enough to allow for adequate reflux cooling between the loop hot legs and the steam generators

D. The RCS will not depressurize enough to allow for adequate feed of subcooled safety injection flow to adequately remove core decay heat

Answer: D

Explanation:

A. Incorrect. Plausible because having a single PORV open would limit the ability to depressurize the RCS by reducing the amount that the RCS could be depressurized, but RCS pressure would NOT "continue to rise" when the PORV was opened.

B. Incorrect. Plausible because opening the PORV would lower RCS pressure and increase SI flow – but the additional SI flow is not a concern for localized thermal shock.

C. Incorrect. Plausible because securing RCPs, and potentially setting up conditions for some degree of reflux cooling, is not one of the mitigation strategies considered in FR-H.1. The lowering of RCS pressure to increase SI flow and core cooling is the primary mitigation strategy in bleed-and-feed.

D. CORRECT. Per the Background Document, if BOTH PORVs are not maintained open, the RCS may not depressurize sufficiently to permit adequate feed (SI) flow to remove core decay heat. If core decay heat exceeds bleed-and-feed heat removal capability, the RCS will repressurize, further reducing SI injection flow, and result in a rapid decrease in RCS inventory.

Technical Reference(s): FR-H.1 Background (Attach if not previously provided)

Proposed references to be provided to applicants during examination: None

Learning Objective: RFRH1C 1.04, 2.01

Question Source: Bank/VISION # _____
Modified Bank # 2010 Seabrook NRC (Note changes or attach parent)
New _____

Question History: Last NRC Exam _____

Question Cognitive Level: Memory or Fundamental Knowledge X
Comprehension or Analysis _____

10 CFR Part 55 Content: 55.41 .10
55.43 _____

Justification for K/A Match:

Matches the K/A by requiring an understanding of the basis for the bleed-and-feed heat removal strategy, and the impact that the inability to use both PORVs will have on the ability to remove core decay heat.

Examination Outline Cross-reference:	Level	RO	SRO
	Tier #	1	
	Group #	1	
	K/A #	077 AA1.04	
	Importance Rating	4.1	4.1

Ability to operate and/or monitor Reactor controls as they apply to | Generator Voltage and Electric Grid Disturbances.

RO Question #18

Given the following plant conditions:

- Plant operating at 100% power
- RG&E Energy Control Center reports that grid disturbances have resulted in degraded grid voltage and frequency
- 'B' RMW and 'B' Boric Acid pumps are aligned for operation
- The following alarms are received:
  - J-7, 480V MAIN OR TIE BREAKER TRIP
  - L-7, BUS 16 UNDERVOLTAGE SAFEGUARDS
  - L-5, SAFEGUARD BUS MAIN BREAKER OVERCURRENT TRIP
- CO reports that Bus 16 voltage indicates 0 volts
- CO report that all other safeguards buses indicate 470 volts

WHICH ONE of the following describes the effect on the plant AND the procedural action required for reactivity control?

A. Reactor trip occurs and transition out of E-0, REACTOR TRIP OR SAFETY INJECTION, is made; ES-0.1, REACTOR TRIP RESPONSE, will address reactivity concerns associated with struck rods and boron concentration requirements

B. Reactor trip occurs; E-0, REACTOR TRIP OR SAFETY INJECTION, will stabilize the plant while the guidance in AP-ELEC.14/16, LOSS OF SAFEGUARDS BUS 14/16, will address actions required for reactivity control

C. Reactor remains critical; use the guidance in AP-ELEC.14/16, LOSS OF SAFEGUARDS BUS 14/16, to manually adjust control rods to control Tavg and restore Makeup System for boron control

D. Reactor remains critical; use the guidance in AP-ELEC.2, SAFEGUARD BUSSES LOW VOLTAGE OR SYSTEM ABNORMAL FREQUENCY, to manually adjust control rods to control Tavg and restore Makeup System for boron control

Answer: C

Explanation:

A. Incorrect. Plausible if the candidate believes that a single loss of 480V Safeguards bus will result in a reactor trip, with ES-0.1 then being the appropriate procedure.

B. Incorrect. Plausible if the candidate believes that a single loss of 480V Safeguards bus will result in a reactor trip AND AP-ELEC.14/16 does contain guidance for reactivity control actions.

C. CORRECT. The loss of a single 480V Safeguards bus will not result in a reactor trip. AP-ELEC.14/16 provides guidance for use of control rods to restore Tavg and actions necessary to restore boron control in the Makeup system.

D. Incorrect. Plausible because the first part is correct , and AP-ELEC.2 is the appropriate procedure to address concerns about the given grid frequency and voltage degradation, but no actions are contained within that procedure for reactivity control.

Technical Reference(s): AP-ELEC.14/16; AR-J-7, AR-L-7 (Attach if not previously provided)

Proposed references to be provided to applicants during examination: None

Learning Objective: R0701C 1.06 & 1.10
RAP66C 2.01

Question Source: Bank/VISION # _____
Modified Bank # 106255 (Note changes or attach parent)
New _____

Question History: Last NRC Exam _____

Question Cognitive Level: Memory or Fundamental Knowledge _____
Comprehension or Analysis X

10 CFR Part 55 Content: 55.41 .10
55.43 _____

Justification for K/A Match:

The question matches the K/A by requiring an evaluation of the plant response to degraded/loss of the grid with subsequent loss of Safeguards Bus 14 and its impact on reactivity controls (boric acid/makeup pumps).

Examination Outline Cross-reference:	Level	RO	SRO
	Tier #	1	
	Group #	2	
	K/A #	028 AA2.01	
	Importance Rating	3.4	3.4

Ability to determine and interpret the following as they apply to the Pressurizer Level Control Malfunctions: PZR level indicators and alarms

RO Question #19

Given the following initial plant conditions:

- Reactor power = 99%
- Pressurizer level = 56%
- 'A' charging pump is running in AUTO

Subsequently the following occur:

- F-4, PRESSURIZER LEVEL DEVIATION -5 NORMAL +5, alarms
- F-15, RCS TAVG DEV 4°, alarms
- CO reports Average T_{AVG} has Failed LOW

WHICH ONE of the following groups of actions describes the INITIAL indications the HCO will see? (Assume NO operator action)

	Charging Pump speed	Backup Heaters
A.	slows down	energized
B.	speeds up	energized
C.	slows down	de-energized
D.	speeds up	de-energized

Answer: A

Explanation:

A. CORRECT. . Since average-Tavg is used to calculate the program PRZR level from 20% to 56% (547˚F to 574˚F), Failure of average-Tavg value low will cause the programmed PRZR level setpoint to fail low. With PRZR level initially on program at 56%, the actual level will be higher than the now lowered (and inaccurate) program level setpoint. With actual level now higher than the lower level setpoint, the Backup heaters will energize. This will result in the charging pump operating in Auto to *lower* its speed to lower charging flow.

B. Incorrect. Plausible because part 2 is correct and the candidate could confuse the response of the charging pump with whether the actual level was lower than the program level.

C. Incorrect. Plausible because part 1 is correct and the candidate might fail to recognize that the temperature instrument failure also result in a "step change" of 5% level deviation which would have energized the Backup heaters.

D. Incorrect. Plausible if the candidate confused the direction of failure (low) with corresponding impact/direction on the program level setpoint.

Technical Reference(s): P-10, AR-F-4 (Attach if not previously provided)

Proposed references to be provided to applicants during examination: None

Learning Objective: R1901C 1.10

Question Source: Bank/VISION # _____
Modified Bank # 63220 (Note changes or attach parent)
New _____

Question History: Last NRC Exam _____

Question Cognitive Level: Memory or Fundamental Knowledge _____
Comprehension or Analysis X

10 CFR Part 55 Content: 55.41 .5
55.43 _____

Justification for K/A Match:

Matches the K/A by requiring candidate to recognize the impact of an RCS temperature channel failure on the program PRZR level control circuit, and the alarms and plant response associated with that failure.

Examination Outline Cross-reference:	Level	RO	SRO
	Tier #	1	
	Group #	2	
	K/A #	037 2.2.44	
	Importance Rating	4.2	4.4

SGTL: Ability to interpret control room indications to verify the status and operation of a system, and understand how operator actions and directives affect plant and system conditions.

RO Question #20

WHICH ONE of the following *sets* of actions will be performed in response to a plant shutdown to respond to confirmed S/G tube leakage of 1.8 GPM on 'A' S/G?

1) Perform a normal plant shutdown at 1%/min per O-2.1, NORMAL SHUTDOWN TO HOT SHUTDOWN
2) Perform a load reduction at 3%/min
3) When turbine load < 15 MW, trip the turbine, trip the reactor, and transition to E-0, REACTOR TRIP OR SAFETY INJECTION
4) When turbine load < 15 MW, trip the turbine, trip the reactor, but do NOT transition to E-0
5) Using control rods in MANUAL, drive control rods until < 1% RTP, then trip the reactor but do NOT transition to E-0
6) Close BOTH MSIVs after the reactor is tripped
7) Close ONLY the leaking MSIV after the reactor is tripped

A. Perform items 1, 4, and 7

B. Perform items 1, 3, and 6

C. Perform items 2, 4, and 6

D. Perform items 2, 5, and 7

Answer: D

Explanation:

A. Incorrect. Item 1 is plausible if the candidate does not realize that a SGTL >1 gpm requires plant shutdown at 3%/min. Several other combinations of leakrates and rates of change less than 1 gpm require a normal plant shutdown to Mode 3 within 6 or 24 hrs. Item 4 is plausible because that would be the normal response to manually tripping the reactor, but is not performed due to the NOTE prior to the reactor shutdown step. Item 7 is the correct action to complete the isolation of the leaking S/G.

B. Incorrect. Item 1 is plausible if the candidate does not realize that a SGTL >1 gpm requires plant shutdown at 3%/min. Several other combinations of leakrates and rates of change less than 1 gpm require a normal plant shutdown to Mode 3 within 6 or 24 hrs. Section 3 is plausible because that would be the normal response to manually tripping the reactor, but is not performed due to the NOTE prior to the reactor shutdown step. Item 6 is plausible because it could be considered to be more conservative if both the leaking and intact S/G MSIVs were isolated, but preferred option is to be able to cool down using the intact S/G and steam dumps.

C. Incorrect. Item 2 is correct. Item 4 is plausible because that would be the normal response to manually tripping the reactor, but is not performed due to the NOTE prior to the reactor shutdown step. Item 6 is plausible because it could be considered to be more conservative if both the leaking and intact S/G MSIVs were isolated, but preferred option is to be able to cool down using the intact S/G and steam dumps.

D. CORRECT. Per the guidance provided in AP-SG.1, if the SGTL is > 1 gpm, a load reduction of 3%/min is performed to minimize the likelihood of a SGTR developing. Load is reduced to 15MW, the turbine is tripped, and rods are driven in until power is <1% RTP, then the reactor is tripped. Per the NOTE preceding Step 28, since this is a controlled shutdown procedure, transition to E-0 is not required. Unless the leaking S/G is not isolable, only the affected S/G MSIV is closed in step 32.

Technical Reference(s): AP-SG.1 (and Background) (Attach if not previously provided)

Proposed references to be provided to applicants during examination: None

Learning Objective: RAP32C 2.01

Question Source: Bank/VISION # _____

Modified Bank # _____ (Note changes or attach parent)

New X

Question History: Last NRC Exam _____

Question Cognitive Level: Memory or Fundamental Knowledge _____

Comprehension or Analysis X

CFR Part 55 Content:	55.41	.10
	55.43	

Justification for K/A Match:

Matches the K/A by requiring knowledge of the major actions contained with the abnormal SGTL procedure, correct interpretations of control room indications, and an overall understanding of the procedural actions required.

Examination Outline Cross-reference:	Level	RO	SRO
	Tier #	1	
	Group #	2	
	K/A #	061 AK2.01	
	Importance Rating	2.5	2.6

Knowledge of the of the interrelations between the Area Radiation Monitoring (ARM) System Alarms and the following: Detectors at each ARM system location

RO Question #21

E-24, RMS AREA MONITOR HIGH ACIVITY, is in alarm.

WHICH ONE of the following Radiation Monitors in alarm would result in this Main Control Board annunciator?

A. R-2, CONTAINMENT

B. R-16, CONTAINMENT FAN COOLING

C. R-17, COMPONENT COOLING

D. R-45, CONTROL ROOM TRAIN 'A'

Answer: A

Explanation:

A. CORRECT. R-2 is an area monitor located in Containment and used to monitor general radiation levels on the Containment Operating Level.

B. Incorrect. Plausible because the candidate might believe the physical arrangement of the detector is similar to that of R-2, but is located within the service water flowpath from the fan coolers. A service water leak in CNMT during an accident, combined with CNMT pressure > SW pressure, would be required to contaminate the service water and result in a reading on R-16 in cpm.

C. Incorrect. Plausible if the candidate believes that since the CCW system is a closed-loop cooling system and not an effluent, an area monitor would be an appropriate detector for this application.

D. Incorrect. Plausible because the control room ventilation system over the years has had a number of different types of detectors, including area monitors and automatic control room ventilation system isolation signals. Incorrect because the current R-45 detection system measures the total dose rate of incoming air through the normal HVAC air intake duct. The high alarm setpoint of 0.25 mR/hr now activates Control Room CREATS isolation.

Technical Reference(s): AR-E-24 (Attach if not previously provided)

ɔposed references to be provided to applicants during examination: None

Learning Objective: R3901C, 1.02;

Question Source: Bank/VISION #

Modified Bank # Sequoyah bank (RMS B2.005) (Note changes or attach parent)

New

Question History: Last NRC Exam

Question Cognitive Level: Memory or Fundamental Knowledge X

Comprehension or Analysis

10 CFR Part 55 Content: 55.41 .11

55.43

Justification for K/A Match:

'ɜtches the K/A by requiring an evaluation of the type of RMS detector required and used in each system plication, and which one functions as an "area monitor" type of alarm.

Examination Outline Cross-reference:	Level	RO	SRO
	Tier #	1	
	Group #	2	
	K/A #	E14 EA1.02	
	Importance Rating	3.3	3.4

Ability to operate and / or monitor the Operating behavior characteristics of the facility as they apply to the (High Containment Pressure)

RO Question #22

Given the following plant conditions:

- The unit was at 100% power when a DBA LOCA occurred
- E-1, LOSS OF REACTOR OR SECONDARY COOLANT, is in progress
- A fault on 480V Safeguards Bus 16 has resulted in an ORANGE path condition on F-0.5, CONTAINMENT
- The crew had transitioned to FR-Z.1, RESPONSE TO HIGH CONTAINMENT PRESSURE
- FR-Z.1 has been completed, with NO additional equipment having been started, and the ORANGE path condition still exists

WHICH ONE of the following describes the expected response of containment pressure, and the next action that the crew should take as a result of these conditions? Containment pressure will _____.

A. rise; the crew should return to E-1, step in effect

B. rise; the crew should re-perform the actions of FR-Z.1 beginning with Step 1

C. slowly lower; the crew should wait until the ORANGE condition clears before taking any additional actions

D. eventually exceed the RED path criteria for FR-Z.1; the crew should return to E-1, Step 1, until the RED path criteria is met, then return to FR-Z.1

Answer: A

Explanation:

A. CORRECT. Once all actions of FR-Z.1 have been completed, the operator is returned to the procedure and step in effect in E-1. Since both the ORANGE (28 psig) and RED (60 psig) path terminus is the same FR-Z.1 procedure, once the six (6) steps have been performed when the ORANGE path actions are taken, there is no need to return to FR-Z.1 when the RED path setpoint is encountered.

B. Incorrect. Plausible if the candidate believes that within the FR-Z.1 procedure there are two sets of actions, depending on which terminus (ORANGE or RED) has been encountered.

C. Incorrect. Plausible if the candidate believes that it is necessary to clear the entry conditions for the ORANGE or RED path condition before returning to the lower-priority E-1 procedure that the crew transitioned from.

D. Incorrect. Plausible if the candidate believes that within the FR-Z.1 procedure there are two sets of actions, depending on which terminus (ORANGE or RED) has been encountered, but per the A-503.1 guidance, this would be inappropriate. Incorrect also because with at least one train of CS and CNMT recirc fans operating, the CNMT pressure should NOT exceed 60 psig.

Technical Reference(s): FR-Z.1 Background, Step 6 (Attach if not previously provided)
A-503.1, p32, step 4.c.(5)

roposed references to be provided to applicants during examination: None

Learning Objective: RFRZ1C 2.01; REP50C 1.26

Question Source: Bank/VISION # _____
Modified Bank # 99850 (Note changes or attach parent)
New _____

Question History: Last NRC Exam _____

Question Cognitive Level: Memory or Fundamental Knowledge _____
Comprehension or Analysis X

10 CFR Part 55 Content: 55.41 .10
55.43 _____

Justification for K/A Match:

Matches the K/A by requiring an assessment of post-accident conditions, predict the response, and then determine the appropriate actions for the high CNMT pressure condition (with degraded equipment).

Examination Outline Cross-reference:	Level	RO	SRO
	Tier #	1	
	Group #	2	
	K/A #	E06 EK3.3	
	Importance Rating	4.0	

Knowledge of the reasons for the following responses as they apply to the (Degraded Core Cooling): Manipulation of controls required to obtain desired operating results during abnormal, and emergency situations

RO Question #23

During a LOCA the Operators are performing FR-C.2 Degraded Core Cooling. WHAT is the basis for the operation of the RCPs, when depressurizing the S/Gs to atmospheric pressure?

A. A single RCP is kept running, regardless of support conditions, to provide forced circulation through the core

B. Both RCPs are kept running (or started), regardless of support conditions, to provide forced circulation through the core

C. Both RCPs are secured in this procedure to prevent adding additional heat to the already degraded RCS temperature condition

D. The remaining RCP is secured in this procedure due to the anticipated loss of number 1 seal requirements

Answer: D

Explanation:

A. Incorrect. Plausible because this is an action directed in FR-C.2, but is not taken in degraded core cooling conditions because the actions of depressurizing the S/Gs to atmospheric is expected to result in accumulator injection and lowering RCS pressure to below the shutoff head of the ECCS pumps.

B. Incorrect. Plausible because this is an action directed in FR-C.2, but is not taken in degraded core cooling conditions because the actions of depressurizing the S/Gs to atmospheric is expected to result in accumulator injection and lowering RCS pressure to below the shutoff head of the ECCS pumps.

C. Incorrect. Plausible because RCPs are eventually secured in this procedure, but not for the reason given (see below). Securing RCPs in FR-H.1 is performed for this reason.

D. CORRECT. Per the Background document, in preparation for the subsequent depressurization of the S/Gs to atmospheric pressure, the remaiming RCP is secured due to the anticipated loss of Number 1 seal requirements. Continued operation may result in damage to the RCPs. Were the conditions to continue to degrade to ICC conditions, the RCPs would be started if core cooling could not be established.

Technical Reference(s): FR-C.2 Background (Attach if not previously provided)

roposed references to be provided to applicants during examination: None

Learning Objective: RFRC2C 1.03

Question Source: Bank/VISION # _____
Modified Bank # _____ (Note changes or attach parent)
New X

Question History: Last NRC Exam _____

Question Cognitive Level: Memory or Fundamental Knowledge X
Comprehension or Analysis _____

10 CFR Part 55 Content: 55.41 .10
55.43 _____

Justification for K/A Match:

Matches the K/A by requiring knowledge of the basis for a significant mitigation strategy (RCP operation) needed to mitigate the degraded core cooling conditions.

Examination Outline Cross-reference:	Level	RO	SRO
	Tier #	1	
	Group #	2	
	K/A #	E02 EK2.1	
	Importance Rating	3.4	3.9

Knowledge of the interrelations between the (SI Termination) and the Components, and functions of control and safety systems, including instrumentation, signals, interlocks, failure modes, and automatic and manual features

RO Question #24

WHICH ONE of the following describes the sequence of operation of the following in ES-1.1, SI TERMINATION in response to a inadvertent SI actuation.

- Charging
- Letdown
- RHR pumps
- SI pumps
- Reset SI

A. Reset SI; Stop both RHR pumps; establish 75 GPM Charging flow; stop SI pumps in sequence; restore Letdown

B. Stop all SI pumps; stop both RHR pumps; reset SI; establish 22 GPM Charging flow; restore Letdown

C. Reset SI; Start Charging pumps to control pressurizer level; stop all SI pumps; stop both RHR pumps; restore Letdown

D. Start Charging pumps to control pressurizer level; restore Letdown; reset SI; stop both RHR pumps; stop all SI pumps

Answer: C

Explanation:

A. Incorrect. Plausible because this is the correct sequence in other EOPs (e.g., ECA-3.1)
B. Incorrect. Plausible because this is the correct sequence in other EOPs (e.g., E-3)
C. CORRECT. As directed by the steps in ES-1.1.
D. Incorrect. Plausible because establishing letdown after establishing charging is a reasonable action, as is securing RHR pumps with pressure above their shutoff head prior to securing the SI pumps.

Technical Reference(s): ES-1.1 (Attach if not previously provided)

Proposed references to be provided to applicants during examination: None

Learning Objective: RES11C 2.01

Question Source: Bank/VISION #
Modified Bank # 2011 Diablo NRC (Note changes or attach parent)
New

Question History: Last NRC Exam

Question Cognitive Level: Memory or Fundamental Knowledge
Comprehension or Analysis X

10 CFR Part 55 Content: 55.41 .10
55.43

Justification for K/A Match:

Matches the K/A because it requires an understanding of the system restoration/termination sequence used in the ES-1.1 SI TERMINATION procedure.

Examination Outline Cross-reference:

Level	RO	SRO
Tier #	1	
Group #	2	
K/A #	E13 EK1.3	
Importance Rating	3.0	3.2

Knowledge of the operational implications of the following concepts as they apply to the Steam Generator Overpressure: Annunciators and conditions indicating signals, and remedial actions associated with the (Steam Generator Overpressure)

RO Question #25

Given the following conditions:

- The crew is responding to an S/G overpressure event
- S/G A pressure is indicating 1200 psig
- S/G B pressure is indicating 1005 psig

WHICH ONE of the following is the basis for this CAUTION in FR-H.2, RESPONSE TO STEAM GENERATOR OVERPRESSURE:

CAUTION: AFW FLOW SHOULD REMAIN ISOLATED TO AFFECTED S/G(s) UNTIL A STEAM RELEASE PATH IS ESTABLISHED

A. Operation of the TDAFWP steam admission valve, may cause water hammer resulting in possible water damage.

B. Adding cold AFW can cause additional flashing on the hot tubes, causing pressure to rise even higher

C. Differential temperatures between the existing high pressure conditions in the S/G and the cold AFW will cause tube failure due to thermal stress

D. AFW is a high pressure system which may cause further overpressure in a S/G with no steam release path

Answer: D

Explanation:

A. Incorrect. Plausible because the combination of feeding a hot, dry S/G and the cold AFW could result in water hammer.

B. Incorrect. Plausible because the same type of feed restrictions exist in both FR-H.1 and FR-H.5 with the concern of tube failure when feeding a hot S/G. While the concern is primarily thermal stress, flashing in a dry S/G could result in a pressure rise.

C. Incorrect. Plausible because the same type of feed restrictions exist in both FR-H.1 and FR-H.5, but this is not the basis for this caution in FR-H.2.

D. CORRECT. Per the Background document, if AFW flow is reestablished to an affected S/G prior to establishing a steam release path, since AFW is a high pressure system, the AFW flow could further increase S/G pressure.

Technical Reference(s): FR-H.2 Background (Attach if not previously provided)

Proposed references to be provided to applicants during examination: None

Learning Objective: RFRH2C 1.02

Question Source: Bank/VISION # 68667
Modified Bank # _____ (Note changes or attach parent)
New _____

Question History: Last NRC Exam _____

Question Cognitive Level: Memory or Fundamental Knowledge X
Comprehension or Analysis _____

10 CFR Part 55 Content: 55.41 .10
55.43 _____

Justification for K/A Match:

The question matches the K/A by evaluating the implications of feeding an overpressurized S/G with a high pressure water source without a sufficient pressure release path being established.

Examination Outline Cross-reference:	Level	RO	SRO
	Tier #	1	
	Group #	2	
	K/A #	E15 EA2.2	
	Importance Rating	2.9	

Ability to determine and interpret the following as they apply to the (Containment Flooding): Adherence to appropriate procedures and operation within the limitations in the facility's license and amendments

RO Question #26

Given the following:

- The plant is operating at 100% power
- MCB Annunciator C-10, CONTAINMENT RECIRC CLRS WATER OUTLET LO FLOW 1050, has alarmed
- Containment Sump A level is 10 feet and slowly rising
- The Containment Sump A Pump is constantly running
- The crew entered AP-SW.1, Service Water Leak, and is now implementing ATT-2.3, Attachment SW Loads in CNMT

WHICH ONE of the following identifies from the list below, requirements that must be met while performing this procedure?

1. Call the control room prior to isolating Service Water to a CRFC.
2. Maximize cooling to the in-service Reactor Compartment Cooling Fan.
3. When determining the leak location, isolate Service Water to a CRFC to only one unit at a time.

A. 1 and 2 ONLY

B. 1 and 3 ONLY

C. 2 and 3 ONLY

D. 1, 2 and 3

Answer: B

Explanation:

A. **Incorrect.** This is incorrect because it does not include the requirement to isolate Service Water to a CRFC to only one unit at a time; and because it is not required to maximize cooling to the in-service Reactor Compartment cooling fan. This is plausible because the operator may incorrectly believe that this must be accomplished in anticipation of isolation of the SW to one of the CRFCs; and because the operator may not know or understand the Note prior to Step 1 of ATT-2.3.

B. **Correct.** According to AP-SW.1 (p6-7; Rev 02300) Steps 4 and 5 will attempt to identify SW leakage into the Containment. Step 5 of AP-SW.1 directs that ATT-2.3 be performed. According to ATT-2.3 (p1; Rev 4) Notes prior to Step 1 direct that the operator call the control room prior to isolating SW to any CRFC, and directs that the operator isolate SW to only one CRFC at a time.

C. **Incorrect** This is incorrect because it does not include the requirement to call the control room prior to isolating Service Water to a CRFC; and because it is not required to maximize cooling to the in-service Reactor Compartment cooling fan. This is plausible because the operator may incorrectly believe that this must be accomplished in anticipation of isolation of the SW to one of the CRFCs; and because the operator may not know or understand the Note prior to Step 1 of ATT-2.3.

D. **Incorrect.** This is incorrect because it is not required to maximize cooling to the in-service Reactor Compartment cooling fan. This is plausible because the operator may incorrectly believe that this must be accomplished in anticipation of isolation of the SW to one of the CRFCs.

Technical Reference(s): AP-SW.1 (p.6-7; Rev 02300) (Attach if not previously provided)
ATT-2.3 (p1; Rev 4)

Proposed references to be provided to applicants during examination: None

Learning Objective: RFRZ2C 1.01

Question Source:
Bank/VISION # _____
Modified Bank # _____ (Note changes or attach parent)
New X

Question History: Last NRC Exam _____

Question Cognitive Level: Memory or Fundamental Knowledge X
Comprehension or Analysis _____

10 CFR Part 55 Content:	55.41	10
	55.43	

Justification for K/A Match:

Some reviewers have argued that this question is psychometrically flawed because distractor D uses a variation of the phrase "All of the Above." According to Appendix B of NUERG-1021, "All of the above" questions provide inadvertent clues to the examinee. When the "all of the above" option is used as a distractor, the examinee only needs to be able to determine that one option is incorrect in order to eliminate this option. Consequently, the question is constructed such that the use of the term "All of the Above" is avoided even though the all-inclusive nature of the Distractor is retained. In this manner, the operator must eliminate one element of each distractor to determine that it is incorrect. Consequently, there are no inadvertent clues provided.

The KA is matched because the operator must demonstrate the ability to adhere to appropriate procedures (AP-SW.1 and ATT-2.3) and operations within the limitations in the facility's license and amendments (TS LCO 3.6.6 requires that the CRFCs be OPERABLE, the License requires that the plant be operated within TS) in response to Containment flooding (AP-SW.1).

The question is at the memory cognitive level because the operator must recall bits of information (i.e. procedure Note requirements) to answer the question correctly.

What MUST be known:
1. Do site flooding response procedures require the AO to call the Control Room before isolating service water to a CFRC? 2. Do site flooding response procedures require that the operator maximize cooling to the in-service Reactor Compartment Cooling Fan? 3. Do site flooding response procedures limit the isolation of SW to the CRCF to one unit at a time?

Examination Outline Cross-reference:	Level	RO	SRO
	Tier #	1	
	Group #	2	
	K/A #	E10 EA1.2	
	Importance Rating	3.6	3.8

Ability to operate and/or monitor the following as they apply to the (Natural Circulation with Steam Void in Vessel): Operating behavior characteristics of the facility

RO Question #27

Given the following:

- The crew is cooling down the plant per ES-0.3, Natural Circulation Cooldown With Steam Voids in the Vessel.
- The RCS was just depressurized from 1200 to 800 psig.
- The pressurizer heaters have just been energized.
- PZR temperature is 500°F.

WHICH ONE of the following is indicative of a formation of a steam bubble in the reactor head during RCS depressurization, AND describes how the plant would respond if an RCP was started now, rather than an hour from now?

A. PZR Level will rise rapidly while RVLIS lowers
RCS pressure would drop more rapidly if the RCP were started now rather than an hour from now.

B. Core exit thermocouples and Pressurizer level will rise slowly while RVLIS lowers;
RCS pressure would drop at about the same rate regardless of whether the RCP is started now or an hour from now.

C. PZR Level will rise rapidly while RVLIS lowers;
RCS pressure would drop at about the same rate regardless of whether the RCP is started now or an hour from now.

D. Core exit thermocouples and Pressurizer level will rise slowly while RVLIS lowers;
RCS pressure would drop more rapidly if the RCP were started now rather than an hour from now.

Answer: A

Explanation:

A. **Correct.** 1st part correct, 2nd part correct. According to ES-0.2 (p12; Rev 01701) and the Caution prior to Step 5 in ES-0.3 (p6; Rev 01401), a rapid rise in Pressurizer level and/or a lowering of RVLIS to < 97% (Head full minus instrument inaccuracies) is indicative of a void formation in the vessel head, which is anticipated in ES-0.3.

B. **Incorrect.** 1st part wrong, 2nd part wrong. See C and D.

C. **Incorrect.** 1st part correct, 2nd part wrong. This is incorrect because the RCS pressure will NOT drop at about the same rate regardless of whether the RCP is started now or an hour from now. Under the current conditions the Pressurizer is NOT saturated. However, the Pressurizer Heaters are energized, and the Pressurizer will be at or closer to saturated conditions in an hour. Because the RCP is started with an unsaturated Pressurizer, according to the WOG ES-0.3 Background Document (p16; Rev 2), the RCS pressure (and Pzr level) will drop faster than it would if the Pressurizer were saturated. This is plausible because the operator may not recognize that the Pressurizer is NOT saturated, or not know why the heaters are energized to saturate the Pressurizer prior to starting an RCP in ES-0.3.

D. **Incorrect.** 1st part wrong, 2nd part correct. This is incorrect because CETs are not expected to rise during an ES-0.3 cooldown, nor will Pressurizer level rise slowly during void formation. The CETs will remain covered during the ES-0.3 cooldown because the operator is directed to repressurize the RCS if RVLIS lowers to 81%. This level is consistent with the top of the Hot Legs and above the CETs. Consequently CETs should remain stable or lower during the ES-0.3 cooldown. This is plausible because the operator may not understand how the RCS behaves during an RCS depressurization while implementing ES-0.3.

Technical Reference(s): ES-0.3 (p6; Rev 01401) (Attach if not previously provided)
WOG ES-0.3 Background Document (p16; Rev 2)

Proposed references to be provided to applicants during examination: None

Learning Objective: RES03C 1.04 & 2.01

Question Source: Bank/VISION # _____
Modified Bank # _____ (Note changes or attach parent)
New X

Question History: Last NRC Exam _____

Question Cognitive Level: Memory or Fundamental Knowledge _____
Comprehension or Analysis X

10 CFR Part 55 Content: 55.41 5
55.43 _____

Justification for K/A Match:

Matches the K/A by requiring an understanding of plant response to procedural actions taken to monitor and control PRZR level during the performance of ES-0.3.

Examination Outline Cross-reference:

Level	RO	SRO
Tier #	2	
Group #	1	
K/A #	003 K5.04	
Importance Rating	3.2	3.5

Knowledge of the operational implications of the following concepts as they apply to the RCPs: Effects of RCP shutdown on secondary parameters, such as steam pressures, steam flow, and feed flow.

RO Question #28

Given the following plant conditions:

- The plant is at 20% power
- 'A' RCP trips

Assuming NO operator actions, WHICH ONE of the following identifies the IMMEDIATE effect that the RCP trip will have on the following:

	'A' S/G Pressure	'A' S/G Level
A.	Rise	Rise
B.	Rise	Lower
C.	Lower	Rise
D.	Lower	Lower

Answer: D

Explanation:

A. Incorrect. Plausible because without the effect of the RCP trip on the 'A' loop, typically when steam flow is stopped in a flow path, the steam pressure rises and, without operator action, the initial steam flow-feed flow mismatch would cause level to also rise.

B. Incorrect. Part two is correct, and part one is plausible because without the effect of the RCP trip on the 'A' loop, typically when steam flow is stopped in a flow path, the steam pressure rises.

C. Incorrect. Part one is correct and part two is plausible if the candidate assumes that the feedflow to steamflow mismatch immediately results in an increasing S/G level. Incorrect because the immediate effect on 'A' S/G level is a lowering due to the void collapse.

D. CORRECT. Without operator action and with power below the P-8 setpoint of 25%, a trip of 'A' RCP and the resultant backflow from 'B' loop will result in less heat input to the 'A' S/G and a reduction in 'A' S/G pressure. With 'B' S/G pressure initially unchanged, most steam load "shifts" to 'B' S/G. The overall effect is that the 'A' S/G experiences a rapid reduction in steam demand, and the unchanged feedwater flow to 'A' S/G will collapse the bubbles in the downcomer region, resulting in an initial lowering of 'A' S/G level.

Technical Reference(s): ROC01S (Attach if not previously provided)

Proposed references to be provided to applicants during examination: None

Learning Objective: ROC01S 1.02; RAP16C 1.02

Question Source: Bank/VISION # _____
Modified Bank # 2010 Watts Bar NRC (Note changes or attach parent)
New _____

Question History: Last NRC Exam _____

Question Cognitive Level: Memory or Fundamental Knowledge _____
Comprehension or Analysis X

10 CFR Part 55 Content: 55.41 .5
55.43 _____

Justification for K/A Match:

KA is matched because the question requires knowledge of how secondary parameters (steam pressure and steam generator level) are affected when an RCP is shutdown during power operations.

Examination Outline Cross-reference:	Level	RO	SRO
	Tier #	2	
	Group #	1	
	K/A #	004 K3.04	
	Importance Rating	3.7	3.9

Knowledge of the effect that a loss or malfunction of the CVCS will have on the RCPs

RO Question #29

Given the following plant conditions:

- The plant is operating at 100% power.
- V-300A and V-300B, Seal Injection Needle Valves to RCPs, are being adjusted.
- During the procedure, V-300A is CLOSED,

WHICH ONE of the following identifies how the following parameters would be affected?

	'B' Seal Injection Flow	'B' RCP Lab Seal D/P	'A' RCP Lab Seal D/P
A.	Rises	Rises	Lowers
B.	Rises	Lowers	Rises
C.	Lowers	Lowers	Lowers
D.	Lowers	Rises	Rises

Answer: A

Explanation:

A. **Correct.** 1st part correct, 2nd part correct, 3rd part correct. According to Lesson Plan R1301C (p15-17; Rev 24) the seal water supply to each RCP comes from a common header that splits into parallel paths to supply each RCP Seal. If the valve in one line is adjusted, it will affect both RCP seal supply flows. When V-300A is inadvertently closed, all of the flow into the common seal water supply line is directed to the B RCP. Consequently, the B Seal Water Injection flow will rise. When the seal water injection flow enters the RCP, a portion of the flow will flow upward through the Seal Package, seal the shaft, and flow away from the RCP through the Seal water return line to the VCT. The remainder of the Seal water Injection flow will flow down the RCP shaft through the labyrinth seal into the RCS. The labyrinth seal has a differential pressure instrument indicating the direction of water flow past the seal. Under conditions of normal seal water flow, the differential pressure is positive. When seal injection flow is lost, RCS water will flow past the labyrinth seal toward the RCP seal, and the differential pressure instrument will reverse (i.e. go negative). When V-300A is inadvertently closed, all of the flow into the common seal water supply line is directed to the B RCP. Consequently, the B RCP Labyrinth Seal D/P will rise. At the same time, the seal water to the A RCP is lost, and RCS water will flow past the labyrinth seal toward the RCP seal, causing the differential pressure instrument to reverse (i.e. go negative or lower).

B. **Incorrect.** 1st part correct, 2nd part wrong, 3rd part wrong. This is incorrect because the B Lab Seal DP will rise and the A Lab Seal DP will lower. This is plausible because the operator may not know how the RCP Seal package works.

C. **Incorrect.** 1st part wrong, 2nd part wrong, 3rd part correct. This is incorrect because the Seal Injection Flow to the B RCP will rise and the B Lab Seal DP will rise. This is plausible because the operator may not know how the RCP Seal package works.

D. **Incorrect.** 1st part wrong, 2nd part correct, 3rd part wrong. This is incorrect because the Seal Injection Flow to the B RCP will rise and the A Lab Seal DP will lower. This is plausible because the operator may not know how the RCP Seal package works.

Technical Reference(s): Lesson Plan R1301C (p15-17; Rev 24) 33013-1265sh1,2 (Attach if not previously provided)

Proposed references to be provided to applicants during examination: None

Learning Objective: R1601C, 1.10; R1301C 1.10

Question Source: Bank/VISION # _____

Modified Bank # _____ (Note changes or attach parent)

New X

Question History: Last NRC Exam _____

Question Cognitive Level: Memory or Fundamental Knowledge _____

Comprehension or Analysis X

10 CFR Part 55 Content: 55.41 3
55.43

Justification for K/A Match:

The KA is matched because the operator must demonstrate the knowledge of the effect that a loss of the CVCS (total loss of Seal water flow to one RCP) will have on the RCPS.

The question is at the Comprehension/Analysis cognitive level because the operator must demonstrate an understanding of how the RCP Seal operates, to answer the question correctly.

What MUST be known:
1. How does the seal water supply system work? 2. How does the RCP labyrinth seal work? 3. What happens to the A RCP lab seal DP when Seal water flow is isolated to the pump? 4. What happens to the B RCP lab seal DP when Seal water flow is isolated to the A RCP? 5. What happens to the B RCP Seal Injection flow when Seal water flow is isolated to the A RCP?

Examination Outline Cross-reference:	Level	RO	SRO
	Tier #	2	
	Group #	1	
	K/A #	005 A2.02	
	Importance Rating	2.7	

Ability to (a) predict the impacts of the following malfunctions or operations on the RHRS, and (b) based on those predictions, use procedures to correct, control, or mitigate the consequences of those malfunctions or operations: Pressure transient protection during cold shutdown

RO Question #30

Given the following plant conditions:

- The plant is in solid plant pressure control.
- The A RHR system is operating.
- HCV-625, RHR HX A Outlet Valve, is FULL OPEN.
- HCV-624, RHR HX B Outlet Valve, is FULL CLOSED.
- RCS Temperature is 185°F.

Subsequently, Letdown Pressure Transmitter PT-135 fails LOW.

WHICH ONE of the following identifies how RCS pressure will change, AND an action that could be taken to stabilize the transient?

A. RCS pressure will LOWER;
Raise charging flow to control RCS pressure

B. RCS pressure will RISE;
Reduce charging flow to control RCS pressure

C. RCS pressure will LOWER;
Adjust HCV-625 to limit RCS cooldown.

D. RCS pressure will RISE;
Adjust HCV-625 to increase RCS cooldown

Answer: B

Explanation:

A. **Incorrect.** This is incorrect because RCS pressure will RAISE, not LOWER. This is plausible because the operator may not know how PCV-135 reacts to the PT-135 failure and conclude that the RCS pressure will LOWER. If so, Raise charging flow to control RCS pressure is possible, and a logical action to take in response.

B. **Correct.** When PT-135 fails LOW, PCV-135, which is in AUTO, will tend to CLOSE to maintain pressure at setpoint. When the valve closes, reducing letdown flow, it will raise RCS pressure which is being controlled by the position of this valve. When RCS pressure starts to rise, MCB Annunciator F-29, PPCS LTOP HI-LOW PRESSURE, will eventually alarm at 360 psig. According to AR-F-29 (p2; Rev 01402), if RCS pressure is HIGH, the operator will be directed to pressure to reduce pressure within normal operating range (between 300 psig and 350 psig). This can be accomplished in solid plant operations by one of two means; (1) reduce charging flow, and/or (2) increase the RCS cooldown. Since HCV-625 is FULLY OPEN, the cooldown rate cannot be raised. Therefore, the operator must reduce charge flow to control RCS pressure.

C. **Incorrect.** This is incorrect because RCS pressure will RAISE, not LOWER. This is plausible because the operator may not know how PCV-135 reacts to the PT-135 failure and conclude that the RCS pressure will LOWER. If so, Adjusting HCV-625 to reduce cooldown would have the effect of raising pressure, but is the opposite of the action need to control pressure.

D. **Incorrect.** This is incorrect because HCV-625 is FULLY OPEN and the cooldown rate cannot be raised any further. This is plausible because the operator may not understand how the RHR HX Outlet and Bypass Valve work in association with each other to control cooldown rate (i.e. the operator may incorrectly believe that the cooldown rate can be raised).

Technical Reference(s): ROP04CLesson Plan (p20-21; Rev 13) (Attach if not previously provided)
AR-F-29 (p2; Rev 01402)

Proposed references to be provided to applicants during examination: None

Learning Objective: ROP04C1 1.01, 1.02, 1.03

Question Source: Bank/VISION # _____
Modified Bank # _____ (Note changes or attach parent)
New X

Question History: Last NRC Exam _____

Question Cognitive Level:	Memory or Fundamental Knowledge	
	Comprehension or Analysis	X

10 CFR Part 55 Content:	55.41	5
	55.43	

Justification for K/A Match:

The KA is matched because the operator must demonstrate the Ability to (a) predict the impacts of a pressure transient (Letdown Valve fails Closed) protection during cold shutdown on the RHRS (RCS Pressure raises or lowers), and (b) based on those predictions, use procedures to correct, control, or mitigate the consequences of those malfunctions or operations (actions to take).

The question is at the Comprehension/Analysis cognitive level because the operator must demonstrate an understanding of how the PCV-135 is affected by a PT-135 failure and/or how the RCS pressure is affected by PCV-135 failing CLOSED, to answer the question correctly.

What MUST be known:
1. How is PCV-135 affected by PT-135 failing LOW? 2. How is RCS pressure affected by PCV-135 failing CLOSED? 3. When solid plant pressure rises what actions are needed to control pressure? 4. When solid plant pressure rises will adjusting HCV-625 when it is FULLY OPEN effectively reduce RCS pressure?

Examination Outline Cross-reference:	Level	RO	SRO
	Tier #	2	
	Group #	1	
	K/A #	006. A2.12	
	Importance Rating	4.5	

Ability to (a) predict the impacts of the following malfunctions or operations on the ECCS; and (b) based on those predictions, use procedures to correct, control, or mitigate the consequences of those malfunctions or operations: Conditions requiring actuation of ECCS

RO Question #31

Given the following

- A reactor trip occurred and E-0, REACTOR TRIP OR SAFETY INJECTION, was entered
- The crew transitioned to ES-0.1, REACTOR TRIP RESPONSE

Subsequently, a Loss of Offsite Power occurs and the following conditions develop:

- RCS pressure is 1800 psig and stable
- All charging pumps are running
- Charging flow is offscale high
- Letdown is isolated
- RCS Subcooling using FIG-1.0 is 18°F
- PRZR level is 3% and lowering slowly

WHICH ONE of the following identifies the correct course of action?

A. Manually initiate SI ONLY, and return to E-0.

B. Manually initiate SI and CI, and return to E-0.

C. Manually start SI pumps as necessary and return to E-0.

D. Remain in ES-0.1, and restore the primary plant to normal operating pressure.

Answer: B

Explanation:

A. Incorrect. Plausible because the transition to ES-0.1 is made at Step 4 of E-0 after determining (at the time) that an SI had not actuated and was not required. Returning to the procedure and "step in effect" is a frequent transitional step in the EOP network

B. CORRECT. Per ES-0.1 FOLDOUT page item 2, "Actuate SI and CI and go to E-0, Step 1 if any automatic setpoint is reached." (RCS pressure is less than 1750 psig setpoint). Additionally, OPG-OPERATIONS-EXPECTATIONS prescribes manual preemptive actions be taken to insert manual SI if RCS pressure lowers to 1800 psig. Plausible because part 1 is correct and part 2 requires knowledge of the rules of usage and technical content of ES-0.1 FOLDOUT page.

C. Incorrect. Plausible because manually starting SI pumps and returning to the previous procedure is frequently used in the EOP network to avoid re-initiating all of the actions (e.g., CNMT isolation) and starting all 3 SI pumps when only 1 may be needed.

D. Incorrect. Plausible if the candidate believes there is additional benefit to maximizing flow prior to returning to E-0, Step 1 and then reassessing the plant conditions prior to performing SI actions.

Technical Reference(s): ES-0.1 FOLDOUT page (Attach if not previously provided)

›posed references to be provided to applicants during examination: None

Learning Objective: RES01C 2.01; REP00C 1.02

Question Source: Bank/VISION # _____
Modified Bank # Callaway 2007 NRC (Note changes or attach parent)
New _____

Question History: Last NRC Exam _____

Question Cognitive Level: Memory or Fundamental Knowledge _____
Comprehension or Analysis X

10 CFR Part 55 Content: 55.41 .10
55.43 _____

Justification for K/A Match:

Matches the K/A by requiring the candidate to assess the impact of the given parameters on procedural usage and identifying that given conditions require ECCS actuation.

Examination Outline Cross-reference:	Level	RO	SRO
	Tier #	2	
	Group #	1	
	K/A #	006 2.4.4	
	Importance Rating	4.5	

ECCS: Ability to recognize abnormal indications for system operating parameters that are entry-level conditions for emergency and abnormal operating procedures

RO Question #32

Given the following conditions:

- A reactor trip has occurred due to a leak in the RCS
- Concurrent with the reactor trip, leakage from the CCW system has resulted in the inability to maintain CCW surge tank level
- Safety Injection has actuated, and equipment has functioned as designed
- The operators are performing E-1, Loss of Reactor or Secondary Coolant
- RCS System pressure is 550 psig and lowering
- Pressurizer level is off-scale low
- Containment pressure is 20 psig and rising slowly
- RWST level is 88% and lowering
- SG pressures are 700 psig and slowly lowering
- SI flow is 800 gpm

WHICH ONE (1) of the following describes the procedure that will be used next to mitigate the event in progress?

A. ES-1.2, POST LOCA COOLDOWN AND DEPRESSURIZATION

B. ES-1.3, TRANSFER TO COLD LEG RECIRCULATION

C. ECA-1.1, LOSS OF EMERGENCY COOLANT RECIRCULATION

D. ECA-1.3, RESPONSE TO SUMP 'B' BLOCKAGE

Answer: C

Explanation:

A. Incorrect. Plausible because this would be the proper transition IF the ability to implement Cold Leg Recirc were not impeded by the loss of CCW.

B. Incorrect. Plausible because RWST level is dropping steadily and would eventually require transition to ES-1.3 IF the ability to implement Cold Leg Recirc were not impeded by the loss of CCW.

C. CORRECT. The sustained loss of CCW impacts the ability to cool the RHR heat exchanger while implementing Cold Leg Recirc flowpath. Per Step 18 of E-1, the lack of an operable CCW pump requires transitioning to ECA-1.1.

D. Incorrect. Plausible because this is a parameter that is monitored during the performance of ES-1.3 (see 'A' above).

Technical Reference(s): E-1 (Attach if not previously provided)

Proposed references to be provided to applicants during examination: None

Learning Objective: REP01C 2.1

Question Source: Bank/VISION # _____
Modified Bank # B360.0052 (Note changes or attach parent)
New _____

Question History: Last NRC Exam _____

Question Cognitive Level: Memory or Fundamental Knowledge _____
Comprehension or Analysis X

10 CFR Part 55 Content: 55.41 .10
55.43 _____

Justification for K/A Match:

Matches the K/A by assessing CCW system parameters which impact the ability of the CCW system to support post-LOCA Cold Leg Recirc capability and require transitioning to another (ECA) procedure.

Examination Outline Cross-reference:	Level	RO	SRO
	Tier #	2	
	Group #	1	
	K/A #	007 K1.03	
	Importance Rating	3.0	

Knowledge of the physical connections and/or cause-effect relationships between the PRTS and the following systems: RCS

RO Question #33

Given the following plant conditions:

- Plant is in MODE 4 with RHR system in operation
- RCS temperature is 340°F and stable
- PRT level is 86% and slowly rising
- PRT pressure is 10 PSIG and slowly rising
- PRT temperature is 165°F and slowly rising

WHICH ONE of the following components, if leaking, is the cause of this condition?

A. RV-314, Seal Water Return Relief Valve

B. RV-434, PRZR Safety Relief Valve

C. RV-887, Accumulator 'B' Test Line Relief Valve

D. AOV-548, Reactor Makeup Water Supply

Answer: B

Explanation:

A. Incorrect. Plausible because the RCP seal water return line would cause pressure and level rise, but not temperature.

B. CORRECT. A leaking PRZR safety valve would result in all 3 PRT parameters rising.

C. Incorrect. Plausible because a leaking Accumulator relief valve would cause pressure and level rise, but not temperature.

D. Incorrect. Plausible since this is the normal Reactor Makeup Water supply used to fill the PRT, and would cause only level and pressure to rise, but not temperature. Also, normally closed AOV-508, RMW to CNMT ISOL VLV, would also have to be leaking by.

Technical Reference(s): P-3, AR-F-17,F-1 Bkdg E-0 step 27, UFSAR 6.2.1.2.2,PPCS plot T0181.33013-1258, 1265sh1,1262sh2 (Attach if not previously provided)

Proposed references to be provided to applicants during examination: None

Learning Objective: R1401CC, 1.03 & 1.04

Question Source: Bank/VISION # _____
Modified Bank # Calloway 2007 NRC (Note changes or attach parent)
New _____

Question History: Last NRC Exam _____

Question Cognitive Level: Memory or Fundamental Knowledge X
Comprehension or Analysis _____

10 CFR Part 55 Content: 55.41 .3
55.43 _____

Justification for K/A Match:

Matches the K/A by evaluating potential sources of water to the PRT and the cause/effect relationship between their fluid temperatures and that of the PRT.

Facility: Ginna

Vendor: WEC

Exam Date: 12/3/14

Exam Type: RO

Examination Outline Cross-reference:

Level	RO	SRO
Tier #	2	
Group #	1	
K/A #	007	A2.02
Importance Rating	2.6	

Ability to (a) predict the impacts of the following malfunctions or operations on the P S; and (b) based on those predictions, use procedures to correct, control, or mitigate the consequences of those malfunctions or operations: Abnormal pressure in the PRT

Proposed Question: RO Question # 34

Given the following plant conditions:

- Plant is at 100% power
- A grid disturbance resulted in a load reduction
- PORV PCV-431C lifted momentarily due to the load rejection, but did not reseat
- The crew closed MOV-515, PRZR PORV BLK VLV, to isolate the leakage
- PRT pressure has been restored per AR-F-17, PRT HI PRESS 5 PSI
- AR-F-1, PRT LIQUID HI TEMP 220°F, is LIT
- PRT temperature is currently 225°F

WHICH ONE of the following correctly completes the statements below?

The LOWEST PRT pressure that will cause the rupture disc to actuate is ____(1)____ PSIG. Under the stated conditions, PRT temperature will be lowered by adding Reactor Makeup Water while draining the PRT to ____(2)____.

A. (1) 100
(2) the RDCT

B. (1) 100
(2) Containment Sump A

C. (1) 150
(2) the RDCT

D. (1) 150
(2) Containment Sump A

Proposed Answer: A

Explanation (Optional):

A. **Correct.** 1st part correct, 2nd part correct. According to P-2 (p29; Rev 04303) the PRT Rupture Disc will rupture at 100 psig. According to AR-F-1 (p1; Rev 00601), a high PRT temperature is remedied by "Adding Reactor Makeup Water and drain as necessary to reduce temperature. This is accomplished by opening RMW valves 508 and 548 to fill with cooler RMW, then draining the PRT by opening AOV-526, PRT TK DRAIN VLV.

B. **Incorrect.** 1st part correct, 2nd part wrong. This is incorrect because the PRT is NOT drained to the Containment Sump A. This is plausible because if the Rupture Disc released, it releases to Containment Sump A.

C. **Incorrect.** 1st part wrong, 2nd part correct. This is incorrect because the setpoint for the Rupture Disc is 100 psig, NOT 150 psig. This is plausible because the PRT Pressure Gage high range is 150 psig, and the operator may not know the setpoint.

D. **Incorrect.** 1st part wrong, 2nd part wrong. See B and C.

Technical Reference(s): P-2 (p29; Rev 04303)
AR-F-1 (p1; Rev 00601), 33013-1258 (Attach if not previously provided)

Proposed References to be provided to applicants during examination:

Learning Objective: R1401C 1.04 & 1.11 (As available)

Question Source: Bank #
Modified Bank # 2011 Robinson (Note changes or attach parent)
New

Question History: Last NRC Exam: NA

Question Cognitive Level: Memory or Fundamental Knowledge X
Comprehension or Analysis

10 CFR Part 55 Content: 55.41 10
55.43

Comments:

The KA is matched because the operator must demonstrate the ability to predict the impacts of the abnormal pressure in the PRT (i.e. Rupture pressure setpoint 100 vs. 150); and based on those predictions, use procedures to correct, control, or mitigate the consequences of those malfunctions or operations (i.e. where does the feed & Bleed water go).

The question is at the Memory cognitive level because the operator must recall bits of information (i.e. Rupture Disc Setpoints, Where is bleed water sent) to answer the question correctly.

What MUST be known:
11. What is the PRT Rupture Disc Setpoint? 12. When we Feed & Bleed the PRT to reduce PRT Temperature, to what location is the bleed water sent?

Examination Outline Cross-reference:

Level	RO	SRO
Tier #	2	
Group #	1	
K/A #	008 A1.03	
Importance Rating	4.4	

Ability to predict and/or monitor changes in parameters (to prevent exceeding design limits) associated with operating the CCWS controls including: CCW pressure

RO Question #35

With the plant at 100% power the following events occur:

- MCB Annunciator A-22, CCW PUMP DISCHARGE PRESS 60 PSI, alarms.
- A manual attempt to start the Standby CCW Pump fails.

The HCO observes the following:

Time (Sec)	RCP A Motor Bearing Temp	RCP B Motor Bearing Temp
0	126°F	135°F
+21	137°F	146°F
+41	147°F	155°F
+61	157°F	165°F
+81	168°F	174°F
+101	176°F	183°F
+121	184°F	191°F
+141	192°F	200°F
+161	200°F	208°F
+181	211°F	218°F
+201	220°F	230°F

WHICH ONE of the following identifies the EARLIEST time at which the Reactor MUST be manually tripped?

A. +121 Seconds

B. +141 Seconds

C. +161 Seconds

D. +201 Seconds

Proposed Answer: A

Explanation:

A. CORRECT. According to AP-CCW.2 (p3; Rev 02201), Caution 1 prior to Step 1, states that IF CCW FLOW TO A RCP IS INTERRUPTED FOR GREATER THAN 2 MINUTES OR IF EITHER RCP MOTOR BEARING TEMPERATURE EXCEEDS 200°F, THEN TRIP THE AFFECTED RCP. IF CCW FLOW TO A RCP IS INTERRUPTED FOR GREATER THAN 2 MINUTES OR IF EITHER RCP MOTOR BEARING TEMPERATURE EXCEEDS 200°F, THEN TRIP THE AFFECTED RCP. Consequently, the RCPs are both required to be tripped within 2 minutes (i.e.+120 seconds) regardless of the RCP Motor Bearing Temperature.

B. Incorrect. This is incorrect because the RCPs must be tripped within 2 minutes regardless of RCP Motor Bearing temperature. This is plausible because the operator may not remember the 2 minute trip criteria; and believe that the reactor must be tripped when one RCP reaches a Motor Bearing Limit of 200°F.

C. Incorrect This is incorrect because the RCPs must be tripped within 2 minutes regardless of RCP Motor Bearing temperature. This is plausible because the operator may not remember the 2 minute trip criteria; and believe that the reactor must be tripped when both RCPs reach a Motor Bearing Limit of 200°F.

D. Incorrect. This is incorrect because the RCPs must be tripped within 2 minutes regardless of RCP Motor Bearing temperature. This is plausible because the operator may not remember the 2 minute trip criteria; and believe that the reactor must be tripped when one RCP reaches a Motor Bearing Limit of 230°F (i.e. the operator confuses the 200°F limit with the 230°F Seal Temperature Limit).

Technical Reference(s): AP-CCW.2 (p3; Rev 02201) (Attach if not previously provided)

Proposed references to be provided to applicants during examination: None

Learning Objective: R2801C, 1.06 & 1.07;

Question Source: Bank/VISION # _____

Modified Bank # _____ (Note changes or attach parent)

New X

Question History: Last NRC Exam _____

Question Cognitive Level: Memory or Fundamental Knowledge X

Comprehension or Analysis

10 CFR Part 55 Content:	55.41	41.10
	55.43	

Justification for K/A Match:

Comments:

The KA is matched because the operator must demonstrate the ability to predict (i.e. Trip is required in 2 Minutes) and/or monitor changes in parameters (RCP Motor Bearing Temperature) associated with operating the CCWS controls including CCW pressure.

The question is at the Comprehension/Analysis cognitive level because the operator must recall bits of information (i.e. Limits for RCP [Rx] Trip requirements), and apply it to a timeline of data observations, to answer the question correctly.

What MUST be known:
1. On a loss of CCW, under what conditions must the reactor be tripped? 2. Given the set of observed parameters, when is the earliest time at which a reactor trip is required?

Examination Outline Cross-reference:	Level	RO	SRO
	Tier #	2	
	Group #	1	
	K/A #	010 K2.03	
	Importance Rating	2.8	

Knowledge of bus power supplies to the following: Indicator for PORV position

RO Question #36

WHICH ONE of the following correctly completes the statement below?

Pressurizer PORV 431C is powered from the ____(1)____ DC Bus. If control power is lost to this valve the valve will fail ____(2)____.

A. (1) A
(2) OPEN

B. (1) A
(2) CLOSED

C. (1) B
(2) OPEN

D. (1) B
(2) CLOSED

Answer: D

Explanation:

A. **Incorrect.** 1st part wrong, 2nd part wrong. See B and C.

B. **Incorrect.** 1st part wrong, 2nd part correct. This is incorrect because the valve is powered from DC Bus B. This is plausible because there are two DC Buses and the operator may incorrectly believe that PORV 431C is powered from DC Bus A.

C. **Incorrect.** 1st part correct, 2nd part wrong. This is incorrect because the valve will not fail OPEN. This is plausible because the PORVs are air-operated valves; and there are several air-operated valves that fail OPEN on a loss of control power.

D. **Correct** Bus B. 1st part correct, 2nd part correct. According to P-10 (p55; Rev 01901), PORV-430 and PORV-431C fail closed on a loss of DC.

Technical Reference(s): P-10 (p55; Rev 01901), 21946-0755 sh1 rev 1 (Attach if not previously provided)

Proposed references to be provided to applicants during examination: None

Learning Objective: R0901C 1.06, RER07C 2.01

Question Source: Bank/VISION # _____
Modified Bank # X 2010 Watts Bar (Note changes or attach parent)
New _____

Question History: Last NRC Exam _____

Question Cognitive Level: Memory or Fundamental Knowledge X
Comprehension or Analysis _____

10 CFR Part 55 Content: 55.41 10
55.43 _____

Justification for K/A Match:

The KA is matched because the operator must demonstrate knowledge of bus power supplies (Which DC Bus) to the indicator for PORV position.
The question is at the memory cognitive level because the operator must recall bits of information (i.e. power supply to 431C, LOP fail position to 431C) to answer the question correctly.

What MUST be known:
1. What is the power supply to Pressurizer PORV 431C? 2. What is the loss-of-power fail position of PORV 431C?

Examination Outline Cross-reference:	Level	RO	SRO
	Tier #	2	
	Group #	1	
	K/A #	012 K6.03	
	Importance Rating	3.1	

Knowledge of the effect of a loss or malfunction of the following will have on the RPS: trip logic circuits

RO Question #37

Given the following plant conditions:

- The plant is at 100% power
- PRZR pressure channel PT-429 has failed and been defeated per ER-INST.1, REACTOR PROTECTION BISTABLE DEFEAT AFTER INSTRUMENT LOOP FAILURE

Which ONE of the following identifies the RPS actuation logic required, from the remaining in-service pressure channels, to initiate a Reactor Trip and Safety Injection on LOW pressurizer pressure?

	Reactor Trip	Safety Injection
A.	1/2	1/2
B.	1/3	1/2
C.	1/3	2/3
D.	2/3	2/3

Answer: B

Explanation:

A. Incorrect. Plausible if the candidate believes that BOTH the reactor trip and SI actuation signal logics are 2/3, and the tripping of PT-429, common to both logic circuits, would place the remaining channels in a 1/2 logic configuration.

B. CORRECT. PT-429 is common to both the reactor trip (2/4 logic with inputs from PT-429, 430, 431, and 449) and SI (2/3 logic with inputs from PT-429, 430, 431) circuits. Defeating PT-429 would leave the remaining reactor trip inputs in a 1/3 configuration (2/4 necessary to trip), and the SI trip inputs in a 1/2 configuration (2/3 necessary for SI).

C. Incorrect. Plausible because part 1 is correct and part 2 is plausible if the candidate believes that PT-429 is NOT one of the SI inputs (PT-449 is the input NOT common to both circuits), leaving the SI logic in its original required state.

D. Incorrect. Plausible if the candidate believes that BOTH the reactor trip and SI actuation signal logics are 2/4, and the tripping of PT-429, common to both logic circuits, would place the remaining channels in a 2/3 logic configuration.

Technical Reference(s): 33013-1353, Sheets 6 & 12 (Attach if not previously provided)

Proposed references to be provided to applicants during examination: None

Learning Objective: R3501C 1.06; RIC02C 1.06

Question Source: Bank/VISION # 2007 CALLAWAY NRC

Modified Bank # _____ (Note changes or attach parent)

New _____

Question History: Last NRC Exam _____

Question Cognitive Level: Memory or Fundamental Knowledge X

Comprehension or Analysis _____

10 CFR Part 55 Content: 55.41 .7

55.43 _____

Justification for K/A Match:

Matches the K/A by requiring knowledge of how the defeat on an RPS instrument channel affects the impact on both the reactor trip and SI logic circuits.

Examination Outline Cross-reference:	Level	RO	SRO
	Tier #	2	
	Group #	1	
	K/A #	012 2.4.45	
	Importance Rating	4.1	

RPS: Ability to prioritize and interpret the significance of each annunciator or alarm

RO Question #38

Given the following plant conditions:

- The plant is operating at 22% power after synchronizing to the grid
- B-27, RCS LOOP A LO FLOW CHANNEL ALERT, is received
- A-17, MOTOR OFF RCP CCWP, is received
- RCS loop A flows (FI-411, FI-412, FI-413) indicates 80% and LOWERING
- RCS loop B flows (FI-414, FI-415, FI-416) indicates 100% and STABLE

WHICH ONE of the following identifies the FIRST procedure entered?

A. AP-RCS.2, LOSS OF REACTOR COOLANT FLOW

B. AP-RCP.1, RCP SEAL MALFUNCTION

C. AP-CCW.2, LOSS OF CCW AT POWER

D. E-0, REACTOR TRIP OR SAFETY INJECTION

Answer: A

Explanation:

A. CORRECT. With reactor power < P-8 setpoint of 25%, a single loop loss of flow trip will NOT occur. While reactor power is > the P-7 setpoint of 8%, this permissive enables the 2-LOOP loss of flow reactor trip. Per AR-B-27, if flow is <91% on 2 or more channels, check for first annunciator panel alarm D-15: if NOT lit, go to AP-RCS.2, LOSS OF REACTOR COOLANT FLOW. In AP-RCS.2, if reactor trip breakers are closed, the procedure will direct a manual reactor trip.

B. Incorrect. Plausible if the candidate believes that one of the inputs to this alarm is EITHER loop low flow conditions. Incorrect because this alarm occurs when both RCS Loop A and RCS Loop B have low flow conditions with > P-7 (8%) conditions.

C. Incorrect. Plausible because the stated conditions will result in Loop A flow conditions < 91%, but the automatic reactor trip (and D-7 alarm) will occur only with power > P-8 (25%).

D. Incorrect. Plausible because both the single loop LOF and 2-loop LOF conditions are inputs into this alarm, but the alarm will occur only if the correct P-7 or P-8 setpoint is also met, as described above.

Technical Reference(s): AR-B-27, D-7, D-15, D-17 (Attach if not previously provided)
AP-RCS.2

Proposed references to be provided to applicants during examination: None

Learning Objective: R3501C 1.07 & 1.11

Question Source: Bank/VISION # 2010 Beaver Valley NRC
Modified Bank # (Note changes or attach parent)
New

Question History: Last NRC Exam

Question Cognitive Level: Memory or Fundamental Knowledge
Comprehension or Analysis X

10 CFR Part 55 Content: 55.41 .7
55.43

Justification for K/A Match:

Matches K/A by requiring an assessment of plant conditions (RCS flow and power level) and a determination of (a) the inputs to relevant reactor trip annunciators and (b) whether the first out annunciator would be eceived.

Examination Outline Cross-reference:	Level	RO	SRO
	Tier #	2	
	Group #	1	
	K/A #	013 K4.13	
	Importance Rating	3.7	

Knowledge of ESFAS design feature(s) and/or interlock(s) which provide for MFW isolation/reset

RO Question #39

Given the following plant conditions:

- The plant is operating at 99% power
- A Reactor Trip occurs
- A feedwater transient has caused the following alarms:
  - G-3, S/G A LEVEL DEVIATION ±7%
  - G-4, S/G A HI LEVEL CHANNEL ALERT 85%
  - G-12, S/G A HI LEVEL 85%
- No manual operator actions have been taken

WHICH ONE of the following is correct regarding:

(1) Impact on MFW system, AND

(2) Actions necessary, if any, to RESET feedwater isolation signal(s) after S/G levels are returned to normal?

A. (1) closes MFW regulating and bypass valves (HCV-466 and HCV-480) AND MFW Isolation valve AOV-3995

(2) Depress MANUAL pushbuttons for MFW regulating valve and bypass valve controllers, lower demand to 0%, operate as necessary to control level

B. (1) closes MFW regulating and bypass valves (HCV-466 and HCV-480) AND MFW Isolation valve AOV-3995

(2) NO actions are necessary - level will control normally in automatic when level restores to < 85%

C. (1) closes <u>only</u> MFW regulating and bypass valves HCV-466 and HCV-480

(2) Depress MANUAL pushbuttons for MFW regulating valve and operate as necessary to control level

D. (1) closes <u>only</u> MFW regulating and bypass valves HCV-466 and HCV-480

(2) NO actions are necessary - level will control normally in automatic when level restores to < 85%

Answer: D

Explanation:

A. Incorrect. Plausible because part 1 is partially correct, and it is reasonable to also assume that the associated feedwater discharge isolation valve might also receive a high level isolation signal. Part 2 is plausible because this is the required action if a reactor trip occurs AND Manual operation of the MFW valves is desired.

B. Incorrect. Plausible because part 1 is partially correct, and it is reasonable to also assume that the associated feedwater discharge isolation valve might also receive a high level isolation signal. Part 2 is correct – normal operation will resume when the high level isolation signal is reset.

C. Incorrect. Plausible because part 1 is correct and part 2 is plausible if the candidate assumed that the HI-LEVEL isolation signal functioned similarly to the reactor trip + LOW Tavg signal, which can be overridden by MANUAL control if the Manual pushbuttons are held in Manual for >3 seconds.

D. CORRECT. Per AR-G-12, the HI LEVEL signal of 2/3 levels > 85% results in feedwater isolation signal on the AFFECTED S/G only. Normal operation is restored when the high level isolation signal is reset.

Technical Reference(s): AR-G-12, G-20 (Attach if not previously provided)

Proposed references to be provided to applicants during examination: None

Learning Objective: R4301C, 1.07

Question Source: Bank/VISION # _____
Modified Bank # 2011 Vogtle NRC (Note changes or attach parent)
New _____

Question History: Last NRC Exam _____

Question Cognitive Level: Memory or Fundamental Knowledge _____
Comprehension or Analysis X

10 CFR Part 55 Content: 55.41 .7
55.43 _____

Justification for K/A Match:

Matches the K/A by requiring knowledge of the Feedwater Isolation (FWI)signals and the actions required to restore main feedwater control following the FWI actuation.

Examination Outline Cross-reference:	Level	RO	SRO
	Tier #	2	
	Group #	1	
	K/A #	022	A1.04
	Importance Rating	3.2	

Ability to predict and/or monitor changes in parameters (to prevent exceeding design limits) associated with operating the CCS controls including: Cooling water flow

RO Question # 40

Given the following plant conditions:

- The plant is operating at 100% power
- A steam leak has occurred inside Containment for which an entry is being planned
- FCV-4561, CNMT CLR SW OUTLET flow controller has failed such that the valve is barely open
- The Containment Temperature is 110°F and slowly rising at approximately one degree F every 15 minutes
- The Containment Pressure is 0.5 psig and slowly rising at approximately one-tenth (0.1) of a pound (psig) every 10 minutes

Assuming that these trends continue, WHICH ONE of the following predicts the EARLIEST time at which the Containment Pressure and Temperature Technical Specifications will be exceeded?

A. The Containment Pressure LCO will be exceeded in 45-60 minutes; AND the Containment Temperature LCO will be exceeded in approximately 2.5 hours.

B. The Containment Pressure LCO will be exceeded in 45-60 minutes; AND the Containment Temperature LCO will be exceeded in approximately 3.75 hours.

C. The Containment Pressure LCO will be exceeded in 75-90 minutes; AND the Containment Temperature LCO will be exceeded in approximately 2.5 hours.

D. The Containment Pressure LCO will be exceeded in 75-90 minutes; AND the Containment Temperature LCO will be exceeded in approximately 3.75 hours.

Proposed Answer: B

Explanation:

A. Incorrect. 1st part correct, 2nd part wrong. This is incorrect because the Containment Temperature TS LCO will be exceeded in about 3.75 hours. This is plausible if the operator recalls the previous Containment Temperature TS LCO of .≤ 120°F and incorrectly bases his calculation on this value.

B. CORRECT. 1st part correct, 2nd part correct. According to TS LCO 3.6.4 (p.3.6.4-1; Amendment 80) Containment pressure shall be ≥ -2.0 psig and ≤ 1.0 psig. Consequently, it will be exceeded in approximately 50 minutes. According to TS LCO 3.6.5 (p3.6.5-1; Amendment 80) Containment average air temperature shall be ≤ 125°F. Consequently, it will be exceeded in approximately 3.75 hours.

C. Incorrect. 1st part wrong, 2nd part wrong. See A and D.

D. Incorrect. 1st part wrong, 2nd part correct. This is incorrect because the Containment Pressure TS LCO will be exceeded in about 50 minutes. This is plausible because the operator may not recall the Containment Pressure TS LCO parameter and base there calculation on an assumed higher value of 2 psig. This value is actually the negative pressure spec value for Containment.

Technical Reference(s): TS LCO 3.6.4 (p3.6.4-1; Amendment 80)
TS LCO 3.6.5 (p3.6.5-1; Amendment 80) (Attach if not previously provided)

Proposed References to be provided to applicants during examination: None

Learning Objective: R5101C 1.06 (As available)

Question Source: Bank #
Modified Bank # (Note changes or attach parent)
New X

Question History: Last NRC Exam: NA

Question Cognitive Level: Memory or Fundamental Knowledge
Comprehension or Analysis X

10 CFR Part 55 Content: 55.41 10
55.43

Comments:

Examination Outline Cross-reference:	Level	RO	SRO
	Tier #	2	
	Group #	1	
	K/A #	026 A1.03	
	Importance Rating	3.5	

Ability to predict and/or monitor changes in parameters (to prevent exceeding design limits) associated with operating the CSS controls including: Containment sump level

RO Question #41

Given the following:

- A Large LOCA has occurred in Containment.
- RWST level is 50% and lowering.
- Containment B Sump level indicators both read 78 inches.

WHICH ONE of the following describes how the Containment Sump level indicators will change over the next several minutes AND identifies the threshold required to transition from the injection phase to the recirculation phase?

Containment B Sump level indicators will.....

A. continually trend up as RWST levels trend down; AND
The transition to recirculation will occur at a Containment Sump level of 113 inches.

B. containment sump B level indicators will change at discrete level elevation changes due to actuation of level switches as RWST levels trend down; AND
The transition to recirculation will occur at Containment Sump level of 113 inches.

C. containment sump B level indicators will change at discrete level elevation changes due to actuation of level switches as RWST level trends down; AND
The transition to recirculation will occur at a Containment Sump level of 180 inches.

D. continually trend up as RWST level trends down; AND The transition to recirculation will occur at a Containment Sump level of 180 inches.

Answer: B

Explanation:

A. **Incorrect.** 1st part wrong. 1st part correct. This is incorrect because the Containment Sump B level indicator design is such that it relies upon float switches at discreet sump levels to be covered. This is plausible because there are several plant level indicators that are capable of real level indication at any given time (i.e. RWST level).

B. **Correct.** 1st part correct. 1st part correct. According to Lesson Plan R2701C (p38; Rev 27) the Control Room Containment Sump B level indications, LI-942 and 943, are two channels indicating water level at multiple heights: (1) 8 inches, (2) 78 inches, (3) 113 inches, (4) 180 inches, and (5) 214 inches. According to ES-1.3 (p3; Rev 04600), Step 2, the operator is directed to check Containment Sump B level at least 113 inches for the purposes of switching from the injection phase to the recirculation phase of the accident.

C. **Incorrect.** 1st part correct. 1st part wrong. This is incorrect because the threshold for switchover from the injection phase to the recirculation phase is 113 inches, not 180 inches. This is plausible because the Containment Sump B Level indicator has a level switch at 180 inches, it is the next higher switch directly above 113, and its significance is that this is just below the design flood level.

D. **Incorrect.** 1st part wrong. 1st part wrong. See A and C.

Technical Reference(s): ES-1.3 (p3; Rev 04600) (Attach if not previously provided)
Lesson Plan R2701C (p38; Rev 27)
EOP setpoint M.7, M.8,M.9

Proposed references to be provided to applicants during examination: None

Learning Objective: R4701C, 1.06;

Question Source: Bank/VISION # _____
Modified Bank # _____ (Note changes or attach parent)
New X

Question History: Last NRC Exam _____

Question Cognitive Level: Memory or Fundamental Knowledge X
Comprehension or Analysis _____

10 CFR Part 55 Content: 55.41 41.10
55.43 _____

Justification for K/A Match:

The KA is matched because the operator must demonstrate the ability to predict and/or monitor changes in parameters (i.e. Containment Sump Level) associated with operating the CSS controls when switching from the injection mode to the recirculation mode in the design basis accident.

The question is at the memory cognitive level because the operator must recall bits of information (i.e. procedure Note requirements) to answer the question correctly.

What MUST be known:
1. What is the design/operation of the Containment Sump Level indicators in the control room? 2. What is the Containment Sump B level threshold for switching from Injection to Recirculation mode of DBA?

Examination Outline Cross-reference:	Level	RO	SRO
	Tier #	2	
	Group #	1	
	K/A #	026 A3.01	
	Importance Rating	4.3	

Ability to monitor automatic operation of the CSS, including: Pump starts and MOV positioning

RO Question #42

Given the following plant conditions:

- A Large Break LOCA and Loss of Offsite Power have occurred
- EDG 'B' tripped while starting
- ES-1.3,TRANSFER TO COLD LEG RECIRCULATION, has been implemented
- Alignment for SI and CNMT Spray Sump Recirculation has been completed
- RWST is at 13% level

WHICH ONE of the following identifies which (1) RHR PUMP DISCHARGE TO SI SUCTION valve(s) will be open for RHR pumps to supply CNMT Spray Pump(s) and (2) which CNMT SPRAY PUMP(s) and DISCHARGE VALVE(s) will be open.

A. (1) MOV-857A and MOV-857C
(2) BOTH CNMT Spray pumps are running; MOV-860A, MOV-860B

B. (1) MOV-857A and MOV-857B
(2) BOTH CNMT Spray pumps are running; MOV-860A, MOV-860C.

C. (1) MOV-857A and MOV-857C
(2) A' CNMT Spray pump running; MOV-860A and MOV-860C

D. (1) MOV-857B
(2) A' CNMT Spray pump running; MOV-860B and MOV-860C

Answer: C

Explanation:

A. 1st part is correct 857 A &C are supplied by A train Power. 2nd Part Incorrect only the A Spray pump has power available and 860B is supplied from B train of power Plausible because 857A and C supply 'A' train and is correct while 857B is supplied from the 'B' train and is incorrect. The candidate will need to recall which valves supply which trains for the first part. If they do not have an understanding of the system flowpath they may choose the wrong valve. With a loss of off-site power and B EDG the B train components will be lost. Only A train components will be operable.MOV-860B is incorrect since this is a B train component.

B. Incorrect. 1st part is wrong as only the A train will be supplied thus only 857A and C will be open. Part Incorrect only the A Spray pump has power available

C. CORRECT. MOV-857A and MOV-857C are in series, and 'B' train pumps and valves are NOT available due to the LOOP and trip of 'B' EDG.

D. Incorrect. 857B is supplied from the B train of power Plausible because 857A and C supply 'A' train and is correct while 857B supplies the 'B' train and is incorrect. The candidate will need to recall which valves supply which trains for the first part. If they do not have an understanding of the system flowpath they may choose the wrong valve. With a loss of off-site power and B EDG the B train components will be lost. Only A train components will be operable.MOV-860D is incorrect since this is a B train component.

Technical Reference(s): P-12 pgs 35,45-47 (Attach if not previously provided)

Proposed references to be provided to applicants during examination: None

Learning Objective: RES13C 2.02;
R2401C 1.05 & 1.09

Question Source: Bank/VISION #
Modified Bank # 2011 HBR NRC (Note changes or attach parent)
New

Question History: Last NRC Exam

Question Cognitive Level: Memory or Fundamental Knowledge
Comprehension or Analysis X

10 CFR Part 55 Content: 55.41 .7
55.43

Justification for K/A Match:

Implicit because the candidate needs to identify which valves stroke with which pumps.

Examination Outline Cross-reference:	Level	RO	SRO
	Tier #	2	
	Group #	1	
	K/A #	039 A2.01	
	Importance Rating	3.1	

Ability to (a) predict the impacts of the following malfunctions or operations on the MRSS; and (b) based on predictions, use procedures to correct, control, or mitigate the consequences of those malfunctions or operations: Flow paths of steam during a LOCA

RO Question #43

Given the following plant conditions:

- A LOCA has occurred coincident with loss of offsite power
- RCS pressure is 1100 psig and stable
- CNMT pressure is 9 psig and stable
- The crew is implementing ES-1.2, POST-LOCA COOLDOWN AND DEPRESSURIZATION

WHICH ONE of the following describes the method, rate, and indicator that will be used to cool down the RCS until normal RHR can be placed in service?

Perform the cooldown using _____.

A. S/G ARVs at a rate of $\leq$ 25°F/hr, using core exit thermocouples

B. S/G ARVs at a rate between 80-100°F/hr, using core exit thermocouples

C. Condenser steam dumps at a rate of $\leq$ 25°F/hr, using cold leg temperature

D. Condenser steam dumps at a rate between 80-100°F/hr, using cold leg temperature

Answer: B

Explanation:

A. Incorrect. Plausible because the method of C/D is correct (with offsite power not available) in part 1, and part 2 is plausible because with RCPs secured, some EOPs establish a maximum C/D of 25°F/hr to prevent bubble formation in the core.

B. CORRECT. With offsite power (and Circulating Water pumps) not available, steam dumps are not available and cooldown must be performed using the S/G ARVs. Most of the EOPs want to maximize the cooldown rate without challenging the FR-P cooldown rate restrictions, so C/D is limited to < 100°F/hr.

C. Incorrect. Plausible if the candidate overlooked that fact that loss of offsite power had rendered steam dumps inoperable, and part 2 is plausible because with RCPs secured, some EOPs establish a maximum C/D of 25°F/hr to prevent bubble formation in the core.

D. Incorrect. Plausible because part 2 is correct and if the candidate overlooked that fact that loss of offsite power had rendered steam dumps inoperable.

Technical Reference(s): ES-1.2 Bkgd, ES-1.2 pg. 11 (Attach if not previously provided)

Proposed references to be provided to applicants during examination: None

Learning Objective: RES12C 1.06 & 2.01

Question Source: Bank/VISION # B360.005
Modified Bank # _____ (Note changes or attach parent)
New _____

Question History: Last NRC Exam _____

Question Cognitive Level: Memory or Fundamental Knowledge _____
Comprehension or Analysis X

10 CFR Part 55 Content: 55.41 .10
55.43 _____

Justification for K/A Match:

Matches K/A by requiring identification of which MRSS heat removal method will be used to cooldown the RCS for a given set of plant conditions a rate which will maximize the beneficial effects of the cooldown while mitigating the effects of the higher-than-normal cooldown rates in avoiding PTS concerns.

Examination Outline Cross-reference:	Level	RO	SRO
	Tier #	2	
	Group #	1	
	K/A #	059 K3.03	
	Importance Rating	3.5	

Knowledge of the effect that a loss or malfunction of the MFW will have on the following: S/Gs

RO Question #44

Given the following plant conditions:

- The plant is at 70% power
- 'B' MFW pump trips

Assuming no operator actions, WHICH ONE of the following describes the INITIAL plant response?

A. Main Feedwater regulating valves modulate open and maintain S/G levels

B. Main Feedwater regulating valves modulate open, but S/G levels continue to lower

C. Main Feedwater regulating AND bypass valves modulate open and maintain S/G levels

D. Main Feedwater regulating AND bypass valves modulate open , but S/G levels continue to lower

Answer: B

Explanation:

A. Incorrect. Plausible response, but 60-65% is the maximum feedwater flow that a single MFW pump can maintain S/G levels.

B. CORRECT. With the FRV Bypass valves in MANUAL, they will not respond to this transient. The FRVs will attempt to maintain program S/G levels, but at this power level, S/G levels cannot be maintained. Per the Background document, simulator scenarios with power > 75% have demonstrated that the reactor will trip on S/G level: AFW pumps must be started to augment the decreased MFW flow from the 'B' MFP trip, and load reduced to maintain S/G levels stable.

C. Incorrect. Plausible if the candidate assumes that both the main and bypass valves respond similarly, but the bypass valves are normally in MANUAL at power. Per the AP-FW.1 Background document, power must be reduced to 50%.

D. Incorrect. Plausible if the candidate assumes that both the main and bypass valves respond similarly, but the bypass valves are normally in MANUAL at power. Part 2 is correct.

Technical Reference(s): AP-FW.1 Background (Attach if not previously provided)

Proposed references to be provided to applicants during examination: None

Learning Objective: R4301C, 1.10; RAP09C 2.01

Question Source: Bank/VISION # 107494

Modified Bank # _____ (Note changes or attach parent)

New _____

Question History: Last NRC Exam _____

Question Cognitive Level: Memory or Fundamental Knowledge _____

Comprehension or Analysis X

10 CFR Part 55 Content: 55.41 .10

55.43 _____

Justification for K/A Match:

Matches the K/A by requiring knowledge of the effect of a single MFW pump loss on maintaining S/G level with an initial power level of 70%.

Examination Outline Cross-reference:	Level	RO	SRO
	Tier #	2	
	Group #	1	
	K/A #	059 A4.08	
	Importance Rating	3.0	

Ability to manually operate and monitor in the control room: Feed regulating valve controller

RO Question #45

Given the following plant conditions:

- The plant is at 100% power
- Due to instability problems with Feedwater flow to the B S/G, BOTH the 'B' feedwater regulating valve controller HCV-476, AND the 'B' feedwater bypass valve controller HCV-481 have been placed in MANUAL.

WHICH ONE of the following conditions would result in both FRV-476 and FRV-481 closing while in MANUAL?

A. High level > 85% in 'A' S/G

B. Trip of BOTH main feed pumps

C. Reactor trip with Tavg less than 554°F

D. A fault on 'B' S/G which results in 'A' S/G pressure < 500 psig

Answer: D

Explanation:

A. Incorrect. Plausible because the valves will close on S/G level >85% in the *associated* S/G, but incorrect because this high level condition is on the opposite S/G.

B. Incorrect. Plausible because there are interlocks (e.g., start of both MDAFW pumps) tied to the trip of both MFW pumps, but not which results in the FRV and FRBVs closing.

C. Incorrect. Plausible because this combination of signals will result in FRV and FRBV closure, but only when the controllers are in AUTO. Incorrect because it's given the controllers are in MANUAL.

D. CORRECT. Any Safety Injection actuation signal will result in automatic closure of FRVs and FRBVs, and the given S/G low pressure condition on the 'A' will result in an SI signal.

Technical Reference(s): P-1 (Attach if not previously provided)

Proposed references to be provided to applicants during examination: None

Learning Objective: R3101C, 1.07;

Question Source: Bank/VISION # 67196
Modified Bank # _____ (Note changes or attach parent)
New _____

Question History: Last NRC Exam _____

Question Cognitive Level: Memory or Fundamental Knowledge X
Comprehension or Analysis _____

10 CFR Part 55 Content: 55.41 .7
55.43 _____

Justification for K/A Match:

Matches the K/A by requiring knowledge of what will conditions will automatically close the feedwater regulating valves while controlling in Manual.

Examination Outline Cross-reference:

Level	RO	SRO
Tier #	2	
Group #	1	
K/A #	061 K5.01	
Importance Rating	3.6	

Knowledge of the operational implications of the following concepts as the apply to the AFW: Relationship between AFW flow and RCS heat transfer

RO Question #46

Given the following:

The plant has been operating for the past 100 Hours

WHICH ONE of the following conditions will result in the need for the MOST Auxiliary Feedwater System flow required to maintain S/G levels constant following a reactor trip?

	Core Burnup	Initial Power Level
A.	1,000 MWD/MTU	10%
B.	1,000 MWD/MTU	100%
C.	10,000 MWD/MTU	10%
D.	10,000 MWD/MTU	100%

Answer: D

Explanation:

A. Incorrect. Plausible because the BOL conditions may be selected due to the highest fuel load (Kexcess) and incorrectly equating this to decay heat. Low power might be chosen due to the fact that the Steamline Break (SLB) is the limiting accident for Shutdown Margin, ITS 3.1.1, but the Feedline Break determines the AFW flow requirement (FSAR 15.2.7) which is the higher power.

B. Incorrect. Plausible part 2 is correct and it's incorrect because of the BOL conditions as stated above.

C. Incorrect. Plausible because part 1 is correct and part 2 is per A explanation above.

D. CORRECT. The FSAR feedline break (FSAR 15.2.7) determines the 195 gpm AFW flow requirement per excerpt below:

15.2.7.4.1 Input Parameters and Initial Conditions

- NSSS power up to 1817 MWt is assumed.
- Conservative core residual heat generation rates assume long-term operation at the initial power level preceding the reactor trip.
- The following AFW assumptions were made: for a feedline break outside the intermediate building, 195 gpm of AFW went to the intact steam generator and was initiated 60 sec after the steam generator low-low level signal. For a feedline break inside the intermediate building, 215 gpm of SAFW went to the intact steam generator and was initiated 870 sec after the steam generator low-low level signal.

Technical Reference(s): FSAR Chapter 15.2.7 (p.117 & 118) (Attach if not previously provided)

Proposed references to be provided to applicants during examination: None

Learning Objective: RTA03C 1.01; R4201C 1.09

Question Source: Bank/VISION # 2007 Callaway NRC

Modified Bank # (Note changes or attach parent)

New

Question History: Last NRC Exam

ıestion Cognitive Level:	Memory or Fundamental Knowledge	
	Comprehension or Analysis	X

10 CFR Part 55 Content:	55.41	.4
	55.43	

Justification for K/A Match:

Matches the K/A by understanding the impact which core Burnup (and decay heat quantity) have on the heat transfer requirements of the AFW system.

¯xamination Outline Cross-reference:	Level	RO	SRO
	Tier #	2	
	Group #	1	
	K/A #	062 K3.01	
	Importance Rating	3.5	

Knowledge of the effect that a loss or malfunction of the ac distribution system will have on the following: Major system loads

RO Question #47

Given the following plant conditions:

- An accident has resulted in automatic SI and Containment Spray actuation
- CNMT pressure is 30 psig and slowly lowering
- SI has NOT yet been reset
- Bus 16 NORMAL Supply breaker has just tripped
- 'B' EDG output breaker closed and re-energized Bus 16

WHICH ONE of the following describes the response of 'B' SI and CS pumps?

A. Both pumps will automatically restart

B. Both pumps must be manually restarted using the individual pump breaker controls

C. 'B' SI pump will automatically restart, but 'B' CS pump must be started manually using its individual pump breaker control

D. 'B' CS pump will automatically restart, but 'B' SI pump must be manually started using its individual pump breaker control

Answer: A

Explanation:

A. CORRECT. Following the SI actuation, the subsequent UV condition (1/2 + 1/2 UV sensors) on Bus 16 trips the B & C SI pump breakers, B & C CRFs, B MDAFW pump, and B RHR pump. Since SI has not been reset, the actuation signal is still present and when the 'B' EDG re-energizes Bus 16 (SI+UV sequence), the 'B' SI pump breaker recloses and the 'B' CS pump (whose breaker was never stripped and does not open on UV), is re-energized. Both components restart "automatically" with no actions required.

B. Incorrect. Plausible if the candidate does not recognize that the SI signal is still present nor recognize that the CS pump does not have UV protection.

C. Incorrect. Plausible because part 1 is correct and if, in part 2, the candidate fails to recognize that the CS pump does not have UV protection and does not need to be manually restarted.

D. Incorrect. Plausible because part 1 is correct and part 2 is plausible if the candidate fails to recognize that the SI signal has not been reset and ECCS components will restart.

Technical Reference(s): 33013-1353, Sheets 5 & 8 (Attach if not previously provided)
P-12

Proposed references to be provided to applicants during examination: None

Learning Objective: R0701C 1.06

Question Source: Bank/VISION # 61956
Modified Bank # _____ (Note changes or attach parent)
New _____

Question History: Last NRC Exam _____

Question Cognitive Level: Memory or Fundamental Knowledge _____
Comprehension or Analysis X

10 CFR Part 55 Content: 55.41 ..7
55.43 _____

Justification for K/A Match:

Matches the K/A by requiring an assessment of the loss of a 480V Safeguards bus safeguards-related equipment.

amination Outline Cross-reference:	Level	RO	SRO
	Tier #	2	
	Group #	1	
	K/A #	062 A3.04	
	Importance Rating	2.7	

Ability to monitor automatic operation of the ac distribution system, including: Operation of inverter (e.g., precharging synchronizing light, static transfer)

RO Question #48

With the plant at 100% power, 125 volt Battery A Disconnect Switch opens.

WHICH ONE of the following describes the effect on Inverter A?

Inverter 'A' output voltage will _____(1)_____ and what action is required?
_____(2)_____

A.
(1) remain the same,
(2) None, because Inverter operation is NOT affected.

B.
(1) lower
(2) Manually transfer to the backup AC power supply.

C.
(1) lower
(2) None, because the static transfer switch to shift to the backup AC power supply.

D.
(1) remain the same,
(2) None, because the static transfer switch will shift to the backup AC power supply.

Answer: A

Explanation:

A **Correct.** According to Lesson Plan R0901C (p19; Rev 35), the Battery Chargers convert AC power to regulated DC power supplying the DC station loads, including the Inverters, and maintaining the station batteries in a state of readiness to accept the design based DC loads for the required time. If the Battery Charger were to fail, the Battery would immediately and imperceptibly power the normal supply to the Inverter. Additionally, the Inverters receive the DC power from the Battery Chargers, invert it to AC power, and power the AC Instrument Bus. When the normal power supply fails, the Static Switch automatically switches to the backup AC power supply. Under the stated conditions, the opening of the A Battery Disconnect Switch will NOT affect the normal or the backup supply to the Inverter.

B. **Incorrect.** This is incorrect because the Inverter A Output Voltage will NOT lower. This is plausible because the operator may not understand how the Battery Charger/Battery operate under normal circumstances, nor understand the operation of the Static Switch.

C. **Incorrect.** This is incorrect because the Inverter A Output Voltage will NOT lower. This is plausible because the operator may not understand how the Battery Charger/Battery operate under normal circumstances.

D. Incorrect. This is incorrect because the Static Switch will NOT shift. This is plausible because the operator may not understand the operation of the Static Switch.

Technical Reference(s): Lesson Plan R0901C (p19; Rev 35) (Attach if not previously provided)

Proposed references to be provided to applicants during examination: None

Learning Objective: R0901C, Obj. 1.04

Question Source: Bank/VISION # _____
Modified Bank # 62492 (Note changes or attach parent)
New _____

Question History: Last NRC Exam _____

Question Cognitive Level: Memory or Fundamental Knowledge X
Comprehension or Analysis _____

10 CFR Part 55 Content: 55.41 41.7
55.43 _____

'ıstification for K/A Match:

ı he KA is matched because the operator must demonstrate the ability to monitor automatic operation of the 120 vital inverter. This is accomplished by identifying how Inverter output voltage responds to a failure of a Battery Disconnect under normal plant alignment.

The question is at the Comprehension/Analysis cognitive level because the operator must recall bits of information (i.e. normal power alignment to inverter, operation of Static Switch), and compare this information to stated plant conditions, in order to answer the question correctly.

What MUST be known:
1. How is DC voltage normally supplied to the Vital Inverters? 2. How does the Inverter Static Switch operate? 3. What happens to the Inverter if the Battery Disconnect Switch is inadvertently opened during normal operating alignment?

Examination Outline Cross-reference:	Level	RO	SRO
	Tier #	2	
	Group #	1	
	K/A #	063 K1.03	
	Importance Rating	2.9	

Knowledge of the physical connections and/ or cause relationships between the DC electrical system and the Battery charger and battery

RO Question #49

WHICH ONE of the following lists the possible power sources to the 1B DC Fuse Cabinet?

A. 1B Inverter, 1A Inverter, TSC Battery Charger

B. 1B Inverter, 1B1 Battery Charger, TSC Battery Charger

C. 1B Battery Charger, 1B1 Battery Charger, 1B Battery, TSC Battery

D. 1B Battery Charger, 1B Main DC Distribution Panel, 1B Battery, TSC Battery

Answer: C

Explanation:

A. Incorrect. Plausible, all possible with the exception of 1B Main DC Distribution Panel which is a load on the system. Plausible, all possible with the exception of Inverters which are loads on the system.

B. Incorrect. Plausible, all possible with the exception of 1B Inverter which is a load on the system.

C. CORRECT

D. Incorrect. Plausible, all possible with the exception of 1B Main DC Distribution Panel which is a load on the system.

Technical Reference(s): P-12 (Attach if not previously provided)

Proposed references to be provided to applicants during examination: None

Learning Objective: R0901C 1.02, 1.04

Question Source: Bank/VISION # 67650
Modified Bank # _____ (Note changes or attach parent)
New _____

Question History: Last NRC Exam _____

Question Cognitive Level: Memory or Fundamental Knowledge _____
Comprehension or Analysis X

10 CFR Part 55 Content: 55.41 41.7 ,41.9
55.43 _____

Justification for K/A Match:

Examination Outline Cross-reference:	Level	RO	SRO
	Tier #	2	
	Group #	1	
	K/A #	063 2.2.42	
	Importance Rating	3.9	

DC Electrical Distribution System: Ability to recognize system parameters that are entry-level conditions for Technical Specifications.

RO Question #50

Given the following:

- The plant is cooling down with RCS Temperature at 340°F.
- The 1A Battery Charger is OOS.

Subsequently, the Electricians report that the 1A1 Battery Charger is degraded to the point that it can supply a MAXIMUM of 140 amps of Battery charging capacity.

WHICH ONE of the following identifies (1) the status of compliance with, and (2) applicability of, LCO 3.8.4, DC Sources - MODES 1, 2, 3, and 4?

Under the current plant conditions LCO 3.8.4 is __(1)__ and __(2)__ applicable.

A. (1) met
(2) is

B. (1) NOT met
(2) is

C. (1) met
(2) is NOT

D. (1) NOT met
(2) is NOT.

Answer: B

Explanation:

A. **Incorrect.** 1st part wrong, 2nd part correct. This is incorrect because LCO 3.8.4 is NOT met. This is plausible because the operator may not know that a minimum of 150 amps of charging capacity is required for operability.

B. **Correct.** 1st part correct, 2nd part correct. According to Technical Specification Table 1.1-1, Modes of Operation (p1.1-6; Amendment 100), the plant is currently in Mode 4. According to TS LCO 3.8.4, DC Sources - MODES 1, 2, 3, and 4 (p3.8.4-1; Amendment 80), the Train A and Train B DC electrical power sources shall be OPERABLE. According to TS LCO 3.8.4 basis (pB3.8.4-4; Rev 41), the Train A and Train B DC electrical power sources, each consisting of one battery, a charging capacity of at least 150 amps, and the corresponding control equipment and interconnecting cabling within the train are required to be OPERABLE to ensure the availability of the required power to shut down the reactor and maintain it in a safe condition after an AOO or a postulated OBA. Since each Battery Charger is rated at 200 amps, the LCO will still be met with the 1A Battery Charger OOS. However, when the Electricians report the degraded status of the 1A1 Battery Charger, the minimum of 150 amps of Battery Charging capacity no longer exists. Consequently, the TS LCO is NOT met, and the LCO is applicable in Mode 4.

C. **Incorrect.** 1st part correct, 2nd part wrong. This is incorrect because LCO 3.8.4 is applicable. This is plausible because the operator may incorrectly believe that the plant is in Mode 5, in which case the TS LCO may not be applicable.

D. **Incorrect.** 1st part wrong, 2nd part wrong. See A and C.

Technical Reference(s): TS Table 1.1-1, Modes of Operation (p1.1-6; Amendment 100)
TS LCO 3.8.4 (p3.8.4-1; Amendment 80)
TS LCO 3.8.4 basis (pB3.8.4-4; Rev 41)

(Attach if not previously provided)

Proposed references to be provided to applicants during examination: None

Learning Objective: R0901C 1.06, 1.13

Question Source: Bank/VISION # _____
Modified Bank # 68545 (Note changes or attach parent)
New _____

Question History: Last NRC Exam _____

Question Cognitive Level:	Memory or Fundamental Knowledge	
	Comprehension or Analysis	X

10 CFR Part 55 Content:	55.41	41.7
	55.43	

Justification for K/A Match:

The question matches the K/A by evaluation of LCO requirements

Examination Outline Cross-reference:	Level	RO	SRO
	Tier #	2	
	Group #	1	
	K/A #	064 K6.08	
	Importance Rating	3.2	

Knowledge of the effect of a loss or malfunction of the following will have on the ED/G system: Fuel oil storage tanks

RO Question #51

Given the following plant conditions:

- A loss of offsite power had occurred
- Both diesel generators started and loaded as expected
- While monitoring EDG operation, the Auxiliary Operator reports the following conditions on 'A' and 'B' EDGs:

	'A' EDG	'B' EDG
Day tank Sightglass Level	6" and ↓	12" and ↑
Fuel Oil Transfer Pump Discharge Pressure	44 psig	15.5 psig
Fuel Transfer Pump Suction Duplex Strainer D/P	0.5 psid	2.8 psid

WHICH ONE of the following describes the reason for these conditions and the consequence, if any, to EDG operation?

A. 'A' Fuel Oil Transfer Pump is not functioning properly due to indications of higher discharge pressure; cross tie the fuel systems per ER-D/G.1, RESTORING D/G's, to prevent pump damage

B. The Fill SOV is not functioning properly; manually operate the Fill SOV Bypass to fill the 'A' EDG Day Tank to recover the 'A' EDG Day Tank level

C. The 'A' Fuel Oil Transfer Pump Suction Duplex Strainer is clogged and must be swapped immediately to ensure a minimum of one (1) hour of operation at full load

D. The 'A' Recirc SOV has opened on low Day Tank level to prevent vortexing of the 'A' EDG Fuel Oil Booster pump and loss of fuel to 'A' EDG

Answer: B

Explanation:

A. Incorrect. Plausible if the candidate is unaware of the nominal parameters associated with Fuel Oil Transfer pump discharge pressure and Fuel Oil Strainer D/P. The given indications are that the discharge flowpath through the Fill SOV is blocked, which has raised discharge pressure to the discharge relief valve RV-5959 setpoint, which is lifting (~43-45 psig setpoint) to protect the running pump. If it WERE malfunctioning, it could be secured and an alternate method of filling a running EDG's day tank would be to utilize the other EDG's fuel oil transfer pump.

B. CORRECT. With the fuel oil transfer pump running (automatically started at 10" day tank level), and normal, stable discharge pressure (> 12 psig) indicated, normal (< 5.5 psid) fuel suction strainer operation, and day tank level still lowering after the pump start, a failure of the fill line SOV is indicated. This SOV can be bypassed by opening a manual bypass valve, V-5937.

C. Incorrect. Plausible if the candidate does not know the nominal parameter associated with proper duplex strainer operation (D/P <5.5 psid), and believes the requirement for a minimum of one hour of continuous operation is linked to this parameter. ITS SR 3.8.1.4 is actually linked to verification of sight glass level (8.75") in the day tank to verify adequate fuel oil.

D. Incorrect. Plausible if the candidate does not understand that the Recirc valve on the EDG day tanks cycles open at a HIGH level condition of 13.5" (the transfer pump started with the EDG running and LOW level of 10" in the Day Tanks. The EDG Fuel Oil Booster pump WILL develop vortexing conditions on LOW level in the tank.

Technical Reference(s): ER-D/G.1, AR-DG-A-2 (Attach if not previously provided)

Proposed references to be provided to applicants during examination: None

Learning Objective: R1801C 1.07, 1.08

Question Source: Bank/VISION # _____
Modified Bank # _____ (Note changes or attach parent)
New X

Question History: Last NRC Exam _____

Question Cognitive Level: Memory or Fundamental Knowledge _____
Comprehension or Analysis X

10 CFR Part 55 Content: 55.41 .7
55.43 _____

Justification for K/A Match:

Matches the K/A by requiring an assessment of symptoms associated with the maintenance of proper fuel oil storage capacity (day tank) and determining what impact those malfunctions could have on continued EDG operation.

Examination Outline Cross-reference:	Level	RO	SRO
	Tier #	2	
	Group #	1	
	K/A #	073 K4.01	
	Importance Rating	4.0	

Knowledge of PRM system design feature(s) and/or interlock(s) which provide for the following: Release termination when radiation exceeds setpoint

RO Question #52

Given the following plant conditions:

- The plant is operating at 100% power
- E-16, RMS PROCESS MONITOR HIGH ACTIVITY, alarms
- R-19, STEAM GENERATOR BLOWDOWN radiation monitor WARNING and HIGH alarms are lit
- No other abnormal RMS indications currently exist

WHICH ONE of the following describes the response of the S/G Blowdown ISOLATION and Blowdown SAMPLE valves?

A. ONLY AFFECTED S/G Blowdown isolation valve closes

B. ONLY AFFECTED S/G Blowdown and Sample isolation valves close

C. ONLY S/G 'A' and S/G 'B' Blowdown isolation valves close

D. BOTH S/Gs' Blowdown and Sample isolation valves close

Answer: D

Explanation:

A. Incorrect. Plausible because it is standard procedure within AP-SG.1 and E-3 to isolate the leaking/ruptured S/G once it is identified. Also plausible because the larger size of the blowdown piping represents a much larger potential radiation release pathway and because the need to sample the S/Gs during the SGTL/SGTR might preclude automatic isolation of the sample lines.

B. Incorrect. Plausible because it is standard procedure within AP-SG.1 and E-3 to isolate the leaking/ruptured S/G once it is identified, and it is correct that the R-19 isolation signal affects both blowdown isolation AND sample valves (but on BOTH S/Gs).

C. Incorrect. Plausible because the larger size of the blowdown piping represents a much larger potential radiation release pathway and because the need to sample the S/Gs during the SGTL/SGTR might preclude automatic isolation of the sample lines. The fact that *both* S/Gs are receiving the isolation signal is correct.

D. CORRECT. Per the AR-RMS-19 and P-9 references, a high ALARM condition on R-19 isolates both S/Gs' blowdown and sample valves.

Technical Reference(s): P-9, AR-RMS-19 (Attach if not previously provided)

Proposed references to be provided to applicants during examination: None

Learning Objective: R3901C 1.07

Question Source: Bank/VISION # _____
Modified Bank # 108916 (Note changes or attach parent)
New _____

Question History: Last NRC Exam 2012 Ginna RO Makeup

Question Cognitive Level: Memory or Fundamental Knowledge X
Comprehension or Analysis _____

10 CFR Part 55 Content: 55.41 .11
55.43 _____

Justification for K/A Match:

Matches the K/A by requiring knowledge of the automatic isolation which occurs in the blowdown and sample lines when process rad monitor R-19 reaches Alarm setpoint.

Examination Outline Cross-reference:	Level	RO	SRO
	Tier #	2	
	Group #	1	
	K/A #	076 K1.08	
	Importance Rating	3.5	

Knowledge of the physical connections and/or cause- effect relationships between the SWS and the following systems: RHR system

RO Question #53

Given the following plant conditions:

- A LOCA has occurred which resulted in automatic SI and CI signals
- Coincident with the SI actuation, a loss of offsite power occurred
- 'A' EDG failed to start

WHICH ONE of the following describes the impact on the Service Water (SW) and RHR systems?

A. SW pumps A and C will supply cooling flow to ALL service water loads

B. SW pumps B and D will supply cooling flow to ALL service water loads

C. SW is isolated to <u>only</u> CCW heat exchanger 'B' and must be re-aligned to establish Cold Leg Recirculation flow

D. SW is isolated to <u>both</u> CCW heat exchangers and must be re-aligned to establish Cold Leg Recirculation flow

Answer: D

Explanation:

A. Incorrect. Plausible if the candidate confuses the power supply configuration between Bus 18 (which is lost, and supplies A & C SW pumps) with Bus 17 and does not recognize that with the UV condition on Train 'B' + SI, the nonessential loads will be isolated due to the Train B SW isolation signal.

B. Incorrect. Plausible because the correct SW pumps are identified, and if the candidate does not recognize that with the UV condition on Train 'B' + SI, the nonessential loads will be isolated due to the Train B SW isolation signal.

C. Incorrect. Plausible because, as a non-essential load, the CCW heat exchangers must be aligned following the SW isolation signal from Train B. Candidate must also recognize the configuration of the SW isolation MOVs, in that each of the non-essential loads has two valves in series, and closure of either the Train A valve or the Train B valve will result in flow isolation to both CCW HXs.

D. CORRECT. Failure of EDG 'A' will result in the loss of Busses 14 & 18. The resultant UV conditions (Normal 480V Supply Breaker trip) + the SI signal will result in SW isolation signals to non-essential loads serviced by MOVs 4609, 4614, 4615, 4616, 4663, and 4670. This includes BOTH CCW heat exchangers, which will be needed for the RHR heat exchangers when establishing Cold Leg Recirc flowpath.

Technical Reference(s): ITS 3.7.8 Basis (Attach if not previously provided)

Proposed references to be provided to applicants during examination: None

Learning Objective: R5101C 1.07, 1.08
RER03C 2.02

Question Source: Bank/VISION # _____
Modified Bank # _____ (Note changes or attach parent)
New X

Question History: Last NRC Exam _____

Question Cognitive Level: Memory or Fundamental Knowledge _____
Comprehension or Analysis X

10 CFR Part 55 Content: 55.41 .7
55.43 _____

Justification for K/A Match:

Matches the K/A by requiring an assessment of plant conditions to recognize SW isolation signal, and which SW loads which have been isolated will impact operation of the RHR on Cold Leg Recirculation.

Examination Outline Cross-reference:	Level	RO	SRO
	Tier #	2	
	Group #	1	
	K/A #	078 K2.02	
	Importance Rating	4.5	

Knowledge of bus power supplies to the Emergency air compressor

RO Question #54

Given the following plant conditions:

- The plant is operating at 100% power
- Instrument air compressors 1A and 1B are in constant speed
- 1C instrument air compressor is tagged for maintenance
- Bus 13 normal supply breaker has tripped on bus fault
- Instrument air pressure is 100 psig and slowly lowering
- H-8, INSTRUMENT AIR LO PRESS 100 PSIG, is lit

WHICH ONE of the following would mitigate the loss of air event?

A. Crosstie 480V Bus 15 to Bus 16 per AP-ELEC.1, LOSS OF 12A AND/ OR 12B BUSSES

B. Locally verify that AOV-5251, SA crosstie to IA is OPEN

C. Verify running, or start, the Service Air Compressor

D. Crosstie Diesel Air Compressor per ATT-11.2, DIESEL AIR COMPRESSOR

Answer: D

Explanation:

A. Incorrect. Plausible because this is the correct RNO action per Step 3 of AP-IA.1, but Bus 15 would be cross-tied to Bus 14, NOT Bus 16.

B. Incorrect. Plausible because AOV-5251 would be open to cross-tie service air with the instrument air header, but ineffective since the SA compressor is without power from Bus 13.

C. Incorrect. Plausible if the candidate does not know the correct power supply to the service air compressor, which is Bus 13 (de-energized).

D. CORRECT. The 'C' IA compressor is held, 'A' IA and the SA compressors are powered from Bus 13 (de-energized), and the 'B' IA compressor is unable to maintain IA pressure. The remaining option, with lowering IA pressure per Step 4 of AP-IA.1, is to crosstie either the diesel and/or the breathing air compressor per ATT-11.2 or T-2F, BACKUP AIR SUPPLY.

Technical Reference(s): AP-IA.1, ATT-11.2 (Attach if not previously provided)

Proposed references to be provided to applicants during examination: None

Learning Objective: R4701C, 1.10

Question Source: Bank/VISION # 67427
Modified Bank # _____ (Note changes or attach parent)
New _____

Question History: Last NRC Exam _____

Question Cognitive Level: Memory or Fundamental Knowledge _____
Comprehension or Analysis X

10 CFR Part 55 Content: 55.41 .4
55.43 _____

Justification for K/A Match:

Matches the K/A by requiring knowledge of which air compressors are available to mitigate the lowering instrument air pressure with Bus 13 de-energized.

Examination Outline Cross-reference:	Level	RO	SRO
	Tier #	2	
	Group #	1	
	K/A #	103 K4.04	
	Importance Rating	2.5	

Knowledge of containment system design feature(s) and/or interlock(s) which provide for the following: Personnel access hatch and emergency access hatch

RO Question #55

The plant is in Mode 6 and core alterations, head lift is in progress. WHICH ONE of the following conditions will result in a loss of containment refueling integrity?

A. The equipment hatch "bolted in place" and held in place by only 8 bolts, equally spaced with no gaps

B. Removal of the fuel transfer tube flange with fuel transfer canal isolation valve, V-650J closed.

C. Movement of material through the equipment hatch with the door interlocks disabled, doors can be closed within 40 minutes.

D. An 'A' S/G safety valve is removed and all 'A' S/G secondary manways are installed inside Containment.

Answer: C

Explanation:

A. Plausible, Not all bolts are installed, only 4 are required.
B. Plausible, closure is only required above mode 5
C. CORRECT, closure is required within 30 min.
D. Plausible, the S/G isolation boundary can be either on the primary or secondary. .

Technical Reference(s): ITS B 3.9.3 (Attach if not previously provided)

Proposed references to be provided to applicants during examination: None

Learning Objective: RRF02C 5.01 R2101C 1.07, 1.12

Question Source: Bank/VISION # _____
Modified Bank # 62920 (Note changes or attach parent)
New _____

Question History: Last NRC Exam _____

Question Cognitive Level: Memory or Fundamental Knowledge _____
Comprehension or Analysis X

10 CFR Part 55 Content: 55.41 41.7
55.43 _____

Justification for K/A Match:

The question matches the K/A by asking the inter-relationship and implication of disablibling equipment hatch interlocks

Examination Outline Cross-reference:	Level	RO	SRO
	Tier #	2	
	Group #	2	
	K/A #	001 K.203	
	Importance Rating	2.7	

Knowledge of bus power supplies to the following: One-line diagram of power supplies to logic circiuits.

RO Question #56

The plant was at normal full-power alignment, when the 'A' MG set Output Breaker inadvertently tripped. WHICH ONE of the following describes the results of this action?

A. No adverse impact. The 'B' MG set will provide all rod and all control system power.

B. One half of the power cabinets lose power, those rods will not move the stationary/ movable gripper coils get reduced current.

C. No immediate impact, one half of the power cabinets lose power, if rod motion is demanded, the applicable rods will drop.

D. All control rods will drop

Answer: A

Explanation:

A. CORRECT

B. Plausible because if power were lost to power cabinets an urgent failure would occur which use reduced currents

C. Plausible; if power were lost, rods could drop, but power is not lost.

D. Plausible if power were lost to power cabinet rods could drop.

Technical Reference(s): R3001C Rod Control (Attach if not previously provided)
AR-C-21

Proposed references to be provided to applicants during examination: None

Learning Objective: R3001C, 1.05;

Question Source: Bank/VISION # _____
Modified Bank # 62236 (Note changes or attach parent)
New _____

Question History: Last NRC Exam _____

Question Cognitive Level: Memory or Fundamental Knowledge _____
Comprehension or Analysis X

10 CFR Part 55 Content: 55.41 41.7
55.43 _____

Justification for K/A Match:

The question matches the K/A by evaluation of power to rod control components

Examination Outline Cross-reference:	Level	RO	SRO
	Tier #	2	
	Group #	2	
	K/A #	002 A3.01	
	Importance Rating	3.7	

Ability to monitor automatic operation of the RCS, including: Reactor coolant leak detection

RO Question #57

The plant is operating at 100% power with the following conditions:

- Both Containment Sump 'A' level indicating channels are inoperable.
- RM-10A/11/12 PUMP is inoperable
- V1590 CONTAINMENT AIR/PLANT VENT CROSS TIE ISOL cannot be opened
- PLANT VENT GASEOUS (R-14) OR PARTICULATE (R-13) MONITORS are aligned for normal operation
- Containment Condensate Collectors are operable

The following events occur:

- Annunciator C-19, CONTAINMENT SUMP A HI LEVEL is lit
- Annunciator C-18, CONTAINMENT SUMP A PUMP AUTO START, is NOT illuminated

With regard to the RMS system, WHICH ONE of the following is the MOST restrictive Tech Spec action required?

A. Restore particulate monitor R-11 within 1 hour

B. Restore noble gas monitor R-12 within 1 hour

C. Perform SR 3.4.13.1, RCS Operational LEAKAGE immediately

D. Enter LCO 3.0.3 immediately

Answer: D

Explanation:

A. Plausible,1 hour requirement to verify R-11 operable is Tech Spec condition associated with Containment Isolation function of R-11.

B. Plausible,1 hour requirement to verify Noble Gas monitor operable is Tech Spec condition associated with Containment Isolation function of R-12.

C. Plausible, with all leak detection inoperable, seems likely action, is a action with portions of the leak detection system inoperable.

D. CORRECT, ITS 3.4.15 require 3 instrumentation systems for OPERABILITY, the conditions make all 3 INOPERABLE. Since all 3 channels INOPERABLE, ITS 3.4.15, F applies requiring entry into LCO 3.0.3.

Technical Reference(s): ITS 3.4.15 (Attach if not previously provided)

Proposed references to be provided to applicants during examination: None

Learning Objective: R1001C 1.12, 1.13

Question Source: Bank/VISION # _____
Modified Bank # 104887 (Note changes or attach parent)
New _____

Question History: Last NRC Exam _____

Question Cognitive Level: Memory or Fundamental Knowledge _____
Comprehension or Analysis X

10 CFR Part 55 Content: 55.41 41.7
55.43 _____

Justification for K/A Match:

The question matches the K/A by asking ITS 3.4.15 LCO required Leak Detection systems and knowledge of 1 hour of less Tech Specs.

Examination Outline Cross-reference:	Level	RO	SRO
	Tier #	2	
	Group #	2	
	K/A #	011 K5.11	
	Importance Rating	2.5	

Knowledge of the operational implications of the following concepts as they apply to the PZR LCS: Reasons for selecting "manual" on letdown control valve controller.

RO Question #58

Given the following:

- The plant was at 100% power
- Normal letdown was removed from service for maintenance

HOW would Pressurizer level be maintained (long term) with Normal Letdown secured:

A. Adjust HCV-142, CHARGING FLOW TO REGENERATIVE HEAT EXCHANGER, to minimize Regenerative HX charging flow

B. Manually open of HCV-133, RHR LETDOWN TO CVCS, to control Low Pressure Purification in flow

C. Manually open HCV-123, EXCESS LETDOWN HX FLOW CONTROL VALVE and establish Excess Letdown

D. Adjust valves 300A and 300B, SEAL INJ NEEDLE VLV TO RCP A/B, to minimize RCP Seal Injection

Answer: C

Explanation:

A. Incorrect. Plausible because the candidate could associate PZR level control with adjustments in charging and Seal Injection flow. With an adjustment in the manually operated seal injection valves it could be plausible that PZR level would change. This is true except that with normal letdown removed from service, the PZR level will continue to rise, but at a different rate, until a letdown path has been restored With normal letdown isolated, the Charging pumps would potentially be reduced to one pump operation and flow adjusted using speed control until normal or excess letdown can be restored, thus the candidate may associate charging flow adjustment with HCV-142.

B. Incorrect. Plausible because HCV-133 is a component in excess letdown and is addressed by procedure S-3.2E, and if the candidate is not familiar with CVCS they may believe this to be correct to help control PZR level. Limiting in-flow to CVCS system by manually operating HCV-133 would be an option. The candidate will need to recognize that this valve would not normally be opened at power or for the conditions and thus makes this incorrect.

C. CORRECT. With Normal Letdown out of service the excess letdown will need to be in placed service IAW S-3.2E to avoid overfilling the PZR due to the charging-letdown mismatch. Part of the lineup will require the operator to manually operate HCV-123 and establish excess letdown flow.

D. Incorrect. Plausible because the candidate could associate PZR level control with adjustments in charging and Seal Injection flow. With an adjustment in the manually operated seal injection valves it could be plausible that PZR level would change. This is true except that with normal letdown removed from service, the PZR level will continue to rise, but at a different rate, until a letdown path has been restored

Technical Reference(s): S-3.2E, UFSAR 9.3.4.2.2.1 (Attach if not previously provided)

Proposed references to be provided to applicants during examination: None

Learning Objective: R1901C 1.04, 1.08
R1601C 1.07.,1.08

Question Source: Bank/VISION #
Modified Bank # 61052 (Note changes or attach parent)
New

Question History: Last NRC Exam

Question Cognitive Level: Memory or Fundamental Knowledge
Comprehension or Analysis X

10 CFR Part 55 Content:	55.41	41.5
	55.43	

Justification for K/A Match:

The question describes circumstances in which manual operation of the PZR level control system is required. Therefore a question on the reason for operating the Excess Letdown manual controller fits the K/A.

Facility: Ginna

Vendor: WEC

Exam Date: 12/3/14

Exam Type: RO

Examination Outline Cross-reference:

Level	RO	SRO
Tier #	2	
Group #	2	
K/A #	014	K1.01
Importance Rating	3.2	

Knowledge of the physical connections and/or cause effect relationships between the RPIS and the following systems: CRDS

RO Question: #59

Given the following:

- The plant was at 100% power
- A loss of off-site power and REACTOR TRIP occurred.
- The immediate actions of E-0, Reactor Trip or Safety Injection, and been directed by the CRS and completed by the control board operators.

Which ONE (1) of the following correctly describes the rod position indication (MRPI) the crew will observe?

A. All MRPI indications are ZERO steps;
All Group Step Counters are at 0 steps;
The Control Rod Drive Mechanisms are energized.

B. All MRPI indications read ZERO steps;
All Group Step Counters are at same value as prior to the trip;
The Control Rod Drive Mechanisms are de-energized.

C. All MRPI indications are blank, replaced by "all control and shutdown rods on bottom" message;
All Group Step Counters are at 0 steps;
The Control Rod Drive Mechanisms are energized.

D. All MRPI indications are blank, replaced by "all control and shutdown rods on bottom" message;
All Group Step Counters are at same value as prior to the trip:
Control Rod Drive Mechanisms are de-energized.

Proposed Answer: B

Explanation (Optional):

A. **Incorrect.** 1st part correct, 2nd part wrong, 3rd part wrong. This is incorrect because the Groups Step Counters are at the same position they were prior to the trip, and because the CRDMs are NOT energized. This is plausible because the operator may incorrectly believe that the GPIS signal comes from actual rod position indication, and that the CRDMs are energize to function.

B. **Correct.** 1st part correct, 2nd part correct, 3rd part correct. According to Lesson Plan R3101C (p11, 16 & 23; Rev 23), MRPI is powered from MCC K which is powered off Bus14. This bus will be re-energized when the D/G starts and repowers the MCC. On a reactor trip the step counters will read the last demanded position, and MRPI indicates all control and shutdown rods on bottom. According to Lesson Plan R3001C (p37; Rev 26), when the reactor trip breakers open, power is lost to the CRDMs and the control rods will drop into the core.

C. **Incorrect.** 1st part wrong, 2nd part wrong, 3rd part wrong. This is incorrect because MRPI will indicate that all rods are on the bottom, Groups Step Counters are at the same position they were prior to the trip, and because the CRDMs are NOT energized. This is plausible because the operator may incorrectly believe that MRPI is de-energized, the GPIS signal comes from actual rod position indication, and that the CRDMs are energize to function.

D. **Incorrect.** 1st part wrong, 2nd part correct, 3rd part correct. This is incorrect because MRPI will indicate that all rods are on the bottom. This is plausible because the operator may incorrectly believe that MRPI is de-energized.

Technical Reference(s): Lesson Plan R3101C (p11, 22 & 23; Rev 19)
E-0 (Attach if not previously provided)

Proposed References to be provided to applicants during examination: None

Learning Objective: R3101C, Obj 1.07 (As available)

Question Source: Bank #

Modified Bank # (Note changes or attach parent)

New X

Question History: Last NRC Exam: NA

Question Cognitive Level: Memory or Fundamental Knowledge X

Examination Outline Cross-reference:	Level	RO	SRO
	Tier #	2	
	Group #	2	
	K/A #	015 2.2.25	
	Importance Rating	3.2	

NIS: Knowledge of the bases in Technical Specifications for limiting conditions for operations and safety limits

RO Question #60

WHICH ONE of the following describes how large AXIAL Xenon oscillations are prevented?

A. Operators use the control rods to maintain the Axial Flux Difference (Delta-I) within a band, which will limit Xenon oscillations

B. Operators monitor the Quadrant Power Tilt Ratio (QPTR) to verify it is within specification to prevent Xenon oscillations

C. The calculation of the OPΔT setpoint include a factor based upon Delta-I which will prevent Xenon oscillations by initiating a reactor trip

D. Xenon oscillations are prevented by the addition of natural uranium "blankets" at the top and bottom of the core

Answer: A

Explanation:

A. CORRECT. Per the ITS Basis for LCO 3.2.3, Axial Flux Distribution, the purpose of the LCO is to establish limits on the values of the AFD in order to limit the amount of axial power distribution skewing to either the top or bottom of the core. By limiting the amount of power distribution skewing, core peaking factors are consistent with the assumptions used in the safety analyses. Limiting power distribution skewing over time also minimizes the xenon distribution skewing, which is a significant factor in axial power distribution control.

B. Incorrect. Plausible because, per the ITS Basis for LCO 3.2.4, QPTR, limiting the QPTR prevents RADIAL xenon oscillations and will indicate any core asymmetries.

C. Incorrect. Plausible because the OPΔT setpoint does include consideration of ΔI in the setpoint formula, but the value is set to zero (0).

D. Incorrect. Plausible because the addition of enriched fuel at the top and bottom of the fuel assemblies is there for a reason (leakage considerations), but not to prevent xenon oscillations.

Technical Reference(s): ITS Bases 3.2.3, 3.2.4 (Attach if not previously provided)

Proposed references to be provided to applicants during examination: None

.earning Objective: R3301C 1.12

Question Source: Bank/VISION # 65570

Modified Bank # _____ (Note changes or attach parent)

New _____

Question History: Last NRC Exam _____

Question Cognitive Level: Memory or Fundamental Knowledge X

Comprehension or Analysis _____

10 CFR Part 55 Content: 55.41 .2, .7

55.43 _____

Justification for K/A Match:

Matches the K/A by requiring knowledge of the bases for LCOs relating to NIS role in preventing xenon oscillations to prevent exceeding core power distribution limits.

Examination Outline Cross-reference:	Level	RO	SRO
	Tier #	2	
	Group #	1	
	K/A #	016 K4.03	
	Importance Rating	2.8	

Knowledge of NNIS design features(s) and / or interlock(s) which provide for the following: Input to control systems

RO Question #61

The plant is operating at 98% power when a Reactor Trip occurs.

WHICH ONE of the following describes how the Main Feedwater Regulating Valves (FRVs) will respond to the reactor trip?

A. If AVG Tavg is < 554°F, the FRVs will close

B. If AVG Tavg increases to >554°F, the FRVs will snap open

C. If AVG Tavg is < 554°F, the FRVs will modulate OPEN only on ADFCS level error

D. If AVG Tavg is > 554°F, the FRVs will modulate CLOSED only on ADFCS flow error

Answer: A

Explanation:

A. CORRECT. Post trip when Tavg is less than 554°F, the logic commands the FRVs to close.

B. Plausible, AFDCS will control valve position on a reactor trip when Tavg > 554°F, but the valves do not "snap open".

C. Plausible, AFDCS will control valve position when Tavg > 554°F. If Tavg is < 554°F, the FRV's do not respond to ADFCS demand signal.

D. Plausible, FRV's respond to an AFDCS level error signal, not a flow error. Due to the reactor trip, S/G level will shrink and the valves will modulate open in response.

Technical Reference(s): P-1 (Attach if not previously provided)

Proposed references to be provided to applicants during examination: None

Learning Objective: R2001C 1.04, 1.07

Question Source: Bank/VISION # 67038
Modified Bank # _____ (Note changes or attach parent)
New _____

Question History: Last NRC Exam _____

Question Cognitive Level: Memory or Fundamental Knowledge X
Comprehension or Analysis _____

10 CFR Part 55 Content: 55.41 41.7
55.43 _____

Justification for K/A Match:

The question matches the K/A by requiring knowledge of the inter-relationship between RCS TEMP (NNIS) and Feed Water FRV control.

6.3.2 (Continued)

5. Feedwater Control

   a. High level override for feedwater valve closure - 85% of level span

      LC-461A / LC-462B

      LC-463D / LC-471A

      LC-472B / LC-473D

   b. FRV Tavg control (automatic control mode when reactor tripped with Main FRVs in Auto) - 554°F

      TC-401F

      Valve closure on low Tavg

   c. Level control:

      - Level program as function of Arbitrated Turbine inlet Chamber Pressure (ADFCS)
      - For Turbine load 0% to 100%, programmed S/G Level Setpoint is a constant 52%
      - Level controller (ADFCS)

        Two modes of operation based on Loop Feedwater Flow

        High Power Mode Loop feedwater flow 25% increasing

        Low Power Mode Loop feedwater flow 15% decreasing

6.3.2.5 (Continued)

d. AMSAC

- 3/4 feed flows less than 25%

  FC-466 / FC-467 / FC-476 / FC-477

AND

- 2/2 1st stage pressures greater than 40% reactor power (approximately 225 psig)

  PT-485 / PT-486

AFTER a variable time delay (depending on reactor power), will cause a turbine trip **AND** start all 3 AFW Pumps.

WHEN 1/2 1st stage pressures is less than 40% reactor power (approximately 225 psig), **THEN** AMSAC will AUTO BLOCK after a 205 second time delay.

6. Rod Control System

- Control bank overlap (thumbwheel switches in rod control logic cabinet)

S1 - Start B with A	130 Steps
S2 - Stop A	224 Steps
S3 - Start C with B	260 Steps
S4 - Stop B	355 Steps
S5 - Start D with C	390 Steps
S6 - Stop C	485 Steps

Examination Outline Cross-reference:	Level	RO	SRO
	Tier #	2	
	Group #	2	
	K/A #	034 K6.02	
	Importance Rating	2.6	

Knowledge of Knowledge of the effect of a loss or malfunction on the following will have on the Fuel Handling System: Radiation monitoring systems

RO Question #62

Refueling Activities are in progress in the Containment Building. While performing Daily Checks it is noted that the sample pump for R-11, Containment Air Particulate Monitor, is not running.
WHICH ONE of the following statements is applicable to this condition?

A. R-11 is OPERABLE and refueling activities may continue. The sample pump is not normally running when purge is in service supplying sample flow.

B. R-11 is INOPERABLE and refueling activities may continue as long as R-10A, Containment Iodine Monitor is operable for Containment Vent Isolation

C. R-11 is INOPERABLE and refueling activities must be stopped due to Containment Vent Isolation Instrumentation being inoperable

D. R-11 is OPERABLE and refueling activities may continue. The Containment Air Particulate Monitor sample pump is only required for the RCS LEAK DETECTION function of the monitor

Answer: C

Explanation:

A. Plausible, The piping arrangement of the sample lines from containment purge exhaust is pressurized to cause flow from containment to the atmosphere with a flowpath. to the R-11 monitor and the candidate can infer therefore that no sample pump is needed for sample flow. INCORRECT since the pump is required to be in operation per LCO 3.3.5, CVI Instrumentation therefore is not OPERABLE and refueling activities must be halted until R-11 is made operable.

B. Plausible, See item distractor A plausibility. R-11 is inoperable and refueling cannot continue even if R-10A is operable. R-11 is required to be operable.

C. CORRECT

D. Plausible, See item distractor A plausibility and per ITS 3.4.15 is required for LCO compliance, however not applicable for the conditions given. R-11 inoperable makes the CVI instrumentation inoperable. The backup criticality monitoring is not lost when R-11 is inoperable

Technical Reference(s): ITS B3.3.5 (Attach if not previously provided)

Proposed references to be provided to applicants during examination: None

Learning Objective: R3701C 1.12, 1.13
RRF02C 5.0

Question Source: Bank/VISION # 63863
Modified Bank # _____ (Note changes or attach parent)
New _____

Question History: Last NRC Exam 2006 Ginna RO

Question Cognitive Level: Memory or Fundamental Knowledge _____
Comprehension or Analysis X

10 CFR Part 55 Content: 55.41 41.7
55.43 _____

Examination Outline Cross-reference:	Level	RO	SRO
	Tier #	2	
	Group #	2	
	K/A #	041 A1.01	
	Importance Rating	2.9	

Ability to predict and/or monitor changes in parameters (to prevent exceeding design limits) associated with operating the SDS controls, including: T-ave., verification above low/low setpoint

RO Question #63

Given the following plant conditions:

- Plant startup in progress
- Turbine just placed on line holding at 55 MW
- The Steam Dump Mode Selector switch is in MANUAL, with HC-484 in AUTO.
- The First set of Steam Dump Valves is partially open
- PT-484, Main Steam Header Pressure, fails off-scale high.

Assuming no operator action,

(1) WHAT will be the status of steam dumps

and

(2) WILL RCS Tavg stabilize above or below the required **RCS Minimum Temperature for Criticality**?

A. (1) Steam Dumps remain closed.
(2) RCS temperature rises to ARV setpoint above the required temperature for criticality

B. (1) Steam Dumps open
(2) RCS temperature rapidly lowers until steam dumps start close at 547°F, RCS temperature will lower to 535°F, below the required temperature for criticality

C. (1) Steam Dumps remain closed.
(2) RCS temperature rises to SG safety setpoint above the required temperature for criticality

D. (1) Steam Dumps open
(2) RCS temperature rapidly lowers until auto SI and Main Steam Line Isolation below the required temperature for criticality

Answer: D

:planation:

A. Incorrect: Failure of PT-484 will result in the Steam Dump opening fully. Plausible, since the trainee selecting the wrong effect of the PT-484 failure would make both parts of this distractor appear to be correct. If the Valves closed the S/G pressure would rise till the ARVs opened.

B. Incorrect. With a PT-484 failure the Steam Dumps will not close at 547°F Plausible If the trainee doesn't understand that the Steam Dump are operating in Pressure Control Mode. The expected response would be that the SD open and remain open until the operator manually closes the valves

C. Incorrect: Failure of PT-484 will result in the Steam Dump opening fully. Plausible, since the trainee selecting the wrong effect of the PT-484 failure would make both parts of this distractor appear to potentially be correct. If the Valves closed the S/G pressure would rise however it is expected that the ARV would .terminate the pressure rise

D. CORRECT Failure of PT-484 will result in SD valve fully opening when in Pressure control mode. The temperature will lower until terminated by an SI signal and Steamline isolation. The temperature will lower below the MIN Temp for criticality prior to SI occurring.

echnical Reference(s): P-1 (Attach if not previously provided)

Proposed references to be provided to applicants during examination: None

Learning Objective: R4501C 1.10

Question Source: Bank/VISION # _____
Modified Bank # 62410 (Note changes or attach parent)
New _____

Question History: Last NRC Exam _____

Question Cognitive Level: Memory or Fundamental Knowledge _____
Comprehension or Analysis X

10 CFR Part 55 Content: 55.41 41.5
55.43 _____

Justification for K/A Match:

ıe question matches the K/A by EVALUATION of steam dump status and RCS temp

Examination Outline Cross-reference:	Level	RO	SRO
	Tier #	2	
	Group #	2	
	K/A #	071 A4.24	
	Importance Rating	2.9	

Ability to manually operate and/or monitor in the control room:
The double verification required before waste gas release

RO Question #64

Prior to the release of a Gas Decay Tank, in addition to the authorization by Shift Manager, Att.1, Gaseous Waste Release Form must be authorized by___(1)____and the alarm set point of___(2)____monitor must be verified in the Control Room.

A. (1) Chemistry Analyst
(2) R-10B, Plant Vent Iodine

B. (1) Chemistry Supervision
(2) R-10B, Plant Vent Iodine

C. (1) Chemistry Analyst
(2) R-14, Plant Vent Noble Gas

D. (1) Chemistry Supervision
(2) R-14, Plant Vent Noble Gas

Answer: D

Explanation:
A. Incorrect. Plausible liquid releases require authorization from Chemistry Supervision. If the candidate does not recognize that this is a different requirement then they may assume this to be the correct answer. 2nd part is plausible if the candidate associates the R-10B with alarm set point for releases.

B. Incorrect.1st part is correct. Plausible if the candidate does not understand the correct radiation monitor equipment associated with GDT releases

C.Incorrect. Plausible liquid releases require authorization from Chemistry Supervision. If the candidate does not recognize that this is a different requirement then they may assume this to be the correct answer. Plausible if the candidate does not understand the correct radiation monitor equipment associated with GDT releases

D.CORRECT. R-14 Is the correct monitor used in releases of GDTs. For GDT releases, Chemistry supervision is required as spelled out in procedure CH-703, which is different from liquid release

Technical Reference(s): P-9, CH-703 (Attach if not previously provided)

Proposed references to be provided to applicants during examination: None

Learning Objective: R3901C, 1.09;

Question Source: Bank/VISION # _____
Modified Bank # _____ (Note changes or attach parent)
New X

Question History: Last NRC Exam _____

Question Cognitive Level: Memory or Fundamental Knowledge _____
Comprehension or Analysis X

10 CFR Part 55 Content: 55.41 .7
55.43 _____

Justification for K/A Match: The question matches the K/A by EVAUATION of two authorization required, and which RMS monitor setpoint must be verified

Examination Outline Cross-reference:	Level	RO	SRO
	Tier #	2	
	Group #	2	
	K/A #	072 A2.01	
	Importance Rating	2.7	

Ability to (a) predict the impacts of the following malfunctions or operations on the ARM system- and (b) based on those predictions, use procedures to correct, control, or mitigate the consequences of those malfunctions or operations: Erratic or failed power supply

RO Question #65

Given the following conditions:

- Plant is in MODE 5.
- Irradiated Fuel movement is in progress in the Spent Fuel Pool
- E-24 RMS AREA MONITOR HIGH ACTIVITY, is in alarm
- R-5, Spent Fuel Pit loses power
- Operator have entered AR-RMS-5, R-5 Spent Fuel Pit

WHICH ONE of the following describes the impact on (1) Aux Building Ventilation Alignment and (2) Irradiated Fuel movement in the Spent Fuel Pool?

A. (1) "C" Aux Bldg Exhaust Fan trips
(2) Immediately suspend Irradiated Fuel movement

B. (1) No change in Aux Building Ventilation Alignment
(2) Immediately suspend Irradiated Fuel movement

C. (1) "C" Aux Bldg Exhaust Fan trips
(2) Continue Irradiated Fuel movement.

D. (1) No change in Aux Building Ventilation Alignment
(2) Continue Irradiated Fuel movement.

Answer: B

Explanation:

A. Plausible, "C" Aux Bldg Exhaust Fan trips on high radiation on R-13/R-14. TRM TR 3.9.2 LCO A, requires immediate suspension of fuel movement.
B. CORRECT.
C. Plausible, "C" Aux Bldg Exhaust Fan trips on high radiation on R-13/R-14. TRM TR 3.9.2 LCO A, requires immediate suspension of fuel movement not continue and replace monitor. Once the monitor is replaced fuel movement can commence.
D. Plausible, first part correct TRM TR 3.9.2 LCO A, requires immediate suspension of fuel movement not continue and replace monitor. Once the monitor is replaced fuel movement can commence.

Technical Reference(s): TRM 3.9.2, RF-8.4, AR-RMS-5 (Attach if not previously provided)

Proposed references to be provided to applicants during examination: None

Learning Objective: R3901C 1.12

Question Source: Bank/VISION # _____
Modified Bank # _____ (Note changes or attach parent)
New X

Question History: Last NRC Exam _____

Question Cognitive Level: Memory or Fundamental Knowledge _____
Comprehension or Analysis X

10 CFR Part 55 Content: 55.41 41.5
55.43 _____

Justification for K/A Match:

Examination Outline Cross-reference:	Level	RO	SRO
	Tier #	3	
	Group #	1	
	K/A #	2.1.8	
	Importance Rating	4.5	

Ability to coordinate personnel activities outside the control room.

RO Question #66

Given the following plant conditions:

- A station blackout has occurred
- The crew is performing actions of ECA-0.0, Loss of All AC Power
- Off-Site power has NOT been restored
- BOTH EDGs are tripped and have NOT been restarted
- SGs depressurization is in progress

WHICH ONE of the following actions may be taken to provide power to a safeguards bus, and the procedure used following the power restoration?

Direct an AO/Electrician(s) to align the TSC Diesel to power BUS_____. The BUS _____ considered restored when power is aligned and the crew _____.

A. 14; IS; will continue in ECA-0.0

B. 14; IS NOT; must remain in ECA-0.0 until an Emergency D/G or off-site power is aligned to Bus 14 or 16.

C. 16; IS; will continue in ECA-0.0.

D. 16; IS NOT; must remain in ECA-0.0 until an Emergency D/G or off-site power is aligned to Bus 14 or 16

Answer: D

Explanation:

A. Incorrect. Plausible if unsure of the electrical lineup since the TSC diesel is aligned to Bus 15 and then cross-tied to Bus 16.

B. Incorrect. Plausible if unsure of the electrical lineup since the TSC diesel is aligned to Bus 15 and then cross-tied to Bus 16.

C. Incorrect. Plausible if the NOTE in ECA-0.0 is not understood.

D. Correct. Note prior to ECA-0.0, Step 27.

Technical Reference(s): ECA-0.0 (Attach if not previously provided)

Proposed references to be provided to applicants during examination: None

Learning Objective: REC00C 1.02
RER05C 1.02, 1.05

Question Source: Bank/VISION # 94754
Modified Bank # (Note changes or attach parent)
New

Question History: Last NRC Exam

Question Cognitive Level: Memory or Fundamental Knowledge
Comprehension or Analysis X

10 CFR Part 55 Content: 55.41 .10
55.43

Justification for K/A Match:

Matches the K/A by requiring knowledge of the need for field personnel to take actions per an EOP.

Facility: Ginna

Vendor: WEC

Exam Date: 12/3/14

Exam Type: RO

Examination Outline Cross-reference:

Level	RO	SRO
Tier #	3	
Group #	1	
K/A #	2.1.14	
Importance Rating	3.1	

Knowledge of criteria or conditions that require plant-wide announcements, such as pump starts, reactor trips, mode changes, etc.

Proposed Question: RO Question # 67

WHICH ONE of the following conditions would require the Control Room personnel to announce over the plant PA system that the plant evacuation alarm is applicable ONLY to personnel in CNMT, and then sound the Plant Evacuation Alarm?

A. Area monitor R-2 containment at 6 mR/hr.

B. A stuck fuel assembly during fuel movement.

C. Shutdown count rate rises by a factor of three.

D. R-11 containment atmosphere particulate at 130 cpm.

Proposed Answer: C

Explanation (Optional):

A. **Incorrect.** This is incorrect because it does NOT meet a condition identified in Section 3.1 of A-3. This is plausible because the condition for evacuation and the site-wide announcement is unexpected radiation monitor alarms, and the operator may incorrectly believe that this is an unexpected reading on R-2. According to P-9 (p25; Rev 09900), the Warning alarm occurs at 30 mrem/hour and the High alarm occurs at 50 mrem/hour.

B. **Incorrect.** This is incorrect because According to RF-601 (p10-11; Rev 00201), there is no need to evacuate the Containment simply for a Stuck Fuel Assembly. This is plausible because the operator might not know the criteria for evacuation during various stuck fuel assembly scenarios (i.e. high rads, increasing gas concentrations); and

incorrectly believe that this condition presents a hazard to personnel within the Containment.

C. **Correct.** According to AR-E-29 (p1; Rev 00702), if the SOURCE RANGE HI FLUX AT SHUTDOWN annunciator alarms, the operator will be directed to check the SR indication, and if the neutron flux is actually rising, then evacuate Containment. According to A-3 (p4; Rev 06800), Control Room personnel SHALL sound the Plant Evacuation Alarm if degraded conditions are noted, such as (1) Increasing RCS leakage, (2) Unexpected CNMT radiation monitor alarms, (3) Increasing gas, particulate or iodine concentrations, or (4) Any other condition which threatens personnel safety. Consequently, the Plant Evacuation Alarm should be sounded if the SR flux rises by a factor of 3. However, this procedure also states that prior to sounding the Plant Evacuation Alarm to evacuate the CNMT, Control Room personnel SHALL announce over the plant PA system that the plant evacuation alarm is applicable ONLY to personnel in CNMT. Consequently, under this condition, the Control Room crew must first announce over the plant PA system that the plant evacuation alarm is applicable ONLY to personnel in CNMT, and then sound the Plant Evacuation Alarm.

D. **Incorrect.** This is incorrect because it does NOT meet a condition identified in Section 3.1 of A-3. This is plausible because the condition for evacuation and the site-wide announcement is unexpected radiation monitor alarms, and the operator may incorrectly believe that this is an unexpected reading on R-11. According to P-9 (p25; Rev 09900), the Warning alarm occurs at 1E4 cpm and the High alarm occurs at 2E4 cpm.

echnical Reference(s): AR-E-29 (p1; Rev 00702)
A-3 (p4; Rev 06800) (Attach if not previously provided)

Proposed References to be provided to applicants during examination:

Learning Objective: (As available)

Question Source: Bank #
Modified Bank # (Note changes or attach parent)
New X

Question History: Last NRC Exam: NA

Question Cognitive Level: Memory or Fundamental Knowledge
Comprehension or Analysis X

10 CFR Part 55 Content: 55.41 10
55.43

Comments:

The KA is matched because the operator must demonstrate Knowledge of criteria or conditions that require plant-wide announcements, such as pump starts, reactor trips, mode changes, etc. In this case, the announcement is made to control a required plant specific-area evacuation. This situation arises from the fact that the Containment Evacuation Alarm is often disabled (inoperable until less than 200F). Consequently, A-3 requires that the Plant Evacuation Alarm be used, requiring the prior announcement to control the subsequent evacuation (i.e. don't want personnel outside Containment to evacuate).

The question is at the Comprehension/Analysis cognitive level because the operator must recall bits of information (Criteria for Containment Evacuation), and then evaluate four conditions to determine if the criteria has been met, in order to answer the question correctly.

What MUST be known:
17. What are the criterion for sounding the Plant Evacuation Alarm when operating within the requirements of A-3? 18. Does the SR rising by a factor of three meet the criteria for evacuating Containment? 19. Does R-2 rising 6 mrem/hour meet the criteria for evacuating Containment? 20. Does a stuck fuel assembly during fuel movement meet the criteria for evacuating Containment? 21. Does R-11 rising to 130 cpm meet the criteria for evacuating Containment?

:amination Outline Cross-reference:

Level	RO	SRO
Tier #	3	
Group #	1	
K/A #	2.1.26	
Importance Rating	3.4	

Knowledge of industrial safety procedures (such as rotating equipment, electrical, high temperature, high pressure, caustic, chlorine, oxygen and Hydrogen).

RO Question #68

WHICH ONE of the following is the MAXIMUM Oxygen concentration above which a GDT must be immediately removed from service or re-use?

A. 3%

B. 4%

C. 21%

D. 75%

Answer: B

Explanation:

A. Incorrect. Plausible because > 3% Oxygen concentration is an action level associated with GDT operation in which the concentration must be reduced to < 2%.

B. CORRECT. Procedures CH-SAMP-MSA and CH-163 state that with a concentration > 4% Oxygen, the GDT must be removed immediately from service.

C. Incorrect. Plausible because if the candidate is unsure of the exact value, they may assume that 21% which can be associated with the normal concentration of Oxygen in air is the limit.

D. Incorrect. Plausible because the explosive limit is associated with Huydrogen and if

Technical Reference(s): CH-SAMP-MSA, CH-163, ITS 5.1.11, (Attach if not previously provided)

Proposed references to be provided to applicants during examination: None

Learning Objective: R3801C, Obj. 8.01

uestion Source: Bank/VISION #

Modified Bank # CALLAWAY 07 NRC (Note changes or attach parent)

New

Question History: Last NRC Exam

Question Cognitive Level: Memory or Fundamental Knowledge

Comprehension or Analysis X

10 CFR Part 55 Content: 55.41 41.10

55.43

Justification for K/A Match:

Examination Outline Cross-reference:	Level	RO	SRO
	Tier #	3	
	Group #	2	
	K/A #	2.2.37	
	Importance Rating	3.6	

Ability to determine operability and/or availability of safety-related equipment.

RO Question #69

Given the following conditions:

- The plant is operating at 100% power
- A loss of DC Bus 'A' occurs

WHICH ONE of the following describes equipment that will be made INOPERABLE by this failure?

A. ALL steam dump valves

B. MOV-860D CS PUMP B DISCH VLV

C. Turbine driven AFW pump

D. Train 'A' SI Actuation Circuitry

Answer: D

Explanation:

A. Incorrect. Plausible because the candidate may recall that losing *one* of the DC busses affects all Steam Dump valves and could incorrectly believe that to be the 'A' bus. DC Bus 'B' is the single DC bus that will result in the loss of ALL steam dump valves. Losing Bus 'A' will fail four of eight valves closed, and the remaining will fail either full open or full closed.

B. Incorrect. Plausible because the candidate will have to recall which DC bus powers which 860 valve. For this event, 860C is rendered inoperable, but 860D is affected by DC Train 'B'.

C. Incorrect. Plausible if the candidate does not recall which components are powered from which DC trains, and since there are components of the TDAFW pump powered from DC trains, they may believe this to be the correct answer by assuming that a loss of the DC bus makes the pump inoperable. If DC Bus 'B' was lost,, the TDAFW pump discharge MOV would fail as-is, but Train 'A' does not affect TDAFW, and does not render the pump inoperable.

D. CORRECT. DC Bus 'A' provides power to the Train 'A' SI actuation circuits.

Technical Reference(s): ER-ELEC.2 (Attach if not previously provided)

Proposed references to be provided to applicants during examination: None

Learning Objective: RER07C 1.02, 2.01

Question Source: Bank/VISION # 94755
Modified Bank # _____ (Note changes or attach parent)
New _____

Question History: Last NRC Exam 2010 Ginna

Question Cognitive Level: Memory or Fundamental Knowledge _____
Comprehension or Analysis X

10 CFR Part 55 Content: 55.41 .7
55.43 _____

Justification for K/A Match:

Matches the K/A because the candidate must demonstrate knowledge of DC safety-related equipment power supplies, and base on equipment failures, demonstrate the ability to determine if the equipment is INOPERABLE.

Examination Outline Cross-reference:	Level	RO	SRO
	Tier #	3	
	Group #	2	
	K/A #	2.2.41	
	Importance Rating	3.5	

Ability to obtain and interpret station electrical and mechanical drawings.

RO Question #70

Given the following sequence of events:

- MOV-865, SI Accumulator B Dish to LOOP A, was full open
- The MCB switch for MOV-865 was placed in the CLOSE position and then released
- MOV-865 is stroking closed

Using the print, identify WHICH ONE of the following is the DESIGNED method to stop the valve when it is fully closed?

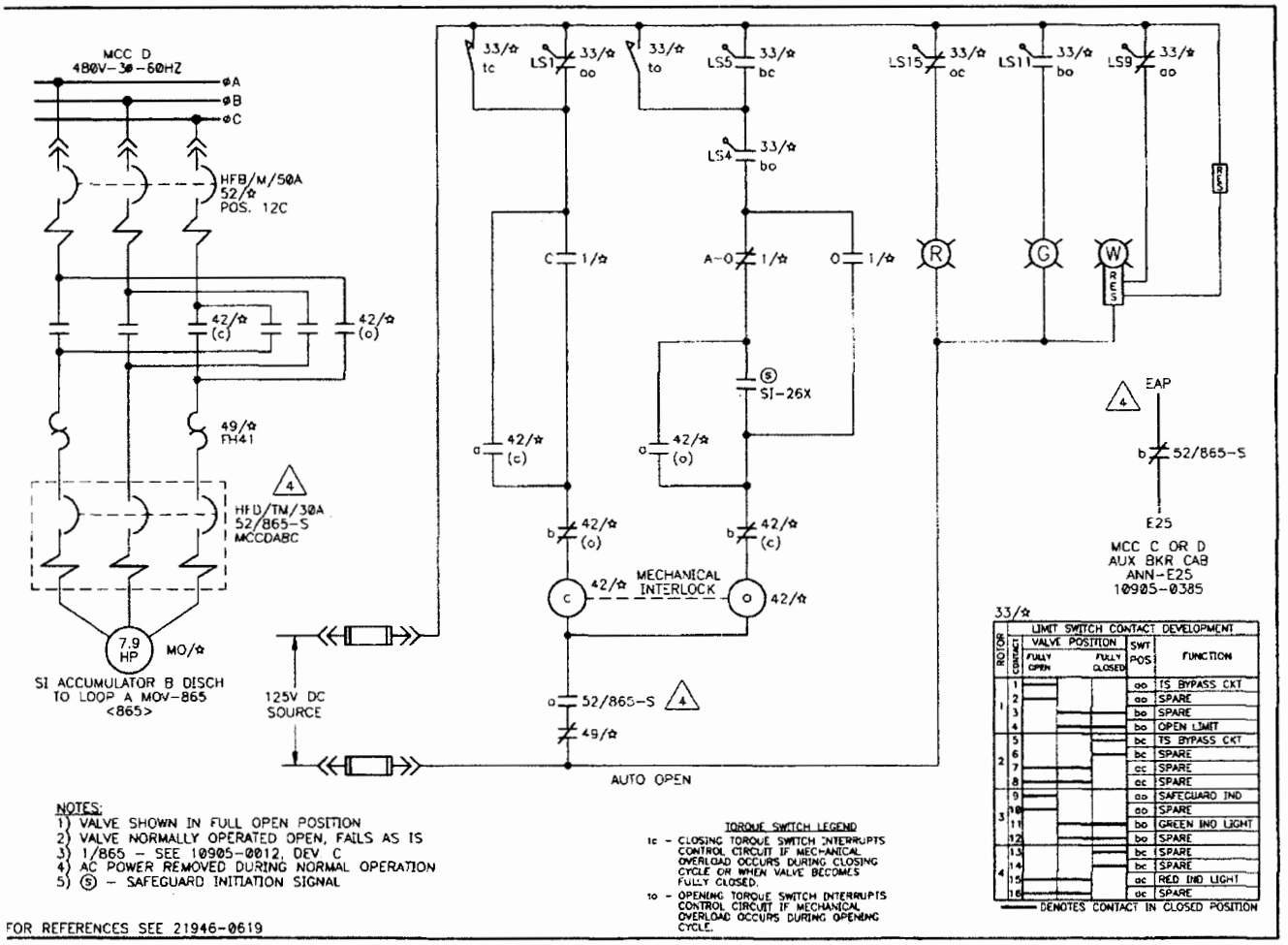

A. LS1 opening

B. 33/☆ tc opening.

C. 42/☆ open "b" contact opening.

D. 42/☆ closed "a" contact opening.

Answer: B

Explanation:

A. Incorrect. Plausible if candidate believes that LS1 device opening and being in line is designed to stop valve movement by interrupting the current flow. This device opens when the closed limit switch is made up; ultimately the 33/★ tc device opens at a preset torque to stop valve movement and protect the valve seat from overtorquing.

B. CORRECT. The 33/★ tc opening device will open by design on a preset torque value to prevent damage to the valve, thus interrupting current flow.

C. Incorrect. Plausible if candidate does not understand how to use the print and may interpret that the 42/★ open "b" contact opening is designed to stop valve movement. This contact works with the mechanical interlock for controlling which direction the motor will turn corresponding to valve movement and is not designed to *stop* valve movement.

D. Incorrect. Plausible if candidate does not understand how to use the print and may interpret that the 42/★ open "a" contact opening is designed to stop valve movement. This contact works with the mechanical interlock for controlling which direction the motor will turn corresponding to valve movement and is not designed to *stop* valve movement.

Technical Reference(s): 10905-0619 (Attach if not previously provided)

Proposed references to be provided to applicants during examination: _____

Learning Objective: RO102C, 5.04

Question Source: Bank/VISION # 99876
Modified Bank # _____ (Note changes or attach parent)
New _____

Question History: Last NRC Exam _____

Question Cognitive Level: Memory or Fundamental Knowledge _____
Comprehension or Analysis X

10 CFR Part 55 Content: 55.41 41.10
55.43 _____

Justification for K/A Match: The KA is matched because the candidate must demonstrate the ability to read and interpret the symbols and legends of the electrical print to choose the correct answer.

Examination Outline Cross-reference:	Level	RO	SRO
	Tier #	3	
	Group #	3	
	K/A #	2.3.7	
	Importance Rating	3.5	

Radiation Control: Ability to comply with radiation work permit requirements during normal or abnormal conditions.

RO Question #71

You are assigned to perform a valve alignment in the auxiliary building:

- You are signed in on RWP 14-6001.
- The highest General Area is 40 Mrem/hour.
- The highest General Area contamination levels are, <500 dpm/100cm^2.

WHICH ONE of the following correctly completes the statement below?

To enter this area you ____(1)____ need to wear a full set of PCs, and you must exit the area if your Electronic Dosimeter indicates ____(2)____.

A. (1) Will
(2) 16 mrem accumulated dose

B. (1) Will
(2) The dose rate where you are standing is 300 mrem/hour

C. (1) Will not
(2) 16 mrem accumulated dose

D. (1) Will not
(2) The dose rate where you are standing is 300 mrem/hour

Answer: C

Explanation:

A. Incorrect. 1st part wrong, 2nd part correct. This is incorrect because the RWP does not require the operator to wear PCs under the contamination levels indicated. This is plausible because if the accumulated dose was 15 mrem instead of 16 mrem, they would NOT have to leave.

B. Incorrect. 1st part wrong, 2nd part wrong. See A and D.

C. CORRECT. 1st part correct, 2nd part correct. According to RWP 14-6001, a worker must wera one full set of PCs for Contaminated work area, however, the same section specifically states that PCs are not required if the loose surface contamination levels are <500 dpm/cm^2. Additionally, according to RWP 14-6001, a worker must secure work and exit the area when the accumulated dose equals 80% of the dose alarm setting (20 mrem).

D. Incorrect. 1st part correct, 2nd part wrong. This is incorrect because the RWP does not require the operator to leave the area under the postulated condition. This is plausible because if the dose rate were 350 mrem/hour (Enough to cause an alarm), rather than 300 mrem, they would have to leave.

Technical Reference(s): RWP 14-6001 (Attach if not previously provided)

Proposed references to be provided to applicants during examination: RWP 14-6001

Learning Objective: RRC03C 2.09

Question Source: Bank/VISION # _____
Modified Bank # _____ (Note changes or attach parent)
New X

Question History: Last NRC Exam NA

Question Cognitive Level: Memory or Fundamental Knowledge _____
Comprehension or Analysis X

10 CFR Part 55 Content: 55.41 12
55.43 _____

Justification for K/A Match:

The KA is matched because the operator must demonstrate the ability to comply with radiation work permit requirements during normal conditions. The operator must recognize that PCs are not required in areas < 500 dpm/100cm2, and that they must back out of the area if they accumulate 80% of the allowable dose.

Examination Outline Cross-reference:	Level	RO	SRO
	Tier #	3	
	Group #	3	
	K/A #	2.3.14	
	Importance Rating	3.4	

Radiation Control: Knowledge of radiation or contamination hazards that may arise during normal,| abnormal, or emergency conditions or activities

RO Question #72

Given the following:

- A Steam Generator Tube Rupture has occurred on S/G 'B'
- The crew has performed all actions of E-3, STEAM GENERATOR TUBE RUPTURE, up to the step to commence depressurization of the RCS

WHICH ONE of the following describes the action taken with 'B' S/G ARV, and the ason for this action?

A. CLOSED with controller in Manual; prevent radioactive release to atmosphere

B. CLOSED with controller in Manual; ensures minimum RCS subcooling will be maintained when RCS depressurization is initiated

C. Set at 1050 psig with controller in AUTO; to prevent lift of S/G safety valve

D. Set at 1050 psig with controller in AUTO; ensures minimum RCS subcooling will be maintained when RCS depressurization is initiated

Answer: C

Explanation:

A. Incorrect. Plausible because it is logical to maintain valve closed but controller will not be in manual. Reason is correct

B. Incorrect. Same reason as option A, and additionally, reason is plausible because if the ARV stuck open on a ruptured SG, the depressurization would also cause depressurization of the RCS. This would result in loss of RCS subcooling

C. Correct

D. Incorrect. Correct for status of valve, but reason is incorrect. Plausible because valve would be placed in manual and closed if it stuck open below 1160 psig, but this is not the reason that the valve is placed in AUTO. The remainder of the steps for SG isolation are correct for this reason

Technical Reference(s): E-3 BACKGROUND (Attach if not previously provided)

Proposed references to be provided to applicants during examination: NONE

Learning Objective: ROP03C 2.01

Question Source: Bank/VISION # WOLF CREEK 09 NRC

Modified Bank # (Note changes or attach parent)

New

Question History: Last NRC Exam NA

Question Cognitive Level: Memory or Fundamental Knowledge

Comprehension or Analysis X

10 CFR Part 55 Content: 55.41 12

55.43

Justification for K/A Match:

The KA is matched because the operator must demonstrate knowledge of the actions taken in E-3. Such accidents provide a direct release path for contaminated primary coolant to the environment via the secondary side relief valves.
The question is at the Comprehension/Analysis cognitive level because the operator must evaluate the current and/or postulated conditions

Examination Outline Cross-reference: Level RO SRO

Tier #	3
Group #	4
K/A #	2.4.5
Importance Rating	3.7

Knowledge of the organization of the operating procedures network for normal, abnormal, and emergency evolutions activities .

RO Question #73

During implementation of the EOPs the following occur:

- An accident has occurred that has resulted in a reactor trip and safety injection.
- Prior to the trip, an AP was being used to address an abnormal condition. The CO is the coordinating remaining actions of the AP that was in use prior to the trip, at the CRS direction.
- A conflict has arisen between the EOP and the AP regarding an electrical lineup.

WHICH ONE of the following statements describes the correct method to resolve the conflict?

A. Guidance in the AP must be followed since it was in effect at the time of the trip. Guidance in conflicting EOP will NOT be performed.

B. Guidance in the EOP must be followed since it is the controlling procedure. Guidance in the conflicting AP will NOT be performed.

C. The SM will, with the concurrence of the CO, decide which action is the is the most applicable for the situation.

D. The SM, along with the STA, invoke 10CFR50.54(x) and perform the procedure most applicable for the situation.

Answer: B

Explanation: The SM, along with the STA, invoke 10CFR50.54(x) and perform the procedure most applicable for the situation.

A. Plausible Candidate if candidate does not understand procedure hierarchy per A-503.1. Incorrect as the highest priority procedure will be the procedure in use per A-503.1 step 5.2.A.1

B. Correct per A-503.1 step 5.2.A.6

C. Plausible Candidate if candidate does not understand procedure deviation per A-503.1 step 5.3.A.2. Incorrect since EOP procedure guidance exists and can be applied in the prescribe sequence.

D. Plausible if candidate does not understand requirement for 10CFR50.54X per A-503.1 step 5.2.A.4 Incorrect

Technical Reference(s): A-503.1 (Attach if not previously provided)

Proposed references to be provided to applicants during examination: NONE

Learning Objective: REP50C 1.02

Question Source: Bank/VISION # 64391

Modified Bank # _____ (Note changes or attach parent)

New _____

Question History: Last NRC Exam NA

Question Cognitive Level: Memory or Fundamental Knowledge _____

Comprehension or Analysis X

10 CFR Part 55 Content: 55.41 10

55.43 _____

Justification for K/A Match:

Examination Outline Cross-reference:	Level	RO	SRO
	Tier #	3	
	Group #	4	
	K/A #	2.4.21	
	Importance Rating	4.0	

Emergency Procedures/Plan: Knowledge of the parameters and logic used to assess the status of safety functions, such as reactivity control, core cooling and heat removal, reactor coolant system integrity, containment conditions, radioactivity release control, etc.

RO Question #74

WHICH ONE of the following correctly completes the statement below with respect to the MINIMUM requirements necessary for an extreme challenge to the RCS Integrity Critical Safety Function?

A Red Path will exist on RCS Integrity if _____ lowered at least 100°F in the last hour and is/are less than 284°F.

A. any CET has

B. any Tcold has

C. both Tcolds have

D. the average of 10 CETs have

Answer: B

Explanation:

A. Incorrect. This is incorrect because Tcold, not CETs, is considered when evaluating the challenge to the RCS Integrity Critical Safety Function; and because only one of the two loops is required to produce the Red Path condition. It is plausible because CET values are used frequently in the EOP network (e.g., subcooling calculation, SGTR cooldown).

B. CORRECT. According to F-0.4 (p2; Rev 00400), to get to a Red Path condition the operator must answer "NO" to the question "Temperature Lowers in All RCS Cold Legs Less Than 100°F in the last 60 minutes." Therefore, if only one Tcold has lowered greater than 100°F, the Red Path condition is still under consideration. Then, the operator must answer "NO" to the question "All RCS Cold Leg Temperature Values Greater than 284°F." Consequently, if only one Tcold is less than or equal to 284°F, the Red Path condition will exist.

C. Incorrect. This is incorrect because only one of the two loop Tcolds is required to produce the Red Path condition. It is plausible because the logic associated with the Red Path condition could be confusing.

D. Incorrect. This is incorrect because Tcold, not Thot, is considered when evaluating the challenge to the RCS Integrity Critical Safety Function. It is plausible the "average of the 5 hottest CETs" is used when determining subcooling manually.

Technical Reference(s): F-0.4 (p2; Rev 00400) (Attach if not previously provided)

Proposed references to be provided to applicants during examination: _____

Learning Objective: FR-P.1 1.5

Question Source: Bank/VISION # _____
Modified Bank # _____ (Note changes or attach parent)
New X

Question History: Last NRC Exam NA

Question Cognitive Level: Memory or Fundamental Knowledge X
Comprehension or Analysis _____

10 CFR Part 55 Content: 55.41 10
55.43 _____

Justification for K/A Match:

The KA is matched because the operator must demonstrate knowledge of the parameters (Thot or Tcold) and logic (MINIMUM of one or two) used to assess the status of the reactor coolant system integrity safety function.

.xamination Outline Cross-reference:	Level	RO	SRO
	Tier #	3	
	Group #	4	
	K/A #	2.4.41	
	Importance Rating	2.9	

Knowledge of the emergency action level thresholds and classifications

RO Question #75

Given the following plant conditions:

- The plant is in a 100/0 electric lineup on Circuit 767 due to maintenance on Circuit 7T
- The crew entered ER-SC.1, ADVERSE WEATHER PLAN, 2 hours ago due to sustained winds of 53 MPH
- An unidentified RCS leak initially estimated at 2 GPM has been evident for 1 hr. The crew is implementing AP-RCS.1
- You are performing the duties of the HCO and have the Monitoring function

WHICH ONE of the following events would require that the Shift Manager, assuming the role of Emergency Director, declare an ALERT condition?

A. Circuit 767 is suddenly lost and the 'A' EDG has failed to load onto either Bus 14 or Bus 18. Energy Control Center reports the cause and duration of 767 loss is unknown at this time.

B. A main control board annunciator test reveals that Annunciator Panels 'C' and 'D' are completely de-energized

C. Security reports a waterspout NE of the plant, approximately 3 miles offshore

D. With letdown isolated, you estimate the RCS leakrate is now at 6 GPM

Answer: A

Explanation:

A. CORRECT. The loss of offsite power was a UE per SU1.1, but the failure of 'A' EDG to power its safeguards busses escalates the classification to an ALERT per SA1.1..

B. Incorrect. Plausible because it would seem that the loss of two critical (including the Reactor First Out) panels would require a declaration of an event, but SU5.1 would be an Unusual Event only if 6 or more panels in Table S-2 are affected.

C. Incorrect. Plausible because with entry into ER-SC.1 due to high winds, and possible consideration of the waterspout being classified as a tornado, the tornado would have to touch down and cause damage within the Table H-1 Safe Shutdown Areas to be classified as an Alert.

D. Incorrect. The original unidentified leakrate of 2 gpm did not meet a classification threshold, but the rise to 12 gpm exceeds the threshold for unidentified leakage > 10 gpm and would be declared an Unusual Event per SU8.1.

Technical Reference(s): EAL Wallchart (Attach if not previously provided)

Proposed references to be provided to applicants during examination: EAL Wallchart

Learning Objective: RSC02, Obj. 3.00

Question Source: Bank/VISION # _____
Modified Bank # _____ (Note changes or attach parent)
New X

Question History: Last NRC Exam _____

Question Cognitive Level: Memory or Fundamental Knowledge X
Comprehension or Analysis _____

10 CFR Part 55 Content: 55.41 .10
55.43 _____

Justification for K/A Match:

Matches the K/A by requiring basic entry level and parameter-related (RCS leakage) EAL classification knowledge using job-specific conditions.

2014 Ginna Initial License NRC Examination

SRO Written Examination

Applicant Information			
Name:			
Date: December, 2014		Facility/Unit:	R.E. Ginna
Region: I		Reactor Type:	Westinghouse
Start Time:		Finish Time:	

Instructions

Use the answer sheets provided to document your answers. Staple this cover sheet on top of the answer sheets. To pass the examination, you must achieve a final grade of at least 80.00 percent overall, with 70.00 percent or better on the SRO-only items if given in conjunction with the RO exam; SRO-only exams given alone require a final grade of 80.00 percent to pass. You have 8 hours to complete the combined examination, and 3 hours if you are only taking the SRO portion.

Applicant Certification

All work done on this examination is my own. I have neither given nor received aid.

_____

Applicant's Signature

Results	
RO/SRO-Only/Total Examination Values	____ / ____ / ____ Points
Applicant's Score	____ / ____ / ____ Points
Applicant's Grade	____ / ____ / ____ Percent

Examination Outline Cross-reference:	Level	RO	SRO
	Tier #		1
	Group #		1
	K/A #	015 2.1.20	
	Importance Rating		4.6

RCP Malfunctions: Ability to interpret and execute procedural steps

SRO Question #76

Given the following plant conditions:

- The plant is at 20% power
- The crew has just entered AP-RCP.1, RCP SEAL MALFUNCTION
- B-17, RCP 1A No.1 SEAL HI-LO FLOW 5.0 GPM 1.0 GPM, is received
- 'A' RCP labyrinth seal D/P is lowering
- B-9, RCP 1A LABYR SEAL LO DIFF PRESS 15" H2O, is received
- The HCO reports that RCP 'A' seal flow is 8.2 GPM and slowly rising
- No.1 seal inlet and outlet temperatures are rising

WHICH ONE of the following describes the required procedural flowpath which will mitigate the conditions described?

A. Utilize O-2.1, NORMAL SHUTDOWN TO HOT SHUTDOWN, to perform a controlled plant shutdown and secure the 'A' RCP within 8 hrs

B. Per AR-B-9, continue to monitor 'A' RCP using ATT-15.1, ATTACHMENT RCP DIAGNOSTICS, and refer to S-2.1, RCP OPERATION, to determine when a reactor trip is required

C. Per AP-RCP.1, trip the reactor, perform the immediate actions of E-0, REACTOR TRIP OR SAFETY INJECTION, then trip 'A' RCP. Transition to E-0.

D. Per AP-RCP.1, trip the reactor, perform the immediate actions of E-0, then trip 'A' RCP. Transition to E-0 Reactor trip or Safety Injection while completing actions in AP-RCP.1.

Answer: D

Explanation:

A. Incorrect. Plausible because this is the required action for No.1 seal failure with total seal flow *less than* 6.0 GPM.

B. Incorrect. Plausible because ATT-15.1 is the attachment used for RCP seal failure diagnosis and S-2.1 does contain threshold setpoints for RCP seal parameters, but the SRO should be able to identify the symptoms of No.1 seal failure which require an immediate reactor trip.

C. Incorrect. Plausible because a reactor trip is required, and the actions described are accurate but incomplete. Following RCP coastdown, AP-RCP.1 RNO actions require closing the affected RCP seal discharge valve to isolate the seal failure, and this action is contained within the AP-RCP.1, not in E-0.

D. CORRECT. The given conditions provides multiple symptoms of a significant failure of No.1 seal. Candidate should know that AP-RCP.1 requires a reactor trip, RCP trip, and isolation of seal leakoff within 4 minutes if the Total No.1 seal flow exceeds 8.0 GPM. The NOTE prior to Step 1 directs that if a reactor trip is initiated, the transition to E-0 should occur while completing subsequent actions of Step 1.

Technical Reference(s): AP-RCP.1, AR-B-9 Rev 10, AR-B-17 rev 12, ATT.15.1 Rev 3, FIG-4.0 Rev 2 (Attach if not previously provided)

Proposed references to be provided to applicants during examination: None

Learning Objective: RAP14C, 2.02

Question Source: Bank/VISION # _____
Modified Bank # 105685 (Note changes or attach parent)
New _____

Question History: Last NRC Exam _____

Question Cognitive Level: Memory or Fundamental Knowledge _____
Comprehension or Analysis X

10 CFR Part 55 Content: 55.41 _____
55.43 .5

Justification for K/A Match:

Matches K/A by requiring recognition of degraded RCP seal conditions which require a reactor trip and immediate securing of affected RCP.

The question is SRO-ONLY because it cannot be answered solely by knowing system knowledge, immediate operator actions, plant parameters that require direct entry into EOPs, or knowing the purpose, overall sequence of events, or overall mitigative strategy of a procedure; AND requires the operator to assess plant conditions and then select a procedure or section of a procedure to mitigate, recover, or with which to proceed.

Examination Outline Cross-reference:	Level	RO	SRO
	Tier #		1
	Group #		1
	K/A #	022 2.4.50	
	Importance Rating		4.0

Loss of Reactor Coolant Makeup: Ability to verify system setpoints and operate controls identified in the alarm response manual

SRO Question #77

Given the following plant conditions:

- The plant is operating at 100% power
- LI-112 , VCT level has failed HIGH
- A-2, VCT LEVEL 14 % 86, is lit
- A-10, VCT PRESSURE 15 PSIG 65, is lit
- FI-128B and FI-128C, Charging Line Flows, are oscillating
- PI-128, Charging Pump Disch Press, is erratic
- PRZR level is 56% and slowly lowering

WHICH ONE of the following correctly completes the statement below?

MCB Annunciator A-2 illuminated when ____(1)____. The CRS will isolate all letdown, stop all Charging Pumps, and vent/restart each pump using ____(2)____.

A. (1) actual VCT level is >86%
(2) AP-CVCS.3, LOSS OF CHARGING FLOW

B. (1) actual VCT level is < 14%
(2) AP-CVCS.3, LOSS OF CHARGING FLOW

C. (1) actual VCT level is >86%
(2) S-3.2G, Charging Pump Isolation

D. (1) actual VCT level is < 14%
(2) S-3.2G, Charging Pump Isolation

Answer: B

Explanation:

A. **Incorrect.** 1st part wrong. 2nd part correct. This is incorrect because LT-112 failing high causes the level divert valve to open based on high level. This is plausible because the operator may incorrectly believe that it does not. CORRECT. All given symptoms are diverse indications of gas intrusion and/or cavitation on the Charging pumps, and the actions given are as directed by AR-A-2 and AP-CVCS.3, LOSS OF ALL CHARGING FLOW.

B. **Correct.** 1st part correct. 2nd part correct. According to P-3 (p25; Rev 03102) when LT-112 fails HIGH, Letdown Divert Valve (LCV-112A) will divert Letdown to the Waste System. At the same time, Auto Makeup will not function because LT-112 is 100%. Consequently, VCT level will lower. According to AP-CVCS.3 (p7; Rev 01300), the operator will be directed to vent and fill each individual charging pump is gas binding is suspected.

C. **Incorrect.** 1st part correct. 2nd part wrong. This is incorrect because LT-112 failing high causes the level divert valve to open based on high level. This is plausible because the operator may incorrectly believe that it does not. This is incorrect because the venting and filling of gas bound Charging Pumps is mitigated in AP-CVCS.3, not S-3.2G. This is plausible because the Charging Pump can be vented and filled in S-3.2G, and the operator may incorrectly believe that this procedure is used under the stated circumstances.

D. **Incorrect.** 1st part wrong. 2nd part wrong. See A and C.

Technical Reference(s): P-3 (p25; Rev 03102) AR-A-2 (p1, Rev 01100), AR-A-10 (Rev 00901) (Attach if not previously provided)

Proposed references to be provided to applicants during examination: None

Learning Objective: RAP31C 2.01

Question Source: Bank/VISION # _____
Modified Bank # _____ (Note changes or attach parent)
New X

Question History: Last NRC Exam _____

Question Cognitive Level: Memory or Fundamental Knowledge _____
Comprehension or Analysis X

10 CFR Part 55 Content: 55.41 _____
55.43 5

Justification for K/A Match:

The KA is matched because the operator must demonstrate the ability, during a Loss of Reactor Coolant Makeup (i.e. Charging flow), to verify system alarm setpoints (The alarm is a common hi/low alarm and the operator must decide upon which condition is the source of the alarm) and operate controls identified in the alarm response manual (The Charging Pumps are directed to be stopped in the AR, and will be vented and restarted in the AP).

The question is at the Comprehension/Analysis cognitive level because the operator must recall bits of information (Source of A-2) and then use this information to predict an outcome (i.e. Cause of A-2 in alarm), in order to answer the question correctly.

The question is SRO-ONLY because it cannot be answered solely by knowing system knowledge, immediate operator actions, plant parameters that require direct entry into EOPs, or knowing the purpose, overall sequence of events, or overall mitigative strategy of a procedure; AND requires the operator to assess plant conditions and then select a procedure or section of a procedure to mitigate, recover, or with which to proceed.

What MUST be known:
1. How does VCT level respond when LT-112 fails high? 2. What is the source of A-2 going into alarm? 3. What VCT level condition is causing the A-2 alarm under the current plant conditions? 4. What procedure is used by the CRS to vent and restart the Charging Pumps after they have become airbound?

Examination Outline Cross-reference:	Level	RO	SRO
	Tier #		1
	Group #		1
	K/A #	027 G2.4.31	
	Importance Rating		4.1

Pressurizer Pressure Control System (PZR PCS) Malfunction: Knowledge of annunciator alarms, indications, or response procedures.

SRO Question # 78

Given the following plant conditions:

- The plant is in Mode 4
- Both 'A' and 'B' RHR Systems are in service
- RCS Temperature is 250°F
- RCS pressure is 320 psig

Subsequently:

- A transient occurs and RCS pressure starts to rise
- At 410 psig RCS pressure lowered rapidly to 340 psig
- After this, the transient subsides and RCS pressure stabilizes at 340 psig
- The HCO reports that PRZR PORV PCV-431C did NOT automatically open during this transient
- F-19, PRZR PORV HI TEMP 145°F Actuates

WHICH ONE of the following identifies the required ACTION?

A. Declare PCV-431C inoperable per Tech Spec 3.4.11 PORVs

B. Declare BOTH PCV-430 AND PCV-431C per Tech Spec 3.4.12 LTOP

C. Declare PCV-431C inoperable AND close MOV-515 per Tech Spec 3.4.11 PORVs

D. Declare PORV-431C inoperable per Tech Spec 3.4.12 LTOP AND verify that PORV-430 is CLOSED

Answer: D

Explanation:

A. Incorrect. Plausible because this represents the a correct action taken by ITS 3.4.11, PORV.

B. Incorrect. This is plausible if the candidate believes that PORV-430 opened at an incorrect pressure and because 431C failed to open.

C. Incorrect. Plausible because this represents the correct action taken by ITS 3.4.11, PORV actuation which is not applicable in this Mode.

D. CORRECT. Per TS 3.4.12 PORV-431C is inoperable. Given indications are that RCS pressure has exceeded the LTOP relief actuation setpoint. The alarm response procedure for AR-AA-22, 23, & 31 has the operator verify that at least one PORV has actuated (opened and closed) as appropriate if overpressure protection is required to be Operable and RCS pressure has exceeded 410 psig.

Technical Reference(s): TS LCO 3.4.12 (p3.4.12-1; Amendment 88); PTLR (pPTLR-3 of 16; Rev 6); (Attach if not previously provided)

Proposed References to be provided to applicants during examination: None

Learning Objective: (As available)

Question Source: Bank #

Modified Bank # (Note changes or attach parent)

New X

Question History: Last NRC Exam:

Question Cognitive Level: Memory or Fundamental Knowledge

Comprehension or Analysis X

10 CFR Part 55 Content: 55.41

55.43 2

Comments:

The KA is matched because the operator must demonstrate knowledge of Knowledge of response procedures (i.e. TS Actions) associated with a PPCS Malfunction (i.e. PORVs did NOT open when required in LTOP).

The KA is matched because the operator must demonstrate knowledge of Knowledge of response procedures (i.e. TS Actions) associated with a PPCS Malfunction (i.e. PORVs did NOT open when required in LTOP).

The question is at the Comprehension/Analysis level cognitive level because the operator must recall bits of information (TS LCO 3.4.12 operability requirements in Mode 4, PTLR PORV Setpoints in LTOP Mode) and then use this information to predict an outcome (i.e. Are the PRZR PORVs Operable, TS Action Required based on Operable), in order to answer the question correctly.

The question is SRO-ONLY because it cannot be answered solely by knowing ≤ 1 hour TS/TRM action statements, the LCO information listed "above the line," or by knowing the TS Safety Limits; AND requires the operator to demonstrate knowledge of the TS basis that is required to analyze TS required actions and terminology (When Two PORVs inoperable in LTOP Mode Action G is required (electrically inhibit one Charging Pump and establish vented RCS)).

What MUST be known:
1. What are the Mode4 Operability Requirements for the PRZR PORVs? 2. What is the PTLR setpoint for the PRZR PORVs when operating in LTOP Mode? 3. Under the current plant conditions are the PRZR PORVs OPERABLE? 4. Under the current plant conditions, what TS Action is required?

FR-

Examination Outline Cross-reference:	Level	RO	SRO
	Tier #		1
	Group #		1
	K/A #	029 EA2.06	
	Importance Rating		3.9

Ability to determine or interpret the following as they apply to an ATWS: Main turbine trip switch position indication

SRO Question #79

Given the following plant conditions:

- Due to an ATWS the crew has entered FR-S.1, Response to Reactor Restart/ATWS.
- The HCO is manually inserting control rods.
- The CO is currently at the step 4, initiating boration of the RCS.
- Main turbine EHC display currently is as shown below:

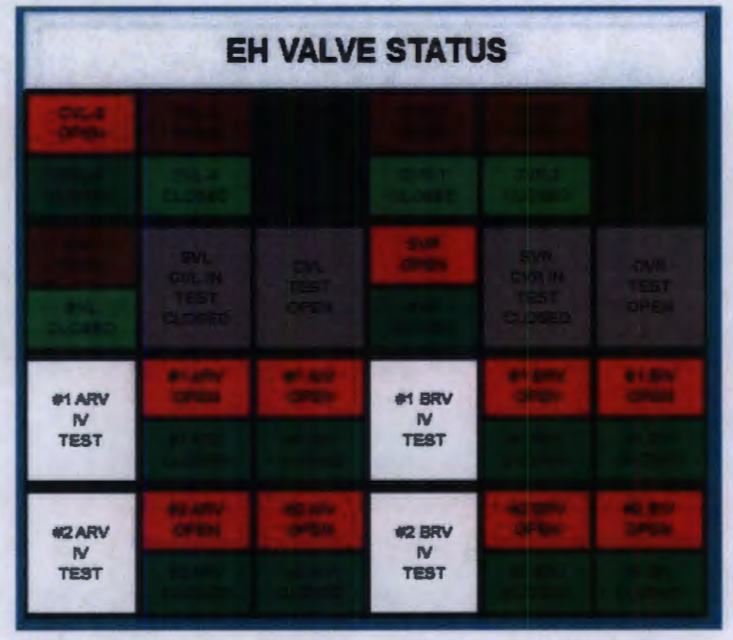

WHICH ONE of the following identifies the expected status of the MSIVs, AND identifies how the CRS would proceed if an subsequent SI were to occur?

The MSIVs are……

A. OPEN;
The CRS will simultaneously perform Steps 3-7 of E-0 with FR-S.1, and start at E-0 step 8 when FR-S.1 directs that the operator return to procedure step in effect.

B. OPEN;
The CRS will continue in FR-S.1, and when the HCO reports that the intermediate range startup rate is negative, transition back to Step 1 of E-0 to verify the SI

response.

C. CLOSED;
The CRS will simultaneously perform Steps 3-7 of E-0 with FR-S.1, and start at E-0 step 8 when FR-S.1 directs that the operator return to procedure step in effect.

D. CLOSED;
The CRS will continue in FR-S.1, and when the HCO reports that the intermediate range startup rate is negative, transition back to Step 1 of E-0 to verify the SI response.

Answer: C

Explanation:

A. **Incorrect.** 1st part wrong. 2nd part correct. This is incorrect because the MSIVs would not be OPEN with the current EHC display. This is plausible because during the event the valves will be open and closed at different times.

B. **Incorrect.** 1st part wrong. 2nd part wrong. See A and D.

C. **Correct.** 1st part correct. 2nd part correct. According to FR-S.1 (p3; Rev 02000) Step 2, the operator will be directed to check the Turbine stop valves closed. If the stop valves are NOT closed, the operator will be directed to trip the turbine. If the turbine will NOT trip, the operator will be directed to close the MSIVs. Under the current conditions, Step 2 is in the past. The EHC Panel shows that the Turbine Stop valves are not closed, and they were not closed when directed by the Step 2 RNO. Consequently, the MSIVs would have been closed. According to A503.1 (p21; Rev 04409), if an SI occurs, coincident with ATWS, E-0 step 1 transitions to FR-S.1 and as directed by FR-S.1, E-0 steps 3 through 7 are completed. When FR-S.1 directs to return to procedure and step in effect E-0 shall be re-entered at the step in effect (step 8 in this example, since steps 1 through 7 have been completed).

D. **Incorrect.** 1st part correct. 2nd part wrong. This is incorrect because the Steps 3-7 of E-0 will be performed simultaneously with FR-S.1, and when the reactor is shutdown the CRS will go to Step 8 of E-0. This is plausible because the operator may incorrectly believe that because of the extreme challenge to the Subcriticality CSFST, no procedures may be performed simultaneously with FR-S.1.

Technical Reference(s): E-0 (Rev 4602), FR-S.1 (p3; Rev 02000) (Attach if not previously provided)
A503.1 (p21; Rev 04409)

Proposed references to be provided to applicants during examination: None

Learning Objective: R4901C 4.07;

Question Source: Bank/VISION # _____
Modified Bank # _____ (Note changes or attach parent)
New X

Question Cognitive Level:	Memory or Fundamental Knowledge	
	Comprehension or Analysis	X

10 CFR Part 55 Content:	55.41	
	55.43	5

Justification for K/A Match:

The KA is matched because the operator must demonstrate the ability to interpret the Main turbine trip switch position indication as it applies to an ATW. The facility uses a pushbutton for the turbine trip function. The intent of the KA is met by showing the operator a current display of the Turbine Control Panel and then asking a question about subsequent actions after an interpretation of the EHC Display is made (i.e. Turbine is NOT tripped).

The question is at the Comprehension/Analysis cognitive level because the operator must recall bits of information (indications of Turb Trip, rules of EOP usage applicable to simultaneous SI/ATWS) and then use this information to predict an outcome (i.e. condition of the MSIVs), in order to answer the question correctly.

The question is SRO-ONLY because it cannot be answered solely by knowing system knowledge, immediate operator actions, plant parameters that require direct entry into EOPs, or knowing the purpose, overall sequence of events, or overall mitigative strategy of a procedure; AND requires the operator to assess plant conditions and then select a procedure or section of a procedure to mitigate, recover, or with which to proceed, and demonstrate knowledge of administrative procedures that specify hierarchy, implementation, and/or coordination of plant normal, abnormal and emergency procedures.

What MUST be known:
1. What are the EHC indications of a tripped Turbine? 2. Under the current display is the Turbine tripped? 3. If the Turbine is NOT tripped at Step 4 of FR-S.1, what is the status of the MSIVs? 4. When operating in FR-S.1 and an SI occurs how does the CRS implement the FR-S.1/E-0 connection?

Examination Outline Cross-reference:	Level	RO	SRO
	Tier #		1
	Group #		1
	K/A #	WE12 EA2.02	
	Importance Rating		3.9

Ability to determine and interpret the following as they apply to the Uncontrolled Depressurization of all S/Gs: Adherence to appropriate procedures and operation within the limitations in the facility's license and amendments

SRO Question #80

Given the following initial plant conditions:

- A main steamline break (MSLB) occurred in the Turbine Building
- Both MSIVs failed to close and Main Control Room attempt to close them was unsuccessful
- The crew entered ECA-2.1, UNCONTROLLED DEPRESSURIZATION OF BOTH STEAM GENERATORS

Current plant conditions:

- RCS temperature has lowered from 547°F to 422°F within the last hour
- S/G NR levels are both offscale low
- The crew has taken the appropriate action for controlling AFW flow
- The crew is at Step 5, "Check Secondary Radiation Levels – NORMAL" of ECA-2.1
- The secondary AO reports that he has successfully closed the 'A' MSIV locally
- 'A' S/G pressure is 500 PSIG and rising

WHICH ONE of the following describes the proper value of AFW flow at THIS time, AND when the transition to the appropriate procedure should occur?

A. AFW flow is 50 GPM per S/G; remain in ECA-2.1 until SI is terminated, then transition to E-1, LOSS OF REACTOR OR SECONDARY COOLANT

B. AFW flow is 50 GPM per S/G; transition to E-2, FAULTED S/G ISOLATION, upon observing the pressure rise in 'A' S/G

C. AFW flow is a minimum of 200 GPM; remain in ECA-2.1 until SI is terminated, then transition to E-1, LOSS OF REACTOR OR SECONDARY COOLANT

D. AFW flow is a minimum of 200 GPM; transition to E-2, FAULTED S/G ISOLATION, upon observing the pressure rise in 'A' S/G

Answer: B

Explanation:

A. Incorrect. Plausible because the AFW flow amount is correct in part one, and part two would be correct if the crew was making the normal exit transition from E-2 without a SGTR in progress.

B. CORRECT. AFW flow is throttled to 50 GPM in Step 2 of ECA-2.1, and part 2 is correct per the FOLDOUT page direction to transition back to E-2 when pressure begins to rise in either S/G (unless actually performing the SI termination steps of ECA-2.1 when the pressure rise is noted.)

C. Incorrect. Plausible if the candidate believes that the "normal" value of AFW flow found in most of the EOPs still must be maintained until S/G levels have been returned to the narrow range and if the crew was making the normal exit transition from E-2 without a SGTR in progress.

D. Incorrect. Plausible if the candidate believes that the "normal" value of AFW flow found in most of the EOPs still must be maintained until S/G levels have been returned to the narrow range and because part two is correct.

Technical Reference(s): ECA-2.1 FOLDOUT (Attach if not previously provided)

Proposed references to be provided to applicants during examination: None

Learning Objective: REC21C 1.03

Question Source: Bank/VISION # 108550
Modified Bank # _____ (Note changes or attach parent)
New _____

Question History: Last NRC Exam Ginna 2007

Question Cognitive Level: Memory or Fundamental Knowledge _____
Comprehension or Analysis X

10 CFR Part 55 Content: 55.41 _____
55.43 .5

Justification for K/A Match:

Matches the K/A by assessing plant conditions and implementing procedural FOLDOUT page transition to another EOP.

The question is SRO-ONLY because it cannot be answered solely by knowing system knowledge, immediate operator actions, plant parameters that require direct entry into EOPs, or knowing the purpose, overall sequence of events, or overall mitigative strategy of a procedure; AND requires the operator to assess plant conditions and then select a procedure or section of a procedure to mitigate, recover, or with which to proceed.

Examination Outline Cross-reference:	Level	RO	SRO
	Tier #		1
	Group #		1
	K/A #	058 A2.02	
	Importance Rating		3.6

Ability to determine and interpret the following as they apply to the Loss of DC Power: 125 VDC bus voltage, low/critical low, alarm

SRO Question #81

Given the following:

- Plant is at 3% power
- the following alarms are lit:
  - J-21, 1A OR 1B BATTERY UNDERVOLTAGE
  - J-31, VITAL BATTERY MONITORING SYSTEM
- DC Bus 'A' voltmeter on MCB reads 108 VDC
- Battery 'A' Discharge rate is 80 amps

WHICH ONE of the following would complete the statements?

(1) DC Train 'A' is _____.

(2) _____ DC train(s) is/are required to be OPERABLE

A. (1) OPERABLE
(2) One

B. (1) OPERABLE
(2) Two

C. (1) INOPERABLE
(2) One

D. (1) INOPERABLE
(2) Two

Answer: D

Explanation:

A. Incorrect. Plausible because if the candidate does not recall the voltage for operability of 108.6vDC, may incorrectly assume that the battery is operable.. In part 2 the power level is at 3% power level or MODE 2. The candidate may assume that this is a MODE that only one train is required to be operable.

B. Incorrect. Plausible because if the candidate does not recall the voltage for operability of 108.6vDC, may incorrectly assume that the battery is operable The required number of DC trains to be OPERABLE in MODES 1-4 is two trains, which is the correct answer since the information given is 3% power.

C. Incorrect. Plausible The Battery is Inoperable when voltage is <108.6 volts. The alarms J-21 and 31 are consistent with voltage problems. In part 2 the power level is at 3% power or MODE 2. The candidate may assume that this is a MODE that only one train is required to be operable.

D. Correct. The Battery is Inoperable when voltage is <108.6 volts. The alarms J-21 and 31 are consistent with voltage problems. The 2nd part is correct for the current plant power level 3% (MODE 2) is correct.

Technical Reference(s): AR-J-15, AR-J-21, AR-J-31, P-12 (Attach if not previously provided)

ITS-3.8.4 Basis

Proposed references to be provided to applicants during examination: None

Learning Objective: RER07C 1.02

Question Source: Bank/VISION # _____

Modified Bank # _____ (Note changes or attach parent)

New X

Question History: Last NRC Exam _____

Question Cognitive Level: Memory or Fundamental Knowledge X

Comprehension or Analysis _____

10 CFR Part 55 Content: 55.41 _____

55.43 2, 5

Justification for K/A Match:

Matches the K/A by requiring knowledge of the significance of a low voltage alarm associated with 125VDC bus voltage.

SRO-only because it requires knowledge of the significance of a low DC Bus voltage, which has potential technical specification implications.

Examination Outline Cross-reference:	Level	RO	SRO
	Tier #		1
	Group #		2
	K/A #	036 AA2.02	
	Importance Rating		4.1

Ability to determine and interpret the following as they apply to Fuel Handling Incidents: Occurrence of a fuel handling incident

SRO Question #82

Given the following plant conditions:

- The plant is in Mode 6 with fuel offload in progress
- A Fuel Assembly has been partially withdrawn from the core when the refueling machine gripper fails causing the assembly to fall back into the core.
- The refueling bridge SRO reports bubbles rising from the mechanically distorted assembly
- R-2, CONTAINMENT is in alarm
- R-10A, CONTAINMENT VENT IODINE, and R-12, CONTAINMENT VENT GAS, are rising

WHICH ONE of the following describes: (1) the actions to be taken in response to the dropped assembly by the control room operators, and (2) which procedure(s) will provide the detailed guidance?

A. (1) EVACUATE Containment, Direct CLOSURE of the at least one Personnel Air Lock Door, Direct CLOSURE of the Equipment Hatch Opening, CLASSIFY the Event per EPIP-1-0;
(2) RF-601, FUEL HANDLING ACCIDENT INSTRUCTIONS, ONLY

B. (1) EVACUATE Containment, Direct CLOSURE of the at least one Personnel Air Lock Door, Direct CLOSURE of the Equipment Hatch Opening, DIRECT Installation of the SFP Weir Gate;
(2) RF-601, FUEL HANDLING ACCIDENT INSTRUCTIONS AND EPIP-1-13 LOCAL RADIATION EMERGENCY

C. (1) EVACUATE Containment, Direct CLOSURE of the at least one Personnel Air Lock Door, Direct CLOSURE of the Equipment Hatch Opening, DIRECT Installation of the SFP Weir Gate;
(2) RF-601, FUEL HANDLING ACCIDENT INSTRUCTIONS, ONLY

D. (1) EVACUATE Containment, Direct CLOSURE of the at least one Personnel Air Lock Door, Direct CLOSURE of the Equipment Hatch Opening, CLASSIFY the Event per EPIP-1-0;
(2) RF-601, FUEL HANDLING ACCIDENT INSTRUCTIONS AND EPIP-1-13 LOCAL RADIATION EMERGENCY

Answer: D

Explanation:

A. Incorrect. Plausible Part (1) is correct RF-601 directs evacuation of CNMT, closure of Personnel Air Lock Doors and the Equipment Hatch Opening. EPIP-1-13 directs that the Event be Classified per EPIP-1-0 (Event is an Alert RA2.1) Therefore Part (2) is incorrect since both procedures are required to be performed. Also neither RF-601 nor EPIP-1-13 directs installation of the SFP Weir Gate.

B. Incorrect. Plausible because if the examinee doesn't know that EPIP-1-13 requires a evaluation of EPIP-1-0 Classifications.

C. Incorrect. Plausible because if the examinee doesn't know that EPIP-1-13 requires a evaluation of EPIP-1-0 Classifications. Part (2) is incorrect since both procedures are required to be performed. Also neither RF-601 nor EPIP-1-13 directs installation of the SFP Weir Gate.

D. CORRECT. Part (1) is correct RF-601 directs evacuation of CNMT, closure of Personnel Air Lock Doors and the Equipment Hatch Opening. EPIP-1-13 directs that the Event be Classified per EPIP-1-0 (Event is an Alert RA2.1). Part 2 is the list of the required procedures.

Technical Reference(s): RF-601, ATT.1 (Attach if not previously provided)
EPIP-1-13
EPIP-1-0

Proposed references to be provided to applicants during examination: None

Learning Objective: R3701C;

Question Source: Bank/VISION # _____
Modified Bank # _____ (Note changes or attach parent)
New X

Question History: Last NRC Exam _____

Question Cognitive Level: Memory or Fundamental Knowledge _____
Comprehension or Analysis X

10 CFR Part 55 Content: 55.41 _____
55.43 .7

Justification for K/A Match:

Matches the K/A by requiring recognition of the symptoms of a damaged fuel assembly during removal and determining the appropriate action using the applicable procedure.

The question is SRO-ONLY because it deals directly with Containment SRO (i.e. Refuel floor SRO) responsibilities during Refueling, which are not shared by the RO, specifically Refuel SRO floor responsibilities.

Examination Outline Cross-reference:	Level	RO	SRO
	Tier #		1
	Group #		2
	K/A #	E16 A2.01	
	Importance Rating		3.3

Ability to determine and interpret the following as they apply to the High Containment Radiation: Facility conditions and selection of appropriate procedures during abnormal and emergency operations.

SRO Question #83

Given the following plant conditions:

- The crew had implemented AP-RCS.3, HIGH REACTOR COOLANT ACTIVITY, at 100% power
- During the subsequent load reduction, an RCS leak developed which resulted in the need for a manual reactor trip and SI
- Containment pressure is 19 PSIG and slowly rising
- 'A' MDAFW pump tripped on start, and the TDAFW pump governor valve tripped and cannot be reset.
- 'B' MDAFW pump flowrate is 180 GPM
- 'A' S/G NR level is 0%, 'B' S/G NR level is 28% and slowly rising
- R29 and R30, CNMT HIGH RANGE, read 12 R/hr and 15 R/hr, respectively
- The crew has just transitioned to E-1, LOSS OF REACTOR OR SECONDARY COOLANT
- The STA has informed the CRS that a CSFST entry condition has been met, and recommends transitioning to that procedure

WHICH ONE of the following identifies the correct procedure flowpath?

A. Transition to FR-H.1, RESPONSE TO LOSS OF SECONDARY HEAT SINK

B. Transition to FR-Z.1, RESPONSE TO HIGH CONTAINMENT PRESSURE

C. Remain in E-1, consider implementing FR-H.5 ONLY, RESPONSE TO STEAM GENERATOR LOW LEVEL.

D. Remain in E-1, consider implementing FR-H.5 AND/OR FR-Z.3, RESPONSE TO HIGH CNMT RADIATION LEVEL

Answer: D

Explanation:

A. Incorrect. Plausible because if the FR-H.1 threshold criteria were met, a transition from E-1 to FR-H.1 would be the correct action. Requires that the candidate be knowledgable that although the total AFW flow is inadequate, entry into FR-H.1 is avoided due to the 'B' S/G level > 25% with adverse CNMT conditions.

B. Incorrect. Plausible if the candidate realizes that FR-Z.1 entry is both on a RED path (>60 PSIG) and an ORANGE path (≥28 PSIG) and confuses the orange path entry pressure with that of Main Steamline Isolation setpoint of 18 PSIG. Either an ORANGE or RED path condition would require the transition from E-1 to FR-Z.1.

C. Incorrect. Plausible because this is a valid yellow path condition for FR-H.5 with 'A' S/G level < 25% (adverse), but .this is not the ONLY yellow path condition met. Incorrect because a second yellow path entry condition is met with R29 and R30 > 10 R/hr as valid entry conditions for FR-Z.3, RESPONSE TO HIGH CNMT RADIATION LEVEL.

D. CORRECT. R29 and R30 > 10 R/hr are valid entry conditions for FR-Z.3, RESPONSE TO HIGH CNMT RADIATION LEVEL, as well as a valid yellow path condition for FR-H.5 with 'A' S/G level < 25% (adverse), Either or both of these may be implemented while remaining in E-1.

Technical Reference(s): CSFST, F-0.5 (Attach if not previously provided)

Proposed references to be provided to applicants during examination: None

Learning Objective: RFRZ3C 2.01

Question Source: Bank/VISION # _____
Modified Bank # _____ (Note changes or attach parent)
New X

Question History: Last NRC Exam _____

Question Cognitive Level: Memory or Fundamental Knowledge _____
Comprehension or Analysis X

10 CFR Part 55 Content: 55.41 _____
55.43 .5

Justification for K/A Match:

Matches the K/A by requiring an assessment of plant conditions following an accident involving CNMT high radiation, then determining which procedure is appropriate.

The question is SRO-ONLY because it cannot be answered solely by knowing system knowledge, immediate operator actions, plant parameters that require direct entry into EOPs, or knowing the purpose, overall sequence of events, or overall mitigative strategy of a procedure; AND requires the operator to demonstrate knowledge of diagnostic steps and decision points in the EOPs that involve transitions to event specific sub-procedures or emergency contingency procedures.

Examination Outline Cross-reference:	Level	RO	SRO
	Tier #		1
	Group #		2
	K/A #	W03 2.4.20	
	Importance Rating		4.3

LOCA Cooldown & Depressurization: Knowledge of the operational implications of EOP warnings, cautions, and notes.

SRO Question #84

Given the following CAUTION from ES-1.2, POST-LOCA COOLDOWN AND DEPRESSURIZATION:

EOP:	TITLE:	
ES-1.2	POST LOCA COOLDOWN AND DEPRESSURIZATION	REV: 03601 PAGE 10 of 35

STEP	ACTION/EXPECTED RESPONSE	RESPONSE NOT OBTAINED

CAUTION

PRZR HEATERS SHOULD NOT BE ENERGIZED UNTIL PRZR LEVEL INDICATES GREATER THAN MINIMUM RECOMMENDED BY TSC TO ENSURE HEATERS ARE COVERED.

7 Deenergize PRZR Heaters

a. Place PRZR proportional heaters in PULL STOP

b. Place PRZR backup heaters in OFF

c. Consult TSC for a recommended minimum indicated PRZR water level that will ensure heaters are covered

(1) WHAT is the basis for this CAUTION in ES-1.2, and (2) WHICH guidance would the TSC use in determining a value for the recommended minimum indicated PRZR water level?

A. (1) The post-accident ADVERSE CNMT temperature value would result in indicated PRZR level being LOWER than actual level;
(2) ITS 3.3.3, Post-Accident Monitoring Instrumentation Bases

B. (1) The post-accident ADVERSE CNMT temperature value would result in indicated PRZR level being LOWER than actual level;
(2) EOP-DIRECTED-TSC-ACTIONS document

C. (1) Hydrogen in the reference legs of PRZR water level instruments can come out of solution in accidents involving depressurization, resulting in indicated PRZR level being HIGHER than actual level
(2) ITS 3.3.3, Post-Accident Monitoring Instrumentation Bases

D. (1) Hydrogen in the reference legs of PRZR water level instruments can come out of solution in accidents involving depressurization, resulting in indicated PRZR level being HIGHER than actual level
(2) EOP-DIRECTED-TSC-ACTIONS document

Answer: D

Explanation:

A. Incorrect. Plausible because post-LOCA CNMT temperature would result in reference leg heatup, but the weight of the reference leg would decrease, D/P would decrease, and indicated level would be HIGHER than actual. ITS PAM instrumentation is also a credible choice, but does not address the H2 dissolution issue.

B. Incorrect. Plausible because post-LOCA CNMT temperature would result in reference leg heatup, but the weight of the reference leg would decrease, D/P would decrease, and indicated level would be HIGHER than actual. Part 2 is the correct reference.

C. Incorrect. Plausible because part 1 is the correct reason, and part 2 is also plausible because ITS PAM instrumentation is also a credible choice, but does not address the H2 dissolution issue.

D. CORRECT. For accidents involving rapid RCS depressurizations which might drive H2 out of solution, as much as a +20% positive bias can result which was NOT considered in developing the EOP setpoints (and had to be referenced by this CAUTION). The referenced procedure was developed to assist the TSC in evaluating EOP-driven technical issues.

Technical Reference(s): EOP-DIRECTED-TSC-ACTIONS (Attach if not previously provided)

Proposed references to be provided to applicants during examination: None

Learning Objective: RES12C, 1.02;

Question Source: Bank/VISION # _____
Modified Bank # _____ (Note changes or attach parent)
New X

Question History: Last NRC Exam _____

Question Cognitive Level: Memory or Fundamental Knowledge _____
Comprehension or Analysis X

10 CFR Part 55 Content: 55.41 _____
55.43 .5

Justification for K/A Match:

Matches K/A by requiring candidate to understand the operational implications of a CAUTION in ES-1.2.

Answer: D

Explanation:

A. Incorrect. Plausible because post-LOCA CNMT temperature would result in reference leg heatup, but the weight of the reference leg would decrease, D/P would decrease, and indicated level would be HIGHER than actual. ITS PAM instrumentation is also a credible choice, but does not address the H2 dissolution issue.

B. Incorrect. Plausible because post-LOCA CNMT temperature would result in reference leg heatup, but the weight of the reference leg would decrease, D/P would decrease, and indicated level would be HIGHER than actual. Part 2 is the correct reference.

C. Incorrect. Plausible because part 1 is the correct reason, and part 2 is also plausible because ITS PAM instrumentation is also a credible choice, but does not address the H2 dissolution issue.

D. CORRECT. For accidents involving rapid RCS depressurizations which might drive H2 out of solution, as much as a +20% positive bias can result which was NOT considered in developing the EOP setpoints (and had to be referenced by this CAUTION). The referenced procedure was developed to assist the TSC in evaluating EOP-driven technical issues.

Technical Reference(s): EOP-DIRECTED-TSC-ACTIONS (Attach if not previously provided)

Proposed references to be provided to applicants during examination: None

Learning Objective: RES12C, 1.02;

Question Source: Bank/VISION # _____
Modified Bank # _____ (Note changes or attach parent)
New X

Question History: Last NRC Exam _____

Question Cognitive Level: Memory or Fundamental Knowledge _____
Comprehension or Analysis X

10 CFR Part 55 Content: 55.41 _____
55.43 .5

Justification for K/A Match:

Matches K/A by requiring candidate to understand the operational implications of a CAUTION in ES-1.2.

The question is SRO-ONLY because it cannot be answered solely by knowing system knowledge, immediate operator actions, plant parameters that require direct entry into EOPs, or knowing the purpose, overall sequence of events, or overall mitigative strategy of a procedure; AND requires the operator to demonstrate knowledge of TSC decision making process and implications to the operation of pressurizer heaters.

Examination Outline Cross-reference:	Level	RO	SRO
	Tier #		1
	Group #		2
	K/A #	E08	2.4.18
	Importance Rating		4.0

Pressurized Thermal Shock: Knowledge of the specific bases for EOPs.

SRO Question # 85

A LOCA occurred with the plant at 100% power.

The following conditions exist 20 minutes after the event:

- RCS Pressure is 75 psig and stable.
- Containment pressure is 17 psig and stable.
- A RED Path exists on RCS Integrity.
- RHR flow is 600 gpm.

The crew is currently getting ready to transition out of E-0, Reactor Trip or Safety Injection, into the E-1, Loss of Reactor or Secondary Coolant.

WHICH ONE of the following identifies the actions that will be taken upon entry into FR-P.1, AND identifies the procedure that will be used upon completion of E-1?

A. Verify that RHR flow is sufficiently high and go to E-1;
ES-1.2, Post-LOCA Cooldown and Depressurization.

B. Perform an RCS Soak, and continue on with E-1 actions that do not cool down or re-pressurize the RCS;
ES-1.2, Post-LOCA Cooldown and Depressurization.

C. Verify that RHR flow is sufficiently high and go to E-1;
ES-1.3, Transfer to Cold Leg Recirculation.

D. Perform an RCS Soak, and continue on with E-1 actions that do not cool down or re-pressurize the RCS;
ES-1.3, Transfer to Cold Leg Recirculation.

Proposed Answer: C

Explanation (Optional):

A. **Incorrect.** 1st part correct, 2nd part wrong. This is incorrect because the operator will go to ES-1.3, rather than ES-1.2. This is plausible because under certain conditions, ES-1.2 is a potential recovery procedure.

B. **Incorrect.** 1st part wrong, 2nd part correct. This is incorrect because the operator will NOT perform an RCS soak in this procedure. This is plausible because if the RCS pressure was sufficiently high, or RHR flow was less than 475 gpm, this would be correct.

C. **Correct.** 1st part correct, 2nd part correct. According to FR-P.1 Step 1 (p3; Rev 03200) the operator will check RCS pressure greater than 350 psig (Adverse). The RNO will direct the operator to check RHR flow greater than 475, and if so (as is the case) return to procedure to step in effect. The crew will return to E-1. According to E-1 Step 19 (p19; Rev 041), the operator will use similar criteria to select ES-1.3 rather than ES-1.2. If the RHR flow is less than 475 psig, the procedure design is assuming that a small break LOCA has occurred and will direct the operator to conduct an RCS cooldown and depressurization. On the other hand, if RHR flow is greater than 475 gpm (as is the case), the procedure design assumes that a Large Break LOCA has occurred and that ES-1.3 is the procedure of choice.

D. **Incorrect.** 1st part wrong, 2nd part wrong. See A and B.

Technical Reference(s): FR-P.1 Step 1 (p3; Rev 03200)
E-1 Step 19 (p19; Rev 041) (Attach if not previously provided)

Proposed References to be provided to applicants during examination: None

Learning Objective: RFRP1C OBJ. 2.1 (As available)

Question Source: Bank #
Modified Bank # (Note changes or attach parent)
New X

Question History: Last NRC Exam: NA

Question Cognitive Level: Memory or Fundamental Knowledge
Comprehension or Analysis X

10 CFR Part 55 Content: 55.41
55.43 2

Comments:

The KA is matched because the operator must demonstrate knowledge of the basis of Step 1 of FR-P.1. This is accomplished by requiring that the operator choose between potential plausible actions within FR-P.1. If the candidate chooses the correct path, it is indicative of an understanding of the Step basis.

The question is at the Comprehension/Analysis level cognitive level because the operator must recall bits of information (Criteria for RHR flow decision points in FR-P.1 and E-1) and then use this information to predict an outcome (i.e. how to proceed through FR-P.1 and which procedure to go to from E-1), in order to answer the question correctly.

The question is SRO-ONLY because it cannot be answered solely by knowing ≤ 1 hour TS/TRM action statements, the LCO information listed "above the line," or by knowing the TS Safety Limits; AND requires the operator to apply the Required Actions and Surveillance Requirements in accordance with the rules of application. Additionally, the operator must demonstrate knowledge of the TS basis that is required to analyze TS required actions and terminology.

What MUST be known:
1. What is the criteria within FR-P.1 that allows the operator to disregard an attempt to save RCS Integrity, and return to procedure Step in effect? 2. What is the criteria within E-1 that allows the operator to choose between ES-1.2 and ES-1.3 as the ultimate recovery procedure? 3. Under the stated plant conditions, how will the crew proceed through FR-P.1? 4. Under the stated plant conditions, will the crew implement ES-1.2 or ES-1.3 when transitioning from E-1?

Examination Outline Cross-reference:	Level	RO	SRO
	Tier #		2
	Group #		1
	K/A #	004 A2.27	
	Importance Rating		4.2

Ability to (a) predict the impacts of the following malfunctions or operations on the CVCS, and (b) based on those predictions, use procedures to correct, control, or mitigate the consequences of those malfunctions or operations: Improper RWST boron concentration

SRO Question # 86

Given the following plant conditions:

- The plant is operating at 100% power
- MOV-350, Immediate Borate Valve, is OOS
- Chemistry calls and reports that the weekly sample of the RWST shows that the boron concentration is 2725 ppm

In accordance with TR 3.1.1, Boron Injection System – Modes 1, 2, 3 and 4, WHICH ONE of the following identifies:

(1) the impact, if any, of the RWST sample results;

AND

(2) if there is an impact, the action needed to ensure that TR 3.1.1 is being complied with?

A. (1) There is no impact on TR 3.1.1;
(2) Refer to ER-CVCS.1, REACTOR MAKEUP MALFUNCTION to restore equipment.

B. (1) TR 3.1.1 is NOT met;
(2) Align the flowpath through V-356, Immediate boration valve in accordance with ER-CVCS.1.

C. (1) TR 3.1.1 is NOT met;
(2) Raise RWST boron concentration using S-9J, Blending to RWST.

D. (1) TR 3.1.1 is NOT met;
(2) Lower RWST boron concentration boron concentration using S-9J.

Proposed Answer: C

Explanation :

A. Incorrect. This is incorrect because three of the four required boron injection flowpaths are inoperable. This is plausible because the operator may not know the TSR 3.1.1 required boron concentration, and incorrectly believe that this boron concentration is within the allowable band. If the operator incorrectly believes that the RWST boron concentration is within, then they would believe that both flowpaths from the RWST are operable. Since only two flowpaths are required, TR 3.1.1 is NOT impacted. Note that the BAST through an operable BA Pump through the normal makeup path [AOV-110A] is currently operable, and therefore the operator would incorrectly believe that there are a total of three operable flowpaths when only two are needed.

B. Incorrect. This is incorrect the Immediate Borate Manual valve cannot be credited as a separate flowpath from the flowpath using AOV-110A. According to Drawing 33016-1266, this valve is located downstream of AOV-110A. Consequently, AOV-110A, which is already credited as one of the required two flowpaths must be opened to credit this valve. This is plausible because the operator may incorrectly believe that the flowpath involving the Immediate Borate Manual Valve can be used as an alternative to the OOS MOV-350.

C. CORRECT. According to TRB 3.1.1 (pTRB 3.1.1-1; Rev 37), the two required boron injection subsystems must be supported by two operable charging pumps and two of the following four flowpaths: (1) BAST through an operable BA Pump through the normal makeup path [AOV-110A], (2) BAST through an operable BA Pump through the Immediate Borate Valve [MOV-350], (3) RWST to the Charging Pump through the Emergency Makeup Valve [AOV-112B], and (4) RWST via gravity feed to the Charging Pump through the Emergency Makeup Valve Bypass Valve [V-358]. According to TSR 3.1.1 (pTR 3.1.1-2; Rev 43) when the RWST is being used as a boron injection flowpath the boron concentration must be > 2750 ppm. Since the RWST Boron concentration is < 2750, flowpaths 3 and 4 above are inoperable. Therefore, TR 3.1.1 is NOT met. Because of this the RWST boron concentration must be raised to greater than 2750 ppm.

D. Incorrect. This is incorrect because the RWST boron concentration is too low, rather than too high. This is plausible because according to TS LCO 3.5.2, Surveillance Requirement 3.5.4.2 (p3.5.4-1; Amendment 96), the operator must verify RWST boron concentration is ≥ 2750 ppm and ≤ 3050 ppm every seven days. Recognizing that TS LCO 3.5.4 has an upper limit, the operator may incorrectly believe that the current RWST boron concentration is too high (i.e. above the TS LCO 3.5.4 upper limit). If the operator incorrectly believes that the RWST boron concentration is too high, then they would believe that both flowpaths from the RWST are inoperable. This, coupled with the flowpath from the Immediate Borate, renders three of the four flowpaths inoperable with two required. If the operator incorrectly believed this the correct action would be to lower RWST boron concentration.

Technical Reference(s): TRB 3.1.1 (pTRB 3.1.1-1; Rev 37) (Attach if not previously provided)

TSR 3.1.1 (pTR 3.1.1-2; Rev 43)
ER-CVCS.1, REACTOR MAKEUP MALFUNCTION

S-9J, BLENDING TO RWST

Proposed References to be provided to applicants during examination: None

Learning Objective: RTS00C, Obj. 3.01, 3.02 (As available)

Question Source: Bank #

Modified Bank # (Note changes or attach parent)

New X

Question History: Last NRC Exam: NA

Question Cognitive Level: Memory or Fundamental Knowledge

Comprehension or Analysis X

10 CFR Part 55 Content: 55.41

55.43 2

Comments:

The KA is matched because the operator must demonstrate the ability to predict the impact of a low RWST boron concentration on the CVCS (Boron Injection Flowpaths); and use procedures (In this case, the required actions within procedures) to correct, control, or mitigate the consequences.

The question is at the Comprehension/Analysis level cognitive level because the operator must recall bits of information (TR 3.1.1 RWST boron concentration requirements, how many flowpaths required to be OPERABLE, which flowpaths are allowed) and then use this information to predict an outcome (i.e. no impact), in order to answer the question correctly.

The question is SRO-ONLY because it cannot be answered solely by knowing ≤ 1 hour TS/TRM action statements, the LCO information listed "above the line," or by knowing the TS Safety Limits; AND requires the operator to apply the Required Actions and Surveillance Requirements in accordance with the rules of application. Additionally, the operator must demonstrate knowledge of the TS basis that is required to analyze TS required actions and terminology.

What MUS□ be known:
1. What is the TSR 3.1.1 required RWST boron concentration? 2. What are the potential boron injection flowpaths that can satisfy TR 3.1.1 in Mode 1? 3. How many boron injection flowpaths are required to be OPERABLE in Mode 1? 4. What is the impact on TR 3.1.1 of RWST boron concentration being higher than that allowed by TS LCO 3.5.4, SR 3.1.1?

Examination Outline Cross-reference:	Level	RO	SRO
	Tier #		2
	Group #		1
	K/A #	2.2.40	
	Importance Rating		4.7

RHR: Ability to apply Technical Specifications for a system

SRO Question #87

WHICH ONE of the following describes (1) the requirement for RHR cooling while in REFUELING mode, AND (2) the basis for that requirement?

A. (1) With >23 feet in reactor cavity, two RHR loops are required to be OPERABLE, with one in operation
(2) With the water volume available in the cavity two RHR loops are required to provide adequate mixing to prevent inadvertent criticality

B. (1) With >23 feet in reactor cavity, one RHR loop is required to be OPERABLE and in operation
(2) Single failures are not considered due to the time available for the operator to respond to the loss of the operating RHR pump prior to reaching boiling in the RCS

C. (1) With <23 feet in reactor cavity, two RHR loops are required to be OPERABLE, with both RHR loops in operation
(2) The reduced volume of water contained within the reactor cavity can result in a rapid approach to boiling if only a single RHR loop is in operation and is lost

D. (1) With <23 feet in reactor cavity, one RHR loop is required to be OPERABLE and in operation
(2) With the water volume available in the cavity one RHR loop is required to provide adequate mixing to prevent inadvertent criticality

Answer: B

Explanation:

A. Incorrect. Plausible because the requirement for many 2-loop cooling systems is that both be available, and one be in operation. Incorrect because with a large volume (>23') of water in the reactor cavity, the failure of a single running RHR loop is not as much a concern because of the time available to operators to respond to the failure. Part 1 is incorrect, part 2 is incorrect since only one RHR loop is required to provide mixing

B. CORRECT. Per the ITS basis found in ITS 3.9.4, a significant amount of time exists with a water level >23' in the cavity before boiling of the coolant would occur following the loss of the single RHR cooling loop. Because of this, single failures are not considered for this LCO due to the time available to respond to the loss of cooling.

C. Incorrect. Plausible because with a reduced volume of water in the cavity and an elevated decay heat load early in the outage, two RHR cooling loops might be required. Part 2 is reasonable, but incorrect – core decay heat and time to boiling is a concern throughout the core unload/reload process.

D. Incorrect. Part 1 is plausible for the basis given in part 2, but part 2's is correct

Technical Reference(s): ITS 3.9.4 & 5 and 3.9.4 bases (Attach if not previously provided)

Proposed references to be provided to applicants during examination: None

Learning Objective: R2501C 1.13

Question Source: Bank/VISION # _____

Modified Bank # 69384 (Note changes or attach parent)

New _____

Question History: Last NRC Exam _____

Question Cognitive Level: Memory or Fundamental Knowledge X

Comprehension or Analysis _____

10 CFR Part 55 Content: 55.41 _____

55.43 2

Justification for K/A Match:

Matches the K/A by requiring knowledge of RHR Cooling Loop requirements during MODE 6.

SRO-only because it requires explanation of the ITS basis which justifies the LCO requirement.

Examination Outline Cross-reference:	Level	RO	SRO
	Tier #		2
	Group #		1
	K/A #	013 A2.03	
	Importance Rating		4.7

Ability to (a) predict the impacts of the following malfunctions or operations on the ESFAS, and (b) based Ability on those predictions, use procedures to correct, control, or mitigate the consequences of those malfunctions or operations: Rapid Depressurization

SRO Question # 88

Given the following:

- The plant has tripped from 100% power due to a Steam Break in Containment.
- Containment pressure has risen to 25 psig and is slowly rising.
- The crew has transitioned from E-0 to the appropriate recovery procedure and isolated the faulted Steam Generator.

WHICH ONE of the following identifies when the ARV setpoint is adjusted to minimize the RCS heatup, AND the plant parameter that is used to determine the correct ARV setpoint?

The crew will adjust the Intact Steam Generator ARV setpoint.....

A. Prior to exiting E-2, Faulted Steam Generator Isolation; AND
The Maximum Hot Leg temperature.

B. Immediately after reducing SI flow in ES-1.1, SI Termination; AND
The Maximum Hot Leg temperature.

C. Immediately after reducing SI flow in ES-1.1, SI Termination; AND
The Maximum Core Exit Thermocouple temperature.

D. Prior to exiting E-2, Faulted Steam Generator Isolation; AND
The Maximum Core Exit Thermocouple temperature.

Proposed Answer: A

Explanation:

A. **Correct.** 1st part correct, 2nd part correct. According to E-2 (p8; Rev 01301), Step 8, the operator will be directed to determine allowable intact S/G pressure using maximum hot leg temperature using FIG-7.0.

B. **Incorrect.** 1st part wrong, 2nd part correct. This is incorrect because the action is taken in E-2, not ES-1.1; and before addressing the SI termination criteria. This is plausible because according to ES-1.1 (p10-11; Rev 03400) the operator is directed to dump steam and stabilize RCS temperature and immediately after terminating ECCS injection flow. However, this is a continuation of controlling the post-accident plant temperature. The determination of the Intact Steam Generator ARV setpoint per FIG-7.0 and the establishing of steam dump per the ARVs were completed in E-2.

C. **Incorrect.** 1st part wrong, 2nd part wrong. See B and D.

D. **Incorrect.** 1st part correct, 2nd part wrong. This is incorrect because the direction in E-2 is to apply the maximum Thot temperature to FIG-7.0, rather than the maximum CET. This is plausible because the CETs are used for other decision points when operating within the EOP network (RCS Subcooling, PTS CSFST decision tree), and the operator may incorrectly believe that the CETs are used in this action.

Technical Reference(s): E-2 (p8; Rev 01301) (Attach if not previously provided)

Proposed References to be provided to applicants during examination: None

Learning Objective: REP02C, Obj. 1.2 (As available)

Question Source: Bank #

Modified Bank # (Note changes or attach parent)

New X

Question History: Last NRC Exam: NA

Question Cognitive Level: Memory or Fundamental Knowledge

Comprehension or Analysis X

10 CFR Part 55 Content: 55.41

55.43 2 or 5

Comments:

The KA is matched because the operator must demonstrate the ability to predict the impacts of a rapid SG depressurization on the ESFAS (i.e. Subsequently will need to terminate SI to avoid a PTS concern, requiring that the heat up be controlled during the mitigation process to avoid a reduction in RCS Subcooling once the faulted SG dries out); and based on those predictions, use procedures to correct, control, or mitigate the consequences of those operations (i.e. use FIG-7.0 within E-2).

The question is at the memory cognitive level because the operator must simply recall bits of information (What plant parameter is applied to FIG-7.0 to determine Intact ARV setpoint, When in the mitigation process are these actions taken) in order to answer the question correctly.

The question is SRO-ONLY because it cannot be answered solely by knowing system knowledge, immediate operator actions, plant parameters that require direct entry into EOPs, or knowing the purpose, overall sequence of events, or overall mitigative strategy of a procedure; AND requires the operator to demonstrate knowledge of when to implement attachments and appendices (i.e. FIG-7.0), including how (i.e. what plant parameter) to coordinate these items with procedure steps.

What MUST be known:
1. When does the operator take action to determine the setpoint of the Intact SG ARV and dump steam to minimize RCS Heatup during a faulted SG? 2. What plant parameter is applied to FIG-7.0 to determine Intact ARV setpoint when operating in E-2?

Level RO SRO

Tier #		2
Group #		1
K/A #	063	A2.01
Importance Rating		3.2

Ability to (a) predict the impacts of the following malfunctions or operations on the DC electrical systems; and (b) based on those predictions, use procedures to correct, control, or mitigate the consequences of those malfunctions or operations.

SRO Question # 89

Given the following:

- The plant is operating at 100% Power
- Annunciator J-23, BATTERY BANK GROUND is received
- The source of the ground is identified to be on MCB DC Distribution Panel A
- The Electricians have requested that breaker #14 to MQ 483 inverter be opened to isolate the ground and de-energizes relay PC-950B, Containment Pressure

WHICH ONE of the following describes (1) the consequence that this ground isolation action will have on Containment Spray (CS) actuation logic prior to defeat, AND (2) what procedure will be referenced to ensure the ITS 3.3.2 function is satisfied?

A. (1) Changes the CS actuation logic to 2 out of 2 + 2 out of 3 logic effectively reducing redundancy
(2) ER-INST.1, REACTOR PROTECTION BISTABLE DEFEAT AFTER INSTRUMENTATION LOOP FAILURE

B. (1) Changes the CS actuation logic to 2 out of 2 + 2 out of 3 logic effectively reducing redundancy
(2) ER-ELEC.2, RECOVERY FROM A LOSS OF A OR B DC TRAIN

C. (1) Causes a protective function changes the CS actuation logic to 1 out of 2 logic
(2) ER-INST.1, REACTOR PROTECTION BISTABLE DEFEAT AFTER INSTRUMENTATION LOOP FAILURE

D. (1) Causes a protective function changes the CS actuation logic to 1 out of 2 logic
(2) ER-ELEC.2, RECOVERY FROM A LOSS OF A OR B DC TRAIN

Answer: A

Explanation:

A. CORRECT. MQ-483 provides power to Containment pressure PC-950A, PC-950B, and Steam pressure PC-479A instrumentation. PC-950B is Containment spray input from Containment Pressure. De-energizing this relay changes the Containment Spray logic from 2 out of 3+2 out of 3 (CNMT Spray utilizing both sets of CNMT Pressure Inst. Front and back of MCB) to a 2 out of 2 +2 out of 3 logic. 2nd part is correct. PC-950B requires DC power to perform its safety function and is "energize" to function bisatable relay. Above MODE 5 I&C installs jumpers in order to energize the relay. This will ensure that the ITS 3.3.2 function to "defeat the bistable is performed and refer to ER-INST.1

B. Incorrect. 1st part is correct as described in A. 2nd part is in correct but plausible since ER-ELEC.2 is associated with problems associated with DC trains and is referenced for other DC events. This does not discuss jumper actions for this relay

C. Incorrect. Plausible because the candidate may believe that the change to the logic is that of PC-950A, Steam Line Isolation, also powered from MQ-483, which will go from 2 out of 3 to 1 out of 2. Plausible because the 2nd part is correct for jumpers to be installed on PC-950B.

D. Incorrect. Plausible because the candidate may believe that the change to the logic is that of PC-950A, Steam Line Isolation, also powered from MQ-483, which will go from 2 out of 3 to 1 out of 2. 2nd part is in correct but plausible since ER-ELEC.2 is associated with problems associated with DC trains and is referenced for other DC events. This does not discuss jumper actions for this relay

Technical Reference(s): P-11, Electrical Distribution Panel Reference Manual; ER-INST.1, ATT 23 Yellow channel- CNMT CH 3B Pressure PI-950 (Attach if not previously provided)

Proposed References to be provided to applicants during examination: None

Learning Objective: R0901C, Obj 1.06, 1.10 (As available)

Question Source: Bank #

Modified Bank # (Note changes or attach parent)

New X

Question History: Last NRC Exam:

Question Cognitive Level: Memory or Fundamental Knowledge

Comprehension or Analysis X

10 CFR Part 55 Content: 55.41

55.43 .5

.

Comments:

Matches the K/A because
This question matches the K/A because it requires the candidate to assess the impacts of operating a DC breaker during ground isolation and predict it's affect on the Containment Spray system. The examinee will have to decide which procedure will apply for this maintenance.

This is SRO only because it requires the candidate to assess the maintenance activity and its affects and then determine which procedure would be applicable tor the situation.

Examination Outline Cross-reference:	Level	RO	SRO
	Tier #		2
	Group #		1
	K/A #	103 2.1.25	
	Importance Rating		4.2

Containment: Ability to interpret references materials, such as graphs, curves, tables, etc.

SRO Question #90

Given the following plant conditions:

- A large break LOCA has occurred
- ES-1.3 , TRANSFER TO COLD LEG RECIRC, is in progress
- CNMT Spray pump 'A' has been started
- CNMT pressure is 47 psig and slowly lowering
- RHR suction temperature (PPCS point T0684A/B) is 292°F
- The crew is assessing FIG-21.0, FIGURE CNMT SPRAY RESTART CRITERIA

WHICH ONE of the following identifies the required CNMT Spray Pump 'A' operation AND what procedural actions will need to be taken next?

A. CONTINUE to RUN Cnmt Spray Pump A;
Stay in ES-1.3 and consult TSC to determine if Rx Vessel Head should be vented.

B. CONTINUE to RUN Cnmt Spray Pump A;
Stay in ES-1.3 and Establish Normal Shutdown alignment.

C. Cnmt Spray Pump A will BE STOPPED;
Stay in ES-1.3 and monitor for indications of Sump blockage

D. Cnmt Spray Pump A will BE STOPPED;
GO TO ECA-1.3, RESPONSE TO SUMP B BLOCKAGE

Answer: C

Explanation:

A. Incorrect. Plausible because FR-Z.1 procedure would have both CS pumps started, but the NOTE prior to step 2 in FR-Z.1 would operate them per E-1 guidance (which would include the ES-1.3 transition). Crew is past Step 12 in ES-1.3, so FR's can be implemented again.

B. Incorrect. Plausible since ATT-28.0 will stop the running CS pump that was started WHEN CNMT pressure lowers to 43 psig, but per rules of procedural usage, that pressure condition has not yet been satisfied.

C. CORRECT. The CAUTION prior to starting the single CS pump in ATT-28.0 warns that RHR suction temperature must be monitored closely and checked against FIG-21.0 to guard against loss of RHR pump suction. Using FIG-21.0, the candidate should determine that the maximum allowable RHR suction temperature for a CNMT pressure of 47 psig is 285°F, and the given PPCS temperature exceeds that, so the CNMT spray pump should be STOPPED.

D. Incorrect. Plausible because this is the correct action as long as RHR suction temperature remains within limits. Incorrect because it hasn't.

Technical Reference(s): ES-1.3, ATT-28.0, and FIG-21.0 (Attach if not previously provided)

Proposed references to be provided to applicants during examination: FIG-21.0

Learning Objective: RES13C 1.02;

Question Source: Bank/VISION # _____
Modified Bank # _____ (Note changes or attach parent)
New X

Question History: Last NRC Exam _____

Question Cognitive Level: Memory or Fundamental Knowledge _____
Comprehension or Analysis X

10 CFR Part 55 Content: 55.41 _____
55.43 .5

Justification for K/A Match:

Matches the K/A because it requires the use of an infrequently-performed Attachment and Figure to determine if Containment Spray pump should be secured.

SRO-only because it requires knowledge of when to implement attachments, including how to coordinate these items with procedural steps.

Examination Outline Cross-reference:

Level	RO	SRO
Tier #		2
Group #		2
K/A #	017 A2.01	
Importance Rating		3.5

Ability to (a) predict the impacts of the following malfunctions or operations on the ITM system; and (2) based on those predictions, use procedures to correct, control, or mitigate the consequences of those malfunctions or operations: Thermocouple open and short circuits

SRO Question #91

Given the following plant conditions:

- A large break LOCA has occurred
- The STA is monitoring the Incore Thermocouple Display as seen below
- The hottest CETs (D2 and D5) have developed a partial SHORT and now reads 300˚F

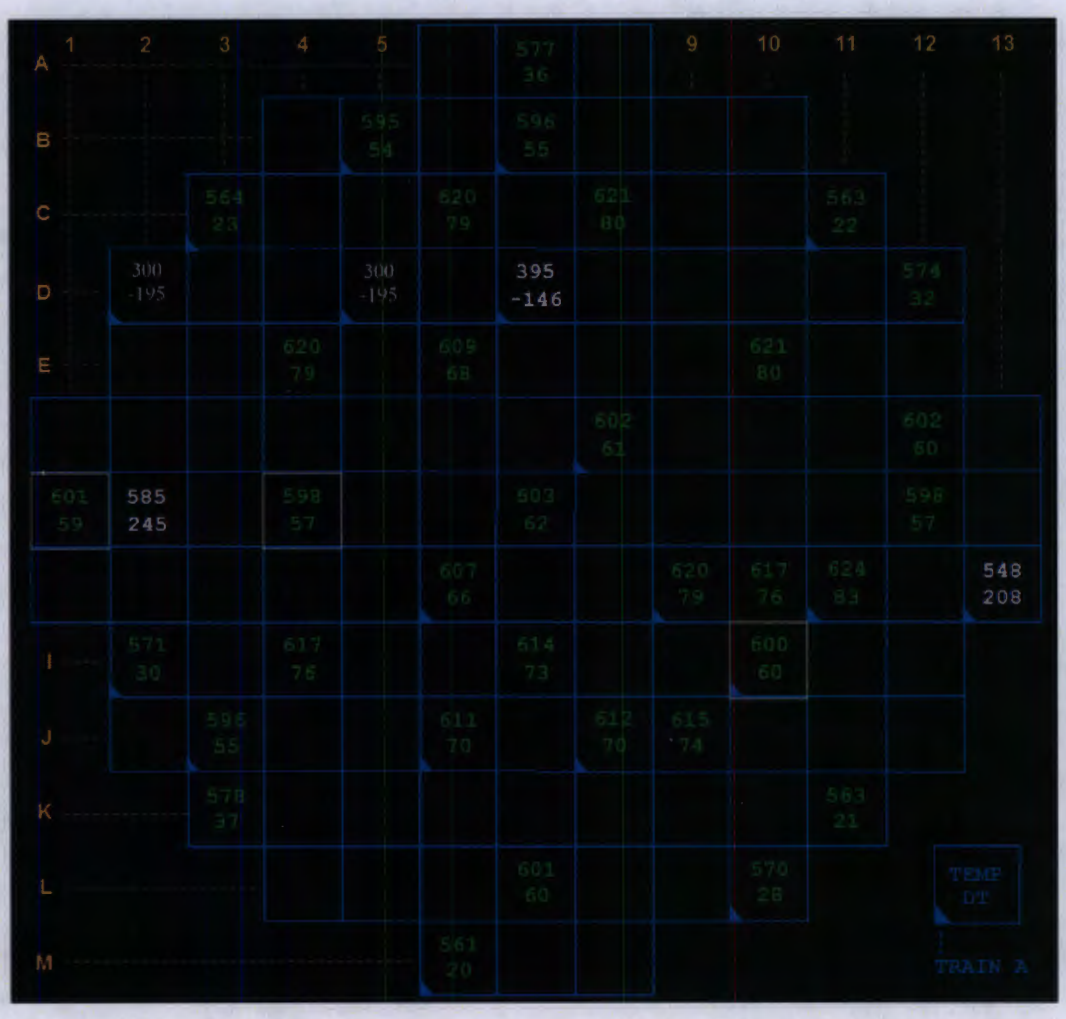

WHICH ONE of the following (1) accurately describes the response of the PPCS Subcooled Margin indication, and (2) what action should be taken, if any, per ITS 3.3.3, PAM Instrumentation for Quadrant 1 Core Exit Temperature (CETs)?

PPCS indicated Subcooled Margin will:

A. (1) RISE; (2) The Quadrant 1 CETs PAM requirements are met no action is required

B. (1) RISE; (2) subcooling must be manually averaged using the next five hottest CETs

C. (1) LOWER; (2) The Quadrant 1 CETs PAM requirements are met no action is required

D. (1) LOWER; (2) subcooling must be manually averaged using the next five hottest CETs

Answer: A

Explanation:

A. CORRECT. Plausible because it requires knowledge of the direction (fail HIGH or LOW) that the partial SHORT CET will indicate. Part 2 is plausible because the higher value IS still part of the 5-hottest CET indications, and that is causing an artificially high CET average value which requires manual calculation.

B. The Partially shorted thermocouple will result in a much lower than the current value condition, which will be reflected in a lower value for the hottest CET, which will drive the PPCS Subcooled Margin value lower. Per the guidance provided in A503.1, Generic Concern section N, use of PPCS for determining Subcooled Margin is identified, and any questionable PPCS data should be verified using other indications.

C. Incorrect. Plausible because it requires knowledge of the direction (fail HIGH or LOW) that the Shorted CET will indicate. Part 2 is plausible because it's correct – and that's the problem which has to be addressed via alternative method for determining subcooled margin.

D. Incorrect. Plausible because it requires knowledge of the direction (fail HIGH or LOW) that the Shorted CET will indicate. Part 2 is plausible because the answer is correct trend for the temperature change because the indicated margin actually rises.

Technical Reference(s): A-503.1 (Attach if not previously provided)

Proposed references to be provided to applicants during examination: None

Learning Objective: R3201C 1.04

Question Source: Bank/VISION # _____
Modified Bank # _____ (Note changes or attach parent)
New X

Question History: Last NRC Exam _____

Question Cognitive Level: Memory or Fundamental Knowledge _____
Comprehension or Analysis X

10 CFR Part 55 Content: 55.41 _____
55.43 .5

Justification for K/A Match:

Matches the K/A by requiring knowledge of the failed value direction of an OPEN thermocouple and what corrective actions are required by the EOP rules of usage procedure to correct the invalid Subcooled Margin calculation.

SRO-only because it requires an assessment of plant conditions and actions required by a procedure to mitigate the effects of the failure.

Examination Outline Cross-reference:	Level	RO	SRO
	Tier #		2
	Group #		2
	K/A #	033 A2.03	
	Importance Rating		3.5

Ability to (1) predict the impacts of the following malfunctions or operations on the Spent Fuel Pool Cooling System; and (2) based on those predictions, use procedures to correct, control, or mitigate the consequences of those malfunctions or operations: Abnormal spent fuel pool water level or loss of water level

SRO Question #92

Given the following plant conditions in the Spent Fuel Pool:

- The plant is two weeks into a refueling outage
- Full core offload was required for RCS maintenance
- SFP cooling loop 'B' is in service
- The standby SFP pump is installed
- SFP cooling temperature is 102˚F and stable
- The Primary AO reports SFP level is slowly lowering due to SFP wier gate leakage.
- Annunciator K-29, SFP HI TEMP HI-LO LEVEL, has just been received

WHICH ONE of the following describes (1) the response of the SFP cooling system to the K-29 alarm, if any, AND (2) what action will be directed by the appropriate procedure to mitigate the effects of this condition?

A. (1) SFP pump 'B' will continue to run until SFP level lowers an additional 2" below the K-29 low level alarm setpoint;
(2) Direct the crew to fill the SFP from the RWST.

B. (1) SFP pump 'B' will continue to run, resulting in continued loss of SFP inventory through the weir gate;
(2) Direct the crew to monitor SFP temperatures and place the standby SFP cooling loop in service if necessary.

C. (1) SFP pump 'B' will trip immediately upon receipt of the K-29 low level alarm;
(2) Direct the crew to fill the SFP from the RWST

D. (1) SFP 'B' will trip immediately upon receipt of the K-29 low level alarm;
(2) Direct the crew to place the 'A' SFP cooling loop in service, monitor SFP temperature, and determine if the standby SFP cooling system needs to be placed in service.

Answer: A

Explanation:

A. CORRECT. The auto trip and low level alarm functions were given separate detectors in ~2012, and the auto trip now occurs ~2" below the receipt of the LLA (pre-warning). With the 'B' SFP pump tripped, and no low level trip on the 'A' SFP pump, the 'A' SFP cooling loop should be placed in service and, with full core offload in progress, the effectiveness of only the 'A' cooling loop should be monitored, and the standby loop placed in service if necessary.

B. Incorrect. Plausible if the candidate believes that it is 'A' SFP pump which trips automatically on a low level condition. Part 2 is plausible because the answer is partially correct (monitor temp, place standby system in service if necessary.

C. Incorrect. Plausible because part 1 used to be true – the 'B' SFP pump would trip when the LLA was received. Part 2 is plausible because that, also, is true, but with full core off-load, both the 'A' and standby cooling loops need to be in service.

D. Incorrect. Plausible because part 1 used to be true – the 'B' SFP pump would trip when the LLA was received. Part 2 is correct.

Technical Reference(s): AR-K-29 (Attach if not previously provided)

Proposed references to be provided to applicants during examination: None

Learning Objective: R3601C 1.07 & 1.11

Question Source: Bank/VISION # _____
Modified Bank # 68705 (Note changes or attach parent)
New _____

Question History: Last NRC Exam _____

Question Cognitive Level: Memory or Fundamental Knowledge _____
Comprehension or Analysis X

10 CFR Part 55 Content: 55.41 41.6
55.43 _____

Justification for K/A Match:

Matches the K/A by predicting the impact of lowering SFP level on the SFPCS, then determining the correct procedural action by assessing recent plant instrumentation mods and full core offload in progress.

SRO-only because it requires an assessment of plant conditions and knowledge of SFP procedural lineups required to select the correct course of action.

Level	RO	SRO
Tier #		2
Group #		2
K/A #	035	2.2.22
Importance Rating		4.7

Steam Generator: Knowledge of limiting conditions for operation and safety limits

SRO Question # 93

Given the following conditions:

- The plant is in MODE 1, 5% power
- The test team has just completed the "as found" test for lift setpoints for safety valves 3509 and 3511 with the following data:

3509 = 1108.6 psig
3511 = 1152.4 psig

(1) ARE these lift settings in compliance with Tech Specs, AND (2) WHAT purpose(s) do the MSSVs serve?

A. (1) No, one (1) MSSV does NOT meet the lift setting requirements
(2) Provide overpressure protection for the secondary system AND protection against overpressurizing the Reactor Coolant System Boundary (RCPB)

B. (1) Yes, both MSSVs meet the lift setting requirements
(2) Provide overpressure protection for the secondary system AND protection against overpressurizing the Reactor Coolant System Boundary (RCPB)

C. (1) No, one (1) MSSV does NOT meet the lift setting requirements
(2) **Only** credited with providing overpressure protection of the secondary system

D. (1) Yes, both MSSVs meet the lift setting requirements
(2) **Only** credited with providing overpressure protection of the secondary system

Proposed Answer: A

Explanation:

A. CORRECT. Per SR 3.7.1.1, the setpoint of 3509 and 3511 should be 1140 psig +1%, -3%. One % of 1140 = 11.4, so the high limit would be 1151.4 psig. The low limit would be 1140 – 3%(1140) = 1140 – 34.2 = 1105.8 psig. With the range between 1105.8 and 1151.4, 3509 is IN spec but 3511 is OUT of spec. The Basis for 3.7.1 states that the primary purpose of the MSSVs is to provide overpressure protection for the secondary system, but they also provide protection against overpressurizing the reactor coolant pressure boundary (RCPB) by providing a heat sink for the removal of energy from the RCS if the preferred heat sink provided by the condenser and circ water system is not available.

B. Incorrect.. Part 1 is plausible if the surveillance acceptable limits are miscalculated and because part 2 is correct.

C. Incorrect. Plausible because part 1 is correct and because while part 2 is the *primary* purpose that they serve, they do serve a secondary purpose as explained in the ITS Basis.

D. Incorrect. Part 1 is plausible if the surveillance acceptable limits are miscalculated and because while part 2 is the *primary* purpose that they serve, they do serve a secondary purpose as explained in the ITS Basis.

Technical Reference(s): ITS3.7.1 and its Basis (Attach if not previously provided)

Proposed References to be provided to applicants during examination: ITS 3.7.1

Learning Objective: R4001C, Obj 1.06, 1.10 (As available)

Question Source: Bank #

Modified Bank # (Note changes or attach parent)

New X

Question History: Last NRC Exam:

Question Cognitive Level: Memory or Fundamental Knowledge X

Comprehension or Analysis

10 CFR Part 55 Content: 55.41

55.43 43.1

Comments:

Matches the K/A because it requires knowledge of and application of the LCO associated with the S/G main steam safety valves.

SRO-only because it requires knowledge of the basis associated with the MSSVs.

Examination Outline Cross-reference:	Level	RO	SRO
	Tier #		3
	Group #		1
	K/A #	2.1.23	
	Importance Rating		4.4

Ability to perform specific system and integrated plant procedures during all modes of plant operation.

SRO Question #94

Given the following plant conditions:

- A controlled cooldown and depressurization from Hot Shutdown to Cold Shutdown is in progress
- RCS T-cold is 370˚F and stable
- RCS pressure is 600 psig and stable
- The CRS had the AO unlocked and closed the breakers for MOV-878B (SI PMP A DISCH TO LOOP B) and MOV-878D (SI PMP B DISCH TO LOOP A) in anticipation of closing those valves.

WHICH ONE of the following actions, if any, will the SM be required take in response to the AO's Action and the reason for the SM's action?

A. None. The breakers being unlocked does not affect the OPERABILITY of the SI train

B. None. The SI system is not required to be operable with RCS pressure LESS THAN 1500 psig

C. Enter Tech Spec 3.03. These valves breakers must be maintained OPEN until RCS temperature is < 350˚F

D. Enter Tech Spec 3.03. These breakers must be maintained LOCKED OPEN until RCS temperature is < 200˚F

Answer: C

Explanation:

A. Incorrect. Plausible because power is still removed from 878A-878D, and the candidate might believe that if the valves have not changed out of the safeguard position that system is in a operable configuration.

B. Incorrect. Plausible because the major action category in O-2.2 section 6.3 is "RCS Cooldown and Depressurization to 350˚F and 1500 PSIG.

C. CORRECT. Per ITS 3.5.2, in Modes 1, 2, & 3 both ECCS trains must be OPERABLE. Per ITS 3.5.3, 4 only 1 ECCS train is required to be operable. Unlocking the breakers while still in Mode 3 would disable BOTH ECCS trains. The statement in B3.5.3 that "ECCS components are OPERABLE if they are capable of being reconfigured to the injection mode (remotely or locally) within 10 minutes is NOT found in the Bases for 3.5.2. Per ITS 3.5.2 with both trains of SI inoperable an Immediate entry into ITS 3.03 is required.

D. Incorrect. Plausible because the first part is correct and the candidate could mistakenly believe that the ITS applies when Mode 5 is entered (<200˚F) and not Mode 4 (<350˚F).

Technical Reference(s): O-2.2, section 6.4 (Attach if not previously provided)
ITS 3.5.2 & 3.5.3

Proposed references to be provided to applicants during examination: None

Learning Objective: R2701C 1.07, 1.09

Question Source: Bank/VISION # 69327
Modified Bank # _____ (Note changes or attach parent)
New _____

Question History: Last NRC Exam _____

Question Cognitive Level: Memory or Fundamental Knowledge _____
Comprehension or Analysis X

10 CFR Part 55 Content: 55.41 _____
55.43 .1

Justification for K/A Match:

Matches the K/A by required knowledge of the basis and past Ginna OE for actions contained within O-2.2 integrated plant procedure.

SRO only by requiring knowledge of ITS 3.5.2 required actions and bases, AND and applicability during performance of significant action steps in O-2.2.

Examination Outline Cross-reference:	Level	RO	SRO
	Tier #		3
	Group #		2
	K/A #	2.2.06	
	Importance Rating		3.6

Equipment Control: Knowledge of the process for making changes to procedures

SRO Question #95

Given the following conditions:

- The crew is in the process of implementing an Emergency Contingency Action (ECA) procedure
- The crew believes that the procedure provides insufficient procedural guidance to prevent damage to plant equipment. An action by the crew is desired to be performed prior to the prescribed EOP step sequence
- The TSC has determined this action has to be taken 10 minutes from now

WHICH ONE of the following describes the process to be used to perform the desired action?

A. Perform only the prescribed EOP step sequence

B. Perform 10CFR50.54X actions, departure from license conditions or technical specifications conditions

C. CNG-PR-1.01-1011, PROCEDURE PROCESS

D. A-503.1, EMERGENCY AND ABNORMAL OPERATING PROCEDURE USERS GUIDE, Procedure Deviation

Answer: D

Explanation:

A. Incorrect. Plausible because EOPs are required to be performed in the prescribed step sequence, however there are exceptional conditions as described in the A-503.1 WOP Procedure Users Guide, Performing Steps Out of Sequence...

B. Incorrect. Plausible because while the 10 CFR 50.54X departure from license conditions or technical specifications is used for changes, which use a different strategy then the EOP when conditions exist that need to be addressed and no apparent procedural guidance exists

C. Incorrect. The purpose of CNG-PR-1.01-1011 is to "Control the process for the development and alteration of site-specific administrative and technical procedures, including EOPs, AOPs, and SOPs. Sufficient time not exists to go process an Immediate Change to the ECA in progress.

D. Correct. Section 5.3.A, Procedure Deviations, addresses procedural deviations where the written guidance provided in the step is not appropriate for the event at hand or is non-conservative. May only be considered when all 3 conditions are met: (1) as-written guidance is deficient due to current plant or equipment conditions, (2) insufficient time exists to implement the normal procedure change policy, and (3) an immediate need exists to prevent or minimize: injury to personnel, damage to plant equipment, or a threat to health and safety of the public. The given conditions meet these criteria.

Technical Reference(s): CNG-PR-1.01-1011, A-503.1 (Attach if not previously provided)

Proposed references to be provided to applicants during examination: None

Learning Objective: R4701C, 1.06;

Question Source: Bank/VISION # _____
Modified Bank # _____ (Note changes or attach parent)
New X

Question History: Last NRC Exam _____

Question Cognitive Level: Memory or Fundamental Knowledge X
Comprehension or Analysis _____

10 CFR Part 55 Content: 55.41 _____
55.43 43.3

Justification for K/A Match:

Matches the K/A by requiring knowledge of which procedural process addresses making a change to an ECA procedure.

SRO-only because it requires knowledge of the procedural process for changing plant procedures.

Examination Outline Cross-reference:

Level	RO	SRO
Tier #		3
Group #		2
K/A #	2.2.18	
Importance Rating		3.9

Knowledge of the process for managing maintenance activities during shutdown | operations, such as risk assessments, work prioritization, etc.

SRO Question #96

Given the following:

- RCS reduced inventory operation is in progress.
- A new open CNMT penetration (#10) is about to be established and assigned to operator A.
- Estimated closure time of Penetration #10 is 7 minutes.
- Time to Boil is determined to be 15 minutes.
- There are three Responsible Individuals assigned to the Containment Closure Deviation Status:
  - Operator A – Total of 5 Minutes assigned
  - Operator B - Total of 12 Minutes assigned
  - Operator C - Total of 13 Minutes assigned

After Operator A is assigned Penetration #10, WHICH ONE of the following identifies the effect on the Most Limiting Total Estimated Closure (MLTEC) Time, AND identifies the MAXIMUM allowable MLTEC?

The MLTEC will……

A. RISE; AND
The maximum MLTEC is 15 minutes

B. RISE; AND
The maximum MLTEC is 120 minutes

C. Remain the same; AND
The maximum MLTEC is 15 minutes

D. Remain the same; AND
The maximum MLTEC is 120 minutes

Answer: C

Explanation:

A. **Incorrect.** 1st part wrong, 2nd part correct. This is incorrect because MLTEC will remain the same, not rise. This is plausible because the operator may not understand the concept of MLTEC.

B. **Incorrect.** 1st part wrong, 2nd part wrong. See A and D.

C. **Correct.** 1st part correct, 2nd part correct. According to Attachment 1 of O-2.3.1A (p61-63; Rev 02601) the MLTEC will remain at 13 Minutes because there are three individuals that are assumed to be working in parallel, and Operator C has a total of 13 minutes. Consequently, the Operator C work is the most limiting. Also according to Attachment 1 of O-2.3.1A (p61-63; Rev 02601), the MLTEC must be less than 120 minutes or the Time-To-Boil (whichever is less).

D. **Incorrect.** 1st part correct, 2nd part wrong. This is incorrect because the maximum MLTEC is 15 minutes, not 120 minutes. This is plausible because procedurally the maximum MLTEC can be as high as 120 if the Time-To-Boil were greater than 2 hours.

Technical Reference(s): O-2.3.1A Attachment 1 (p61-63; Rev 02601) (Attach if not previously provided)

Proposed references to be provided to applicants during examination: None

Learning Objective: ROP14C 1.02

Question Source: Bank/VISION # _____
Modified Bank # _____ (Note changes or attach parent)
New X

Question History: Last NRC Exam _____

Question Cognitive Level: Memory or Fundamental Knowledge X
Comprehension or Analysis _____

10 CFR Part 55 Content: 55.41 _____
55.43 .5

Justification for K/A Match:

Matches the K/A by requiring knowledge of how maintenance activities involving open CNMT penetrations are controlled during shutdown conditions.

SRO-only because it requires knowledge of how to ensure that CNMT closure capability exists within 2 hrs during reduced RCS inventory conditions by implementation of ATT-1 of O-2.3.1A.

Examination Outline Cross-reference:	Level	RO	SRO
	Tier #		3
	Group #		3
	K/A #	2.3.05	
	Importance Rating		2.9

Radiation Control: Ability to use radiation monitoring systems, such as fixed radiation monitors and alarms, portable survey instruments, personnel monitoring equipment, etc.

SRO Question #97

Given the following plant conditions:

- The plant is in Mode 6
- CORE ALTERATIONS are in progress

WHICH ONE of the following fills in the blanks for the radiation monitor(s) required to be operable and the reason for operability the requirement?

During CORE ALTERATIONS.....

Radiation Monitors _____ MUST be operable in order to terminate a release in the event of a _____

A. R-11/12; loss of RHR cooling

B. R-12A; loss of RHR cooling

C. R-11/12; Fuel handling accident

D. R-12A; Fuel handling accident

Answer: C

Explanation:

A. Incorrect. 1st part is correct. R-11/12 are required to be operable to provide a CVI signal to isolate Containment Ventilation. Accident of concern is not a loss of RHR. Greater than 23 Feet over fuel provides margin for any loss of cooling event.

B. Incorrect. R-12A does not provide any input to Containment Isolation. Accident of concern is not loss of RHR. This is plausible if the examinee is not familiar with R-12A function and the reason for a CVI during refueling.

C. CORRECT.

D. Incorrect. R-12A is incorrect, as this provides no isolation function during fuel handling accident. Plausible if unfamiliar with radiation monitoring that provides Containment Isolation. R-12A is placed in service during Containment Purge but the radiation monitor does not isolate Containment.

Technical Reference(s): ITS 3.3.5, Table 3.3.5-1 and Basis (Attach if not previously provided)

Proposed references to be provided to applicants during examination: None

Learning Objective: R4701C, 1.06;

Question Source: Bank/VISION # 2011 NRC SRO Retake EXAM

Modified Bank # _____ (Note changes or attach parent)

New _____

Question History: Last NRC Exam 2011 NRC EXAM

Question Cognitive Level: Memory or Fundamental Knowledge _____

Comprehension or Analysis X

10 CFR Part 55 Content: 55.41 _____

55.43 .4

Justification for K/A Match:

Matches the K/A by requiring knowledge of radiation monitors which must be in service in order to conduct radiation releases via the CNMT PURGE system during CORE ALTERATIONS.

SRO-only because it assesses what radiation monitors have operability requirements during refueling and what accident of concern is the basis for there operabilty.

Examination Outline Cross-reference:	Level	RO	SRO
	Tier #		3
	Group #		3
	K/A #	2.3.11	
	Importance Rating		4.3

Radiation Control: Ability to control radiation releases.

SRO Question #98

You, as the Shift Manager, are authorizing a Gas Decay Tank Release per CH-703, RELEASE OF GDT's AND OTHER GASEOUS BATCH RELEASES.

The release must be initiated within __1__ hours of the tank sample time, with no additions to the tank since the sample was drawn, AND if the release is NOT initiated within the required time limit, __2__ is required to initiate the release.

A. 12 ; Chemistry technician permission

B. 12 ; Generate a new release from the original sample

C. 24 ; Chemistry technician permission

D. 24 ; Generate a new release from the original sample

Answer: A

Explanation:

A. CORRECT. Per the NOTE prior to Step 6.7.3 of CH-703, the release should be initiated within 12 hours after sample time. With chemistry technician approval, the 12 hour rule may be exceeded, providing applicable rad monitors, tank levels, pressures OR analyses are reviewed to ensure conditions that existed when permit was made still exist. This is a change from the previous CH-RETS-GDT-REL procedure, which required that the Chemistry Supervisor approve the deviation from sample time.

B. Incorrect. Plausible because part 1 is correct, and in part 2 it is reasonable to assume that if the allowed release time delay had occurred, generating a release from the original sample would be required (it was required in previous versions of the procedure).

C. Incorrect. Plausible because the time is reasonable ("within 24 hours"), and part 2 was the correct supervisory approval in previous version of the procedure.

D. Incorrect. Plausible because the time is reasonable ("within 24 hours"), and in part 2 it is reasonable to assume that if the allowed release time delay had occurred, generating a release from the original sample would be required (it was required in previous versions of the procedure).

Technical Reference(s): CH-703 (Attach if not previously provided)

Proposed references to be provided to applicants during examination: None

Learning Objective: R4701C, 1.06;

Question Source: Bank/VISION # 100146
Modified Bank # _____ (Note changes or attach parent)
New _____

Question History: Last NRC Exam 2008 NRC Exam

Question Cognitive Level: Memory or Fundamental Knowledge X
Comprehension or Analysis _____

10 CFR Part 55 Content: 55.41 _____
55.43 43.4

Justification for K/A Match:

Matches K/A by requiring knowledge of procedural requirements in place to maintain the accuracy of how much activity has been released.

SRO-only because it cannot be answered solely by knowing system knowledge, immediate operator actions, plant parameters that require direct entry into EOPs, or knowing the purpose, overall sequence of events, or overall mitigative strategy of a procedure; AND requires the operator to demonstrate knowledge of administrative procedures (or in this case, Chemistry procedures) that specify hierarchy, implementation,

and/or coordination of plant normal procedures (i.e. get this done within x amount of time or alternative actions required).

Examination Outline Cross-reference:	Level	RO	SRO
	Tier #		3
	Group #		4
	K/A #	2.4.08	
	Importance Rating		4.5

Emergency Procedures/Plan: Knowledge of how abnormal operating procedures are used in conjunction with EOPs.

SRO Question #99

Given the following plant conditions:

- Reactor was tripped due to a SGTR on 'A' S/G
- 'B' RCP is running
- The crew is implementing E-3, STEAM GENERATOR TUBE RUPTURE, and the RCS cooldown is in progress
- The following alarms are received:
  - A-15, RCP 'B' CCW RETURN HI TEMP OR LOW FLOW 165GPM 125°F
  - A-17, MOTOR OFF RCP CCWP,
  - A-22, CCW PUMP DISCHARGE LO PRESS 60 PSI
- PPCS reading for 'B' RCP motor bearing temperatures are 210°F and rising

WHAT ACTION(s), if any, are required to address these conditions?

A. After two (2) minutes, if conditions do not improve, trip 'B' RCP

B. Trip 'B' RCP per AP-CCW.2, LOSS OF CCW, and continue actions in E-3 for cooldown

C. Continue actions in E-3 until the cooldown is complete, since later steps in E-3 address RCP operation

D. Suspend actions in E-3, enter AP-CCW.2, LOSS OF CCW, to address RCP operation

Answer: B

Explanation:

A. Incorrect. Plausible because this would be the required action (trip within 2 minutes) IF the motor bearing temperatures had not exceeded 200°F.

B. CORRECT. Per A503.1, section 5.2.A.6, "When performing EOPs, various plant conditions may occur which would normally be addressed by AOPs. Actions may be taken per AOPs that DO NOT conflict with the actions of the EOPs if adequate resources are available. (For example, IF during the performance of the EOPs there are indications of abnormal RCP conditions, THEN the RCP Abnormal Procedure SHOULD be performed in parallel with the EOP in effect.)." In addition, the CAUTION in E-3 prior to the cooldown step which states that "Following initiation of controlled cooldown or depressurization, RCP trip criteria is no longer applicable" is designed to apply to the RCP TRIP CRITERIA found in many EOPs, and does NOT apply to conditions which could severely damage the RCP itself.

C. Incorrect. Plausible because of the CAUTION which exists prior to Step 10, "Initiate RCS Cooldown," could be interpreted by the candidate to apply to ALL RCP trip criteria. Incorrect because the CAUTION in E-3 prior to the cooldown step which states that "Following initiation of controlled cooldown or depressurization, RCP trip criteria is no longer applicable" is designed to apply to the RCP TRIP CRITERIA found in many EOPs, and does NOT apply to conditions which could severely damage the RCP itself.

D. Incorrect. Plausible if the candidate recognizes the need to trip the RCP, but is not aware (per A-503.1, Section 5.2.A.6) that the actions of the AOP should be performed in parallel with the EOP.

Technical Reference(s): A-503.1; E-3; AP-CCW.3 (Attach if not previously provided)

Proposed references to be provided to applicants during examination: None

Learning Objective: REC50, 1.18

Question Source: Bank/VISION # 110219 (108449)
Modified Bank # _____ (Note changes or attach parent)
New _____

Question History: Last NRC Exam _____

Question Cognitive Level: Memory or Fundamental Knowledge _____
Comprehension or Analysis X

10 CFR Part 55 Content: 55.41 _____
55.43 .5

Justification for K/A Match:

Matches the K/A by requiring an assessment of how an abnormal procedure's significant action can be implemented while performing a major action in the EOPs.

SRO-only because it requires an assessment of plant conditions (RCP trip criteria in AOP) during the performance of an EOP and selecting a portion of the abnormal procedure to perform to prevent damage to the RCP.

Examination Outline Cross-reference:	Level	RO	SRO
	Tier #		3
	Group #		4
	K/A #	2.4.47	
	Importance Rating		4.2

Ability to diagnose and recognize trends in an accurate and timely manner, utilizing the appropriate control room reference material

SRO Question #100

Given the following plant conditions:

- MSLB has occurred which resulted in an imminent PTS condition
- The crew has completed all required actions, and at 1000 determine that an RCS soak is required

The following RCS cold leg temperatures are subsequently recorded:

1000: 285˚F
1030: 265˚F
1100: 265˚F
1130: 245˚F
1200: 245˚F
1230: 245˚F
1300: 245˚F

Based on this data, AT WHAT TIME is the soak period considered complete?

A. 1100

B. 1200

C. 1230

D. 1300

Answer: C

Explanation:

A. Incorrect. Plausible if the candidate believes that "soak" is completed when two consecutive time period readings result in no change in temperature (1030 and 1100). Incorrect because the temperature being stable must last for 1 hour.

B. Incorrect. Plausible if the candidate believes that the "soak" is completed when a minimum of two consecutive time period readings result in no change in temperature.

C. CORRECT. Since the temperature reached 245°F at 1130, the 1-hr soak period required by the EOP would be completed at 1230, since temperature remained at 245°F for 1 hr.

D. Incorrect. Plausible if the candidate believed that the soak was completed when 4 temperature readings remained the same value.

Technical Reference(s): FR-P.1 Background and EOP setpoint J.3 (Attach if not previously provided)

Proposed references to be provided to applicants during examination: None

Learning Objective: RFRP1C 2.1

Question Source: Bank/VISION # 59962

Modified Bank # _____ (Note changes or attach parent)

New _____

Question History: Last NRC Exam _____

Question Cognitive Level: Memory or Fundamental Knowledge _____

Comprehension or Analysis X

10 CFR Part 55 Content: 55.41 _____

55.43 .2

Justification for K/A Match:

Matches K/A by requiring whether the requirements for a 1-hr soak had been met, per the Background and Setpoint document, after assessing temperature trends.

SRO-only because it requires knowledge of the definition of "soak" in the EOP Background and Setpoint documents and an evaluation of when the cooldown can be continued in FR-P.1.

ADAMS MASTER EXAM FILE PACKAGE

ADAMS DOCUMENT COVER SHEET

***TITLE: Ginna - Draft Operating Exam (Sections A, B, and C) (Folder 2)**

Document Accession No: ML_____
ESTIMATED PAGE COUNT: _____
DOCUMENT DATE: 10/17/2014 (CE to add date)
DOCUMENT TYPE: License-Operator, Part 55 Examination Related Material
AVAILABILITY: Publicly Available
TITLE: - Use title above.*
Author Name: AUDRENNE SMITH (TRAINING MANAGER NAME)
Author Affiliation: EXELON (UTILITY NAME)
ADDRESSEE NAME: D'Antonio J
ADDRESSEE AFFILIATION: NRC/RGN-I/DRS/OB
DOCKET NUMBER: 05000244
LICENSE NUMBER: DPR-18
CASE/REFERENCE NO.: U01900
KEYWORD: NRR-079, SUNSI Review Complete
Package Accession # ML14174A998
DOCUMENT SENSITIVITY: Non-Sensitive

SECURITY:	Access Level:
R1-DRS-BS	Owner
NRC Users	Viewer
General Users	Viewer
DPC	Owner
CJB1	Owner

SITE: Ginna
Exam DATES: 12/1/14 - 12/12/14

ADAMS Profiled & entered into DPC on _____ by _____

JPM A1a RO

Facility: Ginna Task No.:

Task Title: Calculate SDM for an Operating Reactor with an Untripable Rod JPM No.: 2014 Admin - JPM A1a RO

K/A Reference: 2.1.25 (3.9)

Examinee: NRC Examiner:

Facility Evaluator: Date:

Method of testing:

Simulated Performance: _____ Actual Performance: X

Classroom X Simulator _____ Plant _____

READ TO THE EXAMINEE

I will explain the initial conditions, which steps to simulate or discuss, and provide initiating cues. When you complete the task successfully, the objective for this Job Performance Measure will be satisfied.

Provide Candidate with Initial Conditions/Cue (Last Page of this JPM).

Initial Conditions:

- Plant is at 100%
- Tavg is at 574°F
- Date: Today
- MWD/MTU: 18000
- Boron sample date: Today; Boron Sample Time: 0001; Boron Concentration: 200 ppm
- Bank C: 225; Bank D: 217
- Rod K-7 has just been determined to be untripable.

Initiating Cue:

- The CRS has directed you to calculate Shutdown Margin (SDM), and notify him if sufficient SDM exists for the current plant conditions.
- All Independent Verification steps will be performed upon completion of your calculation.

Task Standard: The operator will calculate Shutdown Margin in accordance with the O-3.2, Shutdown Margin for an Operating Reactor, and determine that sufficient SDM does NOT exist.

Required Materials:	Calculator Standard Procedure Reference Carts must be available to the operator
General References:	O-3.2, Shutdown Margin for an Operating Reactor, Rev 03700 Technical Specifications; Appendix A to Facility Operating License for the R.E. Ginna Nuclear Power Plant; Docket No. 50-244, Amendment 116
Handouts:	None
Time Critical Task:	YES (1 hour)
Validation Time:	29 minutes

(Denote Critical Steps with a √)

Provide Candidate with Initial Conditions/Cue (Last Page of this JPM).

START TIME: _____

O-3.2, Step 6.1

Note: Shutdown Margin SHALL be the instantaneous amount of reactivity by which the reactor is subcritical or would be subcritical from its present condition assuming:

- All rod cluster control assemblies (RCCAs) are fully inserted except for the single RCCA of highest reactivity worth, which is assumed to be fully withdrawn. IF any RCCAs is NOT capable of being fully inserted, THEN the reactivity worth of the RCCAs must be accounted for in the determination of SDM.
- In Modes 1 and 2, the fuel and moderator temperatures are changed to the nominal hot zero power temperature.

Performance Step: 1 CHECK Tavg is at program Tavg: ± 1.5°F.

_____

Standard: The operator obtains a copy of O-3.2, reviews it and arrives at Step 6.0.

The operator reads the Note, and proceeds to Step 6.1.

The operator observes that Tavg = Tref (Initial Conditions).

Comment:

O-3.2, Step 6.2

Performance Step: 2 IF Tavg is NOT at program Tavg: ± 1.5°F,.....

_____

Standard: The operator recognizes that this Step is NA.

Comment:

O-3.2, Step 6.3

Note: IF the following calculations will be performed by a Licensed Operator, THEN ENSURE Independent Verification is performed by an STA OR the Reactor Engineer.

Note: IF the following calculations will be performed by an STA OR the Reactor Engineer, THEN ENSURE Independent Verification is performed by a Licensed Operator.

Performance Step: 3 RECORD the cycle burnup (PPCS point ID Burnup).

_____

_____ DATE

_____ MWD/MTU

Standard: The operator reads the Notes, and proceeds.

The operator records Today's date in the DATE block.

The operator records 18000 in the MWD/MTU block.

Comment:

O-3.2, Step 6.4

Performance Step: 4 OBTAIN last loop B boron sample results from on-duty RP AND RECORD date, time and concentration of sample.

_____

Sample Date: _____

Time: _____ Hours

Concentration: _____ ppm

Standard: The operator records Today in the SAMPLE DATE block.

The operator records 0001 in the TIME block.

The operator records 200 ppm in the CONCENTRATION block.

Comment:

Performance Step: 5 _____

O-3.2, Step 6.5
RECORD Reactor Power Level.

_____ %

Standard: The operator records 100 in the % block.

Comment:

Performance Step: 6 _____

O-3.2, Step 6.6
RECORD Bank C and D positions.

Bank C = _____ steps
Bank D = _____ steps

Standard: The operator records 225 steps in the BANK C block.
The operator records 217 steps in the BANK D block.

Comment:

O-3.2, Step 6.7

Note: WHEN determining values based on burnup, THEN the following curves indicated for the applicable burnup range SHALL be used:

- BOL to 6187 MWD/MTU Use BOL curves
- 6188 to 12,373 MWD/MTU Use MOL curves
- 12,374 to EOL MWD/MTU Use EOL curves

The Total Power Defect determined in Step 6.7 will be a positive number.

√ **Performance Step: 7**

_____

DETERMINE total Power Defect, using the appropriate Total Power Defect attachment. USE Attachment 2, Total Power Defect Figure 5-20 (BOL), OR Attachment 3, Total Power Defect Figure 5-21 (MOL), OR Attachment 4, Total Power Defect Figure 5-22 (EOL), using the boron concentration recorded in Step 6.4 and power level recorded in Step 6.5

Total Power Defect: +_____ pcm

Standard:

[√] The operator uses Attachment 4, and determines the intersection point of 100% on the Y Axis (Power Level) and an interpolated 200 PPM Curve (1/3 the distance toward the top of the curve between the 0 PPM and the 600 PPM Curves), and reads the corresponding point on the X Axis (Total Power Defect in PCM), and determines it to be -3050 pcm.

[√] The operator records 3050±100 pcm in the TOTAL POWER DEFECT block.

Comment:

O-3.2, Step 6.8/6.8.1

Note: During power operation ensuring that the shutdown bank is fully withdrawn, and the control banks are within the limits of LCO 3.1.6 verifies adequate shutdown margin (ITS B3.1.1).

√ **Performance Step: 8**

_____

DETERMINE Control Rod negative reactivity available for insertion upon a Reactor trip as follows:

- DETERMINE the negative reactivity inserted upon trip from the ARO position assuming the most reactive rod remains stuck at the full out position using Attachment 1, Negative Reactivity Added On Trip From ARO, and the current burnup from Step 6.3.
  - Rod Worth - Stuck Rod -_____ pcm

Standard:

The operator reads the Note, and proceeds.

[√] The operator uses Attachment 1, and determines the Rod Worth – Stuck Rod for a Burnup of 18,000 MWD/MTU to be 5053 pcm.

[√] The operator records -5053 pcm in the ROD WORTH – STUCK ROD block.

Comment:

O-3.2, Step 6.8.2

Note: WHEN determining values based on burnup, THEN the following curves indicated for the applicable burnup range SHALL be used:

- BOL to 6187 MWD/MTU Use BOL curves
- 6188 to 12,373 MWD/MTU Use MOL curves
- 12,374 to EOL MWD/MTU Use EOL curves

The Integral Rod Worth determined in Step 6.8.2 will always be a positive value.

√ **Performance Step: 9**

_____

DETERMINE the integral rod worth from the rod position recorded in Step 6.6 to the full out position (ARO) using the appropriate Integral Rod Worth column BOL, MOL or EOL in Attachment 5.

Bank Worth to Full Out +_____ pcm

Standard:

The operator reads the Note, and proceeds.

[√] The operator uses Attachment 5, and determines the Integral Rod Worth for EOL conditions with Bank C Rods at 225 Steps and Bank D rods at 217 steps to be 18±1 pcm.

[√] The operator records 18±1 pcm in the BANK WORTH TO FULL OUT block.

Comment:

O-3.2, Step 6.8.3

Note: Stuck rod worth may be obtained from the Stuck Rod Worth column of Attachment 1 for current core burnup. Dropped rods are worth +250 pcm. Rods misaligned low are worth the lower of either +250 pcm (which would indicate it is fully inserted) or +15 pcm/step.

Note: IF there are no stuck, dropped, OR misaligned rod(s), THEN 0 pcm is to be entered.

Caution: Available Shutdown Margin is further reduced by the worth of any Control Rod known to be stuck out, dropped, or misaligned low relative to the bank position.

√ **Performance Step: 10** _____

RECORD the control rod reactivity due to a known stuck (untripable), a dropped (fully inserted) and a misaligned low control rods.

- Stuck Rod + _____ pcm
- Dropped Rod + _____ pcm
- Rod Misaligned Low + _____ pcm

Standard:

The operator reads the Notes and Caution, and proceeds.

[√] The operator uses Attachment 1, and determines the Stuck Rod Worth for a Burnup of 18,000 MWD/MTU to be 932 pcm.

[√] The operator records 932 pcm in the STUCK ROD block.

The operator records 0 pcm in the DROPPED ROD block.

The operator records 0 pcm in the ROD MISALIGNED LOW block.

Comment:

O-3.2, Step 6.8.4

√ **Performance Step: 11** _____

DETERMINE the reduction in control rod reactivity due to known stuck (untripable), dropped (fully inserted) or misaligned low control rods.

(+_____ pcm) + (+_____ pcm) + (+_____ pcm) = +_____ pcm
Step 6.8.3.1 Step 6.8.3.2 Step 6.8.3.3 Unavailable Rod Worth

Standard: [√] The operator calculates unavailable Rod Worth to be 932 pcm
(932 pcm + 0 pcm + 0 pcm = 932 pcm)

Comment:

O-3.2, Step 6.8.5

√ **Performance Step: 12** _____

DETERMINE the total available control rod negative reactivity.

(-_____ pcm) + (+_____ pcm) + (+_____ pcm) = -_____ pcm
Step 6.8.1 Step 6.8.2 Step 6.8.4

Standard: [√] The operator calculates unavailable Rod Worth to be -4103±1 pcm
(-5053 pcm + 18±1 pcm + 932 pcm = -4103±1 pcm)

Comment:

O-3.2, Step 6.9

√ **Performance Step: 13** _____

CALCULATE the Shutdown Margin by adding the negative reactivity added by the control rods in Step 6.8.5 to the positive reactivity from Power Defect recorded in Step 6.7.

(-_____ pcm) + (+_____ pcm) = -_____ pcm
Step 6.8.5 Step 6.7

Standard: [√] The operator calculates Shutdown Margin to be -1053±101 pcm
(-4103±1 + 3050±100 pcm = -1103±101 pcm)

Comment:

O-3.2, Step 6.10

Note: 1.8% delta K/K = 1800 pcm (Single Loop Operation)

Note: 1.3% delta K/K = 1300 pcm (Two Loop Operation)

√ **Performance Step: 14** _____

LOCATE the required Shutdown Margin on Attachment 6, Required Shutdown Margin Figure COLR-2, AND CONVERT to pcm, using the latest boron sample recorded in Step 6.4, AND RECORD below.

Required SDM -_____ pcm

Standard:

The operator reads the Notes, and proceeds.

[√] The operator uses Attachment 6, and determines that for two loop operation and a Boron Concentration for 200 ppm, the required Shutdown Margin is 1.3 delta-K/K.

The operator records 1300 pcm in the REQUIRED SDM block.

Comment:

O-3.2, Step 6.11

√ **Performance Step: 15** _____

VERIFY the Shutdown Margin requirements are satisfied as indicated by the value calculated in Step 6.9 being more negative than the Required SDM in Step 6.10.

Standard:

[√] The operator uses Attachment 6, and determines that the value calculated in Step 6.9 (1053±101) is NOT more negative than the Required SDM (1300) in Step 6.10.

Comment:

Terminating Cue: **Evaluation on this JPM is complete.**

STOP TIME: _____

VERIFICATION OF COMPLETION

Job Performance Measure No.: 2014 Admin - JPM A1a RO

Examinee's Name:

Date Performed:

Facility Evaluator:

Number of Attempts:

Time to Complete:

Question Documentation:

Result: SAT _____ UNSAT _____

Examiner's Signature: _____ Date: _____

JPM CUE SHEET

INITIAL CONDITIONS:

- Plant is at 100%
- Tavg is at 574°F
- Date: Today
- MWD/MTU: 18000
- Boron sample date: Today; Boron Sample Time: 0001; Boron Concentration: 200 ppm
- Bank C: 225;
  Bank D: 217
- Rod K-7 has just been determined to be untripable.

INITIATING CUE:

- The CRS has directed you to calculate Shutdown Margin (SDM), and notify him if sufficient SDM exists for the current plant conditions.
- All Independent Verification steps will be performed upon completion of your calculation.

THIS IS A TIME CRITICAL JPM

JPM A1b RO

Facility:	Ginna	Task No.:	320-001-01-01
Task Title:	Perform an Independent Verification of a Post-Trip Xenon Reactivity Calculation	JPM No.:	2014 Admin - JPM A1b RO
K/A Reference:	2.1.43 (4.1)		

Examinee: NRC Examiner:

Facility Evaluator: Date:

Method of testing:

Simulated Performance: _____ Actual Performance: X

Classroom X Simulator _____ Plant _____

READ TO THE EXAMINEE

I will explain the initial conditions, which steps to simulate or discuss, and provide initiating cues. When you complete the task successfully, the objective for this Job Performance Measure will be satisfied.

Provide Candidate with Initial Conditions/Cue (Last Page) of this JPM, and Handout 1.

Initial Conditions:

- The plant has tripped from 50% power.
- The reactor had been operating at this power for the last 3 days prior to the trip.
- The XENON PREDICT program on the PPCS is NOT available.
- The Reactor Engineer has completed the Xenon Reactivity Calculation.
- It is currently 0900 on 12/3/14.

Initiating Cue: The CRS directed you to independently verify the Xenon Reactivity Calculation in accordance with Step 6.1.3 of O-3, Hot Shutdown With Xenon Present.

Task Standard: The operator will complete an independent verification of the Xenon Reactivity Calculation and determine that Xenon will equal the value at time of shutdown at 2100 on 12/3/14.

Required Materials: Calculator

General References:	O-3, Hot Shutdown With Xenon Present, Rev 04300
Handouts:	Handout 1: Copy of O-3, Hot Shutdown With Xenon Present, marked up for this JPM.
Time Critical Task:	NO
Validation Time:	19 minutes

(Denote Critical Steps with a √)

Provide Candidate with Initial Conditions/Cue (Last Page) of this JPM, and Handout 1.

START TIME: _____

	O-3, Step 6.1.3
Performance Step: 1 _____	COMPLETE Section 1.0 of Attachment 3, Independent Verification.
Standard:	The operator goes to Attachment 3.
Comment:	

	O-3, Attachment 3, Step 1.0/1.1
	NOTE: If calculations were performed by a Licensed Operator, then Independent Verification is performed by an STA OR Reactor Engineer. If calculations were performed by an STA OR Reactor Engineer, then Independent Verification is performed by a Licensed Operator.
Performance Step: 2 _____	CALCULATE the date and time for Xenon to return to the value at time of shutdown by one of the following methods: IF the PPCS program, XENON PREDICT will be used to determine the date and time for Xenon to return to the value at time of shutdown, THEN .....
Standard:	The operator reads the NOTE and proceeds. The operator recognizes that the XENON PREDICT program is OOS, marks this step NA, and proceeds to Step 1.2
Comment:	

O-3, Attachment 3, Step 1.2/1.2.1

√ **Performance Step: 3**

IF Attachment 1, Time To Equilibrium Xenon, will be used to determine the date and time for Xenon to return to the value at time of shutdown, THEN PERFORM the following: OTHERWISE, MARK this Step N/A.
RECORD the average power for the 6 hours prior to reactor shutdown.

Standard:

[√] The operator records 50%.

The operator initials Step 1.2.1.

Comment:

O-3, Attachment 3, Step 1.2.2

√ **Performance Step: 4**

DETERMINE the amount of time for Xenon to decay to the value at time of shutdown, using the Table in Attachment 1. USE the power level recorded in attachment Step 1.2.1 and the current burnup recorded in Prerequisite Step 5.9.

Standard:

[√] The operator observes that the current burnup recorded in Prerequisite 5.9 is 12,514 MWD/MTU.

[√] The operator uses Attachment 1 and finds the intersecting point for 12500 MWD/MTU and 50% power to be 13.5 hours, and records.

The operator initials Step 1.2.2.

Comment:

	O-3, Attachment 3, Step 1.2.5
√ **Performance Step: 5** _____	CALCULATE the date and time at which Xenon will equal the value at time of shutdown by adding the hours determined in Step 1.1.6 OR Step 1.2.2 to Prerequisite Step 5.8 and recording below.
Standard:	[√] The operator observes that the Date and time of the Trip were 0730 on 12/3/14. [√] The operator adds 13.5 hours to the time of trip and determines that Xenon will equal the value at time of shutdown at 2100 on 12/3/14, and records. The operator initials Step 6.1.3. The operator places Printed Name, signature and initials I space provided in Step 5.1 (Page 6 of 19 of O-3).
EXAMINER NOTE:	**The operator may report that the time that was determined in the Independent Verification is different from the time determined by the RE in Step 6.1.2.**
Comment:	
Terminating Cue:	**Evaluation on this JPM is complete.**

STOP TIME: _____

VERIFICATION OF COMPLETION

Job Performance Measure No.: 2014 Admin - JPM A1b RO

Examinee's Name:

Date Performed:

Facility Evaluator:

Number of Attempts:

Time to Complete:

Question Documentation:

Result: SAT _____ UNSAT _____

Examiner's Signature: _____ Date: _____

JPM CUE SHEET

INITIAL CONDITIONS:

- The plant has tripped from 50% power.
- The reactor had been operating at this power for the last 3 days prior to the trip.
- The XENON PREDICT program on the PPCS is NOT available.
- The Reactor Engineer has completed the Xenon Reactivity Calculation.
- It is currently 0900 on 12/3/14.

INITIATING CUE:

The CRS directed you to independently verify the Xenon Reactivity Calculation in accordance with Step 6.1.3 of O-3, Hot Shutdown With Xenon Present.

5.0 PREREQUISITES

NOTE

Steps in Section 5.0 may be performed concurrently **OR** in any order.

5.1. **COMPLETE** signature/initial block below for all personnel performing this procedure.

Print Name	Signature	Initials
REACTOR ENG	Reactor Eng	RE
Shift Manager	Shift Manager	SM

5.2. **PERFORM** page check of this procedure. SM

5.3. Shift Manager has authorized performance of this procedure.

Shift Manager _____ Date 12/3/14

5.4. **NOTIFY** CRS of start of this procedure. SM

5.5. **NOTIFY** HCO to log start of this procedure. SM

5.6. **VERIFY** plant is at Hot Shutdown conditions following power operations. SM

5.7. **VERIFY** Both Reactor Coolant Pumps are operating. SM

5.8. **RECORD** date and time of trip or shutdown.

- Date 12/3/14 Time 0730 SM

5.9. **RECORD** the cycle burnup from PPCS point ID BURNUP.

- MWD/MTU: 12,514 SM

NOTE

Control rods that are **NOT** able to be verified fully inserted include control rods that are confirmed stuck (untrippable) or have lost rod position indication.

5.10. **IF** one or more control rods are **NOT** able to be verified fully inserted **THEN CALCULATE** required increase in boron concentration to compensate for the decrease in shutdown margin.

- 0 (No. of RCCA) × 150 ppm = 0 ppm

SM

6.0 PERFORMANCE

NOTE

The preferred method for determining Xenon reactivity is to use the PPCS program, XENON PREDICT. Use of Attachment 1, Time To Equilibrium Xenon, for a shutdown from non-equilibrium power conditions is an approximation and, if used, the results should be confirmed by the Reactor Engineer as soon as possible. **[G0237]**

6.1. Xenon Reactivity Calculation

6.1.1. **CALCULATE** the date and time for Xenon to return to the value at time of shutdown by one of the following methods:

1. **IF** the PPCS program, XENON PREDICT will be used to determine the date and time for Xenon to return to the value at time of shutdown,
   THEN PERFORM the following.
   OTHERWISE, MARK this Step N/A.

   a. **SELECT** the XENON PREDICT button from the "Operations Menu" on the PPCS. NA

   b. **OBTAIN** "Projected values of Xenon reactivity from current conditions" plot by depressing the TREND PLOT button using XENON PREDICT on the PPCS. NA

   c. **IF** accessing XENON PREDICT **WITHIN ONE** hour of the time at which the Reactor was subcritical,
   THEN RECORD the Xenon value at time zero (current conditions) for this calculation.
   OTHERWISE, MARK this Step N/A.

   XE _____ PCM NA

   d. **IF NOT** accessing XENON PREDICT within one hour of the time at which the Reactor was subcritical,
   THEN RECORD the value of Xenon reactivity that existed at the time the Reactor went subcritical from the hourly PPCS logs (Point ID "XFXEK") using nearest hourly reading.
   OTHERWISE, MARK this Step N/A.

   XE _____ PCM NA

6.1.1.1 (Continued)

e. **MOVE** the cursor on the plot to the location at which the Xenon value on the decaying side of the curve is equal to the Xenon value obtained in **EITHER** Step 6.1.1.1.c **OR** Step 6.1.1.1.d. _____

f. **DETERMINE** the number of hours for the projected Xenon to decay to the value of Xenon reactivity that existed at the time the Reactor went subcritical.

Hours: _____ _____

2. **IF** Attachment 1, Time To Equilibrium Xenon, will be used to determine the date and time for Xenon to return to the value at time of shutdown,
THEN PERFORM the following:
OTHERWISE, MARK this Step N/A.

a. **RECORD** the average power for the 6 hours prior to reactor shutdown.

Power: 100 % RE

b. **DETERMINE** the amount of time for Xenon to decay to the value at time of shutdown, using the Table in Attachment 1. **USE** the power level recorded in Step 6.1.1.2.a and the current burnup recorded in Prerequisite Step 5.9.

Hours 19.25 RE

6.1.2. **CALCULATE** the date and time at which Xenon will equal the value at time of shutdown by adding the hours determined in Step 6.1.1.1.f **OR** 6.1.1.2.b to Step 5.8 and recording below.

Date 12/4/14 Time 0245 RE

6.1.3. **COMPLETE** Section 1.0 of Attachment 3, Independent Verification. _____

6.1.4. **NOTIFY** Reactor Engineering to provide an estimated critical position strategy to ensure that large boron concentration changes are not required immediately prior to startup. _____

JPM A2 RO

Facility: Ginna Task No.:

Task Title: Perform RCS Leakrate Surveillance JPM No.: 2014 Admin - JPM A2 RO

K/A Reference: 2.2.12 (3.7)

Examinee: NRC Examiner:

Facility Evaluator: Date:

Method of testing:

Simulated Performance: _____ Actual Performance: __X__

Classroom __X__ Simulator _____ Plant _____

READ TO THE EXAMINEE

I will explain the initial conditions, which steps to simulate or discuss, and provide initiating cues. When you complete the task successfully, the objective for this Job Performance Measure will be satisfied.

Provide Candidate with Initial Conditions/Cue (Last Page of this JPM) and Handout 1.

Initial Conditions:

- The plant is at 100% power with 40 gpm Letdown flow.
- The VCT Level point on the PPCS is OOS.
- At 1020 the VCT level was 25% when the HCO started the Day Shift RCS Leakage Monitoring Surveillance, intending to monitor for about 4 hours.
- At 1125 a VCT Level instrument failure occurred which I&C corrected and restored to operation within 10 minutes.
- It is currently 1415 and an Auto Makeup has just been completed.
  - No VCT Diversion occurred.
  - The ULR tool is temporarily OOS.
- The current Integrator Readings are as follows:
  - RMW Reading: 240
  - BA Reading 21.0
- A check of the Identified Area Leakage has not changed since the leakrate determinations were recorded.

Initiating Cue:

- The CRS directed you to record the data for the recent Auto Makeup on Attachment 3, RCS Leakage Surveillance Record, AND determine the current RCS Leakrate.

- Identify Tech Spec LCOs, if any, that have been exceeded.

Task Standard:	The operator will complete Attachment 3 in accordance with the KEY provided, and identify the LCO 3.4.13, RCS Operational Leakage, is NOT met.
Required Materials:	Calculator Standard Procedure Reference Carts must be available to the operator
General References:	O-6.13, Daily Surveillance Log, Rev 18301 S-12.4, RCS Leakage Record Instructions, Rev 05701 S-12.2, Operator Action In The Event of Indication of Significant Increase in Leakage, Rev 04700 Technical Specifications; Appendix A to Facility Operating License for the R.E. Ginna Nuclear Power Plant; Docket No. 50-244, Amendment 115
Handouts:	Handout 1: Attachment 3 of S-12.4 marked up as required.
Time Critical Task:	NO
Validation Time:	11 minutes

(Denote Critical Steps with a √)

Provide Candidate with Initial Conditions/Cue (Last Page of this JPM) and Handout 1.

START TIME: _____

√ **Performance Step: 1** _____

S-12.4, Step 6.1.1

Reasons for Addition:

- A - Auto Make-up.
- B - Borate.
- D - Dilution.
- A/D - Alternate Dilution

Standard:

[√] The operator records **1415** in the TIME column of Section A, just below the 1215 entry.

[√] The operator records **A** in the REASON A D B A/D column of Section A.

Comment:

√ **Performance Step: 2** _____

S-12.4, Step 6.1.2

Diversions.

- LOG Y-Yes OR N-No.

Standard:

[√] The operator records **N** in the DIVERSION column of Section A.

Comment:

S-12.4, Step 6.1.3

√ **Performance Step: 3** Gallons Added.

_____

- LOG the number of gallons added from the RMW AND B.A. integrators.

Standard: [√] The operator records **240** in the RMW READING column of Section A.

[√] The operator records **21.0** in the BA READING column of Section A.

Comment:

Performance Step: 4

S-12.4, Step 6.1.4

Calculated Leak Rate.

- OBTAIN Leak Rate from VCT level change if no diversion has occurred during the leakage calculation time period.
- Leakage can be calculated using the following formula:

(Δ% VCT Level) (12 gal./1%) + (Additions in gal. during time period)

- Time (In Minutes) between level readings
- In the above formula, 12 gal./1% is generally the conservative number used for the leak rate calculation. IF an exact number is necessary THEN REFER to Attachment 1 AND Attachment 2 of this procedure.
- IF determining calculated leak rate from an auto makeup, AND NO diversion has taken place, THEN take the total gallons added between auto makeups AND divide by the time elapsed (in minutes).
- IF necessary LCV-112A can be switched to VCT position to calculate a leak rate.
- ENSURE LCV-112A is returned to Auto after leakage calculation is complete or as necessary to maintain VCT Level.
- IF calculated leak rate is greater than 0.500 gpm, THEN submit a Condition Report for Engineering evaluation of impact on Charging Pump NPSH.

Standard:

The operator recognizes that the VCT Level change cannot be used to determine leak rate (Diversion has occurred).

The operator recognizes that the leak rate can be calculated from the last two Auto Make ups (1225 and 1415).

[√] The operator records **115.6** in the GALLONS ADDED BA+RMW column of Section A.

[√] The operator calculates the leakrate as follows:

Leakrate = [(Δ% VCT Level) (12 gal./1%) + (Additions in gal. during time period)]/ Time (In Minutes) between level readings

Leakrate = [(0%)(12.1 gal/%) + 115.6/110 = **1.051 gpm**

[√] The operator records **1.051** in the CALCULATED LEAK RATE column of Section A.

Comment:

S-12.4, Step 6.1.5

√ **Performance Step: 5** Identified Leak Rate.

_____

- This is the sum of the leak rates calculated from the RCDT, PRT, and CPLR, primary to secondary leakrate, AND any other known leak rates.
- The following guidance is provided for the Charging Pump Leakoff Rate data:
  - At 0.100 gpm: SUBMIT Condition Report for 12 week planning process.
  - At 0.150 gpm: Condition Report upgraded to Priority Two; work within two week
  - At 0.200 gpm: IF possible, THEN SECURE pump AND preferentially run other pumps until fixed.
  - At 0.500 gpm: TAG affected pump PER S-3.2G, Charging Pump Isolation.

Standard: The operator recognizes that a check of the Identified Area Leakage reveals that the leakrates in these areas have not changed since the previous leakrate determinations (Initial Conditions).

[√] The operator records **.045** in the IDENT LEAK RATE column of Section A.

Comment:

S-12.4, Step 6.1.6

√ **Performance Step: 6** Unidentified Leak Rate.

_____

- This is the difference in leak rates between the calculated leak rate AND the identified leak rate.

Standard:

[√] The operator DETERMINES THE Unidentified Leakrate to be 1.051-0.045 gpm = 1.006 gpm.

[√] The operator records **1.006 (1.004-1.010)** in the UNIDENTD LEAK RATE column of Section A.

[√] The operator reviews TS LCO 3.4.13 and determines that the LCO is NOT met because Unidentified Leak Rate is in excess of 1.0 gpm.

The operator initials the 1415 entry.

Comment:

S-12.4, Step 6.1.7

Performance Step: 7 RMW and Boric Acid Integrators.

_____

- At 2400 hrs, LOG the 2400 hrs value of RMW AND Boric Acid Integrator reading from the MCB.
- CALCULATE the total number of gallons added to the RCS by subtracting the 0000 hrs (previous day 2400 hrs) reading from the current 2400 hrs reading for both RMW AND Boric Acid.
- To obtain a 24 hr leakage rate, ADD the total gallons of RMW AND Boric Acid. THEN divide by 1440 minutes. N/A if a diversion occurred within the day.

Standard: The operator determines that this step is NOT required yet.

Comment:

Terminating Cue: **Evaluation on this JPM is complete.**

STOP TIME: _____

VERIFICATION OF COMPLETION

Job Performance Measure No.: 2014 Admin - JPM A2 RO

Examinee's Name:

Date Performed:

Facility Evaluator:

Number of Attempts:

Time to Complete:

Question Documentation:

Result: SAT _____ UNSAT _____

Examiner's Signature: _____ Date: _____

JPM CUE SHEET

INITIAL CONDITIONS:

- The plant is at 100% power with 40 gpm Letdown flow.
- The VCT Level point on the PPCS is OOS.
- At 1020 the VCT level was 25% when the HCO started the Day Shift RCS Leakage Monitoring Surveillance, intending to monitor for about 4 hours.
- At 1125 a VCT Level instrument failure occurred which I&C corrected and restored to operation within 10 minutes.
- It is currently 1415 and an Auto Makeup has just been completed.
  - No VCT Diversion occurred.
  - The ULR tool is temporarily OOS.
- The current Integrator Readings are as follows:
  - RMW Reading: 240
  - BA Reading 21.0
- A check of the Identified Area Leakage has not changed since the leakrate determinations were recorded.

INITIATING CUE:

- The CRS directed you to record the data for the recent Auto Makeup on Attachment 3, RCS Leakage Surveillance Record, AND determine the current RCS Leakrate.
- Identify Tech Spec LCOs, if any, that have been exceeded.

Handout.

Attachment 3, RCS Leakage Surveillance Record

Category 3.3.39
Reviewed_____

Date: 12/2/14
Day: Tuesday

Section "A"
System Inventory

Time	RMW Reading	BA Reading	Reason A D B A/D	Diversion	Gallons Added BA + RMW	Calculated Leak Rate	Ident Leak Rate	Unidentd Leak Rate	ULR Tool Updated
1209-2142	—	—	—	—	ΔVCT	.072	.068	.004	
2300	15	0	A/D	N	15				
1020					ΔVCT				
1125				Y					
1200	30	0	A/D	N	15				
1225	135	10.4	A	N	115.4				

RMW Integrator
2400 HRS. _____
0000 HRS. 0
Total Gallons:_____

BA Integrator
2400 HRS. _____
0000 HRS. 0
Total Gallons:_____

24 Hr Leakage Rate, If NO Diversion

Total
RMW + BA = _____ gpm
1440

NOTE: IF Reactor Makeup Rate Increases by 0.25 gpm Over The Normal, **REFER** to S-12.2.
NOTE: IF unidentified leak rate(ULR) meets criteria listed in 6.1.6, **REFER** to S-12.2, Operator Action In The Event Of Indication Of Significant Increase In Leakage
Remarks: Diverted Letdown for 15 seconds at 1125

Section "B"
Leakage From Identified Areas

Time	Night Shift Location	Night Shift G.P.M.	Time	Day Shift Location	Day Shift G.P.M.
2000	RCDT	.001	0900	RCDT	.001
2100	CPLR	.067	1000	CPLR	.044

Remarks:

Remarks:

RCP Standpipe Time	RCP A/B	Aux. Bldg. Sump	Aux. Bldg. Sump Tk	PZR Relief Tank Time	Temp	Press	Level

Section "C"
Containment Condensate Collectors

Total Fluid Released to Sump A:

(# Dumps) (Gal/Dump)

1090 (____) 2.57 = (____)
1091 (____) 2.45 = (____)
1092 (____) 2.42 = (____)
1093 (____) 3.05 = (____)

TOTAL _____

TOTAL = _____ G.P.M.
1440

Dump Time 1090	Dump Time 1091	Dump Time 1092	Dump Time 1093	Dump Time ( )
0258	0020	0953	0144	
0628	0353		0353	
0953	0727		0727	
1317	1114			

Remarks:

Section "D" – Containment
Sump Pump Actuations

1. Last Calculated Leak Rate in gpm.		.006			
2.Last Pump Actuation	Date:	10/30/14			
	TIME:	2018			
3.Present Pump Actuation	Date:				
	TIME:				
4.New Interval In Hours					
5.GPM = Note 1 **OR** 2 STEP 4 X (0.0167)					

Remarks:
NOTE 1: Pump "A" 98 Gals/Actuation, **Pump "B"** 140 Gals/Actuation
NOTE 2: Δ Sump Level in gallons (120gal/ft)(PPCS pt. L2039 or L2044)
NOTE 3: IF sump leakage >0.02 gpm increase occurred, **Refer** to S-12.2

Attachment 3, RCS Leakage Surveillance Record, (Continued)

Section "E"

Containment Temperature:								Containment Pressure PI-944 SEE Note 2 SEE Note 3 SEE Note 4	HCO
PPCS POINTS	TCV03	TCV07	TCV08	TCV09	TCV10	TCV17	AVG. TEMP SEE NOTE 1		
Yesterdays Carry Over							92.77		
0700-1900	78.43	83.99	94.96	91.58	85.93	96.07	88.49	0.35	[illegible]
1900-0700	83.16	89.22	99.83	96.95	90.28	100.80	93.37	0.45	KM

NOTE 1 - Tech Spec limit is ≤ 125° F (SR 3.6.5.1), Refer to step 6.5 for Admin Limits
NOTE 2 - Admin Limit is from – 0.2 TO + 0.5 PSIG., Refer to O-11 for maintaining pressure.
NOTE 3 - Tech Spec limit ≥-2 psig and ≤1 psig (SR 3.6.4.1).
NOTE 4 – Refer to O-11 for procedural guidance to obtain a containment pressure reading via an alternate path when PI-944 out-of-service.

Remarks:

Section "F"

Containment Particulates – R11 (PPCS pt. R11H12)

Remarks:

1. Yesterday's 2400 hr avg 205
2. Today's 1200 hr avg 205
3. Difference Step 2 – Step 1 = 205 - 205 = 0 cpm INC (AM)
   or
   _____ cpm DEC
4. Today's 1200 hr avg 205
5. Today's 2400 hr avg 199
6. Difference Step 5 – Step 4 = 199 - 205 = _____ cpm INC (PM)
   or
   6 cpm DEC
7. G.P.M Leakage = (cpm – background cpm) (1.8 E – 7) / µC/CC Krypton 88 In Reactor Coolant = (199 - 200) (1.8 E – 7) / (3.02E-3) = 0 gpm

NOTE: If Containment Particulate Average Increases by 2000 cpm Over The Last Average, Refer To S-12.2

Section "G"

Containment Gas – R12 (PPCS pt. R12H12)

Remarks:

1. Yesterday's 2400 hr avg 345
2. Today's 1200 hr avg 346
3. Difference Step 2 – Step 1 / Step 1 (100) = (346 - 345) / 345 (100) = 0.3 % INC (AM)
   or
   _____ % DEC
4. Today's 1200 HR AVG 346
5. Today's 2400 HR AVG 340
6. Difference Step 5 – Step 4 / Step 4 (100) = (340 - 346) / 346 (100) = _____ % INC (PM)
   or
   1.7 % DEC

NOTE:- If Containment Gas Average increases by 20% over Last Average, Refer To S-12.2

SHIFT MANAGER REVIEW:

SHIFT 1 _____ SHIFT 2 _____

Attachment 3, RCS Leakage Surveillance Record

Category 3.3.39
Reviewed_____

Section "A"
System Inventory

Date: 12/2/14
Day: Tuesday

Time	RMW Reading	BA Reading	Reason A D B A/D	Diversion	Gallons Added BA + RMW	Calculated Leak Rate	Ident Leak Rate	Unidentd Leak Rate	ULR Tool Updated
1200-2142	—	—	—	-	ΔVCT	.072	.068	.004	
2300	15	0	A/D	N	15				
1020	—	—	—	-	ΔVCT				
1125				Y					
1200	30	0	A/D	N	15				
1225	135	10.4	A	N	115.4				
1415	240	21	A	N	115.6				
1225-MB	—	—	—	-	ΔVCT	1.051	.045	1.006	

RMW Integrator
2400 HRS. _____
0000 HRS. 0
Total Gallons:_____

BA Integrator
2400 HRS. _____
0000 HRS. 0
Total Gallons:_____

24 Hr Leakage Rate, If NO Diversion

Total
RMW + BA = _____ gpm
1440

NOTE: IF Reactor Makeup Rate Increases by 0.25 gpm Over The Normal, **REFER** to S-12.2.
NOTE: IF unidentified leak rate(ULR) meets criteria listed in 6.1.6, **REFER** to S-12.2, Operator Action In The Event Of Indication Of Significant Increase In Leakage
Remarks: Diverted letdown for 15 seconds at 1125

Section "B"
Leakage From Identified Areas

Time	Night Shift Location	Night Shift G.P.M.	Time	Day Shift Location	Day Shift G.P.M.
2000	RCDT	.001	0900	RCDT	.001
2100	CPLR	.067	1000	CPLR	.044

Remarks:

Remarks:

RCP Standpipe Time	RCP A/B	Aux. Bldg. Sump	Sump Tk	PZR Relief Tank Time	Temp	Press	Level

Section "C"
Containment Condensate Collectors

Total Fluid
Released to Sump A:

(# Dumps) (Gal/Dump)

1090 (____) 2.57 = (____)
1091 (____) 2.45 = (____)
1092 (____) 2.42 = (____)
1093 (____) 3.05 = (____)

TOTAL _____

TOTAL = _____ G.P.M.
1440

Dump Time 1090	Dump Time 1091	Dump Time 1092	Dump Time 1093	Dump Time ( )
0258	0020	0953	0144	
0628	0353		0353	
0953	0727		0727	
1317	1114			

Remarks:

Section "D" – Containment
Sump Pump Actuations

1. Last Calculated Leak Rate in gpm.		.006			
2.Last Pump Actuation	Date:	11/30/14			
	TIME:	2018			
3.Present Pump Actuation	Date:				
	TIME:				
4.New Interval In Hours					
5.GPM = Note 1 OR 2 / STEP 4 X (0.0167)					

Remarks:
NOTE 1: Pump "A" 98 Gals/Actuation, **Pump "B"** 140 Gals/Actuation
NOTE 2: Δ Sump Level in gallons (120gal/ft)(PPCS pt. L2039 or L2044)
NOTE 3: IF sump leakage >0.02 gpm increase occurred, **Refer** to S-12.2

JPM A3 RO

Facility: Ginna Task No.:

Task Title: Evaluate Steam Generator Tube Leakage from R-47 Reading JPM No.: 2014 Admin - JPM A3 RO

K/A Reference: 2.3.5 (2.9)

Examinee: NRC Examiner:

Facility Evaluator: Date:

Method of testing:

Simulated Performance: _____ Actual Performance: X

Classroom X Simulator _____ Plant _____

READ TO THE EXAMINEE

I will explain the initial conditions, which steps to simulate or discuss, and provide initiating cues. When you complete the task successfully, the objective for this Job Performance Measure will be satisfied.

Provide Candidate with Initial Conditions/Cue (Last Page) of this JPM.

Initial Conditions:

- The plant is operating at 100% power.
- The Secondary AO has called and indicated that the R-47 AMBER light is blinking, and the R-47 bar graph indication, which is also AMBER, is reading 5.832E2 cpm.
- The AO reports that:
  - The R-47 WARNING alarm setpoint is 4.56E2 cpm.
  - The R-47 HIGH alarm setpoint is 9.11E2 cpm.
- The HCO reports that the PPCS point R47G is reading 4.3 gpd and stable.
- RP/Chemistry has been requested to obtain and analyze an air ejector grab sample.
- The crew is evaluating the need to enter AP-SG.1, Steam Generator Tube Leak.

Initiating Cue: The CRS directed you to:

1. Determine if the R-47 alarm setpoints are set properly.
2. Determine the estimated Steam Generator Tube Leakrate based on the local R-47 reading.

3. Determine if AP-SG.1, Steam Generator Tube Leak, should be entered based on the known information.

Task Standard:	The operator will determine that the R-47 alarm setpoints are set lower than identified by P-9, and that the local R-47 reading is too low to support entry into AP.SG.1.
Required Materials:	Calculator Standard Procedure Reference Carts must be available to the operator
General References:	AR-RMS-R47, R-47 Air Ejector Noble Gas Monitor, Rev 00000 AR-PPCS-R47AR, SGTL Indicated, Rev 00000 RE Ginna Curve Book, Curve 06-004, Steam Generator Tube Leak Rate vs. RM-47 Reading, Rev 8/8/14 AP-SG.1, Steam Generator Tube Leak, Rev 01500 P-9, Radiation Monitoring System, Rev 09900
Handouts:	None
Time Critical Task:	NO
Validation Time:	7 minutes

(Denote Critical Steps with a √)

Provide Candidate with Initial Conditions/Cue (Last Page) of this JPM.

START TIME: _____

√ **Performance Step: 1** Determine if the R-47 alarm setpoints are set properly.

_____

Standard: The operator obtains P-9, Radiation Monitoring System.

[√] The operator uses P-9 to determine that the required R-47 HIGH alarm must be set at 9.11E6 cpm.

[√] The operator compares the reported R-47 HIGH alarm setpoint to that required by P-9, and determines that the R-47 HIGH alarm setpoint is incorrectly set too LOW.

[√] The operator uses P-9 to determine that the R-47 WARNING alarm should be set at 4.56E6 cpm.

[√] The operator compares the reported R-47 WARNING alarm setpoint to that required by P-9, and determines that the R-47 WARNING alarm setpoint is incorrectly set too LOW.

EXAMINER CUE: **If the operator requests the alarm setpoints as listed on the PPCS, indicate that the WARNING alarm is set at 4.56E6 cpm, and the HIGH alarm setpoint is set at 9.11E6 cpm.**

EXAMINER NOTE: **There is a potential that the alarm setpoints on the PPCS and the local instrument could be set differently. The PPCS alarm setpoints are set by IT personal controlling the PPCS Software. The alarm setpoints on the local instrument are set by operators.**

Comment:

√ **Performance Step: 2** _____

Determine the estimated Steam Generator Tube Leakrate based on the local R-47 reading.

Standard:

The operator obtains Curve 06-004, Steam Generator Tube Leak Rate vs. RM-47 Reading.

[√] The operator compares the local R-47 reading of 5.832E2 to Curve #06-004, and determines that Steam Generator Tube Leakage is ≈4.4 gpd.

EXAMINER CUE:

If asked, report as the Secondary AO that the Air Ejector leakoff is 3.0 SCFM.

Comment:

√ **Performance Step: 3** _____

Determine if AP-SG.1, Steam Generator Tube Leak, should be entered based on the known information.

Standard:

The operator obtains AP-SG.1 and reviews Entry Conditions and Symptoms.

[√] The operator compares the known information to the AP-SG.1 Entry Conditions and Symptoms and determines that none are met; and that AP-SG.1 should NOT be entered.

EXAMINER NOTE:

The operator may indicate that AP-SG.1 could be entered based on the results of the requested Air Ejector grab sample.

Comment:

Terminating Cue: **Evaluation on this JPM is complete.**

STOP TIME: _____

VERIFICATION OF COMPLETION

Job Performance Measure No.: 2014 Admin - JPM A3 RO

Examinee's Name:

Date Performed:

Facility Evaluator:

Number of Attempts:

Time to Complete:

Question Documentation:

Result: SAT _____ UNSAT _____

Examiner's Signature: _____ Date: _____

INITIAL CONDITIONS:

- The plant is operating at 100% power.
- The Secondary AO has called and indicated that the R-47 AMBER light is blinking, and the R-47 bar graph indication, which is also AMBER, is reading 5.832E2 cpm.
- The AO reports that:
  - The R-47 WARNING alarm setpoint is 4.56E2 cpm.
  - The R-47 HIGH alarm setpoint is 9.11E2 cpm.
- The HCO reports that the PPCS point R47G is reading 4.3 gpd and stable.
- RP/Chemistry has been requested to obtain and analyze an air ejector grab sample.
- The crew is evaluating the need to enter AP-SG.1, Steam Generator Tube Leak.

INITIATING CUE:

The CRS directed you to:

1. Determine if the R-47 alarm setpoints are set properly.
2. Determine the estimated Steam Generator Tube Leakrate based on the local R-47 reading.
3. Determine if AP-SG.1, Steam Generator Tube Leak, should be entered based on the known information.

JPM A1a SRO

Facility:	Ginna	Task No.:	
Task Title:	Determine Time to Boil for a Loss of Shutdown Cooling	JPM No.:	2014 Admin - JPM A1a SRO
K/A Reference:	2.1.25 (4.2)		

Examinee: NRC Examiner:

Facility Evaluator: Date:

Method of testing:

Simulated Performance: _____ Actual Performance: X

Classroom X Simulator _____ Plant _____

READ TO THE EXAMINEE

I will explain the initial conditions, which steps to simulate or discuss, and provide initiating cues. When you complete the task successfully, the objective for this Job Performance Measure will be satisfied.

Provide Candidate with Initial Conditions/Cue (Last Page of this JPM).

Initial Conditions:

- The plant is in Mode 5 for a refueling outage.
- The reactor has been shutdown for 25 hours.
- The pressurizer is solid with LTOP in service.
- RCS temperature is 140°F.
- The Ginna Defense-In-Depth computer program used to calculate time to boil and core uncovery is unavailable.

Initiating Cue:

The Shift Manager has directed you to determine the Time to Boil given a Loss of RHR and the following two sets of conditions:

- For present plant conditions,

AND

- Exactly four (4) days from now based on the following conditions:
  - RCS level will be reduced to 64 inches
  - RCS temperature will be lowered to 100°F
  - PRZR manway will be removed

Task Standard:	The operator will use IP-OUT-2, Outage Risk Management, and determine that the Time to Boil for the present plant conditions is 2.46 hours, and for the projected conditions four days from now is .43 hours (25.96 +0.1/-0.0 minutes).
Required Materials:	Calculator Standard Procedure Reference Carts must be available to the operator
General References:	IP-OUT-2, Outage Risk Management, Rev 02000
Handouts:	None
Time Critical Task:	NO
Validation Time:	7 minutes

(Denote Critical Steps with a √)

Provide Candidate with Initial Conditions/Cue (Last Page of this JPM).

START TIME: _____

IP-OUT-2, Attachment A.5, Core Cooling

√ **Performance Step: 1** _____

Present Plant conditions: Time to core boiling (saturation) and core uncovery can be determined from Attachments 5-14 of DA-ME- 98-115 (Attachment E, Time to Boil/Core Uncovery). Use the table which most closely matches actual plant conditions.

Standard:

The operator obtains a copy of IP-OUT-2, reviews it and arrives at Attachment E.

The operator determines that Page 5 of 11 on Attachment E, Time to Reach Saturation with Pressurizer Full and RCS Closed, most closely approximates present plant conditions, and addresses this page.

[√] The operator finds the intersecting cell for Time after Shutdown (hrs) - 25 and Time to Reach Saturation (hrs) w/Trcs = 140°F to **2.46 hours**.

Comment:

IP-OUT-2, Attachment A.5, Core Cooling

√ **Performance Step: 2**

_____

Projected Plant conditions four (4) days from now: Time to core boiling (saturation) and core uncovery can be determined from Attachments 5-14 of DA-ME- 98-115 (Attachment E, Time to Boil/Core Uncovery). Use the table which most closely matches actual plant conditions.

Standard:

The operator obtains a copy of IP-OUT-2, reviews it and arrives at Attachment E.

The operator determines that Page 7 of 11 on Attachment E, Time to Reach Saturation at 64" and RCS Open, most closely approximates present plant conditions, and addresses this page.

[√] The operator finds the intersecting cell for Time after Shutdown (hrs) - 120 and Time to Reach Saturation (hrs) w/Trcs = 100°F to **0.43 hours/25.96 (+0.1/-0.0) minutes**.

EXAMINER NOTE:

The +0.1/0.0 allowance is based on the fact that there have been 121 hours rather than 120 hours since the shutdown, and the operator may interpolate between the 120 hour time to reach saturation in minutes and the 150 hour time to reach saturation in minutes. If this is the case, and the operator assumed a linear function between the two points, the time would be increased by approximately 0.1 minutes.

Comment:

Terminating Cue: **Evaluation on this JPM is complete.**

STOP TIME: _____

VERIFICATION OF COMPLETION

Job Performance Measure No.: 2014 Admin - JPM A1a SRO

Examinee's Name:

Date Performed:

Facility Evaluator:

Number of Attempts:

Time to Complete:

Question Documentation:

Result: SAT _____ UNSAT _____

Examiner's Signature: _____ Date: _____

JPM CUE SHEET

INITIAL CONDITIONS:

- The plant is in Mode 5 for a refueling outage.
- The reactor has been shutdown for 25 hours.
- The pressurizer is solid with LTOP in service.
- RCS temperature is 140°F.
- The Ginna Defense-In-Depth computer program used to calculate time to boil and core uncovery is unavailable.

INITIATING CUE:

The Shift Manager has directed you to determine the Time to Boil given a Loss of RHR and the following two sets of conditions:

- For present plant conditions,

AND

- Exactly four (4) days from now based on the following conditions:
  - RCS level will be reduced to 64 inches
  - RCS temperature will be lowered to 100°F
  - PRZR manway will be removed

Record Answers Below:

Present Plant Conditions:	
Projected Plant Conditions: (Four Days from now)	

JPM A1b SRO

Facility: Ginna Task No.:

Task Title: Cold Weather Walkdown JPM No.: 2014 Admin - JPM A1b SRO

K/A Reference: 2.1.8 (4.1)

Examinee: NRC Examiner:

Facility Evaluator: Date:

Method of testing:

Simulated Performance: _____ Actual Performance: X

Classroom X Simulator _____ Plant _____

READ TO THE EXAMINEE

I will explain the initial conditions, which steps to simulate or discuss, and provide initiating cues. When you complete the task successfully, the objective for this Job Performance Measure will be satisfied.

Provide Candidate with Initial Conditions/Cue (Last Page of this JPM) and Handouts 1-2.

Initial Conditions:

- The weekly Cold Weather Walkdown is in progress, and the Primary, Secondary and Outside Auxiliary Operators have just completed their Walkdown Tours.
- The Auxiliary Operator PDA is unavailable, however, the recently completed Attachment 1, Cold Weather Temperature Log, of O-22, Cold Weather Walkdown Procedure, is available.
- A severe lake-effect storm is occurring with 12 inches of snow having accumulated over the last four hours, and the Outside AO has reported that the snow has reached the nozzles of several fire hydrants.
- There are no open work orders/trouble reports numbers generated from M-1306.1, Ginna Station Maintenance Department, Winterizing Inspection Program.
- There are no light-weight easy-view thermometers that have been installed in any locations due to on-going temporary work activities.
- Other than the weather concern, there are no hazards to plant operation at this time.

Initiating Cue:

- You, as the Shift Manager, are required to review Attachment 1 and perform section 6.1, General Instructions, of O-22, and prioritize any areas of concern for the Auxiliary Operator Walkdown Tours.

- Document discrepancies, if any, and any required action(s).

Task Standard:	The operator will review the most recent plant area temperature data and then use O-22 to determine that two areas of the plant are too low in temperature. Then the operator will prioritize the actions of the Auxiliary Operators to tour these areas more frequently, and identify discrepancies and actions required in accordance with the attached KEY.
Required Materials:	None
General References:	O-22, Cold Weather Walkdown Procedure, Rev 01003
Handouts:	Handout 1: O-22, Cold Weather Walkdown Procedure, marked up as follows: • Step 5.1: Several Names inserted/Signatures and Initials • Step 5.2: Initialed • Step 5.3: SM Identified/Date entered and initialed • Step 5.4: Initialed • Step 5.5: Initialed Handout 2: Completed Attachment 1 of O-22, Cold Weather Walkdown Procedure
Time Critical Task:	NO
Validation Time:	20 minutes

(Denote Critical Steps with a √)

Provide Candidate with Initial Conditions/Cue (Last Page of this JPM) and Handouts 1-2.

START TIME: _____

	O-22, Step 6.1.1 **Note:** The instructions in this section are applicable at all times between November 1 and April 1. **Note:** Steps of this Procedure may be performed out of sequence with SRO concurrence.
Performance Step: 1 _____	IF an abnormal condition exists that poses a hazard to plant operation, THEN SUBMIT a work request AND immediately notify Maintenance to correct the problem. OTHERWISE, MARK this Step N/A.
Standard:	The operator reads the Notes, and proceeds. The operator recognizes that no abnormal condition exists which poses a hazard to plant operation, and proceeds.
EXAMINER NOTE:	**These Steps may be performed in any order.**
Comment:	

O-22, Step 6.1.2

Note: Routine thermometer readings are obtained with the Auxiliary Operators PDA. However when the Auxiliary Operators PDA is unavailable Attachment 1, Cold Weather Temperature Log may also be used to log the following readings.

√ **Performance Step: 2** OBTAIN designated thermometer readings in potential cold areas once per shift. (Auxiliary Operator using PDA)

_____

Standard: The operator reads the Note, and proceeds.

The operator reviews the completed Attachment 1 temperature readings and compares these to the minimum temperatures required by Precaution and Limitation 4.1.

[√] The operator determines that the temperatures in the B Diesel Room and the Screenhouse North Wall Area temperatures are below that required by Precaution and Limitation 4.1; and contacts Plant Management.

EXAMINER CUE: **As Plant Management, ask the SM to provide recommendations for corrective actions to raise temperature in the affected area(s) AND to raise surveillance frequency until temperature can be restored.**

[√] The operator prioritizes Section 6.2.11 for the Secondary Operator Walkdown Tour and/or requires inspection of the Diesel Generator Room B at a higher frequency than once every 12 hours.

The operator establishes any or no prioritization for the Primary Operator Walkdown Tour.

[√] The operator prioritizes Section 6.4.1 for the Outside Operator Walkdown Tour and/or requires inspection of the Screenhouse at a higher frequency than once every 12 hours.

EXAMINER NOTE: **These Steps may be performed in any order.**

Comment:

	O-22, Step 6.1.3
Performance Step: 3 ____	IF required by the Shift Manager, THEN PERFORM the following to install light weight easy view thermometers at locations susceptible to cold or hot air OR where temporary work setups would pose a freezing problem: OTHERWISE, MARK this Step N/A.
Standard:	The operator recognizes that there are no light-weight easy-view thermometers that have been installed in any locations due to on-going work activities, and marks this Step NA, and proceeds.
EXAMINER NOTE:	**These Steps may be performed in any order.**
Comment:	

	O-22, Step 6.1.4
Performance Step: 4 ____	WHEN contacted by the Mechanical PM Analyst, THEN LOG open WR/TR numbers and descriptions generated from completion of M-1306.1, Maintenance Department Winterizing Inspection Program, on Attachment 2.
Standard:	The operator recognizes that there are no open work orders/trouble reports numbers generated from M-1306.1, Ginna Station Maintenance Department, Winterizing Inspection Program, and requests that the SM initials this step.
EXAMINER Cue:	**If requested, as the SM Initial Sep 6.1.4.**
EXAMINER NOTE:	**These Steps may be performed in any order.**
Comment:	

O-22, Step 6.1.5

√ **Performance Step: 5** _____

IF snow accumulation reduces the 12 inch minimum from a fire hydrant nozzle to ground level, THEN NOTIFY Fire Brigade to implement SC-3.19, Snow Removal for Access to Fire Equipment. OTHERWISE, MARK this Step N/A.

Standard: [√] The operator notifies the Fire Brigade to implement SC-3.19, Snow Removal for Access to Fire Equipment.

EXAMINER NOTE: **These Steps may be performed in any order.**

Comment:

Terminating Cue: **Evaluation on this JPM is complete.**

STOP TIME: _____

VERIFICATION OF COMPLETION

Job Performance Measure No.: 2014 Admin - JPM A1b SRO

Examinee's Name:

Date Performed:

Facility Evaluator:

Number of Attempts:

Time to Complete:

Question Documentation:

Result: SAT _____ UNSAT _____

Examiner's Signature: _____ Date: _____

KEY:

Priority Area(s) for Secondary Side Operator:	The operator prioritizes Section 6.2.11 for the Secondary Operator Walkdown Tour and/or requires inspection of the Diesel Generator Room B at a higher frequency than once every 12 hours. (JPM Step 2).
Priority Area(s) for Primary Side Operator:	The operator establishes any or no prioritization for the Primary Operator Walkdown Tour (JPM Step 2).
Priority Area(s) for Outside Operator:	The operator prioritizes Section 6.4.1 for the Outside Operator Walkdown Tour and/or requires inspection of the Screenhouse at a higher frequency than once every 12 hours (JPM Step 2).
Discrepancies (If any):	The operator determines that the temperatures in the B Diesel Room and the Screenhouse North Wall Area temperatures are below that required by Precaution and Limitation 4.1 (JPM Step 2).
Required Actions (If any):	Contact Plant Management to establish priority for corrective actions to raise temperature in the B Diesel Room and the Screenhouse North Wall Area temperatures (JPM Step 2). Notify the Fire Brigade to implement SC-3.19, Snow Removal for Access to Fire Equipment (JPM Step 5).

JPM CUE SHEET

INITIAL CONDITIONS:

- The weekly Cold Weather Walkdown is in progress, and the Primary, Secondary and Outside Auxiliary Operators have just completed their Walkdown Tours.
- The Auxiliary Operator PDA is unavailable, however, the recently completed Attachment 1, Cold Weather Temperature Log, of O-22, Cold Weather Walkdown Procedure, is available.
- A severe lake-effect storm is occurring with 12 inches of snow having accumulated over the last four hours, and the Outside AO has reported that the snow has reached the nozzles of several fire hydrants.
- There are no open work orders/trouble reports numbers generated from M-1306.1, Ginna Station Maintenance Department, Winterizing Inspection Program.
- There are no light-weight easy-view thermometers that have been installed in any locations due to on-going temporary work activities.
- Other than the weather concern, there are no hazards to plant operation at this time.

INITIATING CUE:

- You, as the Shift Manager, are required to review Attachment 1 and perform section 6.1, General Instructions, of O-22, and prioritize any areas of concern for the Auxiliary Operator Walkdown Tours.
- Document discrepancies, if any, and any required action(s).

Record Answers Below:

Priority Area(s) for Secondary Side Operator:	
Priority Area(s) for Primary Side Operator:	
Priority Area(s) for Outside Operator:	
Discrepancies (If any):	
Required Actions (If any):	

5.0 PREREQUISITES

NOTE

Steps in Section 5.0 may be performed concurrently **OR** in any order.

5.1. **COMPLETE** signature/initial block below for all personnel performing this procedure.

Print Name	Signature	Initials
Secondary AO	Secondary AO	SAO
Primary AO	Primary AO	PAO
Outside AO	Outside AO	OAO

5.2. **PERFORM** page check of this procedure. _____

5.3. Shift Manager has authorized performance of this procedure.

Shift Manager _____ Date Today

5.4. **NOTIFY** CRS of start of this procedure. _____

5.5. **NOTIFY** HCO to log start of this procedure. _____

Attachment 1, Cold Weather Temperature Log

Outside Air Temp (33' Level) or outside Door 11 if Met Tower is OOS	10					
Int. Bldg. East end, top of stairs from Door S-44	72					
A Diesel Generator Room	66					
B Diesel Generator Room	64					
Main Feed Pump Room near NPSH Panel	78					
Main Feed Pump Room Northwest area	78					
Main Feed Pump Room Southwest Area	75					
MCC 1A Turbine Bldg. Basement	69					
Screenhouse South Screen Bay Area, East side	56					
Screenhouse, North wall	53					
Screenhouse, West wall	55					
Standby Aux. Feed Pump Room	68					
TSC Diesel Generator Room	66					
TSC Batt Room Whenever Generator Rm Heat E-28 is on, N/A the rest of the time. Maintain > 66°F	68					
Aux Building North wall by MCC 1E	71					
Aux Building South wall by Door #29	70					
Aux Building North of Door #28	69					
Battery Room A	75					
Battery Room B	76					
END OF SHIFT REVIEW by either Shift Manager or CRS						

JPM A2 SRO

Facility: Ginna Task No.:

Task Title: Perform RCS Leakrate Surveillance JPM No.: 2014 Admin - JPM A2 SRO

K/A Reference: 2.2.12 (4.1)

Examinee: NRC Examiner:

Facility Evaluator: Date:

Method of testing:

Simulated Performance: _____ Actual Performance: X

Classroom X Simulator _____ Plant _____

READ TO THE EXAMINEE

I will explain the initial conditions, which steps to simulate or discuss, and provide initiating cues. When you complete the task successfully, the objective for this Job Performance Measure will be satisfied.

Provide Candidate with Initial Conditions/Cue (Last Page of this JPM) and Handout 1.

Initial Conditions:

- The plant is at 100% power with 40 gpm Letdown flow.
- The VCT Level point on the PPCS is OOS.
- At 1020 the VCT level was 25% when the HCO started the Day Shift RCS Leakage Monitoring Surveillance, intending to monitor for about 4 hours.
- At 1125 a VCT Level instrument failure occurred which I&C corrected and restored to operation within 10 minutes.
- It is currently 1415 and an Auto Makeup has just been completed.
  - No VCT Diversion occurred.
  - The ULR tool is temporarily OOS.
- The current Integrator Readings are as follows:
  - RMW Reading: 240
  - BA Reading 21.0
- A check of the Identified Area Leakage has not changed since the leakrate determinations were recorded.

Initiating Cue:

- The CRS directed you to record the data for the recent Auto Makeup on Attachment 3, RCS Leakage Surveillance Record, AND determine the current RCS Leakrate.

- Identify Tech Spec LCOs, if any, that have been exceeded; and if any LCOs are exceeded, identify any required Tech Spec ACTION.

Task Standard:	The operator will complete Attachment 3 in accordance with the KEY provided, and identify the LCO 3.4.13, RCS Operational Leakage, is NOT met, and that the required ACTION is to reduce leakage to within limits within 4 hours (A.1).
Required Materials:	Calculator Standard Procedure Reference Carts must be available to the operator
General References:	O-6.13, Daily Surveillance Log, Rev 18301 S-12.4, RCS Leakage Record Instructions, Rev 05701 S-12.2, Operator Action In The Event of Indication of Significant Increase in Leakage, Rev 04700 Technical Specifications; Appendix A to Facility Operating License for the R.E. Ginna Nuclear Power Plant; Docket No. 50-244, Amendment 115
Handouts:	Handout 1: Attachment 3 of S-12.4 marked up as required.
Time Critical Task:	NO
Validation Time:	15 minutes

(Denote Critical Steps with a √)

Provide Candidate with Initial Conditions/Cue (Last Page of this JPM) and Handout 1.

START TIME: _____

√ **Performance Step: 1** _____

S-12.4, Step 6.1.1

Reasons for Addition:

- A - Auto Make-up.
- B - Borate.
- D - Dilution.
- A/D - Alternate Dilution

Standard:

[√] The operator records **1415** in the TIME column of Section A, just below the 1225 entry.

[√] The operator records **A** in the REASON A D B A/D column of Section A.

Comment:

√ **Performance Step: 2** _____

S-12.4, Step 6.1.2

Diversions.

- LOG Y-Yes OR N-No.

Standard:

[√] The operator records **N** in the DIVERSION column of Section A.

Comment:

S-12.4, Step 6.1.3

√ **Performance Step: 3** Gallons Added.

_____

- LOG the number of gallons added from the RMW AND B.A. integrators.

Standard: [√] The operator records **240** in the RMW READING column of Section A.

[√] The operator records **21.0** in the BA READING column of Section A.

Comment:

Performance Step: 4 _____

S-12.4, Step 6.1.4
Calculated Leak Rate.

- OBTAIN Leak Rate from VCT level change if no diversion has occurred during the leakage calculation time period.
- Leakage can be calculated using the following formula:

(Δ% VCT Level) (12 gal./1%) + (Additions in gal. during time period)

- Time (In Minutes) between level readings
- In the above formula, 12 gal./1% is generally the conservative number used for the leak rate calculation. IF an exact number is necessary THEN REFER to Attachment 1 AND Attachment 2 of this procedure.
- IF determining calculated leak rate from an auto makeup, AND NO diversion has taken place, THEN take the total gallons added between auto makeups AND divide by the time elapsed (in minutes).
- IF necessary LCV-112A can be switched to VCT position to calculate a leak rate.
- ENSURE LCV-112A is returned to Auto after leakage calculation is complete or as necessary to maintain VCT Level.
- IF calculated leak rate is greater than 0.500 gpm, THEN submit a Condition Report for Engineering evaluation of impact on Charging Pump NPSH.

Standard:

The operator recognizes that the VCT Level change cannot be used to determine leak rate (Diversion has occurred).

The operator recognizes that the leak rate can be calculated from the last two Auto Make ups (1225 and 1420).

[√] The operator records **115.6** in the GALLONS ADDED BA+RMW column of Section A.

[√] The operator calculates the leakrate as follows:

Leakrate = [(Δ% VCT Level) (12 gal./1%) + (Additions in gal. during time period)]/ Time (In Minutes) between level readings

Leakrate = [(0%)(12.1 gal/%) + 115.6/110 = **1.051 gpm**

[√] The operator records **1.051** in the CALCULATED LEAK RATE column of Section A.

Comment:

S-12.4, Step 6.1.5

√ **Performance Step: 5** Identified Leak Rate.

_____

- This is the sum of the leak rates calculated from the RCDT, PRT, and CPLR, primary to secondary leakrate, AND any other known leak rates.
- The following guidance is provided for the Charging Pump Leakoff Rate data:
  - At 0.100 gpm: SUBMIT Condition Report for 12 week planning process.
  - At 0.150 gpm: Condition Report upgraded to Priority Two; work within two week
  - At 0.200 gpm: IF possible, THEN SECURE pump AND preferentially run other pumps until fixed.
  - At 0.500 gpm: TAG affected pump PER S-3.2G, Charging Pump Isolation.

Standard: The operator recognizes that a check of the Identified Area Leakage reveals that the leakrates in these areas have not changed since the previous leakrate determinations (Initial Conditions).

[√] The operator records **.045** in the IDENT LEAK RATE column of Section A.

Comment:

S-12.4, Step 6.1.6

√ **Performance Step: 6** Unidentified Leak Rate.

_____

- This is the difference in leak rates between the calculated leak rate AND the identified leak rate.

Standard:

[√] The operator DETERMINES THE Unidentified Leakrate to be 1.051-0.045 gpm = 1.006 gpm.

[√] The operator records **1.006 (1.004-1.010)** in the UNIDENTD LEAK RATE column of Section A.

[√] The operator reviews TS LCO 3.4.13 and determines that the LCO is NOT met because Unidentified Leak Rate is in excess of 1.0 gpm and identifies that ACTION A.1 is required (reduce leakage to within limits within 4 hours).

The operator initials the 1415 entry.

Comment:

S-12.4, Step 6.1.7

Performance Step: 7 RMW and Boric Acid Integrators.

_____

- At 2400 hrs, LOG the 2400 hrs value of RMW AND Boric Acid Integrator reading from the MCB.
- CALCULATE the total number of gallons added to the RCS by subtracting the 0000 hrs (previous day 2400 hrs) reading from the current 2400 hrs reading for both RMW AND Boric Acid.
- To obtain a 24 hr leakage rate, ADD the total gallons of RMW AND Boric Acid. THEN divide by 1440 minutes. N/A if a diversion occurred within the day.

Standard: The operator determines that this step is NOT required yet.

Comment:

Terminating Cue: **Evaluation on this JPM is complete.**

STOP TIME: _____

VERIFICATION OF COMPLETION

Job Performance Measure No.: 2014 Admin - JPM A2 SRO

Examinee's Name:

Date Performed:

Facility Evaluator:

Number of Attempts:

Time to Complete:

Question Documentation:

Result: SAT _____ UNSAT _____

Examiner's Signature: _____ Date: _____

JPM CUE SHEET

INITIAL CONDITIONS:

- The plant is at 100% power with 40 gpm Letdown flow.
- The VCT Level point on the PPCS is OOS.
- At 1020 the VCT level was 25% when the HCO started the Day Shift RCS Leakage Monitoring Surveillance, intending to monitor for about 4 hours.
- At 1125 a VCT Level instrument failure occurred which I&C corrected and restored to operation within 10 minutes.
- It is currently 1415 and an Auto Makeup has just been completed.
  - No VCT Diversion occurred.
  - The ULR tool is temporarily OOS.
- The current Integrator Readings are as follows:
  - RMW Reading: 240
  - BA Reading 21.0
- A check of the Identified Area Leakage has not changed since the leakrate determinations were recorded.

INITIATING CUE:

- The CRS directed you to record the data for the recent Auto Makeup on Attachment 3, RCS Leakage Surveillance Record, AND determine the current RCS Leakrate.
- Identify Tech Spec LCOs, if any, that have been exceeded; and if any LCOs are exceeded, identify any required Tech Spec ACTION.

Handout.

Page 1 of 2

Attachment 3, RCS Leakage Surveillance Record

Category 3.3.39
Reviewed_____

Section "A"
System Inventory

Date: 12/2/14
Day: Tuesday

Time	RMW Reading	BA Reading	Reason A D B A/D	Diversion	Gallons Added BA + RMW	Calculated Leak Rate	Ident Leak Rate	Unidentd Leak Rate	ULR Tool Updated
1200-2142	—	—	—	—	ΔVCT	.072	.068	.004	
2300	15	0	A/D	N	15				
1020					ΔVCT				
1125				Y					
1200	30	0	A/D	N	15				
1225	135	10.4	A	N	115.4				

RMW Integrator
2400 HRS. _____
0000 HRS. 0
Total Gallons: _____

BA Integrator
2400 HRS. _____
0000 HRS. 0
Total Gallons: _____

24 Hr Leakage Rate, If NO Diversion

Total
RMW + BA / 1440 = _____ gpm

NOTE: IF Reactor Makeup Rate Increases by 0.25 gpm Over The Normal, **REFER** to S-12.2.
NOTE: IF unidentified leak rate(ULR) meets criteria listed in 6.1.6, **REFER** to S-12.2, Operator Action In The Event Of Indication Of Significant Increase In Leakage
Remarks: Diverted Letdown for 15 seconds at 1125

Section "B"
Leakage From Identified Areas

Time	Night Shift Location	Night Shift G.P.M.	Time	Day Shift Location	Day Shift G.P.M.
2000	RCDT	.001	0900	RCDT	.001
2100	CPLR	.067	1000	CPLR	.044

Remarks:

Remarks:

RCP Standpipe Time	RCP A/B	Aux. Bldg. Sump	Aux. Bldg. Sump Tk	PZR Relief Tank Time	Temp	Press	Level

Section "C"
Containment Condensate Collectors

Total Fluid Released to Sump A:

(# Dumps) (Gal/Dump)

1090 (____) 2.57 = (____)
1091 (____) 2.45 = (____)
1092 (____) 2.42 = (____)
1093 (____) 3.05 = (____)

TOTAL _____

TOTAL / 1440 = _____ G.P.M.

Dump Time 1090	Dump Time 1091	Dump Time 1092	Dump Time 1093	Dump Time ( )
0258	0020	0953	0144	
0628	0353		0353	
0953	0727		0727	
1317	1114			

Remarks:

Section "D" – Containment
Sump Pump Actuations

1. Last Calculated Leak Rate in gpm.		.006			
2.Last Pump Actuation	Date:	10/30/14			
	TIME:	2018			
3.Present Pump Actuation	Date:				
	TIME:				
4.New Interval In Hours					
5.GPM = Note 1 **OR** 2 / STEP 4	X (0.0167)				

Remarks:
NOTE 1: Pump "A" 98 Gals/Actuation, **Pump "B"** 140 Gals/Actuation
NOTE 2: Δ Sump Level in gallons (120gal/ft)(PPCS pt. L2039 or L2044)
NOTE 3: IF sump leakage >0.02 gpm increase occurred, **Refer** to S-12.2

Handout.

Attachment 3, RCS Leakage Surveillance Record, (Continued)

Section "E"

Containment Temperature:								Containment Pressure PI-944 SEE Note 2 SEE Note 3 SEE Note 4	HCO
PPCS POINTS	TCV03	TCV07	TCV08	TCV09	TCV10	TCV17	AVG. TEMP SEE NOTE 1		
Yesterdays Carry Over							92.77		
0700-1900	78.43	83.99	94.96	91.58	85.93	96.07	88.49	0.35	[illegible]
1900-0700	83.16	89.22	99.83	96.95	90.28	100.80	93.37	0.45	KM

NOTE 1 - Tech Spec limit is ≤ 125° F (SR 3.6.5.1), Refer to step 6.5 for Admin Limits
NOTE 2 - Admin Limit is from – 0.2 TO + 0.5 PSIG., Refer to O-11 for maintaining pressure.
NOTE 3 - Tech Spec limit ≥-2 psig and ≤1 psig (SR 3.6.4.1).
NOTE 4 – Refer to O-11 for procedural guidance to obtain a containment pressure reading via an alternate path when PI-944 out-of-service.

Remarks:

Section "F"

Containment Particulates – R11 (PPCS pt. R11H12)

Remarks:

1. Yesterday's 2400 hr avg 205
2. Today's 1200 hr avg 205
3. Difference Step 2 – Step 1 = 205 - 205 = 0 cpm INC (AM)
   or
   _____ cpm DEC
4. Today's 1200 hr avg 205
5. Today's 2400 hr avg 199
6. Difference Step 5 – Step 4 = 199 - 205 = _____ cpm INC (PM)
   or
   6 cpm DEC
7. G.P.M Leakage = (cpm – background cpm) (1.8 E – 7) / μC/CC Krypton 88 In Reactor Coolant = (199 - 200) (1.8 E – 7) / (3.02 E-3) = 0 gpm

NOTE: If Containment Particulate Average Increases by 2000 cpm Over The Last Average, Refer To S-12.2

Section "G"

Containment Gas – R12 (PPCS pt. R12H12)

Remarks:

1. Yesterday's 2400 hr avg 345
2. Today's 1200 hr avg 346
3. Difference Step 2 – Step 1 / Step 1 (100) = (346 - 345 / 345) (100) = 0.3 % INC (AM)
   or
   _____ % DEC
4. Today's 1200 HR AVG 346
5. Today's 2400 HR AVG 340
6. Difference Step 5 – Step 4 / Step 4 (100) = (340 - 346 / 346) (100) = _____ % INC (PM)
   or
   1.7 % DEC

NOTE:- If Containment Gas Average increases by 20% over Last Average, Refer To S-12.2

SHIFT MANAGER REVIEW:

SHIFT 1 _____ SHIFT 2 _____

Attachment 3, RCS Leakage Surveillance Record

Category 3.3.39
Reviewed_____

Date: 12/2/14
Day: Tuesday

Section "A"
System Inventory

Time	RMW Reading	BA Reading	Reason A D B A/D	Diversion	Gallons Added BA + RMW	Calculated Leak Rate	Ident Leak Rate	Unidentd Leak Rate	ULR Tool Updated
1200-2142	—	—	—	-	ΔVCT	.072	.068	.004	
2300	15	0	A/D	N	15				
1020	—	—	—	—	ΔVCT				
1125				Y					
1200	30	0	A/D	N	15				
1225	135	10.4	A	N	115.4				
1415	240	21	A	N	115.6				
1225-1416	—	—	—	-	ΔVCT	1.051	.045	1.006	

RMW Integrator
2400 HRS. _____
0000 HRS. 0
Total Gallons:_____

BA Integrator
2400 HRS. _____
0000 HRS. 0
Total Gallons:_____

24 Hr Leakage Rate, If NO Diversion
Total RMW + BA = _____ gpm
1440

NOTE: IF Reactor Makeup Rate Increases by 0.25 gpm Over The Normal, **REFER** to S-12.2.
NOTE: IF unidentified leak rate(ULR) meets criteria listed in 6.1.6, **REFER** to S-12.2, Operator Action In The Event Of Indication Of Significant Increase In Leakage
Remarks: Diverted letdown for 15 seconds at 1125

Section "B"
Leakage From Identified Areas

Time	Night Shift Location	Night Shift G.P.M.	Time	Day Shift Location	Day Shift G.P.M.
2000	RCDT	.001	0900	RCDT	.001
2100	CPLR	.067	1000	CPLR	.044

Remarks:

Remarks:

RCP Standpipe Time	RCP A/B	Aux. Bldg. Sump	Aux. Bldg. Sump Tk	PZR Relief Tank Time	Temp	Press	Level

Section "C"
Containment Condensate Collectors

Total Fluid Released to Sump A:

(# Dumps) (Gal/Dump)

1090 (____) 2.57 = (____)
1091 (____) 2.45 = (____)
1092 (____) 2.42 = (____)
1093 (____) 3.05 = (____)

TOTAL _____

TOTAL = _____ G.P.M.
1440

Dump Time 1090	Dump Time 1091	Dump Time 1092	Dump Time 1093	Dump Time ( )
0258	0020	0953	0144	
0628	0353		0353	
0953	0727		0727	
1317	1114			

Remarks:

Section "D" – Containment
Sump Pump Actuations

1. Last Calculated Leak Rate in gpm.		.006			
2.Last Pump Actuation	Date:	11/30/14			
	TIME:	2018			
3.Present Pump Actuation	Date:				
	TIME:				
4.New Interval In Hours					
5.GPM = Note 1 OR 2 / STEP 4	X (0.0167)				

Remarks:
NOTE 1: Pump "A" 98 Gals/Actuation, **Pump "B"** 140 Gals/Actuation
NOTE 2: Δ Sump Level in gallons (120gal/ft)(PPCS pt. L2039 or L2044)
NOTE 3: IF sump leakage >0.02 gpm increase occurred, **Refer** to S-12.2

JPM A3 SRO

Facility: Ginna Task No.:

Task Title: Evaluate the Impact of R-14 Failure on a Planned Gaseous Decay Tank Release JPM No.: 2014 Admin - JPM A3 SRO

K/A Reference: 2.3.15 (3.1)

Examinee: NRC Examiner:

Facility Evaluator: Date:

Method of testing:

Simulated Performance: _____ Actual Performance: X

Classroom X Simulator _____ Plant _____

READ TO THE EXAMINEE

I will explain the initial conditions, which steps to simulate or discuss, and provide initiating cues. When you complete the task successfully, the objective for this Job Performance Measure will be satisfied.

Provide Candidate with Initial Conditions/Cue (Last Page of this JPM).

Initial Conditions:

- The plant is at 100% power.
- An A Gas Decay Tank release is being planned.
- The HCO reports that R-14A, Plant Vent Gas, is de-energized and declared inoperable (A-52.12 submitted) for preventative maintenance that will require 2 more hours, and must be completed before it can be returned to service.
- The HCO reports that R-14, Plant Vent Gas, has just failed LOW. I&C has indicated that it will take at least four hours to troubleshoot and correct the failure.

Initiating Cue:

1. The SM has directed you to determine the required actions concerning the Aux Bldg ventilation release based on the additional failure of R-14.

   AND

2. The SM has directed you to determine the earliest time at which the A Gas Decay Tank release can start, and to identify any actions that will be required to start the release.

Task Standard:	The operator will declare R-14 inoperable, and determine that (1) on-going releases (i.e. ventilation) may continue provided grab samples are taken and analyzed for isotopic activity at least once per 8 hours, that (2) at least one of either R-14 or R-14A5 must be restored to OPERABLE status within 30 days or it must be explained in the next Annual Radioactive Effluent Release Report, and that (3) the earliest time that the A Gas Decay Tank release can be initiated is 2 hours from now when the maintenance on R-14A is completed and the instrument is declared OPERABLE, and ONLY if at least two independent samples of the tank's contents are analyzed, and at least two technically qualified members of the facility staff independently verify the release rate calculations and discharge valve lineup.
Required Materials:	Standard Procedure Reference Carts must be available to the operator
General References:	S-4.2.5, Release of Gas Decay Tank, Rev 01902 Offsite Dose Calculation Manual (ODCM), Rev. 29, section 3.2 (Gaseous Effluent Monitors), Table 3.2-1
Handouts:	None
Time Critical Task:	NO
Validation Time:	16 minutes

(Denote Critical Steps with a √)

Provide Candidate with Initial Conditions/Cue (Last Page of this JPM).

START TIME: _____

√ **Performance Step: 1** _____

The SM has directed you to determine the required actions based on the failure of R-14.

Standard:

The operator declares R-14 inoperable.

The operator reviews C.3.2 of the ODCM and Table 3.2-1.

The operator recognizes that Plant Ventilation c is NOT met on Table 3.2-1 (i.e. currently 1 less than the minimum), and that ACTION 2 of Table 3.2-1 is required.

The operator determines that If the number of OPERABLE channels is less than required by the Minimum Channels OPERABLE requirement (i.e. 1), effluent releases via this pathway may continue provided grab samples are taken and analyzed for isotopic activity at least once per 8 hours.

The operator recognizes that C.3.2 is NOT met because Plant Ventilation c is NOT met on Table 3.2-1, and identifies that at least one of either R-14 or R-14A5 must be restored to OPERABLE status within 30 days or, if not, explain in the next Annual Radioactive Effluent Release Report, pursuant to Section 6.2 of the ODCM, why this inoperability was not corrected in a timely manner.

[√] The operator identifies that:

on-going releases (i.e. ventilation) may continue provided grab samples are taken and analyzed for isotopic activity at least once per 8 hours.

The operator identifies that:

at least one of either R-14 or R-14A5 must be restored to OPERABLE status within 30 days or it must be explained in the next Annual Radioactive Effluent Release Report.

EXAMINER NOTE: **The actions may be identified in any order.**

Comment:

√ **Performance Step: 2** _____

Determine the earliest time at which the A Gas Decay Tank release can start, and to identify any actions that will be required to start the release.

Standard:

The operator reviews C.3.2 of the ODCM and Table 3.2-1, and determines that since the A Gas Decay Tank release is NOT in progress, it cannot be initiated until at least two actions are taken:

- Restore R-14A5 to OPERABLE status (2 hours away)

AND

- At least two independent samples of the tank's contents are analyzed, and at least two technically qualified members of the facility staff independently verify the release rate calculations and discharge valve lineup.

[√]The operator identifies that the earliest time that the A Gas Decay Tank release can be initiated is 2 hours from now when the maintenance on R-14A5 is completed and the instrument is declared OPERABLE, and ONLY if at least two independent samples of the tank's contents are analyzed, and at least two technically qualified members of the facility staff independently verify the release rate calculations and discharge valve lineup.

EXAMINER NOTE:

The operator must correctly interpret Note (b) of Table 3.2-1, which will not permit the initiation of the Gas Decay Tank Release until at least R-14A5 is OPERABLE and two independent samples have been independently analyzed. Otherwise, R-14 must be restored (4 hours away).

EXAMINER NOTE:

IF R-14A is OPERABLE, R-14A5 is also OPERABLE.

Comment:

Terminating Cue: **Evaluation on this JPM is complete.**

STOP TIME: _____

VERIFICATION OF COMPLETION

Job Performance Measure No.: 2014 Admin - JPM A3 SRO

Examinee's Name:

Date Performed:

Facility Evaluator:

Number of Attempts:

Time to Complete:

Question Documentation:

Result: SAT _____ UNSAT _____

Examiner's Signature: _____ Date: _____

JPM CUE SHEET

INITIAL CONDITIONS:

- The plant is at 100% power.
- An A Gas Decay Tank release is being planned.
- The HCO reports that R-14A, Plant Vent Gas, is de-energized and declared inoperable (A-52.12 submitted) for preventative maintenance that will require 2 more hours, and must be completed before it can be returned to service.
- The HCO reports that R-14, Plant Vent Gas, has just failed LOW. I&C has indicated that it will take at least four hours to troubleshoot and correct the failure.

INITIATING CUE:

The SM has directed you to determine the required actions concerning the Aux Bldg ventilation release based on the additional failure of R-14.

AND

The SM has directed you to determine the earliest time at which the A Gas Decay Tank release can start, and to identify any actions that will be required to start the release.

JPM A4b SRO

NOTE: This JPM is intended to be used with Simulator Scenario N2014-301-2

Facility: Ginna Task No.:

Task Title: Classify an Emergency Event JPM No.: 2014 Admin - JPM A4b SRO

K/A Reference: 2.4.41 (4.6)

Examinee: NRC Examiner:

Facility Evaluator: Date:

Method of testing:

Simulated Performance: _____ Actual Performance: X

Classroom _____ Simulator X Plant _____

READ TO THE EXAMINEE

I will explain the initial conditions, which steps to simulate or discuss, and provide initiating cues. When you complete the task successfully, the objective for this Job Performance Measure will be satisfied.

Provide Candidate with Initial Conditions/Cue (Last Page of this JPM).

Initial Conditions: The sequence of events that you have just performed on the recently completed Simulator Scenario must be evaluated for any Emergency Classifications.

Initiating Cue:

- Determine the HIGHEST Emergency Classification that would have been made during the recently completed scenario.
- Prepare EP-Form-ALL25, GNP NY STATE RADIOLOGICAL EMERGENCY DATA FORM (Part 1), for notification by the Communicator.

A PORTION OF THIS JPM IS TIME CRITICAL.

Task Standard: The operator will determine that the highest Emergency Classification that must be made throughout this scenario was an ALERT based on FA1.1, HA2.1 and/or SA3.1; and complete EP-Form-ALL25 in accordance with the provided KEY, within 14 minutes.

Required Materials: None

General References: EPIP-1-0, Ginna Station Event and Classification, Rev 04900

	EP-Form-ALL25 R0, GNP NY STATE RADIOLOGICAL EMERGENCY DATA FORM (PART 1)
Handouts:	None
Time Critical Task:	YES (Once the classification is made, the form must be completed within 14 Minutes)
Validation Time:	20 minutes

(Denote Critical Steps with a √)

START TIME: _____

√	**Performance Step: 1** _____	Determine the HIGHEST Emergency Classification that would have been made during the recently completed scenario.
	Standard:	[√] The operator uses EPIP-1-0 or the Wall Charts and determines that an ALERT must be declared based on **FA1.1** (ANY loss or ANY potential loss of either Fuel Clad or RCS (Table F-1 [RED path condition exists F-0.4 Integrity])) OR [√] The operator uses EPIP-1-0 or the Wall Charts and determines that an ALERT must be declared based on **HA2.1** (Fire or explosion resulting in EITHER: Visible damage to ANY safety-related structure, system, or component within ANY Table H-1 area OR Control Room indication of degraded performance of ANY safety-related structure, system, or component within ANY Table H-1 area [Intermediate Building]) OR [√] The operator uses EPIP-1-0 or the Wall Charts and determines that an ALERT must be declared based on **SA3.1** (An automatic trip failed to shut down the reactor as indicated by reactor power > 5% **AND** Manual actions taken at the reactor control console successfully shut down the reactor as indicated by reactor power < 5%)
	EXAMINER NOTE:	**Only one of the classifications above must be made to satisfy the critical nature of this Step.**
	Comment:	

TIME CRITICAL START TIME: _____

√	**Performance Step: 2** _____	Prepare EP-Form-ALL25, GNP NY STATE RADIOLOGICAL EMERGENCY DATA FORM (Part 1), for notification by the Communicator.
	Standard:	[√] The operator COMPLETES EP-Form-ALL25 in accordance with the provided KEY.
	Comment:	

Terminating Cue: **Evaluation on this JPM is complete.**

TIME CRITICAL STOP TIME: _____

STOP TIME: _____

VERIFICATION OF COMPLETION

Job Performance Measure No.: 2014 Admin - JPM A4b SRO

Examinee's Name:

Date Performed:

Facility Evaluator:

Number of Attempts:

Time to Complete:

Question Documentation:

Result: SAT _____ UNSAT _____

Examiner's Signature: _____ Date: _____

JPM CUE SHEET

INITIAL CONDITIONS: The sequence of events that you have just performed on the recently completed Simulator Scenario must be evaluated for any Emergency Classifications.

INITIATING CUE:

- Determine the HIGHEST Emergency Classification that would have been made during the recently completed scenario.
- Prepare EP-Form-ALL25, GNP NY STATE RADIOLOGICAL EMERGENCY DATA FORM (Part 1), for notification by the Communicator.

A PORTION OF THIS JPM IS TIME CRITICAL.

JPM A4b

GNP NY STATE RADIOLOGICAL EMERGENCY DATA FORM (PART 1) EP-Form-ALL25 R0

RECS Message Number: _____

"This is Ginna Station. Please stand by for roll call. "New York State" ☐ **"Monroe County"** ☐ **"Wayne County"** ☐

1. Message transmitted at:
Date _____ Time: _____
Via: **A.** RECS **B.** Other

2. This is:
A. An Actual Event (**B.**) An Exercise

☐* **3. Classification:**
A. UNUSUAL EVENT **C.** SITE AREA EMERGENCY **E.** EMERGENCY TERMINATED
(**B.**) ALERT **D.** GENERAL EMERGENCY **F.** RECOVERY

☐* **4. Classification Time:**
This Emergency Classification declared at: Date Today Time Time of Classification

☐* **5. Release of Radioactive Materials due to the Classified Event:**
(**A.**) No Release
B. Release BELOW federal limits ☐ to atmosphere ☐ to water
C. Release ABOVE federal limits ☐ to atmosphere ☐ to water
D. Unmonitored release requiring evaluation

☐* **6. Protective Actions RECOMMENDATIONS:**
(**A.**) No need for Protective Actions outside the site boundary
B. EVACUATE and implement the KI plan for the following ERPA's
(all remaining ERPA's to monitor the Emergency Alert System)
W1 W2 W3 W4 W5 W6 W7 M1 M2 M3 M4 M5 M6 M7 M8 M9
C. SHELTER-IN-PLACE and implement the KI plan for the following ERPA's
(all remaining ERPA's to monitor the Emergency Alert System)
W1 W2 W3 W4 W5 W6 W7 M1 M2 M3 M4 M5 M6 M7 M8 M9

☐* **7. EAL Number:** * **Brief Event Description** and other significant information

EAL Number	
FA1.1*	and/or HA2.1 or SA3.1 Any loss or any potential loss of either Fuel Clad or RCS barrier (or equivalent). **

☐* **8. Reactor Status:**
A. Operational (**B.**) Shutdown Date: Today Time: Time of Shutdown (subcritical)

☐* **9. Wind Speed:**
A. PPCS Miles/hour at elevation 33 feet

☐* **10. Wind Direction:**
From: PPCS degrees at elevation: 33 feet

☐* **11. Stability Class:**
ΔT PPCS − PPCS = ΔT
250 ft temp 33 ft temp

UNSTABLE			NEUTRAL	STABLE		
Alpha	Bravo	Charlie	(Delta)	Echo	Foxtrot	Golf
	-2.17	-1.95	-1.74	-0.65	+1.74	+4.77

12. Reported by:
Name: _____ Area Code: _____ Number: _____

* check box if information has changed since last form was transmitted.

"Please stand by for roll call: New York State copy?" ☐ **"Monroe County copy?"** ☐ **"Wayne County copy?"** ☐

FOR GINNA USE ONLY:
Time Prepared: Time Time Approved: **Completed form sent to EP Director**
Prepared By: Name Approved By:

WAYNE COUNTY USE ONLY:
Routing: ___ALL ___Dose Assess Calculator ___RDO ___Ginna Tech Rep ___Field Team Coord. ___Plotter
___NYS Rad Health ___Ops Officer ___NYS Health (Ops room) ___Director ___PIO

MONROE COUNTY USE ONLY:
Distribution: 1. Command Room (OEP Administrator) 2. EOC (Operations Desk)
3. Assessment Area (Rad Officer, Health, Field Team Coordinator, Computer Operations, Tech Rep) 4. Evaluator 5. File

** IF HA2.1: Control Room indication of degraded Performance of Any Safety Related SSC within Any Table H-1 Area.
IF SA3.1: An Automatic trip failed to Shut down the Reactor as indicated by Rx Power > 5% And manual Actions successfully taken to

JPM A4c SRO

NOTE: This JPM is intended to be used with Simulator Scenario N2014-301-3

Facility: Ginna Task No.:

Task Title: Classify an Emergency Event JPM No.: 2014 Admin - JPM A4c SRO

K/A Reference: 2.4.41 (4.6)

Examinee: NRC Examiner:

Facility Evaluator: Date:

Method of testing:

Simulated Performance: _____ Actual Performance: X

Classroom _____ Simulator X Plant _____

READ TO THE EXAMINEE

I will explain the initial conditions, which steps to simulate or discuss, and provide initiating cues. When you complete the task successfully, the objective for this Job Performance Measure will be satisfied.

Provide Candidate with Initial Conditions/Cue (Last Page of this JPM).

Initial Conditions: The sequence of events that you have just performed on the recently completed Simulator Scenario must be evaluated for any Emergency Classifications.

Initiating Cue:

- Determine the HIGHEST Emergency Classification that would have been made during the recently completed scenario.
- Prepare EP-Form-ALL25, GNP NY STATE RADIOLOGICAL EMERGENCY DATA FORM (Part 1), for notification by the Communicator.

A PORTION OF THIS JPM IS TIME CRITICAL.

Task Standard: The operator will determine that the highest Emergency Classification that must be made throughout this scenario was a SITE AREA EMERGENCY based on FS1.1; and complete EP-Form-ALL25 in accordance with the provided KEY, within 14 minutes.

Required Materials: None

General References: EPIP-1-0, Ginna Station Event and Classification, Rev 04900

	EP-Form-ALL25 R0, GNP NY STATE RADIOLOGICAL EMERGENCY DATA FORM (PART 1)
Handouts:	None
Time Critical Task:	YES (Once the classification is made, the form must be completed within 14 Minutes)
Validation Time:	20 minutes

PERFORMANCE INFORMATION

(Denote Critical Steps with a √)

START TIME: _____

√	**Performance Step: 1**	Determine the HIGHEST Emergency Classification that would have been made during the recently completed scenario.
	Standard:	[√] The operator uses EPIP-1-0 or the Wall Charts and determines that a SITE AREA EMERGENCY must be declared based on **FS1.1** (Loss or potential loss of ANY two barriers).
	Comment:	

TIME CRITICAL START TIME: _____

√	**Performance Step: 2**	Prepare EP-Form-ALL25, GNP NY STATE RADIOLOGICAL EMERGENCY DATA FORM (Part 1), for notification by the Communicator.
	Standard:	[√] The operator COMPLETES EP-Form-ALL25 in accordance with the provided KEY.
	Comment:	

Terminating Cue: **Evaluation on this JPM is complete.**

TIME CRITICAL STOP TIME: _____

STOP TIME: _____

VERIFICATION OF COMPLETION

Job Performance Measure No.: 2014 Admin - JPM A4c SRO

Examinee's Name:

Date Performed:

Facility Evaluator:

Number of Attempts:

Time to Complete:

Question Documentation:

Result: SAT _____ UNSAT _____

Examiner's Signature: _____ Date: _____

JPM CUE SHEET

INITIAL CONDITIONS: The sequence of events that you have just performed on the recently completed Simulator Scenario must be evaluated for any Emergency Classifications.

INITIATING CUE:

- Determine the HIGHEST Emergency Classification that would have been made during the recently completed scenario.
- Prepare EP-Form-ALL25, GNP NY STATE RADIOLOGICAL EMERGENCY DATA FORM (Part 1), for notification by the Communicator.

A PORTION OF THIS JPM IS TIME CRITICAL.

JPM A4c

GNP NY STATE RADIOLOGICAL EMERGENCY DATA FORM (PART 1)

EP-Form-ALL25 R0

RECS Message Number: _____

"This is Ginna Station. Please stand by for roll call. "New York State" ☐ "Monroe County" ☐ "Wayne County" ☐

1. Message transmitted at:
Date _____ Time: _____
Via: **A.** RECS **B.** Other

2. This is:
A. An Actual Event (**B.**) An Exercise

☐* **3. Classification:**
A. UNUSUAL EVENT (**C.**) SITE AREA EMERGENCY **E.** EMERGENCY TERMINATED
B. ALERT **D.** GENERAL EMERGENCY **F.** RECOVERY

☐* **4. Classification Time:**
This Emergency Classification declared at: Date Today Time Time of Classification

☐* **5. Release of Radioactive Materials due to the Classified Event:**
(**A.**) No Release
B. Release BELOW federal limits ☐ to atmosphere ☐ to water
C. Release ABOVE federal limits ☐ to atmosphere ☐ to water
D. Unmonitored release requiring evaluation

☐* **6. Protective Actions RECOMMENDATIONS:**
(**A.**) No need for Protective Actions outside the site boundary
B. EVACUATE and implement the KI plan for the following ERPA's
(all remaining ERPA's to monitor the Emergency Alert System)
W1 W2 W3 W4 W5 W6 W7 M1 M2 M3 M4 M5 M6 M7 M8 M9
C. SHELTER-IN-PLACE and implement the KI plan for the following ERPA's
(all remaining ERPA's to monitor the Emergency Alert System)
W1 W2 W3 W4 W5 W6 W7 M1 M2 M3 M4 M5 M6 M7 M8 M9

☐* **7. EAL Number:** **Brief Event Description** and other significant information

EAL Number	
FS1.1	Potential loss of the RCS and fuel barriers (or equivalent)

☐* **8. Reactor Status:**
A. Operational (**B.**) Shutdown Date: Today Time: Time of Shutdown (subcritical)

☐* **9. Wind Speed:**
A. PPCS Miles/hour at elevation 33 feet

☐* **10. Wind Direction:**
From: PPCS degrees at elevation: 33 feet

☐* **11. Stability Class:**
ΔT PPCS − PPCS = ΔT
250 ft temp 33 ft temp

UNSTABLE			NEUTRAL	STABLE		
Alpha	Bravo	Charlie	(Delta)	Echo	Foxtrot	Golf
-2.17	-1.95	-1.74	-0.65	+1.74		+4.77

12. Reported by:
Name: _____ Area Code: _____ Number: _____

* check box if information has changed since last form was transmitted.

"Please stand by for roll call: New York State copy?" ☐ "Monroe County copy?" ☐ "Wayne County copy?" ☐

FOR GINNA USE ONLY:
Time Prepared: Time Approved: **Completed form sent to EP Director**
Prepared By: Approved By:

WAYNE COUNTY USE ONLY:
Routing: ___ALL ___Dose Assess Calculator ___RDO ___Ginna Tech Rep ___Field Team Coord. ___Plotter
___NYS Rad Health ___Ops Officer ___NYS Health (Ops room) ___Director ___PIO

MONROE COUNTY USE ONLY:
Distribution: 1. Command Room (OEP Administrator) 2. EOC (Operations Desk)
3. Assessment Area (Rad Officer, Health, Field Team Coordinator, Computer Operations, Tech Rep) 4. Evaluator 5. File

Red = Critical

JPM A4d SRO

NOTE: This JPM is intended to be used with Simulator Scenario N2014-301-4

Facility: Ginna Task No.:

Task Title: Classify an Emergency Event JPM No.: 2014 Admin - JPM A4d SRO

K/A Reference: 2.4.41 (4.6)

Examinee: NRC Examiner:

Facility Evaluator: Date:

Method of testing:

Simulated Performance: _____ Actual Performance: X

Classroom _____ Simulator X Plant _____

READ TO THE EXAMINEE

I will explain the initial conditions, which steps to simulate or discuss, and provide initiating cues. When you complete the task successfully, the objective for this Job Performance Measure will be satisfied.

Provide Candidate with Initial Conditions/Cue (Last Page of this JPM).

Initial Conditions: The sequence of events that you have just performed on the recently completed Simulator Scenario must be evaluated for any Emergency Classifications.

Initiating Cue:

- Determine the HIGHEST Emergency Classification that would have been made during the recently completed scenario.
- Prepare EP-Form-ALL25, GNP NY STATE RADIOLOGICAL EMERGENCY DATA FORM (Part 1), for notification by the Communicator.

A PORTION OF THIS JPM IS TIME CRITICAL.

Task Standard: The operator will determine that the highest Emergency Classification that must be made throughout this scenario was an ALERT based on FA1.1; and complete EP-Form-ALL25 in accordance with the provided KEY, within 14 minutes.

Required Materials: None

General References: EPIP-1-0, Ginna Station Event and Classification, Rev 04900

	EP-Form-ALL25 R0, GNP NY STATE RADIOLOGICAL EMERGENCY DATA FORM (PART 1)
Handouts:	None
Time Critical Task:	YES (Once the classification is made, the form must be completed within 14 Minutes)
Validation Time:	20 minutes

(Denote Critical Steps with a √)

START TIME: _____

√	**Performance Step: 1** _____	Determine the HIGHEST Emergency Classification that would have been made during the recently completed scenario.
	Standard:	[√] The operator uses EPIP-1-0 or the Wall Charts and determines that an ALERT must be declared based on **FA1.1** (ANY loss or ANY potential loss of either Fuel Clad or RCS (Table F-1)).
	Comment:	

TIME CRITICAL START TIME: _____

√	**Performance Step: 2** _____	Prepare EP-Form-ALL25, GNP NY STATE RADIOLOGICAL EMERGENCY DATA FORM (Part 1), for notification by the Communicator.
	Standard:	[√] The operator COMPLETES EP-Form-ALL25 in accordance with the provided KEY.
	Comment:	

Terminating Cue: **Evaluation on this JPM is complete.**

TIME CRITICAL STOP TIME: _____

STOP TIME: _____

VERIFICATION OF COMPLETION

Job Performance Measure No.: 2014 Admin - JPM A4d SRO

Examinee's Name:

Date Performed:

Facility Evaluator:

Number of Attempts:

Time to Complete:

Question Documentation:

Result: SAT _____ UNSAT _____

Examiner's Signature: _____ Date: _____

JPM CUE SHEET

INITIAL CONDITIONS: The sequence of events that you have just performed on the recently completed Simulator Scenario must be evaluated for any Emergency Classifications.

INITIATING CUE:

- Determine the HIGHEST Emergency Classification that would have been made during the recently completed scenario.
- Prepare EP-Form-ALL25, GNP NY STATE RADIOLOGICAL EMERGENCY DATA FORM (Part 1), for notification by the Communicator.

A PORTION OF THIS JPM IS TIME CRITICAL.

JPM A4d

GNP NY STATE RADIOLOGICAL EMERGENCY DATA FORM (PART 1)

EP-Form-ALL25 R0

RECS Message Number: _____

"This is Ginna Station. Please stand by for roll call. "New York State" ☐ **"Monroe County"** ☐ **"Wayne County"** ☐

1. Message transmitted at:
Date _____ Time: _____
Via: **A.** RECS **B.** Other

2. This is:
A. An Actual Event (B.) An Exercise

☐* **3. Classification:**
A. UNUSUAL EVENT **C.** SITE AREA EMERGENCY **E.** EMERGENCY TERMINATED
(B.) ALERT **D.** GENERAL EMERGENCY **F.** RECOVERY

☐* **4. Classification Time:**
This Emergency Classification declared at: Date Today Time Time of Classification

☐* **5. Release of Radioactive Materials due to the Classified Event:**
(A.) No Release
B. Release BELOW federal limits ☐ to atmosphere ☐ to water
C. Release ABOVE federal limits ☐ to atmosphere ☐ to water
D. Unmonitored release requiring evaluation

☐* **6. Protective Actions RECOMMENDATIONS:**
(A.) No need for Protective Actions outside the site boundary
B. EVACUATE and implement the KI plan for the following ERPA's
(all remaining ERPA's to monitor the Emergency Alert System)
W1 W2 W3 W4 W5 W6 W7 M1 M2 M3 M4 M5 M6 M7 M8 M9
C. SHELTER-IN-PLACE and implement the KI plan for the following ERPA's
(all remaining ERPA's to monitor the Emergency Alert System)
W1 W2 W3 W4 W5 W6 W7 M1 M2 M3 M4 M5 M6 M7 M8 M9

☐* **7. EAL Number:** **Brief Event Description** and other significant information

EAL Number	
FA1.1	RCS leakrate > available makeup capacity as indicated by a loss of RCS Subcooling (or equivalent)

☐* **8. Reactor Status:**
A. Operational (B.) Shutdown Date: Today Time: Time of Shutdown (subcritical)

☐* **9. Wind Speed:**
A. PPCS Miles/hour at elevation 33 feet

☐* **10. Wind Direction:**
From: PPCS degrees at elevation: 33 feet

☐* **11. Stability Class:**
ΔT PPCS − PPCS = ΔT
250 ft temp 33 ft temp

UNSTABLE			NEUTRAL	STABLE		
Alpha	Bravo	Charlie	(Delta)	Echo	Foxtrot	Golf
		-2.17	-1.95	-1.74	-0.65	+1.74	+4.77

12. Reported by:
Name: _____ Area Code: _____ Number: _____

* check box if information has changed since last form was transmitted.

"Please stand by for roll call: New York State copy?" ☐ **"Monroe County copy?"** ☐ **"Wayne County copy?"** ☐

FOR GINNA USE ONLY:
Time Prepared: Time Approved: **Completed form sent to EP Director**
Prepared By: Approved By:

WAYNE COUNTY USE ONLY:
Routing: ___ALL ___Dose Assess Calculator ___RDO ___Ginna Tech Rep ___Field Team Coord. ___Plotter
___NYS Rad Health ___Ops Officer ___NYS Health (Ops room) ___Director ___PIO

MONROE COUNTY USE ONLY:
Distribution: 1. Command Room (OEP Administrator) 2. EOC (Operations Desk)
3. Assessment Area (Rad Officer, Health, Field Team Coordinator, Computer Operations, Tech Rep) 4. Evaluator 5. File

Red = Critical

JPM A4e SRO

NOTE: This JPM is intended to be used with Simulator Scenario N2014-301-5

Facility: Ginna Task No.:

Task Title: Classify an Emergency Event JPM No.: 2014 Admin - JPM A4e SRO

K/A Reference: 2.4.41 (4.6)

Examinee: NRC Examiner:

Facility Evaluator: Date:

Method of testing:

Simulated Performance: _____ Actual Performance: X

Classroom _____ Simulator X Plant _____

READ TO THE EXAMINEE

I will explain the initial conditions, which steps to simulate or discuss, and provide initiating cues. When you complete the task successfully, the objective for this Job Performance Measure will be satisfied.

Provide Candidate with Initial Conditions/Cue (Last Page of this JPM).

Initial Conditions: The sequence of events that you have just performed on the recently completed Simulator Scenario must be evaluated for any Emergency Classifications.

Initiating Cue:

- Determine the HIGHEST Emergency Classification that would have been made during the recently completed scenario.
- Prepare EP-Form-ALL25, GNP NY STATE RADIOLOGICAL EMERGENCY DATA FORM (Part 1), for notification by the Communicator.

A PORTION OF THIS JPM IS TIME CRITICAL.

Task Standard: The operator will determine that the highest Emergency Classification that must be made throughout this scenario was a SITE AREA EMERGENCY based on FS1.1; and complete EP-Form-ALL25 in accordance with the provided KEY, within 14 minutes.

Required Materials: None

General References: EPIP-1-0, Ginna Station Event and Classification, Rev 04900

	EP-Form-ALL25 R0, GNP NY STATE RADIOLOGICAL EMERGENCY DATA FORM (PART 1)
Handouts:	None
Time Critical Task:	YES (Once the classification is made, the form must be completed within 14 Minutes)
Validation Time:	20 minutes

(Denote Critical Steps with a √)

START TIME: _____

√	**Performance Step: 1** _____	Determine the HIGHEST Emergency Classification that would have been made during the recently completed scenario.
	Standard:	[√] The operator uses EPIP-1-0 or the Wall Charts and determines that a SITE AREA EMERGENCY must be declared based on **FS1.1** (Loss or potential loss of **ANY** two barriers)
	Comment:	

TIME CRITICAL START TIME: _____

√	**Performance Step: 2** _____	Prepare EP-Form-ALL25, GNP NY STATE RADIOLOGICAL EMERGENCY DATA FORM (Part 1), for notification by the Communicator.
	Standard:	[√] The operator COMPLETES EP-Form-ALL25 in accordance with the provided KEY.
	Comment:	

Terminating Cue: **Evaluation on this JPM is complete.**

TIME CRITICAL STOP TIME: _____

STOP TIME: _____

VERIFICATION OF COMPLETION

Job Performance Measure No.: 2014 Admin - JPM A4e SRO

Examinee's Name:

Date Performed:

Facility Evaluator:

Number of Attempts:

Time to Complete:

Question Documentation:

Result: SAT _____ UNSAT _____

Examiner's Signature: _____ Date: _____

JPM CUE SHEET

INITIAL CONDITIONS: The sequence of events that you have just performed on the recently completed Simulator Scenario must be evaluated for any Emergency Classifications.

INITIATING CUE:

- Determine the HIGHEST Emergency Classification that would have been made during the recently completed scenario.
- Prepare EP-Form-ALL25, GNP NY STATE RADIOLOGICAL EMERGENCY DATA FORM (Part 1), for notification by the Communicator.

A PORTION OF THIS JPM IS TIME CRITICAL.

JPM A4e

GNP NY STATE RADIOLOGICAL EMERGENCY DATA FORM (PART 1)

EP-Form-ALL25 R0

RECS Message Number: _____

"This is Ginna Station. Please stand by for roll call. "New York State" ☐ **"Monroe County"** ☐ **"Wayne County"** ☐

1. Message transmitted at:
Date _____ Time: _____
Via: **A.** RECS **B.** Other

2. This is:
A. An Actual Event (B.) An Exercise

☐* **3. Classification:**
A. UNUSUAL EVENT (C.) SITE AREA EMERGENCY **E.** EMERGENCY TERMINATED
B. ALERT **D.** GENERAL EMERGENCY **F.** RECOVERY

☐* **4. Classification Time:**
This Emergency Classification declared at: Date Today Time Time of classification

☐* **5. Release of Radioactive Materials due to the Classified Event:**
A. No Release
B. Release BELOW federal limits ☐ to atmosphere ☐ to water
(C.) Release ABOVE federal limits ☒ to atmosphere ☐ to water
D. Unmonitored release requiring evaluation

☐* **6. Protective Actions RECOMMENDATIONS:**
(A.) No need for Protective Actions outside the site boundary
B. EVACUATE and implement the KI plan for the following ERPA's
(all remaining ERPA's to monitor the Emergency Alert System)
W1 W2 W3 W4 W5 W6 W7 M1 M2 M3 M4 M5 M6 M7 M8 M9
C. SHELTER-IN-PLACE and implement the KI plan for the following ERPA's
(all remaining ERPA's to monitor the Emergency Alert System)
W1 W2 W3 W4 W5 W6 W7 M1 M2 M3 M4 M5 M6 M7 M8 M9

☐* **7. EAL Number:** **Brief Event Description** and other significant information

EAL Number	
FS1.1	Loss or potential loss of any two barriers (or equivalent)

☐* **8. Reactor Status:**
A. Operational (B.) Shutdown Date: Today Time: Time of Shutdown (subcritical)

☐* **9. Wind Speed:**
A. PPCS Miles/hour at elevation 33 feet

☐* **10. Wind Direction:**
From: PPCS degrees at elevation: 33 feet

☐* **11. Stability Class:**
ΔT PPCS − PPCS = ΔT
250 ft temp 33 ft temp

UNSTABLE			NEUTRAL	STABLE		
Alpha	Bravo	Charlie	(Delta)	Echo	Foxtrot	Golf
	-2.17	-1.95	-1.74	-0.65	+1.74	+4.77

12. Reported by:
Name: _____ Area Code: _____ Number: _____

* check box if information has changed since last form was transmitted.

"Please stand by for roll call: New York State copy?" ☐ **"Monroe County copy?"** ☐ **"Wayne County copy?"** ☐

FOR GINNA USE ONLY:
Time Prepared: Time prepared Time Approved: **Completed form sent to EP Director**
Prepared By: Name Approved By:

WAYNE COUNTY USE ONLY:
Routing: ___ALL ___Dose Assess Calculator ___RDO ___Ginna Tech Rep ___Field Team Coord. ___Plotter
___NYS Rad Health ___Ops Officer ___NYS Health (Ops room) ___Director ___PIO

MONROE COUNTY USE ONLY:
Distribution: 1. Command Room (OEP Administrator) 2. EOC (Operations Desk)
3. Assessment Area (Rad Officer, Health, Field Team Coordinator, Computer Operations, Tech Rep) 4. Evaluator 5. File

SIM JPM A

Facility: Ginna Task No.:

Task Title: Lineup RCDT Pump for Core Cooling JPM No.: 2014 Systems - Control Room JPM A

K/A Reference: 005 A2.03 (2.9/3.1)

Examinee: NRC Examiner:

Facility Evaluator: Date:

Method of testing:

Simulated Performance: _____ Actual Performance: __X__

Classroom _____ Simulator __X__ Plant _____

READ TO THE EXAMINEE

I will explain the initial conditions, which steps to simulate or discuss, and provide initiating cues. When you complete the task successfully, the objective for this Job Performance Measure will be satisfied.

Provide Candidate with Initial Conditions/Cue (Last Page of this JPM) and Handout 1.

Initial Conditions:

- The plant was performing a normal cooldown when both RHR Pumps tripped.
- The S/G's are unavailable.
- AP-RHR.1, Loss of RHR, was entered and attempts to restart the pumps were unsuccessful.
- The crew is in progress of establishing Containment Integrity per O-1.1B, Establishing CNMT Integrity, and all personnel are clear of Containment.

Initiating Cue: The CRS has directed you to lineup and start the RCDT pumps to provide core cooling per ER-RHR.1, Section 6.2, Closed Loop RCS to RHR Cooling.

Task Standard: The operator will line up the RCDT pumps to provide core cooling per Section 6.2 of ER-RHR.1.

Required Materials: None

General References:	AP-RHR.1, Loss of RHR, Rev 02200 ER-RHR.1, RCDT Pump Operation for Core Cooling, Rev 00601
Handouts:	Handout 1: Blank copy of ER-RHR.1, RCDT Pump Operation for Core Cooling.
Time Critical Task:	NO
Validation Time:	7 minutes

SIMULATOR OPERATIONAL GUIDELINES

- Simulator reset to **IC-2** (85" Loop Level)
- Insert **MALF RHR 1A** and **RHR 1B**
- Insert **REM-RCS11, CLOSED,** to isolate RVLIS Valves
- Insert **IND-RCS11, 0%,** RVLIS A Meter Reading
- Insert **IND-RCS13, 0%,** RVLIS A Meter Reading
- Insert A-20, RHR LO FLOW, Annunciator Tile
- Insert C-5, LTOP HI/LOW Temp, Annunciator Tile
- Insert F-29, LTOP Hi/Low Pressure, Annunciator Tile
- Insert the following on Trigger #1
    - **REMOTE-MIS67** and **MIS68 to Close** (RCDT Suction AOV 1003A and B CLOSED)
    - **REMOTE-MIS05** and **MIS06 to 0** (RCDT Pump Discharge Valves V1726/1727 CLOSED)
    - **REMOTE-MIS09** and **MIS10 to 1** (RCDT Pump to RHR HX V1811A and B OPEN)
    - **REMOTE-RHR05 to 0** (RHR HX Bypass V712A CLOSED)
    - **REMOTE-RHR01 to 0** (RHR Pump A Discharge Valve V709A CLOSED)
    - **REMOTE-RHR02 to 0** (RHR Pump B Discharge Valve V709B CLOSED)
    - **REMOTE-EDS055** and **EDS056 to Close** (MOV-1813A and B Breakers CLOSED)

- Ensure LTOP Screen is displayed on PPCS
- FREEZE the Simulator

OR

- IC 156 (December, 2014)
- Place simulator in RUN
- Place simulator in FREEZE
- Place simulator in RUN when directed by examiner

NOTE: **The Simulator/Floor Instructor will need to control the BOP during the performance of this JPM.**

NOTE: **The Simulator/Booth Instructor will need to operate Trigger #1 at Performance Step 8 of this JPM, and provide a cue to the operator at Performance Step 20 of this JPM (See Body of JPM).**

(Denote Critical Steps with a √)

Provide Candidate with Initial Conditions/Cue (Last Page of this JPM) and Handout 1.

START TIME: _____

ER-RHR.1, Step 6.2.1

Caution: RCDT pump discharge relief valve lifts at 132 psig.

Performance Step: 1 Verify RCS pressure less than 100 psig. IF NOT, then consult plant staff for other means of cooling RCS.

_____

Standard: The operator reads the Caution, and proceeds.

The operator observes MCB indication PI-420 or PPCS RCS pressure indication and determines pressure is less than 100 psig.

Comment:

ER-RHR.1, Step 6.2.2

Performance Step: 2 IF there are personnel in CNMT,.....

_____

Standard: The operator confirms via initial conditions no personnel are in CNMT.

Comment:

ER-RHR.1, Step 6.2.3

Performance Step: 3 IF entry is from AP-RHR.1,THEN initiate measures to establish CNMT closure, (refer to O-1.1B, Establishing CNMT Integrity, for guidance).

_____

Standard: The operator confirms via initial conditions that establishing CNMT Integrity is in progress.

Comment:

ER-RHR.1, Step 6.2.4

Performance Step: 4 IF entry is from AP-RHR.2,.....

_____

Standard: The operator confirms via initial conditions that entry was from AP-RHR.1, and proceeds.

Comment:

ER-RHR.1, Step 6.2.5

Performance Step: 5 Continue to monitor core exit T/Cs.

_____

Standard: The operator observes CET indication on PPCS.

Comment:

ER-RHR.1, Step 6.2.6/6.2.6.1

Performance Step: 6 Align RHR CNMT sump suction valves for RCDT pump RCS loop suction as follows:

_____

- Close RHR suction valves from sump B inside CNMT:
  - MOV-851A Closed
  - MOV-851B CLOSED

Standard: The operator observes the MOV-851A Green status light is LIT, and the Red status light is OFF.

The operator observes the MOV-851B Green status light is LIT, and the Red status light is OFF.

Comment:

ER-RHR.1, Step 6.2.6.2

√ **Performance Step: 7** Open RHR suction valves from sump B outside CNMT:

_____

- MOV-850A Open
- MOV-850B Open

Standard: [√] The operator places the MOV-850A Control Switch to OPEN and releases; and observes the Red status light is LIT, and the Green status light is OFF.

[√] The operator places the MOV-850B Control Switch to OPEN and releases; and observes the Red status light is LIT, and the Green status light is OFF.

Comment:

ER-RHR.1, Step 6.2.7/6.2.7.1

√ **Performance Step: 8** Dispatch AO with locked valve key to locally perform the following:

_____

- Place RCDT pump suction valve switches to CLOSE.
  - LCV-1003A Switch In CLOSE
  - LCV-1003B Switch In CLOSE

Standard: [√ The operator directs AO to locally place LCV-1003A/B switches in CLOSE.

EXAMINER CUE: **When the AO is contacted to perform Step 6.2.7.1:**
"For the purpose of the examination schedule, time is being compressed. An Auxiliary Operator has already completed Steps 6.2.7.1 through 6.2.7.6. Read through those steps so that you understand the alignment and then resume your operations again at Step 6.2.8."

SIM DRIVER: **When contacted as AO, insert Trigger 1.**

Comment:

ER-RHR.1, Step 6.2.7.2

Performance Step: 9 Close RCDT pump manual discharge valves (AUX BLDG sub-basement).

_____

- V-1726 Closed
- V-1727 Closed

Standard: The operator recognizes that this action is complete per Performance Step 8 Cue, and proceeds.

EXAMINER NOTE: **Time Compression in progress for local AO actions.**

Comment:

ER-RHR.1, Step 6.2.7.3

Performance Step: 10 Open RCDT pump discharge valves to RHR (AUX BLDG bsmt west behind stairway).

_____

- V-1811A Open
- V-1811B Open

Standard: The operator recognizes that this action is complete per Performance Step 8 Cue, and proceeds.

EXAMINER NOTE: **Time Compression in progress for local AO actions.**

Comment:

ER-RHR.1, Step 6.2.7.4

Performance Step: 11 Close RHR Hx bypass isolation valve V-712A (AUX BLDG bsmt RHR Hx room wall).

_____

Standard: The operator recognizes that this action is complete per Performance Step 8 Cue, and proceeds.

EXAMINER NOTE: **Time Compression in progress for local AO actions.**

Comment:

ER-RHR.1, Step 6.2.7.5

Performance Step: 12 Close RHR pump A discharge valve V-709A (AUX BLDG sub-basement).

_____

Standard: The operator recognizes that this action is complete per Performance Step 8 Cue, and proceeds.

EXAMINER NOTE: **Time Compression in progress for local AO actions.**

Comment:

ER-RHR.1, Step 6.2.7.6

Performance Step: 13 Close RHR pump B discharge valve V-709B (AUX BLDG sub-basement).

_____

Standard: The operator recognizes that this action is complete per Performance Step 8 Cue, and proceeds.

EXAMINER NOTE: **Time Compression in progress for local AO actions.**

Comment:

ER-RHR.1, Step 6.2.7.7

Performance Step: 14 Dispatch AO with locked valve key to unlock and close breakers for RCDT pump suction valves from sump B.

_____

- MOV-1813A breaker (MCC C Pos 13M) Closed
- MOV-1813B breaker (MCC D Pos 13M) Closed

Standard: The operator observes the MOV-1813A Green status light is LIT, and the Red status light is OFF.

The operator observes the MOV-1813B Green status light is LIT, and the Red status light is OFF.

EXAMINER NOTE: **Time Compression in progress for local AO actions.**

Comment:

ER-RHR.1, Step 6.2.8

√ **Performance Step: 15** WHEN local valve alignment complete, THEN open RCDT pump suction valves from sump B.

_____

- MOV-1813A Open
- MOV-1813B Open

Standard: [√] The operator places the MOV-1813A Control Switch to OPEN and observes the Red status light is LIT, and the Green status light is OFF.

[√] The operator places the MOV-1813B Control Switch to OPEN and observes the Red status light is LIT, and the Green status light is OFF.

Comment:

ER-RHR.1, Step 6.2.9

√ **Performance Step: 16** Start RCDT pump A.

_____

Standard: [√] The operator places the RCDT Pump A Control Switch in the START position and observes the Red status light is LIT, and the Green status light is OFF.

Comment:

ER-RHR.1, Step 6.2.10

√ **Performance Step: 17** Start RCDT pump B.

_____

Standard: [√] The operator places the RCDT Pump B in the START position and observes the Red status light is LIT, and the Green status light is OFF.

Comment:

ER-RHR.1, Step 6.2.11

√ **Performance Step: 18** Open RHR Hx A outlet valves HCV-625.

_____

Standard: [√] The operator rotates HCV-625 controller adjust knob clockwise until controller output demand is 0%.

Comment:

ER-RHR.1, Step 6.2.12

√ **Performance Step: 19** Open RHR Hx B outlet valve HCV-624.

_____

Standard: [√] The operator rotates HCV-625 controller adjust knob clockwise until controller output demand is 0%.

Comment:

ER-RHR.1, Step 6.2.13

Performance Step: 20 Direct AO to locally verify discharge pressure on RCDT pumps (AUX BLDG bsmt by RHR Hx room gate).

_____

Standard: The operator contacts the AO and requests RCDT Pump discharge pressure.

SIM DRIVER: **As the AO, report that RCDT Pump discharge pressure is approximately 40 psig and stable.**

Comment:

ER-RHR.1, Step 6.2.14

Caution: Reactor Coolant Drain Tank pumps may be insufficient for decay heat removal.

Performance Step: 21 Verify flow on FI-626.

_____

Standard: The operator reads the Caution and proceeds.

The operator observes approximately 100 GPM of flow on FI-626.

Comment:

Terminating Cue: **Evaluation on this JPM is complete.**

STOP TIME: _____

VERIFICATION OF COMPLETION

Job Performance Measure No.: 2014 Systems - Control Room JPM A

Examinee's Name:

Date Performed:

Facility Evaluator:

Number of Attempts:

Time to Complete:

Question Documentation:

Result: SAT _____ UNSAT _____

Examiner's Signature: _____ Date: _____

JPM CUE SHEET

INITIAL CONDITIONS:

- The plant was performing a normal cooldown when both RHR Pumps tripped.
- The S/G's are unavailable.
- AP-RHR.1, Loss of RHR, was entered and attempts to restart the pumps were unsuccessful.
- The crew is in progress of establishing Containment Integrity per O-1.1B, Establishing CNMT Integrity, and all personnel are clear of Containment.

INITIATING CUE:

The CRS has directed you to lineup and start the RCDT pumps to provide core cooling per ER-RHR.1, Section 6.2, Closed Loop RCS to RHR Cooling.

SIM JPM B

Facility: Ginna Task No.:

Task Title: Verify Containment Isolation and Heat Removal JPM No.: 2014 Systems - Control Room JPM B (Alternate Path)

K/A Reference: EPE E14 EA1.1 (3.7/3.7)

Examinee: NRC Examiner:

Facility Evaluator: Date:

Method of testing:

Simulated Performance: _____ Actual Performance: __X__

Classroom _____ Simulator __X__ Plant _____

READ TO THE EXAMINEE

I will explain the initial conditions, which steps to simulate or discuss, and provide initiating cues. When you complete the task successfully, the objective for this Job Performance Measure will be satisfied.

Provide Candidate with Initial Conditions/Cue (Last Page of this JPM) and Handout 1.

Initial Conditions:

- The plant tripped from 100% power and safety injection has actuated.
- The crew entered E-0, Reactor Trip or Safety Injection, and then transitioned to E-2, Faulted Steam Generator Isolation.
- Due to a degrading transient, an Orange Path now exists on the Containment Critical Safety Function Status Tree.

Initiating Cue: The CRS has directed you to verify Containment Isolation and Heat Removal systems are operating as expected by performing FR-Z.1, Response to High Containment Pressure, starting from Step 1.

Task Standard:	The operator will take action to verify Containment Isolation and Heat Removal systems are operating in accordance with Steps 1-3 of FR-Z.1. When the operator discovers that two Containment Isolation Valves have failed to close as expected the operator will close or direct that alternative valves be closed in accordance with ATT-3.0, Attachment CI/CVI. When it is revealed that one of the two actions on ATT-3.0 were unsuccessful at providing Containment Isolation, the operator will need to take actions to trip the Reactor Coolant Pumps, and close an alternate valve in the CCW System to fully achieve Containment Isolation.
Required Materials:	None
General References:	AR-A-27, Containment Spray 2/3 + 2/3 > 28 PSI, Rev 9 AR-A-28, Containment Spray Channel Alert 2/3 > 28 PSI, Rev 8 CNG-OP-1.01-1000, Conduct of Operations, Rev 01000 F-0.5, Containment, Rev 2 FR-Z.1, Response to High Containment Pressure, Rev 01200 ATT-3.0, Attachment CI/CVI, Rev 01200 P-7, Safety Injection and Containment Spray Systems, Rev 23
Handouts:	Handout 1: Blank copy of FR-Z.1, Response to High Containment Pressure Handout 2: Blank copy of ATT-3.0, Attachment CI/CVI.
Time Critical Task:	NO
Validation Time:	7 minutes

SIMULATOR OPERATIONAL GUIDELINES

- Initiate to **any 100% IC (IC-19)**
- Insert **Malfunctions RPS08A** and **RPS08B, No Manual** (Failure of CS Automatic Actuation/No Manual, Both Trains)
- Insert **Malfunction STM11A, 1.7e+05** (Steam Line Break Inside Containment, 'A' S/G)
- Insert **Malfunction RPS11-A5A** and **RPS11-A5B, Fail As-Is** (MOV-813 and 814 fail as-is on T-Signal, cannot be operated)
- Insert **REM-EDS054**, **Closed**, on **T-1 (Breaker for MOV-817)**
- Place simulator in RUN
- Carry out action of E-0 and transition to E-2.
- Upon transition to E-2, **increase** malfunction **STM11A to 1.7e+07** (Steam Rupture Inside Containment, 'A' S/G)
- Ensure Annunciator A-28 is LIT, that Containment Pressure is > 28 psig, and that CS has NOT automatically actuated
- Place simulator in FREEZE
- Place simulator in RUN when directed by examiner

OR

- IC 157 (December, 2014)
- Place simulator in RUN
- Place simulator in FREEZE
- Place simulator in RUN when directed by examiner

NOTE: **The SIM DRIVER will need to respond as the AO at Performance Step 3, make a report from the field at Step 10, and insert REM-EDS054 at Step 11 of this JPM (See Cues in Body of JPM).**

(Denote Critical Steps with a √)

Provide Candidate with Initial Conditions/Cue (Last Page of this JPM) and Handout 1.

START TIME: _____

FR-Z.1 Step 1

Note: FOLDOUT Page should be open and monitored periodically.

Performance Step: 1 Verify All CI And CVI Valve Status Lights - BRIGHT

_____

Standard: The operator observes all CI And CVI Valve Status Lights are BRIGHT <u>except</u> MOV-813 and MOV-814.

The operator proceeds to the Step 1 RNO.

Comment: **At any time during this JPM, the operator may recognize that automatic actions have failed, and take manual action as needed to operate equipment as needed (See CNG-OP-1.01-1000, Step 5.10.C.4). While the operator *may* take this action, and it is permitted by procedures, and expected; if the action is not taken the operator will still be successful by adherence to the procedure assigned.**

NOTE: Any attempt by the operator to actuate CS by depressing two MCB pushbuttons simultaneously will not be successful (pushbutton operation has failed).

FR-Z.1 Step 1 RNO

Performance Step: 2

IF flow path NOT required, THEN manually close affected CI and CVI valves.

IF valves can NOT be verified closed by MCB indication, THEN close alternate isolation valves. (Refer to ATT-3.0, ATTACHMENT CI/CVI).

Standard:

The operator recognizes that the Rx Support Cooler CCW flowpaths are NOT required under the current conditions.

The operator observes the MOV-813 Red status light is LIT, and the Green status light is OFF.

The operator places the MOV-813 Control Switch to CLOSE, and observes Red status light is LIT, and the Green status light is OFF.

The operator observes the MOV-814 Red status light is LIT, and the Green status light is OFF.

The operator places the MOV-814 Control Switch to CLOSE, and observes Red status light is LIT, and the Green status light is OFF.

The operator refers to ATT-3.0.

EXAMINER CUE:

When the operator is looking to find ATT-3.0, PROVIDE operator with Handout 2 (ATT-3.0).

Comment:

ATT-3.0 Step 1

Note: Locked valve key may be required for local operations.

√ **Performance Step: 3** _____

For each of the following AUTO ISOL VALVES that will not close, take the action directed in the ALTERNATE ISOLATION column.

MOV-813 (CCW) Locally close MOV-813 (AB Int Level).

MOV-814 (CCW) Close V-815A (AB INT LEVEL)

Standard:

The operator reads the Note, and proceeds.

The operator will contact an AO and direct that MOV-813 be locally closed.

[√] The operator will contact an AO and direct that V-815A be locally closed.

The operator will proceed to Step 2 of FR-Z.1 while the local action is taking place.

SIM DRIVER NOTE:

The AO action will be delayed until Performance Step 10.

Upon completion of Performance Step 10, as the AO, report that V-815A has been locally closed, and report that MOV-813 will NOT operate manually.

There is NO Remote for V-815A (Not Modeled).

Comment:

FR-Z.1 Step 2/2.a

Caution: IF ECA-1.1, LOSS OF EMERGENCY COOLANT RECIRCULATION, IS IN EFFECT, THEN CNMT SPRAY SHOULD BE OPERATED AS DIRECTED IN ECA-1.1, RATHER THAN STEP 2 BELOW.
Caution: IF E-1, LOSS OF REACTOR OR SECONDARY COOLANT, IS IN EFFECT, THEN CNMT SPRAY SHOULD BE OPERATED AS DIRECTED IN E-1, LOSS OF REACTOR OR SECONDARY COOLANT, RATHER THAN STEP 2 BELOW.

Performance Step: 4 Verify CNMT Spray Actuated:

_____

- Verify RWST outlet to SI and CNMT spray pumps - OPEN
  - MOV-896A
  - MOV-896B

Standard: The operator reads the Cautions, and proceeds.

The operator observes the MOV-896A Red status light is LIT and the Green status light is OFF.

The operator observes the MOV-896B Red status light is LIT and the Green status light is OFF.

Comment:

FR-Z.1 Step 2.b

Performance Step: 5 Verify CNMT spray pumps - RUNNING

_____

Standard: The operator observes the A Containment Spray Pump Green status light is LIT, and the Red status light is OFF.

The operator observes the B Containment Spray Pump Green status light is LIT, and the Red status light is OFF.

The operator observes Containment pressure to be ≈40 psig.

The operator proceeds to the Step 2.b RNO.

Comment:

FR-Z.1 Step 2.b RNO

√ **Performance Step: 6** Manually start pumps.

_____

Standard: [√] The operator places the A Containment Spray Pump Control Switch to START and observes the Red status light is LIT, and the Green status light is OFF.

[√] The operator places the B Containment Spray Pump Control Switch to START and observes the Red status light is LIT, and the Green status light is OFF.

Comment:

FR-Z.1 Step 2.c

Performance Step: 7 Verify NaOH flow (FI-930)

_____

Standard: The operator observes FI-930 and notes flow at "0."

The operator proceeds to the Step 2.c RNO.

Comment:

FR-Z.1 Step 2.c RNO

√ **Performance Step: 8** _____

IF NaOH flow NOT indicated, THEN place switches for NaOH tank outlet valves to OPEN.

- AOV-836A
- AOV-836B

Standard:

[√] The operator places the Control Switch for AOV-836A in OPEN.

[√] The operator places the Control Switch for AOV-836B in OPEN.

EXAMINER NOTE:

One of the two valve Control Switches must be in the OPEN position to satisfy the Critical Step.

Flow on FI-930 will NOT be observed until Performance Step 10. When the Containment Spray Pump Discharge Valves are OPEN.

Comment:

FR-Z.1 Step 2.d

Performance Step: 9 Verify CNMT spray pump discharge valves - OPEN

_____

MOV-860A

MOV-860B

MOV-860C

MOV-860D

Standard: The operator observes the MOV-860A Green status light is LIT, and the Red status light is OFF.

The operator observes the MOV-860B Green status light is LIT, and the Red status light is OFF.

The operator observes the MOV-860C Green status light is LIT, and the Red status light is OFF.

The operator observes the MOV-860D Green status light is LIT, and the Red status light is OFF.

The operator proceeds to the Step 2.d RNO.

Comment:

FR-Z.1 Step 2.d RNO

√ **Performance Step: 10** Ensure at least one in each set valves - OPEN.

_____

MOV-860A or MOV-860B

MOV-860C or MOV-860D

Standard:

[√] The operator places the MOV-860A Control Switch in OPEN and observes the Red status light is LIT, and the Green status light is OFF.

OR

[√] The operator places the MOV-860B Control Switch in OPEN and observes the Red status light is LIT, and the Green status light is OFF.

AND

[√] The operator places the MOV-860C Control Switch in OPEN and observes the Red status light is LIT, and the Green status light is OFF.

OR

[√] The operator places the MOV-860D Control Switch in OPEN and observes the Red status light is LIT, and the Green status light is OFF.

The operator will observe flow on FI-930.

EXAMINER NOTE: **The operator may all OPEN all four valves, however, at least one valve in each set must be OPEN to satisfy the Critical Nature of this Step.**

Comment:

SIM DRIVER: Call the Control Room as the AO and report "V-815A has been locally closed, however MOV-813 will NOT operate manually."

EXAMINER NOTE: ALTERNATE PATH DECISION POINT OCCURS IN THE NEXT STEP

ATT-3.0 Step 1

Note: Locked valve key may be required for local operations.

√ **Performance Step: 11** _____

For each of the following AUTO ISOL VALVES that will not close, take the action directed in the ALTERNATE ISOLATION column.

MOV-813(CCW): IF MOV-813 can not be closed, THEN perform the following:

- Direct AO with locked valve key to unlock and close breaker for MOV-817 (MCC D POS 10C)
- Stop both RCPs
- Manually close MOV-817 (MCB). IF MOV-817 will not close, THEN direct AO to locally close MOV-817 (AB INT LEVEL).

Standard:

The operator reads the NOTE, and proceeds.

The operator will refer to ATT-3.0, contact the AO, and direct that the AO unlock and close the breaker for MOV-817.

[√] The operator will place the A RCP Control Switch to STOP and observe the Green status light is LIT, and the Red status light is OFF.

[√] The operator will place the B RCP Control Switch to STOP and observe the Green status light is LIT, and the Red status light is OFF.

[√]The operator will place the MOV-817 Control Switch to CLOSE and observe the Green status light is LIT, and the Red status light is OFF.

The operator returns to FR-Z.1.

SIM DRIVER NOTE:

Upon direction from the operator to unlock and close the MOV-817 breaker, operate Trigger 1 (REM-EDS054 (MOV-817 Breaker Closed).

Call as AO and report that you have unlocked and closed the MOV-817 breaker.

Comment:

FR-Z.1 Step 3/3.a

Performance Step: 12 Verify CNMT RECIRC Fans Running:

_____

All fans - RUNNING

Standard: The operator observes the A CNMT RECIRC Fan Red status light is LIT, and the Green status light is OFF.

The operator observes the B CNMT RECIRC Fan Red status light is LIT, and the Green status light is OFF.

The operator observes the C CNMT RECIRC Fan Red status light is LIT, and the Green status light is OFF.

The operator observes the D CNMT RECIRC Fan Red status light is LIT, and the Green status light is OFF.

Comment:

FR-Z.1 Step 3.b

Performance Step: 13 Charcoal filter dampers green status lights - EXTINGUISHED

_____

Standard: The operator observes the A CNMT RECIRC Fan Charcoal Filter Damper Red status light is LIT, and the Green status light is OFF.

The operator observes the C CNMT RECIRC Fan Charcoal Filter Damper Red status light is LIT, and the Green status light is OFF.

Comment:

Terminating Cue: **Evaluation on this JPM is complete.**

STOP TIME: _____

VERIFICATION OF COMPLETION

Job Performance Measure No.: 2014 Systems - Control Room JPM B

Examinee's Name:

Date Performed:

Facility Evaluator:

Number of Attempts:

Time to Complete:

Question Documentation:

Result: SAT _____ UNSAT _____

Examiner's Signature: _____ Date: _____

JPM CUE SHEET

INITIAL CONDITIONS:

- The plant tripped from 100% power and safety injection has actuated.
- The crew entered E-0, Reactor Trip or Safety Injection, and then transitioned to E-2, Faulted Steam Generator Isolation.
- Due to a degrading transient, an Orange Path now exists on the Containment Critical Safety Function Status Tree.

INITIATING CUE:

The CRS has directed you to verify Containment Isolation and Heat Removal systems are operating as expected by performing FR-Z.1, Response to High Containment Pressure, starting from Step 1.

REV. 9 CONTROLLED COPY # 4

ALARM RESPONSE PROCEDURE **AR-A-27**

ALARM TITLE:
CONTAINMENT SPRAY 2/3 + 2/3 > 28 PSI

ALARM SETPOINT (S) :
≥ 28 psig or equivalent Containment Pressure
(PT-945, PT-946, PT-947, PT-948, PT-949, PT-950)

SOURCE (S) :
2 Sets of 2/3 Logic CNMT Pressure or 2/2 Manual Spray

REQUIRED ACTION:

1. Verify it is a valid alarm by checking all CNMT pressure indicators.
   - PI-945 CNMT CH1A Pressure
   - PI-947 CNMT CH2A Pressure
   - PI-949 CNMT CH3A Pressure
   - PT-946 CNMT Pressure 1B
   - PT-948 CNMT Pressure 2B
   - PT-950 CNMT Pressure 3B
2. Ensure the following:
   - CS PUMP A running
   - CS PUMP B running
   - CNMT SPRAY PUMP A DISCHARGE VLV MOV-860A opens
   - CNMT SPRAY PUMP A DISCHARGE VLV MOV-860B opens
   - CNMT SPRAY PUMP B DISCHARGE VLV MOV-860C opens
   - CNMT SPRAY PUMP B DISCHARGE VLV MOV-860D opens
   - CNMT SPRAY NaOH ADDITION AOV-836A opens
   - CNMT SPRAY NaOH ADDITION AOV-836B opens
3. Verify flow on FI-930 Spray Additive Flow.
4. Refer to O-9.3.

COMMENTS:
Alarm resets at ≤ 25 psig.

REFERENCES:

- LOGIC DIAGRAM SAFEGUARDS ACTUATION SIGNALS #33013-1253 SH 6, 7
- ELEMENTARY #10905-362

RESPONSIBLE MANAGER

1-21-2005
EFFECTIVE DATE

REV. 8 CONTROLLED COPY # H

ALARM RESPONSE PROCEDURE **AR-A-28**

ALARM TITLE:
CONTAINMENT SPRAY CHANNEL ALERT 2/3 > 28 PSI

ALARM SETPOINT (S) :
> 28 psig Containment Pressure (> 43 psia - Back of MCB)

SOURCE (S) :
1 Set of 2/3 CNMT Pressure

PC-945B-X2		PC-945B-X1		PC-946B-X2		PC-946B-X1
PC-947B-X2	OR	PC-847B-X1	OR	PC-948B-X2	OR	PC-948B-X1
PC-949B-X2		PC-949B-X2		PC-950B-X2		PC-950B-X1

REQUIRED ACTION:

1. Monitor other CNMT Pressure Channels

   - PI-945 CNMT CH1A Pressure
   - PI-947 CNMT CH2A Pressure
   - PI-949 CNMT CH3A Pressure
   - PI-946 CNMT Pressure 1B
   - PI-948 CNMT Pressure 2B
   - PI-950 CNMT Pressure 3B

COMMENTS:

REFERENCES:

- LOGIC DIAGRAM SAFEGUARDS ACTUATION SIGNALS #33013-1253 SHEET 6, 7
- ELEMENTARY #10905-363

RESPONSIBLE MANAGER

1-21-2005
EFFECTIVE DATE

SIM JPM C

Facility: Ginna Task No.:

Task Title: CVCS Leak Isolation JPM No.: 2014 Systems - Control Room JPM C (Alternate Path)

K/A Reference: 004 A4.08 (3.8/3.4)

Examinee: NRC Examiner:

Facility Evaluator: Date:

Method of testing:

Simulated Performance: _____ Actual Performance: X

Classroom _____ Simulator X Plant _____

READ TO THE EXAMINEE

I will explain the initial conditions, which steps to simulate or discuss, and provide initiating cues. When you complete the task successfully, the objective for this Job Performance Measure will be satisfied.

Provide Candidate with Initial Conditions/Cue (Last Page of this JPM) and Handout 1.

Initial Conditions:

- The Plant is at 100% power.
- Based on plant conditions the crew has entered AP-CVCS.1, "CVCS Leak," and has completed steps 1-5.
- Pressurizer level is stable.
- The leak is believed to be in the Containment and RP has been directed to sample the Containment for entry.

Initiating Cue: While the CRS and the BOP continue to monitor plant conditions, take appropriate actions to isolate the leak starting with Step 6 of AP-CVCS.1, CVCS Leak, and control RCS Inventory to maintain Pressurizer level stable.

Task Standard: The operator will isolate Normal Letdown and Charging, recognize that both operating Charging Pumps have tripped, use AP-CVCS.3 to restore Charging flow, and then place Excess Letdown in service.

Required Materials: None

General References: S-3.2, Charging and Volume Control, Rev 02000
AR-A-4, REGEN HX LETDOWN OUT HIGH TEMP 395°F, Rev 00700
AP-CVCS.1, CVCS Leak, Rev 01501
AR-B-9, RCP 1A LABYR SEAL LO DIFF PRESS 15" H_2O, Rev 10
AR-B-10, RCP 1B LABYR SEAL LO DIFF PRESS 15" H_2O, Rev 10
AP-CVCS.3, Loss of All Charging Flow, Rev 01300
ATT-9.1, Attachment Excess L/D, Rev 00800

Handouts: Handout 1: AP-CVCS.1, CVCS Leak, marked up through Step 5.
Handout 2: Blank copy of AP-CVCS.3, Loss of All Charging Flow
Handout 3: FIG-4.0, Figure RCP Seal Leakoff

Time Critical Task: NO

Validation Time: 13 minutes

SIMULATOR OPERATIONAL GUIDELINES

- Initiate to **any 100% power IC**
- Place simulator in RUN
- Ensure C Charging Pump running in AUTO, B Charging Pump running in MANUAL, and the A Charging Pump available, but OFF
- Insert **Malfunction CVC03, 30 GPM** (Charging Line Leak upstream of Regenerative Heat Exchanger)
- Respond to annunciator procedures and enter AP-CVCS.1, "CVCS Leak"
- Perform steps 1-5 of AP-CVCS.1
- Ensure Przr Level and VCT Level are stable, normal Letdown is in service, and that the VCT is aligned to the suction of the Charging Pumps
- Insert **Malfunctions CVC12B** and **CVC12C** on Trigger #1 (Charging Pumps 'B' and 'C' Trip)
- Place simulator in FREEZE
- Place simulator in RUN when directed by examiner

OR

- Initiate to IC-158 (December, 2014)
- Place simulator in RUN
- Place simulator in FREEZE
- Place simulator in RUN when directed by examiner

NOTE: The Floor Instructor will need to control BOP during the performance of this JPM.

The SIM DRIVER will need to insert Trigger #1 at Step 5 of this JPM.

(Denote Critical Steps with a √)

Provide Candidate with Initial Conditions/Cue (Last Page of this JPM) and Handout 1.

START TIME: _____

AP-CVCS.1, Step 6

Performance Step: 1 Check for leak in Charging Line to REGEN Hx:

_____

Annunciator A-4, REGEN HX LETDOWN OUT HI TEMP 395°F - EXTINGUISHED
Regen Hx Ltdn Outlet Temp - LESS THAN 350°F AND STABLE (TI-127)

Standard: The operator observes that Annunciator A-4 is LIT, and proceeds to the Step 6 RNO.

Comment:

AP-CVCS.1, Step 6 RNO a

√ **Performance Step: 2** Perform the following to isolate normal letdown:

_____

Close letdown isolation, AOV-427.

Standard: [√] The operator places the AOV-427 Control Switch to CLOSE, and observes the Green status light is LIT, Red status light is OFF.

Comment:

AP-CVCS.1, Step 6 RNO b

Performance Step: 3 Close letdown orifice valves (AOV-200A, AOV-200B, and AOV-202).

_____

Standard: The operator observes the Green status light is LIT, Red status light is OFF.

The operator places the AOV-200A Control Switch to CLOSE.

EXAMINER NOTE: **This valve auto closed when AOV-427 was CLOSED by interlock.**

Comment:

AP-CVCS.1, Step 6 RNO c

Performance Step: 4 Close letdown isolation, AOV-371.

_____

Standard: The operator places the AOV-371 Control Switch to CLOSE, and observes the Green status light is LIT, Red status light is OFF.

SIM DRIVER: **After Operator CLOSES AOV-371, INSERT Trigger #1**

Standard: The operator observes one or more of the following:

- Charging flow goes to 0 GPM
- Charging Pumps have tripped
- AR-B-9, RCP 1A LABYR SEAL LO DIFF PRESS 15" H2O, is LIT
- AR-B-10, RCP 1B LABYR SEAL LO DIFF PRESS 15" H2O, is LIT
- AR-G-25, MOTOR OFF CENTER SECTION PUMPS EXCEPT MFW AND AFW PUMPS.

The operator uses the ARP for these annunciators to go to AP-CVCS.3, or enters this procedure directly based on meeting the entry conditions.

EXAMINER NOTE: **Based on a Step 1 of AP-CVCS.1 which is a Continuous Action Step (CAS), the operator may start the A Charging Pump and stabilize Pressurizer level. If so, the operator may continue in AP-CVCS.1. If so, go to JPM Step 9.**

Comment:

EXAMINER NOTE: ALTERNATE PATH DECISION POINT OCCURS IN THE NEXT STEP

AP-CVCS.3, Step 1

Performance Step: 5 Check Charging Pumps – ANY RUNNING

_____

Standard: The operator observes that the Green status lights for the A, B and C Charging Pumps are LIT, and the White status lights on Charging Pump B and C are LIT; and proceeds to the Step 1 RNO.

EXAMINER CUE: **When the operator is looking to find AP-CVCS.3, PROVIDE operator with Handout 2 (AP-CVCS.3).**

Comment:

AP-CVCS.3, Step 1 RNO

√ **Performance Step: 6** Start two charging pumps. IF at least one pump cannot be started, THEN....

_____

Standard: [√] The operator places START Switch for the A Charging Pump to the START Position, and observes Red status light is LIT, and the Green status light is OFF.

Comment:

AP-CVCS.3, Step 2

√ **Performance Step: 7** Check Charging Pump Conditions:

_____

- Check charging pump discharge pressure - GREATER THAN RCS PRESSURE AND STABLE
- Check charging flow - NORMAL
- Check RCP labyrinth seal dp - GREATER THAN 15 INCHES AND STABLE

Standard: The operator observes Charging Pump discharge pressure to be 2400 psig.

The operator observes Charging Pump flow to be 0 gpm.

[√] The operator adjusts the Charging Pump speed to raise RCP Seal flow to stabilize Pressurizer level.

The operator observes the 1A RCP labyrinth seal D/P to be between 15-80 inches H_20.

The operator observes the 1B RCP labyrinth seal D/P to be between 15-80 inches H_20.

EXAMINER NOTE: HCV-142 should remain closed during the recovery of Charging flow.

Comment:

AP-CVCS.3, Step 3

Performance Step: 8 Return To Guidance In Effect

_____

Standard: The operator returns to AP-CVCS.1 Step 6 RNO d.

Comment:

AP-CVCS.1, Step 6 RNO d

√ **Performance Step: 9** Close charging flow control valve, HCV-142 WHILE adjusting charging pump speed to maintain:

- RCP labyrinth seal D/P between 15 inches and 80 inches
- PRZR level at program

Standard: [√] The operator simultaneously adjusts HCV-142 Controller to 100% (Valve Fully Closed) and adjust B Charging Pump speed to maintain RCP Labyrinth Seal D/P 15-80 inches, and Przr Level at program level (56%).

Comment:

AP-CVCS.1, Step 6 RNO e

√ **Performance Step: 10** Close charging to loop B cold leg, AOV-294.

Standard: [√] The operator places the AOV-294 Control Switch to CLOSE, and observes the Green status light is LIT, Red status light is OFF.

Comment:

AP-CVCS.1, Step 6 RNO f

Performance Step: 11 Go to Step 9.

Standard: The operator proceeds to Step 9

Comment:

AP-CVCS.1, Step 9

Performance Step: 12 Check RCP Seal Injection Indications:

_____

- Seal injection flows - GREATER THAN 6 GPM AND STABLE
- RCP labyrinth seal D/Ps - GREATER THAN 15 INCHES AND APPROXIMATELY EQUAL
- RCP seal inlet temperatures - STABLE

Standard: The operator observes the 1A RCP seal injection flow to be ≈8 gpm and stable.

The operator observes the 1B RCP seal injection flow to be ≈8 gpm and stable.

The operator observes the 1A RCP labyrinth seal D/P to be between 15-80 inches H_20.

The operator observes the 1B RCP labyrinth seal D/P to be between 15-80 inches H_20.

The operator observes the 1A RCP seal inlet temperature to be ≈110°F.

The operator observes the 1B RCP seal inlet temperature to be ≈110°F.

Comment:

AP-CVCS.1, Step 10

Performance Step: 13 Check RCP Seal Leakoff Flows:

_____

RCP seal leakoff flows - WITHIN THE NORMAL OPERATING RANGE OF FIG-4.0, FIGURE RCP SEAL LEAKOFF

RCP seal leakoff flows - STABLE

Standard: The operator observes the 1A RCP Seal Leakoff flow to be between 1-5 gpm, and compares this with FIG-4.0.

The operator observes the 1B RCP Seal Leakoff flow to be between 1-5 gpm, and compares this with FIG-4.0.

EXAMINER CUE: **When the operator is looking to find FIG-4.0, PROVIDE operator with Handout 3 (FIG-4.0).**

Comment:

AP-CVCS.1, Step 11

Performance Step: 14 Evaluate Local Leak Investigation - CVCS SYSTEM INTACT IN AUX BLDG

_____

Standard: The operator recognizes that this action is NA and proceeds.

Comment:

AP-CVCS.1, Step 12/12.a

Performance Step: 15 Evaluate Plant Status:

_____

- Leak location identified

Standard: The operator recognizes that the leak is in Containment on the normal Charging Line.

The operator recognizes that the leak is in Containment on the normal Charging Line.

Comment:

AP-CVCS.1, Step 12.b

Performance Step: 16 Check RCS leakage within limits (Refer to leakage surveillance sheet and ITS section 3.4.13)

_____

Standard: The operator recognizes with HCV-142 closed the leak is isolated and proceeds.

Comment:

AP-CVCS.1, Step 12.c

Performance Step: 17 At least one charging flowpath - AVAILABLE FOR INVENTORY CONTROL

_____

- AOV-294
- AOV-392A
- Seal Injection

Standard: The operator recognizes that the seal injection path is available for inventory control, and proceeds.

Comment:

AP-CVCS.1, Step 13

Performance Step: 18 Check Normal Or Excess Letdown - IN SERVICE

_____

Standard: The operator recognizes that neither Normal nor Excess Letdown is in service and proceeds to the Step 13 RNO.

Comment:

AP-CVCS.1, Step 13 RNO

Performance Step: 19 IF normal letdown desired, THEN establish normal letdown. (Refer to ATT-9.0, ATTACHMENT LETDOWN)

_____

IF normal letdown NOT available, THEN establish excess letdown if desired (Refer to ATT-9.1, ATTACHMENT EXCESS L/D).

Standard: The operator recognizes that Normal Letdown has been isolated to isolate a leak per this procedure and proceeds to ATT-9.1.

Comment:

ATT-9.1, Step A

Performance Step: 20 The following conditions must be met to place excess letdown in service:

_____

IA to CNMT - ESTABLISHED

CCW - IN SERVICE

PRZR level - GREATER THAN 13%

Standard: The operator observes that Instrument Air to Containment is established.

The operator observes that CCW is in service.

The operator observes that Pressurizer level is greater than 13%.

Comment:

ATT-9.1, Step B/B.1

Performance Step: 21 Establish excess letdown:

_____

Ensure EXCESS LTDN LOOP A COLD TO Hx, AOV-310 is closed.

Standard: The operator observes that the AOV-310 Green status light is LIT, and the Red status light is OFF.

Comment:

ATT-9.1, Step B.2

Performance Step: 22 Ensure EXCESS LTDN flow control valve, HCV-123 is closed, demand at 0.

_____

Standard: The operator observes that the HCV-123 Controller output is 0.

Comment:

ATT-9.1, Step B.3

Performance Step: 23 Ensure SEAL OR EXCESS LTDN RETURN ISOL VALVE, MOV-313, is open.

_____

Standard: The operator observes that the MOV-313 Red status light is LIT, and the Green status light is OFF.

Comment:

ATT-9.1, Step B.4

√ **Performance Step: 24** Place excess letdown divert valve, AOV-312, to DIVERT.

_____

Standard: [√] The operator places the AOV-312 Control Switch to DIVERT, and observes the Red status light is LIT, and the Green status light is OFF.

Comment:

ATT-9.1, Step B.5

Performance Step: 25 Ensure CCW FROM EX LTDN Hx, AOV-745 - OPEN.

_____

Standard: The operator observes that the AOV-745 Red status light is LIT, and the Green status light is OFF.

Comment:

ATT-9.1, Step B.6

√ **Performance Step: 26** Open EXCESS LTDN LOOP A COLD TO HX, AOV-310.

_____

Standard: [√] The operator places the AOV-312 Control Switch to OPEN, and observes the Red status light is LIT, and the Green status light is OFF.

Comment:

ATT-9.1, Step B.7/7.a

CAUTION: DIVERTING EXCESS LETDOWN TO RCDT WILL RESULT IN CVCS HUT LEVEL RISE OF APPROXIMATELY 4% PER HOUR.

√ **Performance Step: 27** _____

Flush approximately 10 gallons to RCDT as follows (3.2 gal/%, PPCS Point ID LI003).

- Slowly open EXCESS LTDN flow control valve, HCV-123, to maintain excess letdown temperature less than 195°F and pressure less than 100 psig.

Standard:

[√] The operator calls up PPCS Point LI003.

[√] The operator adjusts the HCV-123 Controller such that output rises above 0.

The operator observes TI-122 less than 195°F.

The operator observes PI-121 less than 100 psig.

Comment:

ATT-9.1, Step B.7.b

Performance Step: 28 _____

Ensure approximately 10 gallons is flushed to the RCDT.

Standard:

The operator observes the RDCT level rise approximately 3%.

Comment:

ATT-9.1, Step B.7.c

√ **Performance Step: 29** _____

IF RCP seal return has been established, THEN place EXCESS LTDN HX DIVERT TO VCT OR RCDT VALVE, AOV-312, to NORMAL. IF NOT, THEN leave AOV-312 in DIVERT.

Standard:

[√] The operator recognizes that RCP Seal return has been established and places the AOV-312 Control Switch to NORMAL, and observes the Green status light is LIT, and the Red status light is OFF.

Comment:

ATT-9.1, Step B.8

√ **Performance Step: 30** _____

Adjust charging pump speed to control PRZR level and labyrinth seal D/P.

Standard:

[√] The operator simultaneously adjusts HCV-142 and Charging Pump speed to maintain RCP Labyrinth Seal D/P 15-80 inches, and Przr Level is approaching program level (56%).

Comment:

Terminating Cue: **Evaluation on this JPM is complete.**

STOP TIME: _____

VERIFICATION OF COMPLETION

Job Performance Measure No.: 2014 Systems - Control Room JPM C

Examinee's Name:

Date Performed:

Facility Evaluator:

Number of Attempts:

Time to Complete:

Question Documentation:

Result: SAT _____ UNSAT _____

Examiner's Signature: _____ Date: _____

JPM CUE SHEET

INITIAL CONDITIONS:

- The Plant is at 100% power.
- Based on plant conditions the crew has entered AP-CVCS.1, "CVCS Leak," and has completed steps 1-5.
- Pressurizer level is stable.
- The leak is believed to be in the Containment and RP has been directed to sample the Containment for entry.

INITIATING CUE: While the CRS and the BOP continue to monitor plant conditions, take appropriate actions to isolate the leak starting with Step 6 of AP-CVCS.1, CVCS Leak, and control RCS inventory to maintain Pressurizer level stable.

STEP	ACTION/EXPECTED RESPONSE	RESPONSE NOT OBTAINED

NOTE: o Conditions should be evaluated for site contingency reporting (Refer to EPIP-1.0, GINNA STATION EVENT EVALUATION AND CLASSIFICATION.

o A local radiation emergency should be declared for any unexplained area radiation monitor alarm.

* 1 Monitor PRZR Level - STABLE AT PROGRAM LEVEL	→	Y IF PRZR level lowering, THEN start additional charging pumps and raise speed to raise PRZR level to program. N IF PRZR level continues to lower, THEN close letdown isolation AOV-427 AND excess letdown AOV-310. N IF available charging pumps are running at maximum speed with letdown isolated, AND PRZR level is lowering, THEN trip the reactor and go to E-0, REACTOR TRIP OR SAFETY INJECTION.

STEP	ACTION/EXPECTED RESPONSE	RESPONSE NOT OBTAINED
	NOTE: IF VCT level lowers to 5%, charging pump suction will swap to the RWST. This may require a load reduction.	
2	Check VCT Makeup System:	
	a. Verify VCT level - GREATER THAN 5%	a. Perform the following: 1) Ensure charging pump suction aligned to RWST • LCV-112B - OPEN • LCV-112C - CLOSED 2) Go to Step 3.
	b. Ensure the following: 1) RMW mode selector switch in AUTO 2) RMW control armed - RED LIGHT LIT	
	c. Check VCT level: o Level GREATER THAN 20% -OR- o Level - STABLE OR RISING	c. Perform the following: 1) Ensure letdown divert valve, LCV-112A, aligned to VCT. 2) Manually raise VCT makeup flow as follows: a) Ensure BA transfer pumps and RMW pumps running. b) Adjust RMW flow control valve, HCV-111, to raise RMW flow. c) Adjust boric acid flow to maintain required concentration. IF VCT level can NOT be maintained, THEN refer to ER-CVCS.1, REACTOR MAKEUP CONTROL MALFUNCTION, if necessary.

STEP	ACTION/EXPECTED RESPONSE	RESPONSE NOT OBTAINED

NOTE: A load reduction may be required if charging pump suction is aligned to the RWST.

3 Check Charging Pump Suction Aligned To VCT:

a. VCT level - GREATER THAN 20%

a. IF VCT level can NOT be maintained greater than 5%, THEN perform the following:

1) Ensure charging pump suction aligned to RWST

o LCV-112B open

o LCV-112C closed

2) Continue with Step 4. WHEN VCT level greater than 20%, THEN do Step 3b.

b. Align charging pumps to VCT

o LCV-112C open

o LCV-112B closed

4 Check If RCS Leakage In CNMT:

o Check CNMT radiation monitors - NORMAL

- R-2
- R-7
- R-10A
- R-11
- R-12

o CNMT sump A pump run frequency - NORMAL (Refer to leakage surveillance sheet)

IF leakage is indicated in CNMT, THEN perform the following:

a. Direct RP to sample CNMT for entry.

b. Continue with Step 5. WHEN CNMT cleared for entry, THEN dispatch personnel to investigate CNMT for RCS leakage.

STEP	ACTION/EXPECTED RESPONSE	RESPONSE NOT OBTAINED

* *

CAUTION

RADIATION PROTECTION TECHNICIAN SHOULD BE CONSULTED PRIOR TO ENTERING A HIGH AIRBORNE AREA.

* *

5 Check If RCS Leakage In AUX BLDG:

Dispatch AO To AUX BLDG To Investigate For CVCS Leak (locked area keys required)

a. Check AUX BLDG radiation monitors - NORMAL

- R-4
- R-9
- R-10B
- R-13
- R-14

b. AUX BLDG sump pump run frequency - NORMAL (Refer to leakage surveillance sheet)

c. AUX BLDG sump tank leak rate - NORMAL (Refer to leakage surveillance sheet)

SIM JPM D

Facility:	Ginna	Task No.:	
Task Title:	Depressurize the RCS During a SGTR	JPM No.:	2014 Systems - Control Room JPM D (Alternate Path)
K/A Reference:	EPE 038 EA1.04 (4.3/4.1)		

Examinee: NRC Examiner:

Facility Evaluator: Date:

Method of testing:

Simulated Performance: _____ Actual Performance: X

Classroom _____ Simulator X Plant _____

READ TO THE EXAMINEE

I will explain the initial conditions, which steps to simulate or discuss, and provide initiating cues. When you complete the task successfully, the objective for this Job Performance Measure will be satisfied.

Provide Candidate with Initial Conditions/Cue (Last Page of this JPM) and Handout 1.

Initial Conditions:
- The plant has experienced a Steam Generator Tube Rupture.
- The crew has completed E-3, Steam Generator Tube Rupture, through Step 17, however an attempt to re-establish Instrument Air to the Containment has been unsuccessful.
- The RCS has been cooled to target temperature.
- The crew is ready to commence RCS depressurization.

Initiating Cue: The CRS has directed you to depressurize the RCS to minimize break flow starting with Step 18 of E-3.

Task Standard: The operator will determine that Pressurizer Spray and the normal use of the Pressurizer PORVs is not possible, and use ATT-12.0 to open one Pressurizer PORV; and then close the PORV Block Valve when it is recognized that the previously opened Pressurizer PORV has failed OPEN.

Required Materials: MCB Control Switch Key (Green)

General References:	E-3, Steam Generator Tube Rupture, Rev 04800 ATT-12.0 Attachment N2 PORVs, Rev 6
Handouts:	Handout 1: Blank copy of E-3, Steam Generator Tube Rupture Handout 2: Attachment 12.0, Attachment N2 PORVS
Time Critical Task:	NO
Validation Time:	8 minutes

SIMULATOR OPERATIONAL GUIDELINES

- Reset the Simulator to **any 100% power IC**
- Insert **Malf SGN04B, 500 gpm** (SGTR on 'B' S/G)
- Fail Instrument Air Valve to Containment closed (**OVR-DI-MIS05C, False**)
- Perform Steps 1-17 of E-3
- Ensure that AOV-5392 is closed
- Ensure PPCS is available
- To insert PORV failures when ATT-12.0 is performed:
    - Set Trigger 30 = **x08i160a** (N2 ARMING VLV SOV-8619B switch to ARM)
    - Set Trigger 29 = **x08i161a** (N2 ARMING VLV SOV-8619A switch to ARM)
    - Insert **Malf PZR05B, 100%** on Trigger 30
    - Insert **Malf PZR05A, 100%** on Trigger 29
- Place simulator in FREEZE
- Place simulator in RUN when directed by examiner

OR

- Initiate to IC-159 (December, 2014)
- Place simulator in RUN
- Place simulator in FREEZE
- Place simulator in RUN when directed by examiner

NOTE: **The Floor Instructor will need to control BOP during the performance of this JPM.**

(Denote Critical Steps with a √)

Provide Candidate with Initial Conditions/Cue (Last Page of this JPM) and Handout 1.

START TIME: _____

Performance Step: 1 _____

E-3, Step 18

NOTE: SI ACCUMS may inject during RCS depressurization

Depressurize RCS To Minimize Break Flow And Refill PRZR:

- Check the following:
  - Ruptured S/G Level – LESS THAN 90% [80% adverse CNMT]
  - Any RCP - RUNNING
  - IA to CNMT - AVAILABLE

Standard:

The operator reads the Note, and proceeds.

The operator observes that the B S/G is less than 90% (≈21%).

The operator observes that both RCPs are running.

The operator observes that the AOV-5392 Green status light is LIT, and the Red status light is OFF, and proceeds to the Step 18 RNO.

Comment:

Performance Step: 2 _____

E-3, Step 18 RNO

Go to Step 19.

Standard:

The operator proceeds to Step 19.

Comment:

E-3, Step 19/19.a

Caution: THE PRT MAY RUPTURE IF A PRZR PORV IS USED TO DEPRESSURIZE THE RCS. THIS MAY RESULT IN ABNORMAL CNMT CONDITIONS.
Caution: CYCLING OF THE PRZR PORV SHOULD BE MINIMIZED.
Caution: THE UPPER HEAD REGION MAY VOID DURING RCS DEPRESSURIZATION IF RCPS ARE NOT RUNNING. THIS MAY RESULT IN RAPIDLY RISING PRZR LEVEL.
Note: If auxiliary spray is in use, spray flow may be enhanced by closing normal charging valve AOV-294 and normal spray valves.
Note: When using PRZR PORV select one with an operable block valve.

Performance Step: 3 Depressurize RCS Using PRZR PORV To Minimize Break Flow And Refill PRZR:

_____

- Verify IA to CNMT – AVAILABLE.

Standard: The operator reads the three Cautions and proceeds.

The operator reads the two Notes and proceeds.

The operator observes that the AOV-5392 Green status light is LIT, and the Red status light is OFF, and proceeds to the Step 19 RNO.

Comment:

E-3, Step 19.a RNO

Performance Step: 4 Refer to ATT-12.0, ATTACHMENT N2 PORVS to operate PORVs.

_____

Standard: The operator refers to ATT-12.0 to operate the Pressurizer PORV, and reviews.

Comment:

Performance Step: 5 _____

E-3, Step 19.b
PRZR PORVs – AT LEAST ONE AVAILABLE

Standard:

The operator observes the PCV-430 Green status light LIT, and the Red status light OFF, and determines that it is available.

The operator observes the PCV-431C Green status light LIT, and the Red status light OFF, and determines that it is available.

Comment:

Performance Step: 6 _____

E-3, Step 19.c
Open one PRZR PORV until ANY of the following conditions satisfied:

- PRZR level – GREATER THAN 75% [65% adverse CNMT]

OR

- RCS pressure – LESS THAN SATURATION USING FIG-1.0, FIGURE MIN SUBCOOLING

OR

- BOTH of the following:
  - RCS pressure – LESS THAN RUPTURED S/G PRESSURE
  - PRZR level – GREATER THAN 10% [30% adverse CNMT]

Standard:

The operator refers to ATT-12.0 to operate the Pressurizer PORV.

EXAMINER CUE:

When the operator is looking to find ATT-12.0, PROVIDE operator with <u>Handout 2 (ATT-12.0)</u>.

Comment:

ATT-12.0, Step A

NOTE: If RCS overpressurization accumulator pressure lowers to less than 200 psig, then recharge accumulators using S-29.2, Charging The Reactor Vessel Overpressure Protection System Accumulators with N2. This will require reset of CI and XY relays for the N2 supply valve to CNMT, AOV-846.

NOTE: For FR-H.1 Bleed and Feed the PORV block valve is not required to be operable.

√ **Performance Step: 7** ____

When IA to CNMT NOT available, THEN perform the following to operate one (or both) PRZR PORV (s) in accordance with guidance provided by the procedure step:

Select a PORV with an operable block valve, obtain a key for the RCS overpressurization system, and perform the step below:

- PCV-431C:
  - Verify block valve MOV-515 – OPEN AND OPERABLE
  - Place ACCUM TO SURGE NTK VLV SOV-8616B to OPEN
- PCV-430:
  - Verify block valve MOV-516 – OPEN AND OPERABLE
  - Place ACCUM TO SURGE NTK VLV SOV-8616A to OPEN

Standard:

The operator reads both Notes and proceeds.

The operator observes the MOV-515 Red status light is LIT, Green status light is OFF.

[√] The operator places the SOV-8616B Key Control Switch to OPEN.

OR

The operator observes the MOV-516 Red status light is LIT, Green status light is OFF.

[√] The operator places the SOV-8616A Key Control Switch to OPEN.

EXAMINER NOTE: **These valves have status lights that are NOT operational.**

Comment: **The SOVs are located on the rear of the MCB.**

ATT-12.0, Step B

√ **Performance Step: 8** _____

To depressurize the RCS in accordance with the guidance provided by the EOP step, perform the following:

- For PCV-431C, place overpressurization system arming switch, N2 ARMING VLV SOV-8619B to ARM
- For PCV-430, place overpressurization system arming switch, N2 ARMING VLV SOV-8619A to ARM

Standard:

[√] The operator places the SOV-8619B Key Control Switch to OPEN.

OR

[√] The operator places the SOV-8619A Key Control Switch to OPEN.

EXAMINER NOTE:

These valves have status lights that are NOT operational.

The PORV that is opened by the Operator will fail OPEN.

Comment:

E-3, Step 19.d

√ **Performance Step: 9** _____

Close PRZR PORV

Standard:

The operator observes RCS pressure and PRZR level.

The operator compares RCS pressure to FIG-1.0, FIGURE MIN SUBCOOLING

[√] The operator determines that one of the three stop criteria have been met, and attempts to close the PORV (Performance Step 10).

Comment:

ATT-12.0, Step D

√ **Performance Step: 10** _____

WHEN depressurization complete, THEN close the PORV(s) by performing the following:

- For PCV-431C:
  - Place N2 ARMING VLV SOV-8619B to BLOCK
  - Place ACCUM TO SURGE TNK VLV 8616B to CLOSE
- For PCV-430:
  - Place N2 ARMING VLV SOV-8619A to BLOCK
  - Place ACCUM TO SURGE TNK VLV 8616A to CLOSE

Standard:

[√] The operator places the SOV-8619B Key Control Switch to BLOCK.

[√] The operator places the SOV-8616B Key Control Switch to CLOSE.

OR

[√] The operator places the SOV-8619A Key Control Switch to BLOCK.

[√] The operator places the SOV-8616A Key Control Switch to CLOSE.

[√] The operator observes the previously opened PRZR PORV Red status light is LIT, Green status light is OFF, and recognizes that the PORV has failed to Close.

Comment:

EXAMINER NOTE: ALTERNATE PATH DECISION POINT OCCURS IN THE NEXT STEP

Performance Step: 11 _____

E-3, Step 19.d RNO
IF either PRZR PORV can NOT be closed, THEN close associated block valve.

Standard:

[√] If PCV-430 is OPEN, the operator places the MOV-516 to CLOSE, and observes the Green status light is LIT, Red status light is OFF.

OR

[√] If PCV-431C is OPEN, the operator places the MOV-515 to CLOSE, and observes the Green status light is LIT, Red status light is OFF.

Comment:

Performance Step: 12 _____

E-3, Step 20
Check RCS Pressure - RISING

Standard: The operator observes RCS pressure is rising.

Comment:

Terminating Cue: **Evaluation on this JPM is complete.**

STOP TIME: _____

VERIFICATION OF COMPLETION

Job Performance Measure No.: 2014 Systems - Control Room JPM D

Examinee's Name:

Date Performed:

Facility Evaluator:

Number of Attempts:

Time to Complete:

Question Documentation:

Result: SAT _____ UNSAT _____

Examiner's Signature: _____ Date: _____

JPM CUE SHEET

INITIAL CONDITIONS:

- The plant has experienced a Steam Generator Tube Rupture.
- The crew has completed E-3, Steam Generator Tube Rupture, through Step 17, however an attempt to re-establish Instrument Air to the Containment has been unsuccessful.
- The RCS has been cooled to target temperature.
- The crew is ready to commence RCS depressurization.

INITIATING CUE: The CRS has directed you to depressurize the RCS to minimize break flow starting with Step 18 of E-3.

SIM JPM E

Facility: Ginna Task No.:

Task Title: Synchronize Generator On-Line with Improper Load Pickup JPM No.: 2014 Systems - Control Room JPM E (Alternate Path)

K/A Reference: 045 A2.17 (2.7*/2.9*)

Examinee: NRC Examiner:

Facility Evaluator: Date:

Method of testing:

Simulated Performance: _____ Actual Performance: X

Classroom _____ Simulator X Plant _____

READ TO THE EXAMINEE

I will explain the initial conditions, which steps to simulate or discuss, and provide initiating cues. When you complete the task successfully, the objective for this Job Performance Measure will be satisfied.

Provide Candidate with Initial Conditions/Cue (Last Page of this JPM) and Handouts 1-2.

Initial Conditions:
- The generator is being started following a refueling outage.
- The generator is at 1800 rpm and the turbine is fully warmed up.
- The generator output voltage is 19 KV.
- MTC is negative for this Startup.

Initiating Cue:
- The CRS has directed you to synchronize the generator on-line per O-1.2, Plant Startup From Hot Shutdown to Full Load, steps 6.13.1 through 6.13.10.
- The HCO will control the primary plant.

Task Standard: The operator will synchronize the Main Generator to the Electrical Grid, and when it is recognized that the Automatic Load Pickup has failed to function, the operator will manually load the Turbine to 40 to 60 MW, without reverse powering the Main Generator.

Required Materials: None

General References:	O-1.2, Plant Startup From Hot Shutdown to Full Load, Rev 20101 FIG-13.0, Figure Back Pressure, Rev 0
Handouts:	Handout 1: O-1.2, Plant Startup From Hot Shutdown to Full Load (Pages 1-11, 55, and 66-74) Handout 2: O-1.2, ATT-2, No Load Excitation Limits for #1 and #11 Transformers
Time Critical Task:	NO
Validation Time:	12 minutes
NOTE:	The operators should be pre-briefed in the Briefing Room prior to performance of this JPM.

SIMULATOR OPERATIONAL GUIDELINES

- Reset to **IC-8** (Turbine 1800 rpm)
- Withdraw control rods to ensure reactor power > 15% but < 20%
- Ensure FRVs in Auto
- Ensure generator output voltage at 19 KV
- Insert **MALF TUR18, 1 MW** (Failure of Turbine Auto Load Pickup)
- Ensure Grid frequency [**Remote E-MIS11**] is adjusted so that when the examinee places the Synchroscope to ON it is moving slowly in the SLOW direction (e.g. 60.02 Hz).
- Ensure Grid voltage [**Remote E-MIS10**] is low enough to allow the examinee to adjust incoming voltage to slightly greater than system voltage, while maintaining generator voltage < 19.3 KV (Step 6.13.4)
- Set **REM EDS017** to **Closed** (Sta 13A Man Disconnect 1G13A73)
- Set **REM EDS016** to **Closed** (Sta 13A Man Disconnect 9X13A71)
- Select PBACK on the PPCS Screen in front of the Turbine Control Station.
- FREEZE

OR

- IC 160 (August, 2014)
- Place simulator in RUN.
- Place simulator in FREEZE.
- Select PBACK on the PPCS Screen in front of the Turbine Control Station.
- Place simulator in RUN when directed by examiner.

NOTE: **The Simulator/Floor Instructor will need to control Primary Plant during the performance of this JPM.**

(Denote Critical Steps with a √)

Provide Candidate with Initial Conditions/Cue (Last Page of this JPM) and Handouts 1-2.

START TIME: _____

O-1.2, Step 6.13.1

Performance Step: 1 PLACE synchroscope switch handle in CIRCUIT BKR 1G 13A72 SYNCHROSCOPE.

_____

Standard: The operator places synchroscope switch handle in CIRCUIT BKR 1G 13A72 SYNCHROSCOPE.

EXAMINER NOTE: **There is a single switch handle that may be placed in either CIRCUIT BKR 1G 13A72 SYNCHROSCOPE, or CIRCUIT BKR 9X 13A72 SYNCHROSCOPE.**

Comment:

O-1.2, Step 6.13.2

Note: WHEN next step is performed, THEN MCB Alarm J-5, #11 OR #12 TRANSFORMER OUT OF SYNCH, will cycle in and out of alarm as the Generator phases in and out of sync with the grid.

√ **Performance Step: 2** PLACE CIRCUIT BKR 1G 13A72 SYNCHROSCOPE control switch to ON.

_____

Standard: The operator reads the Note, and proceeds.

[√] The operator rotates CIRCUIT BKR 1G 13A72 SYNCHROSCOPE control switch clockwise to the ON position.

EXAMINER NOTE: **Alarm J-5 may cycle in and out of alarm per the note.**

EXAMINER CUE: **(If Alarm J-5 is cycling in and out of alarm): "The CRS gives you permission to allow alarm J-5 to flash."**

Comment:

O-1.2, Step 6.13.3

Note: Synchroscope should be rotating slowly in the FAST (clockwise) direction in the next step. IF Turbine Generator frequency is slightly higher than system frequency, THEN synchroscope should be rotating in the FAST (clockwise) direction. IF rotating counter clockwise, THEN a raise in speed will be required.

√ **Performance Step: 3** _____

IF Turbine Generator speed adjustment must be made, THEN PERFORM the following:

OTHERWISE, MARK this Step N/A.

1. ADJUST SETTER up OR down 1 rpm. (Turbine EH Control Panel)
2. DEPRESS GO pushbutton. (Turbine EH Control Panel)
3. REPEAT Steps 6.13.3.1 AND 6.13.3.2 UNTIL synchroscope is rotating slow in the FAST (clockwise) direction.

Standard:

The operator reads the Note, and proceeds.

- The operator observes the SYNCHROSCOPE (MCB right section)
- [√] The operator adjusts setter up or down 1 rpm and depresses GO pushbutton until synchroscope is rotating slow in the FAST direction.
  - Up or down arrow pushbuttons depressed to raise / lower the setter
  - GO pushbutton depressed to cause the turbine speed to change until the REFERENCE matches the SETTER

EXAMINER NOTE:

- **Up, down, and GO pushbuttons are located on EH control panel.**
- **Digital REFERENCE and SETTER indication is located above the EH control panel.**
- **It is likely that the operator will need to perform this action TWICE.**

Comment:

O-1.2, Step 6.13.4/4.1

Performance Step: 4

_____

WHEN Turbine is at synchronous speed, THEN REPEAT the following as necessary to ensure generator INCOMING VOLTMETER (GENERATOR) voltage is slightly higher than system RUNNING VOLTMETER (SYSTEM) voltage:

- CHECK voltage on all three phases.

Standard:

The operator rotates the GENERATOR VOLTMETER switch to each phase position and compares:

- INCOMING VOLTMETER (GENERATOR) voltage to the RUNNING VOLTMETER (SYSTEM) voltage
  - A-B phase
  - B-C phase
  - C-A phase

EXAMINER NOTE:

- **INCOMING VOLTMETER (GENERATOR) is located to the left of the SYNCHROSCOPE.**
- **RUNNING VOLTMETER (SYSTEM) is located to the right of the SYNCHROSCOPE.**

Comment:

O-1.2, Step 6.13.4.2

Performance Step: 5 WHILE maintaining voltage within the acceptable operating region of Attachment 2, No Load Excitation Limits for #1 and #11 Transformers, TRY to adjust BASE ADJUSTER to make INCOMING VOLTMETER (GENERATOR) voltage slightly higher than RUNNING VOLTMETER (SYSTEM) voltage.

_____

Standard: The operator refers to Attachment 2

The operator observes the INCOMING VOLTMETER (GENERATOR) voltage and RUNNING VOLTMETER (SYSTEM) voltage.

The operator places the BASE ADJUSTER to RAISE until INCOMING VOLTMETER (GENERATOR) voltage is slightly higher than RUNNING VOLTMETER (SYSTEM) voltage.

The operator does NOT allow GENERATOR voltage to exceed 19.3 KV (per Attachment 2)

EXAMINER NOTE: **Initial IC setup may make the performance of this step unnecessary (removed previous CT status)**

EXAMINER NOTE: **Voltage will remain within the acceptable operating region of Attachment 2 as long as the Examinee keeps the GENERATOR voltage < 19.3 KV.**

Comment:

O-1.2, Step 6.13.4.3

Performance Step: 6 IF INCOMING VOLTMETER (GENERATOR) voltage CANNOT be made slightly higher than RUNNING VOLTMETER (SYSTEM) voltage,.....

_____

Standard: The operator marks this step NA.

Comment:

O-1.2, Step 6.13.5

Performance Step: 7 PLACE CIRCUIT BKR 1G 13A72 SYNCHROSCOPE control switch to OFF.

_____

Standard: The operator Rotates CIRCUIT BKR 1G 13A72 SYNCHROSCOPE control switch counter clockwise to OFF.

Comment:

O-1.2, Step 6.13.6

Performance Step: 8 WHEN disconnects are closed at 13A, THEN OBSERVE the following (red) CLOSED lights ILLUMINATED:

- GENERATOR DISCONNECT 1G13A71
- GENERATOR DISCONNECT 9X13A73

_____

Standard: The operator observes the 1G13A71 Red status light is LIT and the Green status light is OFF.

The operator observes the 9X13A73 Red status light is LIT and the Green status light is OFF.

Comment:

O-1.2, Step 6.13.7

Performance Step: 9 ENSURE Reactor power is between 15% to 20%.

_____

Standard: The operator observes Power Range channels NI-41C, NI-42C, NI-43C, and NI-44C between 15% and 20% (Or equivalent).

EXAMINER CUE: (HCO) **(If asked to report power level): "Power level is 18 (current power level)".**

Comment:

O-1.2, Step 6.13.8

Performance Step: 10 REVIEW CAUTION at beginning of Subsection 6.9.

_____

Standard: The operator reads Caution prior to Step 6.9.1, and proceeds.

Comment:

O-1.2, Step 6.13.9

√ **Performance Step: 11** PLACE CIRCUIT BKR 1G 13A72 SYNCHROSCOPE control switch to ON.

_____

Standard: [√] The operator rotates CIRCUIT BKR 1G 13A72 SYNCHROSCOPE control switch clockwise to ON.

EXAMINER CUE: **(If Alarm J-5 is cycling in and out of alarm): "The CRS gives you permission to allow alarm J-5 to flash."**

Comment:

O-1.2, Step 6.13.10/10.1

Caution: At low MWe output, Turbine loading requirements SHALL be observed PER EOP, FIG-13.0, Figure Back Pressure

- Operation in the Avoid Region SHOULD be minimized.
- Operation in the DO NOT OPERATE region SHALL be limited to 5 minutes.

Performance Step: 12 PERFORM the following to CLOSE CIRCUIT BKR 1G 13A72 BUS 1 115KV:

- WITH RG&E Energy Control Center concurrence, TRY to adjust BASE ADJUSTER so generator INCOMING VOLTMETER (GENERATOR) voltage is slightly higher than system RUNNING VOLTMETER (SYSTEM) voltage as indicated on all three phases.

Standard: The operator refers to FIG-13.0 or calls up PBACK on the PPCS.

The operator observes the INCOMING VOLTMETER (GENERATOR) voltage and RUNNING VOLTMETER (SYSTEM) voltage and determines that no adjustment is needed.

EXAMINER NOTE: **Completed previously. Further adjustment should not be required.**

Comment:

O-1.2, Step 6.13.10.2

Performance Step: 13 IF INCOMING VOLTMETER (GENERATOR) voltage CANNOT be adjusted slightly higher than system RUNNING VOLTMETER (SYSTEM) voltage,……

Standard: The operator Marks 6.13.10.2. a and b N/A.

Comment:

O-1.2, Step 6.13.10.3

Performance Step: 14 _____

REVIEW Steps 6.13.10.4 thru 6.13.10.6 prior to closing CIRCUIT BKR 1G 13A72 BUS 1 115KV to ensure timely actions are taken for automatic load pickup to preclude a generator trip from reverse power.

Standard: The operator reviews Steps 6.13.10.4 thru 6.13.10.6.

Comment:

O-1.2, Step 6.13.10.4

Note: MCB Alarm J-5, #11 or #12 TRANSFORMER OUT OF SYNCH, will stay EXTINGUISHED during performance of next step.

√ **Performance Step: 15** _____

WHEN synchroscope rotating slow in the FAST (clockwise) direction AND approaching 12 o'clock position, THEN CLOSE CIRCUIT BKR 1G 13A72 BUS 1 115KV so breaker closes at the approximate point of synchronism (12 o'clock).

- RECORD time of closure

Standard: The operator observes the synchroscope.

[√] The operator rotates 1G 13A72 breaker pistol-grip switch clockwise to the CLOSE position when the synchroscope is approaching 12 o'clock.

The operator observes the 1G 13A72 Red status lights LIT, Green status lights OFF.

The operator records time of closure.

EXAMINER NOTE: **Examinee may not record breaker closure time until after automatic load pickup is verified. This is acceptable to ensure timely actions are taken for automatic load pickup to preclude a generator trip from reverse power.**

EXAMINER CUE: **IF the operator communicates actions to the CRS, as CRS, acknowledge.**

Comment:

EXAMINER NOTE: ALTERNATE PATH DECISION POINT OCCURS IN THE NEXT STEP

Performance Step: 16 _____

O-1.2, Step 6.13.10.5

Note: Load is to be maintained between 40 to 60 MW UNTIL hold time in Step 6.14.5.2 is completed.

VERIFY Automatic load pickup occurs within approximately 10 seconds.

Standard: The operator observes Generator load and determines that automatic load pickup is NOT raising load to the expected range.

Comment:

O-1.2, Step 6.13.10.6

√ **Performance Step: 17**

IF automatic load pickup does NOT occur within approximately 10 seconds, THEN PERFORM the following:

OTHERWISE, MARK this Step N/A.

a. DEPRESS TURB. MANUAL pushbutton. (Turbine EH Control Panel)
b. INTERMITTENTLY DEPRESS the following pushbuttons as necessary to adjust generator gross load between 40 to 60 MW:
   - MANUAL CONTROL VALVE LOWER
   - MANUAL CONTROL VALVE RAISE

Standard:

[√] The operator depresses TURB. MANUAL pushbutton.

The operator observes OPER PAN light off and TURB MANUAL light is LIT.

The operator observes digital Generator Gross MW indication.

[√] The operator intermittently depresses the RAISE pushbutton to adjust generator gross load to between 40 to 60 MW.

EXAMINER CUE:

IF the operator communicates actions to the CRS, as CRS, acknowledge.

EXAMINER NOTE:

The Main Generator will Reverse Power in about 40 seconds if the operator does NOT take this action.

Comment:

O-1.2, Step 6.13.10.7

Performance Step: 18

PLACE CIRCUIT BKR 1G 13A72 SYNCHROSCOPE control switch to OFF.

Standard:

The operator rotates CIRCUIT BKR 1G 13A72 SYNCHROSCOPE control switch counter clockwise to the OFF position.

Comment:

O-1.2, Step 6.13.10.8

Performance Step: 19 REMOVE synchroscope switch handle from CIRCUIT BKR 1G 13A72 SYNCHROSCOPE.

_____

Standard: The operator removes synchroscope switch handle from CIRCUIT BKR 1G 13A72 SYNCHROSCOPE.

Comment:

Terminating Cue: **Evaluation on this JPM is complete.**

STOP TIME: _____

VERIFICATION OF COMPLETION

Job Performance Measure No.: 2014 Systems - Control Room JPM E

Examinee's Name:

Date Performed:

Facility Evaluator:

Number of Attempts:

Time to Complete:

Question Documentation:

Result: SAT _____ UNSAT _____

Examiner's Signature: _____ Date: _____

JPM CUE SHEET

INITIAL CONDITIONS:

- The generator is being started following a refueling outage.
- The generator is at 1800 rpm and the turbine is fully warmed up.
- The generator output voltage is 19 KV.
- MTC is negative for this Startup.

INITIATING CUE:

- The CRS has directed you to synchronize the generator on-line per O-1.2, Plant Startup From Hot Shutdown to Full Load, steps 6.13.1 through 6.13.10.
- The HCO will control the primary plant.

SIM JPM F

Facility:	Ginna	Task No.:	
Task Title:	Continuous Rod Motion During Re-alignment of Misaligned Control Rod	JPM No.:	2014 Systems - Control Room JPM F (Alternate Path)
K/A Reference:	001 A4.06 (2.9/3.2)		

Examinee: NRC Examiner:

Facility Evaluator: Date:

Method of testing:

Simulated Performance: _____ Actual Performance: X

Classroom _____ Simulator X Plant _____

READ TO THE EXAMINEE

I will explain the initial conditions, which steps to simulate or discuss, and provide initiating cues. When you complete the task successfully, the objective for this Job Performance Measure will be satisfied.

Provide Candidate with Initial Conditions/Cue (Last Page of this JPM) and Handout 1.

Initial Conditions:

- While performing control rod testing in accordance with STP-O-1, Rod Control System, Shutdown Bank Rod I11 failed to move inward with the rest of the Shutdown Bank rods.
- I&C was notified, and a control circuit card was replaced. Follow up readings show the circuit was repaired successfully.
- ER-RCC.2, Restoring a Misaligned RCC, has been entered to restore the misaligned rod. ER-RCC.2 has been completed up to the start of Section 6.2.

Initiating Cue:

- The CRS has directed you to continue rod restoration per Section 6.2 of ER-RCC.2.
- The CO will control the secondary plant.

Task Standard: The operator will move the misaligned rod to a position in the core lower than its associated bank, and then realign the Shutdown Bank with the misaligned rod. While aligning the Shutdown Bank with the misaligned rod, the operator will diagnose a continuous rod insertion accident and manually trip the reactor.

Required Materials:	Lift Coil Cabinet Key (White)
General References:	ER-RCC.2, Restoring a Misaligned RCC, Rev 01701 AP-RCC.1, Continuous Control Rod Withdrawal/Insertion, Rev 11 E-0, Reactor Trip Or Safety Injection, Rev 04602 A-503.1, Emergency and Abnormal Operating Procedures Users Guide, Rev 04409
Handouts:	Handout 1: Blank copy of ER-RCC.1, Restoring a Misaligned RCC. Handout 2: Blank copy of AP-RCC.1, Continuous Control Rod Withdrawal/Insertion
Time Critical Task:	NO
Validation Time:	11 minutes

SIMULATOR OPERATIONAL GUIDELINES

- Place simulator in **IC-27**, 70% power
- Ensure the Shutdown Banks are selected on the MRPI Display Screen.
- Insert **MALF ROD03-I11, UNTRIPPABLE** (rod I11, no motion)
- Insert Shutdown Bank until a 12 step deviation occurs, ensure Step Counters matched and less than 212 Steps, and **clear** MALF ROD3 on Rod I11
- Adjust turbine as necessary for Tavg control, plant stabilization
- Insert **OVR-DI-ROD02B, TRUE** (Uncontrolled Rod Motion on IN SIGNAL) on **Trigger #1**.
-
- FREEZE

OR

- IC-161 (December, 2014)
- Place simulator in RUN
- Place simulator in FREEZE
- Place simulator in RUN when directed by examiner

NOTE: **The Floor Instructor will need to control Secondary Plant during the performance of this JPM at Step 8.**

The SIM DRIVER will need to operate Trigger #1 at Step 12 of this JPM.

(Denote Critical Steps with a √)

Provide Candidate with Initial Conditions/Cue (Last Page of this JPM) and Handout 1.

START TIME: _____

ER-RCC.2, Step 6.2.1

Performance Step: 1 IF affected bank group step counters not in agreement, THEN STEP RODS OUT ½ step.

_____

Standard: The operator observes Shutdown Bank A Step Counters for Group 1 and 2 are both 211 Steps.

Comment:

ER-RCC.2, Step 6.2.2

Performance Step: 2 RECORD the MCB step counter position for the affected group.

_____

Bank _____

Steps _____

Standard: The operator observes the Shutdown Bank step counters, and records the Bank as "Shutdown" and the Steps as "211".

Comment:

ER-RCC.2, Step 6.2.3

Performance Step: 3 PLACE control rod bank selector switch to the affected bank.

_____

Standard: The operator observes the Control Rod Bank Selector Switch is in the SBA.

Comment:

ER-RCC.2, Step 6.2.4

Performance Step: 4 IF the misaligned RCC is in a Control Bank……

_____

Standard: The operator recognizes that this step is Not Applicable and proceeds.

Comment:

ER-RCC.2, Step 6.2.5

√ **Performance Step: 5** DISCONNECT all lift coils for the affected bank except the one for the misaligned RCC.

_____

Standard: The operator obtains the Lift Coil Cabinet Key.

[√] The operator opens the Lift Coil Switch Cabinet and places the Disconnect Switch for Control Rods E3, C9, K5, I3, C5, E11 and K9 in the DOWN position.

EXAMINER NOTE: **The TOGGLE SWITCH is above the Nomenclature in the Lift Coil Switch Cabinet.**

Comment:

ER-RCC.2, Step 6.2.6/6.2.6.1

Note: To determine if a misaligned rod is moving, a MRPI transition should occur within 12 steps.

Note: Alarm C-30, Rod Control Urgent Failure Rod Stop will annunciate as insertion starts.

√ **Performance Step: 6** PERFORM the following to align the RCC with its bank position:

_____

INSERT the misaligned RCC until it transitions to one MRPI position below its bank.

Standard: The operator reads both Notes and proceeds.

[√] The operator places the Rod Control (In/Hold/Out) Switch to IN and observes MRPI for Control Rod I11 to make the first transition at 212 Steps.

[√] The operator releases the Rod Control (In/Hold/Out) Switch when the MRPI display for Control Rod I11 transitions to 200 Steps.

The operator acknowledges AR-C-30, Rod Control Urgent Failure Rod Stop, and notes that this is an expected alarm.

The operator observes MRPI (or equivalent) and determines that Rod I11 stops moving.

EXAMINER NOTE: **The other rods in Shutdown Bank A are at 212 Steps.**

Comment:

ER-RCC.2, Step 6.2.6.2

Performance Step: 7 IF rod will NOT move,.....

_____

Standard: The operator recognizes that the condition is NOT met, and proceeds.

Comment:

ER-RCC.2, Step 6.2.6.3

Performance Step: 8 LOWER Turbine Load to match Tavg to Tref.

_____

Standard: The operator requests that the BOP match Tavg and Tref.

Floor Instructor: **Functioning as the BOP, adjust Turbine Load as needed to match Tavg and Tref.**

Comment:

ER-RCC.2, Step 6.2.6.4

√ **Performance Step: 9** RECONNECT all lift coils on affected bank.

_____

Standard: The operator obtains the Lift Coil Cabinet Key.

[√] The operator opens the Lift Coil Cabinet and places the Disconnect Switch for Control Rods E3, C9, K5, I3, C5, E11 and K9 in the UP position.

Comment:

ER-RCC.2, Step 6.2.6.5

√ **Performance Step: 10** DISCONNECT the lift coil for the misaligned RCC.

_____

Standard: The operator obtains the Lift Coil Cabinet Key.

[√] The operator opens the Lift Coil Cabinet and places the Disconnect Switch for Control Rod I11 in the DOWN position.

Comment:

ER-RCC.2, Step 6.2.6.6

Note: The Rod Control alarm reset pushbutton will reset urgent failure alarms without resetting the counters.
Note: The alarm reset pushbutton also removes the Pulser inhibits for manual and auto rod operation, and the lockups for the stationary and moveable grippers. To ensure stationary gripper engagement, resetting the urgent failure places the stationary coil on hi voltage initially, then low voltage.

√ **Performance Step: 11** RESET Urgent Failure alarm by pushing the ROD CONTROL ALARM RESET pushbutton.

_____

Standard: The operator reads both Notes and proceeds.

[√] The operator depresses the ROD CONTROL ALARM RESET pushbutton, and acknowledges that AR-C-30 has cleared.

Comment:

EXAMINER NOTE: ALTERNATE PATH DECISION POINT OCCURS IN THE NEXT STEP

ER-RCC.2, Step 6.2.6.7

√ **Performance Step: 12** _____

INSERT the affected bank to the same MRPI transition as its misaligned rod

Standard: The operator places the Rod Control (In/Hold/Out) Switch to IN and observes MRPI for the Shutdown Bank Rods (Except Control Rod I11) transitions to 200, and then releases the Switch.

SIM DRIVER: **After Operator has initiated rod motion, INSERT Trigger #1**

[√] The operator observes that the Shutdown Bank rods continue to insert after the Rod Control (In/Hold/Out) Switch has been released, and transitions to AP-RCC.1.

EXAMINER CUE: **The operator may attempt to place the Rod Control bank Select Switch to MANUAL before entering AP-RCC.1.**

When it is apparent that the operator is looking for AP-RCC.1, provide Handout 2 to the operator.

EXAMINER NOTE: **Based on CNG-OP-1.01-1000 (Conduct of Operations) criteria, the operator may manually trip the reactor without addressing AP-RRC.1. If so, move to JPM Step 15.**

Comment:

AP-RCC.1, Step 1.a-c

Performance Step: 13 Evaluate Rod Control System Operability:

_____

Check turbine load - STABLE

Place Rods to MANUAL

Verify control rod motion stops

Standard: The operator places the Control Rod Bank Selector Switch to MANUAL, and observes that the Shutdown Bank Controls Rods are still moving, and proceeds to the Step 1.c RNO.

Comment:

AP-RCC.1, Step 1.c RNO

√ **Performance Step: 14** Manually trip the reactor and go to E-0, REACTOR TRIP or SAFETY INJECTION.

_____

Standard: [√] The operator manually trips the reactor by depressing one of the Reactor Emergency Trip pushbuttons, and begins to perform the Immediate Actions of E-0.

EXAMINER NOTE: **There are two Reactor Emergency Trip pushbuttons either of which will manually trip the reactor when depressed.**

Comment:

Terminating Cue: **Evaluation on this JPM is complete.**

STOP TIME: _____

VERIFICATION OF COMPLETION

Job Performance Measure No.: 2014 Systems - Control Room JPM F

Examinee's Name:

Date Performed:

Facility Evaluator:

Number of Attempts:

Time to Complete:

Question Documentation:

Result: SAT _____ UNSAT _____

Examiner's Signature: _____ Date: _____

JPM CUE SHEET

INITIAL CONDITIONS:

- While performing control rod testing in accordance with STP-O-1, Rod Control System, Shutdown Bank Rod I11 failed to move inward with the rest of the Shutdown Bank rods.
- I&C was notified, and a control circuit card was replaced. Follow up readings show the circuit was repaired successfully.
- ER-RCC.2, Restoring a Misaligned RCC, has been entered to restore the misaligned rod. ER-RCC.2 has been completed up to the start of Section 6.2.

INITIATING CUE:

- The CRS has directed you to continue rod restoration per Section 6.2 of ER-RCC.2.
- The CO will control the secondary plant.

SIM JPM G

Facility:	Ginna	Task No.:	
Task Title:	Transfer Instrument Bus B to Normal Supply	JPM No.:	2014 Systems - Control Room JPM G (Alternate Path)
K/A Reference:	062 A1.03 (2.5/2.8)		

Examinee: NRC Examiner:

Facility Evaluator: Date:

Method of testing:

Simulated Performance: _____ Actual Performance: __X__

Classroom _____ Simulator __X__ Plant _____

READ TO THE EXAMINEE

I will explain the initial conditions, which steps to simulate or discuss, and provide initiating cues. When you complete the task successfully, the objective for this Job Performance Measure will be satisfied.

Provide Candidate with Initial Conditions/Cue (Last Page of this JPM) and Handout 1.

Initial Conditions:

- The B Instrument Bus has been on the Maintenance Power supply for the last four hours to allow completion of maintenance on the normal supply transformer.
- Maintenance has been completed and the Hold Clearance has been removed.
- It is now desired to restore the B Instrument Bus to its normal power supply.
- There are no failed or defeated protection channels.

Initiating Cue: The CRS has directed you to transfer the "B" Instrument Bus from the Maintenance power supply to the normal power supply per Section 6.3 of ER-INST.3, Instrument Bus Power Restoration.

Task Standard: The operator will restore Instrument Bus B to its normal power supply in accordance with ER-INST.3, and take manual control of the Pressurizer Pressure Controller (431K) to stabilize Pressurizer pressure, when it is recognized that the controller has failed in AUTO.

Required Materials:	Protection Rack Key Instrument Bus/DC Cabinet Key
General References:	ER-INST.3, Instrument Bus Power Restoration, Rev 01200 CNG-OP-1.01-1000, Conduct of Operations, Rev 01000
Handouts:	Handout 1: Blank copy of ER-INST.3, Instrument Bus Power Restoration.
Time Critical Task:	NO
Validation Time:	10 minutes

SIMULATOR OPERATIONAL GUIDELINES

- Initiate to **any 100% IC**
- Align the B Instrument Bus to the Maintenance power supply in accordance with Section 6.2 of ER-INST.3
- Insert **MALF PZR04 at 100%** on Trigger #1 (PRZR Master Pressure Control failure)
- FREEZE the Simulator

OR

- IC 162 (December, 2014)
- Place simulator in RUN
- Place simulator in FREEZE
- Place simulator in RUN when directed by examiner.

NOTE: **The Simulator/Floor Instructor will need to control the BOP during the performance of this JPM.**

(Denote Critical Steps with a √)

Provide Candidate with Initial Conditions/Cue (Last Page of this JPM) and Handout 1.

START TIME: _____

ER-INST.3, Step 6.3.1

Note: IF a turbine runback occurs, THEN GO TO AP-TURB.2, TURBINE LOAD REJECTION.
Note: REFER TO Attachment 5, INSTRUMENT POWER SUPPLIES for equipment that could be affected by the swap of power supplies.
Note: REFER TO P-10, INSTRUMENT FAILURE REFERENCE MANUAL (Appendix L) for additional information relating to Instrument Bus failures.
Note: REFER TO P-12, ELECTRICAL SYSTEMS PRECAUTIONS, LIMITATIONS, AND SETPOINTS for additional information relating to instrument busses.
Note: Drawing 3201-0102, 120V AC INSTRUMENT BUS ONE-LINE DIAGRAM can be referenced for information on the Instrument Bus Power Supplies.

Performance Step: 1 VERIFY that normal feed is available as follows:

_____

- Inst Bus A –Supply voltage approximately 120 volts (EI/INVTCVTA, above Inst Bus A).
- Inst Bus B –Annunciator E-14, LOSS B INSTR. BUS, extinguished.
- Inst Bus C –Supply voltage approximately 120 volts (EI/INVTCVTB, above Inst Bus C).
- Inst Bus D –Annunciator E-30, LOSS D INSTR. BUS, extinguished

Standard: The operator reads the Notes, and proceeds.

The operator observes that Instrument Bus A Supply Voltage is 120 Volts.

The operator observes that E-14 is NOT LIT.

The operator observes that Instrument Bus C Supply Voltage is 120 Volts.

The operator observes that E-30 is NOT LIT.

Comment:

ER-INST.3, Step 6.3.2

√ **Performance Step: 2** PLACE Rod Control Bank selector switch to MANUAL.

_____

Standard: [√] The operator places Rod Control Bank Selector Switch to "M" (MANUAL) position.

Comment:

ER-INST.3, Step 6.3.3

√ **Performance Step: 3** REFER to the appropriate attachment for transfer of Instrument Bus power supply

_____

- Attachment Instrument Bus A
- Attachment Instrument Bus B
- Attachment Instrument Bus C
- Attachment Instrument Bus D

Standard: [√] The operator refers to Attachment 2, Attachment Instrument Bus B.

Comment:

ER-INST.3, Attachment 2, Step 1.0

Caution: IF the reactor trip breakers are CLOSED AND Intermediate Range NIS trips are NOT BLOCKED, THEN transfer of INSTRUMENT BUS B power supply may result in a Reactor Trip.

Note: Various single channel alarms will sound and can be reset as soon as power supply is transferred.

Performance Step: 4 VERIFY that any failed or defeated protection channels will not conflict with the Instrument Bus transfer to cause a Reactor Trip. Refer to Attachment 5, INSTRUMENT POWER SUPPLIES

_____

Standard: The operator reads the Caution and Note, and proceeds.

The operator recognizes that there are no failed or defeated protection channels at the present time.

Comment:

ER-INST.3, Attachment 2, Step 2.0/2.1

√ **Performance Step: 5** To prepare for transfer, PERFORM the following:

_____

PLACE CHARGING PUMP SPEED CONTROLLERS (MCB) in MANUAL.

Standard: The operator places the A Charging Pump controller mode select switch from AUTO to BALANCE.

The operator balances controller output to "0" by adjusting manual control knob (Lower black knob).

[√] The operator places the A Charging Pump controller mode select switch in MANUAL.

Comment:

ER-INST.3, Attachment 2, Step 2.2

√ **Performance Step: 6** PLACE PRZR LEVEL DEFEAT switch L/428A (PLP) in defeat-2.

_____

Standard: [√] The operator obtains Protection Rack Key and opens PLP PRZR PRESS and LEVEL Cabinet Door.

[√] The operator places the Przr Level Defeat Switch L/428A (PLP) in defeat-2.

Comment:

ER-INST.3, Attachment 2, Step 2.3

Performance Step: 7 PLACE one Charging Pump (MCB) in AUTO, if desired.

_____

Standard: The operator places controller mode select switch from MANUAL to BALANCE.

The operator balances controller output to "0" by adjusting manual control knob (Lower black knob).

The operator places controller mode select switch in AUTO.

EXAMINER NOTE: **The operator may choose to not place the controller in AUTO at this time.**

Comment:

ER-INST.3, Attachment 2, Step 2.4

√ **Performance Step: 8** PLACE PRZR PRESS CONTROLLER 431K in MANUAL.

_____

Standard: The operator places controller mode select switch from AUTO to BALANCE.

The operator balances controller output to "0" by adjusting manual control knob (Lower black knob).

[√] The operator places controller mode select switch in MANUAL.

Comment:

ER-INST.3, Attachment 2, Step 2.5

√ **Performance Step: 9** PLACE PRESSURIZER PRESSURE DEFEAT switch P/429A in defeat-2 (PLP).

_____

Standard: [√] The operator places Pressurizer Pressure Defeat Switch P\429A in Defeat-2.

[√] The operator closes and locks cabinet door.

Comment:

ER-INST.3, Attachment 2, Step 2.6

√ **Performance Step: 10** PLACE PRZR PRESS CONTROLLER 431K (MCB) in AUTO.

_____

Standard: The operator places controller mode select switch from MANUAL to BALANCE.

The operator balances controller output to "0" by adjusting manual control knob (Lower black knob).

[√] The operator places controller mode select switch in AUTO.

Comment:

ER-INST.3, Attachment 2, Step 3.0

√ **Performance Step: 11** TRANSFER Instrument Bus power supply as follows:

_____

- IF on NORMAL FEED AND MAINTENANCE FEED desired, THEN TRANSFER to MAINTENANCE.
- IF on MAINTENANCE FEED AND NORMAL FEED desired, THEN TRANSFER to NORMAL

Standard: [√] The operator obtains the Instrument Bus/DC Cabinet Key and opens the Instrument Bus B door.

[√] The operator pushes mechanically interlocked breakers from Maintenance closed/Normal open to Normal closed/Maintenance open.

Comment:

ER-INST.3, Attachment 2, Step 4.0/4.1

√ **Performance Step: 12** PERFORM the following to restore controls to normal:

_____

PLACE CHARGING PUMP SPEED CONTROLLERS in MANUAL.

Standard: The operator places controller mode select switch from AUTO to BALANCE.

The operator balances controller output to "0" by adjusting manual control knob (Lower black knob).

[√] The operator places controller mode select switch in MANUAL.

EXAMINER NOTE: **The Charging Controller may already be in MANUAL if it was NOT desired to place it in AUTO at Step 2.3. IF so, the Step is NOT CRITCAL.**

Comment:

ER-INST.3, Attachment 2, Step 4.2

√ **Performance Step: 13** PLACE PRZR LEVEL DEFEAT switch, L/428A (PLP) in NORMAL.

_____

Standard: [√] The operator unlocks and opens PLP PRZR PRESS & LEVEL rack cabinet door.

[√] The operator places Przr Level Defeat Switch, L/428A in NORMAL.

Comment:

ER-INST.3, Attachment 2, Step 4.3

Performance Step: 14 PLACE one Charging Pump in AUTO (MCB), if desired.

_____

Standard: The operator places controller mode select switch from MANUAL to BALANCE.

The operator balances controller output to "0" by adjusting manual control knob (Lower black knob).

The operator places controller mode select switch in AUTO.

EXAMINER NOTE: **The operator may choose to not place the controller in AUTO at this time.**

Comment:

ER-INST.3, Attachment 2, Step 4.4

√ **Performance Step: 15** PLACE PRZR PRESS CONTROLLER 431K (MCB) in MANUAL.

_____

Standard: The operator places controller mode select switch from AUTO to BALANCE.

The operator balances controller output to "0" by adjusting manual control knob (Lower black knob).

[√] The operator places controller mode select switch in MANUAL.

Comment:

ER-INST.3, Attachment 2, Step 4.5

√ **Performance Step: 16** PLACE PRESSURIZER PRESSURE DEFEAT switch P/429A (PLP) in NORMAL.

_____

Standard: [√] The operator places Pressurizer Pressure Defeat Switch P/429A in Normal.

Comment:

EXAMINER NOTE: ALTERNATE PATH DECISION POINT OCCURS IN THE NEXT STEP

ER-INST.3, Attachment 2, Step 4.6

Performance Step: 17 PLACE PRZR PRESS CONTROLLER 431K (MCB) in AUTO.

_____

Standard: The operator places controller mode select switch from MANUAL to BALANCE.

The operator balances controller output to "0" by adjusting manual control knob (Lower black knob).

The operator places controller mode select switch in AUTO.

SIM DRIVER: **Simulator Instructor operate Trigger #1 when operator places controller in AUTO.**

Comment:

CNG-OP-1.01-1000, Step 5.10.C.2/3

√ **Performance Step: 18** Recognize failed controller, take manual control and adjust controller output manually to maintain Przr pressure within normal band.

_____

Standard: The operator recognizes that the controller has failed in AUTO.

[√] The operator places controller mode select switch in MANUAL.

[√] The operator adjusts the controller output to restore Przr pressure within normal band.

EXAMINER NOTE: **According to CNG-OP-1.01-1000, Section 5.10.C.2&3, Transients induced by the malfunction of an automatic system should be terminated by operator action to establish manual control with a proper demand signal. The need and intent to place a controller into manual operation should be communicated to the CRS before taking this action.**

Comment:

Terminating Cue: **Evaluation on this JPM is complete.**

STOP TIME: _____

VERIFICATION OF COMPLETION

Job Performance Measure No.: 2014 Systems - Control Room JPM G

Examinee's Name:

Date Performed:

Facility Evaluator:

Number of Attempts:

Time to Complete:

Question Documentation:

Result: SAT _____ UNSAT _____

Examiner's Signature: _____ Date: _____

JPM CUE SHEET

INITIAL CONDITIONS:

- The B Instrument Bus has been on the Maintenance Power supply for the last four hours to allow completion of maintenance on the normal supply transformer.
- Maintenance has been completed and the Hold Clearance has been removed.
- It is now desired to restore the B Instrument Bus to its normal power supply.
- There are no failed or defeated protection channels.

INITIATING CUE:

The CRS has directed you to transfer the "B" Instrument Bus from the Maintenance power supply to the normal power supply per Section 6.3 of ER-INST.3, Instrument Bus Power Restoration.

SIM JPM H

Facility: Ginna Task No.:

Task Title: Defeat Failed RCS Temperature Channel JPM No.: 2014 Systems - Control Room JPM H

K/A Reference: 016 A4.01 (2.9/2.8)

Examinee: NRC Examiner:

Facility Evaluator: Date:

Method of testing:

Simulated Performance: _____ Actual Performance: __X__

Classroom _____ Simulator __X__ Plant _____

READ TO THE EXAMINEE

I will explain the initial conditions, which steps to simulate or discuss, and provide initiating cues. When you complete the task successfully, the objective for this Job Performance Measure will be satisfied.

Provide Candidate with Initial Conditions/Cue (Last Page of this JPM) and Handout 1.

Initial Conditions:
- The plant was operating at 100% power when TI-402 failed high.
- The crew took all the appropriate actions and the plant is stable at current plant conditions.

Initiating Cue: The CRS has directed you to defeat the affected RCS temperature channel per Attachment 2 of ER-INST.1, Reactor Protection Bistable Defeat After Instrumentation Loop Failure.

Task Standard: The operator will defeat the failed channel in accordance with ER-INST.1.

Required Materials: Cabinet Keys

General References: ER-INST.1, Reactor Protection Bistable Defeat After Instrumentation Loop Failure, Rev 03605

Handouts: Handout 1: Blank copy of Attachment 2 of ER-INST.1, Reactor Protection Bistable Defeat After Instrumentation Loop Failure.

Time Critical Task: NO

Validation Time: 8 minutes

SIMULATOR OPERATIONAL GUIDELINES

- Simulator reset to **IC-19**
- Insert **MALF RCS11B, 650** (TI-402 –Thot- Fails High)
- Place rods in Manual
- Place both running Charging Pumps in Manual
- FREEZE the Simulator

OR

- IC 163 (December, 2014)
- Place simulator in RUN
- Place simulator in FREEZE
- Place simulator in RUN when directed by examiner.

NOTE: **The Simulator/Floor Instructor will need to control the BOP during the performance of this JPM.**

(Denote Critical Steps with a √)

Provide Candidate with Initial Conditions/Cue (Last Page of this JPM) and Handout 1.

START TIME: _____

ER-INST.1, Attachment 2, Step 1.0

Note: IF a RTD has failed, THEN BOTH annunciators F-15 AND F-24 will be lit.
Note: IF the TAVG circuit has failed, THEN annunciator F-15 will be lit AND annunciator F-24 will be extinguished.
Note: IF the ΔT circuit has failed, THEN annunciator F-24 will be lit AND annunciator F-15 will be extinguished.

Performance Step: 1 ENSURE Rod Control selector switch in MANUAL.

_____

Standard: The operator reads the Notes, and proceeds.

The operator observes that the Rod Bank Selector Switch is in M (Manual)

Comment:

ER-INST.1, Attachment 2, Step 2.0

Performance Step: 2 ENSURE Charging Pump speed controllers in MANUAL.

_____

Standard: The operator observes that the A Charging Pump speed Controller is in MANUAL.

The operator observes that the A Charging Pump speed Controller is in MANUAL.

Comment:

ER-INST.1, Attachment 2, Step 3.0

Note: The following Step removes the failed ΔT input from the following functions:

- ΔT Runback and Rodstop
- RIL computer
- Annunciators F-30 OP DELTA T TURBINE RUNBACK
- Annunciator F- 31 OT DELTA T TURBINE RUNBACK

√ **Performance Step: 3** _____

In the RIL INSERTION LIMIT rack, PLACE T/405E DELTA T DEFEAT switch to LOOP A UNIT 2.

Standard:

The operator reads the Note, and proceeds.

[√] The operator unlocks and opens the RIL Cabinet door.

[√] The operator shifts the T/405E DELTA T DEFEAT switch to LOOP A UNIT 2.

The operator closes and locks the RIL Cabinet door.

Comment:

ER-INST.1, Attachment 2, Step 4.0

Note: The following Step removes the failed T_{AVG} input from the following functions:

- Rod Control System
- Steam Dump System
- Pressurizer Level System

√ **Performance Step: 4** In the STEAM DUMP rack, PLACE the TAVG DEFEAT switch T/401A to LOOP A UNIT 2.

_____

Standard: The operator reads the Note, and proceeds.

[√] The operator unlocks and opens the Steam Dump Cabinet door.

[√] The operator shifts the TAVG DEFEAT switch T/401A to LOOP A UNIT 2.

The operator closes and locks the Steam Dump Rack Cabinet door.

Comment:

ER-INST.1, Attachment 2, Step 5.0/5.1

Note: The following bistable status lights are expected to be lit after the DEFEAT:

- LOOP A LO TAVG TC402A
- OPΔT LOOP A TC406A
- OTΔT LOOP A TC406C

Note: The following Annunciators are expected to be lit after the DEFEAT:

- G-9, RCS LOOP A HIGH TAVG 579 F
- F-7, RCS LOOP A LO TAVG 545 F
- F-32, RCS OP DELTA T CHANNEL ALERT
- F-23, RCS OT DELTA T CHANNEL ALERT

Performance Step: 5

_____

DETERMINE the expected Bistable proving light status for the post defeat condition as follows:

RECORD the following Data:

LOOP A-2 T_{AVG} TI-402 _____°F

LOOP 1A-2 Δ TEMP TI-406B _____°F

OTΔT SP1 LOOP 1A-2 TEMP TI-406A _____°F

OPΔT SP2 LOOP 1A-2 TEMP TI-406C _____°F

Standard:

The operator reads the Notes, and proceeds.

The operator observes TI-402, and records 585°F in LOOP A-2 T_{AVG} TI-402 block.

The operator observes TI-406B, and records 76°F in LOOP 1A-2 Δ TEMP TI-406B block.

The operator observes TI-406A, and records 67°F in OTΔT SP1 LOOP 1A-2 TEMP TI-406A block.

The operator observes TI-406C, and records 73°F in OPΔT SP2 LOOP 1A-2 TEMP TI-406C block.

Comment:

ER-INST.1, Attachment 2, Step 5.2

Performance Step: 6 DETERMINE the expected post defeat Bistable proving light status and circle the expected status in table below:

_____

- 402 LOOP A-2
  - HIGH T'AVG Light OFF IF TI-402 ≥ 579°F
  - LOW T'AVG Light OFF IF TI-402 ≤ 545°F
- 406 LOOP A-2
  - OVERTEMP TRIP Light OFF IF T-406B ≥ TI-406A
  - OVERPOWER TRIP Light OFF IF TI-406B ≥ TI-406C

Standard: The operator determines that TI-402 is > 579°F, and circles OFF in the 402 LOOP A-2 HIGH T'AVG

The operator determines that TI-402 is > 545°F, and circles ON in the 402 LOOP A-2 LOW T'AVG

The operator determines that TI-406B is > TI-406A°F, and circles OFF in the 406 LOOP A-2 OVERTEMP TRIP

The operator determines that TI-406B is > TI-406C°F, and circles OFF in the 406 LOOP A-2 OVERPOWER TRIP

Comment:

ER-INST.1, Attachment 2, Step 6.0/6.1

√ **Performance Step: 7** _____

PLACE the affected channel Bistables in the Trip condition by PERFORMING the following:

In the (WHITE) W-1 PROTECTION CHANNEL 2 rack, PLACE the following bistable proving switches to DEFEAT (UP) AND VERIFY the proving light status is correct per the table above:

- 402 LOOP A-2
  - HIGH T'AVG
  - LOW T'AVG
- 406 LOOP A-2
  - OVERTEMP TRIP
  - OVERPOWER TRIP

Standard:

[√] The operator unlocks and opens the White Protection Channel 2 Cabinet door.

[√] The operator pulls out and lifts the 402 LOOP A-2 HIGH T'AVG proving switch to the DEFEAT (UP) position.

The operator verifies that the 402 LOOP A-2 HIGH T'AVG proving light is OFF.

[√] The operator pulls out and lifts the 402 LOOP A-2 LOW T'AVG proving switch to the DEFEAT (UP) position.

The operator verifies that the 402 LOOP A-2 HIGH T'AVG proving light is ON.

[√] The operator pulls out and lifts the 406 LOOP A-2 OVERTEMP proving switch to the DEFEAT (UP) position.

The operator verifies that the 406 LOOP A-2 OVERTEMP proving light is OFF.

[√] The operator pulls out and lifts the 406 LOOP A-2 OVERPOWER proving switch to the DEFEAT (UP) position.

The operator verifies that the 406 LOOP A-2 OVERPOWER proving light is OFF.

The operator closes and locks the White Protection Channel 2 Cabinet door.

Comment:

ER-INST.1, Attachment 2, Step 6.2

Performance Step: 8 VERIFY Correct Bistable Status Light and Annunciator status.

_____

Standard: The operator observes the LOOP A LO TAVG TC402A white bistable light is LIT and determines that the bistable light and Annunciator status is correct.

The operator observes the OPΔT LOOP A TC406A white bistable light is LIT and determines that the bistable light and Annunciator status is correct.

The operator observes the OTΔT LOOP A TC 406C white bistable light is LIT and determines that the bistable light and Annunciator status is correct.

Comment:

ER-INST.1, Attachment 2, Step 7.0/7.1

√ **Performance Step: 9** DELETE 402/406 from the PPCS by performing the following:

_____

SELECT "Group Update" display.

Standard: [√] The operator selects "Group Update" on the PPCS.

Comment:

ER-INST.1, Attachment 2, Step 7.2

√ **Performance Step: 10** SELECT "List Server Groups".

_____

Standard: [√] The operator selects "List Server Groups" on the PPCS (Group Update).

Comment:

ER-INST.1, Attachment 2, Step 7.3

√ **Performance Step: 11** SELECT 402_406 from the pick list.

_____

Standard: [√] The operator selects "402_406" on the PPCS (List Server Groups).

Comment:

ER-INST.1, Attachment 2, Step 7.4

√ **Performance Step: 12** TURN "OFF" scan processing, THEN click the "Set Scan Processing" button.

_____

Standard: [√] The operator turns OFF the 402_406 scan processing on the PPCS (402_406).

[√] The operator clicks the "Set Scan Processing" button on the PPCS (402_406).

Comment:

ER-INST.1, Attachment 2, Step 7.5

√ **Performance Step: 13** ANSWER prompts.

_____

Standard: [√] The operator completes the PPCS deletion process by answering the required prompts.

Comment:

ER-INST.1, Attachment 2, Step 8.0

Performance Step: 14 GO TO step 6.2.7.

_____

Standard: The operator proceeds to Step 6.2.7 of the body of ER-INST.1

Comment:

Terminating Cue: **Evaluation on this JPM is complete.**

STOP TIME: _____

VERIFICATION OF COMPLETION

Job Performance Measure No.: 2014 Systems - Control Room JPM H

Examinee's Name:

Date Performed:

Facility Evaluator:

Number of Attempts:

Time to Complete:

Question Documentation:

Result: SAT _____ UNSAT _____

Examiner's Signature: _____ Date: _____

JPM CUE SHEET

INITIAL CONDITIONS:

- The plant was operating at 100% power when TI-402 failed high.
- The crew took all the appropriate actions and the plant is stable at current plant conditions.

INITIATING CUE: The CRS has directed you to defeat the affected RCS temperature channel per Attachment 2 of ER-INST.1, Reactor Protection Bistable Defeat After Instrumentation Loop Failure.

In-Plant JPM I

Facility: Ginna Task No.:

Task Title: Locally Operate the ARVs JPM No.: 2014 Systems – In-Plant JPM I

K/A Reference: APE 068 AA1.01 (4.3/4.5)

Examinee: NRC Examiner:

Facility Evaluator: Date:

Method of testing:

Simulated Performance: X Actual Performance: _____

Classroom _____ Simulator _____ Plant X

READ TO THE EXAMINEE

I will explain the initial conditions, which steps to simulate or discuss, and provide initiating cues. When you complete the task successfully, the objective for this Job Performance Measure will be satisfied.

Provide Candidate with Initial Conditions/Cue (Last Page of this JPM) and Handout 1.

Initial Conditions:

- You are the Head Control Operator.
- The plant has experienced an uncontrollable Control Room Complex fire.
- The crew performed the required actions of AP-CR.1, Control Room Inaccessibility, and transitioned to ER-FIRE.1, Alternate Shutdown For Control Complex Fire.
- You have completed Attachment 3, Head Control Operator (HCO) and are equipped with a radio.
- The Shift Manager is stabilizing the plant in MODE 3.
- All the required Appendix R equipment has been retrieved from the Appendix R locker outside the Control Room.

Initiating Cue: The Shift Manager has directed you to locally open the A Atmospheric Relief Valve, V-3411, three turns per P-15.2, Dump Steam Through ARVs Locally.

NOTE: No plant equipment should be operated during the performance of this JPM. All actions must be SIMULATED.

Task Standard:	The operator will locally open the A Atmospheric Relief Valve, V-3411, three turns per P-15.2, and then isolate this valve when the handwheel will not rotate in the close direction.
Required Materials:	PPE (Hardhat, Safety Glasses, Hearing Protection, Safety Shoes etc.)
General References:	AP-CR.1, Control Room Inaccessibility, Rev 02403 ER-FIRE.1, Alternate Shutdown For Control Complex Fire, Rev 03301 P-15.2, Dump Steam Through ARVs Locally, Rev 00002
Handouts:	Handout 1: Blank copy of P-15.2, Dump Steam Through ARVs Locally.
Time Critical Task:	NO
Validation Time:	__ minutes

PERFORMANCE INFORMATION

(Denote Critical Steps with a √)

Provide Candidate with Initial Conditions/Cue (Last Page of this JPM) and Handout 1.

START TIME: _____

P-15.2, Step 2.1

Performance Step: 1 OBTAIN radio and establish communications with the Control Room.

_____

Standard: The operator recognizes from the Initial Conditions that they have a radio and are in communication with the Shift Manager.

EXAMINER NOTE: **At this point in ER-FIRE.1 all Control Room Personnel in the plant would have obtained radios from an Appendix R locker outside the Control Room.**

EXAMINER NOTE: **The communications check was completed earlier in ER-FIRE.1.**

Comment:

P-15.2, Step 2.2

Performance Step: 2 OBTAIN ladder, if needed.

_____

Standard: The operator verifies a ladder is in place at V-3411.

EXAMINER NOTE: **A ladder is normally in place to allow access to the valve.**

Comment:

P-15.2, Step 2.3

Note: IF the ARV was opened using the handwheel, THEN the local handwheel must be used to close the ARV.

√ **Performance Step: 3** _____ OPERATE the handwheel on ARV-3411, S/G A ARV, as required by Control Room personnel.

Standard: The operator reads the NOTE, and proceeds.

[√] The operator rotates the "A" ARV (3411) handwheel in the counter-clockwise direction to position the valve to approximately three full turns open.

EXAMINER CUE: **The handwheel turned as desired.**

Standard: The operator leaves noisy area (IB Main Steam Area) to make report.

The operator reports over radio to Shift Manager that ARV-3411 is three full hand turns open.

EXAMINER NOTE: **If the radio call is made from the Main Steam Area: "I cannot hear you".**

EXAMINER CUE: **Acknowledge the report and then state the following:**

The valve has been open for 15 minutes and the SM now directs you to "Slowly throttle closed the valve."

Comment:

P-15.2, Step 2.3/2.3.1

Note: IF the ARV was opened using the handwheel, THEN the local handwheel must be used to close the ARV.

√ **Performance Step: 4** _____

OPERATE the handwheel on ARV-3411, S/G A ARV, as required by Control Room personnel.

IF the handwheel on ARV-3411, S/G A ARV, will NOT close, THEN CLOSE V-3507, S/G A MS INLET BLOCK VLV TO ARV-3411.

Standard: The operator reads the Note, and proceeds.

The operator attempts to rotate the "A" ARV (3411) handwheel in the clockwise direction.

EXAMINER CUE: **The handwheel will not turn.**

Standard: [√] The operator proceeds to "A" ARV Root Isolation Valve (V3507) and rotates the valve handwheel in the clockwise direction.

EXAMINER CUE: **The handwheel turned as desired.**

Standard: The operator leaves noisy area (IB Main Steam Area) to make report.

The operator reports over radio to Shift Manager that ARV-3411 is three full handturns open. However, because it would not close, its Root isolation valve (V3507) was closed.

EXAMINER NOTE: **If the radio call is made from the Main Steam Area: "I cannot hear you".**

Comment:

Terminating Cue: **Evaluation on this JPM is complete.**

STOP TIME: _____

VERIFICATION OF COMPLETION

Job Performance Measure No.: 2014 Systems – In-Plant JPM I

Examinee's Name:

Date Performed:

Facility Evaluator:

Number of Attempts:

Time to Complete:

Question Documentation:

Result: SAT _____ UNSAT _____

Examiner's Signature: _____ Date: _____

JPM CUE SHEET

INITIAL CONDITIONS:

- You are the Head Control Operator.
- The plant has experienced an uncontrollable Control Room Complex fire.
- The crew performed the required actions of AP-CR.1, Control Room Inaccessibility, and transitioned to ER-FIRE.1, Alternate Shutdown For Control Complex Fire.
- You have completed Attachment 3, Head Control Operator (HCO) and are equipped with a radio.
- The Shift Manager is stabilizing the plant in MODE 3.
- All the required Appendix R equipment has been retrieved from the Appendix R locker outside the Control Room.

INITIATING CUE:

The Shift Manager has directed you to locally open the A Atmospheric Relief Valve, V-3411, three turns per P-15.2, Dump Steam Through ARVs Locally.

NOTE: No plant equipment should be operated during the performance of this JPM. All actions must be SIMULATED.

In-Plant JPM J

Facility: Ginna Task No.:

Task Title: Isolate RCP Seals JPM No.: 2014 Systems – In-Plant JPM J

K/A Reference: EPE 055 EA2.03 (3.9/4.7)

Examinee: NRC Examiner:

Facility Evaluator: Date:

Method of testing:

Simulated Performance: X Actual Performance: _____

Classroom _____ Simulator _____ Plant X

READ TO THE EXAMINEE

I will explain the initial conditions, which steps to simulate or discuss, and provide initiating cues. When you complete the task successfully, the objective for this Job Performance Measure will be satisfied.

Provide Candidate with Initial Conditions/Cue (Last Page of this JPM), Laser Pointer and Handout 1.

Initial Conditions:

- The plant was operating at 100% power when it suffered a loss of all AC power.
- The crew entered ECA-0.0, Loss of All AC Power, and is at the step that directs local isolation of RCP Seals.

Initiating Cue: The CRS has directed you to isolate RCP seals in accordance with the applicable portions of ATT-21.0, Attachment RCS Isolation.

NOTE: No plant equipment should be operated during the performance of this JPM. All actions must be SIMULATED.

Task Standard: The operator will locally isolate the RCP Seals per ATT-21.0.

Required Materials: PPE (Hardhat, Safety Glasses, Hearing Protection, Safety Shoes etc.)
Laser Pointer

General References: ECA-0.0, Loss of All AC Power, Rev 03800

ATT-21.0, Attachment RCS Isolation, Rev 00300

Handouts: Handout 1: Blank copy of ATT-21.0, Attachment RCS Isolation.

Time Critical Task: NO

Validation Time: 7 minutes

(Denote Critical Steps with a √)

Provide Candidate with Initial Conditions/Cue (Last Page of this JPM), Laser Pointer and Handout 1.

START TIME: _____

Examiner NOTE: **The order of valve isolation is NOT Critical**

ATT-21.0, Bullet 1

√ **Performance Step: 1** _____

Perform the following to locally complete isolation of the RCS:
- Close RCP #1 seal return isolation valve
  - MOV-313 (Pen 108)

Examiner Cue: **If the operator requests eSOMS location for MOV-313: AB Bsmt, RSWT locked area, elev. 5.**

Standard: [√] The operator presses downward on the declutch lever.

Examiner Cue: **The declutch lever is depressed.**

Standard: [√] While holding the declutch lever down, the operator rotates the valve handwheel in the clockwise direction.

Examiner Cue: **The valve handwheel rotates, and then stops rotating.**

Standard: [√] The operator releases the handwheel.

Examiner NOTE: **MOV-313 is located within a contaminated area and will require that the operator use the laser Pointer to identify the location and describe operation of the valve.**

See Page 12 for Pictures of this Valve.

Comment:

ATT-21.0, Bullet 2

√ **Performance Step: 2**

_____

Perform the following to locally complete isolation of the RCS:

- Close RCP seal injection needle valves
  - V-300A (Pen 106)
  - V-300B (Pen 110)

Examiner Cue: **If the operator requests eSOMS location for V-300A and V-300B: AB Bsmt, RSWT locked area, elev. 4.**

Standard: [√] The operator rotates the V-300A Handwheel in the clockwise direction.

Examiner Cue: **The valve handwheel rotates, and then stops rotating.**

Standard: [√] The operator releases the handwheel.

[√] The operator rotates the V-300B Handwheel in the clockwise direction.

Examiner Cue: **The valve handwheel rotates, and then stops rotating.**

Standard: [√] The operator releases the handwheel.

Examiner NOTE: **V-300A and 300B are located within a contaminated area and will require that the operator use the laser Pointer to identify the location and describe operation of the valve.**

See Pages 10 & 11 for Pictures of these Valves.

Comment:

ATT-21.0, Bullet 3

√ **Performance Step: 3** Perform the following to locally complete isolation of the RCS:

- Close RCP CCW return valves (middle level by RWST)
  - MOV-759A
  - MOV-759B

_____

Examiner Cue: **If the operator requests eSOMS location for MOV-759A and MOV-759B: AB Inter Crane Bay area, elev. 5.**

Standard: [√] The operator presses downward on the MOV-759A declutch lever.

Examiner Cue: **The declutch lever is depressed.**

Standard: [√] While holding the declutch lever down, the operator rotates the MOV-759A valve handwheel in the clockwise direction.

Examiner Cue: **The valve handwheel rotates, and then stops rotating.**

Standard: [√] The operator releases the handwheel.

[√] The operator presses downward on the MOV-759B declutch lever.

Examiner Cue: **The declutch lever is depressed.**

Standard: [√] While holding the declutch lever down, the operator rotates the MOV-759B valve handwheel in the clockwise direction.

Examiner Cue: **The valve handwheel rotates, and then stops rotating.**

Standard: [√] The operator releases the handwheel.

Comment:

ATT-21.0, Bullet 4

√ **Performance Step: 4** _____

Perform the following to locally complete isolation of the RCS:

- Close RCP CCW supply valves (middle level by RWST)
  - MOV-749A
  - MOV-749B

Examiner Cue: **If the operator requests eSOMS location for MOV-749A and MOV-749B: AB Inter Crane Bay area, elev. 5.**

Standard: [√] The operator presses downward on the MOV-749A declutch lever.

Examiner Cue: **The declutch lever is depressed.**

Standard: [√] While holding the declutch lever down, the operator rotates the MOV-749A valve handwheel in the clockwise direction.

Examiner Cue: **The valve handwheel rotates, and then stops rotating.**

Standard: [√] The operator releases the handwheel.

[√] The operator presses downward on the MOV-749B declutch lever.

Examiner Cue: **The declutch lever is depressed.**

Standard: [√] While holding the declutch lever down, the operator rotates the MOV-749B valve handwheel in the clockwise direction.

Examiner Cue: **The valve handwheel rotates, and then stops rotating.**

Standard: [√] The operator releases the handwheel.

Comment:

ATT-21.0, Bullet 5

√ **Performance Step: 5** _____

Perform the following to locally complete isolation of the RCS:
- Close CCW isolation valves for Rx support coolers
  - MOV-813
  - MOV-814

Examiner Cue: **If the operator requests eSOMS location for MOV-813 and MOV-814: AB Inter Crane Bay area, elev. 5.**

Standard: [√] The operator presses downward on the MOV-813 declutch lever.

Examiner Cue: **The declutch lever is depressed.**

Standard: [√] While holding the declutch lever down, the operator rotates the MOV-813 valve handwheel in the clockwise direction.

Examiner Cue: **The valve handwheel rotates, and then stops rotating.**

Standard: [√] The operator releases the handwheel.

[√] The operator presses downward on the MOV-814 declutch lever.

Examiner Cue: **The declutch lever is depressed.**

Standard: [√] While holding the declutch lever down, the operator rotates the MOV-814 valve handwheel in the clockwise direction.

Examiner Cue: **The valve handwheel rotates, and then stops rotating.**

Standard: [√] The operator releases the handwheel.

Comment:

Terminating Cue: **Evaluation on this JPM is complete.**

STOP TIME: _____

VERIFICATION OF COMPLETION

Job Performance Measure No.: 2014 Systems – In-Plant JPM J

Examinee's Name:

Date Performed:

Facility Evaluator:

Number of Attempts:

Time to Complete:

Question Documentation:

Result: SAT _____ UNSAT _____

Examiner's Signature: _____ Date: _____

VERIFICATION OF COMPLETION

Component ID:
300A

P ID chart #:
1265,1

Picture ID:
AUXRWST2-45

Building:
Auxiliary

Level:
Basement

Picture File Location
S:\Databases\SharedData\AlaraTour\pictures\auxbldg\auxrwst2\jpe

Area:
Behind RWST on north west side

Description:
Seal injection inlet needle valve to RCP A

Print Current Record

Component ID:
300B

P ID chart #:
1265,1

Picture ID:
AUXRWST2-25

Building:
Auxiliary

Level:
Basement

Picture File Location
S:\Databases\SharedData\AlaraTour\pictures\auxbldg\auxrwst2\jpg

Area:
Behind RWST on north west side

Description:
Seal injection inlet needle valve to RCP B

Print Current Record

Component ID:
300B

P ID chart #:
1265,1

Picture ID:
AUXRWST2-38

Building:
Auxiliary

Level:
Basement

Picture File Location
S:\Databases\SharedData\AlaraTour\pictures\auxbldg\auxrwst2\jpg

Area:
Behind RWST on north west side

Description:
Seal injection inlet needle valve to RCP B

Print Current Record

VERIFICATION OF COMPLETION

Component ID:
313

P ID chart #:
1265,2

Print Current Record

Picture ID:
AUXRWST2-26

Building:
Auxiliary

Level:
Basement

Picture File Location
S:\Databases\SharedData\AlaraTour\pictures\auxbldg\auxrwst2\jpe

Area:
Behind RWST on north west side

Description:
Seal or excess letdown return isolation MOV

Component ID:
313

P ID chart #:
1265,2

Print Current Record

Picture ID:
AUXRWST2-31

Building:
Auxiliary

Level:
Basement

Picture File Location
S:\Databases\SharedData\AlaraTour\pictures\auxbldg\auxrwst2\jpe

Area:
Behind RWST on north west side

Description:
Seal or excess letdown return isolation MOV

JPM CUE SHEET

INITIAL CONDITIONS:

- The plant was operating at 100% power when it suffered a loss of all AC power.
- The crew entered ECA-0.0, Loss of All AC Power, and is at the step that directs local isolation of RCP Seals.

INITIATING CUE:

The CRS has directed you to isolate RCP seals in accordance with the applicable portions of ATT-21.0, Attachment RCS Isolation.

NOTE: No plant equipment should be operated during the performance of this JPM. All actions must be SIMULATED.

In-Plant JPM K

Facility:	Ginna	Task No.:	
Task Title:	Fire Water Cooling to CCW Heat Exchanger A	JPM No.:	2014 Systems – In-Plant JPM K
K/A Reference:	APE 062 AA1.07 (2.9/3.0)		

Examinee: NRC Examiner:

Facility Evaluator: Date:

Method of testing:

Simulated Performance: X Actual Performance: _____

Classroom _____ Simulator _____ Plant X

READ TO THE EXAMINEE

I will explain the initial conditions, which steps to simulate or discuss, and provide initiating cues. When you complete the task successfully, the objective for this Job Performance Measure will be satisfied.

Provide Candidate with Initial Conditions/Cue (Last Page of this JPM), a Laser Pointer and Handout 1.

Initial Conditions:

- The plant was operating at power when a loss of all Service Water pumps occurred.
- The crew responded using the emergency operating procedures and Attachment 2.4, Attachment No Service Water Pumps, as required.
- The crew is ready to align alternate cooling to one CCW heat exchanger.
- A normal SW discharge alignment is desired.
- SW isolations MOV-4616 and MOV-4735 have been closed from the Control Room.

Initiating Cue: The CRS has directed you to line up Fire Water Cooling from the plant fire header to the A CCW Heat Exchanger per ER-CCW.1, Fire Water Cooling to CCW and A SFP Heat Exchangers.

NOTE: No plant equipment should be operated during the performance of this JPM. All actions must be SIMULATED.

Task Standard:	The operator will locally align fire water to CCW HX A in accordance with ER-CCW.1.
Required Materials:	PPE (Hardhat, Safety Glasses, Hearing Protection, Safety Shoes etc.) Laser Pointer
General References:	ATT-2.4, Attachment No Service Water Pumps, Rev 3 ER-CCW.1, Fire Water Cooling to CCW and A SFP Heat Exchangers, Rev 00301 33013-1250 Sheet 2 Showing Shower Tagout
Handouts:	Handout 1: Blank copy of ER-CCW.1, Fire Water Cooling to CCW and A SFP Heat Exchangers.
Time Critical Task:	NO
Validation Time:	22 minutes

(Denote Critical Steps with a √)

Provide Candidate with Initial Conditions/Cue (Last Page of this JPM), a Laser Pointer and Handout 1.

START TIME: _____

	ER-CCW.1, Step 6.1.1
Performance Step: 1	ENSURE the following valves are CLOSED • SFP SKID HX SW INLET HOSE CONN ISOL VLV, V-8687 (Aux Bldg top floor by CCW Hxs). • TIE IN VALVE FOR TEMP COOLING WATER SYSTEM. V-9184 (Aux Bldg top floor by G fan).
Standard:	The operator attempts to rotate the V-8687 handle in the clockwise direction.
Examiner Cue:	**The Handle will NOT rotate.**
Standard:	The operator attempts to rotate the V-9184 handwheel in the clockwise direction.
Examiner Cue:	**The Handwheel will NOT rotate.**
Comment:	

ER-CCW.1, Step 6.1.2/6.1.2.1

Note: The Fire Hose Flange Connections and Gaskets are located in the Turbine Operating Floor Staged Equipment Locker.
Note: Fire Hose is available in the Ginna Fire Trucks (Ginna 1 and 2).
Note: Maintenance may assist as needed with the next step.

√ **Performance Step: 2** PERFORM the following:

REMOVE the Blind Flanges from V-8687 and V-9184.

Examiner Cue: **If requested, report that "Mechanical Maintenance and the Safety Group are available to assist."**

Standard: The operator reads the Notes, and proceeds.

The operator proceeds to the Turbine Building hose locker and obtains the required flanges/gaskets, and necessary tools.

Examiner Cue: **Report that "You have the flanges/gaskets and tools in your possession."**

EXAMINER NOTE: **It is NOT the intention of the JPM for the operator to leave the RCA. The Examiner shall have the operator describe/point out the location prior to/after the JPM performance.**

Standard: [√] The operator removes the Blind Flange downstream of V-8687.

Examiner Cue: **Report that "The Flange has been removed."**

Standard: [√] The operator removes the Blind Flange downstream of V-9184.

Examiner Cue: **Report that "The Flange has been removed."**

EXAMINER NOTE: **The order of removal of the Blind Flanges is NOT critical.**

Comment:

ER-CCW.1, Step 6.1.2.2

√ **Performance Step: 3** INSTALL the Flange Fire Hose Connection on V-8687 and V-9184.

Examiner Cue: **If requested, report that "Mechanical Maintenance is providing assistance as directed by YOU."**

Standard: [√] The operator installs the Flange Fire Hose Connection on the V-8687 Flange Connection.

Examiner Cue: **Report that "The Flange Fire Hose Connection has been installed."**

Standard: [√] The operator installs the Flange Fire Hose Connection on the V-9184 Flange Connection.

Examiner Cue: **Report that "The Flange Fire Hose Connection has been installed."**

EXAMINER NOTE: **The order of Flange Fire Hose Connection installation is NOT critical.**

Comment:

ER-CCW.1, Step 6.1.2.3

√ **Performance Step: 4** INSTALL a 3" Fire Hose between V-8687 and V-9184.

Examiner Cue:

- **If requested, report that "Mechanical Maintenance is providing assistance as directed by YOU."**
- **A 3 inch Fire Hose is available.**

Standard: [√] The operator installs a 3 inch fire hose between the Flange Fire Hose Connection downstream of V-8687 and V-9184.

Examiner Cue: **Report that "The Fire Hose is connected."**

Comment:

ER-CCW.1, Step 6.1.3/6.1.3.1

Performance Step: 5 IF it is desired to supply the A CCW HX THEN PERFORM the following:

CLOSE AUXILIARY BUILDING SERVICE WATER ISOLATIONS, MOV-4616 and MOV-4735.

Standard: The operator recalls that MOV-4616 and MOV-4735 are closed (Initial Conditions).

Examiner Cue: **If the operator calls the Control Room for valve status, report that "MOV-4616 and MOV-4735 are closed."**

If the operator observes the two valves locally, report that "MOV-4616 and MOV-4735 indicate closed."

Comment:

ER-CCW.1, Step 6.1.3.2

√ **Performance Step: 6** CLOSE SW LOOP A INLET BLOCK VLV TO SFP HX A, V-4621.

Standard: [√] The operator rotates the V-4621 Handwheel in the clockwise direction.

Examiner Cue: **The valve handwheel rotates, and then stops rotating.**

EXAMINER NOTE: **The operator/Examiner will need to fit through some tight spaces to get to this valve. The Examiner may elect to have the operator use the Laser Pointer to point out the valve, and describe its operation.**

Comment:

ER-CCW.1, Step 6.1.3.3

√ **Performance Step: 7** CLOSE SW LOOP B INNER ISOL VLV TO VENT & EYE WASH/SHOWER, V-4618A.

EXAMINER CUE: **If the operator requests eSOMs location for V-4618A, states "AB operating Component Cooling Water HX Platform, 9ft. elevation."**

Standard: [√] The operator rotates the V-4618A Handle in the clockwise direction such that the handle is perpendicular to the pipe.

Examiner Cue: **The valve handle rotates, and then stops rotating.**

EXAMINER NOTE: **This valve is in the overhead. The Examiner may elect to have the operator use the Laser Pointer to point out the valve, and describe its operation.**

Comment:

ER-CCW.1, Step 6.1.3.4

√ **Performance Step: 8** OPEN INLET BLOCK VLV TO CCW HX A, V-4617.

Standard: [√] The operator rotates the V-4617 Handwheel in the counter-clockwise direction.

Examiner Cue: **The valve handwheel rotates, and then stops rotating.**

Comment:

ER-CCW.1, Step 6.1.3.5

√ **Performance Step: 9** IF the Normal SW Discharge Flowpath is desired THEN OPEN CCW HX A SW OUTLET ISOL VLV, V-4619.

Standard: [√] The operator rotates the V-4619 Handwheel in the counter-clockwise direction.

Examiner Cue: **The valve handwheel rotates, and then stops rotating.**

Comment:

ER-CCW.1, Step 6.1.3.6

Performance Step: 10 IF the Redundant SW Discharge Flowpath is desired....

Standard: The operator recognizes that the Redundant SW Discharge Flowpath is NOT desired, and proceeds.

Comment:

ER-CCW.1, Step 6.1.3.7

Note: The following steps will cause the Motor and/or the Engine Fire Pump(s) to start.

√ **Performance Step: 11** OPEN TIE IN VALVE FOR TEMP COOLING WATER SYSTEM. V-9184.

Standard: The operator reads the Note, and proceeds.

[√] The operator rotates the V-9184 Handwheel in the counter-clockwise direction.

Examiner Cue: **The valve handwheel rotates, and then stops rotating.**

Comment:

ER-CCW.1, Step 6.1.3.8

√ **Performance Step: 12** SLOWLY OPEN SFP SKID HX SW INLET HOSE CONN ISOL VLV, V-8687.

Standard: [√] The operator rotates the V-8687 Handle in the counter-clockwise direction.

Examiner Cue: **The valve handle rotates, and then stops rotating.**

Comment:

	ER-CCW.1, Step 6.1.3.9
Performance Step: 13	NOTIFY the Control Room that Fire Water Cooling is established to the A CCW HX.
Standard:	The operator contacts the Control Room and reports that Fire Water Cooling is established to the A CCW HX.
Examiner Cue:	**As the BOP, acknowledge.**
Comment:	

Terminating Cue: **Evaluation on this JPM is complete.**

STOP TIME: _____

VERIFICATION OF COMPLETION

Job Performance Measure No.: 2014 Systems – In-Plant JPM K

Examinee's Name:

Date Performed:

Facility Evaluator:

Number of Attempts:

Time to Complete:

Question Documentation:

Result: SAT _____ UNSAT _____

Examiner's Signature: _____ Date: _____

JPM CUE SHEET

INITIAL CONDITIONS:

- The plant was operating at power when a loss of all Service Water pumps occurred.
- The crew responded using the emergency operating procedures and Attachment 2.4, Attachment No Service Water Pumps, as required.
- The crew is ready to align alternate cooling to one CCW heat exchanger.
- A normal SW discharge alignment is desired.
- SW isolations MOV-4616 and MOV-4735 have been closed from the Control Room.

INITIATING CUE:

The CRS has directed you to line up Fire Water Cooling from the plant fire header to the A CCW Heat Exchanger per ER-CCW.1, Fire Water Cooling to CCW and A SFP Heat Exchangers.

NOTE: No plant equipment should be operated during the performance of this JPM. All actions must be SIMULATED.

Facility:	**Ginna**	Scenario No.: **2**	Op Test No.: **N2014-301**
Examiners:	_____	Operators:	_____ (SRO)
	_____		_____ (RO)
	_____		_____ (BOP)

Initial Conditions:	The plant is at 100% power (EOL), and has been at full power for 145 days. The area has experienced thunderstorms over the last 6 hours, and this is expected to continue for the next 6 hours.
Turnover:	The following equipment is Out-Of-Service: The B CNMT Spray pump has been declared INOPERABLE due to excessive inboard vertical vibration during STP-O-3-COMP-B surveillance test yesterday. Engineering is evaluating the data. A-52.4 submitted for ITS 3.6.6, 72 hour Action.

Event No.	Malf. No.	Event Type*	Event Description
1	CLG05 CLG02A	C-RO C(TS)-SRO	Leak on the CCW System/B CCW Pump Trips
2	PZR03B	I-BOP I-RO I(TS)-SRO	PZR Level Channel 427 fails LOW
3	TUR11B	R-RO N-BOP N-SRO	Turbine Control Valve CV-L4 Drifts Closed
4	FDW07C	C-BOP C(TS)-SRO	B FRV fails AS-IS (Manual Control Available)
5	STM03 STM05A STM05B	M-RO M-BOP M-SRO	MSLB Downstream of MSIVs with MSIVs Stuck OPEN
6	RPS05A RPS05B	NA	RPS fails to Trip Rx in AUTO/Manual Pushbutton
7	STM03	NA	Steam Break Degrades Creating PTS Concern
8	EDS01A EDS01B	NA	Loss of Offsite Power

* (N)ormal, (R)eactivity, (I)nstrument, (C)omponent, (M)ajor

Ginna 2014 NRC Scenario #2

The plant is at 100% power (EOL), and has been at full power for 145 days. The area has experienced thunderstorms over the last 6 hours, and this is expected to continue for the next 6 hours.

The following equipment is Out-Of-Service: The B CNMT Spray pump has been declared INOPERABLE due to excessive inboard vertical vibration during STP-O-3-COMP-B surveillance test yesterday. Engineering is evaluating the data. A-52.4 submitted for ITS 3.6.6, 72 hour Action.

Shortly after taking the watch, a CCW System Supply Relief Valve will lift and fail to reseat causing a 30 gpm CCW System leak. Approximately two minutes afterwards the B CCW Pump will trip, and the A CCW Pump will automatically start. The operator will respond in accordance with AR-A-17, MOTOR OFF RCP CCWP, and enter AP-CCW.2, Loss of CCW During Power Operation. The operator will address Technical Specification 3.7.7, Component Cooling Water System.

After this, Pressurizer Level Channel 427 will fail LOW, resulting in letdown isolation and de-energizing the pressurizer heaters. The crew will respond per AR-F-11, PZR LOW LEVEL 13%, and ER-INST.1, Reactor Protection Bistable Defeat After Instrumentation Loop Failure. They will defeat the failed channel, reset PZR heaters, reduce charging to a single charging pump, and re-establish letdown per S-3.2.E, Placing In or Removing From Service Normal Letdown/Excess Letdown. The crew will start a second charging pump and slowly restore PZR level to program (52%). The operator will address Technical Specification 3.3.1, Reactor Trip System (RTS) Instrumentation and 3.4.9, Pressurizer.

Then, turbine control valve CVL-4 will drift closed. The crew will respond per AP-TURB.2, Turbine Load Rejection, begin a load reduction to less than 50% power using AP-TURB.5, Rapid Load Reduction.

During the load reduction, a failure of the B FRV to control in AUTO. The operator will respond per AR-G-5, S/G/ B LEVEL DEVIATION ±7%, or upon observing an abnormally high level in the B Steam Generator and control the B FRV manually.

Subsequently, a major steamline break will occur in the Turbine Building downstream of the MSIVs. Both MSIVs will fail to close automatically in response to manual attempts from the MCB. The reactor will fail to trip automatically and manual pushbutton will not work, requiring opening of normal supply breakers for Bus 13 and Bus 15 to deenergize rod drive MG sets to trip the reactor. The crew will enter E-0, Reactor Trip or Safety Injection.

The crew will ultimately transition to E-2, Faulted S/G Isolation. Since both MSIVs are failed open, and with a downstream break, both SGs will be affected and their pressures will lower concurrently. Eventually, the crew will transition to ECA-2.1, Uncontrolled Depressurization of Both Steam Generators. After the operator throttles AFW flow in ECA-2.1, the leak will increase in magnitude, resulting in an Orange Path on RCS Integrity. Simultaneously the event will be complicated by a Loss of Offsite Power. Both Emergency Diesel Generators will start and automatically repower the respective

Emergency Busses, and the operator will need to re-establish AFW flow of 50 gpm to each Steam Generator.

The crew will implement FR-P.1, Response to Imminent Pressurized Thermal Shock Condition, when RCS cold leg temperatures reach 311°F. In FR-P.1 the crew will stop the SI pumps and the RHR pumps.

The scenario will be terminated after the SI and RHR pumps are secured.

Critical Tasks:

1. **Manually trip the reactor from the control room before transition to FR-S.1**

Safety Significance: Failure to manually trip the reactor causes a challenge to the subcriticality CSF beyond that irreparably introduced by the postulated conditions. Additionally, it constitutes an "incorrect performance that necessitates the crew taking action which complicates the event mitigation strategy that demonstrates the inability by the crew to recognize a failure of the automatic actuation of the RPS.

2. **Control the AFW flowrate to 50 gpm per SG in order to minimize the RCS Cooldown rate**

Safety Significance: Failure to control the AFW flow rate to the SGs when able to do so causes a challenge to the subcriticality and RCS Integrity CSFs beyond that irreparably introduced by the postulated conditions. Additionally, it constitutes an "incorrect performance that may necessitate the crew taking action which complicates the event mitigation strategy (Transition to FR-S.1 on inability to maintain a negative SUR).

PROGRAM: Ginna Operations Training

MODULE: 2014 Initial License Operator Training Class

TOPIC: NRC Simulator Exam

Scenario N2014-301-2

REFERENCES:

1. Technical Specification 3.6.6, Containment Spray, Containment Recirculation Fan Cooler (CRFC), and NaOH Systems, Amendment 99
2. AR-A-17, MOTOR OFF RCP CCWP, Rev 9
3. AP-CCW.2, Loss of CCW During Power Operation, Rev 02201
4. Technical Specification 3.7.7, Component Cooling Water System, Amendment 80
5. AR-F-11, PZR LOW LEVEL 13%, Rev 4
6. ER-INST.1, Reactor Protection Bistable Defeat After Instrumentation Loop Failure, Rev 03605
7. S-3.2.E, Placing In or Removing From Service Normal Letdown/Excess Letdown, Rev 02700
8. Technical Specification 3.4.9, Pressurizer, Amendment 80
9. Technical Specification 3.3.1, Reactor Trip System (RTS) Instrumentation, Amendment 112
10. AP-TURB.2, Turbine Load Rejection, Rev 02301
11. AP-TURB.5, Rapid Load Reduction, Rev 01600
12. AR-G-5, S/G/ B LEVEL DEVIATION ±7%, Rev 00701
13. E-0, Reactor Trip and Safety Injection, Rev 04602
14. ATT-27.0, Attachment Automatic Action Verification, Rev 00300
15. E-2, Faulted Steam Generator Isolation, Rev 01301
16. ECA-2.1, Uncontrolled Depressurization of Both Steam Generators, Rev 03601
17. FR-P.1, Response to Imminent Pressurized Thermal Shock Condition, Rev 03200

Validation Time: 89 Minutes

Author: David Lazarony, Essential Training & Consulting, LLC

Facility Review:

Rev. 091914

Ginna 2014 NRC Scenario #2

The plant is at 100% power (EOL), and has been at full power for 145 days. The area has experienced thunderstorms over the last 6 hours, and this is expected to continue for the next 6 hours.

The following equipment is Out-Of-Service: The B CNMT Spray pump has been declared INOPERABLE due to excessive inboard vertical vibration during STP-O-3-COMP-B surveillance test yesterday. Engineering is evaluating the data. A-52.4 submitted for ITS 3.6.6, 72 hour Action.

Shortly after taking the watch, a CCW System Supply Relief Valve will lift and fail to reseat causing a 30 gpm CCW System leak. Approximately two minutes afterwards the B CCW Pump will trip, and the A CCW Pump will automatically start. The operator will respond in accordance with AR-A-17, MOTOR OFF RCP CCWP, and enter AP-CCW.2, Loss of CCW During Power Operation. The operator will address Technical Specification 3.7.7, Component Cooling Water System.

After this, Pressurizer Level Channel 427 will fail LOW, resulting in letdown isolation and de-energizing the pressurizer heaters. The crew will respond per AR-F-11, PZR LOW LEVEL 13%, and ER-INST.1, Reactor Protection Bistable Defeat After Instrumentation Loop Failure. They will defeat the failed channel, reset PZR heaters, reduce charging to a single charging pump, and re-establish letdown per S-3.2.E, Placing In or Removing From Service Normal Letdown/Excess Letdown. The crew will start a second charging pump and slowly restore PZR level to program (52%). The operator will address Technical Specification 3.3.1, Reactor Trip System (RTS) Instrumentation and 3.4.9, Pressurizer.

Then, turbine control valve CVL-4 will drift closed. The crew will respond per AP-TURB.2, Turbine Load Rejection, begin a load reduction to less than 50% power using AP-TURB.5, Rapid Load Reduction.

During the load reduction, a failure of the B FRV to control in AUTO. The operator will respond per AR-G-5, S/G/ B LEVEL DEVIATION ±7%, or upon observing an abnormally high level in the B Steam Generator and control the B FRV manually.

Subsequently, a major steamline break will occur in the Turbine Building downstream of the MSIVs. Both MSIVs will fail to close automatically in response to manual attempts from the MCB. The reactor will fail to trip automatically and manual pushbutton will not work, requiring opening of normal supply breakers for Bus 13 and Bus 15 to deenergize rod drive MG sets to trip the reactor. The crew will enter E-0, Reactor Trip or Safety Injection.

The crew will ultimately transition to E-2, Faulted S/G Isolation. Since both MSIVs are failed open, and with a downstream break, both SGs will be affected and their pressures will lower concurrently. Eventually, the crew will transition to ECA-2.1, Uncontrolled Depressurization of Both Steam Generators. After the operator throttles AFW flow in ECA-2.1, the leak will increase in magnitude, resulting in an Orange Path on RCS Integrity. Simultaneously the event will be complicated by a Loss of Offsite Power. Both Emergency Diesel Generators will start and automatically repower the respective Emergency Busses, and the operator will need to re-establish AFW flow of 50 gpm to each Steam Generator.

Emergency Busses, and the operator will need to re-establish AFW flow of 50 gpm to each Steam Generator.

The crew will implement FR-P.1, Response to Imminent Pressurized Thermal Shock Condition, when RCS cold leg temperatures reach 311°F. In FR-P.1 the crew will stop the SI pumps and the RHR pumps.

The scenario will be terminated after the SI and RHR pumps are secured.

Critical Tasks:

1. **Manually trip the reactor from the control room before transition to FR-S.1**

Safety Significance: Failure to manually trip the reactor causes a challenge to the subcriticality CSF beyond that irreparably introduced by the postulated conditions. Additionally, it constitutes an "incorrect performance that necessitates the crew taking action which complicates the event mitigation strategy that demonstrates the inability by the crew to recognize a failure of the automatic actuation of the RPS.

2. **Control the AFW flowrate to 50 gpm per SG in order to minimize the RCS Cooldown rate**

Safety Significance: Failure to control the AFW flow rate to the SGs when able to do so causes a challenge to the subcriticality and RCS Integrity CSFs beyond that irreparably introduced by the postulated conditions. Additionally, it constitutes an "incorrect performance that may necessitate the crew taking action which complicates the event mitigation strategy (Transition to FR-S.1 on inability to maintain a negative SUR).

SIMULATOR OPERATOR INSTRUCTIONS

	Bench Mark	ACTIVITY	DESCRIPTION
☐		**Reset to Temp** I/C 172. **(Built on IC-24)**	**100% power EOL** **At T=0, insert:** • **MALF RPS05A, [No Manual],** Reactor Trip Bkr A Failure • **MALF RPS05B, [No Manual],** Reactor Trip Bkr B Failure • **MALFSTM05A, [100],** MSIV Fails Open VLV 3517 • **MALFSTM05B, [100],** MSIV Fails Open VLV 3516 **To take B CS pump OOS:** • **Pull stop the B CS pump** **Insert the following:** • **MALF CLG02B, 0%, on T-1 (2 Min Delayed),** B CCW Pump Trip • **MALF CLG05, 30 gpm, on T-1** • **MALF PZR03B [0], on T-2,** PZR Level Channel 427 failure • **MALF TUR11B [0 in 20 sec], on T-3, CVL-4 Failure** • **MALF FDW07C, [101],on T-4,** FRV fails as is on downpower • **MALFSTM03 [1E6] on T-5,** Steamline Break outside CNMT downstream of MSIV's • **MALFFPS01-237 [15 seconds delayed], on T-5, Fire in Zone 37** (Int Building Clean Side Main Steamline and above) • **MALFSTM03, [5E6], on T-6** Steamline Break outside CNMT downstream of MSIV's (larger for entry into FR-P.1) • **MALF EDS01A, on T-6** (Loss of Offsite Power) • **MALF EDS01B, on T-6** (Loss of Offsite Power)
☐	Prior to Crew Briefing	**RUN**	• **Hang Protective Tags per OPG-Protective Equipment.** • **Place Black Dot on MCB Annunciator J-25**
☐	**Crew Briefing** • Assign Crew Positions based on evaluation requirements • Review the Shift Turnover Information with the crew.		

	Bench Mark	ACTIVITY	DESCRIPTION
☐	T-0	Begin Familiarization Period	
☐	At direction of examiner	**Event 1** **Trigger#1** **CLG05** (30 gpm, No Ramp) **CLG02B** (B CCW Pump Trip 2 Minute Delayed)	Leak on the CCW System/B CCW Pump Trips
☐	At direction of examiner	**Event 2** **Trigger#2** **PZR03B (0)**	PZR Level Channel 427 fails LOW
☐	At direction of examiner	**Event 3** **Trigger#3** **TUR11B** (0 over 20 seconds)	Turbine Control Valve CV-L4 Drifts Closed
☐	At direction of examiner	**Event 4** **Trigger#4** **FDW07C** (Current Controller Output)	B FRV fails AS-IS (Manual Control Available)
☐	At direction of examiner	**Event 5** **Trigger#5** **STM03** (1E+6) **FPS01-237** **STM05A** (100) **STM05B** (100)]	MSLB Downstream of MSIVs with MSIVs Stuck OPEN **NOTE: The Fire Alarm is 15 seconds dealyed.** **NOTE: These Malfunctions are inserted in the IC at T = 0.**
☐	Continued from Event 5	**Event 6** **MALF RPS05A, [No Manual]** **MALF RPS05B, [No Manual]**	RPS fails to Trip Rx in AUTO/Manual Pushbutton **NOTE: These Malfunctions are inserted in the IC at T = 0.**
☐	After entry into ECA-2.1 At direction of examiner	**Event 7** **Trigger#6** **STM03** (5E+6)	Steam Break Degrades Creating PTS Concern
☐	Simultaneous with Event 7	**Event 8** **Trigger#6** **EDS01A** **EDS01B**	Loss of Offsite Power
☐	**Terminate the scenario upon direction of Lead Examiner**		

Op Test No.:	N2014-301	Scenario #	2	Event #	1	Page	7 of 47
Event Description:	**Leak on the CCW System/B CCW Pump Trips**						

Shortly after taking the watch, a CCW System Supply Relief Valve will lift and fail to reseat causing a 30 gpm CCW System leak. Approximately two minutes afterwards the B CCW Pump will trip, and the B CCW Pump will automatically start. The operator will respond in accordance with AR-A-17, MOTOR OFF RCP CCWP, and enter AP-CCW.2, Loss of CCW During Power Operation. The operator will address Technical Specification 3.7.7, Component Cooling Water System.

SIM DRIVER Instructions: **Operate Trigger #1 (CLG05 (30 gpm), CLG02B (2 minutes delayed))**

Indications Available:

- CCW Surge Tank Level starts to lower.
- Two minutes later, the B CCW Pump trips and the A CCW Pump starts automatically
- MCB Annunciator A-17; MOTOR OFF RCP CCWP
- MCB Annunciator A-13, CCW SURGE TANK LO LEVEL 41.2%

Time	Pos.	Expected Actions/Behavior	Comments
			NOTE: The crew may enter AP-CCW.2 directly.
AR-A-17, MOTOR OFF RCP CCWP			
	HCO	(Step 1) Verify which motor tripped.	
	HCO	(Step 2) IF a RCP has tripped, THEN.....	**NOTE:** An RCP has NOT tripped.
	CRS	(Step 3) IF a CCW pump has tripped, THEN go to the applicable AP-CCW procedure:	
		• AP-CCW.2 (LOSS OF CCW DURING POWER OPERATION)	
			NOTE: The CRS will go to AP-CCW.2.
AP-CCW.2, LOSS OF CCW DURING POWER OPERATION			
	HCO	(Step 1) Check CCW Pump Status:	
		• Both CCW pump breaker white lights – EXTINGUISHED	
		• Annunciator A-17, MOTOR OFF RCP CCWP - EXTINGUISHED	

Op Test No.: N2014-301 Scenario # 2 Event # 1 Page 8 of 47

Event Description: **Leak on the CCW System/B CCW Pump Trips**

Time	Pos.	Expected Actions/Behavior	Comments
	HCO	(Step 1 RNO) Perform the following:	
		• Ensure standby CCW pump running.	
		IF no CCW pump can be operated, THEN.....	**NOTE:** The B CCW Pump is running.
		• IF annunciator A-22, CCW PUMP DISCHARGE LO PRESS 60 PSI, lit, THEN.....	**NOTE:** Annunciator A-22 is NOT lit.
	HCO	(*Step 2) Monitor CCW Surge Tank Level – APPROXIMATELY 50% AND STABLE....	**NOTE:** The CCW Surge Tank Level is lowering.
		(Step 2 RNO) Perform the following:	
		• Open RMW to CCW surge tank, MOV-823.	
		• Start RMW pump(s).	
		• IF surge tank level stable or rising, THEN control level at approximately 50% while continuing with Step 3.	**NOTE:** The makeup flow into the CCW Surge Tank will be able to stabilize the tank level.
	HCO	(*Step 3) Monitor CCW Hx Outlet Temperature (MCB rear or PPCS point ID T0621)	
		• CCW Hx Outlet temperature – LESS THAN 120°F	
	HCO	(*Step 4) Monitor RCP Indications:	
		• Annunciator A-7 (A-15), RCP 1A (1B) CCW return Hi Temp or low flow 165 gpm 125°F alarm – EXTINGUISHED	
		• RCP motor bearings temperature (PPCS Group Display – RCPS OR RXP temperature monitor RK-30A recorder) - ≤ 200°F	

Op Test No.: N2014-301 Scenario # 2 Event # 1 Page 9 of 47

Event Description: **Leak on the CCW System/B CCW Pump Trips**

Time	Pos.	Expected Actions/Behavior	Comments
	HCO	(*Step 5) Monitor If Letdown Should Be Isolated:	
		• Check annunciator A-12, Non-Regen Hx Letdown Out Hi Temp 145°F - EXTINGUISHED	
		• Check excess letdown temperature – LESS THAN 195°F	
	HCO	(Step 6) Check CCW Valve Alignment - NORMAL	
		• Check MCB CCW valves (Refer to ATT-1.0, ATTACHMENT AT POWER CCW ALIGNMENT)	
		• Direct AO to check local flow indications per ATT-1.1, ATTACHMENT NORMAL CCW FLOW	**NOTE:** The CRS will dispatch an AO. **SIM DRIVER:** as **AO**, acknowledge.
	HCO	(Step 7) Locally Check Seal Water Hx CCW Outlet Flow – NORMAL (FI-605)	**NOTE:** The CRS may direct the AO to report status of Seal Water Hx CCW Outlet Flow. If so, **SIM DRIVER** acknowledge as AO, and report flow is **96 gpm**.
SIM DRIVER:		**As AO, call and report that Relief Valve V770 (Near Sample Coolers) is lifting to the drain system. The leak appears to be isolable, and valves V772C (Inlet Iso Valve) and V772D (Outlet Iso Valve) are nearby.** **If directed to isolate the leak, Remove MALF CLG05**	
			NOTE: The CRS may contact Chemistry and direct them to isolate CCW to the Sample Coolers. If so, **SIM DRIVER** acknowledge as Chemistry.

Op Test No.: N2014-301 Scenario # 2 Event # 1 Page 10 of 47

Event Description: **Leak on the CCW System/B CCW Pump Trips**

Time	Pos.	Expected Actions/Behavior	Comments
	HCO/ AO	(Step 8) Check for CCW Leakage In CNMT:	
		• Check CNMT sump A level:	
		• Level – STABLE	
		• Sump A pumps – OFF	
		• RCP oil levels - STABLE	
	HCO/ AO	(Step 9) Check for CCW Leakage In AUX BLDG:	
		• Start frequency of AUX BLDG sump pump(s) – NORMAL (Refer to RCS daily leakage log)	
		• Waste holdup tank level – STABLE OR RISING AS EXPECTED	**NOTE:** The CRS may direct the AO to report status of the WHUT. If so, **SIM DRIVER** acknowledge as AO, and report level is **slowly rising** (Modify if leak is isolated).
	HCO	(Step 10) Verify CCW System Leak - IDENTIFIED	
		• Leak identified	
		• Isolate leak if possible	**NOTE:** The leak has likely been discovered and isolated.
		• Refer to IP-ENV-3, RESPONSE TO A SPILL OF HAZARDOUS MATERIAL/WASTE	**NOTE:** The CRS may ask the SM to address. If so, **SIM DRIVER** acknowledge as OSM.
	HCO	(Step 11) Check Normal or Excess Letdown – IN SERVICE	
	HCO	(Step 12) Check CCW System Leak Isolated	
		• Surge tank level – APPROXIMATELY 50%	

Op Test No.: N2014-301 Scenario # 2 Event # 1 Page 11 of 47

Event Description: **Leak on the CCW System/B CCW Pump Trips**

Time	Pos.	Expected Actions/Behavior	Comments
		• (Step 12a RNO) IF level less than 50%, THEN continue filling.	**NOTE:** The Surge Tank Level is stable (still rising if NOT isolated).
		IF ≥ 50% THEN perform the following:	
		• Stop RMW pump(s).	
		• Close MOV-823.	
		• (Step 12 Continued) Surge tank level - STABLE	
	HCO	(Step 13) Direct RP To Sample CCW System For Chromates	**NOTE:** The CRS may notify RP. **SIM DRIVER:** as **RP**, acknowledge.
	HCO/ CO	(Step 14) Evaluate MCB Annunciator Status (Refer to AR Procedures)	
	CRS	(Step 15) Evaluate Plant Conditions:	
		• CCW system malfunction – IDENTIFIED AND CORRECTED.	**NOTE:** Although the leak has been isolated, the A CCW Pump has tripped, and needs to be evaluated.
		• CCW system status adequate for power operation (Refer to ITS Section 3.7.7).	
	CRS	(Step 16) Notify Higher Supervision	**NOTE:** The CRS may notify the WCC. **SIM DRIVER:** as **WCCS**, acknowledge.
	CRS	(Step 17) Return To Procedure Or Guidance In Effect	

Op Test No.: N2014-301 Scenario # 2 Event # 1 Page 12 of 47

Event Description: **Leak on the CCW System/B CCW Pump Trips**

Time	Pos.	Expected Actions/Behavior	Comments
			NOTE: The CRS will likely check the Tech Specs.
TECHNICAL SPECIFICATION 3.7.7, COMPONENT COOLING (CCW) WATER SYSTEM			
	CRS	3.7.7 Two CCW trains, two CCW heat exchangers, and the CCW loop header shall be OPERABLE.	
	CRS	APPLICABILITY: MODES 1, 2, 3, and 4.	
		ACTIONS	
		CONDITION / REQUIRED ACTION / COMPLETION TIME	
		A. One CCW train inoperable. / A.1 Restore CCW train to OPERABLE status. / 72 hours	
			NOTE: The CRS will likely conduct a Plant Status Brief.
At the discretion of the Lead Examiner move to Event #2.			

Op Test No.: N2014-301	Scenario # 2	Event # 2	Page 13 of 47
Event Description:	**PZR Level Channel 427 fails LOW**		

After this, Pressurizer Level Channel 427 will fail LOW, resulting in letdown isolation and de-energizing the pressurizer heaters. The crew will respond per AR-F-11, PZR LOW LEVEL 13%, and ER-INST.1, Reactor Protection Bistable Defeat After Instrumentation Loop Failure. They will defeat the failed channel, reset PZR heaters, reduce charging to a single charging pump, and re-establish letdown per S-3.2.E, Placing In or Removing From Service Normal Letdown/Excess Letdown. The crew will start a second charging pump and slowly restore PZR level to program (52%). The operator will address Technical Specification 3.3.1, Reactor Trip System (RTS) Instrumentation, 3.3.3, Post Accident Monitoring (PAM) Instrumentation, and 3.4.9, Pressurizer.

SIM DRIVER Instructions: **Operate Trigger #2 (PZR03B [0])**

Indications Available:

- MCB Annunciator F-4, PRESSURIZER LEVEL DEVIATION -5 NORMAL +5
- MCB Annunciator F-11, PRESSURIZER LO LEVEL 13%
- VCT Level (LT-112) starts to lower
- LT-427 indicates low compared to remaining PRZR Level Channels
- Normal Letdown has isolated due to one PZR level channel failing low

Time	Pos.	Expected Actions/Behavior	Comments
			NOTE: The CRS may enter ER-INST.1 directly.
AR-F-4, PRESSURIZER LEVEL DEVIATION -5 NORMAL +5			
	HCO	(Step 1) Perform a channel check.	**NOTE:** LT-427 will indicate low compared to the others.
	HCO	(Step 2) Verify Backup Heaters on at + 5%	
	HCO	(Step 3) Check charging pump speed and controls.	**NOTE:** Auto pump has reduced to MIN speed.
	HCO	(Step 4) Check Letdown in service.	**NOTE:** Normal Letdown will auto isolate.
	HCO	(Step 5) Control Charging and Letdown as necessary to control level.	

Op Test No.: N2014-301 Scenario # 2 Event # 2 Page 14 of 47

Event Description: **PZR Level Channel 427 fails LOW**

Time	Pos.	Expected Actions/Behavior	Comments
	CRS	(Step 6) Go to the appropriate procedure:	
		• AP-RCS.1 for RCS leak	
		• ER-INST.1 for failed channel	**NOTE:** The CRS will go to ER-INST.1.
AR-F-11, PRESSURIZER LO Level 13%			
	HCO	(Step 1) Perform a channel check	**NOTE:** LT-427 will indicate low compared to the others.
	CRS	(Step 2) Go to the appropriate procedure:	
		• AP-RCS.1 for RCS leak	
		• ER-INST.1 for failed channel	**NOTE:** The CRS will go to ER-INST.1.
ER-INST.1, REACTOR PROTECTION BISTABLE DEFEAT AFTER INSTRUMENTATION LOOP FAILURE			
	HCO	(Step 6.1.1) IDENTIFY the failed instrument channel by observation of the bistable status light board, MCB annunciators, and the MCB metering indication.	**NOTE:** The HCO will identify that LI-427 has failed LOW.
	HCO	(Step 6.4.2) If letdown isolation valve, AOV-427 has closed, THEN perform the following:	**NOTE:** Letdown isolated
		1. Place charging pump speed controllers in MANUAL AND minimize charging flow.	**NOTE:** The HCO will place Charging Pump Speed in MANUAL.
		2. Stop all but one charging pumps (s).	**NOTE:** The HCO will stop one Charging Pump.
		3. Adjust HCV-142 as necessary to maintain RCP labyrinth seal ΔP between 20 and 80 inches.	**NOTE:** The HCO will close HCV-142 due to letdown isolation.
		4. Place loop B cold leg to REGEN HX AOV-427 switch (MCB) to close position	

Op Test No.: N2014-301 Scenario # 2 Event # 2 Page 15 of 47

Event Description: **PZR Level Channel 427 fails LOW**

Time	Pos.	Expected Actions/Behavior	Comments
		5. Consider placing excess letdown in service, refer to S-3.2E, PLACING IN OR REMOVING FROM SERVICE NORMAL LETDOWN/EXCESS LETDOWN	**NOTE:** CRS will likely defeat channel and then return Normal Letdown to service.
	HCO	(Step 6.3.4) REFER TO the appropriate attachment to defeat the associated control functions:	**NOTE:** The CRS will go Attachment 10, White Channel - PRZR Level LI-427.
		Attachment 9, Red Channel - PRZR Level LI-426	
		Attachment 10, White Channel - PRZR Level LI-427	
		Attachment 11, Blue Channel - PRZR Level LI-428	
			NOTE: The CRS will hand this off to the CO.
ER-INST.1, REACTOR PROTECTION BISTABLE DEFEAT AFTER INSTRUMENTATION LOOP FAILURE ATTACHMENT 10 WHITE CHANNEL - PRZR LEVEL LI-427			
			NOTE: The CO will likely conduct Instrument Defeat Brief.
	HCO	(Step 1) Ensure Charging pump controllers are in MANUAL	
	CO	(Step 2) In the PLP PRESS AND LEVEL rack, check the PRZR level defeat switch L/428A position.	**NOTE:** The CO will unlock and open the PLP PRZR PRESS AND LEVEL Rack Cabinet, take the required action, and then close and lock the cabinet door.
		• IF L/428A is in NORMAL, THEN place L-428A to DEFEAT-2.	
	CO	(Step 3) Notify the CRS that PRZR Heaters and Letdown can now be restored per steps 6.4.4 and 6.4.5.	

Op Test No.: N2014-301 Scenario # 2 Event # 2 Page 16 of 47

Event Description: **PZR Level Channel 427 fails LOW**

Time	Pos.	Expected Actions/Behavior	Comments
	CO	(Step 4) DETERMINE the expected Bistable proving light status for the post defeat condition as follows:	
		RECORD the following Data:	
		• PRZR Level LI-427_____%	
	CO	(Step 5) DETERMINE the expected post defeat Bistable proving light status and circle the expected status in table below:	
		• 427 CHANNEL 2 HIGH LEVEL TRIP Light OFF if LI-427 ≥87%	**NOTE:** The CO will determine that the Proving Light should be ON in the Post-Defeat condition.
	CO	(Step 6) In the (WHITE) W-1 PROTECTION CHANNEL 2 rack, PLACE the following bistable proving switches to DEFEAT (UP) AND verify the proving light status is correct: <u>427 CHANNEL 2</u> HIGH LEVEL TRIP	**NOTE:** The CO will unlock and open the W-1 PROTECTION CHANNEL 2 Rack Cabinet, take the required action, and then close and lock the cabinet door. **NOTE:** The B/S proving light should be ON after defeat.
	HCO	(Step 7) PLACE the PRZR level recorder transfer switch (MCB) to position 428.	
	HCO	(Step 8) VERIFY the bistable status lights AND Annunciators listed above are lit.	
	HCO/ CO	(Step 9) Remove the PRZR level channel from the PPCS, by performing the following: • On the "Sub/Delete/Restore" display • Select Point ID L0427 • Turn "OFF" scan processing. • Select "Change". • Answer prompts	

Op Test No.: N2014-301 Scenario # 2 Event # 2 Page 17 of 47

Event Description: **PZR Level Channel 427 fails LOW**

Time	Pos.	Expected Actions/Behavior	Comments
	CRS	(Step 10) GO TO step 6.4.4	**NOTE:** The CRS will return to the body of the procedure.
ER-INST.1, REACTOR PROTECTION BISTABLE DEFEAT AFTER INSTRUMENTATION LOOP FAILURE			
	HCO	(Step 6.4.4) Reset PRZR heaters breakers as necessary.	**NOTE:** Not necessary
	HCO	(Step 6.4.5) Restore normal letdown as follows, if desired.	**NOTE:** If excess letdown was placed on service earlier then Section 6.6 (Removing Excess Letdown from Service) will be performed.
		1. COMPLETE removal of normal letdown from service per S-3.2E, PLACING IN OR REMOVING FROM SERVICE NORMAL LETDOWN/EXCESS LETDOWN.	
		2. RESTORE normal letdown per S-3.2E, PLACING IN OR REMOVING FROM SERVICE NORMAL LETDOWN/EXCESS LETDOWN.	
			NOTE: The CRS will continue with ER-INST.1.
S-3.2E, PLACING IN OR REMOVING FROM SERVICE NORMAL LETDOWN/EXCESS LETDOWN			
			NOTE: This action will complete the removal of Normal Letdown from Service.
	HCO/ CO	(Step 6.2.1) PLACE Charging Pumps in MANUAL	
	HCO/ CO	(Step 6.2.2) ENSURE CLOSED Letdown Orifice isolation valves. AOV-200A AOV-200B AOV-202	

Op Test No.: N2014-301 Scenario # 2 Event # 2 Page 18 of 47

Event Description: **PZR Level Channel 427 fails LOW**

Time	Pos.	Expected Actions/Behavior	Comments
	HCO/ CO	(Step 6.2.3) CLOSE LTDN ISOLATION VLV RHR to NRHX, AOV-427.	
	HCO/ CO	(Step 6.2.4) REDUCE charging flow while throttling closed charging flow to Regenerative Heat Exchanger HCV-142 to maintain greater than 20" RCP labyrinth seal ΔP.	
	HCO/ CO	(Step 6.2.5) CLOSE LETDOWN ISOL VLV RHR TO NRHX AOV-371.	
	HCO/ CO	(Step 6.2.6) PLACE NRHX LTDN OUTLET TEMP (TI-130) TCV-130 in MANUAL/ CLOSED.	
	HCO/ CO	(Step 6.3.1) Determine if a flush is required. If the letdown line has been isolated for less than one hour perform section 6.4 and N/A section 6.5 with permission of the Shift Manager or Control Room Supervisor.	**NOTE:** Since letdown has been isolated ONLY a few minutes, a flush will NOT be required.
	HCO/ CO	(Step 6.4.1) Restore Letdown Without a Flush	
	HCO/ CO	(Step 6.4.1.1) ENSURE letdown is secured PER Section 6.2 prior to restoring.	
	HCO/ CO	(Step 6.4.1.2) IF charging flowpath to Loop B COLD Leg is desired (preferred method), THEN PERFORM the following:	
		ENSURE CLOSED CHARGING VLV RHX TO LOOP B HOT, AOV-392A.	
		OPEN CHARGING VLV RHX TO LOOP B COLD LEG AOV-294.	

Op Test No.: N2014-301 Scenario # 2 Event # 2 Page 19 of 47

Event Description: **PZR Level Channel 427 fails LOW**

Time	Pos.	Expected Actions/Behavior	Comments
	HCO/ CO	(Step 6.4.1.3) IF Charging flowpath to Loop B HOT leg is desired,.....	**NOTE:** Charging alignment to the Hot Leg will NOT be desired.
	HCO/ CO	(Step 6.4.2) START a second Charging Pump at minimum speed.	
	HCO/ CO	(Step 6.4.3) SLOWLY OPEN charging flow to Regenerative Heat Exchanger HCV-142 to reduce labyrinth seal ΔP to - 40".	
	HCO/ CO	(Step 6.4.4) ADJUST Charging Pump speed while maintaining - 40" labyrinth seal ΔP UNTIL HCV-142 is fully OPEN.	
	HCO/ CO	(Step 6.4.5) ESTABLISH greater than or equal to 22 gpm charging line flow.	
	HCO/ CO	(Step 6.4.6) IF placing 40 GPM orifice in service	**NOTE:** A 60 gpm Orifice was previously in service.
	HCO/ CO	(Step 6.4.7) IF placing 60 GPM orifice in service THEN	
		PLACE LOW PRESS LTDN PRESS PCV-135 in MANUAL at - 60% open.	
		PLACE NRHX LTDN OUTLET TEMP (TI-130) TCV-130 in MANUAL at -60% open.	
	HCO/ CO	(Step 6.4.8) OPEN LETDOWN ISOL VLV RHR TO NRHX AOV-371.	
	HCO/ CO	(Step 6.4.9) PLACE LTDN LOOP B COLD LEG TO RHX AOV-427 to OPEN and THEN to AUTO.	

Op Test No.: N2014-301 Scenario # 2 Event # 2 Page 20 of 47

Event Description: **PZR Level Channel 427 fails LOW**

Time	Pos.	Expected Actions/Behavior	Comments
	HCO/ CO	(Step 6.4.10) OPEN desired Letdown orifice valve AOV-200A, AOV-200B, or AOV-202 AND MARK AOV's not opened N/A.	
		AOV-200A	
		AOV-200B	
		AOV-200	
	HCO/ CO	(Step 6.4.11) ADJUST LOW PRESS LTDN PRESS PCV-135 to achieve Letdown pressure of -250 psig on PI-135.	
	HCO/ CO	(Step 6.4.12) PLACE LOW PRESS LTDN PRESS, PCV-135 IN AUTO.	
	HCO/ CO	(Step 6.4.13) PLACE NRHX LTDN OUTLET TEMP (TI-130) TCV-130 in AUTO at the setpoint recorded in Step 5.4.	**Examiner NOTE:** At the discretion of the Lead Examiner move to Event #3.
	HCO/ CO	(Step 6.4.14) PLACE Pressurizer level control (Charging Pump) to AUTO.	
ER-INST.1, REACTOR PROTECTION BISTABLE DEFEAT AFTER INSTRUMENTATION LOOP FAILURE			
	HCO	(Step 6.4.6) WHEN PRZR level is restored to normal, THEN place an operating charging pump controller in AUTO.	
	HCO	(Step 6.3.6) Open associated block valve closed in step 4.4.3	**NOTE:** No Block Valve was Closed.
	CRS	(Step 6.4.7) Check the following ITS Sections for LCOs:	
		• Section 3.3.1, Table 3.3.1-1, Function 8	
		• Section 3.3.3, Table 3.3.3-1, Function 2	

Op Test No.: N2014-301 Scenario # 2 Event # 2 Page 21 of 47

Event Description: **PZR Level Channel 427 fails LOW**

Time	Pos.	Expected Actions/Behavior	Comments
		• Section 3.4.9	
	CRS	(Step 6.4.8) GO TO Step 6.15.	
	HCO	(Step 6.15.1) IF necessary, VERIFY an operable channel is selected for the affected recorder.	
	HCO	(Step 6.15.2) Verify the following systems in AUTO if desired: ○ Rod Control	
	CO	○ Turbine EH control	
	HCO	○ PRZR Pressure control • HC 431K • PRZR spray valves • PRZR heaters	
	HCO	○ PRZR level control	
	CO	○ Steam Dump (unless 1st stage pressure failed)	
	CO	○ MFW control	
	CO	○ S/G Atmos Relief Vlv Control	
	CRS	(Step 6.15.3) NOTIFY the following people: ○ Operations Supervision ○ STA ○ Work Week Manager	**NOTE:** The CRS may notify the SM/STA/WWM. **SIM DRIVER:** as **SM/STA/WWM**, acknowledge.
	CRS	(Step 6.15.4) REFER to the following for Notification Requirements:	**NOTE:** The CRS may ask the SM. **SIM DRIVER:** as **SM**, acknowledge.
		CNG-NL-1.01-1004, REGULATORY REPORTING	
		OPG-NOTIFICATION, REQUIRED NOTIFICATIONS TO THE PSC/PIO/CEG SENIOR MANAGEMENT/OPERATIONS MANAGEMENT	

Op Test No.: N2014-301 Scenario # 2 Event # 2 Page 22 of 47

Event Description: **PZR Level Channel 427 fails LOW**

Time	Pos.	Expected Actions/Behavior	Comments
			NOTE: The CRS will address the Technical Specifications.
TECHNICAL SPECIFICATION 3.3.1, REACTOR TRIP (RTS) INSTRUMENTATION			
	CRS	LCO 3.3.1 The RTS instrumentation for each Function in Table 3.3.1-1 shall be OPERABLE.	
		APPLICABILITY: According to Table 3.3.1-1 (Function 8)	
		ACTIONS	
		CONDITION / REQUIRED ACTION / COMPLETION TIME	**NOTE:** Function 8 is affected.
		A. One or more functions with one channel inoperable. / A.1 Enter the Condition referenced in Table 3.3.1-1 for the channel(s). / Immediately	
		D. As required by Required Action A.1 and referenced by Table 3.3.1-1 / D.1 Place channel in trip / 6 hours	
TECHNICAL SPECIFICATION 3.4.9, PRESSURIZER			
	CRS	LCO 3.4.9: The pressurizer shall be OPERABLE.	
	CRS	APPLICABILITY: modes 1, 2 and 3.	

Op Test No.: N2014-301 Scenario # 2 Event # 2 Page 23 of 47

Event Description: **PZR Level Channel 427 fails LOW**

Time	Pos.	Expected Actions/Behavior			Comments
		CONDITION	REQUIRED ACTION	COMPLETION TIME	**NOTE:** The CRS will identify that the crew was in this TS LCO when the Heaters tripped on low pressurizer level, and out of this TS LCO when the heaters were reset.
		B. Pressurizer heaters capacity not within limits.	B.1 Be in MODE 3. AND B.2 Be in MODE 4.	6 hours. 12 hours.	
					NOTE: The CRS may address LCO 3.3.3, but determine that this TS is met using in-service instruments.
At the discretion of the Lead Examiner move to Event #3.					

Op Test No.: N2014-301	Scenario # 2	Event # 3	Page 24 of 47
Event Description:	**Turbine Control Valve CV-L4 Drifts Closed**		

Then, turbine control valve CVL-4 will drift closed. The crew will respond per AP-TURB.2, Turbine Load Rejection, begin a load reduction to less than 50% power using AP-TURB.5, Rapid Load Reduction.

SIM DRIVER Instructions: **Operate Trigger #3 (TUR11B (20 over 20 seconds))**

Indications Available:

- MW lowering on turbine
- CLV-4 closing/closes
- Rx Power lowering (7-8% change)
- Tref lowering
- Rods stepping in to lower Tavg
- RCS Pressure lowering during transient
- MCB Annunciator AR-G-15, STEAM DUMP ARMED
- Steam dumps cycle

Time	Pos.	Expected Actions/Behavior	Comments
		AP-TURB.2, TURBINE LOAD REJECTION	
	HCO	(Step 1*) Montor RCS Tavg	
		• Tavg-GREATER THAN 545°F	
		• Tavg-LESS THAN 579°F	
	CO	(Step 2) Check Turbine Valves:	
		• Turbine stop valves and reheat steam valves-OPEN	
		• Turbine control valves-ALL VALVES AT APPROXIMATELY THE SAME POSITION	
	CRS	(Step 2 RNO) If failure of turbine control valves indicated, THEN reduce power to less than 50% (refer to AP-TURB.5, RAPID LOAD REDUCTION).	**NOTE:** The CRS may use both AP-TURB.2 and 5 simultaneously during the downpower.

Op Test No.: N2014-301 Scenario # 2 Event # 3 Page 25 of 47

Event Description: **Turbine Control Valve CV-L4 Drifts Closed**

Time	Pos.	Expected Actions/Behavior	Comments
			NOTE: The CRS will go to AP-TURB.5 and conduct Rapid Load Reduction Brief prior to commencing load reduction.
AP-TURB.5, RAPID LOAD REDUCTION			
	HCO	(Step 1) Initiate Load Reduction a) Verify rods in AUTO	
	CO	b) Reduce turbine load in Auto as follows:	
		• Place Turbine EH Control in OPER PAN., IMP PRESS IN, if desired.	**NOTE:** OPER PAN IMP PRESS IN is desired.
		• Select desired rate on thumbwheel	**NOTE:** The operator will select 1%/Min.
		• Reduce the setter to the desired load	
		• Depress the GO button	
	HCO	c) Initiate boration at the rate determined in OPG-REACTIVITY-CALC	**NOTE:** The HCO will initiate a boration.
	HCO	d) Place PRZR backup heaters switch to ON	
	HCO	(*Step 2) Monitor RCS Tavg • Tavg- GREATER THAN 545°F • Tavg- LESS THAN 579°F	**NOTE:** This is a Continuous Action. The CRS will make both board operators aware.
	HCO	(Step 3) Adjust Boric Acid Addition Rate As Necessary To (refer to OPG-REACTIVITY-CALC): • Maintain rods above the insertion limit • Match Tavg and Tref • Compensate for Xenon	

Op Test No.: N2014-301 Scenario # 2 Event # 3 Page 26 of 47

Event Description: **Turbine Control Valve CV-L4 Drifts Closed**

Time	Pos.	Expected Actions/Behavior	Comments
	HCO	(*Step 4) Monitor PRZR Pressure- TRENDING TO 2235 PSIG IN AUTO	**NOTE:** This is a Continuous Action. The CRS will make both board operators aware.
	CO	(*Step 5) Monitor MFW Regulating Valves- RESTORING S/G LEVEL TO 52% IN AUTO	**NOTE:** This is a Continuous Action. The CRS will make both board operators aware.
	HCO	(*Step 6) Monitor PRZR Level- TRENDING TO PROGRAM IN AUTO CONTROL	**NOTE:** This is a Continuous Action. The CRS will make both board operators aware.
	CO	(Step 7) Check IA Available To CNMT	
		IA pressure - GREATER THAN 60 PSIG	
		Instr Air to CNMT Isol Valve, AOV-5392 - OPEN	
	HCO/ CO	(Step 8) Check Steam Dump Status:	
		Annunciator G-15, STEAM DUMP ARMED - LIT	**NOTE:** The Steam Dump System will be ARMED.
		Steam dump operating properly in AUTO	
	CO	(Step 9) Check Hotwell Level:	
		Hotwell level controller in AUTO	
		Controller demand LESS THAN 60%	
		Hotwell level at setpoint	
	CO	(Step 9 RNO) IF controller demand approaching 70% (Large Reject Valve Opens), THEN place controller in Manual and control level.	
	CRS/ CO	(Step 10) Check If Condensate Booster Pumps Should Be Secured	

Op Test No.: N2014-301 Scenario # 2 Event # 3 Page 27 of 47

Event Description: **Turbine Control Valve CV-L4 Drifts Closed**

Time	Pos.	Expected Actions/Behavior	Comments
		Condensate booster pumps – 2 PUMPS RUNNING	**NOTE:** There are two Condensate Booster Pumps running.
		Verify the following:	
		Verify reactor power is 70%-75%	**NOTE:** Rx power is expected to be > 75%.
	CRS	(Step 10.b RNO) Go to Step 18.	
	CRS	(Step 18) Evaluate Plant Status	
		IF load was reduced more than 15% RTP in one hour, THEN notify RP to obtain primary samples required by ITS LCO 3.4.16	**NOTE:** The CRS may call Chemistry to address the samples. If so, **SIM DRIVER** acknowledge as Chemistry (Note that Sample Coolers were previously isolated).
			NOTE: The CRS address remaining steps of AP-TURB.2 while continuing the power reduction.

(While still in downpower) At the discretion of the Lead Examiner move to Event #4.

Op Test No.:	N2014-301	Scenario #	2	Event #	4	Page	28	of 47
Event Description:	**B FRV fails AS-IS (Manual Control Available)**							

During the load reduction, a failure of the B FRV to control in AUTO. The operator will respond per AR-G-5, S/G/ B LEVEL DEVIATION ±7%, or upon observing an abnormally high level in the B Steam Generator and control the B FRV manually.

SIM DRIVER Instructions: **Operate Trigger #4 (FDW07C (Current Controller Output in %))**

Indications Available:

- Feed flow in the B SG will stabilize during the downpower
- B SG level starts to rise.
- MCB Annunciator G-22, ADFCS SYSTEM TROUBLE
- MCB Annunciator G-5, S/G LEVEL DEVIATION ±7%

Time	Pos.	Expected Actions/Behavior	Comments
			NOTE: The CO will dispatch the AO to the relay room to check the ADFCS Panel. **SIM DRIVER:** as AO report that ADFCS Panel indicates "Control Card Failure" after 3 minutes.
AR-G-5, S/G LEVEL DEVIATION ±7%			
	CO	(Step 4.1) PERFORM a channel check of the following:	
		• LI-471	
		• LI-472	
		• LI-473	
	CO	(Step 4.2) IF Main Feedwater is supplying the S/G, THEN PERFORM the following as necessary:	
		• PLACE SG B MFW REG VLV HCV-476 in MANUAL.	**NOTE:** The CO will take manual control of the B FRV, and control B S/G level manually.
		• PLACE FW FLOW LOOP B BYPASS VLV HCV-481 in • MANUAL.	
		• CONTROL SG level manually.	
At the discretion of the Lead Examiner move to Events #5-8.			

Op Test No.: N2014-301	Scenario # 2	Event # 5, 6, 7 & 8	Page 29 of 47
Event Description:	**MSLB Downstream of MSIVs with MSIVs Stuck OPEN / RPS fails to Trip Rx in AUTO/Manual Pushbutton / Steam Break Degrades Creating PTS Concern / Loss of Offsite Power**		

Subsequently, a major steamline break will occur in the Turbine Building downstream of the MSIVs. Both MSIVs will fail to close automatically in response to manual attempts from the MCB. The reactor will fail to trip automatically and manual pushbutton will not work, requiring opening of normal supply breakers for Bus 13 and Bus 15 to deenergize rod drive MG sets to trip the reactor. The crew will enter E-0, Reactor Trip or Safety Injection. The crew will ultimately transition to E-2, Faulted S/G Isolation. Since both MSIVs are failed open, and with a downstream break, both SGs will be affected and their pressures will lower concurrently. Eventually, the crew will transition to ECA-2.1, Uncontrolled Depressurization of Both Steam Generators. After the operator throttles AFW flow in ECA-2.1, the leak will increase in magnitude, resulting in an Orange Path on RCS Integrity. Simultaneously the event will be complicated by a Loss of Offsite Power. Both Emergency Diesel Generators will start and automatically repower the respective Emergency Busses, and the operator will need to re-establish AFW flow of 50 gpm to each Steam Generator. The crew will implement FR-P.1, Response to Imminent Pressurized Thermal Shock Condition, when RCS cold leg temperatures reach 311°F. In FR-P.1 the crew will stop the SI pumps and the RHR pumps. The scenario will be terminated after the SI and RHR pumps are secured.

SIM DRIVER Instructions: Operate Trigger #5 (STM03 (1E+6), FDS-1-237 [15 seconds delayed])

Indications Available:

- Numerous MCB Annunciators.
- Pressurizer pressure and level start to lower.
- RCS Tavg starts to lower.
- Steam break heard in Control Room.
- Intermediate Building Fire alarm (15 seconds delayed).

Time	Pos.	Expected Actions/Behavior	Comments
		E-0, REACTOR TRIP OR SAFETY INJECTION	
	HCO	(Step 1) Verify Reactor Trip:	**Immediate Action**
		• At least one train of reactor trip breakers – OPEN	
		• Neutron flux - LOWERING	**NOTE:** The reactor will NOT trip automatically or via manual pushbutton.
		• MRPI indicates – ALL CONTROL AND SHUTDOWN RODS ON BOTTOM	

Op Test No.: N2014-301 Scenario # 2 Event # 5, 6, 7 & 8 Page 30 of 47

Event Description: **MSLB Downstream of MSIVs with MSIVs Stuck OPEN / RPS fails to Trip Rx in AUTO/Manual Pushbutton / Steam Break Degrades Creating PTS Concern / Loss of Offsite Power**

Time	Pos.	Expected Actions/Behavior	Comments
	HCO	(Step 1 RNO) Manually trip reactor.	**Immediate Action**
		• IF reactor trip breakers NOT open, THEN perform the following:	
		• Open Bus 13 and Bus 15 normal feed breakers.	
		• Verify rod drive MG sets tripped.	
		• Close Bus 13 and Bus 15 normal feed breakers.	
		• Reset lighting breakers.	
		• IF the reactor will NOT trip OR IF power range NIS indicates greater than 5%, THEN	**NOTE:** The reactor will Trip when the Rod Drive MG Sets are de-energized.

CRITICAL TASK

1. Manually trip the reactor from the control room before transition to FR-S.1

Safety Significance: Failure to manually trip the reactor causes a challenge to the subcriticality CSF beyond that irreparably introduced by the postulated conditions. Additionally, it constitutes an "incorrect performance that necessitates the crew taking action which complicates the event mitigation strategy that demonstrates the inability by the crew to recognize a failure of the automatic actuation of the RPS.

	CO	(Step 2) Verify Turbine Stop Valves – CLOSED	**Immediate Action**
	CO	(Step 3) Verify Both Trains of AC Emergency Busses Energized to at Least 440 VOLTS:	**Immediate Action**
		• Bus 14 and Bus 18	
		• Bus 16 and Bus 17	
	HCO	(*Step 4) Check if SI is Actuated:	**Immediate Action**

Op Test No.: N2014-301 Scenario # 2 Event # 5, 6, 7 & 8 Page 31 of 47

Event Description: **MSLB Downstream of MSIVs with MSIVs Stuck OPEN / RPS fails to Trip Rx in AUTO/Manual Pushbutton / Steam Break Degrades Creating PTS Concern / Loss of Offsite Power**

Time	Pos.	Expected Actions/Behavior	Comments
		• Any SI Annunciator – LIT	**NOTE:** Based on Pressurizer Pressure, the HCO may Manually actuate SI and CI. If Not, auto actuation will occur.
		• SI sequencing – BOTH TRAINS STARTED.	
	HCO/ CO	Foldout Page	**NOTE:** The crew will monitor these conditions throughout the performance of E-0.
		RCP TRIP CRITERIA	
		LOSS OF SW CRITERIA	
		AFW SUPPLY SWITCHOVER CRITERION	
		SFP COOLING CRITERIA	**NOTE:** The CRS may dispatch an AO to address the status of the SFPCS. If so, **SIM DRIVER** acknowledge as AO, and report in 5 Minutes that the SFPCS is operating normally.
	HCO	(*Step 5) Verify CNMT Spray Not Required:	
		• Annunciator A-27, CNMT SPRAY – EXTINGUISHED	
		• CNMT pressure- LESS THAN 28 PSIG	**NOTE:** Containment Pressure will be normal (The Steam Break is outside Containment).
	CRS	(Step 6) Direct Operator to Perform ATT-27.0, ATTACHMENT AUTOMATIC ACTION VERIFICATION	

Op Test No.: N2014-301 Scenario # 2 Event # 5, 6, 7 & 8 Page 32 of 47

Event Description: **MSLB Downstream of MSIVs with MSIVs Stuck OPEN / RPS fails to Trip Rx in AUTO/Manual Pushbutton / Steam Break Degrades Creating PTS Concern / Loss of Offsite Power**

Time	Pos.	Expected Actions/Behavior	Comments
			NOTE: The CRS will hand off ATT-27.0 to either the HCO or the CO, and continue with the other operator in E-0. **Examiner** following operator performing ATT-27.0 continue below. **Examiner** following operator NOT performing ATT-27.0 continue at **Page 35**.
E-0, REACTOR TRIP OR SAFETY INJECTION, ATTACHMENT 27.0, ATTACHMENT AUTOMATIC ACTION VERIFICATION			
	HCO/ CO	(Step 1) Verify SI and RHR Pumps Running:	
		• All SI pumps – RUNNING	
		• Both RHR pumps – RUNNING	
	HCO/ CO	(Step 2) Verify CNMT RECIRC Fans Running:	
		• All fans – RUNNING	
		• Charcoal filter dampers green status lights – EXTINGUISHED	
	HCO/ CO	(Step 3) Check If Main Steamlines Should Be Isolated:	
		• Any MSIV – OPEN	
		• Check CNMT pressure- LESS THAN 18 PSIG	
		• Check if ANY main steamlines should be isolated:	
		• Low Tavg (545°F) AND high steam flow (0.5x106 lb/hr) from either S/G	**NOTE:** Tavg will be LOW with Hi Steam Flow from both S/Gs.
		OR	

Op Test No.: N2014-301 Scenario # 2 Event # 5, 6, 7 & 8 Page 33 of 47

Event Description: **MSLB Downstream of MSIVs with MSIVs Stuck OPEN / RPS fails to Trip Rx in AUTO/Manual Pushbutton / Steam Break Degrades Creating PTS Concern / Loss of Offsite Power**

Time	Pos.	Expected Actions/Behavior	Comments
		• High-High steam flow (4.4x106 lb/hr) from either S/G	
		• Verify MSIV closed on the affected S/G(s)	**NOTE:** The HCO/CO will attempt to close the MSIVs however, they will NOT Close.
	HCO/ CO	(Step 3.d RNO) Manually close valves.	
	HCO/ CO	(Step 4) Verify MFW Isolation:	
		• MFW pumps – TRIPPED	
		• MFW Isolation valves – CLOSED	
		• S/G A, AOV-3995	
		• S/G B, AOV-3994	
		• S/G Blowdown and sample valves - CLOSED	
	HCO/ CO	(Step 5) Verify At Least Two SW Pumps - RUNNING	
	HCO/ CO	(Step 6) Verify CI and CVI:	
		• CI and CVI annunciators - LIT	
		• Annunciator A-26, CNMT ISOLATION	
		• Annunciator A-25, CNMT VENTILATION ISOLATION	
		• Verify CI and CVI valve status lights – BRIGHT	
		• CNMT RECIRC fan coolers SW outlet valve status lights - BRIGHT	
		• FCV-4561	
		• FCV-4562	

Op Test No.: N2014-301 Scenario # 2 Event # 5, 6, 7 & 8 Page 34 of 47

Event Description: **MSLB Downstream of MSIVs with MSIVs Stuck OPEN / RPS fails to Trip Rx in AUTO/Manual Pushbutton / Steam Break Degrades Creating PTS Concern / Loss of Offsite Power**

Time	Pos.	Expected Actions/Behavior	Comments
		• Letdown orifice valves - CLOSED	
		• AOV-200A	
		• AOV-200B	
		• AOV-202	
	HCO/ CO	(Step 7) Check CCW System Status:	
		• Verify CCW pump – AT LEAST ONE RUNNING	
	HCO/ CO	(Step 8) Verify SI and RHR Pump Flow:	
		• SI flow indicators – CHECK FOR FLOW	
		• RHR flow indicator – CHECK FOR FLOW	
		(Step 7b RNO) IF RCS pressure less than 150 psig…….	**NOTE:** RCS Pressure is > 150 psig.
	HCO/ CO	(Step 9) Verify SI Pump and RHR Pump Emergency Alignment:	
		• RHR pump discharge to Rx vessel deluge - OPEN	
		• MOV-852A	
		• MOV-852B	
		• Verify SI pump C – RUNNING	
		• Verify SI pump A - RUNNING	
		• Verify SI pump B - RUNNING	
		• Verify SI pump C discharge valves - OPEN	
		• MOV-871A	
		• MOV-871B	

Op Test No.: N2014-301 Scenario # 2 Event # 5, 6, 7 & 8 Page 35 of 47

Event Description: **MSLB Downstream of MSIVs with MSIVs Stuck OPEN / RPS fails to Trip Rx in AUTO/Manual Pushbutton / Steam Break Degrades Creating PTS Concern / Loss of Offsite Power**

Time	Pos.	Expected Actions/Behavior	Comments
	HCO/ CO	(Step 10) Verify CREATS Actuation:	
		• At least one damper in each flowpath - CLOSED	
		• Normal Supply Air	
		• Normal Return Air	
		• Lavatory Exhaust Air	
		• CREATS fans – BOTH RUNNING	
	HCO/ CO	(Step 11) Verify CI and CVI During a Fire Event	
		A confirmed fire has occurred in the control complex or cable tunnel (fire systems S05, S06, S08, Z05, Z18, or Z19).	
		(Step 11 RNO) Go to END	
E-0, REACTOR TRIP OR SAFETY INJECTION			
			Examiner following operator NOT performing ATT-27.0 continue **HERE**.
	HCO/ CO	(Step 7) Verify Both MDAFW Pumps Running	
	HCO/ CO	(Step 8) Verify AFW Valve Alignment:	
		• AFW flow – INDICATED TO BOTH S/G(s)	
		• AFW flow from each MDAFW pump – LESS THAN 230 GPM	
	HCO/ CO	(*Step 9) Monitor Heat Sink:	

Op Test No.: N2014-301 Scenario # 2 Event # 5, 6, 7 & 8 Page 36 of 47

Event Description: **MSLB Downstream of MSIVs with MSIVs Stuck OPEN / RPS fails to Trip Rx in AUTO/Manual Pushbutton / Steam Break Degrades Creating PTS Concern / Loss of Offsite Power**

Time	Pos.	Expected Actions/Behavior	Comments
		• Check S/G narrow range level – GREATER THAN 7% [25% ADVERSE CNMT] in any S/G	
	CO	(Step 9.a RNO) Perform the following:	
		Verify total AFW flow - GREATER THAN 200 GPM	**NOTE:** AFW flow is expected to be 200 gpm.
		IF total AFW is less than 200 gpm, THEN....	
	CRS	Go to Step 10.	
	CO	(Step 10) Check If TDAFW Pump Can Be Stopped:	
		• Both MDAFW pumps – RUNNING	**NOTE:** Both of the AFW Pumps are running.
		• PULL STOP TDAFW pump steam supply valves	
		• MOV-3504A	
		• MOV-3505A	
	HCO	(Step 11) Check CCW Flow to RCP Thermal Barriers:	
		• Annunciator A-7, RCP 1A CCW RETURN HI TEMP OR LO FLOW EXTINGUISHED	
		• Annunciator A-15, RCP 1B CCW RETURN HI TEMP OR LOW FLOW - EXTINGUISHED	
	HCO	(*Step 12) Monitor RCS Tavg – STABLE AT OR TRENDING TO 547°F	**NOTE:** Tavg is ≈400°F and lowering.
	HCO	(Step 12 RNO) If temperature less than 547°F and lowering, THEN perform the following:	
		• Stop dumping steam.	

Op Test No.: N2014-301 Scenario # 2 Event # 5, 6, 7 & 8 Page 37 of 47

Event Description: **MSLB Downstream of MSIVs with MSIVs Stuck OPEN / RPS fails to Trip Rx in AUTO/Manual Pushbutton / Steam Break Degrades Creating PTS Concern / Loss of Offsite Power**

Time	Pos.	Expected Actions/Behavior	Comments
		• Ensure reheater steam supply valves are closed.	
		• IF cooldown continues, THEN control total feed flow between 200 gpm to 230 gpm until narrow range level greater than 7% [25% adverse CNMT] in at least one S/G.	
		• WHEN S/G level greater than 7% [25% adverse CNMT] in one S/G, THEN limit feed flow to that required to maintain level in at least one S/G.	
		• IF cooldown continues, THEN close both MSIVs.	**NOTE:** The MSIVs have failed OPEN, and cannot be closed.
	HCO	(Step 13) Check PRZR PORVs and Spray Valves:	
		• PORVs – CLOSED	
		• Auxiliary Spray Valve (AOV-296) – CLOSED	
		• Check PRZR pressure – LESS THAN 2260 PSIG	
		• Normal PRZR spray valves - CLOSED	
		• PCV-431A	
		• PCV-431B	
	HCO	(Step 14) Monitor RCP Trip Criteria:	
		• RCP status – ANY RCP RUNNING	**NOTE:** The RCPs are both running.
		• SI pumps - AT LEAST TWO RUNNING	
		• RCS pressure minus maximum S/G pressure - LESS THAN 210 psi [240 psi adverse CNMT]	**NOTE:** The RCP trip criteria is NOT met.
	CRS	(Step 14c RNO) Go to Step 15.	

Op Test No.: N2014-301 Scenario # 2 Event # 5, 6, 7 & 8 Page 38 of 47

Event Description: **MSLB Downstream of MSIVs with MSIVs Stuck OPEN / RPS fails to Trip Rx in AUTO/Manual Pushbutton / Steam Break Degrades Creating PTS Concern / Loss of Offsite Power**

Time	Pos.	Expected Actions/Behavior	Comments
	CO	(Step 15) Check If S/G Secondary Side Is Intact: • Pressure in both S/Gs- STABLE OR RISING • Pressure in both S/Gs- GREATER THAN 110 PSIG	**NOTE:** The A SG is depressurizing in an uncontrolled manner (≈200 psig and lowering).
	CRS	(Step 15 RNO) IF any S/G pressure lowering in an uncontrolled manner OR completely depressurized, THEN go to E-2, FAULTED STEAM GENERATOR ISOLATION, Step 1.	**NOTE:** While Steam pressure in both SGs is greater than 110 psig, both SG pressures are lowering.
			NOTE: The CRS will go to E-2.
			NOTE: The CRS will likely conduct an Alignment Brief.
E-2, FAULTED STEAM GENERATOR ISOLATION			
	HCO/ CO	Foldout Page	**NOTE:** The crew will monitor these conditions throughout the performance of E-2.
		LOSS OF SW CRITERIA	
	CO	(Step 1) Check MSIV of Faulted S/G(s) - CLOSED	**NOTE:** BOTH MSIVs are OPEN.
	CO	(Step 1 RNO) Manually close valve.	
	CRS	IF valve will NOT close from MCB, THEN dispatch AO with locked valve key to locally closed faulted S/G(s) MSIV as follows:	**NOTE:** The CRS will dispatch an AO to address the status of the MSIVs. If so, **SIM DRIVER** acknowledge as AO, after 5 minutes, report that steam in the local spaces is preventing access.

Op Test No.: N2014-301 Scenario # 2 Event # 5, 6, 7 & 8 Page 39 of 47

Event Description: **MSLB Downstream of MSIVs with MSIVs Stuck OPEN / RPS fails to Trip Rx in AUTO/Manual Pushbutton / Steam Break Degrades Creating PTS Concern / Loss of Offsite Power**

Time	Pos.	Expected Actions/Behavior	Comments
		• S/G A	
		• close IA to MSIV, V-5408A	
		• open vent valves V-5471 AND V-5473	
		• S/G B	
		• close IA to MSIV, V-5409B	
		• open vent valves V-5472 AND V-5474	
	CO	(Step 2) Check If Any S/G Secondary Side Is Intact:	
		• Check pressure in S/G A- STABLE OR RISING	**NOTE:** The A SG is depressurized.
		OR	
		• Check pressure in S/G B – STABLE OR RISING	
	CO	(Step 2 RNO) IF both S/G pressures lowering in an uncontrolled manner, THEN go to ECA-2.1, UNCONTROLLED DEPRESSURIZATION OF BOTH STEAM GENERATORS, Step 1.	
			NOTE: The CRS will likely conduct an Alignment Brief.
ECA-2.1, UNCONTROLLED DEPRESSURIZATION OF BOTH STEAM GENERATORS			
	HCO/ CO	Foldout Page	**NOTE:** The crew will monitor these conditions throughout the performance of ECA-2.1.
		LOSS OF SW CRITERIA	
		SI REINITIATION CRITERIA	
		E-2 TRANSITION CRITERIA	
		COLD LEG RECIRCULATION SWITCHOVER CRITERION	

Op Test No.: N2014-301 Scenario # 2 Event # 5, 6, 7 & 8 Page 40 of 47

Event Description: **MSLB Downstream of MSIVs with MSIVs Stuck OPEN / RPS fails to Trip Rx in AUTO/Manual Pushbutton / Steam Break Degrades Creating PTS Concern / Loss of Offsite Power**

Time	Pos.	Expected Actions/Behavior	Comments
		AFW SUPPLY SWITCHOVER CRITERION	
		E-3 TRANSITION CRITERIA	
	CO	(Step 1) Check Secondary Pressure Boundary:	
		a. Verify all of the following:	
		• MSIVs - CLOSED	**NOTE:** Both MSIVs are failed OPEN.
		• MFW flow control valves - CLOSED	
		• MFW regulating valves	
		• MFW bypass valves	
		• MFW pump discharge valves - CLOSED	**NOTE:** The CO will re-energize MCC A and B to re-power the MFW Pump Discharge Valves.
		• S/G blowdown and sample valves - CLOSED	
		• TDAFW pump steam supply valves – PULL STOP	
		• TDAFW pump flow control valves - CLOSED	
		• S/G ARVs - CLOSED	
	CRS	(Step 1 RNO) Manually close valves one loop at time. If valves can NOT be closed. THEN dispatch AO to locally isolate flowpaths, one at a time	**NOTE:** The CRS will dispatch an AO to address the status of the MSIVs. If so, **SIM DRIVER** acknowledge as AO, after 5 minutes, report that steam in the local spaces is preventing access.

Op Test No.: N2014-301 Scenario # 2 Event # 5, 6, 7 & 8 Page 42 of 47

Event Description: **MSLB Downstream of MSIVs with MSIVs Stuck OPEN / RPS fails to Trip Rx in AUTO/Manual Pushbutton / Steam Break Degrades Creating PTS Concern / Loss of Offsite Power**

Time	Pos.	Expected Actions/Behavior	Comments
Indications Available: • Numerous MCB Annunciators. • Control Room lights go dark. • Both Emergency Diesels start and repower their respective ESF Busses.			
			NOTE: Since SI is NOT reset, the AFW valves will OPEN fully on Sequencer actuation requiring the operator to re-throttle AFW flow to 50 gpm per SG.
			Examiner NOTE: The crew will continue on in ECA-2.1 until an Orange Path develops on RCS Integrity, at which time the crew will transition to FR-P.1.
			NOTE: A Red path on Heat Sink will exist because the operator has throttled AFW flow to 50 gpm per SG. However, FR-H.1 will NOT be addressed because the Red Path exists due to operator action.
FR-P.1, RESPONSE TO IMMINENT PRESSURIZED THERMAL SHOCK CONDITION			
	HCO/ CO	Foldout Page	**NOTE:** The crew will monitor these conditions throughout the performance of FR-P.1.
		LOSS OF SW CRITERIA	
	HCO	(Step 1) Check RCS Pressure – GREATER THAN 300 PSIG [350 PSIG adverse CNMT]	**NOTE:** RCS pressure is > 300 psig.
	HCO	(step 2) Check if RCS Cold Leg temperatures –STABLE OR RISING	**NOTE:** Cold Leg temperatures will be lowering.

Op Test No.: N2014-301 Scenario # 2 Event # 5, 6, 7 & 8 Page 43 of 47

Event Description: **MSLB Downstream of MSIVs with MSIVs Stuck OPEN / RPS fails to Trip Rx in AUTO/Manual Pushbutton / Steam Break Degrades Creating PTS Concern / Loss of Offsite Power**

Time	Pos.	Expected Actions/Behavior	Comments
	CO	(Sep 2 RNO) Try to stop RCS cooldown:	
		Ensure S/G ARV' closed	
		Close both S/G MSIVs.	**NOTE:** Both MSIVs have failed OPEN. **NOTE:** The CRS may dispatch an AO. If so, **SIM DRIVER** acknowledge as AO, after 5 minutes, report that steam in the local spaces is preventing access.
	CO	Ensure MFW flow control valves	
		• MFW regulating valves	
		• MFW bypass valves	
		Ensure MFW pumps are tripped	
		Ensure reheater steam supply valves are closed.	
		IF S/G pressure less than condensate pressure, THEN stop all condensate pumps.	**NOTE:** The CO may stop the Condensate Pumps.
		IF RHR system in service, THEN	**NOTE:** RHR is NOT in service.
	CO	Control total feed flow to non-faulted S/G(s) greater than 200 gpm until narrow range level greater than 7% [25% adverse CNMT] in at least one non-faulted S/G. WHEN S/G level greater than 7% [25% adverse CNMT] in one non-faulted S/G, THEN limit feed flow to stop RCS cooldown.	**NOTE:** Both SGs are faulted.
	CO	(Step 3) Check if any S/G Secondary is intact:	
		o Pressure in both S/G's-STABLE or Rising	
		o Pressure in both S/G's Greater than 110 PSIG	

Op Test No.: N2014-301 Scenario # 2 Event # 5, 6, 7 & 8 Page 44 of 47

Event Description: **MSLB Downstream of MSIVs with MSIVs Stuck OPEN / RPS fails to Trip Rx in AUTO/Manual Pushbutton / Steam Break Degrades Creating PTS Concern / Loss of Offsite Power**

Time	Pos.	Expected Actions/Behavior	Comments
	CO	(Step 3 RNO) Minimize cooldown from faulted S/G's.	
		Close faulted S/G's TDAFW pump steam supply valves • S/G A, MOV-3505A • S/G B, MOV-3504A	**NOTE:** This action has already been taken.
		IF BOTH S/Gs faulted, THEN control AFW feed flow to 50 GPM to each S/G.	**NOTE:** Both SGs are faulted.
		If ANY S/G NOT FAULTED, THEN	**NOTE:** Both SGs are faulted.
	HCO	(Step 4) Check PRZR PORV Block Valves:	
		Power to PORV block valves-AVAILABLE	
		Block valves-AT LEAST ONE OPEN.	
	HCO	(Step 5) Check PRZR PORV Status:	
		Check Reactor Vessel Overpressure Protection is on service.	**NOTE:** LTOPs is NOT in service.
	CRS	(Step 5 RNO) Go to step 5d.	
	HCO	(Step 5.d) PRZR pressure –LESS THAN 2335 psig	
		Verify PRZR PORVs -CLOSED	
	HCO	(Step 6) Check if SI Pumps-ANY RUNNING	**NOTE:** All three SI Pumps are running.
	HCO	(Step 7) Check if SI Can be terminated:	

Op Test No.: N2014-301 Scenario # 2 Event # 5, 6, 7 & 8 Page 45 of 47

Event Description: **MSLB Downstream of MSIVs with MSIVs Stuck OPEN / RPS fails to Trip Rx in AUTO/Manual Pushbutton / Steam Break Degrades Creating PTS Concern / Loss of Offsite Power**

Time	Pos.	Expected Actions/Behavior	Comments
		• RCS subcooling based on core exit T/Cs-GREATER THAN 50°F USING FIG-1.0, FIGURE MIN SUBCOOLING	**NOTE:** SI Termination Criteria will be met.
		• Check RVLIS Indication • Fluid Fraction (any RCP running)-GREATER THAN 84%	**NOTE:** RVLIS is at 100%.
	HCO	(Step 8) Reset SI	
	HCO	(Step 9) STOP SI AND RHR Pumps and Place in AUTO	

Terminate the Exam at the discretion of the Lead Examiner

SRO Examiner Perform Admin JPM A4b on CRS

TURNOVER SHEET for NRC Exam Scenario #2

Core Age: EOL 100% Power, Equilibrium Xe Outside Air Temp = 82°F Water Temp = 70°F	Procedure in Use:	ACTIONS/NOTES: • The plant is at 100% power (EOL), and has been at full power for 145 days. • The area has experienced thunderstorms over the last 6 hours, and this is expected to continue for the next 6 hours. • The B CNMT Spray pump has been declared INOPERABLE due to excessive inboard vertical vibration during STP-O-3-COMP-B surveillance test yesterday. Engineering is evaluating the data. A-52.4 submitted for ITS 3.6.6, 72 hour Action. • Letdown flow is on the 60 gpm Orifice. • The following Alarms are in: • J-25, SAFEGUARDS EQUIPMENT LOCKED OFF (B Cont Spray Pump OOS) • Protected equipment IAW OPG Protected Equipment.
Boron: 297 ppm BAST: 17,400 ppm RCS Activity: Normal	RCS LEAKAGE: (gpm) Total: .021 Identified: .003 Unidentified: .018	
Equipment Problems/OOS: See NOTES	*Planned Activities for Shift:* • None	Electrical System Operator Declarations None in effect

	BAST (gal)	RWST (gal)	1st hour dilution stabilization (gal RMW)	2nd hour dilution stabilization (gal RMW)
10% at 1% per minute	70	446	358	181
10% at 10% per hour	68	434	360	185
50% at 1% per minute	315	2039	2182	1264
50% at 10% per hour	273	1760	1038	591

TURNOVER SHEET for NRC Exam Scenario #2

A-52.4					
EQUIPMENT	**DATE/TIME OOS**	**LCO**	**TITLE**	**EXP DATE**	**ECD**
'B' Cont Spray Pump	Yesterday, 24hrs ago	3.6.6.A	CS system	72 hours	30 hours from now AM
A-52.12					
EQUIPMENT	**DATE/TIME OOS**	**TRM /ODCM**	**TITLE**	**EXP DATE**	**ECD**

PROGRAM: Ginna Operations Training

MODULE: 2014 Initial License Operator Training Class

TOPIC: NRC Simulator Exam

Scenario N2014-301-3

REFERENCES:

1. Technical Specification 3.7.5, Auxiliary Feedwater (AFW) System, Amendment 88
2. Technical Specification 3.1.7, Rod Position Indication, Amendment 114
3. O-6.9.2, Establishing and/or Transferring Offsite Power to Bus 12A/12B, Rev 02201
4. AR-E-14, LOSS B INSTR. BUS, Rev 12
5. ER-INST.3, Instrument Bus Power Restoration, Rev 01200
6. S-3.2E, Placing In or Removing From Service Normal Letdown/Excess Letdown, Rev 02700
7. AR-K-32, CV AIR DRYER LOW PRESS SG B/D TANK HIGH LEVEL, Rev 01000
8. Technical Specification 3.8.7, AC Instrument Bus Sources - Modes 1-4, Amendment 80
9. Technical Specification 3.8.9, Distribution Systems – Modes 1, 2, 3 and 4, Amendment 80
10. AR-F-2, PRESSURIZER HI PRESS 2310 PSI, Rev 11
11. AR-F-10, PRESSURIZER LO PRESS 2205 PSI, Rev 10
12. AP-PRZR.1, Abnormal Pressurizer Pressure, Rev 01700
13. ER-INST.1, Reactor Protection Bistable Defeat After Instrumentation Loop Failure, Rev 03605
14. Technical Specification 3.4.1, RCS Pressure, Temperature, and Flow Departure From Nucleate Boiling (DNB) Limits, Amendment 80
15. Technical Specification 3.3.1, Reactor Trip System (RTS) Instrumentation, Amendment 112
16. Technical Requirement 3.4.3, Anticipated Transient Without Scram (ATWS) Mitigation, Rev Rev 31
17. AR-I-27, ROTOR ECCENTRICITY OR VIBRATION, Rev 01301
18. AP-TURB.3, Turbine Vibration, Rev 01700
19. AP-TURB.5, Rapid Load Reduction, Rev 01600
20. E-0, Reactor Trip and Safety Injection, Rev 04602
21. ATT-27.0, Attachment Automatic Action Verification, Rev 00300
22. E-1, Loss of Reactor or Secondary Coolant, Rev 04100
23. F-0.3, Heat Sink, Rev 4
24. FR-H.1, Response to Loss of Secondary Heat Sink, Rev 04002
25. ATT-5.1, Attachment SAFW, Rev 01002
26. ATT-22.0, Attachment Restoring Feed Flow, Rev 00600
27. E-2, Faulted Steam Generator Isolation, Rev 01301

Validation Time: 108 Minutes

Author: David Lazarony, Essential Training & Consulting, LLC

Facility Review:

Rev. 090514

Facility:	**Ginna**	Scenario No.: **3**	Op Test No.: **N2014-301**
Examiners:		Operators:	(SRO)
			(RO)
			(BOP)

Initial Conditions:	The plant is at 48% power (MOL). The plant power was reduced several days ago due to a malfunction on the A MFW Pump. Corrective Maintenance has been completed, and the pump is running for retest. RG&E Energy Control Center has requested that the electric plant be aligned to a 0/100 configuration on circuit 7T to allow the RG&E personnel to perform an insulator inspection on the 767 Line. The 767 line will remain OPERABLE throughout the inspection.
Turnover:	The following equipment is Out-Of-Service: The B AFW Pump is OOS for Bearing Replacement. A-52.4 submitted for ITS 3.6.6, 7 day Action. MRPI for Rod G3 indicates on the bottom, however, this is a confirmed instrumentation problem (I&C is working).

Event No.	Malf. No.	Event Type*	Event Description
1	NA	N-BOP N-SRO	Shift Electric Plant
2	EDS07B	C-RO C-BOP C(TS)-SRO	Loss of B Instrument Bus
3	PZR02D	I-RO I-BOP I(TS)-SRO	Pressurizer Pressure (PT-449) fails HIGH
4	TUR05E CND03A	R-RO C-BOP C-SRO	Main Turbine High Vibration/Downpower w/Hotwell Level Transmitter fails HIGH
5	FDW09A	M-RO M-BOP M-SRO	Feed Line Rupture Inside Containment
6	SIS02A SIS02B	NA	Safety Injection fails to actuate Automatically
7	RPS07K	NA	A AFW Pump to Auto Start/Trips after Manual Start
8	REM FDW32	NA	TDAFW Pump trips on Overspeed
9	OVR FDW42A FDW15B	NA	Standby AFW fails to function

* (N)ormal, (R)eactivity, (I)nstrument, (C)omponent, (M)ajor

Ginna 2014 NRC Scenario #3

The plant is at 48% power (MOL). The plant power was reduced several days ago due to a malfunction on the A MFW Pump. Corrective Maintenance has been completed, and the pump is running for retest. RG&E Energy Control Center has requested that the electric plant be aligned to a 0/100 configuration on circuit 7T to allow the RG&E personnel to perform an insulator inspection on the 767 Line. The 767 line will remain OPERABLE throughout the inspection.

The following equipment is Out-Of-Service: The B AFW Pump is OOS for Bearing Replacement. A-52.4 submitted for ITS 3.6.6, 7 day Action. MRPI for Rod G3 indicates on the bottom, however, this is a confirmed instrumentation problem (I&C is working).

Shortly after taking the watch, the operator will shift the Electric Line-up from 50/50 to 0/100 in accordance with O-6.9.2, Establishing and/or Transferring Offsite Power to Bus 12A/12B.

Shortly afterwards, a loss of the B Instrument Bus will occur. The operator will respond in accordance with AR-E-14, LOSS B INSTR. BUS. Power will be restored to the bus per guidance in ER-INST.3, Instrument Bus Power Restoration, which will include the isolation and re-establishment of Normal Letdown in accordance with S-3.2E, Placing In or Removing From Service Normal Letdown/Excess Letdown. The operator will address AR-K-32, CV AIR DRYER LOW PRESS SG B/D TANK HIGH LEVEL, while restoring from the transient. The operator will address Technical Specification 3.8.7, AC Instrument Bus Sources Modes 1-4, and 3.8.9, Distribution Systems – Modes 1, 2, 3 and 4.

After this, the controlling Pressurizer Pressure Transmitter will fail HIGH, causing the Spray Valves to open. The operator will respond in accordance with AR-F-2, PRESSURIZER HIGH PRESS 2310 PSI and AR-F-10, PRESSURIZER LO PRESS 2205 PSI, and enter AP-PZR.1, Abnormal PZR Pressure. AP-PZR.1 will refer the operator to ER-INST.1, Reactor Protection Bistable Defeat After Instrumentation Loop Failure, for the defeat of PT-449. The operator will address Technical Specification 3.4.1, RCS Pressure, Temperature, and Flow Departure From Nucleate Boiling (DNB) Limits; 3.3.1, Reactor Trip System (RTS) Instrumentation; and TRM-3.4.3, Anticipated Transient Without Scram (ATWS) Mitigation.

Following this, a turbine high vibration condition on Bearing #5 will develop within about 60 seconds. The operator will respond in accordance with AR-I-27, ROTOR ECCENTRICITY OR VIBRATION; and enter AP-TURB.3, Turbine Vibration; and then AP-TURB.5, Rapid Downpower. The operator will need to lower the Turbine Load to stabilize the vibrations. During the load reduction Hotwell Level Transmitter will fail HIGH. The operator will need to manually control the Hotwell Level Controller.

Subsequently, a feed line rupture inside Containment will occur. The Reactor will trip however, the Safety Injection will fail to actuate automatically. The operator will enter E-0, Reactor Trip or Safety Injection. On the reactor trip the A AFW Pump will fail to Autostart, then trip after it is manually started; and the TDAFW Pump will trip on overspeed. The operator will transition from E-0 to FR-H.1, Response to a Loss of Secondary Heat Sink.

The operator will unsuccessfully attempt to place the Standby AFW System in service, and then attempt to restore a Secondary Heat Sink using the MFW System. Once the Secondary Heat Sink is re-established using MFW, the operator will transition back to E-0, and then transition to E-2, Faulted Steam Generator Isolation.

The scenario will terminate at Step 9 of E-2, after the crew has determined that a transition to E-1, Loss of Reactor or Secondary Coolant, is required.

Critical Tasks:

1. Manually actuate Safety Injection before transition out of E-0 into ES-0.1

Safety Significance: Failure to actuate Safety Injection when it is required to be actuated, and can be actuated, violates the assumptions of the Safety Analysis and constitutes incorrect performance that could lead to misdiagnosis of the event, implementation of an incorrect mitigation strategy and ultimately degradation of the RCS and/or fuel cladding fission product barriers.

2. Establish feedwater flow into at least one Steam Generator before RCS Bleed and Feed is required.

Safety Significance: Failure to establish feedwater flow into at least one Steam Generator results in the crew having to rely upon the lower-priority action of having to initiate RCS Bleed and Feed to minimize the possibility of core uncovery. Failure to perform this task, when able to do so, constitutes incorrect performance that leads to degradation of the RCS and/or fuel cladding fission product barriers.

SIMULATOR OPERATOR INSTRUCTIONS

	Bench Mark	ACTIVITY	DESCRIPTION
☐		**Reset to Temp** I/C 171. **(Built on IC-20)**	**48% power MOL** **To take B MDAFW pump OOS:** ▪ **Pull stop the B MDAFW pump** ▪ **Insert OVR-DO-FDW-06A, OFF (4008 Green light OFF)** ▪ **Close MOV-4008** ▪ **Close MOV-4000A and B** ▪ **OVR-DO-FDW21A=OFF (MOV-4000A Green Lamp)** ▪ **OVR-DO-FDW22A=OFF (MOV-4000B Green Lamp)** **Insert MALF ROD 11-G3 (MRPI G3 on Bottom)** **Insert SIS02A (SIS Train A fails in AUTO)** **Insert SIS02B (SIS Train B fails in AUTO)** **Insert MALF RPS07K (Autostart failure of A MDAFW pump)** **Insert OVR-DI-FDW42D = FALSE (MOV-9629A CLOSED, unable to OPEN)** **Insert MALF FDW15B (SAFW pump D failure)** **Set Trigger 30 = True when a reactor trip signal is received from either Train** **Set REM FDW32, Severity = 0, T-30 (Trip valve 3652 trips to simulate overspeed condition on TDAFW pump)** **Set Trigger 29 = x06i236b = = 1 to activate when A MDAFW pump manually started** **Insert MALF FDW11A, 30 second delayed, T-29 (A MDAFW pump trip on manual start switch)** **Set Trigger 28 = xtci004A (On Turbine Controls to GO)** **MALF EDS07B, on T-1** **MALF PZR02D, 2500, 0 Ramp, on T-2** **MALF TUR05E, 8 Mils, 60 second Ramp on T-3** **MALF CND03A, 48 inches, on T-28 (120 second Delay)** **MALF FDW09A, 2E+7, 120 second Ramp, on T-4**
☐	Prior to Crew Briefing	**RUN**	• **Hang Protective Tags per OPG-Protective Equipment.** • **Hang Caution Tags on MOV-4000A and B** • **Place Black Dot on all required MCB Annunciators**

	Bench Mark	ACTIVITY	DESCRIPTION
☐	**Crew Briefing** • Assign Crew Positions based on evaluation requirements • Review the Shift Turnover Information with the crew. • Conduct Pre-job Brief using marked up copy of O-6.9.2, Section 6.4 marked up as follows: o All steps in Sections 6.4.1 are marked NA o All steps in Sections 6.4.3 are marked NA		
☐	T-0	Begin Familiarization Period	
☐	At direction of examiner	**Event 1**	Shift Electric Plant
☐	At direction of examiner	**Event 2** **Trigger #1** **EDS07B**	Loss of B Instrument Bus
☐	At direction of examiner	**Event 3** **Trigger#2** **PZR02D**	Pressurizer Pressure (PT-449) fails HIGH **2500, No Ramp**
☐	At direction of examiner	**Event 4** **Trigger#3** **TUR05E** **CND03A**	Main Turbine High Vibration/Downpower w/Hotwell Level Transmitter fails HIGH **NOTE:** • **Initial Value is 8 mils over 60 second ramp to cause Annunciator I-27.** • **When I-27 is received, THEN modify TUR05E to 9.6 mils over 480 seconds.** • **2 Minutes after load reduction is started, THEN modify TUR05E to 8.75 mils (or just below current value) over 480 seconds.** • **WHEN crew stops Load Reduction, THEN modify TUR05E to the current value.** **T-28 (When Turbine controls to GO) (120 Seconds Delayed)** **48 inches**
☐	At direction of examiner	**Event 5** **Trigger #4** **FDW09A**	Feed Line Rupture Inside Containment **2E+7, 180 second Ramp**

	Bench Mark	ACTIVITY	DESCRIPTION
☐	Continued from Event 5	**Event 6** **T = 0** **SIS02A** **SIS02B**	Safety Injection fails to actuate Automatically **NOTE: This Malfunction is inserted in the IC at T = 0.**
☐	Continued from Event 5	**Event 7** **T = 0** **RPS07K**	A AFW Pump to Auto Start/Trips after Manual Start **NOTE: This Malfunction is inserted in the IC at T = 0.** **T-29 (When pump manually started) (30 seconds delayed)**
☐	Continued from Event 5	**Event 8** **T = 0** **REM FDW32 = 0**	TDAFW Pump trips on Overspeed **NOTE: This Remote is inserted in the IC at T = 0.** **T-30 (Rx Trip)**
☐	Continued from Event 5	**Event 9** **T = 0** **OVR-FDW42A** **FDW15B**	Standby AFW fails to function **NOTE: This Malfunction is inserted in the IC at T = 0.** **FALSE (MOV-9629A CLOSED, unable to OPEN)** **(SAFW pump D failure)**
☐	**Terminate the scenario upon direction of Lead Examiner**		

Op Test No.:	N2014-301	Scenario #	3	Event #	1	Page	8	of 58
Event Description:	**Shift Electric Plant**							

Shortly after taking the watch, the operator will shift the Electric Line-up from 50/50 to 0/100 in accordance with O-6.9.2, Establishing and/or Transferring Offsite Power to Bus 12A/12B.	
SIM DRIVER Instructions:	**NA**
Indications Available:	**NA**

Time	Pos.	Expected Actions/Behavior	Comments
O-6.9.2, ESTABLISHING AND/OR TRANSFERRING OFFSITE POWER TO BUS 12A/BUS 12B			
		(Step 6.4.2) ESTABLISH Offsite Power to 12B Bus using Circuit 7T as follows:	
	CO	(1.) MARK BUS 12B ALT FEED FROM 767, 52/12BX, breaker initial position:	**NOTE:** 52/12BX is CLOSED.
		• OPEN	
		• CLOSED	
	CO	(2.) VERIFY CLOSED CIRCUIT BKR 7T1352 34 KV BUS.	
	CO	(3.) TURN ON BUS 12B ALT FEED FROM 7T, 52/12AX SYNCHROSCOPE	
	CO	(4.) CLOSE BUS 12B ALT FEED FROM 7T, 52/12AX.	**NOTE:** J-6/L-28 will be expected alarms. **NOTE:** When the CO closes the 52/12AX the 52/12BX will auto OPEN.
	CO	(5.) IF BUS 12B ALT FEED FROM 767, 52/12BX, was initially OPEN, THEN	**NOTE:** 52/12BX was CLOSED.
	CO	(6.) IF BUS 12B NORMAL FEED FROM 767, 52/12BX, was initially CLOSED, THEN PERFORM the following: OTHERWISE, MARK this Step N/A.	
		• VERIFY breaker OPENED (Green light ILLUMINATED, White light ILLUMINATED).	

Op Test No.: N2014-301 Scenario # 3 Event # 1 Page 9 of 58

Event Description: **Shift Electric Plant**

Time	Pos.	Expected Actions/Behavior	Comments
		• PLACE BUS 12B NORMAL FEED FROM 767, 52/12BX, control switch to TRIP AND THEN to AUTO.	
		• VERIFY breaker is OPEN AND RESET (Green light ILLUMINATED, White light EXTINGUISHED).	
	CO	(7.) IF BUS 12B NORMAL FEED FROM 767, 52/12BX, is NOT OPEN,....	**NOTE:** 52/12BX is OPEN.
	CO	(8.) VERIFY BUS 12B VOLTMETER 4160 V indicates approximately 4000 VOLTS on all 3 phases.	
	CO	(9.) VERIFY Bus 16 and Bus 17 voltmeter indicates greater than 440 volts on all 3 phases.	
	CO	(10.) TURN OFF BUS 12B ALT FEED FROM 7T, 52/12AX SYNCHROSCOPE AND REMOVE the handle.	
	CRS	(Step 6.7) IF required, THEN RESET 12A and 12B Alarm Panels in Relay Room Annex.	**SIM DRIVER:** Use REM EDS50 to clear 12B transformer alarm L-28
			NOTE: The CRS will likely conduct a Plant Status Brief.
At the discretion of the Lead Examiner move to Event #2.			

Op Test No.: N2014-301	Scenario # 3	Event # 2	Page 10 of 58
Event Description:	**Loss of B Instrument Bus**		

Shortly afterwards, a loss of the B Instrument Bus will occur. The operator will respond in accordance with AR-E-14, LOSS B INSTR. BUS. Power will be restored to the bus per guidance in ER-INST.3, Instrument Bus Power Restoration, which will include the isolation and re-establishment of Normal Letdown in accordance with S-3.2E, Placing In or Removing From Service Normal Letdown/Excess Letdown. The operator will address AR-K-32, CV AIR DRYER LOW PRESS SG B/D TANK HIGH LEVEL, while restoring from the transient. The operator will address Technical Specification 3.8.7, AC Instrument Bus Sources Modes 1-4, and 3.8.9, Distribution Systems – Modes 1, 2, 3 and 4.

SIM DRIVER Instructions: **Operate Trigger #1 (EDS07B)**

Indications Available:

- Multiple MCB Annunciators
- MCB Annunciator E-14, LOSS B INSTR. BUS
- White and Red Bistable Status lights extinguish
- VCT Level (LT-112) fails low causing continuous Auto Makeup
- Tavg-Tref is 12°F (1st Stage Pressure has failed Low), with an Auto Rod Inward green Status light, but NO Auto Rod motion
- Normal Letdown has isolated due to one PZR level channel failing low

Time	Pos.	Expected Actions/Behavior	Comments
		AR-E-14, LOSS B INSTR BUS	
	CRS	1. Restore power to Instrument Bus B (Refer to ER-INST.3, INSTRUMENT BUS POWER RESTORATION)	
	CRS	2. Evaluate plant conditions to determine if additional action is required by referring to the following: o ITS LCO 3.8.7 and 3.8.8	
	CRs	3. Notify the following: o SM o Electricians o Electrical Planner	**NOTE:** The CRS may notify the WCC. **SIM DRIVER:** as **WCCS**, acknowledge.
			NOTE: The CRS will go to ER-INST.3.

Op Test No.: N2014-301 Scenario # 3 Event # 2 Page 11 of 58

Event Description: **Loss of B Instrument Bus**

Time	Pos.	Expected Actions/Behavior	Comments
ER-INST.3, INSTRUMENT BUS POWER RESTORATION			
	CO	(Step 6.1.1) IF Any instrument bus is deenergized THEN PERFORM the following:	
		Verify an alternate power supply is available by checking supply voltage as follows:	
		Maintenance- Supply voltage approximately 120 volts (EI/CVTAUX, above Instr Bus D)	
	HCO	(Step 6.1.2) Close letdown isolation valve, AOV-427.	**NOTE:** The HCO will isolate Normal Letdown.
			NOTE: VCT level indication is lost, and with L/D isolated, actual level is lowering, and CRS may direct AO to monitor VCT level locally (no ER-INST.3 procedure guidance) If so, **SIM DRIVER:** as **AO**, acknowledge, and **Use Insight from Scenario Setup, or Monitor VCT level on drawing VCT1 and report value to CRS (When requested or the remainder of the scenario).**
	HCO	(Step 6.1.3) Place charging pump controllers in MANUAL	**NOTE:** The HCO will place Charging Pump speed control in Manual OR may secure one of the two Charging Pumps altogether.
			NOTE: The HCO may place the Auto Makeup to the VCT in Manual to prevent overfilling the VCT.
	CO	(Step 6.1.4) Place hotwell level controller to manual, if desired.	

Op Test No.: N2014-301 Scenario # 3 Event # 2 Page 12 of 58

Event Description: **Loss of B Instrument Bus**

Time	Pos.	Expected Actions/Behavior	Comments
	HCO	(Step 6.1.5) Place PRZR PRESS CONTROLLER 431K in MANUAL, if necessary.	
	HCO	(Step 6.1.6) Place rods in MANUAL.	**NOTE:** The HCO will place Rods in Manual.
	CRS	(Step 6.1.7) Transfer Instrument Bus to an available power supply. (Maintenance or Normal)	**NOTE:** The CRS will direct the bus to be energized from the Maintenance supply
	CO	o IF on NORMAL FEED AND MAINTENANCE FEED desired, THEN TRANSFER to MAINTENANCE	**NOTE:** Instrument Bus B is now re-energized.
	CO	(Step 6.1.8) CHECK Instrument Bus supply voltage within ITS limits. (Refer to O-6.11, SURVEILLANCE REQUIREMENT/ROUTINE OPERATIONS CHECK SHEET)	**NOTE:** O-6.11 requires voltage between 113-123V
	CRS	(Step 6.1.9) Go to Step 6.4	
	HCO	(Step 6.4.1) VERIFY one Charging Pump in AUTO, IF desired.	
	HCO	(Step 6.4.2) VERIFY PRZR PRESS CONTROLLER 431K in AUTO.	
	HCO	(St5ep 6.4.3) RESTORE PRZR Heaters as required.	
	HCO	(step 6.4.4) IF letdown isolation valve, AOV-427 has been closed, THEN RESTORE Letdown as follows:	

Op Test No.: N2014-301 Scenario # 3 Event # 2 Page 13 of 58

Event Description: **Loss of B Instrument Bus**

Time	Pos.	Expected Actions/Behavior	Comments
	HCO	(Step 6.4.4.1) COMPLETE removal of normal letdown from service per S-3.2E, PLACING IN OR REMOVING FROM SERVICE NORMAL LETDOWN/EXCESS LETDOWN	**NOTE:** Removed per Section 6.2 of S-3.2E
			NOTE: The CRS will hand this off to the HCO or the CO, and continue on in ER-INST.3.
S-3.2E, PLACING IN OR REMOVING FROM SERVICE NORMAL LETDOWN/EXCESS LETDOWN			
	HCO/ CO	(Step 6.2.1) PLACE Charging Pumps in MANUAL	
	HCO/ CO	(Step 6.2.2) ENSURE CLOSED Letdown Orifice isolation valves. AOV-200A AOV-200B AOV-202	
	HCO/ CO	(Step 6.2.3) CLOSE LTDN ISOLATION VLV RHR to NRHX, AOV-427.	
	HCO/ CO	(Step 6.2.4) REDUCE charging flow while throttling closed charging flow to Regenerative Heat Exchanger HCV-142 to maintain greater than 20" RCP labyrinth seal ΔP.	
	HCO/ CO	(Step 6.2.5) CLOSE LETDOWN ISOL VLV RHR TO NRHX AOV-371.	
	HCO/ CO	(Step 6.2.6) PLACE NRHX LTDN OUTLET TEMP (TI-130) TCV-130 in MANUAL/ CLOSED.	
			NOTE: The CRS will continue with ER-INST.3.
ER-INST.3, INSTRUMENT BUS POWER RESTORATION			

Op Test No.: N2014-301 Scenario # 3 Event # 2 Page 14 of 58

Event Description: **Loss of B Instrument Bus**

Time	Pos.	Expected Actions/Behavior	Comments
	CRS	(Step 6.4.3.2) RESTORE normal letdown per S-3.2E, PLACING IN OR REMOVING FROM SERVICE NORMAL LETDOWN/EXCESS LETDOWN.	**NOTE:** Restored per Section 6.3 and 6.4 of S-3.2E
			NOTE: The CRS will hand this off to the HCO or the CO, and continue on in ER-INST.3.
S-3.2E, PLACING IN OR REMOVING FROM SERVICE NORMAL LETDOWN/EXCESS LETDOWN			
	HCO/ CO	(Step 6.3.1) Determine if a flush is required. If the letdown line has been isolated for less than one hour perform section 5.3.2 and N/A section 5.3.3 with permission of the Shift Manager or Control Room Foreman.	**NOTE:** Since letdown has been isolated ONLY a few minutes, a flush will NOT be required.
	HCO/ CO	(Step 6.4.1) <u>Restore Letdown Without a Flush</u>	
	HCO/ CO	(Step 6.4.1.1) ENSURE letdown is secured PER Section 6.2 prior to restoring.	
	HCO/ CO	(Step 6.4.1.2) IF charging flowpath to Loop B COLD Leg is desired (preferred method), THEN PERFORM the following:	
		ENSURE CLOSED CHARGING VLV RHX TO LOOP B HOT, AOV-392A.	
		OPEN CHARGING VLV RHX TO LOOP B COLD LEG AOV-294.	
	HCO/ CO	(Step 6.4.1.3) IF Charging flowpath to Loop B HOT leg is desired,.....	**NOTE:** Charging alignment to the Hot Leg will NOT be desired.
	HCO/ CO	(Step 6.4.2) START a second Charging Pump at minimum speed.	

Op Test No.: N2014-301 Scenario # 3 Event # 2 Page 15 of 58

Event Description: **Loss of B Instrument Bus**

Time	Pos.	Expected Actions/Behavior	Comments
	HCO/ CO	(Step 6.4.3) SLOWLY OPEN charging flow to Regenerative Heat Exchanger HCV-142 to reduce labyrinth seal ΔP to - 40".	
	HCO/ CO	(Step 6.4.4) ADJUST Charging Pump speed while maintaining - 40" labyrinth seal ΔP UNTIL HCV-142 is fully OPEN.	
	HCO/ CO	(Step 6.4.5) ESTABLISH greater than or equal to 22 gpm charging line flow.	
	HCO/ CO	(Step 6.4.6) IF placing 40 GPM orifice in service THEN PERFORM the following	**NOTE:** A 40 gpm Orifice was previously in service.
		PLACE LOW PRESS LTDN PRESS PCV-135 in MANUAL at - 40% open.	
		PLACE NRHX LTDN OUTLET TEMP (TI-130) TCV-130 in MANUAL at -40% open.	
	HCO/ CO	(Step 6.4.7) IF placing 60 GPM orifice in service THEN	
	HCO/ CO	(Step 6.4.8) OPEN LETDOWN ISOL VLV RHR TO NRHX AOV-371.	
	HCO/ CO	(Step 6.4.9) PLACE LTDN LOOP B COLD LEG TO RHX AOV-427 to OPEN and THEN to AUTO.	
	HCO/ CO	(Step 6.4.10) OPEN desired Letdown orifice valve AOV-200A, AOV-200B, or AOV-202 AND MARK AOV's not opened N/A.	
		AOV-200A	
		AOV-200B	
		AOV-200	

Op Test No.: N2014-301 Scenario # 3 Event # 2 Page 16 of 58

Event Description: **Loss of B Instrument Bus**

Time	Pos.	Expected Actions/Behavior	Comments
	HCO/ CO	(Step 6.4.11) ADJUST LOW PRESS LTDN PRESS PCV-135 to achieve Letdown pressure of -250 psig on PI-135.	
	HCO/ CO	(Step 6.4.12) PLACE LOW PRESS LTDN PRESS, PCV-135 IN AUTO.	
	HCO/ CO	(Step 6.4.13) PLACE NRHX LTDN OUTLET TEMP (TI-130) TCV-130 in AUTO at the setpoint recorded in Step 5.4.	**Examiner NOTE:** At the discretion of the Lead Examiner move to **Event #3**.
	HCO/ CO	(Step 6.4.14) PLACE Pressurizer level control (Charging Pump) to AUTO.	
			NOTE: The CRS will continue with ER-INST.3, Step 6.4.5.
ER-INST.3, INSTRUMENT BUS POWER RESTORATION			
	CO	(Step 6.4.5) RESTORE EH control to AUTO/IMP IN, If desired.	
	HCO	(Step 6.4.6) RESTORE ROD CONTROL BANK SELECTOR Switch to AUTO, if desired.	**NOTE:** The HCO will place the Rods back in Auto.
	HCO	(Step 6.4.7) VERIFY CNMT ventilation isolation is reset.	
	HCO	(Step 6.4.8) VERIFY Hotwell level controller in AUTO, if desired.	
	CO	(Step 6.4.9) RESTORE desired SW pump alignment.	
	CO	(Step 6.4.10) ENSURE motor fire pump breaker closed.	

Op Test No.: N2014-301 Scenario # 3 Event # 2 Page 17 of 58

Event Description: **Loss of B Instrument Bus**

Time	Pos.	Expected Actions/Behavior	Comments
	CO/AO	(Step 6.4.11) DISPATCH an AO to verify proper operation of Battery Chargers if necessary.	**NOTE:** The CRS may dispatch an AO. **If so, SIM DRIVER:** as **AO**, acknowledge.
	HCO/ CO	(Step 6.4.12) EVALUATE MCB Annunciator status (refer to AR procedures)	**NOTE:** Annunciator K-32 needs follow-up.
AR-K-32, SG BLOWDOWN TANK HIGH LEVEL			
	CO	1. Direct AO to remove and then restore Blowdown per T-14.F.1, SG Blowdown System Operation	**SIM DRIVER:** Insert REM SGN05, RESET,
ER-INST.3, INSTRUMENT BUS POWER RESTORATION			
	CRS	(Step 6.4.13) IF Instrument Bus D was affected, THEN	**NOTE:** Instrument Bus D was NOT affected.
	CRS	(Step 6.4.14) IF Instrument Bus A or C is being powered from associated emergency AC Bus, then	**NOTE:** Instrument Bus A or C is NOT being powered form the emergency AC Bus.
	CRS	(Step 6.4.15) RETURN to procedure or guidance in effect.	
			NOTE: The CRS will likely conduct a Plant Status Brief.
			NOTE: The CRS will address the Technical Specifications.

Op Test No.: N2014-301	Scenario # 3	Event # 2	Page 18 of 58
Event Description:	**Loss of B Instrument Bus**		

Time	Pos.	Expected Actions/Behavior	Comments
TECHNICAL SPECIFICATION 3.8.7, AC INSTRUMENT BUS SOURCES – MODES 1, 2, 3 AND 4			
	CRS	LCO 3.8.7 The following AC instrument bus power sources shall be OPERABLE: a) Inverters for Instrument Buses A and C; and b) Class 1E constant voltage transformer (CVT) for Instrument Bus B.	
	CRS	APPLICABILITY: MODES 1, 2, 3, AND 4.	
		CONDITION / REQUIRED ACTION / COMPLETION TIME B. Class 1E CVT for AC Instrument Bus B inoperable / B.1 Power AC Instrument Bus B from its non-Class 1E CVT. / 2 hours AND B.2 Restore Class 1E CVT for AC Instrument Bus B to OPERABLE status. / 7 Days	**NOTE:** The CRS will take ACTIONS B.1 and B.2.
TECHNICAL SPECIFICATION 3.8.9, DISTRIBUTION SYSTEMS – MODES 1, 2, 3 AND 4			
	CRS	LCO 3.8.9 Train A and Train B of the following electrical power distribution subsystems shall be OPERABLE: a) AC power; b) AC instrument bus power; and c) DC power	
	CRS	APPLICABILITY: modes 1, 2, 3 and 4.	

Op Test No.: N2014-301 Scenario # 3 Event # 2 Page 19 of 58

Event Description: **Loss of B Instrument Bus**

Time	Pos.	Expected Actions/Behavior			Comments
		CONDITION	REQUIRED ACTION	COMPLETION TIME	**NOTE:** The CRS will note that while Instrument Bus B was OOS, they were in B.1, but came out of this action when power to the Bus was restored.
		B. One AC Instrument bus electrical power distribution train inoperable.	B.1 Restore AC Instrument bus electrical power distribution train to OPERABLE status.	2 hours.	
At the discretion of the Lead Examiner move to Event #3.					

Op Test No.: N2014-301	Scenario # 3	Event # 3	Page 20 of 58
Event Description:	**Pressurizer Pressure (PT-449) fails HIGH**		

After this, the controlling Pressurizer Pressure Transmitter will fail HIGH, causing the Spray Valves to open. The operator will respond in accordance with AR-F-2, PRESSURIZER HIGH PRESS 2310 PSI and AR-F-10, PRESSURIZER LO PRESS 2205 PSI, and enter AP-PZR.1, Abnormal PZR Pressure. AP-PZR.1 will refer the operator to ER-INST.1, Reactor Protection Bistable Defeat After Instrumentation Loop Failure, for the defeat of PT-449. The operator will address Technical Specification 3.4.1, RCS Pressure, Temperature, and Flow Departure From Nucleate Boiling (DNB) Limits; 3.3.1, Reactor Trip System (RTS) Instrumentation; and TRM-3.4.3, Anticipated Transient Without Scram (ATWS) Mitigation.

SIM DRIVER Instructions: **Operate Trigger #2 (PZR02D (2500))**

Indications Available:

- MCB Annunciator F-2, PRESSURIZER HIGH PRESS 2310
- PI-449 reading 2250 psig, all others lowering slowly
- Both Presssurizer Spray Valves fully OPEN
- Master pressure Controller 431K output at 100%
- PPCS Alarm PZR AVG PRESS HI ALARM
- MCB Annunciator F-10, PRESSURIZER LO PRESS 2205 (15seconds delayed)

Time	Pos.	Expected Actions/Behavior	Comments
			NOTE: The HCO may take action to place 431K in MANUAL control, or the Spray Valve Controllers in MANUAL control, before arriving at the procedurally directed step, per the Guidance of A-503.1.
			NOTE: The crew may enter AP-PRZR.1 directly.
AR-F-2, PRESSURIZER HI PRESS 2310 PSI			
	CRS	(Step 1) IF RCS pressure is high, THEN go to AP-PRZR.1.	**NOTE:** Pressurizer Pressure is NOT high.
	CRS	(Step 2) IF due to instrument failure, THEN refer to ER-INST.1, REACTOR PROTECTION BISTABLE DEFEAT AFTER INSTRUMENTATION LOOP FAILURE	**NOTE:** While an instrument has failed, the failure has created a pressure transient, and AP-PRZR.1 is the appropriate procedure.

Op Test No.: N2014-301 Scenario # 3 Event # 3 Page 21 of 58

Event Description: **Pressurizer Pressure (PT-449) fails HIGH**

Time	Pos.	Expected Actions/Behavior	Comments
AR-F-10, PRESSURIZER LO PRESS 2205 PSI			
			NOTE: This alarm will occur if the Spray Valves are open ≈15 seconds.
	HCO	(Step 1) Perform a channel check.	
	CRS	(Step 2) Go to the applicable procedure: • AP-TURB.2, if turbine load rejection has occurred. • AP-PRZR.1, if pressure is abnormal for plant condition. • ER-INST.1, if channel failed	
	CRS	(Step 3) Refer to ITS LCO 3.4.1	
			NOTE: The CRS will go to AP-PRZR.1.
AP-PRZR.1, ABNORMAL PRESSURIZER PRESSURE			
	HCO	(Step 1) Check PRZR Pressure: • All 4 narrow range channels- APPROXIMATELY EQUAL	
	HCO/ CRS	(Step 1 RNO) IF one pressure channel deviates significantly from the other 3. THEN perform the following: a) IF the controlling PRZR pressure channel has failed. THEN place controller, 431K, in MANUAL and adjust output to restore PRZR pressure b) Refer to ER-INST.1. REACTOR PROTECTION BISTABLE DEFEAT AFTER INSTRUMENTATION LOOP FAILURE.	**NOTE:** The CRS may refer to ER-INST.1 here, or later when the pressure transient has been verified to be under control.
	HCO	(Step 2) Check Reactor Power- STABLE	

Op Test No.: N2014-301 Scenario # 3 Event # 3 Page 22 of 58

Event Description: **Pressurizer Pressure (PT-449) fails HIGH**

Time	Pos.	Expected Actions/Behavior	Comments
	HCO	(Step 3) Check PRZR Pressure: a) Pressure- LESS THAN 2235 PSIG b) Pressure- GREATER THAN 2000 PSIG	
	HCO	(Step 4) Check PRZR Heater Status: a) PRZR proportional heater breaker- CLOSED b) PRZR heater backup group- ON	
	HCO	(Step 5) Verify Normal PRZR Spray Valves- CLOSED o AOV-431A o AOV-431B	**NOTE:** The HCO may take action to place 431K in MANUAL control, or the Spray Valve Controllers in MANUAL control, before arriving at THIS step, per the Guidance of A-503.1.
	HCO	(Step 5 RNO) Place Controllers in MANUAL at 0% Demand.	
	HCO	(Step 6) Check PRZR Pressure Controller, 431K, Demand- LESS THAN 50%	
	HCO	(Step 7) Check PRZR PORVs: a) PORVs- CLOSED b) Annunciator F-19. PRZR PORV OUTLET HI TEMP 145°F- EXTINGUISHED	
	CRS	c) Go to Step 9	

Op Test No.: N2014-301 Scenario # 3 Event # 3 Page 23 of 58

Event Description: **Pressurizer Pressure (PT-449) fails HIGH**

Time	Pos.	Expected Actions/Behavior	Comments
	HCO	(Step 9) Check PRZR Safety Valves: o Position indicator- LESS THAN 0.1 INCH o Annunciator F-18. PRZR SAFETY VLV OUTLET HI TEMP 145°F- EXTINGUISHED o Annunciator AA-13, PRESSURIZER SAFETY VALVE POSITION- EXTINGUISHED.	
	HCO	(Step 10) Check AUX Spray Valve, AOV-296 - CLOSED	
	HCO	(Step 11) Check PRZR Pressure Control Restored: a) Pressure- TRENDING TO 2235 PSIG	
	CRS	b) Go to Step 16	
	HCO	(Step 16) Check PRT Indications: a) Level- BETWEEN 61% and 84% b) Pressure- APPROXIMATELY 1.5 PSIG AND STABLE c) Temperature- AT CNMT AMBIENT TEMPERATURE AND STABLE	
	HCO	(Step 17) Establish PRZR Pressure Control In Auto: a) Verify 431K in AUTO	

Op Test No.: N2014-301 Scenario # 3 Event # 3 Page 24 of 58

Event Description: **Pressurizer Pressure (PT-449) fails HIGH**

Time	Pos.	Expected Actions/Behavior	Comments
	HCO	(Step 17 RNO) Place 431K in AUTO, if desired.	**NOTE:** 431K cannot be placed in Auto until the Instrument is defeated. IF the Instrument has NOT been defeated in accordance with ER-INST.1, the CRS may refer to this procedure here.
ER-INST.1, REACTOR PROTECTION BISTABLE DEFEAT AFTER INSTRUMENTATION LOOP FAILURE			
	HCO	(Step 6.1.1) IDENTIFY the failed instrument channel by observation of the bistable status light board, MCB annunciators, and the MCB metering indication.	
	CRS	(Step 6.1.2) WHEN a failed instrument loop and/or channel has been identified, THEN refer to the appropriate section of this procedure listed below:	**NOTE:** The CRS will refer to PRZR Pressure Channel Failures, Section 6.3.
	HCO	(Step 6.3.1) IF the controlling PRZR Pressure channel has failed (normally PT-449, but PT-429 may be selected as controlling channel), THEN PLACE HC-431K in MANUAL at about 50% and control pressure manually	
	HCO	(Step 6.3.2) IF PT-430 OR PT-431 has failed, THEN	**NOTE:** Neither PT-430 nor PT-431 has failed.
	HCO	(Step 6.3.3) IF hot leg streaming has been causing single channel ΔT runback signals, THEN.....	**NOTE:** hot leg streaming has NOT been causing runback signals.
	HCO	(Step 6.3.4) REFER TO the appropriate attachment to defeat the associated control functions:	**NOTE:** The CRS will go to the PRZR PRESSURE PI-449 YELLOW CHANNEL Attachment 8.

Op Test No.:	N2014-301	Scenario #	3	Event #	3	Page	25 of 58
Event Description:	**Pressurizer Pressure (PT-449) fails HIGH**						

Time	Pos.	Expected Actions/Behavior	Comments
			NOTE: The CRS will hand this off to the CO.
ER-INST.1, REACTOR PROTECTION BISTABLE DEFEAT AFTER INSTRUMENTATION LOOP FAILURE ATTACHMENT 8 YELLOW CHANNEL - PRZR PRESSURE PI-449			
			NOTE: The CO will likely conduct Instrument Defeat Brief.
	HCO	(Step 1) IF PRZR Pressure channel failure resulted in a runback, THEN	**NOTE:** The failure did NOT result in a runback.
	CO	(Step 2) In the PLP PRZR PRESS AND LEVEL rack, VERIFY the PRZR pressure DEFEAT switch P/429A position. o IF P/429A is in NORMAL, THEN place P/429A to DEFEAT-1.	**NOTE:** The CO will unlock and open the PLP PRZR PRESS AND LEVEL Rack Cabinet, take the required action, and then close and lock the cabinet door.
	CO	(Step 3) In the RIL INSERTION LIMIT rack, PLACE T/405F DELTA T DEFEAT switch to Loop B UNIT 2.	**NOTE:** The CO will unlock and open the RIL Insertion Limit Rack Cabinet, take the required action, and then close and lock the cabinet door.
	CO	(Step 4) DETERMINE the expected Bistable proving light status for the post defeat condition as follows:	
		RECORD the following Data:	
		• PRZR Pressure PI-449_____PSIG	
		• LOOP 1B-2 Δ TEMP TI-408B _____^{0}F	
		• OTΔT SP1 LOOP 1B-2TEMP TI-408A_____^{0}F	
		DETERMINE the expected post defeat Bistable proving light status and circle the expected status in table below:	
		408 LOOP B-2 • OVERTEMP TRIP Light OFF IF TI-408B ≥ TI-408A	**NOTE:** The CO will determine that the Proving Light should be ON in the Post-Defeat condition.

Op Test No.: N2014-301 Scenario # 3 Event # 3 Page 26 of 58

Event Description: **Pressurizer Pressure (PT-449) fails HIGH**

Time	Pos.	Expected Actions/Behavior	Comments
		449 CHANNEL 4 • LOW PRESS TRIP Light OFF IF PI-449 ≤ 1873 psig	**NOTE:** The CO will determine that the Proving Light should be ON in the Post-Defeat condition.
	CO	(Step 5) In the (YELLOW) Y-1 PROTECTION CHANNEL 4 rack, PLACE the following bistable proving switches to DEFEAT (UP) AND verify the proving light status is correct: 408 LOOP B-2 OVER TEMP TRIP 449 CHANNEL 4 LOW PRESS TRIP	**NOTE:** The CO will unlock and open the Y-1 PROTECTION CHANNEL 4 Rack Cabinet, take the required action, and then close and lock the cabinet door. **NOTE:** Both B/S proving lights should be ON after defeat.
	HCO	(Step 6) PLACE the PRZR pressure recorder transfer switch (MCB) to position 1-3	
	HCO	(Step 7) VERIFY the bistable status lights AND Annunciators listed above are lit.	**Examiner NOTE:** At the discretion of the Lead Examiner move to **Event #4**.

Op Test No.: N2014-301 Scenario # 3 Event # 3 Page 27 of 58

Event Description: **Pressurizer Pressure (PT-449) fails HIGH**

Time	Pos.	Expected Actions/Behavior	Comments
	HCO/ CO	(Step 8) DELETE 404/408 from processing by performing the following on the PPCS: • SELECT "Group Update" display • SELECT "List Server Groups" • SELECT 404_408 from the pick list • TURN "OFF" scan processing, THEN click the "Set Scan Processing" button • ANSWER prompts • SELECT the "Sub/Delete/Restore" display • SELECT Point ID T0404 • TURN "ON" scan processing • SELECT "Change" • ANSWER prompts • SELECT the "Sub/Delete/Restore" display • SELECT Point ID P0449 • TURN "OFF" scan processing • SELECT "Change" • ANSWER prompts	
	CRS	(Step 9) GO TO step 6.3.5	**NOTE:** The CRS will return to the body of the procedure.
	HCO	(Step 6.3.5) RESTORE the following systems to automatic operation as necessary: ○ PRZR Pressure control • HC 431K • PRZR Spray Valves • PRZR Heaters	**NOTE:** The HCO will return 431K to Auto.
	HCO	○ PRZR Level Control	
	HCO	○ Rod Control	
	CO	○ Steam Dump	
	CO	○ Turbine EH control	

Op Test No.: N2014-301 Scenario # 3 Event # 3 Page 28 of 58

Event Description: **Pressurizer Pressure (PT-449) fails HIGH**

Time	Pos.	Expected Actions/Behavior	Comments
	HCO	(Step 6.3.6) Open associated block valve closed in step 4.4.3	**NOTE:** No Block Valve was Closed.
	CRS	(Step 6.3.7) REFER TO the following ITS Sections for LCO's: Section 3.3.1, Table 3.3.1-1, Functions 5, 7a, and 7b (7b not required for PT-449) Section 3.3.2, Table 3.3.2-1, Function 1d (not required for PT-449) Section 3.3.3, Table 3.3.3-1, Functions 1 and 6	**NOTE:** The CRS will evaluate Technical Specifications.
	CRS	(Step 6.3.8) REFER TO TRM 3.4.3, Anticipated Transients Without Scram (ATWS) mitigation	**NOTE:** The CRS will evaluate Technical Requirements Manual.
	CRS	(Step 6.3.9) IF turbine runback has occurred AND rods are in MANUAL, ……	**NOTE:** The failure did NOT result in a runback.
	HCO	(Step 6.3.10) RESTORE AUTO Rod Control, if desired.	**NOTE:** The HCO will place the Rods in Auto.
	CRS	(Step 6.3.11) GO TO step 6.15	
	HCO	(Step 6.15.1) IF necessary, VERIFY an operable channel is selected for the affected recorder.	
	HCO	(Step 6.15.2) Verify the following systems in AUTO if desired: o Rod Control	
	CO	o Turbine EH control	
	HCO	o PRZR Pressure control • HC 431K • PRZR spray valves • PRZR heaters	
	HCO	o PRZR level control	

Op Test No.: N2014-301 Scenario # 3 Event # 3 Page 29 of 58

Event Description: **Pressurizer Pressure (PT-449) fails HIGH**

Time	Pos.	Expected Actions/Behavior	Comments
	CO	○ Steam Dump (unless 1st stage pressure failed)	
	CO	○ MFW control	
	CO	○ S/G Atmos Relief Vlv Control	
	CRS	(Step 6.15.3) NOTIFY the following people: ○ Operations Supervision ○ STA ○ Work Week Manager	**NOTE:** The CRS may notify the SM/STA/WWM. **SIM DRIVER:** as **SM/STA/WWM**, acknowledge.
	CRS	(Step 6.15.4) REFER to the following for Notification Requirements:	**NOTE:** The CRS may ask the SM. **SIM DRIVER:** as **SM**, acknowledge.
		CNG-NL-1.01-1004, REGULATORY REPORTING	
		OPG-NOTIFICATION, REQUIRED NOTIFICATIONS TO THE PSC/PIO/CEG SENIOR MANAGEMENT/OPERATIONS MANAGEMENT	
AP-PRZR.1, ABNORMAL PRESSURIZER PRESSURE			
	HCO	(Step 17.b) Verify PRZR Spray Valves in Auto.	
	HCO	(Step .c) Verify PRZR Heaters restored: • PRZR proportional heaters breaker – Closed • PRZR backup heaters RESET in AUTO	
	CRS	(Step 18) Evaluate MCB Annunciator Status (Refer to AR Procedures)	
	CRS	(Step 19) Notify Higher Supervision	

Op Test No.: N2014-301 Scenario # 3 Event # 3 Page 30 of 58

Event Description: **Pressurizer Pressure (PT-449) fails HIGH**

Time	Pos.	Expected Actions/Behavior	Comments
	CRS	(Step 20) Notify Reactor Engineer for Transient Monitoring Program	
			NOTE: The CRS will address the Technical Specifications.
TECHNICAL SPECIFICATION 3.4.1, RCS PRESSURE, TEMPERATURE, AND FLOW DEPARTURE FROM NUCLEATE BOILING (DNB) LIMITS			
	CRS	(LCO 3.4.1) RCS DNB Parameters for pressurizer pressure, RCS average temperature, and RCS total flow rate shall be within the limits specified in the COLR	**NOTE:** The CRS will determine that the crew be in and then out of this Technical Specification during the course of this event.
		APPLICABILITY: Mode 1.	
		ACTIONS:	
		CONDITION / REQUIRED ACTION / COMPLETION TIME	
		A. One or more RCS DNB parameters not within limits. / A.1 Restore RCS DNB parameter(s) to within limit. / 2 hours	
TECHNICAL SPECIFICATION 3.3.1, REACTOR TRIP (RTS) INSTRUMENTATION			
	CRS	LCO 3.3.1 The RTS instrumentation for each Function in Table 3.3.1-1 shall be OPERABLE.	
		APPLICABILITY: According to Table 3.3.1-1 (Functions 5, 7a)	
		ACTIONS	

Op Test No.: N2014-301 Scenario # 3 Event # 3 Page 31 of 58

Event Description: **Pressurizer Pressure (PT-449) fails HIGH**

Time	Pos.	Expected Actions/Behavior			Comments
		CONDITION	REQUIRED ACTION	COMPLETION TIME	**NOTE:** Functions 5 and 7a are affected.
		A. One or more functions with one channel inoperable.	A.1 Enter the Condition referenced in Table 3.3.1-1 for the channel(s).	Immediately	
		D. As required by Required Action A.1 and referenced by Table 3.3.1-1	D.1 Place channel in trip	6 hours	
		K. As required by Required Action A.1 and referenced by Table 3.3.1-1	K.1 Place channel in trip	6 hours	
TECHNICAL REQUIREMENT 3.4.3, ANTICIPATED TRANSIENTS WITHOUT SCRAM (ATWS) MITIGATION					
	CRS	TR 3.4.3 ATWS Mitigation shall be OPERABLE as follows:			
		• Each PORV shall be capable of automatic actuation and each block valve shall be open;			
		• Manual rod insertion shall be OPERABLE; and			
		• ATWS Mitigation System Actuation Circuitry (AMSAC) shall be OPERABLE.			
		APPLICABILITY MODE 1 > 45% RTP.			
		CONDITION	REQUIRED ACTION	COMPLETION TIME	
		A. One or more PORV automatic flow path inoperable.	A.1 Declare ATWS mitigating capability inoperable.	Immediately	

Op Test No.:	N2014-301	Scenario #	3	Event #	3	Page	32	of 58
Event Description:	**Pressurizer Pressure (PT-449) fails HIGH**							

At the discretion of the Lead Examiner move to Event #4.			

Op Test No.:	N2014-301	Scenario #	3	Event #	4	Page	33	of 58

Event Description: **Main Turbine High Vibration/Downpower w/Hotwell Level Transmitter fails HIGH**

Following this, a turbine high vibration condition on Bearing #5 will develop within about 60 seconds. The operator will respond in accordance with AR-I-27, ROTOR ECCENTRICITY OR VIBRATION; and enter AP-TURB.3, Turbine Vibration; and then AP-TURB.5, Rapid Downpower. The operator will need to lower the Turbine Load to stabilize the vibrations. During the load reduction Hotwell Level Transmitter will fail HIGH. The operator will need to manually control the Hotwell Level Controller.

SIM DRIVER Instructions:

Operate Trigger #3

- **Initial Value is 8 mils over 60 second ramp to cause Annunciator I-27.**
- **When I-27 is received, THEN modify TUR05E to 9.6 mils over 480 seconds.**
- **2 Minutes after load reduction is started, THEN modify TUR05E to 8.75 mils (or just below current value) over 480 seconds.**
- **WHEN crew stops Load Reduction, THEN modify TUR05E to the current value.**

Indications Available:

- MCB Annunciator I-27, ROTOR ECCENTRICITY OR VIBRATION
- MCB Turbine Bearing Recorder Bearing 5 indicating high, bearings 4 and 6 rising at a lower rate.
- Back of MCB Turbine Bearing Vibration Panel Bearing 5 indicating high, bearings 4 and 6 rising at a lower rate.
- Hotwell level controller output rising to greater than 60% (120 seconds delayed from Turbine in GO)

Time	Pos.	Expected Actions/Behavior	Comments
			NOTE: The crew may enter AP-TURB.3 directly.
		AR-I-27, ROTOR ECCENTRICITY OR VIBRATION	
	CO/ CRS	(Step 4.1) CHECK vibration levels on the following:	
		TURBINE VIBRATION, RK-14 (MCB front)	
		Turbine Vibration Monitor (MCB rear)	
	CO	(Step 4.2) IF high vibration on Bearings 1 – 8, THEN GO TO AP-TURB.3.	
			NOTE: The CRS will go to AP-TURB.3.

Op Test No.: N2014-301 Scenario # 3 Event # 4 Page 34 of 58

Event Description: **Main Turbine High Vibration/Downpower w/Hotwell Level Transmitter fails HIGH**

Time	Pos.	Expected Actions/Behavior	Comments
		AP-TURB.3, TURBINE VIBRATION	
	CO	(Step 1) Verify Turbine Vibration- ALL BEARINGS LESS THAN 14 MILS	
	CO	(Step 2) Check Turbine Bearings No.1 through No. 8 Vibration- LESS THAN 7 MILS	**NOTE:** The highest vibration will be on Bearing #5 at 8-9 Mils.
	CO	(Step 2 RNO) Attempt to stabilize vibration as follows: IF generator on line, THEN begin reducing load to stabilize vibrations. (Refer to AP-TURB.5, RAPID LOAD REDUCTION	
			NOTE: The CRS will go to AP-TURB.5 and conduct Rapid Load Reduction Brief prior to commencing load reduction.
		AP-TURB.5, RAPID LOAD REDUCTION	
	HCO	(Step 1) Initiate Load Reduction a) Verify rods in AUTO	
	CO	b) Reduce turbine load in Auto as follows:	
		• Place Turbine EH Control in OPER PAN., IMP PRESS IN, if desired.	**NOTE:** IMP PRESS IN is desired.
		• Select desired rate on thumbwheel	**NOTE:** The operator will select 1%/Min.
		• Reduce the setter to the desired load	
		• Depress the GO button	
	HCO	c) Initiate boration at the rate determined in OPG-REACTIVITY-CALC	**NOTE:** The HCO will initiate a boration.
	HCO	d) Place PRZR backup heaters switch to ON	

Op Test No.: N2014-301 Scenario # 3 Event # 4 Page 35 of 58

Event Description: **Main Turbine High Vibration/Downpower w/Hotwell Level Transmitter fails HIGH**

Time	Pos.	Expected Actions/Behavior	Comments
	HCO	(*Step 2) Monitor RCS Tavg • Tavg- GREATER THAN 545°F • Tavg- LESS THAN 579°F	**NOTE:** This is a Continuous Action. The CRS will make both board operators aware.
	HCO	(Step 3) Adjust Boric Acid Addition Rate As Necessary To (refer to OPG-REACTIVITY-CALC): • Maintain rods above the insertion limit • Match Tavg and Tref • Compensate for Xenon	
	HCO	(*Step 4) Monitor PRZR Pressure- TRENDING TO 2235 PSIG IN AUTO	**NOTE:** This is a Continuous Action. The CRS will make both board operators aware.
	CO	(*Step 5) Monitor MFW Regulating Valves- RESTORING S/G LEVEL TO 52% IN AUTO	**NOTE:** This is a Continuous Action. The CRS will make both board operators aware.
	HCO	(*Step 6) Monitor PRZR Level- TRENDING TO PROGRAM IN AUTO CONTROL	**NOTE:** This is a Continuous Action. The CRS will make both board operators aware.
	CO	(Step 7) Check IA Available To CNMT	
		IA pressure - GREATER THAN 60 PSIG	
		Instr Air to CNMT Isol Valve, AOV-5392 - OPEN	
	HCO/ CO	(Step 8) Check Steam Dump Status:	
		Annunciator G-15, STEAM DUMP ARMED - LIT	
		Steam dump operating properly in AUTO	

Op Test No.: N2014-301 Scenario # 3 Event # 4 Page 36 of 58

Event Description: **Main Turbine High Vibration/Downpower w/Hotwell Level Transmitter fails HIGH**

Time	Pos.	Expected Actions/Behavior	Comments
	CO	(Step 9) Check Hotwell Level:	**NOTE:** The CO will recognize that the Hotwell Controller Output is greater than 60%.
		Hotwell level controller in AUTO	
		Controller demand LESS THAN 60%	
		Hotwell level at setpoint	
	CO	(Step 9 RNO) IF controller demand approaching 70% (Large Reject Valve Opens), THEN place controller in Manual and control level.	**NOTE:** The CO will place the Hotwell Controller in MANUAL.
	CRS/ CO	(Step 10) Check If Condensate Booster Pumps Should Be Secured	
		Condensate booster pumps – 2 PUMPS RUNNING	**NOTE:** There are NO Condensate Booster Pumps running.

To ensure conditions are met for FR-H.1 entry in the next scenario, the next events should be initiated after ~ 2% load reduction has been completed. At the discretion of the Lead Examiner move to Events #5-9.

Op Test No.:	N2014-301	Scenario #	3	Event #	5, 6, 7, 8 & 9	Page	37	of 58

Event Description: **Feed Line Rupture Inside Containment/Safety Injection fails to actuate Automatically/A AFW Pump to Auto Start/Trips after Manual Start/TDAFW Pump trips on Overspeed/Standby AFW fails to function**

Subsequently, a feed line rupture inside Containment will occur. The Reactor will trip however, the Safety Injection will fail to actuate automatically. The operator will enter E-0, Reactor Trip or Safety Injection. On the reactor trip the A AFW Pump will fail to Autostart, then trip after it is manually started; and the TDAFW Pump will trip on overspeed. The operator will transition from E-0 to FR-H.1, Response to a Loss of Secondary Heat Sink. The operator will unsuccessfully attempt to place the Standby AFW System in service, and then attempt to restore a Secondary Heat Sink using the MFW System. Once the Secondary Heat Sink is re-established using MFW, the operator will transition back to E-0, and then transition to E-2, Faulted Steam Generator Isolation. The scenario will terminate at Step 9 of E-2, after the crew has determined that a transition to E-1, Loss of Reactor or Secondary Coolant, is required.

SIM DRIVER Instructions: Operate Trigger #4 (FDW09A, 2E+7 over 180 seconds)

Indications Available:

- Containment NR Pressure starts to rise.
- Feedflow A SG starts to rise.
- A SG NR Level starts to lower.

Time	Pos.	Expected Actions/Behavior	Comments
		E-0, REACTOR TRIP OR SAFETY INJECTION	
	HCO	(Step 1) Verify Reactor Trip:	**Immediate Action**
		• At least one train of reactor trip breakers – OPEN	
		• Neutron flux - LOWERING	
		• MRPI indicates – ALL CONTROL AND SHUTDOWN RODS ON BOTTOM	
	CO	(Step 2) Verify Turbine Stop Valves – CLOSED	**Immediate Action**
	CO	(Step 3) Verify Both Trains of AC Emergency Busses Energized to at Least 440 VOLTS:	**Immediate Action**
		• Bus 14 and Bus 18	

Op Test No.: N2014-301 Scenario # 3 Event # 5, 6, 7, 8 & 9 Page 38 of 58

Event Description: **Feed Line Rupture Inside Containment/Safety Injection fails to actuate Automatically/A AFW Pump to Auto Start/Trips after Manual Start/TDAFW Pump trips on Overspeed/Standby AFW fails to function**

Time	Pos.	Expected Actions/Behavior	Comments
		• Bus 16 and Bus 17	
	HCO	(*Step 4) Check if SI is Actuated:	**Immediate Action**
		• Any SI Annunciator – LIT	**NOTE:** D-28, CNMT Press
		• SI sequencing – BOTH TRAINS STARTED.	

CRITICAL TASK

1. Manually actuate Safety Injection before transition out of E-0 into ES-0.1

Safety Significance: Failure to actuate Safety Injection when it is required to be actuated, and can be actuated, violates the assumptions of the Safety Analysis and constitutes incorrect performance that could lead to misdiagnosis of the event, implementation of an incorrect mitigation strategy and ultimately degradation of the RCS and/or fuel cladding fission product barriers.

	HCO/ CO	Foldout Page	**NOTE:** The crew will monitor these conditions throughout the performance of E-0.
		RCP TRIP CRITERIA	
		LOSS OF SW CRITERIA	
		AFW SUPPLY SWITCHOVER CRITERION	
		SFP COOLING CRITERIA	**NOTE:** The CRS may dispatch an AO to address the status of the SFPCS. If so, **SIM DRIVER** acknowledge as AO, and report in 5 Minutes that the SFPCS is operating normally.
	HCO	(*Step 5) Verify CNMT Spray Not Required:	
		• Annunciator A-27, CNMT SPRAY – EXTINGUISHED	

Op Test No.: N2014-301 Scenario # 3 Event # 5, 6, 7, 8 & 9 Page 39 of 58

Event Description: **Feed Line Rupture Inside Containment/Safety Injection fails to actuate Automatically/A AFW Pump to Auto Start/Trips after Manual Start/TDAFW Pump trips on Overspeed/Standby AFW fails to function**

Time	Pos.	Expected Actions/Behavior	Comments
		• CNMT pressure- LESS THAN 28 PSIG	**NOTE:** Containment Pressure will be rising, and will exceed 28 psig. This is a Continuous Action Step, and will need to be verified when the conditions are met (i.e. by performing Step 5 RNO).
	HCO	(Step 5 RNO) Verify CNMT spray initiated.	
	CRS	(Step 6) Direct Operator to Perform ATT-27.0, ATTACHMENT AUTOMATIC ACTION VERIFICATION	
			NOTE: The CRS will hand off ATT-27.0 to either the HCO or the CO, and continue with the other operator in E-0. **Examiner** following operator performing ATT-27.0 continue below. **Examiner** following operator NOT performing ATT-27.0 continue at **Page 42**.
E-0, REACTOR TRIP OR SAFETY INJECTION, ATTACHMENT 27.0, ATTACHMENT AUTOMATIC ACTION VERIFICATION			
	HCO/ CO	(Step 1) Verify SI and RHR Pumps Running:	
		• All SI pumps – RUNNING	
		• Both RHR pumps – RUNNING	
	HCO/ CO	(Step 2) Verify CNMT RECIRC Fans Running:	
		• All fans – RUNNING	

Op Test No.: N2014-301 Scenario # 3 Event # 5, 6, 7, 8 & 9 Page 40 of 58

Event Description: **Feed Line Rupture Inside Containment/Safety Injection fails to actuate Automatically/A AFW Pump to Auto Start/Trips after Manual Start/TDAFW Pump trips on Overspeed/Standby AFW fails to function**

Time	Pos.	Expected Actions/Behavior	Comments
		• Charcoal filter dampers green status lights – EXTINGUISHED	
	HCO/ CO	(Step 3) Check If Main Steamlines Should Be Isolated:	
		• Any MSIV – OPEN	
		• Check CNMT pressure- LESS THAN 18 PSIG	
		• Ensure BOTH MSIVs closed and go to Step 4.	
	HCO/ CO	(Step 4) Verify MFW Isolation:	
		• MFW pumps – TRIPPED	
		• MFW Isolation valves – CLOSED	
		• S/G A, AOV-3995	
		• S/G B, AOV-3994	
		• S/G Blowdown and sample valves - CLOSED	
	HCO/ CO	(Step 5) Verify At Least Two SW Pumps - RUNNING	
	HCO/ CO	(Step 6) Verify CI and CVI:	
		• CI and CVI annunciators - LIT	
		• Annunciator A-26, CNMT ISOLATION	
		• Annunciator A-25, CNMT VENTILATION ISOLATION	
		• Verify CI and CVI valve status lights – BRIGHT	

Op Test No.: N2014-301 Scenario # 3 Event # 5, 6, 7, 8 & 9 Page 41 of 58

Event Description: **Feed Line Rupture Inside Containment/Safety Injection fails to actuate Automatically/A AFW Pump to Auto Start/Trips after Manual Start/TDAFW Pump trips on Overspeed/Standby AFW fails to function**

Time	Pos.	Expected Actions/Behavior	Comments
		• CNMT RECIRC fan coolers SW outlet valve status lights - BRIGHT	
		• FCV-4561	
		• FCV-4562	
		• Letdown orifice valves - CLOSED	
		• AOV-200A	
		• AOV-200B	
		• AOV-202	
	HCO/ CO	(Step 7) Check CCW System Status:	
		• Verify CCW pump – AT LEAST ONE RUNNING	
	HCO/ CO	(Step 8) Verify SI and RHR Pump Flow:	
		• SI flow indicators – CHECK FOR FLOW	
		• RHR flow indicator – CHECK FOR FLOW	
		(Step 7b RNO) IF RCS pressure less than 150 psig…….	**NOTE:** RCS Pressure is > 150 psig.
	HCO/ CO	(Step 9) Verify SI Pump and RHR Pump Emergency Alignment:	
		• RHR pump discharge to Rx vessel deluge - OPEN	
		• MOV-852A	
		• MOV-852B	
		• Verify SI pump C – RUNNING	
		• Verify SI pump A - RUNNING	
		• Verify SI pump B - RUNNING	

Op Test No.: N2014-301 Scenario # 3 Event # 5, 6, 7, 8 & 9 Page 42 of 58

Event Description: **Feed Line Rupture Inside Containment/Safety Injection fails to actuate Automatically/A AFW Pump to Auto Start/Trips after Manual Start/TDAFW Pump trips on Overspeed/Standby AFW fails to function**

Time	Pos.	Expected Actions/Behavior	Comments
		• Verify SI pump C discharge valves - OPEN	
		• MOV-871A	
		• MOV-871B	
	HCO/ CO	(Step 10) Verify CREATS Actuation:	
		• At least one damper in each flowpath - CLOSED	
		• Normal Supply Air	
		• Normal Return Air	
		• Lavatory Exhaust Air	
		• CREATS fans – BOTH RUNNING	
	HCO/ CO	(Step 11) Verify CI and CVI During a Fire Event	
		A confirmed fire has occurred in the control complex or cable tunnel (fire systems S05, S06, S08, Z05, Z18, or Z19).	
		Go to END	
E-0, REACTOR TRIP OR SAFETY INJECTION			
			Examiner following operator NOT performing ATT-27.0 continue **HERE**.
	HCO/ CO	(Step 7) Verify Both MDAFW Pumps Running	**NOTE:** The B AFW Pump is OOS, and the A AFW Pump will TRIP shortly after manual START.

Op Test No.: N2014-301 Scenario # 3 Event # 5, 6, 7, 8 & 9 Page 43 of 58

Event Description: **Feed Line Rupture Inside Containment/Safety Injection fails to actuate Automatically/A AFW Pump to Auto Start/Trips after Manual Start/TDAFW Pump trips on Overspeed/Standby AFW fails to function**

Time	Pos.	Expected Actions/Behavior	Comments
	CO	(Step 7 RNO) Manually start both MDAFW pumps. IF less than 2 MDAFW pumps are running, THEN manually open TDAFW pump steam supply valves. • MOV-3505A • MOV-3504A	**NOTE:** The TDAFW Pump will trip on overspeed If dispatched as an AO, **SIM DRIVER:** Report that governor valve **cannot be reset** in **5 minutes**.
	HCO/ CO	(Step 8) Verify AFW Valve Alignment:	
		• AFW flow – INDICATED TO BOTH S/G(s)	
		• AFW flow from each MDAFW pump – LESS THAN 230 GPM	
	HCO/ CO	(Step 8 RNO) Manually align valves as necessary	**NOTE:** There will be no AFW flow, and manually alignment of valves will NOT restore flow.
	HCO/ CO	(*Step 9) Monitor Heat Sink:	
		• Check S/G narrow range level – GREATER THAN 7% [**25% ADVERSE CNMT**] in any S/G	**NOTE:** Adverse Containment Numbers should be used, until Containment Pressure is less than 4 psig.
	HCO/ CO	(Step 9 RNO) Perform the following: Verify total AFW flow GREATER THAN 200 GPM IF total AFW is less than 200 GPM, THEN manually start pumps and align valves to establish greater than 200 gpm AFW flow. IF AFW flow greater than 200 gpm can flow can NOT be established, THEN go to FR-H.1, RESPONSE TO LOSS OF SECONDARY HEAT SINK. Step 1.	

Op Test No.: N2014-301 Scenario # 3 Event # 5, 6, 7, 8 & 9 Page 44 of 58

Event Description: **Feed Line Rupture Inside Containment/Safety Injection fails to actuate Automatically/A AFW Pump to Auto Start/Trips after Manual Start/TDAFW Pump trips on Overspeed/Standby AFW fails to function**

Time	Pos.	Expected Actions/Behavior	Comments
			NOTE: The CRS will go to FR-H.1.
			Examiner NOTE: An Orange Path on Containment will also exist but the Red Path on Heat Sink will be a higher priority.
FR-H.1, RESPONSE TO LOSS OF SECONDARY HEAT SINK			
	HCO/ CO	Foldout Page	**NOTE:** The crew will monitor these conditions throughout the performance of FR-H.1.
		LOSS OF SW CRITERIA	
	HCO	(Step 1) Check If Secondary Heat Sink Is Required: a) RCS pressure- GREATER THAN ANY NON-FAULTED S/G PRESSURE b) Check RCS cold leg temperature GREATER THAN 350°F	
	CO	(*Step 2) Check if Bleed and Feed is Required Both S/G level wide range levels LESS THAN 120 inches [160 inches adverse CNMT]	**NOTE:** Adverse Containment Numbers should be used, until Containment Pressure is less than 4 psig.
	CRS	(Step 2 RNO) Go to Step 3.	
	HCO	(Step 3.a) Try to Establish AFW Flow To At Least One Intact S/G: a) Check Blowdown and Sample Valves-CLOSED	

Op Test No.: N2014-301 Scenario # 3 Event # 5, 6, 7, 8 & 9 Page 45 of 58

Event Description: **Feed Line Rupture Inside Containment/Safety Injection fails to actuate Automatically/A AFW Pump to Auto Start/Trips after Manual Start/TDAFW Pump trips on Overspeed/Standby AFW fails to function**

Time	Pos.	Expected Actions/Behavior	Comments
	HCO	(Step 3.a RNO) Place Blowdown and sample valve switches to CLOSE	
	CO	(Step 3.b) Verify 2 MDAFW Pump-AVAILABLE	**NOTE:** Neither MDAFW Pump is available.
		(Step 3.b RNO) Perform the following: IF the TDAFW is available THEN ..... IF SBAFW is available THEN go to Step 4.	**NOTE:** The TDAFW Pump is NOT available, however, the SBAFW System is available.
	HCO	(Step 4) Stop Both RCPs	**NOTE:** The HCO will stop both RCPs.
	HCO	(Step 5) Reset SI if Actuated	
	CO	(Step 6) Try and Establish SAFW Flow To At Least One Intact S/G: a) Perform the following: 1) Align SAFW system for operation (Refer to ATT-5.1, ATTACHMENT SAFW)	
ATTACHMENT-5.1, ATTACHMENT SAFW			
			NOTE: The CO will attempt to align Train B to feed the B SG due to the fault in A SG.

Op Test No.: N2014-301 Scenario # 3 Event # 5, 6, 7, 8 & 9 Page 46 of 58

Event Description: **Feed Line Rupture Inside Containment/Safety Injection fails to actuate Automatically/A AFW Pump to Auto Start/Trips after Manual Start/TDAFW Pump trips on Overspeed/Standby AFW fails to function**

Time	Pos.	Expected Actions/Behavior	Comments
	CO	(Step C) Align SAFW Pump D to selected S/G as follows: 1) Ensure SI reset 2) Ensure the following valves open: • MOV-9701B, SAFW PUMP D DISCHARGE • MOV-4615, AUX BLDG SW ISOL VLVS • MOV-9704B, SAFW PUMP D ISOL VLV • MOV-9746, SAFW PMP D EMERG DISCH VLV 3) Open MOV-9629B, SAFW PUMP D SUCTION VLV 4) Verify at least 1 SW pump running 5a) To feed S/G B, go to step 6. 6) Restore SAFW flow as directed by procedure in effect.	
			NOTE: The CO will report that the D SBAFW Pump is ready to be started.
FR-H.1, RESPONSE TO LOSS OF SECONDARY HEAT SINK			
	CRS/ CO	(Step 6.a.2) Determine SAFW flow requirements per ATT-22.0, ATTACHMENT RESTORING FEED FLOW	**NOTE:** The CRS will direct the CO to use ATT-22.0 to determine the allowable rate of feed flow to the B SG.
ATT-22.0, ATTACHMENT RESTORING FEED FLOW			
	HCO	(Step 1) Check affected S/G Loop RCS Temperature	**NOTE:** The CO will determine that the B SG can be filled as desired to restore Narrow Range Level to > 25%, when a Feedwater flow source is restored.
		Tavg in the affected Loop Less Than 550°F.	

Op Test No.: N2014-301 Scenario # 3 Event # 5, 6, 7, 8 & 9 Page 47 of 58

Event Description: **Feed Line Rupture Inside Containment/Safety Injection fails to actuate Automatically/A AFW Pump to Auto Start/Trips after Manual Start/TDAFW Pump trips on Overspeed/Standby AFW fails to function**

Time	Pos.	Expected Actions/Behavior	Comments
	CO	Fill affected S/G as necessary to restore level	
	CRS	Go to Step 3.	
	HCO	(Step 3) Check RCS Loop Hot Legs - BOTH HOT LEG TEMPERATURES LOWERING	
	HCO/ CO	(Step 4) Verify affected S/G is not faulted or ruptured.	**NOTE:** The B SG is NOT Faulted or Ruptured.
FR-H.1, RESPONSE TO LOSS OF SECONDARY HEAT SINK			
	CO	(Step 6.a.3) Start selected SAFW pump(s) a. IF greater than 215 gpm total SAFW flow can NOT be established, THEN go to Step 7	**NOTE:** The D SBAFW Pump will fail to start, and the CRS will direct the CO to start the C SAFW pump per Section B of ATT-5.1.
ATTACHMENT-5.1, ATTACHMENT SAFW			
	CO	(Step B) Align SAFW Pump C to selected S/G as follows: 1) Ensure SI reset 2) Ensure the following valves open: • MOV-9701A, SAFW PUMP C DISCHARGE • MOV-4616, AUX BLDG SW ISOL VLVS • MOV-9704A, SAFW PUMP C ISOL VLV 3) Open MOV-9629A, SAFW PUMP C SUCTION VLV	**NOTE:** MOV-9629A will NOT open . HCO/CO should inform CRS that suction valve to C SAFW pump cannot be opened.
FR-H.1, RESPONSE TO LOSS OF SECONDARY HEAT SINK			

Op Test No.: N2014-301 Scenario # 3 Event # 5, 6, 7, 8 & 9 Page 48 of 58

Event Description: **Feed Line Rupture Inside Containment/Safety Injection fails to actuate Automatically/A AFW Pump to Auto Start/Trips after Manual Start/TDAFW Pump trips on Overspeed/Standby AFW fails to function**

Time	Pos.	Expected Actions/Behavior	Comments
	CRS	(Step 6.a RNO) If greater than 215 gpm total SAFW flow can NOT be established, THEN go to Step 7	
	CO	(Step 7) Try to Establish MFW Flow to at Least One S/G	
		• Check any MFW pump AVAILABLE	
		• Check condensate system:	
		• Condensate pump - ANY RUNNING	
		• MFW pump suction pressure GREATER THAN 200 PSIG	
	CO	• Establish MFW flow:	
		• Check MFW pump discharge valves-CLOSED	
		• Verify MFW regulating or bypass valves - OPERABLE	
		• Depress MANUAL pushbuttons for A and B MFW regulating valve and bypass valve controllers AND adjust to 0% demand.	
	CO	• Open MFIV's for both S/G's: • S/G A. AOV-3995 • S/G B. AOV-3994	**NOTE:** The operator will NOT open AOV-3995 because the A S/G is Faulted.
	CRS	• Dispatch AO to restore MFW pump SW cooling	**NOTE:** The CRS will dispatch an AO. **SIM DRIVER:** as **AO**, acknowledge, and immediately reports that SW is verified.
	HCO	• Verify S/G blowdown key switches in NORMAL	
	CO	• Ensure Annunciator H-4, MAIN FEED PUMP OIL SYSTEM-EXTINGUISHED	

Op Test No.: N2014-301 Scenario # 3 Event # 5, 6, 7, 8 & 9 Page 49 of 58

Event Description: **Feed Line Rupture Inside Containment/Safety Injection fails to actuate Automatically/A AFW Pump to Auto Start/Trips after Manual Start/TDAFW Pump trips on Overspeed/Standby AFW fails to function**

Time	Pos.	Expected Actions/Behavior	Comments
	CO	• Close Condensate Bypass valve, AOV-3959	
	CO	• Ensure Annunciator H-11, Feed PUMP SEAL WATER LO DIFF PRESS 15 PSI- EXTINGUISHED	**NOTE:** Whether or not this Annunciator is LIT will depend on the control of the Hotwell Level, which is in MANUAL Control
	CO	• Ensure one MFW pump recirc valve-OPEN	
	CO	• Start Selected MFW pump	
	CO	• Open MFW pump discharge valve	
	CO	• Open MFW regulating or bypass valves to control MFW flow per requirements of ATT-22.0, ATTACHMENT RESTORING FEED FLOW	**NOTE:** The CO will determine that the B SG can be filled as desired to restore Narrow Range Level to > 25% per ATT-22.0, when a Feedwater flow source is restored.
	CRS	• Go to Step 11	
	CO	Step 11. Check S/G Levels: a) Narrow range level in at least one S/G- GREATER THAN 7% [**25% adverse CNMT**] IF feed flow verified and level rising in at Least one S/G, THEN maintain flow to Restore narrow range level greater than 7% [**25% adverse CNMT**]. b) Return to procedure and step in effect.	**NOTE:** Adverse Containment Numbers should be used, until Containment Pressure is less than 4 psig. **NOTE:** The CRS will determine that a Secondary Heat Sink has been restored with the MFW System, and return to E-0, Step 9.

Op Test No.: N2014-301 Scenario # 3 Event # 5, 6, 7, 8 & 9 Page 50 of 58

Event Description: **Feed Line Rupture Inside Containment/Safety Injection fails to actuate Automatically/A AFW Pump to Auto Start/Trips after Manual Start/TDAFW Pump trips on Overspeed/Standby AFW fails to function**

Time	Pos.	Expected Actions/Behavior	Comments
CRITICAL TASK **2. Establish feedwater flow into at least one Steam Generator before RCS Bleed and Feed is required.** Safety Significance: Failure to establish feedwater flow into at least one Steam Generator results in the crew having to rely upon the lower-priority action of having to initiate RCS Bleed and Feed to minimize the possibility of core uncovery. Failure to perform this task, when able to do so, constitutes incorrect performance that leads to degradation of the RCS and/or fuel cladding fission product barriers.			
			NOTE: The CRS will likely conduct an Alignment Brief.
		E-0, REACTOR TRIP OR SAFETY INJECTION	
	CO	(*Step 9) Monitor Heat Sink:	
		• Check S/G narrow range level – GREATER THAN 7% [**25% ADVERSE CNMT**] in any S/G	**NOTE:** Adverse Containment Numbers should be used, until Containment Pressure is less than 4 psig.
		• Check S/G narrow range level BOTH S/G LESS THAN 50%	
		• Control feed flow to maintain S/G narrow range level between 7% [**25% adverse CNMT**] and 50%.	**NOTE:** Adverse Containment Numbers should be used, until Containment Pressure is less than 4 psig.
	CO	(Step 10) Check If TDAFW Pump Can Be Stopped:	
		• Both MDAFW pumps – RUNNING	**NOTE:** None of the AFW Pumps are running.
	CRS	(Step 10 RNO) Go to Step 11	
	HCO	(Step 11) Check CCW Flow to RCP Thermal Barriers:	

Op Test No.: N2014-301 Scenario # 3 Event # 5, 6, 7, 8 & 9 Page 51 of 58

Event Description: **Feed Line Rupture Inside Containment/Safety Injection fails to actuate Automatically/A AFW Pump to Auto Start/Trips after Manual Start/TDAFW Pump trips on Overspeed/Standby AFW fails to function**

Time	Pos.	Expected Actions/Behavior	Comments
		• Annunciator A-7, RCP 1A CCW RETURN HI TEMP OR LO FLOW EXTINGUISHED	
		• Annunciator A-15, RCP 1B CCW RETURN HI TEMP OR LOW FLOW - EXTINGUISHED	
	HCO	(*Step 12) Monitor RCS Tavg – STABLE AT OR TRENDING TO 547°F	**NOTE:** The crew may take the RNO action depending on how the crew has controlled Temperature to this point.
	HCO	(Step 12 RNO) If temperature less than 547°F and lowering, THEN perform the following:	
		• Stop dumping steam.	
		• Ensure reheater steam supply valves are closed.	
		• IF cooldown continues, THEN control total feed flow between 20 gpm to 230 gpm until narrow range level greater than 7% [**25% adverse CNMT**] in at least one S/G.	**NOTE:** Adverse Containment Numbers should be used, until Containment Pressure is less than 4 psig.
		• WHEN S/G level greater than 7% [**25% adverse CNMT**] in one S/G, THEN limit feed flow to that required to maintain level in at least one S/G.	**NOTE:** Adverse Containment Numbers should be used, until Containment Pressure is less than 4 psig.
		• IF cooldown continues, THEN close both MSIVs.	
	HCO	(Step 13) Check PRZR PORVs and Spray Valves:	
		• PORVs – CLOSED	
		• Auxiliary Spray Valve (AOV-296) – CLOSED	

Op Test No.: N2014-301 Scenario # 3 Event # 5, 6, 7, 8 & 9 Page 52 of 58

Event Description: **Feed Line Rupture Inside Containment/Safety Injection fails to actuate Automatically/A AFW Pump to Auto Start/Trips after Manual Start/TDAFW Pump trips on Overspeed/Standby AFW fails to function**

Time	Pos.	Expected Actions/Behavior	Comments
		• Check PRZR pressure – LESS THAN 2260 PSIG	
		• Normal PRZR spray valves - CLOSED	
		• PCV-431A	
		• PCV-431B	
	HCO	(Step 14) Monitor RCP Trip Criteria:	
		• RCP status – ANY RCP RUNNING	**NOTE:** The RCPs were previously stopped.
	CRS	(Step 14c RNO) Go to Step 15.	
	CO	(Step 15) Check If S/G Secondary Side Is Intact: • Pressure in both S/Gs- STABLE OR RISING • Pressure in both S/Gs- GREATER THAN 110 PSIG	**NOTE:** The A SG is depressurizing in an uncontrolled manner.
	CRS	(Step 15 RNO) IF any S/G pressure lowering in an uncontrolled manner OR completely depressurized, THEN go to E-2, FAULTED STEAM GENERATOR ISOLATION, Step 1.	
			NOTE: The CRS will go to E-2.
			NOTE: The CRS will likely conduct an Alignment Brief.
E-2, FAULTED STEAM GENERATOR ISOLATION			
	HCO/ CO	Foldout Page	**NOTE:** The crew will monitor these conditions throughout the performance of E-2.
		LOSS OF SW CRITERIA	

Op Test No.: N2014-301 Scenario # 3 Event # 5, 6, 7, 8 & 9 Page 53 of 58

Event Description: **Feed Line Rupture Inside Containment/Safety Injection fails to actuate Automatically/A AFW Pump to Auto Start/Trips after Manual Start/TDAFW Pump trips on Overspeed/Standby AFW fails to function**

Time	Pos.	Expected Actions/Behavior	Comments
	CO	(Step 1) Check MSIV of Faulted S/G(s) - CLOSED	**NOTE:** BOTH MSIVs are CLOSED.
	CO	(Step 2) Check If Any S/G Secondary Side Is Intact:	
		• Check pressure in S/G A- STABLE OR RISING	**NOTE:** The A SG is depressurized.
		OR	
		• Check pressure in S/G B – STABLE OR RISING	
	CO	(Step 3) Check Faulted S/G Status:	**NOTE:** The A SG is depressurized.
		• Faulted S/G pressure – LOWERING IN AN UNCONTROLLED MANNER	
		OR	
		• Faulted S/G – COMPLETELY DEPRESSURIZED	
	CO	(Step 4) Isolate Feed Flow to Faulted S/G:	
		• Close or verify closed the following valves:	
		• Faulted S/G MDAFW pump discharge valve	
		• S/G A, MOV-4007	
		• Faulted S/G MFW regulating valve and bypass valve - CLOSED	
		• S/G A, HCV-466 and HCV-480	
		• MFW isolation valves - CLOSED	
		• S/G A, AOV-3995	
		• MDAFW pump crosstie valves – BOTH CLOSED	

Op Test No.: N2014-301 Scenario # 3 Event # 5, 6, 7, 8 & 9 Page 54 of 58

Event Description: **Feed Line Rupture Inside Containment/Safety Injection fails to actuate Automatically/A AFW Pump to Auto Start/Trips after Manual Start/TDAFW Pump trips on Overspeed/Standby AFW fails to function**

Time	Pos.	Expected Actions/Behavior	Comments
		• MOV-4000A	
		• MOV-4000B	
	CO	• Faulted S/G SAFW pump discharge valve	
		• S/G A, MOV-9704A	**NOTE:** MOV-9704A is OPEN from ATT-5.1, and must be closed.
		• Pull stop faulted S/G MDAFW pump	
		• Close faulted S/G TDAFW flow control valve	
		• S/G A, AOV-4297	
	CO	(Step 5) Isolate Steam Flow From Faulted S/G:	
		• Verify faulted S/G ARV – CLOSED	
		• S/G A, AOV-3411	
		• Close faulted S/G TDAFW pump steam supply valve and place in PULL STOP	
		• S/G A, MOV-3505A	
		• Verify faulted S/G blowdown and sample valves – CLOSED	
		• S/G A, AOV-5738 and AOV-5735	
		• Dispatch AO to complete faulted S/G isolation (Refer to ATT-10.0, ATTACHMENT FAULTED S/G)	**NOTE:** The CRS will dispatch an AO. **SIM DRIVER:** as **AO**, acknowledge.
	CO	(*Step 6) Monitor Intact S/G Levels:	**Examiner NOTE:** Terminate the Exam at the discretion of the Lead Examiner.

Op Test No.: N2014-301 Scenario # 3 Event # 5, 6, 7, 8 & 9 Page 55 of 58

Event Description: **Feed Line Rupture Inside Containment/Safety Injection fails to actuate Automatically/A AFW Pump to Auto Start/Trips after Manual Start/TDAFW Pump trips on Overspeed/Standby AFW fails to function**

Time	Pos.	Expected Actions/Behavior	Comments
		• Narrow range level – GREATER THAN 7% [**25% adverse CNMT**]	**NOTE:** Adverse Containment Numbers should be used, until Containment Pressure is less than 4 psig.
		• Control feed flow to maintain narrow range level between 17% [**25% adverse CNMT**] and 50%	**NOTE:** Adverse Containment Numbers should be used, until Containment Pressure is less than 4 psig.
	HCO	(Step 7) Check Secondary Radiation Levels - NORMAL	
		• Steamline radiation monitor (R-31 and R-32)	
		• Air ejector radiation monitor (R-15)	
		• S/G blowdown radiation monitor (R-19)	
		• Request Chem Tech sample S/Gs for activity	
	CO	(Step 8) Adjust Steam Dump to Minimize RCS Heatup:	
		• Determine allowable intact S/G pressure using maximum hot leg temperature (Refer to FIG-7.0, FIGURE INTACT S/G PRESSURE)	
		• Check condenser steam dump available:	**NOTE:** Steam Dump to the Condenser is NOT available.
	CO	(Step 8b RNO) Perform the following:	
		• Adjust intact S/G ARV to pressure determined from FIG-7.0, FIGURE INTACT S/G PRESSURE.	
	CRS	• Go to E-1, LOSS OF REACTOR OR SECONDARY COOLANT, Step 1.	

Op Test No.: N2014-301 Scenario # 3 Event # 5, 6, 7, 8 & 9 Page 56 of 58

Event Description: **Feed Line Rupture Inside Containment/Safety Injection fails to actuate Automatically/A AFW Pump to Auto Start/Trips after Manual Start/TDAFW Pump trips on Overspeed/Standby AFW fails to function**

Time	Pos.	Expected Actions/Behavior	Comments
			NOTE: The CRS will go to E-1.
Terminate the Exam at the discretion of the Lead Examiner **SRO Examiner Perform Admin JPM A4c on CRS**			

TURNOVER SHEET for NRC Exam Scenario #3

Core Age: MOL
48% Power, Equilibrium Xe
Outside Air Temp = 45°F
Water Temp = 45°F
	Procedure in Use:	ACTIONS/NOTES:
		• The plant is at 48% power (MOL).
		• The plant power was reduced several days ago due to a malfunction on the A MFW Pump.
		• Corrective Maintenance has been completed, and the pump is running for retest.
		• The B AFW Pump is OOS for Bearing Replacement. A-52.4 submitted for ITS 3.6.6, 7 day Action.
		• MRPI for Rod G3 indicates on the bottom, however, this is a confirmed instrumentation problem (I&C is working).
		• RG&E Energy Control Center has requested that the electric plant be aligned to a 0/100 configuration on circuit 7T to allow the RG&E personnel to perform an insulator inspection on the 767 Line. The 767 line will remain OPERABLE throughout the inspection.
		• The following Alarms are in:
		  • C-5, PPCS ROD SEQUENCE OR ROD (MRPI Failure)
		  • DEVIATION/PPCS LTOP HI-LOW TEMPERATURE
		  • C-14, ROD BOTTOM (MRPI Failure)
		  • E-4, POWER RANGE UPPER DETECT FLUX DEV OR AUTO DEFEAT (< 50% Power)
		  • E-12, POWER RANGE LOWER DETECT FLUX DEV OR AUTO DEFEAT (< 50% Power)
		  • J-25, SAFEGUARDS EQUIPMENT LOCKED OFF (B MD AFW Pump OOS)
		• Protected equipment IAW OPG Protected Equipment.

Boron: 1106 ppm BAST: 17,400 ppm RCS Activity: Normal	RCS LEAKAGE: (gpm) Total: .021 Identified: .003 Unidentified: .018	

TURNOVER SHEET for NRC Exam Scenario #3

Equipment Problems/OOS:	*Planned Activities for Shift:*	Electrical System Operator Declarations
See NOTES	• Align a 0/100 configuration on circuit 7T	None in effect

	BAST (gal)	RWST (gal)	1st hour dilution stabilization (gal RMW)	2nd hour dilution stabilization (gal RMW)
10% at 1% per minute	52	545	77	51
10% at 10% per hour	48	503	77	52
50% at 1% per minute	229	2482	558	314
50% at 10% per hour	173	1860	296	98

A-52.4					
EQUIPMENT	**DATE/TIME OOS**	**LCO**	**TITLE**	**EXP DATE**	**ECD**
'B' MDAFW Pump	Yesterday, 24hrs ago	3.7.5.B	AFW system	7 days	2 days from now AM
MRPI for Rod G3	Today 4hrs ago	3.1.7.A2	Rod Position Indication	None	None
A-52.12					
EQUIPMENT	**DATE/TIME OOS**	**TRM /ODCM**	**TITLE**	**EXP DATE**	**ECD**

PROGRAM: Ginna Operations Training

MODULE: 2014 Initial License Operator Training Class

TOPIC: NRC Simulator Exam

Scenario N2014-301-4

REFERENCES:

1. S-3.2P, Swapping CVCS Letdown Orifices, Rev 00401
2. P-17, Operations Control Room Operating Instructions, Attachment 12, CROI-12 Swapping Electro-Hydraulic Pumps, Rev 01602
3. AR-E-26, POWER RANGE CHANNEL DEV ±2%, Rev 12
4. AR-E-28, POWER RANGE ROD DROP ROD STOP -5%/5SEC, Rev 00700
5. ER-NIS.3, PR Malfunction, Rev 02603
6. Technical Specification 3.3.1, Reactor Trip Instrumentation, Amendment 112
7. CNG-OP-1.01-1000, Conduct of Operations, Rev 01000
8. AR-F-19, PRZR PORV OUTLET HI TEMP 145°F, Rev 01101
9. AP-PRZR.1, Abnormal Pressurizer Pressure, Rev 01700
10. A-503.1, Emergency And Abnormal Operating Procedures Users Guide, Rev 04409
11. Core Operating Limits Report (COLR), Cycle 37, Rev 0
12. AP-RCS.1, Reactor Coolant Leak, Rev 02001
13. AR-F-9, PRT HI PRESS 5 PSI, Rev 00701
14. AP-TURB.5, Rapid Load Reduction, Rev 01600
15. ATT-23.0, Attachment Transfer 4160 V Loads, Rev 0
16. Technical Specification 3.4.13, RCS Leakage, Amendment 100
17. Technical Specification 3.4.11, Pressurizer PORVs, Amendment 88
18. Technical Specification 3.4.1 RCS Pressure, Temperature, and Flow Departure from Nucleate Boiling (DNB) Limits, Amendment 80
19. TRM 3.4.3, Anticipated Transients Without Scram (ATWS) Mitigation, Rev 31
20. E-0, Reactor Trip and Safety Injection, Rev 04602
21. ATT-27.0, Attachment Automatic Action Verification, Rev 00400
22. E-1, Loss of Reactor or Secondary Coolant, Rev 04100
23. ATT-8.1, Attachment D/G Stop, Rev 6
24. ES-1.2 Post-LOCA Cooldown and Depressurization, Rev 03601
25. ATT-15.0, Attachment RCP Start, Rev 11
26. FR-P.1, Response to Imminent Pressurized Thermal Shock Condition, Rev 03200

Validation Time: 110 Minutes

Author: David Lazarony, Essential Training & Consulting, LLC

Facility Review:

Rev. 082714

Facility:	**Ginna**	Scenario No.: **4**	Op Test No.: **N2014-301**
Examiners:	_____	Operators:	_____ (SRO)
	_____		_____ (RO)
	_____		_____ (BOP)

Initial Conditions:	The plant is at 48% power (MOL). Power has been held at this level for approximately four days while corrective maintenance is performed on the A MFW Pump. Chemistry has indicated that continued operation on the 60 gpm Normal Letdown Orifice is no longer necessary. It is expected that Letdown will be returned to 40 gpm on this shift by swapping to Letdown Orifice Valve AOV-200A. Also, it is expected to swap EHC Pumps for routine equipment rotation. The area has experienced severe weather over the last 6 hours, and this is expected to continue for the next 6 hours.
Turnover:	The following equipment is Out-Of-Service: The B AFW Pump is OOS for Bearing Replacement. Steam Flow channel FT-475 is OOS. The channel has been defeated per ER-INST.1.

Event No.	Malf. No.	Event Type*	Event Description
1	NA	N-RO N-SRO	Swap Letdown Orifice (60 gpm to 40 gpm)
2	NA	N-BOP N-SRO	Alternate EHC Supply Pumps
3	NIS06A CVC07A	C-RO I-BOP I(TS)-SRO	Power Range N41 Upper Detector fails LOW/Letdown Pressure Controller Failure
4	PZR05B	C-RO C(TS)-SRO	PORV Leak/Block Valve Failure
5	TUR09D	R-RO C-BOP C-SRO	Downpower/Failure of Turbine Control/EHC
6	PZR07	M-RO M-BOP M-SRO	Pzr Steam Space Break
7	RPS11-A3	NA	Seal Water Return Isolation CIV Fails in AUTO

* (N)ormal, (R)eactivity, (I)nstrument, (C)omponent, (M)ajor

Ginna 2014 NRC Scenario #4

The plant is at 48% power (MOL). Power has been held at this level for approximately four days while corrective maintenance is performed on the A MFW Pump. Chemistry has indicated that continued operation on the 60 gpm Normal Letdown Orifice is no longer necessary. It is expected that Letdown will be returned to 40 gpm on this shift by swapping to Letdown Orifice Valve AOV-200A. Also, it is expected to swap EHC Pumps for routine equipment rotation. The area has experienced severe weather over the last 6 hours, and this is expected to continue for the next 6 hours.

The following equipment is Out-Of-Service: The B AFW Pump is OOS for Bearing Replacement. Steam Flow channel FT-475 is OOS. The channel has been defeated per ER-INST.1.

Shortly after taking the watch, the operator will swap Letdown Orifice Control valves in accordance with S-3.2P, Swapping CVCS Letdown Orifices.

After this, the operator will alternate the EHC Supply Pump alignment in accordance with P-17, Operations Control Room Operating Instructions, Attachment 12, CROI-12 Swapping Electro-Hydraulic Pumps.

Then, the N41 Power Ranger Upper Detector will fail Low. The operator will respond in accordance with AR-E-26, POWER RANGE CHANNEL DEV ±2%, and/or AR-E-28, POWER RANGE ROD DROP ROD STOP -5%/5SEC, and then enter ER-NIS.3, PR Malfunction. The operator will address Technical Specification 3.3.1, Reactor Trip Instrumentation. While the CO is defeating the failed Power Range Channel, a failure of the Letdown Pressure Controller will cause PCV-115 to fail OPEN. The operator will need to take manual control of the failed controller, and control Letdown pressure manually.

Subsequently, Pressurizer PORV-431C will fail partially open. The operator will respond in accordance with AR-F-18, PRZR PORV OUTLET HI TEMP 145°F, and enter AP-PZR.1, Abnormal Pressurizer Pressure. When the operator attempts to isolate the PORV, the Block Valve will fail to shut fully resulting in a 2-5 gpm leak into the PRT. The crew may implement AP-RCS.1, Reactor Coolant Leak, and prepare to make a Containment entry. Ultimately, the crew will be directed to take the unit off-line. The operator will address Technical Specification 3.4.11, Pressurizer PORVs, 3.4.1 RCS Pressure, Temperature, and Flow Departure from Nucleate Boiling (DNB) Limits, as well as TRM 3.4.3, Anticipated Transients Without Scram (ATWS) Mitigation. Although the crew will address Technical Specification 3.4.13, RCS Leakage, it is likely that at the current leakrate, this specification will be met.

The operator will take the unit off line in accordance with AP-TURB.5, Rapid Load Reduction During the downpower, the Main Turbine will fail in automatic control, and shift to manual control. The operator will identify that the load reduction has been stopped, and use manual control of the turbine to restart and continue the downpower. The remainder of the downpower will need to be accomplished using manual control of the Turbine.

When the plant is at approximately 40% power, the piping leading to the failed PORV will fail so that a vapor space Small Break LOCA occurs. The plant will trip and Safety Injection will be actuated, and the operator will enter E-0, Reactor Trip or Safety Injection. On the plant trip Containment Isolation Valve MOV-313, the Seal Water Return Line CIV, will fail to close automatically, requiring that the operator manually close this valve.

The operator will transition from E-0 to E-1, Loss of Reactor or Secondary Coolant, and then into ES-1.2 Post-LOCA Cooldown and Depressurization. While in ES-1.2, an Orange Path may occur on the RCS Integrity Critical Safety Function Status Tree.

The scenario will terminate at Step 14 of ES-1.2, after the crew has demonstrated the ability to evaluate/perform the SI flow reduction sequence, or upon transition to FR-P.1, Response to Imminent Pressurized Thermal Shock Condition.

Critical Tasks:

1. Trip all RCPs within 5 minutes of reaching trip criteria

Safety Significance: Failure to trip all RCPs when required can lead to core uncovery and to fuel temperatures in excess of 2200°F. Analyses have shown that if the RCPs are tripped within 5 minutes of the trip criteria being met, PCT will remain below 2200 °F, and if this action is delayed beyond 5 minutes, this PCT will be exceeded. It is a management expectation that the RCPs be tripped as quickly as possible, but within 5 minutes when the trip criteria is met. Failure to take this action represents mis-operation by the operator which leads to degradation of the fuel cladding fission produce barrier, and a violation of a license condition.

2. Close the Seal Water Return Containment Isolation Valve before transition out of E-0.

Safety Significance: Failure to close at least one Containment Isolation Valve on each critical penetration under the postulated conditions when it is possible to do so, constitutes mis-operation leading to degradation of the Containment Barrier. Failure to take this action leads to an unnecessary release of fission products to the auxiliary building, increasing the potential for release to the environment, and reducing accessibility to vital equipment within the Auxiliary Building. Higher radiation levels within the Auxiliary Building will result in a degradation of ALARA principles.

SIMULATOR OPERATOR INSTRUCTIONS

	Bench Mark	ACTIVITY	DESCRIPTION
☐		**Reset to Temp I/C 151 (Built from IC-20)**	**48% power MOL** **T=0:** **OVR-DO-FDW21A=OFF (MOV-4000A Green Lamp)** **OVR-DO-FDW22A=OFF (MOV-4000B Green Lamp)** **MALF RPS11-A3, ISOL SIG ONLY** **Set T-30 = x06i230a=1 (Close for MOV-515)** **Insert MALF STM01E, 0** **Insert OVR-DO-FDW06A, OFF** **Insert MALF NIS06A, 0, on T-1** **Insert MALF CVC07A, 100, on T-2** **Insert MALF PZR05B, 5, on T-3** **Insert OVR-DI-PZR04C, FALSE, on T-30** **Insert OVR-DI-PZR04D, TRUE, on T-30** **Insert OVR-DO-PZR04A, ON, on T-30** **Insert OVR-DO-PZR04B, ON, on T-30** **Insert MALF TUR09D, 100, on T-4** **Insert OVR-TUR05O=OFF (IMP IN), on T-4** **Insert OVR-TUR05P=ON (IMP OUT), on T-4** **Insert MALF PZR07, 89000, on T-5**
☐	Prior to Crew Briefing	**RUN**	• **Hang Protective Tags on the A MDAFW Pump and the TDAFW Pump Steam Supply Valves.** • **Hang CAUTION tags on the B MDAFW pump and R-19 panel** • **Hang Caution Tags on MOV-4000A and B.** • **Place a Black Dot on annunciator J-25 for the Safeguards equipment OOS.**
☐	**Crew Briefing** 1. Assign Crew Positions based on evaluation requirements 2. Review the Shift Turnover Information with the crew. 3. Provide crew with a copy of S-3.2P and P-17, Attachment 12.		
☐	T-0	Begin Familiarization Period	
☐	Upon Turnover	**Event 1**	Swap Letdown Orifice (60 gpm to 40 gpm)
☐	Upon Completion of Orifice Swap	**Event 2**	Alternate EHC Supply Pumps

	Bench Mark	ACTIVITY	DESCRIPTION
☐	At direction of examiner	**Event 3** **Trigger #1** **NIS06A** **Trigger #2** **CVC07A**	Power Range N41 Upper Detector fails LOW/Letdown Pressure Controller Failure **0%, No Ramp** **100%, No Ramp**
☐	At direction of examiner	**Event 4** **Trigger #3** **PZR05B** **Trigger #30 (Block Valve CS to CLOSE)** **OVR-PZR04A, ON (Green light LIT)** **OVR-PZR04B, ON (Red light LIT)** **OVR-PZR04C, FALSE (Close signal)** **OVR-PZR04D, TRUE (Open signal)**	PORV Leak/Block Valve Failure **5%, No Ramp (Throttled back to 2% after the operator attempts to close the PORV Block Valve)** **Block Valve fails in mid-position**
☐	At direction of examiner	**Event 5** **Trigger#4** **TUR09D** **OVR-TUR05O=OFF** **OVR-TUR05P=ON**	Downpower/Failure of Turbine Control/EHC **100%, No Ramp** **NOTE: will need to insert:** **REM-EDS49=RESET** **REM-EDS50=RESET** **When performing ATT-23.0**
☐	At direction of examiner	**Event 6** **Trigger#5** **PZR07**	Pzr Steam Space Break (PORV Leakage) **89,000, No Ramp**
☐	At direction of examiner	**Event 7** **RPS11-A3 (T=0)**	Seal Water Return Isolation CIV Fails in AUTO **NOTE: This MALF is entered at T=0, and will become effective on Reactor Trip/SIS/CIS**
☐	**Terminate the scenario upon direction of Lead Examiner**		

Op Test No.:	N2014-301	Scenario #	4	Event #	1	Page	7 of 65
Event Description:	**Swap Letdown Orifice (60 gpm to 40 gpm)**						

Shortly after taking the watch, the operator will swap Letdown Orifice Control valves in accordance with S-3.2P, Swapping CVCS Letdown Orifices.	
SIM DRIVER Instructions:	**NA**
Indications Available:	**NA**

Time	Pos.	Expected Actions/Behavior	Comments
S-3.2P, SWAPPING CVCS LETDOWN ORIFICES			
			NOTE: The HCO will contact an AO. **SIM DRIVER:** as **AO**, acknowledge.
	HCO	(Step 6.2.1) Place PCV-135 to MANUAL AND ADJUST as necessary to control Low Pressure Letdown pressure at approximately 300 psig.	
	HCO	(Step 6.2.2) IF required, THEN PLACE TCV-130 to manual AND ADJUST as necessary to maintain letdown temperature at desired value. OTHERWISE, MARK this Step N/A.	**NOTE:** Since TCV-130 is slow to react, most operators will take this controller to MANUAL.
	HCO	(Step 6.2.3) CLOSE LTDN ORIFICE VALVE, AOV-202, THEN MMEDIATELY OPEN LTDN ORIFICE AOV-200A OR LTDN ORIFICE AOV-200B. Mark orifice valve not operated N/A.	**NOTE:** The HCO will close AOV-202 completely before opening AOV-200A.
		• AOV-202	
		• AOV-200A	
		• AOV-200B	
	HCO	(Step 6.2.4) ADJUST PCV-135 UNTIL PI-135 indicates approximately 250 psig.	
	HCO	(Step 6.2.5) ENSURE PCV-135 controller signal is nulled/balanced, THEN PLACE PCV-135 to AUTO.	**NOTE:** It will be desired to leave PCV-135 in AUTO control.

Op Test No.: N2014-301 Scenario # 4 Event # 1 Page 8 of 65

Event Description: **Swap Letdown Orifice (60 gpm to 40 gpm)**

Time	Pos.	Expected Actions/Behavior	Comments
	HCO	(Step 6.2.6) ADJUST the Charging Pump that is in manual UNTIL the speed of the operating pumps is approximately equal.	
	HCO	(Step 6.2.7) VERIFY Letdown temperature is at desired value, THEN ENSURE TCV-130 is in AUTO.	**NOTE:** It will be desired to leave TCV-130 in AUTO control.
	HCO	(Step 6.2.8) IF Charging/Letdown mismatch exist, THEN PLACE Charging Pumps in manual AND ADJUST as necessary to maintain Charging/Letdown mismatch at approximately 0. OTHERWISE, MARK this Step N/A.	**NOTE:** Most operators will leave the A Charging Pump in Auto, and attempt to control the speed of the C Charging Pump speed in MANUAL.
	HCO/ AO	(Step 6.2.9) LOCALLY ADJUST SEAL INJECTION INLET NEEDLE VLV TO RCP A, V-300A AND SEAL INJECTION INLET NEEDLE VLV TO RCP B, V-300B, as necessary to maintain labyrinth seal D/P between 30 and 40 inches.	
	HCO	(Step 6.2.10) MONITOR Letdown Temperature is controlling at desired value.	
	HCO/ AO	(Step 6.2.11) VERIFY local demin D/P less than 25 psid (DPI-100, DPI-101).	**NOTE:** The HCO will contact an AO. **SIM DRIVER:** as **AO**, acknowledge, and report that the Demin D/P is 15 psid.
	HCO	(Step 6.2.12) NOTIFY Shift Chemistry Technician.	**NOTE:** The HCO will contact Chemistry. **SIM DRIVER:** as **Chemistry**, acknowledge.
Crew should initiate actions to complete Event #2 after this evolution is complete.			

Op Test No.:	N2014-301	Scenario #	4	Event #	2	Page	9	of 65
Event Description:	**Alternate EHC Supply Pumps**							

After this, the operator will alternate the EHC Supply Pump alignment in accordance with P-17, Operations Control Room Operating Instructions, Attachment 12, CROI-12 Swapping Electro-Hydraulic Pumps.

SIM DRIVER Instructions: **NA**

Indications Available: **NA**

Time	Pos.	Expected Actions/Behavior	Comments
P-17, OPERATIONS CONTROL ROOM OPERATING INSTRUCTIONS ATTACHMENT 12, CROI-12 SWAPPING ELECTRO-HYDRAULIC PUMPS			
			NOTE: The CO will dispatch an AO. **SIM DRIVER:** as **AO**, acknowledge.
	CO	(Step 2.1) START EH System Supply Pump B.	
	CO	(Step 2.2) STOP EH System Supply Pump A.	
	CO	(Step 2.3) VERIFY EH Pump B is operating normally AND discharge pressure is between 1600 and 2100 lbs as indicated on PI-6055 when loaded.	**NOTE:** The CO will contact the AO. **SIM DRIVER:** as **AO**, acknowledge, report that EH Pump B discharge pressure is 1860 psig.
	CO	(Step 2.4) IF EH System Supply Pump B is NOT maintaining system pressure between 1600 to 2100 lbs as indicted on PI-6054, THEN	**NOTE:** The CO will recognize that this is NOT applicable
	CO	(Step 2.5) MONITOR AND MAINTAIN EH system temperature between 110 and 130°F.	**NOTE:** The CO will contact the AO. **SIM DRIVER:** as **AO**, acknowledge, report that EH Pump B discharge temperature is 118°F.

Op Test No.: N2014-301 Scenario # 4 Event # 2 Page 10 of 65

Event Description: **Alternate EHC Supply Pumps**

Time	Pos.	Expected Actions/Behavior	Comments
	CO	(Step 3.0) MONITOR System operation for 15 minutes after pump swap to ENSURE stable system operation and normal parameters.	
			NOTE: The CRS may notify the **WCC**. **SIM DRIVER:** as **WCCS**, acknowledge.
			NOTE: The CRS will likely conduct a Plant Status Brief.
At the discretion of the Lead Examiner move to Event #3.			

Op Test No.: N2014-301	Scenario # 4	Event # 3	Page 11 of 65
Event Description:	**Power Range N41 Upper Detector fails LOW/Letdown Pressure Controller Failure**		

Then, the N41 Power Ranger Upper Detector will fail Low. The operator will respond in accordance with AR-E-26, POWER RANGE CHANNEL DEV ±2%, and/or AR-E-28, POWER RANGE ROD DROP ROD STOP -5%/5SEC, and then enter ER-NIS.3, PR Malfunction. The operator will address Technical Specification 3.3.1, Reactor Trip Instrumentation. While the CO is defeating the failed Power Range Channel, a failure of the Letdown Pressure Controller will cause PCV-115 to fail OPEN. The operator will need to take manual control of the failed controller, and control Letdown pressure manually.

SIM DRIVER Instructions: **Operate Trigger #1 (NIS06A, 0%)**

Indications Available:

- MCB Annunciator E-26, POWER RANGE CHANNEL DEV ±2%
- MCB Annunciator E-28, POWER RANGE ROD DROP ROD STOP -5%/5SEC
- NI-41C, Power Range Flux indicating 25%
- NI-41B, Power Range Full Power indicating 25%
- Power Range Drawer, N41A indicating 25%
- Power Range Drawer, Upper Detector Current indicating 0
- Power Range Drawer, Dropped Rod Rod Stop light is LIT

Time	Pos.	Expected Actions/Behavior	Comments
			NOTE: The crew may enter ER-NIS.3 directly.
AR-E-26, POWER RANGE CHANNEL DEV ±2%			
	CRS	(Step 1) Refer to ER-NIS.3.	
	HCO	(Step 2) Check alarm F-29 and power tilt indication on PPCS.	
	HCO	(Step 3) Monitor MRPI for Rod out of alignment.	
	HCO	(Step 4) Monitor incore thermocouples.	
AR-E-28, POWER RANGE ROD DROP ROD STOP -5%/5 SEC			

Op Test No.: N2014-301 Scenario # 4 Event # 3 Page 12 of 65

Event Description: **Power Range N41 Upper Detector fails LOW/Letdown Pressure Controller Failure**

Time	Pos.	Expected Actions/Behavior	Comments
	HCO/ CO	(Step 4.1) CHECK the Following for indication of a dropped or misaligned RCC	**NOTE:** The CRS will recognize that AP-RCC.3 is NOT applicable.
		• Power Range indications	
		• MRPI indication	
		• RCS Tavg	
		• Core Exit Thermocouples	
	CRS	(Step 4.1.1) IF conditions indicate a dropped or misaligned RCC THEN.....	**NOTE:** There is no Dropped or Misaligned RCC.
	CRS	(Step 4.1.2) IF conditions indicate a malfunctioning Power Range THEN GO TO ER-NIS.3 POWER RANGE MALFUNCTION	
			NOTE: The CRS will go to ER-NIS.3.
ER-NIS.3, PR MALFUNCTION			
	HCO	(Step 6.1) PLACE the Rod Control Bank Selector switch in M (MANUAL).	**NOTE:** The HCO will place the Rods in MANUAL.
	HCO	(Step 6.2) ADJUST Tavg Tref.	
	HCO	(Step 6.3) IF hot leg streaming has been causing single channel Δ runback signals,.....	**NOTE:** Hot leg streaming has NOT been causing single channel ΔT runback signals – reactor power too low for this concern.
	HCO	(Step 6.4) DEFEAT the inoperable Power Range per appropriate attachment:	**NOTE:** The appropriate Attachment is Attachment 1.
		• Attachment 1, N-41 Defeat	
			NOTE: The CRS will hand off the Attachment to the CO.

Op Test No.: N2014-301 Scenario # 4 Event # 3 Page 13 of 65

Event Description: **Power Range N41 Upper Detector fails LOW/Letdown Pressure Controller Failure**

Time	Pos.	Expected Actions/Behavior	Comments
		ER-NIS.3, PR MALFUNCTION ATTACHMENT 1, N-41 DEFEAT	
			NOTE: The CO will conduct an Instrument Defeat Brief.
	CO	(Step 1) IF the PPCS is operational, THEN delete NIS Channel 41 from processing by performing the following:	
		• SELECT "Group Update" display	
		• Select "List Server Groups"	
		• Select NIS1 from the pick list	
		• TURN "OFF" scan processing, then click the "Set Scan Processing" button	
		• ANSWER prompts	
	CO	(Step 2) VERIFY the ROD CONTROL BANK SELECTOR switch (MCB) is in the M (MANUAL) position.	
	CO	(Step 3) PLACE the DROPPED ROD MODE switch (Power Range N41A drawer) to BYPASS AND VERIFY the following:	
		• DROPPED ROD BYPASS (local light) is ILLUMINATED.	
		• POWER RANGE-1 ROD DROP BYPASS (MCB BYPASS STATUS LIGHT) is ILLUMINATED.	
		• Annunciator (MCB) E-7, NIS TRIP BYPASS, is ILLUMINATED.	
	CO	(Step 4) PLACE T/405E DELTA T DEFEAT switch (RIL Insertion Limit Rack) to LOOP A UNIT 1 (Defeats the ΔT Runback and Rodstop for the failed channel AND removes the associated ΔT input from the RIL computer-Annunciators F-30 AND F-31 will clear if lit).	**NOTE:** The CO will unlock and open the RIL Insertion Limit Rack Cabinet, take the required action, and then close and lock the cabinet door.

Op Test No.: N2014-301 Scenario # 4 Event # 3 Page 14 of 65

Event Description: **Power Range N41 Upper Detector fails LOW/Letdown Pressure Controller Failure**

Time	Pos.	Expected Actions/Behavior	Comments
	CO/ HCO	(Step 5) Place the OVERTEMP TRIP bistable (RED R-1 Protection Channel 1 rack) proving switch to DEFEAT (UP) AND VERIFY the following:	**NOTE:** The CO will unlock and open the RED R-1 Protection Channel 1 Rack Cabinet, take the required action, and then close and lock the cabinet door.
		• Annunciator F-23, RCS OTΔT CHANNEL ALERT, is ILLUMINATED.	
		• Proving light OFF if TI-405B ≥ TI-405A	**NOTE:** Light is ON
		IF any proving light status is NOT correct, THEN SUBMIT a Condition Report on the discrepancy and continue with the channel defeat steps.	**NOTE:** The Proving Light status is Correct.
	CO/ HCO	(Step 6) PLACE the OVERPOWER TRIP bistable (Red R-1 Protection Channel 1 rack) proving switch to DEFEAT (UP) AND VERIFY the following:	
		• Annunciator F-32, RCS OPΔT CHANNEL ALERT, is ILLUMINATED.	
		• Proving light OFF if TI-405B ≥ TI-405C	**NOTE:** Light is ON
		IF any proving light status is NOT correct, THEN SUBMIT a Condition Report on the discrepancy and continue with the channel defeat steps.	**NOTE:** The Proving Light status is Correct.
	CO	(Step 7) Verify the following bistables are ILLUMINATED:	
		• TC405A OPΔT Loop A	
		• TC405C OTΔT Loop A	
		IF any bistable above is NOT lit, THEN the ΔT channel(s) may not be in the tripped condition. Further investigation is necessary to ensure ITS requirements are met.	

Op Test No.:	N2014-301	Scenario #	4	Event #	3	Page	15 of 65
Event Description:	**Power Range N41 Upper Detector fails LOW/Letdown Pressure Controller Failure**						

Time	Pos.	Expected Actions/Behavior	Comments
			Examiner NOTE: This malfunction should be inserted while the CO is in the back of the MCB, defeating the Power Range Channel failure. If following the CO, continue with Step 8 of ER-NIS.3 on **Page 16**.
SIM DRIVER Instructions:		**Operate Trigger #2 (CVC07A, 100%)**	
Indications Available: • Letdown pressure will start to lower. • Letdown flow raises. • Pressurizer level starts to slowly lower. • A Charging and Letdown flow mismatch is observed on the PPCS.			
CNG-OP-1.01-1000, CONDUCT OF OPERATIONS			
	HCO	(Step 5.10.C.1) Use sound judgment when deciding to take manual actions before automatic actions in response to parameter trends. Take manual actions when automatic actions do not occur.	**NOTE:** The HCO will diagnose a failure of the PCV-135 Controller in AUTO, and place the controller in MANUAL.
	HCO	(Step 5.10.C.2) Transients induced by the malfunction of an automatic system should be terminated by operator action to establish manual control with a proper demand signal. Unless an instrument indication or control action is demonstrated to be incorrect by checking multiple and diverse indications, the control shall remain in automatic.	
	HCO	(Step 5.10.C.3) The need and intent to place a controller into manual operation should be communicated to the CRS before taking this action.	**NOTE:** The HCO will communicate to the CRS that the PCV-135 controller is in MANUAL.

Op Test No.: N2014-301 Scenario # 4 Event # 3 Page 16 of 65

Event Description: **Power Range N41 Upper Detector fails LOW/Letdown Pressure Controller Failure**

Time	Pos.	Expected Actions/Behavior	Comments
		ER-NIS.3, PR MALFUNCTION ATTACHMENT 1, N-41 DEFEAT	
			Examiner NOTE: If following the CO, continue HERE.
	CO	(Step 8) PLACE the UPPER SECTION DEFEAT switch (Detector Current Comparator-Miscellaneous Control & Indications drawer) to the PRN41 position AND VERIFY the following:	
		• Local light for CHANNNEL DEFEAT upper section is ILLUMINATED.	
	CO	(Step 9) PLACE the LOWER SECTION DEFEAT switch (Detector Current Comparator-Miscellaneous Controls & Indications drawer) to PRN41 position AND VERIFY the following:	
		• Local light for CHANNEL DEFEAT lower section is ILLUMINATED.	
	CO	(Step 10) PLACE the POWER MISMATCH BYPASS switch (Detector Current Comparator-Miscellaneous Controls & Indications drawer) to BYPASS PR N41	
	CO	(Step 11) PLACE the ROD STOP BYPASS switch (Detector Current Comparator-Miscellaneous Controls & Indications drawer) to BYPASS PR N41.	
	CO	(Step 12) PLACE the COMPARATOR CHANNEL DEFEAT switch (Comparator and Rate drawer) to N41 AND VERIFY the following:	
		• Local light for COMPARATOR DEFEAT is ILLUMINATED.	

Op Test No.: N2014-301 Scenario # 4 Event # 3 Page 17 of 65

Event Description: **Power Range N41 Upper Detector fails LOW/Letdown Pressure Controller Failure**

Time	Pos.	Expected Actions/Behavior	Comments
	CO	(Step 13) REMOVE the 118V 5A AC INSTR POWER fuses (Power Range N41B drawer) AND VERIFY the following alarms (MCB) are ILLUMINATED:	
		• E-18, POWER RANGE LOSS OF DETECTOR VOLTAGE	
		• E-19, POWER RANGE HI RANGE CHANNEL ALERT 108%	
		• E-21, POWER RANGE OVERPOWER ROD STOP 103%^	
		• E-27, POWER RANGE LO RANGE CHANNEL ALERT 24%	**NOTE:** Normally LIT above 24% power.
		• E-28, POWER RANGE ROD DROP ROD STOP -5%/5 SEC	
	CO/ HCO	(Step 13.1) VERIFY the following RED bistable lights (MCB) are ILLUMINATED:	
		• HI POW RANGE P-10 NC41M	
		• HI POW RANGE P-8 NC41N	
		• LO POW RANGE TRIP NC41P	
		• HI POW RANGE TRIP NC41R	
		• HI POW RANGE P-9 NC41S	
		IF any bistable above is NOT ILLUMINATED, THEN the channel may not be in the tripped condition. Further investigation is necessary to ensure ITS requirements are met.	
	CO	(Step 13.2) VERIFY the following status lights (Power Range N41A drawer) are lit:	
		• CONTROL POWER ON	
		• LOSS OF DETECTOR VOLT	
		• OVERPOWER TRIP HIGH RANGE	
		• OVERPOWER ROD STOP	
		• OVERPOWER TRIP LOW RANGE	

Op Test No.: N2014-301 Scenario # 4 Event # 3 Page 18 of 65

Event Description: **Power Range N41 Upper Detector fails LOW/Letdown Pressure Controller Failure**

Time	Pos.	Expected Actions/Behavior	Comments
		• POWER ABOVE PERMISSIVE P10	
		• POWER ABOVE PERMISSIVE P8	
		• POWER ABOVE PERMISSIVE P9	
		• ROD DROP	
		• DROPPED ROD BYPASS	
	CO	(Step 13.3) VERIFY the following status lights (Power Range N41B drawer) are extinguished:	
		• INSTRUMENT POWER ON	
		• CHANNEL ON TEST	
	CO	(Step 14) NOTIFY I&C to INSTALL jumpers across contacts 1-5 AND 4-8 of Power Range relays NC 41 MX (both A train and B train Protection Racks). This will remove N-41 from the logic circuit for reinstating the PR low power trip and the source ranges (P-10).	**NOTE:** The CO may notify the WCC/I&C. **SIM DRIVER:** as **WCCS/I&C**, acknowledge. Set **REM NIS105 to INSTALLED** to complete jumper installation.
	CO	(Step 15) INITIATE an A-52.4 on N-41.	
	CO	(Step 16) Go to step 6.5.	**NOTE:** The CO will notify the CRS that Attachment N-41 Defeat is complete.
	CRS	(Step 6.5) WHEN the appropriate channel defeat attachment is complete, THEN restore the following systems to AUTOMATIC as desired:	
	CO	• STEAM DUMP	
	HCO	• ROD CONTROL	**NOTE:** The HCO will place the Rods in AUTO.
	CO	• EH	

Op Test No.: N2014-301 Scenario # 4 Event # 3 Page 19 of 65

Event Description: **Power Range N41 Upper Detector fails LOW/Letdown Pressure Controller Failure**

Time	Pos.	Expected Actions/Behavior	Comments
	CRS	(Step 6.6) CHECK the following for required actions:	
		• Tech Spec Sections	
		• Section 3.3.1 TABLE 3.3.1-1 Functions 2a & b, 5, 6, 16b, 16c, 16d and 16e.	
		• Section 3.2.1 (SR 3.2.1.2)	
		• Section 3.2.2 (SR 3.2.2.2)	
		• Section 3.2.3	**NOTE:** N/A if < 50% power
		• Section 3.2.4	**NOTE:** N/A if < 50% power
		• TRM Sections	
		• Section 3.2.3	**NOTE:** N/A if < 50% power
		• Section 3.2.4	**NOTE:** N/A if < 50% power
TECHNICAL SPECIFICATION 3.3.1, REACTOR TRIP (RTS) INSTRUMENTATION			
	CRS	LCO 3.3.1 The RTS instrumentation for each Function (functions 2a, 2b, 5, 6, 16b, 16c, 16d, 16e) in Table 3.3.1-1 shall be OPERABLE.	
		APPLICABILITY According to Table 3.3.1-1.	

Op Test No.: N2014-301 Scenario # 4 Event # 3 Page 20 of 65

Event Description: **Power Range N41 Upper Detector fails LOW/Letdown Pressure Controller Failure**

Time	Pos.	Expected Actions/Behavior			Comments
		CONDITION	REQUIRED ACTION	COMPLETION TIME	
		A. One or more Functions with one channel inoperable.	A.1 Enter the Condition reference in Table 3.3.1-1 for the channel(s).	Immediately	
		D. As required by Required Action A.1 and referenced by Table 3.3.1-1.	D.1 Place channel in trip.	6 hours	
		S. As required by Required Action A.1 and referenced by Table 3.3.1-1.	S.1 Verify interlock is in required state for existing plant conditions.	1 hour	
			OR		
			S.2 Declare associated RTS Function channel(s) inoperable.	1 hour	
					NOTE: The CRS will likely conduct a Plant Status Brief.

At the discretion of the Lead Examiner move to Event #4.

Op Test No.: N2014-301 Scenario # 4 Event # 4 Page 21 of 65

Event Description: **PORV Leak/Block Valve Failure**

Subsequently, Pressurizer PORV-431C will fail partially open. The operator will respond in accordance with AR-F-18, PRZR PORV OUTLET HI TEMP 145°F, and enter AP-PZR.1, Abnormal Pressurizer Pressure. When the operator attempts to isolate the PORV, the Block Valve will fail to shut fully resulting in a 2-5 gpm leak into the PRT. The crew may implement AP-RCS.1, Reactor Coolant Leak, and prepare to make a Containment entry. Ultimately, the crew will be directed to take the unit off-line. The operator will address Technical Specification 3.4.11, Pressurizer PORVs, 3.4.1 RCS Pressure, Temperature, and Flow Departure from Nucleate Boiling (DNB) Limits, as well as TRM 3.4.3, Anticipated Transients Without Scram (ATWS) Mitigation. Although the crew will address Technical Specification 3.4.13, RCS Leakage, it is likely that at the current leakrate, this specification will be met.

SIM DRIVER Instructions: **Operate Trigger #3 (PZR05B, 5%, Throttled back to 2% after the operator attempts to close the PORV Block Valve)**

Indications Available:

- MCB Annunciator F-19, PRZR PORV OUTLET HI TEMP 145°F
- MCB Annunciator F-18, PRZR SAFETY VALVE HI TEMP 145°F
- Pressurizer Pressure decreases slowly
- PRT Pressure (PI-440A) increases
- PCV-431C has dual indication

Time	Pos.	Expected Actions/Behavior	Comments
AR-F-19, PRZR PORV OUTLET HI TEMP 145°F			
	CRS	(Step 1) IF Pressurizer pressure is lowering, THEN GO TO AP-PRZR.1, ABNORMAL PRESSURIZER PRESSURE.	**NOTE:** The HCO will recognize that Pzr Pressure is lowering because of the Open PORV.
	HCO	(Step 2) Check PRZR PORV outlet temperature, TI-438.	**NOTE:** The HCO may attempt to close PCV-431C, in accordance with A-503.1. Upon recognizing that PCV-431C did NOT close, the HCO will attempt to close MOV-515.
	HCO	(Step 3) Check PRT parameters.	

Op Test No.: N2014-301 Scenario # 4 Event # 4 Page 22 of 65

Event Description: **PORV Leak/Block Valve Failure**

Time	Pos.	Expected Actions/Behavior	Comments
	HCO	(Step 4) Check Containment temperature.	
	CRS	(Step 5) Start OR swap Containment Recirc Fans per Shift Manager directions.	
	CRS	(Step 6) Refer to ITS LCO 3.4.11 and 3.4.13.	
			NOTE: The CRS will go to AP-PRZR.1.
SIM DRIVER Note:		**When the operator attempts to close the PORV Block Valve, Trigger #30 will activate, failing the valve at mid-position.**	
Indications Available: • PORV Block Valve Red status light LIT • PORV Block Valve Green status light LIT • Pressurizer Pressure continues to decreases slowly			
			Examiner NOTE: If the crew enters AP-RCS.1 at any time, proceed to the actions on **Page 25.**
AP-PRZR.1, ABNORMAL PRESSURIZER PRESSURE			
	HCO	(Step 1) Check PRZR Pressure:	
		• All 4 narrow range channels – APPROXIMATELY EQUAL	
		• All 4 narrow range channels – TRENDING TOGETHER	
	HCO	(Step 2) Check Reactor Power – STABLE	
	HCO	(Step 3) Check PRZR Pressure:	
		• Pressure – LESS THAN 2235 PSIG	
		• Pressure – GREATER THAN 2000 PSIG	
	HCO	(Step 4) Check PRZR heater Status:	

Op Test No.: N2014-301 Scenario # 4 Event # 4 Page 23 of 65

Event Description: **PORV Leak/Block Valve Failure**

Time	Pos.	Expected Actions/Behavior	Comments
		• PRZR proportional heater breaker – CLOSED	
		• PRZR heater backup group - ON	**NOTE:** All Pzr Heaters will be energized.
	HCO	(Step 5) Verify Normal PRZR Spray Valves - CLOSED	
		• AOV-431A	
		• AOV-431B	
	HCO	(Step 6) Check PRZR Pressure Controller, 431K, Demand – LESS THAN 50%	
	HCO	(Step 7) Check PRZR PORVs:	
		• PORVs – CLOSED	**NOTE:** PCV-431C will be in mid-position.
		• (Step 7a RNO) Manually close PORVs	**NOTE:** PORV will not close.
		IF any valve can NOT be closed, THEN manually close the associated block valve.	
		• MOV-515 for PCV-431C	**NOTE:** The HCO will attempt to close the Block Valve unsuccessfully (if not attempted earlier).
	HCO	• (Step 7 Continued) Annunciator F-19, PRZR PORV OUTLET HI TEMP 145°F – EXTINGUISHED	**NOTE:** F-19 is LIT.
		• (Step 7b RNO) IF PORV leakage is indicated, THEN perform the following:	
		• Close PORV block valves one at a time AND check if pressure stabilizes.	

Op Test No.: N2014-301 Scenario # 4 Event # 4 Page 24 of 65

Event Description: **PORV Leak/Block Valve Failure**

Time	Pos.	Expected Actions/Behavior	Comments
		• MOV-515	**NOTE:** The HCO will attempt to close the Block Valve unsuccessfully (if not attempted earlier).
	CRS	• (Step 7c Go to step 9)	
	HCO	(Step 9) Check PRZR Safety Valves:	
		Position indicator - LESS THAN 0.1 INCH	
		Annunciator F-18, PRZR SAFETY VLV OUTLET HI TEMP 145°F - EXTINGUISHED	
		Annunciator AA-13, PRESSURIZER SAFETY VALVE POSITION - EXTINGUISHED	
	HCO	(Step 10) Check AUX Spray Valve, AOV-296 – CLOSED.	
	HCO	(Step 11) Check PRZR Pressure Control Restored:	
		• Pressure – TRENDING TO 2235 PSIG	**NOTE:** The Pressurizer Pressure is expected to be rising by this time.
	CRS	• Go to Step 16.	
	HCO	(Step 16) Check PRT Indications:	
		• Level - BETWEEN 61% AND 84%	
		• Pressure – APPROXIMATELY 1.5 PSIG AND STABLE	**NOTE:** The PRT pressure will be rising.
	HCO	(Step 16.b RNO) Open PRT vent, AOV-527 until PRT 1.5 PSIG AND STABLE pressure is approximately 1.5 psig. IF PRT pressure will NOT lower, THEN open PRT drain valve, AOV-526, to reduce pressure until PRT pressure is approximately 1.5 psig.	**NOTE:** The HCO will attempt to control PRT pressure.

Op Test No.: N2014-301 Scenario # 4 Event # 4 Page 25 of 65

Event Description: **PORV Leak/Block Valve Failure**

Time	Pos.	Expected Actions/Behavior	Comments
	HCO	(Step 16.c) Temperature - AT CNMT AMBIENT TEMPERATURE AND STABLE	
	HCO	(Step 17) Establish PRZR Pressure Control In Auto:	
		• Verify 431K in AUTO	
		• Verify PRZR spray valves in AUTO	
		• Verify PRZR heaters restored:	
		• PRZR proportional heaters breaker - CLOSED	
		• PRZR backup heaters breaker - RESET, IN AUTO	
	CRS/ HCO/ CO	(Step 18) Evaluate MCB Annunciator Status (Refer to AR Procedures)	
	CRS	(Step 19) Notify Higher Supervision	
	CRS	(Step 20) Notify Reactor Engineer for Transient Monitoring Program	**NOTE:** The CRS will call RE. **SIM DRIVER:** as **RE**, acknowledge.
			NOTE: IF crew does not enter AP-RCS.1, then PROMPT (as Ops Management) that plant should be S/D per AP-TURB.5 at 1%/minute.
			NOTE: The following steps assumes CRS enters AP-RCS.1.IF AP-TURB.5 entry, Move forward to Event 5.
AP-RCS.1, REACTOR COOLANT LEAK			
	HCO	(*Step 1) Monitor PRZR Level – STABLE AT PROGRAM LEVEL	**NOTE:** The HCO may raise Charging Pump Speed.

Op Test No.: N2014-301 Scenario # 4 Event # 4 Page 26 of 65

Event Description: **PORV Leak/Block Valve Failure**

Time	Pos.	Expected Actions/Behavior	Comments
	HCO	(Step 2) Check VCT Makeup System:	
		• Verify VCT level – GREATER THAN 5%	
		• Ensure the following:	
		• RMW mode selector switch in AUTO	
		• RMW control armed – RED LIGHT LIT	
		• Check VCT level:	
		• Level GREATER THAN 20%	
		OR	
		• Level - STABLE OR RISING	
	HCO	(Step 3) Check If RCS Leakage In CNMT:	**NOTE:** The leakage is into the PRT.
		• Check CNMT radiation monitors - NORMAL	
		• R-2	
		• R-7	
		• R-10A	
		• R-11	
		• R-12	
		• CNMT sump A pump run frequency – NORMAL (Refer to RCS Daily Leakage Log)	
	CRS	(Step 4) Dispatch AO to AUX BLDG To Investigate For CVCS Leak (locked area keys required)	**NOTE:** The CRS will dispatch an AO. **SIM DRIVER:** as **AO**, acknowledge.
	HCO	(Step 5) Check For Leak To CCW System:	**NOTE:** The leakage is into the PRT.
		• CCW surge tank level – APPROXIMATELY 50% AND STABLE	

Op Test No.: N2014-301 Scenario # 4 Event # 4 Page 27 of 65

Event Description: **PORV Leak/Block Valve Failure**

Time	Pos.	Expected Actions/Behavior	Comments
		• CCW radiation monitor, R-17 - NORMAL	
	HCO	(Step 6) Check CVCS Conditions:	**NOTE:** The leakage is into the PRT.
		• Normal letdown – IN SERVICE	
		• Letdown indication:	
		• Letdown flow – APPROXIMATELY 40 GPM (60 GPM IF AOV-202 OPEN)	
		• Low pressure LTDN pressure – APPROXIMATELY 250 PSIG	
		• Letdown pressure control valve, PCV-135, demand APPRXIMATELY 35% OPEN (40% OPEN IF AOV-202 OPEN)	
	HCO	• Charging indication:	
		• Seal injection flows – GREATER THAN 6 GPM AND STABLE	
		• RCP Labyrinth seal D/Ps – GREATER THAN 15 INCHES AND APPROXIMATELY EQUAL	
		• Charging pump discharge pressure – GREATER THAN RCS PRESSURE	
		• AUX BLDG radiation levels - NORMAL	
		• R-4	
		• R-9	
		• R-10B	
		• R-13	
		• R-14	
	HCO	(Step 7) Check PRT Indications:	**NOTE:** The leakage is into the PRT.
		• Level – BETWEEN 61% AND 84%	

Op Test No.: N2014-301 Scenario # 4 Event # 4 Page 28 of 65

Event Description: **PORV Leak/Block Valve Failure**

Time	Pos.	Expected Actions/Behavior	Comments
		• Pressure – APPROXIMATELY 1.5 PSIG AND STABLE	**NOTE:** PRT pressure is increasing.
		• Temperature - AT CNMT AMBIENT TEMPERATURE AND STABLE	
	HCO	(Step 7 RNO) Check tailpipe and valve leakoff temperatures for the PRZR safety valves and PORVs for indication of leakage.	**NOTE:** Tailpipe temperatures are high.
		IF no PORV or safety valve leakage is indicated, THEN.....	**NOTE:** There is PORV leakage indicated into the PRT.
	HCO	(Step 8) Check S/Gs for Leakage:	
		• Air ejector radiation monitors - NORMAL	
		• R-15	
		• R-47	
		• R-48	
		• S/G blowdown radiation monitor (R-19) – NORMAL	
		• Steamline radiation monitors - NORMAL	
		• R-31	
		• R-32	
		• S/G sample activity – NORMAL (Check with Chemistry Department for normal)	
	HCO	(Step 9) Check SI Accumulator Levels – STABLE	**NOTE:** The leakage is into the PRT.
	HCO	(Step 10) Check RCP Seal Leakoff Flows:	
		• Leakoff flows – WITHIN THE NORMAL OPERATING RANGE OF FIG-4.0, FIGURE RCP SEAL LEAKOFF	
		• Leakoff flows - STABLE	

Op Test No.: N2014-301 Scenario # 4 Event # 4 Page 29 of 65

Event Description: **PORV Leak/Block Valve Failure**

Time	Pos.	Expected Actions/Behavior	Comments
	HCO	(Step 11) check RCDT Leak Rate – NORMAL (Refer to RCS Daily Leakage Log and PPCS point ID L1003)	**NOTE:** The leakage is into the PRT.
	HCO	(Step 12) Check Valve Leakoff Temperatures – NORMAL (Refer to Pressurizer Valve Leak-Off Temperature Record Log)	
	HCO	(Step 13) Check Normal or Excess Letdown – IN SERVICE	**NOTE:** Normal Letdown is in service.
	HCO	(Step 14) Establish Stable Plant Conditions:	
		• PRZR level – TRENDING TO PROGRAM IN AUTO CONTROL	
		• Check PRZR pressure – TRENDING TO 2235 PSIG IN AUTO	**NOTE:** Pressurizer Pressure is trending down.
		• (Step 14b RNO) Control PRZR pressure by one of the following:	
		• 431K in MANUAL	
		• Manual control of PRZR heaters and sprays	
		• IF pressure can NOT be controlled manually THEN refer to AP-PRZR.1, ABNORMAL PRESSURIZER PRESSURE.	
	HCO	(Step 15) Establish Control Systems In Auto	
		• Verify 431K in AUTO	
		• (Step 15a RNO) Place 431K in AUTO, if desired.	
		• (Step 15 Continued) Verify PRZR spray valves in AUTO	
		• Verify PRZR heaters restored:	

Op Test No.: N2014-301 Scenario # 4 Event # 4 Page 30 of 65

Event Description: **PORV Leak/Block Valve Failure**

Time	Pos.	Expected Actions/Behavior	Comments
		• PRZZR proportional heaters breaker – CLOSED	
		• PRZR backup heaters breaker – RESET, IN AUTO	
		• Verify one charging pump in AUTO	
	HCO/ CO	(Step 16) Evaluate MCB Annunciator Status (Refer to AR Procedures)	
	CRS	(Step 17) Evaluate RCS Leakage:	
		• Leakage within limits (Refer to leakage surveillance sheet and ITS section 3.4.13)	**NOTE:** The leakage is > than that allowed by TS.
		• (Step 17a RNO) IF leak NOT isolable, but PRZR level and seal injection can be maintained, THEN shut the plant down (Refer to 0-2.1, NORMAL SHUTDOWN TO HOT SHUTDOWN or AP-TURB.5, RAPID LOAD REDUCTION).	**SIM DRIVER:** As the Shift Manager, direct the CRS to shutdown the plant using AP-TURB.5 at 1%/minute.
		• (Step 17 Continued) Leak location identified	
		• (Step 17b RNO) Return to Step 1.	

Op Test No.: N2014-301 Scenario # 4 Event # 4 Page 31 of 65

Event Description: **PORV Leak/Block Valve Failure**

Time	Pos.	Expected Actions/Behavior	Comments
			NOTE: The CRS will likely conduct a Plant Status Brief. **NOTE:** The CRS will go to AP-TURB.5. **NOTE:** The CO may notify the **CENG Generation Dispatch**. **SIM DRIVER:** as **CENG Generation Dispatch**, acknowledge. **NOTE:** The CO may notify the **RG&E ECC**. **SIM DRIVER:** RG&E ECC, acknowledge. **NOTE:** The CRS may notify the **WCC**. **SIM DRIVER:** as **WCCS**, acknowledge.
			Examiner NOTE: The CRS may NOT check TS during the plant transient. If NOT, **CRS Examiner** check TS after the scenario is complete.
TECHNICAL SPECIFICATION 3.4.1, RCS PRESSURE, TEMPERATURE, AND FLOW DEPARTURE FROM NUCLEATE BOILING (DNB) LIMITS			
	CRS	RCS Pressure, Temperature, and Flow Departure from Nucleate Boiling (DNB) Limits	
	CRS	LCO 3.4.1 RCS DNB parameters for pressurizer pressure, RCS average temperature, and RCS total flow rate shall be within the limits specified in the COLR.	**NOTE:** According to Section 2.10.1 of the COLR, the Przr Pressure shall be ≥2205 psig.
		APPLICABILITY: MODE 1	
		ACTIONS	

Op Test No.: N2014-301 Scenario # 4 Event # 4 Page 32 of 65

Event Description: **PORV Leak/Block Valve Failure**

Time	Pos.	Expected Actions/Behavior			Comments
		CONDITION	REQUIRED ACTION	COMPLETION TIME	
		A. One or more RCS DNB parameters not within limits.	A.1 Restore RCS DNB parameter(s) to within limit.	2 hours	
TECHNICAL SPECIFICATION 3.4.11, PRESSURIZER POWER OPERATED RELIEF VALVES (PORVs)					
	CRS	LCO 3.4.11 Each PORV and associated block valve shall be OPERABLE.			
	CRS	APPLICABILITY MODES 1, 2, and 3.			
		CONDITION	REQUIRED ACTION	COMPLETION TIME	
		B. One PORV inoperable.	B.1 Close associated block valve. AND B.2 Remove power from associated block valve. AND B.3 Restore PORV to OPERABLE status.	1 hour 1 hour 72 hours	
		C. One block valve inoperable.	C.1 Place associated PORV in manual control. AND C.2 Restore block valve to OPERABLE status.	1 hour 7 days	

Op Test No.: N2014-301 Scenario # 4 Event # 4 Page 33 of 65

Event Description: **PORV Leak/Block Valve Failure**

Time	Pos.	Expected Actions/Behavior	Comments
TECHNICAL SPECIFICATION 3.4.13, RCS OPERATIONAL LEAKAGE			
	CRS	LCO 3.4.13 RCS operational LEAKAGE shall be limited:	**NOTE:** The CRS will evaluate this Tech Spec but conclude the the LCO is MET (Identified leakrate is 2-5 gpm).
		• No pressure boundary LEAKAGE;	
		• 1 gpm unidentified LEAKAGE;	
		• 10 gpm identified LEAKAGE; and	
		• 150 gallons per day primary to secondary LEAKAGE through any one steam generator (SG).	
		APPLICABILITY MODES 1, 2, 3, and 4.	
		CONDITION / REQUIRED ACTION / COMPLETION TIME A. RCS operational LEAKAGE not within limits for reasons other than pressure boundary LEAKAGE or primary to secondary LEAKAGE. / A.1 Reduce LEAKAGE to within limits. / 4 hours	
TECHNICAL REQUIREMENT 3.4.3, ANTICIPATED TRANSIENTS WITHOUT SCRAM (ATWS) MITIGATION			
	CRS	TR 3.4.3 ATWS Mitigation shall be OPERABLE as follows:	
		• Each PORV shall be capable of automatic actuation and each block valve shall be open;	

Op Test No.: N2014-301 Scenario # 4 Event # 4 Page 34 of 65

Event Description: **PORV Leak/Block Valve Failure**

Time	Pos.	Expected Actions/Behavior			Comments
		• Manual rod insertion shall be OPERABLE; and			
		• ATWS Mitigation System Actuation Circuitry (AMSAC) shall be OPERABLE.			
		APPLICABILITY MODE 1 > 45% RTP.			
		CONDITION	REQUIRED ACTION	COMPLETION TIME	
		A. One or more PORV automatic flow path inoperable.	A.1 Declare ATWS mitigating capability inoperable.	Immediately	
When the crew starts the downpower move to Event #5					

Op Test No.: N2014-301 Scenario # 4 Event # 5 Page 35 of 65

Event Description: **Downpower/Failure of Turbine Control/EHC**

The operator will take the unit off line in accordance with AP-TURB.5, Rapid Load Reduction During the downpower, the Main Turbine will fail in automatic control, and shift to manual control. The operator will identify that the load reduction has been stopped, and use manual control of the turbine to restart and continue the downpower. The remainder of the downpower will need to be accomplished using manual control of the Turbine.

SIM DRIVER Instructions: **NA**

Indications Available: **NA**

Time	Pos.	Expected Actions/Behavior	Comments
		AP-TURB.5, RAPID LOAD REDUCTION	
			Examiner NOTE: The crew may perform ATT-23.0 based on the Note prior to Step 1 of AP-TURB-5. If so, Examiner following CO continue, while other Examiners continue with Step 1 of AP-TURB.5 on **Page 36.**
		ATT-23.0, ATTACHMENT TRANSFER 4160V LOADS	
	CO	(Step 1) Place Bus 12A – Bus 11A TIE SYNCHROSCOPE to ON.	
	CO	(Step 2) Close BUS 12A – BUS 11A TIE 4160V.	
	CO	(Step 3) Place BUS 12A – BUS 11A TIE SYNCHROSCOPE to OFF.	
	CO	(Step 4) Open BUS 11A NORMAL FEED 4160V.	
	CO	(Step 5) Place BUS 11B – BUS 12B TIE SYNCHROSCOPE to ON.	

Op Test No.: N2014-301 Scenario # 4 Event # 5 Page 36 of 65

Event Description: **Downpower/Failure of Turbine Control/EHC**

Time	Pos.	Expected Actions/Behavior	Comments
	CO	(Step 6) Close BUS 11B – BUS 12B TIE 4160V.	
	CO	(Step 7) Place BUS 11B – BUS 12B TIE SYNCHROSCOPE to OFF.	
	CO	(Step 8) Open BUS 11B NORMAL FEED 4160V.	
	CO	(Step 9) Reset alarms L-20 AND L-28, locally in the Relay Room Addition.	**NOTE:** The BOP will contact the AO to perform this action. **SIM DRIVER:** as AO, acknowledge and will need to insert: **REM-EDS49=RESET** **REM-EDS50=RESET**
AP-TURB.5, RAPID LOAD REDUCTION			
			Examiners NOTE: Examiners following HCO and CRS, continue HERE.
			NOTE: The CRS will conduct a load reduction brief.
	HCO	(Step 1) Initiate Load Reduction	
		• Verify rods in AUTO	
		• Reduce turbine load in Auto as follows:	
	CO	• Place Turbine EH Control in OPER PAN., IMP PRESS IN, if desired.	
		• Select desired rate on thumbwheel	**NOTE:** The CO will select 1%/Minute.
		• Reduce the setter to the desired load	
		• Depress the GO button	**NOTE:** The CO will start the load decrease.

Op Test No.: N2014-301 Scenario # 4 Event # 5 Page 37 of 65

Event Description: **Downpower/Failure of Turbine Control/EHC**

Time	Pos.	Expected Actions/Behavior	Comments
	HCO	• Initiate boration at the rate determined in OPG-REACTIVITY-CALC.	**NOTE:** The HCO will initiate a boration.
		• Place PRZR backup heaters switch to ON	
	HCO	(*Step 2) Monitor RCS Tavg	
		• Tavg – GREATER THAN 545°F	
		• Tavg – LESS THAN 579°F	
	HCO	(Step 3) Adjust Boric Acid Addition Rate As Necessary To (refer to OPG-REACTIVITY-CALC):	
		• Maintain rods above the insertion limit	
		• Match Tavg and Tref	
		• Compensate for Xenon	
	HCO	(*Step 4) Monitor PRZR Pressure – TRENDING TO 2235 PSIG IN AUTO	**NOTE:** Pressurizer Pressure may be trending down.
	HCO	(Step 4 RNO) Control PRZR pressure by one of the following:	
		• 431K in MANUAL	
		• Manual control of PRZR heaters and sprays	
		If PRZR pressure can NOT be controlled manually, THEN refer to AP-PRZR.1, ABNORMAL PRESSURIZER PRESSURE.	**NOTE:** This procedure has already been completed.
	CO	(*Step 5) Monitor MFW Regulating Valves – RESTORING S/G LEVEL TO 52% IN AUTO	
	HCO	(*Step 6) Monitor PRZR Level – TRENDING TO PROGRAM IN AUTO CONTROL	

Op Test No.: N2014-301 Scenario # 4 Event # 5 Page 38 of 65

Event Description: **Downpower/Failure of Turbine Control/EHC**

Time	Pos.	Expected Actions/Behavior	Comments
SIM DRIVER Instructions:		**Operate Trigger #4 (TUR09D, 100%, OVR-TUR05O = OFF, OVR-TUR5P = ON)**	

Indications Available:
• Turbine Load decrease stops
• EH valve control status lights:
  • OPER PAN – DARK
  • IMP PRESS OUT – DARK
  • TURB MANUAL – LIT
  • MANUAL CONTROL VALVE LOWER – LIT
  • MANUAL CONTROL VALVE FAST – LIT
  • MANUAL CONTROL VALVE RAISE – LIT
• Reference and Setter Control Valve Position are equalized			

			NOTE: Based on the changing plant condition, the CRS may re-enter AP-TURB.5.
AP-TURB.5, RAPID LOAD REDUCTION			
	HCO	(Step 1) Initiate Load Reduction	
		• Verify rods in AUTO	
		• Reduce turbine load in Auto as follows:	
	CO	• (Step 1b RNO) IF Auto control is inoperable, THEN reduce turbine load in manual at the desired rate.	
At the discretion of the Lead Examiner move to Events #6-7.			

Op Test No.: N2014-301 Scenario # 4 Event # 6 & 7 Page 39 of 65

Event Description: **Pzr Steam Space Break/Seal Water Return Isolation CIV Fails in AUTO**

When the plant is at approximately 40% power, the piping leading to the failed PORV will fail so that a vapor space Small Break LOCA occurs. The plant will trip and Safety Injection will be actuated, and the operator will enter E-0, Reactor Trip or Safety Injection. On the plant trip Containment Isolation Valve MOV-313, the Seal Water Return Line CIV, will fail to close automatically, requiring that the operator manually close this valve. The operator will transition from E-0 to E-1, Loss of Reactor or Secondary Coolant, and then into ES-1.2 Post-LOCA Cooldown and Depressurization. While in ES-1.2, an Orange Path may occur on the RCS Integrity Critical Safety Function Status Tree. The scenario will terminate at Step 14 of ES-1.2, after the crew has demonstrated the ability to evaluate/perform the SI flow reduction sequence, or upon transition to FR-P.1, Response to Imminent Pressurized Thermal Shock Condition.

SIM DRIVER Instructions: Operate Trigger #5 (PZR07, 89,0000)

Indications Available:

- Pressurizer Pressure decreases at a faster rate
- Pzr level initially decreases and then starts to rise
- PRT pressure increases rapidly and then equalizes with Containment Pressure

Time	Pos.	Expected Actions/Behavior	Comments
			Examiner NOTE: RCS pressure will drop to within 210 psig [240 psig Adverse Containment] shortly after the LOCA, and the SI Pumps are operating. The five minute Clock to stop the RCPs should start when this occurs. **Record Time:** _____
E-0, REACTOR TRIP OR SAFETY INJECTION			
	HCO	(Step 1) Verify Reactor Trip:	**Immediate Action**
		• At least one train of reactor trip breakers – OPEN	
		• Neutron flux – LOWERING	
		• MRPI indicates – ALL CONTROL AND SHUTDOWN RODS ON BOTTOM	

Op Test No.: N2014-301 Scenario # 4 Event # 6 & 7 Page 40 of 65

Event Description: **Pzr Steam Space Break/Seal Water Return Isolation CIV Fails in AUTO**

Time	Pos.	Expected Actions/Behavior	Comments
	CO	(Step 2) Verify Turbine Stop Valves - CLOSED	**Immediate Action**
	CO	(Step 3) Verify Both trains of AC Emergency Buses	**Immediate Action**
		• Bus 14 and Bus 18	
		• Bus 16 and Bus 17	
	HCO/ CO	(Step 4) Check if SI is Actuated:	**Immediate Action**
		• Any SI Annunciator – LIT	
		• SI sequencing – BOTH TRAINS STARTED	
	HCO/ CO	Foldout Page	**NOTE:** The crew will monitor these conditions throughout the performance of E-0.
		RCP TRIP CRITERIA	**NOTE:** This condition is expected to be met.
		• IF BOTH conditions listed below occur, THEN trip both RCPs:	
		○ SI pumps - AT LEAST TWO RUNNING	
		○ RCS pressure minus maximum S/G pressure - LESS THAN 210 psi [240 psi adverse CNMT]	
		LOSS OF SW CRITERIA	
		AFW SUPPLY SWITCHOVER CRITERION	
		SFP COOLING CRITERIA	
	HCO	(*Step 5) Verify CNMT Spray Not Required:	**NOTE:** The Containment Pressure is expected to be ≈2 psig and rising slowly.
		• Annunciator A-27, CNMT SPRAY EXTINGUISHED	

Op Test No.: N2014-301 Scenario # 4 Event # 6 & 7 Page 41 of 65

Event Description: **Pzr Steam Space Break/Seal Water Return Isolation CIV Fails in AUTO**

Time	Pos.	Expected Actions/Behavior	Comments
		• CNMT pressure – LESS THAN 28 PSIG	
	CO	(Step 6) Direct Operator to Perform ATT-27.0, ATTACHMENT AUTOMATIC ACTION VERIFICATION	
			NOTE: The CRS will hand off ATT-27.0 to either the HCO or the CO, and continue with the other operator in E-0. **Examiner** following operator performing ATT-27.0 continue below. **Examiner** following operator NOT performing ATT-27.0 continue at **page 45**.
E-0, REACTOR TRIP OR SAFETY INJECTION, ATTACHMENT 27.0, ATTACHMENT AUTOMATIC ACTION VERIFICATION			
	HCO/ CO	(Step 1) Verify SI and RHR Pumps Running:	
		• All SI pumps – RUNNING	
		• Both RHR pumps – RUNNING	
	HCO/ CO	(Step 2) Verify CNMT RECIRC Fans RUNNING:	
		• All fans RUNNING	
		• Charcoal filter dampers green status lights – EXTINGUISHED	
	HCO/ CO	(Step 3) Check If Main Steamlines Should Be Isolated:	
		• Any MSIV – OPEN	
		• Check CNMT pressure – LESS THAN 18 PSIG	
		• Check if ANY main steamlines should be isolated	

Op Test No.: N2014-301 Scenario # 4 Event # 6 & 7 Page 42 of 65

Event Description: **Pzr Steam Space Break/Seal Water Return Isolation CIV Fails in AUTO**

Time	Pos.	Expected Actions/Behavior	Comments
		• Low Tavg (545°F) AND high steam flow ($0.5x10^6$ lb/hr) from either S/G	
		OR	
		• High-High steam flow ($4.4x10^6$ lb/hr) from either S/G	
		• (Step3c RNO) Go to Step 4.	
	HCO/ CO	(Step 4) Verify MFW Isolation:	
		• MFW pumps – TRIPPED	
		• MFW Isolation valves - CLOSED	
		• S/G A, AOV-3995	
		• S/G B, AOV-3994	
		• S/G blowdown and sample valves - CLOSED	
	HCO/ CO	(Step 5) Verify At Least Two SW Pumps - RUNNING	
	HCO/ CO	(Step 6) Verify CI and CVI:	
		• CI and CVI annunciators - LIT	
		• Annunciator A-26, CNMT ISOLATION	
		• Annunciator A-25, CNMT VENTILATION ISOLATION	
		• (Step 6 Continued) Verify CI and CVI valve status lights - BRIGHT	**NOTE:** MOV-313 Status light is NOT bright.
		• (Step 6b RNO) Manually close affected CI and CVI valve(s).	**NOTE:** The HCO will manually close MOV-313.

Op Test No.: N2014-301 Scenario # 4 Event # 6 & 7 Page 43 of 65

Event Description: **Pzr Steam Space Break/Seal Water Return Isolation CIV Fails in AUTO**

Time	Pos.	Expected Actions/Behavior	Comments
		IF valve(s) can NOT be closed from the MCB, THEN.....	**NOTE:** MOV-313 can be closed.

CRITICAL TASK

2. Close the Seal Water Return Containment Isolation Valve before transition out of E-0.

Safety Significance: Failure to close at least one Containment Isolation Valve on each critical penetration under the postulated conditions when it is possible to do so, constitutes mis-operation leading to degradation of the Containment Barrier. Failure to take this action leads to an unnecessary release of fission products to the auxiliary building, increasing the potential for release to the environment, and reducing accessibility to vital equipment within the Auxiliary Building. Higher radiation levels within the Auxiliary Building will result in a degradation of ALARA principles.

		• (Step 6 Continued) CNMT RECIRC fan coolers SW outlet valve status lights - BRIGHT	
		• FCV-4561	
		• FCV-4562	
		• Letdown orifice valves - CLOSED	
		• AOV-200A	
		• AOV-200B	
		• AOV-202	
	CO	(Step 7) Check CCW System Status:	
		• Verify CCW pump – AT LEAST ONE RUNNING	
	CO	(Step 8) Verify SI And RHR Pump Flow:	
		• SI flow indicators – CHECK FOR FLOW	
		• RHR flow indicator – CHECK FOR FLOW	

Op Test No.: N2014-301 Scenario # 4 Event # 6 & 7 Page 44 of 65

Event Description: **Pzr Steam Space Break/Seal Water Return Isolation CIV Fails in AUTO**

Time	Pos.	Expected Actions/Behavior	Comments
		• (Step 8b RNO) IF RCS pressure less than 150 psig manually start pumps and align valves. IF NOT, THEN go to Step 9.	
	CO	(Step 9) Verify SI Pump And RHR Pump Emergency Alignment:	
		• RHR pump discharge to Rx vessel deluge - OPEN	
		• MOV-852A	
		• MOV-852B	
		• Verify SI pump C – RUNNING	
		• Verify SI pump A - RUNNING	
		• Verify SI pump B – RUNNING	
		• Verify SI pump C discharge valves - OPEN	
		• MOV-817A	
		• MOV-817B	
	CO	(Step 10) Verify CREATS Actuation:	
		• At least one damper in each flowpath - CLOSED	
		• Normal Supply Air	
		• Normal Return Air	
		• Lavatory Exhaust Air	
		• CREATS fans – BOTH RUNNING	
	CO	(Step 11) Verify CI and CVI During a Fire Event	
		• A confirmed fire has occurred in the control complex or cable tunnel (fire systems S05, S06, S08, Z05, Z18, or Z19).	

Op Test No.: N2014-301 Scenario # 4 Event # 6 & 7 Page 45 of 65

Event Description: **Pzr Steam Space Break/Seal Water Return Isolation CIV Fails in AUTO**

Time	Pos.	Expected Actions/Behavior	Comments
	CO	(Step 11 RNO) Go to END	
E-0, REACTOR TRIP OR SAFETY INJECTION			
			Examiner following operator NOT performing ATT-27.0 continue **HERE**.
	HCO	(Step 7) Verify Both MDAFW Pumps RUNNING	
		(Step 7 RNO) Manually start both MDAFW pumps.	**NOTE:** ONLY the A MDAFW Pump will be running.
		IF less than 2 MDAFW pumps are running, THEN manually open TDAFW pump steam supply valves.	
		• MOV-3505A	
		• MOV-3504A	**NOTE:** The CO will start the TDAFW Pump.
	HCO	(Step 8) Verify AFW Valve Alignment:	
		• AFW flow – INDICATED TO BOTH S/G(s)	
		• AFW flow from each MDAFW pump LESS THAN 230 GPM	
	HCO	(*Step 9) Monitor Heat Sink:	
		• Check S/G narrow range level GREATER THAN 7% [25% adverse CNMT] in any S/G	
		• Check S/G narrow range level BOTH S/G LESS THAN 50%	
		• Control feed flow to maintain S/G narrow range level between 7% [25% adverse CNMT] and 50%.	

Op Test No.: N2014-301 Scenario # 4 Event # 6 & 7 Page 46 of 65

Event Description: **Pzr Steam Space Break/Seal Water Return Isolation CIV Fails in AUTO**

Time	Pos.	Expected Actions/Behavior	Comments
	HCO	(Step 10) Check If TDAFW Pump Can Be Stopped:	
		• Both MDAFW pumps – RUNNING	**NOTE:** ONLY the A MDAFW Pump will be running.
	CRS	(Step 10 a RNO) Go to Step 11.	
	HCO	(Step 11) Check CCW Flow to RCP thermal Barriers:	
		• Annunciator A-7. RCP 1A CCW RETURN HI TEMP OR LOW FLOW - EXTINGUISHED	
		• Annunciator A-15, RCP 1B CCW RETURN HI TEMP OR LOW FLOW EXTINGUISHED	
	HCO	(*Step 12) Monitor RCS Tavg – STABLE AT OR TRENDING TO 547°F	**NOTE:** Tavg is expected to be less than 547°F and lowering.
	CO	(Step 12 RNO) IF temperature less than 547°F and lowering, THEN perform the following:	
		• Stop dumping steam.	
		• Ensure reheater steam supply valves are closed.	
		• IF cooldown continues, THEN control total feed flow between 200 gpm to 230 gpm until narrow range level greater than 7% [25% adverse CNMT] in at least one S/G.	**NOTE:** Adverse Containment may exist at this time.
		• WHEN S/G level greater than 7% [25% adverse CNMT] in one S/G, THEN limit feed flow to that required to maintain level in at least one S/G.	
		• IF cooldown continues, THEN close both MSIVs.	**NOTE:** The CO will CLOSE both MSIVs.

Op Test No.: N2014-301 Scenario # 4 Event # 6 & 7 Page 47 of 65

Event Description: **Pzr Steam Space Break/Seal Water Return Isolation CIV Fails in AUTO**

Time	Pos.	Expected Actions/Behavior	Comments
	HCO	(Step 13) Check PRZR PORVS And Spray Valves:	
		• PORVs – CLOSED	**NOTE:** PCV-431C is still OPEN.
	HCO	• (Step 13a RNO) IF PRZR pressure less than 2335 psig, THEN manually close PORVs.	
		IF any valve can NOT be closed, THEN manually close its block valve.	
		• MOV-516 for PCV-430	
		• MOV-515 for PCV-431C	**NOTE:** MOV-515 is still OPEN.
	CRS	IF block valve can NOT be closed, THEN go to E-1, LOSS OF REACTOR OR SECONDARY COOLANT, Step 1.	
			NOTE: The CRS will go to E- 1. The CRS will conduct an alignment brief.
E-1, LOSS OF REACTOR OR SECONDARY COOLANT			
	HCO/ CO	Foldout Page	**NOTE:** The crew will monitor these conditions throughout the performance of E-0.
		RCP TRIP CRITERIA	**NOTE:** This condition is expected to be met.
		• IF BOTH conditions listed below occur, THEN trip both RCPs:	
		○ SI pumps - AT LEAST TWO RUNNING	
		○ RCS pressure minus maximum S/G pressure - LESS THAN 210 psi [240 psi adverse CNMT]	**NOTE:** Adverse Containment is likely to exist at this time.
		LOSS OF SW CRITERIA	

Op Test No.: N2014-301 Scenario # 4 Event # 6 & 7 Page 48 of 65

Event Description: **Pzr Steam Space Break/Seal Water Return Isolation CIV Fails in AUTO**

Time	Pos.	Expected Actions/Behavior	Comments
		SI REINITIATION CRITERIA	
		SI TERMINATION CRITERIA	
		SECONDARY INTEGRITY CRITERIA	
		E-3 TRANSITION CRITERIA	
		COLD LEG RECIRCULATION SWITCHOVER CRITERION	
		AFW SUPPLY SWITCHOVER CRITERION	
	HCO	(Step 1) Monitor RCP Trip Criteria:	
		• RCP status – ANY RCP RUNNING	
		• SI pumps – AT LEAST TWO RUNNING	
		• RCS pressure minus maximum S/G pressure – LESS THAN 210 psi [240 psi adverse CNMT]	
		• Stop both RCPs	**NOTE:** If the RCPs have NOT been stopped prior to this step, they will be stopped here.

CRITICAL TASK

1. Trip all RCPs within 5 minutes of reaching trip criteria

Safety Significance: Failure to trip all RCPs when required can lead to core uncovery and to fuel temperatures in excess of 2200°F. Analyses have shown that if the RCPs are tripped within 5 minutes of the trip criteria being met, PCT will remain below 2200°F, and if this action is delayed beyond 5 minutes, this PCT will be exceeded. It is a management expectation that the RCPs be tripped as quickly as possible, but within 5 minutes when the trip criteria is met. Failure to take this action represents mis-operation by the operator which leads to degradation of the fuel cladding fission produce barrier, and a violation of a license condition.

Record Pump Stop Time: _____

Subtract time recorded at time of the RCP Trip Criteria met on Page 41 _____ = _____ minutes.

Op Test No.: N2014-301 Scenario # 4 Event # 6 & 7 Page 49 of 65

Event Description: **Pzr Steam Space Break/Seal Water Return Isolation CIV Fails in AUTO**

Time	Pos.	Expected Actions/Behavior	Comments
	HCO/ CO	(Step 2) Check If S/G Secondary Side Is Intact:	
		• Pressure in both S/Gs – STABLE OR RISING	
		• Pressure in both S/Gs – GREATER THAN 110 PSIG	
	CO	(*Step 3) Monitor Intact S/G Levels:	
		• Narrow range level – GREATER THAN 7% [25% adverse CNMT]	
		• Control feed flow to maintain narrow range level between 17% [25% adverse CNMT] and 50%	
		(Step 4) Monitor If Secondary Radiation Levels Are Normal	
		• Steamline radiation monitor (R-31 and R-32)	
		• Request Chem Tech sample S/Gs for activity	**NOTE:** The CRS may contact Chemistry. **SIM DRIVER:** as **Chemistry**, acknowledge.
	HCO	(*Step 5) Monitor PRZR PORV Status:	
		• Power to PORV block valves – AVAILABLE	
		• PORVs – CLOSED	**NOTE:** PCV-431C is still OPEN.
	HCO	• (Step 5b RNO) IF PRZR pressure less than 2335 psig, THEN manually close PORVs.	

Op Test No.: N2014-301 Scenario # 4 Event # 6 & 7 Page 50 of 65

Event Description: **Pzr Steam Space Break/Seal Water Return Isolation CIV Fails in AUTO**

Time	Pos.	Expected Actions/Behavior	Comments
		IF any PORV can NOT be closed, THEN manually close its block valve. IF block valve can NOT be closed, THEN dispatch AO to locally check breaker.	**NOTE:** MOV-515 is still OPEN. The CRS may dispatch an AO. **SIM DRIVER:** as **AO**, acknowledge.
		• MOV-515, MCC D position 6C	
		• MOV-516, MCC C position 6C	
	HCO	• (Step 5 Continued) Block valves – AT LEAST ONE OPEN.	
	HCO	(Step 6) Reset SI.	
	HCO	(Step 7) Reset CI:	
		• Depress CI reset pushbutton	
		• Verify annunciator A-26, CNMT ISOLATION – EXTINGUISHED	
	CO	(Step 8) Verify Adequate SW Flow:	
		• Check at least two SW pumps RUNNING	
		• Dispatch AO to establish normal shutdown alignment (Refer to ATT-17.0, ATTACHMENT SD-1)	**NOTE:** The CRS will dispatch an AO. **SIM DRIVER:** as **AO**, acknowledge.
	HCO/ CO	(Step 9) Establish IA to CNMT:	
		• Verify non-safeguards busses energized from offsite power	
		• Bus 13 normal feed – CLOSED	
		OR	
		• Bus 15 normal feed – CLOSED	

Op Test No.: N2014-301 Scenario # 4 Event # 6 & 7 Page 51 of 65

Event Description: **Pzr Steam Space Break/Seal Water Return Isolation CIV Fails in AUTO**

Time	Pos.	Expected Actions/Behavior	Comments
		• Verify turbine building SW isolation valves - OPEN	
		• MOV-4613 and MOV-4670	
		• MOV-4614 and MOV-4664	
		• Verify adequate air compressors – RUNNING	
		• Check IA supply:	
		• Pressure – GREATER THAN 60 PSIG	
		• Pressure – STABLE OR RISING	
		• Reset both trains of XY relays for IA to CNMT AOV-5392	
		• Verify IA to CNMT AOV-5392 – OPEN	
	CO	(Step 10) Check Normal Power Available To Charging Pumps:	
		• Check Normal Power Available To Charging Pumps:	
		• Bus 14 normal feed breaker – CLOSED	
		• Bus 16 normal feed breaker - CLOSED	
		• Verify adequate Safeguards Bus capacity to run charging pumps (6 amps each)	
		• Station Service transformer 14 ammeter	
		• Station Service transformer 16 ammeter	
	HCO	(Step 11) Check If Charging Flow Has Been Established:	
		• Charging pumps – ANY RUNNING	**NOTE:** There are NO Charging Pumps running.

Op Test No.: N2014-301 Scenario # 4 Event # 6 & 7 Page 52 of 65

Event Description: **Pzr Steam Space Break/Seal Water Return Isolation CIV Fails in AUTO**

Time	Pos.	Expected Actions/Behavior	Comments
		• (Step 11a RNO) Perform the following:	
		• IF CCW flow is lost to any RCP thermal barrier OR any RCP #1 seal outlet temperature greater than 235°F, THEN…….	**NOTE:** CCW flow to the RCP has NOT been lost, nor is any RCP #1 seal outlet temperature greater than 235°F.
		• Ensure HCV-142 open, demand at 0%.	
		• (Step 11 Continued) Charging pump suction aligned to RWST:	
		• LCV-112B – OPEN	
		• LCV-1112C – CLOSED	
		• (Step 11b RNO) manually align valves as necessary.	
		• (Step 11 Continued) Start charging pumps and adjust charging flow as necessary to restore PRZR level	**NOTE:** The HCO will start one Charging Pump even though Pzr Level is off-scale high.
	HCO	(Step 12) Check If SI Should Be Terminated:	
		• RCS pressure:	
		• Pressure – GREATER THAN 1650 psig [1650 psig adverse CNMT]	**NOTE:** Adverse Containment is likely to exist at this time. RCS pressure is expected to be ≈1200 psig and stable.
		• Pressure – STABLE OR RISING	
	CRS	• (Step 12a RNO) Do NOT stop SI pumps. Go to Step 13.	
	HCO	(*Step 13) Monitor If CNMT Spray Should Be Stopped:	

Op Test No.: N2014-301 Scenario # 4 Event # 6 & 7 Page 53 of 65

Event Description: **Pzr Steam Space Break/Seal Water Return Isolation CIV Fails in AUTO**

Time	Pos.	Expected Actions/Behavior	Comments
		• CNMT spray pumps – ANY RUNNING	**NOTE:** No CS pumps running.
	CRS	• (Step 13a RNO) Go to Step 14.	
	HCO	(*Step 14) Monitor IF RHR Pumps Should Be Stopped:	
		• Check RCS pressure:	
		• Pressure – GREATER THAN 300 psig [350 psig adverse CNMT]	**NOTE:** Adverse Containment is likely to exist at this time.
		• RCS pressure – STABLE OR RISING	
		• RHR pumps – ANY RUNNING IN INJECTION MODE	
		• Stop RHR pumps and place in AUTO	**NOTE:** The HCO will STOP the RHR Pumps.
		• Dispatch AO to perform ATT-14.6, ATTACHMENT RHR PRESS REDUCTION, Part A.	**NOTE:** The CRS will dispatch an AO. **SIM DRIVER:** as **AO**, acknowledge. Use INSIGHT point t_p682a to provide RHR pump suction pressure. If asked, report RHR discharge pressure ~100 PSIG, and pressure reduction is not necessary per this Att.
	CO	(Step 15) Check RCS And S/G Pressures	
		• Check pressures in both S/Gs – STABLE OR RISING	
		• Check pressures in both S/Gs – GREATER THAN 110 PSIG	
		• Check RCS pressure – STABLE OR LOWERING	

Op Test No.: N2014-301 Scenario # 4 Event # 6 & 7 Page 54 of 65

Event Description: **Pzr Steam Space Break/Seal Water Return Isolation CIV Fails in AUTO**

Time	Pos.	Expected Actions/Behavior	Comments
	CO	(Step 16) CHECK IF EMERGENCY D/Gs Should Be Stopped:	
		• Verify Safeguards busses 14, 16, 17, and 18 voltage – GREATER THAN 440 VOLTS	
		• Verify Safeguards busses 14, 16, 17, and 18 voltage energized by offsite power:	
		• Emergency D/G output breakers – OPEN	
		• AC emergency bus normal feed breakers - CLOSED	
		• Stop any unloaded emergency D/G and place in standby (Refer to ATT-8.1, ATTACHMENT D/G STOP)	**NOTE:** Both D/Gs are running unloaded.
			NOTE: The CRS will hand this off to the CO. **CRS/HCO Examiner** continue on **page 55**.
ATT-8.1, ATTACHMENT D/G STOP			
	CO	(Step A) Perform the following to STOP D/G A and restore to AUTO:	
		• Verify D/G A Bus 14 supply breaker is OPEN.	
		• Verify D/G A Bus 18 supply breaker is OPEN.	
		• Using D/G A GOVERNOR, adjust D/G A speed to return frequency to 60Hz.	
		• Using D/G A AUTO VOLTAGE CONTROL rheostat adjust D/G A voltage to 480 volts.	
		• Place D/G A CONTROL switch to STOP AND immediately depress D/G A VOLTAGE SHUTDOWN button until voltage decays to zero.	
		• After ~60 seconds, perform the following:	

Op Test No.: N2014-301 Scenario # 4 Event # 6 & 7 Page 55 of 65

Event Description: **Pzr Steam Space Break/Seal Water Return Isolation CIV Fails in AUTO**

Time	Pos.	Expected Actions/Behavior	Comments
		• Depress D/G A FIELD RESET	
		• Depress D/G A RESET	
		• Verify D/G A AIR START SOLENOID lights – LIT	
		• Verify D/G A START RELAY lights - LIT	
		• IF alternate cooling is being supplied to the D/G A……	**NOTE:** Alternate Cooling is NOT being supplied.
	CO	(Step B) Perform the following to STOP D/G B and restore to AUTO:	
		• Verify D/G B Bus 16 supply breaker is OPEN.	
		• Verify D/G B Bus 17 supply breaker is OPEN.	
		• Using D/G B GOVERNOR, adjust D/G B speed to return frequency to 60Hz.	
		• Using D/G B AUTO VOLTAGE CONTROL rheostat adjust D/G B voltage to 480 volts.	
		• Place D/G B CONTROL switch to STOP AND immediately depress D/G B VOLTAGE SHUTDOWN button until voltage decays to zero.	
		• After ~60 seconds, perform the following:	
		• Depress D/G B FIELD RESET	
		• Depress D/G B RESET	
		• Verify D/G B AIR START SOLENOID lights - LIT	
		• Verify D/G b START RELAY lights - LIT	
		• IF alternate cooling is being supplied to the D/G B……	**NOTE:** Alternate Cooling is NOT being supplied.
E-1, LOSS OF REACTOR OR SECONDARY COOLANT			

Op Test No.: N2014-301 Scenario # 4 Event # 6 & 7 Page 56 of 65

Event Description: **Pzr Steam Space Break/Seal Water Return Isolation CIV Fails in AUTO**

Time	Pos.	Expected Actions/Behavior	Comments
			CRS/HCO Examiner continue HERE.
	HCO	(Step 17) Evaluate Plant Status:	
		• Check auxiliary building radiation - NORMAL	
		• Plant vent iodine (R-10B)	
		• Plant vent particulate (R-13)	
		• Plant vent gas (R-14)	
		• CCW liquid monitor (R-17)	
		• LTDN line monitor (R-9)	
		• CHG pump room (R-4)	
		• WHEN TSC is manned, THEN request evaluation of sampling requirements.	**NOTE:** The TSC will NOT be manned.
		• RCS boron	
		• RCS activity	
		• CNMT hydrogen	
		• CNMT sump boron	
		• CNMT Sump pH	
		• Verify adequate Rx head cooling:	
		• Verify at least one control rod shroud fan - RUNNING	
		• Verify one Rx compartment cooling fan - RUNNING	
	HCO	(Step 18) Verify CNMT Sump Recirculation Capability:	
		• Check RHR and Support systems:	
		• At least one recirculation flowpath, including required power supplies, from Sump B and back to RCS available per ATT-14.5, ATTACHMENT RHR SYSTEM	**NOTE:** The HCO woill refer to ATT-14.5.
		• At least one SW pump available.	

Op Test No.: N2014-301 Scenario # 4 Event # 6 & 7 Page 57 of 65

Event Description: **Pzr Steam Space Break/Seal Water Return Isolation CIV Fails in AUTO**

Time	Pos.	Expected Actions/Behavior	Comments
		• At least one CCW pump available.	
		• At least one CCW Hx available.	
		• Check SW pumps – AT LEAST 2 PUMPS AVAILABLE	
		• Dispatch AO to check AUX BLDG sub-basement for RHR system leakage (AUX BLDG sub-basement key may be required)	**NOTE:** The CRS will dispatch an AO. **SIM DRIVER:** as **AO**, acknowledge (Report No Leaks).
	HCO	(Step 19) Check If RCS Cooldown And Depressurization Is Required:	
		• RCS pressure – GREATER THAN 300 psig (350 psig adverse CNMT)	**NOTE:** Adverse Containment is likely to exist at this time.
		• Go To ES-1.2, POST LOCA COOLDOWN AND DEPRESSURIZATION, Step 1	
			NOTE: The CRS will go to ES-1.2.
ES-1.2, POST-LOCA COOLDOWN AND DEPRESSURIZATION			
			Examiner NOTE: An Orange Path on RCS Integrity is expected during the steps taken in ES-1.2. If so, move forward to exam termination.
	HCO/ CO	Foldout Page	**NOTE:** The crew will monitor these conditions throughout the performance of E-0.
		LOSS OF SW CRITERIA	
		SI REINITIATION CRITERIA	
		SI TERMINATION CRITERIA	
		SECONDARY INTEGRITY CRITERIA	
		COLD LEG RECIRCULATION SWITCHOVER CRITERION	

Op Test No.: N2014-301 Scenario # 4 Event # 6 & 7 Page 58 of 65

Event Description: **Pzr Steam Space Break/Seal Water Return Isolation CIV Fails in AUTO**

Time	Pos.	Expected Actions/Behavior	Comments
		AFW SUPPLY SWITCHOVER CRITERION	
		E-3 TRANSITION CRITERIA	
	HCO	(*Step 1) Monitor If RHR Pumps Should Be Stopped:	
		• RHR pumps – ANY RUNNING IN INJECTION MODE	**NOTE:** The RHR Pumps have previously been stopped.
	CRS	• (Step 1a RNO) Go to Step 2.	
	CO	(Step 2) Monitor AC Bus Power:	
		• Verify Safeguards Busses 14, 16, 17, and 18 – GREATER THAN 440 VOLTS	
		• Monitor All AC Busses – BUSSES ENERGIZED BY OFFSITE POWER	
		• Normal feed breakers to all 480 volt busses – CLOSED	
		• Emergency D/G output breakers - OPEN	
	CO	(Step 3) Check Power Availability To Charging Pumps:	
		• Check Normal Power Available To Charging Pumps:	
		• Bus 14 normal feed breaker – CLOSED	
		• Bus 16 normal feed breaker - CLOSED	
		• Verify adequate Safeguards Bus capacity to run charging pumps (6 amps each)	
		• Station Service transformer 14 ammeter	
		• Station Service transformer 16 ammeter	

Op Test No.: N2014-301 Scenario # 4 Event # 6 & 7 Page 59 of 65

Event Description: **Pzr Steam Space Break/Seal Water Return Isolation CIV Fails in AUTO**

Time	Pos.	Expected Actions/Behavior	Comments
	HCO	(Step 4) Establish 75 GPM Charging Flow:	
		• Charging pumps – ANY RUNNING	**NOTE:** There are one or two Charging Pumps running.
		• Align charging pump suction to RWST:	
		• LCV-112B – OPEN	
		• LCV-112C – CLOSED	
		• Start charging pumps as necessary (75 kw each) and establish 75 gpm total charging flow	
		• Charging line flow	
		• Seal injection flow	
	CO	(Step 5) Establish Condenser Steam Dump Pressure Control:	
		• Verify condenser available:	
		• Any MSIV – OPEN	**NOTE:** Both MSIVs are CLOSED.
		• (Step 4a RNO) Place S/G ARV controllers in AUTO at current SG pressure and go to Step 6.	
	CO	(*Step 6) Monitor Intact S/G Levels:	
		• Narrow range level – GREATER THAN 7% [25% adverse CNMT]	**NOTE:** Adverse Containment is likely to exist at this time.
		• Control feed flow to maintain narrow range level between 17% [25% adverse CNMT] and 50%	
	HCO	(Step 7) Deenergize PRZR Heaters	
		• Place PRZR proportional heaters in PULL STOP	

Op Test No.: N2014-301 Scenario # 4 Event # 6 & 7 Page 60 of 65

Event Description: **Pzr Steam Space Break/Seal Water Return Isolation CIV Fails in AUTO**

Time	Pos.	Expected Actions/Behavior	Comments
		• Place PRZR backup heaters in OFF	
		• Consult TSC for a recommended minimum indicated PRZR water level that will ensure heaters are covered	**NOTE:** The TSC is NOT manned.
	CO	(Step 8) Initiate RCS Cooldown To Cold Shutdown:	
		• Establish and maintain cooldown rate using CET's – BETWEEN 80°F/HR AND 100°F/HR	**NOTE:** Current C/D due to SI flow should be > 100°F/hr
		• Use RHR system if in service	
		• Dump steam to condenser from intact S/G(s)	
	HCO	(Step 9) Check RCS Subcooling Based On Core Exit T/Cs – GREATER THAN 0°F USING FIG-1.0, FIGURE MIN SUBCOOLING	**NOTE:** IF subcooling is indicated, crew should transition to FR-P.1 if entry conditions are reached.
	HCO	(Step 10) Check SI and RHR Pump Status:	
		• SI pumps – ANY RUNNING	
		OR	
		• RHR pumps – ANY RUNNING IN INJECTION MODE	
	HCO	(Step 11) Depressurize RCS To Refill PRZR:	**NOTE:** Pzr Level is off-scale HIGH.
		• Depressurize using normal PRZR spray if available	
		• (Step 10a RNO) Depressurize using one PRZR PORV.	
		• (Step 10 Continued) PRZR level – GREATER THAN 20% [40% adverse CNMT]	**NOTE:** Adverse Containment is likely to exist at this time.

Op Test No.: N2014-301 Scenario # 4 Event # 6 & 7 Page 61 of 65

Event Description: **Pzr Steam Space Break/Seal Water Return Isolation CIV Fails in AUTO**

Time	Pos.	Expected Actions/Behavior	Comments
		• Stop RCS depressurization	
	HCO	(Step 12) Check If An RCP Should Be Started:	
		• Both RCPs – STOPPED	**NOTE:** Both RCPs are stopped.
		• RCS subcooling based on core exit T/Cs – GREATER THAN 0°F USING FIG-1.0, FIGURE MIN SUBCOOLING	
		• PRZR level – GREATER THAN 20% (40% adverse CNMT)	**NOTE:** Adverse Containment is likely to exist at this time.
		• Try to start an RCP	
		• Establish conditions for starting an RCP	
		• Bus 11A or 11B energized	
		• Refer to ATT-15.0, ATTACHMENT RCP START	
ATT-15.0, ATTACHMENT RCP START			
	HCO	(Step A) The following are prerequisites for starting an RCP:	
		• MCC E energized	
		• RCP oil lift pump running (~2 minutes)	
		• RCP oil lift pressure white light - LIT	
	HCO	(Step B) In addition, the following conditions should be met prior to starting an RCP:	
		• Both PRZR spray valves closed – DEMAND AT 0%	
		• CCW in service to selected RCP(s) with flow and temperature alarms (A-7, A-15) extinguished.	

Op Test No.: N2014-301 Scenario # 4 Event # 6 & 7 Page 62 of 65

Event Description: **Pzr Steam Space Break/Seal Water Return Isolation CIV Fails in AUTO**

Time	Pos.	Expected Actions/Behavior	Comments
		• Selected RCP(s) seal inlet temperature – LESS THAN 135°F	
		• Selected RCP(s) motor bearing temperatures – LESS THAN 200°F	
		• Selected RCP(s) seal injection in service	
		• Seal injection flow – GREATER THAN 6 GPM	
		• Labyrinth seal D/P – GREATER THAN 15 INCHES OF WATER	
		• Selected RCP(s) #1 seal D/P – GREATER THAN 220 PSID	
		• Selected RCP(s) oil levels:	
		• Level alarms (A-24, A-32) - EXTINGUISHED	
		• Level indicators – ON SCALE	
		• Selected RCP(s) seal return alignment	
		• RCP #1 seal outlet valve(s) open:	
		• AOV-270A for RCP A	
		• IF MOV-313, seal return isolation, open.....	**NOTE:** MOV-313 is Closed.
		• IF MOV-313 closed, THEN verify other RCP #1 seal parameters normal for selected RCP(s):	
		• RCP #1 seal inlet temperature – LESS THAN 135°F	
		• RCP #1 seal D/P – GREATER THAN 220 PSID	
		• IF ES-0.2, ES-0.3 or ES-1.1 is in effect.....	**NOTE:** These procedures are NOT in effect.
ES-1.2, POST-LOCA COOLDOWN AND DEPRESSURIZATION			

Op Test No.: N2014-301 Scenario # 4 Event # 6 & 7 Page 63 of 65

Event Description: **Pzr Steam Space Break/Seal Water Return Isolation CIV Fails in AUTO**

Time	Pos.	Expected Actions/Behavior	Comments
		• (Step 12 Continued) Start one RCP.	**NOTE:** The HCO will START one RCP.
	HCO	(Step 13) Check If One Of Three SI Pumps Should Be Stopped:	
		• Three SI pumps – RUNNING	
		• RCS subcooling based on core exit T/Cs – GREATER THAN 35°F [50°F adverse CNMT] USING FIG-1.0, FIGURE MIN SUBCOOLING	**NOTE:** Adverse Containment is likely to exist at this time.
		• Check PRZR level – GREATER THAN 20% [40% adverse CNMT]	**NOTE:** Adverse Containment is likely to exist at this time.
		• Stop one SI pump	**NOTE:** The HCO will STOP one SI pump.
	HCO	(Step 14) Check If One Of Two SI Pumps Should Be Stopped:	
		• Two SI pumps – RUNNING	
		• Determine required RCS subcooling from table:	
		• RCS subcooling based on core exit T/Cs – GREATER THAN VALUE FROM TABLE ABOVE USING FIG-1.0, FIGURE MIN SUBCOOLING	**NOTE:** The HCO will NOT be able to stop the second SI Pump, due to Subcooling requirements NOT met.

Terminate the Exam at the discretion of the Lead Examiner

SRO Examiner Perform Admin JPM A4 on CRS

UNIT STATUS:

Power Level: 48% RCS [B] 1106 ppm BAST[B]: 17400 ppm

Power History: The plant is at 48% power (MOL), for four days. Core Burnup: 10000 MWD/MTU

INFORMATION NEEDED TO ASSUME TO SHIFT:

- The plant is at ~48% power (MOL). Reactor power is below P-9.
- Power has been held at this level for approximately four days while corrective maintenance is performed on the A MFW Pump.
- Chemistry has indicated that continued operation on the 60 gpm Normal Letdown Orifice is no longer necessary. The crew should be prepared to return Letdown flow to 40 gpm by swapping to AOV-200A immediately after turnover.
- The crew should also plan to swap EHC Pumps in preparation for performing maintenance on the A EHC supply pump after the letdown orifice flow has been adjusted

The following equipment is Out-Of-Service:

- The B AFW Pump is OOS for Bearing Replacement. LCO 3.7.5 was entered 24 hours ago. Estimated return to service is within 48 hours.
- Steam Flow channel FT-475 is OOS. The channel has been defeated per ER-INST.1.

A-52.4

Equipment	***Date***	Time	Reason	Required Actions	Required Completion Date/Time	Required Action not met
B MDAFW Pump	_/_/14	0330	Bearing Replacement	ITS 3.7.5 Enter Condition B Required Action B.1: Restore MDAFW Train to OPERABLE Status in 7 days	6 days from current date/time	ITS 3.7.5 Enter Condition G Required Action G.1: Be in Mode 3 in 6 hours AND Required Action G.2: Be in Mode 4 in 12 hours
FT-475	_/_/14	0700	Detector failure	ITS 3.3.2 Function 4.d Enter Condition A/F Function 4.e Enter Condition A/F Place Channel in TRIP within 6 hours	ACTION Completed	ITS 3.3.2 Function 4.d Enter Condition G Function 4.e Enter Condition G

PROGRAM: Ginna Operations Training

MODULE: 2014 Initial License Operator Training Class

TOPIC: NRC Simulator Exam

Scenario N2014-301-5

REFERENCES:

1. O-1.2, Plant Startup From Hot Shutdown to Full Power Load, Rev 20101
2. T-16A, Turbine Pre-Startup, Rev 09400
3. A-503.1, Emergency and Abnormal Operating Procedures Users Guide, Rev 04409
4. AR-L-8, 480V GROUND, Rev 8
5. AR-A-22, CCW PUMP DISCHARGE LO PRESS 60 PSI, Rev 12
6. AP-CCW.2, Loss of CCW During Power Operation, Rev 02201
7. Technical Specification 3.7.7, CCW System, Amendment 80
8. AR-E-9, IR N-35 LOSS OF COMPENSATING VOLTAGE, Rev 4
9. ER-NIS.2, IR MALFUNTION, Rev 00501
10. AR-L-23, BUS18 UNDER VOLTAGE SAFEGUARDS, Rev 01102
11. AR-L-13, SAFEGUARDS BUS D/G BREAKER OVERCURRENT TRIP, Rev 8
12. AP-ELECT.17/18, Loss of Safeguards Bus 17/18, Rev 00802
13. AP-SW.2, Loss of Service Water, Rev 00801
14. Technical Specification 3.8.1, AC Sources – Modes 1, 2, 3, and 4, Amendment 109
15. Technical Specification 3.8.9, Distribution Systems – Modes 1, 2, 3,and 4, Amendment 80
16. Technical Specification 3.7.8, Service Water System, Amendment 102
17. AR-A-11, LETDOWN LINE HI PRESS 400 PSI, Rev 4
18. E-0, Reactor Trip and Safety Injection, Rev 04602
19. ATT-27.0, Attachment Automatic Action Verification, Rev 00400
20. E-2, Faulted Steam Generator Isolation, Rev 01301
21. E-3, Steam Generator Tube Rupture, Rev 04800
22. ECA-3.1, SGTR with Loss of Reactor Coolant, Subcooled Recovery Desired, Rev 03401
23. FR-P.1, Response to Imminent Pressurized Thermal Shock Condition, Rev 03200

Validation Time: 112 Minutes

Author: David Lazarony, Essential Training & Consulting, LLC

Facility Review:

Rev. 092614

Facility:	**Ginna**	Scenario No.: **5**	Op Test No.: **N2014-301**
Examiners:	_____	Operators:	_____ (SRO)
	_____		_____ (RO)
	_____		_____ (BOP)

Initial Conditions:	The plant is at 1 x 10-8 amps (BOL). The plant ran at 100% power for 12 days, and then tripped four days ago due to a MFW Pump failure. The repairs have been made and the plant is ready to be started back up. The crew will be directed to pull rods to the point of adding heat (POAH), and start the A MFW Pump in accordance with O-1.2, Plant Startup From Hot Shutdown to Full Power Load, Step 6.3.4 and beyond. The area has experienced thunderstorms over the last 6 hours, and this is expected to continue for the next 6 hours.
Turnover:	The following equipment is Out-Of-Service: The B Condensate Pump is OOS for Bearing Replacement.

Event No.	Malf. No.	Event Type*	Event Description
1	NA	R-RO N-SRO	Raise Power to POAH
2	NA	N-BOP N-SRO	Testing of the MFW Oil Pumps
3	CLG10 CLG02A A-EDS33	C-RO C(TS)-SRO	480VAC Ground/A CCW Pump trips w/B CCW Pump failure to start in AUTO
4	NIS05A	C-BOP C(TS)-SRO	Loss of Compensating Voltage to Intermediate Range N35
5	EDS04D CLG01D	C-BOP C(TS)-SRO	Fault on 480V Bus 18/SW Pump D fails to start
6	CVC07A	C-RO C-SRO	PCV-135 fails CLOSED
7	STM04D STM09A	M-RO M-BOP M-SRO	B ARV fails CLOSED/B SG Safety Valve Lifts and fails OPEN
8	RPS05A RPS05B	NA	Failure of Reactor to Trip in AUTO only
9	SGN04B RCS16	NA	B Steam Generator Tube Rupture/1% Failed Fuel

* (N)ormal, (R)eactivity, (I)nstrument, (C)omponent, (M)ajor

Ginna 2014 NRC Scenario #5

The plant is at 1 x 10-8 amps (BOL). The plant ran at 100% power for 12 days, and then tripped four days ago due to a MFW Pump failure. The repairs have been made and the plant is ready to be started back up. The crew will be directed to pull rods to the point of adding heat (POAH), and start the B MFW Pump in accordance with O-1.2, Plant Startup From Hot Shutdown to Full Power Load, Step 6.3.4 and beyond. The area has experienced thunderstorms over the last 6 hours, and this is expected to continue for the next 6 hours.

The following equipment is Out-Of-Service: The B Condensate Pump is OOS for Bearing Replacement.

Shortly after taking the watch, the operator will raise power to the POAH in accordance with Step 6.3.4 of O-1.2, Plant Startup From Hot Shutdown to Full Load. The operator will raise reactor power and stabilize reactor power at 0.5-1.0%; and then control Tavg at 547°F.

After this, the operator will conduct the oil pump checks on the A Main Feedwater (MFW) Pump accordance with Attachment 5, Main Feed Pump A Startup of O-1.2, Plant Startup From Hot Shutdown to Full Load, in preparation for starting the A MFW Pump.

Subsequently, a 480VAC ground will occur on Bus 14 and the A CCW Pump will trip, and the B CCW Pump will fail to automatically start. The operator will either start the A CCW pump manually per A-503.1, Emergency and Abnormal Operating Procedures Users Guide; or respond in accordance with AR-A-22, CCW PUMP DISCHARGE LO PRESS 60 PSI, and enter AP-CCW.2, Loss of CCW During Power Operation. The operator will evaluate Technical Specification 3.7.7, CCW System.

Shortly after this, the compensating voltage power supply for the Intermediate Range Nuclear Instrument N35 will fail Low. The operator will respond in accordance with AR-E-9, IR N-35 LOSS OF COMPENSATING VOLTAGE and enter ER-NIS.2, IR MALFUNTION. The operator will address Technical Specification 3.3.1, Reactor Trip Instrumentation.

Shortly afterwards, a fault on 480V Bus 18 will occur, resulting in Bus 18 de-energizing. The operator will respond in accordance with AR-L-23, BUS18 UNDER VOLTAGE SAFEGUARDS AR-L-5, SAFEGUARD BUS MAIN BREAKER OVERCURRENT TRIP, and/or AR-L-13, SAFEGUARDS BUS D/G BREAKER OVERCURRENT TRIP and enter AP-ELECT.17/18, Loss of Safeguards Bus 17/18. The D Service Water Pump has failed to start, leaving only the B SW Pump running. The operator may leave the A EDG running or trip it within AP-ELECT.17/18, but in either case align Alternate Cooling to the EDG. The operator will enter AP-SW.2, Loss of Service Water, and take actions to isolate non-essential SW loads. The operator will address Technical Specification 3.8.1, AC Sources – Modes 1, 2, 3, and 4; 3.8.9, Distribution Systems – Modes 1, 2, 3,and 4; and 3.7.8, Service Water System.

During the recovery, Letdown Pressure Control Valve PCV-135 will fail closed causing the Letdown Line Relief valve to lift to the PRT. The operator will respond in accordance with AR-A-11, LETDOWN LINE HI PRESS 400 PSI, and take manual control of the valve.

After this, the B ARV will inadvertently close, and one SG Safety valve will open and stick open. The reactor will fail to trip automatically, and the operator will need to manually trip the reactor and enter E-0, Reactor Trip or Safety Injection. On the trip approximately 1% failed fuel will occur. The operator will proceed through E-0, and then transition to E-2, Faulted Steam Generator Isolation.

While in E-2 a large Steam Generator Tube Rupture will develop on the B Steam Generator, and the operator will transition to E-3, Steam Generator Tube Rupture. Because the B Steam Generator is both Ruptured and Faulted, the operator will transition to ECA-3.1, SGTR with Loss of Reactor Coolant, Subcooled Recovery Desired.

Also, while in E-2, it is expected that high temperatures will occur on the RCPs due to low service water flow, requiring the crew to stop these pumps. Because of this the NC condition of the RCS will tend to lower loop Tcold temperatures causing an Orange/Red condition on RCS Integrity. If so, the operator may need to transition to FR-P.1, Response to Imminent Pressurized Thermal Shock Condition.

The scenario will terminate at Step 15 of ECA-3.1, after the crew has monitored conditions for continuing with the Subcooled Recovery procedure, or upon transition to FR-P.1.

Critical Tasks:

1. **Manually trip the reactor prior to transition to FR-S.1, "Response to Nuclear Generation/ATWS."**

Safety Significance: Failure to trip the reactor when required causes a challenge to the Subcriticality Critical Safety Function that otherwise would not exist. This mis-operation by the operator necessitates the crew taking compensating action which complicates the event mitigation strategy and demonstrates an inability by the operator to recognize a failure of the automatic actuation of the RPS.

2. **Isolate the Faulted Steam Generator before transitioning out of E-2.**

Safety Significance: Failure to isolate a Faulted SG that can be isolated causes challenges to the Critical Safety Functions that would not otherwise occur. Failure to isolate flow could result in an unwarranted Orange or Red Path condition on RCS Integrity, Subcriticality (if cooldown is allowed to continue uncontrollably).

SIMULATOR OPERATOR INSTRUCTIONS

	Bench Mark	ACTIVITY	DESCRIPTION
☐		**Reset to Temp** I/C 175. **(Built on IC-7)**	**0% power BOL** **T=0:** **Place B Condensate Pump is Pull-Stop.** **InsertCND05, Vacuum Priming Pump A ON** **Insert CND06, Vacuum Priming Pump B ON** **ENSURE that the A CCW Pump is ON and the B CCW Pump is in STANDBY.** **ENSURE that Steam Generator Levels are stabilized.** **Insert MALF CLG10 (Auto start failure of standby CCW pump on low pressure)** **Insert MALF RPS05A, MAN AVAIL (Reactor trip breaker A failure)** **Insert MALF RPS05B, MAN AVAIL (Reactor trip breaker B failure)** **Insert MALF CLG01D (SWP D Trip)** **MALF CLG02A, on T-1,** A CCW Pump Trip **ANN A-EDS33, ON, on T-1,** 480 VAC Ground (15 Seconds delayed, clears in 20 seconds) **MALF NIS05A, 1E-8 amps, 0 Ramp, on T-2,** Loss of Compensating Voltage in N35 **MALF EDS04D, on T-3,** Fault on Bus 18 **MALF CVC07A, 0%, 0 Ramp, MAN AVAIL, on T-4,** PCV-135 Fails CLOSED **MALF STM04D, 0%, 0 Ramp, on T-5** **MALF STM09A, 100% initially (Immediately throttles from 100% to 10% over 600 seconds), 0 Ramp, on T-5** **MALF SGN04B, 60% [600 gpm], 0 Ramp, on T-6** **MALFRCS16=1%, 0 Ramp, on T-6,** 1% failed fuel
☐	Prior to Crew Briefing	**RUN**	• **Hang Protective Tags per OPG-Protective Equipment.** • **Place Black Dot on J-17** • **Place a Critical Parameter Marker on SG Narrow Range level at 52±7%.**

	Bench Mark	ACTIVITY	DESCRIPTION
☐	**Crew Briefing** • Assign Crew Positions based on evaluation requirements • Review the Shift Turnover Information with the crew. 1. Provide crew with Reactivity Plan for the startup. 2. Hand out O-1.2, Step 6.3 and substeps (p24-26), marked up as follows: • Step 6.3.1 – Initialed • Step 6.3.2.1 and 2 – NA • Step 6.3.3.1 - Initialed • Step 6.3.3.2.a – Initialed • Step 6.3.3.2.b 1st Bullet – Record 100, Initialed • Step 6.3.3.2.b 2nd Bullet – Record D, Initialed • Step 6.3.3.2.c 1st Bullet – Record 110, Initialed • Step 6.3.3.2.c 2nd Bullet – Record D, Initialed • Step 6.3.3.2.d – Record 2094, Initialed • Step 6.3.3.2.e – Record 547, Initialed • Step 6.3.3.2.f – Initialed • Step 6.3.6 – Initialed • Step 6.3.7 – Initialed • Step 6.3.8 – NA • All other Steps blank 3. Provide a Blank Copy of Attachment 5. 4. Low Power Attachment of O-1.2 should be covered in the Pre-Job Briefing.		
☐	T-0	Begin Familiarization Period	
☐	At direction of examiner	**Event 1**	Raise power to POAH
☐	At direction of examiner	**Event 2**	Testing of the MFW Oil Pumps
☐	At direction of examiner	**Event 3** **Trigger#1** **A-EDS33** **CLG02A** **CLG10 (T=0)**	480VAC Ground/A CCW Pump trips w/B CCW Pump failure to start in AUTO **ON, (Simulates simultaneous 480V ground). Alarm will clear 20 seconds after alarm.** **NOTE: This Malfunction is inserted in the IC at T = 0.**

	Bench Mark	ACTIVITY	DESCRIPTION
☐	At direction of examiner	**Event 4** **Trigger#2** **NIS05A**	Loss of Compensating Voltage to Intermediate Range N35 **1E-8 amps, No Ramp**
☐	At direction of examiner	**Event 5** **Trigger #3** **EDS04D** **CLG01D (T=0)**	Loss of Emergency Bus: 480V Bus 18/SW Pump D fails to start **NOTE: This Malfunction is inserted in the IC at T = 0.**
☐	At direction of examiner	**Event 6** **Trigger #4** **CVC07A**	PCV-135 fails Closed **0% (MAN AVAIL), No Ramp**
☐	At direction of examiner	**Event 7** **Trigger #5** **STM04D (0%)** **STM09A (100%)**	B ARV fails CLOSED/B SG Safety Valve Lifts and fails OPEN **NOTE: After initial opening of Safety Valve, the valve will throttle to 5% open over the next 10 minutes.**
☐	Continued from Event 7	**Event 8** **RPS05A (T=0)** **RPS05B (T=0)**	Failure of Reactor to Trip in AUTO only **NOTE: This Remote is inserted in the IC at T = 0.**
☐	Upon Entry into E-2	**Event 9** **Trigger #6** **SGN04B (600 gpm)** **RCS16 (1%)**	B Steam Generator Tube Rupture/1% Failed Fuel
☐	**Terminate the scenario upon direction of Lead Examiner**		

Op Test No.: N2014-301 Scenario # 5 Event # 1 Page 8 of 57

Event Description: **Raise Power to POAH**

Shortly after taking the watch, the operator will raise power to the POAH in accordance with Step 6.3.4 of O-1.2, Plant Startup From Hot Shutdown to Full Load. The operator will raise reactor power and stabilize reactor power at 0.5-1.0%; and then control Tavg at 547°F.

SIM DRIVER Instructions: **NA**

Indications Available: **NA**

Time	Pos.	Expected Actions/Behavior	Comments
O-1.2, PLANT STARTUP FROM HOT SHUTDOWN TO FULL LOAD			
			NOTE: The CRS will conduct an alignment brief.
	HCO	(Step 6.3.4) WITHDRAW controlling bank of Rods and raise Reactor Power to the point of adding heat without exceeding the capacity of one AFW Pump.	**NOTE:** The HCO will raise Reactor power.
	CO/ CRS	(Step 6.3.5) VERIFY one of the following is operating to control RCS Tavg AND MARK component NOT controlling Tavg N/A.	
		• SG ARVs	
		• Condenser Steam Dumps	
	CO	(Step 6.3.9) ENSURE Steps 1.1 through 1.5 are complete on the following MFW Pump Attachments for available Main Feed Water Pump(s):	
		• Attachment 5, Main Feedwater Pump A	**NOTE:** The CRS will hand Attachment 5 off to the CO.
		• Attachment 6, Main Feedwater Pump B	
			NOTE: The CRS will likely conduct a Plant Status Brief.
At the discretion of the Lead Examiner move to Event #2.			

Op Test No.:	N2014-301	Scenario #	5	Event #	2	Page	9	of 57
Event Description:	**Testing of the MFW Oil Pumps**							

After this, the operator will conduct the oil pump checks on the A Main Feedwater (MFW) Pump accordance with Attachment 5, Main Feed Pump A Startup of O-1.2, Plant Startup From Hot Shutdown to Full Load, in preparation for starting the A MFW Pump.

SIM DRIVER Instructions: **NA**

Indications Available: **NA**

Time	Pos.	Expected Actions/Behavior	Comments
			NOTE: The CO will contact and coordinate with the Secondary AO to complete this Attachment. **SIM DRIVER:** Acknowledge as AO as appropriate.
O-1.2, PLANT STARTUP FROM HOT SHUTDOWN TO FULL LOAD ATTACHMENT 5, MAIN FEEDWATER PUMP A			
	CO	(Step 1.0) PERFORM the following to align and start MFW Pump A:	
	CO	(Step 1.1) PLACE Feedwater Pump A Oil Pump in service as follows:	
	CO	(Step 1.1.1) START a FEEDWATER PUMP A AC OIL PUMP AND MARK the Oil Pump NOT started N/A.	
		• 1A1	
		• 1A2	
	CO	(Step 1.1.2) PERFORM the following to ensure the FEEDWATER PUMP A DC OIL PUMP starts on low oil pressure:	
		• PLACE FEEDWATER PUMP A DC OIL PUMP in AUTO.	
		• SLOWLY SELECT standby FEEDWATER PUMP A AC OIL PUMP.	**NOTE:** The CO will need to move the Select Switch slowly.

Op Test No.: N2014-301 Scenario # 5 Event # 2 Page 10 of 57

Event Description: **Testing of the MFW Oil Pumps**

Time	Pos.	Expected Actions/Behavior	Comments
		• VERIFY FEEDWATER PUMP A DC OIL PUMP starts.	
			NOTE: MCB Annunciator J-31 may alarm when the DC Oil Pump is started. Based on this alarm, the CRS may contact maintenance to evaluate the DC Distribution System. If so, **SIM DRIVER:** Acknowledge as Maintenance, and report that the alarm will clear when the DC Oil Pump is stopped; and that it is appropriate to continue with the test.
	CO	• VERIFY MCB Alarm H-12, FEED PUMP DC OIL PUMP AUTO START, is ILLUMINATED.	
		• VERIFY MCB Alarm H-4, MAIN FEED PUMP OIL SYSTEM, is ILLUMINATED.	
		• STOP FEEDWATER PUMP A DC OIL PUMP.	
		• VERIFY MCB Alarm H-12, FEED PUMP DC OIL PUMP AUTO START is EXTINGUISHED.	
		• VERIFY MCB Alarm H-4, MAIN FEED PUMP OIL SYSTEM, is EXTINGUISHED.	
		• ENSURE FEEDWATER PUMP A DC OIL PUMP in AUTO.	
		• SLOWLY SELECT the original running FEEDWATER PUMP A AC OIL PUMP.	**NOTE:** The CO will need move the Select Switch slowly.
		• OBSERVE FEEDWATER PUMP A DC OIL PUMP starts.	
		• VERIFY MCB Alarm H-12, FEED PUMP DC OIL PUMP AUTO START, is ILLUMINATED.	

Op Test No.: N2014-301 Scenario # 5 Event # 2 Page 11 of 57

Event Description: **Testing of the MFW Oil Pumps**

Time	Pos.	Expected Actions/Behavior	Comments
		• VERIFY MCB Alarm H-4, MAIN FEED PUMP OIL SYSTEM, is ILLUMINATED.	
		• STOP FEEDWATER PUMP A DC OIL PUMP.	
		• VERIFY MCV Alarm H-12, FEED PUMP DC OIL PUMP AUTO START, is EXTINGUISHED.	
		• VERIFY MCB Alarm H-4, MAIN FEED PUMP OIL SYSTEM, is EXTINGUISHED.	
		• ENSURE FEEDWATER PUMP A DC OIL PUMP in AUTO.	
At the discretion of the Lead Examiner move to Event #3.			

Op Test No.:	N2014-301	Scenario #	5	Event #	3	Page	12	of 57

Event Description: **480VAC Ground/A CCW Pump trips w/B CCW Pump failure to start in AUTO**

Subsequently, a 480VAC ground will occur on Bus 14 and the A CCW Pump will trip, and the B CCW Pump will fail to automatically start. The operator will either start the A CCW pump manually per A-503.1, Emergency and Abnormal Operating Procedures Users Guide; or respond in accordance with AR-A-22, CCW PUMP DISCHARGE LO PRESS 60 PSI, and enter AP-CCW.2, Loss of CCW During Power Operation. The operator will evaluate Technical Specification 3.7.7, CCW System.

SIM DRIVER Instructions: **Operate Trigger #1 (CLG02A, A-EDS33 (ON))**

Indications Available:

- MCB Annunciator L-8, 480V GROUND
- MCB Annunciator, CCW PUMP DISCHARGE LO PRESS 60 PSIG
- A CCW Pump Green Breaker Status Light LIT
- A CCW Pump White Breaker Status Light LIT
- B CCW Pump Green Breaker Status Light LIT

Time	Pos.	Expected Actions/Behavior	Comments
			NOTE: The HCO may start the B CCW directly, or the crew may enter AP-CCW.2 directly.
		AR-L-8, 480V GROUND	
	CO	(Step 1) Notify AOs to verify which 480V Bus has the ground.	**NOTE:** The CRS will dispatch an AO. **SIM DRIVER:** as **AO**, acknowledge.
	CRS	(Step 2) Notify SS to determine WHAT equipment may be removed AND returned service on the affected Bus AND MCC(s).	**NOTE:** The CRS may notify the SS. **SIM DRIVER:** as **SS**, acknowledge.
	CRS	(Step 3) IF necessary, THEN refer to ITS LCO 3.8.1 OR 3.8.2.	

Op Test No.: N2014-301 Scenario # 5 Event # 3 Page 13 of 57

Event Description: **480VAC Ground/A CCW Pump trips w/B CCW Pump failure to start in AUTO**

Time	Pos.	Expected Actions/Behavior	Comments
	CRS	(Step 4) IF necessary, THEN notify the following:	**NOTE:** The CRS may notify the WCC/Electricians. **SIM DRIVER:** as **WCCS/Electricians**, acknowledge, and **after 3 Minutes** report that **the A CCW has tripped**.
		• Electricians	
		• Electric Planner	
AR-A-22, CCW PUMP DISCHARGE LO PRESS 60 PSI			
	CRS	(Step 1) GO TO the applicable AP-CCW procedure:	
		• AP-CCW.2, LOSS OF CCW DURING POWER OPERATION	
	HCO	(Step 2) Notify AO to check CCW pumps.	**NOTE:** The CRS may direct the AO to check the CCW Pumps. If so, **SIM DRIVER** acknowledge as AO, and report A CCW Pump Motor Hot to Touch.
	HCO	(Step 3) IF CCW pump cavitation is evident with normal CCW surge tank level as indicated on LI-618,....	**NOTE:** The CRS may direct the AO to check the CCW Pumps. If so, **SIM DRIVER** acknowledge as AO, and report no evidence of cavitation exists on any CCW Pump.
	CRS	(Step 4) Refer to ITS LCO 3.4.6, 3.4.7, 3.4.8, 3.7.7, 3.9.4 and 3.9.5.	

Op Test No.: N2014-301 Scenario # 5 Event # 3 Page 14 of 57

Event Description: **480VAC Ground/A CCW Pump trips w/B CCW Pump failure to start in AUTO**

Time	Pos.	Expected Actions/Behavior	Comments
			NOTE: The HCO may start the B CCW directly per the guidance of A-503.1, and/or the CRS may go to AP-CCW.2.
A-503.1, EMERGENCY AND ABNORMAL OPERATING PROCEDURES USERS GUIDE			
	HCO	(Step 1) Manual backup is the insertion of a manual trip, actuation, or control signal after a given parameter has reached or exceeded the setpoint for the corresponding automatic signal, based on the observed failure of the automatic function to occur. Manual backup is in an attempt to restore or maintain the design function.	**NOTE:** The HCO may start the B CCW, restoring CCW flow, and the crew MAY NOT enter the AP.
			Examiner NOTE: Although the CRS will probably NOT enter AP-CCW.2, it is scripted here in case he does. If NOT, proceed to Technical Specification evaluation on **Page 18**.
AP-CCW.2, LOSS OF CCW DURING POWER OPERATION			
			Examiner NOTE: If the B CCW Pump is started already upon entry into this procedure, move on to Event 4 and the discretion of the Lead Examiner, and address TS Evaluation upon completion of the scenario.
	HCO	(Step 1) Check CCW Pump Status:	
		• Both CCW pump breaker with lights - EXTINGUISHED	**NOTE:** The A CCW Pump white Breaker Status light will be LIT.
		(Step 1 RNO) Perform the following:	
		• Ensure standby CCW pump running.	**NOTE:** The HCO will start the B CCW Pump here, if NOT previously started.

Op Test No.: N2014-301 Scenario # 5 Event # 3 Page 15 of 57

Event Description: **480VAC Ground/A CCW Pump trips w/B CCW Pump failure to start in AUTO**

Time	Pos.	Expected Actions/Behavior	Comments
		IF no CCW pump can be operated,....	**NOTE:** The B CCW Pump can be started.
		• IF annunciator A-22, CCW PUMP DISCHARGE LO PRESS 60 PSI, lit,.....	**NOTE:** Once the B CCW Pump is started, this annunciator will NOT be LIT.
	HCO	(*Step 2) Monitor CCW Surge Tank Level – APPROXIMATELY 50% AND STABLE (PPCS Point L0618)	
	HCO	(*Step 3) Monitor CCW Hx Outlet Temperature (MCB rear or PPCS point ID T0621)	
		• CCW Hx Outlet temperature – LESS THAN 120°F	
	HCO	(*Step 4) Monitor RCP Indications:	
		• Annunciator A-7 (A-15), RCP 1A (1B) CCW return Hi temp or low flow 165 gpm 125°F alarm – EXTINGUISHED	
		• RCP motor bearings temperature (PPCS Group Display – RCPS OR RCP temperature monitor RK-20A recorder) - ≤ 200°F.	
	HCO	(*Step 5) Monitor If Letdown Should Be Isolated:	
		• Check annunciator A-12, Non-Regen Hx Letdown Out Hi Temp 145°F – EXTINGUISHED	
		• Check Excess letdown temperature – LESS THAN 195°F	
	HCO/ CO/ AO	(Step 6) Check CCW Valve Alignment - NORMAL	

Op Test No.: N2014-301 Scenario # 5 Event # 3 Page 16 of 57

Event Description: **480VAC Ground/A CCW Pump trips w/B CCW Pump failure to start in AUTO**

Time	Pos.	Expected Actions/Behavior	Comments
		• Check MCB CCW valves (Refer to ATT-1.0, ATTACHMENT AT POWER CCW ALIGNMENT)	**NOTE:** The CRS will hand off ATT-1.0 to the HCO or CO.
		• Direct AO to check local flow indications per ATT-1.1, ATTACHMENT NORMAL CCW FLOW	**NOTE:** The CRS may dispatch an AO. **SIM DRIVER:** as **AO**, acknowledge, and **after 5 Minutes**, report that **ATT-1.1. is complete**.
	HCO/ AO	(Step 7) Locally Check Seal Water Hx CCW Outlet Flow – NORMAL	**NOTE:** The CRS may dispatch an AO. **SIM DRIVER:** as **AO**, acknowledge, and report after 2 Minutes that flow is 96 gpm.
	HCO	(Step 8) check For CCW Leakage In CNMT:	
		• Check CNMT sump A level:	
		• Level – STABLE	
		• Sump A pumps – OFF	
		• RCP oil levels - STABLE	
	HCO	(Step 9) Check for CCW Leakage In AUX BLDG:	
		• Start frequency of AUX BLDG sump pump(s) – NORMAL (Refer to RCS daily leakage log)	
		• Waste holdup tank level – STABLE OR RISING AS EXPECTED	**NOTE:** The CRS may contact an AO. **SIM DRIVER:** as **AO**, acknowledge, and report that the **WHUT Level is stable**.
	HCO	(Step 10) Verify CCW System Leak – IDENTIFIED	

Op Test No.: N2014-301 Scenario # 5 Event # 3 Page 17 of 57

Event Description: **480VAC Ground/A CCW Pump trips w/B CCW Pump failure to start in AUTO**

Time	Pos.	Expected Actions/Behavior	Comments
		• Leak identified	**NOTE:** The CRS will answer this "YES" being aware that there is NO leak, and continue.
		• Isolate leak if possible	
		• Refer to IP-ENV-3, RESPONSE TO A SPILL OF HAZARDOUS MATERIAL/WASTE	**NOTE:** The CRS may NOT take this action, knowing that there is no leak.
	HCO	(Step 11) Check Normal or Excess Letdown – IN SERVICE	**NOTE:** Normal letdown is in service.
	HCO	(Step 12) Check CCW System Leak Isolated	
		• Surge tank level – APPROXIMATELY 50%	
		• Surge tank level - STABLE	
	HCO	(Step 13) Direct RP To Sample CCW System For Chromates	**NOTE:** The CRS may NOT take this action, knowing that there is no leak.
	HCO/ CO	(Step 14) Evaluate MCB Annunciator Status (Refer to AR Procedures)	
	CRS	(Step 15) Evaluate Plant Conditions:	
		• CCW system malfunction – IDENTIFIED AND CORRECTED	
		• CCW system status adequate for power operation (Refer to ITS Section 3.7.7).	
	CRS	(Step 16) Notify Higher supervision	**NOTE:** The CRS may notify the WCC. **SIM DRIVER:** as **WCCS**, acknowledge.

Op Test No.: N2014-301 Scenario # 5 Event # 3 Page 18 of 57

Event Description: **480VAC Ground/A CCW Pump trips w/B CCW Pump failure to start in AUTO**

Time	Pos.	Expected Actions/Behavior	Comments
	CRS	(Step 17) Return to Procedure Or Guidance In Effect	
			Examiner NOTE: If the CRS does NOT enter AP-CCW.2, continue **HERE**.
TECHNICAL SPECIFICATION 3.7.7, COMPONENT COOLING WATER (CCW) SYSTEM			
	CRS	LCO 3.7.7 Two CCW trains, two CCW heat exchangers, and the CCW loop header shall be OPERABLE.	**NOTE:** CRS should recognize escalating MODE change to >5% power cannot occur with LCO not met.
		AAPLICABILITY: MODES 1, 2, 3, and 4.	
	CRS	CONDITION / REQUIRED ACTION / COMPLETION TIME A. One CCW train inoperable. / A.1 Restore CCW train to OPERABLE status. / 72 hours	
			NOTE: The CRS will likely conduct a Plant Status Brief.
At the discretion of the Lead Examiner move to Event #4.			

Op Test No.:	N2014-301	Scenario #	5	Event #	4	Page 19	of 57
Event Description:	**Loss of Compensating Voltage to Intermediate Range N35**						

Shortly after this, the compensating voltage power supply for the Intermediate Range Nuclear Instrument N35 will fail Low. The operator will respond in accordance with AR-E-9, IR N-35 LOSS OF COMPENSATING VOLTAGE and enter ER-NIS.2, IR MALFUNTION. The operator will address Technical Specification 3.3.1, Reactor Trip Instrumentation.

SIM DRIVER Instructions: **Operate Trigger #2 (NIS05A (1E-8%))**

Indications Available:

- MCB Annunciator E-9, IR N-35 LOSS OF COMPENSATING VOLTAGE

Time	Pos.	Expected Actions/Behavior	Comments
AR-E-9, IR N-35 LOSS OF COMPENSATION VOLTAGE			
	CRS	(Step 1) Refer to ER-NIS.2	
			NOTE: The CRS will go to ER-NIS.2.
ER-NIS.2, IR MALFUNCTION			
	CO	(Step 6.1) DEFEAT the reactor trip and rod stop function for the affected channel by placing the level trip switch in the BYPASS position.	**NOTE:** E-7 alarm, NIS TRIP BYPASS, will light
	CRS	(Step 6.2) NOTIFY I&C to repair the faulty channel.	**NOTE:** The CRS may notify the WCC/I&C. **SIM DRIVER:** as **WCCS/I&C**, acknowledge.
	CRS	(Step 6.3) REFER to ITS Section 3.3.1, Table 3.3.1-1, function 3 and Function 16a for NIS intermediate range channel operability requirements.	

Op Test No.: N2014-301 Scenario # 5 Event # 4 Page 20 of 57

Event Description: **Loss of Compensating Voltage to Intermediate Range N35**

Time	Pos.	Expected Actions/Behavior	Comments
			NOTE: The CRS will evaluate Technical Specifications and determine that per Condition E, reactor S/D is required to reduce power to <5E-11 amps (can't raise power > 8% due to CCW pump failure).
TECHNICAL SPECIFICATION 3.3.1, REACTOR TRIP SYSTEM (RTS) INSTRUMENTATION			
	CRS	LCO 3.3.1 The RTS instrumentation for each Function in Table 3.3.1-1 shall be OPERABLE.	
	CRS	APPLICABILITY: According to Table 3.3.1-1.	
	CRS	ACTIONS	

CONDITION	REQUIRED ACTION	COMPLETION TIME
A. One or more Functions with one channel inoperable. OR Two source range channels inoperable.	A.1 Enter the Condition referenced in Table 3.3.1-1 for the channel(s).	Immediately
E. As required by Required Action A.1 and referenced by Table 3.3.1-1.	E.1 Reduce THERMAL POWER to < 5E-11 amps. OR	2 hours
	E.2 Increase THERMAL POWER to ≥ 8% RTP.	2 hours

NOTE: The CRS will recognize that Function 3 requires ACTION E.1, and that No mode change with CCW pump inoperable. Power must be reduced to < 5E-11 amps.

Op Test No.: N2014-301 Scenario # 5 Event # 4 Page 21 of 57

Event Description: **Loss of Compensating Voltage to Intermediate Range N35**

Time	Pos.	Expected Actions/Behavior			Comments
		S. As required by Required Action A.1 and referenced by Table 3.3.1-1.	S.1 Verify interlock is in required state for existing plant conditions. OR	1 hour	**NOTE:** The CRS will recognize that Function 16.a requires ACTION S.1.
			S.2 Declare associated RTS Function channel(s) inoperable.	1 hour	
					NOTE: The CRS will evaluate Technical Specifications and determine that reactor S/D is required to reduce power to <5E-11 amps.
At the discretion of the Lead Examiner move to Event #5.					

Op Test No.: N2014-301 Scenario # 5 Event # 5 Page 22 of 57

Event Description: **Fault on 480V Bus 18/SW Pump D fails to start**

Shortly afterwards, a fault on 480V Bus 18 will occur, resulting in Bus 18 de-energizing. The operator will respond in accordance with AR-L-23, BUS18 UNDER VOLTAGE SAFEGUARDS AR-L-5, SAFEGUARD BUS MAIN BREAKER OVERCURRENT TRIP, and/or AR-L-13, SAFEGUARDS BUS D/G BREAKER OVERCURRENT TRIP and enter AP-ELECT.17/18, Loss of Safeguards Bus 17/18. The D Service Water Pump has failed to start, leaving only the B SW Pump running. The operator may leave the A EDG running or trip it within AP-ELECT.17/18, but in either case align Alternate Cooling to the EDG. The operator will enter AP-SW.2, Loss of Service Water, and take actions to isolate non-essential SW loads. The operator will address Technical Specification 3.8.1, AC Sources – Modes 1, 2, 3, and 4; 3.8.9, Distribution Systems – Modes 1, 2, 3,and 4; and 3.7.8, Service Water System.

SIM DRIVER Instructions: **Operate Trigger #3 (EDS04D)**

Indications Available:

- MCB Annunciator L-23, BUS 18 UNDER VOLTAGE SAFEGUARDS
- MCB Annunciator L-5, SAFEGUARD BUS MAIN BREAKER OVERCURRENT TRIP
- MCB Annunciator L-13, SAFEGUARDS BUS D/G BREAKER OVERCURRENT TRIP
- Multiple MCB Annunciators
- Bus 18 Volts indicating 0
- Bus 18 amperage indicating 0
- A EDG starts, voltage at 480 VAC, but will not load on Bus 18.

Time	Pos.	Expected Actions/Behavior	Comments
			NOTE: The crew may enter AP-ELECT.17/18 directly.
AR-L-23, BUS 18 UNDER VOLTAGE SAFEGUARDS			
	CRS	(Step 4.1) IF either L-20, 12A XFMR OR 12A BUS TROUBLE OR L-28, 12B XFMR OR 12B BUS TROUBLE- IS LIT, THEN.....	**NOTE:** These annunciators are NOT LIT.
	CRS	(Step 4.2) IF D/G A ties onto Bus 18 THEN....	**NOTE:** D/G A will NOT tie onto Bus 18.
	CRS	(Step 4.3) IF D/G does not start THEN.....	**NOTE:** D/G A will start.

Op Test No.: N2014-301 Scenario # 5 Event # 5 Page 23 of 57

Event Description: **Fault on 480V Bus 18/SW Pump D fails to start**

Time	Pos.	Expected Actions/Behavior	Comments
AR-L-13, SAFEGUARDS BUS D/G BREAKER OVERCURRENT TRIP			
	CRS	(Step 1) Notify Electricians.	
	CRS	(Step 2) Investigate overcurrent condition.	
	CRS	(Step 3) Refer to ITS LCO 3.8.1 or 3.8.2.	
	CRS	(Step 4) When electricians have corrected the overcurrent condition, reset alarm by going to the AFTER TRIP position on the applicable breaker.	
			NOTE: The CRS will go to AP-ELEC.17/18.
AP-ELECT.17/18, LOSS OF SAFEGUARDS BUS 17/18			
	CO	(Step 1) Verify Emergency D/G Associated With Affected Bus – RUNNING	**NOTE:** The A D/G is RUNNING, but its breaker is NOT Closed.
		• Bus 18 – D/G A	
	CO	(Step 2) Verify Both trains Of AC Emergency Busses Energized To At Least 440 VOLTS:	
		• Bus 14 and Bus 18	**NOTE:** Bus 18 is de-energized.
		• Bus 16 and Bus 17	
	CO	(Step 2 RNO) IF Bus 14 AND Bus 16 are deenergized, THEN…..	**NOTE:** Bus 16 is energized.
		IF one train deenergized, THEN perform the following:	
		• Ensure D/G aligned for unit operation	
		• Mode switch in UNIT	
		• Voltage control selector in AUTO	

Op Test No.: N2014-301 Scenario # 5 Event # 5 Page 24 of 57

Event Description: **Fault on 480V Bus 18/SW Pump D fails to start**

Time	Pos.	Expected Actions/Behavior	Comments
		• Check D/G running.	
		IF NOT, THEN.....	**NOTE:** The A D/G is RUNNING, but its breaker is NOT Closed.
		• Adjust D/G voltage to approximately 480V.	
		• Adjust D/G frequency to approximately 60 Hz.	
	CO	(Step 3) Verify Service Water System Operation:	
		• SW pumps – AT LEAST ONE RUNNING IN EACH LOOP	**NOTE:** The D SW Pump has failed to Start, ONLY the B SW Pump is RUNNING.
		• A or B pump in Loop A	
		• C or D pump in Loop B	
			NOTE: The CRS may address AP.SW.1, SW Leak, however this procedure will NOT address the low flow condition.
	CO	(Step 3a RNO) Perform the following:	
		• Manually start SW pump as necessary (357 kw each).	**NOTE:** The CO may attempt to START the D SW Pump, but it will fail.
		• IF adequate cooling can NOT be supplied to a running D/G.	**NOTE:** The CRS will have to decide whether or not 1 SW Pump is adequate cooling. **IF NOT**, the CRS will direct that the A D/G be stopped, and address ER-D/G.2 for Alternate Cooling. **If SO**, CRS will continue as scripted.
		• IF no SW pumps can be operated, THEN....	**NOTE:** The B SW Pump is RUNNING.
		• IF only one SW pump can be operated, THEN refer to AP-SW.2, LOSS OF SERVICE WATER.	

Op Test No.: N2014-301 Scenario # 5 Event # 5 Page 25 of 57

Event Description: **Fault on 480V Bus 18/SW Pump D fails to start**

Time	Pos.	Expected Actions/Behavior	Comments
			NOTE: The CRS will go to AP-SW.2.
		AP-SW.2, LOSS OF SERVICE WATER	
	CO	(Step 1) Verify 480V AC Emergency Busses 17 and 18 – ENERGIZED	**NOTE:** Bus 18 is de-energized.
	CO	(Step 1 RNO) Ensure associated D/G(s) running and attempt to manually load busses 17 and/or 18 onto their respective D/G(s).	
		IF neither bus 17 nor bus 18 can be energized, THEN.....	**NOTE:** Bus 17 is energized.
	CO	(*Step 2) verify SW Pump Alignment:	
		• Check at least one SW pump running in each loop	
		• A or B pump in loop A	**NOTE:** The B SW Pump is RUNNING.
		• C or D pump in loop B	**NOTE:** Both C and D SW Pumps are OFF.
	CO	• (Step 2a RNO) Perform the following:	
		• Manually start SW pumps as necessary (257 kw each).	**NOTE:** The CO may attempt to START the D SW Pump, but it will fail.
		• IF adequate cooling can NOT be supplied to a running D/G, THEN.....	**NOTE:** The CRS will direct action based on whether or NOT one SW Pump can adequately cool the D/G.
		• IF no SW pumps can be operated, THEN.....	**NOTE:** The B SW Pump is RUNNING.
	CRS	• IF only one SW pump can be operated, THEN go to Step 3.	

Op Test No.: N2014-301 Scenario # 5 Event # 5 Page 26 of 57

Event Description: **Fault on 480V Bus 18/SW Pump D fails to start**

Time	Pos.	Expected Actions/Behavior	Comments
	CO	(Step 3) Align Alternate Cooling To One D/G (Refer to ER-D/G.2, ALTERNATE COOLING FOR EMERGENCY D/Gs):	
		• IF B or D SW Pump is operating, THEN align alternate cooling to D/G A per ER-D/G.2.	**NOTE:** The CRS will dispatch an AO. **SIM DRIVER:** as **AO**, acknowledge, and use REM-GEN21 = OPEN. Report after 3 Minutes that ATT-2.2 is complete.
	CO	(Step 4) Isolate SW To Non-Essential Loads	
		• Close screenhouse SW isolation valves	
		• MOV-4609	
		• MOV-4780	
		• Close air conditioning SW isolation valves	
		• MOV-4663	
		• MOV-4733	
		• Direct AO to perform Part C of ATT-2.2, ATTACHMENT SW ISOLATION	**NOTE:** The CRS will dispatch an AO. **SIM DRIVER:** as **AO**, acknowledge, and report after 3 Minutes that ATT-2.2 is complete.
	CO	(Step 5) Monitor Plant Equipment Cooled By SW – TEMPERATURES STABLE	
		• Exciter	
		• MFP oil coolers	
		• Instrument air compressors	
		• Bus duct coolers	
		• Seal Oil unit	
		• Turbine lube oil cooler	
		• CCW Hx	
		• SFP Hx	

Op Test No.: N2014-301 Scenario # 5 Event # 5 Page 27 of 57

Event Description: **Fault on 480V Bus 18/SW Pump D fails to start**

Time	Pos.	Operator Actions	Comments
		• AFPs	
		• Condensate Pumps	
		• Secondary sample coolers	
		(Step 6) Notify Higher Supervision	**NOTE:** The CRS may notify the WCC. **SIM DRIVER:** as **WCCS**, acknowledge.
	CO	(Step 7) Check SW System Status:	
		• Check SW loop header pressures:	
		• PPCS SW low pressure alarm status – NOT LOW	
		• PPCS point ID P2160	
		• PPCS point ID P2161	
		• Pressure in both loops STABLE OR RISING	
		• Check SW loop header pressures – GREATER THAN 40 PSIG	**NOTE:** The SW System pressures are < 40 psig.
	CO/ AO	• (Step 7a RNO) Locally isolate selected SW loads as desired (Refer to ATT 2.2, ATTACHMENT SW ISOLATION)	**NOTE:** The CRS will dispatch an AO. **SIM DRIVER:** as **AO**, acknowledge.
	CO	• (Step 7b) Check at least one SW pump running in each loop:	
		• A or B pump in loop A	**NOTE:** The B SW Pump is RUNNING.
		• C or D pump in loop B	**NOTE:** Both C and D SW Pumps are OFF.
		• (Step 7b RNO) Perform the following:	
		• Continue efforts to start at least one SW pump in each loop.	

Op Test No.: N2014-301 Scenario # 5 Event # 5 Page 28 of 57

Event Description: **Fault on 480V Bus 18/SW Pump D fails to start**

Time	Pos.	Expected Response	Comments
		• IF at least two SW pumps can be operated, THEN,……	**NOTE:** Two SW Pumps cannot be operated.
		• IF NOT, THEN return to Step 3.	**NOTE:** The CRS will continue efforts to restore the SW System.
TECHNICAL SPECIFICATION 3.8.1, AC SOURCES – MODES 1, 2, 3 AND 4			
	CRS	LCO 3.8.1 The following AC electrical sources shall be OPERABLE:	
		• One qualified independent offsite power circuit connected between the offsite transmission network and each of the onsite 480 V safeguards buses required by LCO 3.8.9, "Distribution Subsystems – MODES 1, 2, 3, and 4"; and	
		• Two emergency diesel generators (DGs) capable of supplying their respective onsite 480 V safeguards buses required by LCO 3.8.9.	
	CRS	APPLICABILITY: MODES 1, 2, 3, and 4.	
	CRS	ACTIONS	
	CRS	CONDITION / REQUIRED ACTION / COMPLETION TIME	
		B. One DG inoperable. / B.1 Perform SR 3.8.1.1 for the offsite circuit. / 1 hour AND Once per 8 hours thereafter	
		B.2 Declare required feature(s) supported by the inoperable DG inoperable when its required redundant feature(s) is inoperable. AND / 4 hours from discovery of Condition B concurrent with inoperability of redundant required feature(s).	

Op Test No.: N2014-301 Scenario # 5 Event # 5 Page 29 of 57

Event Description: **Fault on 480V Bus 18/SW Pump D fails to start**

Time	Pos.	Expected Actions/Behavior			Comments
			B.3.1 Determine OPERABLE DG is not inoperable due to common cause failure.	24 hours	
			OR		
			B.3.2 Perform SR 3.8.1.2 for OPERABLE DG.	24 hours	
			AND		
			B.4 Restore DG to OPERABLE status.	7 days	
TECHNICAL SPECIFICATION 3.8.9, DISTRIBUTION SYSTEMS – MODES 1, 2, 3 AND 4					
	CRS	LCO 3.8.9 Train A and Train B of the following electrical power distribution subsystems shall be OPERABLE:			
		• AC power.			
	CRS	APPLICABILITY: MODES 1, 2, 3, and **4**.			
	CRS	ACTIONS			
	CRS	CONDITION	REQUIRED ACTION	COMPLETION TIME	
		A. One AC electrical power distribution train inoperable	A.1 Restore AC electrical power distribution train to OPERABLE status.	8 hours	

Op Test No.: N2014-301 Scenario # 5 Event # 5 Page 30 of 57

Event Description: **Fault on 480V Bus 18/SW Pump D fails to start**

	Pos	Expected Response	
		TECHNICAL SPECIFICATION 3.7.8, SERVICE WATER (SW) SYSTEM	
	CRS	LCO 3.7.8 Four SW pumps and the SW loop header shall be OPERABLE.	
	CRS	APPLICABILITY: MODES 1, 2, 3, and 4.	
	CRS	CONDITION / REQUIRED ACTION / COMPLETION TIME	
		A. One SW pump inoperable / A.1Restore SW pump to OPERABLE status. / 14 days	
At the discretion of the Lead Examiner move to Event #6.			

Op Test No.:	N2014-301	Scenario #	5	Event #	6	Page 31	of 57
Event Description:	**PCV-135 fails CLOSED**						

During the recovery, Letdown Pressure Control Valve PCV-135 will fail closed causing the Letdown Line Relief valve to lift to the PRT. The operator will respond in accordance with AR-A-11, LETDOWN LINE HI PRESS 400 PSI, and take manual control of the valve.

SIM DRIVER Instructions: **Operate Trigger #4 (CVC07A (0%))**

Indications Available:

- PCV-135 Controller output goes to 100
- MCB Annunciator A-11, LETDOWN LINE HI PRESS 400 PSI
- Letdown flow drops to 0.

Time	Pos.	Expected Actions/Behavior	Comments
AR-A-11, LETDOWN LINE HI PRESS 400 PSI			
	HCO	(Step 1) Adjust PCV-135 controller to lower setting.	**NOTE:** The HCO will take manual control of PCV-135, and adjust Letdown Pressure to ≈250 psig.
	HCO	(Step 2) Transfer PCV-135 controller to manual if necessary.	
	HCO	(Step 3) Verify letdown flow (FI-134) is consistent with letdown orifice in service.	**NOTE:** The CRS may notify the WCC. **SIM DRIVER:** as **WCCS**, acknowledge.
			NOTE: The CRS will likely conduct a Plant Status Brief.
At the discretion of the Lead Examiner move to Events #7-9.			

Op Test No.:	N2014-301	Scenario #	5	Event #	7, 8 & 9	Page	32	of 57

Event Description: **B ARV fails CLOSED/B SG Safety Valve Lifts and fails OPEN/ Failure of Reactor to Trip in AUTO only/B Steam Generator Tube Rupture/1% Failed Fuel**

After this, the B ARV will inadvertently close, and one SG Safety valve will open and stick open. The reactor will fail to trip automatically, and the operator will need to manually trip the reactor and enter E-0, Reactor Trip or Safety Injection. On the trip approximately 1% failed fuel will occur. The operator will proceed through E-0, and then transition to E-2, Faulted Steam Generator Isolation. While in E-2 a large Steam Generator Tube Rupture will develop on the B Steam Generator, and the operator will transition to E-3, Steam Generator Tube Rupture. Because the B Steam Generator is both Ruptured and Faulted, the operator will transition to ECA-3.1, SGTR with Loss of Reactor Coolant, Subcooled Recovery Desired. Also, while in E-2, it is expected that high temperatures will occur on the RCPs due to low service water flow, requiring the crew to stop these pumps. Because of this the NC condition of the RCS will tend to lower loop Tcold temperatures causing an Orange/Red condition on RCS Integrity. If so, the operator may need to transition to FR-P.1, Response to Imminent Pressurized Thermal Shock Condition. The scenario will terminate at Step 15 of ECA-3.1, after the crew has monitored conditions for continuing with the Subcooled Recovery procedure, or upon transition to FR-P.1.

SIM DRIVER Instructions: Operate Trigger #5 (STM05B (0%) and STM09B (100%))

Indications Available:
- The B ARV closes.
- The B SG pressure rises and Safety Valve(s) lift.
- One SG Safety Valve in the B SG sticks open causing SG/RCS pressure to lower.

Time	Pos.	Expected Actions/Behavior	Comments
		E-0, REACTOR TRIP OR SAFETY INJECTION	
	HCO	(Step 1) Verify Reactor Trip:	**Immediate Action** **NOTE:** The Reactor will fail to trip in Auto and Manually.
		• At least one train of reactor trip breakers – OPEN	
		• Neutron flux - LOWERING	
		• MRPI indicates – ALL CONTROL AND SHUTDOWN RODS ON BOTTOM	
	HCO/ CO	(Step 1 RNO) Manually trip reactor.	**Immediate Action**

Op Test No.: N2014-301 Scenario # 5 Event # 7, 8 & 9 Page 33 of 57

Event Description: **B ARV fails CLOSED/B SG Safety Valve Lifts and fails OPEN/ Failure of Reactor to Trip in AUTO only/B Steam Generator Tube Rupture/1% Failed Fuel**

Time	Pos.	Expected Actions/Behavior	Comments
		IF reactor trip breakers NOT open, THEN perform the following:	
		• Open Bus 13 and Bus 15 normal feed breakers.	
		• Verify rod drive MG sets tripped.	
		• Close Bus 13 and Bus 15 normal feed breakers.	
		• Reset lighting breakers.	
		IF the reactor will NOT trip.....	**NOTE:** De-energizing Bus 13 and 15 causes the Rods to insert.

CRITICAL TASK

1. **Manually trip the reactor prior to transition to FR-S.1, "Response to Nuclear Generation/ATWS."**

Safety Significance: Failure to trip the reactor when required causes a challenge to the Subcriticality Critical Safety Function that otherwise would not exist. This mis-operation by the operator necessitates the crew taking compensating action which complicates the event mitigation strategy and demonstrates an inability by the operator to recognize a failure of the automatic actuation of the RPS.

	CO	(Step 2) Verify Turbine Stop Valves – CLOSED	**Immediate Action**
	CO	(Step 3) Verify Both Trains of AC Emergency Busses Energized to at Least 440 VOLTS:	**Immediate Action**
		• Bus 14 and Bus 18	**NOTE:** Bus 18 is de-energized.
		• Bus 16 and Bus 17	

Op Test No.: N2014-301 Scenario # 5 Event # 7, 8 & 9 Page 34 of 57

Event Description: **B ARV fails CLOSED/B SG Safety Valve Lifts and fails OPEN/ Failure of Reactor to Trip in AUTO only/B Steam Generator Tube Rupture/1% Failed Fuel**

Time	Pos.	Expected Actions/Behavior	Comments
	HCO	(Step 3 RNO) Attempt to start any failed emergency D/G to restore power to all AC emergency busses.	**Immediate Action** **NOTE:** The A D/G breaker has previously failed, and actions taken will be dependent upon how this was mitigated previously.
		IF Bus 14 AND Bus 16 are deenergized, THEN go to.....	**NOTE:** Busses 14 and 16 are both energized.
	HCO	(*Step 4) Check if SI is Actuated:	**Immediate Action** **NOTE:** SI may or may NOT have actuated at this point. If it has, continue with Step 5.
	HCO/ CO	• (Step 4a RNO) IF any of the following conditions are met, THEN manually actuate SI and CI:	
		• PRZR pressure less than 1750 psig	
		OR	
		• Steamline pressure less than 514 psig	
		OR	
		• CNMT pressure greater than 4 psig	
		OR	
		• SI sequencing started	
		OR	
		• Operator determines SI required	
		• IF SI is NOT required,.....	
	HCO/ CO	• (Step 4b) SI sequencing – BOTH TRAINS STARTED.	**NOTE:** The SG Safety Valve being stuck OPEN will eventually require that SI be actuated.

Op Test No.: N2014-301 Scenario # 5 Event # 7, 8 & 9 Page 35 of 57

Event Description: **B ARV fails CLOSED/B SG Safety Valve Lifts and fails OPEN/ Failure of Reactor to Trip in AUTO only/B Steam Generator Tube Rupture/1% Failed Fuel**

Time	Pos.	Expected Actions/Behavior	Comments
	HCO/ CO	(Step 4b RNO) Manually actuate SI and CI.	
	HCO/ CO	Foldout Page	**NOTE:** The crew will monitor these conditions throughout the performance of E-0.
		RCP TRIP CRITERIA	
		LOSS OF SW CRITERIA	
		AFW SUPPLY SWITCHOVER CRITERION	
		SFP COOLING CRITERIA	**NOTE:** The CRS may dispatch an AO to address the status of the SFPCS. If so, **SIM DRIVER** acknowledge as AO, and report in 5 Minutes that the SFPCS is operating normally.
	HCO	(*Step 5) Verify CNMT Spray Not Required:	
		• Annunciator A-27, CNMT SPRAY – EXTINGUISHED	
		• CNMT pressure – LESS THAN 28 PSIG	
	CRS	(Step 6) Direct Operator to Perform ATT-27.0, ATTACHMENT AUTOMATIC ACTION VERIFICATION	
			NOTE: The CRS will hand off ATT-27.0 to either the HCO or the CO, and continue with the other operator in E-0. **Examiner** following operator performing ATT-27.0 continue below. **Examiner** following operator NOT performing ATT-27.0 continue at **Page 38**.

Op Test No.: N2014-301 Scenario # 5 Event # 7, 8 & 9 Page 36 of 57

Event Description: **B ARV fails CLOSED/B SG Safety Valve Lifts and fails OPEN/ Failure of Reactor to Trip in AUTO only/B Steam Generator Tube Rupture/1% Failed Fuel**

Time	Pos.	Expected Actions/Behavior	Comments
E-0, REACTOR TRIP OR SAFETY INJECTION, ATTACHMENT 27.0, ATTACHMENT AUTOMATIC ACTION VERIFICATION			
	HCO/ CO	(Step 1) Verify SI and RHR Pumps Running:	
		• All SI pumps – RUNNING	
		• Both RHR pumps – RUNNING	
	HCO/ CO	(Step 2) Verify CNMT RECIRC Fans Running:	
		• All fans – RUNNING	
		• Charcoal filter dampers green status lights – EXTINGUISHED	
	HCO/ CO	(Step 3) Check If Main Steamlines Should Be Isolated:	
		• Any MSIV – OPEN	**NOTE:** B MSIV is CLOSED, Both MSIVs may be Closed.
		• Check CNMT pressure- LESS THAN 18 PSIG	
		• Ensure BOTH MSIVs closed and go to Step 4.	
	HCO/ CO	(Step 4) Verify MFW Isolation:	
		• MFW pumps – TRIPPED	
		• MFW Isolation valves – CLOSED	
		• S/G A, AOV-3995	
		• S/G B, AOV-3994	
		• S/G Blowdown and sample valves - CLOSED	

Op Test No.: N2014-301 Scenario # 5 Event # 7, 8 & 9 Page 37 of 57

Event Description: **B ARV fails CLOSED/B SG Safety Valve Lifts and fails OPEN/ Failure of Reactor to Trip in AUTO only/B Steam Generator Tube Rupture/1% Failed Fuel**

Time	Pos.	Expected Actions/Behavior	Comments
	HCO/ CO	(Step 5) Verify At Least Two SW Pumps - RUNNING	
	HCO/ CO	(Step 6) Verify CI and CVI:	
		• CI and CVI annunciators - LIT	
		• Annunciator A-26, CNMT ISOLATION	
		• Annunciator A-25, CNMT VENTILATION ISOLATION	
		• Verify CI and CVI valve status lights – BRIGHT	
		• CNMT RECIRC fan coolers SW outlet valve status lights - BRIGHT	
		• FCV-4561	
		• FCV-4562	
		• Letdown orifice valves - CLOSED	
		• AOV-200A	
		• AOV-200B	
		• AOV-202	
	HCO/ CO	(Step 7) Check CCW System Status:	
		• Verify CCW pump – AT LEAST ONE RUNNING	
	HCO/ CO	(Step 8) Verify SI and RHR Pump Flow:	
		• SI flow indicators – CHECK FOR FLOW	
		• RHR flow indicator – CHECK FOR FLOW	

Op Test No.: N2014-301 Scenario # 5 Event # 7, 8 & 9 Page 38 of 57

Event Description: **B ARV fails CLOSED/B SG Safety Valve Lifts and fails OPEN/ Failure of Reactor to Trip in AUTO only/B Steam Generator Tube Rupture/1% Failed Fuel**

Time	Pos.	Expected Actions/Behavior	Comments
		(Step 7b RNO) IF RCS pressure less than 150 psig…….	**NOTE:** RCS Pressure is > 150 psig.
	HCO/ CO	(Step 9) Verify SI Pump and RHR Pump Emergency Alignment:	
		• RHR pump discharge to Rx vessel deluge - OPEN	
		• MOV-852A	
		• MOV-852B	
		• Verify SI pump C – RUNNING	
		• Verify SI pump A - RUNNING	
		• Verify SI pump B - RUNNING	
		• Verify SI pump C discharge valves - OPEN	
		• MOV-871A	
		• MOV-871B	
	HCO/ CO	(Step 10) Verify CREATS Actuation:	
		• At least one damper in each flowpath - CLOSED	
		• Normal Supply Air	
		• Normal Return Air	
		• Lavatory Exhaust Air	
		• CREATS fans – BOTH RUNNING	
	HCO/ CO	(Step 11) Verify CI and CVI During a Fire Event	
		A confirmed fire has occurred in the control complex or cable tunnel (fire systems S05, S06, S08, Z05, Z18, or Z19).	
		Go to END	

Op Test No.: N2014-301 Scenario # 5 Event # 7, 8 & 9 Page 39 of 57

Event Description: **B ARV fails CLOSED/B SG Safety Valve Lifts and fails OPEN/ Failure of Reactor to Trip in AUTO only/B Steam Generator Tube Rupture/1% Failed Fuel**

Time	Pos.	Expected Actions/Behavior	Comments
E-0, REACTOR TRIP OR SAFETY INJECTION			
			Examiner following operator NOT performing ATT-27.0 continue **HERE**.
	HCO/ CO	(Step 7) Verify Both MDAFW Pumps Running	
	HCO/ CO	(Step 8) Verify AFW Valve Alignment:	
		• AFW flow – INDICATED TO BOTH S/G(s)	
		• AFW flow from each MDAFW pump – LESS THAN 230 GPM	
	CO	(*Step 9) Monitor Heat Sink:	**NOTE:** The A SG is likely > 7%, and the crew will stop AFW flow.
		• Check S/G narrow range level – GREATER THAN 7% [25% ADVERSE CNMT] in any S/G	
		• Check S/G narrow range level BOTH S/G LESS THAN 50%	
		• Control feed flow to maintain S/G narrow range level between 7% [25% adverse CNMT] and 50%.	
	CO/ HCO	(Step 10) Check If TDAFW Pump Can Be Stopped:	
		• Both MDAFW pumps – RUNNING	
		• PULL STOP TDAFW pump steam supply valves	
		• MOV-3504A	
		• MOV-3505A	

Op Test No.: N2014-301 Scenario # 5 Event # 7, 8 & 9 Page 40 of 57

Event Description: **B ARV fails CLOSED/B SG Safety Valve Lifts and fails OPEN/ Failure of Reactor to Trip in AUTO only/B Steam Generator Tube Rupture/1% Failed Fuel**

Time	Pos.	Expected Actions/Behavior	Comments
	HCO	(Step 11) Check CCW Flow to RCP Thermal Barriers:	
		• Annunciator A-7, RCP 1A CCW RETURN HI TEMP OR LO FLOW EXTINGUISHED	
		• Annunciator A-15, RCP 1B CCW RETURN HI TEMP OR LOW FLOW - EXTINGUISHED	
	HCO	(*Step 12) Monitor RCS Tavg – STABLE AT OR TRENDING TO 547°F	**NOTE:** A cooldown is in progress through the SG Safety Valve.
	HCO	(Step 12 RNO) If temperature less than 547°F and lowering, THEN perform the following:	
		• Stop dumping steam.	
		• Ensure reheater steam supply valves are closed.	
		• IF cooldown continues, THEN control total feed flow between 200 gpm to 230 gpm until narrow range level greater than 7% [25% adverse CNMT] in at least one S/G.	
		• WHEN S/G level greater than 7% [25% adverse CNMT] in one S/G, THEN limit feed flow to that required to maintain level in at least one S/G.	
		• IF cooldown continues, THEN close both MSIVs.	
	HCO	(Step 13) Check PRZR PORVs and Spray Valves:	
		• PORVs – CLOSED	
		• Auxiliary Spray Valve (AOV-296) – CLOSED	

Op Test No.: N2014-301 Scenario # 5 Event # 7, 8 & 9 Page 41 of 57

Event Description: **B ARV fails CLOSED/B SG Safety Valve Lifts and fails OPEN/ Failure of Reactor to Trip in AUTO only/B Steam Generator Tube Rupture/1% Failed Fuel**

Time	Pos.	Expected Actions/Behavior	Comments
		• Check PRZR pressure – LESS THAN 2260 PSIG	
		• Normal PRZR spray valves - CLOSED	
		• PCV-431A	
		• PCV-431B	
	HCO	(Step 14) Monitor RCP Trip Criteria:	
		• RCP status – ANY RCP RUNNING	
		• SI pumps - AT LEAST TWO RUNNING	
		• RCS pressure minus maximum S/G pressure - LESS THAN 210 psi [240 psi adverse CNMT]	
	CRS	(Step 14c RNO) Go to Step 15.	
	CO	(Step 15) Check If S/G Secondary Side Is Intact: • Pressure in both S/Gs- STABLE OR RISING • Pressure in both S/Gs- GREATER THAN 110 PSIG	**NOTE:** The B SG is depressurizing in an uncontrolled manner.
	CRS	(Step 15 RNO) IF any S/G pressure lowering in an uncontrolled manner OR completely depressurized, THEN go to E-2, FAULTED STEAM GENERATOR ISOLATION, Step 1.	
			NOTE: The CRS will go to E-2.
			NOTE: The CRS will likely conduct an Alignment Brief.

SIM DRIVER Instructions: Operate Trigger #6 (SGN04B (60%)/RCS16 (1%))

Op Test No.: N2014-301 Scenario # 5 Event # 7, 8 & 9 Page 42 of 57

Event Description: **B ARV fails CLOSED/B SG Safety Valve Lifts and fails OPEN/ Failure of Reactor to Trip in AUTO only/B Steam Generator Tube Rupture/1% Failed Fuel**

Time	Pos.	Expected Actions/Behavior	Comments
Indications Available: • The B SG wide range level starts to rise. • The RCS pressure starts to lower. • R-32 alarms			
		E-2, FAULTED STEAM GENERATOR ISOLATION	
	HCO/ CO	Foldout Page	**NOTE:** The crew will monitor these conditions throughout the performance of E-2.
		LOSS OF SW CRITERIA	
	CO	(Step 1) Check MSIV of Faulted S/G(s) - CLOSED	**NOTE:** BOTH MSIVs are CLOSED.
	CO	(Step 2) Check If Any S/G Secondary Side Is Intact:	
		• Check pressure in S/G A- STABLE OR RISING	**NOTE:** The A SG is intact.
		OR	
		• Check pressure in S/G B – STABLE OR RISING	
	CO	(Step 3) Check Faulted S/G Status:	**NOTE:** The B SG is depressurized.
		• Faulted S/G pressure – LOWERING IN AN UNCONTROLLED MANNER	
		OR	
		• Faulted S/G – COMPLETELY DEPRESSURIZED	
	CO	(Step 4) Isolate Feed Flow to Faulted S/G:	
		• Close or verify closed the following valves:	

Op Test No.:	N2014-301	Scenario #	5	Event #	7, 8 & 9	Page	43 of 57

Event Description: **B ARV fails CLOSED/B SG Safety Valve Lifts and fails OPEN/ Failure of Reactor to Trip in AUTO only/B Steam Generator Tube Rupture/1% Failed Fuel**

Time	Pos.	Expected Actions/Behavior	Comments
		• Faulted S/G MDAFW pump discharge valve	
		• S/G B, MOV-4008	
		• Faulted S/G MFW regulating valve and bypass valve - CLOSED	
		• S/G B, HCV-476 and HCV-481	
		• MFW isolation valves - CLOSED	
		• S/G B, AOV-3994	
		• MDAFW pump crosstie valves – BOTH CLOSED	
		• MOV-4000A	
		• MOV-4000B	
	CO	• Faulted S/G SAFW pump discharge valve	
		• S/G B, MOV-9704B	
		• Pull stop faulted S/G MDAFW pump	
		• Close faulted S/G TDAFW flow control valve	
		• S/G B, AOV-4298	
			NOTE: If Feed flow has NOT been isolated previously, it will be isolated here.

CRITICAL TASK:

5. Isolate the Faulted Steam Generator before transitioning out of E-2.

Safety Significance: Failure to isolate a Faulted SG that can be isolated causes challenges to the Critical Safety Functions that would not otherwise occur. Failure to isolate flow could result in an unwarranted Orange or Red Path condition on RCS Integrity, Subcriticality (if cooldown is allowed to continue uncontrollably).

	CO	(Step 5) Isolate Steam Flow From Faulted S/G:	
		• Verify faulted S/G ARV – CLOSED	

Op Test No.: N2014-301 Scenario # 5 Event # 7, 8 & 9 Page 44 of 57

Event Description: **B ARV fails CLOSED/B SG Safety Valve Lifts and fails OPEN/ Failure of Reactor to Trip in AUTO only/B Steam Generator Tube Rupture/1% Failed Fuel**

Time	Pos.	Expected Actions/Behavior	Comments
		• S/G B, AOV-3410	
		• Close faulted S/G TDAFW pump steam supply valve and place in PULL STOP	
		• S/G B, MOV-3504A	
		• Verify faulted S/G blowdown and sample valves – CLOSED	
		• S/G B, AOV-5737 and AOV-5736	
		• Dispatch AO to complete faulted S/G isolation (Refer to ATT-10.0, ATTACHMENT FAULTED S/G)	**NOTE:** The CRS will dispatch an AO. **SIM DRIVER:** as **AO**, acknowledge and After 3 Minutes report that the Attachment is complete.
	CO	(*Step 6) Monitor Intact S/G Levels:	
		• Narrow range level – GREATER THAN 7% [25% adverse CNMT]	**NOTE:** The B SG has a SGTR.
		• Control feed flow to maintain narrow range level between 17% [25% adverse CNMT] and 50%	
	HCO	(Step 7) Check Secondary Radiation Levels - NORMAL	
		• Steamline radiation monitor (R-31 and R-32)	**NOTE:** R-32 will be in alarm.
		• Air ejector radiation monitor (R-15)	
		• S/G blowdown radiation monitor (R-19)	
		• Request Chem Tech sample S/Gs for activity	**NOTE:** The CRS will request that Chemistry sample. **SIM DRIVER:** as **chemistry**, acknowledge.
	CO	(Step 7 RNO) IF steamline radiation monitors NOT available, **THEN** dispatch AO to locally check steamline radiation.	

Op Test No.: N2014-301 Scenario # 5 Event # 7, 8 & 9 Page 45 of 57

Event Description: **B ARV fails CLOSED/B SG Safety Valve Lifts and fails OPEN/ Failure of Reactor to Trip in AUTO only/B Steam Generator Tube Rupture/1% Failed Fuel**

Time	Pos.	Expected Actions/Behavior	
	CO	IF abnormal radiation levels detected in any S/G, **THEN** go to E-3, STEAM GENERATOR TUBE RUPTURE, Step 1.	
			NOTE: It is expected that A-7/A-15 will alarm because of limited SW flow to CCW. If so, the RCPs will need to be stopped due to hi temperatures.
			NOTE: The CRS will go to E-3.
E-3, STEAM GENERATOR TUBE RUPTURE			
	HCO/ CO	Foldout Page	**NOTE:** The crew will monitor these conditions throughout the performance of E-3.
		LOSS OF SW CRITERIA	
		SI REINITIATION CRITERIA	
		SECONDARY INTEGRITY CRITERIA	
		COLD LEG RECIRCULATION SWITCHOVER CRITERIA	
		AFW SUPPLY SWITCHOVER CRITERION	
		MULTIPLE S/G TUBE RUPTURE CRITERIA	
	CRS	(Step 1) Dispatch an AO to standby at door 44 in the Turbine Building.	**NOTE:** The CRS may direct the AO to standby at door 44 in the Turbine Building. If so, **SIM DRIVER** acknowledge as AO.
	HCO	(*Step 2) Monitor RCP Trip Criteria:	

Op Test No.:	N2014-301	Scenario #	5	Event #	7, 8 & 9	Page	43 of 57

Event Description: **B ARV fails CLOSED/B SG Safety Valve Lifts and fails OPEN/ Failure of Reactor to Trip in AUTO only/B Steam Generator Tube Rupture/1% Failed Fuel**

Time	Pos.	Applicant's Actions or Behavior	
		• RCP status –ANY RCP RUNNING	**NOTE:** It is likely that both RCPs are OFF due to high temperatures (Low SW flow).
		• SI pumps –AT LEAST TWO RUNNING	
		• RCS pressure minus maximum S/G pressure – LESS THAN 210 psi [240 psi adverse CNMT]	**NOTE:** Trip criteria is NOT met.
		(Step 1c RNO) Go to step 3	
	CO	(Step 3) Identify Ruptured S/G(s):	
		• Unexpected rise in either S/G narrow range level	**NOTE:** The CO may report that there is an unexpected increase in B SG Level.
		OR	
		• High radiation indication on main steamline radiation monitor	
		• R-31 for S/G A	
		• R-32 for S/G B	
		OR	
		• RP reports high radiation from S/G activity sample.	**NOTE:** The CRS will request that RP assist the Chemistry sample. **SIM DRIVER:** as **RP**, acknowledge, and report that the B SG has high radioactivity.
	CO	(Step 4) Isolate Flow From Ruptured S/G(s):	**NOTE:** B is ruptured
		• Adjust ruptured S/G ARV controller to 1050 psig in AUTO	
		• Check ruptured S/G ARV - CLOSED	
		• Close ruptured S/G TDAFW pump steam supply valve and place in PULL STOP	
		• S/G A, MOV-3505A	

Op Test No.: N2014-301 Scenario # 5 Event # 7, 8 & 9 Page 47 of 57

Event Description: **B ARV fails CLOSED/B SG Safety Valve Lifts and fails OPEN/ Failure of Reactor to Trip in AUTO only/B Steam Generator Tube Rupture/1% Failed Fuel**

Time	Pos.	Expected Action/Behavior	
		• S.G B, MOV-3504A	
		• Verify ruptured S/G blowdown valve - CLOSED	
		• S/G B, AOV-5737	
	CO	(Step 5) Complete Ruptured S/G Isolation:	
		• Close ruptured S/G MSIV –RUPTURED S/G MSIV CLOSED	
		• Dispatch AO to complete ruptured S/G isolation (Refer to ATT-16.0, ATTACHMENT RUPTURED S/G part A)	**NOTE:** The CRS will dispatch an AO. **SIM DRIVER:** as **AO**, acknowledge, and perform all remotes associated with ATT-16.0 (Schedule File **ATT16SGBpartA.sch**).
	CO	(Step 6) Check Ruptured S/G Level:	
		• Narrow range level – GREATER THAN 7% [25% adverse CNMT]	
	CO	(Step 6a RNO) IF ruptured S/G NOT faulted, THEN.....	**NOTE:** The CRS will determine that the Ruptured SG is Faulted, and continue.
		• Close MDAFW pump discharge valve to ruptured S/G	
		• S/G B, MOV-4008	
		• Pull stop MDAFW pump for ruptured S/G	
		• Close TDAFW pump flow control valve to ruptured S/G	
		• S/G B, AOV-4298	
		• Verify MDAFW pump crosstie valves - CLOSED	
		• MOV-4000A	
		• MOV-4000B	

Op Test No.: N2014-301 Scenario # 5 Event # 7, 8 & 9 Page 48 of 57

Event Description: **B ARV fails CLOSED/B SG Safety Valve Lifts and fails OPEN/ Failure of Reactor to Trip in AUTO only/B Steam Generator Tube Rupture/1% Failed Fuel**

	Pos.	Expected Behavior	Comments
	CO	(Step 7) Verify Ruptured S/G Isolated:	
		• Check ruptured MSIV - CLOSED	
		• Check TDAFW pump steam supply from ruptured S/G - ISOLATED	
		• Ruptured S/G pressure – GREATER THAN 500 PSIG	**NOTE:** The B SG is less than 500 psig.
	CRS	(Step 7 RNO) Go to ECA-3.1, SGTR WITH LOSS OF REACTOR COOLANT – SUBCOOLED RECOVERY DESIRED, Step 1.	
			NOTE: The CRS will go to ECA-3.1.
ECA-3.1, SGTR WITH LOSS OF REACTOR COOLANT SUBCOOLED RECOVERY DESIRED			
			Examiner NOTE: It is expected that at some time during the performance of ECA-3.1, an Orange/Red Path may exist on RCS Integrity. If so, Terminate Exam at the discretion of the Lead Examiner.
	HCO/ CO	Foldout Page	**NOTE:** The crew will monitor these conditions throughout the performance of ECA-3.1.
		LOSS OF SW CRITERIA	
		SI REINITIATION CRITERIA	
		SATURATED RECOVERY CRITERIA	
		SECONDARY INTEGRITY CRITERIA	
		COLD LEG RECIRCULATION SWITCHOVER CRITERIA	
		AFW SUPPLY SWITCHOVER CRITERION	

Op Test No.: N2014-301 Scenario # 5 Event # 7, 8 & 9 Page 49 of 57

Event Description: **B ARV fails CLOSED/B SG Safety Valve Lifts and fails OPEN/ Failure of Reactor to Trip in AUTO only/B Steam Generator Tube Rupture/1% Failed Fuel**

Time	Pos.	Expected Actions/Behavior	Comments
	HCO	(Step 1) Reset SI	
	HCO	(Step 2) Reset CI:	
		• Depress CI reset pushbutton	
		• Verify annunciator A-26, CNMT ISOLATION – EXTINGUISHED	
	CO	(Step 3) Verify Adequate SW Flow:	
		• Check at least two SW pumps – RUNNING	
	CO	(Step 3.a RNO) Manually start SW pumps as power supply permits (257 kw each).	
		• IF less than two SW pumps running, THEN perform the following:	**NOTE:** Only one SW Pump is running.
		• Ensure SW isolation.	
	CRS	• Refer to AP-SW.2, LOSS OF SERVICE WATER.	**NOTE:** The CRS may refer to AP-SW.2, however, no additional SW Pumps can be started.
		• Dispatch AO to establish normal shutdown alignment (Refer to ATT-17.0, ATTACHMENT SD-1)	**NOTE:** This task is already in progress.
	HCO/ CO	(Step 4) Establish IA to CNMT:	
		• Verify non-safeguards busses energized from offsite power	
		• Bus 13 normal feed – CLOSED	
		OR	
		• Bus 15 normal feed - CLOSED	

Op Test No.: N2014-301	Scenario # 5	Event # 7, 8 & 9	Page 50 of 57
Event Description:	**B ARV fails CLOSED/B SG Safety Valve Lifts and fails OPEN/ Failure of Reactor to Trip in AUTO only/B Steam Generator Tube Rupture/1% Failed Fuel**		

Time	Pos.	Expected Operator Actions/Behavior	Comments
		• Verify SW isolation valves to turbine building - OPEN	**NOTE:** These valves are closed.
		• MOV-4613 and MOV-4670	
		• MOV-4614 and MOV-43664	
	CO	(Step 4.b RNO) Perform the following:	
		Restore IA using Service Air Restore IA using Service Air	**NOTE:** The CRS will start the Diesel SA Compressor.
		• Verify adequate air compressor(s) – RUNNING	
		• Check IA supply:	
		• Pressure – GREATER THAN 60 PSIG	
		• Pressure – STABLE OR RISING	
		• Reset both trains of XY relays for IA to CNMT AOV-5392	
		• Verify IA to CNMT AOV-5392 - OPEN	
	CO	(Step 5) Monitor AC Bus Power:	
		• Verify Safeguards Busses 14, 16, 17, and 18 – GREATER THAN 440 VOLTS	**NOTE:** Bus 18 is de-energized.
	CRS	(Step 5a RNO) Perform the following:	
		• Restore bus voltage (Refer to AP-ELEC.2, SAFEGUARD BUSSES LOW VOLTAGE OR SYSTEM LOW FREQUENCY)	
		• Continue with Step 6. WHEN bus voltage restored, THEN do Step 5b.	
		• Verify All AC Busses – BUSSES ENERGIZED BY OFFSITE POWER	

Op Test No.: N2014-301 Scenario # 5 Event # 7, 8 & 9 Page 51 of 57

Event Description: **B ARV fails CLOSED/B SG Safety Valve Lifts and fails OPEN/ Failure of Reactor to Trip in AUTO only/B Steam Generator Tube Rupture/1% Failed Fuel**

Time	Pos.	Expected Actions/Behavior	Comments
		• Normal feed breakers to all 480 volt busses – CLOSED	
		• Emergency D/G output breakers - OPEN	
	HCO	(Step 6) Deenergize PRZR Heaters	
		• Place PRZR proportional heaters in PULL STOP	
		• Place PRZR backup heaters to OFF	
		• Consult TSC for a recommended minimum indicated PRZR level that will ensure heaters are covered.	**NOTE:** The CRS will contact the TSC. **SIM DRIVER:** as **TSC**, acknowledge, indicate that TSC is NOT manned, and will call when active.
	HCO	(Step 7) Monitor If CNMT Spray Should Be Stopped:	
		• CNMT spray pumps – ANY RUNNING	**NOTE:** The CS Pumps are NOT running.
	CRS	• (Step 7a RNO) Go to Step 8.	
	CO	(Step 8) Check Ruptured S/G Level:	
		• Narrow range level – GREATER THAN 7% [25% adverse CNMT]	
		• Close MDAFW pump discharge valve to ruptured S/G	
		• S/G A, MOV-4007	
		• S/G B, MOV-4008	
		• Pull stop MDAFW pump for ruptured S/G	
		• Close TDAFW pump flow control valve to ruptured S/G	
		• S/G A, AOV-4297	

Op Test No.: N2014-301 Scenario # 5 Event # 7, 8 & 9 Page 52 of 57

Event Description: **B ARV fails CLOSED/B SG Safety Valve Lifts and fails OPEN/ Failure of Reactor to Trip in AUTO only/B Steam Generator Tube Rupture/1% Failed Fuel**

Time	Pos.	Expected Actions/Behavior	
		• S/G B, AOV-4298	
		• Verify MDAFW pump crosstie valves - CLOSED	
		• MOV-4000A	
		• MOV-4000B	
	HCO	(*Step 9) Monitor If RHR Pumps Should Be Stopped:	
		• RHR pumps – ANY RUNNING IN INJECTION MODE	**NOTE:** The RHR Pumps are BOTH running.
		• Check RCS pressure:	
		• Pressure - GREATER THAN 300 psig [350 psig adverse CNMT]	
		• Pressure - STABLE OR RISING	
		• Stop RHR pumps and place in AUTO	
	CRS	(Step 10) Evaluate Plant Status:	
	HCO	• Check auxiliary building radiation - NORMAL	
		• Plant vent iodine (R-10B)	
		• Plant vent particulate (R-13)	
		• Plant vent gas (R-14)	
		• CCW liquid monitor (R-17)	
		• Letdown line monitor (R-9)	
		• CHC pump room (R-4)	
	CRS	• Direct Chem Tech to obtain following samples:	**NOTE:** The CRS may contact Chemistry. **SIM DRIVER:** as **Chemistry**, acknowledge.
		• RCS boron	
		• RCS activity	
		• CNMT hydrogen	

Op Test No.: N2014-301 Scenario # 5 Event # 7, 8 & 9 Page 53 of 57

Event Description: **B ARV fails CLOSED/B SG Safety Valve Lifts and fails OPEN/ Failure of Reactor to Trip in AUTO only/B Steam Generator Tube Rupture/1% Failed Fuel**

Time	Pos.	Expected Action/Response	Comments
		• CNMT sump boron	
		• CNMT sump pH	
	HCO	• Verify adequate Rx head cooling:	
		• Verify at least one control rod shroud fan – RUNNING	
		• Verify one Rx compartment cooling fan - RUNNING	
	HCO	(Step 10.c.2 RNO) Perform the following:	
		• Dispatch AO to locally reset UV relays at MCC C and MCC D.	**NOTE:** The CRS will dispatch an AO. **SIM DRIVER:** as **AO**, acknowledge, and use EDS033 and 034 = RESET.
		• Manually start one fan as power supply permits (23 kw)	**NOTE:** The HCO starts one Rx Compartment Cooling Fan.
	HCO/ CO	(Step 11) Check Power Availability to Charging Pumps:	
		• Check Normal Power Available To Charging Pumps:	
		• Bus 14 normal feed breaker - CLOSED	
		• Bus 16 normal feed breaker - CLOSED	
		• Verify adequate Safeguard Bus capacity to run charging pumps (6 amps each)	
		• Station Service transformer 14 ammeter	
		• Station Service transformer 16 ammeter	
	HCO	(Step 12) Establish 75 GPM Charging Flow:	
		• Charging pumps – ANY RUNNING	
		• Align charging pump suction to RWST:	

Op Test No.: N2014-301 Scenario # 5 Event # 7, 8 & 9 Page 54 of 57

Event Description: **B ARV fails CLOSED/B SG Safety Valve Lifts and fails OPEN/ Failure of Reactor to Trip in AUTO only/B Steam Generator Tube Rupture/1% Failed Fuel**

Time	Pos.	Expected Actions/Behavior	Comments
		• LCV-112B – OPEN	
		• LCV-112C CLOSED	
		• Start charging pumps as necessary and establish 75 gpm total charging flow	
		• Charging line flow	
		• Seal injection	
	CO	(Step 13) Check If S/G Secondary Side Is Intact:	**NOTE:** The A SG is intact.
		• Pressure in both S/Gs – STABLE OR RISING	
		• Pressure in both S/Gs – GREATER THAN 110 PSIG	
	CO	(*Step 14) Monitor Intact S/G levels:	
		• Narrow range level – GREATER THAN 7% [25% adverse CNMT]	
		• Control feed flow to maintain narrow range level between 17% [25% adverse CNMT] and 50%	
	CO	(Step 15) Initiate RCS Cooldown To Cold Shutdown:	
		• Establish and maintain cooldown rate in RCS cold legs – LESS THAN 100°F/HR	
		• Use RHR system if in service	
		• Dump steam to condenser from intact S/G	
	CO	(*Step 16) Monitor Conditions For Subcooled Recovery:	
		• Check RWST level – GREATER THAN 56%	

Op Test No.: N2014-301 Scenario # 5 Event # 7, 8 & 9 Page 55 of 57

Event Description: **B ARV fails CLOSED/B SG Safety Valve Lifts and fails OPEN/ Failure of Reactor to Trip in AUTO only/B Steam Generator Tube Rupture/1% Failed Fuel**

Time	Pos.	Expected Actions/Behavior	Comments
		• Check ruptured S/G narrow level – LESS THAN 90% [80% adverse CNMT]	**NOTE:** If SG Level < 90%, continue in ECA-3.1.
		• (Step 15b RNO) Consult TSC to determine if recovery should be completed using ECA-3.2, SGTR WITH LOSS OF REACTOR COOLANT – SATURATED RECOVERY DESIRED.	

Terminate the Exam at the discretion of the Lead Examiner

SRO Examiner Perform Admin JPM A4e on CRS

TURNOVER SHEET for NRC Exam Scenario #5

Core Age: BOL 0%, Equilibrium Xe Outside Air Temp = 51°F Water Temp = 50°F	Procedure in Use: O-1.2	ACTIONS/NOTES: • The plant is at 1 x 10-8 amps (BOL). • The plant ran at 100% power for 12 days, and then tripped four days ago due to an A MFW Pump failure. • The repairs have been made and the plant is ready to be started back up. • The crew is directed to pull rods to the point of adding heat (POAH), and stabilize power between 0.5 and 1%; and start the A MFW Pump in accordance with O-1.2, Plant Startup From Hot Shutdown to Full Power Load, Step 6.3.4. • The crew is directed to test the MFW Lube Oil Pumps in accordance with O-1.2, Plant Startup From Hot Shutdown to Full Power Load, Step 6.3.9. • The area has experienced thunderstorms over the last 6 hours, and this is expected to continue for the next 6 hours. • The B Condensate Pump is OOS for Bearing Replacement. • The alarms on the MCB have been evaluated and are expected for the current plant conditions. • Protected equipment IAW OPG Protected Equipment.
Boron: 2094 ppm BAST: 17,400 ppm RCS Activity: Normal	RCS LEAKAGE: (gpm) Total: .021 Identified: .003 Unidentified: .018	
Equipment Problems/OOS: See NOTES	*Planned Activities for Shift:* • Plant Startup	Electrical System Operator Declarations None in effect

	BAST (gal)	RWST (gal)	1st hour dilution stabilization (gal RMW)	2nd hour dilution stabilization (gal RMW)
10% at 1% per minute	52	545	77	51
10% at 10% per hour	48	503	77	52
50% at 1% per minute	229	2482	558	314
50% at 10% per hour	173	1860	296	98

TURNOVER SHEET for NRC Exam Scenario #5

A-52.4					
EQUIPMENT	**DATE/TIME OOS**	**LCO**	**TITLE**	**EXP DATE**	**ECD**
A-52.12					
EQUIPMENT	**DATE/TIME OOS**	**TRM /ODCM**	**TITLE**	**EXP DATE**	**ECD**