NOTES:

1. FOR GENERAL NOTES SEE DWG. INDEX E-52B.
2. FOR CONTROL SW. DETAILS SEE DWG. E-30B, SHEET 7, FIG. 7.
3. FOR VALVE LIMIT SW DEVELOPMENT SEE DWG. E-52B, SHEET 21B AND NOTES 5 & 11 THIS SHEET. 12
4. FOR DETAILS OF LOCAL PUSHBUTTONS & IND. LIGHTS SEE DWG.E-30B, SHEET 7 TYPES 3, 4, & 6 WITH AMBER LIGHT RESS CAT NO 503976.
5. 100% OPEN = VALVE PHYSICALLY FULLY OPEN. ALL POSITIONS BASED FROM THERE. FIELD ADJUST ROTOR 3 WITH SW CONTACTS 9 THRU 12 TO ACTUATE WHEN VALVE CS1530 REACHES 53-1/2% OPEN & VALVE CS1531 REACHES 54-1/8% OPEN, ROTOR 4 WITH CONTACTS 13 THRU 16 WHEN VALVE CS1530 REACHES 55-1/2% OPEN & VALVE CS1531 REACHES 56-1/8% OPEN, AND ROTOR 1 WITH CONTACTS 1 THRU 4 WHEN VALVE CS1530 REACHES 60-1/4% ±1-1/8% OPEN & VALVE CS1531 REACHES 66-1/4% ±2-3/4% OPEN; SEE DWG. E-52B, SH.21B.
6. AGASTAT TYPE 7022AC SET TO DROP OUT AT 5 SEC. IN CABINET CDF11B IS ORIGINAL. ANY FUTURE REPLACEMENT IS TO BE MODEL E-7022AC, REF. NRC INFO. NOTICE 87-66. AGASTAT TYPE E-7022AC SET TO DROP OUT AT 5 SEC. IN CABINET CDE11C.
7. FOR VENDOR DWG. REFER TO E-17B, SEE VENDOR DWG. FOR SFAS INTERNAL WIRING. 12
8. FOR LIMIT SWITCHES SEE DWG. E-52B, SHEET 19C.
9. FOR IL SEE DWG. E-30B, SH. 6A, FIG. 3
10. OVERLOAD HEATER REPLACED BY SHORTING BARS.
11. FIELD TO ADJUST ROTOR #2 WITH SWITCH CONTACTS 5 THRU 8 TO ACTUATE WHEN VALVE REACHES p= 20% OPEN (+5%, -0%).

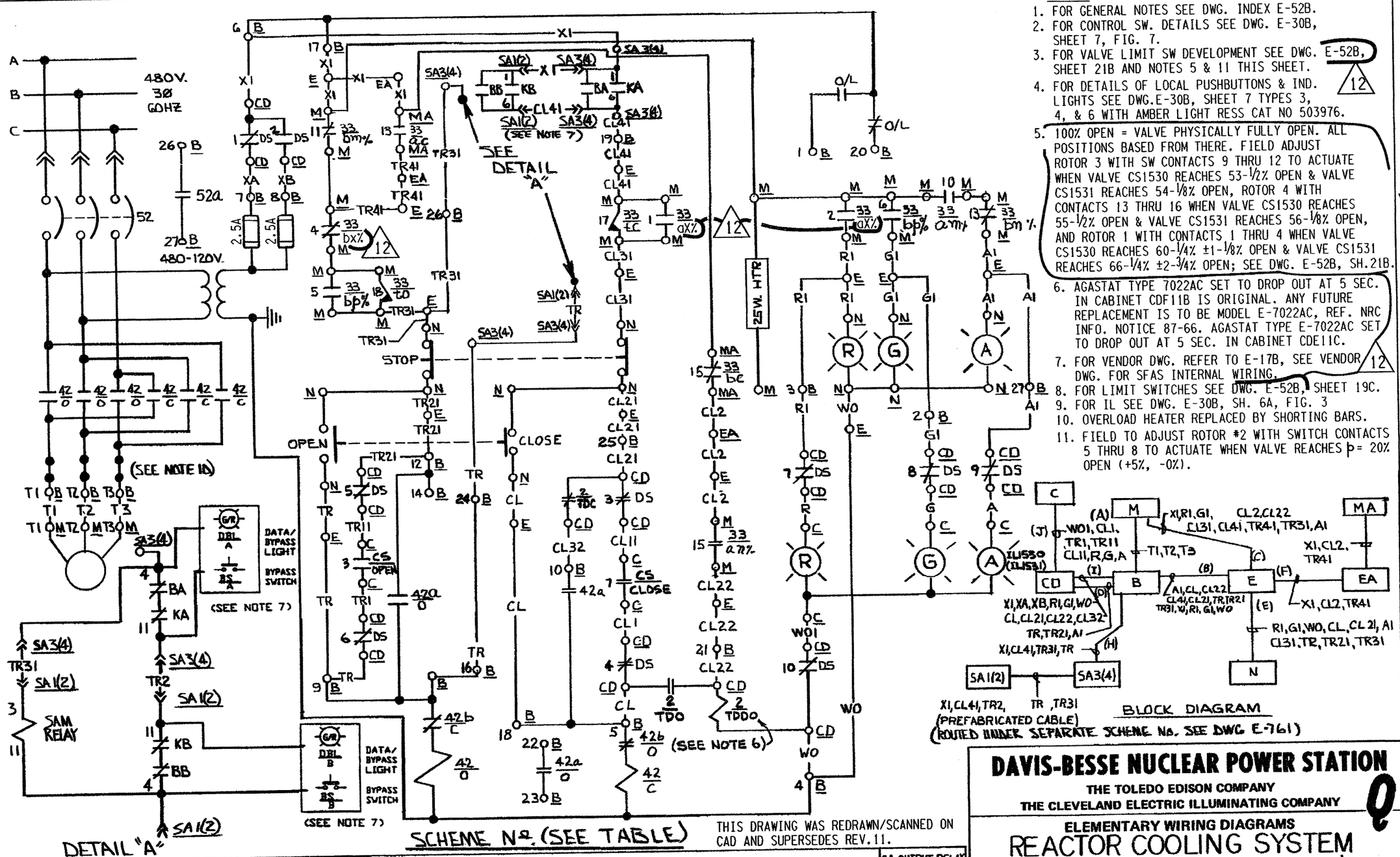

DETAIL "A"

SCHEME Nº (SEE TABLE)

THIS DRAWING WAS REDRAWN/SCANNED ON CAD AND SUPERSEDES REV.11.

SCHEME NO.	MCC	START UP SYS NO.	CHANNEL	WIRE PREFIX	CONT. SW. CS	EQUIPMENT NO:S C	CD	B	E	EA	M	MA	N		SA1	SA2	SA3	SA4	SA OUTPUT RELAY KA	KB
BE1156	E11C	G1	1	SHA	HIS1530	C5716	CDE11C	BE1156	EVI5300	EVDH09B	MVI5300	MVDH09B	NVI5300		C5762D	—	C5763C	—	K25 A	K25 A
BF1147	F11B	G1	2	SHB	HIS1531	C5716	CDF11B	BF1147	EVI5310	EVDH09A	MVI5310	MVDH09A (NOTE 8)	NVI5310		—	C5755D	—	C5756C	K25 A	K25 A

REV	DESCRIPTION	DATE	DR	CHK	SUPV	CHIEF	PROJ	OWNER	OWNER
11	INC DCN E-52B-645 & 681 PER MOD 90-0006L SUPD	3/4/92	CAP	EMS	SKS				
12	INC. DCN'S 03-0359-001-001 & 03-0359-002-001 BOTH REV.01 & GEN. UPDATE ADD "DWG. E-52B" TO NOTES 3, 5, & 8 FOR CLARITY. (REDRAWN)	3/4/14	SAC	SJC	RJC				
0	ISSUED FOR CONSTRUCTION								

G-231-D

DAVIS-BESSE NUCLEAR POWER STATION

THE TOLEDO EDISON COMPANY
THE CLEVELAND ELECTRIC ILLUMINATING COMPANY

ELEMENTARY WIRING DIAGRAMS

REACTOR COOLING SYSTEM CS PMP'S 1 & 2 OUT VLV'S

BECHTEL COMPANY	JOB NO	DRAWING NO.	REV.
	7749	E-52B-SH21A	12

DB 02-08-14

DFN=F/SCHEME/E52BSH21A.DGN/TIF