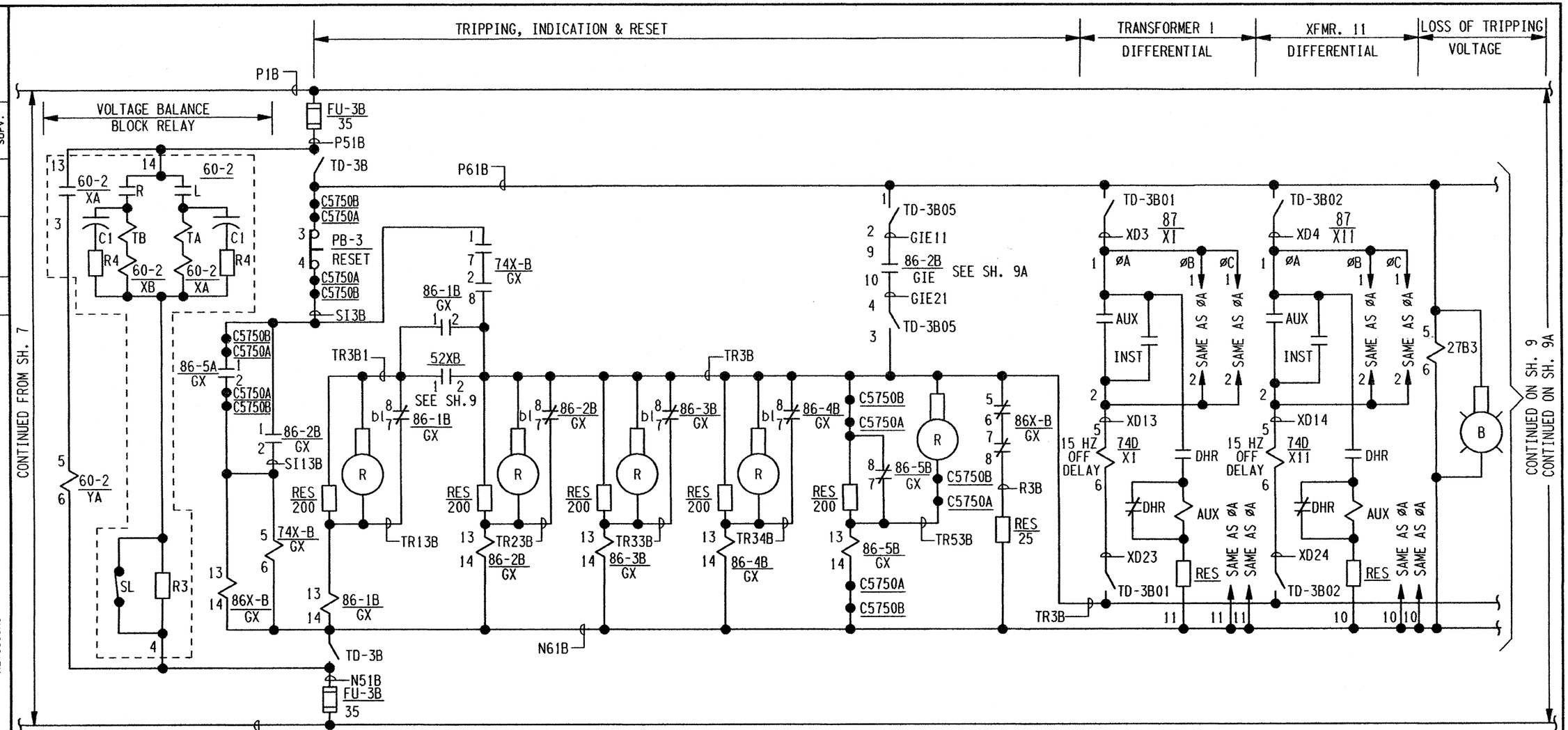

SCHEME NO. GX02-CHANNEL B
START-UP SYS. NO. 087/098

NOTES:
1. FOR GENERAL NOTES & LOCATION DESIGNATIONS SEE DRAWING INDEX E-31B.
2. SEE SH.12 & SH.15 FOR RELAY CONTACT ASSIGNMENTS.
3. *4 NOT USED - SEE GE INSTRUCTIONS GEI 10190G.

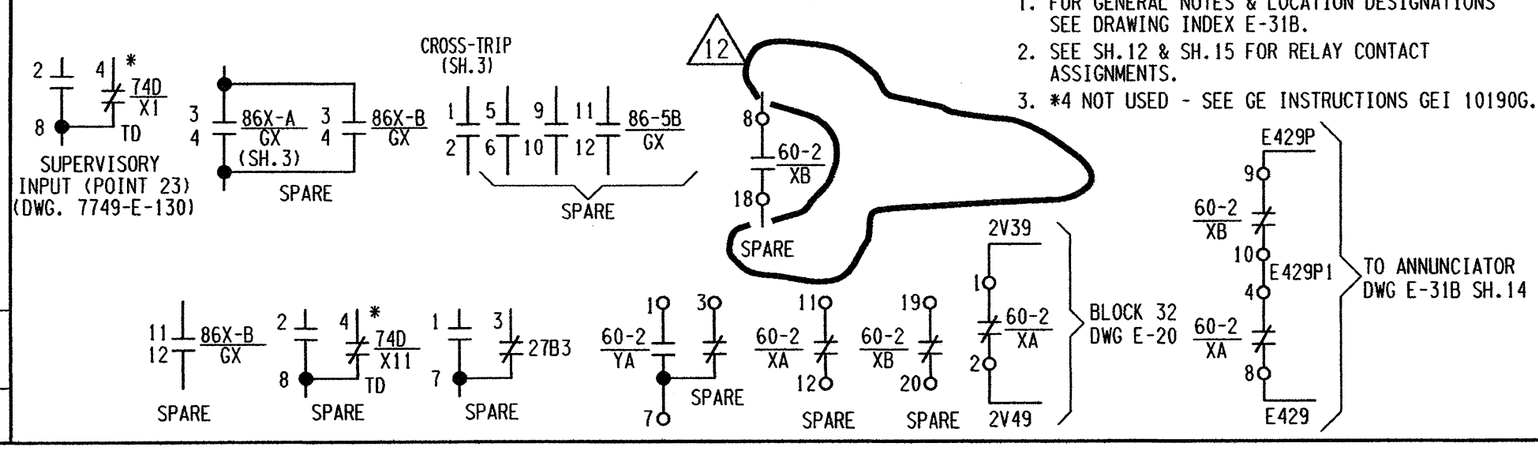

GENERATOR - TRANSFORMER
B RELAY CKTS

THIS DWG. WAS REDRAWN ON CAD AND SUPERSEDES REVISION 6.

SCALE NONE	DESIGNED TG	DRAWN JAD	DATE 03-24-92

DAVIS-BESSE NUCLEAR POWER STATION
UNIT NO. 1
THE TOLEDO EDISON COMPANY

ELEMENTARY WIRING DIAGRAMS
GENERATOR AND TRANSFORMER PROTECTION
TRIPPING AND LOCK-OUT RELAY CKTS

DRAWING NO.	REV.
E-31B SH. 8	12

NO.	DATE	REVISIONS
11	5-7-12	INC. DUN 05-0255-001-007 REV.00
12	5-6-92	INC. DUN 12-0134-001-005 REV.00
7		GEN. UPDATE REDRAWN ON CAD TO IMPROVE LEGIBILITY

INITIALS		INITIALS	
ON FILE		ON FILE	GEN. SUPV.
			ENGR. SUPV.
			ENGR.
			CH'K
SBW			BY

DR 06-06-14 DFN= F:/SCHEME/E31BSH8.DGN