Two separate sources of makeup water are provided to ensure that an adequate supply of seal water is available for long term operation.

Seal Water Actuation Criteria

Containment isolation and seal water injection are accomplished automatically for certain penetrating lines requiring early isolation, and manually for others, depending on the status of the system being isolated and the potential for leakage in each case. Generally, the following criteria determine whether the isolation and seal water injection are automatic or manual.

Automatic containment isolation and automatic seal water injection are required for lines that could communicate with the containment atmosphere and be void of water following a loss-of-coolant accident. These lines include:

- Reactor coolant pump cooling water supply and return lines (phase B isolation)
- Reactor coolant pump seal water return line (phase B isolation)
- Letdown line
- Reactor Coolant System sample lines
- Reactor Coolant Vent Line 6
- Containment air sample inlet and outlet lines (air pressurization)
- Reactor coolant drain tank gas analyzer line 6

6

Automatic containment isolation and automatic seal water injection are also provided for the following lines, which are not connected directly to the Reactor Coolant System, but terminate inside the containment at certain components. These components can be exposed to the reactor coolant or containment atmosphere as the result of leakage or failure of a related line or component. The isolated lines are not required for post-accident service.

These lines include:

Pressurizer relief tank gas analyzer line
Pressurizer relief tank makeup line
Safety Injection System test line
Reactor coolant drain tank pump discharge line
Steam generator blowdown lines
Steam generator blowdown sample lines
Accumulator sample line
Containment sump pump discharge

Manual containment isolation and manual seal water injection are provided for lines that are normally filled with water and will remain filled following the loss-of-coolant accident, and for lines that must remain in service for a time following the accident. The manual seal water injection assures a long term seal. These lines include:

Reactor coolant pump seal water supply lines
Charging Line
Safety injection headers
Boron injection lines
Containment spray headers

Seal water injection is not necessary to insure the integrity of isolated lines in the following categories:

Lines that are connected to non-radioactive systems outside the containment and in which a pressure gradient exists which opposes leakage from the containment. These include nitrogen supply lines to the pressurizer relief tank, accumulators, and reactor coolant drain tank, the instrument air header, the pressurizer deadweight tester line, and the plant air header.

6

Lines that do not communicate with the containment atmosphere or Reactor Coolant System and are missile protected throughout their

length inside containment. These lines are not postulated to be severed or otherwise opened to the containment atmosphere as a result of a loss-of-coolant accident. These include the steam and feedwater headers, the containment ventilation system cooling water supply and return lines, and the excess letdown heat exchanger cooling water supply and return lines.

Lines that are designed for long term post-accident service as part of the engineered safety features. The only lines in this category are the containment sump recirculation lines. These lines are connected to a closed system outside containment.

Special lines such as the fuel transfer tube, containment purge ducts, and the containment pressure and vacuum relief lines. The zone between the two gaskets sealing the blind flange to the inner end of the fuel transfer tube is pressurized to prevent leakage from the containment in the event of an accident. The zone between the two butterfly valves in each containment purge duct is pressurized above incident pressure while the valves are closed during power operation, as are the spaces between the two butterfly valves in the containment pressure and vacuum relief lines.

Components

All associated components, piping, and structures of the Isolation Valve Seal Water System are designed to the Class I seismic criterion.

There are no components of this system located inside containment. The isolation valve seal water tank data are listed in Table 5.2.2-2.

The piping and valves for the system including the air-operated valves, are designed in accordance with the USAS Code for Pressure Piping (Power Piping Systems), B31.1.

Design Evaluation

The Isolation Valve Seal Water System provides an extremely prompt and reliable method of limiting the fission product release from the containment isolation valves in the event of a loss-of-coolant accident.

The employment of the system during a loss-of-coolant accident, while not considered for analysis of the consequences of the accident, provides an additional means of conservatism in ensuring that leakage is minimized. No detrimental effect on any other safeguards system will occur should the seal water system fail to operate.

System Response

Automatic containment isolation will be completed within approximately two seconds following generation of the phase A containment isolation signal. This is the estimated closing time of the air operated containment isolation valves. Since the Isolation Valve Seal Water System is actuated by this signal, automatic seal water injection will be in effect within this time period.

Subsequent generation of the phase B isolation signal on containment high pressure (spray actuation signal) will close a number of motor operated isolation valves with an estimated closing time of 10 seconds. Automatic seal water injection flow will have been initiated in advance of this signal by the phase A signal.

Single Failure Analysis

A single failure analysis is presented in Table 5.2.2-3. The analysis shows that the failure of any single active component will not prevent fulfilling the design function of the system.

Override Capability

The operator has the ability to override containment isolation valves as necessary; for example, the isolation valves in the steam generator blowdown lines and valves in those systems required for post-accident operation. (Refer to p 6.2-8a, 6.2-9, and Table 5.2.2-1). 3

Reliance on Interconnected Systems

The Isolation Valve Seal Water System can operate and meet its design function without reliance on any other system. Electric power is not required for system operation, although instrument power is required to provide indication in the control room of seal water tank pressure and level.

Shared Function Evaluation

Table 5.2.2-4 is an evaluation of the main components discussed previously and a brief description of how each component functions during normal operation and during an accident.

C.I.S. - Containment Isolation Signal
A - Automatic Seal Water Injection
M - Manual Seal Water Injection
FC - Fail Closed
Dia. - Diaphragm Valve
DDV - Double Disc Gate Valve
C.S. - Closed System

Hot - >200°F
Cold - <200°F

TABLE 5.2.2-1A

CONTAINMENT PIPING PENETRATIONS

AND VALVING

RCS - Reactor Coolant System
ACS - Auxiliary Coolant System
WDS - Waste Disposal System
SIS - Safety Injection System
SS - Sampling System
CVCS - Chemical and Volume Control System
VENT - Ventilation System
PPS - Penetration Pressurization System

Pene. No.	Penetration and System	Dia-gram	Valve or Barrier	Valve Type	Oper. Type	Posit. Indic. in Cont. Room	Normal Posit.	Posit. During Shutdown	Posit. After Accident	Posit. on Power Fail.	Cont. Isol. Trip	Seal Water Inj.	Used After Accid.	Fluid G-Gas W-Water	Temp	Notes
1	Pressurizer Relief Tank Vent-RCS	-2	A	Dia.	Air	Yes	Open	Open	Closed	FC	T	A	No	G	Cold	
			B	Dia.	Air	Yes	Open	Open	Closed	FC	T	A	No	G	Cold	
			C	Globe	Sol.	No	Clsd.	Closed	Closed	As is	No	-	No	G	Cold	Opened intermittently by automatic analyzer for gas sample.
2	Pressurizer Relief Tank Nitrogen Supply-RCS	-2	A	Check	-	No	Clsd	Closed	Closed	-	No	-	No	G	Cold	
			B	Dia.	Man.	No	Open	Open	Closed	As is	No	-	No	G	Cold	
			C	Pres. Reg.	Self Contain.	No	Clsd.	Closed	Closed	FC	No	-	No	G	Cold	
3	Pressurizer Relief Tank Makeup - RCS	-2	A	Dia.	Air	Yes	Clsd	Closed	Closed	FC	T	A	No	W	Cold	
			B	Dia.	Air	Yes	Clsd	Closed	Closed	FC	T	A	No	W	Cold	
4	Primary System Vent Header Nitrogen supply Line-WDS	-3	A	Dia.	Air	Yes	Clsd.	Closed	Closed	FC	T	A	No	G	Cold	
			B	Dia.	Air	Yes	Clsd.	Closed	Closed	FC	T	A	No	G	Cold	
			C	Dia.	Man.	No	Open	Open	Closed	As is	No	-	No	G	Cold	
			D	Check	-	No	Clsd.	Closed	Closed	-	No	-	No	G	Cold	
			E	Press Reg.	Self Contained	No	Clsd.	Closed	Closed	FC	No	-	No	G	Cold	

Amendment 6

C.I.S - Containment Isolation Signal
A - Automatic Seal Water Injection
M - Manual Seal Water Injection
FC - Fail Closed
Dia. - Diaphragm Valve
DDV - Double Disc Gate Valve
C.S. - Closed System

Hot - >200°F
Cold - <200°F

RCS - Reactor Coolant System
ACS - Auxiliary Coolant System
WDS - Waste Disposal System
SIS - Safety Injection System
SS - Sampling System
CVCS - Chemical and Volume Control System
VENT - Ventilation System
PPS - Penetration Pressurization System

TABLE 5.2.2-1B

CONTAINMENT PIPING PENETRATONS

AND VALVING

Pene. No.	Pene. and System	Diagram	Valve or Barrier	Valve Type	Oper. Type	Posit. Indic. in Cont. Room	Normal Posit.	Posit. During Shutdown	Posit. After Accident	Posit. on Power Fail.	Cont. Isol. Trip	Seal Water Inj.	Used After Accid.	Fluid G-Gas W-Water	Temp.	Notes
5	Reactor Coolant Drain Tank	-3	A	Globe	Sol.	Yes	Open	Open	Closed	FC	T	A	No	G	Cold	Opened intermittently by automatic analyzer for gas sample
			B	Globe	Sol.	Yes	Open	Open	Closed	FC	T	A	No	G	Cold	
			C	Globe	Sol.	No	Closed	Closed	Closed	FC	No	-	No	G	Cold	
6	Reactor Coolant Drain Tank Pump Discharge Line WDS	-3	A	Dia.	Air	Yes	Closed	Closed	Closed	FC	No	-	No	W	Cold	Isolation valve for reactor coolant drain tank pump suction
			B	Dia.	Air	Yes	Closed	Closed	Closed	FC	T	A	No	W	Cold	
			C	Dia.	Air	Yes	Closed	Closed	Closed	FC	T	A	No	W	Cold	
7 8 9	Main Stream Headers (Sec. Sys.)	-4	A	Swing-Disc Stop Valve	Air Piston	Yes	Open	Closed	Open*	Open	No*	-	Yes*	G	Hot	*Automatic isolation for stream line break
			B	Gate	Mot.	Yes	Closed	Closed	Closed	As is	No	-	No	G	Hot	
			C	Check	-	No	Open	Open	Open	As is	No	-	Yes	G	Hot	
			D	Globe	Man.	No	Closed	Closed	Closed	As is	No	-	No	G	Hot	
			E	Globe	Man.	No	Closed	Closed	Closed	As is	No	-	No	G	Hot	
			F	Globe	Mot.	Yes	Closed	Closed	Open	As is	No	-	N'	G	Hot	
			C.S	-	-	-	-	-	-	-	-	-	-	-	-	Steam generator secondary side is a missile protected closed system.

C.I.S - Containment Isolation Signal
A - Automatic Seal Water Injection
M - Manual Seal Water Injection
FC - Fail Closed
Dia. - Diaphragm Valve
DDV - Double Disc Gate Valve
C.S. - Closed System

Hot - >200°F
Cold - <200°F

TABLE 5.2.2-1C

CONTAINMENT PIPING PENETRATONS

AND VALVING

RCS - Reactor Coolant System
ACS - Auxiliary Coolant System
WDS - Waste Disposal System
SIS - Safety Injection System
SS - Sampling System
CVCS - Chemical and Volume Control System
VENT - Ventilation System
PPS - Penetration Pressurization System

Pene. No.	Pene. and System	Dia-gram	Valve or Barrier	Valve Type	Oper. Type	Posit. Indic. in Cont. Room	Normal Posit.	Posit. During Shutdown	Posit. After Accident	Posit. on Power Fail.	Cont. Isol. Trip	Seal Water Inj.	Used After Accid.	Fluid G-Gas W-Water	Temp.	Notes
10	Main Feed-	-4	A	Check	-	No	Open	Open	Open*	As is	No	-	Yes*	W	Hot	*Isolated for steam
11	water		B	Gate	Man.	No	Open	Open	Open*	As is	No	-	Yes*	W	Hot	line break.
12	headers		C	Gate	Man.	No	Open	Open	Open*	As is	No	-	Yes*	W	Hot	This valve is in
	(Sec. Sys.)		D	Check	-	No	Open	Open	Open*	As is	No	-	Yes*	W	Hot	emergency feedwater line
			C.S.	-	-	-	-	-	-	-	-	-	-	-	-	Steam generator second-
			E	Globe	Man.	No	Closed	Open	Closed	As is	No	-	No	W	Hot	ary side is a missile
			F	Globe	Man.	No	Open	Open	Closed	As is	No	-	No	W	Cold	protected closed system
57	Emergency	-4	A	Check	-	No	Closed	Closed	Open	As is	No	-	Yes	W	Hot	*May be closed manually
58	Feedwater		B	Gate	Man.	No	Open	Open	Open*	As is	No	-	Yes*	W	Hot	by the operator
59	Headers															
	(Sec. Sys.)		C.S.	-	-	-	-	-	-	-	-	-	-	-	-	Steam Generator
13	Steam Gen.	-4	A	Globe	Air	Yes	Closed	Closed	Closed	FC	T	A	No	W	Hot	
14	Blowdown Lines		B	Globe	Air	Yes	Closed	Closed	Closed	FC	T	A	No	W	Hot	
15	(Sec. Sys.)															
16	Residual	-5	A	Gate	Motor	Yes	Closed	Open	Open	As is	No	-	Yes	W	Hot	
	Heat Removal		B	Gate	Motor	Yes	Closed	Closed	Open*	As is	No	-	Yes*	W	Cold	*Closed during rec-
	Loop Out-		C	Gate	Motor	Yes	Closed	Closed	Open*	As is	No	-	Yes*	W	Cold	circulaton phase
	ACS/SIS		D	Gate	Motor	Yes	Closed	Closed	Closed	As is	No	-	Yes	W	Cold	
			E	Gate	Man.	No	Open	Open	Open	As is	No		Yes	W	Cold	
			F	Globe	Man.	No	Open	Open	Open	As is	No	-	Yes	W	Cold	
			C.S.	-	-	-	-	-	-	-	-	-	-	-	-	RHR System
46	Containment	-5	A	Gate	Mot.	Yes	Closed	Closed	Closed*	As is	No	-	Yes	W	Cold	*Opened by operator for
47	Sump Recir-		B	Gate	Mot.	Yes	Closed	Closed	Closed*	As is	No	-	Yes	W	Cold	post accident recir-
	culation		C.S.	-	-	-	-	-	-	-	-	-	-	-	-	cluation
	Lines - SIS															RHR System

6

6

C.I.S - Containment Isolation Signal
A - Automatic Seal Water Injection
M - Manual Seal Water Injection
FC - Fail Closed
Dia. - Diaphragm Valve
DDV - Double Disc Gate Valve
C.S. - Closed System

Hot - >200°F
Cold - <200°F

TABLE 5.2.2-1D

CONTAINMENT PIPING PENETRATONS

AND VALVING

RCS - Reactor Coolant System
ACS - Auxiliary Coolant System
WDS - Waste Disposal System
SIS - Safety Injection System
SS - Sampling System
CVCS - Chemical and Volume Control System
VENT - Ventilation System
PPS - Penetration Pressurization System

Pene. No.	Pene. and System	Dia-gram	Valve or Barrier	Valve Type	Oper. Type	Posit. Indic. in Cont. Room	Normal Posit.	Posit. During Shutdown	Posit. After Accident	Posit. on Power Fail.	Cont. Isol. Trip	Seal Water Inj.	Used After Accid.	Fluid G-Gas W-Water	Temp.	Notes
17	Residual Heat Removal Loop In - ACS/SIS	-6	A	Check	-	No	Closed	Open	Open	As is	No	-	Yes	W	Hot	Opens on Safety injection signal.
			B	Gate	Mot.	Yes	Closed	Open	Open	As is	No	-	Yes	W	Hot	
			C	Globe	Man.	No	Open	Closed	Closed	As is	No	-	No	W	Hot	Line normally closed during power operation
			D	Globe	Air	Yes	Closed	Closed	Closed	As is	No	-	No	W	Hot	
			E	Globe	Man.	No	Open	Open	Open	As is	No	-	Yes	W	Hot	
			F	Butter-fly	Air	Yes	Closed	Closed	Closed	FC	No	-	Yes	W	Hot	
			G	Gate	Mot.	Yes	Closed	Closed	Closed*	As is	No	-	Yes	W	Cold	*May be opened during accident for flow through containment spray pumps and high head safety injection pumps.
			C.S.	-	-	-	-	-	-	-	-	-	-	-	-	Residual heat removal loop.
18	Reactor coolant pump cooling water in - ACS	-7	A	Check	-	No	Open	Open	Closed	As is	No	-	No	W	Cold	
			B	DDV	Mot.	Yes	Open	Open	Closed	As is	P	A	No	W	Cold	
			C	DDV	Mot.	Yes	Open	Open	Closed	As is	P		No	W	Cold	
			C.S.	-	-	-	-	-	-	-	-	-	-	-	-	Component cooling water loop.
19	Reactor coolant pump cooling water out - ACS (6" line)	-7	A	DDV	Mot.	Yes	Open	Open	Closed	As is	P	A	No	W	Cold	
			B	Gate	Man.	No	Open	Open	Closed	As is	No	-	No	W	Cold	
			C.S.	-	-	-	-	-	-	-	-	-	-	-	-	Component cooling water loop.

TABLE 5.2.2-1E

CONTAINMENT PIPING PENETRATONS

AND VALVING

C.I.S - Containment Isolation Signal
A - Automatic Seal Water Injection
M - Manual Seal Water Injection
FC - Fail Closed
Dia. - Diaphragm Valve
DDV - Double Disc Gate Valve
C.S. - Closed System

Hot - >200°F
Cold - <200°F

RCS - Reactor Coolant System
ACS - Auxiliary Coolant System
WDS - Waste Disposal System
SIS - Safety Injection System
SS - Sampling System
CVCS - Chemical and Volume Control System
VENT - Ventilation System
PPS - Penetration Pressurization System

Pene. No.	Pene. and System	Dia-gram	Valve or Barrier	Valve Type	Oper. Type	Posit. Indic. in Cont. Room	Normal Posit.	Posit. During Shutdown	Posit. After Accident	Posit. on Power Fail.	Cont. Isol. Trip	Seal Water Inj.	Used After Accid.	Fluid G-Gas W-Water	Temp.	Notes
20	Reactor coolant pump cooling water out - ACS (3" line)	-7	A	Gate	Mot.	Yes	Open	Open	Closed	As is	P	A	No	W	Cold	
			B	Globe	Air	Yes	Open	Open	Closed	FC	P	A	No	W	Cold	
			C	Gate	Man.	No	Open	Open	Closed	As is	No	-	No	W	Cold	
			C.S.	-	-	-	-	-	-	-	-	-	-	-	-	Component cooling water loop.
21	Excess letdown heat exchanger cooling water in - ACS	-8	A	Check	-	No	Closed	Closed	Closed	As is	No	-	No	W	Cold	
			B	Gate	Man.	No	Open	Closed	Closed	As is	No	-	No	W	Cold	
			C.S.	-	-	-	-	-	-	-	-	-	-	-	-	Component cooling water
			C.S.	-	-	-	-	-	-	-	-	-	-	-	-	Heat exchanger is a missile protected closed system inside containment.
22	Excess let-down heat exchanger cooling water out - ACS	-8	A	Gate	Air	Yes	Closed	Closed	Closed	FC	T	-	No	W	Cold	
			B	Gate	Man.	No	Open	Closed	Closed	As is	No	-	No	W	Cold	
			C	Globe	Man.	No	Open	Open	Open	As is	No	-	No	W	Cold	
			C.S.	-	-	-	-	-	-	-	-	-	-	-	-	Component cooling water
			C.S.	-	-	-	-	-	-	-	-	-	-	-	-	loop. Heat exchanger is a missile protected closed system inside containment.
23	Letdown line CVCS	-9	A	Globe	Air	Yes	Open*	Closed	Closed	FC	T	-	No	W	Hot	Letdown orifice isolat-valves. *One valve normally open, two closed.
			B	Globe	Air	Yes	Open	Closed	Closed	FC	T	A	No	W	Hot	
			C	Globe	Air	Yes	Open	Closed	Closed	FC	T	A	No	W	Hot	
			D	Globe	Man.	No	Open	Closed	Closed	As is	No	-	No	W	Hot	Can be closed to prevent loss of seal water if valve C fails to close tightly.
			C.S.	-	-	-	-	-	-	-	-	-	-	-	-	Chemical and Volume Control System.

TABLE 5.2.2-1F

CONTAINMENT PIPING PENETRATONS

AND VALVING

C.I.S - Containment Isolation Signal
A - Automatic Seal Water Injection
M - Manual Seal Water Injection
FC - Fail Closed
Dia. - Diaphragm Valve
DDV - Double Disc Gate Valve
C.S. - Closed System

Hot - >200°F
Cold - <200°F

RCS - Reactor Coolant System
ACS - Auxiliary Coolant System
WDS - Waste Disposal System
SIS - Safety Injection System
SS - Sampling System
CVCS - Chemical and Volume Control System
VENT - Ventilation System
PPS - Penetration Pressurization System

Pene. No.	Pene. and System	Dia-gram	Valve or Barrier	Valve Type	Oper. Type	Posit. Indic. in Cont. Room	Normal Posit.	Posit. During Shutdown	Posit. After Accident	Posit. on Power Fail.	Cont. Isol. Trip	Seal Water Inj.	Used After Accid.	Fluid G-Gas W-Water	Temp.	Notes
24	Charging line - CVCS	-9	A	Check	-	No	Open	Closed	Closed*	As is	No	-	No*	W	Cold	
			B	Globe	Man.	No	Open	Closed	Closed*	As is	No	M	No*	W	Cold	*May be used for high pressure safety in-injection.
			C	Gate	Man.	No	Open	Closed	Closed*	As is	No	M	No	W	Cold	
			D	Globe	Man.	No.	Closed	Closed	Closed*	As is	No	M	No*	W		
			C.S.	-	-	-	-	-	-	-	-	-	-	-	-	Chemical and volume control system.
25 26 27	Reactor coolant pump seal water supply lines - CVCS	-10	A	Check	-	No	Open	Open	Closed*	As is	No	-	Yes*	W	Cold	*Line is isolated after pump is shutdown
			B	Needle	Man.	No	Throt.	Open	Closed*	As is	No	M	Yes*	W	Cold	
			C	Globe	Man.	No	Open	Open	Closed*	As is	No	M	Yes*	W	Cold	
			D	Globe	Man.	No	Closed	Closed	Closed	As is	No	M	Yes*	W	Cold	
			E	Globe	Man.	No	Open	Open	Closed*	As is	No	M	Yes*	W	Cold	
			F	Gate	Man.	No	Closed	Closed	Closed	As is	No	M	Yes*	W	Cold	
			C.S.	-	-	-	-	-	-	-	-	-	-	-	-	Chemical and volume control system
28	Reactor coolant pump seal water return line - CVCS	-10	A	DDV	Mot.	Yes	Open	Open	Closed	As is	P	A	No	W	Cold	
			B	Dia.	Man.	No	Open	Open	Closed	As is	No	-	No	W	Cold	
			C	Dia.	Man.	No	Open	Open	Closed	As is	No	-	No	W	Cold	
			D	Dia.	Man.	No	Closed	Closed	Closed	As is	No	-	No	W	Cold	
			C.S.	-	-	-	-	-	-	-	-	-	-	-	-	Volume control tank.

C.I.S. - Containment Isolation Signal
A - Automatic Seal Water Injection
M - Manual Seal Water Injection
FC - Fail Closed
Dia. - Diaphragm Valve
DDV - Double Disc Gate Valve
C.S. - Closed System

Hot - >200°F
Cold - <200°F

TABLE 5.2.2-1G

CONTAINMENT PIPING PENETRATIONS

AND VALVING

RCS - Reactor Coolant System
ACS - Auxiliary Coolant System
WDS - Waste Disposal System
SIS - Safety Injection System
SS - Sampling System
CVCS - Chemical and Volume Control System
VENT - Ventilation System
PPS - Penetration Pressurization System

Pene. No.	Penetration and System	Diagram	Valve or Barrier	Valve Type	Oper. Type	Posit. Indic. in Cont. Room	Normal Posit.	Posit. During Shutdown	Posit. After Accident	Posit. on Power Fail.	Cont. Isol. Trip	Seal Water Inj.	Used After Accid.	Fluid G-Gas W-Water	Temp	Notes
29	Reactor Coolant System sample lines - SS	-11	A	Globe	Air	Yes	Clsd.	Closed	Closed	FC	T	A	No	W	Hot	
30			B	Globe	Air	Yes	Clsd.	Closed	Closed	FC	T	A	No	W	Hot	
31			C	Globe	Man.	No	Clsd.	Open	Closed	As is	No	-	No	W	Hot	Prevents loss of seal water if valve B fails.
60	Accumulator Sample line	-11	A	Globe	Air	Yes	Clsd.	Closed	Closed	FC	T	A	No	W	Cold	
			B	Globe	Air	Yes	Clsd.	Closed	Closed	FC	T	A	No	W	Cold	
			C	Globe	Man.	No	Open	Open	Closed	As is	No	-	No	W	Cold	
32	Fuel transfer tube-FH	-11	A	Blind Flange	-	No	Clsd.	Closed	Closed	As is	No	-	No	W	Cold	Double gasketed blind flange located in missile protected refueling canal.
			B	Gate	Man.	No	Clsd.	Closed	Closed	As is	No	-	No	W	Cold	
33	Instrument air header (Sec. Sys.)	-12	A	Check	-	No	Open	Open	Closed	As is	No	-	No	G	Cold	
			B	Globe	Air	Yes	Open	Open	Closed	FC	T	-	No	G	Cold	
			C	Globe	Man.	No	Open	Open	Closed	As is	No	-	No	G	Cold	
			C.B.	-	-	-	-	-	-	-	-	-	-	-	-	Instrument air supply is capable of providing inflow until line can be isolated, if line is ruptured inside containment Any leakage will be toward containment.
6 34	Unassigned number															

C.I.S. - Containment Isolation Signal
A - Automatic Seal Water Injection
M - Manual Seal Water Injection
FC - Fail Closed
Dia. - Diaphragm Valve
DDV - Double Disc Gate Valve
C.S. - Closed System

Hot - >200°F
Cold - <200°F

TABLE 5.2.2-1H

CONTAINMENT PIPING PENETRATIONS

AND VALVING

RCS - Reactor Coolant System
ACS - Auxiliary Coolant System
WDS - Waste Disposal System
SIS - Safety Injection System
SS - Sampling System
CVCS - Chemical and Volume Control System
VENT - Ventilation System
PPS - Penetration Pressurization System

Pene. No.	Penetration and System	Dia-gram	Valve or Barrier	Valve Type	Oper. Type	Posit. Indic. in Cont. Room	Normal Posit.	Posit. During Shutdown	Posit. After Accident	Posit. on Power Fail.	Cont. Isol. Trip	Seal Water Inj.	Used After Accid.	Fluid G-Gas W-Water	Temp	Notes
35	Containment air sample in - Rad. Mon.	-12	A	Dia.	Air	Yes	Open	Open	Closed*	FC	T	-	No*	G	Cold	*May be opened after accident for sample, when containment pressure is below 5 psig.
			B	Dia.	Air	Yes	Open	Open	Closed*	FC	T	-	No*	G	Cold	
36	Containment air sample out - Rad. Mon.	-12	A	Dia.	Air	Yes	Open	Open	Closed*	FC	T	-	No*	G	Cold	*May be opened after accident for sample, when containment pressure is below 5 psig.
			B	Dia.	Air	Yes	Open	Open	Closed*	FC	T	-	No*	G	Cold	
37	Containment Purge supply duct - VENT	-13	A	But-terfly	Air	Yes	Clsd.	Open	Closed	FC	T*	-	No	G	Cold	*Also isolated on high radiation signal.
			B	But-terfly	Air	Yes	Clsd.	Open	Closed	FC	T*	-	No	G	Cold	
38	Containment purge exhaust duct - VENT	-13	A	But-terfly	Air	Yes	Clsd.	Open	Closed	FC	T*	-	No	G	Cold	*Also isolated on high radiation signal.
			B	But-terfly	Air	Yes	Clsd.	Open	Closed	FC	T*	-	No	G	Cold	

C.I.S. - Containment Isolation Signal
A - Automatic Seal Water Injection
M - Manual Seal Water Injection
FC - Fail Closed
Dia. - Diaphragm Valve
DDV - Double Disc Gate Valve
C.S. - Closed System

Hot - >200°F
Cold - <200°F

TABLE 5.2.2-1I

CONTAINMENT PIPING PENETRATIONS

AND VALVING

RCS - Reactor Coolant System
ACS - Auxiliary Coolant System
WDS - Waste Disposal System
SIS - Safety Injection System
SS - Sampling System
CVCS - Chemical and Volume Control System
VENT - Ventilation System
PPS - Penetration Pressurization System

Pene. No.	Penetration and System	Dia-gram	Valve or Barrier	Valve Type	Oper. Type	Posit. Indic. in Cont. Room	Normal Posit.	Posit. During Shutdown	Posit. After Accident	Posit. on Power Fail.	Cont. Isol. Trip	Seal Water Inj.	Used After Accid.	Fluid G-Gas W-Water	Temp	Notes
39	Plant air supply header (Sec. Sys.)	-14	A	Dia.	Man.	No	Clsd.	Closed	Closed	As is	No	A	No	G	Cold	Locked closed during power operation - under administrative control
			B	Dia.	Man.	No	Clsd.	Closed	Closed	As is	No	A	No	G	Cold	
			C	Dia.	Man.	No	Open	Open	Closed	As is	No	-	No	G	Cold	Can be closed to prevent loss of seal water if there are indications that valve B is not closed tightly.
41	Containment pressure relief	-14	A	But-terfly	Air	Yes	Clsd.	Closed	Closed	FC	T*	-	No	G	Cold	*Also closed on high radiation signal
			B		Air	Yes	Clsd.	Closed	Closed	FC	T*	-	No	G	Cold	
42	Containment vacuum relief	-14	A	But-terfly	Air	Yes	Clsd.	Closed	Closed	FC	T*	-	No	G	Cold	*Also closed on high radiation signal.
			B		Air	Yes	Clsd.	Closed	Closed	FC	T*	-	No	G	Cold	
48	Safety Injection Test Line - SIS	-15	A	Globe	Man.	No	L.C.	Closed	Closed	As is	No	A	No	W	Cold	
			B	Globe	Man.	No	L.C.	Closed	Closed	As is	No	A	No	W	Cold	
43	Safety injection line - SIS	-15	A	Globe	Mot.	Yes	Clsd.	Closed	Open	As is	No	-	Yes	W	Cold	Valves A and C opened on S.I. signal
			B	Globe	Man.	No	Open	Open	Open	As is	No	-	Yes	W	Cold	
			C	DDV	Mot.	Yes	Open	Open	Open	As is	No	M	Yes	W	Cold	
			D	Gate	Mot.	Yes	Open	Open	Open*	As is	No	-	Yes	W	Cold	*Closed by operator when post-accident recirculation is initiated.
			E	Gate	Mot.	Yes	Open	Open	Open*	As is	No	-	Yes	W	Cold	

C.I.S. - Containment Isolation Signal
A - Automatic Seal Water Injection
M - Manual Seal Water Injection
FC - Fail Closed
Dia. - Diaphragm Valve
DDV - Double Disc Gate Valve
C.S. - Closed System

Hot - >200°F
Cold - <200°F

TABLE 5.2.2-1J

CONTAINMENT PIPING PENETRATIONS

AND VALVING

RCS - Reactor Coolant System
ACS - Auxiliary Coolant System
WDS - Waste Disposal System
SIS - Safety Injection System
SS - Sampling System
CVCS - Chemical and Volume Control System
VENT - Ventilation System
PPS - Penetration Pressurization System

Pene. No.	Penetration and System	Dia-gram	Valve or Barrier	Valve Type	Oper. Type	Posit. Indic. in Cont. Room	Normal Posit.	Posit. During Shutdown	Posit. After Accident	Posit. on Power Fail.	Cont. Isol. Trip	Seal Water Inj.	Used After Accid.	Fluid G-Gas W-Water	Temp	Notes
62	Boron	-17	A	Check	-	No	Closed	Closed	Open	As is	No	-	Yes	W	Cold	Valve B opened on Safety
63	Injection		B	DDV	Mot.	Yes	Closed	Closed	Open	As is	No	M	Yes	W	Cold	Injection Signal
64	Lines															
44	Containment	-16	F	DDV	Man.	No	Open	Open	Open	As is	No	M	Yes	W	Cold	
45	Spray Head-		A	Globe	Man.	No.	Clsd.	Closed	Closed	As is	No	-	No	W	Cold	*Closed by operator when
	ers - SIS		B	Globe	Man.	No	Clsd.	Closed	Closed	As is	No	-	No	W	Cold	post-accident recircu-
			C	Check	-	No	Clsd.	Open	Open*	As is	No	-	Yes	W	Cold	lation is initiated.
			D	Gate	Mot.	Yes	Open	Open	Open*	As is	No	-	Yes	W	Cold	
			E	Gate	Mot.	Yes	Open	Open	Open	As is	No	-	Yes	W	Cold	
			C.S.	-	-	-	-	-	-	-	-	-	-	-	-	Closing valves D and E makes this a closed system.
49	Ventil. Sys-	-16	C.S.	-	-	-	-	-	-	-	-	-	-	-	-	Containment cooler and
50	tem Cooling															its cooling water piping
51	Water In-															are missile protected
52	VENT															and a closed system in-
																side containment.
			A	Gate	Mot.	Yes	Open	Open	Open	As is	No	-	Yes	W	Cold	
53	Ventil. Sys-	-16	C.S.	-	-	-	-	-	-	-	-	-	-	-	-	Missile protected closed
54	tem Cooling															system.
55	Water out-		A	Gate	Mot.	Yes	Open	Open	Open	As is	No	-	Yes	W	Cold	
56	VENT															

C.I.S. - Containment Isolation Signal
A - Automatic Seal Water Injection
M - Manual Seal Water Injection
FC - Fail Closed
Dia. - Diaphragm Valve
DDV - Double Disc Gate Valve
C.S. - Closed System

Hot - >200°F
Cold - <200°F

TABLE 5.2.2-1K

CONTAINMENT PIPING PENETRATIONS

AND VALVING

RCS - Reactor Coolant System
ACS - Auxiliary Coolant System
WDS - Waste Disposal System
SIS - Safety Injection System
SS - Sampling System
CVCS - Chemical and Volume Control System
VENT - Ventilation System
PPS - Penetration Pressurization System

Pene. No.	Penetration and System	Dia-gram	Valve or Barrier	Valve Type	Oper. Type	Posit. Indic. in Cont. Room	Normal Posit.	Posit. During Shutdown	Posit. After Accident	Posit. on Power Fail.	Cont. Isol. Trip	Seal Used Water Inj.	Seal Used Accid.	Fluid After W-Water	G-Gas Temp	Notes
61	Containment Sump Pumps discharge	-17	A	Dia.	Air	Yes	Closed	Closed	Closed	FC	T	A	No	W	Cold	
			B	Dia.	Air	Yes	Closed	Closed	Closed	FC	T	A	No	W	Cold	
65	Accumulator Nitrogen Supply	-17	A	Globe	Air	Yes	Open	Open	Closed	FC	T	-	No	G	Cold	
			B	Press Reg.	Self Contain	No	Closed	Closed	Closed	FC	No	-	No	G	Cold	
			C	Globe	Man.	No	Closed	Closed	Closed	As is	No	-	No	G	Cold	
			D	Globe	Man.	No	Open	Open	Closed	As is	No	-	No	G	Cold	
			E	Check		No	Closed	Closed	Closed	As is	No	-	No	G	Cold	
68	Containment Pressure Sensing Lines		A	Globe	Man.	No.	Open	Open	Open	As is	No	-	No	G	Cold	
69		-18	B	Globe	Man.	No.	Open	Open	Open	As is	No	-	No	G	Cold	
70																
72	Dead-weight tester line	-17	A	Globe	Man.	No	Closed	Closed	Closed	As is	No	-	No	W	Cold	
			B	Globe	Man.	No	Closed	Closed	Closed	As is	No	-	No	W	Hot	

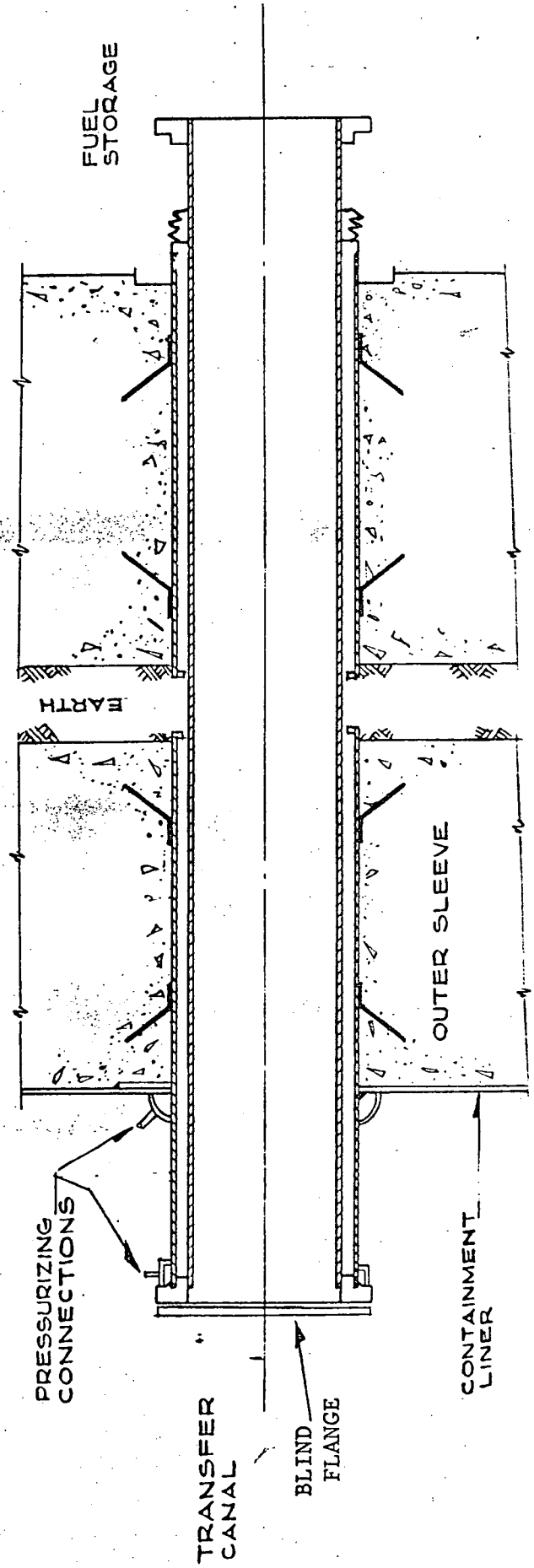

H.B. ROBINSON UNIT NO. 2
FUEL TRANSFER PENETRATION

FIGURE 5.2.2-1

TABLE 5.2.2-2

ISOLATION VALVE SEAL WATER TANK

Material	ASTM A-240
Design Pressure, psig	150
Design Temperature, °F	200
Operating pressure, psig	50-100
Operating temperature, °F	Ambient
Code	ASME UPV (Sect. VIII)

TABLE 5.2.2-3

SINGLE FAILURE ANALYSIS - ISOLATION
VALVE SEAL WATER SYSTEM

Component	Malfunction	Comments
A. Automatically Operated Valves (Open on Phase A Containment Isolation Signal)		
1) Isolation valve for automatic injection headers	Fails to open	Two provided. Operation of one required.
B. Instrumentation		
1) Level transmitter	Fails	Local level indicator at tank also provided
2) Pressure transmitter	Fails	Local pressure indicator at tank also provided

TABLE 5.2.2-4

SHARED FUNCTIONS EVALUATION

Component	Normal Operating Function	Normal Operating Arrangement	Accident Function	Accident Arrangement
Isolation Valve Seal Water Storage Tank	NONE	Lined up to seal water injection piping	Source of water for sealing isolation valves	Lined up to seal water injection piping
N_2 Supply Bottles	NONE	Lined up to seal water tank	Source of N_2 to maintain seal water tank pressure	Lined up to seal water tank

PENE. NO. 1 - PRESSURIZER RELIEF TANK GAS ANALYZER LINE
PENE. NO. 2 - PRESSURIZER RELIEF TANK NITROGEN SUPPLY
PENE. NO. 3 - PRESSURIZER RELIEF TANK MAKEUP

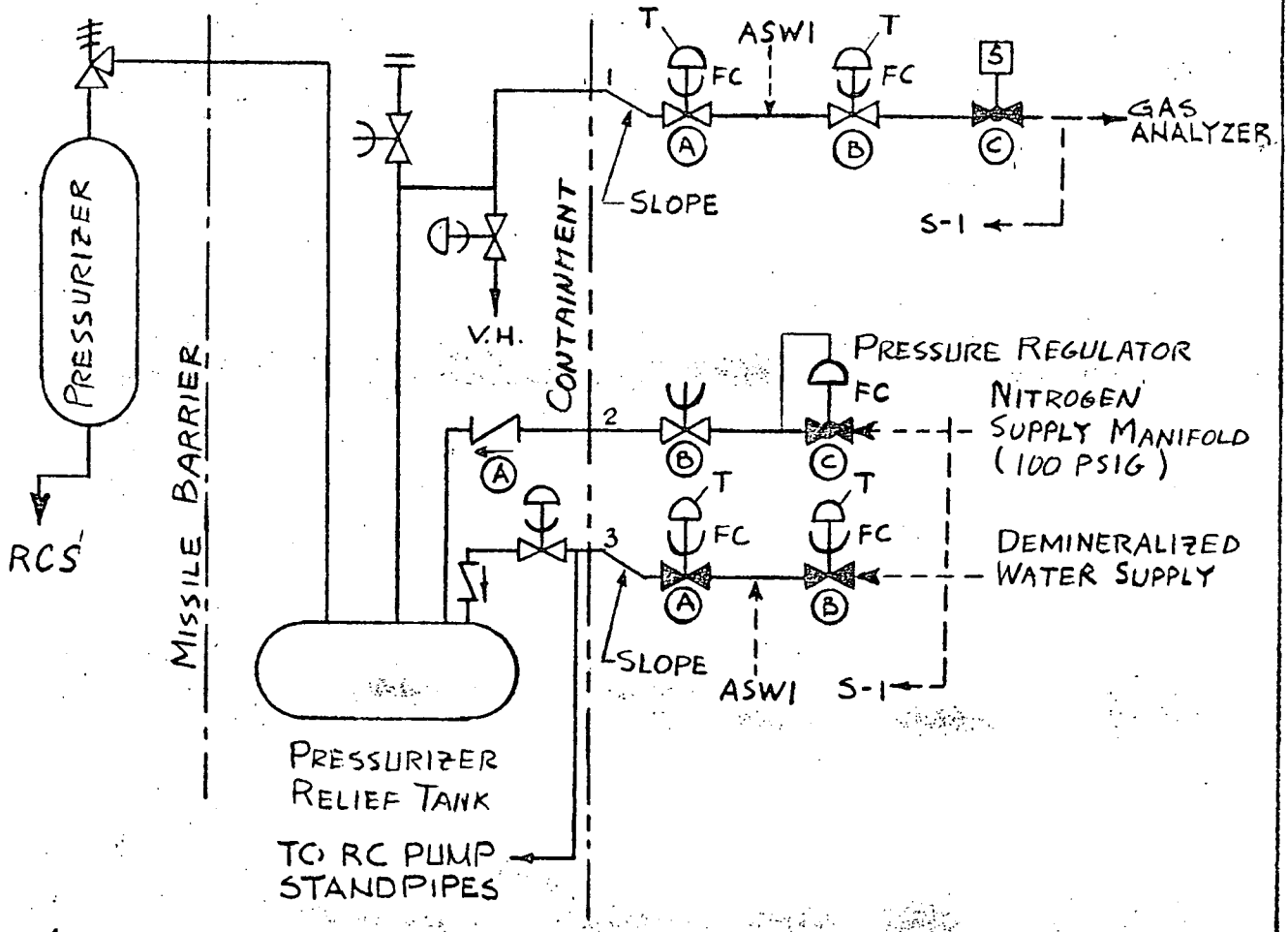

1. ALTHOUGH THE PRESSURIZER RELIEF TANK IS MISSILE PROTECTED, THESE PENETRATING LINES CAN BECOME EXPOSED TO CONTAINMENT ATMOSPHERE IF THE PRESSURIZER SAFETY VALVE DISCHARGE HEADER IS BREACHED BY THE ACCIDENT.

2. VALVE (C) IN THE LINE TO THE GAS ANALYZER IS OPENED INTERMITTENTLY TO WITHDRAW A GAS SAMPLE. THIS OPERATION IS AUTOMATICALLY CONTROLLED BY THE GAS ANALYZER.

FOR LIST OF SYMBOLS SEE FIG. 5.2.2-~~18~~ 21

FIGURE 5.2.2-2

PENE. NO. 4 - PRIMARY SYSTEM VENT HEADER (& N_2 SUPPLY LINE)
PENE. NO. 5 - REACTOR COOLANT DRAIN TANK GAS ANALYZER LINE
PENE. NO. 6 - REACTOR COOLANT DRAIN TANK PUMP DISCHARGE LINE

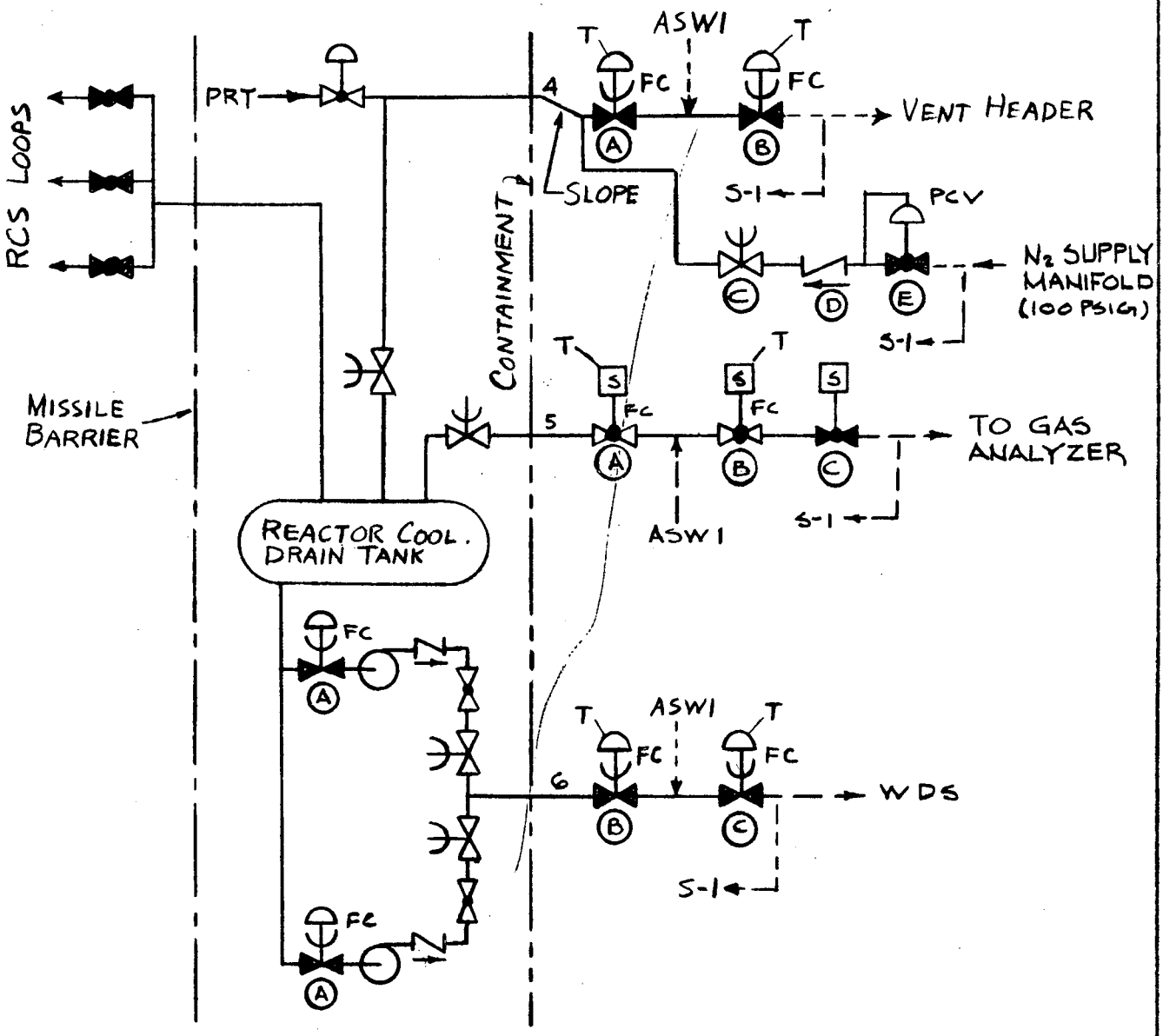

WDS – WASTE DISPOSAL SYSTEM

1. VALVE (C) IN THE LINE TO THE GAS ANALYZER IS OPENED INTERMITTENTLY TO WITHDRAW A GAS SAMPLE. THIS OPERATION IS AUTOMATICALLY CONTROLLED BY THE GAS ANALYZER.

FIGURE 5.2.2-3

PENE. NOS. 7, 8, 9 – MAIN STEAM HEADERS
PENE. NOS. 10, 11, 12 – FEEDWATER HEADERS
PENE. NOS. 13, 14, 15 – STEAM GENERATOR BLOWDOWN LINES
PENE. NOS. 57, 58, 59 – EMERGENCY FEEDWATER HEADERS
PENE. NOS. – STEAM GENERATOR BLOWDOWN SAMPLE LINES

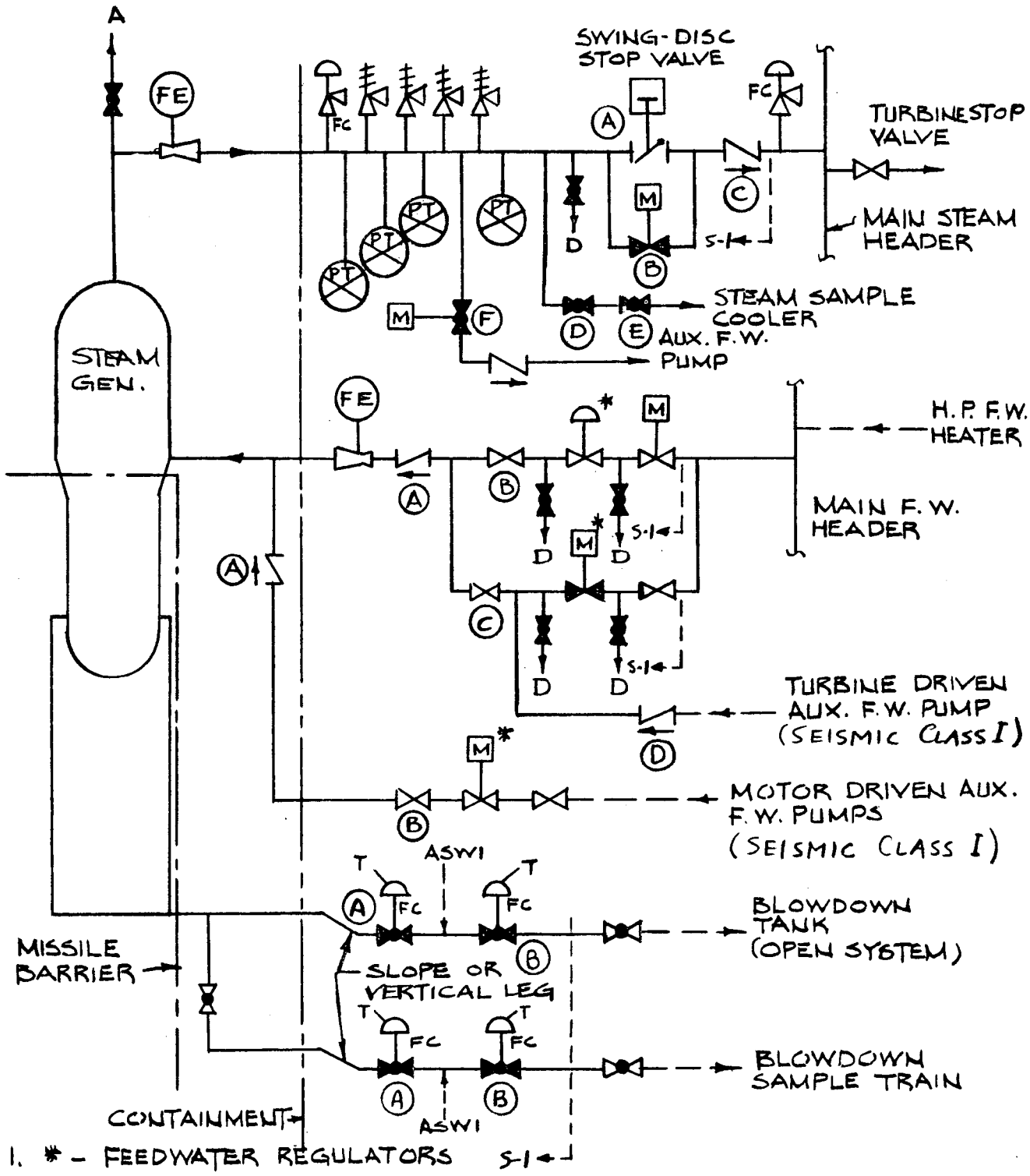

1. * – FEEDWATER REGULATORS

FIGURE 5.2.2-4

PENE. NO. 16 - RESIDUAL HEAT REMOVAL LOOP OUT
PENE. NO. 46, 47 - CONTAINMENT SUMP RECIRCULATION LINES

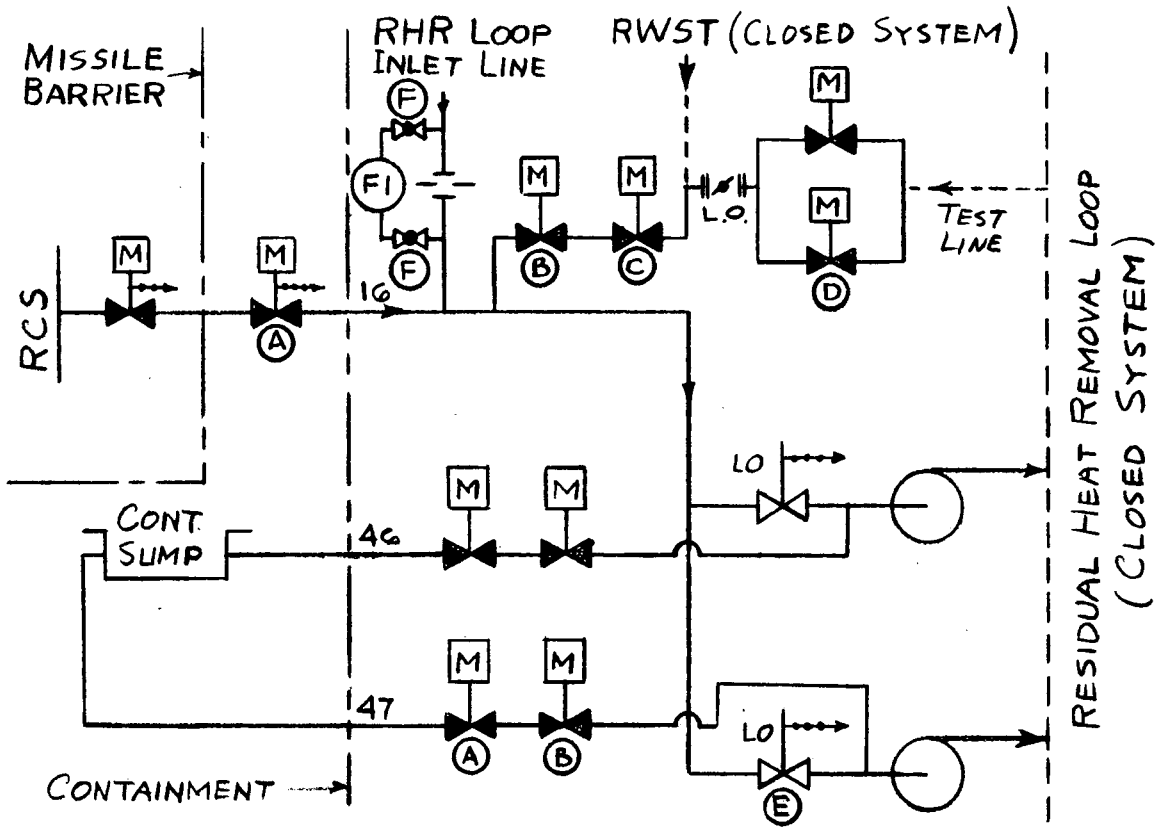

RWST- REFUELING WATER STORAGE TANK
RHR - RESIDUAL HEAT REMOVAL
ENTIRE SYSTEM IS SEISMIC CLASS I

FIGURE 5.2.2-5

PENE. NO. 17 - RESIDUAL HEAT REMOVAL LOOP IN

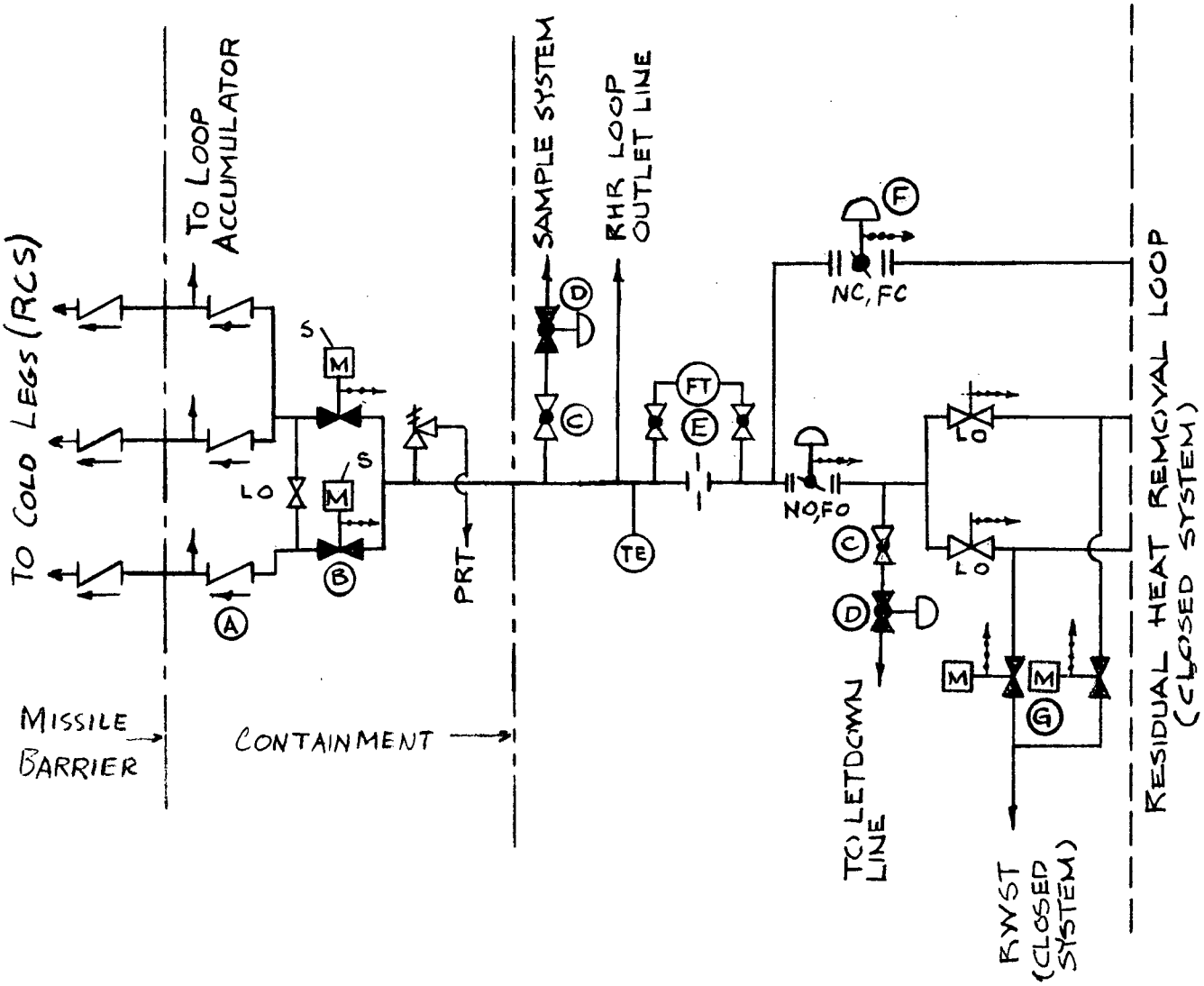

1. VALVE B1 IS IN A LINE WHICH CONNECTS TO THE LETDOWN LINE INSIDE CONTAINMENT.
2. ENTIRE SYSTEM IS SEISMIC CLASS 1

FIGURE 5.2.2-6

PENE. NO. 18 - REACTOR COOLANT PUMP COOLING WATER IN

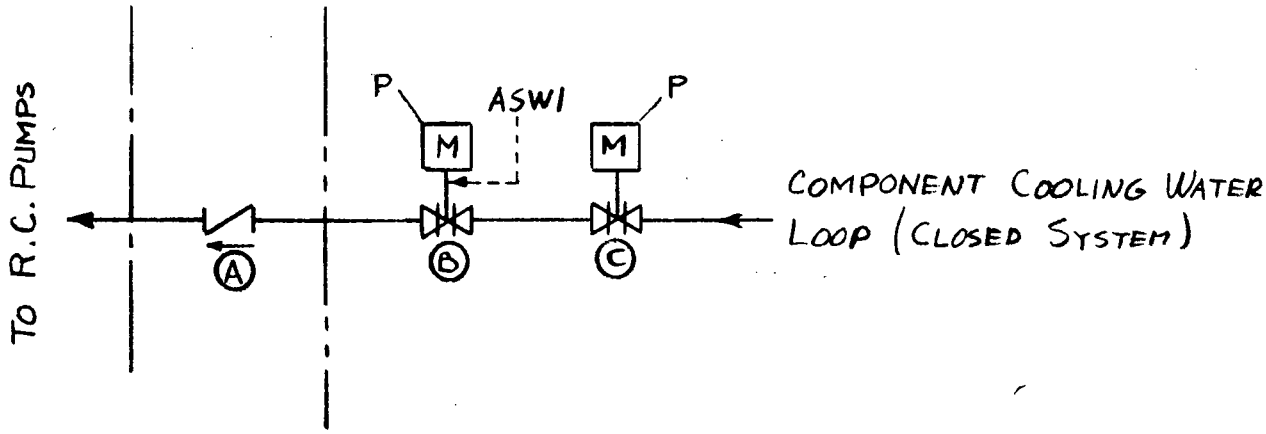

PENE. NO. 19 - REACTOR COOLANT PUMP COOLING WATER OUT (6")

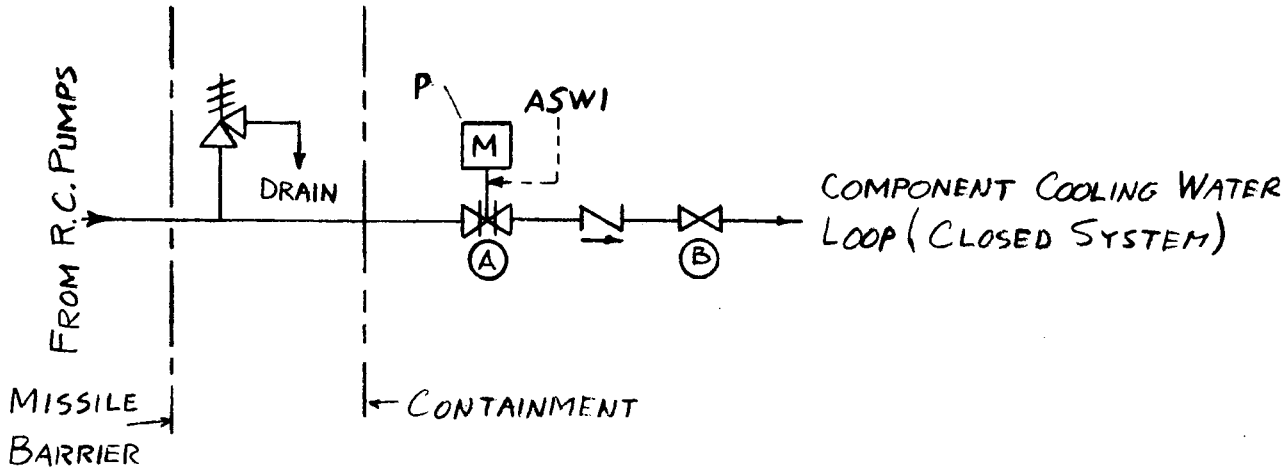

PENE. NO. 20 - REACTOR COOLANT PUMP COOLING WATER OUT (3")

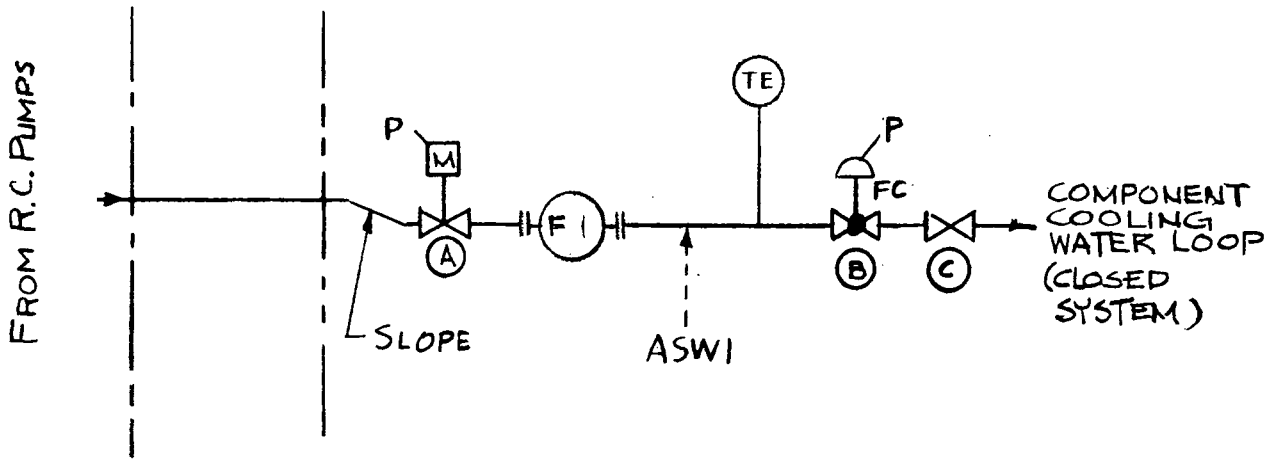

COMPONENT COOLING WATER LOOP IS SEISMIC CLASS I.

FIGURE 5.2.2-7

PENE. NO. 21 - EXCESS LETDOWN HEAT EXCHANGER COOLING WATER IN

PENE. NO. 22 - EXCESS LETDOWN HEAT EXCHANGER COOLING WATER OUT

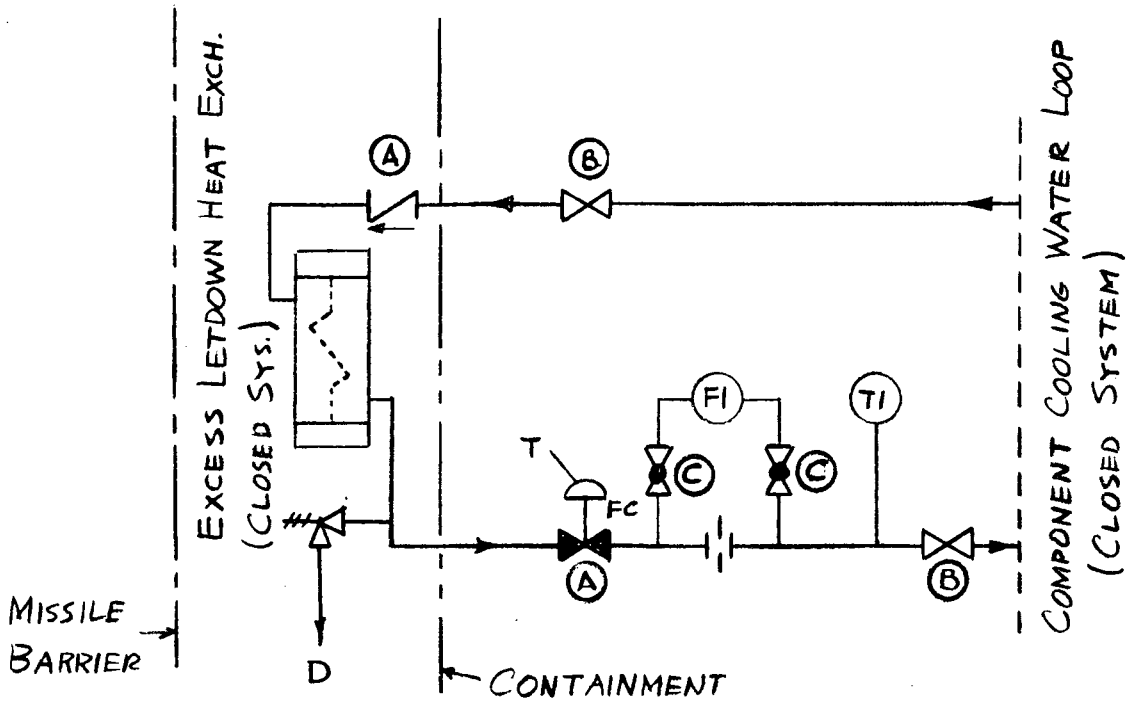

COMPONENT COOLING WATER LOOP IS SEISMIC CLASS I

FIGURE 5.2.2-8

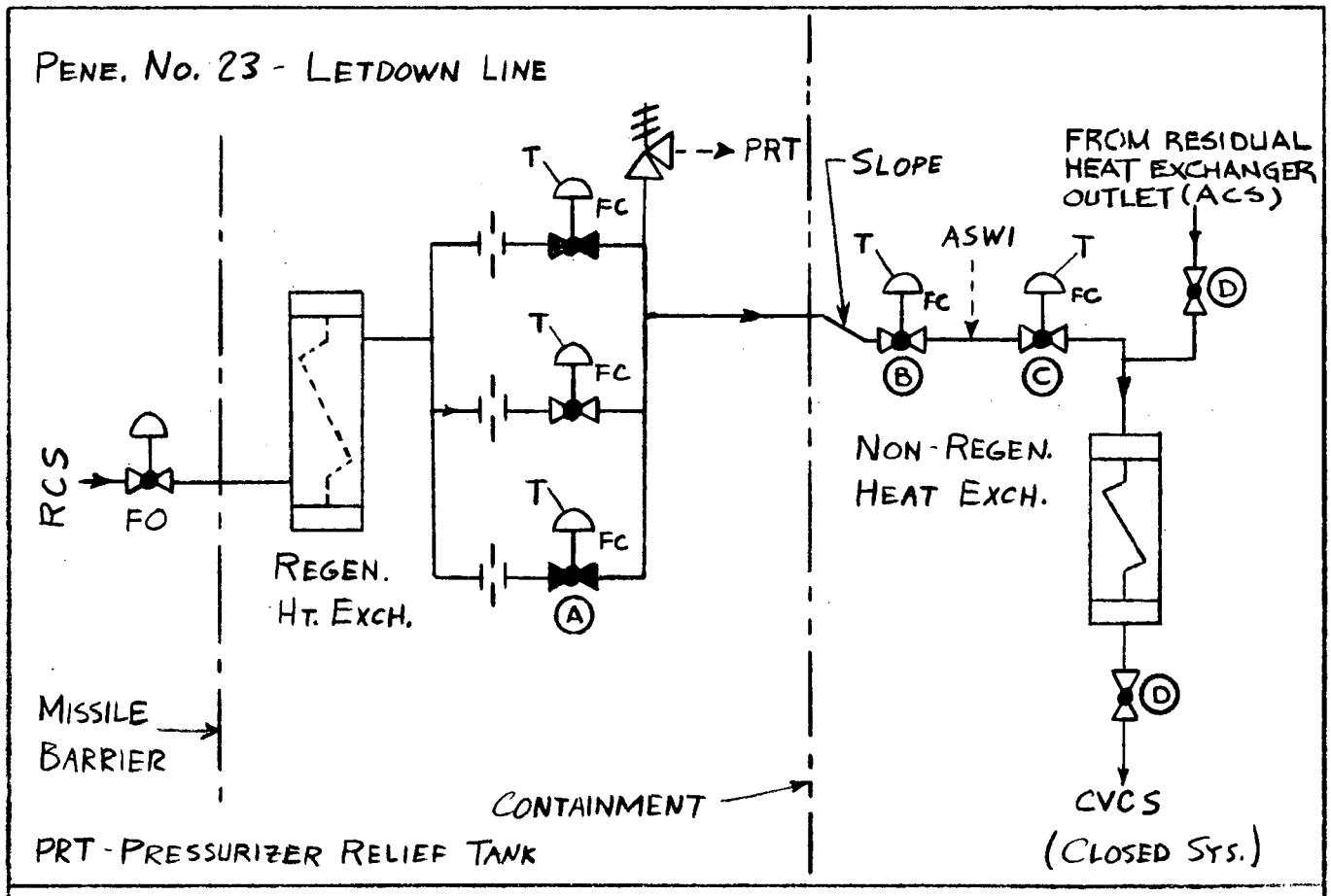

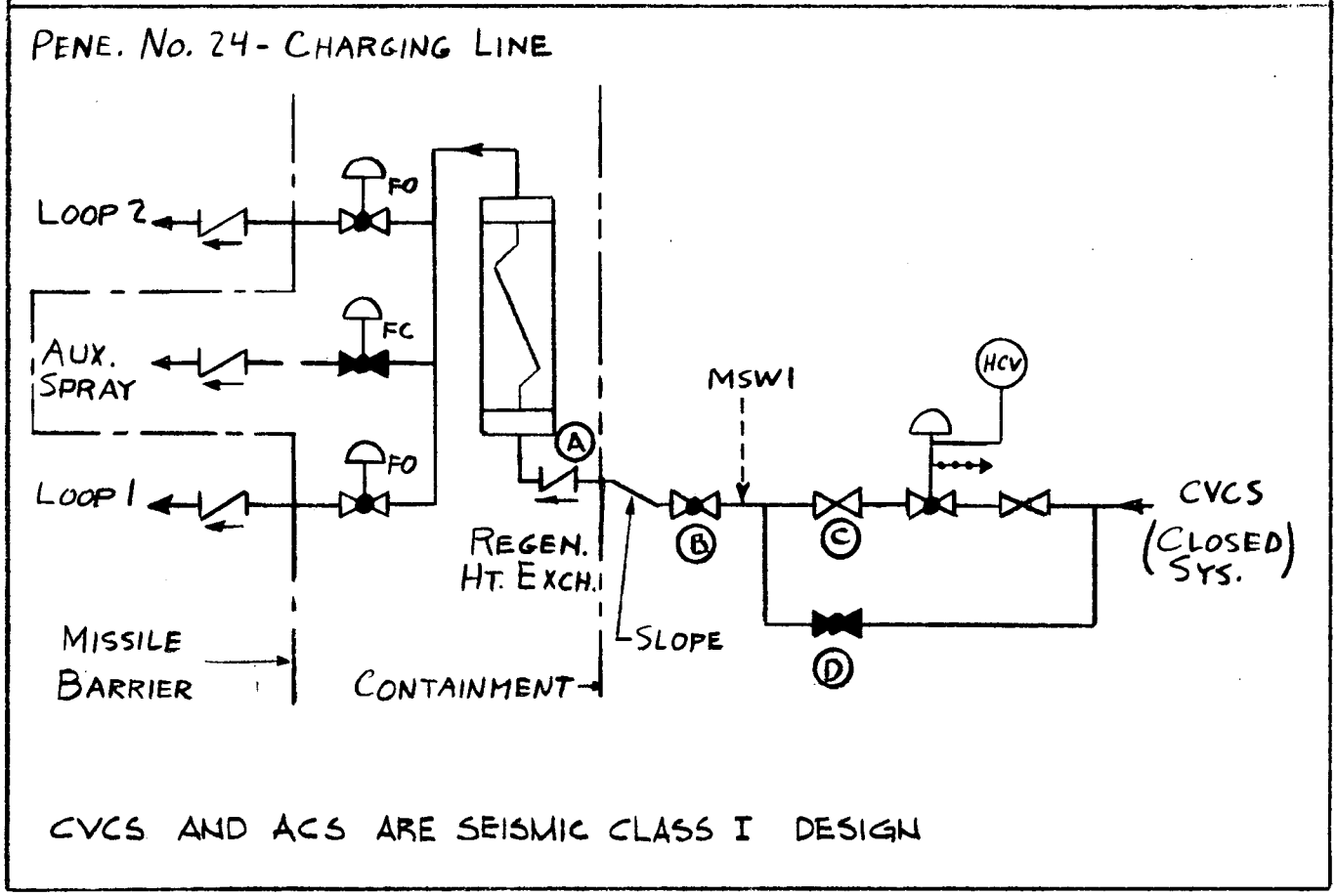

CVCS AND ACS ARE SEISMIC CLASS I DESIGN

FIGURE 5.2.2-9

PENE. NOS. 25, 26, 27 - REACTOR COOLANT PUMP SEAL WATER SUPPLY LINES

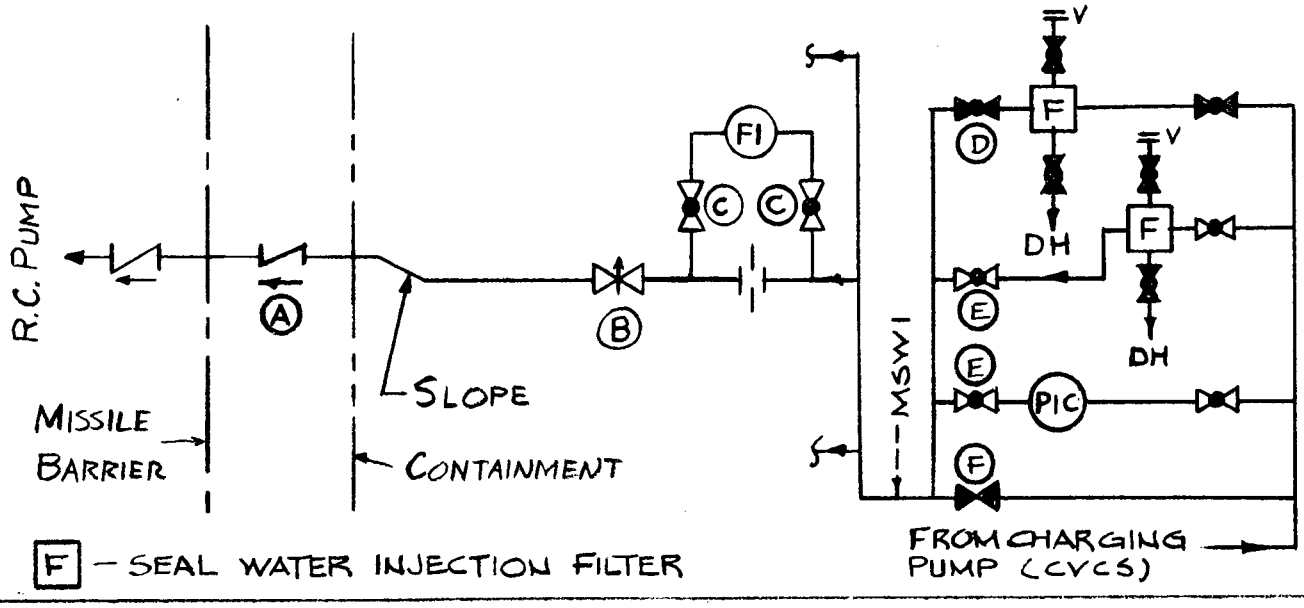

F - SEAL WATER INJECTION FILTER

PENE. NO. 28 - REACTOR COOLANT PUMP SEAL WATER RETURN LINE

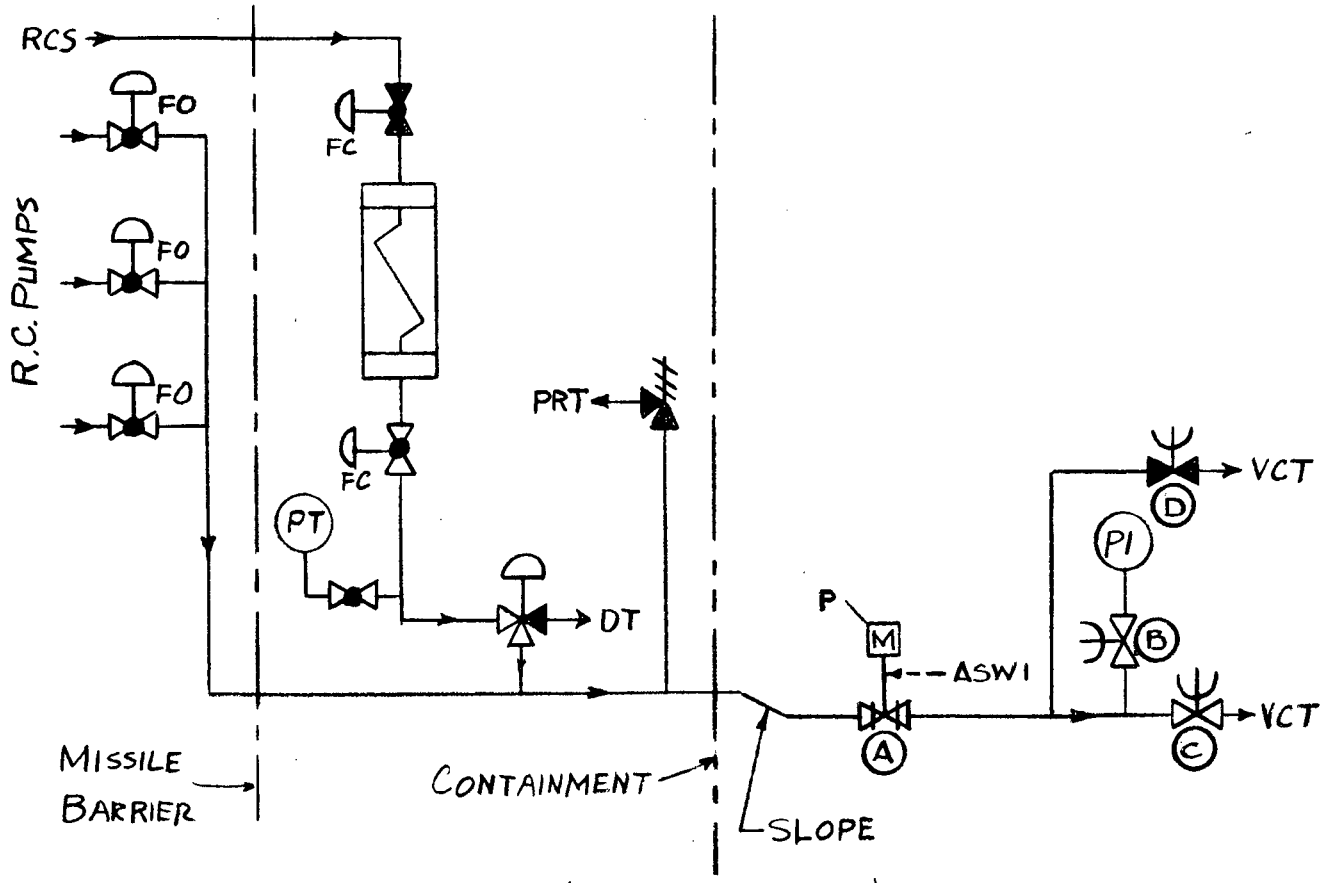

VCT - VOLUME CONTROL TANK (CLOSED SYSTEM)

CVCS IS A SEISMIC CLASS I DESIGN SYSTEM

FIGURE 5.2.2-10

PENE. NOS. 29,30,31 - REACTOR COOLANT SYSTEM SAMPLE LINES
PENE. NO. 60 - ACCUMULATOR SAMPLE LINE

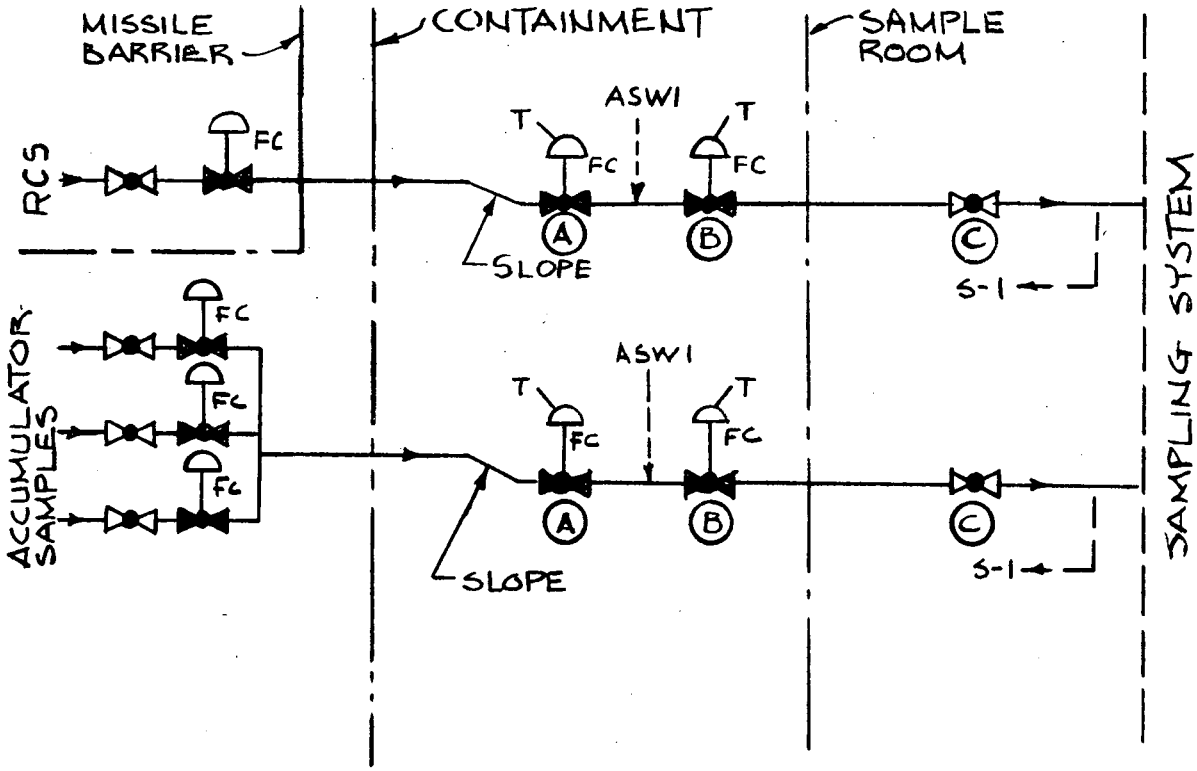

PENE. NO. 32 - FUEL TRANSFER TUBE

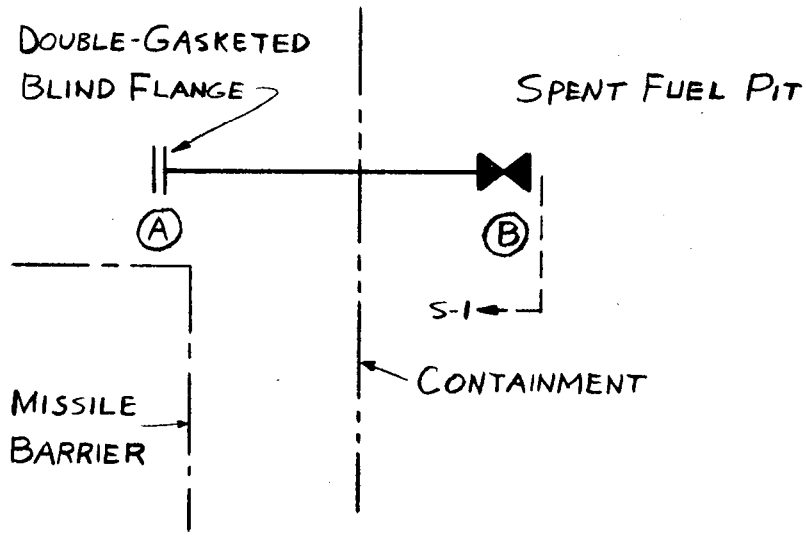

FIGURE 5.2.2-11

PENE. NO. 33 - INSTRUMENT AIR HEADER

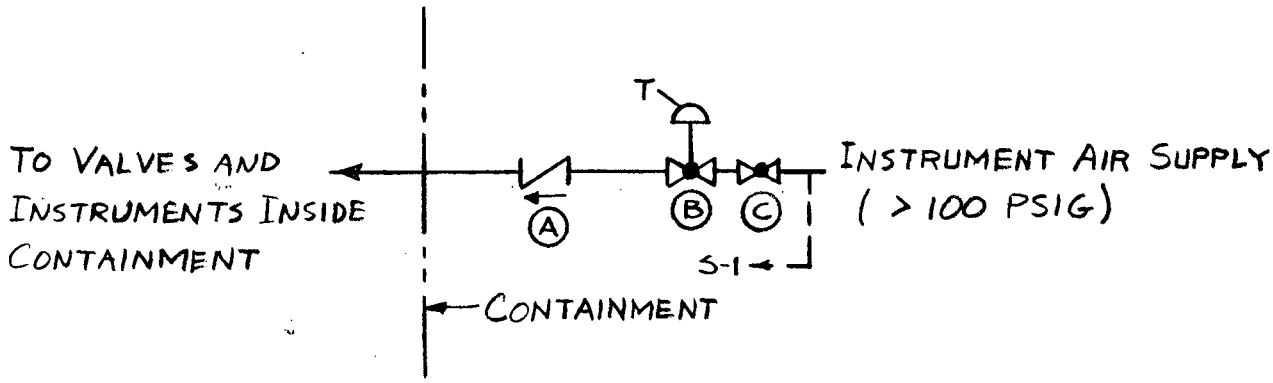

PENE. NO. 35 - CONTAINMENT AIR SAMPLE IN
PENE. NO. 36 - CONTAINMENT AIR SAMPLE OUT

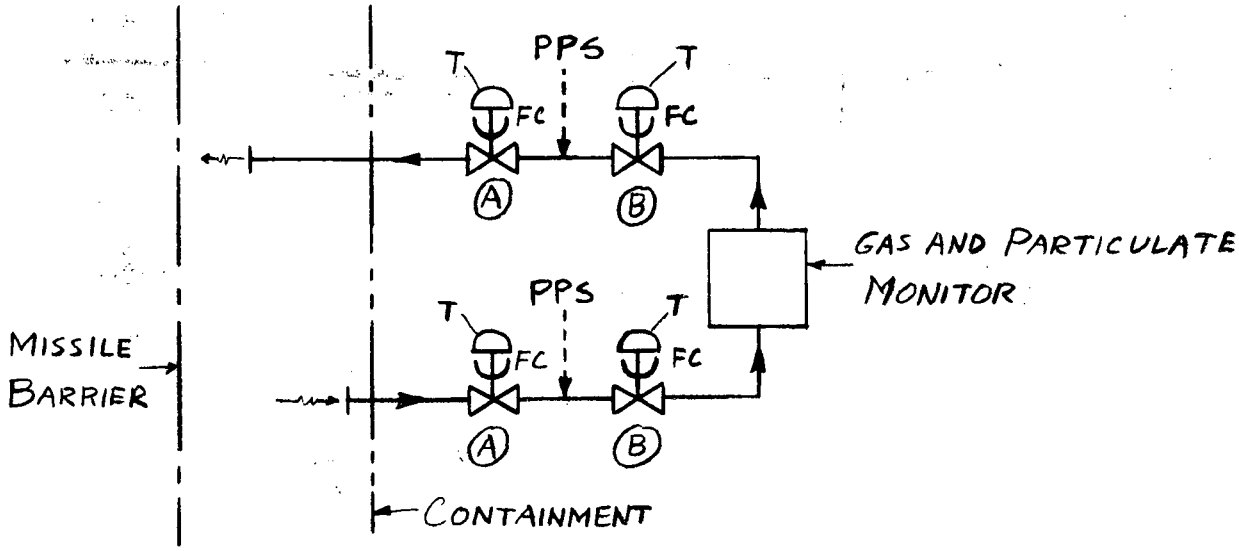

1. CONTAINMENT ISOLATION SIGNAL APPLIED TO THESE VALVES MUST BE OVERRIDDEN IN ORDER TO USE THE MONITOR AFTER AN ACCIDENT.
2. PPS - PENETRATION PRESSURIZATION SYSTEM.
3. ENTIRE SYSTEM IS SEISMIC CLASS I DESIGN.

FIGURE 5.2.2-12

PENE. NO. 37 - CONTAINMENT PURGE SUPPLY DUCT

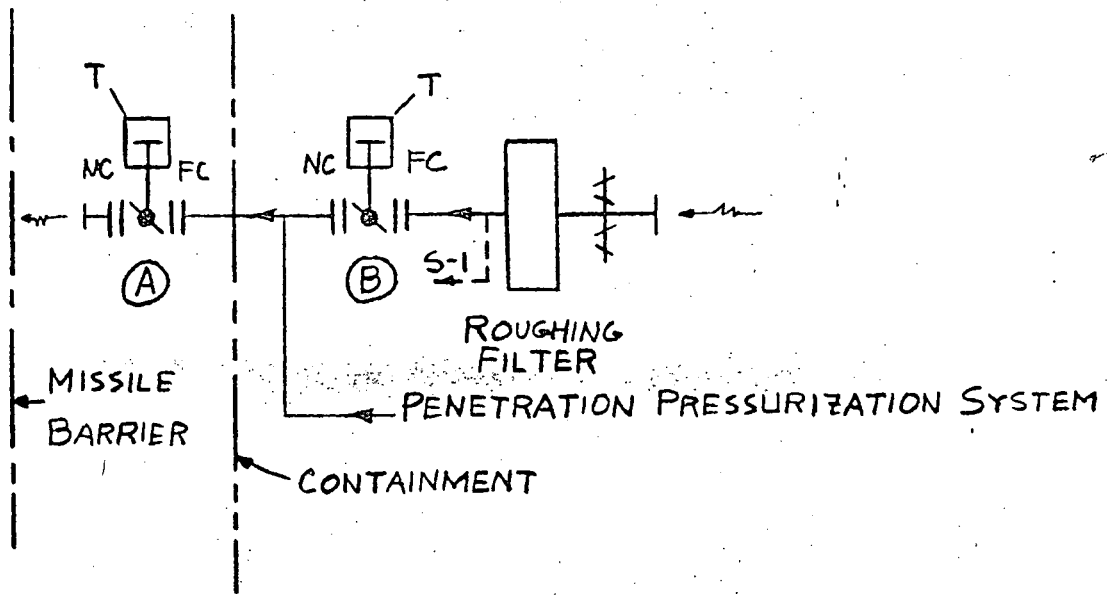

1. THESE VALVES HAVE AIR CYLINDER OPERATORS.

PENE. NO. 38 - CONTAINMENT PURGE EXHAUST DUCT

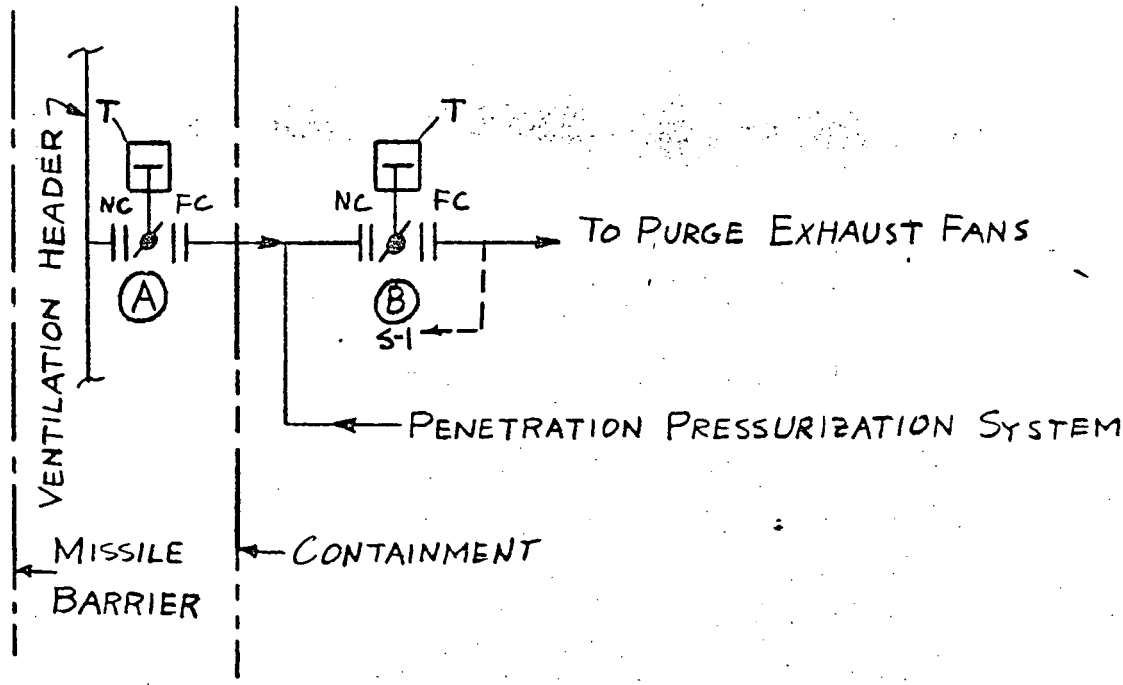

1. THESE VALVES HAVE AIR CYLINDER OPERATORS.

FIGURE 5.2.2-13

6

PENE. NO. 39 — PLANT AIR SUPPLY HEADER

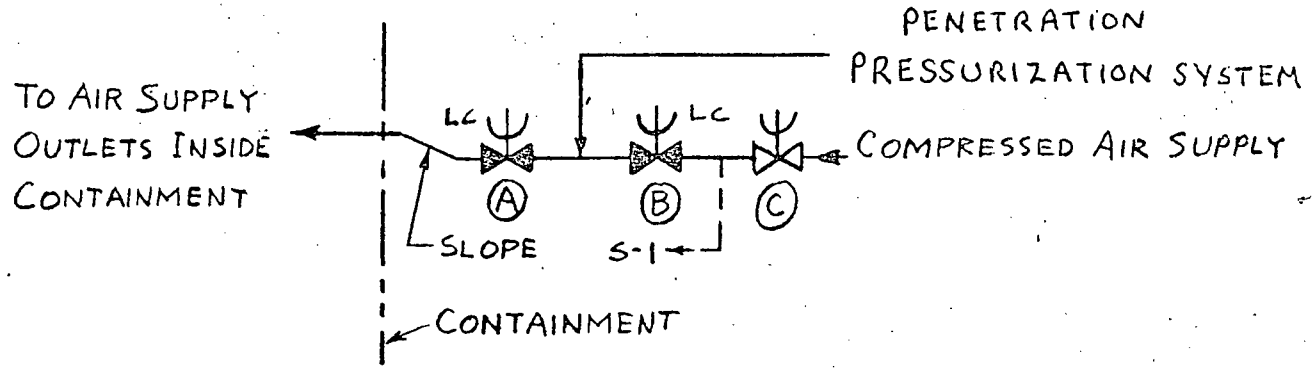

PENE. NO. 41 - CONTAINMENT PRESSURE RELIEF

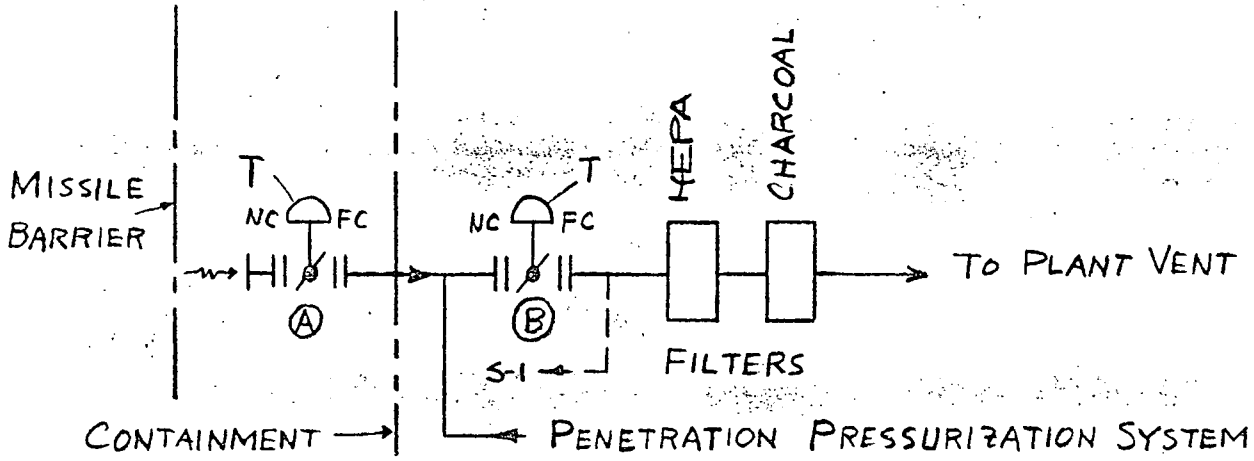

PENE. NO. 42 - CONTAINMENT VACUUM RELIEF

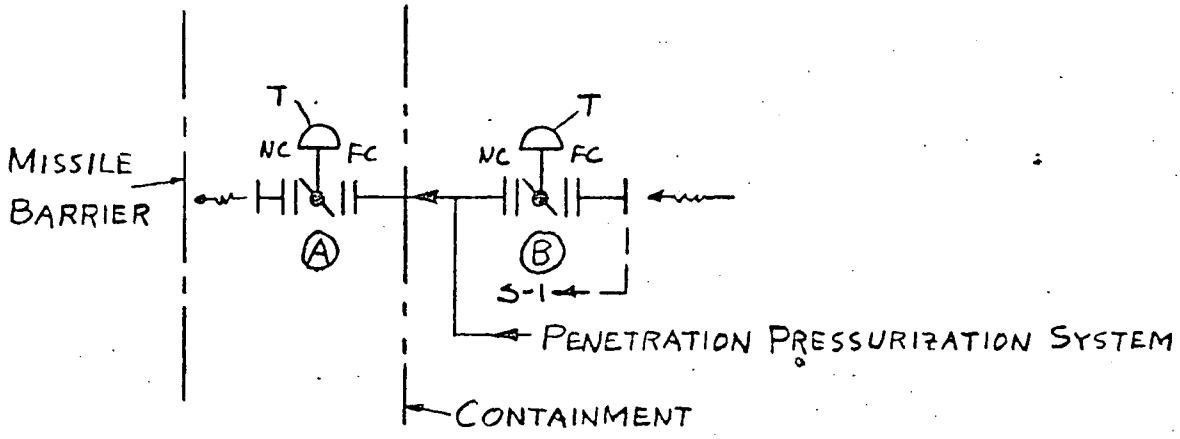

FIGURE 5.2.2-14

PENE. NO. 43 – SAFETY INJECTION LINE
PENE. NO. 48 – SAFETY INJECTION TEST LINE
PENE. NOS. 62, 63, 64 – BORON INJECTION LINES.

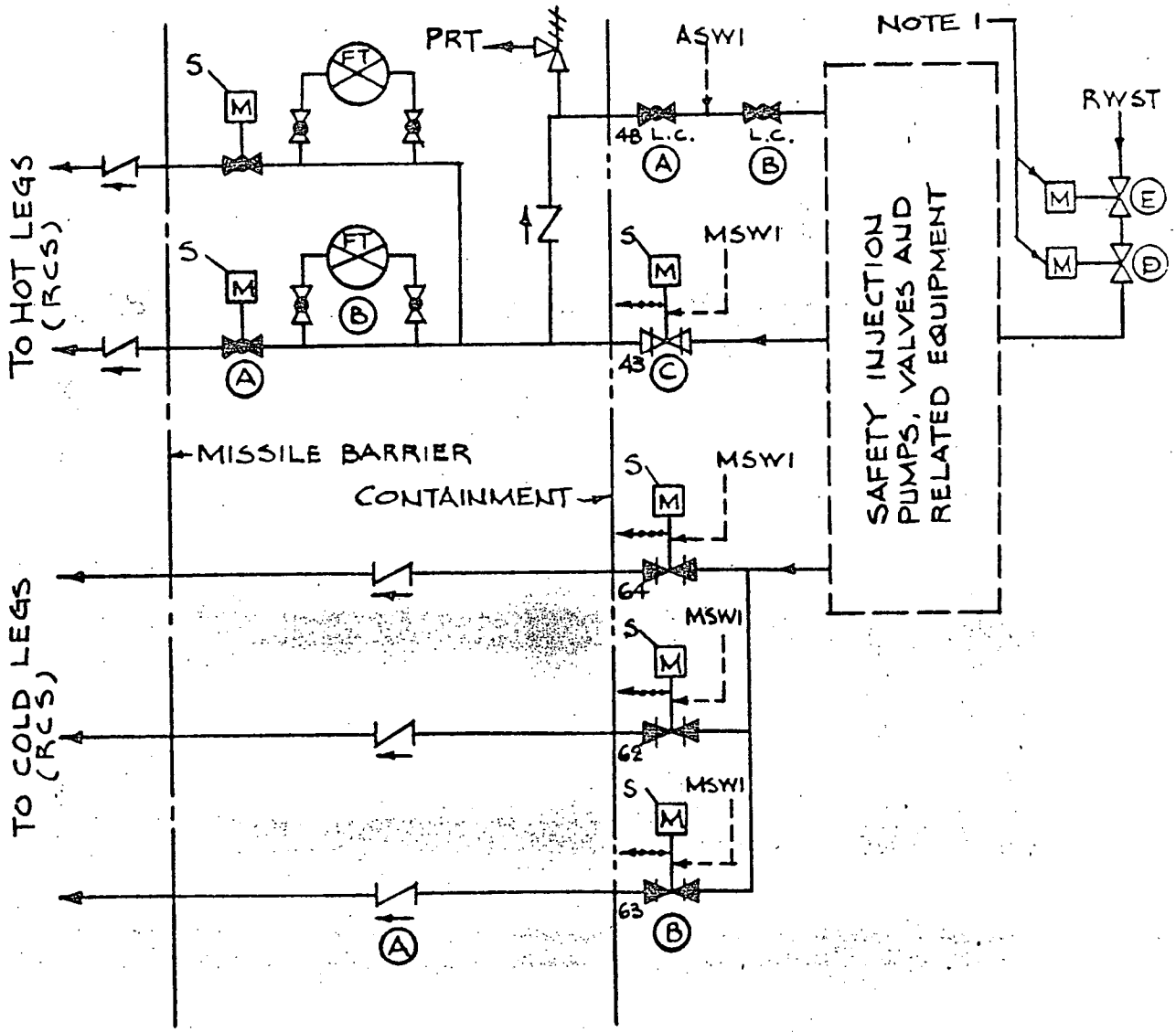

NOTE 1 – THESE VALVES CLOSED BY OPERATOR AFTER RWST HAS BEEN EMPTIED BY SAFETY INJECTION

NOTE 2 – SAFETY INJECTION PUMPS AND ASSOCIATED VALVES (EXCEPT CONTAINMENT ISOLATION VALVES SHOWN ABOVE) ARE LOCATED IN ROOM WITH VENTILATION EXHAUST THROUGH CHARCOAL FILTERS FOLLOWING ACCIDENT.

NOTE 3 – ENTIRE SYSTEM IS SEISMIC CLASS 1

FIGURE 5.2.2-15

PENE. NOS. 44, 45 - CONTAINMENT SPRAY HEADERS

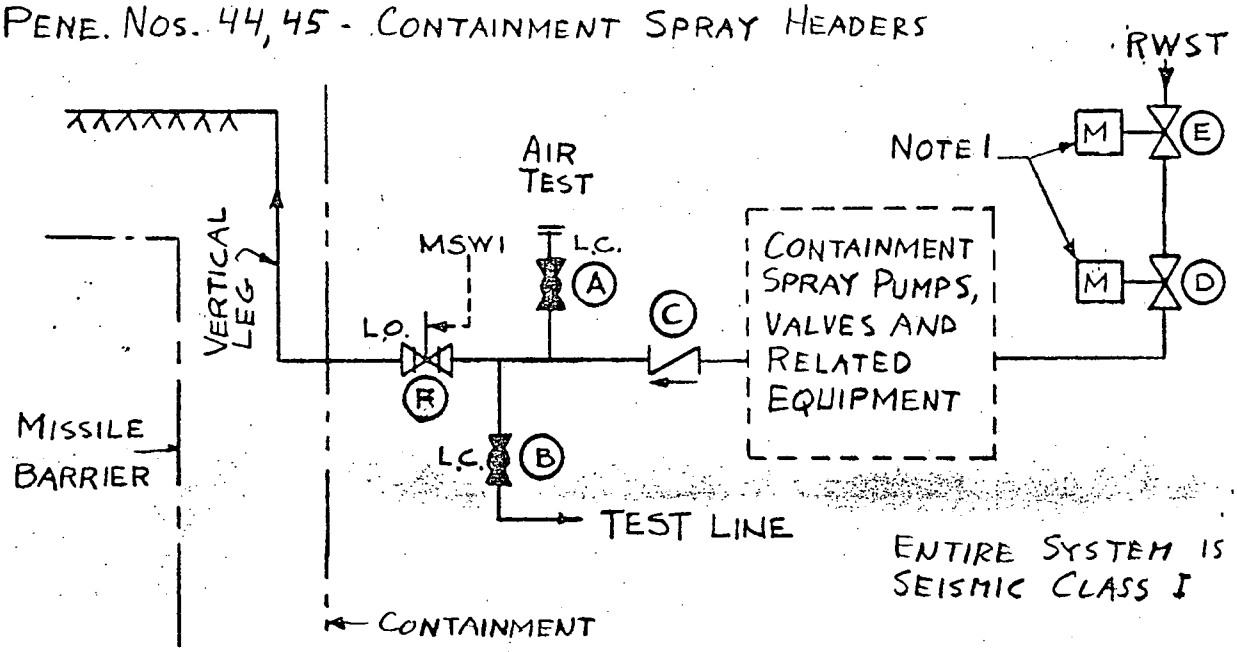

NOTE 1 - THESE VALVES CLOSED BY OPERATOR AFTER RWST HAS BEEN EMPTIED BY SAFETY INJECTION.

NOTE 2 - CONTAINMENT SPRAY PUMPS AND ALL ASSOCIATED VALVES EXCEPT D, E AND F LOCATED IN ROOM WITH VENTILATION EXHAUST THROUGH CHARCOAL FILTERS FOLLOWING ACCIDENT.

PENE. NOS. 49, 50, 51, 52 - VENTIL. SYSTEM COOLING WATER IN
PENE. NOS. 53, 54, 55, 56 - VENTIL. SYSTEM COOLING WATER OUT - COILS
PENE. NOS. 53A, 54A, 55A, 56A - VENTIL. SYSTEM COOLING WATER OUT - FAN MOTOR

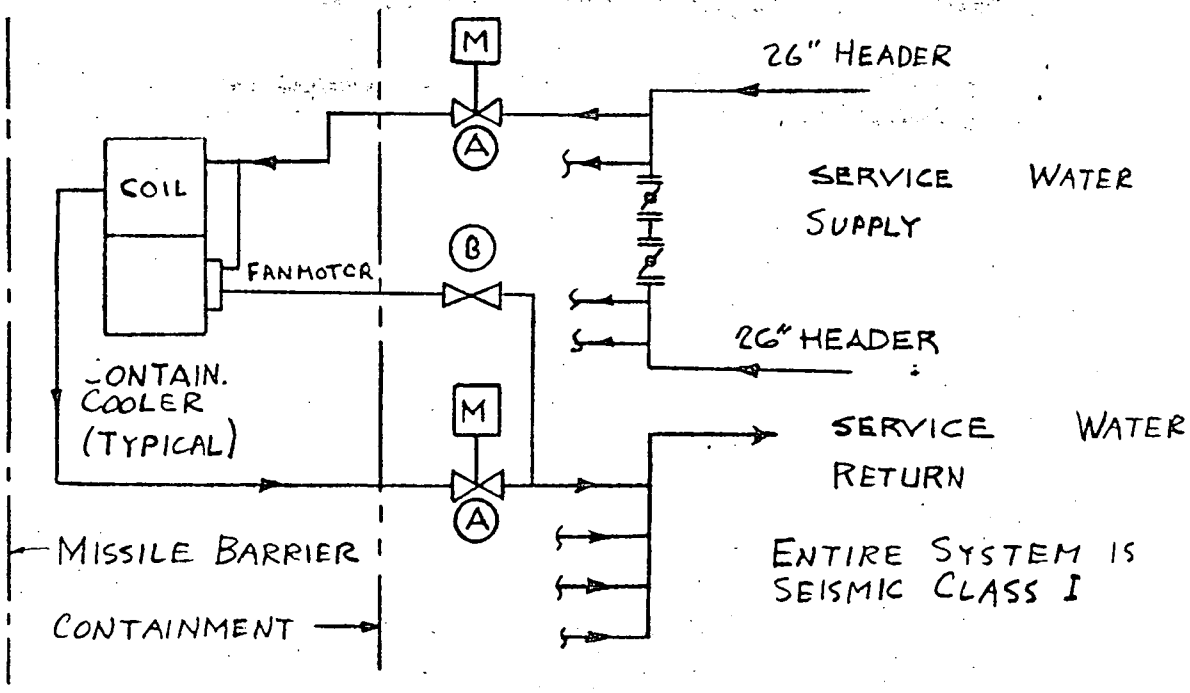

FIGURE 5.2.2-16

PENE. NO. 61 - CONTAINMENT SUMP PUMPS DISCHARGE LINE

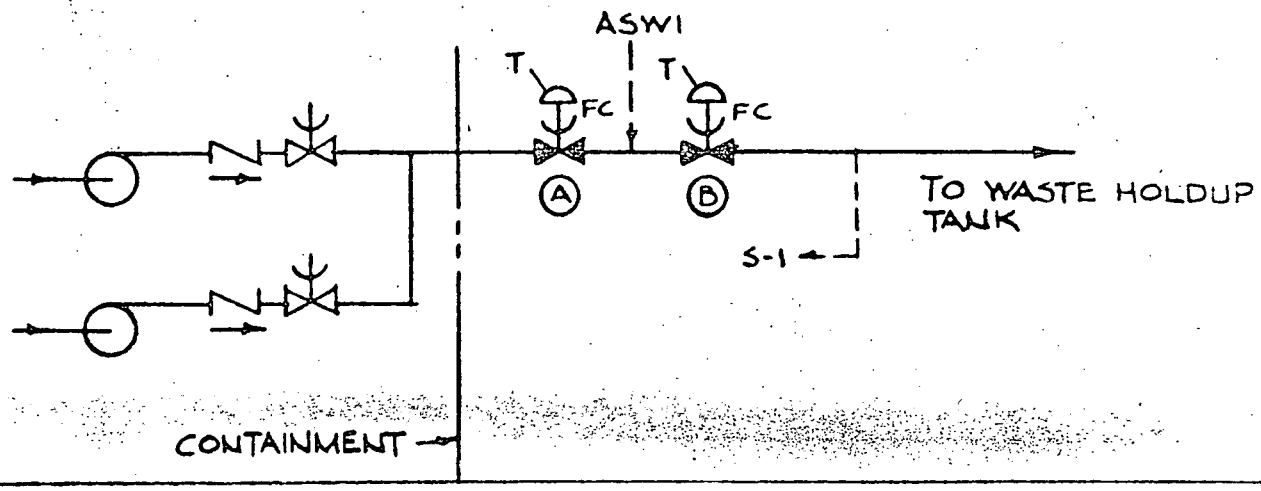

PENE. NO. 65 - ACCUMULATOR NITROGEN SUPPLY

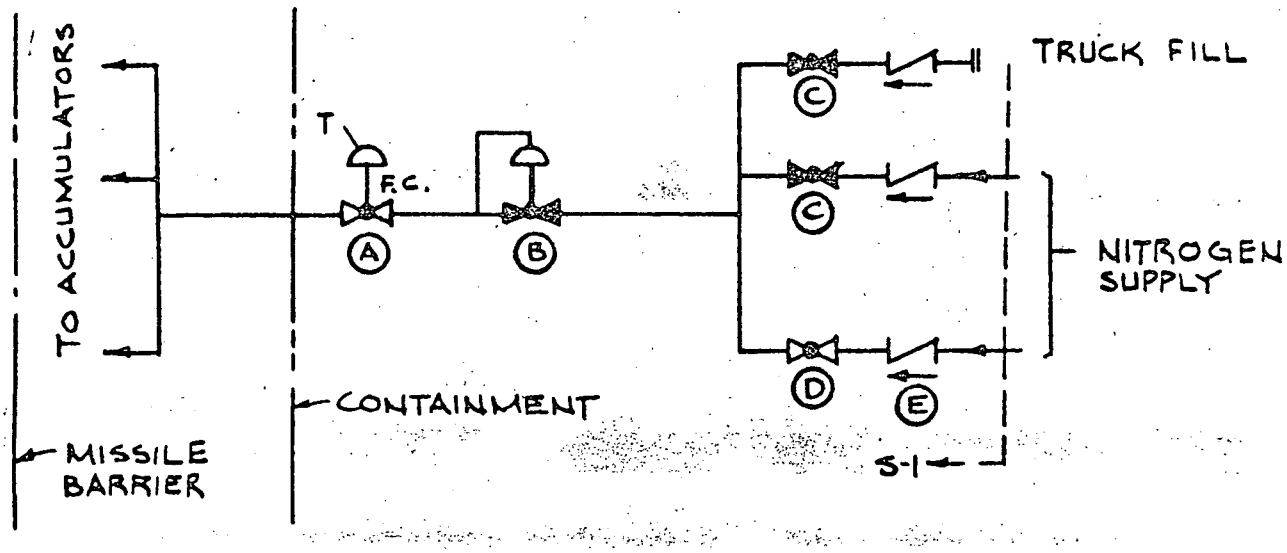

PENE. NO. 72 - DEADWEIGHT TESTER LINE

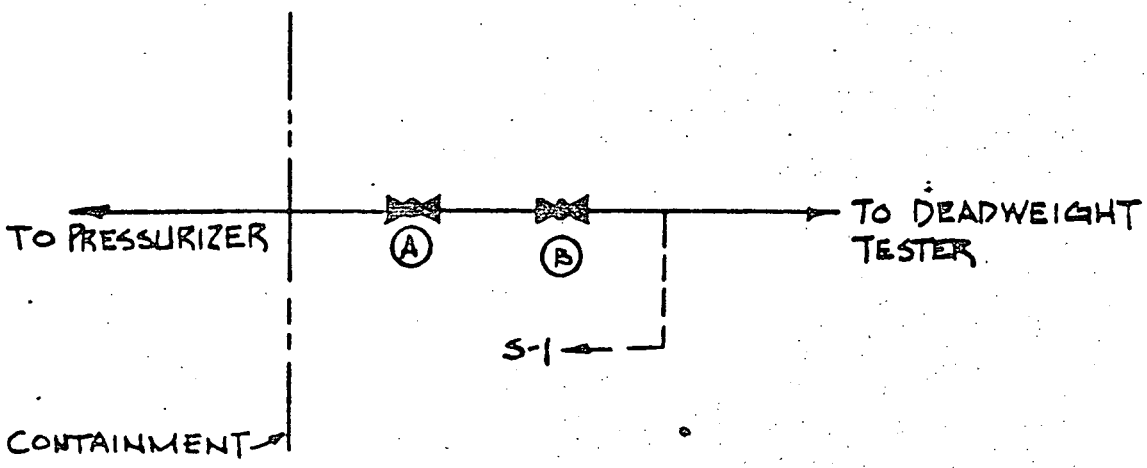

FIGURE 5.2.2-17

6 Penetration Numbers 68, 69, 70

CONTAINMENT PRESSURE
SENSING LINES

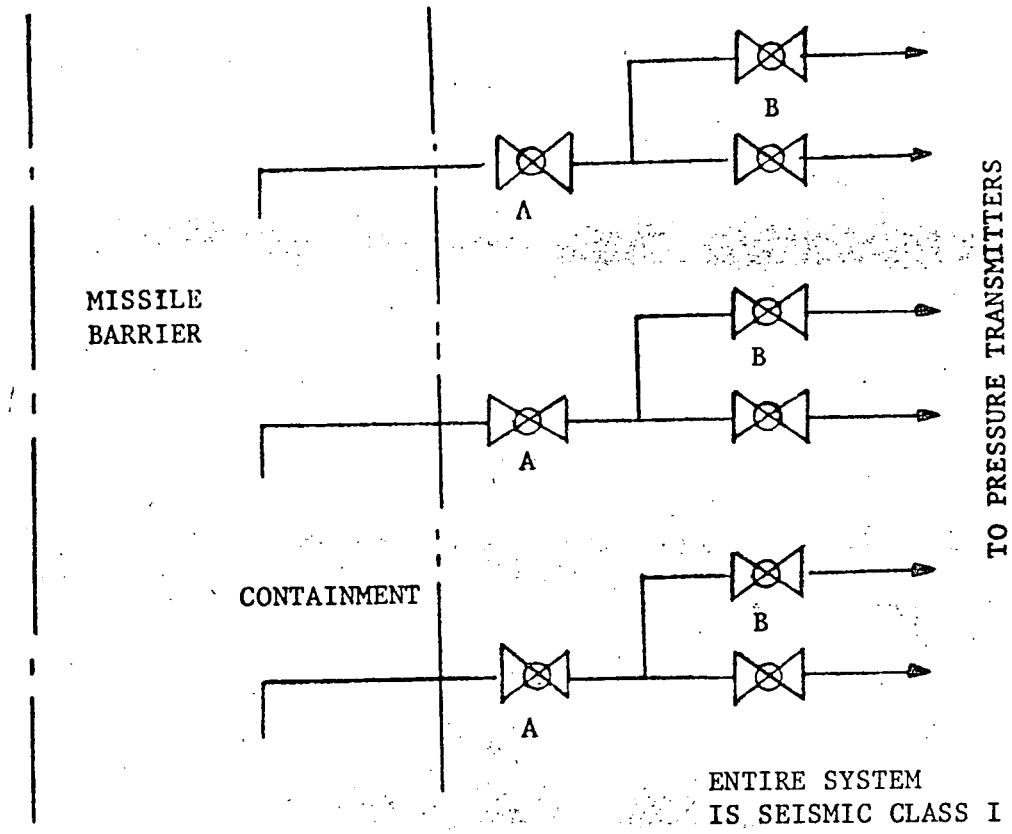

6

Penetration No. 66 - Containment Test Channel Line

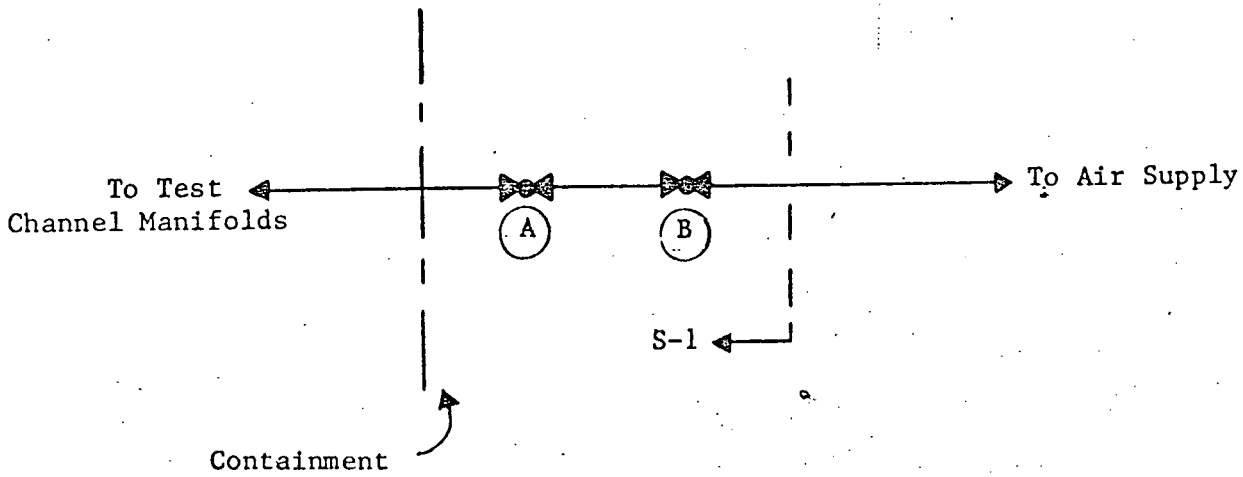

Figure 5.2.2-18 Amendment 5, 6

PENE. NOS. 71 PENETRATION PRESSURIZATION SYSTEM AIR SUPPLY

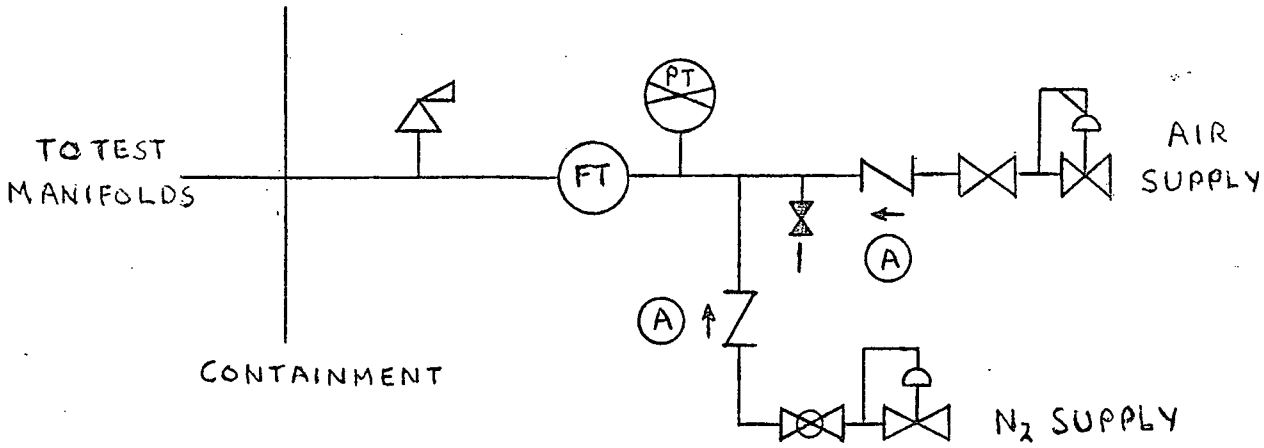

ENTIRE SYSTEM IS SEISMIC CLASS I

PENE. NOS. 67 CONTAINMENT CONTROLLED LEAK

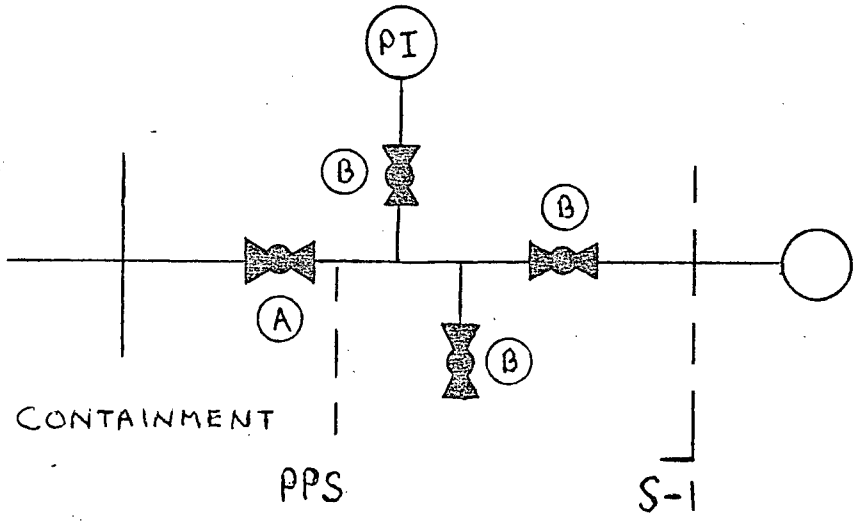

FIGURE 5.2.2-18A

Amendment 6

Legend:

DH - Drain Header
V - Atmosphere Vent
PMW - Primary Makeup Water
SW - Service Water

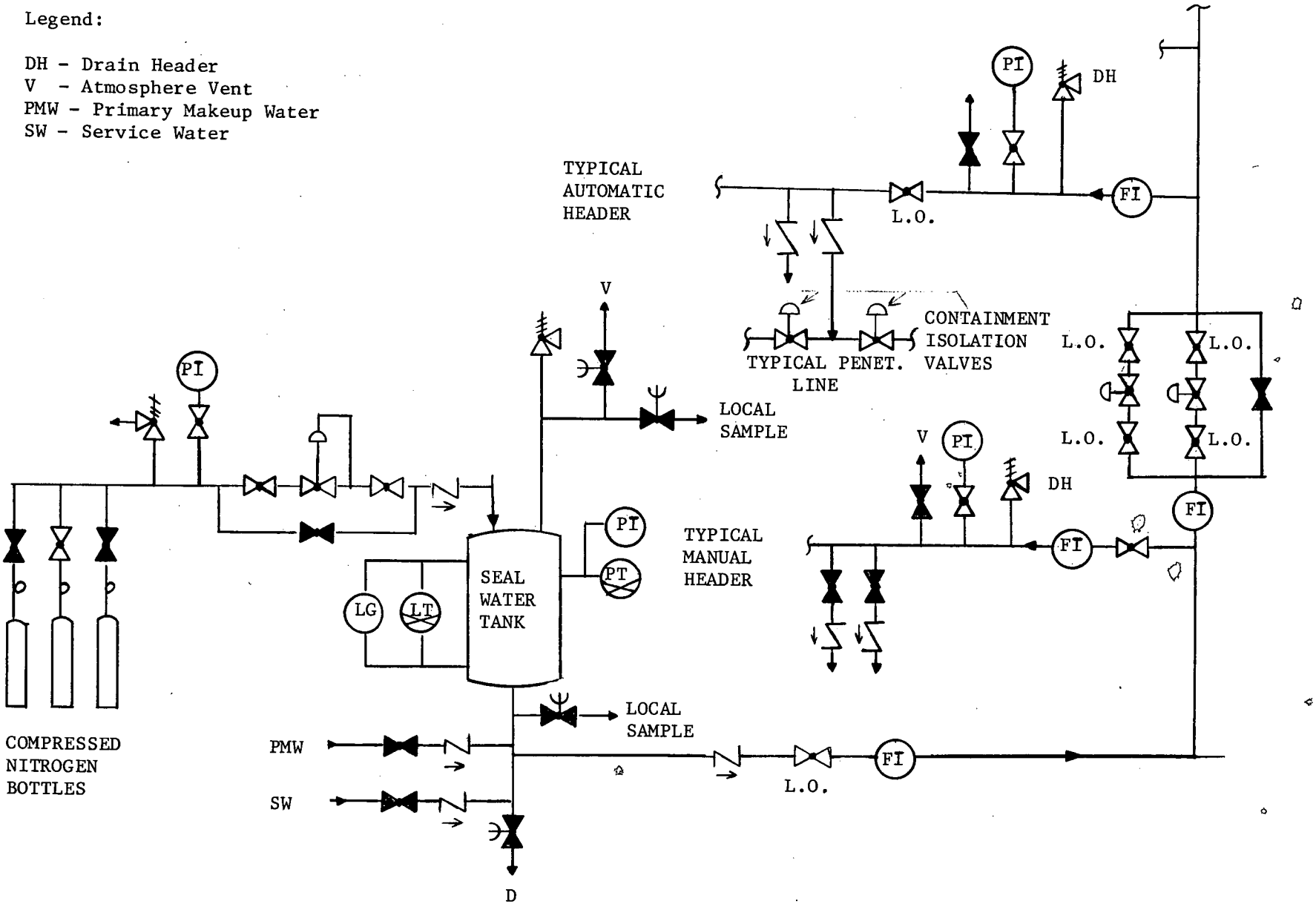

H. B. ROBINSON UNIT NO. 2
ISOLATION VALVE SEAL WATER SYSTEM

FIGURE 5.2.2-19

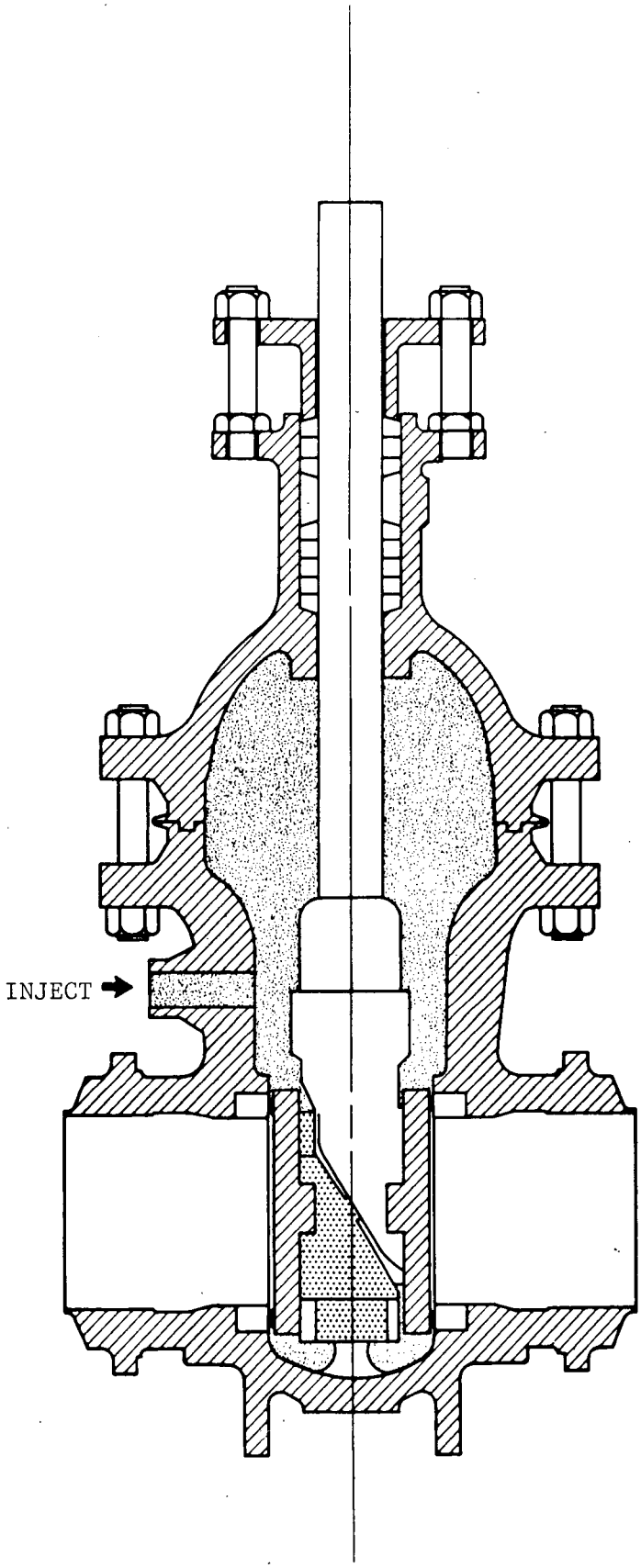

DOUBLE DISK ISOLATION VALVE WITH SEAL WATER INJECTION

FIGURE 5.2.2-20

LEGEND

FOR SYMBOLS USED ON FIGURES 5·2-1 THROUGH 5·2-16

VALVES

- GLOBE
- DIAPHRAGM
- GATE
- DOUBLE DISC GATE
- CHECK
- BUTTERFLY
- SAFETY OR RELIEF
- SELF CONTAINED PRESSURE REGULATOR
- NEEDLE

OPERATORS

- AIR DIAPHRAGM
- AIR CYLINDER
- M — MOTOR
- S — SOLENOID

DARKENED SYMBOL INDICATES NORMALLY CLOSED VALVE

VALVE STEM LEAKOFF

NOTATION

T - TRIPPED BY CONTAINMENT ISOLATION SIGNAL, PHASE A
P - TRIPPED BY CONTAINMENT ISOLATION SIGNAL, PHASE B
ASWI - AUTOMATIC SEAL WATER INJECTION
MSWI - MANUAL SEAL WATER INJECTION
NO - NORMALLY OPEN
NC - " CLOSED
FO - FAIL OPEN
FC - " CLOSED
LO - LOCKED OPEN
LC - " CLOSED
PRT - PRESSURIZER RELIEF TANK
RWST - REFUELING WATER STORAGE TANK
DT - REACTOR COOLANT DRAIN TANK
S-I - SEISMIC CLASS I
S - SAFETY INJECTION SIGNAL

FIGURE 5.2.2-21

5.3 REACTOR CONTAINMENT VENTILATION SYSTEM

The primary purpose of ventilation is to reduce personnel exposure to air borne radioactive contaminants and to prevent equipment excessive operating temperatures.

The reactor containment ventilation systems do not introduce any outside air to the containment during reactor operation. Except for infrequent releases which may be required due to leakage from the Instrument Air System or Penetration Pressurization System, the system does not exhaust any containment air to the atmosphere during reactor operation. Following a loss of coolant accident, the Containment Recirculation Cooling System is used to control the containment atmosphere temperature and pressure.

5.3.1 DESIGN BASIS

5.3.1.1 Performance Objectives

The ventilating systems are designed to accomplish the following:

a) Remove the normal heat loss from all equipment and piping in the reactor containment during plant operation and to maintain a temperature of 120°F or less inside the containment with 95°F cooling water with three out of four fans operating.

b) Provide sufficient air circulation and filtering throughout all containment areas to permit safe and continuous access to the reactor containment within two hours after reactor shutdown assuming defects exist in 1 percent of the fuel rods.

c) Provide for positive circulation of air across the refueling water surface to enhance personnel access and safety during shutdown.

d) Provide for purging of the containment vessel to the plant vent for dispersion to the environment. The rate of release does not permit off-site dose to exceed one-tenth of that permitted by 10 CRF 20.

e) To remove heat generated by the control rod drive mechanisms.

f) Provide cooling for the reactor vessel and primary concrete shield.

g) Reduce the concentration of radioactive iodine and other particulate matter in the containment atmosphere to permissible levels for purging and personnel access.

h) Provide for routine containment building pressure and vacuum relief as required during normal power operation.

i) Provide for depressurization of the containment vessel following an accident. The post-accident design and operating criteria are detailed in Section 6.3.

5.3.1.2 List of Component Systems

In order to accomplish these objectives the following systems are provided:

a) Containment Recirculation Cooling System
b) Control Rod Drive Mechanism Cooling System
c) Reactor Compartment Cooling System
d) Reactor Support Cooling System
e) Refueling Water Surface Purge System
f) Containment Charcoal Auxiliary Filter System
g) Containment Purge System
h) Containment Pressure and Vacuum Relief System

5.3.1.3 Design Characteristics - Sizing

The design characteristics of the equipment required in the containment for cooling, filtration and heating to handle the normal thermal and air cleaning loads during normal plant operation are presented in Table 5.3.1-1. In certain cases where engineered safety features functions also are served by the equipment, component sizing is determined from the heavier duty specifications associated with the design basis accident (DBA), detailed further in Section 6.3.

TABLE 5.3.1-1A

PRINCIPAL COMPONENT DATA SUMMARY

System	Units Installed	Unit Capacity	Units Required for Normal Operation	Units Required for MCA Operation
Containment Air Recirculation Cooling Units	4 recirc. unit assemblies		3 recirc. unit assemblies	2 recirc. unit assemblies
Prefilters - Normal - 56 per recirc. unit	224	1,520 cfm	168	-
Cooling Coils - Normal - 6 per recirc. unit	24	292,000 Btu/hr	18	-
Cooling Coils - MCA - 6 per recirc. unit	24	6,667,000 Btu/hr (minimum)	-	12
Fan - 1 per recirc. unit	4	85,000 cfm	3	2
Fan Pressure - Normal	-	6.0 in. WG	3	-
Fan Pressure - MCA	-	26.0 in. WG max.	-	-
Fan Motor - 1 per recirc. unit	4	350 hp	3	2
Control Rod Drive Mechanism Cooling				
Cooling Coils	3	544,000 Btu/hr	3	-
Fans	2	35,000 cfm	1	-
Fan Pressure - Normal	-	8.0 in. WG	-	-
Fan Motors	2	60 hp	1	-
Reactor Compartment Cooling				
Fans	2	15,450	1	-
Fan Pressure - Normal	-	3/4 in. WG	-	-
Fan Motors	2	7-1/2 hp	1	-
Reactor Support Cooling				
Fans	2	9,000 cfm	1	-
Fan Pressure - Normal	-	7 in. wg	-	-
Fan Motor	2	15 hp	1	-
Refueling Water Surface Purge	-	8,000 cfm via "Purge Exhaust System"		
Ductwork	-	-	-	-

TABLE 5.3.1-1B

PRINCIPAL COMPONENT DATA SUMMARY

System	Units Installed	Unit Capacity	Units Required for Normal Operation	Units Required for MCA Operation
Containment Charcoal Auxiliary Filter				
HEPA Filters - 6 per assembly	12	833 cfm	6	-
Charcoal Filters - 6 per assembly	12	833 cfm	6	-
Fans - 1 per assembly	2	5,000 cfm	1	-
Fan Pressure	2	3-1/2 in. wg	1	-
Fan Motor - 1 per assembly	2	5 hp	1	-
Purge Supply				
Outdoor Air Intake	1	35,000 cfm	1	-
Prefilters	36	972 cfm	36	-
Heating Coils	3	755,000 Btu/hr	3	-
Purge Exhaust				
Fans	2	35,000 cfm	1	-
Fan Pressure	2	8-1/2 in. wg	1	-
Fan Motor	2	75	1	-
Containment Pressure Relief				
HEPA Filters	1	1,000 cfm	1	-
Charcoal Filters	1	1,000 cfm	1	-

5.3.2 DESCRIPTION OF COMPONENT SYSTEMS

5.3.2.1 Containment Air Recirculation Cooling System

The Reactor Containment Air Recirculation Cooling System consists of four air handling units located adjacent to the containment wall above the operating deck.

Each air handling unit includes roughing filters, water cooling coils, and a motor driven centrifugal non-overloading fan.

Each unit draws air from the containment atmosphere and discharges to a header from where it is distributed through ductwork to the individual areas. In operating units the air is drawn through the roughing filters, open inlet louver and cooling coils by the unit fan, which discharges through an open outlet louver to a main distribution header.

The distribution system is arranged to ensure against short circuiting the air flow back to the unit inlet. Air is never drawn directly into the unit from inside the reactor coolant loop compartments.

The cooling coils of each air handling unit are capable of removing 1.75×10^6 Btu/hr during the normal plant operation and 40×10^6 Btu/hr at design basis accident conditions when supplied with 800 gpm of cooling water at 95°F. Coils are provided with adequate drain pans to collect the condensate and conduct it to the containment sump.

The Recirculation Cooling units, ductwork and accessories are designed as Class I structures, and are designed to possess sufficient margin to withstand an over-rated condition of 63 psig and 290°F for one hour without loss of operability. No specific criteria for heat removal

capability are applied at the over-rated condition. The equipment is designed to operate at the post-accident conditions at 42 psig and 263°F for three hours, followed by operation in an air-steam atmosphere at 20 psig, 200°F for an additional 21 hours. The equipment design will permit subsequent operation in an air-steam atmosphere at 5 psig, 155°F for an indefinite period.

The fans are designed for single speed operation with a capacity of 85,000 scfm for normal and 65,000 cfm for accident operating conditions. However, since the density of the air steam mixture at the accident conditions is much greater than at normal conditions, fan power requirements at accident conditions are considerably greater than at normal operating conditions. The fan motors are sized for the accident conditions.

5.3.2.2 Control Rod Drive Mechanism Cooling System

Air from the containment atmosphere is drawn downward through a cooling shroud surrounding the control rod drive mechanisms to absorb heat generated by the mechanisms. The system consists of ductwork, water cooled heat exchanger and two 100% capacity exhaust fans. The air is drawn from the lower portion of the cooling shroud, cooled by the heat exchanger, and then discharged by the operating fan to the containment atmosphere.

5.3.2.3 Reactor Compartment Cooling and Reactor Support Cooling Systems

In order to remove heat from the reactor vessel and primary concrete shield, and to cool the nuclear instrumentation external to the reactor, a flow of air cooled by the Recirculation Cooling units is directed upward through the annulus between the surface of the reactor vessel and the primary concrete shield. A portion of this flow is drawn

through the reactor supports by the Reactor Support Cooling System and then exhausted to the containment. The remainder is released to the containment through the passages between the primary concrete shield and the vessel flange and hot and cold leg piping.

The Reactor Compartment Cooling System consists of ductwork connected to the Recirculation Cooling unit distribution header, two 100% capacity booster fans and discharge ductwork.

The Reactor Support Cooling System consists of cooling air passages in the reactor supports, connected to an exhaust ductwork system penetrating the primary concrete shield. One of two 100% capacity exhaust fans maintains cooling air flow through this system.

5.3.2.4 Refueling Water Surface Purge System

This system consists of air intakes located above the refueling water surface around the refueling canal and reactor cavity, with exhaust ductwork penetrating the refueling canal concrete walls to connect to the Purge Exhaust System ductwork. During refueling, flow through the purge exhaust ductwork inside containment is throttled by a motor operated damper and simultaneously the motor operated damper in the Refueling Water Surface Purge System branch is opened, thus exhausting air from the refueling water surface to the plant vent via the Purge Exhaust System.

5.3.2.5 Containment Charcoal Auxiliary Filter System

This system consists of two 5000 cfm fan-filter units and is provided to remove radioactive iodine and other particulate activities released to the containment atmosphere via Reactor Coolant System leakage during normal power operation. Each unit consists of ductwork connecting to the Recirculation Cooling units distribution header, high efficiency particulate air (HEPA) filters, charcoal filters and an exhaust fan, discharging between the containment wall and secondary shielding.

During power operation, the containment particulate and radiogas monitor indications will guide operation of either one or both of these units for pre-access cleanup or prior to purging.

5.3.2.6 Containment Purge System

a) The Containment Purge System is designed to exhaust 35,000 cfm of containment air to the atmosphere. The system capacity is based on a volumetric change in one hour so that an effective purge of the containment within two hours can readily be accomplished. The system function independently of the Auxiliary Building Exhaust System, and includes both purge supply and purge exhaust sections.

b) The purge supply system consists of an outdoor air intake complete with motorized damper, prefilters and heating coils, and a supply duct penetrating containment which includes butterfly valves for isolation.

c) The purge exhaust system includes an exhaust duct penetrating containment which includes butterfly valves for isolation, exhaust ductwork, and two 100% capacity purge exhaust fans. The exhaust ductwork is connected to the suction side of the purge exhaust fans which are located in the Auxiliary Building. The Auxiliary Building Exhaust System discharges to the plant vent directly to avoid any interconnection between the two systems.

d) The supply and exhaust penetrations through the containment are each equipped with quick closing, tight seating, 125 psi air operated butterfly valves both inside and outside the containment. These valves are designed to fail closed on loss of control signal

or control air, and are closed during normal plant operation. The sections of the ducts between the closed butterfly valves are pressurized to a pressure slightly higher than containment design pressure by the Penetration Pressurization System. Interlocks automatically prevent admission of pressurization air to the spaces unless the butterfly valves are closed.

Prior to activating the purge system after shutdown, the containment particulate and gas monitor will be used to indicate the airborne activity levels inside the containment, as a guide for routine release from the building.

5.3.2.7 Containment Pressure and Vacuum Relief System

Normal power operation will be conducted with the closed containment building at essentially atmospheric pressure. The Containment Pressure and Vacuum Relief System is provided to control variations in containment pressure with respect to atmospheric pressure, due to changes in atmospheric pressure and to leakage from the Instrument Air and Penetration Pressurization Systems.

This system includes separate 6-inch lines penetrating the containment, each equipped with two quick closing, tight seating, 125 psi air operated butterfly valves, one inside and one outside containment. These valves are designed to fail closed on loss of control signal or control air, and are closed during normal plant operation, except as required for pressure control. The sections of these lines between the closed butterfly valves are pressurized to a pressure slightly higher than the containment design pressure by the Penetration Pressurization System. Interlocks prevent admission of pressurization air to the spaces unless the butterfly valves are closed.

The pressure relief line discharges to the plant vent through a high efficiency particulate air (HEPA) filter and a charcoal filter, for removal of particulate and halogen radioactivity from the vented air.

Operation of the pressure and vacuum relief lines is manually controlled by the plant operator. A narrow range pressure transmitter continuously indicates containment pressure in the control room. Separate high and low pressure alarms are actuated by this transmitter to alert the operator to overpressure and vacuum conditions. These alarms are tentatively set for actuation at plus and minus 0.3 psig. Vacuum relief can be accomplished without regard to atmospheric conditions. In the event of pressure buildup, the operator will be guided by atmospheric conditions, and by the containment particulate and radiogas monitor in relieving the overpressure.

Manual operation of both these lines is overridden by automatic containment isolation and containment high radioactivity signals.

5.3.3 HVAC FLOW DIAGRAM AND INSTRUMENTATION

5.3.3.1 Ventilation Systems Flow Diagram

The conceptual design of the plant ventilation system is shown on Figure 5.3.3-1. The overall system is divided into the following component systems: (a) Condenser air ejector to plant vent; (b) Turbine Building ventilation; (c) Reactor Containment Building ventilation; (d) Reactor Auxiliary Building ventilation; (e) Control Room Ventilation; (f) Fuel Handling Building ventilation; and (g) Relay Room No. 2 and Cable Room No. 2 ventilation.

The systems shown on Figure 5.3.3-1 are schematically represented to indicate flow paths and equipment arrangements. The basic design is predicated on the criterion of controlling the direction of air flow to insure that potentially contaminated areas are maintained at negative pressures and the exhaust therefrom is directed to the plant vent for discharge. This criterion further enhances proper operation since the plant vent effluent is continuously monitored, and high level activity can be traced to determine source, promote isolation, and effect a remedy.

5.3.3.2 Instrumentation - General

All actuators are remotely controlled from the control room by the operator except where automatic interlocks are involved. All actuators are designed to fail to the position required for post-accident operation upon loss of electric or pneumatic power. Instrumentation in the control room will provide information to allow proper remote operation of the system.

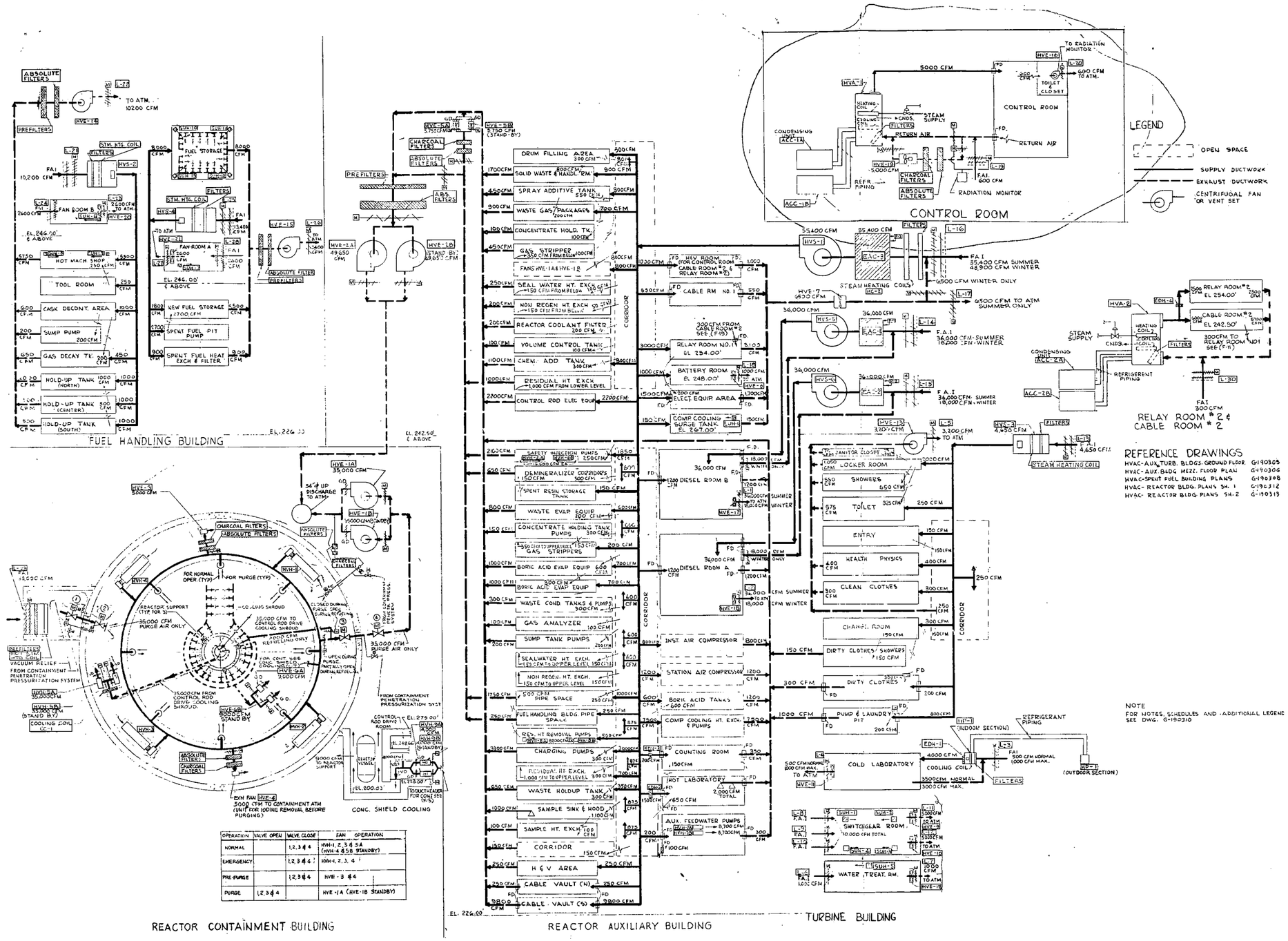

OPERATION	VALVE OPEN	VALVE CLOSE	FAN OPERATION
NORMAL		1,2,3 & 4	HVH-1, 2, 3 & 5A (HVH-4 & 5B STANDBY)
EMERGENCY		1,2,3 & 4	HVH-1, 2, 3, 4
PRE-PURGE		1,2,3 & 4	HVE-3 & 4
PURGE	1,2,3 & 4		HVE-1A (HVE-1B STANDBY)

HVAC - FLOW DIAGRAM
FIGURE 5.3.3-1

5.4 CONTAINMENT PENETRATION PRESSURIZATION SYSTEM

5.4.1 DESIGN BASES

The Containment Penetration Pressurization System provides means for continuously pressurizing in the event of a loss-of-coolant accident above maximum containment post-incident pressure the positive pressure zones incorporated into the containment penetrations. Although no credit is taken for system operation in calculation of off-site accident doses, it is designed as a Class I system and provides assurance that the containment leak rate in the event of an accident is lower than that assumed in the accident analysis. The system is designed to provide a means of continuously monitoring the leakage status of the containment penetrations.

5.4.2 SYSTEM DESIGN AND OPERATION

5.4.2.1 System Description

The Containment Penetration Pressurization System is shown in Figure 5.4.2-1. The system utilizes a regulated supply of clean and dry compressed air from the instrument air system, which is backed up by the service air system, to pressurize all containment penetrations. The system maintains a pressure in excess of containment design pressure continuously during all reactor operations thereby ensuring that there will be no out-leakage of the containment atmosphere through the penetrations during an accident. Typical piping and electrical penetrations are described in Section 5.2.

The primary source of air for this system is the 100 psig instrument air system (Section 9). Two instrument air compressors are used, although only one is required to maintain pressurization at the maximum allowable leakage rate of the pressurization system. The service air compressor acts as a backup to the instrument air compressors (Section 9).

A standby source of gas pressure for the system is provided by a bank of nitrogen cylinders. These will automatically deliver nitrogen at a slightly lower pressure (approximately 44 psi) than the normal regulated air supply pressure of approximately 46 psig. Thus, in the event of failure of the normal and backup air supply systems during periods when the system is in operation, the penetration pressure requirements will be automatically maintained by the nitrogen supply. This assures reliable pressurization under both normal and accident conditions.

Leakage from the system and potential leakage from penetrations is determined by continuous measurement of the air flow.

Containment penetrations are grouped into four independent zones to simplify the process of locating leaks during operation. Each such zone is served by its own air receiver. In the event that all normal and backup air supplies are lost, each of the four pressurization system zones continues to be supplied with air from its respective air receiver. Each of the air receivers, Table 5.4.2-1, is sized to supply air to its pressurized zone for a period of at least four hours, based on a leakage rate of 0.2% per day of the containment free volume of 2.1×10^6 cu. ft. (0.1% per day leakage into the containment and 0.1% per day leakage to the environment).

If the receivers become exhausted before normal and backup air supplies can be restored, nitrogen from the bank of pressurized cylinders will be supplied to the affected zones. The nitrogen bank is sized to provide a 24 hour supply of gas to the system, again based on a total leakage rate from the pressurization system of 0.2% of the containment free volume in 24 hours. The nitrogen supply will also automatically assume the pressurization gas load in the event an air receiver fails.

A pressure relief valve set at 55 psig protects the system from failure of the pressure reducing valve in the line to each zone from the bank of nitrogen cylinders. The main air supply header in each zone of piping is also protected by a pressure relief valve, set to open at 55 psig. Pressure control valves, isolation valves and check valves are located outside of the containment for ease of inspection and maintenance. Failure of any of these components, except the locked-open manual shut-off valves at each penetration, does not lead to loss of pressure in the system since backup systems automatically augment the normal air supply.

The line to each of the four pressurized zones is equipped with a restricting orifice to assure that air consumption will be within the capacity of the system. High air consumption in one zone cannot affect the operation of the other zones under any circumstances.

Pressurization of each penetration can be verified by closing off its air supply line, and opening a test connection at the penetration to observe the escape of the pressurizing medium.

5.4.2.2 Pressure Indication

To ensure that the operators are aware at all times that all penetrations are pressurized, each of the four independent pressurized zones is provided with the instrumentation described below.

a) Pressure gauges, mounted outside the containment for ready accessibility and available for regular reading.

b) Pressure transmitters, to provide remote pressure indication and remote low pressure alarms in the central control room.

Individual penetrations are also provided with pressure test connections and shut-off values for isolation and verification of the pressurization and leak-tightness of each penetration.

5.4.2.3 Personnel Air Lock Interlock

Continuous pressurization of air lock door double-gasketed barriers and the protection of the pressurization header against air loss are assured by a set of interlocks. One interlock on each air-lock door prevents opening of the door until the pressurization line is isolated and pressure in the double-gasketed closure is relieved to atmosphere. This prevents excessive leakage from the pressurization system. The pressurization line to this zone is also equipped with a restricting orifice to assure that air consumption, even upon failure of the interlock, will be within the capacity of the pressurization system, and will not result in loss of pressure in other zones connected to the same pressurization header. Another set of interlocks prevents opening of one air lock door until the double-gasketed zone on the other door is re-pressurized.

5.4.2.4 Containment Purge Line Interlock

The containment ventilation purge penetration butterfly valves are also interlocked to prevent the opening of either valve until the pressurization line to the space between the valves has been isolated. Isolation of the pressurization line to each purge duct pressurized zone can be accomplished remotely from the central control room. Alarm lights, prominently displayed on a panel indicating the isolation status of the containment, remain lit identifying an open purge duct isolation valve or a low pressurization zone pressure. Restricting orifices are installed in each pressurization line to the ventilation purge ducts to assure that air consumption, even on failure of an interlock, will not result in loss of pressure to the other zones connected to the same pressurization header.

The containment pressure relief line and vacuum relief line isolation valves (two butterfly valves in series), and the pressurized spaces formed between these valves, are provided with similar interlocking to prevent the opening of any of the butterfly valves until the inter-valve space has been depressurized. The pressurization lines to these spaces are also equipped with flow restricting orifices, and alarm lights in the containment identify open valves or low inter-valve space pressure.

5.4.2.5 Containment Inleakage

With a continuous inleakage to the containment from the penetration pressurization system of .02% of the containment volume per day, the calculated
6 time for the containment pressure to rise by 0.3 psig is approximately 25 days and therefore is not considered to be an operating or safety problem. From the standpoint of allowable pressure, a much greater inleakage would be permitted. The activity of the air in the containment is limited during normal operation through the use of two containment charcoal auxiliary filter units. Each unit contains HEPA and charcoal filters, and permits containment overpressure relief as required through the pressure

relief line to the plant vent. The containment pressure relief line is also equipped with HEPA and charcoal filters.

5.4.2.6 Components

All associated components, piping, and structures, of the Containment Penetration Pressurization System are designed to Class I Seismic criteria.

The piping and valves for the system are designed in accordance with the USAS Code for Pressure Piping (Power Piping Systems), B31.1.

For a description of the instrument air compressors and the service air compressors, refer to Service Air System, Section 9.

The nitrogen cylinders used are designed in accordance with Section VIII (Unfired Pressure Vessels) of the ASME Boiler and Pressure Vessel Code, for 2200 psig maximum pressure, and contain a total of 17,350 scf of nitrogen.

TABLE 5.4.2-1

CONTAINMENT PENETRATION

PRESSURIZATION AIR RECEIVERS

Material	ASTM A-285-C
Design pressure, psig	140
Design temperature, °F	200
Operating pressure, psig	100
Operating temperature, °F	100
Code	ASME UPV (Sect. VIII)

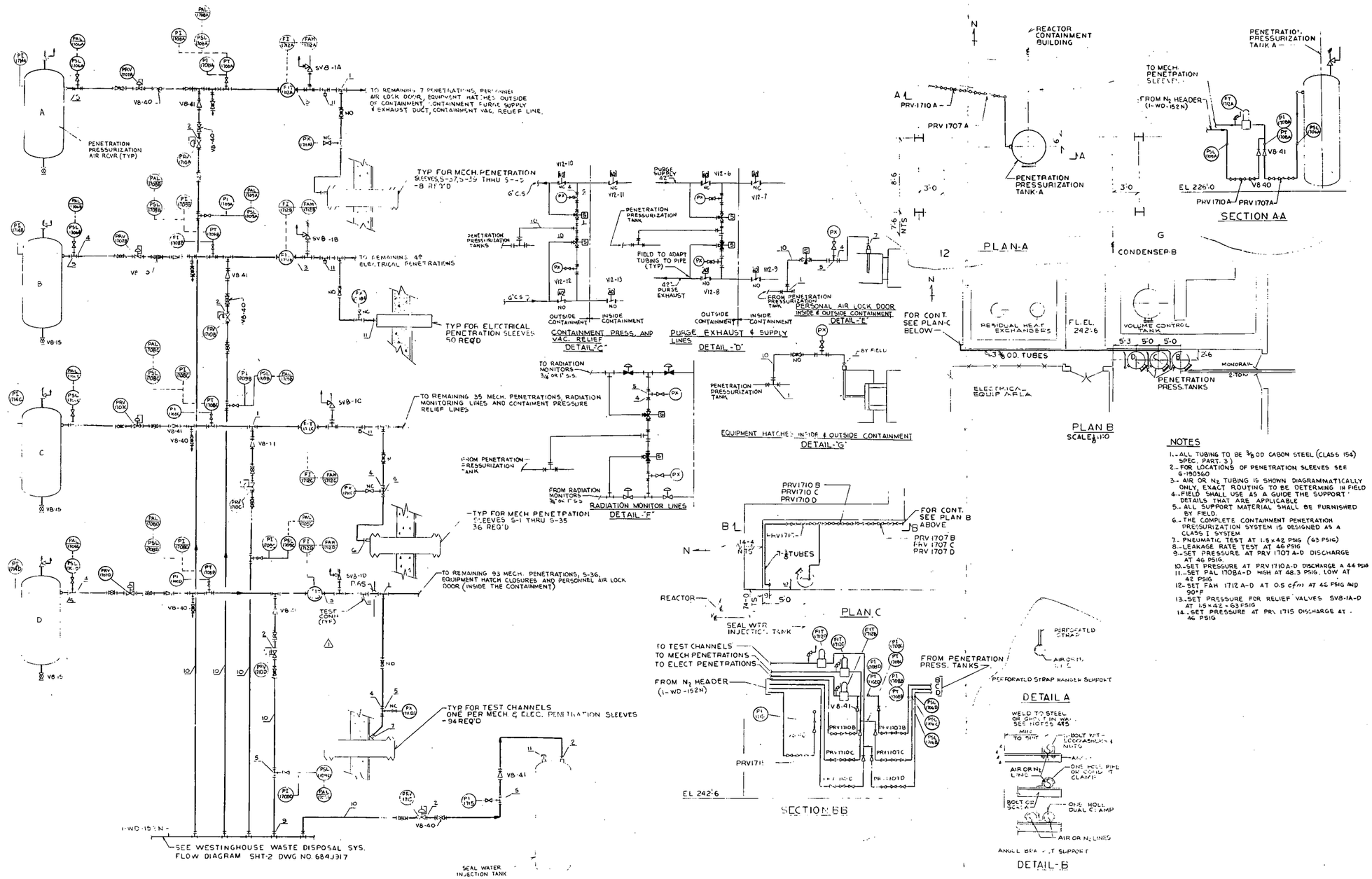

G 190 261

CONTAINMENT PENETRATION PRESSURIZATION SYSTEM
FIGURE 5.4.2-1

5.4.3 DESIGN EVALUATION

The employment of this system following a loss-of-coolant accident, while not considered for analysis of the consequences of the accident, provides an additional means for ensuring that leakage is minimized if not altogether eliminated. No detrimental effect on any safety features system will be felt should the pressurization system fail to operate.

5.4.3.1 System Response

Since the Containment Penetration Pressurization System is continuously pressurized above the containment design pressure during all reactor operations, there is no response time required for the system to operate.

The exact number of individual pressurization points is not determined at this time, but, as an example, assume that there are 200 points, each supplied by one of four pressurizing headers. Each plenum can be isolated and its leak tightness measured by the absolute pressure-volume method. A leakage sensitivity of the order of 0.2 cu.ft./day/penetration at design pressure can be readily obtained in this way. The aggregate sensitivity for all penetrations, when estimated by this method, is about 40 cu.ft./day. The absolute accuracy of this test method is highly variable, especially if tests are made during reactor operation, due to non-isothermal conditions in the penetrations. On the average, an accuracy of $\pm$ 40 cu.ft./day is a reasonable estimate, which would correspond to $\pm$ 0.002% of the net containment volume per day in this plant.

5.4.3.2 Single Failure Analysis

A single failure analysis is presented in Table 5.4.3-1. The analysis shows that the failure of any single active components will not prevent fulfilling the design function of the system.

5.4.3.3 Reliance on Interconnected Systems

The Containment Penetration Pressurization System can operate and meet its design function without reliance on any other system, except as limited by air compressor availability following depletion of all reserves in the air receivers and backup nitrogen cylinders. Electric power is not necessary for operation of the system, although instrument power is required in order to provide indications in the control room of system operation.

5.4.3.4 Shared Functions Evaluation

Table 5.4.3-2 is an evaluation of the main components discussed previously and a brief description of how each component functions during normal operation and during an accident.

TABLE 5.4.3-1

SINGLE FAILURE ANALYSIS CONTAINMENT PENETRATION PRESSURIZATION SYSTEM

Component	Malfunction	Comments
Instrument Air Compressor	Fails to maintain pressure	One of two instrument air compressors required to operate. The service air compressor is available as backup.
Pressure Reducing Valve for each zone	Fails to maintain pressure	Pressure drops to 44 PSIG than pressure supply from PRV in the N_2 Supply line. Indication by local PI and by PI in the control room. Low pressure alarm at 42 PSIG.
Pressure Reducing Valve for each zone in air supply line or N_2 supply line	Fails and causes overpressurization	Relief Valve downstream to prevent overpressurization. Alarm will be given by abnormal flow and pressure in the Control Room. (High flow alarm at 0.5 SCRM.)

TABLE 5.4.3-2

SHARED FUNCTIONS EVALUATION

Component	Normal Operating Function	Normal Operating Arrangement	Accident Function	Accident Arrangement
Instrument Air Compressors (2)	Supply air to instruments and controls and to pressurized penetrations	2 air compressors in operation	Supply air to pressurized penetrations	1 air compressor in operation
Service Air Compressor (1)	Supply air to station air headers	1 air compressor in operation	"	1 air compressor in operation
N_2 Cylinders	Backup source of N_2 to maintain penetration pressure	Lined up to Penetration Pressurization System	Backup source of N_2 to maintain penetration pressure	Lined up to Penetration Pressurization System
Instrument Air Receivers (2) and Instrument Air Dryers (2)	Primary source of air for penetrations	Lined up to Penetration Pressurization System	Primary source of air for penetrations	Lined up to Penetration Pressurization System

5.4.4 INSPECTIONS AND TESTS

5.4.4.1 Inspections

The system components located outside the containment can be visually inspected at any time. Components inside the containment can be inspected during shutdown. All pressurized zones have provisions for either local pressure indication outside the containment or remote low pressure alarms in the control room.

5.4.4.2 Testing

Since the system is in operation continuously during all reactor operations to maintain the penetrations pressurized above containment design pressure, no special testing of system operation or components is necessary.

Should one zone indicate a leak during operation, the specific penetration or penetration weld channel containing the leak can be identified by isolating the individual air supply line to each component in the zone and injecting leak test gas through a capped tube connection installed in each line.

Total leakage from penetrations and weld channels is measured by summing the recorded flows in each of the four pressurization zones. A leak would be expected to build up slowly and would therefore be noted before design leakage limits are exceeded. Therefore, remedial actions can be taken before the limit is reached.

In order to provide facility for monitoring the larger penetrations, branch pressurizing lines are provided from one of the zones to:

a) The double-gasketed space on each hatch of the personnel air lock.

b) The double-gasketed space at the equipment hatch flange.

c) The pressurized zones in the spent fuel transfer tube.

d) The spaces between the two butterfly valves in the purge supply and exhaust ducts.

e) The spaces between the two butterfly valves in the containment pressure and vacuum relief lines.

f) The spaces between double containment isolation valves in the containment radiation monitor inlet and outlet lines.

The make up air flow to the pressurized zones during normal operation is recognized to be only an indication of the potential leakage from the containment. However, it does indicate the leakage from the pressurization system, and the degree of accuracy will be increased when correlated with the results of the full scale containment leak rate test. The criteria for selection of operating limits for air consumption of the pressurization system are based upon the integrated containment leak rate test acceptance criterion and upon the maintenance of suitable reserve air supplies in the static reserves consisting of the air receivers and nitrogen cylinders. A summary of these operating limits is as follows:

1. A base-line air consumption rate shall be established for each of the four pressurization headers at the time of successful completion of the integrated containment leak rate test. Unexplained increases from this consumption rate shall be considered as reason for concern and normal practice will require routine investigation and location of the point of leakage.

6 2. The upper limit for long-term uncorrected air consumption for the pressurization system shall be .04% of the containment volume per day (sum of four headers). This is consistent with maintenance of a minimum 24 hours supply in the reserve nitrogen cylinders.

The upper limit for long-term air consumption for the pressurization system shall be contingent on the following: 6

a) Pressure in all pressurization zones is maintained above incident pressure.

b) Air supply is maintained from the compressed air system with at least one compressor available.

The preoperational leak rate test program consists of an integrated leak test at 42 psig and a sensitive leak rate test (see 5.6.2.2).

The 42 psig test will be performed with all the double penetration and weld channel zones closed. 6

This test must show that the integrated leakage rate is no greater than 0.1% of the containment volume per day at accident conditions.

A sensitive leak rate test shall be conducted with the penetrations and testable weld channels at 42 psig and the containment building at 41 psig.

A flow sensing device is located in each of the headers supplying make up air to the four pressurization zones. Signal output from each of the four flow sensors is locally available tramsmitted to the control room. The flow measurement accuracy of these instruments is
6 within ± 1% and the reproducibility is within 0.3%. Since a flow of 0.1% of the containment volume per day at 42 psig is approximately 0.6 ft^3/minute, the sensitivity of the flowmeters is well within the maximum leakage of the pressurization system. The pre- and post-operational sensitive leak rate tests will indicate the true leak rates from the penetrations, liner welds, and liner weld joint channels.(1)

(1) Includes interspaces between isolation valves and several lines and interspaces between double gaskets at the equipment hatch closures and personnel air lock doors.

5.5 SYSTEM DESIGN EVALUATION

5.5.1 RELIANCE ON INTERCONNECTED SYSTEMS

The containment leakage limiting boundary is provided in the form of a single carbon steel liner on the vessel. Each system whose piping penetrates this boundary is designed to maintain isolation of the containment from the outside environment. Provision is made to check leakage by pressurizing penetrations and test channels.

5.5.2 SYSTEM INTEGRITY AND SAFETY FACTORS

5.5.2.1 Pipe Rupture - Penetration Integrity

The penetrations for the main steam, feedwater, blow down and sample lines are designed so that the penetration is stronger than the piping system and that the vapor barrier will not be breeched due to a hypothesized pipe rupture.

5.5.2.2 Containment Structure Component Analysis

A. Mathematical Models Utilized

Basically three separate structural components have been analyzed, each in equilibrium with loads applied to it and with constraints occurring at the juncture of the structures. The three structures are:

a - The 130 ft ID hemispherical dome
b - The 130 ft ID cylinder
c - The base slab (including piles)

Mathematically the dome and cylinder have been treated as thin walled shell structures which for internal pressure and thermal loads and as cantilever beam for earthquake loads results in analysis of them as membranes. Since the thickness of the dome and cylinder is small in comparison with the radius of curvature (cylinder 1/18.5, dome 1/25.5) and there are no discontinuities such as sharp bends in the meridional curves, the stresses due to pressure and wind or earthquake can be calculated by assuming that they are uniformly distributed across the thickness.

The base slab was treated as an annulus supported on an elastic foundation. The basic assumptions are made for this type of structure:

a - The foundation is elastic. This implies that the settlement at any point is proportional to the pressure at that point.

b - The foundation modulus in tension is equal to that in compression. The foundation modulus is defined as the pressure which is required to produce a unit settlement.

These assumptions are valid for the pile foundation described in this report, which is designed to transmit uplift to the piles.

B. Base Slab Analysis

The base slab has been analyzed as an annulus supported on an elastic foundation. The slab, a round disc resting on a pile foundation, will deflect depending upon the various loads imposed. The elastic foundation theory accounts for these deflections. The foundation modulus used in the design analysis has been determined by load tests performed in the field. Slight inaccuracies in the determination of the foundation modulus are reflected in the calculated values of moment, shear and pile load as a fourth root of the initial inaccuracy and therefore do not greatly affect the calculated value.

The analysis of the annulus divides it into a number of radial wedges and analyzes each of these wedges as a beam on an elastic foundation. The solution, as outlined in "Beams on Elastic Foundation" by M. Hetenyi, was utilized to obtain the radial moments, shears and delfections and circumferential moments.

To assure the correctness of the annulus assumption, the sump beneath the reactor vessel has been so designed and constructed that it hangs from the base slab and offers no bending resistance to the base slab nor any deflection resistance but only loads the slab with its own dead weight.

C. Cylinder Analysis

The analysis of the cylinder is the superposition of membrane forces resulting from gravity, pressure and thermal loads, over-turning due

to earthquake or wind and shears due to earthquake or wind. The concrete is reinforced circumferentially using reinforcing steel hoops and is post-tensioned vertically. The analysis, therefore, assumes that the concrete is vertically cracked under load.

The basic equation for analysis is

$$D \frac{d^4 w}{dy^4} + \frac{Eh}{r^2} w = P_z \qquad (1)$$

where $\frac{Eh}{r^2}$ is the equivalent to the foundation modulus for a beam on an elastic foundation; here taken as the modulus of the hoop reinforcing steel.

Earthquake shears are computed in the cylinder wall by the theory of shear flow.

D. Dome Analysis

The analysis of the hemispherical dome has been performed by the superposition of membrane forces resulting from gravity, accident pressure and accident thermal loads. In addition earthquake and wind loading create both direct and shear stresses in the dome and the operating temperature of the liner creates tension and compression. All of the combined direct stresses are developed in the reinforcing steel encased in the concrete. The liner of the dome is used to resist the seismic shear load. The basic analysis is based upon the equations presented in "Thin Shell Concrete Structures" by D.P. Billington.

E. Discontinuity Analysis

Discontinuity stresses occur at changes in section or direction of the containment shell.

When a structure experiences only elastic strains there is only a minimal relief of restraints causing secondary stresses. If a structure experiences increase strains beyond the elastic range, the restraints at any point will cease to be as significant due to local yielding in these regions and, if increased loads were applied until collapse of the structure was imminent, all restraints would be effectively removed and only membrane forces (primary stresses) should be experienced.

The juncture of the cylinder to the dome is a point of discontinuity since, under the internal pressure and temperature design conditions, the cylinder will tend to increase in diameter differently than the dome. To compute the unrestrained dimensional changes the dome and cylinder are considered to be steel membranes equivalent in area to the reinforcing steel since the concrete is cracked vertically in the cylinder and in two directions in the dome, and only the reinforcing resists all hoop tension. The moments and shears are computed by equating the deformations of the cylinder and hemispherical dome at the point of juncture and solving for deflections, moments and shears in the cylinder and dome.

In the solution of the continuity equation the cylinder is assumed to have no horizontal cracks since it is prestressed vertically. This is a conservative simplifying assumption since small horizontal cracks due to secondary discontinuity moments in the cylinder tend to relieve moment and shear. These discontinuity stresses are significant for a short distance from the point of discontinuity in the structure. Therefore, the stresses are considered local.

The juncture of the cylinder to the base slab is a point of discontinuity. In the analysis, the juncture is considered to be fixed to a mat of infinite rigidity. The cylinder at this point cannot expand or rotate under the internal pressure and temperature load conditions, hence, shear and moment is introduced into the cylinder walls. The analysis to obtain the moments and shears in the cylinder

walls due to these loads at the joint is done in the same manner as for the juncture of the cylinder to dome.

At the large diameter penetration such as the equipment hatch and personnel lock structural steel frames have been embedded in the concrete. To these frames the horizontal and vertical reinforcing steel has been anchored and in the case of the equipment hatch and personnel lock the vertical prestressing tendons are also anchored to them. These frames are designed to resist all of the load applied to them from the members anchored to them in accordance with the same criteria as the reinforcing steel.

The frames were analyzed as four sided rigid frames with loads applied to all four sides. The effect of the equipment hatch and personnel lock on the containment cylinder wall was checked by a finite element analysis performed by the Franklin Institute. This analysis indicated that the structural frames around these two penetrations are slightly stiffer than the wall section but result in no stresses beyond the design stress limits.

Stiffness method based on flat plate finite element representation was developed for the subject analysis by Dr. Z. Zudans of the Franklin Institute Rearch Laboratory, (FIRL), Philadelphia, Pennsylvania. Individual elements consisted of several layers of orthotropic elastic material bounded by stiffened or non-stiffened edges. Mechanical surface loadings and arbitrary temperature distributions through the element thickness, as well as concentrated loadings, were included. Solution method was based on the usual assumptions of thin shell theory.

Introduction

The finite element method for finding stresses in plate structures was first treated by Hrennikoff[1,2]. With the advent of computers this method was explored by Clough[3], Yettram and Husain [4,5], McCormick[6], Turner, Clough, Martin and Topp[7], Lunder[8], Zienkiewicz[9], Argyris[10,11] and others.

The method used for the H.B. Robinson Containment Vessel analysis was based on a four-cornered flat panel. Shell theory utilized in the analysis is the first order reference theory outlined in detail in Reference 12. Structure is subdivided into a finite number of four-cornered elements. The stiffness of each of the elements is lumped at its four corners. Each of the corners of the finite element has five degrees of freedom: three displacements (axial, circumferential, radial) and two rotations (axial, circumferential). Equilibrium equations of the corners are written and the solution gives the displacements for each of the corners. These in turn are used to evaluate the stresses within the panel. In the following a brief description of the analysis method, as well as the practical capabilities and the limitations of the resulting computer program is described.

Method of Analysis

Stiffness method of analysis is based on the solution of joint equilibrium equations written in terms of joint displacements. In order to generate the system equations, stiffness matrices of individual panels are required. These are computed by utilizing the Principle of Virtual Work[12].

(Note: symbols used in Eq. 1 are those of Reference 12, additional symbols are defined when they first appear in this description.)

Physical components of the joint displacements are assumed in the following form:

$$d = T\,(x^1, x^2)\,\underset{\sim}{a} \qquad (2)$$

where

$$\underset{\sim}{d} = \begin{matrix} (U) \\ (V) \\ (W) \\ (\theta_1) \\ (\theta_2) \end{matrix}$$

are the displacements in x^1, x^2 and x^3 directions and θ_1, θ_2 are the rotations about x^1 and x^2 axes, respectively, Figure 5-62.

T is a (5 x 20) matrix of polynomials in (x^1, x^2) describing the displacement form assumed in the panel, and a is a vector (20 x 1) of the constants determining the polynomial coefficients. The latter are found in terms of the panel corner displacements D by inverting a matrix consisting of four blocks of T evaluated at four panel corners. This results in the displacement vector expressed in terms of panel corner displacements.

$$\underset{\sim}{d} = T\,t^{-1}\,\underset{\sim}{D} \qquad (3)$$

where t^{-1} is the above mentioned (20 x 20) inverse and D is the corner displacement vector (20 x 1).

The displacement vector, $\underset{\sim}{D}$, is further utilized to define the strains in the shell. The joint force equations is:

$$\underset{\sim}{F} = K\,\underset{\sim}{D} - \underset{\sim}{P} - \underset{\sim}{H} \qquad (4)$$

In Eq. 4, F is (20 x 1) force vector corresponding to panel joint displacements, K is (20 x 20) panel stiffness matrix, P is (20 x 1) load vector, and H is (20 x 1) effective thermal load vector.

Presence of the stiffeners along the edges of the panel adds to each of the terms of $\underset{\sim}{F}$. Respective contributions are again evaluated by the use of the Principle of Virtual Work and are based on the shell stiffener theory developed in Reference 12.

Addition of $\underset{\sim}{F}$ for each of the joints, as contributed by the panels attached to the joint, results in the overall system of equilibrium equations for all joints of the system. This system of equations is then modified to account for the externally prescribed constraints on the displacements or on the forces (boundary conditions). Solution of the system is then performed by utilizing the tridiagonal character of this system. The tridiagonal character of the system is essential in order to achieve the required accuracy in the system solution.

Once the resulting displacement vector is found the stresses at the desired points are evaluated from the following equation

$$\underset{\sim}{\sigma} = Z\ R\ T\ t^{-1}\ \underset{\sim}{D} - \underset{\sim}{\sigma}^{T} \qquad (5)$$

In Eq. 5, σ is (3 x 1) stress vector (σ_{11}, σ_{12}, σ_{22}), Z is (3 x 6) matrix relating strains to stresses, R is (6 x 5) matrix of differential operators relating strains to displacements and σ^T the stress modification vector (3 x 1) to account for the local temperature deviation from the linear through the wall thickness distribution.

Computer Program, Resulting Capabilities, Limitations

The computer program developed for the present analysis utilized greatly the FIRL three-dimensional structural analysis program. It consisted of four major links designed to perform the following operations:

Link 1 - Evaluates the stiffness matrices, load influence coefficients and other quantities required for the following links. It essentially operates for each of the individual panels as well as sets up the system topology required for proper bookkeeping when generating the system equilibrium equations.

Link 2 - Forms the system equations, modifies the same to suit the prescribed boundary conditions and records these on tape for auxiliary storage.

Link 3 - Breaks up the system in diagonal and tridiagonal blocks, inverts the modified diagonal blocks in a forward sweep, performs the backward sweep and generates the displacement solution vector. All matrix operations are performed in double precision and on (5 x 5) submatrices. Diagonal blocks A_{kk} are inverted by first performing the following operation

$$A_{kk} = S^T W S \qquad (6)$$

where S is the upper triangular matrix and W a diagonal matrix. Inversion of the diagonal blocks is then performed by inverting the right-hand side of Eq. 6. All operations in this part are kept in double precision in order to achieve the required accuracy. Last operation in this link consists in utilizing the solution and generating the joint equilibrium residuals. These residuals, compared to the joint load vector, were utilized to evaluate the achieved solution accuracy.

Link 4 - It is designed to evaluate the stresses (including the computation of principal stress) at specified points, print displacements and stresses in a convenient output format.

The computer program was first designed for IBM 7094, 32K computer. The size limitations therefore were dictated by the size of this computer. After a sufficient number of test runs had been performed and the computer program had been fully debugged it was recompiled on GE 635 with 120K core memory, increasing the critical dimensions to meet the requirements of a more sophisticated mathematical model (finer subdivision), without undue loss of the operational speed.

Capabilities of the program are as follows:

Panels can consist of up to ten (10) variable thickness layers each having its own orthotropic elastic properties, boundaries of each of the panels can be either stiffened or not stiffened. Alternative passage allows to prescribe panel in-plane and bending stiffnesses as input quantities.

This was incorporated to allow the possibility of evaluating the effects of concrete cracking and reinforcing steel configuration that would not fit the layer concept. There are five components of distributed panel surface loading that can be prescribed as well as an arbitrary temperature distribution through the wall thickness. It was anticipated that by proper specification of negative average panel temperatures the effects on concrete shrinkage and creep could be evaluated at any given time (but not as continuous functions of time), when the amount of the postulated shrinkage and creep was known. Similarly, prescription of positive tendon temperatures could allow for tendon relaxation. Concentrated loads could be specified at any of the joints in any of the five directions associated with the five degrees of freedom. The shape of the panel boundary between any two joints was defined by a corner point and one intermediate point coordinate. Total of 20 joints could be placed on line (floor in the sense of level above the base). This limitation hinged on the largest size diagonal block (in double precision) to be inverted in the core memory. Transition to a larger capacity computer allowed for an increase of at least by a factor of three (3) or more, (as dictated by the computational accuracy). Five simultaneous loading conditions could be handled.

Program debugging was based on comparing the results of this program with those of the known classical shell solutions as well as the comparison to some test data. There is a great number of shell problem solutions available at the FIRL[1] and elsewhere in the the literature.

List of References

1. A Hrennikoff, "Solution of Problems of Elasticity by the Framework Method," Journ. Appl. Mech., Vol. 63, 1941.
2. A Hrennikoff and S.S. Tezcan, "Analysis of Cylindrical Shells by the Finite Element Method," Internt'l Symposium on Large Size Shell Structures, Leningrad, USSR, Sept. 1966.
3. R W Clough, "The Finite Element Method in Plane Stress Analysis," Proc ASCE 2nd Conf on Electronic Computation, Pittsburgh, Pa, Sept 1966.
4. A L Yettram and H M Husain, "Grid-Framework Method for Plates in Flexure," Journ of the Eng Mechanics Division, ASCE, June 1965.
5. A L Yettram and H M Husain, "Plane-framework Methods for Plates in Extension," Journ of the Eng Mechanics Division, ASCE, Feb 1966.
6. C W McCormick, "Plane Stress Analysis," Journal of the Structural Division, ASCE, August 1963.
7. M J Turner, R W Clough, H C Martin, and L J Topp, "Stiffness and Deflection Analysis of Complex Structures," Journal of the Aeronautical Sciences, Sept 1956.
8. C A Lunder, "Derivation of a Stiffness Matrix for a Right Triangular Plate in Bending and Subjected to Initial Stress," MS Thesis, University of Washington, 1961.
9. O C Zienkiewicz, "The Finite Element Method for Analysis of Elastic Isotropic and Orthotropic Slabs," Paper No. 6726.
10. J H Argyris, and S. Kelsey "Energy Theorems and Structural Analysis, Butterworths, London, 1960.
11. J H Argyris, "Recent Advances in Matrix Methods of Structural Analysis," The MacMillan Company, 1964.
12. Z Zudans, "New Formulation and Evaluation of Elastic Shell Theory." Ph.d. Dissertation, University of Pennsylvania, 1966.

5.5.3 PERFORMANCE CAPABILITY MARGIN

The containment structure is designed based upon load factors which are used as the ratio by which accident and earthquake loads are multiplied for design purposes to ensure that the load/deformation behavior of the structure is one of elastic, low strain behavior at design loads. This approach places minimum emphasis on fixed gravity loads and maximum emphasis on accident and earthquake loads. Because of the refinement of the analysis and the restrictions on construction procedures, the load factors primarily provide for a safety margin on the load assumptions.

The uncertainties of structural behavior have been accounted for in the selection of the methods of analyses and the results of the analyses can be shown to be conservative. Such uncertainties have not been accounted for by using margins on load assumptions. The methods of design and analysis for the Robinson containment structure have been chosen to be in accordance with this philosophy as follows:

1) Dome: The dome was analyzed using thin shell theory which for this thickness of dome to diameter ratio yields an accurate representation of dome behavior. It is a method of analysis sufficiently simple in solution to require no simplifying assumptions particularly in the critical design load conditions which create tensions in the membrane. The use of the dome liner only to resist shears due to wind or earthquake is a conservative assumption. With no internal pressure loading, the concrete of the dome will participate in resisting shear to a large extent. With the internal pressure loading and the concrete cracked the concrete and reinforcing steel will still resist shear, but no credit is taken for this shear resistance.

2) Cylinder: The basic cylinder analysis uses thin shell theory which for this diameter to thickness ratio yields an accurate representation of cylinder behavior.

3) Base Slab: The use of beam on elastic foundation theory for solution of the base slab is an accurate representation of the actual slab. The slab is set on a series of piles (springs). The value of the modulus of subgrade reaction (spring constant) has been confirmed from test data obtained in the field.

4) Junctions: Loads at the juncture of the dome to the cylinder and the cylinder to the base slab have been computed by solution of the continuity equation established for these junctures. In these solutions the assumption is made that the cylinder concrete is not cracked horizontally. This is a conservative simplifying assumption since small horizontal cracks due to the secondary discontinuity moments tend to relieve the moment and shear.

5) Penetrations: The stresses around the equipment and personnel hatches have been checked using a finite element approach resulting in a conservative design as a result of the selection of the initial loading and material properties.

In summary all elements of the containment have been analyzed using either a method of analysis which yields a true and accurate answer or using simplifying assumptions which result in a conservative answer for the particular stresses being computed.

6) Proof Test: To provide further assurance for the adequacy of the structural design a proof test to 115 percent of the design pressure is made. This test compares the actual deformation of the structure with the predicted deformation based upon the design assumptions.

In considering the selection of the proof test pressure, the desired end results of the test must be considered. In the case of a containment structure constructed of concrete in which instrumentation will be provided to verify the reaction of the structure to the loads, it is necessary to meet three criteria at the proof pressure without causing any damage to the containment structure:

1 - The liner should be stressed to levels in tension equal to, or greater, than the stress levels computed for the design basis accident condition.

2 - The structure should be stressed to such a level that it reacts essentially the same as it would react with the design basis accident condition (neglecting earthquake forces). In the case of a concrete containment structure which depends upon reinforcing steel for its strength, it is necessary to have a test pressure sufficiently high that the concrete will crack, bringing into play the reinforcing steel. Considering concrete to have a tensile strength equal to 0.1 f'_c the Robinson containment concrete will crack at a pressure of about 34 psi. This is a pressure equal to 81 percent of the design pressure. 2

3 - When instrumentation is to be used to measure deflections and deformations, the test pressure must be sufficiently high that the precision of the measuring devices is not a significant percentage of the magnitude of the measurement taken. With a test pressure equal to, or slightly larger than the design pressure, a radial growth of about 1/2 in. in radius is expected in the cylinder. This can be accurately measured with precise theodolites using calibrated targets.

A proof test pressure which meets all three criteria is adequate for the purposes intended for the test. In the case of the Robinson concrete containment structure, a test pressure of 81 percent of design pressure would be the minimum which could be considered, since this is the lowest pressure at which the structural reaction of the containment will follow the design assumptions. At 115 percent of design pressure, all liner stresses are at, or above, the design basis accident stresses in tension. It would be correct and justifiable to decrease the test pressure to design pressure, since this would decrease liner stresses by a very small amount and the stresses would remain at, or above, the stress levels under design basis

APPENDIX 5A

DESIGN CRITERIA FOR STRUCTURES AND EQUIPMENT

1.0 Definition of Seismic Design Classifications

- Class I
- Class II
- Class III

2.0 Seismic classification of Particular Structures and Equipment

- Buildings and Structures
- Equipment, Piping and Supports

3.0 Class I Design Criteria for Vessels and Piping

- Piping Vessels and Supports
- Reactor Vessel Internals
- Reactor Vessel

APPENDIX 5A

DESIGN CRITERIA FOR STRUCTURES AND EQUIPMENT

1.0 DEFINITION OF SEISMIC DESIGN CLASSIFICATIONS

All equipment and structures are classified as Class I, and Class II, or Class III as recommended in:

a) TID-7024, "Nuclear Reactors and Earthquakes" August, 1963 and,

b) G. W. Housner, "Design of Nuclear Power Reactors Against Earthquakes", Proceedings of the Second World Conference on Earthquake Engineering, Vol. I, Japan 1960, Pg. 133, 134 and 137.

Class I

Those structures and components including instruments and controls whose failure might cause or increase the severity of a loss-of-coolant accident or result in an uncontrolled release of excessive amounts of radioactivity. Also, those structures and components vital to safe shutdown and isolation of the reactor.

Class II

Those structures and components which are important to reactor operation but not essential to safe shutdown and isolation of the reactor and whose failure could not result in the release of substantial amounts of radioactivity.

Class III

Those structures and components which are not directly related to reactor operation or containment.

All components, systems and structures classified as Class I are designed in accordance with the following criteria:

1. Primary steady state stresses, when combined with the seismic stress resulting from the response to a ground acceleration of 0.067g acting in the vertical and 0.1g acting in the horizontal planes simultaneously, are maintained within the allowable stress limits accepted as good practice and, where applicable, set forth in the appropriate design standards, e.g., ASME Boiler and Pressure Vessel Code, USAS B31.1 Code for Pressure Piping, ACI 318 Building Code Requirements for Reinforced Concrete, and AISC Specifications for the Design and Erection of Structural Steel for Buildings.

2. Primary steady state stresses when combined with the seismic stress resulting from the response to a ground acceleration of 0.133g acting in the vertical and 0.2g acting in the horizontal planes simultaneously, are limited so that the function of the component, system or structure shall not be impaired as to prevent a safe and orderly shutdown of the plant.

All Class II structures and components are designed on the basis of a static analysis for a ground acceleration of 0.067g acting in the vertical and 0.1g acting in the horizontal directions simultaneously.

The structural design of all Class II structures meets the requirements of the applicable building code.

Table 5A.1-1 gives the damping factors used in the design of components and structures.

The design of Class I structures and components utilizes the "response spectrum" approach in the analysis of the dynamic loads imparted by the earthquake. The analysis is based upon the response spectra shown on Figures 5A.1-1 and 5A.1-2.

The following method of analysis is applied to Class I structures and components, including instrumentation:

1. The natural period of vibration of the structure or component is determined.

2. The response acceleration of the component to the seismic motion is taken from the response spectrum curve at the appropriate period.

3. Stresses and deflections resulting from the combined influence of normal loads and the seismic load due to the design earthquake (0.067g acting in the vertical and 0.1g acting in the horizontal planes simultaneously) are calculated and checked against the limits imposed by the design standard.

4. Stresses and deflections resulting from the combined influence of normal loads and the seismic loads due to the assumed hypothetical earthquake (0.133g acting in the vertical and 0.2g acting in the horizontal planes simultaneously) are calculated and checked to verify that deflections do not cause loss of function and that stresses do not produce rupture.

TABLE 5A.1-1
DAMPING FACTORS

Component	Per Cent of Critical Damping
Containment Structure	2.0
Concrete Support Structure of Reactor Vessel	2.0
Steel Assemblies:	
(a) Bolted or Riveted	2.5
(b) Welded	1.0
Vital Piping Systems	0.5
Concrete Structures above Ground:	
(a) Shear Wall	5.0
(b) Rigid Frame	5.0

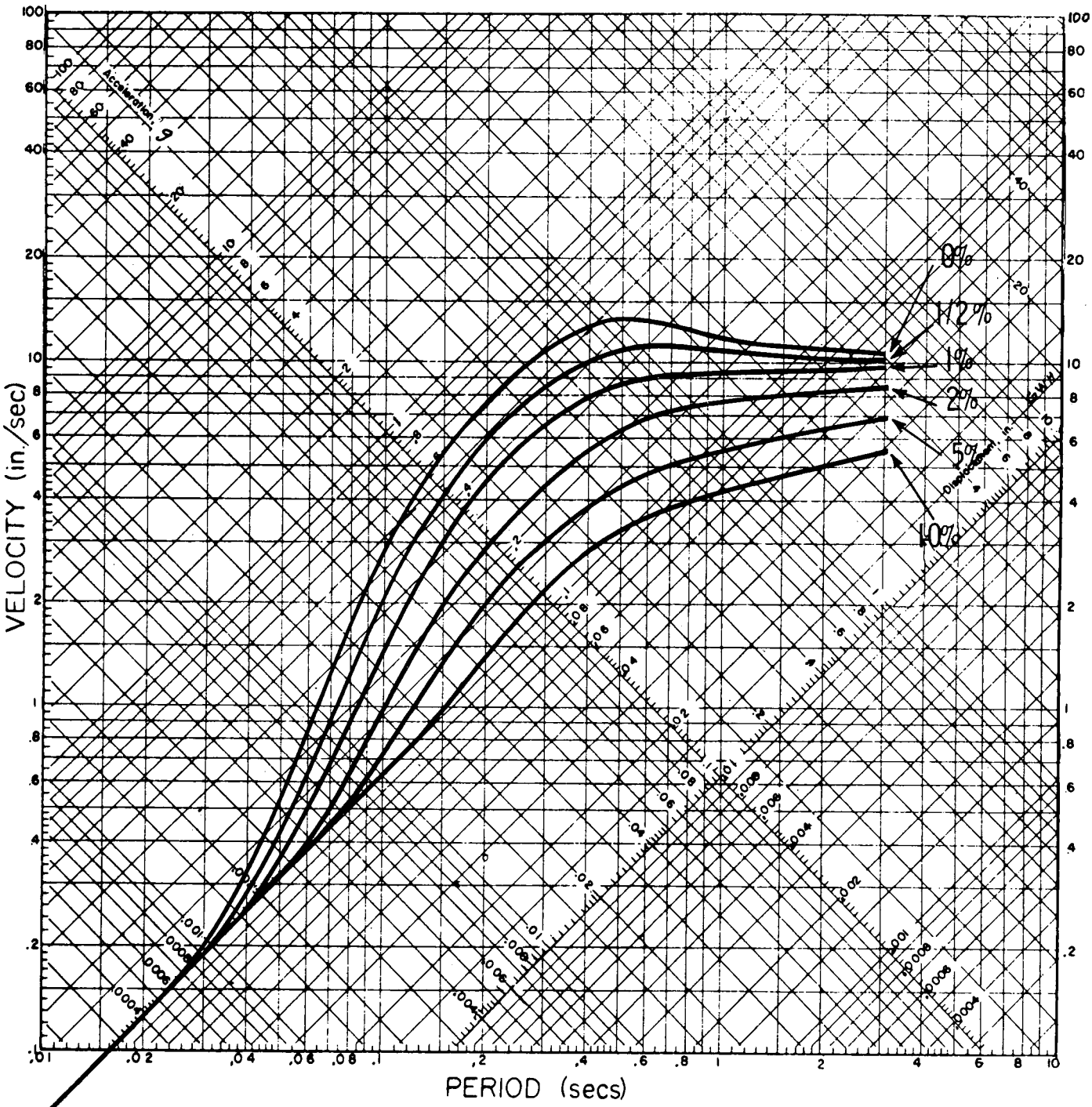

FIG. 5A.1-1 10%G DESIGN SPECTRUM

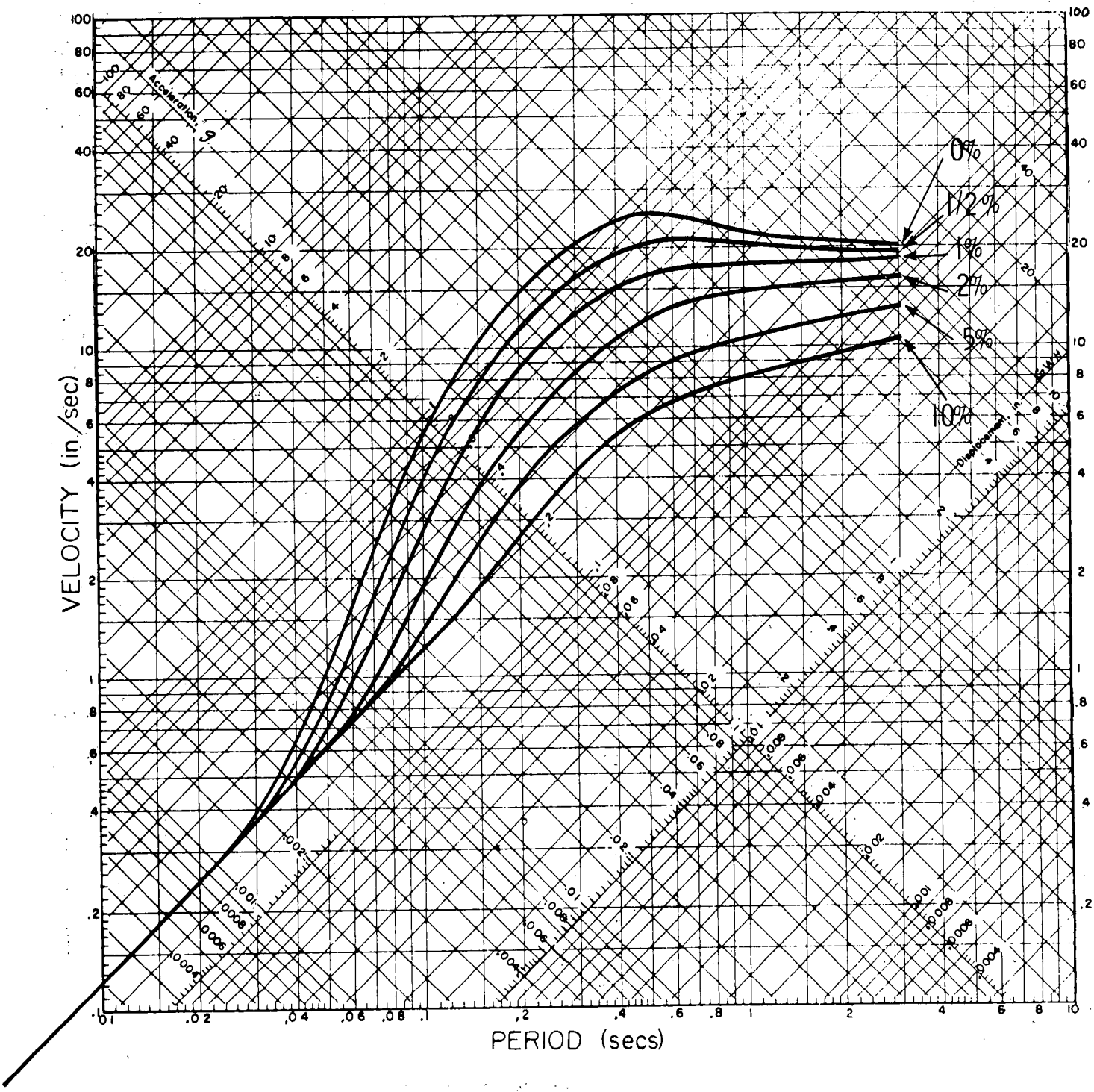

FIG. 5A.1-2 20%G RESPONSE SPECTRUM

2.0 CLASSIFICATION OF PARTICULAR STRUCTURES AND EQUIPMENT

Examples of particular structure and equipment classifications are given below. These classifications are not intended to be all-inclusive.

Item	Class
Buildings and Structures	
Containment (including all penetrations and air locks, the concrete shield, the liner and the interior structures)	I
Spent fuel pit	I
Control room	I
Diesel generator room	I
Intake structure (to the extent that water is always available to the service water pumps)	I
Auxiliary building	I
Turbine structure	II
Buildings containing conventional facilities	III
Equipment, Piping and Supports*	
Reactor Control and Protection System	I
Radiation Monitoring System	*

* Class I components (equipment, piping, instrumentation, etc.) located in or supported on a Class II structure will be protected from earthquake damage or will be backed up by other Class I components located in or supported by a Class I structure.

Process Instrumentation and Controls	I
Reactor	I
Vessel and its supports	
Vessel internals	
Fuel assemblies	
RCC assemblies and drive mechanisms	
Supporting and positioning members	
In-core instrumentation structure	
Reactor Coolant System	I
Piping and valves (including safety & relief valves)	
Steam generators	
Pressurizer	
Reactor coolant pumps	
Supporting and positioning members	
Engineered Safety Features	I
Safety Injection System (including safety injection and residual heat removal pumps, refueling water storage tank, accumulator tanks, boron injection tank, residual heat exchangers and connecting piping and valving)	
Containment Spray System (including spray pumps, spray headers, spray additive tank and connecting piping and valving)	
Containment Ventilation System (including fans, coolers ducts, valves, absolute filters and demisters)	

Auxiliary Building Ventilation System	I
Condensate storage tanks	I
Pressurizer relief tank	II
Residual heat removal loop	I
Containment Penetration Pressurization System	I
Component cooling loop	I
Isolation Valve Seal Water System	I
Sampling System	II
Spent fuel pit cooling loop	II
Fuel transfer tube	I
Emergency Power Supply System Diesel generators and fuel oil storage tank D-C power supply system Power distribution lines to equipment required for transformers and switchgear supplying the engineered safety features Control panel boards Motor control centers	I
Control Equipment, facilities and lines necessary for the above Class I items	I

Waste Disposal System	I
Chemical drain tank	
Waste holdup tanks	
Sump tank	
Gas decay tanks	
Spent resin storage tank	
Reactor coolant drain tank	
Compressors	
Waste evaporator	
Waste evaporator feed pump	
Waste holdup tank pumps	
Sump tank pump	
Interconnecting waste gas piping	
Waste Disposal System	III
All elements not listed as Class I	
Containment crane	I
Manipulator and other cranes	III
Conventional equipment, tanks and piping, other than I and II Classes	III
Emergency Boiler Feed, Service Water and Fire Protection Systems' pumps and piping	I

The Chemical and Volume Control System is considered Class I except for those items listed below,

Batching tank	II
Monitor tanks	II
Monitor tank pumps	II
Chemical mixing tank	II
Resin fill tank	III

3.0 CLASS I DESIGN CRITERIA FOR VESSELS AND PIPING

All components of the Reactor Coolant System and associated systems are designed to the standards of the applicable ASME Code or USAS Code. The loading combinations which are employed in the design of Class I components of these systems, i.e., vessels, piping, supports, vessel internals and other applicable components, are given in Table 5A.3-1.

This Table also indicates the stress limits which are used in the design of the listed equipment for the various loading combinations.

To be able to perform their function, i.e., allow core shutdown and cooling the reactor vessel internals must satisfy deformation limits which are more restrictive than the stress limits shown in Table 5A.3-1. For this reason the reactor vessel internals are treated separately.

Piping, Vessels and Supports

The reasoning for selection of the load combinations and stress limits given in Table 5A.3-1. is as follows. For the design earthquake, the nuclear steam supply system is designed to be capable of continued safe operation, i.e., for the combination of normal loads and design earthquake loading. Critical equipment and supports needed for this purpose are required to operate within normal design limits.

In the case of the assumed hypothetical earthquake, it is only necessary to ensure that critical components do not lose their capability to perform their safety function, i.e., shut the plant down and maintain it in a safe condition. This capability is ensured by maintaining the stress limits as shown in Table 5A.3-1. No rupture of a Class I pipe can be caused by the occurrence of the assumed hypothetical earthquake.

TABLE 5A.3-1 - LOADING COMBINATIONS AND STRESS LIMITS

LOADIING COMBINATIONS	VESSELS	PIPING	SUPPORTS
1. Normal Loads	$P_m \leq S_m$ $P_L + P_B \leq 1.5\ S_m$	$P_m \leq S$ $P_L + P_B \leq S$	Working Stresses or Applicable Factored Load Design Values
2. Normal + Design Earthquake Loads	$P_m \leq S_m$ $P_L + P_B \leq 1.5\ S_m$	$P_m \leq 1.2\ S$ $P_L + P_B \leq 1.2\ S$	1-1/3 Working Stresses or Applicable Factored Load Design Values
3. Normal + Assumed Hypothetical Earthquake Loads	$P_m \leq 1.2\ S_m$ $P_L + P_B \leq 1.2\ (1.5\ S_m)$	$P_m \leq 1.2\ S$ $P_L + P_B \leq 1.2\ (1.5\ S)$	Deflections and Stresses of Supports Limited to Maintain Supported Equipment Within their Stress Limits
4. Normal + Pipe Rupture Loads	$P_m \leq 1.2\ S_m$ $P_L + P_B \leq 1.2\ (1.5\ S_m)$	$P_m \leq 1.2\ S$ $P_L + P_B \leq 1.2\ (1.5\ S)$	Deflections and Stresses of Supports Limited to Maintain Supported Equipment Within Their Stress Limits

Where P_m = primary general membrane stress; or stress intensity

P_L = primary local membrane stress; or stress intensity

P_B = primary bending stress; or stress intensity

S_m = stress intensity value from ASME B & PV Code, Section III

S = allowable stress from USAS B31.1 Code for Pressure Piping

Careful design and thorough quality control during manufacture and construction and periodic inspection during plant life, ensures that the independent occurrence of a reactor coolant pipe rupture is extremely remote. If it is assumed that a reactor coolant pipe ruptures, the stresses in the unbroken leg will be as noted in line 4 of Table 5A.3-1.

Reactor Vessel Internals

Design Criteria for Normal Operation

The internals and core are designed for normal operation conditions and subjected to loads of mechanical, hydraulic, and thermal origin. The response of the structure under the design earthquake is included in this category.

The stress criteria established in Section III of the ASME Boiler and Pressure Vessel Code, Article 4, has been adopted as a guide for the design of the internals and core with exception of those fabrication techniques and materials which are not covered by the Code, such as the fuel rod cladding. Seismic stresses are combined in the most conservative way and are considered primary stresses.

The members are designed under the basic principles of: (1) maintaining distortions within acceptable limits, (2) keeping the stress levels within acceptable limits, and (3) prevention of fatigue failures.

Design Criteria for Abnormal Operation

The abnormal design condition assumes blowdown effects due to a reactor coolant pipe double-ended break.

For this condition the criteria for acceptability are that the reactor be capable of safe shutdown and that the engineered safety features are able to operate as designed. Consequently, the limitations established on the internals for these types of loads are concerned principally with the maximum allowable deflections. The deflection criteria for critical structures under abnormal operation are presented in Table 5A.3-2.

TABLE 5A.3-2

INTERNALS DEFLECTIONS UNDER ABNORMAL OPERATION
(Inches)

	Calculated Deflection (Preliminary)	Allowable Limit	No Loss-of-Function Limit
Upper Barrel, expansion/compression (to assure sufficient inlet flow area/and to prevent the barrel from touching any guide tube to avoid disturbing the RCC guide structure).	0.072	3	6
Upper Package, axial deflection (to maintain the control rod guide structure geometry).	0.005	1	2
RCC Guide Tube, cross section distortion (to avoid interference between the RCC elements and the guides).	0	0.035	0.072
RCC Guide Tube, deflection as a beam (to be consistent with conditions under which ability to trip has been tested).	0.2	1.0	1.5
Fuel Assembly Thimbles, cross section distortion (to avoid interference between the control rods and the guides).	0	0.035	0.072

Reactor Vessel

The criteria for movement of the reactor vessel, under the worst combination of loads, i.e., normal plus the assumed hypothetical earthquake or normal plus reactor coolant pipe rupture loads, assures that the radial movement of the reactor vessel will not exceed the clearance between the reactor coolant piping and the surrounding concrete.

The relative motions between Reactor Coolant System components are controlled by the structures which are used to support the reactor vessel, the steam generators, the pressurizer and the reactor coolant pumps.

The supports are designed to limit the stresses in the pipe to the stress limits given in Table 5A.3-1.

APPENDIX 5B

Siesmic Design of Equipment

The following information has been prepared in response to concerns expressed by the AEC and their consultants as a result of their review and a plant site visit of October 16, 1969. Specifically these conserns are:

(a) How were the Class I tank supports and anchorages designed for lateral forces?

(b) How were lateral forces considered in the design of anchorage of equipment cabinets and battery racks?

(c) How were the effects of the masses of valve motors considered in evaluating the seismic response of major and small pipes?

(d) Show that the containment air cooler radiators on the operating floor of the containment structure are adequately supported for lateral loads.

Other concerns expressed have been answered in revisions to responses in Tab VI, VII and FSAR page changes.

(a) How were the Class I tank supports and anchorages designed for lateral forces?

(b) How were lateral forces considered in the design of anchorage of equipment cabinets and battery racks?

Supports and anchorages for some Class I tanks, all equipment cabinents, and all battery racks were designed by the manufacturer in accordance with lateral and vertical inertial load factors for the hypothetical earthquake. Where vendor did not design the supports the purchaser provided the design in accordance with factors for hypothetical earthquake. These factors, corresponding to the total response in all modes of the floor on which the equipment is located, were furnished to the manufacturers as part of purchase order specifications. The tanks and supports and anchorage of the tanks were considered rigidly attached to the structure. The manufacturers designs were reviewed and found to be adequate.

(c) How were the effects of the masses of valve motor considered in evaluating the seismic response of major and small pipes?

The effects of the masses of valve motors were investigated some years ago for another project. It was found that in those cases the net effect was to move the center of gravity of the assembly approximately one-third of the distance away from the centerline of the pipe toward the motor. The net effect was negligible for seismic loading and torsional moment on the piping. Therefore, the masses of the valve motors were added to that of the valve and the whole assembly treated as a concentrated load in the piping system.

(d) Show that the containment air cooler radiators on the operating floor of the containment structure are adequately supported for lateral loads.

The seismic analysis of the fan cooler system has been conducted in two parts.

a) Analysis of the structural steel enclosure of the cooling units to include the effect of supported equipment.

b) Analysis of the fan-motor system and their foundation.

The fan cooler enclosure is shown in plan view in Figure 5B-1. The Maximum Hyporthetical Eq. seismic load stresses were determined on the basis of a 0.45 g horizontal acceleration and 0.3g vertical acceletation taken simultaneously with inertial loading assumed uniformly distributed along the supporting member.

These values exceed the maximum of the ground response spectrum for 2 percent damping defined for the site and represent the combined mode total horizontal acceleration of the supporting operating deck.

Two seismic analyses were performed as shown in Figure 5B-2. The resultant maximum stresses for Dead Load plus Seismic for each frame member is shown in Table 5B-1.

The maximum combined stress of 18.0 Ksi was determined at the beam to column joint of Frame 1. This value represents a 2.0 Safety Factor for combined dead plus seismic with respect to outermost fiber local yield of the structure.

The fan-motor and supporting structure system have been analyzed dynamically as a lumped parameter system. The model used is shown in Figure 5B-3. The only vibrational mode having a frequency below 40 cps is vertical vibration of the anchorage system.

This frequency is approximately 5 cps and is the result of spring mounting of the unit to eliminate operational vibration. This containment internal structure has not been analyzed for vertical modes of vibration but experience on their containment internal structures indicate fundamental vertical frequency modes well in excess of 5 cps hence no potential resonance with the structure is considered.

This frequency response to the vertical component of the ground response spectrum for 2 percent damping results in a 0.3 loading. The seismic input to the fan cooler system is therefore 0.45g horizontal and 0.3g vertical as verified by dynamic analysis.

The failure modes considered for the motor unit are in excess deflection of the rotor shaft which results in rubbing against the housing or by bearing failure. The failure modes for the fan are by failure of the fan shaft support bearings or by deflection of the fan housing and fan to cause binding. In addition the potential for shear and overturning failure of the motor-fan assembly at the foundation anchorage was investigated. The results of these failure mode analyses are shown in Table 5B-2. Details of the foundation attachment are shown in Fig. 5B-4. In addition the potential for shear and overturning failure of the motor-fan assembly at the foundation anchorage was investigated.

Based on the sesimic analysis performed as outlined above it may be concluded the fan cooler units in the containment are adequately designed to resist the seismic loading defined for the site.

This frequency response to the vertical component of the ground response spectrum for 2 percent damping results in a 0.3g loading. The seismic input to the fan cooler system is therefore 0.5g horizontal and 0.3g as verified by dynamic analysis.

The failure modes considered for the motor unit are excess deflection of the rotor shaft which results in rubbing against the housing or by bearing failure. The failure modes for the fan are by failure of the fan shaft support bearings or by deflection of the fan housing and fan to cause binding. The results of these failure mode analyses are shown in Table 5B-2.

TABLE 5B-1

SEISMIC STRESSES AND LOADS

Frame	Beam						Column				(Vertical ↓)		(Vertical ↑)
	P_{max}	V_{max}	M_{max}	J_{max}	Member	Location	P_{max}	V_{max}	M_{max}	J_{max}	Member	Location	P_{max}
1	0.2	6.0	29.0	18.0	2(6[18.0)	Joint	10.2 -0.6	2.4	27.7	9.0	2(9[25.4)	Joint	-3.4
2	SMALL			<8.7	6WF20	Joint	SMALL			<8.7	8WF40	Joint	-2.0
3	0.1	4.2	19.4	<11.9	10[28.3	Joint	4.5 -3.2	1.8	19.4	<11.9	9[25.4 or 13[31.8	Joint	-4.0
4	0.1	4.2	19.4	<11.9	2(9[25.4)	Joint	4.5 -3.2	1.8	19.4	<11.9	2(9[25.4)	Joint	-3.3
5	SMALL				6[18.0		SMALL				8WF40		-2.6
6	SMALL				6WF25		SMALL				8WF40		-2.8

TABLE 5B-2

SEISMIC ANALYSIS OF FAN MOTOR SYSTEM

Failure Mode	Description	Calculated Behavior	Limit Behavior	Factor of Safety
1	Deflection of the Motor Rotor and Shaft to cause rubing against housing	.0063 in	.030 in	4.8
2	Radial Load on Motor Bearing	1210 lbs	22300 lbs	18.4
3	Thrust load on Motor Bearing (Parallel to Shaft) Including potential input load in accellerating through 0.1 in gap	2121 lbs	10000 lbs	4.7
4	Combined Deflection of Fan Wheel and of Fan Housing to cause rubbing	0.106 in	1.625 in	15.3
5	Radial Load on Fan Bearings	2100 lbs	106,000 lbs	50.5
6	Thrust Load on Fan Bearings	480 lbs	2000 lbs	4.2
7	Failure of Anchor bolts connecting upper support frame to lower support frame			
	Shear	1.33 Ksi	21.6 Ksi	16.3
	Tension (overturning)	0.60 Ksi	36.0 Ksi	60.0
8	Failure of Welds connecting lower support frame to floor plate embedments			
	Shear	1.97 Ksi	21.6 Ksi	11.0
	Overturning	0.32 Ksi	21.6 Ksi	68.0

Note: All calculations base on: horizontal seismic accelleration of 0.45g
vertical seismic accelleration of 0.30g
Dead Load

FIGURE 5B-1
STRUCTURAL LAYOUT

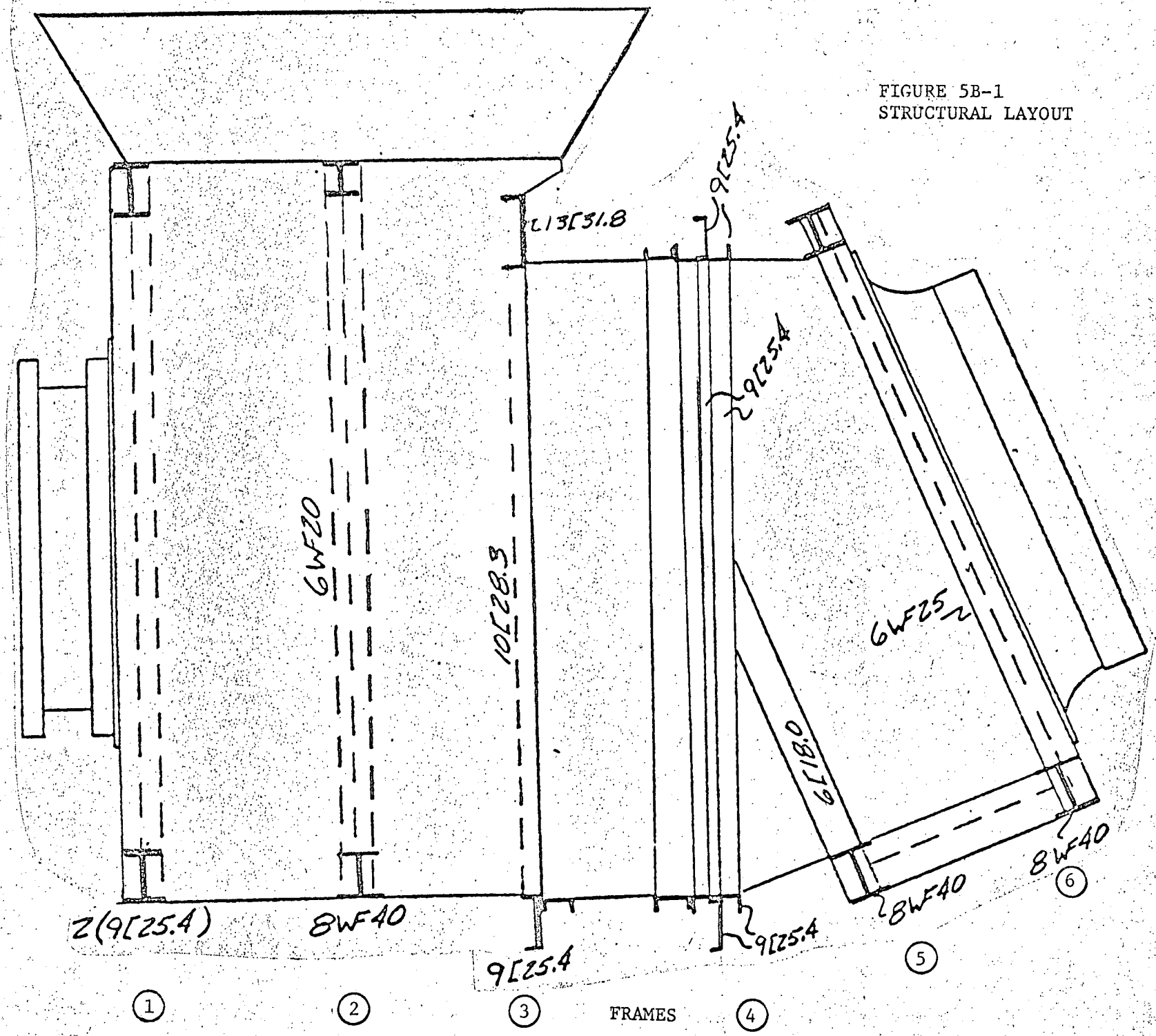

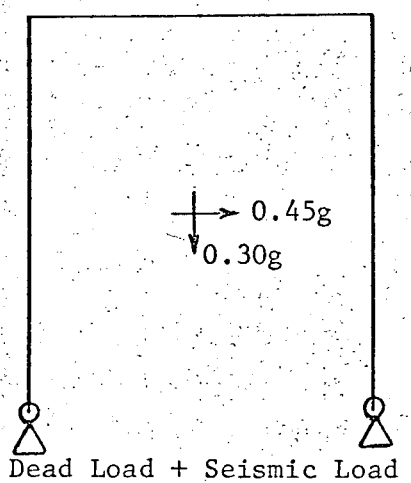

Case I Dead Load + Seismic Load (Down)

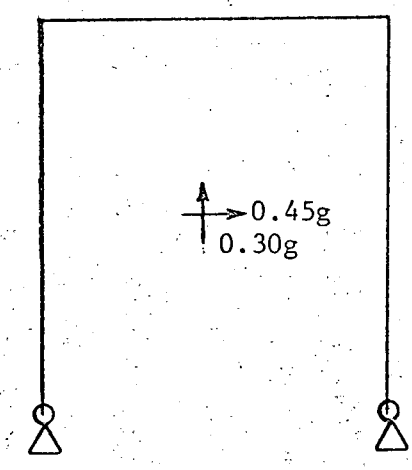

Case II Dead Load + Seismic Load (Up)

Seismic Design Loads on Enclosures
Figure 5B-2

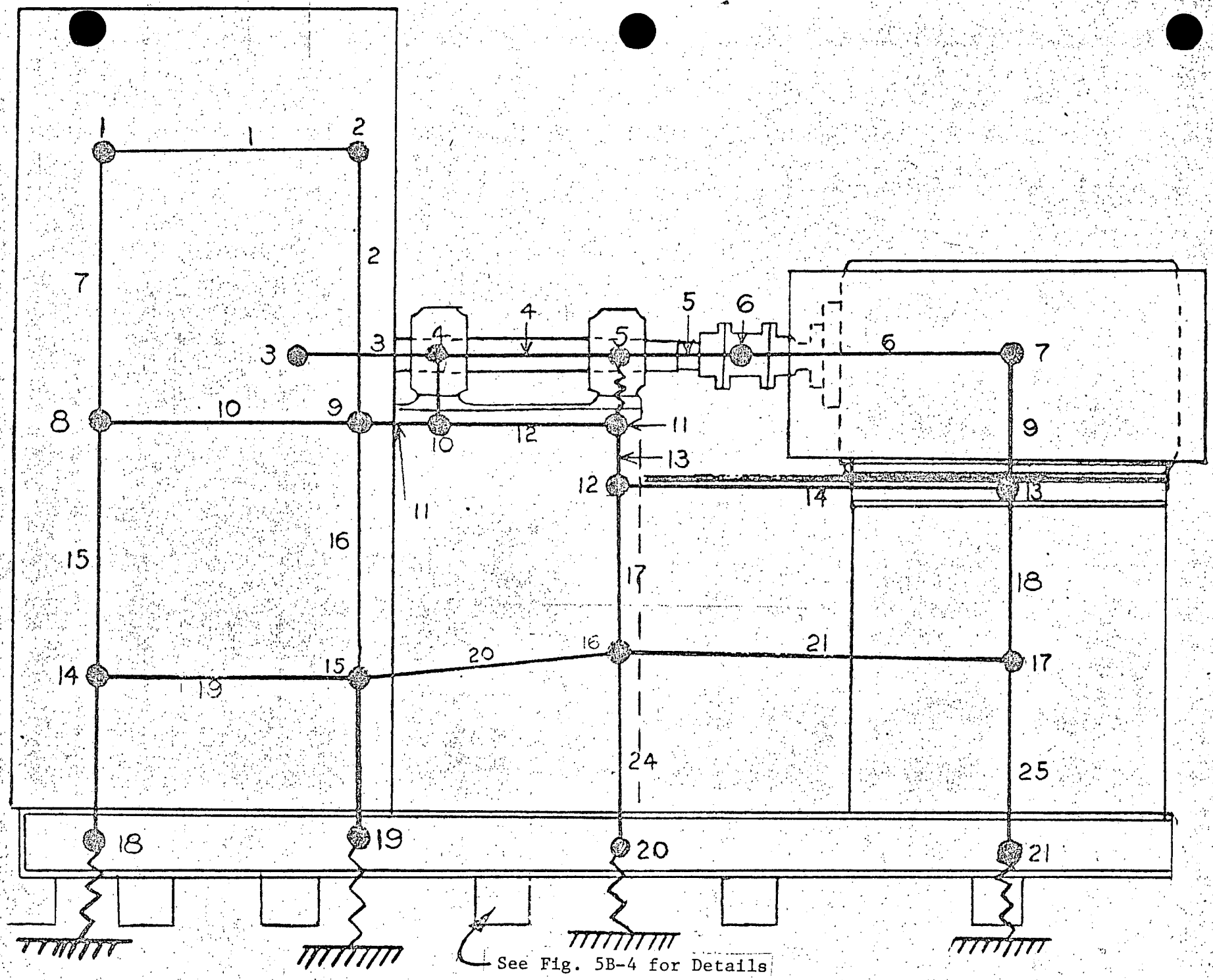

Fig. 5B-3 Lump Parameter Mass Model of Fan Cooler System

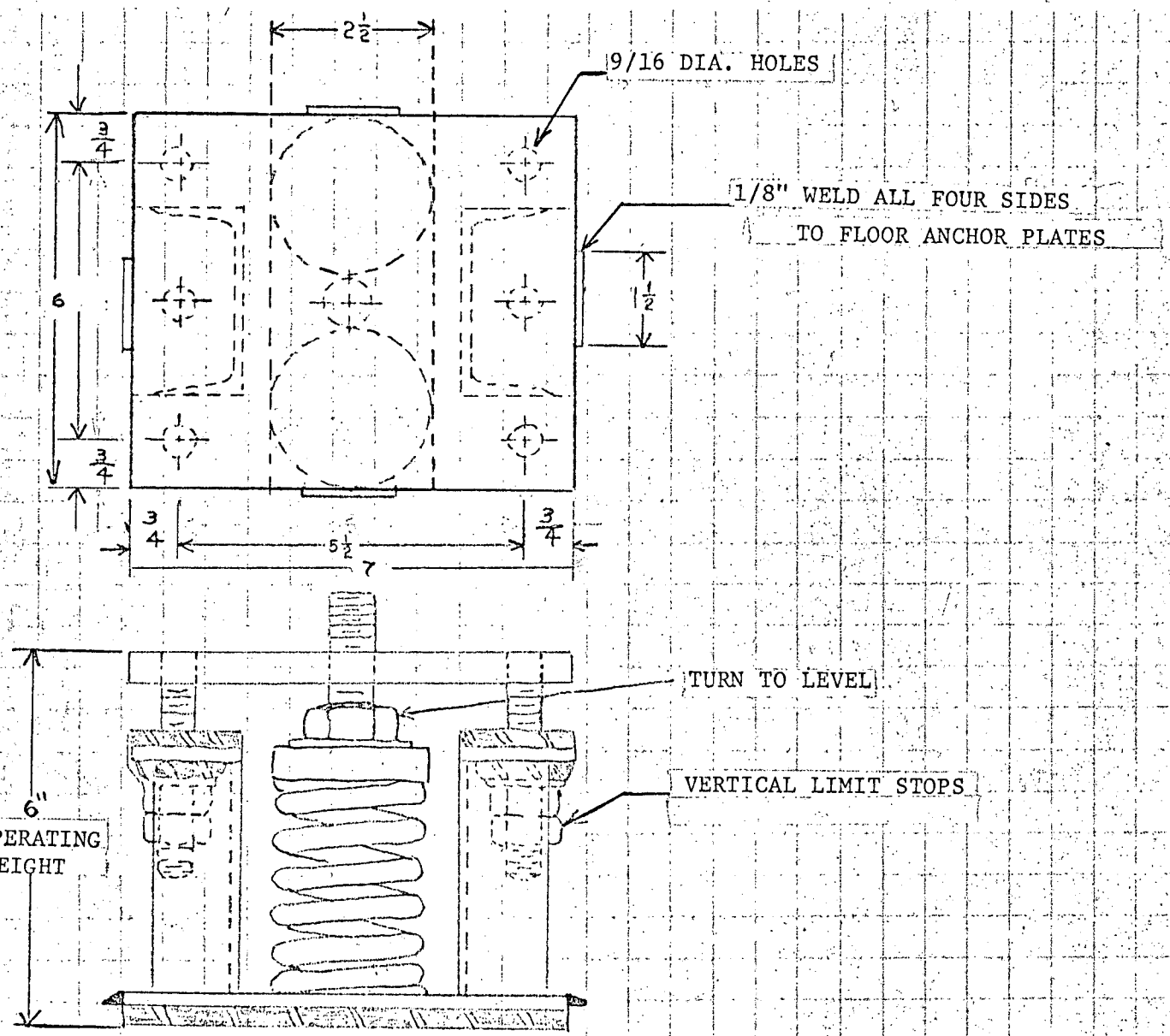

Foundation Mounting Attachment
Figure 5B-4

APPENDIX 5C

PART I

H. B. ROBINSON

ADDITIONAL INFORMATION ON

SEISMIC DESIGN OF CLASS I PIPING

This report contains an explanation of the criteria, analytical methods, seismic coefficients and summary of results as outlined in the following:

TABLE OF CONTENTS

1. METHOD OF ARRIVING AT STATIC COEFFICIENTS
2. COMMENTARY ON STATIC COEFFICIENTS
3. RANGE OF STATIC COEFFICIENTS
4. COMPUTER METHOD OF STATIC ANALYSIS
5. SIMPLIFIED METHOD OF STATIC ANALYSIS
6. SYSTEMS ANALYZED BY COMPUTER METHOD & SIMPLIFIED METHOD
7. COMMENTARY ON TABULATED SUMMARY OF MAXIMUM PIPE STRESS
8. TABULATED SUMMARY OF MAXIMUM PIPE STRESS
9. SAFETY FACTORS ON SEISMIC SUPPORTS
10. CONCLUSIONS

Amendment 7

1. Method of Arriving at Static Coefficients

Class I piping is housed by and supported from the reactor inner structure, the reactor containment structure, the Class I bay of the turbine building and the reactor auxiliary building. A dynamic analysis was performed of these structures to determine the expected accelerations at various levels within the structure for both the operating basis and design basis earthquakes. Details of the dynamic analysis of Class I structures are continued in FSAR - Appendix 5A. In arriving at the static coefficients used for the design of piping systems, the horizontal acceleration values at the various levels of the structures were amplified by a ratio equal to the peak ground response for 0.5% damping as shown on the Housner curves divided by the ground acceleration. In our case the peak ground response is 0.96g for the 0.2 ground acceleration earthquake so that all building response accelerations were multiplied by a factor of 4.8.

2. Commentary on Static Coefficients

The Class I systems seismic design considered amplified response of the supporting building structure plus potential resonance with the ground response curve specified for the site. Potential resonance of the Class I system with the building structure was not considered as such for the following reasons. Conventionally, resonance response analysis is based on linear elastic mathematical analysis. No consideration is made with respect to shifts in structural stiffness as a function of load nor of change in stiffness due to changes in member geometry nor increase in structural damping due to joint slippage and local yielding. These phenomena are known to be present in real structures, and effectively cause automatic detuning of the building structure and the Class I system. Even if at some instant in time the building and the system are in resonance, the system in attempting to respond to the resonating input changes its stiffness or damping characteristics so as to drop out of resonance with the building.

The method currently used to incorporate this non-linear phenomon into available linear elastic methods of analysis which consider potential building resonance has been to increase damping factors as a function of stress level.

For example, a percentage of critical damping of 0.5 was used in determining the g loading for the original design fo Class I piping. Dr. N. M. Newmark[1] recommends a value of 2% for vital piping at or just below the yield point. This would limit the peak response acceleration at ground level to 0.45g instead of 0.96g for 0.2g ground acceleration. Hence, an inherent conservatism of 0.96/0.45 = 2.13 exists in the g loading selected for the design of Class I piping. Similar arguments can be presented about the soil and building damping.

[1] Proceedings of the IAEA Panel on Aseismic Design and Testing of Nuclear Facilities, held 12-16 June 1967, page 107.

3. Range of Static Coefficients for the Various Buildings

As explained previously, the seismic response of the structures were amplified by a factor of 4.8 for the static coefficients that were applied to the piping systems. For the design basis earthquake (0.2g ground acceleration) these amplified values of horizontal accelerations ranged as follows for the various structures:

Reactor Containment Structure

0.96g at El 226

3.00g at El 413

Reactor Inner Structure

0.96g at El 226

2.15g at El 275

Reactor Auxiliary Building

0.96g at El 226

1.65g at El 262

Turbine Building - Class I Bay

0.96g at El 226

1.85g at El 266

In all cases, the vertical acceleration applied to the piping was assumed to be two -thirds of the peak ground response acceleration for 0.5% damping, i.e., .32g for the operating basis earthquake and .64g for the design basis earthquake.

4. Computer Method of Static Analysis

For Class I systems analyzed by this method, an isometric sketch was made from the piping drawings with mass points located at every tee and at the intersection of straight pieces and elbows. In addition, straight pieces were divided into as many mass points as necessary to assure adequate distribution of loading between support points with spans between mass points rarely exceeding ten foot lengths. A thermal analysis was then performed and after examining thermal displacements throughout the system, single or multi directional restraints were preliminarily located and the static analysis was performed.

The static analysis program uses the displacement method in which the equations of equilibrium at the junctions are solved simultaneously to obtain junction displacements, after which reactions at every point in the system are calculated. Input data for the program includes weight per foot of pipe, fluid and insulation, weight of concentrated loads such as valves, static coefficient for the horizontal and vertical directions, and the location and direction of restraints. The computer output includes forces, moments and stresses (as per the Pressure Piping Code, B31.1) at all points, displacements at all points, and forces on restraints and anchors.

The program multiplies the weight per foot of piping by the static coefficient and uses this adjusted weight unit to determine the virtual weight of each piece of pipe or concentrated load. Half the weight of each member is lumped at the end points and concentrated loads added as applicable. The program then calculates two sets of reactions for the system with loadings applied simultaneously first in one horizontal direction (X) and the vertical direction (Y), then in the other horizontal direction (Z) and the vertical direction (Y).

For each system, the results of the two combined horizontal-vertical analyses were evaluated and if the stress values were found excessive, restraints were added or relocated and the system reanalyzed both statically and thermally. Only in extreme cases where thermal considerations would not allow the use of positive restraints were hydraulic snubbers specified.

5 - Simplified Method of Static Analysis

This method was used for the static analysis of relatively cold systems where thermal effects, although not ignored, were not a critical factor in the placement of restraints for seismic protection. The design basis was that restraints and supports be placed at close enough intervals so that seismic stresses would not exceed 5000 psi for the operational basis earthquake and 10,000 psi for the design basis earthquake.

For every size and schedule of pipes, filled with water and empty, and for the appropriate g loadings the maximum permissible span of straight, uniform pipe were established. These spans were determined on the conservative basis that supports act as pinned end joints for a uniformly loaded, simply supported beam rather than for a continuous beam. It is recognized that in the usual configuration of piping for large systems there are many deviations from the basic straight, uniform run of piping that must be considered in determining permissible span lengths. The effects of concentrated loads, branch connections, changes in pipe size, stress intensification factors, changes of direction, offsets, and various combinations of these effects were studied in detail. Correction factors were determined for each of these deviations which resulted in shortening the permissible span between restraint points for maintaining stress values within the preset limits.

As examples of correction factors:

The permissible span for a straight, uniform run of 4" Sch 40 pipe filled with water with a static coefficient of 1.50g is 29.6 feet for a stress value of 10,000 psi. If a valve weighing 163 pounds was located anywhere within the restraint locations, the permissible span was reduced by an amount equivalent to the weight of valve (163 lbs) divided by the weight per foot of piping (say 16.3 $\frac{\text{lbs}}{\text{Ft}}$), resulting in a permissible span of 19.6 feet

(29.6 feet minus 10 feet). This approach is conservative since the resulting span lengths are shorter than actually required for limiting stresses to specified values.

If the same 4" Sch 40 pipe had a reducer located between restraint points so that piping on either end reduced to 3" Sch 40, the permissible span for the smaller size line governed.

If between restraint points the piping configuration was such that the 4" Sch 40 pipe had both a valve located along the 4" piping and a 3" Sch 40 reducer, the permissible span was reduced first for the effect of the valve weight and again for reduced pipe size.

6 - Systems Analyzed by Computer Method & Simplified Method

In all cases, systems that did not permit the use of the simplified method were analyzed by the computer method. Accordingly, systems were separated as per the following categories:

Computer Analysis

1 - Piping 2" and larger with temperature in excess of 212°.

2 - Piping with temperature less than 212° with significant movement due to expansion of equipment at connection nozzles.

3 - Piping with temperature less than 212° located in the upper region of the reactor containment structure.

4 - Piping with temperature less than 212° connected to piping of higher temperature that could not be logically analyzed except as part of the main system.

Simplified Analysis

For the most part, systems analyzed by this method were those of lesser anticipated stress levels consisting of piping 212° F or less and with relatively low seismic loadings. Systems, other than those analyzed by the computer method, 1-1/2" and over were analyzed by the simplified method.

Piping 1-1/4" and smaller that were field run (drains, vents, test lines and instrumentation lines) were seismically protected by specifying the maximum spacing between restraints such that stress values for straight runs of pipe would not exceed 10,000 psi for the 0.2g ground acceleration earthquake.

7 - Commentary on Tabulated Summary of Maximum Pipe Stresses

The tabulated summary of maximum pipe stresses is essentially an evaluation of primary stresses due to internal pressure, weight and seismic loading for the design basis earthquake. In compiling the stress values, consideration was given to the following:

1 - In all cases the higher stress value of either the X,Y or Y,Z analysis, as described in Section 4 was used.

2 - In all cases where there are duplicate systems, such as the three main steam and feedwater lines in the reactor building and turbine auxiliary bay, the highest stress values were used.

3 - Results shown for systems analyzed by the simplified method assume that the entire stress is caused by bending stress and not torsional stress.

4 - Hangers are to be located as per the recommended spacing of the B31.1 Code resulting in a weight stress of 1500 psi.

Stress values for thermal expansion and for seismic loading due to the operational basis earthquake do not appear in the tabulated summary, however:

1 - In all cases, thermal expansion stresses are within the Sa allowable of the Code for Pressure Piping, B31.1.

2 - In all cases, the sum of stresses due to internal pressure, weight and seismic loading for the operational basis earthquake is within 1.2 S_h (allowable stress in hot condition).

8. TABULATED SUMMARY OF MAXIMUM PIPE STRESS

TABLE 5C-1A

Line No.	Description of Pipe Line	Size and Wall Thickness	Material ASTM Spec.	Seismic Analysis Isometric	Pressure Stress PAf/Am (PSI)	Maximum Estimated Weight Stress (PSI)	Ref. Point No.
1.	Main Steam	26.00" O.D. 1.09" t	A-155 KC-55-1	MS-1	3800	1500	32
2.	Main Steam	26.00" O.D. 1.09" t	A-155 KC-55-1	MS-2	3800	1500	40
3.	Feedwater 16" FW-11	16.00" O.D. 1.03" t	A-106 GR. B	FOW-5	2880	1500	76
4.	Feedwater 16" FW-11	16.00" O.D. 1.03" t	A-106 GR. B	FOW-6	2880	1500	95
5.	Surge Line to Pressurizer 12" RC-10	12.75" O.D. 1.125" t	A-376 Type 316	RC-1	4710	1500	10
6.	Safety Injection To Accumulator 8" SI-38	8.625" O.D. .906" t	A-376 Type 316	SI-2	5077	1500	330
7.	Residual Heat Removal From Primary Loop #2 12" AC-9	12.75" O.D. .375" t	A-376 Type 304	SI-3	2715	1500	68
8.	6" Containment Spray Ring 6" SI-130	6.625" O.D. .134" t	A-312 Type 304	SI-15	814	1500	150
9.	4" Containment Spray Ring 4" SI-128	4.500" O.D. .120" t	A-312 Type 304	SI-16	604	1500	12
10.	Cooling Water From Fan Cooler B 6" CW-39	6.625" O.D. .134" t	SS Type 304	By chart	581	1500	

TABLE 5C-1B

Line No.	Location and Elevation	Horizontal Seismic Coefficient -g (0.2g ground)	Max. Seismic Stress (0.2g ground) Bending Stress (Sb) (PSI)	Max. Seismic Stress (0.2g ground) Torsional Stress (St) (PSI)	Maximum Combined Longitudinal Stress (PSI)	Faulted Condition Allowables Stress Corres. To 20% Uniform Strain (PSI)	Faulted Condition Allowables Stress Corres. To 40% Uniform Strain (PSI)
1.	Containment El. 265.00'	1.80	15,680	960	20,980	34,600	38,200
2.	Turb. Aux. Bay El. 265.00'	1.90	9,712	8	15,012	34,600	38,200
3.	Containment El. 262.00'	1.80	16,850	1,550	21,230	36,000	39,800
4.	Turb. Aux. Bay El. 265.00'	1.90	4,780	0	9,160	36,000	39,800
5.	Containment El. 242.00'	1.00	1,990	900	8,200	34,200	43,700
6.	Containment El. 243.5'	1.00	11,771	824	18,348	34,200	43,700
7.	Containment El. 240.5'	1.00	9,852	1,212	14,067	35,300	45,000
8.	Containment El. 390.09'	2.55	3,660	32	5,974	35,300	45,000
9.	Containment El. 399.86'	2.75	3,108	24	5,212	35,300	45,000
10.	Containment El. 275'	2.15	10,000	---	12,081	35,300	45,000

TABLE 5C-2A

Line No.	Description of Pipe Line	Size and Wall Thickness	Material ASTM Spec.	Seismic Analysis Isometric	Pressure Stress PAf/Am (PSI)	Maximum Estimated Weight Stress (PSI)	Ref. Point No.
11.	Component Cooling Water To RC Pump 1 4" AC-35	4.500" O.D. .237" t	A-106 GR. B	By chart	201	1500	
12.	Spent Fuel Pit Cooling Water To Spent Fuel Pit 10" AC-40	10.75" O.D. .365" t	A-106 GR. B	By chart	330	1500	
13.	Waste Disposal DR Pump A-B Suct 3" WD-45	3.50" O.D. .12" t	A-312 Type 304	WD-1	98	1500	9
14.	Feedwater Aux. FW Pump Disch. To Anch. 4" FW-25	4.50" O.D. .337" t	A-106 GR. B	FDW-1	2387	1500	36
15.	Feedwater Aux. Feedwater FWD Pump A-B Disch. To Penet. 4" FW-22	4.50" O.D. .337" t	A-106 GR. B	FDW-2	2387	1500	189
16.	Feedwater Aux. Feedwater From Penet. To 16" FW-9 4" FW-22	4.50" O.D. .337" t	A-106 GR. B	FDW-3	2387	1500	267
17.	Waste Disposal Dr. Pump A-B Disch. 3" WD-49	3.50" O.D. .12" t	A-312 Type 304	WD-2	197	1500	23
18.	Reactor Coolant Demin. Water To Press. Relief Tank 3" RC-32	3.50" O.D. .12" t	A-312 Type 304	RC-2	656	1500	30
19.	Reactor Coolant Aux. Spray To Pressurizer 4" RC-28	4.50" O.D. .438" t	A-376 Type 316	RC-3	4125	1500	163
20.	Reactor Coolant From Press. to Press. Relief Tank 12" RC-11	12.75" O.D. .375" t	A-106 GR. B	RC-4	3879	1500	20
21.	Reactor Coolant Drain From Coolant Loops and Standpipe To Drain Tank 2" RC-65	2.375" O.D. .109" t	A-312 Type 304	RC-7	283	1500	13

TABLE 5C-2B

Line No.	Location and Elevation	Horizontal Seismic Coefficient -g (0.2g ground)	Max. Seismic Stress (0.2g ground) Bending Stress (Sb) (PSI)	Max. Seismic Stress (0.2g ground) Torsional Stress (St) (PSI)	Maximum Combined Longitudinal Stress (PSI)	Faulted Condition Allowables Stress Corres. To 20% Uniform Strain (PSI)	Faulted Condition Allowables Stress Corres. To 40% Uniform Strain (PSI)
11.	Containment El. 275'	2.15	10,000	---	11,701	31,500	34,800
12.	React. Aux. Bldg. El. 235'	1.00	10,000	---	11,830	31,500	34,800
13.	Containment El. 229.04'	1.00	3,872	172	5,470	35,300	45,000
14.	React. Aux. Bldg. El. 244'	1.60	12,380	5,524	16,267	36,000	39,800
15.	React. Aux. Bldg. El. 243.75'	1.00	12,488	618	16,375	36,000	39,800
16.	Containment El. 246'	1.00	8,674	873	12,561	36,000	39,800
17.	Containment El. 240'	1.00	7,797	298	9,494	35,300	45,000
18.	Containment El. 248'	1.20	6,986	58	9,142	35,300	45,000
19.	Containment El. 266'	1.90	9,741	350	15,366	35,300	45,000
20.	Containment El. 273'	2.15	14,725	80	20,104	36,000	39,800
21.	Containment El. 260'	1.70	14,370	529	16,153	35,300	45,000

TABLE 5C-3A

Line No.	Description of Pipe Line	Size and Wall Thickness	Material ASTM Spec.	Seismic Analysis Isometric	Pressure Stress PAf/Am (PSI)	Maximum Estimated Weight Stress (PSI)	Ref. Point No.
22.	Safety Injection From Penet. 43 to the Hot Leg 2" RC-20	2.375" O.D. .323" t	A-376 Type 316	SI-1	2276	1500	58
23.	Safety Injection From Pumps To Penet. 43 and Boron Tank 4" SI-110	4.50" O.D. .337" t	A-312 Type 316	SI-4	3913	1500	89
24.	Safety Injection From Penet. 63 To 10" SI-47 2" SI-63	2.375" O.D. .343" t	A-376 Type 316	SI-6	2276	1500	57
25.	Containment Spray From Pump A To Penet. 44 6" SI-34	6.625" O.D. .280" t	A-312 Type 304	SI-10	363	1500	57
26.	Containment Spray From Penet. 44 To Ring Hdr. 6" SI-34A	6.625" O.D. .134" t	A-312 Type 304	SI-13	814	1500	124
27.	Stm. Gen. Blowdown From Penet. 14 To Anch. And Isolation Valves 2" B-3	2.375" O.D. .218" t	A-106 GR. B	B-5	2009	1500	4
28.	Chem. And Vol. Control Recirc. Pump Disch. To Hold-up Tanks 4" CH-74	4.50" O.D. .120" t	A-312 Type 304	CH-3	863	1500	2
29.	Chem. And Vol. Control From Regen. Ht. Exch. 3" CH-15A	3.50" O.D. .438" t	A-376 Type 316	CH-4	2823	1500	23

TABLE 5C-3B

Line No.	Location and Elevation	Horizontal Seismic Coefficient -g (0.2g ground)	Max. Seismic Stress (0.2g ground) Bending Stress (Sb) (PSI)	Max. Seismic Stress (0.2g ground) Torsional Stress (St) (PSI)	Maximum Combined Longitudinal Stress (PSI)	Faulted Condition Allowables Stress Corres. To 20% Uniform Strain (PSI)	Faulted Condition Allowables Stress Corres. To 40% Uniform Strain (PSI)
22.	Containment El. 244'	1.00	6,548	4,731	10,324	34,200	43,700
23.	React. Aux. Bldg. El. 234'	1.15	14,980	910	20,393	34,200	43,700
24.	Containment El. 236'	1.00	13,489	3,466	17,265	34,200	43,700
25.	React. Aux. Bldg. El. 237'	1.15	16,397	1,495	18,260	35,300	45,000
26.	Containment El. 397'	2.65	3,701	142	6,015	35,300	45,000
27.	React. Aux. Bldg. El. 237.5'	1.00	13,000	1,619	16,509	36,000	39,800
28.	React. Aux. Bldg. El. 228'	1.00	15,258	144	17,621	35,300	45,000
29.	Containment El. 240'	1.00	13,734	1,925	18,057	34,200	43,700

9. Safety Factors of Seismic Supports

Grinnell Company, Inc. of Providence, R.I., was selected for the design of seismic supports and restraints for this project. They have certified that their normal design of restraints incorporates a built-in basic safety factor of five. This factor varies, but mostly on the conservative side, because:

1 - In many cases, the loads on restraints are of such a small magnitude that in order to maintain uniform design standards, stock items for rods, clamps and associated hardware were used which were orders of magnitude heavier than required.

2 - Even for extreme cases where, for the total of thermal plus seismic loading, the allowable stress values for structural steel were extended to 1.33 times normal allowable stress limits, there exists a conservative safety factor, as shown by the following example:

If a restraint was designed for a total force of 4000 lbs, 2000 lbs due to thermal loading and 2000 lbs due to seismic loading, it would be permissible to use structural steel for a normal allowable value of 3000 lbs, taking advantage of the 1.33 allowable increase for seismic loading. Due to the normal safety factor of five, the force on the restraint can be increased to 15,000 lbs, before failure occurs, resulting in a total margin of 13,000 lbs for seismic loading, which is equivalent to a safety factor of 6.5.

10 - Conclusions

After considering (a) the margin that exists between expected stresses and faulted condition stress allowables, (b) the conservatism in the seismic restraint design, (c) the conservatism in the damping values used as identified in Section 2, and (d) the use of peak accelerations as a function of building elevation, it is concluded that adequate margin exists in the design to account for potential resonance of the piping with the building.

APPENDIX 5C

PART II

H. B. ROBINSON

ADDITIONAL INFORMATION ON

SEISMIC DESIGN OF CLASS I PIPING

This supplement reports the results of the seismic analysis of the CPL Reactor Coolant System (RCS). The report includes a description of the RCS, a brief discussion of the method of analysis, a description of the assumptions made, constraints used, and finally, presentation of the significant results including the points of maximum stress compared with the stress allowable.

The RCS consists of the reactor vessel (RV), steam generator (SG), reactor coolant pump (RCP), interconnecting pipe and the components supports. See Figure 1 for the orientation of the RCS.

One loop was examined for response to seismic loads. The horizontal acceleration component was applied to the loop in four direction at 90° increments, (See Figure 2) each being combined with the vertical component.

The "OBE" and "DBE" accelerations are given below.

Condition	Equipment	Horizontal (g)	Vertical (g)
(OBE)	SG	0.19	0.12
	RCP	0.40	0.27
	Pipe & Fittings	0.40	0.27
(DBE)	SG	0.37	0.25
	RCP	0.96	0.53
	Pipe & Fittings	0.96	0.53

The above horizontal and vertical acceleration components were applied to the center of gravity of each pipe section, fitting and piece of equipment. The mass of each item was based on the total weight including water and insulation.

RCS

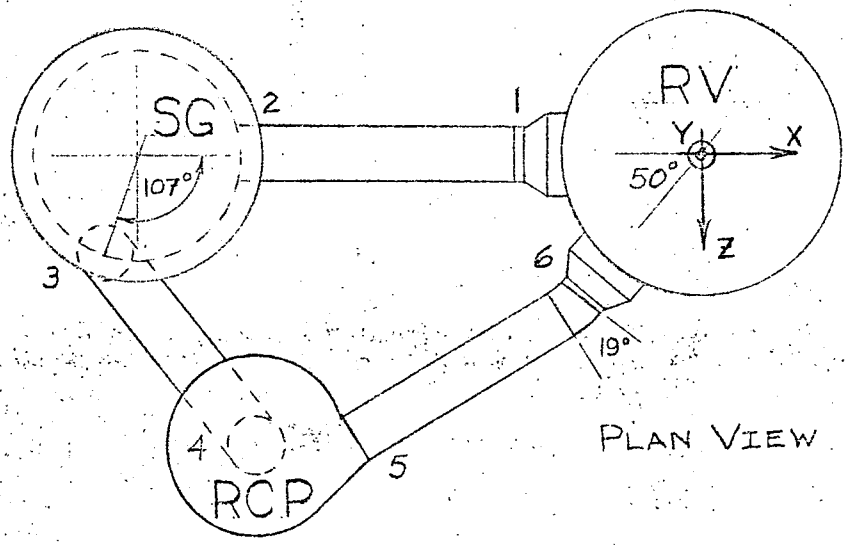

FIGURE 1

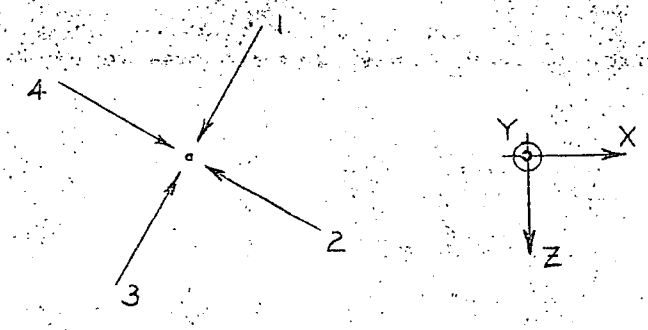

FIGURE 2

Each mass operated on by its appropriate acceleration produced a force. These forces applied to the model in the appropriate direction gave an equivalent static loading condition. The resulting forces and moments are the internal forces and moments exerted by the piping system on all anchors and points of restraint.

The stress is a combined stress due to bending and torsion, i.e.,

$$S_E = \sqrt{\frac{i^2 M_B^2}{Z^2} + \frac{M_t^2}{Z^2}}$$

where M_B = resultant bending moment, in-lb

M_t = torsional moment, in-lb

Z = section modulus of pipe, in^3

i = stress intensification factor

It must be noted that the acceleration values listed are from response spectra with ground accelerations of 0.1 and 0.2 for OBE and DBE conditions respectively. The values for the RCP and piping/fittings are the peak values of the respective curves. The values for the SG are approximately half of the peak. The analysis proved these lower values to be justified, as the SG was "pinned" to its hard stops with these lower values applied; higher values for the SG would not have changed the results since being against the stops prevents the SG from further influencing the piping stresses.

Analysis of the response of the containment internal structure showed that there is little or no response amplification at the elevation of the RCS.

REACTOR COOLANT LOOP SEISMIC ANALYSES

The reactor coolant loop is defined in "Plan View" of the Figure 1. There are two seismic conditions - "OBE" and "DBE" earthquake loadings.

Movements, restraints, guides, and supports used in the calculation are given below. Support design must reflect these values for compatibility between the analyzed system arrangement and the actual system.

Reactor Vessel - For the seismic analysis the reactor vessel is rigid.

Steam Gen. - For the seismic analysis, the movement is restricted to 1/4" in any direction in the horizontal plane at the center of gravity.

R.C. Pump - The seismic analysis requires the pipe to carry all pump reactions due to horizontal seismic loading. (This is very conservative).

All equipment dead weights are carried in the supports.

The following is a presentation of results of significant calculated stress:

The allowable stresses are calculated as follows:

(1.2 x material allowable) - longitudinal pressure stress- deadweight stress

The piping material is ASTM A376 Grade TP-316H

$$\sigma_a = 17050 \text{ @ } 650°$$

The fitting material is ASTM A351, Grade CF8M

$$\sigma_a = 15000 \text{ @ } 650°$$

The points of max. stress are at the RV outlet nozzle hot leg interface, and discharge end of the RCP cold leg (19°) elbow.

The pressure stress for the hot leg is:

$$\sigma_{1p} = \frac{P\ r_i^2}{r_o^2 - r_i^2} \qquad \text{where } P = 2335,\ r_i = 14.5,\ r_o = 17.0$$

$$\sigma_{1p} = 6234$$

The pressure stress for the cold leg elbow is:

$$\sigma_{1p} = \frac{P\ r_i^2}{r_o^2 - r_i^2} \qquad \text{where } P = 2335,\ r_i = 13.75,\ r_o = 16.5156$$

$$\sigma_{1p} = 5274$$

The seismic allowable is 1.2 times the material allowable minus the longitudinal pressure stress and deadweight stress. The seismic allowable for the hot leg is:

$$\sigma_{sa} = (1.2 * 17050) - 6234 - 400$$
$$= 20460 - 6634$$
$$= 13826$$

The seismic allowable for the cold leg elbow is:

$$\sigma_{sa} = (1.2 * 15000) - 5274 - 400$$
$$= 18000 - 5674$$
$$= 12325$$

The calculated maximum stresses are given below:

Table 1

Loading Conditions		Point of Max. Stress	
Direction	Type	(ref. Fig. 1)	Stress
1	Design	6	6206
2	Design	1	4554

Table 1 (continued)

Loading Conditions		Point of Max. Stress	
Direction	Type	(Ref. Fig. 1)	Stress
3	OBE	6	6286
4	OBE	1	4667
1	DBE	6	14588
2	DBE	6	9995
3	DBE	6	14773
4	DBE	6	10333

In all but two cases the calculated value is below the allowables. In these two cases the overstressed point is at the cold leg elbow. This condition arises because in the analysis presented here the RCP has been very conservatively allowed to move in the horizontal plane without external restraint. With the pump support structure restraint included, the loading on the cold leg is greatly relieved, and the apparent overstress condition does not exist.

D.D. Mirro

JUNE 5 1970 letter supersedes this

dynamic analysis WESTDYN.

APPENDIX 5D

Compatibility of Protective Coatings With Post-Accident Environment

The investigation of materials compatibility in the post-accident design basis environment also included an evaluation of protective coatings for use in containment.

The results of the protective coatings evaluation[1] showed that several inorganic zincs, modified phenolics and epoxy coatings are resistant to an environment of high temperature (320° F maximum test temperature) and alkaline sodium borate. Long term tests included exposure to spray solution at 150 - 175° F for 60 days, after initially being subjected to the design basis accident cycle. Similar tests were conducted at Idaho Falls NRTS.[2]

The protective coatings, which were found to be resistant to the test conditions, that is, exhibited no significant loss of adhesion to the substrate nor formation of deterioration products, comprise virtually all of the protective coatings exposed in the CPL containment. Hence, the protective coatings will not add deleterious products to the core cooling solution. Essentially all carbon steel surfaces are either coated with Carbozinc-11[3] (inorganic zinc primer) and Phenoline 305[3] (modified phenolic top coat), or protected from direct impingement of the spray. For example, the containment vessel liner surface is protected by the liner insulation and is not exposed to the DBA Spray. The coating in this area is the Keeler & Long 7230 System. It should be noted further, however, that this coating system, while exhibiting blisters in the conservative test environment,[1] did not fail to the extent that significant deterioration products were released from the surface. 10

The concrete surfaces which have been coated are coated with Phenoline 305 or Carboline 195 Surfacer[3] and Phenoline 305. Carboline 195 Surfacer is a product generally identical (modified epoxy-polyomide) with protective coating which has been shown to be completely resistant to the design basis accident environment.

It should be pointed out that several test panels of the types of protective coatings used at CPL were exposed for two design basis accident cycles and showed no deterioration or less of adhesion with the substrate. 10

(1) "Evaluation of Protective Coatings for Use in Reactor Containment" L. F. Picone, WCAP-7198-L, April 1968

(2) "Development of Testing Procedures for Protective Coatings to be Used in Nuclear Reactor Containment Structures", B. J. Newby, et al, IN 1253 February 1969 10

(3) Carboline Co., St. Louis, Missouri

(4) Keeler & Long Inc., Waterbury, Conn.

accident conditions in all areas except the base slab liner and the axial stress at the base of the cylinder wall. In selecting the value of 115 percent of design pressure for test pressure, the background of testing steel containments using the ASME Code was recognized as a convenient comparison point. Although this code is not applicable to a composite concrete and steel containment, the fact that a number of containments have been tested to 115 percent of design pressure is a strong argument to maintain this value for concrete containments as a means of comparison.

As a result of the analyses and assumptions made the stresses in all portions of the containment have been kept within safe design stress limits which are below the yield strength of the material.

5.6 TESTS AND INSPECTION CAPABILITY

5.6.1 PRINCIPAL DESIGN CRITERIA

Initial Containment Leakage Rate Testing

Criterion: Containment shall be designed so that integrated leakage rate testing can be conducted at the peak pressure calculated to result from the design basis accident after completion and installation of all penetrations and the leakage rate shall be measured over a sufficient period of time to verify its conformance with required performance. (GDC 54)

After completion of the containment structure and installation of all penetrations and weld channels an integrated leak test will be performed in accordance with American Nuclear Society Standard, ANS 7.60 on the total containment volume to ensure no leaks remain in the containment after construction closure.

Following the initial integrated leak test a structural strength test on the containment will be conducted.

After successful completion of the initial integrated leak and strength tests an initial sensitive leakage rate test will be conducted in accordance with American Nuclear Society Standard, ANS 7.60. Only the volume of the weld channels and double penetrations are to be included in the test to verify that the leakage rate is no greater than 0.1 percent of the containment free volume per day.

Periodic Containment Leakage Rate Testing

Criterion: The containment shall be designed so that an integrated leakage rate can be periodically determined by test during plant lifetime. (GDC 55)

A leak rate test at the peak calculated accident pressure using the same method as the initial sensitive leak rate test can be performed at any time during the operational life of the plant.

Provisions for Testing of Penetrations

Criterion: Provisions shall be made to the extent practical for periodically testing penetrations which have resilient seals or expansion bellows to permit leak tightness to be demonstrated at the peak pressure calculated to result from occurrence of the design basis accident. (GDC 50)

A permanently piped monitoring system is provided such that all penetrations are pressurized at all times throughout the operating life of the plant.

Penetrations are designed with double seals so as to permit pressurization of the interior of the penetration. The large access openings such as the equipment hatch and personnel air locks are equipped with double gasket seals with the space between them connected to the pressurization system. The system utilizes a supply of clean, dry, compressed air which will place the penetrations under an internal pressure greater than the peak calculated accident pressure.

Leakage from the pressurization system is checked by continuous measurement of the integrated makeup air flow. In the event excessive leakage is discovered, each penetration can then be checked separately at any time.

Provisions for Testing of Isolation Valves

Criterion: Capability shall be provided to the extent practical for testing functional operability of valves and associated apparatus essential to the containment function for establishing that no failure has occurred and for determining that valve leakage does not exceed acceptable limits. (GDC 57)

Capability is provided to the extent practical for testing the functional operability of valves and associated apparatus during periods of reactor shutdown.

Initiation of containment isolation employs coincidence circuits which allow checking of the operability and calibration of one channel at a time. Removal or bypass of one signal channel places that circuit in the half-tripped mode.

The main steam and feedwater barriers and isolation valves in systems which connect to the Reactor Coolant System are hydrostatically tested.

Valves in the Residual Heat Removal System are not considered to be isolation valves in the usual sense inasmuch as the system would be in operation under accident conditions.

5.6.2 PREOPERATIONAL TESTING

Field and operational inspection and testing will be divided into three phases:

a) That taking place during erection of the Containment Building Liner; Construction Tests.

b) That taking place after the Containment Structure is erected and all penerations are complete and installed; Pre-operational tests.

c) Monitoring during reactor operation; Post-operational tests.

5.6.2.1 Construction Tests

Quality of both materials and construction of the containment vessel are assured by a continuous program of quality control and inspection by Ebasco Services and Westinghouse Atomic Power Division. Ebasco Services Incorporated is the Engineer-Constructor and, as such, has direct responsibility for inspection and quality control. An Ebasco quality control group not reporting to field production management is directly responsible for implementing and administering the inspection and quality control programs. Ebasco maintains a staff of factory inspectors who will inspect and verify the quality of all manufactured products used in the construction of the containment. Ebasco is responsible for assuring quality of the materials used in the manufacture of the concrete and for the proper placement, erection, construction procedures and practices in the actual construction of the containment. Working under the direction of the quality control field engineer is a staff of qualified engineers and inspectors. Design engineers thoroughly familiar with the design have been at the site as required during the critical phases of containment erection to ensure conformance to design standards. The testing of all steel products and concrete was done by a qualified independent testing laboratory. Radiographic inspection of welds is done under the supervision

of the Nondestructive Testing Laboratory of Ebasco. Copies of all quality control reports are forwarded to Carolina Power & Light, WAPD and the design engineering department of Ebasco. It is the direct responsibility of the Ebasco engineering department to approve the quality control reports; however, as a parallel effort, WAPD and Carolina Power & Light review these reports for compliance with quality control procedures. In addition, WAPD reviews and approves all radiographs, whether conducted in the field or in the shop of the supplier. WAPD furnishes for CP&L review copies of nondestructive tests conducted by Westinghouse or its suppliers.

Bottom Liner Plates

All liner plate welds were tested for leak tightness by a vacuum box. After completion of a successful vacuum box leak test, the welds were covered by channels. A strength test of channel welds was then performed by applying 48.3 psig air pressure to the channels in the zone for a period of 15 minutes.

In addition, the zone of channels was held at the 42 psig air pressure using a Freon-air mixture for a period of at least two hours with no more than 0.5 psi drop in pressure. Compensation for change in ambient air temperature was made as necessary.

Vertical Cylindrical Walls and Dome

Liner plate seam welds in the cylindrical walls and dome were spot radiographed as follows: For each 50 lineal feet (maximum) of welding by each welder a 12-inch (minimum) radiograph is made.

ASME Pressure Vessel Code, Section VIII, specifies 1 percent of spot radiography, but 2 percent spot radiography is used as an aid to quality control on full penetration butt welds.

ASA N6-2 states that for parts of containment structures where the steel plate serves primarily as a membrane liner to reduce leakage, radiography

of seam welds will not be required. However, in the interests of conservatism, and in accordance with Quality Control Procedures, the liner was spot radiographed 2%. The bottom three rings were magnetic particle tested.

In those instances where back up plates have been used with liner welds and radiography is unsatisfactory, the welds have been magnetic particle tested at the intersection of the liner plates for a distance of one foot in each direction. This results in approximately 7 percent magnetic partical testing of liner welds. In addition all back up plate liner welds are 100 percent vacuum box tested.

The inspection for liner attachment studs was as follows: The first two studs welded to each plate, after being allowed to cool, were bent approximately 34° by striking the stud with a hammer. If failure occurs in the welds of either stud, the welding procedure or technique was corrected and two successive studs successfully welded and tested before further studs were attached to the liner. All studs welds were visually inspected, and studs on which a full 360° weld was not obtained were repaired by adding a 1/8" fillet weld in place of the insufficient weld, using the shielded metal arc process with low hydrogen welding electrodes.

Before welding a new stud where a defective one has been removed, the area was ground flush and smooth.

Any stud which did not show a full 360° weld or any stud which has been repaired by welding was struck with a hammer and bent 15°. For studs showing less than 350° weld prior to repair, the direction of bending was opposite to the lack of weld. The procedures outlined above for the first two studs on each plate were then followed.

The penetration welds were spot radiographed. After successful spot radiograph, the welds were covered by steel angles, channels or pipe sections welded to the liner and the assemblage strength tested to 48.3 psig for a period of 15 minutes. On successful conclusion of the

strength test, halogen sniffer tests were performed on all penetration welds at 42 psig pressure. The detection of any amount of halogen indicated a leak requiring weld repairs and retesting. The zone under pressure was held under 42 psig for a period of at least 2 hours with zero drop in pressure.

Penetrations

Strength and leak tests of individual penetration internals and closures and sleeve weld channels was performed in a similar manner to the above and all leaks repaired and retested until no further leaks were found.

Shop leak testing procedures were conducted in accordance with ASA N6.1965.

A proof test will be applied to each penetration which will pressurize the necessary areas to 48.3 psig. This pressure will be maintained a sufficient time to allow soap bubble and Freon sniff tests of all welds and mating surfaces. Any leaks found are to be repaired and retested, this procedure to be repeated until no leaks exist.

On-Site-User-Testing of Materials

Item	On-Site-User-Testing of Materials
Concrete (Cement, aggregate, water)	Concrete tests in accordance with C 172, C 31, C 192, C 39, C 231. Standard Slump test in accordance with ASTM C 143. Aggregate in accordance with ASTM C 33. Water tests ASTM D512.
Reinforcing Steel	Tensile strength test on full bars as by-product of tests on splices. Random sampling of sample heat bars by full scale tensile testing.

Prestressing Steel	One tensile strength test on a representative sample of tendon material from each heat of steel used. Prestressing is a full scale tension test beyond stress value for factored load condition.
Mechanical Splices	Each splicing crew will receive instructions from a representative of the supplier and be required to prepare several acceptable sample splices for each bar size. All Cadweld splices will be visually inspected to assure that sound filler metal is present at both ends of the sleeve and in the tap hole. This inspection is made on the same day that the splice is made by an inspector working for the quality control engineer. An inspection manual has been issued to guide the inspector in his judgement of a satisfactory splice. Any splices in doubt as to integrity will be cut out and replaced. The Cadweld splices made by each crew is randomly sampled by cutting out the splice and a length of bar at each end of the splice and tension testing to failure in an independent testing laboratory. The schedule for testing and sampling is approximately as follows for each crew: 4 out of the first 100 splices for each bar size and grade. 3 out of the next 100 splices. 2 out of the next and subsequent units of 100 splices.

A continual review of the test data will be performed and if any of the splices fail to develop 90% of the minimum ultimate strength of the bar or if two splices in sequence fail to develop the full minimum tensile strength, the production of that crew is halted until an investigation is made to determine the cause and extent of the defective splices, and corrections are made to assure that further splices will meet the specification strength. Before returning to production, the crew is required to make several sample splices and qualify as a new crew if their splicing procedures were found inadequate by the investigation. It is believed that the most probable cause for poor Cadweld splices is the performance of the splicing crew. All material is subjected to quality control inspection procedures in the shop before shipment which gives a high degree of reliability to the materials and components used.

Insulation	None
Liner Plates	None
Steel Liner Studs	See 5.6.2.1 b) 1.

5.6.2.2 Initial Leak Rate Test

Experience with testing containment vessels indicates that leakage does not occur through the steel plates or the welds joining the steel plates when these structures have been fabricated and inspected in accordance with applicable ASME pressure vessel code provisions. The sources of leakage have been associated with the penetrations. Based

on this experience, all penetrations and the welds joining these penetrations to the containment liner have been designed to provide a double barrier which can be continuously pressurized at a pressure higher than the design pressure of the containment. This blocks all of these potential sources of leakage with a high pressure zone and at the same time provides a means of monitoring the leakage status of the containment.

Although experience indicates that full penetration liner welds performed by qualified welders and inspected by the procedures outlined earlier do not leak, the design incorporates weld channels over all the liner welds which can be pressurized to containment design pressure periodically to permit leak testing of the welds.

After the Containment Building is complete with liner, concrete structures, and all electrical and piping penetrations, equipment hatch and personnel locks in place, the following initial tests will be performed.

Gross Leak Rate Tests

An integrated leak rate test will be conducted at 42 psig. Detailed procedures are being prepared for this leak rate test. Due consideration will be given to the incorporation of a small known reference leakage. It is expected that this pre-operational integrated leak rate test will serve to demonstrate the adequacy of the post-operational sensitive leak rate testing program. Successful completion of this test is based on a leakage rate no greater than 0.1 percent by weight of the containment volume per day.

Sensitive Leak Rate Tests

The sensitive leak rate tests will comply with ANS 7.60 (proposed standard dated December, 1964) but only the volume of the weld channels and double penetrations will be included in the test. This volume is about 1000 times smaller than the containment free volume.

The test conditions for the sensitive leak rate tests are as follows:

1) Penetrations and weld channels at 42 psig and with the containment building pressurized to 40 psig but not participating in the leak test.

2) Penetrations and weld channels at 42 psig and with the containment building at atmospheric pressure.

From the results of these two tests the leakage through the inner and outer barriers of the penetrations and weld channels can be determined and their integrity demonstrated.

Strength Test

A pressure test will be made on the completed building using air at 48.3 psig. This pressure will be maintained on the building for a period of one hour. During this test measurements and observations will be made to verify the adequacy of the structure design.

A structural test program of the containment shell will be carried out after construction is complete in order to provide additional assurances of the adequacy of the structural design. The structural tests will be made by pressurizing the containment to 115 percent of design pressure (48.3 psig) for a period of one hour and measuring the movement of the structure at selected locations as described below. The detailed plan for testing (including predicted and tolerable deflections) is currently being prepared.

The structural performance will be checked by comparing the actual deflections under test with the predicted values. The areas of greatest interest will be:

1 - The cylinder wall at points where it is in pure membrane stress.

2 - The cylinder wall at points of discontinuity caused by junction to another structural component

a) springline

b) base

3 - The cylinder wall in the areas of the equipment hatch and personnel lock.

4 - The base slab at the perimeter

5 - The reactor sump structure

To determine the degree of agreement between predicted and computed performance in these areas, an instrumentation program is being developed with the aim of being able to trace the deflection pattern of the outside surface of the wall measured in a vertical line at four quarter points on the cylinder. In addition the longitudinal and circumferential growth of the cylinder from base to the spring line will be measured at these quarter points. Radial movement of the outside surface of the wall will be measured on four lines radiating away from the equipment hatch and personnel lock. Vertical movement of the base slab adjacent to the wall will be measured at the quarter points.

To match the type of instrumentation to the magnitude of measurement calibrated targets attached to the wall and high magnification theodolites will be used to measure radial movement at the springline and upper portions of the wall where movements of about 1/2" are expected. Theodolites are capable of a precision of $\pm$ .01" when used in such situations. This is sufficient for this magnitude of measurement.

Measurements at the base of the wall and around the two large penetrations will be made by means of dial gages capable of measuring to .001".

Longitudinal and circumferential growth of the wall will be measured by means of electrical strain gages attached to the face of the liner

to the insulation immediately prior to testing in an area subjected only to membrane forces. Three gages in each direction will be used to reduce the difficulty of interpretation. Unbonded and unstressed gages will be placed alongside the bonded gages to allow for thermal effects.

Dial gages will be used to determine the movement of the base slab.

To provide further information on the basic hypotheses, meridional and tangential strains will be measured on the dome liner near the peak where pure membrane strains occur. These strains will be measured along the same quarter points as strains gages. To reduce the difficulty of reading inter-pretation three redundant gages with three dummy gages (non-strain reading) for thermal compensation will be placed for each measurement desired.

The reactor sump structure walls will be instrumented to measure physical movement at several elevations above the sump bottom slab by means of pin supported bars with redundant and dummy strain gages attached.

To ascertain the degree of conservatism in the assumption on vertical crack spacing in the cylinder wall a program to measure the average, minimum and maximum spacing will be pursued at three elevations.

1 - base
2 - area of membrane stress only
3 - elevation of top tendon anchorage

These cracks will be measured at the quarter points for a circumferential distance of 10 feet using stress sensitive paint to make any cracking more discernible.

The crack pattern in the area of the large penetrations will be visually checked to confirm consistency with the predicted tension stress pattern.

The number of gases at each location is currently being determined.

The expected magnitudes of readings and the tolerable differences between predicted and measured are being developed. These tolerable differences will be dependent upon several factors - among them being:

1 - the magnitude of the measurement
2 - the amount of conservatism factored into the predicted value
3 - the type of instrumentation

In the event that any measurements are outside the tolerable differences an analysis will be made to determine the reasons for and the implications of the difference.

5.6.3 POST-OPERATIONAL TESTS

5.6.3.1 Leakage Monitoring

The double penetrations in the containment will be continuously pressurized to provide a continuous and very sensitive and accurate means of monitoring their status with respect to leakage. Weld seam channels which are installed on the inside of the liner are provided with fittings to permit very sensitive and accurate periodic leak testing of the liner weld channels. With these provisions there is no need to perform integrated leak rate tests of the containment building unless major maintenance or modifications of the containment are made. To allow for this possibility, it will be permissible to pressurize the containment building to 42 psig.

5.6.3.2 Tendon Surveillance

As stated in Supplement 2 in (PSAR) in answer to question VIII.E(2) (a), the applicant, its engineer-instructor and its consultants believe that there is sufficient evidence in the history of the prestressed concrete industry to justify the specifying of an uniaxially prestressed concrete containment vessel such as the H. B. Robinson containment with full confidence that it will perform within the criteria set in its design. Conservative values will be used in estimating qualities of materials which affect the net prestressing force.

As an example of the conservatism to be used consider creep and shrinkage. Design values of 0.0003 inches/inch shrinkage and 2.25 for coefficient of creep (creep stain/elastic strain) have been specified. It is expected that actual values of 0.0001 inches/inch shrinkage and 1.7 for coefficient of creep are realistic values based on preliminary estimates using Hansen and Mattock, Influence of Size and Shape of Member on the Shrinkage and Creep of Concrete, Journal of the ACI - Feb. 1966 - as a guide.

Such a conservative design can only result in higher pre-compression stresses in the concrete and higher tensile stresses in the tendons. This is of little interest since even with these higher tensile stresses the tendons will never reach the tensile stress imposed upon them with the initial prestressing operation.

There is no practical method of surveying the tendon stress and corrosion and creep and shrinkage of the concrete for a grouted tendon. Known conservative analytical procedures in addition to successful experience application for grouted tendons does not warrant a surveillance program. However, two short tendons similar to the service tendons and in a similar environment are being provided. These may be uncovered at any time for surveillance of any corrosion.

TABLE OF CONTENTS

Section	Title	Figure
6	ENGINEERED SAFETY FEATURES	6.1-1
6.1	Criteria	6.1-2
6.1.1	Engineered Safety Features Criteria	6.1-2
	Engineered Safety Features Basis for Design	6.1-2
	Reliability and Testability of Engineered Safety Features	6.1-4
	Missile Protection	6.1-5
	Engineered Safety Features Components Capability	6.1-7
	Accident Aggravation Prevention	6.1-8
	Sharing of Systems	6.1-8
6.1.2	Related Criteria	6.1-9
6.2	Safety Injection System	6.2-1
6.2.1	Design Basis	6.2-1
	Emergency Core Cooling System Capability	6.2-1
	Inspection of Emergency Core Cooling System	6.2-3
	Testing of Emergency Core Cooling System Components	6.2-3
	Testing of Emergency Core Cooling System	6.2-3
	Testing of Operational Sequence of Emergency Core Cooling System	6.2-4
	Codes and Classifications	6.2-5
	Service Life	6.2-5
6.2.2	System Design and Operation	6.2-5
	System Description	6.2-5
	Injection Phase	6.2-6
	Recirculation Phase	6.2-9
	Cooling Water	6.2-12
	Component Cooling System	6.2-12
	Service Water System	6.2-12
	Change-Over from Injection Phase to Recirculation Phase	6.2-12
	Location of the Major Components Required for Recirculation	6.2-13
	Components	6.2-14
	Accumulators	6.2-15
	Boron Injection Tank	6.2-16
	Refueling Water Storage Tank	6.2-17
	Safety Injection Pumps	6.2-18
	Heat Exchangers	6.2-20
	Valves	6.2-20
	Motor Operated Valves	6.2-23
	Manual Valves	6.2-25
	Accumulator Check Valves	6.2-25
	Relief Valves	6.2-27
	Leakage Limitations	6.2-27
	Piping	6.2-28

TABLE OF CONTENTS (Cont'd)

Section	Title	Figure
	Pump and Valve Motors	6.2-31
	Motors Outside the Containment	6.2-31
	Motors Inside the Containment	6.2-31
	Electrical Supply	6.2-33
	Protection Against Dynamic Effects	6.2-33
6.2.3	Design Evaluation	6.2-34
	Range of Core Protection	6.2-34
	System Response	6.2-36
	Single Failure Analysis	6.2-38
	Reliance on Interconnected Systems	6.2-38
	Shared Function Evaluation	6.2-39
	Passive Systems	6.2-39
	Emergency Flow to the Core	6.2-41
	Recirculation Loop Leakage	6.2-41
	Pump NPSH Requirements	6.2-42
	Residual Heat Removal Pumps	6.2-42
	Safety Injection Pumps	6.2-42
6.2.4	Tests and Inspections	6.2-43
	Inspection Capability	6.2-43
	System Testing	6.2-43
	Components Testing	6.2-44
	Operational Sequence Testing	6.2-46
6.3	Containment Air Recirculation Cooling System	6.3-1
6.3.1	Design Bases	6.3-1
	Containment Heat Removal Systems	6.3-1
	Inspection of Containment Pressure - Reducing Systems	6.3-2
	Testing of Containment Pressure - Reducing Systems Components	6.3-2
	Testing of Operational Sequence of Containment Pressure-Reducing Systems	6.3-2
	Performance Objectives	6.3-3
	System Design and Operation	6.3-5
	Containment Cooling System Characteristics	6.3-5
	Actuation Provisions	6.3-6
	Flow Distribution and Flow Characteristics	6.3-7
	Cooling Water for the Fan Cooler Units	6.3-8
	Actuation Provisions	6.3-8
	Environmental Protection	6.3-8
	Components	6.3-9
	Roughing Filters	6.3-9
	Fan-Motor Units	6.3-9
	Cooling Coils	6.3-11
	Ducting	6.3-12
	Air Operated Louvers	6.3-12
	Electrical Supply	6.3-12

TABLE OF CONTENTS (Cont'd)

Section	Title	Figure
6.3.3	Design Evaluation	6.3-13
	Range of Containment Protection	6.3-13
	System Response	6.3-13
	Single Failure Analysis	6.3-14
	Reliance on Interconnected Systems	6.3-14
	Shared Function Evaluation	6.3-14
	Reliability Evaluation of the Fan Cooler Motor	6.3-14
6.3.4	Tests and Inspection	6.3-16
	Inspection Capability	6.3-16
	Testing	6.3-17
	Component Testing	6.3-17
	System Testing	6.3-18
	Operational Sequence Testing	6.3-18
6.4	Containment Spray System	6.4-1
6.4.1	Design Bases	6.4-1
	Containment Heat Removal Systems	6.4-1
	Inspection of Containment Pressure Reducing Systems	6.4-2
	Testing of Containment Pressure - Reducing Systems Components	6.4-2
	Testing of Containment Spray Systems	6.4-3
	Testing of Operational Sequence of Containment Pressure-Reducing Systems	6.4-3
	Inspection of Air Cleanup Systems	6.4-3
	Testing of Air Cleanup Systems Components	6.4-4
	Testing of Air Cleanup Systems	6.4-4
	Testing of Operational Sequence of Air Cleanup Systems	6.4-4
	Performance Objectives	6.4-5
	Service Life	6.4-6
	Codes and Classifications	6.4-6
6.4.2	System Design and Operation	6.4-7
	System Description	6.4-7
	Recirculation Phase	6.4-8
	Cooling Water	6.4-9
	Change Over	6.4-9
	Components	6.4-9
	Pumps	6.4-10
	Spray Nozzles	6.4-10
	Spray Additive Tank	6.4-11
	Heat Exchangers	6.4-12
	Valves	6.4-12
	Piping	6.4-12
	Motors for Pumps and Valves	6.4-12
	Electrical Supply	6.4-12
	Environmental Protection	6.4-12
	Material Compatibility	6.4-12

TABLE OF CONTENTS (Cont'd)

Section	Title	Figure
6.4.3	Design Evaluation	6.4-13
	Range of Containment Protection	6.4-13
	System Response	6.4-15
	Single Failure Analysis	6.4-15
	Reliance on Interconnected Systems	6.4-15
	Shared Function Evaluation	6.4-16
6.4.4	Tests and Inspections	6.4-16
	Inspection Capability	6.4-16
	Component Testing	6.4-17
	System Testing	6.4-17
	Operational Sequence Testing	6.4-18
6.5	Leakage Detection and Provisions for the Primary and Auxiliary Coolant Loops	6.5-1
6.5.1	Leakage Detection Systems	6.5-1
	Design Bases	6.5-1
	Monitoring Reactor Coolant Leakage	6.5-1
	Monitoring Radioactivity Releases	6.5-1
	Principles of Design	6.5-2
	Systems Design and Operation	6.5-2
	Reactor Coolant System	6.5-3
	Containment Air Particulate Monitor	6.5-3
	Containment Radioactive Gas Monitor	6.5-5
	Humidity Detector	6.5-7
	Condensate Measuring System	6.5-7
	Component Cooling Liquid Monitor	6.5-8
	Condenser Air Ejector Gas Monitor	6.5-9
	Steam Generator Liquid Sample Monitor	6.5-9
	Pump Activity	6.5-10
	Liquid Inventory	6.5-11
	Residual Heat Removal Loop	6.5-11
	Component Cooling Loop	6.5-12
	Service Water System	6.5-13
6.5.2	Leakage Provisions	6.5-14
	Design Basis	6.5-14
	Reactor Coolant System	6.5-14
	Residual Heat Removal Loop	6.5-15
	Component Cooling Loop	6.5-16
	Service Water System	6.5-16
Appendix 6A	Iodine Removal Effectiveness Evaluation of the Containment Spray System	

LIST OF TABLES

Table	Title
6.2-1	Safety Injection System - Code Requirements
6.2-2	Instrumentation Readouts on the Control Board for Operator Monitoring During Recirculation
6.2-3	Quality Standards of Safety Injection Systems Components
6.2-4	Accumulator Design Parameters
6.2-5	Boron Injection Tank
6.2-6	Refueling Water Storage Tank Design Parameters
6.2-7	Pump Parameters
6.2-8	Residual Heat Exchangers Design Parameters
6.2-9(a)	Single Failure Analysis - Safety Injection System
6.2-9(b)	Loss of Recirculation Flow Path
6.2-10	Shared Function Evaluation
6.2-11	Accumulator Inleakage
6.2-12	Maximum Potential Recirculation Loop Leakage
6.2-13	Residual Heat Removal System Design, Operation and Test Conditions

LIST OF FIGURES

Figure Number	Title
6.2-1	Safety Injection System
6.2-2	Safety Injection System - Plan Sheet #1
6.2-3	Safety Injection System - Plan Sheet #2
6.2-4	Safety Injection Systems Sections
6.2-5	Residual Heat Removal Piping
6.2-6	Reactor Building Drainage
6.2-7	Safety Injection Pump Performance Characteristics
6.2-8	Bar Chart
6.3-1	Fan Cooler Schematic
6.4-1	Containment Spray Pump Performance Characteristics

6.0 ADMINISTRATIVE CONTROLS

6.1 ORGANIZATION, REVIEW AND AUDIT

6.1.1 The Plant Superintendent is directly responsible for the safe operation of the facility.

6.1.2 In all matters pertaining to operation of the plant and to these Technical Specifications, the Plant Superintendent shall report to and be directly responsible to the Manager of Nuclear Generation. The organization is shown in Figure 6.1-1.[1] 5

6.1.3 Organization for conduct of operation of the plant is shown in Figure 6.1-2[2]

1. Qualifications with regard to educational background and experience of key supervisory and professional personnel in the above chart are as follows:[3]

   a. Plant Superintendent

      Degree in Engineering or equivalent in technical education and training. Ten years of experience which includes experience in the Engineering, Operation, Maintenance or Supervision of power plant facilities, including some nuclear experience, with at least 5 years in a responsible supervisory position of such facilities.

b. Operating Supervisor

Degree in Engineering or equivalent in technical education and training. Five years' of experience which includes experience in the Engineering, Operation, Maintenance or Supervision of power plant facilities including some nuclear experience. Obtain a Senior Reactor Operator License for H. B. Robinson Unit No. 2.

c. Engineering Supervisor

5 Degree in Engineering with at least two years' experience in Engineering, Operation or Maintenance of a power plant facility.

d. Maintenance Supervisor

Degree in Engineering or equivalent in technical education and training with at least one year's experience in Engineering, Operation or Maintenance of a power plant facility.

e. Radiation Control & Test Foreman

High school graduate with two years college, technical school, or equivalent training. Relevant experience including work with the radiation protection group at a nuclear plant.

f. Instrumentation and Control Foreman

High school graduate or equivalent with additional courses in basic electricity and electronics. Must have experience in instrumentation and control work with emphasis on electronic repair.

2. The following requirements are in addition to the applicable regulations of 10 CFR 50.54:

   a. Two licensed reactor operators shall be at the plant, one of whom shall be in the control room, at all times when there is fuel in the reactor vessel.

   b. Two licensed reactor operators shall be in the control room during approach to criticality of the reactor.

6.1.4 Organizational units for the review and audit of plant operations shall be constituted and have the responsibilities and authorities outlined below:

6.1.4.1 Plant Safety Committee[4]

a. Membership

1. Chairman: Plant Superintendent

2. Vice Chairman: Operating Supervisor

3. Secretary: Engineering Supervisor

4. Maintenance Supervisor 5

5. Technical Service Group - Senior Engineer Radiation Control

6. Radiation Control & Test Foreman

7. Instrumentation & Control Foreman

b. Qualifications:

The qualifications of the regular members of the Plant Safety Committee with regard to the combined experience and technical specialties of the individual members shall be maintained at a level at least equal to or higher than as described in 6.1.3 and in 6.1.4.2, part b.6.

c. Meeting frequency: Monthly, and as required, on call of the Chairman.

d. Quorum: Chairman or Vice Chairman plus four members or their designated alternates.

e. Designated alternates shall be from other plant personnel in the appropriate disciplines or from the Technical Services Group; however, there shall be no more than two (2) alternate members serving on the committee at any one time.

f. Responsibilities:

1. Review proposed normal, abnormal and emergency operating procedures. Review all proposed maintenance procedures and proposed changes to those procedures; and any other proposed procedures or changes thereto as determined by the Plant Superintendent to affect nuclear safety.

2. Review proposed tests and experiments.

3. Review proposed changes to Technical Specifications.

4. Review proposed changes or modifications to plant systems or equipment, which changes would require a change in procedures in (1) above.

H. B. Robinson Plant Technical Specifications 4.5 through 4.8 (Surveillance requirements) specify the test frequency and acceptance criteria to be used for periodic verification of the operability of engineered safety features actuation circuits and components.

7

The testing of the analog channel inputs is accomplished in the same manner as for the reactor protection system. The engineered safety features logic system is tested by means of test switches to simulate inputs from the analog channels. The test switches interrupt the logic matrix output to the master relay to prevent actuation. Verification that the logic is accomplished is indicated by the matrix test light. Upon completion of the logic checks, verification that the circuit from the logic matrices to the master relay is complete is accomplished by use of an ohmmeter to check continuity. Additional verification is provided by periodically operating the safeguards pumps by means of their normal controls.

10

5. Review plant operations to detect any potential safety hazards.

6. Investigate reported instances of violations of Technical Specifications, such investigations to include reporting, evaluation and recommendations to prevent recurrence, to the Manager of Nuclear Generation, and to the Chairman of the Company Nuclear Safety Committee. 5

7. Perform special reviews and investigations and render reports thereon as requested by the Chairman of the Company's Nuclear Safety Committee.

g. Authority:

1. The Plant Safety Committee shall be advisory.

2. The Plant Safety Committee shall recommend to the Plant Superintendent approval or disapproval of proposals under items e (1) through (4) above.

   a. In the event of disagreement between the recommendations of the Plant Safety Committee and the actions contemplated by the Plant Superintendent, the course determined by the Plant Superintendent to be the more conservative will be followed with immediate notification to the Manager of Nuclear Generation and to the Chairman of the Company Nuclear Safety Committee.

3. The Plant Safety Committee shall make tentative determinations as to whether or not proposals considered by the Committee involves unreviewed safety questions. This determination shall be subject to review and approval by the Company Nuclear Safety Committee.

h. Records:

Minutes shall be kept of all meetings of the Plant Safety Committee and copies shall be sent to the Manager of Nuclear Generation and to the Chairman of the Company Nuclear Safety Committee.

5

i. Procedures:

Written administrative procedures for committee function shall be prepared and maintained describing the method of submission, and the content of presentations to the committee; provisions for the use of subcommittees; review and approval by members of written committee evaluations and recommendations; the distribution of minutes; and, such other matters as may be appropriate.

6.1.4.2 Company Nuclear Safety Committee(5)

a. Membership:

1. Chairman

2. Vice Chairman

5

3. Secretary

4. Four technically qualified persons who are not members of the plant staff.

5. One member from the supervisory staff of the plant.

6. At least one qualified non-company affiliated technical consultant and others as required. Duly appointed consultant members shall have equal vote with permanent members of the Committee.

7. Members in 1 through 6 above shall be designated by the Manager of Power Supply. 5

b. Minimum Qualifications: The qualifications of the regular members of the Company Nuclear Safety Committee with regards to the individual members shall be maintained at a level at least equal to or higher than the following:(6)

1. Nuclear Power Plant Technology

   Engineering graduate with at least 10 years senior experience in the nuclear power field in either the design or operation of power generating facilities.

2. Reactor Operations

   Engineering graduate or its equivalent with at least three years of experience in nuclear power plant operations or engineering.

3. Utility Operations

   Engineering graduate or its equivalent with at least eight years of experience in utility operations and/or engineering.

4. Power Plant Design

   Engineering graduate or its equivalent with at least eight years of experience in power plant design and/or operation.

5. Reactor Engineering

Engineering graduate in nuclear engineering with additional graduate work or equivalent experience in reactor physics, or a mechanical, electrical, or chemical engineer with graduate work in nuclear engineering. In addition at least three years experience is required.

6. Radiation Safety

Graduate in Health Physics, Nuclear Engineering, or a related field with radiological safety courses or its equivalent in experience in radiation control and safety with at least three years at a nuclear facility is required.

7. Safety Analysis

Engineering graduate or its equivalent with at least five years experience in nuclear engineering.

c. Meeting frequency: Quarterly, and as required on call of the Chairman.

d. Quorum: Chairman or Vice Chairman plus five members.

e. Responsibilities:

1. Review proposed changes to the operating license including Technical Specifications.

2. Review minutes of meetings of the Plant Safety Committee to determine if matters considered by that committee involve unreviewed or unresolved safety questions.

During the injection phase, the safety injection pumps do not depend on any portion of other systems. During the recirculation phase, if Reactor Coolant system pressure stays high due to a small break accident, suction to the safety injection pumps is provided by the residual heat removal pumps.

The Containment Air Recirculation System also serves the dual function of containment cooling during normal operation and containment cooling after an accident. Since the method of operation for both cooling functions is the same, the dual aspect of this system does not affect its function as an engineered safety feature.

6.1.2 RELATED CRITERIA

The following are criteria which, although related to all engineered safety features, are more specific to other plant features or system, therefore are discussed in others sections as listed.

Name	Discussion
Quality Standards (GDC 1)	Section 1.3
Records Requirements (GDC 2)	Section 4.1
Performance Standards (GDC 5)	Section 4.1
Instrumentation and Control Systems (GDC 12)	Section 7.1
Engineered Safety Features Actuation System (GDC 15)	Section 7.5
Emergency Power (GDC 24)	Section 8.1

6.2 SAFETY INJECTION SYSTEM

6.2.1 DESIGN BASIS

Emergency Core Cooling System Capability

Criterion: An Emergency Core Cooling System with the capability for accomplishing adequate emergency core cooling shall be provided. This core cooling system and the core shall be designed to prevent fuel and clad damage that would interfere with the emergency core cooling function and to limit the clad metal-water reaction to acceptable amounts for all sizes of breaks in the reactor coolant piping up to the equivalent of a double-ended rupture of the largest pipe. The performance of such emergency core cooling system shall be evaluated conservatively in each area of uncertainty. (GDC 44)

Adequate emergency core cooling is provided by the Safety Injection System (which constitutes the Emergency Core Cooling System) whose components operate in three modes. These modes are delineated as passive accumulator injection, active safety injection and residual heat removal recirculation.

The primary purpose of the Safety Injection System is to automatically deliver cooling water to the reactor core in the event of a loss-of-coolant accident. This limits the fuel clad temperature and thereby ensures that the core will remain intact and in place, with its heat transfer geometry preserved. This protection is afforded for:

a) All pipe break sizes up to and including the hypothetical instantaneous circumferential rupture of a reactor coolant loop, assuming unobstructed discharge from both ends.

b) A loss of coolant associated with the rod ejection accident.

c) A steam generator tube rupture.

The basic design criteria for loss of coolant accident evaluations are:

1. The cladding temperature is to be less than:

   a. The melting temperature of Zircaloy-4.

   b. The temperature at which gross core geometry distortion, including clad fragmentation may be expected.

2. The total core metal-water reaction will be limited to less than 1 percent.

Thus the core geometry is retained to such an extent that effective cooling of the core is not impaired.

For any rupture of a steam pipe and the associated uncontrolled heat removal from the core, the Safety Injection System adds shutdown reactivity so that with a stuck rod, no off-site power and minimum engineered safety features, there is no consequential damage to the Reactor Coolant System and the core remains in place and intact.

Redundancy and segregation of instrumentation and components is incorporated to assure that postulated malfunctions will not impair the ability of the system to meet the design objectives. The system is effective in the event of loss of normal plant auxiliary power coincident with the loss of coolant, and can accommodate the failure of any single component or instrument channel to respond actively in the system. During the recirculation phase of a loss of coolant, the system can accommodate a loss of any part of the flow path since back up alternative flow path capability is provided.

The ability of the Safety Injection System to meet its capability objectives is presented in Section 6.2.3. The analysis of the accidents is presented in Section 14.

Inspection of Emergency Core Cooling System

Criterion: Design provisions shall, where practical, be made to facilitate physical parts of the Emergency Core Cooling System, including reactor vessel internals and water injection nozzles (GDC 45).

Design provisions are made to facilitate access to the critical parts of the reactor vessel internals, injection nozzles, pipes, valves and safety injection pumps for visual or boroscopic inspection for erosion, corrosion and vibration wear evidence, and for non-destructive inspection where such techniques are desirable and appropriate.

Testing of Emergency Core Cooling System Components

Criterion: Design provisions shall be made so that components of the Emergency Core Cooling System can be tested periodically for operability and functional performance. (GDC 46)

The design provides for periodic testing of active components of the Safety Injection System for operability and functional performance.

Power sources are arranged to permit individual actuation of each active component of the Safety Injection System.

The safety injection pumps can be tested periodically during plant operation using the minimum flow recirculation lines provided. The residual heat removal pumps are used every time the residual heat removal loop is put into operation. All remote operated valves can be exercised and actuation circuits can be tested during routine plant operation.

Testing of Emergency Core Cooling System

Criterion: Capability shall be provided to test periodically the operability of the Emergency Core Cooling System up to a location as close to the core as is practical. (GDC 47)

A integrated system test can be performed during the late stages of plant cooldown when the residual heat removal loop is in service. This test would not introduce flow into the Reactor Coolant System but would demonstrate the operation of the valves, pump circuit breakers, and automatic circuitry upon initiation of safety injection.

The accumulator tank pressure and level are continuously monitored during plant operation and flow from the tanks can be checked at any time using test lines.

The accumulators and the safety injection piping up to the final isolation valve is maintained full of borated water at refueling water concentration while the plant is in operation. The accumulators and injection lines will be refilled with borated water as required by using the safety injection pumps to recirculate refueling water through the injection headers. A small bypass line and a return line are provided for this purpose.

Flow in each of the hot leg injection lines and in the main flow line for the residual heat removal pumps is monitored by a flow indicator. Pressure instrumentation is also provided for the main flow paths of the high head and residual heat removal pumps. Level and pressure instrumentation are provided for each accumulator tank.

Testing of Operational Sequence of Emergency Core Cooling System

Criterion: Capability shall be provided to test initially, under conditions as close as practical to design, the full operational sequence that would bring the Emergency Core Cooling System into action, including the transfer to alternate power sources. (GDC 48)

The design provides for capability to test initially, to the extent practical, the full operational sequence up to the design conditions for the Safety Injection System to demonstrate the state of readiness and capability of the system. Details of the operational sequence testing are presented in Section 6.2.5.

Codes and Classifications

Table 6.2-1 tabulates the codes and standards to which the safety injection system components are designed.

Service Life

All portions of the system located within the containment are designed to operate without benefit of maintenance and without loss of functional performance for the duration of time the component is required.

6.2.2 SYSTEM DESIGN AND OPERATION

System Description

Adequate emergency core cooling following a loss-of-coolant accident is provided by the Safety Injection System shown in Figure 6.2-1. Figures 6.2-2, 6.2-3, 6.2-4 and 6.2-5 depict how this system concept is translated into plant layout design. The system components operate in the following possible modes:

a) Injection of borated water by the passive accumulators.

b) Injection of borated water from the boron injection tank and the refueling water storage tank by the safety injection pumps.

c) Injection by the residual heat removal pumps also drawing borated water from the refueling water storage tank.

d) Recirculation of spilled coolant injected water and Containment Spray System drainage back to the reactor from the containment sump by the residual heat removal pumps.

The initiation signal for core cooling by the safety injection pumps and the residual heat removal pumps is the Safety Injection Signal which is actuated by any of the following:

a) Low pressurizer pressure in coincidence with low pressurizer water level (1/3 pairs - A pair is defined as a pressure signal and its assigned level signal)

b) High containment pressure (2/3, Hi level approximately 10% of containment design pressure)

c) Steam line differential pressure two out of three per loop (between steam line and main steam header)

d) High steam flow in any steam line (2/3 per line) with low T_{avg} (2/3) or low steam line pressure (2/3).

e) Manual Actuation

Injection Phase

The principal components of the Safety Injection System which provide emergency core cooling immediately following a loss of coolant are the accumulators (one for each loop), the three safety injection (high head) pumps and the two residual heat removal (low head) pumps.

The accumulators, which are passive components, discharge into the cold legs of the reactor coolant piping when pressure decreases to 660 psig, thus rapidly assuring core cooling for large breaks. They are located inside the containment, but outside the crane wall, therefore each is protected against possible missiles.

The safety injection signal, opens the Safety Injection System isolation valves and starts the safety injection pumps and the residual heat removal pumps. The items on Figure 6.2-1 marked with an "S" receive the safety injection signal (refer also to Figure 7.2-2). The high head safety injection pumps take suction from the refueling water storage tank and since the boron injection tank is located at the discharge of the high head safety injection pumps its content of 12% boric acid will rapidly enter the reactor coolant system.

The residual heat removal pumps deliver to all three cold legs through the piping between the accumulators and the cold legs. The high head safety injection pumps deliver into two separate headers one going to the cold legs and one to the hot legs. The header to the hot legs divides into two separate injection lines (Loops 2 and 3). The header to the cold legs contains the boron injection tank. Downstream of the tank the header divides into three injection lines connecting to the pipes from the accumulators close to the reactor coolant system cold leg piping. Therefore, the ability is provided to isolate the pumps on separate headers, and thereby ensure the delivery of the full flow from at least one pump for the special case of a broken header.

For large breaks, the Reactor Coolant System would be depressurized and voided of coolant rapidly (about 10 seconds for the largest break) and a high flow rate is required to quickly recover the exposed fuel rods and limit possible core damage. To achieve this objective, one residual heat removal pump (high flow, low head) is required to deliver borated water to the cold legs of the reactor coolant loops. Two pumps are available in order to provide for an active component failure. Delivery from these pumps supplements the accumulator discharge.

The boron injection tank which is located in the high head safety injection header that discharges into the cold legs, initially provides injection of water at a high boron concentration. The tank contains boric acid at a nominal concentration of 20,000 ppm boron (12% boric acid solution) and it is

isolated from the reactor coolant system by two check valves in series with parallel disk normally closed motor operated gate valves. It is isolated from the accumulators by one check valve in series with the normally closed gate valves. The tank is isolated from the high head safety injection pumps by two parallel disk, normally closed, motor operated gate valves. Leakage of liquid at different concentration or chemistry into the boron injection tank or leakage out of the tank is prevented by inter-connecting a line between the tank isolation valves. By using this arrangment the pressure differential across the tank when the valves are closed is zero.

In the event of a steam line break accident, isolation valves in the high head injection header to the hot legs do not initially receive a signal to open. This causes all flow from the high head safety injection pumps to flow through the cold leg injection header containing the boron injection tank, thus assuring the insertion of the high concentration boron solution with the minimum time delay. (Figure 7.2-12)

Because the injection phase of the accident is terminated before the refueling water storage tank is completely emptied, all pipes are kept filled with water before recirculation is initiated. Water level indication and alarms on the refueling water storage tank give the operator ample warning to terminate the injection phase. Additional level indicators and alarms are provided in the containment sump which also gives back-up indication when injection can be terminated and recirculation initiated.

For small breaks the depressurization of the Reactor Coolant System by the Safety Injection System can be augmented by steam dump and auxiliary feed water addition. As is demonstrated in 14.3.2 use of the steam dump is not required to meet the core cooling objectives. It is intended that for small breaks (4" and smaller) steam dump will be employed to facilitate the recovery from the accident, and to reduce the reactor coolant pressure to the cut-in pressure of the residual heat removal pumps.

The main steam headers do not get a containment isolation signal, however, they do close automatically on a steam line break (Refer to Table 5.2.2-1B).

Since leakage between the Reactor Coolant System and the steam generator during operation is possible, careful consideration is given to the effect of any possible radioactive leakage into the steam generator. Manual steam dump to the atmosphere will not be initiated unless it can be assured that there has been no measured contamination of the steam generator as a result of the loss-of-coolant accident.

Characteristic of breaks large enough to release fission products from the core is a rapid depressurization of the reactor and an uncovering of the core followed by an increase in fuel clad temperature causing clad burst. For these breaks, the reactor coolant pressure would fall below that of the steam generator before the steam generator is pressurized to the safety valves set point. There would be no leakage of radioactivity to the atmosphere. 3

Before initiating any cooldown of the steam generator either by atmosphere steam or steam dump to the condenser, the operator would check the activity in the steam generator by use of the radiation monitor in the steam generator blowdown line. The operator would open the blowdown line from the control room and observe the readings on the radiation monitor. If the readings showed an increase over the normal operating level, steam dump would not be permitted and the steam generator would remain isolated for the duration of the accident.

When steam dump cooldown is used for small breaks (4" and smaller), the steam will be dumped to the condenser when outside power is available or directly to the atmosphere when outside power is not available. As discussed in 14.3.2 the expected clad temperatures for break sizes 4" and smaller are limited to a value below which clad bursting is expected. When steam dump is initiated, the only activity that could be leaked into the steam would be dumped to the condenser if outside power is available, in which case, the air ejector radiation monitor would provide additional information that activity carry over to the secondary side had not occurred as a result of the accident. 3

Recirculation Phase

After the injection operation, coolant spilled from the break and water collected from the containment spray is cooled and returned to the Reactor Coolant System by the recirculation system.

When the break is large, depressurization occurs due to the large rate of mass and energy loss through the break to containment. The system is arranged so that the residual heat removal pumps take suction from the sump in the containment floor and deliver spilled reactor coolant and borated refueling water back to the core through the residual heat exchangers. The system is arranged to allow either of the residual heat removal pumps to take over the recirculation function.

There are two sump return lines which lead from the containment to the residual heat removal pumps. Each line is located inside of a larger diameter guard pipe. The lines are separated by approximately 18'. The lines are designed to allow for 2 inches differential movement between the containment and pump chamber and are designed as Class I equipment.

Filtration of the water entering the residual heat removal pump suction piping is accomplished as follows: (Refer to Figure 6.2-2)

1. Coarse filtration is accomplished by the screens in the lower portion of the shield wall. These screens have openings of approximately 1".

2. Floating and submerged debris is excluded from entering the pump suction by the baffles located in the sump area.

3. Any debris that penetrates the first two lines of defense (1. & 2. above) is removed by the two screens (1/2" diameter and 7/32" diameter mesh) arranged in series at the pump suction line openings in the sump area.

Recirculation may start with a water depth of 1.5 feet on the containment floor. This is equivalent to the amount of water in the primary systems plus 60% of the refueling water storage tank, or approximately 215,000 gallons of water at 263°F. The maximum inlet velocity between the upper baffle and the container floor, which is the smallest flow area in this design, is approximately 1 foot per second.

The number of pumps operating and the worst case flows for determining NPSH requirements are:

3 High heads at 600 GPM each or 1800 GPM total
2 Low Heads at 3750 GPM each or 7500 GPM total
2 Containment Sprays at 1300 GPM each or 2600 GPM total

3

A quantitative analysis of the available and required net positive suction head (NPSH) for the safety injection, residual heat removal and containment spray pumps for both the initial injection phase (with suction from the refueling water storage tank) and the recirculation phase (suction from the containment sump) shows,

A) During the initial injection phase (from Refueling Water Storage Tank), at initiation of the injection phase the following applies:

Pump	$NPSH_{RQD}$, ft.	$NPSH_{AV}$, ft.
High head	25	51.1
Low head (RHR)	12	63.5
Containment spray	20	51.8

From this it can be seen that the high head pump is the controlling component for NPSH. The injection phase will be terminated just before the RWST level is reached where $NPSH_{AV}$ equals $NPSH_{RQD}$ of 25 ft. at the runout flow of 600 gpm. Transition to recirculation from the containment sump will commence prior to this point.

B) During the recirculation phase (from containment sump) the following applies:

1) High head safety injection pumps 3

During recirculation via the high head pump, this pump and the RHR pump would be aligned in series with the RHR pump (which has a head of 240 ft.) boosting the suction of the high head pump. Thus, no NPSH problems would be experienced.

2) Containment spray pump

Same as high head safety injection

3) Residual heat removal (low head) pump

During recirculation from the containment sump at 3750 GPM, the $NPSH_{AV}$ with 2.5 ft. of water on the containment floor is 20 ft. This takes credit for elevation head only. $NPSH_{RQD}$ at 3750 GPM is 12 ft.

The high head recirculation flow path via the high head safety injection pumps is only required for the range of small break sizes for which the reactor coolant system pressure remains in excess of the shut-off head of the residual heat removal pumps at the end of the injection phase.

Those portions of the Safety Injection System located outside of the containment which are designed to circulate, under post-accident conditions, radioactively contaminated water collected in the containment, meet the following requirements:

a) Shielding to maintain radiation levels within the guidelines set forth in 10 CFR 100. (Section 11.2)

b) Collection of discharges from pressure relieving devices into closed systems.

c) Means to limit radioactivity leakage to the environs, within guidelines set forth in 10 CFR 100.

Recirculation loop leakage is discussed in Section 6.2.3.

For the recirculation phase of the accident the reactor coolant water which eventually is located on the containment floor is recirculated through the sump line from the containment to the suction of the residual heat removal pump. Two independent and redundant recirculation lines are provided. Each line has two motor operated valves. The first valve is located adjacent to the containment such that the line outside the containment can be isolated in the event of a passive failure. During recirculation one recirculation train will be in service which includes either of the two residual heat removal pumps and either one of two residual heat exchangers. The flow will go from the discharge of the residual heat removal pump through the residual heat exchanger and then into the reactor via either the low-head injection path or the high head injection path via the safety injection pumps. The high head injection path is provided in the event of a small break in which the pressure in the reactor coolant system is higher than the shut-off head of the residual heat removal pumps.

In the event of a failure in the operating train, during recirculation the capability exists to switch to the other independent recirculation flow path, i.e., through the high head safety injection pumps to provide core cooling.

Cooling Water

Component Cooling System

During the recirculation mode, the Component Cooling System is used to cool the recirculation fluid as it passes through the residual heat exchanger.

One of the three component cooling pumps and one of the two component cooling heat exchangers provide the core and containment cooling function during recirculation.

Service Water System

The service water system is provided with redundant and independent loop headers and valves such that the two component cooling heat exchangers which are supplied with service water for cooling can have flow directed to them from the two independent headers. Two of the four service water pumps are required to operate during the recirculation phase.

Change-Over from Injection Phase to Recirculation Phase

The sequence, from the time of the safety injection signal, for the change-over from the injection to the recirculation is as follows:

a) First, sufficient water is delivered to provide the required net positive suction head (NPSH) of the residual heat removal pumps to change to recirculation.

b) Second, the first low level alarm on the refueling water storage tank sounds. The operator, at this point, takes appropriate action to assure that sufficient NPSH exists for the operating pumps to run until the refueling water storage tank is nearly empty. This alarm also serves to alert the operator to prepare for switchover to the recirculation mode.

c) Finally the second low level alarm on the refueling water storage tank sounds. At this time, the operator performs the switchover operation.

The changeover from injection to recirculation is effected by the operator in the control room via a series of manual switching operations.

Remote operated valves for the injection phase of the Safety Injection System (Figure 6.2-1) which are under manual control, (this is, valves which normally are in their ready position and do not receive a safety injection signal) have their positions indicated on a common portion of the control board. At any time during operation when one of these valves is not in the ready position for injection , it is shown visually on he board. Reference is made to Table 6.2-2 which is listing of the instrumentation readouts on the control board which the operator can monitor during recirculation. In addition, an audible annunciation alerts the operator to the condition.

Location of the Major Components Required for Recirculation

The residual heat removal pumps are located in the residual heat removal pump pit between the containment building and auxiliary building (El. 203' 0") which is below the basement floor of the auxiliary building. The residual heat exchangers are located on the first floor of the auxiliary building (El. 226' 0").

The high head safety injection pumps, component cooling pumps and component cooling heat exchangers are located in the auxiliary building (El. 226' 0").

The service water pumps are located in the intake structure and the redundant piping to the component cooling heat exchangers is run underground.

Components

All associated components, piping, structures, and power supplies, of the Safety Injection System are designed to Class I seismic criteria.

All components inside the containment are capable of withstanding or are protected from differential pressure which may occur during the rapid pressure rise to 42 psig in 10 seconds.

Motors which operate only during or after the postulated accident are designed as if used in continuous service. Periodic operation of the motors and the tests of the insulation will ensure that the motors remain in a reliable operating condition.

All motors, instruments, transmitters, and their associated cables located inside the containment which are required to operate following the accident are designed to function under the post-accident temperature, pressure, and humidity conditions.

Emergency core cooling components are austenitic stainless steel, and hence are quite compatible with the spray solution over the full range of exposure in the post-accident regime. While this material is subject to crevice corrosion by hot, concentrated caustic, solution the NaOH additive cannot enter the containment or Emergency Core Cooling Systems without first being diluted and partially neutralized with boric acid to a mild solution. Corrosion tests performed with simulated spray showed negligible attack, both generally and locally, in stressed and unstressed stainless steel at containment and ECCS conditions. These tests are discussed in WCAP-7153.[1]

---

[1] WCAP-7153, "Investigations of Chemical Additives for Reactor Containment Sprays," M. J. Bell, et al, March 1968 (W Confidential).

The quality standards of all safety injection system components is tabulated in summary form in Table 6.2-3.

Accumulators

The accumulators are pressure vessels filled with borated water and pressurized with nitrogen gas. During normal plant operation each accumulator is isolated from the Reactor Coolant System by two check valves in series.

Should the Reactor Coolant System pressure fall below the accumulator pressure, the check valves open and borated water is forced into the Reactor Coolant System. Mechanical operation of the swing-disc check valves is the only action required to open the injection path from the accumulators to the core via the cold leg.

The accumulators are passive engineered safety features because the gas forces injection; no external source of power or signal transmission is needed to obtain fast-acting, high-flow capability when the need arises. One accumulator is attached to each of the cold legs of the Reactor Coolant System.

The design capacity of the accumulators is based on the assumption that flow from one of the accumulators spills onto the containment floor through the ruptured loop, and the flow from the remaining accumulators provides sufficient water to fill the volume outside of the core barrel below the nozzles, the bottom plenum, and one-half the core.

The accumulators are carbon steel, clad with stainless steel and designed to ASME Section III, Class C. Connections for remotely draining or filling the fluid space, during normal plant operation, are provided.

The level of borated water in each accumulator tank is adjusted remotely as required during normal plant operations. Refueling water is added using a safety injection pump. Water level is reduced by draining to the reactor coolant drain tank. Samples of the solution in the tanks are taken at the sampling station for periodic checks of boron concentration.

Redundant level and pressure indicators are provided with read outs on the control board. Each indicator is equipped with high and low level alarms.

The accumulator design parameters are given in Table 6.2-4.

Boron Injection Tank

The boron injection tank, located in the flow path between the high head safety injection pumps discharge and the cold legs, limits rapid return to power after a steam break by injecting water at a concentration of 20,000 ppm boron into the reactor coolant system cold legs.

The boron injection tank is maintained full of 12% ppm boric acid solution (20,000 ppm boron) from the boric acid tanks of the Chemical and Volume Control System. The isolated portion of the injection header on the inlet and outlet side of the tank and the supply and return lines from the boric acid tanks are redundantly heat traced and provided with redundant temperature indicators and controls. The tank is provided with redundant electric strip heaters that will maintain the temperature above the solubility limits of the 12% boric acid solution (130°F at a concentration of 20,000 ppm). Redundant temperature indicative controllers with alarms are provided.

The tank is vertical with the outlet nozzle on top. A level alarm is provided from a stand pipe/vent arrangement on the outlet pipe at an elevation higher than the top of the tank. This alarm assures that the tank is maintained full of solution at all times. An accumulator is provided to compensate for thermal expansion and contraction within the tank.

Design parameters are given in Table 6.2-5.

Refueling Water Storage Tank

In addition to its usual duty to supply borated water to the refueling canal for refueling operations, this tank provides borated water to the safety injection pumps, the residual heat removal pumps and the containment spray pumps for the loss-of-coolant accident. During plant operation it is aligned to the suction of the pumps. It is constructed of stainless steel.

The capacity of the refueling water storage tank is based on the requirement for filling the refueling canal and a minimum of 300,000 gallons is available for delivery. This capacity provides an amount of borated water to assure:

a) A volume sufficient to refill the reactor vessel above the nozzles

b) The volume of borated refueling water needed to increase the concentration of initially spilled water to a point that assures no return to criticality with the reactor at cold shutdown and all control rods, except the most reactive RCC assembly, inserted into the core

c) A sufficient volume of water on the floor to permit the initiation of recirculation.

The water in the tank is borated to a concentration which assures reactor shutdown by at least 10% $\delta k/k$ when all RCC assemblies are inserted and when the reactor is cooled down for refueling. The maximum boric acid concentration is approximately 1.4 weight percent boric acid. At 32°F the solubility limit of boric acid is 2.2%. Therefore the concentration of boric acid in the refueling water storage tank is well below the solubility limit at 32°F.

Two level indications with low level alarms are provided.

A dynamic response analysis similar to that performed for the Containment Structure has been performed to determine the horizontal loads to be applied to this tank for the hypothetical earthquake. Vertical Seismic Loads equal to 0.133g have been applied simultaneously. Wave generation in the tank has been taken into account. A membrane stress analysis of the vertical cylindrical tank was performed considering the discontinuities at the base and top.

The allowable stress criteria are 95% yield for tension, 90% for compression and shear.

The design parameters are given in Table 6.2-6.

Safety Injection Pumps

The three high-head safety injection pumps for supplying borated water to the Reactor Coolant System are horizontal centrifugal pumps driven by electrical motors. Parts of the pump in contact with borated water are stainless steel or equivalent corrosion resistant material. A minimum flow bypass line is provided on each pump discharge to recirculate flow to the refueling water storage tank in the event the pumps are started with the normal flow paths blocked. The design parameters are presented in Table 6.2-7 and Figure 6.2-7 gives the performance characteristics of these pumps.

The two residual heat removal (low head) pumps of the Auxiliary Coolant System are used to inject borated water at low pressure to the Reactor Coolant System. They are also used to recirculate fluid from the containment sump and send it back to the reactor, the suction of the spray pumps or to suction of the high head safety injection pumps. These pumps are of the in-line centrifugal type, driven by electric motors. Parts of the pumps which contact

the borated water and sodium hydroxide solution during recirculation are stainless steel or equivalent corrosion resistant material. A minimum flow bypass line is provided on the discharge of the residual heat exchangers to recirculate cooled fluid to the suction of the residual heat removal pumps should these pumps be started with their normal flow paths blocked. The design parameters are presented in Table 6.2-7.

The pressure containing parts of the pumps are castings conforming to ASTM A-351 Grade CF8 or CF8M. Stainless steel forgings are procured per ASTM A-182 Grade F304 or F316 or ASTM A-336, Class F8 or F8M, and stainless plate is constructed to ASTM A-240, Type 304 or 316. All bolting material conforms to ASTM A-193. Materials such as weld-deposited Stellite or Colmonoy are used at points of close running clearances in the pumps to prevent galling and to assure continued performance ability in high velocity areas subject to erosion.

All pressure containing parts of the pumps are chemically and physically analyzed and the results are checked to ensure conformance with the applicable ASTM specification. In addition, all pressure containing parts of the pump are liquid penetrant inspected in accordance with Appendix VIII of Section VIII of the ASME Boiler and Pressure Vessel Code. The acceptance standard for the liquid penetrant test is USAS B31.1, Code for Pressure Piping, Case N-10.

The pump design is reviewed with special attention to the reliability and maintenance aspects of the working components. Specific areas include evaluation of the shaft seal and bearing design to determine that adequate allowances have been made for shaft deflection and clearances between stationary parts.

Where welding of pressure containing parts is necessary, a welding procedure including joint detail is submitted for review and approval by Westinghouse. The procedure includes evidence of qualification necessary for compliance with Section IX of the ASME Boiler and Pressure Vessel Code Welding Qualifications. This requirement also applies to any repair welding performed on pressure containing parts.

The pressure-containing parts of the pump are assembled and hydrostatically tested to 1.5 times the design pressure for 30 minutes.

Each pump is given a complete shop performance test in accordance with Hydraulic Institute Standards. The pumps are run at design flow and head, shut-off head and three additional points to verify performance characteristics. Where NPSH is critical, this value is established at design flow by means of adjusting suction pressure.

Details of the component cooling and service water pumps which serve the Safety Injection System are presented in Section 9.

Heat Exchangers

The two residual heat exchangers of the Auxiliary Coolant System cool the recirculated sump water. These heat exchangers are sized for the cooldown of the Reactor Coolant System. Table 6.2-8 gives the design parameters of the heat exchangers.

The ASME Boiler and Pressure Vessel Code has strict rules regarding the wall thicknesses of all pressure containing parts, material quality assurance provisions, weld joint design, radiographic and liquid penetrant examination of materials and joints, and hydrostatic testing of the unit as well as requiring final inspection and stamping of the vessel by an ASME Code inspector.

The designs of the heat exchangers also conform to the requirements of TEMA (Tubular Exchanger Manufacturers Association) for Class R heat exchangers. Class R is the most rugged class of TEMA heat exchangers and is intended for units where safety and durability are required under severe service conditions. Items such as: tube spacing, flange design, nozzle location, baffle thickness and spacing, and impingement plate requirements are set forth by TEMA Standards.

In addition to the above, additional design and inspection requirements were imposed to ensure rugged, high quality heat exchangers such as: confined-type gaskets, main flange studs with two nuts on each end to ensure permanent leak tightness general construction and mounting brackets suitable for the plant seismic design requirements, tubes and tube sheet capable of withstanding full shell side pressure and temperature with atmospheric pressure on the tube side, ultrasonic inspection in accordance with Paragraph N-324.3 of Section III of the ASME Code of all tubes before bending, penetrant inspection in accordance with Paragraph N-627 of Section III of the ASME Code of all welds and all hot or cold formed parts, a hydrostatic test duration of not less than thirty minutes, the witnessing of hydro and penetrant tests by a qualified inspector, a thorough final inspection of the unit for good workmanship and the absence of any gouge marks or other scars that could act as stress concentration points, a review of the radiographs and of the certified chemical and physical test reports for all materials used in the unit.

The Residual Heat Exchangers are conventional vertical shell and U-tube type units. The tubes are seal welded to the tube sheet. The shell connections are flanged to facilitate shell removal for inspection and cleaning of the tube handle. Each unit has a SA-285 Grade C carbon steel shell, a SA-234 carbon steel shell end cap, SA-213 TP-304 stainless steel tubes, SA-240 Type 304 stainless steel channel, Sa-240 Type 304 stainless steel channel cover and SA-240 Type 304 stainless steel tube sheet.

Valves

All parts of valves used in the Safety Injection System in contact with borated water are austenitic stainless steel or equivalent corrosion resistant material. The motor operators on the injection line isolation valves are capable of rapid operation. All valves required for initiation of safety injection or isolation of the system have remote position indication in the control room.

Valving is specified for exceptional tightness and, where possible, such as instrument valves, packless diaphragm valves are used. All valves, except those which perform a control function, are provided with backseats which are capable of limiting leakage to less than 1.0 cc per hour per inch of stem diameter, assuming no credit taken for valve packing. Those valves which are normally open, are backseated. Normally closed globe valves are installed with recirculation flow under the seat to prevent leakage of recirculated water through the valve stem packing. Relief valves are totally enclosed. Control and motor-operated valves, 2 1/2" and above, which are exposed to recirculation flow, are provided with double-packed stuffing boxes and stem leakoff connections which are piped to the Waste Disposal System.

The check valves which isolate the Safety Injection System from the Reactor Coolant System are installed immediately adjacent to the reactor coolant piping to reduce the probability of an injection line rupture causing a loss-of-coolant accident.

Three relief valves are associated with the post loss of coolant recirculation. One is located outside the containment at the boron injection tank discharge to prevent overpressure in the header and in the boron injection tank. The high head safety injection piping leading to the hot legs is protected by a relief valve inside the containment in the test line.

The relieving capacity of these valves is based on a flow several times greater than the expected leakage rate through the check and isolation valves. They will also prevent overpressurization due to thermal expansion. The valves relieve to the pressurizer relief tank.

The residual heat removal loop is protected by a relief valve in the common header leading to the accumulator pipes. The valve is located inside the containment and is relieved to the pressurizer relief tank. Apart from relieving possible leakage from the reactor coolant system the valve is sized to relieve flow from one charging pump.

The gas relief valves on the accumulator protect them from pressures in excess of the design value.

Motor Operated Valves

The pressure containing parts (body, bonnet and discs) of the valves employed in the Safety Injection System are designed per criteria established by the USAS B16.5 or MSS SP66 specifications. The materials of construction for these parts are procured per ASTM A182, F316 or A351, GR CF8M, or CF8. All material in contact with the primary fluid, except the packing, is austenitic stainless steel or equivalent corrosion resisting material. The pressure containing cast components are radiographically inspected as outlined in ASTM E-71 Class 1 or Class 2. The body, bonnet and discs are liquid penetrant inspected in accordance with ASME Boiler and Pressure Vessel Code Section VIII, Appendix VIII. The liquid penetrant acceptable standard is as outlined in USAS B31.1 Case N-10.

When a gasket is employed the body-to-bonnet joint is designed per ASME Boiler and Pressure Vessel Code Section VIII or USAS B16.5 with a fully trapped, controlled compression, spiral wound asbestos gasket with provisions for seal welding, or of the pressure seal design with provisions for seal welding. The body-to-bonnet bolting and nut materials are procured per ASTM A193 and A194, respectively.

The entire assembled unit is hydrotested as outlined in MSS SP-61 with the exception that the test is maintained for a minimum period of 30 minutes per inch of wall thickness. Any leakage is cause for rejection. The seating design is of the Darling parallel disc design, the Crane flexible wedge design, or the equivalent. These designs have the feature of releasing the mechanical holding force during the first increment of travel. Thus,

the motor operator has to work only against the frictional component of the hydraulic unbalance on the disc and the packing box friction. The discs are guided throughout the full disc travel to prevent chattering and provide ease of gate movement. The seating surfaces are hard faced (Stellite No. 6 or equivalent) to prevent galling and reduce wear.

The stem material is ASTM A276 Type 316 condition B or precipitation hardened 17-4 PH stainless procured and heat treated to Westinghouse Specifications. These materials are selected because of their corrosion resistance, high tensile properties, and their resistance to surface scoring by the packing. The valve stuffing box is designed with a lantern ring leak-off connection with a minimum of a full set of packing below the lantern ring and a maximum of one-half of a set of packing above the lantern ring; a full set of packing is defined as a depth of packing equal to 1-1/2 times the stem diameter. The experience with this stuffing box design and the selection of packing and stem materials has been very favorable in both conventional and nuclear power plants.

The motor operator is extremely rugged and is noted throughout the power industry for its reliability. The unit incorporates a "hammer blow" feature that allows the motor to impact the discs away from the fore or backseat upon opening or closing. This "hammer blow" feature not only impacts the disc but allows the motor to attain its operational speed.

The valve is assembled, hydrostatically tested, seat-leakage tested (fore and back), operationally tested, cleaned and packaged per specifications. All manufacturing procedures employed by the valve supplier such as hard facing, welding, repair welding and testing are submitted to Westinghouse for approval.

For those valves which must function on the safety injection signal, 10 second operators are provided. For all other valves in the system, the valve operator completes its cycle from one position to the other within 120 seconds.

Valves which must function against system pressure are designed such that they function with a pressure drop equal to full system pressure across the valve disc.

Manual Valves

The stainless steel manual globe, gate and check valves are designed and built in accordance with the requirements outlined in the motor operated valve description above.

The carbon steel valves are built to conform with USAS B16.5. The materials of construction of the body, bonnet and disc conform to the requirements of ASTM A105 Grade II, A181 Grade II or A216 Grade WCB or WCC. The carbon steel valves pass only non-radioactive fluids and are subjected to hydrostatic test as outlined in MSS SP-61 except that the test pressure is maintained for at least 30 minutes per inch of wall thickness. Since the fluid controlled by the carbon steel valves is not radioactive, the double packing and seal weld provisions are not provided.

Accumulator Check Valves

The pressure containing parts of this valve assembly are designed in accordance with MSS SP-66. All parts in contact with the operating fluid are of austenitic stainless steel or of equivalent corrosion resistant materials procured to applicable ASTM or WAPD specifications. The cast pressure-containing parts are radiographed in accordance with ASTM E-94 and the acceptance standard as outlined in ASTM E-71. The cast pressure-containing parts, machined surfaces, finished hard facings, and gasket bearing surfaces are liquid penetrant inspected per ASME B&PV Code, Section VIII and the acceptance standard is as outlined in USAS B31.1 Code Case N-10. The final valve is hydrotested per MSS SP-66 except that the test pressure is maintained for at least 30 minutes. The seat leakage is conducted in accordance with the manner prescribed in MSS SP-61 except that the acceptable leakage is 2cc/hr/in, nominal pipe diameter.

The valve is designed with a low pressure drop configuration with all operating parts contained within the body, which eliminates those problems associated with packing glands exposed to boric acid. The Clapper arm shaft is manufactured from 17-4 PH stainless steel heat treated to Westinghouse Specifications. The clapper arm shaft bushings are manufactured from Stellite No. 6 material. The various working parts are selected for their corrosion resistant, tensile, and bearing properties.

The disc and seat rings are manufactured from a forging. The mating surfaces are hard faced with Stellite No. 6 to improve the valve seating life. The disc is permitted to rotate, providing a new seating surface after each valve opening.

The valves are intended to be operated in the closed position with a normal differential pressure across the disc of approximately 1550 psi. The valves shall remain in this position except for testing and safety injection. Since the valve will not be required to normally operate in the open condition, hence be subjected to impact loads caused by sudden flow reversal, it is expected that this equipment will not have difficulties performing its required functions.

When the valve is required to function a differential pressure of less than 25 psig will shear any particles that may attempt to prevent the valve from functioning. Although the working parts are exposed to the boric acid solution contained within the reactor coolant loop, a boric acid "freeze up" is not expected with this low a concentration.

The experience derived from the check valves employed in the Emergency Injection System of the Carolina - Virginia Tube Reactor in a similar system indicates that the system is reliable and workable.

The CVTR Emergency Injection System, normally maintained at containment ambient conditions was separated from the main coolant piping by a single six inch check valve. A leak detection was provided at a proper elevation to accumulate any leakage coming back through the check valve. A level alarm provided a signal on excessive leakage. The pressure differential was 1500 psi and the system was stagnant. The valve was located 2 to 3 feet

from the main coolant piping which resulted in some heatup and cooldown cycling. The CVTR went critical late in 1963 and operated until 1967. During that time, the level sensor in the detection never alarmed due to check valve leakage.

Relief Valves

The accumulator relief valves are sized to pass nitrogen gas at a rate in excess of the accumulator gas fill line delivery rate. The relief valves will also pass water in excess of the expected leak rate, but this is not necessary because the time required to fill the gas space gives the operator ample opportunity to correct the situation. For an inleakage rate 15 times the manufacturing test rate, there will be about 1000 days before water will reach the relief valves. Prior to this, level and pressure alarms would have been actuated.

The safety injection test line relief valve is provided to relieve any pressure, above design, that might build up in the high head safety injection piping. The valve will pass a nominal 50 gpm which is far in excess of the manufacturing design leak rate of 24 cc/hr.

Leakage Limitations

Valving is specified for exceptional tightness. Small normally open valves have backseats which limit leakage to less than one cubic centimeter per hour per inch of stem diameter assuming no credit for packing in the valve. Normally closed globe valves are installed with recirculation flow under the seat to prevent stem leakage from the more radioactive fluid side of the seat.

Motor operated valves, which are exposed to recirculation flow, are provided with double-packed stuffing boxes and stem leakoff connections which are piped to the waste disposal system.

The specified leakage across the valve disc required to meet the equipment specification and hydrotest requirements is as follows:

a) Conventional globe - 3 cc/hr/in. of nominal pipe size

b) Gate valves - 3 cc/hr/in. of nominal pipe size; 10 cc/hr/in for 300 and 150 pound USA Standard

c) Motor-operated gate valves - 3 cc/hr/in. of nominal pipe size; 10 cc/hr/in for 300 and 150 pound USA Standard

d) Check valves - 3 cc/hr/in. of nominal pipe size; 10 cc/hr/in for 300 and 150 pound USA Standard

e) Accumulator check valves -2 cc/hr/in. of nominal pipe size

Relief valves are totally enclosed. Leakage from components of the recirculation loop including valves is tabulated in Table 6.2-12.

Piping

All Safety Injection System piping in contact with borated water is austenitic stainless steel. Piping joints are welded except for the flanged connections at the safety injection and containment spray pumps.

The piping beyond the accumulator stop valves is designed for Reactor Coolant System conditions (2485 psig, 650°F). All other piping connected to the accumulator tanks is designed for 900 psig and 650°F.

The safety injection pump suction piping (210 psig at 300°F) from the refueling water storage is designed for low pressure losses to meet NPSH (net positive suction head) requirements of the pumps.

The safety injection high pressure branch lines (1500 psig at 300°F) to the hot legs are designed for high pressure losses to limit the flow rate out of a potential rupture of a branch line at the connection to the reactor coolant loop.

The piping is designed to meet the minimum requirements set forth in (1) the USAS B31.1 Code for the Pressure Piping, (2) Nuclear Code Case N-7, (3) USAS Standards B36.10 and B36.19 and (4) ASTM Standards, and (5) supplementary standards plus additional quality control measures.

Minimum wall thicknesses are determined by the USAS Code formula in the power piping Section 1 of the USAS Code for Pressure Piping. This minimum thickness is increased to account for the manufacturer's permissible tolerance of minus 12-1/2 per cent on the nominal wall. Purchased pipe and fittings have a specified nominal wall/thickness that is no less than the sum of that required for pressure containment, mechanical strength, and manufacturing tolerance.

Thermal and seismic piping flexibility analyses are performed. Special attention is directed to the piping configuration at the pumps with the objective of minimizing pipe imposed loads at the suction and discharge nozzles. Piping is supported to accomodate expansion due to temperature changes during the accident.

Pipe and fitting materials are procured in conformance with all requirements of the ASTM and USAS specifications. All materials are verified for conformance to specification and documented by certification of compliance to ASTM material requirements. Specifications impose additional quality control upon the suppliers of pipes and fittings as listed below.

a) Check analyses are performed on both the purchased pipe and fittings.

b) Pipe branch lines between the reactor coolant pipes and the isolation stop valves conform to ASTM A376 and meet the supplementary requirement S6 ultrasonic testing.

c) Fittings conform to the requirements of ASTM A403. Fittings 3 inch and above have requirements for UT inspection similar to SG of A376.

Shop fabrication of piping subassemblies is performed by reputable suppliers in accordance with specifications which define and govern material procurement,

detailed design, shop fabrication, cleaning, inspection, identification, packaging and shipment.

Welds for pipes sized 2-1/2" and larger are butt welded. Reducing tees are used where the branch size exceeds 1/2 of the header size. Branch connections of sizes that are equal to or less than 1/2 of the header size are of a design that conforms to the USAS rules for reinforcement set forth in the USAS B31.1 Code for Pressure Piping. Bosses for branch connections are attached to the header by means of full penetration welds.

All welding is performed by welders and welding procedures qualified in accordance with the ASME Boiler and Pressure Vessel Code Section IX, Welding Qualifications. The Shop Fabricator is required to submit all welding procedures and evidence of qualifications for review and approval prior to release for fabrication. All welding materials used by the Shop Fabricator must have prior approval.

All high pressure piping butt welds containing radioactive fluid, at greater than 600°F temperature and 600 psig pressure or equivalent, are radiographed. The remaining piping butt welds are randomly radiographed. The technique and acceptance standards are those outlined in UW-51 of the ASME B&PV Code Section VIII. In addition, butt welds are liquid penetrant examined in accordance with the procedure of ASME B&PV Code, Section VIII, Appendix VIII and the acceptance standard as defined in the USAS Nuclear Code Case N-10. Finished branch welds are liquid penetrant examined on the outside and where size permits, on the inside root surfaces.

A post-bending solution anneal heat treatment is performed on hot-formed stainless steel pipe bends. Completed bends are then completely cleaned of oxidation from all affected surfaces. The shop fabricator is required to submit the bending, heat treatment and clean-up procedures for review and approval prior to release for fabrication.

General cleaning of completed piping subassemblies (inside and outside surfaces) is governed by basic ground rules set forth in the specifications. For example, these specifications prohibit the use of hydrochloric acid and limit the chloride content of service water and demineralized water.

Packaging of the piping subassemblies for shipment is done so as to preclude damage during transit and storage. Openings are closed and sealed with tight-fitting covers to prevent entry of moisture and foreign material. Flange facings and weld end preparations are protected from damage by means of wooden cover plates and securely fastened in position. The packing arrangement proposed by the shop fabricator is subject to approval.

Pump and Valve Motors

Motors Outside the Containment

Motor electrical insulation systems are supplied in accordance with USAS, IEEE and NEMA standards and are tested as required by such standards. Temperature rise design selection is such that normal long life is achieved even under accident loading conditions.

Although the motors which are provided only to drive engineered safety features equipment are normally run only for test, the design loading and temperature rise limits are based on accident conditions. Normal design margins are specified for these motors to make sure the expected lifetime includes allowance for the occurrence of accident conditions.

Criteria for motors of the Safety Injection System require that under any anticipated mode of operation, the motor name rating is not exceeded. The motors have a 1.15 service factor for normal operation. Design and test criteria ensure that motor loading does not exceed the application criteria.

Motors Inside the Containment

The motor operators for the valves inside containment are designed to withstand containment environment conditions following the loss of coolant accident so

that the valves can perform the required function during the recovery period.

Periodic operation of the motors and tests of the insulation ensure that the motors remain in a reliable condition.

Tests to demonstrate the adequacy of valve motor operators of the type used in the design to be functional after exposure to temperature, pressure and radiation are being conducted in two groups.

The first group is the exposure of valve motor operators to both temperature and pressures similar to that predicted for the incident:

a) Operator is located inside a pressure vessel which is exposed to approximately 330°F at 90 psig.

b) Operator will be cycled approximately three times under simulated valve operating loads.

c) Pressures and temperatures will be reduced in step changes to 285°F at 60 psig, 219°F at 20 psig and 152°F at atmosphere or less.

d) Operator will be cycled approximately three times at each of the levels of change. Full recordings of pertinent data will be taken throughout the tests.

e) Unit shall be examined after completion of test and operating data compared to data prior to exposure.

The second group test is the radiation test on a motor from the valve operator.

a) Two production line motors are being used for this test. One is to be exposed to 1.5×10^8 rads of gamma for approximate period of one month. The other motor will be used for the final comparative analysis.

b) Both units will be tested for coil resistance, insulation meggering both before and after motor vibration and reversing operations.

Electrical Supply

Details of the normal and emergency power sources for the Safety Injection System are presented in Section 8.

Protection Against Dynamic Effects

Pipe Whip Criteria

Pipe restraints are provided in the H. B. Robinson Unit No. 2 which provide reasonable assurance of protection against pipe reactions in accordance with General Design Criterion 40 and 42. 6

Incident pipe rupture

The internal structural system is designed to mitigate loading due to incident rupture in the reactor coolant line, feedwater and steam lines. Incident rupture is considered in only one line at a time. The snubber and key systems are designed to deliver rupture thrusts on the steam generator into the internal structural system.

The steam lines are strapped to the crane wall at intervals selected to prevent a whipping pipe from contacting the liner. The straps are designed so that no interference with the normal thermal expansion modes of the steam lines results, and are anchored and sized to restrain the whipping pipe within the elastic limits of the straps. 7

Those portions of the Boiler Feed and the Main Steam piping are located in the annular space formed by the crane wall and the lined wall of the containment structure are restrained to the crane wall. The spacing of the restraints is less than the radial distance from the outside of the pipe to the containment wall, so that, in the event of a pipe rupture, a completely severed pipe cannot strike the containment liner, regardless of the manner in which it whips.

The pipe restraints have been placed such that pipe whip associated with a loss of coolant accident (LOCA) is restrained to the extent that:

(1) The containment integrity is not violate.

(2) For breaks in small pipe containing reactor coolant, high head safety injection capability will be maintained to at least one leg of the affected loop. Note: Small pipe is considered to be lines which have an inside diameter equal to or less than 4 inches.

(3) For breaks larger than 6 inches I. D. emergency core cooling (ECC) for the entire loop is assumed to be inoperative.

(4) Pipe break will not propogate between loops. 7

(5) Pipe break in one loop will not defeat ECC capability to the other loops.

(6) The primary equipment supports will continue to perform their design function.

(7) Rupture of steam and feedwater lines is not permitted.

All five injection lines penetrate the containment adjacent to the auxiliary building.

The portion of the high head injection system within the containment is connected to the accumulator injection lines attached to each loop cold leg piping and to the hot leg pipe of two loops. The portion of the low head injection system within the containment is connected to the accumulator injection lines attached to each loop cold leg pipe.

For most of the routing, these lines are outside the reactor and steam generator shielding, and hence they are protected from missiles originating within these areas.

The coolant loop supports are designed to restrict the motion to about one-tenth of an inch, whereas the attached safety injection piping can sustain a 3 inch displacement without exceeding the working stress range.

All hangers, stops and anchors are designed in accordance with USAS B31.1 Code for Pressure Piping and ACI 318 Building Code Requirements for Reinforced Concrete which provide minimum requirements on materials, design and fabrication with ample safety margins for both dead and operational dynamic loads over the life of the equipment. In addition to the normal load conditions the requirements of Table 5A.3.1 for the loading combinations shown are used in design of supports. Specifically, these standards require the following:

(1) All materials used are in accordance with ASTM specifications which establish quality levels for the manufacturing process, minimum strength properties, and for test requirements which ensure compliance with the specifications.

(2) Qualification of welding processes and welders for each class of material welded and for types and positions of welds.

(3) Maximum allowable stress values are established which provide an ample safety margin on yield strength for normal loads and ultimate strength for design basis accident or maximum hypothetical seismic loads.

6.2.3 DESIGN EVALUATION

Range of Core Protection

The measure of effectiveness of the Safety Injection System is the ability of the pumps and accumulators to keep the core flooded or to reflood the core rapidly where the core has been uncovered for postulated large area ruptures. The result of the performance is to sufficiently limit any increase in clad temperature below a value where emergency core cooling objectives are met (Section 6.2.1). The range of core protection as a function of break diameter provided by the various components of the Safety Injection System is presented in Figure 6.2-8.

Figure 6.2-8 was developed from the results of the loss of coolant accident studies presented in Section 14.3.1. Simulations of a sufficient number of break sizes were performed to demonstrate that the Safety Injection components meet the emergency core cooling requirements. The injection from the following combination of components was analyzed as discussed below.

Bar A. Two Safety Injection Pumps

Bar B. One Residual Heat Removal Pump and Two Accumulators†

Bar C. Two Safety Injection Pumps and Two Accumulators†

Bar D. Two Safety Injection Pumps, One Residual Heat Removal Pump and Two Accumulators†

With minimum on-site emergency power available (one-of-two diesel generators) the emergency core cooling equipment available is represented by Bar D (two out of three safety injection pumps, one out of two residual heat pumps, and two out of three accumulators). With these systems, the calculated maximum fuel cladding temperature is limited to 2450°F, which meets the emergency core cooling design objectives for all break sizes up to and including the double-ended severence of the reactor coolant pipe. (Section 14.3.2).

The remaining three combinations (Bars A, B, C) represent degraded cases with operation of less than the minimum design emergency core cooling equipment. These cases are shown only to present the capability of individual portions of the systems and to demonstrate the overall margins of the system. The operation of two safety injection pumps, (Bar A) provides core protection for break sizes up to an equivalent break diameter of approximately 4 inches. The operation of two safety injection pumps would allow flow spilling from a broken safety injection line to go uncorrected to operator action. Isolation of the broken line by operator action would increase the range of protection.

In Section 14.3.2 an analysis is presented that demonstrated the ability of the two high pumps to keep the core hot spot covered for all breaks up to a 4" equivalent diameter hole. When the hot spot remains covered, no core damage is expected.

† No credit is taken for the accumulator which is attached to the ruptured loop.

The cases represented in Bars B and C are presented to demonstrate the redundancy between the low and high head pumping systems to provide protection for large area rupture. For large area ruptures analyzed (14.3.2) the clad temperatures are turned around by the accumulator injection. The active pumping components serve only to complete the refill started by the accumulators. Either two safety injection pumps or one residual heat removal pump provides sufficient addition of water to continue the reduction of clad temperature initially caused by the accumulator.

The four inch break represents the upper limit of protection for the high head safety injection system. Two safety injection pumps limit the peak clad temperatures to levels well below the temperature where clad bursting is expected. For all breaks four inches and smaller the release of fission products will be limited to the activity initially in the coolant. For larger ruptures, up to and including the double ended rupture of the reactor coolant pipe, the accumulators together with various combinations of high and low head pumps limit the peak clad temperatures to levels well below the temperature where any loss of clad geometric integrity is expected.

System Response

To provide protection for large area ruptures in the Reactor Coolant System the Safety Injection System must respond to rapidly reflood the core following the depressurization and core voiding that is characteristic of large area ruptures. The accumulators act to perform the rapid reflooding function with no dependence on the normal or emergency power sources, and also with no dependence on the receipt of an actuation signal.

Operation of this system with two of the three available accumulators delivering their contents to the reactor vessel (one accumulator spilling through the break) prevents fuel clad melting and limits metal-water reaction to an insignificant amount (<1%).

The function of the safety injection or residual heat removal pumps is to complete the refill of the vessel and ultimately return the core to a sub-cooled state. As discussed earlier the flow from either two safety injection pumps or one residual heat removal pump is sufficient to complete the refill with no loss of level in the core. Moreover, there is sufficient excess water delivered by the accumulators to tolerate a delay in starting the pumps.

Initial response of the injection systems is automatic, with appropriate allowances for delays in actuation of circuitry and active components. The active portions of the injection systems are automatically actuated by the safety injection signal (Section 7). In addition, manual actuation of the entire injection system and individual components can be accomplished from the control room. In analysis of system performance, delays in reaching the programmed trip points and in actuation of components are conservatively established on the basis that only emergency on-site power is available.

The starting sequence of the safety injection and residual heat removal pumps and the related emergency power equipment is designed so that delivery of the full rated flow is reached within 26 seconds after the process parameters reach the set points for the injection signal. See Table 8.2-4.

Since the 26 second delay includes an allowance for pump runup to full rated delivery, some credit is taken for the partial flow which occurs before the full rated flow is reached. An analysis of the partial flow which occurs during the pump runup period shows that it is conservative to assume full rated flow at 25 seconds. 25 seconds is the delay which is assumed in the analysis of the loss-of-coolant accident as described in Section 14.

For the small break analysis, an additional delay time is allowed to account for the receipt of safety injection signal, either from combination of low pressurizer level and pressure or from high containment pressure.

Single Failure Analysis

A single active failure analysis is presented in Table 6.2-9(a). All credible active system failures are considered. The analysis of the loss-of-coolant accident presented in Section 14 is consistent with the single failure analysis.

It is based on the worst single failure (generally a pump failure) in both the safety injection and residual heat removal pumping systems. The analysis shows that the failure of any single active component will not prevent fulfilling the design function.

In addition, an alternative flow path is available to maintain core cooling if any part of the recirculation flow path becomes unavailable. This is evaluated in Table 6.2-9(b).

Failure analyses of the component cooling and service water system under loss-of-coolant accident conditions are described in Section 9.3 and 9.6, respectively.

Reliance on Interconnected Systems

During the injection phase, the high head safety injection pumps do not depend on any portion of other systems with the exception of the suction line from the refueling water storage tank. During the recirculation phase of the accident for small breaks, suction to the safety injection pumps is provided by a residual heat removal pump.

The residual heat removal (low head) pumps are normally used during reactor shutdown operations. Whenever the reactor is at power, the pumps are aligned for emergency duty.

The minimum size of debris that will be excluded from entry into the recirculation system will be 7/32" diameter. Debris larger than 1/4" diameter could result in clogging of the containment spray nozzles.

Debris accumulation in the piping during construction is minimized by controlled cleanliness procedures. However, the system is flushed with clean water after construction is completed to remove any debris that may have entered the system inadvertently.

Shared Function Evaluation

Table 6.2-10 is an evaluation of the main components, which have been previously discussed, and a brief description of how each component functions during normal operation and during the accident.

Passive Systems

The accumulators are a passive safety feature in that they perform their design function in the total absence of an actuation signal or power source. The only moving parts in the accumulator injection train are in the two check valves.

The working parts of the check valves are exposed to fluid of relatively low boric acid concentration contained within the reactor coolant loop. Even if some unforeseen deposition accumulated, calculations have shown that a differential pressure of about 25 psi will shear any particles in the bearing that may attempt to prevent the valve from functioning.

The isolation valve at each accumulator is only closed when the reactor is intentionally depressurized or momentarily for testing. The isolation valve is normally opened and an alarm in the control room sounds if the valve is inadvertently closed.

The check valves operate in the closed position with a nominal differential pressure across the disc of approximately 1550 psi. They remain in this position except for testing or when called upon to function. Since

the valves operate normally in the closed position and are therefore not subject to the abuse of flowing operation or impact loads caused by sudden flow reversal and seating, they do not experience any wear of the moving parts, and function as required.

When the Reactor Coolant System is being pressurized during the normal plant heatup operation, the check valves are tested for leakage as soon as there is about 100 psi differential across the valve. This test confirms the seating of the disc and whether or not there has been an increase in the leakage since the last test. When this test is completed, the discharge line test valves are opened and the Reactor Coolant System pressure increase continued. There should be no increase in leakage from this point on since increasing reactor coolant pressure increases the seating force and decreases the probability of leakage.

The accumulators can accept leakage back from the Reactor Coolant System without effect on their availability. Table 6.2-11 indicates that inleakage rates, over a given time period, require readjusting the level at the end of the time period. In addition, these rates are compared to the maximum allowed leak rates for manufacturing acceptance tests (20 cc/hr i.e. 2 cc/hr/in).

In-leakage at a rate of 5 cc/hr/inch, 2-1/2 times test, would require that the accumulator water volume be adjusted approximately once every 30 months. This would indicate that level adjustments can be scheduled for normal refueling shutdowns and that this work can be done at the operator's convenience. At a leakrate of 30 cc/hr/inch (15 times the acceptance leakrate), the water level will have to be readjusted approximately once every 5 or 6 months. This readjustment will take about 2 hours maximum.

The accumulators are located inside the reactor containment and protected from the reactor coolant system piping and components by a missile barrier. Accidental release of the gas charge in the three accumulators would cause an increase in the containment pressure of approximately 0.1 psi. This release of gas has been included in the containment pressure analysis for the loss-of-coolant accident, Section 14.3.

During normal operation, the flow rate through the reactor coolant piping is approximately five times the maximum flow rate from the accumulator during injection. Therefore fluid impingement on reactor vessel components during operation of the accumulator is not restricting.

Emergency Flow to the Core

Special attention is given to factors that could adversely affect the accumulator and safety injection flow to the core. These factors are:

a) Steam binding in the core, including flow blockage due to loop sealing
b) Carryover of accumulator water during blowdown
c) Short circuiting of the accumulator from the core to another part of the Reactor Coolant System
d) Loss of accumulator water through the break

All of the above are considered in the analysis, and are discussed quantitatively in Section 14.

Recirculation Loop Leakage

Table 6.2-12 summarizes the maximum potential leakage from the leak sources of the recirculation loop which goes through the residual heat removal pumps, a residual heat exchanger and the high head safety injection pumps. In the analysis, a maximum leakage is assumed from each leak source. For conservatism, a leakage of 10 drops per minute was assumed from each flange although each flange would be adjusted to essentially zero leakage. The total maximum potential leakage resulting from all sources is 2265 cc/hr to the auxiliary building atmosphere and 12 cc/hr to the drain tank.

During external recirculation, significant margin exists between the design and operating conditions of the residual heat removal system components, as shown in Table 6.2-13. In addition, during normal plant cooldown operation of the residual heat removal system is initiated when the primary system pressure and temperature have been reduced to 350 psig and 350°F respectively. Since the maximum operating conditions during recirculation are 150 psig and 213°F, significant margin also exists between normal operating and accident conditions. In view of the above margins, it is considered that the leakage rates tabulated in Table 6.2-12 are conservative.

Leakage detection exterior to containment is achieved through use of sump level detection. The Auxiliary Building sump pumps start automatically in the event that liquid accumulates in the sump and alarm in the control room indicates that water has accumulated in the sump. Valving is provided to permit the operator to isolate individually the residual heat removal pumps.

Pump NPSH Requirements

Residual Heat Removal Pumps

The NPSH of the residual heat removal pumps is evaluated for normal plant shutdown operation, and both the injection and recirculation phase operation of the design basis accident. Recirculation operation gives the limiting NPSH requirement, and the NPSH available is determined from the containment water level, and the pressure drop in the suction piping from the sump to the pumps. During recirculation 40% NPSH margin is available.

Safety Injection Pumps

The NPSH for the safety injection pumps is evaluated for both the injection and recirculation phase operation of the design basis accident. The end of injection phase operation gives the limiting NPSH requirement and the NPSH available is determined from the elevation head and vapor pressure of the water in the refueling water storage tank, and the pressure drop in the suction piping from the tank to the pumps. At the end of the injection phase, approximately 10% NPSH margin is available.

6.2.4 TESTS AND INSPECTIONS

Inspection Capability

All components of the Safety Injection System can be inspected periodically to demonstrate system readiness.

The pressure containing systems can be inspected for leaks from pump seals, valve packing, flanged joints and safety valves during system testing.

In addition, to the extent practical, the critical parts of the reactor vessel internals, injection nozzles, pipes, valves and safety injection pumps can be inspected visually or by boroscopic examination for erosion, corrosion, and vibration wear evidence, and for non-destructive test inspection where such techniques are desirable and appropriate.

System Testing

Testing can be conducted during plant shutdown to demonstrate proper automatic operation of the Safety Injection System. A test signal is applied to initiate automatic action and verification made that the safety injection pumps attain required discharge heads. The test demonstrates the operation of the valves, pump circuit breakers, and automatic circuitry.

The test is considered satisfactory if control board indication and visual observations indicate all components have operated and sequenced properly.

The accumulator pressure and level are continuously monitored during plant operation and flow from the tanks can be checked at any time using test lines.

The accumulators and the injection piping up to the final isolation valve are maintained full of borated water while the plant is in operation. The accumulators and injection lines are refilled with borated water as

required by using the safety injection pumps to recirculate refueling water through the injection lines. A small test line is provided for this purpose in each injection header.

Flow in each of the hot leg injection lines and in the main flow line for the residual heat removal pumps is monitored by flow indicators. Pressure instrumentation is also provided for the main flow paths of the safety injection and residual heat removal pumps.

Components Testing

Pre-operational performance tests of the components are performed in the manufacturer's shop. An initial system flow test demonstrates proper functioning of the system. Thereafter, periodic tests demonstrate that components are functioning properly.

Each active component of the Safety Injection System can be individually actuated on the normal power source at any time during plant operation to demonstrate operability. The test of the safety injection pumps employs the minimum flow recirculation test line which connects back to the refueling water storage tank. Remote operated valves are exercised and actuation circuits tested. The automatic actuation circuitry, valves and pump breakers also may be checked during integrated system tests performed during a planned cooldown of the Reactor Coolant System.

The operation of the remote stop valves in the accumulator discharge line can be tested by opening the remote test valves in the test line connected just downstream of the stop valves. Flow through the test line is measured and the opening and closing of the discharge line stop valves is verified by the flow instrumentation. Test circuits are provided to periodically examine the leakage back through the check valves and to ascertain that these valves seat whenever the reactor system pressure is raised. It is expected that this test would be routinely performed when the reactor is being returned to power after an outage and the reactor pressure is

raised above the accumulator pressure. If leakage through a check valve should become excessive, the isolation valve would be closed and an orderly shut down initiated to repair the check valve. The performance of the check valves in this application has been carefully studied and it is concluded that it is highly unlikely that the accumulator lines would have to be closed because of leakage.

The isolation valves are also closed at any time that the Reactor Coolant System is depressurized. The safety injection actuation signal will cause this valve to open should it be in the closed position at the time of a loss-of-coolant incident.

The recirculation piping is initially hydrostatically tested at 150 per cent of design pressure of each portion of the loop. The entire loop is also pressurized during periodic testing of the engineered safety features components. The recirculation piping is also leak tested at the time of the periodic re-tests of the containment.

Since the recirculation flow path is operated at a pressure in excess of the containment pressure, it is hydrotested during periodic re-tests at the recirculation operating pressures. This is accomplished by running each pump utilized during recirculation (safety injection, spray, and residual heat removal pumps) in turn at near shut off head conditions and checking the discharge and recirculation test lines. The suction lines are tested by running the residual heat removal pumps and opening the flow path to containment spray and safety injection pumps in the same manner as described above.

During the above test, all system joints, valve packings, pump seals, leakoff connection, or other potential points of leakage are visually examined. Valve gland packing, pump seals, and flanges are adjusted or replaced as required to reduce the leakage to acceptable proportions. For power operated valves, final packing adjustments are made, and the valves are put through an operating cycle before a final leakage examination is made.

Operational Sequence Testing

The full operational sequence of the Safety Injection System is tested to the extent practical prior to initial plant operation. This test demonstrates the state of readiness and capacity of this system. The Safety Injection System valving is set initially to simulate the system alignment for plant power operation.

To initiate the test, the Safety Injection System block switch is moved to the unblock position to provide control power allowing the automatic actuation of the safety injection signal relays from the pressurizer. Simultaneously, the breakers supplying normal power to the 480 volt buses are tripped, operation of the diesel-generator power system commences automatically. The safety injection pumps and the residual heat removal pumps start automatically following the prescribed loading sequence. The valves operate automatically to align the flow path for injection into the Reactor Coolant System.

The functioning of the accumulators is checked by closing the stop valve, raising the pressure in the tank and then opening the stop valve and observing the rising pressurizer level. The rising water level in the pressurizer provides indication of system delivery. Flow into the Reactor Coolant System is terminated prior to complete filling of the pressurizer.

The functional test provides information to confirm the proper automatic sequencing of load addition to the diesel-generator.

The functional test is repeated for the various modes of operation needed to demonstrate performance at partial effectiveness, i.e., to demonstrate the proper loading sequence with loss of one of the diesel generator power sources, and to demonstrate the correct automatic starting of a second safety injection pump should the first pump fail to respond. These latter cases are performed without delivery of water to the Reactor Coolant System, but include starting of all pumping equipment involved in each test.

TABLE 6.2-1

SAFETY INJECTION SYSTEM - CODE REQUIREMENTS

Component	Code
Refueling Water Storage Tank	AWWA D100-65
Residual Heat Exchanger	
Tube Side	ASME Section III Class C
Shell Side	ASME Section VIII
Accumulators	ASME Section III Class C
Boron Injection Tank	ASME Section III Class C
Valves	USAS B16.5
Piping	USAS B31.1

TABLE 6.2-2

INSTRUMENTATION READOUTS ON THE CONTROL BOARD FOR OPERATOR MONITORING DURING RECIRCULATION

Valves

System	Valve Number
SIS	MOV 759 A, B
SIS	MOV 844 A, B
SIS	MOV 860 A, B
SIS	MOV 861 A, B
SIS	MOV 862 A, B
SIS	MOV 863 A, B
SIS	MOV 864 A, B
SIS	MOV 866 A, B
SIS	MOV 867 A, B
SIS	MOV 868 A, B, C
SIS	MOV 869
SIS	MOV 880 A, B, C, D
SIS	AOV 856 A, B
ACS	AOV 758
ACS	AOV 605
ACS	MOV 744 A, B
ACS	MOV 749 A, B

Instrumentation

System	Channel Number
SIS	FI 940
SIS	FI 943
SIS	FI 932
SIS	FI 933
SIS	FI 958 A, B
SIS	LI 1925 A, B

TABLE 6.2-2 (Continued)

Instrumentation

System	Channel Number
SIS	PI 934
SIS	PI 940
SIS	PI 943
ACS	FI 605
ACS	LI 614
ACS	TR 604 A, B
ACS	TR 606
RCS	LRCA 459
RCS	LICA 460
RCS	LICA 461
RCS	LI 462

Pumps

SIS	Safety Injection
SIS	Containment Spray
ACS	Residual Heat Removal
ACS	Component Cooling
SWS	Service Water
SWS	Service Water Booster Pumps

TABLE 6.2-3

QUALITY STANDARDS OF SAFETY INJECTION SYSTEM COMPONENTS

RESIDUAL HEAT EXCHANGER

A. Tests and Inspections
   1. Hydrostatic Test
   2. Radiograph of longitudinal and girth welds (tube side only)
   3. UT of tubing or eddy current tests
   4. Dye penetrant test of welds
   5. Dye penetrant test of tube to tube sheet welds
   6. Gas leak test of tube to tube sheet welds before hydro and expanding tubes

B. Special Manufacturing Process Control
   1. Tube to tube sheet weld qualifications procedure
   2. Welding and NDT and procedure review
   3. Surveillance of supplier quality control and product

COMPONENT COOLING HEAT EXCHANGER

A. Test and Inspections
   1. Hydrostatic Test
   2. Dye penetrant test of welds

B. Special Manufacturing Process Control
   1. Welding and NDT and procedure review
   2. Surveillance of supplier quality control and product

SAFETY INJECTION, AND RESIDUAL HEAT REMOVAL PUMPS

A. Tests and Inspections
   1. Performance Test
   2. Dye penetrant of pressure retaining parts
   3. Hydrostatic test

TABLE 6.2-3 (Continued)

B. Special Manufacturing Process Control

1. Weld, NDT and inspection procedures for review
2. Surveillance of suppliers quality control system and product

ACCUMULATORS

A. Tests and Inspections

1. Hydrostatic test
2. Radiography of longitudinal and girth welds
3. Dye penetrant/magnetic particle of weld

B. Special Manufacturing Process Control

1. Weld, fabrication, DNT and inspection procedure review
2. Surveillance of suppliers quality control and product

VALVES

A. Tests and Inspections

(a) 200 psi and 200°F or below (cast or bar stock)

1. Dye Penetrant Test
2. Hydrostatic Test
3. Seat Leakage Test

(b) Above 200 psi and 200°F

(i) Forged Valves

1. UT of billet prior to forging
2. Dye penetrant 100% of accessible areas after forging
3. Hydrostatic Test
4. Seat Leakage Test

(ii) Cast Valves

1. Radiographic 100%*
2. Dye Penetrant all accessible areas*
3. Hydrostatic Test
4. Seat Leakage

TABLE 6.2-3 (Continued)

(c) Functional Tests Required for:

1. Motor Operated Valves
2. Auxiliary Relief Valves

B. Special Manufacturing Process Control

1. Weld, NDT, performance testing, assembly and inspection procedure review
2. Surveillance of suppliers quality control and product
3. Special Weld process procedure qualification (e.g. hard facing)

PIPING

A. Tests and Inspections

Class 1501 and below

Seamless or welded. If welded 100% radiography is required, Shop Fabricated and field fabricated pipe weld joints are inspected as follows:

2501R - 601R - 100% radiographic inspection and penetrant examination
301R - 151R - 10% random radiographic inspection
301R - 151R - 100% liquid penetrant examination

B. Special Manufacturing Process Control

Surveillance of suppliers quality control and product.

* For valves with radioactive service only

TABLE 6.2-4

ACCUMULATOR DESIGN PARAMETERS

Number	3
Type	Stainless steel clad/ carbon steel
Design pressure, psig	700
Design temperature, °F	300
Operating temperature, °F	70 - 120
Normal pressure, psig	660
Minimum pressure, psig	600
Total volume, ft^3	1200
Minimum water volume at operating conditions, ft^3	775
Boron concentration (as boric acid), ppm	2000
Relief valve set point, psig*	700

*The relief valves have soft seats and are designed and tested to ensure zero leakage at normal operating pressure

TABLE 6.2-5

BORON INJECTION TANK

Number	1
Type	Vertical
Total Volume*	900 Gal
Design Pressure	1750 psig
Design Temperature	300°F
Operating Pressure psig	approx. 700 to 800
Operating Temperature	160
Fluid	12% Boric Acid Solution
Material	Austenitic Stainless Steel
Code	Class C, Section 3
Heater Power Level	5 kw

* Tank always maintained full of boric acid solution

TABLE 6.2-6

REFUELING WATER STORAGE TANK DESIGN PARAMETERS

Number	1
Material	Stainless Steel
Total volume, gal.	353,000
Minimum volume, (solution) gal.	350,000
Normal pressure, psig	atmospheric
Operating temperature, °F	ambient
Design pressure, psig	atmospheric
Design temperature, °F	200
Boron concentration (as boric acid), ppm	2500

TABLE 6.2-7

PUMP PARAMETERS

Safety Injection Pump Design Parameters

Number	3
Design pressure, discharge, psig	1,750
Design temperature, °F	300
Design flow rate, gpm	375
Max. flow rate, gpm	550
Design head, ft	2,500
Shutoff head, ft	3,500
Material	11 - 13 Chrome
Motor H.P.	350
Type	Horizontal centrifugal

Residual Heat Removal Pump Design Parameters

Number of pumps	2
Type	Vertical centrifugal
Design pressure, discharge, psig	600
Design temperature °F	400
Design flow, gpm	3000
Design head, ft.	270
Material	Austenitic Stainless steel
Maximum flow rate, gpm	4000
Shutoff head, ft.	325
Motor H.P.	300
Type	Vertical centrifugal

TABLE 6.2-8

RESIDUAL HEAT EXCHANGERS DESIGN PARAMETERS

Number	2
Design heat duty, Btu/hr (Normal)	29.4×10^6
Design UA, Btu/hr/°F	1.41×10^6
Design Cycles (85°F - 350°F)	200
Type	Vertical Shell and U-tube

	Tube-Side	Shell-side
Design pressure psig	600	150
Design flow, lb/hr	1.875×10^6	5.12×10^6
Inlet temperature, °F	140	107.4
Outlet temperature, °F	124.4	113.2

TABLE 6.2-9(a)

SINGLE FAILURE ANALYSIS-SAFETY INJECTION SYSTEM

Component	Malfunction	Comments
A. Accumulator (injection phase)	Delivery to broken loop	Totally passive system with one accumulator per loop. Evaluation based on two accumulators delivering to the core and one spilling from ruptured loop.
B. Pump: (injection phase)		
1) High head safety injection	Fails to start	Three provided. Evaluation based on operation of two
2) Residual heat removal	Fails to start	Two provided. Evaluation based on operation of one
3) Component cooling*	Fails to start	Three provided. One required for recirculation cooling
4) Service Water	Fails to start	Four provided. Evaluation based on operation of two.(See also Section 6.2-3)
C. Automatically Operated Valves: Open on SIS - Injection phase		
1) High head injection line isolation valve at the loops	Fails to open	Four out of five are assumed to open
2) High head cold leg isolation injection header valve	Fails to open	Two parallel valves. One required to open
3) Residual heat removal pump isolation valve at injection line	Fails to open	Two parallel valves. One required to open

* Recirculation phase

TABLE 6.2-9(a) (Continued)

Component	Malfunction	Comments
D. Valves Operated From Control Room for Recirculation: (recirculation phase)		
1) Containment sump recirculation isolation	Fails to open	Two lines in parallel with two valves in series in each line, one pair of valves in either line is required to open
2) Safety injection pump suction valve at residual heat exchanger discharge	Fails to open	Two parallel valves. One required to open
3) Isolation valve on the test line returning to the refueling water storage tank	Fails to close	Two valve in series. One required to close
4) Isolation valve at suction header from refueling water storage tank	Fails to close	Two valves in series. One required to close
5) Isolation valves at residual heat removal pump suction line from refueling water storage tank.	Fails to close	Two valves in series. One required to close

The status of all active components of the Safety Injection System is indicated on the main control board. Reference is made to Table 6.2-2

TABLE 6.2-9(b)

LOSS OF RECIRCULATION FLOW PATH

Flow Path	Indication of Loss of Flow Path	Alternative Flow Path
Low Head Recirculation		
From containment sump to low head injection header via the residual heat removal pumps and the residual heat exchangers.	1. No flow in low head injection header. (flow monitor in main header)	From containment sump to high head injection header via the residual heat removal pumps, the residual heat exchangers, and the safety injection pumps.
High Head Recirculation		
From containment sump to high head injection header via the residual heat removal pumps, the residual heat exchangers, the high head injection pumps suction header, and the high head injection pumps.	1. No flow in high head injection headers (four flow monitors and two pressure monitors)	From containment sump to high head injection header via the residual heat removal pumps, the residual heat exchangers, the redundant high head recirculation suction header, and either or both of two of the three high head injection pumps.
	2. Flow in only one of the two high head injection branch headers	As 1 except that flow from the safety injection pump(s) is only supplied to the unbroken branch header.

NOTE: As shown on Figure 6.2-1, there are valves at all locations where alternative flow paths are provided.

TABLE 6.2-10

SHARED FUNCTIONS EVALUATION

Component	Normal Operating Function	Normal Operating Arrangement	Accident Function	Accident Arrangement
Boron Injection Tank	None	Lined up to discharge of safety injection pumps	Source of high concentrated borated water for core	Lined up to discharge of safety injection pumps
Refueling Water Storage Tank	Storage tank for refueling operations	Lined up to suction of safety injection residual heat removal, and spray pumps	Source of borated water for core and spray nozzles	Lined up to suction of safety injection residual heat removal, and spray pumps
Accumulators (3)	None	Lined up to cold legs of reactor coolant piping	Supply borated water to core promptly	Lined up to cold legs of reactor coolant piping
Safety Injection Pumps (3)	None	Lined up to hot and cold legs of reactor coolant piping	Supply borated water to core	Lined up to hot and cold legs of reactor coolant piping
Residual Heat Removal Pumps (2)	Supply water to core to remove residual heat during shutdowns	Lined up to take suction from refueling water storage tank.	Supply borated water to core	Lined up to take suction from refueling water storage tank.
Service Water Pumps (4)	Supply lake cooling water to component cooling heat exchangers	Two pumps in service	Supply lake cooling water to component cooling heat exchangers	*Two pumps in service (See Section 6.2-3)

TABLE 6.2-10 (Continued)

Component	Normal Operating Function	Normal Operating Arrangement	Accident Function	Accident Arrangement
Component Cooling Pumps (3)	Supply cooling water to station nuclear components	One pump in service	Supply cooling water to residual heat exchangers and S.I. pump bearings	One pump in service
Residual Heat Exchangers (2)	Remove residual heat from core during shutdown	Line up for recirculation	Cool water in containment sump for core cooling and containment spray	Lined up for recirculation
Component Cooling Heat Exchangers (2)	Remove heat from component cooling water	One heat exchanger in service	Cool water for residual heat exchangers	One heat exchanger in in service

TABLE 6.2-11

ACCUMULATOR INLEAKAGE*

Time Period Between Level Adjustments	Observed Leak Rate cc/hr	(Observed Leak Rate) ÷ (Max. Allowed Design)
1 month	3270	163.5
3 months	1090	54.4
6 months	545	27.2
9 months	363	18.1
1 year	273	13.7
10 years	27.3	1.37

* A total of 83.3 cubic feet, added to the initial amount, can be accepted in each accumulator before an alarm is sounded.

TABLE 6.2-12

MAXIMUM POTENTIAL
RECIRCULATION LOOP LEAKAGE

Items	No. of Units	Type of Leakage Control and Unit Leakage Rate Used in the Analysis	Leakage to Atmosphere cc/hr	Leakage Drain Tank cc/hr
1. Residual Heat Removal Pumps	2	Mechanical seal with auxiliary backup packing with leakoff in-between. Essentially zero leakage from mechanical seal	0	0
2. Spray Pumps	2	Same as Residual	0	0
3. Safety Injection Pumps	3	Same as Residual	0	0
4. Flanges:		Gasket - adjusted to zero leakage following any test - 10 drops/min/flange used in analysis		
a. Pump	10		300	0
b. Valves bonnet to body (larger than 2")	55		1650	0
c. Control Valves	5		150	0
5. Valves - Stem Leakoffs	12	Backseated, double packing with leakoff - 1 cc/hr/in stem diameter	0	12
6. Misc. Small Valves	55	Flanged body packed stems - 1 drop/mm used	165	0
			2265	12

TABLE 6.2-13

RESIDUAL HEAT REMOVAL SYSTEM
DESIGN, OPERATION AND TEST CONDITIONS

	Pumps	Heat Exchangers	Valves	Pipes and Fittings
Design Conditions				
Pressure, PSIG	600	600	665	700
Temperature, °F	400	400	400	400
Operating Conditions (Max)*				
Pressure, PSIG	160	160	160	160
Temperature, °F	180	180	180	180
Test Pressure, PSIG	1200	900	1100	900
Allowable Pressure at Operating Temp. PSIG	>600	>600	>690	>850

*During post loss-of-coolant recirculation

CONDUCT OF OPERATIONS CHART

SOL - Senior Reactor Operator License
OL - Reactor Operator LIcense

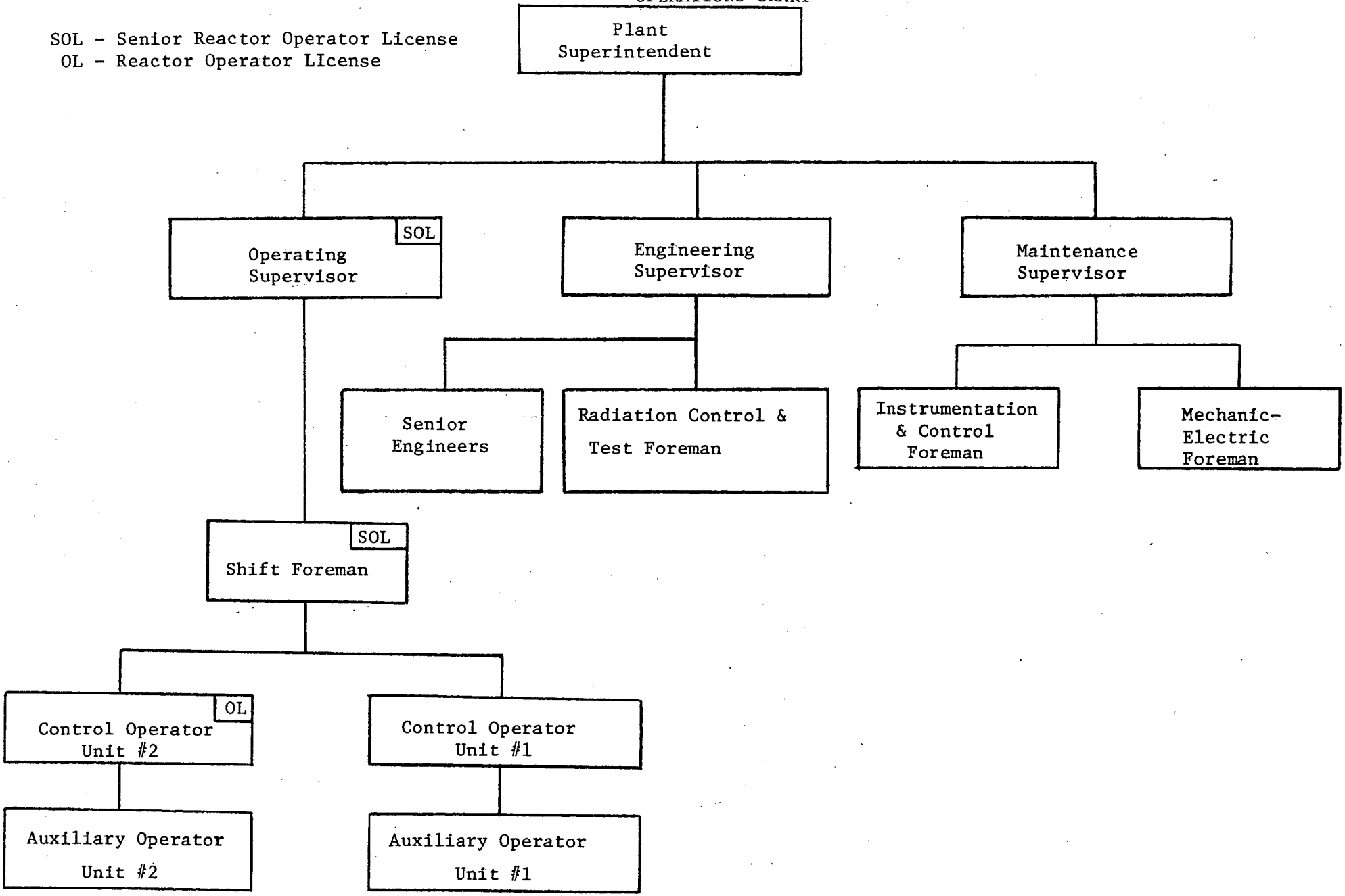

Figure 6.1-2

H. B. ROBINSON UNIT NO. 2

MANAGEMENT ORGANIZATION CHART

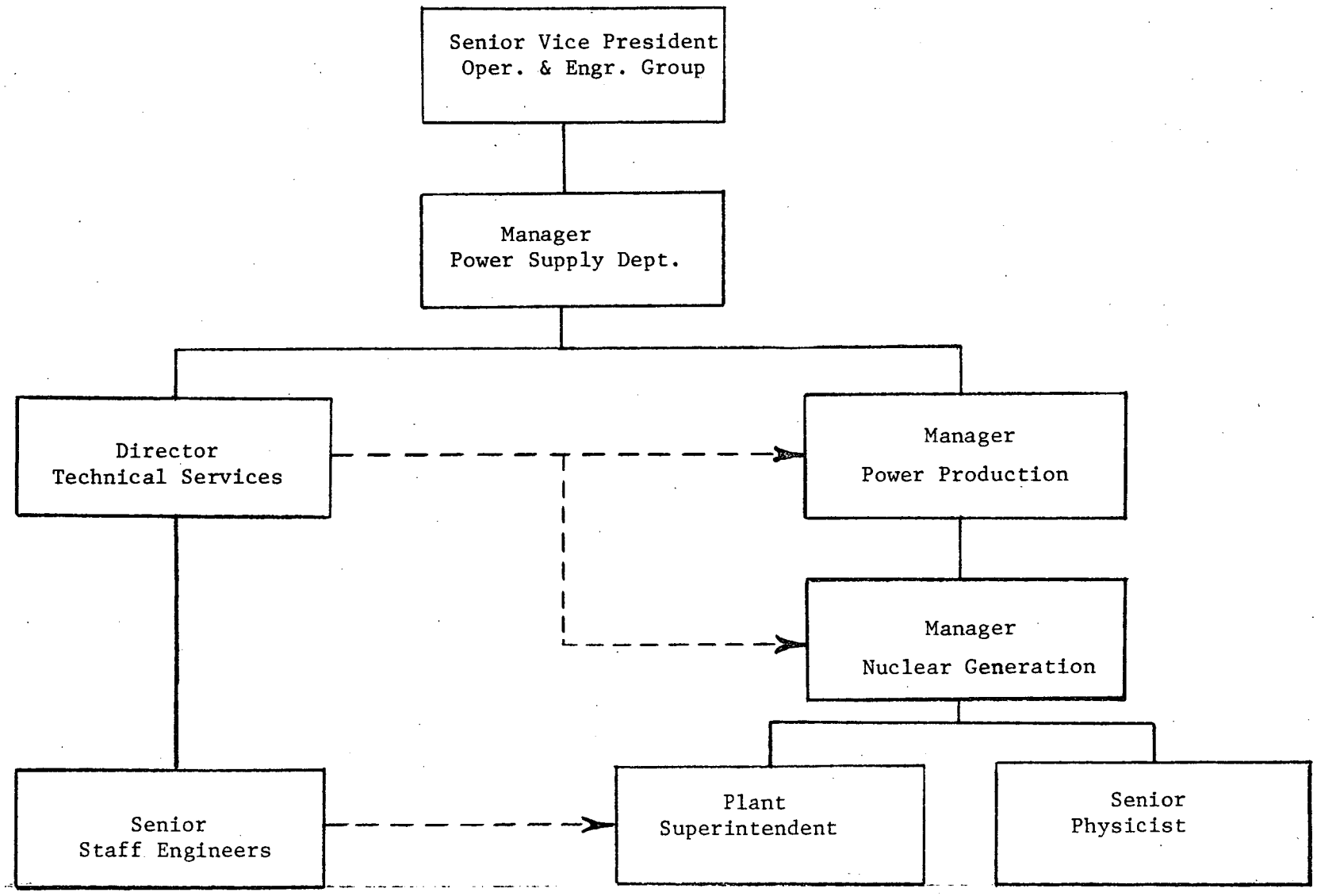

Fig. 6.1-1

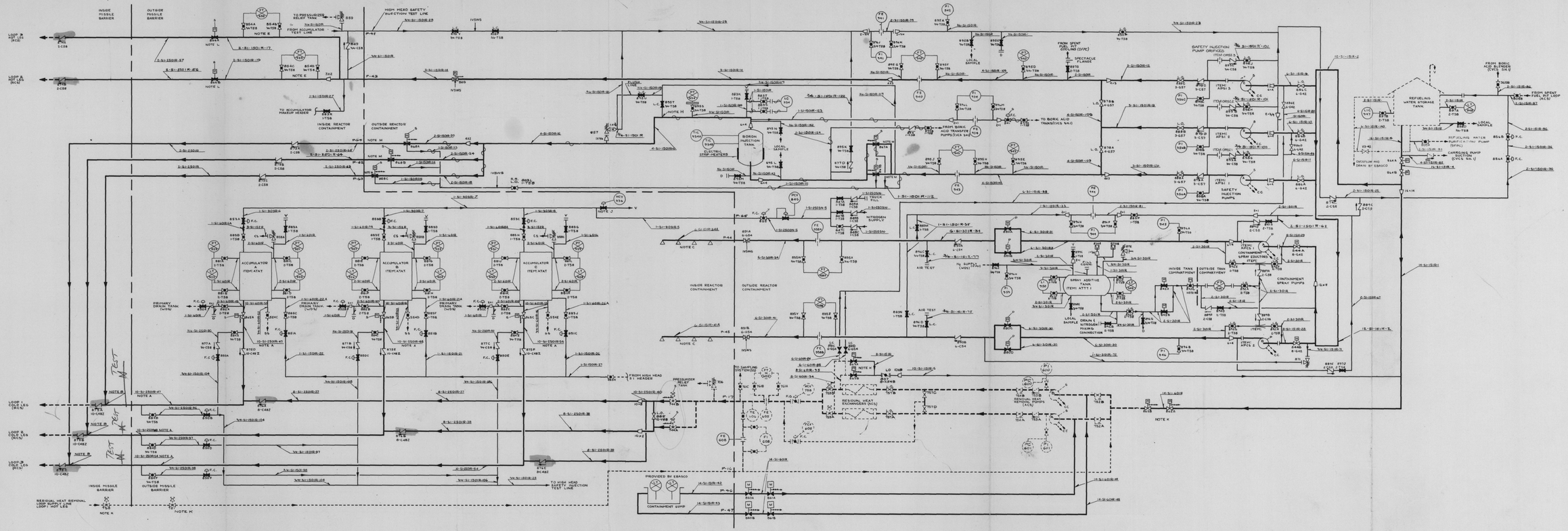

REFERENCES.

1. AUXILIARY PIPING SHOP & FIELD FABRICATION
   D. L. SPEC. QA1002 (REV. 1)
2. MATERIAL SPEC. PIPE
   M. L. SPEC. QA1010 (REV. 3)
3. MATERIAL SPEC. PIPE & FITTINGS
   D. L. SPEC. QA1016 (REV. 4)
4. DEFINITION OF SYMBOLS
   D. L. SPEC. QA1019 (REV. 3)
5. INSTRUMENTATION & CONTROL STANDARDS
   D. L. SPEC. SPECIFICATIONS FOR INSTRUMENT DIAGRAMS. SECTION 3.5 ISSUED 6-1-70
   D. INSTRUMENT INSTALLATION. SECTION 3.6 ISSUED 1-1-70, SL 1968

REFERENCES DRAWINGS.

RCS - REACTOR COOLANT SYSTEM D. DWG. 6070-M-013
CVCS - CHEMICAL & VOLUME CONTROL SYSTEM
   SHEET #1 D. DWG. 6B4 / 701
   SHEET #7 D. DWG. 6B4 / 705
   SHEET #8 D. DWG. 5A1 / 801
CC - COMPONENT COOLING D. DWG. 6B4 / 731
   AUXILIARY COOLANT SYSTEM
RHR - RESIDUAL HEAT REMOVAL D. DWG. 5A1-M-0108
   AUXILIARY COOLANT SYSTEM
SFPC - SPENT FUEL PIT COOLING D. DWG. 5A1-M-0105 D
   AUXILIARY COOLANT SYSTEM
SS - SAMPLING SYSTEM D. DWG. 5A1 F 806
WDS - WASTE DISPOSAL SYSTEM
   SHEET #1 D. DWG. 6B4 / 751
   SHEET #2 D. DWG. 6B4 / 752
ISVSWS - ISOLATION VALVE SEAL WATER SYSTEM
   EBASCO DWG. 0-0903

LEGEND.

B.B. - VALVE WITH BEACH BOD
C.S. - CONTAINMENT SUMP
L.C. - LOCKED CLOSED
L.O. - LOCKED OPEN
F.C. - FAIL CLOSED
V - LOCAL VENT
I - SAFETY INJECTION ACTUATION SIGNAL
S - HIGH-HIGH CONTAINMENT PRESSURE SIGNAL
P (%Ø) - ITEM NO. OF PIPE WITHIN SLEEVE AT CONTAINMENT BUILDING
D - LOCAL DRAIN
ISVSWS - ISOLATION VALVE SEAL WATER SYSTEM

NOTES.

A. PIPING IS SCHEDULE 160.
B. LOCATE CONNECTION WITHIN 6 INCHES OF CHECK VALVE
C. 90 NOZZLES PER HEADER ARRANGEMENT
   (HEAD ATTS. 3 PARCO MODEL 17)
   (HEAD ATTS. 4 PARCO MODEL 17)
D. ALL 'D' ITEM NUMBERS IN 515 ARE SHOWN WITHOUT PREFIX CPL5E .
E. LOCATE TAPS 2" APART

H. LOCATE CONNECTION CLOSE TO VALVES 860A, 860B AND 860C.
J. FLOW UNDER SEAT VALVES OPENS AT 900 PSIG
K. VALVES 750 AND 751 CANNOT BE OPENED UNLESS VALVES 860A AND 860B, 860A AND 860C ARE CLOSED. VALVES 860A AND 860B, 860A AND 860C CANNOT BE OPENED UNLESS PRESSURE IN RESIDUAL HEAT REMOVAL LOOP IS BELOW 250 PSIG.
L. VALVE PROVIDED WITH ELECTRIC SUMMATES.
M. LEAK TIGHT, ONE OR LEAST THREE FEET BEYOND ISOLATION VALVE.
N. VALVE PROVIDED WITH REGULATING CONTROL FOR POST ACCIDENT RECIRCULATION FLOW CONTROL.

684J878 SAFETY INJECTION SYSTEM
Figure 6.2-1

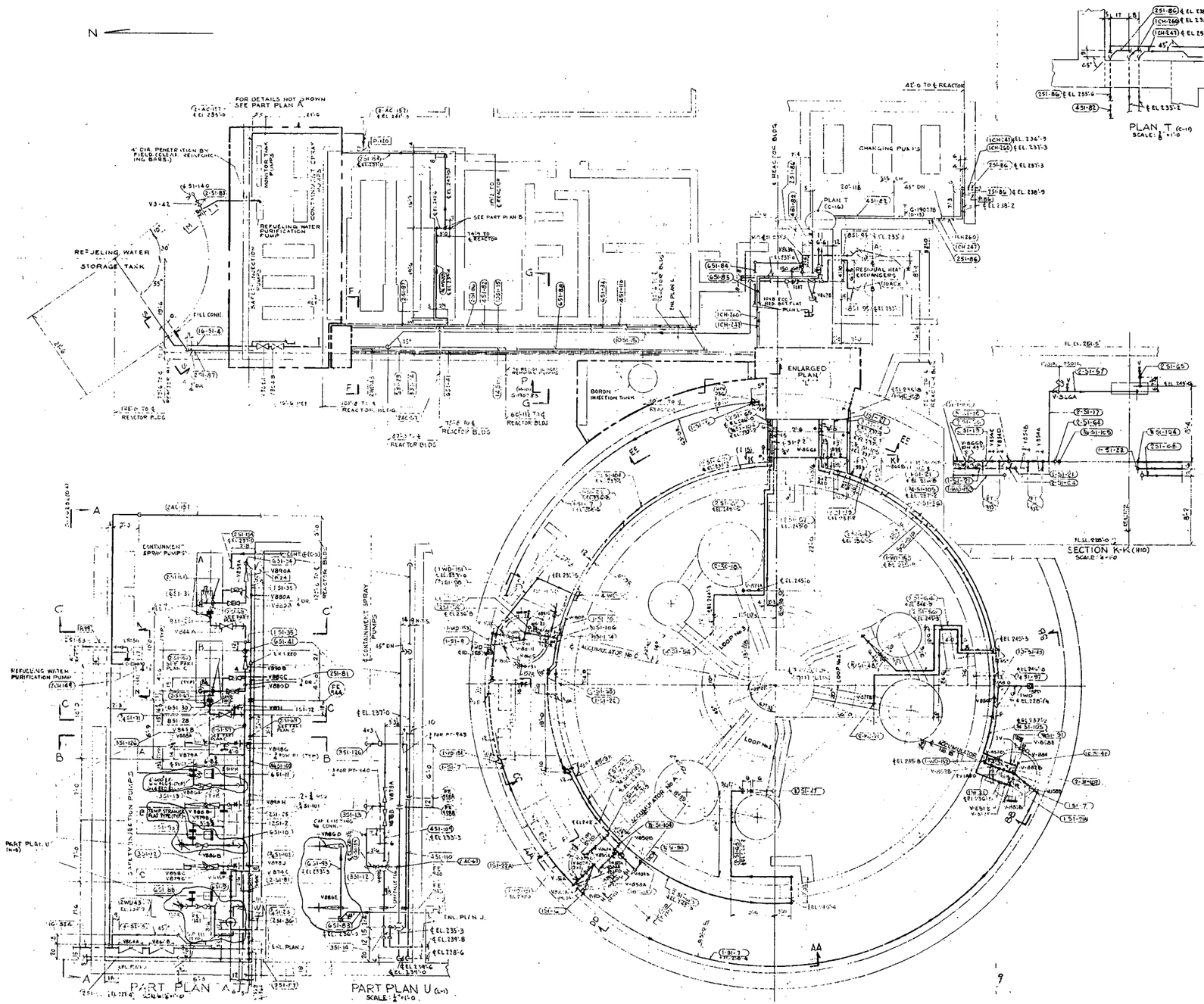

NOTES:

ALL PIPING TO CONFORM TO EBASCO PIPING AND INSULATION SCHEDULE B-190174

NO ALLOWANCE HAS BEEN MADE FOR WELDS OR GASKETS.

UNLESS OTHERWISE NOTED: ALL PIPE BENDS TO HAVE A RADIUS OF 3 PIPE DIAMETERS; WHERE PIPE WALL THICKNESS IS NOT SUFFICIENT TO MAKE A SATISFACTORY BEND, A SECTION OF PIPE OF SUFFICIENT WALL THICKNESS, AS PER PFI STANDARD, SHALL BE UTILIZED FOR THE BEND; ELBOWS TO BE LONG RADIUS AND INDICATED BY SHARP CORNERS; ALL PIPING 2 INCHES AND SMALLER TO BE FIELD RUN.

FOR SMALL BRANCH PIPE CONNECTIONS, SEE DESIGN GUIDES M-23 & M-24 AND THE PIPING AND INSULATION SCHEDULE.

DESIGN AND LOCATION OF PIPE HANGERS, SUPPORTS AND GUIDES BY HANGER FABRICATOR.

FIELD TO LOCATE, DETERMINE SIZE AND SET ALL PIPE SLEEVES IN CONCRETE FLOORS BEFORE CONCRETE IS PLACED. SEE STRUCTURAL DRAWINGS FOR TYPICAL DETAILS OF PIPE SLEEVES AND FOR FLOOR OPENINGS REQUIRING SPECIAL FLOOR FRAMING.

OPENINGS 6 INCHES IN DIAMETER AND OVER FOR SHOP FABRICATED PIPING, IN GRATING AND CHECKERED PLATE FLOORS, SHALL BE PROVIDED IN THE SHOP. ALL OTHER OPENINGS ARE TO BE PROVIDED IN THE FIELD.

ALL OPENINGS, EXCEPT THOSE FOR STRESS ANALYZED PIPE LINES, SHALL CLEAR PIPE INSULATION BY A MINIMUM OF 1 INCH BEYOND EXTREME PIPE MOVEMENT.

▶ ITEM NO. OF PIPE WITHIN SLEEVE.

P# — INDICATES WALL PENETRATION

F.P.# — INDICATES FLOOR PENETRATION

U# — INDICATES UNDESIGNATED PENETRATION.

G 190 281 SAFETY INJECTION SYSTEM - PLAN, SHEET 1
FIGURE 6.2-2

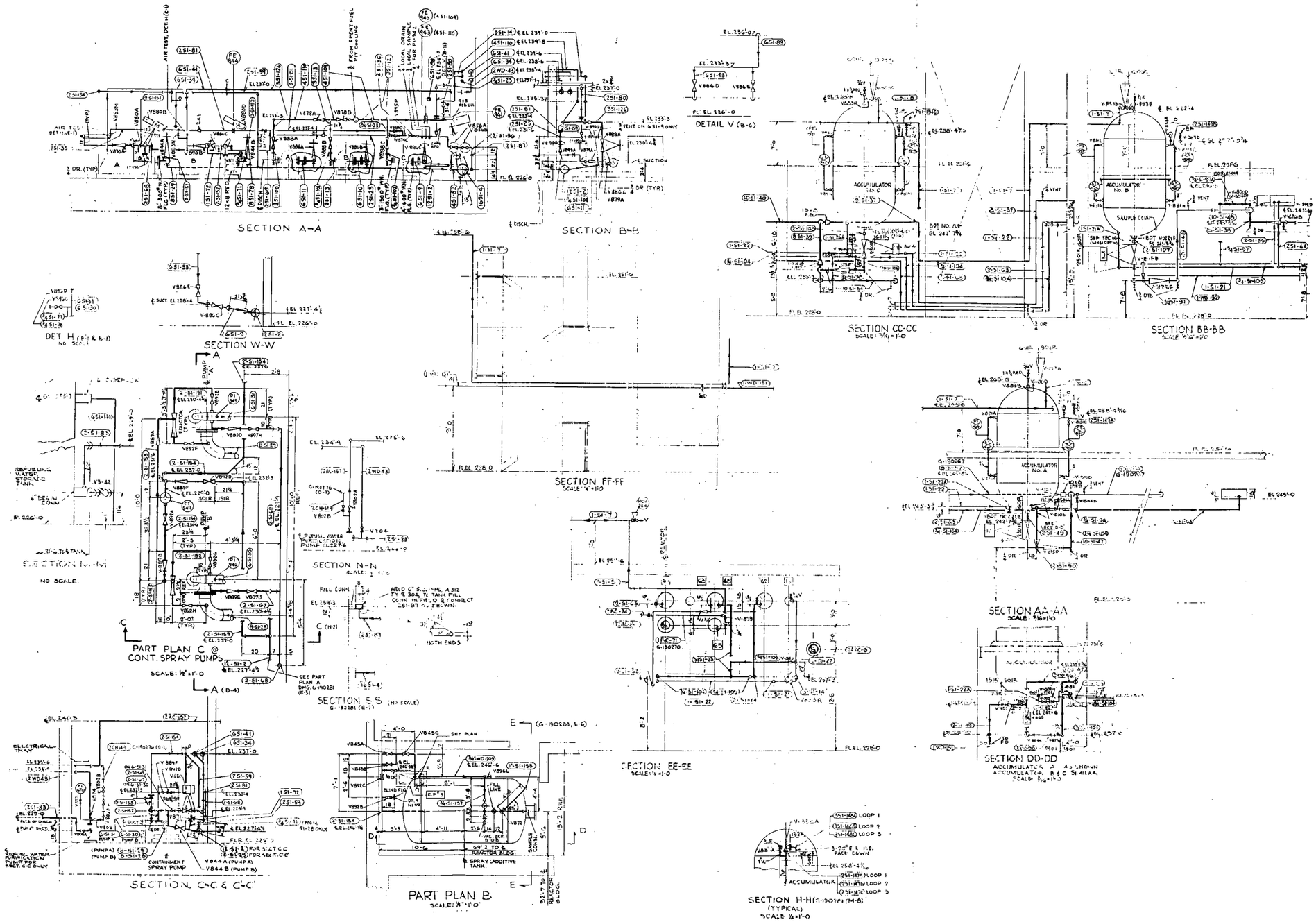

G 190 282

SAFETY INJECTION SYSTEM - PLAN, SHEET 2
FIGURE 6.2-3

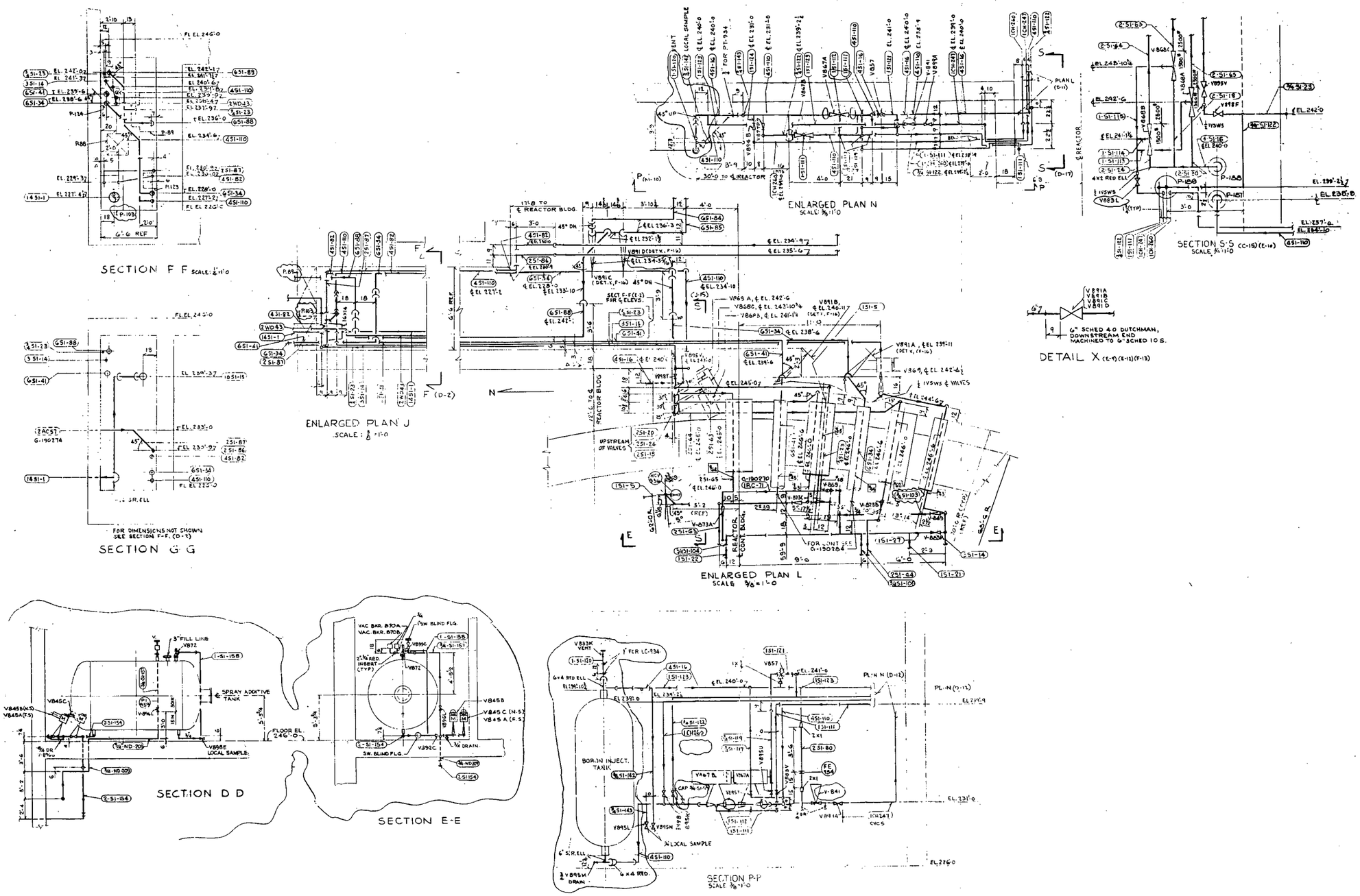

G 190 283

SAFETY INJECTION SYSTEMS SECTIONS
FIGURE 6.2-4

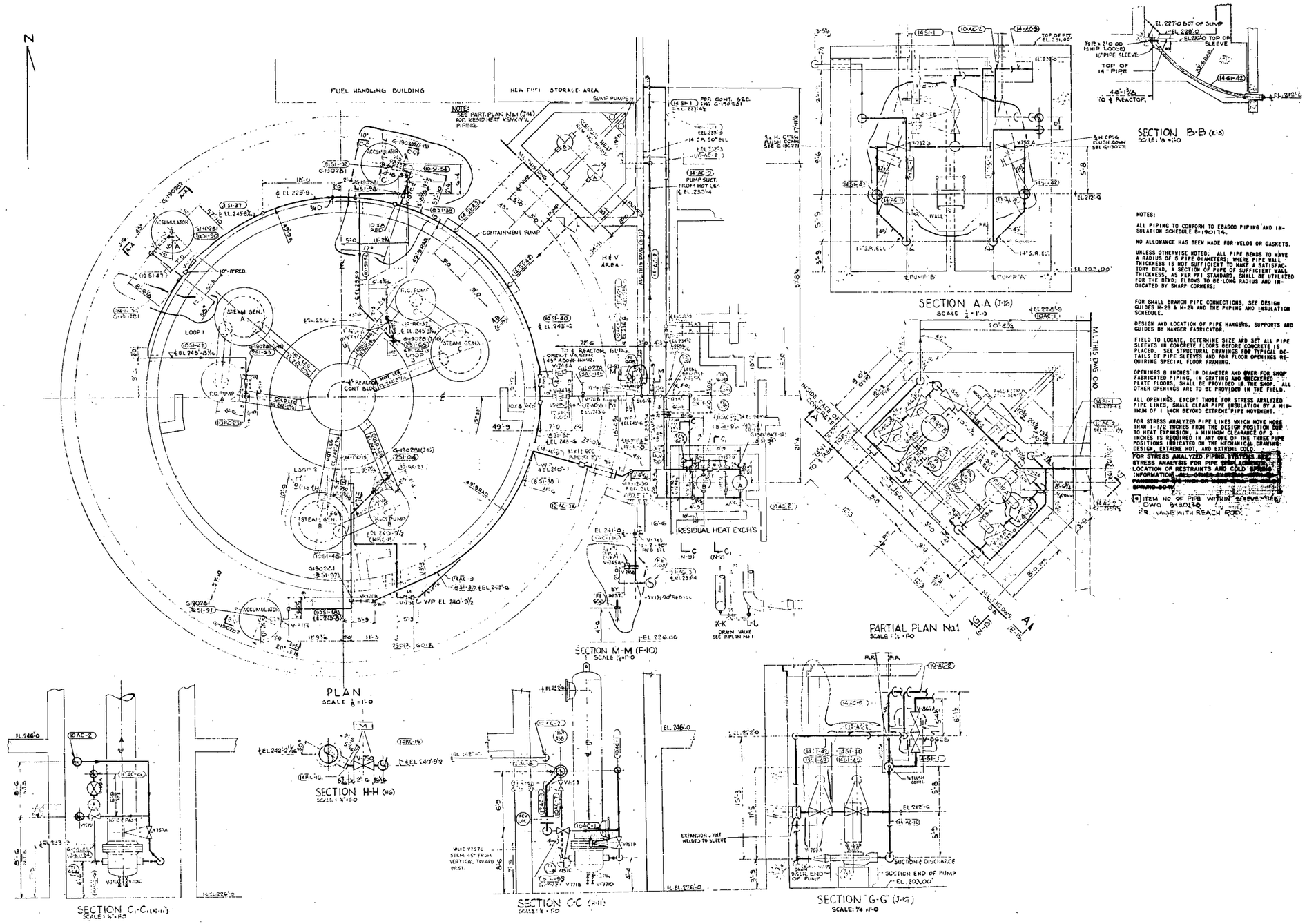

G 190 267

RESIDUAL HEAT REMOVAL PIPING
FIGURE 6.2-5

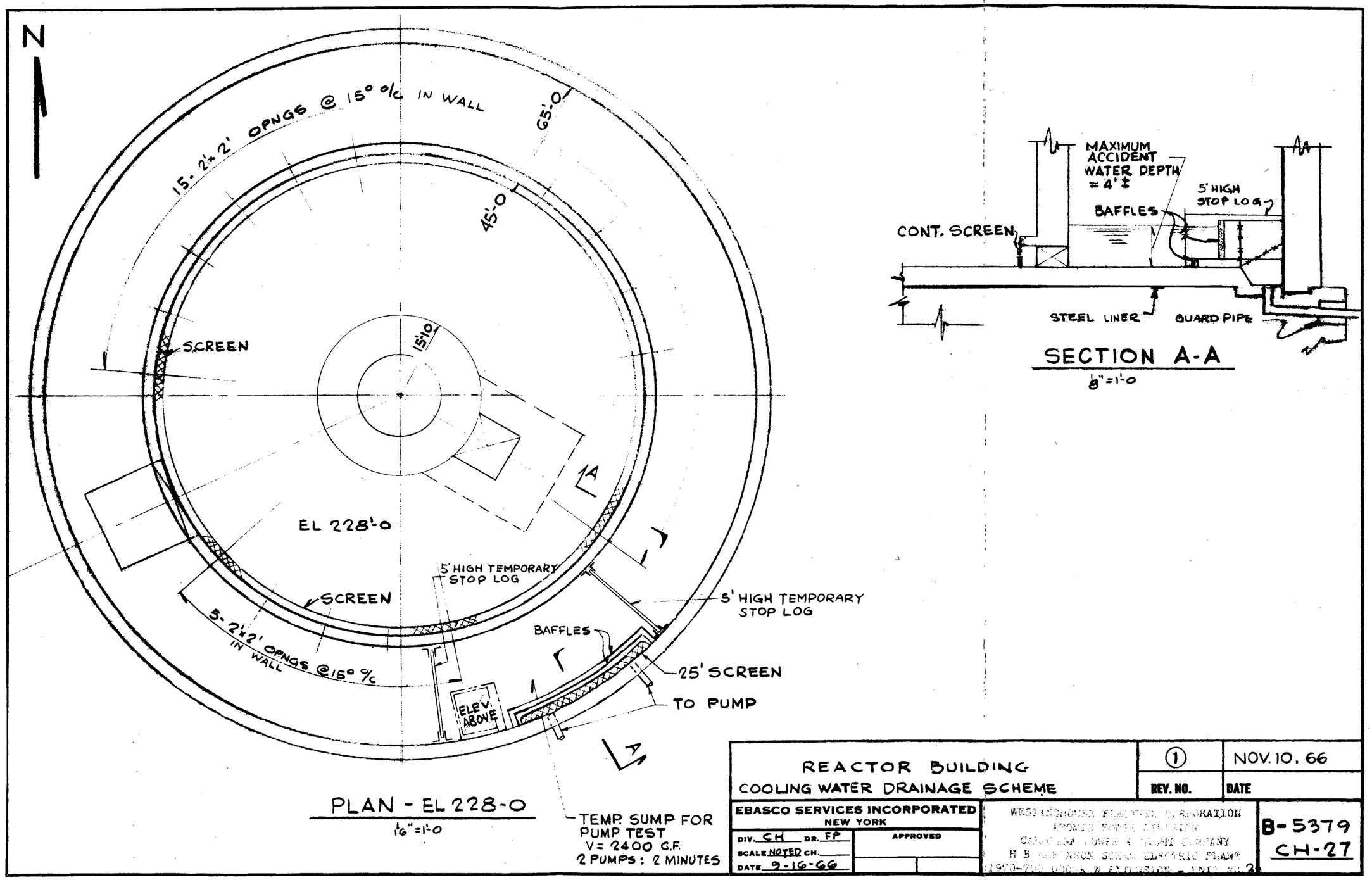
N
15-2'x2' OPNGS @ 15° o/c IN WALL
65'-0
45'-0
15'-10
SCREEN
EL 228'-0
5' HIGH TEMPORARY STOP LOG
SCREEN
5-2'x2' OPNGS @15° o/c IN WALL
BAFFLES
ELEV. ABOVE
5' HIGH TEMPORARY STOP LOG
25' SCREEN
TO PUMP
A
A
PLAN - EL 228-0
1/16"=1'-0
TEMP. SUMP FOR PUMP TEST
V= 2400 C.F.
2 PUMPS: 2 MINUTES
MAXIMUM ACCIDENT WATER DEPTH = 4'±
5' HIGH STOP LOG
BAFFLES
CONT. SCREEN
STEEL LINER
GUARD PIPE
SECTION A-A
1/8"=1'-0
REACTOR BUILDING
COOLING WATER DRAINAGE SCHEME
1
REV. NO.
NOV. 10, 66
DATE
EBASCO SERVICES INCORPORATED
NEW YORK
DIV. CH DR. FP
SCALE NOTED CH.
DATE 9-16-66
APPROVED
B-5379
CH-27

FIGURE 6.2-6