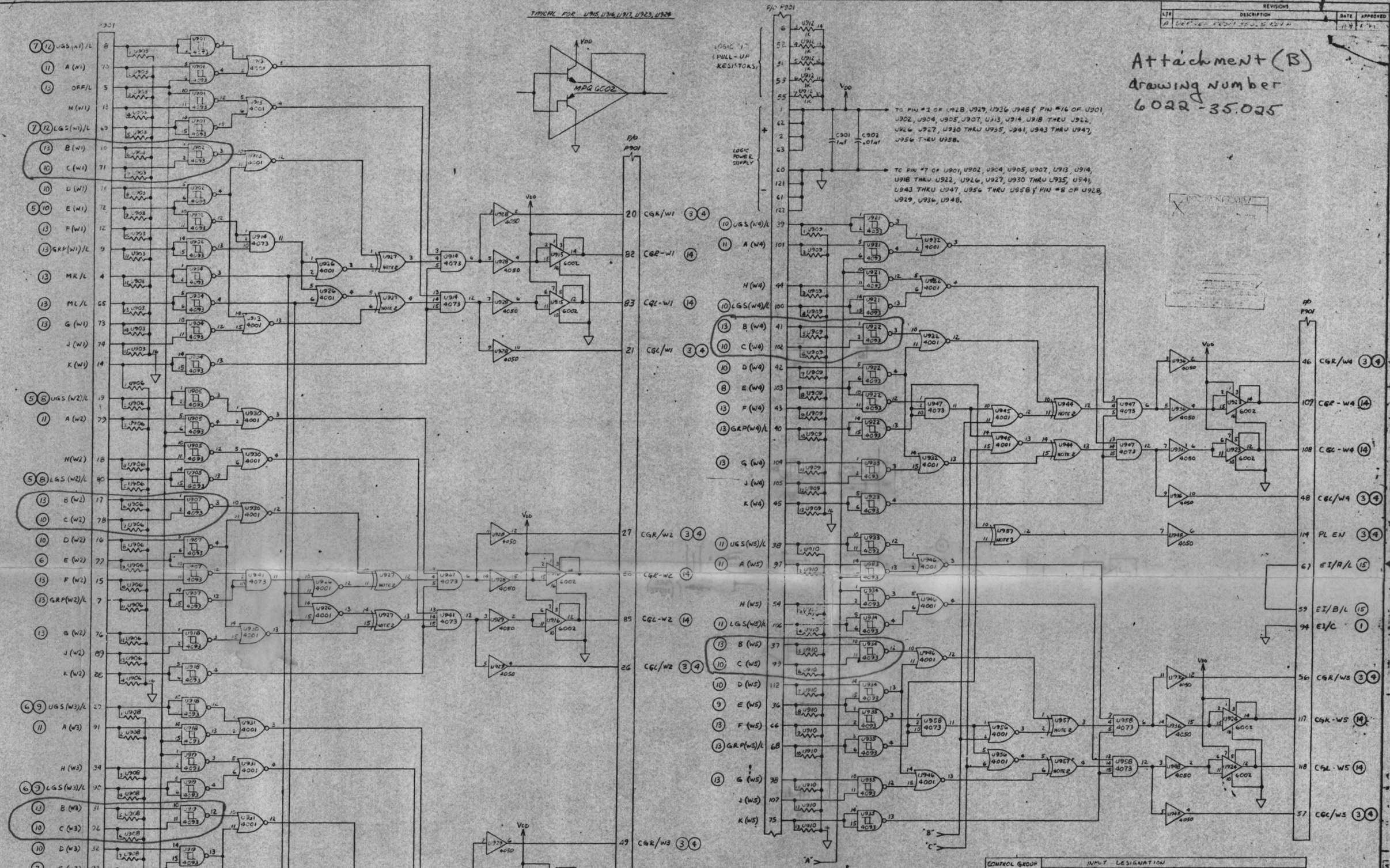

Attachment (B)
Drawing Number
6022-35.025

REVISIONS			
LTR	DESCRIPTION	DATE	APPROVED
D	[illegible]	[illegible]	[illegible]

CONTROL GROUP TYPE	INPUT DESIGNATION									
	A (W)	B (W)	C (W)	D (W)	E (W)	F (W)	G (W)	H (W)	J (W)	K (W)
SHUT DOWN	CWP/L	LOGIC "0"	LOGIC "0"	LOGIC "0"	LOGIC "0"	LOGIC "0"	LOGIC "0"	LOGIC "1"	LOGIC "1"	LOGIC "0"
REGULATING	CWP/L	AR/L	AWP/L	AS/L	SPW/L	MS/L	AR/L	LOGIC "1"	LOGIC "1"	LOGIC "0"
PART LENGTH	LOGIC "1"	LOGIC "0"	LOGIC "0"	LOGIC "0"	LOGIC "1"	LOGIC "0"	LOGIC "0"	LOGIC "1"	LOGIC "1"	LOGIC "0"

Inputs
C - Automatic Withdrawl Prohibit
B - Automatic Raise

REFERENCE DRAWINGS		
NO	CWS NO	CWS TITLE
1	35018	CALL REMOVAL CKT (1SV)
2	-	NOT USED
3	35024	SUB-GROUP SEQUENCER
4	35030	MASTER SEQ LINE OF "R" RAISE/LOWER
5	35038	COMMON LOGIC RELAY INTERFACE, PCB 1
6	35039	COMMON LOGIC RELAY INTERFACE, PCB 3
7	35040	COMMON LOGIC RELAY INTERFACE, PCB 5
8	35041	COMMON LOGIC RELAY INTERFACE, PCB 7
9	35042	COMMON LOGIC RELAY INTERFACE, PCB 9
10	35043	COMMON LOGIC RELAY INTERFACE, PCB 11
11	35044	COMMON LOGIC RELAY INTERFACE, PCB 13
12	35045	COMMON LOGIC RELAY INTERFACE, PCB 15
13	35048	COMMON LOGIC RELAY INTERFACE, PCB 21
14	35070	[illegible]
15	35070	CRITICAL MANUAL RELAY CKT #1

NOTES:
1. ALL COMPONENT PIN NOS. ARE SOCKET PIN NOS AND NOT PACKAGE PIN NOS.
2. U926, U949 & U955 ARE CD4030A OR CD4070B
3. ALL UNUSED CDS/MOS INPUTS ARE GROUNDED
4. ALL UNMARKED RESISTORS ARE 10K Ω
5. UGS(W)/L & LGS(W)/L INPUTS ARE LOGIC "1" FOR FULL LENGTH CONTROL GROUPS.
6. [illegible]

KEF	3	35170	BACK PLANE WIRE LIST
KEF	2	35325	WIRE WRAP BL AND ASSY
KEF	1	27125	WIRE LIST
QTY REQ'D	ITEM NO	PART OR IDENTIFYING NO	NOMENCLATURE OR DESCRIPTION

LIST OF MATERIALS OR PARTS LIST

AS BUILT

UNLESS OTHERWISE SPECIFIED
DIMENSIONS ARE IN INCHES
DIMENSIONS SHOWN ARE AFTER PLATING
COMMERCIAL TOLERANCES APPLY TO STOCK
TOLERANCES
FRACTIONS ±1/64
DECIMALS .X ±.03 .XX ±.010 .XXX ±.005
ANGLES ±1°
REMOVE ALL BURRS AND SHARP EDGES
MATERIAL
FINISH

APPROVALS		DATE
DRAWN BY	[illegible]	4-19-77
CHECKED	[illegible]	4-19-77
APPROVED	[illegible]	[illegible]
APPROVED		DATE
APPROVED		DATE

ELECTRO-MECHANICS, INC.
NEW BRITAIN, CONN
CEDMCS
CONTROL GROUP RAISE/LOWER
SCHEMATIC DIAGRAM
[illegible] STATION

SIZE	CODE IDENT NO	DWG NO
E	96568	[illegible] 35025 A

SCALE [illegible] WEIGHT [illegible] SHEET 1 OF 1

35275	6022
NEXT ASSY	USED ON
APPLICATION	

TI APERTURE CARD

8412190333