SEABROOK STATION

Fire Protection of Safe Shutdown Capability (10CFR50, Appendix R)

Revision 12

INTRODUCTION

General Design Criterion 3, "Fire Protection," of Appendix A, "General Design Criteria for Nuclear Power Plants," to 10 CFR Part 50" Licensing of Production and Utilization Facilities" requires that structures, systems and components important to safety shall be designed and located to minimize, consistent with other safety requirements, the probability and effects of fires.

Appendix R, "Fire Protection Program for Nuclear Power Facilities Operating Prior to January 1, 1979" to 10 CFR Part 50 was issued on November 19, 1980 (45 FR 76602). Paragraph III.G, "Fire Protection of Safe Shutdown Capability," requires that fire damage be limited so that:

a. One train of systems necessary to achieve and maintain hot shutdown conditions from either the control room or emergency control station(s) is free of fire damage; and

b. Systems necessary to achieve and maintain cold shutdown from either the control room or emergency control station(s) can be repaired within 72 hours.

This requires each licensee to assess those areas of the plant"....where cables or equipment, including associated non-safety circuits that could prevent operation or cause maloperation due to hot shorts, open circuits, or shorts to ground of redundant trains of systems necessary to achieve and maintain hot shutdown conditions are located in the same fire area..." The regulation establishes separation requirements for areas outside of primary containment and inside noninerted containment.

Appendix R, paragraph III.L, "Alternative and Dedicated Shutdown Capability," establishes the following performance goals for the shutdown functions:

a. The reactivity control function shall be capable of achieving and maintaining cold shutdown reactivity conditions.

b. The reactor coolant makeup function shall be capable of maintaining the reactor coolant level within level indication in the pressurizer.

c. The reactor heat removal function shall be capable of achieving and maintaining decay heat removal.

d. The process monitoring function shall be capable of providing direct readings of the process variables necessary to perform and control the above functions.

e. The supporting functions shall be capable of providing process cooling, lubrication, etc., necessary to permit operation of the equipment used for Safe Shutdown functions.

Branch Technical Position CMEB 9.5-1 "Guidelines for Fire Protection for Nuclear Power Plants," Rev. 2, July 1981 reiterates the above requirements in Section C.5.b and C.5.c.

By letters dated March 16, 1981 (from R.L. Tedesco to W.C. Tallman) and September 30, 1981 (from D.G. Eisenhut to W.C. Tallman) the Nuclear Regulatory Commission (NRC) transmitted "Request for Additional Information, Seabrook Station, Units 1 & 2, Fire Protection Program, Power System." This document requested New Hampshire Yankee (NHY) to provide information relative to the equipment and cabling required to achieve and maintain hot and/or cold shutdown. By letter dated July 27, 1982 (from F.J. Miraglia to W.C. Tallman) the NRC transmitted Auxiliary System Branch RAI's. By letter of May 15, 1981 (SBN-160), NHY committed itself to undertaking a comprehensive program to address the concerns identified in the NRC letters. This report and appendix detail the program and the analyses and evaluations emanating from it.

The "Report" is comprised of the following:

1. An "Introduction" section.
2. A "Report Preparation/Maintenance" section which summarizes the program utilized to perform the Safe Shutdown Capability review and to maintain the safe shutdown capability as plant modifications are implemented.
3. Safe Shutdown Capability

    3.1 The "Discussion of Bases and Positions" section provides a discussion of the bases and positions established for the review of the safe shutdown performance goals.

    3.2 The "Main Control Room Safe Shutdown" Section provides a discussion of the Shutdown Locations, Functions/Systems which satisfy the performance goals; a Safe Shutdown Equipment List; and an analysis and evaluation of each fire area.

    3.3 The "Alternative Safe Shutdown Using Remote Safe Shutdown Facilities" discusses the bases and positions established for the review; a review of the Alternative Safe Shutdown capabilities; an Alternative Safe Shutdown Equipment List; and an analysis and evaluation.

    3.4 The "Alternative Safe Shutdown - Emergency Feedwater Pumphouse Fire" section discusses the location and shutdown capabilities, and an analysis and evaluation of this fire area.

    3.5 The "High-Low Pressure Interfaces" section provides a general discussion, a list of interfaces, a High Low Pressure Interface Safe Shutdown Equipment List and an analysis and evaluation.

    3.6 The "Associated Circuits" section provides a definition of associated circuits of concern and a discussion of the methodology used to address the various types of associated circuits.

3.7 The "Deviations from 1OCFR50 Appendix R" section lists all deviations resulting from the shutdown analysis.

The "Appendix" is comprised of the following sections which support the report:

I. A "P&I Diagrams (Typical)" section which contains photographs of typical marked P&I Diagrams utilized in the review.

II. A "Schematic Diagrams & Cable Diagrams (Typical)" section which contains copies of typical drawings utilized in the review.

III. An "Equipment Lists (Tables)" section which contains the tables that list all equipment required for performance of the Safe Shutdown functions.

IV. A "Raceway Arrangement Drawings (Typical)" section which contains photographs of typical marked raceway drawings utilized in the review.

REPORT PREPARATION/MAINTENANCE

To establish a methodical course of action and provide guidance to the various organizations required to support the initial development of the Safe Shutdown Capability program, UE&C procedure TP-2 (NHY Procedure 38160) titled "Procedure for Review and Report Preparation for 10 CFR Part 50 Appendix R, Fire Protection of Safe Shutdown Capability" was prepared. The salient points of this procedure are as described in Sections 2.1 to 2.8. As modifications are implemented to the plant, the effect of these modifications to this report must be evaluated. The evaluation process is as described in Section 2.9.

2.1 DETERMINATION OF FIRE AREAS/ZONES

The fire areas/zones are as delineated in "Fire Protection Program Evaluation and Comparison to Branch Technical Position APCSB 9.5-1, Appendix A" or as determined by the Responsible Engineer.

2.2 DETERMINATION OF SAFE SHUTDOWN SYSTEMS

The Safe Shutdown systems were determined by considering the minimum performance goals established in Appendix R, Paragraph III.L.2, and utilizing the following sources for guidance:

2.2.1 Final Safety Analysis Report - Seabrook Station

2.2.2 Fire Protection Program Evaluation and Comparison to Branch Technical Position APCSB 9.5-1, Appendix A

2.2.3 Station Operating Procedure No. OS1200.01 "Safe Shutdown and Cooldown from the Main Control Room"

2.2.4 Station Operating Procedure No. OS1200.02 "Safe Shutdown and Cooldown from the Remote Safe Shutdown Facilities"

2.2.5 United Engineers & Constructors Inc. Engineering

2.2.6 Yankee Atomic Electric Co. Engineering

2.2.7 New Hampshire Yankee Engineering

2.3 DETERMINATION OF SAFE SHUTDOWN EQUIPMENT

The minimum equipment necessary to perform the Safe Shutdown function was determined by utilizing the following sources:

2.3.1 Final Safety Analysis Report - Seabrook Station

2.3.2 Fire Protection Program Evaluation and Comparison to Branch Technical Position APCSB 9.5-1, Appendix A

2.3.3 Station Operating Procedure No. OS1200.01 "Safe Shutdown and Cooldown from the Main Control Room"

2.3.4 Station Operating Procedure No. OS1200.02 "Safe Shutdown from the Remote Safe Shutdown Facilities"

2.3.5 Piping and Instrumentation (P&I) Diagrams

2.3.6 United Engineers & Constructors Inc. Engineering

2.3.7 Yankee Atomic Electric Co. Engineering

2.3.8 New Hampshire Yankee Engineering

Sets of P&I Diagrams and One-Line Diagrams were marked to indicate hot standby equipment and cold shutdown equipment for main control room shutdown and remote safe shutdown. Train A equipment was marked in red, and Train B equipment was marked in green. Photographs of typical marked P&I Diagrams are contained in Appendix Section I.

2.4 DETERMINATION OF SAFE SHUTDOWN CABLES

Considering the equipment defined and utilizing their related electrical schematic diagrams and cable schematics, the cables required for Safe Shutdown were determined. The raceways through which these cables were routed were determined; and then their associated fire area/zone(s) were determined. To document the review, the "10 CFR 50 - Appendix R, Safe Shutdown Equipment List" was prepared from data gathered in this review. Copies of typical schematic diagrams and cable schematics are contained in Appendix Section II. Copies of the safe shutdown equipment lists are contained in Appendix Section III.

2.5 COMPUTER INPUT AND REPORTS

The following data were input to UE&C's "NRC Emergency Shutdown Program NRCESP" Program No. EL-130:

a. Listing of Raceways and their Associated Fire Zones

b. Listing of Cables (from Safe Shutdown Equipment Lists)

The following output reports were generated using the NRC Emergency Shutdown Programs:

c. Listing of Fire Areas/Zones

d. Safe Shutdown Cables using CASP A Format

e. Safe Shutdown Raceways and Associated Cables by Fire Zone

f. Safe Shutdown Raceways and Cables

g. Cables with Associated Fire Zones

Copies of the input data and output reports were contained in Appendix Section V.

2.6 DETERMINATION OF SAFE SHUTDOWN RACEWAYS

Utilizing the "Safe Shutdown Raceways and Associated Cables by Fire Zone" computer report, a set of raceway arrangement drawings was marked as follows:

2.6.1 Train A raceways, boxes, and termination equipment were marked in red.

2.6.2 Train B raceways, boxes, and terminating equipment were marked in green.

2.6.3 Equipment which is manually operated or disabled was marked in orange. A "D" was placed beside equipment to be disabled. An "M" was placed beside equipment needed to be manually operated.

2.6.4 Rated fire walls and barriers were marked in black.

Photographs of typical marked raceway arrangement drawings are contained in Appendix Section IV.

2.7 ANALYSIS OF RACEWAYS AND EQUIPMENT TO SATISFY APPENDIX R REQUIREMENTS

2.7.1 Each fire area/zone that contained Safe Shutdown equipment or cables was reviewed to determine if Appendix R, Paragraph III.G.2 separation requirements were satisfied.

2.7.2 If the Appendix R requirements were not satisfied, further analysis was performed to determine the effects of a hot short circuit, short circuit, open circuit, ground or other equipment failure.

2.7.3 If the Safe Shutdown function was affected by a hot short circuit, short circuit, open circuit, ground or other equipment failure, then the following analysis to satisfy the Appendix R requirements was provided:

2.7.3.1 Analysis which documented that the in situ and transient combustibles were insufficient to cause a fire which affected the redundant trains of equipment and cables.

2.7.3.2 A three-hour fire barrier or a one-hour barrier and sprinklers between the redundant equipment or cables.

2.7.3.3 Rerouted the redundant cable out of the fire area/zones, or provided twenty feet of separation and sprinklers in the area.

2.7.3.4 Provided an alternative or dedicated safe shutdown equipment or system (See Section 3.3 and 3.4).

2.7.3.5 Requested a deviation from the 10 CFR 50, Appendix R requirements based on the combustibles in the fire area/zone, the spatial separation and the protective measures provided. (See Section 3.7).

2.8 HIGH-LOW PRESSURE INTERFACES

A list was prepared of the high-low pressure interfaces and the lines with two or more electrically operated valves which could open and potentially cause a LOCA. A review was performed in the same manner as discussed in Section 2.4 and 2.5 utilizing this list. An analysis and evaluation were then performed. (See Section 3.5)

2.9 MODIFICATION EVALUATION

As plant modifications are implemented, their effect on the analysis contained in this report must be evaluated to ensure that the safe shutdown capability in the event of a fire is maintained. This evaluation will consider the UFSAR, this Appendix R Report, Supporting Documentation and the latest issue of design documents. If necessary, appropriate markups of documents will be included in the design change package to reflect any change in the Appendix R safe shutdown analysis.

The UE&C computer programs described in Section 2.5 are no longer available. New computer programs were written to produce the following reports to support the analysis contained in this report and evaluation of modifications:

a. List of Areas/Zones

b. List of Raceways and Associated Fire Zones

c. List of Cables w/Event Indicators

d. Safe Shutdown Raceways and Associated Cables by Fire Zone

e. Safe Shutdown Raceways and Cables

f. Cables with Associated Fire Zones

Copies of these reports are contained in Appendix R supporting documentation.

SAFE SHUTDOWN CAPABILITY

3.1 DISCUSSION OF BASES AND POSITIONS

3.1.1. General

10 CFR Part 50 Appendix R, Paragraph III.G.1 requires that fire damage be limited so that:

a. One train of systems necessary to achieve and maintain hot standby condition from either the control room or emergency control station(s) is free of fire damage; and

b. Systems necessary to achieve and maintain cold shutdown from either the control room or emergency control station(s) can be repaired within 72 hours.

Based on requirement "a" above, the design basis of Seabrook Station is that one train of systems necessary to achieve and maintain hot standby from the control room or the emergency control stations (hereafter designated the remote safe shutdown facilities) is free of fire damage.

Under this basis, Appendix R, Paragraph III.G.2 and III.G.3 will apply to the safe shutdown paths controlled from the main control room or the remote safe shutdown facilities. Any deviations from the III.G.2 and III.G.3 criteria will be with respect to the main control room or the remote safe shutdown facilities and is addressed in Sections 3.2.7, 3.3.9, 3.4.3 and in the List of Deviations Section 3.7 of this report. For fires in some areas of plant, alternative shutdown capabilities are provided as discussed in Sections 3.3 and 3.4.

This Section defines the bases and positions utilized in determining and reviewing the shutdown capabilities that will satisfy the requirements of Paragraph III.G. These capabilities can be utilized to safely shut down the reactor in the event of a fire in any area/zone of the plant.

3.1.2 Safe Shutdown

"Safe Shutdown" for purposes of the review is defined as a capability to bring the reactor from a 100 percent power operating condition to a "cold shutdown" condition. Included in this are conditions "hot standby," "hot shutdown," "cold shutdown," and maintenance of "cold shutdown."

The design basis event for safe shutdown is a postulated fire in a specific fire area/zone with or without the loss of offsite power (LOOP). This design basis was used for the original Appendix R Report preparation. The LOOP was assumed to occur whether the specific fire being analyzed caused it or not. The diesel generators (DGs) were analyzed to both automatically start and load, and not automatically start and load. An engineering evaluation prepared in 2007, documented that this was a conservative design basis since Appendix R does not require an arbitrary LOOP for non-alternate shutdown fire areas/zones (i.e., for shutdown control from the main control room). For future safe shutdown analyses, offsite power can be credited to remain available for non-alternate shutdown fire areas/zones if the cables required to support offsite power are not damaged by the fire (i.e., an arbitrary LOOP need not be assumed). This approach provides greater analysis flexibility.

No other design basis event (e.g. seismic or LOCA) is considered to occur coincident with the fire event.

The safe shutdown functions shall assure the following:

a. No fuel clad damage.

b. No rupture of any primary coolant boundary.

c. No rupture of containment boundary.

d. Reactor coolant system process variables shall be within those predicted for a loss of normal AC power.

e. Achievement of cold shutdown conditions within 72 hours and maintenance of cold shutdown conditions thereafter.

3.1.3 Redundancy

To assure a safe shutdown capability pre-fire, two redundant trains (Train A and Train B) of equipment are provided for each safe shutdown function. Each train contains a complete complement of the equipment, cabling, instrumentation and controls necessary to perform the safe shutdown functions.

In several instances a single mechanical equipment is common to both trains (i.e., condensate storage tank, mechanical manual valves, piping, HVAC ducts, etc.).

Single failure is not assumed to occur except to equipment that is damaged by the fire.

3.1.4 Determination of Safe Shutdown Functions

The safe shutdown functions are determined by considering the performance goals established in Appendix R, Paragraph III.L.2. The systems or portions of systems necessary to satisfy safe shutdown are subsequently determined.

3.1.5 Determination of Safe Shutdown Equipment

Safe shutdown systems are the systems required to achieve the performance goals listed in Section 1. The equipment for these systems can be divided by function as Hot Standby (Reactor tripped and T-Avg above 350°F) and Cold Shutdown (Reactor tripped/and cool down of the Reactor Coolant System T-Avg equal to or below 200°F).

The following criteria are used to determine the equipment required for safe shutdown:

a. The equipment is required to operate to permit a safe shutdown system to perform its safe shutdown function.

b. The equipment's maloperation can prevent a safe shutdown system from performing the safe shutdown function.

c. The equipment is a process or electrical boundary for a safe shutdown system.

3.1.6 Safe Shutdown System Boundaries

The safe shutdown system process boundaries are established by the following devices:

a. Normally closed manual valve

b. Check valve

c. Electrically operated safe shutdown valve

d. Root valve on small instrument lines to non-safe shutdown instruments

e. Relief valve

f. Redundant valves on high-low pressure boundaries

g. Boundary valve between a safe shutdown process line and a non-Safe Shutdown process line which if it is an incorrect position will not affect the operation of the Safe Shutdown system.

The safe shutdown electrical system boundaries are established by the following devices:

h. Isolation device (i.e., coordinated circuit breaker, fuse, transducer, etc.)

i. "Remote Local" selector switch

Cables isolated by "Remote-Local" selector switches or other isolation devices are not included in the review.

3.1.7 Manual Operator Actions

Manual operator actions must satisfy the following considerations:

a. Sufficient manpower and time is available to perform all required manual actions.

b. There is accessibility to the equipment to perform the manual action either during or after the fire.

3.1.8 Spurious Operation

The evaluation of the effects of spurious equipment operation on safe shutdown functions considers the effects of hot short circuits, short circuits, open circuits and grounds.

The effects of hot short circuits are considered on the following:

a. Energized 120V ac grounded circuits

b. De-energized 120V ac grounded circuits

c. Energized 120V ac ungrounded circuits

d. Energized 125V dc ungrounded circuits

Hot short circuits are not considered for disabled (tripped power supply) 3-phase 480 Volt ac circuits, ungrounded 1-phase 120 Volt ac circuits and ungrounded 125 Volt dc circuits as these would require multiple hot shorts in the correct sequence to cause a device to function. These are considered incredible events.

The effects of short circuits, open circuits and grounds are considered for all circuits evaluated for spurious operation.

The above discussion does not provide all of the criteria used for evaluating spurious component operations during the original Appendix R Report preparation. An engineering evaluation prepared in 2007 reviewed various Seabrook, NRC, and industry documents to re-create the circuit analysis methodology bases used for the fire safe shutdown analyses that was not included in the above discussion. The following documents the added methodology criteria.

The analyses shall consider fire induced damage to any and all unprotected cables in the fire area/zone being analyzed. Each cable failure shall be considered individually, one-at-a-time, and the effects of any spurious operation(s) evaluated. If the effect is unacceptable (ex. loss of inventory), then operator actions, or other corrective actions (see Section 2.7), are specified to mitigate the effects of the spurious operation. If the effect is acceptable, then additional sequential cable failures and resultant spurious operations of same function components must also be considered (ex. spurious opening of other normally closed series valves in a potential diversion flow path). If their effects are unacceptable, then appropriate preventative/disabling operator actions (ex. open a circuit breaker) are specified to prevent the unacceptable condition. Mitigating and preventative/disabling actions that rely on electrical power, ex. MOV operation, can not credit components with unprotected cables in the fire area/zone being analyzed.

The basis described in the previous paragraph is typically referred to in the industry as any-and-all, one-at-a-time.

In addition, it will be assumed that the loss of function from fire damage to unprotected cables within a fire area cable will prevent the effected components from operating to support safe shutdown but any resulting state changes will be evaluated as spurious operations following the above criteria of one-at-a-time. Also, a protective device state change from a short circuit (open a fuse or trip a circuit breaker) will be considered a spurious operation and will be evaluated following the above criteria of one-at-a-time including any end component state changes, ex., loss of control power to a normally energized solenoid operated valve (SOV) would cause the SOV to change state as a spurious operation.

For Seabrook, failure of an individual cable typically only causes spurious operation of one component although there are exceptions where one cable failure can cause spurious operation of multiple components.

The complete circuit for each equipment tag typically consists of multiple cables routed through many fire zones. It is expected that applying the failure modes to some cables in a circuit may not actually result in a spurious operation of the corresponding equipment. However, it appears that the original safe shutdown analyses conservatively assumed that every cable failure would cause spurious operation of the supported component(s) since there was no evidence found in the original analyses of credit being taken for analyzing specific conductor interactions as the basis for concluding that there was no resulting spurious operation. For future safe shutdown analyses, it is acceptable to use circuit analysis to demonstrate that a fire-induced cable failure can not cause a spurious operation. These circuit analyses should be included in appropriate engineering documents.

Operator actions to mitigate spurious component operation must meet the criteria provided in Section 3.1.7 on manpower, timing and accessibility considering the system effect of the corresponding spurious operation. Preventative/disabling operator actions should be documented in a procedure and be able to be completed in a reasonable time consistent with completion of time critical mitigating actions.

Automatic signals can be credited if their circuits are included in the analysis to ensure that their cables are free of fire damage for the fire areas which credit the signals. Automatic signals with unprotected cables in a fire zone must be analyzed to fail to operate or spuriously operate because of fire-induced cable damage. The automatic signals must also be analyzed to operate as designed if the system conditions caused by the fire (ex. low level, high flow, loss of power, etc.) would initiate the automatic function to ensure that the automatic actuation is not detrimental to safe shutdown.

The review assumes that all conductors within multi-conductor cables would short, open or ground due to a fire. Cable to cable interactions are not considered credible events because of the thermoset cable insulation used at Seabrook Station.

3.1.9 Disabled (tripped power supply) Equipment

To prevent spurious operations of valves and other equipment which are normally aligned in their safe shutdown position, the operators will trip the power supplies to these devices upon reaching the RSS facilities.

3.1.10 Fire Areas

The "Fire Protection Program Evaluation and Comparison to Branch Technical Position APCSB 9.5-1, Appendix A" report establishes fire areas and zones for purposes of fire detection and protection. Although these zones are satisfactory for fire detection and protection, they do not in all cases satisfy Appendix R requirements. To assure that the Appendix R separation requirements are satisfied, zones containing redundant equipment which do not satisfy the requirements are grouped and analyzed to provide assurance that safe shutdown can be achieved. An example of this is containment which has three zones: C-F-l-Z, C-F-2-Z and C-F-3-Z. As there is no 3-hour rated barrier between zones, they have been considered as one fire area. The delineation of the fire areas and zones which have been combined into a fire area is in Section 3.2.7.

3.1.11 Emergency Lighting

Emergency lighting units per Appendix R, Paragraph III J are provided with at least an 8-hour battery powered supply or diesel generator backed essential lighting (See letter SBN-932, dated January 27, 1986, Deviation No. 10) in all areas needed for operation of safe shutdown equipment and in access and egress routes. In areas where actions are required after eight hours and actions are needed during a cooldown, 8-hour battery powered supplied lights are not provided. Repairs per Appendix R III G.l.b, will be implemented to provide required illumination for required cooldown actions.

3.1.12 Repairs for Cold Shutdown

For cold shutdown, the following equipment will require replacement of control fuses which will be available in the Train B switchgear room.

a. EAH-FN-31B

b. RC-V87

c. RC-V88

d. RH-P-8B

e. SI-V17

f. SI-V47

In the event that emergency bus EDE-SWG-5 is not available, a temporary power connection will be provided from EDE-MCC-621 to the RC-V88 MCC cubicle.

In the event that PCCW cooling is lost to containment due to loss of containment instrument air causing inboard PCCW isolation valve closure, IA-V530 will be manually opened via a pneumatic jumper to supply outside containment instrument air to containment instrument air to reopen the inboard PCCW isolation valves to reestablish PCCW cooling flow to support containment habitability.

3.2 MAIN CONTROL ROOM SAFE SHUTDOWN

3.2.1 Main Control Room Safe Shutdown Locations

Safe shutdown will be accomplished with control from the main control room (MCR), utilizing the safe shutdown equipment and depending on the location of the fire, a combination of the following locations:

a. Train A Switchgear Room

b. Train B Switchgear Room

c. Diesel Generator Room A

d. Diesel Generator Room B

e. Primary Auxiliary Building El. 25'-0" Boric Acid Storage Tank Area

f. Primary Auxiliary Building El. 7'-0" Charging Pump Rooms

g. Containment

h. Equipment Train A Vault (Vault #1)

i. Equipment Train B Vault (Vault #2)

j. Mechanical Penetration Area

k. Emergency Feedwater Pump Building

l. Condensate Storage Tank

m. Control Room HVAC Equipment and Duct Area

n. Non-Essential Switchgear Room

o. Turbine Building

Actions from the various areas would be of the following types: manual valve actuations, manual damper actuations, tripping of power supplies, opening of doors to provide air flow for cooling, realign power supplies, and/or manipulation of control switches.

The term "prompt action" refers to an action taken after receipt of a valid fire alarm in the main control room. The term "expeditious action" or "expeditiously" refers to an action taken quickly upon entry into the applicable safe shutdown procedure. These type actions are considered to be completed prior to a spurious operation of the equipment operated by the prompt and expeditious actions. Therefore, no associated timing calculation is required for these actions.

3.2.2 Safe Shutdown Functions for Hot Standby

The following are PWR equipment necessary for hot standby:

3.2.2.1 Reactor Coolant (RC) Inventory and Pressure Control

To compensate for miscellaneous RC system leakage, RC pump seal leakage and cooldown volume shrink, portions of the chemical and volume control (CS) system including centrifugal charging pumps, boric acid transfer pumps, and a borated water supply, either the refueling water storage tank (RWST) or the boric acid tanks (BAT) are used. The injection path to the RC system will be either through the seal injection flow path or the high head injection flow path. The preferred seal injection path requires that a flow control valve (CS-FCV-121) and that a minimum of two of the four seal injection valves (CS-V154, CS-V158, CS-V162 or CS-V166) be operable. Additionally, the normal charging flow path to the RC system is isolated. This can be accomplished by use of any one of three functionally redundant valves (CS-V142, CS-V143 or CS-HCV-182). Should the seal injection path not be operable, e.g., due to spurious closure of a flow path valve (CS-FCV-121) the high head injection flow path (SI-V138 or SI-V139) can be utilized initially to maintain hot standby by batch charging from the RWST to maintain pressurizer level. Should SI-V-138 or SI-V-139 spuriously open, the charging pump may have to be stopped to prevent overfill of the pressurizer.

During cooldown as RC system pressure decreases, it is necessary to provide a flow restricted path to prevent charging pump cavitation. This is due to the limited flow capability from the BAT. If the high head injection path cannot be isolated at this time and/or if the flow controlled path through CS-FCV-121 is not operable, a capability is provided to manually align and throttle the charging pumps to the seal injection flow paths. The necessary operator actions and valve alignments are unique for each fire area where these flow paths are affected and are described in the analysis for each area.

RC pump seal cooling is provided by a redundant thermal barrier cooling system. Should the redundant thermal barrier system not be available, the seals will be cooled by the seal injection capability. On a long term basis, seal injection will be restored. The reactor coolant pumps (RCPs) are stopped from the main control board. Circuit analysis shows that the RCPs can not spuriously restart due to fire-induced cable damage.

The RC system pressure is controlled by use of a portion of the RC system which includes the pressurizer heaters (Group A and B) to increase pressure and the pressurizer power operated relief valves (PORV) which depressurize the RC system by discharging reactor coolant fluid to the pressurizer relief tank (PRT).

Considering worst case scenarios for spurious actuation of affected equipment, the required times for operator actions regarding RC inventory and pressure control for safe shutdown from the main control room are provided below:

Action	Time
Close PORV block valve	Prompt
Isolate letdown	15 minutes
Swap charging pump suction from VCT to RWST	15.4 minutes. Should SI-V138, SI-V139, or CS-HCV-182 spuriously open, this action must be completed no later than 5.0 minutes following letdown line isolation.
Trip RCPs	10 minutes
Open a PORV to reduce pressurizer pressure in the event of spurious pressurizer heater operation or trip pressurizer heaters	23 minutes
Start a charging pump, or open a high head safety injection valve SI-V-138 or SI-V-139 if normal charging pump path is not available	31.1 minutes
Isolate charging flow, except for seal injection	35.4 minutes
Trip spuriously operating containment building spray pumps	46 minutes
Trip spuriously operating SI pump	< 4 hours, prior to commencement of plant cooldown
Isolate the potential diversion path from the BAT to the RWST, or align BAT for gravity feed.	<4 hours, prior to commencement of plant cooldown
Align BAT for makeup source	<4 hours, prior to commencement of plant cooldown

3.2.2.2 Reactivity Control

Reactivity for hot standby at normal operating temperature (not) is provided by insertion of the control rods. Reactivity conditions required for cooldown and maintaining cold shutdown are provided by a portion of the chemical and volume control (CS) system which includes a centrifugal charging pump taking suction from the BAT's either utilizing the gravity flow path or the boric acid transfer pumps. During cooldown, the borated water source must be the BAT volume until expended to at least the point that the volume injected or a boron sample demonstrates that sufficient shutdown margin for cold shutdown has been achieved, at which time the RWST would be aligned. If gravity feed from the BAT is used, the RWST must be isolated.

Considering worst case scenarios for spurious actuation of affected equipment, the required times for operator actions regarding reactivity control for safe shutdown from the main control room are provided below:

Action	Time
Trip the Reactor	Expeditiously
Provide borated water from the BATs, via boric acid transfer pump or gravity feed	<4 hours, prior to commencement of plant cooldown
Isolate boric acid flow diversion path	<4 hours, prior to commencement of plant cooldown

3.2.2.3 Decay Heat Removal

The reactor coolant (RC) system temperature is controlled by use of portions of the feedwater (FW) system and the main steam (MS) system. The main steam safety/relief valves will maintain a heat dump capability. The steam generator water inventory is controlled by operating the motor driven emergency feedwater pump, the start-up feedwater pump, and associated valves. Inventory for the emergency feedwater is from the condensate storage tank. Long term water capability exists using a temporary connection between the suction of the turbine driven emergency feed pump and the fire protection system but is not required to meet Appendix R requirement. This temporary connection back feeds to the CST which supplies water to the startup feedwater pump and the motor driven emergency feedwater pump. To assure main steam system integrity the MSIV's and MSIV bypass valves are maintained closed. The MSIV bypass valves are normally locked closed and depowered with breakers locked open to preclude spurious opening. Decay heat transfer is made possible by natural convection flow in the RC system.

Considering worst case scenarios for spurious actuation of affected equipment, the required times for operator actions regarding decay heat removal for safe shutdown from the main control room are provided below:

Action	Time
Isolate the MSIVs	Expeditiously following a reactor trip
Place the mode selector switches for the ASDVs to the closed position	Prompt
Gain Control of excessive Emergency Feedwater Flow	20 minutes
Start motor driven EFW pump or startup feedwater pump to preclude steam generator dry out – normal power operation	39 minutes
Start motor driven EFW pump or startup feedwater pump to preclude steam generator dry out – low power operation	75 minutes
Time to bypass the startup feed pump low suction trip	4 hours
Time allotted for operator actions to preclude emptying CO tank to accommodate RHR Cut-in, and ultimately achieve cold safe shutdown within 72 hours	9 hours; 4 hours at hot standby plus 5 hours cooldown to RHR Cut-in

3.2.2.4 Process Monitoring

Instrumentation is provided at the main control room for monitoring the following process variables:

a. Steam generator emergency feedwater flow

b. Reactor coolant loop hot and cold leg temperatures

c. Steam generator wide-range level

d. Steam generator pressure

e. Pressurizer level

f. Pressurizer pressure

g. Wide-range neutron monitoring (excore)

h. Primary component cooling water temperature

i. Boric acid tank level

j. Condensate storage tank level

3.2.2.5 Service Water

The service water system will supply cooling water to the primary component cooling water system, diesel generators, and if required, fire protection system. Service water supply will be from the service water pumps taking suction from the tunnels to the ocean. If necessary, transfer to the cooling towers utilizing the cooling tower fans, cooling tower pumps and associated motor-operated transfer valves can be accomplished automatically on low service water pump discharge header pressure or manually from the main control room. If a manual transfer to the cooling tower is in effect and a loss of offsite power occurs, cooling tower operation automatically resumes upon restoration of electrical power.

3.2.2.6 Primary Component Cooling Water (CC)

The CC system is utilized to maintain cooling water to the charging pumps, RHR pumps, RHR heat exchangers, containment structure cooling units, containment enclosure cooling units and reactor coolant pumps (RCP) thermal barrier heat exchanger. The PCCW pumps, temperature control valves, RCP thermal barrier cooling pumps, and inboard and outboard containment isolation valves are necessary for system operations.

3.2.2.7 Sampling

Sampling of the reactor coolant system is not required at hot standby and cold shutdown conditions since make-up during cool-down will only be provided to the RCS from the boric acid tanks (two) which are maintained at 4 wt% boric acid. During all phases of cooldown, the core will be maintained to the shutdown margin greater than or equal to the limit specified in the Core Operating Limits Report (COLR).

3.2.2.8 Diesel-Generator Building Air Handling (DAH)

The DAH system is utilized to maintain long-term habitability and equipment protection for the diesel-generator rooms. The DAH system includes the fans and dampers for air handling in these areas.

3.2.2.9 Containment Enclosure Air Handling (EAH)

The EAH system is utilized to maintain long-term habitability of the mechanical penetration area, and provides equipment cooling in the charging pump rooms, and the hydrogen analyzer and electrical room. The EAH system includes the coolers, fans, and dampers required for air handling in these areas.

3.2.2.10 Emergency Feedwater Pumphouse Air Handling (EPA)

The EPA system is utilized to maintain long-term habitability and equipment protection in the emergency feedwater pump building. The EPA system includes the fans and dampers required for air handling in this area.

3.2.2.11 Primary Auxiliary Building Air Handling (PAH)

Portions of the PAH system are utilized to maintain long-term habitability and equipment protection in the PCCW area of the primary auxiliary building. The PAH system includes the fans and dampers required for ventilation in this area.

3.2.2.12 Service Water Air Handling (SWA)

Portions of the SWA system are utilized for equipment protection in the SW pump house electrical control rooms. The SWA system includes the fans and dampers required for air handling in these areas.

3.2.2.13 Electrical Distribution Emergency (EDE)

Portions of the EDE system are required to power the various pumps, fans, valves, etc. required for Safe Shutdown. Included in the EDE system are the 4160 Volt ac emergency switchgear, 460 Volt ac emergency unit substations and motor control centers, the uninterruptible power supplies, the static transfer switches, 120 Volt ac vital distribution panels, 125 Volt dc batteries, battery chargers, and 125 Volt dc distribution panels.

3.2.2.14 Diesel-Generators (DG)

The diesel-generators provide power to the emergency electrical distribution system upon loss of off-site power. The DG system includes the diesels, generators, control panels, engine-driven auxiliaries fuel oil transfer pumps, starting air compressors and backup operating air compressors.

3.2.2.15 Safeguard Actuation System

The safeguard actuation system could be actuated, depending on the fire area. A portion of this system is used to deactivate the system for recovery.

3.2.2.16 Service Air (SA) and Instrument Air (IA)

Portions of the SA and IA systems are required for air operated valves and dampers necessary for safe shutdown.

3.2.2.17 Control Building Air Handling (CBA)

The CBA system is used to maintain Control Building habitability and equipment protection. The CBA system is comprised of a non-safety related chilled water system that can be aligned to either safety related air handling unit and two redundant safety related chilled water systems, which are aligned to their corresponding safety related air handling units. Each chilled water system includes its own packages chiller and circulating pumps. The air handling units include cooling coils (safety related and non-safety related), fans, dampers. Fires that could disable either safety related train of Control Room cooling are discussed in applicable fire area analysis.

3.2.2.18 Communication

The Gaitronics or radio systems are used to announce the fire event and dispatch the fire brigade. The Gaitronics system is also used to provide a fire alarm. For shutdown from the main control room (MCR), most of the operator actions are actually performed in the MCR where face-to-face communication would be used. When field actions are required, an operator would: a) be dispatched to take the required action, b) go to the field and take the action, and c) then return to the MCR and report the action completed. No other communication methods are credited for shutdown controlled from the main control room. Radios and Gaitronics are not credited but would be used as additional means of communication, if not damaged by the fire.

3.2.3 Safe Shutdown Function for Cooldown

The following equipment in addition to that which is listed in Section 3.2.2 is necessary for cooldown.

3.2.3.1 Decay Heat Removal

In addition to equipment discussed in Section 3.2.2.3, the steam generator atmospheric relief valves will be used for cooldown until the residual heat removal (RH) system can be used. The residual heat removal system will be the long term heat sink at the end of cooldown. An RH pump will be operated along with various control, manual and motor operated valves. Also, the startup feedpump low suction pressure trip must also be bypassed prior to commencing cooldown.

3.2.3.2 Containment Building Air Handling (CAH)

The CAH system is utilized to maintain habitability of containment for manual operation of the RHR and SI isolation valves. The CAH system includes six containment cooling units and their associated fans.

3.2.3.3 Sample System

For cold shutdown, the operator will draw a manual sample from RH system to verify boron concentration before line-up to RCS. The operator will use manual valves in RH system.

3.2.4 Manual Operator Actions

The following equipment may require manual operation outside the MCR.

a. Control Building dampers CBA-DP-24A, CBA-DP-24B, CBA-DP-24C, CBA-DP-24D, CBA-DP-24E, CBA-DP-24F, CBA-DP-52, CBA-DP-26A, CBA-DP-26B.

b. Switchgear room fans CBA-FN-19, CBA-FN-20, CBA-FN-32 and CBA-FN-33.

c. Component cooling water valves CC-V122, CC-V168, CC-V175, CC-V257 and CC-V272

d. CVC tank isolation valves CS-LCV-112B and CS-LCV-112C (RSS Panels).

e. RWST suction to charging pump valves CS-LCV-112D and CS-LCV-112E (RSS panel)

f. Charging pumps discharge and bypass valves CS-V210, CS-V219, CS-V220 and CS-V221.

g. Boric acid tank level CS-LT-7464 (RSS panel)

h. Boric acid tank valves CS-V410, CS-V416, CS-V423, CS-V426, CS-V431, CS-V437, CS-V439, CS-V442 and CS-V1207

i. Diesel generators DG-DG-1A and DG-DG-1B (DG panels)

j. RHR inlet isolation valves RC-V22, RC-V23, RC-V87 and RC-V88

k. RHR sampling valves RH-V8 and RH-V44

l. RH heat exchanger to CS/SI pump isolation valves RH-V35 and RH-V36

m. Instrument air cross connect valves IA-V50 and IA-V530.

n. Safety injection accumulator isolation valves SI-V3, SI-V32

o. PAB fans PAH-FN-42A and PAH-FN-42B (RSS panels)

p. Control building doors C119, C300, C310, C311 and C312.

q. Start-up feedpump low suction pressure trip bypass switch (FW-CS-4233).

r. Realign the suction of the start-up feedpump (CO-V-142).

s. Realign the power supply of the start-up feedpump from Bus ED-SWG-4 to Bus EDE-SWG-5 (if not already aligned to Bus EDE-SWG-5).

t. Not used

Equipment CBA-DP-24D, CBA-DP-24E, CBA-DP-24F, CS-V210, CS-V219, CS-V220, CS-V221, CS-V410, CS-V416, CS-V423, CS-V431, CS-V437, CS-V439, CS-V442, CS-V1207, CO-V142, IA-V50, RH-V8 and RH-V44 are not electrically operated; hence, they have no cables. Electrical operation of IA-V530 is not credited so its cables are not analyzed.

3.2.5 Disabled (tripped power supply) Equipment

The following equipment may require disabling:

a. Primary component cooling valves CC-V1092, CC-V1095, CC-V1101 and CC-V1109

b. Chemical and volume control valves CS-FCV-110A, -111A, -110B, -111B CS-V154, CS-V158, CS-V162, CS-V166, CS-V175, CS-V176, CS-V196 and CS-V197

c. Not used.

d. Emergency buses EDE-SWG-5 and EDE-SWG-6 (control power)

e. Emergency Feedwater Control Valves FW-FV-4214A,B; FW-FV-4224A,B, FW-FV-4234A,B and FW-FV-4244A,B

f. Atmospheric relief valves MS-PV-3001, MS-PV-3002, MS-PV-3003 and MS-PV-3004

g. Not used.

h. Reactor coolant valves RC-V122, RC-V124, RC-V323, RC-FV-2881, RC-LCV-459*, RC-LCV-460*, RC-PCV-456A and RC-PCV-456B

i. Pressurizer heaters Group C, Group D and Control Group

j. Reactor coolant pumps RC-P-1A, RC-P-1B, RC-P-1C, RC-P-1D

k. Residual heat removal valves RH-V14, RH-V26, RH-V32, RH-V35, RH-V36, RH-V70, RH-HCV-607* and RH-FCV-619*

l. Safety injection valves SI-V158 and SI-V159

m. Service water valves SW-V15, SW-V16*, SW-V18*, SW-V19, SW-V20, SW-V23, SW-V25, SW-V34 and SW-V54

n. Engineered safety features actuation system logic cabinets

o. Service water pump permissive logics

Those valves noted with an asterisk (*) fail to their safe shutdown position upon de-energization.

3.2.6 Safe Shutdown Equipment List

Tables that list all equipment, including instrumentation and vital support systems equipment, required to achieve hot standby or cold shutdown from the main control room are provided in Appendix III. However, analysis can be also provided to justify not listing components and cables in Appendix III. The tables provide the following information for each equipment listed:

a. A column which notes whether the equipment is required for hot standby or cold shutdown.

b. A column which defines each equipment's location by fire zone/area.

c. A column which defines each equipment's redundant counterpart.

d. A column which lists each equipment's essential cabling. For each cable's routing by fire zone/area see computer report, "Cables with Associated Fire Zones" (Main Control Room Safe Shut-down).

e. The table also delineates the following additional information:

1) P & I Diagram Drawing No.

2) Physical Location Drawing No.

3) Power Supply

4) Electrical Node Number

5) Supporting Control and Instrumentation Equipment

6) Electrical Schematic Drawing No.

7) Electrical Cable Schematic Drawing No.

8) Supporting Systems

9) Remarks

Separate tables are furnished for each of the safe shutdown functions. In several instances a safe shutdown function requires components from several systems to perform its safe shutdown function.

In order to simplify the tabulation, the following are not listed: manual valves in the process flow path; mechanical check valves which provide a safe shutdown system boundary; normally closed manual valves which provide a safe shutdown system boundary; mechanical relief valves; and root valves on small instrument lines. The review of these valves is documented by the marked P & I Diagrams.

Tables are provided for the following functions which satisfy the performance goals stated in Appendix R, Paragraph III.L.2.

Function	Table No.
Decay Heat Removal	3.1.3.1
Reactor Coolant Inventory and Pressure Control	3.1.3.2
Reactivity Control	3.1.3.3
Process Monitoring	3.1.3.4
Safeguard Actuation System	3.1.3.5
Cold Shutdown	3.1.3.6
Service Water	3.1.3.7
Primary Component Cooling Water	3.1.3.8
Containment Building Air Handling	3.1.3.9
Control Building Air Handling	3.1.3.10
Diesel Generator Building Air Handling	3.1.3.11
Containment Enclosure Air Handling	3.1.3.12
Emergency Feedwater Pumphouse Air Handling	3.1.3.13
Primary Auxiliary Building Air Handling	3.1.3.14
Service Water Air Handling	3.1.3.15
Service/Instrument Air	3.1.3.16
Electrical Distribution Emergency	3.1.3.17
Diesel Generators	3.1.3.18

3.2.7 Analysis and Evaluation of Fire Areas

Provided on the following pages is a tabulation of the safe shutdown equipment and safe shutdown cabling contained in a fire area. The Train A and Train B redundant equipment are depicted, and an "X" is shown in the tabulation if equipment and/or cables are located in the fire area.

If redundant trains of equipment are affected by a fire in the area, an analysis is provided on an area, equipment or system basis for the effects of a fire in this area.

An evaluation is provided as to whether the Appendix R requirements or safe shutdown requirements are satisfied. If a deviation from Appendix R requirements exists, this deviation is justified by analysis.

The following fire areas and associated fire zones have been considered in this review:

Building	Fire Area	Fire Zones	Tabulation
Containment		C-F-1-Z, C-F-2-Z, C-F-3-Z	3.2.7.1
Control Building-El. 21'-6"	CB-F-1A-A	-	3.2.7.2
Control Building-El. 21'-6"	CB-F-1B-A	-	3.2.7.3
Control Building-El. 21'-6"	CB-F-1D-A	-	3.2.7.4
Control Building-El. 21'-6"	CB-F-1E-A	-	3.2.7.5
Control Building-El. 21'-6"	CB-F-1F-A	-	3.2.7.6
Control Building-El. 21'-6"	CB-F-1G-A	-	3.2.7.7
Control Building-El. 50'-0"	CB-F-2A-A	-	3.2.7.8
Control Building-El. 50'-0"	CB-F-2B-A	-	3.2.7.9
Control Building-El. 50'-0"	CB-F-2C-A	-	3.2.7.10
Control Building-El. 75'-0"	CB-F-3A-A	-	3.2.7.11
Control Building-El. 75'-0"	CB-F-3B-A	-	3.2.7.12
Control Building-El. 75'-0"	CB-F-3C-A	-	3.2.7.13
Intentionally left blank			3.2.7.14
Control Building-Stairwell	CB-F-S1-0	-	3.2.7.15
Control Building-Stairwell	CB-F-S2-0	-	3.2.7.16

Building	Fire Area	Fire Zones	Tabulation
Containment Fan Encl. Area and Containment Annulus/		CE-F-l-Z, PP-F-1A-Z, PP-F-2A-Z, PP-F-3A-Z,	3.2.7.17
Mechanical Penetration Area		PP-F-1B-Z, PP-F-2B-Z, PP-F-3B-Z, PP-F-4B-Z PP-F-5B-Z	
Condensate Storage Area	CST-F-1-0		3.2.7.18
Intentionally left blank			3.2.7.19
Intentionally left blank			3.2.7.20
Cooling Tower-El. 22'-0"	CT-F-1C-A		3.2.7.21
Cooling Tower-El. 22'-0"	CT-F-1D-A		3.2.7.22
Intentionally left blank			3.2.7.23
Cooling Tower-El. 46'-0"	CT-F-2B-A		3.2.7.24
Cooling Tower, Fans	CT-F-3-0		3.2.7.25
Duct Bank-ET to SW	DCT-F-1A-0	-	3.2.7.26
Duct Bank-ET to SW	DCT-F-1B-0	-	3.2.7.27
Duct Bank-PAB to CT	DCT-F-2A-0	-	3.2.7.28
Duct Bank-PAB to CT	DCT-F-2B-0	-	3.2.7.29
Duct Bank-CB to PAB	DCT-F-3B-0	-	3.2.7.30
Duct Bank-East MUA	DCT-F-4A-0	-	3.2.7.31
Duct Bank-East MUA	DCT-F-4B-0	-	3.2.7.32
Duct Bank-West MUA	DCT-F-5A-0	-	3.2.7.33
Duct Bank-West MUA	DCT-F-5B-0	-	3.2.7.34
Duct Bank-SWPH to CW	DCT-F-6-0	-	3.2.7.35
Duct Bank-TB to CST	DCT-F-7-0	-	3.2.7.36
Diesel Gen. Bldg.-El(-)16'-0"	DG-F-1A-A	-	3.2.7.37
Diesel Gen. Bldg.-El (-)16'-0"	DG-F-1B-A	-	3.2.7.38
Diesel Gen. Bldg.-El 21'-6"	DG-F-2A-A	-	3.2.7.39

Building	Fire Area	Fire Zones	Tabulation
Diesel Gen. Bldg.-El 21'-6"	DG-F-2B-A	-	3.2.7.40
Diesel Gen. Bldg.-El 51'-6"	-	DG-F-3A-Z DG-F-3B-Z	3.2.7.41
Diesel Gen. Bldg.-El 51'-6"	DG-F-3C-A	-	3.2.7.42
Diesel Gen. Bldg.-El 51'-6"	DG-F-3D-A	-	3.2.7.43
Diesel Gen. Bldg.-El 51'-6"	DG-F-3E-A	-	3.2.7.44
Diesel Gen. Bldg.-El 51'-6"	DG-F-3F-A	-	3.2.7.45
Diesel Gen. Bldg.-Stairwell	DG-F-S1-0	-	3.2.7.46
Diesel Gen. Bldg.-Stairwell	DG-F-S2-0	-	3.2.7.47
Emer. Feedwater Pump Bldg.	EFP-F-1-A	-	3.2.7.48
Electrical Tunnel	ET-F-1A-A	-	3.2.7.49
Electrical Tunnel	ET-F-1B-A	-	3.2.7.50
Electrical Tunnel	ET-F-1C-A	-	3.2.7.51
Electrical Tunnel	ET-F-1D-A	-	3.2.7.52
Electrical Tunnel Stairwell	ET-F-S1-0	-	3.2.7.53
Fire Pump House	FPH-F-1A-A	-	3.2.7.54
Fire Pump House	FPH-F-1B-A	-	3.2.7.55
Fire Pump House	FPH-F-1C-A	-	3.2.7.56
Fuel Storage Bldg.-El 51'-6"	FSB-F-1-A	-	3.2.7.57
East Mainsteam & Feedwater Pipe Chase	-	MS-F-1A-Z MS-F-2A-Z MS-F-3A-Z MS-F-4A-Z MS-F-5A-Z	3.2.7.58
West Mainsteam & Feedwater Pipe Chase	-	MS-F-1B-Z MS-F-2B-Z MS-F-3B-Z	3.2.7.59
East Air Make-Up Pit	MUA-F-1-0	-	3.2.7.60
Intentionally left blank	-	-	3.2.7.61

Building	Fire Area	Fire Zones	Tabulation
Non-Essential Swgr. Room	-	NES-F-1A-Z	3.2.7.62
Primary Auxiliary Building - El. 7'-0"	-	PAB-F-1A-Z PAB-F-1B-Z	3.2.7.63* 3.2.7.64*
Primary Auxiliary Building - El. 7'-0"	-	PAB-F-1F-Z	3.2.7.65*
Primary Auxiliary Building - El. 7'-0"	-	PAB-F-1J-Z	3.2.7.66*
Primary Auxiliary Building - El. 7'-0"	-	PAB-F-1K-Z	3.2.7.67*
Primary Auxiliary Building - El. 25'-0"	-	PAB-F-2A-Z	3.2.7.68*
Primary Auxiliary Building - El. 25'-0"	-	PAB-F-2B-Z	3.2.7.69*
Primary Auxiliary Building - El. 25'-0"	-	PAB-F-2C-Z	3.2.7.70*
Primary Auxiliary Building - El. 53'-0"	-	PAB-F-3A-Z	3.2.7.71*
Primary Auxiliary Building - El. 53'-0"	-	PAB-F-3B-Z	3.2.7.72*
Primary Auxiliary Building - El. 81'-0"	-	PAB-F-4-Z	3.2.7.73*
Primary Auxiliary Building - El. 7'-0"	PAB-F-1C-A	-	3.2.7.74
Primary Auxiliary Building - El. 7'-0"	PAB-F-1D-A	-	3.2.7.75
Primary Auxiliary Building - El. 7'-0"	PAB-F-1E-A	-	3.2.7.76
Primary Auxiliary Building - Electrical Chase	PAB-F-1G-A	-	3.2.7.77
Primary Auxiliary Building - Stairwell	PAB-F-S1-0	-	3.2.7.78

Building	Fire Area	Fire Zones	Tabulation
Primary Auxiliary Building - Stairwell	PAB-F-S2-0	-	3.2.7.79
Equipment Vault-Train B (Vault 2)	-	RHR-F-1A-Z RHR-F-1C-Z RHR-F-2A-Z RHR-F-3A-Z RHR-F-4A-Z	3.2.7.80
Equipment Vault-Train A (Vault 1)	-	RHR-F-1B-Z RHR-F-1D-Z RHR-F-2B-Z RHR-F-3B-Z RHR-F-4B-Z	3.2.7.81
Circulating Water Pump House		SW-F-1A-Z	3.2.7.82
Service Water Pump House	SW-F-1B-A		3.2.7.83
Service Water Pump House	SW-F-1C-A		3.2.7.84
Service Water Pump House	SW-F-1D-A		3.2.7.85
Service Water Pump House		SW-F-1E-Z	3.2.7.86
Intake & Discharge Structure	SW-F-2-0		3.2.7.87
Turbine Building		TB-F-1A-Z TB-F-1C-Z TB-F-2-Z TB-F-3-Z	3.2.7.88
Turbine Building	TB-F-1B-A		3.2.7.89
Tank Farm		TF-F-1-0	3.2.7.90
Waste Process Building		W-F-1A-Z W-F-1B-Z W-F-1K-Z W-F-2A-Z W-F-2B-Z W-F-2C-Z W-F-2D-Z W-F-2E-Z	3.2.7.91

* All primary auxiliary building fire zones containing safe shutdown equipment and/or cables have been combined into one fire area for analysis purposes.

Tabulation 3.2.7.1

Containment

Fire Area: C-F-1-Z, C-F-2-Z, C-F-3-Z

A. Equipment And Cables Located In The Fire Area

	Train A			Train B	
Description	Equip.	Cable	Description	Equip.	Cable
CAH-AC-1C	x		CAH-AC-1A	x	
CAH-FN-1C	x	x	CAH-FN-1A	x	x
CAH-AC-1E	x		CAH-AC-1B	x	
CAH-FN-1E	x	x	CAH-FN-1B	x	x
CAH-AC-1F	x		CAH-AC-1D	x	
CAH-FN-1F	x	x	CAH-FN-1D	x	x
CAH-JV3-43	x	x	CAH-JV7-43	x	x
CAH-JV4-43	x	x	CAH-JV8-43	x	x
CAH-JV5-43	x	x			
CAH-JV6-43	x	x			
CC-FISL-2124	x	x	CC-FISL-2122	x	x
CC-FISL-2223	x	x	CC-FISL-2123	x	x
CC-FISL-2224	x	x	CC-FISL-2222	x	x
CC-LT-2172-1		x	CC-LT-2192-1		x
CC-LT-2172-2		x	CC-LT-2192-2		x
CC-LT-2172-3		x	CC-LT-2192-3		x
CC-LT-2272-1		x	CC-LT-2292-1		x
CC-LT-2272-2		x	CC-LT-2292-2		x
CC-LT-2272-3		x	CC-LT-2292-3		x
CC-E-153A	x		CC-E-153B	x	
CC-P-322A	x	x	CC-P-322B	x	x
CC-V57	x	x	CC-V176	x	x

Containment

Fire Area: C-F-1-Z, C-F-2-Z, C-F-3-Z

A. Equipment And Cables Located In The Fire Area

Train A			Train B		
Description	Equip.	Cable	Description	Equip.	Cable
CC-V121	x	x	CC-V256	x	x
CC-FISHL-2147	x	x	CC-FISHL-2247	x	x
CC-FISHL-2248	x	x	CC-FISHL-2148	x	x
CC-V428	x				
CC-V439	x				
			CC-V395	x	
			CC-V438	x	
CC-TK-196	x		CC-TK-196	x	
ED-JX2-42	x	x	ED-JX3-42	x	x
ED-MM-163H	x	x	ED-MM-163E	x	x
			ED-PP-8B	x	x
			ED-X-16A	x	x
IA-D-2A	x	x	IA-D-2B	x	x
IA-J97-42	x	x	IA-J98-42	x	x
SA-C-4A	x	x	SA-C-4B	x	x
SA-CP-134A	x	x	SA-CP-134B	x	x
CS-V10	x	x	CS-V168	x	x
CS-V28	x	x			
CS-V44	x	x			
CS-V59	x	x			
CS-V177	x	x			
CS-V185	x	x	CS-V175	x	x
			CS-V176	x	x

Containment

Fire Area: C-F-1-Z, C-F-2-Z, C-F-3-Z

A. Equipment And Cables Located In The Fire Area

	Train A			Train B	
Description	Equip.	Cable	Description	Equip.	Cable
CS-V145	x	x			
RC-LCV-459	x	x			
RC-LCV-460	x	x			
			RC-FV-2881	x	x
			RC-V323	x	x
RC-E-10	x	x	RC-E-10	x	x
EDE-TBX-X47	x	x	EDE-TBX-X44	x	x
RC-E-11A	x		RC-E-11B	x	
RC-E-11C	x		RC-E-11D	x	
RC-P-1A	x				
RC-P-1B	x				
RC-P-1C	x				
RC-P-1D	x				
RC-PCV-456A	x	x	RC-PCV-456B	x	x
RC-V122	x	x	RC-V124	x	x
EDE-TBX-X56	x	x	EDE-TBX-X35	x	x
RC-TK-11	x		RC-TK-11	x	
RC-V23	x	x	RC-V22	x	x
RC-V88	x	x	RC-V87	x	x
SI-V3	x	x	SI-FV-2475	x	x
			SI-FV-2476	x	x
SI-V32	x	x	SI-FV-2477	x	x
			SI-FV-2486	x	x

Containment

Fire Area: C-F-1-Z, C-F-2-Z, C-F-3-Z

A. Equipment And Cables Located In The Fire Area

	Train A			Train B	
Description	Equip.	Cable	Description	Equip.	Cable
SI-FV-2482	x	x	SI-V17	x	x
SI-FV-2483	x	x			
SI-FV-2495	x	x	SI-V47	x	x
SI-FV-2496	x	x			
			SI-V158	x	x
SI-V159	x	x			
RH-V35		x	RH-V36		x
SB-V1	x	x			
SB-V3	x	x			
SB-V5	x	x			
SB-V7	x	x			
FW-LT-501	x	x	FW-LT-519	x	x
FW-LT-503	x	x	FW-LT-537	x	x
FW-LT-529	x	x	FW-LT-502	x	x
FW-LT-548	x	x	FW-LT-504	x	x
NI-NE-6690	x	x	NI-NE-6691	x	x
EDE-TBX-XP8	x	x	EDE-TBX-XP9	x	x
RC-LT-459	x	x	RC-LT-460	x	x
RC-PT-455	x	x	RC-PT-456	x	x
RC-PT-457	x	x	RC-PT-458	x	x
RC-TE-413A	x	x	IC-TE-XX	x	x
RC-TE-423A	x	x			
RC-TE-433A	x	x			

Containment

Fire Area: C-F-1-Z, C-F-2-Z, C-F-3-Z

A. Equipment And Cables Located In The Fire Area

Train A			Train B		
Description	Equip.	Cable	Description	Equip.	Cable
RC-TE-443A	x	x	IC-MM-173	x	x
EDE-TBX-X40	x	x			
EDE-TBX-X48	x	x			
EDE-TBX-X94	x	x			
			RC-TE-413B	x	x
			RC-TE-423B	x	x
			RC-TE-433B	x	x
			RC-TE-443B	x	x
			EDE-TBX-X14	x	x
			EDE-TBX-X86	x	x
			EDE-TBX-X52	x	x
			EDE-TBX-X69	x	x
Electrical Penetrations	x	x	Electrical Penetrations	x	x
MM-IR-1	x	x			
MM-IR-2	x	x			
MM-IR-3	x	x			
MM-IR-4	x	x	MM-IR-4	x	x
MM-IR-6	x	x			
MM-IR-8	x	x			
MM-IR-7A	x	x	MM-IR-7A	x	x

B. Analysis

1. General Area Analysis

The following protective measures are inherent in the existing containment design:

a. The significant in situ combustibles are limited to the reactor coolant pump lubricating oil, hydraulic snubbers, cables in trays, and EPDM rubber (debris interceptor trim).

b. An oil collection system is provided for the reactor coolant pumps.

c. Each hydraulic snubber contains 3.5 gallons of a high flash point, high auto ignition point silicon-based hydraulic fluid. The snubbers are designed to withstand an SSE without failure. Even if leaks were to develop, studies performed at Factory Mutual Research Corporation have shown that a heat flux of 16 kW/M^2 is necessary to ignite a high flash point hydraulic fluid similar to the silicon based fluid. It would require the introduction of a transient combustible to containment to provide this heat flux.

d. Containment is inaccessible during normal operation with the exception of operator tours. Because of this, transient combustibles are not considered as a fire hazard. This absence of transient combustibles removes the ignition source for the cables, the hydraulic fluid, and the EPDM rubber.

e. Prior to plant start-up administrative controls will assure the removal of transient combustibles which could be brought into containment during plant shutdowns.

f. Charcoal filter CAH-F-8 has an early fire detection system internal to the filter.

2. System Analysis

a. Containment Structure Cooling Units CAH-AC-1A through 1F (Fans CAH-FN-1A through 1F, Speed Changers CAH-JV3-43 through CAH-JV8-43 and CC Flow Switches CC-FISL 2122 through CC-FISL-2224)

Cables for the redundant cooling unit fans, speed changers and flow switches are routed through trays and conduits from the penetration where they enter containment to the cooling units. The trays are separated by concrete floors except between Columns 2 and 4, Columns 5 and 6, Columns 7 and 8, Columns 12 and 13, Columns 14 and 15, and Columns 17 and 18 where there is grating.

Between Columns 2 and 4, the Train B trays are a minimum of 12' above floor elevation (-) 26'-0" and a maximum of 19' above floor elevation (-) 26'-0". The Train A trays are a minimum of 11' above the grating elevation 0'-0". There is a minimum of 18' of vertical separation between the redundant trays. Even if the redundant trays are affected by a fire, only two Train B and one Train A cooling unit could be affected, the other three cooling units would continue to be operable.

Between Columns 5 and 6, the Train B trays are a minimum of 14' above floor elevation (-) 26'-0" and a maximum of 19' above floor elevation (-) 26'-0". The Train A trays are a minimum of 18' above the grating elevation 0'-0". There is a minimum of 24' of vertical separation between the redundant trays. Even if the redundant trays were affected by a fire, only one Train A and one Train B cooling units could be affected; the other four cooling units would continue to be operable.

Between Columns 7 and 8, only one Train A cooling units' cables are routed. There are no Train B cooling units' cables at this location.

Between Columns 12 and 13, only one Train A and one Train B cooling units' cables are routed. The other four cooling units would continue to be operable.

Between Columns 14 and 15, the Train B trays are a minimum of 19' above floor elevation (-) 26'-0" and a maximum of 21' above floor elevation (-) 26'-0". The Train A trays are a minimum of 17' above the grating elevation 0'-0". There is a minimum of 22' of vertical separation between the redundant trays. Even if the redundant trays were affected by a fire, the only two Train A and one Train B cooling unit could be affected. The other three cooling units would continue to be operable.

Between Columns 17 and 18, the Train B trays are a minimum of 12' above floor elevation (-) 26'-0" and a maximum of 19' above floor elevation (-) 26'-0". The Train A trays are a minimum of 11' above the grating elevation 0'-0". There is a minimum of 18' of vertical separation between the redundant trays. Even if the redundant trays were affected by a fire, only two Train A and one Train B cooling units could be affected; the other three cooling units would continue to be operable.

A maximum of three containment structure cooling units (CAH) are needed to maintain habitability of the containment. This can be any combination of Train A and B units. At all points discussed above where Train A and B cables are run near each other without concrete floor separation, there is a minimum of 18' of vertical separation, with the Train B cables a minimum of 12' off the floor.

This vertical separation, the height of the cable from the floor and the lack of combustibles provide acceptable fire protection and provide protection equivalent to the technical requirements of Appendix R. Additionally, a fire at any of these points would affect a maximum of three out of six units, leaving three to cool containment.

b. Thermal Barrier Pumps CC-P-322A and CC-P-322B

Cables for the redundant thermal barrier pumps are routed through trays and conduits from the penetration where they enter containment to the pumps at elevation (-) 26'-0". The trays are separated by concrete floors except between Columns 17 and 18 where there is a grating.

Between Columns 17 and 18, the Train B trays are a minimum of 12' above floor elevation (-) 26'-0" and a maximum of 19' above floor elevation (-) 26'-0". The Train A trays are a minimum of 11' above the grating elevation 0'-0". There is a minimum of 18' of vertical separation between the redundant trays. The only in situ combustibles at this location are the cables in trays.

The conduit to the Train A pump is routed such that there is a minimum of 6' horizontal separation from the Train B tray that contains the redundant cable. The conduit is run approximately 22' above elevation (-) 26'-0" to the point that it drops down to the Train A pump. The pump is located 6' above elevation (-) 26'-0" between Columns 17 and 18. The Train A pump is separated from the tray containing the cable to the Train B pump by a horizontal distance of 6' and a vertical distance of 9'. In addition there are two totally enclosed instrument trays below the Train B tray.

Should the thermal barrier cooling be unavailable, the redundant seal injection cooling capability located in other plant fire areas will satisfy the safe shutdown requirements.

The separation height of cable from the floor and lack of in situ combustibles provide acceptable fire protection and provide protection equivalent to the technical requirements of Appendix R. The redundant seal cooling satisfies the safe shutdown requirements.

c. Component Cooling Isolation Valves CC-V57, CC-121, CC-V176, CC-V256

Cables for the redundant valves are routed through trays and conduits from the penetration where they enter containment to the valves on the west side of containment at elevation 4'-0". The trays are separated by a concrete floor, except between Columns 17 and 18 and between Columns 14 and 15 where there is grating.

Between Columns 17 and 18, the Train B trays are a minimum of 12' above floor elevation (-) 26'-0" and a maximum of 19' above floor elevation (-) 26'-0". The Train A trays are a minimum of 11' above the grating elevation 0'-0". There is a minimum of 18' of vertical separation between the redundant trays. The only in situ combustibles at this location are the cables in the trays.

Between Columns 14 and 15, the Train B trays are a minimum of 19' above floor elevation (-) 26'-0" and a maximum of 21' above floor elevation (-) 26'-0". The Train A trays are a minimum of 17' above the grating elevation 0'-0". There is a minimum of 22' of vertical separation between the redundant trays. The only in situ combustibles at this location are the cables in the trays.

The Train A valves CC-V57 and CC-V121 are located between Columns 14 and 15 approximately 4' above the grating elevation 0'-0". The cables for the Train B valves CC-V176 and CC-V256 are routed in trays which are a minimum of 19' above floor elevation (-) 26'-0". There is a minimum of 8' vertical separation between the Train B trays and the Train A valves. The only in situ combustibles at this location are the cables in the trays.

The Train B valves CC-V176 and CC-V256 are located between Columns 12 and 13 approximately 4' above the grating elevation 0'-0". Although the cables for the redundant Train A valves are not in this location, the power cables for Train A containment structure cooling unit CAH-AC-1E are routed in this area such that a fire could impact four of the six cooling units. However, the cables are routed in tray 19' above the grating elevation 0'-0" and then in conduit to the cooling unit. There is a vertical separation of approximately 15' between valves CC-V176 and CC-V256 and the Train A trays. The only in situ combustibles at this location are the cables in the tray.

One set of redundant valves is needed to provide component cooling water to one train of containment structure cooling units.

Between Columns 17 and 18, the vertical separation is 18' with the lower cables 12' off the floor. The separation and height of cable from the floor provide acceptable fire protection and provide protection equivalent to the technical requirements of Appendix R.

Between Columns 14 and 15, there is a vertical separation of 27', with the lower cables 19' off the floor. There is a minimum separation of 8' between the Train A valves and the Train B cables, with the Train B cables 19' off the floor. The separation, height of cable from the floor and lack of in situ combustibles provide acceptable fire protection and provide protection equivalent to the technical requirements of Appendix R.

Between Columns 12 and 13, there is a vertical separation of 15' between the Train B valves and the Train A cable. The valves are 30' off the floor (Elevation (-) 26'-0"). The separation, height of the valves off the floor and lack of in situ combustibles provide acceptable fire protection and provide protection equivalent to the technical requirements of Appendix R.

d. Component Cooling Head Tank Level Transmitters CC-LT-2172-1, 2, 3, CC-LT-2272-1, 2, 3, CC-LT-2192-1, 2, 3, CC-LT-2292-1, 2, 3 and Associated Flow Switches CC-FISHL-2147, CC-FISHL-2248, CC-FISHL-2247, CC-FISHL-2148

Cables associated with CC heat tank level transmitters which affect the Loop B outboard isolation valves CC-V175 and CC-V257 are routed in the same trays as the Loop A inboard isolation valves CC-V57 and CC-V121. Failures in these cables could cause total loss of PCCW to containment by initiation of a spurious lo-lo head tank level signal. Loop B PCCW can be re-established by transferring control of valves CC-V175 and CC-V257 to local control at the RSS panel in fire area CB-F-1A-A. This removes the lo-lo head tank level isolation function and allows operators to re-open the valves.

Cables associated with CC head tank level transmitters which affect the Loop A outboard isolation valves CC-V122 and CC-V168 are routed in proximity to trays containing cables for the Loop B inboard isolation valves CC-V176 and CC-V256. Failures in these cables could cause total loss of PCCW to containment by initiation of a spurious lo-lo head tank level signal. Loop A PCCW can be re-established by transferring control of valves CC-V122 and CC-V168 to local control at the RSS panel in fire area CB-F-1B-A. This removes the lo-lo head tank level isolation function and allows operators to re-open the valves.

The provision of a capability to isolate the affected portion of the circuit and re-position the valves from another fire area satisfies the safe shutdown requirements.

e. Thermal Barrier Isolation Valves CC-V395, CC-V428, CC-V438, CC-V439

Valves CC-V395, CC-V428, CC-V438 and CC-V439 are normally open valves which must remain open for safe shutdown. The valves are permanently disabled in the open position.

The disabling of the above valves satisfies the safe shutdown requirements.

f. Air Compressors and Dryers SA-C-4A, SA-C-4B, IA-D-2A, IA-D-2B and Associated Distribution Panels, Control Panels and Contactors

The air compressors and their associated dryers located at elevation 0'-0" are required only for instrument air to the primary component cooling water containment isolation valves. These valves are required to remain operable only for containment entry when manual operation of the safety injection accumulator isolation valves SI-V3, SI-V17, SI-V32, and SI-V47 and RHR inlet isolation valves RC-V22, RC-V23, RC-V87 and RC-V88 is required.

The redundant air compressors and dryers are within 4' of one another. The Train B cables are routed in conduit from the compressors through the floor to the Train B trays. The Train B cable is routed in conduit from the air dryer to the power panel. The only in situ combustibles at this location are the cables in trays.

A cross connection to the plant instrument air system is provided to back up the containment instrument air system in the event of a compressor failure. Containment isolation is provided by an air operated, fail closed valve (outboard) and a check valve (inboard). The outboard valve is operable from the Main Control Board. The cross connection is not relied upon to achieve hot/cold shutdown for containment fires and is only described here due to its potential use as a backup. The cable and control circuits are not considered Appendix R equipment and are, therefore, not listed in the respective tables.

The Train A cables to valves SI-V3 and RC-V88 are routed in power and control trays a minimum of 17' above floor elevation 0'-0" in the vicinity of the Train B air compressor and dryer. The trays are effectively shielded from the compressor and dryer by a 5' wide by 3' high steel ventilation duct located 8' above the floor between the compressor/dryer and the trays. Should the cables to valve SI-V3 fail, the accumulator can be vented by use of Train B valves SI-FV-2475 and SI-FV-2476. Further discussion of the separation between these cables is provided in Paragraph "n". Failure of the cables to RC-V88 will not prevent safe shutdown as functionally redundant valve RC-V23 will still be operable.

The Train A cables to valve RC-V23 are routed in tray and conduit a minimum of 20' horizontal from the Train B air compressors and dryers and are separated by a concrete floor when they are in proximity to the equipment.

The Train B cables to valves SI-V47, RC-V22 and RC-V87 are routed in trays which are separated from the Train A air compressor and dryer by a concrete floor.

The cables to Train A Valve SI-V32 and Train B valve SI-V17 are routed on the opposite side of containment from the air compressors.

The separation distance, radiant shielding provided by ventilation duct and lack of in situ combustibles between the air compressors/dryers and the cabling for the valves that must remain operable should the redundant compressors/dryers be damaged due to a fire provide acceptable fire protection and provide protection equivalent to the technical requirements of Appendix R.

g. <u>RC Pump Seal Water Isolation Valves CS-V10, CS-V28, CS-V44, CS-V59, CS-V168, and CS - Charging to RC Isolation Valves CS-V177, CS-V185</u>

Valve CS-V168 is a normally open valve which should remain open for safe shutdown. Spurious isolation of the Train B valve CS-V168 could result in loss of RC inventory through the upstream relief valve, if CS-V10, CS-V28, CS-V44 and CS-V59 cannot be closed. This inventory is directed to the PRT and is therefore, non-recoverable. However, the postulated flow rate (12 gpm) coupled with the RCS volume shrink over the cooldown period to 350°F (approximately 5 hours) is within the capabilities of the boric acid tanks. Cooldown below 350°F to cold shutdown can be accomplished using the RWST. Shutdown margin is assured in all phases of this cooldown.

The safe shutdown requirements are satisfied.

h. Letdown Isolation Valves CS-V175, CS-V176, CS-V145, RC-LCV-459, RC-LCV-460

1) Excess Letdown Line

Functionally redundant Train B series valves CS-V175 and CS-V176 are normally closed and remain closed for safe shutdown. The spurious opening of one valve will not prevent safe shutdown.

The operators will prevent further spurious operation by tripping the power supply breakers for CS-V175 and CS-V176 at the Train B switchgear room (Fire Area: CB-F-1B-A).

2) Normal Letdown Line

Functionally redundant Train A series valves CS-V145, RC-LCV-459 and RC-LCV-460 are normally open and are required to close for safe shutdown. CS-V145 can be closed from the main control room. Should this valve not close due to spurious operation, the operators can close either RC-LCV-459 or RC-LCV-460 by tripping their power supply breakers at the Train A switchgear room (Fire Area: CB-F-1A-A). This will prevent further spurious operation.

The capability to isolate the letdown flow paths and mitigate spurious operations from outside the fire area satisfies the safe shutdown requirements.

i. Charging Pump Test Line Isolation Valves SI-158, SI-159

On spurious operation of either of the normally closed, fail closed valves SI-V158 (Train B) or SI-V159 (Train A), the operators will isolate the high head injection path by closing SI-V138 and SI-V139. Charging will then be accomplished utilizing the seal injection path through valves CS-V154, CS-V158, CS-V162 and CS-V166 located in Fire Zones PP-F-1A-Z and PP-F-5B-Z. The operators can close SI-V158 and SI-V159 by tripping their power supply breakers in the Train A and Train B switchgear rooms (Fire Areas: CB-F-1A-A and CB-F-1B-A).

The capability to provide charging to the RC System through a minimum of one flow path satisfies the safe shutdown requirements.

j. Head Vent Valves RC-FV-2881 and RC-V323

Functionally redundant Train B series valves RC-FV-2881 and RC-V323 are normally closed and remain closed for safe shutdown. The spurious opening of one valve will not prevent safe shutdown. The operators will prevent further spurious operation by tripping the power supply breakers for RC-FV-2881 and RC-V323 at the Train B switchgear room (Fire Area: CB-F-1B-A).

The safe shutdown requirements are satisfied.

k. Pressurizer Heaters RC-E-10 and Terminal Boxes EDE-TBX-X44, EDE-TBX-X47

Cables for the redundant pressurizer heaters are routed through trays from the penetration where they enter containment to the heaters at the pressurizer. The trays are separated by concrete floors and walls from the penetration to a point 20' from the pressurizer except between Columns 2 and 3 where there is grating.

Between Columns 2 and 3, the Train B cables are routed in trays which are a minimum of 10' above floor elevation (-) 26'-0". The Train A cables are routed in trays a minimum of 18' above the grating elevation 0'-0". There is a minimum of 25' vertical separation between the redundant trays. The only in situ combustibles at this location are the cables in the trays.

In the area near the entrance to the pressurizer cubicle, the Train B trays are 12' above floor Elevation (-) 26'-0. There is a spatial separation of approximately 6' between the redundant trays. The only in situ combustibles at this location are the cables in the trays.

The Train A trays are 8'-4" above the floor and the Train B trays are 18'-6" above the floor at the entrance of the pressurizer cubicle. This is a vertical separation between redundant trays of over 8'.

Inside the cubicle, the cables are routed in enclosed wireways up to the point where they are routed to the individual pressurizer heater connections. The heaters are located over 20' above the floor. There are no in situ combustibles in the pressurizer heater cubicle.

The containment is a controlled entry area and the fire loading is very low. The use of transient combustibles is strictly controlled. Where the grating exists, the cables of interest are separated vertically by 25' minimum. The lower set of cables are at least 10, off the floor. This separation and the height of the cable from the floor provide acceptable fire protection and provide protection equivalent to the technical requirement of Appendix R.

At the area near the entrance to the pressurizer cubicle, there is a spatial separation of 6' between the cables of interest. There are no in situ combustibles. Access to this area is extremely limited during power operation. The separation, lack of combustibles and limited access provide acceptable fire protection and provide protection equivalent to the technical requirements of Appendix R.

At the entrance to the pressurizer and inside, the case is the same, with the additional factor being the routing of the cables in enclosed wireways up to the point where they are routed to the individual pressurizer heater conditions. The separation, lack of combustibles, limited access and routing of the cables in wireways provide acceptable fire protection and provide protection equivalent to the technical requirements of Appendix R.

l. <u>Pressurizer Relief Valves, RC-PCV-456A, RC-PCV-456B, RC-V122 and RC-V124</u>

Cables for the pressurizer relief valves are routed in trays and conduits from the penetration where they enter containment to the valves on the top of the pressurizer. The trays are separated by a concrete floor except between Columns 2 and 4; between Columns 5 and 6; and between Columns 7 and 8 where there is grating.

Between Columns 2 and 4, the Train B cables are routed in trays which are a minimum of 10' above floor Elevation (-) 26'-0". Other trays containing Train B cables are located up to 16' above floor Elevation (-) 26'-0". The Train A cables are routed in trays a minimum of 18' above the grating Elevation 0'-0". There is a minimum of 25' vertical separation between the redundant trays. The only in situ combustibles at this location are the cables in the trays.

Between Columns 5 and 6, the Train B trays are a minimum of 14' above floor Elevation (-) 26'-0" and a maximum of 19' above floor Elevation (-) 26'-0". The Train A trays are a minimum of 18' above the grating Elevation 0'-0". There is a minimum of 24' vertical separation between the redundant trays. The only in situ combustibles at this location are the cables in trays; three pints of oil in 15 HP RC drain tank pump motor contributing 56,250 Btu fire load; and five pounds of grease in 3 HP containment sump pump motors contributing 90,000 Btu fire load.

Between Columns 7 and 8, the Train B trays are a minimum of 13' above floor Elevation (-) 26'-0" and a maximum of 19' above floor Elevation (-) 26'-0". The Train A trays are a minimum of 16' above the grating Elevation 0'-0". There is a minimum of 23' of vertical separation between the redundant trays. The only situ combustibles at this location are the cables in trays.

At the pressurizer, the cables are routed in conduit on opposite outside walls of the pressurizer enclosure with a minimum horizontal separation of approximately 15'. The Train A cables are routed in the area of reactor coolant pump C. Near the top of the pressurizer, the conduits enter the pressurizer cubicle and are routed on opposite sides of the cubicle over to the valves. The redundant valves are separated by 2' on the top of the pressurizer. There are no in situ combustibles at the top of the pressurizer.

Between Columns 2 and 4 and 7 and 8, there is a minimum vertical separation of 23' between Train A and B cables. The Train B cables area minimum of 10' off the floor. The separation, height off the floor and lack of in situ combustibles provide acceptable fire protection and provide protection equivalent to the technical requirements of Appendix R.

Between Columns 5 and 6, there is a vertical separation of 25' with the lower cables 14' off the floor. The combustibles are in two motors. The separation, height off the floor, and the enclosure of combustibles in the motors provide acceptable fire protection and provide protection equivalent to the technical requirements of Appendix R.

At the pressurizer, the cables are routed in conduit on opposite sides of the pressurizer cubicle. At the top of the pressurizer where the valves are located, there is no access during operation and there are no in situ combustibles. Adequate fire protection is provided and provides protection equivalent to the technical requirements of Appendix R.

RC-PCV-456A is a normally closed, fail closed valve whose cables are in this fire area. The spurious opening of a PORV can result in an over-cooling condition in the RCS. This coupled with the potential unavailability of SI constitutes an unanalyzed condition. The PORV is supplemented with a normally open, series block valve RC-V122. For all fires that have the potential to cause spurious opening of the PORV, the operators will close the block valve by procedure. This will be the first step in the procedure and can readily be accomplished from the main control room. The promptness of this action is justification for the ability to isolate the block valve prior to any spurious valve operations. Under the condition, the initial short will not cause depressurization. To prevent subsequent spurious operations, the operators will de-energize the PORV and the block valve by tripping their power supplies in the Train A switchgear room (Fire Area: CB-F-1A-A).

RC-PCV-456B is normally closed, fail closed valve whose cables are in this fire area. The spurious opening of a PORV can result in an over-cooling condition in the RCS. This coupled with the potential unavailability of SI constitutes an unanalyzed condition. The PORV is supplemented with a normally open, series block valve RC-V124. For all fires, that have the potential to cause spurious opening of the PORV, the operators will close the block valve by procedure. This will be the first step in the procedure and can readily be accomplished from the main control room. The promptness of this action is justification for the ability to isolate the block valve prior to any spurious valve operations. Under this condition, the initial short will not cause depressurization. To prevent subsequent spurious operations, the operators will de-energize the PORV and the block valve by tripping their power supplies in the Train B switchgear room (Fire area: CB-F-1B-A).

m. <u>RHR Isolation Valves RC-V22, RC-V23, RC-V87, RC-V88</u>

RHR isolation valves are permanently disabled in the closed position. Redundant valves RC-V23 and RC-V88 are separated by 25' with no intervening combustibles other than cables in trays. Redundant valves RC-V22 and RC-V87 are separated by 3'. These valves are not needed until 9 hours into the event and are only required to be opened for cold shutdown. This can be accomplished manually, if required.

Therefore, no fire protection other than the existing separation is needed. Protection equivalent to the technical requirements of Appendix R is provided.

n. Accumulator Tank Outlet Isolation Valve SI-V3 and Vent Valves SI-FV-2475, SI-FV-2476

Cables for the redundant valves are routed through trays and conduits from the penetration where they enter containment to the valves. The trays are separated by concrete floor except between Columns 17 and 18 where there is grating.

The Train A valve SI-V3 is located near column 17 at Elevation (-) 26'-0" and the Train B, valves SI-FV-2475 and SI-FV-2476 are located near column 16 at Elevation 0'-0". The accumulator isolation valve is separated from its redundant vent valves by approximately 20' horizontal with an intervening concrete floor.

At Elevation (-) 26'-0" the cables to the redundant valves are in proximity such that a fire could affect operation of both trains of equipment. However, the same fire will not prevent the operation of the Train A equipment necessary for containment habitability.

These valves are not required to reach or maintain hot standby. They are required to be closed before going to cold shutdown. These valves will be manually closed, if required, prior to decreasing reactor pressure below 600 psig. Prior to this time the accumulators are prevented from injection by reactor pressure acting against a check valve. Manual operation of the isolation valve is only necessary if both the valve circuit and the redundant vent valves are rendered inoperable by the fire. This manual operation can be delayed as much as 9 hours into the event.

At Elevation 0'-0" the cables to the redundant valves are in proximity such that a fire could affect operation of both trains of equipment. Additionally, the redundant air compressors/dryers necessary for containment habitability are in the same area. As discussed above, the valves are not required for 9 hours. To assure that one train of valves can be operated from the MCR or locally, a radiant energy shield is provided around the Train B vent valves and their related cables in the area of the air compressors.

The horizontal separation distance between the redundant valves provide acceptable fire protection and provide protection equivalent to the technical requirements of Appendix R. The provision of a capability to manually operate the accumulator isolation valve satisfies the safe shutdown requirements.

o. Accumulator Tank Outlet Isolation Valve SI-V32 and Vent Valves SI-FV-2477, SI-FV-2486

Cables for redundant valves are routed through trays and conduits from the penetration where they enter containment to the valves. The trays are separated by concrete floors except between Columns 2 and 4; between Columns 5 and 6 and between Columns 7 and 8 where there is grating.

Between Columns 2 and 4, the Train B cables are routed in trays which are a minimum of 10' above floor Elevation (-) 26'-0". Other trays containing Train B cables are located up to 16' above floor Elevation (-) 26'-0". The Train A cables are routed in trays a minimum of 18' above the grating Elevation 0'-0". There is a minimum of 25' vertical separation between the redundant trays. The only in situ combustibles at this location are the cables in the trays.

Between Columns 5 and 6, the Train B trays are a minimum of 14' above floor Elevation (-) 26'-0" and a maximum of 19' above floor Elevation (-) 26'-0". The Train A trays are a minimum of 18' above the grating Elevation 0'-0". There is a minimum of 24' of vertical separation between the redundant trays. The only in situ combustibles at this location are the cables in trays; three pints of oil in 15 HP RC drain tank pump motor contributing 56, 250 Btu fire load; and five pounds of grease in 3 HP containment sump pump motors contributing 90,000 Btu fire load.

Between Columns 7 and 8, the Train B trays are a minimum of 13' above floor Elevation (-) 26'-0" and a maximum of 19' above floor Elevation (-) 26'-0". The Train A trays are a minimum of 16' above the grating Elevation 0'-0". There is a minimum of 23' of vertical separation between the redundant trays. The only in situ combustibles at this location are the cables in trays.

The Train A Valve SI-V32 is located near column 8 at Elevation (-) 26'-0" and the Train B valves SI-FV-2477 and SI-FV-2486 are located near column 7 at Elevation 0'-0". The accumulator isolation valve is separated from its redundant vent valves by approximately 20' horizontal with an intervening concrete floor.

Between Columns 7 and 8 at Elevation (-) 26'-0" the cables are in proximity such that a fire could affect operation of both trains of equipment. However, the same fire will not prevent operation of the Train A or Train B equipment necessary for containment habitability.

These valves are not required to reach or maintain hot standby. They are required to be closed before going to cold shutdown. These valves will be manually closed, if required, prior to decreasing reactor pressure below 600 psig. Prior to this time the accumulators are prevented from injection by reactor pressure acting against a check valve. Manual operation of the isolation valve is only necessary if both the valve circuit and the redundant vent valves are rendered inoperable by the fire. This manual operation can be delayed as much as 9 hours into the event.

Between Columns 2 and 4 and 7 and 8, there is a minimum vertical separation of 23' between Train A and B cables. The Train B cables are a minimum of 10' off the floor. The separation, height off the floor and lack of in situ combustibles provide acceptable fire protection and provide protection equivalent to the technical requirements of Appendix R.

Between Columns 5 and 6, there is a vertical separation of 25' with the lower cables 14' off the floor. The combustibles are in two motors. The separation, height off the floor, and the enclosure of combustibles in the motors provide acceptable fire protection and provides protection equivalent to the technical requirements of Appendix R.

At the valves, the horizontal separation between the redundant valves provide acceptable fire protection and provide protection equivalent to the technical requirements of Appendix R. The provision of a capability to manually operate the accumulator isolation valve satisfies the safe shutdown requirements.

p. Accumulator Tank Outlet Isolation Valve SI-V17 and Vent Valves SI-FV-2482, SI-FV-2483

Cables for the redundant valves are routed through trays and conduits from the penetration where they enter containment to the valves. The trays are separated by concrete floors except between Columns 2 and 4.

Between Columns 2 and 4, the Train B cables are routed in trays which are a minimum of 10' above floor Elevation (-) 26'-0. Other trays containing Train B cables are located up to 16' above floor Elevation (-) 26'-0". The Train A cables are routed in trays a minimum of 18' above the grating Elevation 0'-0". There is a minimum of 25' vertical separation between the redundant trays. The only in situ combustible at this location are the cables in the trays.

The Train B valve SI-V17 is located near column 3 at Elevation (-) 26'-0" and the Train A valves SI-FV-2482 and SI-FV-2483 are located near column 4 at Elevation 0'-0". The accumulator isolation valve is separated from its redundant vent valves by approximately 20' horizontal separation with an intervening concrete floor.

Between Columns 2 and 4 there is a minimum vertical separation of 25' between Train A and B cables. The Train B cables are a minimum of 10' off the floor. The separation, height off the floor and lack of in situ combustibles provide acceptable fire protection and provide protection equivalent to the technical requirements of Appendix R.

At the valves, the horizontal separation between the redundant valves and the intervening concrete floor provide acceptable fire protection and provide protection equivalent to the technical requirements of Appendix R.

q. Accumulator Tank Outlet Isolation Valve SI-V47 and Vent Valves SI-FV-2495 and SI-FV-2496

Cables for the redundant valves are routed through trays and conduits from the penetrations where they enter containment to the valves. The trays are separated by concrete floor except between Columns 17, and 18, between Columns 14 and 15 and between Columns 12 and 13.

Between Columns 17 and 18, the Train B trays are a minimum of 12' above floor elevation (-) 26'-0" and a maximum of 19' above floor elevation (-) 26'-0". The Train A trays are a minimum of 11' above the grating elevation 0'-0". There is a minimum of 18' of vertical separation between the redundant trays. The only in situ combustibles at this location are the cables in the trays.

Between Columns 14 and 15, the Train B trays are a minimum of 19' above floor elevation (-) 26'-0" and a maximum of 21' above floor elevation (-) 26'-0". The Train A trays are a minimum of 17' above the grating elevation 0'-0". There is a minimum of 22' of vertical separation between the redundant trays. The only in situ combustibles at this location are the cables in the trays.

Between Columns 12 and 13, the Train B cables are routed in trays which are a minimum of 20' above floor Elevation (-) 26'-0". The Train A cables are routed in tray and conduit a minimum of 19' above the grating Elevation 0'-0". There is a minimum of 20' vertical separation between the redundant cables. The only in situ combustible at this location are the cables in the trays.

The Train B valve SI-V47 is located near column 12 at Elevation (-) 26'-0" and the Train A valves SI-FV-2495 and SI-FV-2496 are located near column 13 at Elevation 0'-0". The accumulator isolation valve is separated from its redundant vent valves by approximately 20' horizontal separation with an intervening concrete floor.

Between Columns 17 and 18, the vertical separation is 18' with the lower cables 12' off the floor. The separation and height of cable from the floor provide acceptable fire protection and provide protection equivalent to the technical requirements of Appendix R.

Between Columns 14 and 15, there is a vertical separation of 27', with the lower cables 19' off the floor. There is a minimum separation of 8' between the Train A valves and the Train B cables, with the Train B cables 19' off the floor. The separation, height of cable from the floor and lack of in situ combustibles provide acceptable fire protection and provide protection equivalent to the technical requirements of Appendix R.

Between column 12 and 13, there is a vertical separation of 20' with the lower cables 20' off the floor. The separation and height of cable from the floor provide acceptable fire protection and provide protection equivalent to the technical requirements of Appendix R.

At the valves, the horizontal separation between the redundant valves and the intervening concrete floor provide acceptable fire protection and provide protection equivalent to the technical requirements of Appendix R.

r. <u>RH Heat Exchanger to CS/SI Pump Isolation Valves RH-V35, RH-V36</u>

Cables for the redundant valves RH-V35 and RH-V36 are routed in proximity to one another in the area of the valves RC-V22, RC-V23, RV-V87 and RV-V88. Valves RH-V35 and RH-V36 are normally closed and their position is in consequential during all modes of plant operation with the exception of cooldown below 350°F when the RH system is placed in operation. At that time it is necessary to assure that the valves remain closed. Should one of the valves open spuriously, the operators can disable its power supply in either the Train A or Train B switchgear room (Fire Areas: CB-F-1A-A or CB-F-1B-A) and manually reposition the valves located in the equipment vaults (Fire Zone: RHR-F-4B-Z or RHR-F-2A-Z).

Manual operation of the valves can be delayed as much as 9 hours into the event. Therefore, no fire protection other than the existing separation is needed.

The provision of a capability to mitigate the spurious operation of the valves outside the fire area satisfies the safe shutdown requirements.

s. Steam Generator Blowdown Isolation Valves SB-V1, SB-V3, SB-V5, SB-V7

One Train (Train A) of the SG Blowdown isolation valves and their related cables are located in containment. The redundant train (Train B) valves SB-V9, SB-V10, SB-V11 and SB-V12 are located in the main steam and feedwater pipe chase (Fire Zone: MS-F-1B-Z).

The Appendix R separation requirements are satisfied.

t. Steam Generator Level Transmitters FW-LT-501, FW-LT-502, FW-LT-503, FW-LT-504, FW-LT-519, FW-LT-529, FW-LT-537, FW-LT-548

Cables for redundant steam generator level transmitters are routed through enclosed trays and conduits from the penetration where they enter containment to the level transmitters. As only two steam generators are required for safe shutdown, any combinations of two transmitters will satisfy the safe shutdown requirements. At the penetrations in containment the four Train A transmitter cables are separated from the four Train B transmitter cables by a concrete floor. From the penetrations the cables separate such that two Train A and two Train B transmitter cables are routed on each side of the containment up to the transmitters. The transmitters are located approximately 75' apart with intervening walls.

The separation between redundant transmitters and their cables provide acceptable fire protection and provide protection equivalent to the technical requirements of Appendix R.

u. Excore Nuclear Instrumentation NI-NE-6690 and NI-NE-6691 and Terminal Boxes EDE-TBX-XP8, EDE-TBX-XP9

Cables for the redundant nuclear instrumentation are routed through conduit from the penetration where they enter containment to the instruments in the reactor pit. The conduits are separated by concrete floors and walls or by a minimum of 20' from the penetration to the reactor pit. The only intervening combustibles between the redundant conduits are cables in trays. The conduits enter the pit approximately 3' apart and again separate to turn to their respective instruments, which are 16' apart. Because of high radiation, the pit is inaccessible during normal operation. Other than the cable in conduit, the fire loading in this area is zero.

The containment is a controlled entry area and the fire loading is very low. The use of transient combustibles is strictly controlled. The minimum of 20' separation and the routing of cables in conduit provide acceptable fire protection in the general containment area. At the entrance to the pit and inside it, the separation, routing of cables in conduit and inaccessibility of the pit due to high radiation, provide acceptable protection and provide protection equivalent to the technical requirements of Appendix R.

v. Pressurizer Level Transmitters RC-LT-459, RC-LT-460

Cables for redundant level transmitters are routed in enclosed tray and conduit from the penetration where they enter containment to the level transmitters at Elevation 0'-0". The trays are separated by concrete floor except between Columns 2 and 4, Columns 5 and 6 and Columns 7 and 8 where there is grating.

Between Columns 2 and 4, the Train B trays are a minimum of 8' above floor Elevation (-) 26'-0" and the Train A trays are a minimum of 12' above grating Elevation 0'-0". There is a minimum of 23' vertical separation between the redundant trays. The only in situ combustibles at this location are the cables in the trays.

Between Columns 5 and 6, the Train B trays are a minimum of 14' above floor Elevation (-) 26'-0" and the Train A trays are a minimum of 18' above grating Elevation 0'-0". There is a minimum of 29' vertical separation between the redundant trays. The only in situ combustibles at this location are the cables in trays: three pints of oil in 15 HP RC drain tank pump motor contributing 56,250 Btu fire load; and five pounds of grease in 3 HP containment sump pump motors contributing 90,000 Btu fire load.

Between Columns 7 and 8, the Train B trays and conduit are a minimum of 14' above floor Elevation (-) 26'-0" and the Train A trays are a minimum of 14' above grating Elevation 0'-0". There is a minimum of 20' of vertical separation between the redundant raceways. The only in situ combustibles at this location are the cables in the trays.

The redundant level transmitters are located 6' above the floor at Elevation 0'-0". They are separated by approximately 1'-0" horizontally. The Train B transmitter is enclosed in a non-combustible radiant energy shield. The cable to the Train A transmitter is routed in conduit from the enclosed instrumentation tray located 14' above the grating Elevation 0'-0" to the transmitter. The cable to the Train B transmitter is routed in conduit from the enclosed instrumentation tray located 15' above floor Elevation (-) 26'-0" to the level transmitter. The conduit is protected by a radiant energy shield above Elevation 0'-0" until it enters the enclosure formed by the non-combustible radiant energy shield for RC-LT-460. The combustibles in the area are limited to cables in one stack of open trays (3 trays high) between elevations (-) 12'-8" and (-) 7'-4" approximately 13' above floor Elevation (-) 26'-0" and one stack of open trays (4 trays high) between elevations 16'-8" and 20'-8" approximately 16' above grating Elevation 0'-0".

The separation, height of the tray off of the floor, enclosure of combustibles in the motors and provision of a radiant energy shield provide acceptable fire protection and provide protection equivalent to the technical requirements of Appendix R.

w. <u>Pressurizer Pressure Transmitters RC-PT-455, RC-PT-456, RC-PT-457, and RC-PT-458</u>

Redundant channels' of pressurizer pressure instruments and cables are located in proximity. Spurious operation of two channels will initiate safety injection and containment isolation phase A signals. The operators will have the capability to terminate SI after 1 minute by use of the manual reset and block switch and terminate containment isolation by use of the manual reset switch. All ESF equipment which has been started will be tripped and locked out. To preclude further spurious operations, the operators will disable the engineered safety features logic cabinets in the Train A and Train B Switchgear Rooms (Fire Areas: CB-F-1A-A and CB-F-1B-A).

The provision of a capability to mitigate the spurious operation of the pressure transmitters outside the fire area satisfies the safe shutdown requirements.

x. Reactor Coolant Hot Leg Temperature Elements, RC-TE-413A through RC-TE-443B, IC-TE-1 through IC-TE-58, IC-MM-173 and Terminal Boxes EDE-TBX-X40, EDE-TBX-X48, EDE-TBX-X94

Cables for redundant RC hot leg temperature elements are routed through enclosed trays and conduits from the penetration where they enter containment to the temperature elements. As only one hot leg temperature is required for safe shutdown, any of the TE's can satisfy the safe shutdown requirements. As the TE's are at various locations around the containment, there is a minimum of 20' of separation except for the penetration area. At the Train A penetration area, all hot leg TE cables could fail. This function can also be performed by the Train B incore thermocouples IC-TE-1 through IC-TE-58 which are separated from the Train A penetration area by concrete walls and floors.

The separation between redundant temperature monitoring capabilities and their associated cables provide acceptable fire protection and provide protection equivalent to the technical requirements of Appendix R.

y. Reactor Coolant Cold Leg Temperature Elements RC-TE-413B through RC-TE-443B and Terminal Boxes EDE-TBX-X14 through EDE-TBX-X69

Cables for redundant RC cold leg temperature elements are routed through enclosed trays and conduits from the penetration where they enter containment to the temperature elements. As only one cold leg temperature is required for safe shutdown any one of the TE's can satisfy the safe shutdown requirements except for the penetration area. At the Train B penetration area, all cold leg TE cables could fail. This function can also be performed by the steam generator pressure instruments because cold leg temperature approximates the saturation temperature corresponding to secondary pressure. These pressure transmitters FW-PT-514, FW-PT-525, FW-PT-534 and FW-PT-545 are located in Fire Zones MS-F-3A-Z and MS-F-1B-Z.

The provision of a capability to permit RC temperature monitoring outside the fire area satisfies the safe shutdown requirements.

C. Evaluation

Deviations from the Appendix R, Paragraph III.G.2 separation requirements exist in containment and have been described above and analyzed in detail. These deviations are justified based on the analyses and our assertion that additional modifications would not enhance fire protection safety which has been insured by the protective measures listed in the "General Area Analysis" and the "System Analysis".

Tabulation 3.2.7.2

Control Building – El. 21' -6"

Fire Area: CB-F-1A-A

A. Equipment And Cables Located In The Fire Area

	Train A			Train B	
Description	Equip.	Cable	Description	Equip.	Cable
CAH-FN-1C		x			
CAH-FN-1E		x			
CAH-FN-1F		x			
CBA-DP-21A		x			
CBA-DP-24A		x			
CBA-DP-24B		x			
CBA-DP-24C		x			
CBA-DP-26A		x			
CBA-E-230A		x			
CBA-FN-14A		x			
CBA-FN-19		x			
CBA-FN-20		x			
CBA-FN-21A		x			
CBA-P-434A		x			
CBA-P-435A		x			
CBS-P-9A		x			
CC-LT-2172-1		x			
CC-LT-2172-2		x			
CC-LT-2172-3		x			
CC-LT-2272-1		x			
CC-LT-2272-2		x			
CC-LT-2272-3		x			

Tabulation 3.2.7.2

Control Building – El. 21' -6"

Fire Area: CB-F-1A-A

A. Equipment And Cables Located In The Fire Area

	Train A			Train B	
Description	Equip.	Cable	Description	Equip.	Cable
CC-P-11A		x			
CC-P-11C		x			
CC-P-322A		x			
CC-TE-2171		x			
CC-TV-2171-1		x			
CC-TV-2171-2		x			
CC-V57		x			
CC-V121		x			
CC-V175		x			
CC-V257		x			
CC-V145		x			
CC-V1101		x			
CC-V1109		x			
CO-LT-4096		x			
CP-CP-111	x	x	CP-CP-111	x	x
CS-FT-121		x			
CS-FCV-110A					x
CS-FCV-111A					x
CS-FCV-110B					x
CS-FCV-111B					x
CS-FCV-121		x			
CS-HCV-182		x			

Tabulation 3.2.7.2

Control Building – El. 21' -6"

Fire Area: CB-F-1A-A

A. Equipment And Cables Located In The Fire Area

	Train A			Train B	
Description	Equip.	Cable	Description	Equip.	Cable
CS-LCV-112B		x			
CS-LCV-112D		x			
CS-LT-102		x			
CS-P-2A		x	CS-P-2B	(1)	(1)
CS-P-3A		x			
CS-V10		x			
CS-V28		x			
CS-V44		x			
CS-V59		x			
CS-V142		x			
CS-V154		x			
CS-V158		x			
CS-V162		x			
CS-V166		x			
CS-V167		x			
CS-V196		x			
CS-V460		x			

(1) CS-P-2B and its cables are not actually located in this fire area. However, CS-P-2B is listed because it is potentially affected via a systems interaction. See Analysis Section B.13.

Tabulation 3.2.7.2

Control Building – El. 21' -6"

Fire Area: CB-F-1A-A

A. Equipment And Cables Located In The Fire Area

	Train A			Train B	
Description	Equip.	Cable	Description	Equip.	Cable
DAH-DP-16A		x			
DAH-FN-25A		x			
DAH-FN-26A		x			
DAH-CP-295		x			
DG-CP-75A		x			
DG-CP-79	x	x			
DG-DG-1A		x			
DG-P-38A		x			
DG-C-2A		x			
EAH-FN-5A		x			
EAH-FN-31A		x			
EAH-FN-174A		x			
ED-X-14J		x			
ED-BC-2A		x			
ED-BC-2B		x			
ED-I-4		x			
ED-PP-122B	x	x			
ED-PP-3C	x	x			
ED-US-11	x	x			
ED-US-23	x	x			
EDE-B-1A		x			
EDE-B-1C		x			

Tabulation 3.2.7.2

Control Building – El. 21' -6"

Fire Area: CB-F-1A-A

A. Equipment And Cables Located In The Fire Area

	Train A			Train B	
Description	Equip.	Cable	Description	Equip.	Cable
EDE-BC-1A	x	x			
EDE-BC-1C	x	x			
EDE-CP-1E	x	x			
EDE-CP-227	x	x			
EDE-CP-229	x	x			
EDE-CP-248	x	x			
EDE-I-1A	x	x			
EDE-I-1C	x	x			
EDE-I-1E	x	x			
EDE-MCC-511		x			
EDE-MCC-512	x	x			
EDE-MCC-513		x			
EDE-MCC-514		x			
EDE-MCC-515	x	x			
EDE-MCC-521	x	x			
EDE-MCC-522	x	x			
EDE-MCC-523		x			
EDE-MCC-531	x	x			
EDE-MM-578	x	x			
EDE-MM-583	x	x			
EDE-MM-585	x	x			
EDE-PP-1A	x	x			

Tabulation 3.2.7.2

Control Building – El. 21' -6"

Fire Area: CB-F-1A-A

A. Equipment And Cables Located In The Fire Area

	Train A			Train B	
Description	Equip.	Cable	Description	Equip.	Cable
EDE-PP-1C	x	x			
EDE-PP-1E	x	x			
EDE-PP-11E	x	x			
EDE-PP-111A	x	x			
EDE-PP-112A	x	x			
EDE-PP-113A	x	x			
EDE-SWG-5	x	x			
EDE-SWG-11A	x	x			
EDE-SWG-11C	x	x			
EDE-US-51	x	x			
EDE-US-52	x	x			
EDE-US-53	x	x			
EPA-DP-371		x			
EPA-DP-373		x			
EPA-FN-47A		x			
FW-FV-4214A		x			
FW-FV-4224A		x			
FW-FV-4234A		x			
FW-FV-4244A		x			
FW-P-113		x			
FW-P-161		x			
FW-V156		x			

Tabulation 3.2.7.2

Control Building – El. 21' -6"

Fire Area: CB-F-1A-A

A. Equipment And Cables Located In The Fire Area

	Train A			Train B	
Description	Equip.	Cable	Description	Equip.	Cable
FW-V163		x			
MS-PV-3001		x			
MS-PV-3002		x			
MS-PV-3003		x			
MS-PV-3004		x			
MS-V86		x			
MS-V88		x			
MS-V90		x			
MS-V92		x			
MM-CP-1		x			
MM-CP-3		x			
MM-CP-7		x			
MM-CP-12		x			
MM-CP-108A	x	x			
MM-CP-152A		x			
MM-CP-153		x			
MM-CP-297A		x			
NI-NE-6690		x			

Tabulation 3.2.7.2

Control Building – El. 21' -6"

Fire Area: CB-F-1A-A

A. Equipment And Cables Located In The Fire Area

	Train A			Train B	
Description	Equip.	Cable	Description	Equip.	Cable
NI-NM-6690	x	x			
NI-MM-6690J	x	x			
PAH-DP-35A		x			
PAH-DP-36A		x			
PAH-DP-43A		x			
PAH-DP-357		x			
PAH-FN-42A		x			
RC-E-10 (Group A)		x			
RC-P-1A		x			
RC-P-1B		x			
RC-P-1C		x			
RC-P-1D		x			
RC-PCV-456A		x			
RC-V23		x			
RC-V88		x			
RC-V122		x			
RC-E-10 (Group C,D Control)		x			
RH-FCV-618		x			
RH-HCV-606		x			
RH-P-8A		x			
RH-V14		x			
RH-V35		x			

Tabulation 3.2.7.2

Control Building – El. 21' -6"

Fire Area: CB-F-1A-A

A. Equipment And Cables Located In The Fire Area

	Train A			Train B	
Description	Equip.	Cable	Description	Equip.	Cable
RH-V70		x			
SA-SKD-137A		x			
SA-C-4A		x			
SI-FV-2482		x			
SI-FV-2483		x			
SI-FV-2495		x			
SI-FV-2496		x			
SI-P-6A		x			
SI-V3		x			
SI-V32		x			
SI-V138		x			
SI-PT-937		x			
SW-FN-51A		x			
SW-P-41A		x			
SW-P-41C		x			
SW-P-110A		x			
SW-V2		x			
SW-V4		x			
SW-V15		x			
SW-V16		x			
SW-V20		x			
SW-V22		x			

Tabulation 3.2.7.2

Control Building – El. 21' -6"

Fire Area: CB-F-1A-A

A. Equipment And Cables Located In The Fire Area

	Train A			Train B	
Description	Equip.	Cable	Description	Equip.	Cable
SW-V34		x			
SW-V54		x			
SW-V56		x			
SW-V74		x			
SW-V139		x			
SWA-DP-66		x			
SWA-FN-71		x			
SWA-FN-40A		x			

B. Analysis

1. General Systems/Equipment Analysis

With the exception of the systems/equipment discussed below, a fire in this area will only affect the Train A safe shutdown equipment and cables. The redundant Train B safe shutdown equipment and cables are located in fire area CB-F-1B-A.

The Appendix R separation requirements are satisfied.

2. Containment Spray Pump CBS-P-9A

This pump is not required for safe shutdown, however; a fire could cause a spurious start. The operators will terminate operation of the CBS pump either by tripping and locking out the motor's circuit breaker from the MCR or by removing all power from the 4160V emergency bus E5.

The safe shutdown requirements are satisfied.

3. Component Cooling Water Containment Isolation Valves CC-V57, CC-V121, CC-V175, CC-V257 and Head Tank Level Transmitters CC-LT-2172-1, 2, 3, CC-LT-2272-1, 2, 3

A fire could cause loss of all PCCW to containment by spurious closure of the PCCW Loop B outboard isolation valves CC-V175 and CC-V257. One train of PCCW is required to maintain containment habitable for manual valve operations. PCCW is also required for cooling air compressor SA-C-4B. Should all PCCW be isolated, the operators will immediately trip the Train B air compressor SA-C-4B to preclude operating the compressor without cooling. As the containment instrument air pressure decays without SA-C-4B operating, the PCCW Loop B inboard isolation valves will close.

The operators will manually reopen the PCCW Loop B outboard isolation valves CC-V175 and CC-V257 in the mechanical penetration fire area (Fire Zone: PP-F-4B-Z). The operators will then manually open IA-V530 to connect the outside containment Loop B instrument air to the inside containment instrument air system. Once containment instrument air is restored, the PCCW Loop B inboard isolation valves will reopen to reestablish PCCW cooling to the air compressor and to the Train B containment structure coolers.

The safe shutdown requirements are satisfied.

4. Reactor Trip Switchgear CP-CP-111

Redundant trains of cables and equipment are located in proximity. These breakers are tripped from the MCR as an initial operator action; however, a fire in the area of the reactor trip switchgear could prevent operation of both trains of tripping capability. Should this occur the operators can remove power from the reactor trip MG sets by tripping the switching station breakers that supply power to the UAT and RAT causing a loss of offsite power to the station. This trip can be initiated from the MCR as the switching station breaker control circuits are not routed through this fire area. The removal of power from the MG sets will, after a short time delay to allow for coastdown, result in de-energizing the reactor trip solenoids and; hence, insertion of the control rods.

The safe shutdown requirements are satisfied.

5. Charging Pump Flow Control Valve CS-FCV-121 and Flow Transmitter CS-FT-121

   Under normal conditions, charging is accomplished by utilizing the control valve CS-FCV-121 and its associated transmitter. Spurious closure of this valve could isolate the seal injection path. In this event the operators will utilize the high head injection path for hot standby charging flow by opening the Train B valve SI-V139. The cables, controls and equipment required for operation of SI-V139 are not contained in the fire area. For cooldown, the operators will manually align the Train B charging pump discharge and bypass valves (CS-V219 and CS-V220) to the seal injection flow path and throttle the bypass valve as required. This operator action can be delayed for up to four (4) hours.

   The safe shutdown requirements are satisfied.

6. RC Pump Seal Water Isolation Valves CS-V10, CS-V28, CS-V44, CS-V59 and CS-V167

   Valve CS-V167 is a normally open valve which should remain open for safe shutdown. Spurious isolation of the Train A valve CS-V167 could result in loss of RC inventory through the upstream relief valve. This inventory is directed to the PRT and is therefore, non-recoverable. Additionally, cables for the functionally redundant Train A valves CS-V10, CS-V28, CS-V44 and CS-V59 are routed in proximity. However, the postulated flow rate (12 GPM) coupled with the RCS volume shrink over the cooldown period to 350°F (approximately 5 hours) is within the capabilities of the boric acid tanks. Cooldown below 350°F to cold shutdown can be accomplished using the RWST. Shutdown margin is assured in all phases of this cooldown.

   The safe shutdown requirements are satisfied.

7. RC Pump Seal Injection Isolation Valves CS-V154, CS-V158, CS-V162 and CS-V166

   Under normal conditions, these valves are utilized for the seal injection flow path. Spurious closure of one valve will not prevent safe shutdown. The operators will prevent further spurious operations by removing power from the 4160V emergency bus E5. MCC E512, which powers these valves, is fed from emergency bus E5.

These valves provide a redundant RC pump seal cooling capability to the safety grade thermal barrier seal cooling. Cables, controls and equipment required for the Train B thermal barrier seal cooling capability are not contained in this fire area.

The Appendix R separation requirements are satisfied.

8. SI-CS Suction Cross Connection Valve CS-V460

Valve CS-V460 is a normally closed Train A valve which is required to remain closed for cooldown. Should this valve open spuriously, the functionally redundant Train B valve CS-V475 can be closed from the MCR. Cables and controls for valve CS-V475 are not located in this fire area.

The Appendix R separation requirements are satisfied.

9. Tower Actuation Logic EDE-CP-248

Failures in TA logic cables or equipment could initiate a spurious tower actuation signal which would transfer Train A service water cooling capability from the pumphouse to the cooling towers. The transfer will not interrupt Train A service water nor will it have any impact on Train B service water. This failure does not prevent safe shutdown.

The safe shutdown requirements are satisfied.

10. 4160V Switchgear EDE-SWG-5

Although this equipment is not required for safe shutdown for fire in this area, there are many loads powered from it whose spurious operation could affect safe shutdown should they remain powered. For any fire in the Train A switchgear room that has a potential to impact safe shutdown, the operators will trip and lockout all ac power supplies (UAT, RAT, DG) to the bus from the MCR. To assure that breakers cannot spuriously reclose, the UAT and RAT breaker dc control power will be disabled at the disabling panel and the DG breaker control power will be disabled at the DG control panel both in the Train A diesel generator room (Fire Area DG-F-2A-A).

Should the capability to trip the power supplies not be available due to prior loss of the dc control power, the operators can remove power by tripping the switching station breakers that supply power to the UAT and RAT causing a loss of offsite power to the station. This trip can be initiated from the MCR as the switching station breaker control circuits are not routed through this fire area. Subsequent to this loss of offsite power, the 4160V emergency switchgear bus E6 and Train B power will be supplied by the Train B diesel generator.

The safe shutdown requirements are satisfied.

11. Emergency Feedwater Pump Control Valves FW-FV-4214A, FW-FV-4224A, FW-FV-4234A and FW-FV-4244A

These valves are normally open and at least two valves must remain open for safe shutdown. Spurious closure of one valve will not prevent safe shutdown. The operators will prevent further spurious operations by removing power from the 4160V emergency bus E5. MCC E515, which powers these valves, is fed from emergency bus E5.

The safe shutdown requirements are satisfied.

12. Atmospheric Relief Valves MS-PV-3001, MS-PV-3002, MS-PV-3003, MS-PV-3004

Valves MS-PV-3001, MS-PV-3002, MS-PV-3003 and MS-PV-3004 are normally closed valves. A fire would prevent operation of the Train A capabilities provided for opening and closing these valves. However, the fire would not affect the Train B capabilities and the valves will be operable for safe shutdown.

Spurious opening of even one ARV can result in an overcooling condition in the RCS. This coupled with the potential unavailability of SI constitutes an unanalyzed condition. Since the ARV's are air operated valves, their spurious operation will be prevented by assuring that these valves are placed in a state such that the initial spurious operation in the air supply will not cause the valve to open. This will be accomplished by procedure as one of the first steps for any fire that can affect the integral ARV air system cables. This action is justifiable since it can be accomplished from the main control room. To prevent a subsequent short that could override the initial action and cause the ARV to open, the affected air solenoids will be de-energized from the disabling panel located in Train A diesel generator room (Fire Area: DG-F-2A-A).

This will isolate the faulted air supply but will not preclude operation of the ARV since the redundant air solenoids will still be operational.

The safe shutdown requirements are satisfied.

13. Volume Control Tank Isolation Valve CS-LCV-112B and CS-LCV-112D, and Charging Pump CS-P-2A & CS-P-2B

Volume control tank (VCT) isolation valves CS-LCV–112B & -112C are normally open to provide a suction path from the VCT to the normally operating charging pump (CS-P-2A or -2B). These valves must stay open until RWST valve CS-LCV-112D or –112E is manually opened to provide a charging pump suction path from the RWST, or the boric acid tanks are manually aligned as a charging pump suction source. Spurious closure of a VCT isolation valve caused by a hot short would interrupt suction flow to the operating charging pump causing it to be damaged. If the standby charging pump has cables in the same area then its operation can also be degraded. The result would be no charging system flow. Since this fire area contains cables for CS-LCV-112B and CS-P-2A, this condition is potentially applicable for the system alignment with CS-P-2A the standby pump and CS-P-2B the operating pump.

There is an electrical interlock that automatically opens opposite train RWST valve 1-CS-LCV-112E if VCT valve 1-CS-LCV-112B is not full open (i.e., spuriously closes). The cables, controls and equipment required for automatically opening RWST valve 1-CS-LCV-112E are not contained in this fire area. The open RWST valve provides a suction path so operating charging pump CS-P-2B will not be damaged.

Since charging flow is available, the safe shutdown requirements are satisfied.

14. Not Used.

15. Reactor Coolant Pumps RC-P-1A, RC-P-1B, RC-P-1C and RC-P-1D

Cables required for trip of the RC pumps are routed through this fire area. These breakers are tripped from the MCR as an initial operator action; however, fire in this area could prevent this trip. Should this occur the operators will either trip the RC pump circuit breakers locally (Fire Area: NES-F-1A-Z) or by removing power from the RC pump motors by tripping the switching station breakers which supply power to the UAT and RAT, thus causing a loss of offsite power to the station. This trip can be initiated from the MCR as the switching station breaker control circuits are not routed through this fire area.

The safe shutdown requirements are satisfied.

16. Pressurizer Relief Valves RC-PCV-456A, RC-V122

RC-PCV-456A is a normally closed, fail closed valve whose cables are in this fire area. The spurious opening of a PORV can result in an overcooling condition in the RCS. This coupled with the potential unavailability of SI constitutes an unanalyzed condition. The PORV is supplemented with a normally open, series block valve RC-V122. For all fires that have the potential to cause spurious opening of the PORV, the operators will close the block valve by procedure. This will be the first step in the procedure and can readily be accomplished from the main control room. The promptness of this action is justification for the ability to isolate the block valve prior to any spurious valve operations. Under the condition, the initial short will not cause depressurization. To prevent subsequent spurious operations, the operators will de-energize the PORV by placing the PORV main control board control switch to the closed position.

The safe shutdown requirements are satisfied.

17. RHR Isolation Valves RC-V23, RC-V88

RHR isolation valves are permanently disabled in the closed position. For entry into RHR shutdown cooling valve RC-V88 must be opened. This can be accomplished manually by entry into containment, if required. This manual operation can be delayed as much as 9 hours into the event.

The safe shutdown requirements are satisfied.

18. Safety Injection Pump SI-P-6A

This pump is not required for safe shutdown; however, a fire could cause a spurious start. The operators will terminate operation of the SI pump either by tripping and locking out the motor's circuit breaker from the MCR or by removing all power from the 4160V emergency bus E5.

The safe shutdown requirements are satisfied.

19. Cooling Tower Fan SW-F-51A, Pump SW-P-110A, Valves SW-V54, SW-V56, SW-V139, Fans SWA-FN-69 and Dampers SWA-DP-66 and SWA-FN-71

During normal plant operation, the service water pumphouse is utilized for plant cooling. The cooling towers are considered a redundant capability which may be utilized for a limited period of time during the year (e.g., tunnel heat treating). Should a fire occur during this time period the operators can utilize the Train B service water pumphouse capability. The cables, controls and equipment required for the Train B service water pumphouse capability are not contained in this fire area.

The Appendix R separation requirements are satisfied.

20. Pressurizer Heaters Group C, Group D, Control Group

This equipment is not required for safe shutdown; however, a fire could cause spurious operations. The operators will terminate operation of the pressurizer heaters, or mitigate the condition by tripping the heaters' circuit breaker, by tripping off-site power from the control room, or by reducing pressure by opening a PORV.

The safe shutdown requirements are satisfied.

21. Containment Pressure Transmitter SI-PT-937

A cable for one channel of containment pressure instrumentation is routed through this fire area. This channel inputs to 2 out of 3 and 2 out of 4 logics which initiate protective actions. A spurious signal from one channel is not sufficient to initiate the logic and perform the protective action; hence, a failure in this cable will not prevent safe shutdown.

The safe shutdown requirements are satisfied.

22. Containment Enclosure Isolation Damper, PAH-DP-35A, PAH-DP-36A

Cables for dampers PAH-DP-35A and PAH-DP-36A are routed through this area. Under normal operation both dampers are open. If both dampers go closed, the Containment Enclosure Air Handling (EAH) system operates in the recirculation mode. The normal and recirculation modes for EAH system operation both satisfy the safe shutdown function. Independent operation of either damper (one open and one closed) could cause an air flow problem in EAH system. This assumes that both redundant dampers (PAH-DP-35B and PAH-DP-36B) are in their normal open position since they would not be affected by a fire in this area.

Both dampers are powered from a single Train A power supply. The circuit design is such that a spurious signal will cause both dampers to operate together either both open (normal mode) or both closed (recirculation mode).

The safe shutdown requirements are satisfied.

23. Control Room Air Conditioning

The non-safety related chilled water system, which is powered from a non-safety related power supply, is normally running and aligned to either the A Train or the B Train Control Building Air Conditioning System fan unit. During normal plant operation, with the non-safety subsystem aligned for Control Room cooling on the A Train fan unit, the control switch on the MCB for the safety related train will be aligned for AUTO operation. On a loss of offsite power, the non-safety chilled water subsystem will be shut down and an automatic start sequence will be initiated via the emergency diesel generator load sequencer to restart the AC unit and start the A Train safety chiller.

In the event the A Train of the CBA fails to start, operator actions, prompted by high Control Room temperature, are assumed to secure the failed chiller and associated equipment and start the B Train. All controls for the recovery are in the Control Room.

The safe shutdown requirements are satisfied.

24. Boration/Dilution Flow Control Valves, CS-FCV-110A, -111A, -110B, -111B

This area contains cables for CS-FCV-110A, -111A, -110B, -111B. Spurious opening of these valves in conjunction with spurious start of a boric acid transfer pump or reactor makeup water pump may divert boric acid from the reactor coolant system affecting cold shutdown reactivity control, or result in an unplanned dilution affecting hot standby and cold shutdown reactivity control. The operators isolate the diversion flow by closing CS-FCV-110B and –111B using the main control board control switches. The operators isolate the dilution flow by closing CS-LCV-112C using the main control board control switch.

The safe shutdown requirements are satisfied.

25. Charging Pump CS-P-2A and High Head Injection Valve SI-V-138

Either charging pump CS-P-2A or CS-P-2B is normally operating. High head injection valve SI-V-138 is normally closed. If SI-V-138 spuriously opens, CS-P-2A and CS-P-2B need to be stopped to isolate charging flow to prevent pressurizer overfill. If CS-P-2A can not be stopped from the main control room because its cables are routed through this fire area, then power will be removed from Emergency Bus E5 to stop the pump (see Item 10 analysis). A fire in this area does not affect the capability to trip CS-P-2B from the main control room.

C. Evaluation

The safe shutdown requirements and Appendix R separation requirements are satisfied.

Tabulation 3.2.7.3

Control Building – El. 21' -6"

Fire Area – CB-F-1B-A

A. Equipment And Cables Located In The Fire Area

Train A			Train B		
Description	Equip.	Cable	Description	Equip.	Cable
			CAH-FN-1A		x
			CAH-FN-1B		x
			CAH-FN-1D		x
			CBA-DP-21B		x
			CBA-DP-26B		x
			CBA-E-230B		x
			CBA-FN-14B		x
			CBA-FN-21B		x
			CBA-FN-32		x
			CBA-FN-33		x
			CBA-P-434B		x
			CBA-P-435B		x
			CBS-P-9B		x
			CC-LT-2192-1		x
			CC-LT-2192-2		x
			CC-LT-2192-3		x
			CC-LT-2292-1		x

Control Building – El. 21' -6"

Fire Area – CB-F-1B-A

A. Equipment And Cables Located In The Fire Area

Train A			Train B		
Description	Equip.	Cable	Description	Equip.	Cable
			CC-LT-2292-2		x
			CC-LT-2292-3		x
			CC-P-11B		x
			CC-P-11D		x
			CC-P-322B		x
			CC-TE-2271		x
			CC-TV-2271-1		x
			CC-TV-2271-2		x
			CC-V122		x
			CC-V168		x
			CC-V176		x
			CC-V256		x
			CC-V272		x
			CC-V1092		x
			CC-V1095		x
			CP-CP-111		x
			CS-LCV-112C		x
			CS-LCV-112E		x

Control Building – El. 21' -6"

Fire Area – CB-F-1B-A

A. Equipment And Cables Located In The Fire Area

Train A			Train B		
Description	Equip.	Cable	Description	Equip.	Cable
CS-P-2A	(1)	(1)	CS-P-2B		x
			CS-P-3B		x
			CS-V143		x
			CS-V168		x
			CS-V175		x
			CS-V176		x
			CS-V197		x
			CS-V426		x
			CS-V461		x
			CS-V475		x
			DAH-DP-16B		x
			DAH-FN-25B		x
			DAH-FN-26B		x
			DAH-CP-296		x

(1) CS-P-2A and its cables are not actually located in this fire area. However, CS-P-2A is listed because it is potentially affected via a systems interaction. See Analysis Section B.19.

Control Building – El. 21' -6"

Fire Area – CB-F-1B-A

A. Equipment And Cables Located In The Fire Area

Train A			Train B		
Description	Equip.	Cable	Description	Equip.	Cable
			DG-CP-76A		x
			DG-CP-80	x	x
			DG-DG-1B		x
			DG-P-38B		x
			DG-C-2B		x
			EAH-FN-5B		x
			EAH-FN-31B		x
			EAH-FN-174B		x
			ED-X-16A		x
			EDE-B-1B		x
			EDE-B-1D		x
			EDE-BC-1B	x	x
			EDE-BC-1D	x	x
			EDE-CP-1F	x	x
			EDE-CP-228	x	x
			EDE-CP-230	x	x
			EDE-CP-249	x	x
			EDE-I-1B	x	x

Control Building – El. 21' -6"

Fire Area – CB-F-1B-A

A. Equipment And Cables Located In The Fire Area

Train A			Train B		
Description	Equip.	Cable	Description	Equip.	Cable
			EDE-I-1D	x	x
			EDE-I-1F	x	x
			EDE-MCC-612	x	x
			EDE-MCC-614		x
			EDE-MCC-611		x
			EDE-MCC-615	x	x
			EDE-MCC-621	x	x
			EDE-MCC-622	x	x
			EDE-MCC-631	x	x
			EDE-MM-580	x	x
			EDE-PP-1B	x	x
			EDE-PP-1D	x	x
			EDE-PP-1F	x	x
			EDE-PP-11F	x	x
			EDE-PP-111B	x	x
			EDE-PP-112B	x	x
			EDE-PP-113B	x	x
			EDE-SWG-6	x	x

Control Building – El. 21' -6"

Fire Area – CB-F-1B-A

A. Equipment And Cables Located In The Fire Area

Train A			Train B		
Description	Equip.	Cable	Description	Equip.	Cable
			EDE-SWG-11B	x	x
			EDE-SWG-11D	x	x
			EDE-US-61	x	x
			EDE-US-62	x	x
			EDE-US-63	x	x
			EPA-DP-372		x
			EPA-DP-374		x
			EPA-FN-47B		x
			FW-FV-4214B		x
			FW-FV-4224B		x
			FW-FV-4234B		x
			FW-FV-4244B		x
			FW-P-37B		x
			FW-V347		x
			IA-SKD-18B		x
			MM-CP-2		x
			MM-CP-4		x
			MM-CP-13		x

Control Building – El. 21' -6"

Fire Area – CB-F-1B-A

A. Equipment And Cables Located In The Fire Area

Train A			Train B		
Description	Equip.	Cable	Description	Equip.	Cable
			MM-CP-108B	x	x
			MM-CP-152B		x
			MM-CP-486B		x
			MM-CP-297B		x
			MS-CP-183	x	x
			MS-CP-185	x	x
			MS-PV-3001		x
			MS-PV-3002		x
			MS-PV-3003		x
			MS-PV-3004		x
			MS-V86		x
			MS-V88		x
			Ms-V90		x
			MS-V92		x
			NI-NE-6691		x
			NI-NM-6691	x	x
			NI-NM-6691J	x	x
			PAH-DP-35B		x

Control Building – El. 21' -6"

Fire Area – CB-F-1B-A

A. Equipment And Cables Located In The Fire Area

Train A			Train B		
Description	Equip.	Cable	Description	Equip.	Cable
			PAH-DP-36B		x
			PAH-DP-43B		x
			PAH-DP-358		x
			PAH-FN-42B		x
			RC-E-10 (Group B)		x
			RC-FV-2881		x
			RC-PCV-456B		x
			RC-V22		x
			RC-V87		x
			RC-V124		x
			RC-V323		x
			RH-FCV-619		x
			RH-HCV-607		x
			RH-P-8B		x
			RH-V26		x
			RH-V32		x
			RH-V36		x
			SA-SKD-137B		x

Control Building – El. 21' -6"

Fire Area – CB-F-1B-A

A. Equipment And Cables Located In The Fire Area

Train A			Train B		
Description	Equip.	Cable	Description	Equip.	Cable
			SA-C-4B		x
			SI-FV-2475		x
			SI-FV-2476		x
			SI-FV-2477		x
			SI-FV-2486		x
			SI-P-6B		x
			SI-V17		x
			SI-V47		x
			SI-V139		x
			SI-V158		x
			SW-P-41B		x
			SW-P-41D		x
			SW-V5		x
			SW-V18		x
			SW-V19		x
			SW-V23		x
			SW-V25		x
			SW-V29		x

Control Building – El. 21' -6"

Fire Area – CB-F-1B-A

A. Equipment And Cables Located In The Fire Area

Train A			Train B		
Description	Equip.	Cable	Description	Equip.	Cable
			SW-V31		x
			SWA-FN-40B		x

B. ANALYSIS

1. General System/Equipment Analysis

With the exception of the systems/equipment discussed below, a fire in this area will only affect the Train B safe shutdown equipment and cables. The redundant Train A safe shutdown equipment and cables are located in fire area CB-F-1A-A.

The Appendix R separation requirements are satisfied.

2. Containment Spray Pump CBS-P-9B

This pump is not required for safe shutdown, however, a fire could cause a spurious start. The operators will terminate operation of the CBS pump either by tripping and locking out the motor's circuit breaker from MCR or by removing all power from the 4160V emergency Bus E6.

The safe shutdown requirements are satisfied.

3. Component Cooling Water Containment Isolation Valves CC-V122, CC-V168, CC-V176, CC-V256 and Head Tank Level Transmitters CC-LT-2192-1, 2, 3, CC-LT-2292-1, 2, 3

A fire could cause loss of all PCCW to containment by spurious closure of the PCCW Loop B outboard isolation valves CC-V122 and CC-V168. One train of PCCW is required to maintain containment habitable for manual valve operations. PCCW is also required for cooling the air compressor SA-C-4A. Should all PCCW be isolated, the operators will immediately trip the Train A air compressor SA-C-4A to preclude operating the compressor without cooling. As the containment instrument air pressure decays without SA-C-4A operating, the PCCW Loop B inboard isolation valves will close.

The operators will manually reopen the PCCW Loop A outboard isolation valves CC-V-122 and CC-V-168 in the mechanical penetration fire area (Fire Zone: PP-F-4B-Z). The operators will then manually open IA-V50 to connect the outside containment Loop A instrument air to the outside containment Loop B instrument air. The operators will then manually open IA-V530 to connect the outside containment Loop B instrument air to the inside containment instrument air system. Once containment instrument air is restored, the PCCW Loop A inboard isolation valves will reopen to reestablish cooling to the air compressor and to the Train A containment structure coolers.

The safe shutdown requirements are satisfied.

4. RC Pump Seal Water Isolation Valve CS-V168

Valve CS-V168 is a normally open valve which should remain open for safe shutdown. Spurious isolation of the Train B valve could result in RC inventory loss through the upstream relief valves. This inventory is directed to the PRT and is therefore, non-recoverable. To preclude this loss of inventory, redundant isolation capability is provided for the RC pump seal return lines by means of Train A valves CS-V10, CS-V28, CS-V44 and CS-V59. The cables, controls and equipment required for the operation of CS-V10, CS-V28, CS-V44 and CS-V59 are not contained in this fire area.

The safe shutdown requirements are satisfied.

5. Excess Letdown Isolation Valves CS-V175 and CS-V176

Cables for functionally redundant fail closed valves CS-V175 and CS-V176 are routed in proximity. These valves are normally closed and remain closed for safe shutdown. Should either valve spuriously open, the operators will mitigate the spurious operation by disabling the power supply to CS-V175 at the disabling panel in the Train B diesel generator room (Fire Area: DG-F-2B-A).

The safe shutdown requirements are satisfied.

6. Charging Pump Test Line Isolation Valve SI-V158

On spurious operation of the normally closed, fail closed valves SI-V158 (Train B), the operators will maintain the normally closed high head injection path valves SI-V138 and SI-V139 closed. Charging will be accomplished utilizing the seal injection flow path through valves CS-FCV-121, CS-V154, CS-V158, CS-V162 and CS-V166. The cables controls and equipment required for operation of these valves are not contained in the fire area.

The capability to provide charging to the RC System through a minimum of one flow path satisfies the safe shutdown requirements.

7. BAT to Charging Pump Isolation Valve CS-V426

Valve CS-V426 is a normally closed valve which is opened to provide a path from the boric acid tanks to the charging pump suction. This path is required to begin cooldown. In the event that this valve is inoperable, the operators can provide a redundant path by manually positioning valves in the boric acid tank room (Fire Zone: PAB-F-2B-Z). The operators can maintain the plant in hot standby for the time required to perform this manual action.

The safe shutdown requirements are satisfied.

8. SI-CS Suction Cross Connection Valves CS-V461, CS-V475

Cables for valves CS-V461 and CS-V475 are located in proximity. Prior to beginning cooldown, the normally closed valve CS-V461 valve should remain closed or the functionally redundant valve CS-V475 should be closed. The isolation of this path will prevent the potential loss of boric acid tank inventory to the RWST during cooldown. In the event of a spurious valve operation which renders this flow path open, the plant can be maintained in hot standby for as long as 4 hours.

Should this area be inaccessible due to the fire or should the operators desire to initiate the cooldown sooner than 4 hours, a gravity feed can be established from the boric acid tanks to the charging pumps. As the BAT head is lower than that required to return inventory to the RWST, there would be no loss of BAT inventory through this path and the position of these valves would be inconsequential.

The safe shutdown requirements are satisfied.

9. Tower Actuation Logic EDE-CP-249

Failures in TA logic cables or equipment could initiate a spurious tower actuation signal which would transfer Train B service water cooling capability from the pumphouse to the cooling towers. The transfer will not interrupt Train B service water nor will it have any impact on Train A service water. This failure does not prevent safe shutdown.

The safe shutdown requirements are satisfied.

10. 4160V Switchgear EDE-SWG-6

Although this equipment is not required for safe shutdown for fire in this area, there are many loads powered from it whose spurious operation could affect safe shutdown should they remain powered. For any fire in the Train B switchgear room that has a potential to impact safe shutdown, the operators will trip and lockout all ac power supplies (UAT, RAT, DG) to the bus from the MCR. To assure that breakers cannot spuriously reclose, the UAT and RAT breaker dc control power will be disabled at the disabling panel and the DG breaker control power will be disabled at the DG control panel, both in the Train B diesel generator room (Fire Area: DG-F-2B-A).

Should the capability to trip the power supplies not be available due to prior loss of the dc control power, the operators can remove power by tripping the switching station breakers that supply power to the UAT and RAT causing a loss of offsite power to the station. This trip can be initiated from the MCR as the switching station breaker control circuits are not routed through this fire area. Subsequent to this loss of offsite power, the 4160V emergency switchgear bus E5 and Train A power will be supplied by the Train A diesel generator.

The safe shutdown requirements are satisfied.

11. Emergency Feedwater Pump Control Valves FW-FV-4214B, FW-FV-4224B, FW-FV-4234B and FW-FV-4244B

These valves are normally open and at least two valves must remain open for safe shutdown. Spurious closure of one valve will not prevent safe shutdown. The operators will prevent further spurious operations by removing power from the 4160V emergency bus E6. MCC E615, which powers these valves, is fed from emergency bus E6.

The safe shutdown requirements are satisfied.

12. Atmospheric Relief Valves MS-PV-3001, MS-PV-3002, MS-PV-3003, MS-PV-3004

Valves MS-PV-3001, MS-PV-3002, MS-PV-3003 and MS-PV-3004 are normally closed valves. A fire would prevent operation of the Train B capabilities provided for opening and closing these valves. However, the fire would not affect the Train A capabilities and the valves will be operable for safe shutdown.

Spurious opening of even one ARV can result in an overcooling condition in the RCS. This coupled with the potential unavailability of SI constitutes an unanalyzed condition. Since the ARV's are air operated valves, their spurious operation will be prevented by assuring that these valves are placed in a state such that the initial spurious operation in the air supply will not cause the valve to open. This will be accomplished by procedure as one of the first steps for any fire that can affect the integral ARV air system cables. This action is justifiable since it can be accomplished from the main control room. To prevent a subsequent short that could override the initial action and cause the ARV to open, the affected air solenoids will be de-energized from the disabling panel located in Train B diesel generator room (Fire Area: DG-F-2B-A).

This will isolate the faulted air supply but will not preclude operation of the ARV since the redundant air solenoids will still be operational.

The safe shutdown requirements are satisfied.

13. Reactor Vent Valves RC-FV-2881, RC-V323

Functionally redundant series valves RC-FV-2881 (fail closed) and RC-V-323 are normally closed and remain closed for safe shutdown. The spurious opening of one valve will not prevent safe shutdown. The operators will prevent spurious opening of this path by disabling the power supply to valve RC-FV-2881 at the disabling panel in the Train B diesel generator room (Fire Area: DG-F-2B-A).

The safe shutdown requirements are satisfied.

14. Pressurizer Relief Valves RC-PCV-456B, RC-V124

RC-PCV-456B is normally closed, fail closed valve whose cables are in this fire area. The spurious opening of a PORV can result in an overcooling condition in the RCS. This coupled with the potential unavailability of SI constitutes an unanalyzed condition. The PORV is supplemented with a normally open, series block valve RC-V124. For all fires that have the potential to cause spurious opening of the PORV, the operators will close the block valve by procedure. This will be the first step in the procedure and can readily be accomplished from the main control room. The promptness of this action is justification for the ability to isolate the block valve prior to any spurious valve operations. Under the condition, the initial short will not cause depressurization. To prevent subsequent spurious operations, the operators will de-energize the PORV by placing the PORV main control board control switch to the closed position.

The safe shutdown requirements are satisfied.

15. RHR Isolation Valves RC-V22, RC-V87

RHR isolation valves are permanently disabled in the closed position. For entry into RHR shutdown cooling valve RC-V22 must be opened. This can be accomplished by entry into containment, if required. This manual operation can be delayed as much as 9 hours into the event.

The safe shutdown requirements are satisfied.

16. Safety Injection Pump SI-P-6B

This pump is not required for safe shutdown; however, a fire could cause a spurious start. The operators will terminate operation of SI pump either by tripping and locking out the motor's circuit breaker from the MCR or by removing all power from the 4160V emergency bus E6.

The safe shutdown requirements are satisfied.

17. Containment Enclosure Isolation Damper, PAH-DP-35B, PAH-DP-36B

Cables for dampers PAH-DP-35B and PAH-DP-36B are routed through this area. Under normal operation both dampers are open. If both dampers go closed, the Containment Enclosure Air Handling (EAH) system operates in the recirculation mode. The normal and recirculation modes for EAH system operation both satisfy the safe shutdown function. Independent operation of either damper (one open and one closed) could cause an air flow problem in EAH system. This assumes that both redundant dampers (PAH-DP-35A and PAH-DP-36A) are in their normal open position since they would not be affected by a fire in this area.

Both dampers are powered from a single Train B power supply. The circuit design is such that a spurious signal will cause both dampers to operate together, either both open (normal mode) or both closed (recirculation mode).

The safe shutdown requirements are satisfied.

18. Control Room Air Conditioning

The non-safety related chilled water system, which is powered from a non-safety related power supply, is normally running and aligned to either the A Train or the B Train Control Building Air Conditioning System fan unit. During normal plant operation, with the non-safety subsystem aligned for Control Room cooling on the B Train fan unit, the control switch on the MCB for the safety related train will be aligned for AUTO operation. On a loss of offsite power, the non-safety chilled water subsystem will be shut down and an automatic start sequence will be initiated via the emergency diesel generator load sequencer to restart the AC unit and start the B Train safety chiller.

In the event the B Train of the CBA fails to start, operator actions, prompted by high Control Room temperature, are assumed to secure the failed chiller and associated equipment and start the A Train. All controls for the recovery are in the Control Room.

The safe shutdown requirements are satisfied.

19. Volume Control Tank Isolation Valve CS-LCV-112C and CS-LCV-112E, and Charging Pump CS-P-2A & CS-P-2B

Volume control tank (VCT) isolation valves CS-LCV-112B & -112C are normally open to provide a suction path from the VCT to the normally operating charging pump (CS-P-2A or –2B). These valves must stay open until RWST valve CS-LCV-112D or –112E is manually opened to provide a charging pump suction path from the RWST, or the boric acid tanks are manually aligned as a charging pump suction source. Spurious closure of a VCT isolation valve caused by a hot short would interrupt suction flow to the operating charging pump causing it to be damaged. If the standby charging pump has cables in the same area then its operation can also be degraded. The result would be no charging system flow. Since this fire area contains cables for CS-LCV-112C and CS-P-2B, this condition is applicable for the system alignment with CS-P-2B the standby pump and the CS-P-2A the operating pump.

There is an electrical interlock that automatically opens opposite train RWST valve 1-CS-LCV-112D if VCT valve 1-CS-LCV-112C is not full open (i.e., spuriously closes). The cables, controls and equipment required for automatically opening RWST valve 1-CS-LCV-112D are not contained in this fire area. The open RWST valve provides a suction path so operating charging pump CS-P-2A will not be damaged.

Since charging flow is available, the safe shutdown requirements are satisfied.

20. Charging Pump CS-P-2B and High head Injection Valve SI-V-139

Either charging pump CS-P-2A or CS-P-2B is normally operating. High head injection valve SI-V-139 is normally closed. If SI-V-139 spuriously opens, CS-P-2A and CS-P-2B need to be stopped to isolate charging flow to prevent pressurizer overfill. If CS-P-2B can not be stopped from the main control room because its cables are routed through this fire area, then power will be removed from Emergency Bus E6 to stop the pump (see Item 10 analysis). A fire in this area does not affect the capability to trip CS-P-2A from the main control room.

C. Evaluation

The safe shutdown requirements and Appendix R separation requirements are satisfied.

Tabulation 3.2.7.4

Control Building – El. 21' -6"

Fire Area – CB-F-1D-A

A. Equipment And Cables Located In The Fire Area

	Train A			Train B	
Description	Equip.	Cable	Description	Equip.	Cable
EDE-B-1A	x	x			

B. Analysis

All equipment and cables are Train A. The redundant Train B equipment and cables are in Fire Area CB-F-1F-A, separated from this area by a 3-hour fire wall.

C. Evaluation

The Appendix R separation requirements are satisfied.

Tabulation 3.2.7.5

Control Building – El. 21' -6"

Fire Area – CB-F-1E-A

A. Equipment And Cables Located In The Fire Area

	Train A			Train B	
Description	Equip.	Cable	Description	Equip.	Cable
EDE-B-1C	x	x			

B. Analysis

All equipment and cables are Train A. The redundant Train B equipment and cables are in Fire Area CB-F-1G-A, separated from this area by a 3-hour fire wall.

C. Evaluation

The Appendix R separation requirements are satisfied.

Tabulation 3.2.7.6

Control Building – El. 21' -6"

Fire Area – CB-F-1F-A

A. Equipment And Cables Located In The Fire Area

Train A			Train B		
Description	Equip.	Cable	Description	Equip.	Cable
			EDE-B-1B	x	x

B. Analysis

All equipment and cables are Train B. The redundant Train A equipment and cables are in Fire Area CB-F-1D-A, separated from this area by a 3-hour fire wall.

C. Evaluation

The Appendix R separation requirements are satisfied.

Tabulation 3.2.7.7

Control Building – El. 21' -6"

Fire Area – CB-F-1G-A

A. Equipment And Cables Located In The Fire Area

Train A			Train B		
Description	Equip.	Cable	Description	Equip.	Cable
			EDE-B-1D	x	x

B. Analysis

All equipment and cables are Train B. The redundant Train A equipment and cables are in Fire Area CB-F-1E-A, separated from this area by a 3-hour fire wall.

C. Evaluation

The Appendix R separation requirements are satisfied.

Tabulation 3.2.7.8

Control Building – El. 50' -0"

Fire Area – CB-F-2A-A

A. Equipment And Cables Located In The Fire Area

Train A			Train B		
Description	Equip.	Cable	Description	Equip.	Cable
Cables for all systems required for Train A Safe Shutdown.			Cables for all systems required for Train B Safe Shutdown.		

B. Analysis

This area contains cables for redundant equipment required for safe shutdown. For a fire in this area, the operators will proceed with a controlled evacuation of the MCR and establishment of control from the RSS facilities.

Details of the systems and equipment required for the alternative safe shutdown utilizing the RSS facilities are contained in Section 3.3.

C. Evaluation

The use of the RSS facilities satisfies the safe shutdown requirements.

Tabulation 3.2.7.9

Control Building – El. 50' -0"

Fire Area – CB-F-2B-A

A. Equipment And Cables Located In The Fire Area

	Train A			Train B	
Description	Equip.	Cable	Description	Equip.	Cable
CBA-DP-21A	x	x			
CBA-DP-24A	x	x			
CBA-DP-24B	x	x			
CBA-DP-24C	x	x			
CBA-DP-26A		x			
CBA-DP-52		x			
CBA-E-230A		x			
CBA-FN-14A		x			
CBA-FN-19	x	x			
CBA-FN-20	x	x			
CBA-FN-21A	x	x			
CBA-FN-211A		x			
CBA-PDS-21206 A1/A2		x			
CBA-TIC-5571	x				
DG-CP-79		x			
FW-FV-4214A		x			
FW-FV-4224A		x			
FW-FV-4234A		x			
FW-FV-4244A		x			
MM-CP-152A		x			
MM-CP-153		x			
MM-CP-297A		x			

Control Building – El. 50' -0"

Fire Area – CB-F-2B-A

A. Equipment And Cables Located In The Fire Area

	Train A			Train B	
Description	Equip.	Cable	Description	Equip.	Cable
RC-LCV-459		x			
RC-PCV-456A		x			

B. Analysis

1. General System/Equipment Analysis

With the exception of the systems/equipment discussed below, a fire in this area will only affect the Train A safe shutdown equipment and cables. The redundant Train B equipment and cables are located in fire area CB-F-2C-A.

The Appendix R separation requirements are satisfied.

2. Recirculation Damper CBA-DP-52

Cables for damper CBA-DP-52 are routed through this area. This damper is normally closed and is required to remain closed for safe shutdown if only one main control room ventilation fan is operating. In the event of a spurious opening of the damper, the operators will isolate and bleed the air line to the dampers air operator and manually re-close the damper by means of a handwheel. The damper and its air supplies are located in the main control room HVAC equipment and duct area (Fire Area: CB-F-3B-A).

The safe shutdown requirements are satisfied.

3. Process Control Cabinets MM-CP-153, MM-CP-297A

Power cables for PCC cabinets MM-CP-153 and MM-CP-297A are routed through this fire area. The loss of power to these cabinets will result in loss of CST level transmitter CO-LT-4096 and FW-LT-4252 and emergency feedwater flow transmitters FW-FT-4214-2 and FW-FT-4234-2. The Train B CST level transmitter FW-LT-4257 is not affected by a fire in this area. Additionally, the emergency feedwater flow to two steam generators will be available along with steam generator level for all four steam generators.

The Appendix R separation requirements are satisfied.

4. Normal Letdown Isolation Valve RC-LCV-459

Cables for valve RC-LCV-459 are routed in this fire area. The cables, controls and equipment for functionally redundant valve CS-V145 are not contained in this area and; hence, will be available for safe shutdown.

The Appendix R separation requirements are satisfied.

5. Control Room Air Conditioning

The non-safety related chilled water system, which is powered from a non-safety related power supply, is normally running and aligned to either the A Train or the B Train Control Building Air Conditioning System fan unit. During normal plant operation, with the non-safety subsystem aligned for Control Room cooling on the A Train fan unit, the control switch on the MCB for the safety related train will be aligned for AUTO operation. On a loss of offsite power, the non-safety chilled water subsystem will be shut down and an automatic start sequence will be initiated via the emergency diesel generator load sequencer to restart the AC unit and start the A Train safety chiller.

In the event the A Train of the CBA fails to start, operator actions, prompted by high Control Room temperature, are assumed to secure the failed chiller and associated equipment and start the B Train. All controls for the recovery are in the Control Room.

The safe shutdown requirements are satisfied.

6. Emergency Feedwater Pump Control Valves FW-FV-4214A, FW-FV-4224A, FW-FV-4234A, FW-FV-4244A

   These valves are normally open and at least two valves must remain open for safe shutdown. Spurious closure of one valve will not prevent safe shutdown. The operators will prevent further spurious operations by disabling the power supplies to the unaffected valves in the Train A switchgear room (Fire Area: CB-F-1A-A).

   The safe shutdown requirements are satisfied.

7. Pressurizer Power Operated Relief Valve (PORV) RC-PCV-456A

   A cable for RC-PCV-456A is routed in this area. Failure of this cable cannot cause the PORV to spuriously open, so the RCS pressure boundary is maintained.

   The safe shutdown requirements are satisfied.

C. Evaluation

The safe shutdown requirements and Appendix R separation requirements are satisfied.

Tabulation 3.2.7.10

Control Building – El. 50' -0"

Fire Area – CB-F-2C-A

A. Equipment And Cables Located In The Fire Area

Train A			Train B		
Description	Equip.	Cable	Description	Equip.	Cable
			CBA-DP-21B	x	x
			CBA-DP-24D	x	
			CBA-DP-24E	x	
			CBA-DP-24F	x	
			CBA-DP-26B		x
			CBA-E-230B		x
			CBA-FN-14B		x
			CBA-FN-21B	x	x
			CBA-FN-32	x	x
			CBA-FN-33	x	x
			CBA-FN-211B		x
			CBA-PDS-21206 B1/B2		x
			CBA-TIC-5572	x	
			DG-CP-76A		x
			DG-DG-1B		x
			DG-CP-80		x
			EDE-SWG-6		x
			FW-FV-4214B		x
			FW-FV-4224B		x
			FW-FV-4234B		x
			FW-FV-4244B		x
			MM-CP-13		x

Control Building – El. 50' -0"

Fire Area – CB-F-2C-A

A. Equipment And Cables Located In The Fire Area

Train A			Train B		
Description	Equip.	Cable	Description	Equip.	Cable
			MM-CP-297B		x
			RC-FV-2881		x
			RC-PCV-456B		x

B. Analysis

1. General System/Equipment Analysis

With the exception of the systems/equipment discussed below, a fire in this area will only affect the Train B safe shutdown equipment and cables. The redundant Train A equipment and cables are located in fire areas CB-F-2B-A and other fire areas.

The Appendix R separation requirements are satisfied.

2. Main Control Room Cooling Equipment CBA-E-230A, CBA-E-230B, CBA-DP-26A, CBA-DP-26B, CBA-FN-14A, CBA-FN-14B, CBA-FN-211A, CBA-FN-211B, CBA-PDS-21206A1/A2, CBA-PDS-21206B1/B2, CBA-TCV-21200A, CBA-TCV-21200B

The control building Train B mechanical room - south is a Class 1 area which for safe shutdown has a primary function of providing protection for the Train B air handling equipment for the Train B switchgear rooms and battery rooms. The area is approximately 26 ft. long by 43 ft. wide by 23 ft. high with floor area of 1120 sq. ft. and volume of 25,800 cu. ft.

The in situ combustibles consist of cables in trays.

There are a total of three cable trays which run horizontally through the area. When stacked, the trays run three high with the bottom tray being an enclosed instrument tray. There is approximately 200 ft. of uncovered cable tray containing a total of approximately 50 cables.

Detectors are provided throughout the area.

The cable for the Train A cooling equipment is routed in a conduit and box with a one-hour, fire-rated barrier. The only exception is at an interference with two HVAC duct hangers where the one-hour wrap is butted up to the hangers and pyrocrete is installed for heat transfer protection. The conduit and box are approximately 20 ft. above the floor. There are a total of eight cables in tray within 20 ft. horizontal of the barriered conduit. The redundant Train B cables are routed in tray a minimum of 25 ft. from the barriered conduit.

The spatial separation, the height above the floor, the routing of one train of cables in conduit with a one-hour, fire-rated barrier and considering the limited in situ combustibles provide acceptable fire protection and provide protection equivalent to the technical requirements of Appendix R. A deviation from Appendix R, Paragraph III.G.2.c "in addition to 1 hour fire barrier, and automatic fire suppression system shall be installed", has been approved.

2a. Control Room Air Conditioning

The non-safety related chilled water system, which is powered from a non-safety related power supply, is normally running and aligned to either the A Train or the B Train Control Building Air Conditioning System fan unit. During normal plant operation, with the non-safety subsystem aligned for Control Room cooling on the B Train fan unit, the control switch on the MCB for the safety related train will be aligned for AUTO operation. On a loss of offsite power, the non-safety chilled water subsystem will be shut down and an automatic start sequence will be initiated via the emergency diesel generator load sequencer to restart the AC unit and start the B Train safety chiller.

In the event the B Train of the CBA fails to start, operator actions, prompted by high Control Room temperature, are assumed to secure the failed chiller and associated equipment and start the A Train. All controls for the recovery are in the Control Room.

The safe shutdown requirements are satisfied.

3. Process Protection Cabinet MM-CP-13

The power cable for the PPC cabinet MM-CP-13 is routed through this fire area. The loss of power to this cabinet will prevent opening of valves RC-V22 and RC-V87. These valves are required to be opened for cooldown below 350°F when the RH System is placed in operation. Should the cable damage be such that valves cannot be operated from the MCR, the affected portion of the circuit can be isolated at the RSS panel in the Train B switchgear room (Fire Area: CB-F-1B-A) and the valves repositioned for safe shutdown.

The safe shutdown requirements are satisfied.

4. Process Control Cabinet MM-CP-297B

The power cable for PCC cabinet MM-CP-297B is routed through this fire area. The loss of power to this cabinet will result in loss of CST level transmitter FW-LT-4257 and emergency feedwater flow transmitters FW-FT-4224-2 and FW-FT-4244-2. The Train A CST level transmitter FW-LT-4252 is not affected by a fire in this area. Additionally, the emergency feedwater flow to two steam generators will be available along with steam generator level for all four steam generators.

The Appendix R separation requirements are satisfied.

5. Reactor Vent Valve RC-FV-2881

A cable for the normally closed, fail closed valve RC-FV-2881 is routed through this fire area. The spurious opening of this valve will not prevent safe shutdown as functionally redundant valve RC-V323 is normally closed and has no cables, controls, or equipment in this fire area so it cannot spuriously open.

The Appendix R separation requirements are satisfied.

6. Emergency Feedwater Pump Control Valves FW-FV-4214B, FW-FV-4224B, FW-FV-4234B, FW-FV-4244B

These valves are normally open and at least two valves must remain open for safe shutdown. Spurious closure of one valve will not prevent safe shutdown. The operators will prevent further spurious operations by disabling the power supplies to the unaffected valves in the Train B switchgear room (Fire Area: CB-F-1B-A).

The safe shutdown requirements are satisfied.

7. Pressurizer Power Operated Relief Valve (PORV) RC-PCV-456B

A cable for RC-PCV-456B is routed in this area. Failure of this cable cannot cause the PORV to spuriously open, so the RCS pressure boundary is maintained.

The safe shutdown requirements are satisfied.

C. Evaluation

Deviations from Appendix R, Paragraph III.G.2, separation requirements exist in the Control Building El. 50'-0" for the CBA System and have been discussed and analyzed above. A deviation from Appendix R, Paragraph III.G.2.c, "in addition to 1 hour fire barrier, an automatic fire suppression system shall be installed", is requested. These deviations are justified based on the analysis and our assertion that additional modifications would not enhance fire protection safety. For the remainder of the systems affected in this analysis, the safe shutdown requirements and the Appendix R separation requirements are satisfied.

Tabulation 3.2.7.11

Control Building – El. 75' -0"

Fire Area – CB-F-3A-A

A. Equipment And Cables Located In The Fire Area

Train A			Train B		
Description	Equip.	Cable	Description	Equip.	Cable
Cables for all systems required for Train A Safe Shutdown.			Cables for all systems required for Train B Safe Shutdown.		

B. Analysis

This area contains cables for redundant equipment required for safe shutdown. For a fire in this area, the operators will proceed with a controlled evacuation of the MCR and establishment of control from the RSS facilities.

Details of the systems and equipment required for the alternative safe shutdown utilizing the RSS facilities are contained in Section 3.3.

C. Evaluation

The use of the RSS facilities satisfies the safe shutdown requirements.

Tabulation 3.2.7.12

Control Building – El. 75' -0"

Fire Area – CB-F-3B-A

A. Equipment And Cables Located In The Fire Area

	Train A			Train B	
Description	Equip.	Cable	Description	Equip.	Cable
CBA-CP-177	x	x	CBA-CP-178	x	x
CBA-DP-26A	x	x	CBA-DP-26B	x	x
CBA-E-230A		x	CBA-E-230B		x
CBA-FN-14A	x	x	CBA-FN-14B	x	x
CBA-FN-211A		x	CBA-FN-211B		x
CBA-DP-52	x	x			
CBA-PDS-21206 A1/A2		x	CBA-PDS-21206 B1/B2		x
CBA-PDSH-5305	x	x	CBA-TCV-21200B	x	x
CBA-PDSH-5306	x	x	CBA-TC-21200B		x
CBA-TCV-21200A	x	x			
CBA-TC-21200A		x			
DG-CP-79		x	DG-CP-80		x
MM-CP-152A		x			
MM-CP-153		x			
MM-CP-297A		x	MM-CP-297B		x

B. Analysis

This area contains cables for redundant equipment required for safe shutdown. For a fire in this area, the operators will proceed with a controlled evacuation of the MCR and establishment of control from the RSS facilities. The main control room may also become uninhabitable because of smoke from a fire in this area.

Details of the systems and equipment required for the alternative safe shutdown utilizing the RSS facilities are contained in Section 3.3.

C. Evaluation

The use of the RSS facilities satisfies the safe shutdown requirements.

Tabulation 3.2.7.13

Control Building – El. 75' -0" Computer Room

Fire Area – CB-F-3C-A

A. Equipment And Cables Located In The Fire Area

Train A			Train B		
Description	Equip.	Cable	Description	Equip.	Cable
None			None		

B. Analysis

There are no safe shutdown cables or equipment in this fire area.

C. Evaluation

The Appendix R separation requirements do not apply to this fire area.

Tabulation 3.2.7.14

This page intentionally left blank.

Tabulation 3.2.7.15

Control Building – Stairwell

Fire Area – CB-F-S1-0

A. Equipment And Cables Located In The Fire Area

Train A			Train B		
Description	Equip.	Cable	Description	Equip.	Cable
None			None		

B. Analysis

There are no safe shutdown cables or equipment in this fire area.

C. Evaluation

The Appendix R separation requirements do not apply to this fire area.

Tabulation 3.2.7.16

Control Building – Stairwell

Fire Area – CB-F-S2-0

A. Equipment And Cables Located In The Fire Area

Train A			Train B		
Description	Equip.	Cable	Description	Equip.	Cable
None			None		

B. Analysis

There are no safe shutdown cables or equipment in this fire area.

C. Evaluation

The Appendix R separation requirements do not apply to this fire area.

Tabulation 3.2.7.17

Containment Enclosure Fan Area And Containment Annulus/
Mechanical Penetration Area

Fire Area - CE-F-l-Z, PP-F-1A-Z, PP-F-1B-Z, PP-F-2A-Z, PP-F-2B-Z, PP-F-3A-Z, PP-F-3B-Z, PP-F-4B-Z, PP-F-5B-Z

A. Equipment And Cables Located In The Fire Area

	Train A			Train B	
Description	Equip.	Cable	Description	Equip.	Cable
CC-V175	x	x	CC-V122	x	x
CC-V257	x	x	CC-V168	x	x
CC-V1101	x	x	CC-V1092	x	x
CC-V1109	x	x	CC-V1095	x	x
CS-V142	x	x	CS-V143	x	x
CS-V154	x	x			
CS-V158	x	x			
CS-V162	x	x			
CS-V166	x	x			
CS-V167	x	x			
EAH-AC-2A	x		EAH-AC-2B	x	
EAH-FN-5A	x	x	EAH-FN-5B	x	x
EAH-FN-31A	x	x	EAH-FN-31B	x	x
EAH-DP-3A	x	x	EAH-DP-3B	x	x
EAH-DP-25A	x	x	EAH-DP-25B	x	x
EDE-TBX-YC3	x	x	EDE-TBX-YB3	x	x
			PAH-DP-35B	x	x
			PAH-DP-36B	x	x
RC-FV-2894	x	x	RC-FV-2896	x	x
RC-V23		x	RC-V22		x

Containment Enclosure Fan Area And Containment Annulus/
Mechanical Penetration Area

Fire Area - CE-F-l-Z, PP-F-1A-Z, PP-F-1B-Z, PP-F-2A-Z, PP-F-2B-Z, PP-F-3A-Z, PP-F-3B-Z, PP-F-4B-Z, PP-F-5B-Z

A. Equipment And Cables Located In The Fire Area

	Train A			Train B	
Description	Equip.	Cable	Description	Equip.	Cable
RC-V88		x	RC-V87		x
RH-V14	x	x	RH-V26	x	x
RH-V70	x	x	RH-V32	x	x
RH-V35		x	RH-V36		x
EDE-TBX-Y32	x	x	EDE-TBX-Y35	x	x
CBS-V8	x	x	CBS-V14	x	x
SI-V138	x	x	SI-V139	x	x
SI-PT-937	x	x	SI-PT-936	x	x

B. Analysis

1. General Area Analysis

a. Mechanical Penetration Area (PP-F-XX-Z)

The mechanical penetration area is a Class 1 concrete structure which for safe shutdown has a primary purpose of protecting the containment isolation valves for component cooling, charging pumps and RHR. The area is sectioned into compartments, separated by concrete walls, with small openings for access. This configuration would most probably limit a fire caused by transient combustibles to one zone in the area.

The area contains no in situ combustibles with the exception of cable in trays. Only Train A safe shutdown cables are routed in trays. All Train B safe shutdown cables are in conduits.

Personnel access to the radioactive areas will be limited to operator tours.

Detectors are provided throughout the area.

b. Containment Fan Enclosure Area and Containment Annulus (CE-F-l-Z)

The containment fan enclosure area is a Class 1 concrete structure which for safe shutdown has a primary function of providing protection for the redundant cooling and air handling equipment for the RHR, CBS, SI equipment vaults; the charging pump rooms; and the mechanical penetration area. The area is approximately 112 feet long by 21 feet wide by 29'-6" high with a floor area of 3000 sq. ft. and volume of 90,000 cu. ft.

The in situ combustibles consist of cables in trays and charcoal in filters and fiberglass ladders.

There are a total of seven cable trays which are stacked four high for the Train A trays and three high for the Train B trays. The bottom tray in each stack is an enclosed instrumentation cable tray. The trays are a minimum of 13'-6" above the floor. There is approximately 275 lineal ft. of uncovered cable tray containing a total of 80 cables. With the exception of three cables, the Train B cables for the fans are routed in one-hour, fire-rated barriered conduits from the point where they enter the area to the equipment.

The charcoal filters which contain 1050 lbs. of charcoal each are not required for safe shutdown nor are they within 30 ft. of the cooling units. The units have an early fire detection system internal to the units.

Detectors are provided throughout the area.

2. System/Equipment Analysis

a. Component Cooling Isolation Valves CC-V175, CC-V257, CC-V122, CC-V168

The redundant component cooling containment isolation valves CC-V175, CC-V257, CC-V122 and CC-V168 are located in proximity. These valves are normally open and remain open for safe shutdown. The valves are provided with dual coil solenoids that must be energized to close the valves. The operators can prevent spurious operation by tripping the power supply breakers at the Train A and Train B switchgear rooms (Fire Areas: CB-F-1A-A and CB-F-1B-A). It should be noted, however, that these valves are required to remain operable only for containment entry when manual operation of the safety injection isolation valves SI-V3, SI-V17, SI-V32 and SI-V47 and the reactor coolant - RHR isolation valves RC-V22, RC-V23, RC-V87 and RC-V88 is required. Cables for these valves are not routed through this fire area; hence the valves would be operable from the main control room or the RSS control panels and containment entry would not be required.

The safe shutdown requirements are satisfied.

b. Thermal Barrier Containment Isolation Valves CC-V1101, CC-V1109, CC-V1092, CC-V1095

The redundant thermal barrier containment isolation valves CC-V1101, CC-V1109, CC-V1092, CC-V1095 are located in the same fire area. The redundant valves are in separate fire zones separated by a concrete wall. These valves are normally open and remain open for safe shutdown. The operators will prevent spurious operation of more than one valve by tripping the power supply breakers for these valves at the Train A and Train B switchgear rooms (Fire Areas: CB-F-1A-A and CB-F-1B-A).

The safe shutdown requirements are satisfied.

c. Charging Line Isolation Valves CS-V142, CS-V143

The redundant charging line isolation valves CS-V142 and CS-V143 are located in the same fire area. These valves are normally open and at least one valve is required to be closed for safe shutdown. The functionally redundant valve CS-HCV-182 is not located in this fire area; hence, it can be closed to isolate the normal charging line.

The Appendix R separation requirements are satisfied.

d. Seal Injection Isolation Valves: CS-V154, CS-V158, CS-V162, CS-V166 and High Head Injection Valves SI-V138, SI-V139

Under normal conditions, the seal injection isolation valves CS-V154, CS-V158, CS-V162 and CS-V166 are utilized for the seal injection flow path. Spurious closure of one of these valves will not prevent safe shutdown. The operators will prevent further spurious operations by tripping the power supply breakers in the Train A switchgear room (Fire Area: CB-F-1A-A).

The high head injection valves SI-V138 and SI-V139 are normally closed valves which may be opened to provide a redundant hot standby charging path. If the seal injection path is available, the position of these valves during hot standby is inconsequential.

On cooldown, the operators will either close or maintain closed the high head injection path. If the high head injection path cannot be isolated, a capability is provided to manually align and throttle the charging pumps to the seal injection flow paths.

The safe shutdown requirements are satisfied.

e. RC Pump Seal Water Isolation Valve CS-V167

Valve CS-V167 is a normally open valve that should remain open for safe shutdown. Spurious isolation of the Train A valve could result in loss of inventory through the upstream relief valve. This inventory is directed to the PRT and is, therefore, non-recoverable. To preclude this loss of inventory, functionally redundant isolation capability is provided by the RC pump seal return lines by means of Train A valves CS-V10, CS-V28, CS-V44 and CS-V59 and the excess letdown line by means of normally closed, fail closed valves CS-V175 or CS-V176. The cables, controls and equipment required for operation of valves CS-V10, CS-V28, CS-V44, CS-V59, CS-V175 and CS-V176 are not contained in this fire area.

The Appendix R separation requirements are satisfied.

f. Containment Enclosure Cooling Units EAH-AC-2A, EAH-AC-2B; Fans EAH-FN-5A, EAH-FN-5B; Dampers EAH-DP-3A, EAH-DP-3B and Terminal Boxes EDE-TBX-YC3, EDE-TBX-YB3

The redundant cooling units EAH-AC-2A and EAH-AC-2B are totally enclosed fiberglass insulated steel units which house the motor, fan and cooling coils. The units are separated by 8 ft. of clear space and the fan motors EAH-FN-5A and EAH-FN-5B are approximately 25 ft. apart. During normal operation only one cooling unit is required to operate.

An analysis has shown that a worst case fire caused by burning five (5) gallons of heptane between the cooling units can affect potentially one cooling unit.

All Train B cables required for operation of the cooling unit EAH-AC-2B are routed in one-hour, fire-rated barriered conduits from the rated fire wall where they enter the fire area to the equipment.

The spatial separation, the routing of one train of cables in a conduit with a one-hour, fire-rated barrier, the limited in situ combustibles provide acceptable fire protection and provide protection equivalent to the technical requirements of Appendix R.

g. Containment Enclosure Return Fans EAH-FN-31A, EAH-FN-31B and Dampers EAH-DP-25A and EAH-DP-25B.

The redundant return fans EAH-FN-31A and EAH-FN-31B are located 20 ft. above the floor and are an integral part of the HVAC ducts (one in each duct). These fans are required to maintain the equipment vaults habitable for entry if manual operations are required to place RHR into operation for cold shutdown. A fire in the containment enclosure fire zone CE-F-1-Z will not prevent operation from the MCR of any equipment necessary for RHR operation; hence, habitability of the equipment vaults is not required. Analysis and field testing has confirmed that the containment enclosure supply fan EAH-FN-5A or EAH-FN-5B is sufficient to maintain the equipment vaults below the equipment's qualified temperatures.

The safe shutdown requirements are satisfied.

h. Containment Enclosure Isolation Damper, PAH-DP-35B, PAH-DP-36B

Cables for dampers PAH-DP-35B and PAH-DP-36B are routed through this area. Under normal operation both dampers are open. If both dampers go closed, the Containment Enclosure Air Handling (EAH) system operates in the recirculation mode. The normal and recirculation modes for EAH system operation both satisfy the safe shutdown function. Independent operation of either damper (one open and one closed) could cause an air flow problem in EAH system. This assumes that both redundant dampers (PAH-DP-35A and PAH-DP-36A) are in their normal open position since they would not be affected by a fire in this area.

Both dampers are powered from a single Train B power supply. The circuit design is such that a spurious signal will cause both dampers to operate together, either both open (normal mode) or both closed (recirculation mode).

The safe shutdown requirements are satisfied.

i. RHR Isolation Valves RC-V22, RC-V23, RC-V87, RC-V88 and Sample Valves RC-FV-2894, RC-FV-2896

Redundant cables associated with the position indicating lights for the RHR isolation valves are contained in this area. Failure of these circuits will not prevent the operators from opening the valves for entry into cold shutdown. Although this indication is desirable, other means are available to confirm RH system operability (e.g. RH Pump Flow).

The safe shutdown requirements are satisfied.

j. H Pump to Cold Leg Isolation Valves RH-V14, RH-V26

Valves RH-V14 and RH-V26 are normally open valves which are required to remain open for RH systems operation (cold shutdown). These valves and their related cables are in proximity. If either valve spuriously closes, the operators will prevent further spurious operation of the redundant valve by tripping the power supply breakers in either the Train A or Train B switchgear rooms (Fire Areas: CB-F-1A-A and CB-F-1B-A).

The safe shutdown requirements are satisfied.

k. RH Pump to Hot Leg Isolation Valves RH-V70, RH-V32

Valves RH-V70 and RH-V32 are normally closed valves which are required to remain closed for RH system operation (cold shutdown). These valves and their related cables are in proximity. If either valve spuriously opens, the operators will prevent further spurious operation of the redundant valve by tripping the power supply breakers in either the Train A or Train B switchgear rooms (Fire Areas: CB-F-1A-A and CB-F-1B-A).

The safe shutdown requirements are satisfied.

l. RH Heat Exchanger to CS/SI Pump Isolation Valves RH-V35, RH-V36, Containment Sump Isolation Valves CBS-V8, CBS-V14 and Terminal Boxes EDE-TBX-Y32, EDE-TBX-Y35

Cables for the redundant valves RH-V35 and RH-V36 are routed in proximity to one another. Valves RH-V35 and RH-V36 are normally closed and their position is inconsequential during all modes of plant operation with the exception of cooldown below 350°F when the RH system is placed in operation. At that time it is necessary to assure that the valves remain closed. Should one of the valves open spuriously the operators can disable its power supply in either the Train A or Train B switchgear rooms (Fire Areas: CB-F-1A-A or CB-F-1B-A) and manually reposition the valves located in the equipment vaults (Fire Zone RHR-F-4B-Z or RHR-F-2-A-Z).

Manual operation of the valves can be delayed as much as 9 hours into the event. Therefore, no fire protection other than the existing separation is needed.

The provision of a capability to mitigate the spurious operation of the valves outside the fire area satisfies the safe shutdown requirements.

m. Containment Pressure Transmitters SI-PT-936, SI-PT-937

Redundant channels of containment pressure instruments and cables are located in proximity. Spurious operation of these channels will initiate containment spray and containment isolation Phase B. The operators will have the capability to terminate these protective actions by use of manual reset switches. All ESF equipment which has been started will be tripped and locked out. To preclude further spurious operations, the operators will disable the engineered safety features logic cabinets in the Train A and Train B switchgear rooms (Fire Areas: CB-1F-1A-A and CB-F-1B-A).

The provision of a capability to mitigate the spurious operation of the pressure transmitters outside the fire area satisfies the safe shutdown requirements.

C. Evaluation

Deviations from the Appendix R, Paragraph III.G.2 separation requirements exist in the containment fan enclosure area and the mechanical penetration area, and have been discussed and analyzed above. A deviation for Appendix R, Paragraph III G.2c, "in addition to a 1 hour fire barrier, an automatic fire suppression system shall be installed", has been approved. These deviations are justified based on the analysis and our assertion that additional modifications would not enhance fire protection safety.

Tabulation 3.2.7.18

Condensate Storage Tank

Fire Area – CST-F-1-0

A. Equipment And Cables Located In The Fire Area

	Train A			Train B	
Description	Equip.	Cable	Description	Equip.	Cable
CO-LT-4096	x	x			
CO-TK-25	x				

B. Analysis

All equipment and cables are Train A. The redundant Train B equipment and cables are in Fire Area EFW-F-l-A.

C. Evaluation

The Appendix R separation requirements are satisfied.

Tabulation 3.2.7.19

This page intentionally left blank.

Tabulation 3.2.7.20

This page intentionally left blank.

Tabulation 3.2.7.21

Cooling Tower - El. 22'-0"

Fire Area – CT-F-1C-A

A. Equipment And Cables Located In The Fire Area

Train A			Train B		
Description	Equip.	Cable	Description	Equip.	Cable
			EDE-MCC-641	x	x
			EDE-SWG-6		x
			SW-P-41B		x
			SW-P-41D		x
			SW-V25		x

B. Analysis

All equipment and cables are Train B. Thus Train B service water supplied either by the service water pumps or cooling tower pumps are not available due to a fire in this area. The redundant Train A equipment and cables are in Fire Area CT-F-1D-A, separated from this area by a 3-hour fire wall. Train A service water, normally supplied by Train A service water pump is available.

C. Evaluation

The Appendix R separation requirements are satisfied.

Tabulation 3.2.7.22

Cooling Tower - El. 22'-0"

Fire Area – CT-F-1D-A

A. Equipment And Cables Located In The Fire Area

	Train A			Train B	
Description	Equip.	Cable	Description	Equip.	Cable
EDE-MCC-513	x	x			
SW-FN-51A		x			
SW-P-41A		x			
SW-P-41C		x			
SW-P-110A		x			
SW-V54		x			
SW-V56		x			
SW-V139		x			
SWA-DP-64B	x				
SWA-DP-66		x			
SWA-FN-64		x			
SWA-FN-71		x			
SWA-L-28	x				
SWA-TSH-5669	x	x			

B. Analysis

All equipment and cables are Train A. Thus Train A service water supplied either by the service water pumps or cooling tower pump are not available due to a fire in this area. The redundant Train B equipment and cables are in Fire Area CT-F-1C-A, separated from this area by a 3-hour fire wall. Train B service water, normally supplied by Train B service water pump is available.

C. Evaluation

The Appendix R separation requirements are satisfied.

Tabulation 3.2.7.23

This page intentionally left blank

Tabulation 3.2.7.24

Cooling Tower - El. 46'-0"

Fire Area – CT-F-2B-A

A. Equipment And Cables Located In The Fire Area

	Train A			Train B	
Description	Equip.	Cable	Description	Equip.	Cable
SW-FN-51A		x			
SW-P-41A		x	SW-P-41B		x
SW-P-41C		x	SW-P-41D		x
SW-P-110A	x	x			
SW-V54	x	x	SW-V25	x	x
SW-V55	x				
SW-V56	x	x			
SW-V139		x			
SWA-DP-66	x	x			
SWA-FN-64	x	x			
SWA-FN-71	x	x			
SWA-TSH-5667	x	x			

B. Analysis

Redundant equipment and cables are located in the same fire area. The plant will normally be operating on service water pumps SW-P-41A, B, C, and D. These pumps are located in the service water pump house which is a separate area (Fire Area: SW-F-1E-Z).

This area contains valves SW-V25 and SW-V54 which are normally closed. The spurious opening of SW-V25 would divert B Train service water flow to the cooling tower thus reducing cooling flow to the diesel generator and PCCW heat exchangers. Spurious opening of SW-V54 would result in the same condition for the A Train service water system. The operators will prevent further spurious operation of the redundant valve by tripping the power supply breakers for EDE-MCC-513 at the 480 Volt Unit Substation E51 (Fire Area: CB-F-1A-A) for SW-V54 and the EDE-US-64 supply breaker at 4160 Switchgear E6 (Fire Area: CB-F-1B-A) for valve SW-V25. Thus, one train of service water capability is assured.

Permissive logic for redundant SW pumps could prevent the redundant SW pumps from being started (Note: one pump of each Train is normally running). The operators will prevent spurious operation of the permissive logic by tripping the power supply breakers at the Train A and Train B switchgear rooms (Fire Areas: CB-F-1A-A and CB-F-1B-A).

This area contains cooling tower fan SW-F-51A, pump SW-P110A, valves SW-V54, SW-V55, SW-V56, SW-V139, fans SWA-FN-64, SWA-FN-71, damper SWA-DP-66 and switch SWA-TSH-5667. The cooling towers are considered a redundant capability which may be utilized for a limited period of time during the year (e.g., tunnel heat treating). Should a fire occur during this time period the operators can utilize the Train B service water pumphouse capability. The cables, controls and equipment required for the Train B service water pumphouse capability are not contained in this fire area.

C. Evaluation

The safe shutdown requirements are satisfied.

Tabulation 3.2.7.25

Cooling Tower - Fans

Fire Area – CT-F-3-0

A. Equipment And Cables Located In The Fire Area

	Train A			Train B	
Description	Equip.	Cable	Description	Equip.	Cable
SW-FN-51A	x	x			
SW-V139	x	x			

B. Analysis

All equipment and cables are Train A. However, the fire in this area does not affect the Train A or Train B service water pumps and associated equipment (located in Fire Area SW-F-1E-Z) which will normally be operating. Safe shutdown is not affected.

C. Evaluation

The Appendix R separation requirements are satisfied.

Tabulation 3.2.7.26

Duct Bank - ET To SW-0"

Fire Area – DCT-F-1A-0

A. Equipment And Cables Located In The Fire Area

	Train A			Train B	
Description	Equip.	Cable	Description	Equip.	Cable
EDE-CP-248		x			
EDE-MCC-514		x			
SW-P-41A		x			
SW-P-41C		x			
SW-PT-8272		x			
SW-PT-8273		x			
SW-PT-8274		x			
SW-V2		x			
SW-V22		x			
SWA-FN-40A		x			

B. Analysis

All equipment and cables are Train A. The redundant Train B equipment and cables are in Fire Area DCT-F-1B-0.

C. Evaluation

The Appendix R separation requirements are satisfied.

Tabulation 3.2.7.27

Duct Bank - ET To SW

Fire Area – DCT-F-1B-0

A. Equipment And Cables Located In The Fire Area

Train A			Train B		
Description	Equip.	Cable	Description	Equip.	Cable
			EDE-CP-249		x
			EDE-MCC-614		x
			SW-P-41B		x
			SW-P-41D		x
			SW-PT-8282		x
			SW-PT-8283		x
			SW-PT-8284		x
			SW-V29		x
			SW-V31		x
			SWA-FN-40B		x

B. Analysis

All equipment and cables are Train B. The redundant Train A equipment and cables are in Fire Area DCT-F-1A-0.

C. Evaluation

The Appendix R separation requirements are satisfied.

Tabulation 3.2.7.28

Duct Bank - PAB To CT

Fire Area – DCT-F-2A-0

A. Equipment And Cables Located In The Fire Area

	Train A			Train B	
Description	Equip.	Cable	Description	Equip.	Cable
EDE-MCC-513		x			
SW-FN-51A		x			
SW-P-41A		x			
SW-P-41C		x			
SW-P-110A		x			
SW-V54		x			
SW-V56		x			
SW-V139		x			
SWA-DP-66		x			
SWA-FN-64		x			
SWA-FN-71		x			

B. Analysis

All equipment and cables are Train A. The redundant Train B equipment and cables are in Fire Area DCT-F-2B-0 and other plant fire areas.

C. Evaluation

The Appendix R separation requirements are satisfied.

Tabulation 3.2.7.29

Duct Bank - PAB To CT

Fire Area – DCT-F-2B-0

A. Equipment And Cables Located In The Fire Area

Train A			Train B		
Description	Equip.	Cable	Description	Equip.	Cable
			EDE-SWG-6		x
			SW-P-41B		x
			SW-P-41D		x
			SW-V25		x

B. Analysis

All equipment and cables are Train B. The redundant Train A equipment and cables are in Fire Area DCT-F-2A-0.

C. Evaluation

The Appendix R separation requirements are satisfied.

Tabulation 3.2.7.30

Duct Bank - CB to PAB

Fire Area – DCT-F-3B-0

A. Equipment And Cables Located In The Fire Area

Train A			Train B		
Description	Equip.	Cable	Description	Equip.	Cable
			CC-P-11B		x
			CC-P-11D		x
			CC-TE-2271		x
			CC-TV-2271-1		x
			CC-TV-2271-2		x
			CC-V122		x
			CC-V168		x
			CC-V1092		x
			CC-V1095		x
			CS-LCV-112C		x
			CS-LCV-112E		x
CS-P-2A	(1)	(1)	CS-P-2B		x
			CS-P-3B		x
			CS-V143		x
			CS-V197		x
			EAH-FN-5B		x
			EAH-FN-31B		x
			EDE-SWG-6		x
			PAH-DP-43B		x

(1) CS-P-2A and its cables are not actually located in this fire area. However, CS-P-2A is listed because it is potentially affected via a systems interaction. See Analysis Section B.4.

Duct Bank - CB to PAB

Fire Area – DCT-F-3B-0

A. Equipment And Cables Located In The Fire Area

Train A			Train B		
Description	Equip.	Cable	Description	Equip.	Cable
			PAH-DP-358		x
			PAH-FN-42B		x
			RC-V22		x
			RC-V87		x
			SI-V139		x
			SW-P-41B		x
			SW-P-41D		x
			SW-V5		x
			SW-V18		x
			SW-V19		x
			SW-V23		x
			SW-V25		x

B. Analysis

1. General System/Equipment Analysis

With the exception of the systems/equipment discussed below, a fire in this area will only affect the Train B safe shutdown cables. The redundant Train A safe shutdown cables are located in Fire Area PAB-F-1G-A.

The Appendix R separation requirements are satisfied.

2. Component Cooling Water Pumps CC-P-11B, CC-P-11D and Component Cooling Water Containment Isolation Valves CC-V122, CC-V168

   A fire could cause loss of all PCCW to Containment. It should be noted, however, that these valves are required to remain operable only for containment entry when manual operation of the safety injection isolation valves SI-V3, SI-V17, SI-V32 and SI-V47 and the reactor coolant - RHR isolation valves RC-V22, RC-V23, RC-V87 and RC-V88 are required. Cables for these valves are not routed through this fire area; hence, the valves would be operable from the main control room or the RSS control panels and containment entry would not be required.

   The safe shutdown requirements are satisfied.

3. RHR Isolation Valves RC-V22, RC-V87

   Redundant cables associated with the position indicating lights for the RHR isolation valves are contained in this area. Failure of these circuits will not prevent the operators from opening the valves for entry into cold shutdown. Although this indication is desirable, other means are available to confirm RH System operability (e.g. RH Pump Flow).

   The safe shutdown requirements are satisfied.

4. Volume Control Tank Isolation Valve CS-LCV-112C and Charging Pump CS-P-2A & CS-P-2B

   Volume control tank (VCT) isolation valves CS-LCV-112B & -112C are normally open to provide a suction path from the VCT to the normally operating charging pump (CS-P-2A or –2B). These valves must stay open until RWST valve CS-LCV-112D or –112E is manually opened to provide a charging pump suction path from the RWST, or the boric acid tanks are manually aligned as a charging pump suction source. Spurious closure of a VCT isolation valve caused by a hot short would interrupt suction flow to the operating charging pump causing it to be damaged. If the standby charging pump has cables in the same area then its operation can also be prevented. The result would be no charging system flow. Since this fire area contains cables for CS-LCV-112C and CS-P-2B, this condition is potentially applicable for the system alignment with CS-P-2B the standby pump and CS-P-2A the operating pump.

The CS-LCV-112C circuit design prevents spurious valve closure from hot shorts as follows. The field cable conductors for the motor control center (MCC) contactor close coil circuit are in different cables than the 120 V "hot" circuit conductors eliminating the hot short failure mode within the cables. Cable-to-cable hot shorts need not be postulated for thermoset cable insulation as used at Seabrook. Since CS-LCV-112C will not spuriously close, CS-P-2A as the operating charging pump will not be damaged. Also, the CS-LCV-112C and CS-P-2B cables are routed in separate concrete encased conduits within the duct bank so that one fire can not damage both the valve and the standby pump cables.

Since charging flow is available, the safe shutdown requirements are satisfied.

C. Evaluation

The safe shutdown requirements and Appendix R separation requirements are satisfied.

Tabulation 3.2.7.31

East MUA

Fire Area – DCT-F-4A-0

A. Equipment And Cables Located In The Fire Area

Train A			Train B		
Description	Equip.	Cable	Description	Equip.	Cable
None			None		

B. Analysis

There are no safe shutdown cables or equipment in this fire area.

C. Evaluation

The Appendix R separation requirements do not apply to this fire area.

Tabulation 3.2.7.32

East MUA

Fire Area – DCT-F-4B-0

A. Equipment And Cables Located In The Fire Area

Train A			Train B		
Description	Equip.	Cable	Description	Equip.	Cable
None			None		

B. Analysis

There are no safe shutdown cables or equipment in this fire area.

C. Evaluation

The Appendix R separation requirements do not apply to this fire area.

Tabulation 3.2.7.33

East MUA

Fire Area – DCT-F-5A-0

A. Equipment And Cables Located In The Fire Area

Train A			Train B		
Description	Equip.	Cable	Description	Equip.	Cable
None			None		

B. Analysis

There are no safe shutdown cables or equipment in this fire area.

C. Evaluation

The Appendix R separation requirements do not apply to this fire area.

Tabulation 3.2.7.34

East MUA

Fire Area – DCT-F-5B-0

A. Equipment And Cables Located In The Fire Area

Train A			Train B		
Description	Equip.	Cable	Description	Equip.	Cable
None			None		

B. Analysis

There are no safe shutdown cables or equipment in this fire area.

C. Evaluation

The Appendix R separation requirements do not apply to this fire area.

Tabulation 3.2.7.35

Duct Bank - SWPH To CW

Fire Area – DCT-F-6-0

A. Equipment And Cables Located In The Fire Area

Train A			Train B		
Description	Equip.	Cable	Description	Equip.	Cable
None			None		

B. Analysis

There are no safe shutdown cables or equipment in this fire area.

C. Evaluation

The Appendix R separation requirements do not apply to this fire area.

Tabulation 3.2.7.36

Duct Bank - TB To CST

Fire Area – DCT-F-7-0

A. Equipment And Cables Located In The Fire Area

	Train A			Train B	
Description	Equip.	Cable	Description	Equip.	Cable
CO-LT-4096	x				

B. Analysis

Train A cable is located in this area. The redundant cable and equipment is located in fire area EFW-F-1-A.

C. Evaluation

The Appendix R separation requirements are satisfied.

Tabulation 3.2.7.37

Diesel Generator Building - El. (-) 16'-0"

Fire Area – DG-F-1A-A

A. Equipment And Cables Located In The Fire Area

	Train A			Train B	
Description	Equip.	Cable	Description	Equip.	Cable
DG-P-38A	x	x			
DG-S-5A	x				
DG-TK-26A	x				

B. Analysis

All equipment and cables are Train A. The redundant Train B equipment and cables are in Fire Area DG-F-1B-A, separated from this area by a 3-hour fire wall.

C. Evaluation

The Appendix R requirements are satisfied.

Tabulation 3.2.7.38

Diesel Generator Building - El. (-) 16'-0"

Fire Area – DG-F-1B-A

A. Equipment And Cables Located In The Fire Area

Train A			Train B		
Description	Equip.	Cable	Description	Equip.	Cable
			DG-P-38B	x	x
			DG-S-5B	x	
			DG-TK-26B	x	

B. Analysis

All equipment and cables are Train B. The redundant Train A equipment and cables are in Fire Area DG-F-1A-A, separated from this area by a 3-hour fire wall.

C. Evaluation

The Appendix R requirements are satisfied.

Tabulation 3.2.7.39

Diesel Generator Building - El. 21'-6"

Fire Area – DG-F-2A-A

A. Equipment And Cables Located In The Fire Area

	Train A			Train B	
Description	Equip.	Cable	Description	Equip.	Cable
CBA-E-230A		x			
CBA-P-434A		x			
CBA-P-435A		x			
DAH-DP-16A	x	x			
DAH-FN-25A		x			
DAH-FN-26A	x	x			
DAH-TB-5529-1	x	x			
DAH-TE-5529-1	x	x			
DAH-TT-5529-1	x	x			
DAH-CP-295	x	x			
DG-C-2A	x	x			
DG-C-18A	x	x			
DG-CP-36	x	x			
DG-CP-75A	x	x			
DG-CP-75B	x	x			
DG-DG-1A	x	x			
DG-P-38A		x			
DG-SKD-17A	x	x			
DG-TBX-HF7	x	x			
DG-TK-45A	x				
DG-TK-45B	x				
ED-I-4		x			

Diesel Generator Building - El. 21'-6"

Fire Area – DG-F-2A-A

A. Equipment And Cables Located In The Fire Area

	Train A			Train B	
Description	Equip.	Cable	Description	Equip.	Cable
EDE-MCC-511	x	x			
EDE-SWG-5		x			
FW-FV-4214A		x			
FW-FV-4224A		x			
FW-FV-4234A		x			
FW-FV-4244A		x			
MM-CP-12		x			
MM-CP-297A		x			
MM-CP-450A	x	x			
MS-PV-3001		x			
MS-PV-3003		x			
RC-LCV-459		x			
RC-PCV-456A		x			
SW-V16		x			

B. Analysis

1. General System/Equipment Analysis

With the exception of the systems/equipment discussed below, a fire in this area will only affect the Train A safe shutdown equipment and cables. The redundant Train B equipment and cables are located in fire area DG-F-2B-A.

The Appendix R separation requirements are satisfied.

2. Process Protection Cabinet MM-CP-12

The power cables for the PPC cabinet MM-CP-12 is routed through this fire area. The loss of power to this cabinet will prevent opening of valves RC-V23 and RC-V88. Valve RC-V88 is required to be opened for cooldown below 350°F when the RH system is placed in operation. Should the cable damage be such that valves cannot be operated from the MCR, the affected portion of the circuit can be isolated at the RSS panel in the Train A switchgear room (Fire Area: CB-F-1A-A) and the valves repositioned for safe shutdown.

The safe shutdown requirements are satisfied.

3. Process Control Cabinet MM-CP-297A

The power cable for PCC cabinet MM-CP-297A is routed through this fire area. The loss of power to this cabinet will result in loss of CST level transmitter FW-LT-4252 and emergency feedwater flow transmitters FW-FT-4214-2 and, FW-FT-4234-2. The Train B CST level transmitter FW-LT-4257 is not affected by a fire in this area. Additionally, the emergency feedwater flow to two steam generators will be available along with steam generator level for all four steam generators.

The Appendix R separation requirements are satisfied.

4. Normal Letdown Isolation Valve RC-LCV-459

Cables for valve RC-LC-459 are routed in this fire area. The cables, controls, and equipment for functionally redundant valve CS-V145 are not contained in this area and; hence, will be available for safe shutdown.

The Appendix R separation requirements are satisfied.

5. Pressurizer Power Operated Relief Valve RC-PCV-456A

RC-PCV-456A is a normally closed, fail closed valve whose cables are in this fire area. The spurious opening of a PORV can result in an overcooling condition in the RCS. This coupled with the potential unavailability of SI constitutes an unanalyzed condition. The PORV is supplemented with a normally open, series block valve RC-V122. For all fires that have the potential to cause spurious opening of the PORV, the operators will close the block valve by procedure. This will be the first step in the procedure and can readily be accomplished from the main control room. The promptness of this action is justification for the ability to isolate the block valve prior to any spurious valve operations. Under the condition, the initial short will not cause depressurization. To prevent subsequent spurious operations, the operators will de-energize the PORV by tripping its power supply in the Train A switchgear room (Fire Area: CB-F-1A-A).

The safe shutdown requirements are satisfied.

6. Control Room Air Conditioning

The non-safety related chilled water system, which is powered from a non-safety related power supply, is normally running and aligned to either the A Train or the B Train Control Building Air Conditioning System fan unit. During normal plant operation, with the non-safety subsystem aligned for Control Room cooling on the A Train fan unit, the control switch on the MCB for the safety related train will be aligned for AUTO operation. On a loss of offsite power, the non-safety chilled water subsystem will be shut down and an automatic start sequence will be initiated via the emergency diesel generator load sequencer to restart the AC unit and start the A Train safety chiller.

In the event the A Train of the CBA fails to start, operator actions, prompted by high Control Room temperature, are assumed to secure the failed chiller and associated equipment and start the B Train. All controls for the recovery are in the Control Room.

The safe shutdown requirements are satisfied.

7. Emergency Feedwater Pump Control Valves FW-FV-4214A, FW-FV-4224A, FW-FV-4234A, FW-FV-4244A

   These valves are normally open and at least two valves must remain open for safe shutdown. Spurious closure of one valve will not prevent safe shutdown. The operators will prevent further spurious operations by disabling the power supplies to the unaffected valves in the Train A switchgear room (Fire Area: CB-F-1A-A).

   The safe shutdown requirements are satisfied.

C. Evaluation

The safe shutdown requirements and Appendix R separation requirements are satisfied.

Tabulation 3.2.7.40

Diesel Generator Building - El. 21'-6"

Fire Area – DG-F-2B-A

A. Equipment And Cables Located In The Fire Area

Train A			Train B		
Description	Equip.	Cable	Description	Equip.	Cable
			CBA-P-434B		x
			CBA-P-435B		x
			DAH-DP-16B	x	x
			DAH-FN-25B		x
			DAH-FN-26B	x	x
			DAH-TB-5530-1	x	x
			DAH-TE-5530-1	x	x
			DAH-TT-5530-1	x	x
			DAH-CP-296	x	x
			DG-C-2B	x	x
			DG-C-18B	x	x
			DG-CP-37	x	x
			DG-CP-76A	x	x
			DG-CP-76B	x	x
			DG-DG-1B	x	x
			DG-P-38B		x
			DG-SKD-17B	x	x
			DG-TBX-HF8	x	x
			DG-TK-45C	x	
			DG-TK-45D	x	
			EDE-MCC-611	x	x
			EDE-SWG-6		x

Diesel Generator Building - El. 21'-6"

Fire Area – DG-F-2B-A

A. Equipment And Cables Located In The Fire Area

Train A			Train B		
Description	Equip.	Cable	Description	Equip.	Cable
			FW-FV-4214B		x
			FW-FV-4224B		x
			FW-FV-4234B		x
			FW-FV-4244B		x
			MM-CP-13		x
			MM-CP-450B	x	x
			MS-PV-3002		x
			MS-PV-3004		x
			RC-FV-2881		x
			RC-PCV-456B		x
			SW-V18		x

B. Analysis

1. General System/Equipment Analysis

With the exception of the systems/equipment discussed below, a fire in this area will only affect the Train B safe shutdown equipment and cables. The redundant Train A equipment and cables are located in fire area DG-F-2A-A and other fire areas.

The Appendix R separation requirements are satisfied.

2. Process Protection Cabinet MM-CP-13

The power cables for the PPC cabinet MM-CP-13 are routed through this fire area. The loss of power to this cabinet will prevent opening of valves RC-V22 and RC-V87. Valve RC-V22 is required to be opened for cooldown below 350°F when the RH System is placed in operation. Should the cable damage be such that the valves cannot be operated from the MCR, the affected portion of the circuit can be isolated at the RSS panel in the Train B switchgear room (Fire Area: CB-F-1B-A) and the valves repositioned for safe shutdown.

The safe shutdown requirements are satisfied.

3. Reactor Vent Valve RC-FV-2881

A cable for the normally closed, fail closed valve RC-FV-2881 is routed through this fire area. The spurious opening of this valve will not prevent safe shutdown as functionally redundant valve RC-V323 is normally closed and has no cables, controls, or equipment in this fire area so it cannot spuriously open.

The Appendix R separation requirements are satisfied.

4. Pressurizer Power Operated Relief Valve RC-PCV-456B

RC-PCV-456B is a normally closed, fail closed valve whose cables are in this fire area. The spurious opening of a PORV can result in an overcooling condition in the RCS. This coupled with the potential unavailability of SI constitutes an unanalyzed condition. The PORV is supplemented with a normally open, series block valve RC-V124. For all fires that have the potential to cause spurious opening of the PORV, the operators will close the block valve by procedure. This will be the first step in the procedure and can readily be accomplished from the main control room. The promptness of this action is justification for the ability to isolate the block valve prior to any spurious valve operations. Under this condition, the initial short will not cause depressurization. To prevent subsequent spurious operations, the operators will de-energize the PORV by tripping its power supply in the Train B switchgear room (Fire Area: CB-F-1B-A).

The safe shutdown requirements are satisfied.

5. Control Room Air Conditioning

The non-safety related chilled water system, which is powered from a non-safety related power supply, is normally running and aligned to either the A Train or the B Train Control Building Air Conditioning System fan unit. During normal plant operation, with the non-safety subsystem aligned for Control Room cooling on the B Train fan unit, the control switch on the MCB for the safety related train will be aligned for AUTO operation. On a loss of offsite power, the non-safety chilled water subsystem will be shut down and an automatic start sequence will be initiated via the emergency diesel generator load sequencer to restart the AC unit and start the B Train safety chiller.

In the event the B Train of the CBA fails to start, operator actions, prompted by high Control Room temperature, are assumed to secure the failed chiller and associated equipment and start the A Train. All controls for the recovery are in the Control Room.

The safe shutdown requirements are satisfied.

6. Emergency Feedwater Pump Control Valves FW-FV-4214B, FW-FV-4224B, FW-FV-4234B, FW-FV-4244B

These valves are normally open and at least two valves must remain open for safe shutdown. Spurious closure of one valve will not prevent safe shutdown. The operators will prevent further spurious operations by disabling the power supplies to the unaffected valves in the Train B switchgear room (Fire Area: CB-F-1B-A).

The safe shutdown requirements are satisfied.

C. Evaluation

The safe shutdown requirements and Appendix R separation requirements are satisfied.

Tabulation 3.2.7.41

Diesel Generator Building - El. 51'-6"

Fire Area – DG-F-3A-Z, DG-F-3B-Z

A. Equipment And Cables Located In The Fire Area

	Train A			Train B	
Description	Equip.	Cable	Description	Equip.	Cable
CBA-E-230A	x	x	CBA-E-230B	x	x
CBA-FN-211A	x	x	CBA-FN-211B	x	x
CBA-P-434A	x	x	CBA-P-434B	x	x
CBA-P-435A	x	x	CBA-P-435B	x	x
CBA-PDS-21202A	x	x	CBA-PDS-21202B	x	x
CBA-PDS-21206 A1/A2	x	x	CBA-PDS-21206 B1/B2	x	x
DAH-FN-25A	x	x	DAH-FN-25B	x	x
DAH-FISH-5529	x	x	DAH-FISH-5530	x	x
			DG-CP-76A		x
			DG-DG-1B		x
			EDE-SWG-6		x
			MM-CP-13		x
RC-LCV-459		x			
			RC-FV-2881		x

B. Analysis

1. General Area Analysis

The diesel generator mechanical equipment room is a Class 1 area which for safe shutdown has a primary function of providing protection for the redundant air handling equipment for the diesel generator rooms. The area is approximately 86 ft long by 37 ft. wide by 26 ft. high with a floor area of 3200 sq. ft. and volume of 83,000 cu. ft.

The in situ combustibles consist of cables in trays, 7 gallons of oil in equipment, and fiberglass ladders.

There are a total of six cable trays which run horizontally and vertically through the area. When stacked the trays are run three high with the bottom tray being an enclosed instrumentation cable tray. There is approximately 375 ft. of uncovered cable tray containing a total of approximately 80 cables.

Detectors are provided throughout the area.

An analysis has shown that a worst case fire caused by burning 3.5 gallons of oil will not affect the operation of the Safe Shutdown equipment.

2. System/Equipment Analysis

a. Main Control Room Cooling CBA-E-230A, CBA-E-230B, CBA-FN-211A, CBA-FN-211B, CBA-P-434A, CBA-P-435A, CBA-P-434B, CBA-P-435B, CBA-PDS-21202A, CBA-PDS-21202B, CBA-PDS-21206A1/A2, CBA-PDS-21206B1/B2

The redundant control room cooling equipment and cables are located in the same fire area. A fire in this area can cause total loss of this cooling capability. Should this occur, the operators will utilize the evaporator fans CBA-FN-14A, 14B to supply outside air into the control room. These fans and their cables are not in this fire area. An air inlet and exhaust path, utilizing these fans, can be established by opening certain doors in the control room complex which will allow air to enter into the fan intake plenum from the south stairwell and exhaust the control room via the double doors to the turbine building.

The safe shutdown requirements are satisfied.

b. Diesel Generator Room Cooling DAH-FN-25A, DAH-FN-25B, DAH-FISH-5529, DAH-FISH-5530

The Safe Shutdown cables for the fans and flow switches are routed in barriered conduit from the floor where they enter the area to the equipment (a distance of approximately 20 feet or less). The one-hour, fire-rated barrier is reduced at two locations or stops approximately two feet from the equipment because of access or potential interference. The redundant fans and dampers are separated by approximately 28 feet with the only intervening combustible being approximately 44 cables in three vertical/horizontal Train B trays and approximately 33 cables in two horizontal Train A trays. The Train A and Train B trays are separated by 8 ft. The redundant flow switches and associated conduits are separated by 45 ft. with the above trays containing the only intervening combustibles.

The spatial separation, the routing of both trains of cables in separate conduits with a one-hour, fire-rated barrier and the limited in situ combustibles provide acceptable fire protection equivalent to the technical requirements of Appendix R.

Note: A deviation was requested and granted for not installing suppression in this location. Since that deviation was granted the following conservative changes have been made, the electrically operated supply dampers have been changed to back draft dampers and the supply fan flow switch interlock with the exhaust fan has been removed. Cables for the flow switch are still routed in barriered conduit because their failure could effect the control circuit for the supply fan. These changes do not adversely effect the basis of the deviation.

c. Diesel Generator Control DG-CP-76A, DG-DG-1B, EDE-SWG-6

The cables for control panels DG-CP-76A and DG-DG-1B are located in this area. Failure of these cables will render the Train B diesel inoperable from the main control room. The operators can re-establish Train B diesel operability by transferring control to the RSS panel located in the Train B diesel room (Fire Area: DG-F-2B-A). Operation of the diesel from the RSS panel will also allow re-establishing emergency power to EDE-SWG-6 by isolation of the faulted main control room cables.

The safe shutdown requirements are satisfied.

d. Process Protection Cabinet MM-CP-13

The power cable for the PPC cabinet MM-CP-13 is routed through this fire area. The loss of power to this cabinet will prevent opening of valves RC-V22 and RC-V87. These valves are required to be opened for cooldown below 350°F when the RH system is placed in operation. Should the cable damage be such that valves cannot be operated from the MCR, the affected portion of the circuit can be isolated at the RSS panel in the Train B switchgear room (Fire Area: CB-F-1B-A) and the valves repositioned for safe shutdown.

The safe shutdown requirements are satisfied.

e. Normal Letdown Isolation Valve RC-LCV-459

Cables for valve RC-LCV-459 are routed in this fire area. The cables, controls and equipment for functionally redundant valve CS-V145 are not contained in this area and; hence, will be available for safe shutdown.

The Appendix R separation requirements are satisfied.

f. Reactor Vent Valve RC-FV-2881

A cable for the normally closed, fail closed valve RC-FV-2881 is routed through this fire area. The spurious opening of this valve will not prevent safe shutdown as functionally redundant valve RC-V323 is normally closed and has no cables, controls, or equipment in this fire area so it cannot spuriously open.

The Appendix R separation requirements are satisfied.

C. Evaluation

Deviations from the Appendix R, Paragraph III.G.2 separation requirements exist in the diesel generator building El. 51'-6" for the DAH system and have been discussed and analyzed above. A deviation from Appendix R, Paragraph III G.2c, "in addition to 1 hour fire barrier, an automatic fire suppression system shall be installed", has been approved. These deviations are justified based on the analysis and our assertion that additional modifications would not enhance fire protection safety. For the remainder of the systems affected in this analysis, the safe shutdown requirements and the Appendix R separation requirements are satisfied.

Tabulation 3.2.7.42

Diesel Generator Building - El. 51'-6"

Fire Area –DG-F-3C-A

A. Equipment And Cables Located In The Fire Area

	Train A			Train B	
Description	Equip.	Cable	Description	Equip.	Cable
DG-LS-FLC	x	x			
DG-P-38A		x			
DG-TK-46A	x				
DG-TK-78A	x				

B. Analysis

All equipment and cables are Train A. The redundant Train B equipment and cables are in Fire Area DG-F-3D-A, separated from this area by a 3-hour fire wall.

C. Evaluation

The Appendix R separation requirements are satisfied.

Tabulation 3.2.7.43

Diesel Generator Building - El. 51'-6"

Fire Area –DG-F-3D-A

A. Equipment And Cables Located In The Fire Area

Train A			Train B		
Description	Equip.	Cable	Description	Equip.	Cable
			DG-LS-FLC	x	x
			DG-P-38B		x
			DG-TK-46B	x	
			DG-TK-78B	x	

B. Analysis

All equipment and cables are Train B. The redundant Train A equipment and cables are in Fire Area DG-F-3C-A, separated from this area by a 3-hour fire wall.

C. Evaluation

The Appendix R separation requirements are satisfied.

Tabulation 3.2.7.44

Diesel Generator Building - El. 51'-6"

Fire Area –DG-F-3E-A

A. Equipment And Cables Located In The Fire Area

	Train A			Train B	
Description	Equip.	Cable	Description	Equip.	Cable
DG-F-36A	x				
DG-MM-8A	x				

B. Analysis

There are no safe shutdown cables in this fire area. Only mechanical equipment for DG-A is contained in this fire area. The redundant equipment is contained in fire area DG-F-3F-A.

C. Evaluation

The Appendix R separation requirements are satisfied.

Tabulation 3.2.7.45

Diesel Generator Building - El. 51'-6"

Fire Area –DG-F-3F-A

A. Equipment And Cables Located In The Fire Area

Train A			Train B		
Description	Equip.	Cable	Description	Equip.	Cable
			DG-F-36B	x	
			DG-MM-8B	x	

B. Analysis

There are no safe shutdown cables in this fire area. Only mechanical equipment for DG-B is contained in this fire area. The redundant equipment is contained in fire area DG-F-3E-A.

C. Evaluation

The Appendix R separation requirements are satisfied.

Tabulation 3.2.7.46

Diesel Generator Building – Stairwell (N)

Fire Area –DG-F-S1-0

A. Equipment And Cables Located In The Fire Area

Train A			Train B		
Description	Equip.	Cable	Description	Equip.	Cable
None			None		

B. Analysis

There are no safe shutdown cables or equipment in this fire area.

C. Evaluation

The Appendix R separation requirements do not apply to this fire area.

Tabulation 3.2.7.47

Diesel Generator Building – Stairwell (S)

Fire Area –DG-F-S2-0

A. Equipment And Cables Located In The Fire Area

Train A			Train B		
Description	Equip.	Cable	Description	Equip.	Cable
None			None		

B. Analysis

There are no safe shutdown cables or equipment in this fire area.

C. Evaluation

The Appendix R separation requirements do not apply to this fire area.

Tabulation 3.2.7.48

Emergency Feedwater Pump Building

Fire Area – EFP-F-1-A

A. Equipment And Cables Located In The Fire Area

	Train A			Train B	
Description	Equip.	Cable	Description	Equip.	Cable
EPA-TSH-5430	x	x	EPA-TSH-5431	x	x
EPA-FN-47A	x	x	EPA-FN-47B	x	x
EPA-DP-371	x	x	EPA-DP-372	x	x
EPA-DP-373	x	x	EPA-DP-374	x	x
MM-IR-49	x	x	MM-IR-50	x	x
FW-FT-4214-2	x	x	FW-FT-4224-2	x	x
FW-FT-4224-4	x	x	FW-FT-4214-4	x	x
FW-FT-4234-2	x	x	FW-FT-4244-2	x	x
FW-FT-4244-4	x	x	FW-FT-4234-4	x	x
FW-FV-4214A	x	x	FW-FV-4214B	x	x
FW-FV-4224A	x	x	FW-FV-4224B	x	x
FW-FV-4234A	x	x	FW-FV-4234B	x	x
FW-FV-4244A	x	x	FW-FV-4244B	x	x
			FW-P-37B	x	x
FW-LT-4252	x	x	FW-LT-4257	x	x
			FW-V347	x	x

B. Analysis

The emergency feedwater pump building is a Class 1 concrete structure which for Safe Shutdown has a primary function of providing protection for the motor driven feedwater pump and valves. The area is approximately 79 ft. long by 28 ft. wide by 18 ft. high with a floor area of 2400 sq. ft. and a volume of 43,000 cu. ft.

The in situ combustibles consist of six gallons of oil in the turbine drive of emergency feedwater pump FW-P-37A and 27 pounds of plastic in a 10 ft. step and 24 ft. extension ladder. An analysis of the Design basis Fire for this combustible is contained in the "Fire Protection Program Evaluation and Comparison to Branch Technical Position APCSB-9.5-1 Appendix A.

All cables are routed in conduit.

Detectors are provided throughout the area.

See Section 3.4 for a discussion of the operator response for a fire in this area.

The eight emergency feed pump control valves are separated such that valves FW-FV-4214A, B and FW-FV-4244A, B are separated by 60 feet from valves FW-FV-4224A, B and FW-FV-4234A, B. See Section 3.4 for more discussion of these valves.

The redundant fans and dampers are in separate steel enclosures located 11 ft. above the floor, and separated by 1'-6". The temperature switches are separated by over 20'.

The redundant CST Level transmitters FW-LT-4252 and FW-LT-4257 are separated by 16'.

The motor driven emergency feedwater pump and recirculation valve FW-V347 are located in this fire area.

For a fire in this area, the start-up feedwater pump FW-P-113 (SUFP) and start-up to EFW valves FW-V156 and FW-V163 will be utilized to satisfy the safe shutdown requirements. The SUFP low suction pressure trip must also be bypassed prior to commencing cooldown.

During no-load and low load plant operations, the SUFP is aligned to non-emergency Bus 4 to provide its startup and shutdown functions. After the SUFP completes its startup function, its power supply will be transferred to emergency Bus E5 as plant power is increased. The SUFP will remain aligned to Bus E5 during 100% power operation. As power is decreased in preparation for a plant shutdown, the SUFP power supply will be transferred back to Bus 4. If the SUFP is required to perform its EFW contingency function in response to a fire that disables the Train B emergency feedwater pump, while aligned to Bus 4 coincident with a loss of offsite power, it will have to be manually transferred to Bus E5 and manually started. SUFP operation will be controlled by operating procedures including selection of the appropriate power supply and verification of adequate power supply capacity prior to starting the SUFP on the emergency diesel generator.

The main control room would not have to be evacuated for a fire in this area; hence, the operators would have the capability to control and monitor all the equipment which is powered from the electrical distribution emergency system and would be required for a safe shutdown.

Additional details on the alternative safe shutdown capability are contained in Section 3.4.

C. Evaluation

A deviation from the requirements of Appendix R, Paragraph III.G.3 requiring the installation of fixed suppression in an area for which alternative safe shutdown capability has been developed exists in the emergency feedwater pump building. This deviation is justified based on our assertion that additional modifications would not enhance plant safety which has been insured by the alternative shutdown capability discussed in Section 3.4 and Tabulation 3.4.3.

Tabulation 3.2.7.49

Electrical Tunnel

Fire Area – ET-F-1A-A

A. Equipment And Cables Located In The Fire Area

	Train A			Train B	
Description	Equip.	Cable	Description	Equip.	Cable
CAH-FN-1C		x			
CAH-FN-1E		x			
CAH-FN-1F		x			
CC-LT-2172-1		x			
CC-LT-2172-2		x			
CC-LT-2172-3		x			
CC-LT-2272-1		x			
CC-LT-2272-2		x			
CC-LT-2272-3		x			
CC-P-322A		x			
CC-V57		x			
CC-V121		x			
EDE-MM-582	x	x			
ED-X-14J	x	x			
ED-PP-8J	x	x			
SA-C-4A		x			
CS-V10		x			
CS-V28		x			
CS-V44		x			
CS-V59		x			
CS-V145		x			
RC-LCV-459		x			
RC-LCV-460		x			

Electrical Tunnel

Fire Area – ET-F-1A-A

A. Equipment And Cables Located In The Fire Area

	Train A			Train B	
Description	Equip.	Cable	Description	Equip.	Cable
RC-E-10		x			
RC-PP-6A	x	x			
RC-PCV-456A		x			
RC-V122		x			
RC-V23		x			
RC-V88		x			
SI-V159		x			
SI-V3		x			
SI-V32		x			
SI-FV-2482		x			
SI-FV-2483		x			
SI-FV-2495		x			
SI-FV-2496		x			
RH-V35		x			
FW-FV-4214A		x			
FW-FV-4224A		x			
FW-FV-4234A		x			
FW-FV-4244A		x			
MS-V86		x			
MS-V88		x			
MS-V90		x			
MS-V92		x			
MS-PV-3002		x			
MS-PV-3003		x			

Electrical Tunnel

Fire Area – ET-F-1A-A

A. Equipment And Cables Located In The Fire Area

Train A			Train B		
Description	Equip.	Cable	Description	Equip.	Cable
SB-V1		x			
SB-V3		x			
SB-V5		x			
SB-V7		x			
EAH-FN-174A		x			
EDE-CP-248		x			
EDE-MCC-514		x			
EPA-FN-47A		x			
EPA-DP-371		x			
EPA-DP-373		x			
SW-P-41A		x			
SW-P-41C		x			
SW-V2		x			
SW-V22		x			
SW-PT-8272		x			
SW-PT-8273		x			
SW-PT-8274		x			
SWA-FN-40A		x			
FW-LT-501		x			
FW-LT-503		x			
FW-LT-529		x			
FW-LT-548		x			
FW-PT-524		x			
FW-PT-526		x			

Electrical Tunnel

Fire Area – ET-F-1A-A

A. Equipment And Cables Located In The Fire Area

	Train A			Train B	
Description	Equip.	Cable	Description	Equip.	Cable
FW-PT-534		x			
FW-PT-536		x			
FW-LT-4252		x			
FW-FT-4214-2		x			
FW-FT-4224-4		x			
FW-FT-4234-2		x			
FW-FT-4244-4		x			
NI-NE-6690		x			
NI-NT-6690	x	x			
RC-LT-459		x			
RC-PT-405		x			
RC-PT-455		x			
RC-PT-457		x			
RC-TE-413A		x			
RC-TE-423A		x			
RC-TE-433A		x			
RC-TE-443A		x			
SI-PT-935		x			
Electrical Penetrations	x	x			

B. Analysis

1. General System/Equipment Analysis

With the exception of the systems/equipment discussed below, a fire in this area will only affect the Train A safe shutdown equipment and cables. The redundant Train B safe shutdown equipment and cables are located in fire area ET-F-1C-A.

The Appendix R safe shutdown requirements are satisfied.

2. Component Cooling Water Isolation Valves CC-V57, CC-V121, and Head Tank Level Transmitters CC-LT-2172-1, 2, 3, CC-LT-2272-1, 2, 3

   Cables associated with head tank level transmitters which affect the Loop B outboard isolation valves CC-V175 and CC-V257 are routed in the same trays as the Loop A inboard isolation valves CC-V57 and CC-V121. Failures in these cables could cause total loss of PCCW to containment by initiation of a spurious lo-lo head tank level signal. Loop B PCCW can be re-established by transferring control of valves CC-V175 and CC-V257 to local control at the RSS panel in fire area CB-F-1A-A. This removes the lo-lo head tank level isolation function and allows operators to re-open the valves.

   The safe shutdown requirements are satisfied.

3. RC Pump Seal Water Isolation Valves CS-V10, CS-V28, CS-V44, CS-V59

   The safe shutdown function of these valves is to isolate seal return in the event that valve CS-V168 spuriously closes due to a fire. As cabling for CS-V168 is not routed through this area, the position of these valves is inconsequential and will not prevent safe shutdown.

   The safe shutdown requirements are satisfied.

4. Letdown Isolation Valves CS-V145, RC-LCV-459, RC-LCV-460

   Functionally redundant Train A series valves CS-V145, RC-LCV-459 and RC-LCV-460 are normally open and are required to close for safe shutdown. CS-V145 can be closed from the main control room. Should this valve not close due to spurious operation, the operators can close either RC-LCV-459 or RC-LCV-460 by tripping their power supply breakers at the Train A switchgear room (Fire Area: CB-F-1A-A). This will prevent further spurious operation.

   The safe shutdown requirements are satisfied.

5. Charging Pump Test Line Isolation Valve SI-V159

   On spurious operation of the normally closed, fail closed valve SI-V159 (Train A), the operators will maintain the normally closed high head injection path valves SI-V138 and SI-V139 closed. Charging will be accomplished utilizing the seal injection flow path through valves CS-FCV-121, CS-V154, CS-V158, CS-V162 and CS-V166. The cables, controls and equipment required for operation of these valves are not contained in the fire area.

   The capability to provide charging to the RC System through a minimum of one flow path satisfies the safe shutdown requirements.

6. RHR Isolation Valves RC-V23, RC-V88

   RHR isolation valves are permanently disabled in the closed position. For entry into RHR shutdown cooling, valve RC-V88 must be opened. These valves are not required until 9 hours into the event. This can be accomplished manually by entry into containment, if required.

   The safe shutdown requirements are satisfied.

7. Emergency Feedwater Pump Control Valves FW-FV-4214A, FW-FV-4224A, FW-FV-4234A, FW-FV-4244A

   These valves are normally open and at least two valves must remain open for safe shutdown. Spurious closure of one valve will not prevent safe shutdown. The operators will prevent further spurious operations by disabling the power supplies to the unaffected valves in the Train A switchgear room (Fire Area: CB-F-1A-A).

   The safe shutdown requirements are satisfied.

8. Main Steam Isolation Valves MS-V86, MS-V88, MS-V90, MS-V92

   Failure of the Train A cables will not prevent safe shutdown as the redundant Train B cables required for MSIV closure are routed in Fire Area ET-F-1C-A.

   The Appendix R separation requirements are satisfied.

9. Not used.

10. Atmospheric Relief Valves MS-PV-3002, MS-PV-3003 and Associated Solenoids

Valves MS-PV-3002 and MS-PV-3003 are normally closed valves. A fire would prevent operation of the Train A capabilities provided for opening and closing these valves. However, the fire would not affect the Train B capabilities and the valves will be operable for safe shutdown.

Spurious opening of even one ARV can result in an overcooling condition in the RCS. This coupled with the potential unavailability of SI constitutes an unanalyzed condition. Since the ARV's are air operated valves, their spurious operation will be prevented by assuring that these valves are placed in a state such that the initial spurious operation in the air supply will not cause the valve to open. This will be accomplished by procedure as one of the first steps for any fire that can affect the integral ARV air system cables. This action is justifiable since it can be accomplished from the main control room. To prevent a subsequent short that could override the initial action and cause the ARV to open, the affected air solenoids will be de-energized from the distribution panels located in Train A switchgear room (Fire Area: CB-F-1A-A).

This will isolate the faulted air supply but will not preclude operation of the ARV since the redundant air solenoids will still be operational.

The safe shutdown requirements are satisfied.

11. Tower Actuation Logic Pressure Transmitters SW-PT-8272, SW-PT-8273, SW-PT-8274

Failure in this cable could initiate a spurious tower actuation signal which would transfer Train A service water cooling capability from the pumphouse to the cooling towers. This transfer will not significantly interrupt Train A service Water cooling nor will it have any impact on Train B service water. This failure does not prevent safe shutdown.

The safe shutdown requirements are satisfied.

12. Main Steam Pressure Transmitters FW-PT-524, FW-PT-526, FW-PT-534, FW-PT-536

    Redundant channels of main steam pressure cables are located in proximity. Spurious operation of the channels will initiate safety injection and containment isolation Phase A signals. The operators will have the capability to terminate SI after 1 minute by use of the manual reset block switch and terminate the containment isolation by use of the manual reset switch. All ESF equipment which has been started will be tripped and locked out. To preclude further spurious operations, the operators will disable the engineered safety features logic cabinets in the Train A and Train B switchgear rooms (Fire Areas: CS-F-1A-A and CB-F-1B-A).

    The safe shutdown requirements are satisfied.

13. Steam Generator Level Transmitters FW-LT-501, FW-LT-503, FW-LT-529, FW-LT-548

    Cables for transmitters FW-LT-501, FW-LT-503, FW-LT-529, FW-LT-548 are located in the same fire area. A Fire could cause loss of indication for all four steam generators. However, the same fire would not affect the redundant level transmitters FW-LT-502, FW-LT-504, FW-LT-519 and FW-LT-537.

    The Appendix R separation requirements are satisfied.

14. Emergency Feedwater Flow Transmitters FW-FT-4214-2, FW-FT-4224-4, FW-FT-4234-2, FW-FT-4244-4

    Failure in this cable could cause spurious closure of one emergency feedwater line. The logic will prevent isolation of additional lines. This leaves three steam generators available for heat removal; hence, safe shutdown is not affected. Although, failure in this cable could also cause loss of flow indication on two emergency feedwater lines, steam generator operability can be monitored by use of SG level indication.

    The safe shutdown requirements are satisfied.

15. Condensate Storage Tank Level FW-LT-4252

All cables are Train A. The Train B level transmitter FW-LT-4257 will be available. In addition, the cables for CST level transmitter CO-LT-4096 are not routed through this area.

The safe shutdown requirements are satisfied.

16. Pressurizer Pressure Transmitters RC-PT-455, RC-PT-457

Redundant channels of pressurizer pressure cables are located in proximity. Spurious operation of two channels will initiate safety injection and containment isolation Phase A signals. The operators will have the capability to terminate SI after 1 minute by use of the manual reset and block switch and terminate the containment isolation by use of the manual reset switch. All ESF equipment which has been started will be tripped and locked out. To preclude further spurious operations, the operators will disable the engineered safety features logic cabinets in the Train A and Train B Switchgear Rooms (Fire Areas: CB-F-1A-A and CB-F-1B-A).

The provision of a capability to mitigate the spurious operation of the pressure transmitters outside the fire area satisfies the safe shutdown requirements.

17. Reactor Coolant Temperature Elements RC-TE-413A, RC-TE-423A, RC-TE-433A, RC-TE-443A

All hot leg RC temperature element cables are routed through this area; however, this function can also be performed by the Train B incore thermocouples IC-TE-XX. The cables for these thermocouples are routed through the Train B electrical tunnel (Fire Area: ET-F-1C-A).

The Appendix R separation requirements are satisfied.

18. Pressurizer Relief Valves RC-PCV-456A, RC-V122

RC-PCV-456A is a normally closed, fail closed valve whose cables are in this fire area. The spurious opening of a PORV can result in an overcooling condition in the RCS. This coupled with the potential unavailability of SI constitutes an unanalyzed condition. The PORV is supplemented with a normally open, series block valve RC-V122. For all fires that have the potential to cause spurious opening of the PORV, the operators will close the block valve by procedure. This will be the first step in the procedure and can readily be accomplished from the main control room. The promptness of this action is justification for the ability to isolate the block valve prior to any spurious valve operations. Under the condition, the initial short will not cause depressurization. To prevent subsequent spurious operations, the operators will de-energize the PORV and the block valve by tripping their power supplies in the Train A switchgear room (Fire Area: CB-F-1A-A).

The safe shutdown requirements are required.

19. Containment Pressure Transmitter SI-PT-935

A cable for one channel of containment pressure instrumentation is routed through this fire area. This channel inputs to 2 out of 3 and 2 out of 4 logics which initiate protective actions. A spurious signal from one channel is not sufficient to initiate the logic and perform the protective action; hence, a failure in this cable will not prevent safe shutdown.

The safe shutdown requirements are satisfied.

C. Evaluation

The safe shutdown requirements and Appendix R separation requirements are satisfied.

Tabulation 3.2.7.50

Electrical Tunnel

Fire Area – ET-F-1B-A

A. Equipment And Cables Located In The Fire Area

	Train A			Train B	
Description	Equip.	Cable	Description	Equip.	Cable
CAH-FN-1C		x			
CAH-FN-1E		x			
CAH-FN-1F		x			
CC-LT-2172-1		x			
CC-LT-2172-2		x			
CC-LT-2172-3		x			
CC-LT-2272-1		x			
CC-LT-2272-2		x			
CC-LT-2272-3		x			
CC-P-322A		x			
CC-V57		x			
CC-V121		x			
ED-X-14J		x			
SA-C-4A		x			
CS-V10		x			
CS-V28		x			
CS-V44		x			
CS-V59		x			
CS-V145		x			
RC-LCV-459		x			
RC-LCV-460		x			
RC-E-10		x			

Electrical Tunnel

Fire Area – ET-F-1B-A

A. Equipment And Cables Located In The Fire Area

Train A			Train B		
Description	Equip.	Cable	Description	Equip.	Cable
RC-PCV-456A		x			
RC-V122		x			
RC-V23		x			
RC-V88		x			
SI-V138		x			
SI-V159		x			
SI-V3		x			
SI-V32		x			
SI-FV-2482		x			
SI-FV-2483		x			
SI-FV-2495		x			
SI-FV-2496		x			
RH-V35		x			
FW-FV-4214A		x			
FW-FV-4224A		x			
FW-FV-4234A		x			
FW-FV-4244A		x			
FW-V156		x			
MS-V86		x			
MS-V88		x			
MS-V90		x			
MS-V92		x			
MS-PV-3001		x			
MS-PV-3002		x			

Electrical Tunnel

Fire Area – ET-F-1B-A

A. Equipment And Cables Located In The Fire Area

	Train A			Train B	
Description	Equip.	Cable	Description	Equip.	Cable
MS-PV-3003		x			
MS-PV-3004		x			
SB-V1		x			
SB-V3		x			
SB-V5		x			
SB-V7		x			
EAH-FN-174A		x			
EDE-CP-248		x			
EDE-MCC-514		x			
EPA-FN-47A		x			
EPA-DP-371		x			
EPA-DP-373		x			
SW-P-41A		x			
SW-P-41C		x			
SW-V2		x			
SW-V22		x			
SW-PT-8272		x			
SW-PT-8273		x			
SW-PT-8274		x			
SWA-FN-40A		x			
FW-LT-501		x			
FW-LT-503		x			
FW-LT-529		x			
FW-LT-548		x			

Electrical Tunnel

Fire Area – ET-F-1B-A

A. Equipment And Cables Located In The Fire Area

Train A			Train B		
Description	Equip.	Cable	Description	Equip.	Cable
FW-PT-514		x			
FW-PT-524		x			
FW-PT-526		x			
FW-PT-534		x			
FW-PT-536		x			
FW-PT-544		x			
FW-LT-4252		x			
FW-FT-4214-2		x			
FW-FT-4224-4		x			
FW-FT-4234-2		x			
FW-FT-4244-4		x			
NI-NE-6690		x			
RC-LT-459		x			
RC-PT-405		x			
RC-PT-455		x			
RC-PT-457		x			
RC-TE-413A		x			
RC-TE-423A		x			
RC-TE-433A		x			
RC-TE-443A		x			
SI-PT-935		x			

B. Analysis

1. General System/Equipment Analysis

With the exception of the systems/equipment discussed below, a fire in this area will only affect the Train A safe shutdown equipment and cables. The redundant Train B safe shutdown equipment and cables are located in fire area ET-F-1C-A.

The Appendix R safe shutdown requirements are satisfied.

2. Component Cooling Water Isolation Valves CC-V57, CC-V121 and Head Tank Level Transmitters CC-LT-2172-1, 2, 3, CC-LT-2272-1, 2, 3

Cables associated with head tank level transmitters which affect the Loop B outboard isolation valves CC-V175 and CC-V257 are routed in the same trays as the Loop A inboard isolation valves CC-V57 and CC-V121. Failures in these cables could cause total loss of PCCW to containment by initiation of a spurious lo-lo head tank level signal. Loop B PCCW can be re-established by transferring control of valves CC-V175 and CC-V257 to local control at the RSS panel in fire area CB-F-1A-A. This removes the lo-lo head tank level isolation function and allows operators to re-open the valves.

The safe shutdown requirements are satisfied.

3. RC Pump Seal Water Isolation Valves CS-V10, CS-V28, CS-V44, CS-V59

The safe shutdown function of these valves is to isolate seal return in the event that valve CS-V168 spuriously closes due to a fire. As cabling for CS-V168 is not routed through this area, the position to these valves is inconsequential.

The safe shutdown requirements are satisfied.

4. Letdown Isolation Valves CS-V145, RC-LCV-459, RC-LCV-460

Functionally redundant Train A series valves CS-V145, RC-LCV-459 and RC-LCV-460 are normally open and are required to close for safe shutdown. CS-V145 can be closed from the main control room. Should this valve not close due to spurious operation, the operators can close either RC-LCV-459 or RC-LCV-460 by tripping their power supply breakers at the Train A switchgear room (Fire Area: CB-F-1A-A). This will prevent further spurious operation.

The safe shutdown requirements are satisfied.

5. Charging Pump Test Line Isolation Valve SI-V159

   On spurious operation of the normally closed, fail closed valve SI-V159 (Train A), the operators will maintain the normally closed high head injection path valves SI-V138 and SI-V139 closed. Charging will then be accomplished utilizing the seal injection path through valves CS-FCV-121, CS-V154, CS-V158, CS-V162 and CS-V166. The cables, controls and equipment required for operation of these valves are not contained in the fire area.

   The capability to provide charging to the RC system through a minimum of one flow path satisfies the safe shutdown requirements.

6. RHR Isolation Valves RC-V23, RC-V88

   RHR isolation valves are permanently disabled in the closed position. For entry into RHR shutdown cooling, valve RC-V88 must be opened. These valves are not required until 9 hours into the event. This can be accomplished manually by entry into containment, if required.

   The safe shutdown requirements are satisfied.

7. Emergency Feedwater Pump Control Valves FW-FV-4214A, FW-FV-4224A, FW-FV-4234A, FW-FV-4244A

   These valves are normally open and at least two valves must remain open for safe shutdown. Spurious closure of one valve will not prevent safe shutdown. The operators will prevent further spurious operations by disabling the power supplies to the unaffected valves in the Train A switchgear room (Fire Area CB-F-1A-A).

   The safe shutdown requirements are satisfied.

8. Not used.

9. Main Steam Isolation Valves MS-V86, MS-V88, MS-V90, MS-V92

   Failure of the Train A cables will not prevent safe shutdown as the redundant Train B cables required for MSIV closure are routed in Fire Area ET-F-1C-A.

   The Appendix R separation requirements are satisfied.

10. Not used.

11. Atmospheric Relief Valves MS-PV-3001, MS-PV-3002, MS-PV-3003, MS-PV-3004

Valves MS-PV-3001, MS-PV-3002, MS-PV-3003 and MS-PV-3004 are normally closed valves. A fire would prevent operation of the Train A capabilities provided for opening and closing these valves. However, the fire would not affect the Train B capabilities and the valves will be operable for safe shutdown.

Spurious opening of even one ARV can result in an overcooling condition in the RCS. This coupled with the potential unavailability of SI constitutes an unanalyzed condition. Since the ARV's are air operated valves, their spurious operation will be prevented by assuring that these valves are placed in a state such that the initial spurious operation in the air supply will not cause the valve to open. This will be accomplished by procedure as one of the first steps for any fire that can affect the integral ARV air system cables. This action is justifiable since it can be accomplished from the main control room. To prevent a subsequent short that could override the initial action and cause the ARV to open, the affected air solenoids will be de-energized from the distribution panel located in Train A switchgear room (Fire Area: CB-F-1A-A).

This will isolate the faulted air supply but will not preclude operation of the ARV since the redundant air solenoids will still be operational.

The safe shutdown requirements are satisfied.

12. Tower Actuation Logic Pressure Transmitters SW-PT-8272, SW-PT-8273, SW-PT-8274

Failure in this cable could initiate a spurious tower actuation signal which would transfer Train A service water cooling capability from the pumphouse to the cooling towers. This transfer will not significantly interrupt Train A service water cooling nor will it have any impact on Train B service water. This failure does not prevent safe shutdown.

The safe shutdown requirements are satisfied.

13. Main Steam Pressure Transmitters FW-PT-514, FW-PT-524, FW-PT-526, FW-PT-534, FW-PT-536, FW-PT-544

    Redundant channels of main steam pressure cables are located in proximity. Spurious operation of the channels will initiate safety injection and containment isolation Phase A signals. The operators will have the capability to terminate SI after one (1) minute by use of the manual reset and block switch and terminate the containment isolation by use of the manual reset switch. All ESF equipment which has been started will be tripped and locked out. To preclude further spurious operations, the operators will disable the engineered safety features logic cabinets in the Train A and Train B switchgear room (Fire Areas: CB-F-1A-A and CB-F-1B-A).

    The safe shutdown requirements are satisfied.

14. Steam Generator Level Transmitters FW-LT-501, FW-LT-503, FW-LT-529, FW-LT-548

    Cables for transmitters FW-LT-501, FW-LT-503, FW-LT-529 and FW-LT-548 are located in the same fire area. A fire could cause loss of indication for all four steam generators. However, the same fire would not affect the redundant level transmitters FW-LT-502, FW-LT-504, FW-LT-519 and FW-LT-537.

    The Appendix R separation requirements are satisfied.

15. Emergency Feedwater Flow Transmitter FW-FT-4214-2, FW-FT-4234-2

    Failure in this cable could cause spurious closure of one emergency feedwater line. The logic will prevent isolation of additional lines. This leaves three steam generators available for heat removal; hence, safe shutdown is not affected. Although failure in this cable could also cause loss of flow indication on two emergency feedwater lines, steam generator operability can be monitored by use of SG level indication.

    The safe shutdown requirements are satisfied.

16. Condensate Storage Tank Level FW-LT-4252

    All cables are Train A. The Train B level transmitter FW-LT-4257 will be available. In addition, the cables for CST level transmitter CO-LT-4096 are not routed through this area.

    The Appendix R separation requirements are satisfied.

17. Pressurizer Pressure Transmitters RC-PT-455, RC-PT-457

Redundant channels of pressurizer pressure cables are located in proximity. Spurious operation of two channels will initiate safety injection and containment isolation Phase A signals. The operators will have the capability to terminate SI after 1 minute by use of the manual reset and block switch and terminate the containment isolation by use to the manual reset switch. All ESF equipment which has been started will be tripped and locked out. To preclude further spurious operations, the operators will disable the engineered safety features logic cabinets in the Train A and Train B switchgear rooms (Fire Areas: CB-F-1A-A and CB-F-1B-A).

The provision of a capability to mitigate the spurious operation of the pressure transmitters outside the fire area satisfies the safe shutdown requirements.

18. Reactor Coolant Temperature Elements RC-TE-413A, RC-TE-423A, RC-TE-433A, RC-TE-443A

All hot leg RC temperature element cables are routed through this area; however, this function can also be performed by the Train B incore thermocouples IC-TE-XX. The cables for these thermocouples are routed through the Train B electrical tunnel (Fire Area: ET-F-1C-A).

The Appendix R separation requirements are satisfied.

19. Containment Pressure Transmitter SI-PT-935

A cable for one channel of containment pressure instrumentation is routed through this fire area. This channel inputs to 2 out of 3 and 2 out of 4 logics which initiate protective actions. A spurious signal from one channel is not sufficient to initiate the logic and perform the protective action; hence, a failure in this cable will not prevent safe shutdown.

The safe shutdown requirements are satisfied.

20. Pressurizer Relief Valves RC-PCV-456A, RC-V122

RC-PCV-456A is normally closed, fail closed valve whose cables are in this fire area. The spurious opening of a PORV can result in an overcooling condition in the RCS. This coupled with the potential unavailability of SI constitutes an unanalyzed condition. The PORV is supplemented with a normally open, series block valve RC-V122. For all fires that have the potential to cause spurious opening of the PORV, the operators will close the block valve by procedure. This will be the first step in the procedure and can readily be accomplished from the main control room. The promptness of this action is justification for the ability to isolate the block valve prior to any spurious valve operations. Under the condition, the initial short will not cause depressurization. To prevent subsequent spurious operations, the operators will de-energize the PORV and the block valve by tripping their power supplies in the Train A switchgear room (Fire Area: CB-F-1A-A).

The safe shutdown requirements are satisfied.

21. High Head Safety Injection Valve SI-V-138

SI-V-138 is a normally closed valve which may be opened to provide a redundant hot standby charging path. The functionally redundant Train B valve SI-V-139 is available to perform this function. Should SI-V-138 spuriously open, the charging pump may have to be stopped to prevent overfill of the pressurizer.

The safe shutdown requirements are satisfied.

C. EVALUATION

The safe shutdown requirements and Appendix R separation requirements are satisfied.

Tabulation 3.2.7.51

Electrical Tunnel

Fire Area – ET-F-1C-A

A. Equipment And Cables Located In The Fire Area

Train A			Train B		
Description	Equip.	Cable	Description	Equip.	Cable
			CAH-FN-1A		x
			CAH-FN-1B		x
			CAH-FN-1D		x
			CC-LT-2192-1		x
			CC-LT-2192-2		x
			CC-LT-2192-3		x
			CC-LT-2292-1		x
			CC-LT-2292-2		x
			CC-LT-2292-3		x
			CC-P-322B		x
			CC-V122		x
			CC-V256		x
			EDE-MM-584	x	x
			ED-PP-8B		x
			ED-X-16A		x
			SA-C-4B		x
			CS-V168		x
			CS-V175		x
			CS-V176		x
			RC-FV-2881		x
			RC-V323		x
			RC-E-10		x

Electrical Tunnel

Fire Area – ET-F-1C-A

A. Equipment And Cables Located In The Fire Area

Train A			Train B		
Description	Equip.	Cable	Description	Equip.	Cable
			RC-PP-6B	x	x
			RC-PCV-456B		x
			RC-V124		x
RC-V23		x	RC-V22		x
RC-V88		x	RC-V87		x
			SI-V158		x
			SI-V17		x
			SI-V47		x
			SI-FV-2475		x
			SI-FV-2476		x
			SI-FV-2477		x
			SI-FV-2486		x
			RH-V36		x
			FW-FV-4214B		x
			FW-FV-4224B		x
			FW-FV-4234B		x
			FW-FV-4244B		x
			FW-P-37B		x
			FW-V347		x
			MS-V88		x
			MS-V90		x
			MS-PV-3002		x
			MS-PV-3003		x
			EAH-FN-174B		x

Electrical Tunnel

Fire Area – ET-F-1C-A

A. Equipment And Cables Located In The Fire Area

Train A			Train B		
Description	Equip.	Cable	Description	Equip.	Cable
			EDE-CP-249		x
			EDE-MCC-614		x
			EPA-FN-47B		x
			EPA-DP-372		x
			EPA-DP-374		x
			SW-P-41B		x
			SW-P-41D		x
			SW-V29		x
			SW-V31		x
			SW-PT-8282		x
			SW-PT-8283		x
			SW-PT-8284		x
			SWA-FN-40B		x
			FW-LT-502		x
			FW-LT-504		x
			FW-LT-519		x
			FW-LT-537		x
			FW-PT-525		x
			FW-PT-535		x
			FW-LT-4257		x
			FW-FT-4214-4		x
			FW-FT-4224-2		x
			FW-FT-4234-4		x
			FW-FT-4244-2		x

Electrical Tunnel

Fire Area – ET-F-1C-A

A. Equipment And Cables Located In The Fire Area

Train A			Train B		
Description	Equip.	Cable	Description	Equip.	Cable
			NI-NE-6691		x
			NI-NT-6691	x	x
			RC-LT-460		x
RC-PT-405	x	x	RC-PT-403	x	x
			RC-PT-456		x
			RC-PT-458		x
			IC-TE-XX		x
			MM-CP-486B		x
			RC-TE-413B		x
			RC-TE-423B		x
			RC-TE-433B		x
			RC-TE-443B		x
SI-PT-935	x	x	SI-PT-934	x	x
			Electrical Penetrations	x	x

B. Analysis

1. General System/Equipment Analysis

With the exception of the systems/equipment discussed below, a fire in this area will only affect the Train B safe shutdown equipment and cables. The redundant Train A safe shutdown equipment and cables are located in fire area ET-F-1A-A.

The Appendix R separation requirements are satisfied.

2. Component Cooling Water Isolation Valves CC-V176, CC-V256 and Head Tank Level Transmitters CC-LT-2192-1, 2, 3, CC-LT-2292-1, 2, 3

   Cables associated with head tank level transmitters which affect the Loop A outboard isolation valves CC-V122 and CC-V168 are routed in the same trays as the Loop B inboard isolation valves CC-V176 and CC-V256. Failures in these cables could cause total loss of PCCW to containment by initiation of a spurious lo-lo heat tank level signal. Loop A PCCW can be re-established by transferring control of valves CC-V122 and CC-V168 to local control at the RSS panel in fire area CB-F-1B-A. This removes the lo-lo head tank level isolation function and allows operators to re-open the valves.

   The safe shutdown requirements are satisfied.

3. RC Pump Seal Water Isolation Valve CS-V168

   Valve CS-V168 is a normally open valve which should remain open for safe shutdown. Spurious isolation of the Train B valve could result in RC inventory loss through the upstream relief valves. This inventory is directed to the PRT and is therefore, non-recoverable. To preclude this loss of inventory, redundant isolation capability is provided for the RC pump seal return lines by means of Train A valves CS-V10, CS-V28, CS-V44 and CS-V59. The cables, controls and equipment required for the operation of CS-V10, CS-V28, CS-V44 and CS-V59 are not contained in this fire area.

   The safe shutdown requirements are satisfied.

4. Letdown Isolation Valves CS-V175, CS-V176

   Functionally redundant Train B series valves CS-V175 and CS-V176 are normally closed and remain closed for safe shutdown. The spurious opening of one valve will not prevent safe shutdown. The operators will prevent further spurious operation by tripping the power supply breakers for CS-V175 and CS-V176 at the Train B switchgear room (Fire Area: CB-F-1B-A).

   The safe shutdown requirements are satisfied.

5. Charging Pump Test Line Isolation Valve SI-V158

On spurious operation of the normally closed, fail closed valve SI-V158 (Train B), the operators will maintain the normally closed high head injection path valves SI-V138 and SI-V139 closed. Charging will be accomplished utilizing the seal injection path through valves CS-FCV-121, CS-V154, CS-V158, CS-V162 and CS-V166.

The cables, controls and equipment required for operation of their valves are not contained in the fire area.

The capability to provide charging to the RC system through a minimum of one flow path satisfies the safe shutdown requirements.

6. Head Vent Valves RC-FV-2881 and RC-V323

Functionally redundant Train B series valves RC-FV-2881 and RC-V323 are normally closed and remain closed for safe shutdown. The spurious opening of one valve will not prevent safe shutdown. The operators will prevent further spurious operation by tripping the power supply breakers for RC-FV-2881 and RC-V323 at the Train B switchgear room (Fire Area: CB-F-1B-A).

The safe shutdown requirements are satisfied.

7. RHR Isolation Valves RC-V22, RC-V23, RC-V87, RC-V88

RHR isolation valves are permanently disabled in the closed position. For entry into RHR shutdown cooling, valves RC-V22 and RC-V23 must be opened. This can be accomplished manually by entry into containment, if required. This manual operation can be delayed as much as 9 hours into the event.

The safe shutdown requirements are satisfied.

8. Emergency Feedwater Pump Control Valves FW-FV-4214B, FW-FV-4224B, FW-FV-4234B, FW-FV-4244B

These valves are normally open and at least two valves must remain open for safe shutdown. Spurious closure of one valve will not prevent safe shutdown. The operators will prevent further spurious operations by disabling the power supplies to the unaffected valves in the Train B switchgear room (Fire Area: CB-F-1B-A).

The safe shutdown requirements are satisfied.

9. Main Steam Isolation Valves MS-V88, MS-V90

Failure of the Train B cables will not prevent safe shutdown as the redundant Train A cables required for MSIV closure are routed in Fire Area ET-F-1A-A.

The Appendix R separation requirements are satisfied.

10. Atmospheric Relief Valves MS-PV-3002, MS-PV-3003

Valves MS-PV-3002 and MS-PV-3003 are normally closed valves. A fire would prevent operation of the Train B capabilities provided for opening and closing these valves. However, the fire would not affect the Train A capabilities and the valves will be operable for safe shutdown.

Spurious opening of even one ARV can result in an overcooling condition in the RCS. This coupled with the potential unavailability of SI constitutes an unanalyzed condition. Since the ARV's are air operated valves, their spurious operation will be prevented by assuring that these valves are placed in a state such that the initial spurious operation in the air supply will not cause the valve to open. This will be accomplished by procedure as one of the first steps for any fire that can affect the integral ARV air system cables. This action is justifiable since it can be accomplished from the main control room. To prevent a subsequent short that could override the initial action and cause the ARV to open, the affected air solenoids will be de-energized from the distribution panel located in Train B switchgear room (Fire Area: CB-F-1B-A).

This will isolate the faulted air supply but will not preclude operation of the ARV since the redundant air solenoids will still be operational.

The safe shutdown requirements are satisfied.

11. Tower Activation Logic Pressure Transmitters SW-PT-8282, SW-PT-8283, SW-PT-8284

Failure in this cable could initiate a spurious tower actuation signal which would transfer one train of service water cooling capability from the pumphouse to the cooling towers. This transfer will not significantly interrupt Train B service water cooling nor will it have any impact on Train A service water. This failure does not prevent safe shutdown.

The safe shutdown requirements are satisfied.

12. Main Steam Pressure Transmitters FW-PT-525, FW-PT-535

A cable for one channel of main steam pressure instrumentation is routed through this fire area. This channel inputs to 2 out of 3 logics which initiate protective actions. A spurious signal from the one channel is not sufficient to initiate the logic. Hence, a failure in this cable will not prevent safe shutdown.

The safe shutdown requirements are satisfied.

13. Steam Generator Level Transmitters FW-LT-502, FW-LT-504, FW-LT-519, FW-LT-537

Cables for transmitters FW-LT-502, FW-LT-504, FW-LT-519, FW-LT-537 are located in the same fire area. A fire could cause loss of indication for all four steam generators. However, the same fire would not affect the redundant level transmitters FW-LT-501, FW-LT-503, FW-LT-529 and FW-LT-548.

The Appendix R separation requirements are satisfied.

14. Emergency Feedwater Flow Transmitter FW-FT-4214-4, FW-FT-4224-2, FW-FT-4234-4, FW-FT-4244-2

Failure in this cable could cause spurious closure of one emergency feedwater line. The logic will prevent isolation of additional lines. This leaves three steam generators available for heat removal; hence, safe shutdown is not affected.

Although, failure in this cable could also cause loss of flow indication on two emergency feedwater lines, steam generator operability can be monitored by use of SG level indication.

The safe shutdown requirements are satisfied.

15. Condensate Storage Tank Level FW-LT-4257

All cables are Train B. The Train A level transmitter FW-LT-4252 will be available. In addition, the cables for CST level transmitter CO-LT-4096 are not routed through this area.

The Appendix R separation requirements are satisfied.

16. Reactor Pressure RC-PT-403, RC-PT-405

Redundant reactor pressure instruments and cables are contained in this area. This function can also be performed by functionally redundant pressurizer pressure transmitters RC-PT-455 or RC-PT-457 routed through Fire Area ET-F-1A-A.

The Appendix R separation requirements are satisfied.

17. Pressurizer Pressure Transmitters RC-PT-456, RC-PT-458

Redundant channels of pressurizer pressure cables are located in proximity. Spurious operation of two channels will initiate safety injection and containment isolation Phase A signals. The operators will have the capability to terminate SI after 1 minute by use of the manual reset and block switch and terminate the containment isolation by use of the manual reset switch. All ESF equipment which has been started will be tripped and locked out. To preclude further spurious operations, the operators will disable the engineered safety features logic cabinets in the Train A and Train B switchgear rooms (Fire Areas: CB-F-1A-A and CB-F-1B-A).

The provision of a capability to mitigate the spurious operation of the pressure transmitters outside the fire area satisfies the safe shutdown requirements.

18. Reactor Coolant Temperature RC-TE-413B, RC-TE-423B, RC-TE-433B, RC-TE-443B

All cold leg RC temperature element cables are routed through this area; however, this function can also be performed by the Train A steam generator pressure transmitters FW-PT-514, FW-PT-524, FW-PT-534, FW-PT-544 because cold leg temperature approximated the saturation temperature corresponding to secondary pressure. The cables for these PT's are routed through fire area ET-F-1A-A.

The safe shutdown requirements are satisfied.

19. Pressurizer Relief Valves RC-PCV-456B, RC-V124

RC-PCV-456B is normally closed, fail closed valve whose cables are in this fire area. The spurious opening of a PORV can result in an overcooling condition in the RCS. This coupled with the potential unavailability of SI constitutes an unanalyzed condition. The PORV is supplemented with a normally open, series block valve RC-V124. For all fires that have the potential to cause spurious opening of the PORV, the operators will close the block valve by procedure. This will be the first step in the procedure and can readily be accomplished from the main control room. The promptness of this action is justification for the ability to isolate the block valve prior to any spurious valve operations. Under the condition, the initial short will not cause depressurization. To prevent subsequent spurious operations, the operators will de-energize the PORV and the block valve by tripping their power supplies in Train B switchgear room (Fire Area: CB-F-1A-A).

The safe shutdown requirements are satisfied.

20. Containment Pressure Transmitters SI-PT-934, SI-PT-935

Redundant channels of containment pressure instruments and cables are located in proximity. Spurious operation of these channels will initiate safety injection, containment spray and containment isolation Phase A and Phase B. The operators will have the capability to terminate the SI after 1 minute by use of manual reset and block switches and terminate the containment spray and containment isolation by use of manual reset switches. All ESF equipment which has been started will be tripped and locked out. To preclude further spurious operations, the operators will disable the engineered safety features logic cabinets in the Train A and Train B switchgear rooms (Fire Areas: CB-1F-1A-A and CB-F-1B-A).

Provision of a capability to mitigate the spurious operation of the pressure transmitters outside the fire area satisfies the safe shutdown requirements.

C. Evaluation

The safe shutdown requirements and Appendix R separation requirements are satisfied.

Tabulation 3.2.7.52

Electrical Tunnel

Fire Area – ET-F-1D-A

A. Equipment And Cables Located In The Fire Area

Train A			Train B		
Description	Equip.	Cable	Description	Equip.	Cable
			CAH-FN-1A		x
			CAH-FN-1B		x
			CAH-FN-1D		x
			CC-LT-2192-1		x
			CC-LT-2192-2		x
			CC-LT-2192-3		x
			CC-LT-2292-1		x
			CC-LT-2292-2		x
			CC-LT-2292-3		x
			CC-P-322B		x
			CC-V176		x
			CC-V256		x
			ED-X-16A		x
			SA-C-4B		x
			CS-V168		x
			CS-V175		x
			CS-V176		x
			PAH-DP-35B		x
			PAH-DP-36B		x
			RC-FV-2881		x
			RC-V323		x
			RC-E-10		x

Electrical Tunnel

Fire Area – ET-F-1D-A

A. Equipment And Cables Located In The Fire Area

Train A			Train B		
Description	Equip.	Cable	Description	Equip.	Cable
			RC-PCV-456B		x
			RC-V124		x
			RC-V22		x
			RC-V87		x
			SI-V139		x
			SI-V158		x
			SI-V17		x
			SI-V47		x
			SI-FV-2475		x
			SI-FV-2476		x
			SI-FV-2477		x
			SI-FV-2486		x
			RH-V36		x
			FW-FV-4214B		x
			FW-FV-4224B		x
			FW-FV-4234B		x
			FW-FV-4244B		x
			FW-P-37B		x
			FW-V-347		x
			MS-V86		x
			MS-V88		x
			MS-V90		x
			MS-V92		x
			MS-PV-3001		x

Electrical Tunnel

Fire Area – ET-F-1D-A

A. Equipment And Cables Located In The Fire Area

Train A			Train B		
Description	Equip.	Cable	Description	Equip.	Cable
			MS-PV-3002		x
			MS-PV-3003		x
			MS-PV-3004		x
			SB-V9		x
			SB-V10		x
			SB-V11		x
			SB-V12		x
			EAH-FN-174B		x
			EDE-CP-249		x
			EDE-MCC-614		x
			EPA-FN-47B		x
			EPA-DP-372		x
			EPA-DP-374		x
			SW-P-41B		x
			SW-P-41D		x
			SW-V29		x
			SW-V31		x
			SW-PT-8282		x
			SW-PT-8283		x
			SW-PT-8284		x
			SWA-FN-40B		x
			CS-LT-106		x
			FW-LT-502		x
			FW-LT-504		x

Electrical Tunnel

Fire Area – ET-F-1D-A

A. Equipment And Cables Located In The Fire Area

Train A			Train B		
Description	Equip.	Cable	Description	Equip.	Cable
			FW-LT-519		x
			FW-LT-537		x
			FW-PT-515		x
			FW-PT-516		x
			FW-PT-525		x
			FW-PT-535		x
			FW-PT-545		x
			FW-PT-546		x
			FW-LT-4257		x
			FW-FT-4214-4		x
			FW-FT-4224-2		x
			FW-FT-4234-4		x
			FW-FT-4244-2		x
			NI-NE-6691		x
			RC-LT-460		x
			RC-PT-403		x
			RC-PT-456		x
			RC-PT-458		x
			IC-TE-XX		x
			MM-CP-486B		x
			RC-TE-413B		x
			RC-TE-423B		x
			RC-TE-433B		x
			RC-TE-443B		x

Electrical Tunnel

Fire Area – ET-F-1D-A

A. Equipment And Cables Located In The Fire Area

Train A			Train B		
Description	Equip.	Cable	Description	Equip.	Cable
			SI-PT-934		x
			SI-PT-936		x
			MM-CP-2		x

B. Analysis

1. General System/Equipment Analysis

With the exception of the systems/equipment discussed below, a fire in this area will only affect the Train B safe shutdown equipment and cables. The redundant Train A safe shutdown equipment and cables are located in fire area ET-F-1A-A.

The Appendix R separation requirements are satisfied.

2. Component Cooling Water Isolation Valves CC-V176, CC-V256 and Head Tank level Transmitters CC-LT-2192-1, 2, 3 and CC-LT-2292-1, 2, 3

Cables associated with head tank level transmitters which affect the Loop A outboard isolation valves CC-V122 and CC-V168 are routed in the same trays as the Loop B inboard isolation valves CC-V176 and CC-V256. Failures in these cables could cause total loss of PCCW to containment by initiation of a spurious lo-lo heat tank level signal. Loop A PCCW can be re-established by transferring control of valves CC-V122 and CC-V168 to local control at the RSS panel in fire area CB-F-1B-A. This removes the lo-lo head tank level isolation function and allows operators to re-open the valves.

The safe shutdown requirements are satisfied.

3. RC Pump Seal Water Isolation Valve CS-V168

Valve CS-V168 is a normally open valve which should remain open for safe shutdown. Spurious isolation of the Train B valve could result in RC inventory loss through the upstream relief valves. This inventory is directed to the PRT and is therefore, non-recoverable. To preclude this loss of inventory, redundant isolation capability is provided for the RC pump seal return lines by means of Train A valves CS-V10, CS-V28, CS-V44 and CS-V59 and the excess letdown line by means of either normally closed, fail closed valves CS-V175 or CS-V176. The cables, controls and equipment required for the operation of CS-V10, CS-V28, CS-V44 and CS-V59 are not contained in this fire area. The cables for valves CS-V175 and CS-V176 are routed in the same trays as the cables for CS-V168. To prevent the spurious closure of CS-V168 or the spurious opening of CS-V175 or CS-V176, the operators will trip their power supply breakers in the Train B switchgear room (Fire Area: CB-F-1B-A).

The safe shutdown requirements are satisfied.

4. Letdown Isolation Valves CS-V175, CS-V176

Functionally redundant Train B series valves CS-V175 and CS-V176 are normally closed and remain closed for safe shutdown. The spurious opening of one valve will not prevent safe shutdown. The operators will prevent further spurious operation by tripping the power supply breakers for CS-V175 and CS-V176 at the Train B switchgear room (Fire Area: CB-F-1B-A).

The safe shutdown requirements are satisfied.

5. Charging Pump Test Line Isolation Valve SI-V158

On spurious operation of the normally closed, fail closed valve SI-V158 (Train B), the operators will maintain the normally closed high head injection path valves SI-V138 and SI-V139 closed. Charging will be accomplished utilizing the seal injection path through valves CS-FCV-121, CS-V154, CS-V158, CS-V162 and CS-V166. The cables, controls and equipment required for operation of these valves are not contained in the fire area.

The capability to provide charging to the RC System through a minimum of one flow path satisfies the safe shutdown requirements.

6. Head Vent Valves RC-FV-2881 and RC-V323

Functionally redundant Train B series valves RC-FV-2881 and RC-V323 are normally closed and remain closed for safe shutdown. The spurious opening of one valve will not prevent safe shutdown. The operators will prevent further spurious operation by tripping the power supply breakers for RC-FV-2881 and RC-V323 at the Train B switchgear room (Fire Area: CB-F-1B-A).

The safe shutdown requirements are satisfied.

7. RHR Isolation Valves RC-V-22, RC-V87

RHR isolation valves are permanently disabled in the closed position. For entry into RHR shutdown cooling, valve RC-V22 must be opened. This can be accomplished manually by entry into containment, if required. This manual operation can be delayed as much as 9 hours into the event.

The safe shutdown requirements are satisfied.

8. Emergency Feedwater Pump Control Valves FW-FV-4214B, FW-FV-4224B, FW-FV-4234B, FW-FV-4244B

These valves are normally open and at least two valves must remain open for safe shutdown. Spurious closure of one valve will not prevent safe shutdown. The operators will prevent further spurious operations by disabling the power supplies to the unaffected valves in the Train B switchgear room (Fire Area: CB-F-1B-A).

The safe shutdown requirements are satisfied.

9. Main Steam Isolation Valves MS-V86, MS-V88, MS-V90, MS-V92

Failure of the Train B cables will not prevent safe shutdown as the redundant Train A cables required for MSIV closure are routed in Fire Area ET-F-1A-A.

The Appendix R separation requirements are satisfied.

10. Atmospheric Relief Valves MS-PV-3001, MS-PV-3002, MS-PV-3003, MS-PV-3004

Valves MS-PV-3001, MS-PV-3002, MS-PV-3003, and MS-PV-3004 are normally closed valves. A fire would prevent operation of the Train B capabilities provided for opening and closing these valves. However, the fire would not affect the Train A capabilities and the valves will be operable for safe shutdown.

Spurious opening of even one ARV can result in an overcooling condition in the RCS. This coupled with the potential unavailability of SI constitutes an unanalyzed condition. Since the ARV's are air operated valves, their spurious operation will be prevented by assuring that these valves are placed in a state such that the initial spurious operation in the air supply will not cause the valve to open. This will be accomplished by procedure as one of the first steps for any fire that can affect the integral ARV air system cables. This action is justifiable since it can be accomplished from the main control room. To prevent a subsequent short that could override the initial action and cause the ARV to open, the affected air solenoids will be de-energized from the distribution panel located in Train B switchgear room (Fire Area: CB-F-1B-A).

This will isolate the faulted air supply but will not preclude operation of the ARV since the redundant air solenoids will still be operational.

The safe shutdown requirements are satisfied.

11. Tower Activation Logic Pressure Transmitters SW-PT-8282, SW-PT-8283, SW-PT-8284

Failure in this cable could initiate a spurious tower actuation signal which would transfer one train of service water cooling capability form the pumphouse to the cooling towers. This transfer will not significantly interrupt Train B service water cooling nor will it have any impact on Train A service water. This failure does not prevent safe shutdown.

The safe shutdown requirements are satisfied.

12. Steam Generator Level Transmitters FW-LT-502, FW-LT-504, FW-LT-519, FW-LT-537

    Cables for transmitters FW-LT-502, FW-LT-504, FW-LT-519, FW-LT-537 are located in the same fire area. A Fire could cause loss of indication for all four steam generators. However, the same fire would not affect the redundant level transmitters FW-LT-501, FW-LT-503, FW-LT-529 and FW-LT-548.

    The Appendix R separation requirements are satisfied.

13. Main Steam Pressure Transmitters FW-PT-515, FW-PT-516, FW-PT-525, FW-PT-535, FW-PT-545, FW-PT-546

    Redundant channels of main steam pressure cables are located in proximity. Spurious operation of the channels will initiate safety injection and containment isolation Phase A signals. The operators will have the capability to terminate SI after 1 minute by use of the manual reset and block switch and terminate the containment isolation by use of the manual reset switch. All ESF equipment which has been started will be tripped and locked out. To preclude further spurious operations, the operators will disable the engineered safety features logic cabinets in the Train A and Train B switchgear rooms (Fire Areas: CB-F-1A-A and CB-F-1B-A).

    The safe shutdown requirements are satisfied.

14. Emergency Feedwater Flow Transmitters FW-FT-4214-4, FW-FT-4224-2, FW-FT-4234-4, FW-FT-4244-2

    Failure in this cable could cause spurious closure of one emergency feedwater line. The logic will prevent isolation of additional lines. This leaves three steam generators available for heat removal; hence, safe shutdown is not affected.

    Although failure in this cable could also cause loss of flow indication on two emergency feedwater lines, steam generator perability can be monitored by use of SG level indication.

    The safe shutdown requirements are satisfied.

15. Condensate Storage Tank Level FW-LT-4257

All cables are Train B. The Train A level transmitter FW-LT-4252 will be available. In addition, the cables for CST level transmitter CO-LT-4096 are not routed through this area.

The Appendix R separation requirements are satisfied.

16. Pressurizer Pressure Transmitters RC-PT-456, RC-PT-458

Redundant channels of pressurizer pressure cables are located in proximity. Spurious operation of two channels will initiate a safety injection signal. The operators will have the capability to terminate SI after 1 minute by use of the manual reset and block switch. All SI equipment which has been started will be tripped and locked out. To preclude further spurious operations, the operators will disable the engineered safety features logic cabinets in the Train A and Train B switchgear rooms (Fire Areas: CB-F-1A-A and CB-F-1B-A).

The provision of a capability to mitigate the spurious operation of the pressure transmitters outside the fire area satisfies the safe shutdown requirements.

17. Reactor Coolant Temperature RC-TE-413B, RC-TE-423B, RC-TE-433B, RC-TE-443B

All cold leg RC temperature element cables are routed through this area; however, this function can also be performed by the Train A steam generator pressure transmitters FW-PT-514, FW-PT-524, FW-PT-534, FW-PT-544 because cold leg temperature approximates the saturation temperature corresponding to secondary pressure. The cables for these PT's are routed through fire area ET-F-1A-A.

The safe shutdown requirements are satisfied.

18. Containment Pressure Transmitters SI-PT-934, SI-PT-936

Redundant channels of containment pressure instruments and cables are located in proximity. Spurious operation of these channels will initiate safety injection, containment spray and containment isolation Phase A and Phase B. The operators will have the capability to terminate the SI after 1 minute by use of manual reset and block switches and terminate the containment spray and containment isolation by use of manual reset switches. All ESF equipment which has been started will be tripped and locked out. To preclude further spurious operations, the operators will disable the engineered safety features logic cabinets in the Train A and Train B switchgear rooms (Fire Areas: CB-F-1A-A and CB-F-1B-A).

The provision of a capability to mitigate the spurious operation of the pressure transmitters outside the fire area satisfies the safe shutdown requirements.

19. Process Protection System Cabinet MM-CP-2

Failure of cable will cause loss of power supply to Channel II process protection system cabinet and related instrumentation. The power supplies to redundant channel PPC are routed through other fire areas and; hence, the PPC's will perform their safe shutdown function.

The Appendix R separation requirements are satisfied.

20. Pressurizer Relief Valves RC-PCV-456B, RC-V124

RC-PCV-456B is a normally closed, fail closed valve whose cables are in this fire area. The spurious opening of a PORV can result in an overcooling condition in the RCS. This coupled with the potential unavailability of SI constitutes an unanalyzed condition. The PORV is supplemented with a normally open, series block valve RC-V122. For all fires that have the potential to cause spurious opening of the PORV, the operators will close the block valve by procedure. This will be the first step in the procedure and can readily be accomplished from the main control room. The promptness of this action is justification for the ability to isolate the block valve prior to any spurious valve operations. Under the condition, the initial short will not cause depressurization. To prevent subsequent spurious operations, the operators will de-energize the PORV and the block valve by tripping their power supply in the Train B switchgear room (Fire Area: CB-F-1B-A).

The safe shutdown requirements are satisfied.

21. Containment Enclosure Isolation Damper, PAH-DP-35B, PAH-DP-36B

Cables for dampers PAH-DP-35B and PAH-DP-36B are routed through this area. Under normal operation both dampers are open. If both dampers go closed, the Containment Enclosure Air Handling (EAH) system operates in the recirculation mode. The normal and recirculation modes for EAH system operation both satisfy the safe shutdown function. Independent operation of either damper (one open and one closed) could cause an air flow problem in EAH system. This assumes that redundant dampers (PAH-DP-35A and PAH-DP-36A) are in their normal open position since they would not be affected by a fire in this area.

Both dampers are powered from a single Train B power supply. The circuit design is such that a spurious signal will cause both dampers to operate together, either both open (normal mode) or both closed (recirculation mode).

The safe shutdown requirements are satisfied.

22. High Head Safety Injection Valve SI-V-139

SI-V-139 is a normally closed valve which may be opened to provide a redundant hot standby charging path. The functionally redundant Train A valve SI-V-138 is available to perform this function. Should SI-V-139 spuriously open, the charging pump may have to be stopped to prevent overfill of the pressurizer.

The safe shutdown requirements are satisfied.

C. Evaluation

The safe shutdown requirements and Appendix R separation requirements are satisfied.

Tabulation 3.2.7.53

Electrical Tunnel- Stairwell

Fire Area – ET-F-S1-0

A. Equipment And Cables Located In The Fire Area

Train A			Train B		
Description	Equip.	Cable	Description	Equip.	Cable
None			None		

B. Analysis

There are no safe shutdown cables or equipment in this fire area.

C. Evaluation

The Appendix R separation requirements do not apply to this fire area.

Tabulation 3.2.7.54

Fire Pump House

Fire Area – FPH-F-1A-A

A. Equipment And Cables Located In The Fire Area

Train A			Train B		
Description	Equip.	Cable	Description	Equip.	Cable
None			None		

B. Analysis

There are no safe shutdown cables or equipment in this fire area.

C. Evaluation

The Appendix R separation requirements do not apply to this fire area.

Tabulation 3.2.7.55

Fire Pump House

Fire Area – FPH-F-1B-A

A. Equipment And Cables Located In The Fire Area

Train A			Train B		
Description	Equip.	Cable	Description	Equip.	Cable
None			None		

B. Analysis

There are no safe shutdown cables or equipment in this fire area.

C. Evaluation

The Appendix R separation requirements do not apply to this fire area.

Tabulation 3.2.7.56

Fire Pump House

Fire Area – FPH-F-1C-A

A. Equipment And Cables Located In The Fire Area

Train A			Train B		
Description	Equip.	Cable	Description	Equip.	Cable
None			None		

B. Analysis

There are no safe shutdown cables or equipment in this fire area.

C. Evaluation

The Appendix R separation requirements do not apply to this fire area.

Tabulation 3.2.7.57

Fuel Storage Building

Fire Area – FSB-F-l-A

A. Equipment And Cables Located In The Fire Area

Train A			Train B		
Description	Equip.	Cable	Description	Equip.	Cable
None			None		

B. Analysis

There are no safe shutdown cables or equipment in this fire area.

C. Evaluation

The Appendix R separation requirements do not apply to this fire area.

Tabulation 3.2.7.58

East Main Steam and Feedwater Pipe Chase

Fire Area – MS-F-1A-Z, MS-F-2A-Z, MS-F-3A-Z, MS-F-4A-Z, MS-F-5A-Z

A. Equipment And Cables Located In The Fire Area

	Train A			Train B	
Description	Equip.	Cable	Description	Equip.	Cable
EAH-FN-174A	x	x	EAH-FN-174B	x	x
EAH-TSH-5136	x	x	EAH-TSH-5763	x	x
EDE-MCC-514		x			
FW-PT-524	x	x	FW-PT-535	x	x
FW-PT-526	x	x			
FW-PT-534	x	x	FW-PT-525	x	x
FW-PT-536	x	x			
MM-IR-51A	x	x	MM-IR-51B	x	x
			MS-PY-3002-1,2	x	x
MS-PY-3002-5,6	x	x	MS-PY-3002-3,4	x	x
MS-PV-3002	x	x	MS-PV-3002	x	x
MS-PY-3003-1,2	x	x			
MS-PY-3003-3,4	x	x	MS-PY-3003-5,6	x	x
MS-PV-3003	x	x	MS-PV-3003	x	x
MS-V86		x			
MS-V92		x			
MS-V88	x	x	MS-V88	x	x
MS-V90	x	x	MS-V90	x	x
MS-CP-182	x	x			
MS-CP-184	x	x			
EDE-CP-248		x			
SW-P-41A		x			

East Main Steam and Feedwater Pipe Chase

Fire Area – MS-F-1A-Z, MS-F-2A-Z, MS-F-3A-Z, MS-F-4A-Z, MS-F-5A-Z

A. Equipment And Cables Located In The Fire Area

	Train A			Train B	
Description	Equip.	Cable	Description	Equip.	Cable
SW-P-41C		x			
SW-V2		x			
SW-V22		x			
SW-PT-8272		x			
SW-PT-8273		x			
SW-PT-8274		x			
SWA-FN-40A		x			

B. ANALYSIS

1. General Area Analysis

The east MS & FW pipe chase is a concrete structure 74'-9" long by 16'-3" wide by 57' high with a floor area of 1220 sq. ft. and a volume of 69,540 cu. ft. The area contains no in situ combustibles other than cables in trays and fiberglass ladders. There is one stack of three cable trays. The bottom tray is an enclosed instrument level tray located approximately 1'-6" above the floor. The other trays are open ladder type trays which are located approximately 10' above the floor. The zone contains approximately 140 lineal ft. of ladder type tray.

Detectors are provided throughout the area.

2. System Analysis

a. Containment Enclosure Ventilation Fans EAH-FN-174A, EAH-FN-174B and Temperature Switches, EAH-TSH-5136, EAH-TSH-5763.

Redundant ventilation fans and related cables are located in proximity. The purpose of these fans is to provide cooling for the Train A MSIV logic cabinets and the main steam pressure instrumentation. The failure of these fans will not prevent safe shutdown as the Train B logic cabinets and the main steam pressure transmitters FW-PT-514 and FW-PT-545 are not in the same fire area. The Train B logic cabinets are in the Train B switchgear room (Fire Area CB-F-1B-A) and the main steam pressure transmitters FW-PT-514 and FW-PT-545 are located in the west main steam and feedwater pipe chase (Fire Zone MS-F-1B-Z). These logic cabinets and pressure transmitters will perform their safe shutdown function.

The Appendix R separation requirements are satisfied.

b. 460 Volt Motor Control Center EDE-MCC-514

All cables are Train A. The redundant Train B cables are in Fire Area DCT-F-1B-0.

The Appendix R separation requirements are satisfied.

c. Main Steam Pressure Transmitters FW-PT-524, FW-PT-525, FW-PT-526, FW-PT-534, FW-PT-535, FW-PT-536 and Instrument Racks, MM-IR-51A, MM-IR-51B.

Redundant channels of main steam pressure instruments and cables are located in proximity. Spurious operation of the channels will initiate safety injection and containment isolation Phase A signals. The operators will have the capability to terminate SI after one (1) minute by use of the manual reset and block switch and terminate the containment isolation by use of the manual reset switch. All ESF equipment which has been started will be tripped and locked out.

To preclude further spurious operations, the operators will disable the engineered safety features logic cabinets in the Train A and Train B Switchgear Rooms (Fire Areas: CB-F-1A-A and CB-F-1B-A).

Additionally main steam line pressure transmitters FW-PT-525 and FW-PT-534 utilized for process monitoring are located in the same fire areas. A fire could cause loss of indication from both main steam line pressure transmitters. However, the same fire would not affect pressure transmitters FW-PT-514 and FW-PT-545 which are functionally redundant and are located in the west main steam and feedwater pipe chase. (Fire Area: MS-F-1B-Z). These pressure transmitters and their associated atmospheric relief valves MS-PV-3001 and MS-PV-3004 will perform their safe shutdown function.

The Appendix R separation requirements are satisfied.

d. Atmospheric Relief Valves MS-PV-3002, MS-PV-3003 and Associated Solenoids.

Valves MS-PV-3002 and MS-PV-3003 are normally closed valves. A fire could prevent operation of these valves. However, the same fire would not prevent the operation of valves MS-PV-3001 and MS-PV-3004 which are in the west main steam and feedwater pipe chase (Fire Area: MS-F-1B-Z, MS-F-2B-Z).

Spurious opening of even one ARV can result in an overcooling condition in the RCS. This coupled with the potential unavailability of SI constitutes an unanalyzed condition. Since the ARV's are air operated valves, their spurious operation will be prevented by assuring that these valves are placed in a state such that the initial spurious operation in the air supply will not cause the valve to open. This will be accomplished by procedure as one of the first steps for any fire that can affect the integral ARV air system cables. This action is justifiable since it can be accomplished from the main control room. To prevent a subsequent short that could override the initial action and cause the ARV to open, the affected air solenoids will be de-energized from the distribution panels located in Train A and Train B switchgear rooms (Fire Areas: CB-F-1A-A and CB-F-1B-A).

This will isolate the faulted air supply but will not preclude operation of the ARV since the redundant air solenoids will still be operational.

The safe shutdown requirements are satisfied.

e. Main Steam Isolation Valves (MSIV) MS-V88 and MS-V90 and Logic Cabinet MS-CP-182, MS-CP-184.

The valves MS-V88 and MS-V90 have no redundant counterpart, but they are supplied with redundant control capabilities. The Train A cables are routed in tray and conduit to the MSIV's and their respective Train A logic cabinets. The Train B cables are routed in conduit on the opposite side of the MS & FW pipe chase. Their is a minimum horizontal separation of 10' up to the point that the conduits must run to the valves. The Train B conduits are routed approximately 15' above the floor. The MSIV'S, connection boxes and electrical equipment are located approximately 25' above the floor. The Train B conduits are a minimum of 20' above the floor at the point they are in proximity to the Train A conduits. The Train A and Train B controls are on opposite sides of the MSIV approximately 2' apart.

These valves are closed as an initial operator action. Should an MSIV reopen due to spurious operation (loss of power to both trains), the operators will isolate all feedwater to its respective steam generator and allow the SG to dry out. In the worst case this condition could occur to both MSIV'S. The two steam generators and their associated MSIV's in the west main steam and feedwater pipe chase (Fire Area: MS-F-1B-Z, MS-F-2B-Z) will be available for safe shutdown.

The safe shutdown requirements are satisfied.

f. Main Steam Isolation Valves (MSIV) MS-V86 and MS-V92

Valves MS-V86 and MS-V92 receive logic signals from both the Train A and the Train B MSIV logic cabinets. The cables and equipment in this Fire Area are associated with the Train A logic. The Train B logic cables and equipment are not routed through this fire area; hence, they will perform their safety function (MSIV trip).

The Appendix R separation requirements are satisfied.

g. Not used.

h. Service Water Pumps SW-P-41A and SW-P-41C

All cables are Train A. The redundant Train B cables are in Fire Area DCT-F-1B-0.

The Appendix R separation requirements are satisfied.

i. Service Water Valves SW-V2 and SW-V22

All cables are Train A. The redundant Train B cables are in Fire Area DCT-F-1B-0.

The Appendix R separation requirements are satisfied.

j. Tower Activation Logic Pressure Transmitters SW-PT-8272, SW-PT-8273, SW-PT-8274 and Tower Actuation Panel EDE-CP-248

Failure in this cable could initiate a spurious tower actuation signal which would transfer one train of service water cooling capability from the pumphouse to the cooling towers. This transfer will not significantly interrupt Train A service water cooling nor will it have any impact on Train B service water. This failure does not prevent safe shutdown.

The safe shutdown requirements are satisfied.

k. Service Water Air Handling Fan SWA-FN-40A

All cables are Train A. The redundant Train B cables are in Fire Area DCT-F-1B-0.

The Appendix R separation requirements are satisfied.

C. Evaluation

The safe shutdown requirements and Appendix R separation requirements are satisfied.

Tabulation 3.2.7.59

West Main Steam and Feedwater Pipe Chase

Fire Area – MS-F-1B-Z, MS-F-2B-Z, MS-F-3B-Z

A. Equipment And Cables Located In The Fire Area

Train A			Train B		
Description	Equip.	Cable	Description	Equip.	Cable
FW-PT-514	x	x	FW-PT-545	x	x
FW-PT-544	x	x	FW-PT-515	x	x
FW-V156	x	x	FW-PT-516	x	x
			FW-PT-546	x	x
MM-IR-52A	x	x	MM-IR-52B	x	x
MS-PY-3001-1, 2	x	x			
MS-PY-3001-3, 4	x	x	MS-PY-3001-5, 6	x	x
MS-PV-3001	x	x	MS-PV-3001	x	x
			MS-PY-3004-1, 2	x	x
MS-PY-3004-5, 6	x	x	MS-PY-3004-3, 4	x	x
MS-PV-3004	x	x	MS-PV-3004	x	x
MS-V86	x	x	MS-V86	x	x
MS-V92	x	x	MS-V92	x	x
			SB-V9	x	x
			SB-V10	x	x
			SB-V11	x	x
			SB-V12	x	x

B. Analysis

1. General Area Analysis

The west MS & FW pipe chase is a concrete structure 66'-9" long by 14' wide by 57' high with a floor area of 935 sq. ft. and a volume of 64,700 cu. ft.

The only in situ combustibles contained in the area consist of one gallon of oil in the steam recirculation pump for a fire loading of 150,000 Btu's and fiberglass ladders for a fire loading of 1,586,000 Btu's. There are no cables in trays.

Detectors are provided throughout the area.

2. System/Equipment Analysis

a. Main Steam Pressure Transmitters FW-PT-514, FW-PT-515, FW-PT-516, FW-PT-544, FW-PT-545, FW-PT-546 and Instrument Racks, MM-IR-52A, MM-IR-52B.

Redundant channels of main steam pressure instruments and cables are located in proximity. Spurious operation of the channels will initiate safety injection and containment isolation Phase A signals. The operators will have the capability to terminate SI after 1 minute by use of the manual reset and block switch and terminate containment isolation by use of the manual reset switch. All ESF equipment which has been started will be tripped and locked out. To preclude further spurious operations, the operators will disable the engineered safety features logic cabinets in the Train A and Train B switchgear rooms (Fire Areas: CB-F-1A-A and CB-F-1B-A).

Additionally main steam line pressure transmitters FW-PT-514 and FW-PT-545 utilized for process monitoring are located in the same fire areas. A fire could cause loss of indication from both main steam line pressure transmitters. However, the same fire would not affect pressure transmitters FW-PT-525 and FW-PT-534 which are functionally redundant and are located in the east main steam and feedwater pipe chase. (Fire Area: MS-F-3A-Z). These pressure transmitters and their associated atmospheric relief valves MS-PV-3002 and MS-PV-3003 will perform their safe shutdown function.

The safe shutdown requirements and Appendix R separation requirements are satisfied.

b. Atmospheric Relief Valves MS-PV-3001, MS-PV-3004 and Associated Solenoids.

Valves MS-PV-3001 and MS-PV-3004 are normally closed valves. A fire could prevent operation of these valves. However, the same fire would not prevent the operation of valves MS-PV-3002 and MS-PV-3003 which are in the west main steam and feedwater pipe chase (Fire Areas: MS-F-1A-Z, MS-F-2A-Z).

Spurious opening of even one ARV can result in an overcooling condition in the RCS. This coupled with the potential unavailability of SI constitutes an unanalyzed condition. Since the ARV's are air operated valves, their spurious operation will be prevented by assuring that these valves are placed in a state such that the initial spurious operation in the air supply will not cause the valve to open. This will be accomplished by procedure as one of the first steps for any fire that can affect the integral ARV air system cables. This action is justifiable since it can be accomplished from the main control room. To prevent a subsequent short that could override the initial action and cause the ARV to open, the affected air solenoids will be de-energized from the distribution panels located in Train A and Train B switchgear rooms (Fire Areas: CB-F-1A-A and CB-F-1B-A).

This will isolate the faulted air supply but will not preclude operation of the ARV since the redundant air solenoids will still be operational.

The safe shutdown requirements are satisfied.

c. Main Steam Isolation Valves (MSIV) MS-V86 and MS-V92

The valves MS-V86 and MS-V92 have no redundant counterpart, but they are supplied with redundant control capabilities. The Train A and Train B conduits are on opposite sides of the west MS & FW pipe chase with a minimum horizontal separation of 10' up to the point that the conduits must run to the valves. The MSIV connection boxes and electrical equipment are located approximately 25' above the floor. The Train B conduits are a minimum of 20' above the floor at the point they are in proximity to the Train A conduits. The Train A and Train B controls are on opposite sides of the MSIV approximately 2' apart.

These valves are closed as an initial operator action. Should an MSIV reopen due to spurious operation (loss of power to both trains), the operators will isolate all feedwater to its respective steam generator and allow the SG to dry out. In the worst case this condition could occur to both MSIV'S. The two steam generators and their associated MSIV's in the east main steam and feedwater pipe chase (Fire Areas: MS-F-1A-Z and MS-F-2A-Z) will be available for safe shutdown.

The safe shutdown requirements are satisfied.

d. Not used.

C. Evaluation

The safe shutdown requirements and Appendix R separation requirements are satisfied.

Tabulation 3.2.7.60

East Air Make-Up Pit

Fire Area – MUA-F-1-0

A. Equipment And Cables Located In The Fire Area

Train A			Train B		
Description	Equip.	Cable	Description	Equip.	Cable
None			None		

B. Analysis

There are no safe shutdown cables or equipment in this fire area.

C. Evaluation

The Appendix R separation requirements do not apply to this fire area.

Tabulation 3.2.7.61

This page intentionally left blank.

Tabulation 3.2.7.62

Non-Essential Switchgear Room

Fire Area – NES-F-1A-Z

A. Equipment And Cables Located In The Fire Area

	Train A			Train B	
Description	Equip.	Cable	Description	Equip.	Cable
ED-CP-532	x	x			
ED-I-4	x	x			
ED-PP-5	x	x			
ED-PP-121B	x	x			
ED-PP-122A		x			
ED-SWG-l	x	x			
ED-SWG-2	x	x			
ED-US-11		x			
ED-US-23		x			
EDE-SWG-5		x			
FW-P-113		x			
FW-P-161		x			
MM-CP-153		x			
RC-P-1A		x			
RC-P-1B		x			
RC-P-1C		x			
RC-P-1D		x			

B. Analysis

Loss of ED-I-4, ED-PP-5, ED-CP-532, MM-CP-153 will cause loss of CST level instrumentation CO-LT-4096. Redundant equipment is located in fire area EFP-F-1-A.

RC pump switchgear control power (ED-SWG-l and ED-SWG-2) is lost. The RC pump switchgear is located in the fire area. The operator will trip the pumps by tripping offsite power from the control room.

Pressurizer heaters C, D and control group control power (ED-US-11 and ED-US-23) will be lost due to this fire. If the heaters require tripping, an operator will do so manually in the Train A switchgear room (Fire Area: CB-F-1A-A). Alternatively, the operator can reduce pressure by opening a PORV. Redundant heaters are available with control power from the emergency DC bus.

Cables from EDE-SWG-5 are located in this fire area. Loss of one cable could cause loss of offsite power which is acceptable since both diesel generators are available.

C. Evaluation

The safe shutdown requirements are satisfied.

Tabulation 3.2.7.63

Primary Auxiliary Building

Fire Area – PAB-F-1A-Z

A. Equipment And Cables Located In The Fire Area

Train A			Train B		
Description	Equip.	Cable	Description	Equip.	Cable
			CC-P-11B		x
			CC-P-11D		x
			CC-TE-2271		x
			CC-TV-2271-1		x
			CC-TV-2271-2		x
			CC-V122		x
			CC-V168		x
			CC-V1092		x
			CC-V1095		x
CS-E-5A	x		CS-E-5B	x	
CS-FCV-121		x	SI-V139		x
CS-FT-121	x	x			
CS-HCV-182	x	x			
MM-IR-17	x	x			
			CS-LCV-112C		x
			CS-LCV-112E		x
CS-P-2A		x	CS-P-2B		x
			CS-P-3B		x
			CS-V143		x
CS-V196		x	CS-V197		x
			EAH-FN-5B		x
			EAH-FN-31B		x

Primary Auxiliary Building

Fire Area – PAB-F-1A-Z

A. Equipment And Cables Located In The Fire Area

Train A			Train B		
Description	Equip.	Cable	Description	Equip.	Cable
			EDE-SWG-6		x
EDE-MCC-513		x			
			PAH-DP-43B		x
			PAH-DP-358		x
			PAH-FN-42B		x
			RC-V22		x
			RC-V87		x
SW-FN-51A		x			
SW-P-41A		x	SW-P-41B		x
SW-P-41C		x	SW-P-41D		x
SW-P-110A		x			
			SW-V5		x
			SW-V18		x
			SW-V19		x
			SW-V23		x
SW-V54		x	SW-V25		x
SW-V56		x			
SW-V139		x			
SWA-DP-66		x			
SWA-FN-64		x			
SWA-FN-71		x			

B. Analysis

For Analysis, see Primary Auxiliary Building Zone Analysis and Evaluation.

C. Evaluation

For Evaluation, see Primary Auxiliary Building Zone Analysis and Evaluation.

Tabulation 3.2.7.64

Primary Auxiliary Building

Fire Area – PAB-F-1B-Z

A. Equipment And Cables Located In The Fire Area

Train A			Train B		
Description	Equip.	Cable	Description	Equip.	Cable
None			None		

B. Analysis

There are no safe shutdown cables or equipment in this fire area.

C. Evaluation

The Appendix R separation requirements do not apply to this fire area.

Tabulation 3.2.7.65

Primary Auxiliary Building

Fire Area – PAB-F-1F-Z

A. Equipment And Cables Located In The Fire Area

Train A			Train B		
Description	Equip.	Cable	Description	Equip.	Cable
None			None		

B. Analysis

There are no safe shutdown cables or equipment in this fire area.

C. Evaluation

The Appendix R separation requirements do not apply to this fire area.

Tabulation 3.2.7.66

Primary Auxiliary Building

Fire Area – PAB-F-lJ-Z

A. Equipment And Cables Located In The Fire Area

	Train A			Train B	
Description	Equip.	Cable	Description	Equip.	Cable
CC-V175		x			
CC-V257		x			
CS-FCV-121	x	x			
CS-FY-121B	x	x			
CS-V158		x			
CS-V196	x	x	CS-V197	x	x
RC-V23		x			
RC-V88		x			
SI-PT-937		x	SI-PT-936		x
SI-V138		x			

B. Analysis

For Analysis, see Primary Auxiliary Building Zone Analysis and Evaluation.

C. Evaluation

For Evaluation, see Primary Auxiliary Building Zone Analysis and Evaluation.

Tabulation 3.2.7.67

Primary Auxiliary Building

Fire Area – PAB-F-lK-Z

A. Equipment And Cables Located In The Fire Area

	Train A			Train B	
Description	Equip.	Cable	Description	Equip.	Cable
CS-LCV-112B		x	CS-LCV-112C		x
CS-LCV-112D		x	CS-LCV-112E		x
PAH-DP-43A	x	x	PAH-DP-43B	x	x
PAH-DP-357		x	PAH-DP-358		x
PAH-FN-42A		x	PAH-FN-42B		x
SW-V4	x	x	SW-V5	x	x
SW-V74	x	x			

B. Analysis

For Analysis, see Primary Auxiliary Building Zone Analysis and Evaluation.

C. Evaluation

For Evaluation, see Primary Auxiliary Building Zone Analysis and Evaluation.

Tabulation 3.2.7.68

Primary Auxiliary Building

Fire Area – PAB-F-2A-Z

A. Equipment And Cables Located In The Fire Area

Train A			Train B		
Description	Equip.	Cable	Description	Equip.	Cable
CS-FCV-110A		x			
CS-FCV-111A		x			
CS-FCV-110B		x			
CS-FCV-111B		x			
CS-LT-102		x	CS-LT-106		x
CS-P-3A		x			
			CS-V426		x
			EAH-FN-5B		x
EDE-MCC-513		x			
PAH-DP-35A	x	x	PAH-DP-35B		x
PAH-DP-36A		x	PAH-DP-36B		x
PAH-DP-43A		x			
PAH-DP-357		x			
PAH-FN-42A		x			
SW-FN-51A		x			
SW-P-41A		x			
SW-P-41C		x			
SW-P-110A		x			
SW-V54		x			
SW-V56		x			
SW-V139		x			
SWA-DP-66		x			

Primary Auxiliary Building

Fire Area – PAB-F-2A-Z

A. Equipment And Cables Located In The Fire Area

	Train A			Train B	
Description	Equip.	Cable	Description	Equip.	Cable
SWA-FN-64		x			
SWA-FN-71		x			

B. Analysis

For Analysis, see Primary Auxiliary Building Zone Analysis and Evaluation.

C. Evaluation

For Evaluation, see Primary Auxiliary Building Zone Analysis and Evaluation.

Tabulation 3.2.7.69

Primary Auxiliary Building

Fire Area – PAB-F-2B-Z

A. Equipment And Cables Located In The Fire Area

	Train A			Train B	
Description	Equip.	Cable	Description	Equip.	Cable
CS-FCV-110A	x	x			
CS-FCV-111A	x	x			
CS-FCV-110B	x	x			
CS-FCV-111B	x	x			
CS-LT-102	x	x	CS-LT-106	x	x
CS-P-3A	x	x	CS-P-3B	x	x
			CS-V426	x	x
CS-V410	x		CS-V410	x	
CS-V416	x		CS-V416	x	
CS-V431	x		CS-V423	x	
CS-V437	x		CS-V1207	x	
CS-V439	x		CS-V439	x	
CS-V442	x		CS-V442	x	
CS-TK-4A	x		CS-TK-4B	x	
PAH-DP-43A		x			
PAH-DP-357		x			
PAH-FN-42A		x			

B. Analysis

For Analysis, see Primary Auxiliary Building Zone Analysis and Evaluation.

C. Evaluation

For Evaluation, see Primary Auxiliary Building Zone Analysis and Evaluation.

Tabulation 3.2.7.70

Primary Auxiliary Building

Fire Area – PAB-F-2C-Z

A. Equipment And Cables Located In The Fire Area

	Train A			Train B	
Description	Equip.	Cable	Description	Equip.	Cable
CC-LT-2172-1		x	CC-LT-2192-1		x
CC-LT-2172-2		x	CC-LT-2192-2		x
CC-LT-2172-3		x	CC-LT-2192-3		x
CC-LT-2272-1		x	CC-LT-2292-1		x
CC-LT-2272-2		x	CC-LT-2292-2		x
CC-LT-2272-3		x	CC-LT-2292-3		x
CC-P-11A	x	x	CC-P-11B	x	x
CC-P-11C	x	x	CC-P-11D	x	x
CC-TE-2171	x	x	CC-TE-2271	x	x
CC-TE-2197	x	x	CC-TE-2297	x	x
CC-TV-2171-1	x	x	CC-TV-2271-1	x	x
CC-TV-2171-2	x	x	CC-TV-2271-2	x	x
CC-TY-2171	x	x	CC-TY-2271	x	x
MM-IR-93	x	x			
CC-E-17A	x		CC-E-17B	x	
CS-FT-121		x			
CS-FCV-110A		x			
CS-FCV-111A		x			
CS-FCV-110B		x			
CS-FCV-111B		x			
CS-FCV-121		x			
CS-HCV-182		x			

Primary Auxiliary Building

Fire Area – PAB-F-2C-Z

A. Equipment And Cables Located In The Fire Area

Train A			Train B		
Description	Equip.	Cable	Description	Equip.	Cable
CS-LT-102		x	CS-LT-106		x
CS-LCV-112B		x	CS-LCV-112C		x
CS-LCV-112D		x	CS-LCV-112E		x
CS-P-2A		x			
CS-P-3A		x	CS-P-3B		x
CS-V196		x			
			CS-V426		x
EDE-MCC-513		x			
EAH-FN-5A		x	EAH-FN-5B		x
EAH-FN-31A		x	EAH-FN-31B		x
PAH-DP-35A		x	PAH-DP-35B		x
PAH-DP-36A	x	x	PAH-DP-36B		x
PAH-DP-43A		x	PAH-DP-43B		x
PAH-DP-357	x	x	PAH-DP-358	x	x
PAH-FN-42A	x	x	PAH-FN-42B	x	x
PAH-TSH-5391	x	x	PAH-TSH-5393	x	x
SW-FN-51A		x			
SW-P-41A		x			
SW-P-41C		x			
SW-P-110A		x			
SW-V4		x	SW-V5		x
SW-V15		x			
SW-V16		x	SW-V18		x

Primary Auxiliary Building

Fire Area – PAB-F-2C-Z

A. Equipment And Cables Located In The Fire Area

	Train A			Train B	
Description	Equip.	Cable	Description	Equip.	Cable
SW-V20	x	x	SW-V19	x	x
SW-V34	x	x	SW-V23	x	x
SW-V54		x			
SW-V56		x			
SW-V74		x			
SW-V139		x			
SWA-DP-66		x			
SWA-FN-64		x			
SWA-FN-71		x			

B. Analysis

For Analysis, see Primary Auxiliary Building Zone Analysis and Evaluation.

C. Evaluation

For Evaluation, see Primary Auxiliary Building Zone Analysis and Evaluation.

Tabulation 3.2.7.71

Primary Auxiliary Building

Fire Area – PAB-F-3A-Z

A. Equipment And Cables Located In The Fire Area

	Train A			Train B	
Description	Equip.	Cable	Description	Equip.	Cable
CC-LT-2172-1	x	x	CC-LT-2192-1	x	x
CC-LT-2172-2	x	x	CC-LT-2192-2	x	x
CC-LT-2172-3	x	x	CC-LT-2192-3	x	x
CC-LT-2272-1		x	CC-LT-2292-1		x
CC-LT-2272-2		x	CC-LT-2292-2		x
CC-LT-2272-3		x	CC-LT-2292-3		x
EDE-TBX-YH4	x	x	EDE-TBX-YH5	x	x
CC-TK-19A	x		CC-TK-19B	x	
CS-FCV-110A		x			
CS-FCV-111A		x			
CS-FCV-110B		x			
CS-FCV-111B		x			
CS-LCV-112B		x			
CS-LCV-112D		x			
DG-E-42A	x		DG-E-42B	x	
SW-V4		x	SW-V5		x
SW-V15	x	x	SW-V17	x	
SW-V16	x	x	SW-V18	x	x

B. Analysis

For Analysis, see Primary Auxiliary Building Zone Analysis and Evaluation.

C. Evaluation

For Evaluation, see Primary Auxiliary Building Zone Analysis and Evaluation.

Tabulation 3.2.7.72

Primary Auxiliary Building

Fire Area – PAB-F-3B-Z

A. Equipment And Cables Located In The Fire Area

	Train A			Train B	
Description	Equip.	Cable	Description	Equip.	Cable
CC-LT-2272-1	x	x	CC-LT-2292-1	x	x
CC-LT-2272-2	x	x	CC-LT-2292-2	x	x
CC-LT-2272-3	x	x	CC-LT-2292-3	x	x
CS-FCV-110A		x			
CS-FCV-111A		x			
CS-FCV-110B		x			
CS-FCV-111B		x			
CS-LCV-112B	x	x	CS-LCV-112C	x	x
CS-LCV-112D		x	CS-LCV-112E		x

B. Analysis

For Analysis, see Primary Auxiliary Building Zone Analysis and Evaluation.

C. Evaluation

For Evaluation, see Primary Auxiliary Building Zone Analysis and Evaluation.

Tabulation 3.2.7.73

Primary Auxiliary Building

Fire Area – PAB-F-4-Z

A. Equipment And Cables Located In The Fire Area

Train A			Train B		
Description	Equip.	Cable	Description	Equip.	Cable
None			None		

B. Analysis

There are no safe shutdown cables or equipment in this fire zone.

C. Evaluation

The Appendix R separation requirements do not apply to this zone.

PAB Zone

Primary Auxiliary Building

Zone Analysis And Evaluation

B. Analysis

1. General Area Analysis

a. The PAB is a Class 1 concrete structure which contains the above listed equipment and cable required for safe shutdown. The PAB has been divided into several zones for fire protection analysis, with intervening walls, floors and ceilings of poured concrete.

b. The significant in situ combustibles consist of 0.2 gallon of oil in each of the two boron injection pumps; 1.0 gallon of oil in the monorail crane hoists; 1.0 gallon of oil in each of the two chiller pumps; 0.25 gallon of oil in each of the two reactor makeup water pumps; 1.0 pound of grease in each of the two boric acid transfer pumps; 1.0 gallon of oil in each of the four primary component cooling pumps; 0.5 gallon of oil in each of the two flash tank distillate pumps; 32,500 lbs. of charcoal within filters PAH-F-16 and CAP-F-40 and 19,000 pounds of insulation for cables in trays. The analysis of the in situ fire load provided by the cable in trays is contained in the "Zone Analyses". An analysis of the Design Basis Fires for the remaining combustibles is contained in the "Fire Protection Program Evaluation of Comparison to Branch Technical Position APCSB 9.5-1, Appendix A" and is summarized as follows:

1) Elevation 7'-0" and Below

a) Fire Zone PAB-F-1A-Z

Total fire loading for 6.0 gallons of oil is 900,000 Btu (chiller pumps CS-P-7A, and CS-P-7B and reactor makeup water pumps RMW-P-16A and RMW-P-16B), and the fire loading for fiberglass ladders is (28 pounds plastic) 364,000 Btu.

b) Fire Zone PAB-F-1J-Z

Limited in situ combustibles in pumps.

c) Fire Zone PAB-F-1K-Z

No combustibles

2) Elevation 25'-0"

a) Fire Zone PAB-F-2A-Z

Total fire load for fiberglass ladders is (71 pounds plastic) 923,000 Btu.

b) Fire Zone PAB-F-2B-Z

Total fire loading for 2.0 pounds of grease is 36,000 Btu (boric acid transfer pumps CS-P-3A and CS-P-3B).

c) Fire Zone PAB-F-2C-Z

Total fire loading for 5.25 gallons of oil is 787,500 Btu (PCCW pumps CC-P-11A, 11B, 11C and 11D; 3½ ton monorail crane hoist CS-CR-13; 4½ ton monorail crane hoist CS-CR-5; boron injection pumps SI-P-4A and SI-P-4B).

3) Elevation 53'-0"

a) Fire Zone PAB-F-3A-Z

Total fire loading for 1.0 gallon of oil is 150,000 Btu (flash tank distillate pumps SB-P-171A and SB-P-171B).

b) Fire Zone PAB-F-3B-Z

Total fire loading for 0.5 gallon of oil is 75,000 Btu (4½ ton monorail crane hoist CS-CR-6) and for 50 pounds of Class A material is 400,000 Btu and for fiberglass ladders is (71 pounds plastic) 923,000 Btu. See "Fire Protection Program Evaluation and Comparison to Branch Technical Position APCSB 9.5-1 Appendix A" for analysis of 6600 lbs. of charcoal in CAP-F-40.

c. The Train A safe shutdown cables are routed in trays. The Train B safe shutdown cables are routed in conduits with a one-hour, fire-rated barrier from the fire area boundary where they enter the PAB to the fire area boundary where they exit or the equipment at which they terminate, except as discussed in the zone analyses.

d. Detectors are provided in all zones of the PAB with the exception of Fire Zones PAB-F-1B-Z, PAB-F-1F-Z and PAB-F-1K-Z.

e. Suppression is provided in Fire Zone PAB-F-2C-Z. Details are provided in the zone analysis.

f. Early fire detection by use of carbon monoxide detectors within the charcoal filter CAP-F-40 is provided.

g. Volume control tank (VCT) isolation valves CS-LCV-112B & -112C are normally open to provide a suction path from the VCT to the normally operating charging pump (CS-P-2A or –2B). These valves must stay open until RWST valve CS-LCV-112D or –112E is manually opened to provide a charging pump suction path from the RWST, or the boric acid tanks are manually aligned as a charging pump suction source. Spurious closure of a VCT isolation valve caused by a hot short would interrupt suction flow to the operating charging pump causing it to be damaged. If the standby charging pump has cables in the same area then its operation can also be degraded. The result would be no charging system flow.

The following PAB fire zones have been combined into one fire area for analysis purposes:
PAB-F-1A-Z, PAS-F-1J-Z, PAB-F-1K-Z, PAB-F-2A-Z, PAB-F-2B-Z, PAB-F-2C-Z, PAB-F-3A-Z, and PAB-F-3B-Z.

Since this combined fire area contains cables for CS-LCV-112B, CS-LCV-112C, CS-P-2A and CS-P-2B, this condition is potentially applicable for the system alignment with either combination of CS-P-2A and CS-P-2B as the standby pump and operating pump.

The CS-LCV-112B and CS-LCV-112C circuit design prevents spurious valve closure from hot shorts as follows. The field cable conductors for the motor control center (MCC) contactor close coil circuit are in different cables than the 120 V "hot" circuit conductors eliminating the hot short failure mode within the cables. Cable-to-cable hot shorts need not be postulated for thermoset cable insulation as used at Seabrook. Also, the barriered conduit for CS-LCV-112C prevents Train B cable damage. Since CS-LCV-112B and CS-LCV-112C will not spuriously close, CS-P-2A or –2B as the operating charging pump will not be damaged.

2. Zone Analyses

a. Fire Zone PAB-F-1A-Z (Tabulation 3.2.7.63)

1) Specific Zone Analysis

This zone at Elevation 7'-0" and (-) 2'-0" of the PAB is bounded by concrete floors, ceilings and walls with penetrations to other zones. The zone is approximately 140' long by 75' wide by 16' high with a floor area of 5200 sq. ft. and a volume of 81,600 cu ft. All Train B Safe Shutdown cables are routed in conduit with a one-hour, fire-rated barrier. Combustibles are limited to 6.0 gallons of oil for a fire loading of 900,000 Btu and 28 pounds of plastic (fiberglass ladders) for a fire loading of 364,000 Btu with a total fire loading of 248 Btu per sq. ft. of floor area.

Detectors are provided throughout the zone.

2) System Analyses

a) Primary Component Cooling Water (CC) System

This zone contains cable routed in barriered conduits for temperature element CC-TE-2271; pumps CC-P-11B and CC-P-11D; and valves CC-TV-2271-1, CC-TV-2272-2, CC-V122, CC-V168, CC-V1092 and CC-V1095. This equipment is all Train B. There is no redundant Train A CC system equipment or cables in this fire zone.

b) Chemical and Volume Control (CS) System

This zone contains cables routed in barriered conduits for pumps CS-P-2B and CS-P-3B; and valves CS-LCV-112C, CS-LCV-112E, CS-V143 and CS-V197.

Cables for the Train A pump CS-P-2A which is redundant to pump CS-P-2B are routed in tray and conduit that is 10' above floor Elevation 7'-0" in the area that the pump cables are in proximity.

See additional CS system discussion on CS-LCV-112B, CS-LCV-112C, CS-P-2A and CS-P-2B in the General Area Analysis, Section B.1.g.

Cables for the Train A Valve CS-FCV-121 and transmitter CS-FT-121 which provide a redundant charging flow path to valve SI-V139 are routed in tray and conduit in proximity to the barriered conduit containing the cables for SI-V139.

Cables for the Train A valve CS-V196 are routed in tray and conduit in proximity to the barriered conduits containing the cables for the Train B Valve CS-V197.

c) Containment Enclosure Air Handling (EAH) System

This zone contains cables routed in barriered conduits for fans EAH-FN-5B and EAH-FN-31B. This equipment is all Train B. There is no redundant Train A EAH system equipment or cables in this fire zone.

d) Electrical Distribution - Emergency (EDE) System

This zone contains Train B cables routed in barriered conduits for the 4160V switchgear EDE-SWG-6. There are no functionally redundant cables in this area. The Train A EDE-MCC-513 cable has functionally redundant cables located in other fire areas.

e) PAB Handling (PAH) System

This zone contains cables routed in barriered conduits for dampers PAH-DP-43B, PAH-DP-358 and fan PAH-FN-42B. This equipment is Train B. There is no redundant Train A PAH system equipment or cables in this fire zone.

f) Reactor Coolant (RC) System

This zone contains cables routed in barriered conduits for valves RC-V22 and RC-V87. The cables are part of the position indicating light circuit for valves that have been permanently disabled. Failures in this circuit will not prevent opening of the valves for cold shutdown.

g) Safety Injection (SI) System

This zone contains cables routed in barriered conduits for valve SI-V139. This equipment is Train B. The redundant cables and equipment are as discussed in b) above.

h) Service Water (SW) System

This zone contains cables routed in barriered conduits for Train B pumps SW-P-41B and SW-P-41D and valves SW-V5, SW-V18, SW-V19, SW-V23 and SW-V25. The only exception is at an interference with an HVAC duct support where the one-hour wrap is reduced and pyrocrete is installed for heat transfer protection. Cables for Train A pumps SW-P-41A and SW-P-41C and valve SW-54, which are redundant to pumps SW-P-41B and SW-P-41D and valve SW-V25 are routed in tray that is 9' above the floor Elevation 7'-0" except at the entrance to the duct bank to the cooling towers where it is 3'-6" above floor Elevation 7'-0". There is approximately 8' of horizontal separation between the Train B barriered conduit and the Train A tray. For the other Train A cables routed in this zone, the redundant cables and equipment are contained in other fire areas.

i) Service Water Air Handling (SWA) System

All cables are Train A, the redundant cables are located in other fire areas.

3) Summary

For CC, EAH, and PAH systems above, the routing of the Train B cables in conduit with a one-hour, fire-rated barrier; the absence of Train A equipment and cables; and considering the low combustibles loading in the zone, provide acceptable fire protection and provide protection equivalent to the technical requirements of Appendix R. A deviation for Appendix R, Paragraph III G.2c. "in addition to 1 hour fire barrier, an automatic fire suppression system shall be installed," has been approved.

For CS and SI systems above, the routing of the Train B cables in conduit with a one-hour, fire-rated barrier; the 10' height of the tray and conduit above the floor; and considering the low combustibles loading in the zone, provide acceptable fire protection and provide protection equivalent to the technical requirements and Appendix R. A deviation for Appendix R, Paragraph III G.2c "in addition to 1 hour fire barrier, an automatic fire suppression system shall be installed," is requested.

For SW system above, the routing of the Train B cables in conduit with a one-hour, fire-rated barrier; the 8' of separation between the Train A tray and the Train B conduit; and considering the low combustibles loading in the zone, provide acceptable fire protection and provide protection equivalent to the technical requirements of Appendix R. A deviation for Appendix R, Paragraph III G.2c "in addition to 1 hour fire barrier, an automatic fire suppression system shall be installed," is requested.

For RC system above, the safe shutdown requirements are satisfied.

For EDE and SWA systems above the Appendix R separation requirements are satisfied.

b. Fire Zone PAB-F-1J-Z (Tabulation 3.2.7.66)

1) Specific Zone Analysis

This zone at Elevation (-) 6'-0" and (-) 26'-0" of the PAB is bounded by concrete floors, ceiling and walls with penetrations to other zones. The zone is approximately 96' long by 75' wide by 11' to 18' high with floor area of 1980 sq. ft. and a volume of 23,782 cu. ft.

All Train B safe shutdown cables are routed in conduit with a one-hour, fire-rated barrier.

Combustibles are limited to cables in open trays with a total fire loading of 500 Btu per sq. ft. and limited in situ combustibles in pumps.

Detectors are provided throughout the zone.

2) System Analyses

a) Primary Component Cooling Water (CC) System

This zone contains cables routed in tray for the Train A valves CC-V175 and CC-V257. The tray is minimum of 10' above floor elevation (-) 26'-0". Only 6 linear feet of the tray is in the zone. The redundant Train B cables are routed in barriered conduit above floor elevation (-) 8'-0" in Fire Zone PAB-F-1Z-Z, which is approximately 18' horizontally above the Train A cables with an intervening concrete floor.

b) Chemical and Volume Control (CS) System

This zone contains equipment and cables in conduit required for operation of Train A Valve CS-FCV-121 which provides a redundant charging flow path to Train B Valve SI-V139. The redundant Train B cables are routed in barriered conduit in Fire Zone PAB-F-1A-Z and are separated from the Train A cables by concrete floors and walls.

Valve CS-V158 provides redundant seal cooling capabilities to the safety grade thermal barrier cooling. Cables, controls and equipment for the Train A thermal barrier cooling capability are not contained in the PAB fire area and will be available for safe shutdown.

Redundant valves CS-V196 and CS-V197 are located in the same fire zone and are separated by approximately 3' horizontal separation. These valves are normally open valves that remain open for Safe Shutdown. The spurious closure for one valve will not prevent shutdown. The operators will prevent further spurious operation by tripping the power supply breakers at the Train A or Train B switchgear rooms (Fire Areas: CB-F-1A-A or CB-F-1B-A).

See additional CS system discussion on CS-LCV-112B, CS-LCV-112C, CS-P-2A and CS-P-2B in the General Area Analysis, Section B.1.g.

c) Reactor Coolant (RC) System

This zone contains cables routed in tray for the Train A valves RC-V23 and RC-V88. The cables are part of the position indicating light circuit for valves that have been permanently disabled. Failures in this circuit will not prevent the opening of the valves for cold shutdown.

d) Safety Injection (SI) System

This zone contains cables routed in tray for the Train B valve SI-V139. The tray is a minimum of 10' above floor Elevation (-) 26'-0". Only six lineal feet of the tray is in the zone. The redundant Train B cables are routed in barriered conduit above floor Elevation (-) 8'-0" in Fire Zone PAB-F-1A-Z, which is approximately 18' horizontally above the Train A cables with an intervening concrete floor.

Redundant channels of containment pressure (SI-PT-936 and SI-PT-937) cables are located in proximity. Spurious operation of these channels will initiate containment spray and containment isolation Phase B. The operators will have the capability to terminate these protective actions by use of manual reset switches. All ESF equipment which has been started will be tripped and locked out. To preclude further spurious operations, the operators will disable the engineered safety features logic cabinets in the Train A and Train B switchgear rooms (Fire Areas: CB-F-1A-A and CB-F-1B-A).

3) Summary

For CC and SI systems above, the routing of the Train B cables in conduit with a one-hour, fire-rated barrier; the height of the Train A an B raceways, the provision of a capability to mitigate the spurious operation of the pressure transmitters outside the fire area; and considering the low combustibles loading in the zone provide acceptable fire protection and provide protection equivalent to the technical requirements of Appendix R. A deviation from Appendix R, Paragraph III G.2.c "in addition to 1 hour fire barrier, an automatic fire suppression system shall be installed", has been approved.

For CS system above, the routing of the Train B cables in conduit with a one-hour, fire-rated barrier; and the low combustibles loading in the zone provide acceptable fire protection and provide protection equivalent to the technical requirements of Appendix R. A deviation from Appendix R, Paragraph III G.2.c in addition to 1 hour fire barrier, an automatic fire suppression system shall be installed", has been approved.

For RC system above, the safe shutdown requirements are satisfied.

c. Fire Zone PAB-F-1K-Z (Tabulation 3.2.7.67)

1) Specific Zone Analysis

This zone between Elevation (-) 6'-0" and roof Elevation 81'-0" of the PAB is bounded by concrete floors, ceilings and walls with penetrations to other zones. The zone is approximately 68' long by 9' wide by 75' high with a floor area of 4,620 sq. ft. and a volume of 75,370 cu. ft.

There is no tray in the zone and all cables are routed in conduit. All Train B safe shutdown cables are routed in conduit with a one-hour, fire-rated barrier.

There are no in situ combustibles in the zone.

2) System Analyses

a) Chemical and Volume Control (CS) System

This zone contains cables routed in conduit for Train A valves CS-LCV-112B and CS-LCV-112D. The Train B cables for their redundant counterpart valves CS-LCV-112C and CS-LCV-112E are routed in barriered conduit in the zone. There is 13' horizontal separation between the conduits containing the redundant cables.

See additional CS system discussion on CS-LCV-112B, CS-LCV-112C, CS-P-2A and CS-P-2B in the General Area Analysis, Section B.1.g.

b) PAB Air Handling (PAH System)

This zone contains cables routed in conduit to Train A damper PAH-DP-43A. The Train B cables to redundant damper PAH-DP-43B are routed in barriered conduit in the zone. The only exception to the barrier is a short length of flexible conduit whose wrapping would interfere with the damper operator. The dampers are located approximately 15' above the floor. The area containing the dampers is a concrete and steel enclosed air plenum with limited access and no combustibles.

These dampers and the fans which they control are not needed unless the main ventilation system is lost due to loss of off-site power or unless the temperature in the PCCW area exceeds 40°C (104°F).

c) Service Water (SW) System

This zone contains cables routed in conduit for Train A valve SW-V4. The Train B cables for its redundant counterpart valve SW-V5 are routed in barriered conduit in the zone. The only exception to the barrier is one cable which runs in flexible conduit between a limit switch on valve SW-V5 to its motor operator. There is 8' horizontal separation between the barriered conduit for valve SW-V5 and valve SW-V4. There is 16' horizontal separation between the redundant valves. The valves are located approximately 15' above floor Elevation 53'-0" and 3' above platform Elevation 65'-0.

This zone also contains cables routed in conduit for Train A valve SW-V74. The position of this valve is only important when the Train A cooling tower capabilities are in use at which time the valve should be closed and should remain closed. In the event this valve opens spuriously, the operators can either transfer the Train A service water to the pumphouse or utilize the Train B service water system.

This satisfies the safe shutdown requirements.

3) Summary

For the CS system above, the routing of the Train B cables in conduit with a one-hour, fire-rated barrier; the spatial separation between the Train A and Train B conduits; and considering the absence of in situ combustibles in the zone provide acceptable fire protection and provide protection equivalent to the technical requirements of Appendix R. A deviation from Appendix R, Paragraph III G.2.c "in addition to 1 hour fire barrier, an automatic fire suppression system shall be installed", has been approved.

For the PAH system above, the routing of the Train B cables in conduit with a one-hour, fire-rated barrier; the height of the dampers above the floor; the absence of in situ combustibles in the zone and the fact that a fire in the area could not cause loss of off-site power, provide acceptable fire protection and provide protection equivalent to the technical requirements of Appendix R. A deviation from Appendix R, Paragraph III.G.2 has been approved.

For the SW system above, the routing of the Train B cables in conduit with a one-hour, fire-rated barrier; the horizontal separation of 8' between conduit and valve and 16' between the valves themselves; the height of the valves from the floor; and considering the absence of in situ combustibles in the zone provide acceptable fire protection and provide protection equivalent to the technical requirements of Appendix R. A deviation from Appendix R, Paragraph III G.2.c "in addition to 1 hour fire barrier, an automatic fire suppression system shall be installed", has been approved.

d. Fire Zone PAB-F-2A-Z (Tabulation 3.2.7.68)

1) Specific Zone Analysis

This zone at Elevation 25'-0" of the PAB is bounded by concrete floor, ceiling and walls (South and East) and is contiguous to fire zones PAB-F-2B-Z and PAB-F-2C-Z. The northern boundary consists of partial height concrete walls and an 11' wide access passage. The western boundary consists of full height concrete walls and metal partitions. There are penetrations for tray, ducts, and pipes to other fire zones. The zone is approximately 44' long by 39' wide by 26' high with a floor area of 1550 sq. ft and a volume of 40,000 cu ft.

No safe shutdown equipment is contained in the zone, only safe shutdown cables. Combustibles are 71 pounds of plastic (fiberglass ladders) for a total fire loading of 596 Btu per sq. ft. of floor area and limited in situ combustibles. This is classed as a low fire load.

Detectors are provided throughout the zone.

2) System Analyses

a) Chemical and Volume Control (CS) System

This zone contains cables routed in tray for the redundant boric acid tank level transmitters CS-LT-102 and CS-LT-106. These tank levels are only required once cooldown has been initiated. Should both transmitter cables be damaged by a fire, the operators can utilize the Train B level transmitter CS-LT-7464. This transmitter and its associated cable are not contained in this fire zone. The indicator for this transmitter is located at the RSS panel in the Train B switchgear room (Fire Area: CB-F-1B-A).

This zone contains cables routed in tray and conduit for the boric acid pump CS-P-3A and for the boric acid to charging pumps isolation valve CS-V426. Cables for the redundant Train B boric acid pump CS-P-3B are routed in barriered conduits in Fire Zones PAB-F-2B-Z and PAB-F-2C-Z. Valve CS-V426 has no electrically operated redundant counterpart. Should the valve be damaged by a fire, the operator will establish a gravity path from the BAT's to the charging pump suction by the repositioning to manual valves in the boric acid pump room (Fire Zone PAB-F-2B-Z). These valves are not required to be operated until boric acid is required for shutdown reactivity. This would be up to four hours into the event.

See additional CS system discussion on CS-LCV-112B, CS-LCV-112C, CS-P-2A and CS-P-2B in the General Area Analysis, Section B.1.g.

This zone contains cables for CS-FCV-110A, -111A, -110B, -111B. Spurious opening of these valves in conjunction with spurious start of a boric acid transfer pump or reactor makeup water pump may divert boric acid from the reactor coolant system affecting cold shutdown reactivity control, or result in an unplanned dilution affecting hot standby and cold shutdown reactivity control. The operators isolate the diversion flow by closing CS-FCV-110B & -111B using the main control board control switches. The operators isolate the dilution flow by closing CS-LCV-112B or CS-LCV-112C using the main control board control switch.

b) Containment Enclosure Air Handling (EAH) System

This zone contains cable routed in barriered conduit for the Train B fan EAH-FN-5B. The cables for the redundant Train A fan EAH-FN-5A are routed in trays in fire zone PAB-F-2C-Z. There is approximately 16' horizontal separation between the barriered conduit and the redundant tray.

c) Electrical Distribution Emergency (EDE) System

All cables are Train A. The functionally redundant cables are located in other fire areas.

d) PAB Air Handling (PAH) System

Cables and equipment for outboard isolation dampers PAH-DP-35A and PAH-DP-36A and inboard isolation dampers PAH-DP-35B and PAH-DP-36B are routed in trays and conduits in proximity to one another. Under normal operation both outboard and both inboard dampers are open. If both outboard or both inboard dampers go closed, the Containment Enclosure Air Handling (EAH) system operates in recirculation mode. The normal and recirculation modes for EAH system operation both satisfy the safe shutdown function. If the outboard dampers and the inboard dampers operate independently such that either the supply or the exhaust path but not both are isolated, there could be an air flow problem in EAH system.

Outboard dampers are powered from a single Train A power supply. Inboard dampers are powered from a single Train B power supply. The circuit design for the outboard and inboard dampers is such that a spurious signal in either or both circuits will cause both outboard and inboard dampers to operate together, either both open (normal mode) or both closed (recirculation mode).

This zone contains cables routed in tray for the Train A fan PAH-FN-42A and damper PAH-DP-357. The cables for the redundant Train B fan PAH-FN-42B and damper PAH-DP-358 are routed in barriered conduit in fire zone PAB-F-2C-Z. There is greater than 50' of horizontal separation between the tray and the redundant barriered conduit.

e) Service Water (SW) System

This zone contains cable routed in tray for the Train A pumps SW-P-41A and SW-P-41C and valve SW-V54. The cables for the redundant Train B pumps SW-P-41B and SW-P-41D and valve SW-V25 are routed in barriered conduits in fire zone PAB-F-1A-Z. There is approximately 25' of horizontal separation between the tray and the redundant barriered conduits. For the other Train A cables routed in this zone, the redundant cables and equipment are contained in other fire areas.

f) Service Water Air Handling (SWA) System

All cable are Train A, the redundant cables are located in other fire areas.

3) Summary

For the CS system above, the provision of a manual valve alignment capability that is not required for up to four hours into the event satisfies the safe shutdown requirements. Also, the capability to isolate the boric acid diversion flow and the dilution flow using the main control board control switches satisfies the safe shutdown requirements.

For the EAH, PAH and SW systems above, the routing of the Train B cables in a one-hour, fire-rated barrier; the horizontal separation of 16', 25' and 50' respectively; and the low combustibles loading in the zone, provide acceptable fire protection and provide protection equivalent to the technical requirements of Appendix R. A deviation from Appendix R, Paragraph III.G.2.c, "in addition to 1 hour fire barrier, an automatic fire suppression system shall be installed", has been approved.

For the EDE and SWA systems above, the Appendix R separation requirements are satisfied.

e. Fire Zone PAB-F-2B-Z (Tabulation 3.2.7.69)

1) Specific Zone Analysis

This zone at Elevation 25'-0" of the PAB is bounded by concrete floor, ceiling and walls (South and West) and is contiguous to fire zones PAB-F-2A-Z and PAB-F-2C-Z. The northern and eastern boundaries consists of full height concrete walls and metal partitions. There are penetrations for tray, ducts and pipes to other fire zones.

The zone is approximately 28' long by 37' wide by 16' high with a floor area of 1300 sq. ft. and a volume of 33,800 sq. ft.

Combustibles are limited to 2.0 pounds of grease for a fire loading of 36,000 Btu and cables in open trays for a total fire loading of 6000 Btu per sq. ft. of floor area.

Detectors are provided throughout the zone.

2) System Analyses

a) Chemical and Volume Control (CS) System

The redundant boric acid tank level transmitters CS-LT-102 and CS-LT-106 are located in the same fire zone. Should both transmitters be unavailable due to fire damage, the operators can utilize the Train B level transmitter CS-LT-7464. This transmitter and its associated cable are not contained in this fire zone. The indicator for this transmitter is located on the RSS panel in the Train B switchgear room (Fire Area: CB-F-1B-A).

Redundant boric acid pumps CS-P-3A and CS-P-3B and the valve CS-V426 are located in the same fire zone. Should both pumps or the valve be damaged by the fire, the operators will establish a gravity flow path from the BAT's to the charging pump suction by repositioning of manual valves in the fire zone.

Valves CS-V410, CS-V416, CS-V437, CS-V1207, CS-V439 and CS-V442 are manual valves required for gravity feed from the boric acid tanks to the charging pumps. These valves are not required to be operated until boric acid is required for shutdown reactivity. This would be upon commencement of cooldown, up to four hours into the event, and the valves would then be accessible for manual operation. During this time the plant would be maintained in hot standby with RC inventory makeup provided by the RWST.

See additional CS system discussion on CS-LCV-112B, CS-LCV-112C, CS-P-2A and CS-P-2B in the General Area Analysis, Section B.1.g.

This zone contains cables for CS-FCV-110A, -111A, -110B, -111B and the valves. Spurious opening of these valves in conjunction with spurious start of a boric acid transfer pump or reactor makeup water pump may divert boric acid from the reactor coolant system affecting cold shutdown reactivity control, or result in an unplanned dilution affecting hot standby and cold shutdown reactivity control. The operators isolate the diversion flow by closing CS-FCV-110B & -111B using the main control board control switches. The operators isolate the dilution flow by closing CS-LCV-112B or CS-LCV-112C using the main control board control switch.

b) PAB Air Handling (PAH) System

This zone contains cables routed in tray and conduit for the Train A fan PAH-FN-42A and dampers PAH-DP-43A and PAH-DP-357. The cables for the redundant Train B fan PAH-FN-42B and dampers PAH-DP-43B and PAH-DP-358 are routed in barriered conduit in fire zone PAB-F-2C-Z. There is 4' horizontal separation between the Train A raceways and the Train B equipment and barriered conduit. The Train A trays are a minimum of 8' above floor Elevation 25'-0". A total of 3 trays exist in the stack with the bottom tray an enclosed instrument level tray containing no Safe Shutdown cables. The Train B damper PAH-DP-358 is located approximately 18' above floor Elevation 25'-0".

3) Summary

For the CS system above, the provision of a manual valve alignment capability that is not required for up to four hours into the event satisfies the safe shutdown requirements. Also, the capability to isolate the boric acid diversion flow and the dilution flow using the main control board control switches satisfies the safe shutdown requirements.

For the PAH system above, the routing of the Train B cables in conduit with a one-hour, fire-rated barrier in another zone of the PAB; the 4' horizontal between the Train A and Train B equipment; the 8' height of the tray above the floor; and considering the low combustibles loading in the zone, provide acceptable fire protection and provide protection equivalent to the technical requirements of Appendix R. A deviation from Appendix R, Paragraph III G.2.c. "in addition to 1 hour fire barrier, automatic fire suppression system shall be installed", has been approved.

f. Fire Zone PAB-F-2C-Z (Tabulation 3.2.7.70)

1) Specific Zone Analysis

This zone at Elevation 25'-0" of the PAB is bounded by concrete floors, ceilings and walls (North, East and West) and is contiguous to fire zones PAB-F-2A-Z and PAB-F-2B-Z to the South. The southern boundary consists of full height partitions, full and partial height concrete walls and an 11' wide access passage. There are penetrations for tray, ducts and pipes to other fire zones. The zone is approximately 100' long by 75' wide by 26' high with a floor area of 7,200 sq. ft. and a volume of 187,000 cu. ft.

The trays installed at Elevation 25'-0" are in stacks five and six high by four wide, as a worst case, with a minimum of 4' between the Train A and Train B stacks. There are several areas where the trays have vertical drops through the floor. With a limited number of exceptions, the trays are a minimum of 10' above the floor. Metal covers are provided around the vertical trays near column lines 2 and C.

The in situ combustibles are limited to cables in open trays which provide a fire load of 16,000 Btu per square foot of floor area; the boron injection pumps which contain 0.25 gallons of oil are a fire loading of 37,500 Btu; the primary component cooling water pumps CC-P-11A, 11B, 11C and 11D containing a total of four gallons of oil for a fire loading of 600,000 Btu; 4½ ton monorail crane hoist CS-CR-5 containing 0.5 gallons of oil for a fire loading of 75,000 Btu; and 3½ ton monorail crane hoist CS-CR-13 containing 0.5 gallons of oil for a fire loading of 75,000 Btu.

The concentrated fire load in this zone is 30,000 Btu per square foot of tray. Because of the concentrated fire load, we have installed sprinklers to control transient fires in the area of the trays.

To protect the PCCW pumps against a fire from a transient combustible, we have installed a pre-action system, using high temperature heads over the pumps and the surrounding area. Spray shields will be installed over the PCCW pump motors.

Detectors are provided throughout the zone.

2) System Analyses

a) Primary Component Cooling Water (CC) System

The redundant Primary Component Cooling Water (PCCW) pumps are located in the same fire area. The CC System is configured such that there are two 100% capacity PCCW pumps in each train either of which can be utilized for safe shutdown. The spatial separation between Train A pump CC-P-11A and Train B pump CC-P-11D is in excess of 20' with a metal partition between them. The spatial separation between Train A pump CC-P-11C and Train B pump CC-P-11B is in excess of 20' with a metal partition between them. The cables to the Train B pumps are routed in barriered conduit from the point they enter the PAB to the pump motors. The conduits are barriered in the vicinity of the Train B pumps. The Train B pumps have a spatial separation of 25' from the Train A trays and 15' from the Train B trays.

The redundant PCCW heat exchanger valves CC-TV-2171-1, 2 and CC-TV-2271-1, 2 and their associated controls and instrument rack MM-IR-93 are located in the same fire area. The cables for the Train B valves CC-TV-2271-1 and CC-TV-2271-2 and the Train B controllers are routed in barriered conduits. The only exception is a reduction in the barriers at the controllers and valves due to interference with instrument lines. The redundant valves are mounted approximately 20' above the floor with a minimum separation of 2'.

The controllers are wall and instrument rack mounted and are separated by approximately 20'.

The redundant temperature elements CC-TE-2171, CC-TE-2197 and CC-TE-2271, CC-TE-2297 are located in the same fire area. The cable for one of the redundant Train B temperature elements is routed in a barriered conduit. The trip logic is a 2 out of 2 logic. The redundant temperature elements have a horizontal separation of approximately 8' and are mounted on 24" component cooling water pipes approximately 20' above the floor.

Cables for the redundant head tank level transmitters are in proximity. Failures in these cables could initiate a spurious lo-lo-head tank level isolation signal. This in turn would result in closure of the PCCW containment isolation valves. These valves are only required when it is necessary to maintain containment habitable for containment entry to manually operate the RHR isolation valves and the SI accumulator isolation valves. The circuitry for these valves is not affected by a fire in this area; hence, they would be operable from the MCR. Therefore, the spurious operation of these transmitters will not prevent safe shutdown.

b) Chemical and Volume Control (CS) System

This zone contains cables in tray required for operation of Train A valve CS-FCV-121, which provides one of the required hot standby charging flow paths. The redundant Train B valve SI-V139 cables are routed in barriered conduit in Fire Zone PAB-F-1A-Z and are separated from the Train A cables by concrete floors.

For cooldown, the operators will manually align the Train B charging pump discharge and bypass valves (CS-V219 and CS-V220) to the seal injection flow path and throttle the bypass valve as required. This operator action can be delayed for up to of 4 hours into the event.

This zone contains cables in barriered conduit for the charging to RCS isolation valve CS-V143. The cables for the redundant valve CS-V142 are not contained in this fire area.

This zone contains cables routed in tray for the redundant boric acid tank level transmitters CS-LT-102 and CS-LT-106. These tank levels are only required once cooldown has been initiated. Should both transmitter cables be damaged by a fire, the operators can utilize the Train B level transmitter CS-LT-7464. This transmitter and its associated cable are not contained in this fire zone. The indicator for this transmitter is located at the RSS panel in the Train B switchgear room (Fire Area: CB-F-1B-A).

This zone contains cables routed in tray and conduit for the redundant boric acid pumps CS-P-3A and CS-P-3B and for the valve CS-V426. Should both pumps or the valves be damaged by a fire, the operator will establish a gravity path from the BAT's to the charging pump suction by the repositioning of manual valves in the boric acid pump room (Fire Zone PAB-F-2B-Z). These valves are not required to be operated until boric acid is required for shutdown reactivity. This would not be required for up to four hours into the event.

This zone contains cables routed in tray and conduit for the Train A charging pump CS-P-2A. The cable for the redundant Train B pump CS-P-2B are routed in a barriered conduit in Fire Zone PAB-F-1A-Z.

The zone contains cables routed in tray and conduit for the redundant valves CS-LCV-112B, CS-LCV-112D, CS-LCV-112C and CS-LCV-112E. The cables for valves CS-LCV-112C and CS-LCV-112E are routed in barriered conduits. The only exception is at an interference with fire detectors where the one-hour wrap is reduced to allow air flow to the detector. At the point of the reduced one-hour wrap, there is a minimum of 20' of horizontal separation to functionally redundant cables.

See additional CS system discussion on CS-LCV-112B, CS-LCV-112C, CS-P-2A and CS-P-2B in the General Area Analysis, Section B.1.g.

This zone contains cables for CS-FCV-110A, -111A, -110B, -111B. Spurious opening of these valves may divert boric acid from the reactor coolant system affecting cold shutdown reactivity control, or result in an unplanned dilution affecting hot standby and cold shutdown reactivity control. The operators isolate the diversion flow by tripping the control circuit power supply breaker to close CS-FCV-110B & -111B (valves fail closed). The operators isolate the dilution flow by closing CS-LCV-112C using the main control board control switch.

This zone contains cables routed in trays for valve CS-V196. The cables for the redundant Train B valve CS-V197 are routed in a barrier conduit in Fire Zone PAB-F-1A-Z.

c) Containment Enclosure Air Handling (EAH) System

The cables for the redundant fans EAH-FN-5A and EAH-FN-5B, are routed in tray and conduits in the same area. All the Train B fan cables are routed in barriered conduits, which are separated from the Train A cables by a minimum of 18'.

Cables for redundant equipment vault return fans EAH-FN-31A and EAH-FN-31B are routed in trays and conduits in proximity to one another. These fans are required to maintain the equipment vaults habitable for entry if manual operations are required to place RHR into operation for cold shutdown. A fire in the PAB fire area will not prevent operation from the MCR of any equipment necessary for RHR operation; hence, habitability of the equipment vaults is not required. Analysis and field testing has confirmed that the containment enclosure supply fans EAH-FN-5A and EAH-FN-5B are sufficient to maintain the equipment vaults below the equipment's qualified temperatures.

d) Electrical Distribution Emergency (EDE) System

All cables are Train A. The functionally redundant cables are located in other fire areas.

e) PAB Air Handling (PAH) System

Cables and equipment for outboard isolation dampers (PAH-DP-35A and PAH-DP-36A and inboard isolation dampers PAH-DP-35B and PAH-DP-36B are routed in trays and conduits in proximity to one another. Under normal operation both outboard and both inboard dampers are open. If both outboard or both inboard dampers go closed, the Containment Enclosure Air Handling (EAH) system operates in recirculation mode. The normal and recirculation modes for EAH system operation both satisfy the safe shutdown function. If the outboard dampers and the inboard dampers operate independently such that either the supply or the exhaust path but not both are isolated, there could be an air flow problem in EAH system.

Outboard dampers are powered from a single Train A power supply. Inboard dampers are powered from a single Train B power supply. The circuit design for the outboard and inboard dampers is such that a spurious signal in either or both circuits will cause both outboard and inboard dampers to operate together, either both open (normal mode) or both closed (recirculation mode).

The redundant PAH fans (PAH-FN-42A and PAH-FN-42B) and dampers (PAH-DP-43A, PAH-DP-357, PAH-DP-43B and PAH-DP-358) are in proximity. The fans and dampers are inside separate metal enclosures located approximately 15' above the floor. The Train B fan and damper cables are routed in barriered conduits. The only exception to the barrier is short lengths of flexible conduit whose wrapping would interfere with damper operator PAH-DP-358. There are no cable trays in the vicinity of the fans and dampers. The only in situ combustibles in the vicinity are in the PCCW pumps which are separated from the fans and dampers by greater than 20' horizontally and the monorail crane hoist.

These fans are not needed unless the main ventilation system is lost due to the loss of off-site power or unless the temperature in the immediate area exceeds 40°C (104°F).

The redundant temperature switches PAH-TSH-5391 and PAH-TSH-5393 and conduits containing their cables are located in proximity. Failure of these switches or their cables could prevent operation of fans PAH-FN-42A and PAH-FN-42B. Should the switches or cables fail, the operators can isolate the affected portion of the circuit at the RSS facilities in the Train A and Train B switchgear rooms (Fire Areas: CB-F-1A-A and CB-F-1B-A) and restart the fans.

f) Service Water (SW) System

This zone contains cables routed in tray for the Train A pumps SW-P-11A and SW-P-11C and valve SW-V54. The redundant Train B pumps and valve cables are routed in a barriered conduit in Fire Zone PAB-F-1A-Z which is separated from this zone by an intervening concrete floor.

The cables for redundant valves SW-V4, SW-V16, SW-V5 and SW-V18, are located in the same fire zone. These valves may be required to reposition to isolate secondary component cooling water or for DG cooling. The Train B valves SW-V5 and SW-V18 cables are routed in barriered conduits and are separated from the Train A cables by greater than 30' horizontally. There are no cable trays or other in situ combustibles in the vicinity of Train B conduits.

The cables for redundant valves SW-V-15 and SW-V17 are located in the same fire zone. These valves are normally in their safe shutdown position to provide cooling to the PCCW heat exchangers. In addition, the circuit breaker for SW-V17 is administratively controlled off so the valve cannot spuriously close. If SW-V15 spuriously closes, SW-V17 is still open to provide the Train B PCCW heat exchanger cooling function.

Redundant valves SW-V20, SW-V34 and SW-V19, SW-V23 are located in the same fire zone. Operators for valves SW-V34 and SW-V23 are approximately 5' above floor Elevation 25'-0" and operators for valves SW-V20 and SW-V19 are approximately 10' above floor Elevation 25'-0". The redundant valves are separated by approximately 16' horizontally. There are no cable trays in the vicinity of the valves. The only in situ combustibles in the vicinity are the PCCW pumps which are separated from the Train A valves by greater than 16' horizontally. The valves are in Safe Shutdown position. The operators will prevent spurious operation by tripping the power supply breakers at the Train A and Train B Switchgear Rooms (Fire Area: CB-F-1A-A and CB-F-1B-A).

For the other Train A cables routed in this zone, the redundant cables and equipment are contained in other fire areas.

g) Service Water Air Handling (SWA) System

All cables are Train A. The redundant functionally cables are located in other fire areas.

3) Summary

For the CC system above, the routing of the Train B cables in conduit with a one-hour, fire-rated barrier; the spatial separation; and the provision of the sprinkler system, provide acceptable fire protection and provide protection equivalent to the technical requirements of Appendix R.

For the CS system charging pumps and the related CS and SI valves above, the routing of the Train B cables in conduit with a one-hour, fire-rated barrier and the provision of suppression in the area of the trays and the PCCW pumps, provide acceptable fire protection and provide protection equivalent to the technical requirements of Appendix R.

For the CS system transmitters, boric acid pumps and related valve above, the provision of a manual valve alignment capability that is not required for up to four hours into the event satisfies the safe shutdown requirements. Also, the capability to isolate the boric acid diversion flow by tripping the control circuit power supply breaker and isolate the dilution flow using the main control board control switches satisfies the safe shutdown requirements.

For the EAH system supply fans above, the routing of Train B cables in conduit with a one-hour, fire-rated barrier and the provision of suppression in the area of the trays and the PCCW pumps, provide acceptable fire protection and provide protection equivalent to the technical requirements of Appendix R.

For the EAH system return fans above, the safe shutdown requirements are satisfied.

For the PAH dampers above, the safe shutdown requirements are satisfied.

For the PAH fans and related dampers above, the routing of the Train B cables in conduits with a one-hour, fire-rated barrier; the height of the fans off the floor; the lack of combustibles in the area of the fans and the fact that a fire in the area could not cause loss of offsite power, provide acceptable fire protection and provide protection equivalent to the technical requirements of Appendix R.

For the PAH temperature switches above, the safe shutdown requirements are satisfied.

For the SW system above, the routing of the Train B cables in a conduit with a one-hour, fire-rated barrier; the spatial separation and the provision of the sprinkler system, provide acceptable fire protection and provide protection equivalent to the technical requirement of Appendix R.

For the EDE and SWA systems above, the Appendix R separation requirements are satisfied.

g. Fire Zone PAB-F-3A-Z (Tabulation 3.2.7.71)

1) Specific Zone Analysis

This zone at Elevation 53'-0" of the PAB is bounded by concrete floor, ceiling and walls (North, East and West) and is contiguous to fire zone PAB-F-3B-Z to the South. The southern boundary consists of a full height partition wall. There are penetrations for tray, ducts and pipes to other fire zones. The zone is approximately 53' long by 75' wide by 26' high with a floor area of 4000 sq. ft. and a volume of 103,400 cu. ft.

Combustibles are limited to 1.0 gallon of oil for a fire loading of 150,000 Btu and cables in open trays for a total fire loading of 3000 Btu per sq. ft. of floor area.

Detectors are provided throughout the zone.

2) System Analyses

a) Primary Component Cooling Water (CC) System

Redundant transmitters and cables for head tank level logic are in proximity. Failures in these transmitters or cables could initiate a spurious lo-lo head tank level isolation signal. This in turn, would result in closure of the PCCW containment isolation valves. These valves are only required when it is necessary to maintain containment habitable for containment entry to manually operate the RHR isolation valves and the SI accumulator isolation valves. The circuitry for these valves is not affected by a fire in this area; hence they would be operable from the MCR. Therefore, the spurious operation of these transmitters will not prevent safe shutdown.

b) Chemical and Volume Control (CS) System

This zone contains cables routed in tray for the Train A valves CS-LCV-112B and CS-LCV-112D. The Train B cables are routed in barriered conduits in fire zone PAB-F-3B-Z.

See additional CS system discussion on CS-LCV-112B, CS-LCV-112C, CS-P-2A and CS-P-2B in the General Area Analysis, Section B.1.g.

This zone contains cables for CS-FCV-110A, -111A, -110B, -111B. Spurious opening of these valves in conjunction with spurious start of boric acid transfer pump or reactor makeup water pump may divert boric acid from the reactor coolant system affecting cold shutdown reactivity control, or result in an unplanned dilution affecting hot standby and cold shutdown reactivity control. The operators isolate the diversion flow by closing CS-FCV-110B & -111B using the main control board control switches. The operators isolate the dilution flow by closing CS-LCV-112C using the main control board control switch.

c) Service Water (SW) System

This zone contains Train A valves SW-V15 and SW-V16 and cables for Train A valve SW-V4. Also contained in this zone are the redundant Train B valves SW-V17 and SW-V18 and cables for valve SW-V5.

Redundant valves SW-V15 and SW-V17 are in the Safe Shutdown position. In addition, the circuit breaker for SW-V17 is administratively controlled off so the valve cannot spuriously close. If SW-V15 spuriously closes, SW-V17 is still open to provide the Train B PCCW heat exchanger cooling function. For conservatism, the operators will prevent further spurious operation by tripping the SW-V15 power supply breaker in the Train A switchgear room (Fire Area: CB-F-1A-A).

Redundant diesel generator jacket water heat exchanger valves SW-V16 and SW-V18 are normally closed and are required to open for operation of the diesel generators. De-energizing the solenoids will open the valves. If SW-V16 or SW-V18 spuriously closes, SW to the respective train DG would be isolated. The other train DG would still be available. Also, a fire in this area does not cause a loss-of-offsite power. To prevent further spurious operation, the operators will trip the valves' power supply breakers in the Train A and Train B switchgear rooms (Fire Areas: CB-F-1A-A and CB-F-1B-A).

The Train A cables for valve SW-V4 are routed in trays and conduit. The trays and conduit are a minimum of 10' above floor Elevation 53'-0". The Train B cables for valve SW-V5 are routed in barriered conduits. The Train A and Train B raceways are separated by greater than 25'.

3) Summary

For the CC system above, the safe shutdown requirements are satisfied. For the CS system above, the routing of the Train B cables in conduit with a one-hour, fire rated barrier in another fire zone and considering the low combustibles loading in the zone, provide acceptable fire protection and provide protection equivalent to the technical requirements of Appendix R. A deviation from Appendix R, Paragraph III G.2.c, "in addition to one (1) hour fire barrier, an automatic fire suppression system shall be installed", has been approved. Also, the capability to isolate the boric acid diversion flow and the dilution flow using the main control board control switches satisfies the safe shutdown requirements.

For the SW system above, the routing of the Train B cables in a conduit with a one-hour, fire-rated barrier; the spatial separation; the disabling capabilities in another fire area; and considering the low combustibles loading in the zone, provide acceptable fire protection and provide protection equivalent to the technical requirements of Appendix R. A deviation from Appendix R, Paragraph III G.2.c, "in addition to one (1) hour fire barrier, an automatic fire suppression system shall be installed", has been approved.

h. Fire Zone PAB-F-3B-Z (Tabulation 3.2.7.72)

1) Specific Zone Analysis

This zone at Elevation 53'-0" of the PAB is bounded by concrete floor, ceiling and walls (South, East and West) and is contiguous to fire zone PAB-F-3A-Z to the North. The northern boundary consists of a full height partition wall. There are penetrations for ducts and pipes to other fire zones. The zone is approximately 88' long by 75' wide by 26' high with a floor area of 6500 sq. ft. and a volume of 168,200 cu. ft.

Combustibles are limited to 71 pounds of plastic (fiberglass ladders) for a fire loading of 923,000 Btu, 0.5 gallon of oil for a fire loading of 75,000 Btu, 50 pounds of Class A material for a fire loading of 400,000 Btu for a total fire loading of 1602 Btu per sq. ft. of floor area. See "Fire Protection Program Evaluation and Comparison to Branch Technical Position APCSB 9.5-1 Appendix A" for the analysis of 6600 lbs. of charcoal in CAP-F-40.

Detectors are provided throughout the zone.

2) System Analysis

a) Primary Component Cooling Water (CC) System

Redundant transmitters and cables for head tank level logic are in proximity. Failures in these transmitters or cables could initiate a spurious lo-lo head tank level isolation signal. This in turn would result in closure of the PCCW containment isolation valves. These valves are only required when it is necessary to maintain containment habitable for containment entry to manually operate the RHR isolation valves and the SI accumulator isolation valves. The circuitry for these valves is not affected by a fire in this area; hence, they would be operable from the MCR. Therefore, the spurious operation of these transmitters will not prevent safe shutdown.

b) Chemical and Volume Control (CS) System

The redundant volume control tank isolation valves CS-LCV-112B and CS-LCV-112C are located in the same fire area. The valves are in separate concrete cells with concrete walls and a solid controlled access door between them. There are no in situ combustibles or cables in trays in the cells. The cables for the Train B valve CS-LCV-112C are routed in barriered conduits.

See additional CS system discussion on CS-LCV-112B, CS-LCV-112C, CS-P-2A and CS-P-2B in the General Area Analysis, Section B.1.g.

This zone contains cables for the redundant RWST suction valves CS-LCV-112D and CS-LCV-112E. These cables are part of a circuit that will automatically open the opposite train RWST valve if a VCT valve is not full open (i.e., spuriously closes). Since the VCT valves do not spuriously close for a fire in this zone, the automatic open circuit is not required. The automatic open circuit is supplied from a separate circuit, i.e., not the RWST MOV control circuit, so failure of these cables does not affect the ability to manually open the RWST valves as part of transferring charging pump suction from the VCT to the RWST.

This zone contains cables for CS-FCV-110A, -111A, -110B, -111B. Spurious opening of these valves in conjunction with spurious start of a boric acid transfer pump or reactor makeup water pump may divert boric acid from the reactor coolant system affecting cold shutdown reactivity control, or result in an unplanned dilution affecting hot standby and cold shutdown reactivity control. The operators isolate the diversion flow by closing CS-FCV-110B & -111B using the main control board control switches. The operators isolate the dilution flow by closing CS-LCV-112C using their main control board control switch.

3) Summary

For the CC system above, the safe shutdown requirements are satisfied.

For the CS system above, the routing of the Train B cables in a one-hour, fire-rated barrier; the separation between the valves; the absence of in situ combustibles in the cells; and considering the low combustibles loading in the zone, provide acceptable fire protection and provide protection equivalent to the technical requirements of Appendix R. A deviation from Appendix R Paragraph III G.2.c, "in addition to 1 hour fire barrier, an automatic fire suppression system shall be installed", has been approved. Also, the capability to isolate the boric acid diversion flow and the dilution flow using the main control board control switches satisfies the safe shutdown requirements.

C. Evaluation

Deviations from the Appendix R, Paragraph III.G.2 separation requirements exist in the Primary Auxiliary Building fire zones PAB-F-1A-Z, PAB-F-1J-Z, PAB-F-1K-Z, PAB-F-2A-Z, PAB-F-2B-Z, PAB-F-2C-Z, PAB-F-3A-Z and PAB-F-3B-Z. These deviations are justified based on the above analyses and our assertion that additional modifications would not enhance fire protection safety.

Tabulation 3.2.7.74

Primary Auxiliary Building

Fire Area – PAB-F-1C-A

A. Equipment And Cables Located In The Fire Area

	Train A			Train B	
Description	Equip.	Cable	Description	Equip.	Cable
CS-P-2A	x	x			
CS-PS-7467-1	x	x			
CS-V210	x				
CS-V221	x				

B. Analysis

All equipment and cables are Train A. The redundant Train B equipment and cables are in Fire Area PAB-F-1D-A, separated from this area by a 3-hour fire wall.

C. Evaluation

The Appendix R separation requirements are satisfied.

Tabulation 3.2.7.75

Primary Auxiliary Building

Fire Area – PAB-F-1D-A

A. Equipment And Cables Located In The Fire Area

Train A			Train B		
Description	Equip.	Cable	Description	Equip.	Cable
			CS-P-2B	x	x
			CS-PS-7468-1	x	x
			CS-V219	x	
			CS-V220	x	

B. Analysis

All equipment and cables are Train B. The redundant Train A equipment and cables are in Fire Area PAB-F-1C-A, separated from this area by a 3-hour fire wall.

C. Evaluation

The Appendix R separation requirements are satisfied.

Tabulation 3.2.7.76

Primary Auxiliary Building

Fire Area – PAB-F-1E-A

A. Equipment And Cables Located In The Fire Area

	Train A			Train B	
Description	Equip.	Cable	Description	Equip.	Cable
CS-FCV-121		x			
CS-FI-121B	x	x			
CS-FT-121		x			

B. Analysis

Cables and equipment necessary for operation of valve CS-FCV-121 are contained in this fire area. This valve is part of the seal injection flow path. The cables and equipment for valves SI-V-138 and SI-V-139 which are part of the functionally redundant high head injection path are not contained in this fire area; hence they will be available for hot standby.

For cooldown, the operators will manually align the charging pump discharge and bypass valves (CS-V210, CS-V221 or CS-V219, CS-V220) to the seal injection flow path and throttle the bypass valves as required.

C. Evaluation

The safe shutdown requirements and the Appendix R separation requirements are satisfied.

Tabulation 3.2.7.77

Primary Auxiliary Building

Fire Area – PAB-F-1G-A

A. Equipment And Cables Located In The Fire Area

Train A			Train B		
Description	Equip.	Cable	Description	Equip.	Cable
CC-LT-2172-1		x	CC-LT-2192-1		x
CC-LT-2172-2		x	CC-LT-2192-2		x
CC-LT-2172-3		x	CC-LT-2192-3		x
CC-LT-2272-1		x	CC-LT-2292-1		x
CC-LT-2272-2		x	CC-LT-2292-2		x
CC-LT-2272-3		x	CC-LT-2292-3		x
CC-P-11A		x			
CC-P-11C		x			
CC-TE-2171		x			
CC-TV-2171-1		x			
CC-TV-2171-2		x			
CC-V145		x	CC-V272		x
CC-V175		x			
CC-V257		x			
CC-V1101		x			
CC-V1109		x			
CS-FT-121		x			
CS-FCV-110A		x			
CS-FCV-111A		x			
CS-FCV-110B		x			
CS-FCV-111B		x			
CS-FCV-121		x			

Primary Auxiliary Building

Fire Area – PAB-F-1G-A

A. Equipment And Cables Located In The Fire Area

Train A			Train B		
Description	Equip.	Cable	Description	Equip.	Cable
CS-HCV-182		x			
CS-LCV-112B		x			
CS-LCV-112D		x			
CS-LT-102		x	CS-LT-106		x
CS-P-2A		x	CS-P-2B	(1)	(1)
CS-P-3A		x			
CS-V142		x			
CS-V154		x			
CS-V158		x			
CS-V162		x			
CS-V166		x			
CS-V167		x			
CS-V196		x			
			CS-V426		x
CS-V460		x	CS-V475		x
			CS-V461		x
EAH-FN-5A		x			
EAH-FN-31A		x			
EDE-MCC-513		x			
PAH-DP-35A		x	PAH-DP-35B		x
PAH-DP-36A		x	PAH-DP-36B		x
PAH-DP-43A		x			
PAH-DP-357		x			

Primary Auxiliary Building

Fire Area – PAB-F-1G-A

A. Equipment And Cables Located In The Fire Area

Train A			Train B		
Description	Equip.	Cable	Description	Equip.	Cable
PAH-FN-42A		x			

(1) CS-P-2B and its cables are not actually located in this fire area. However, CS-P-2B is listed because it is potentially affected via a systems interaction. See Analysis Section B.18.

RC-V23		x	RC-V22		x
RC-V88		x	RC-V87		x
RH-FCV-618		x	RH-FCV-619		x
RH-HCV-606		x	RH-HCV-607		x
RH-V14		x	RH-V26		x
RH-V35		x	RH-V36		x
RH-V70		x	RH-V32		x
SI-PT-937		x	SI-PT-936		x
SI-V138		x			
SW-FN-51A		x			
SW-P-41A		x			
SW-P-41C		x			
SW-P-110A		x			
SW-V4		x			
SW-V15		x			
SW-V16		x			
SW-V20		x			
SW-V34		x			
SW-V54		x			
SW-V56		x			

Primary Auxiliary Building

Fire Area – PAB-F-1G-A

A. Equipment And Cables Located In The Fire Area

	Train A			Train B	
Description	Equip.	Cable	Description	Equip.	Cable
SW-V74		x			
SW-V139		x			
SWA-DP-66		x			
SWA-FN-64		x			
SWA-FN-71		x			

B. Analysis

1. General System/Equipment Analysis

With the exception of the systems/equipment discussed below, a fire in this area will only affect the Train A safe shutdown cables. The redundant Train B safe shutdown cables are located in fire area DCT-F-3B-0 and other fire areas.

The Appendix R separation requirements are satisfied.

2. PCCW Head Tank level Transmitters CC-LT-2172-1, 2, 3; CC-LT-2272-1, 2, 3; CC-LT-2192-1, 2, 3, CC-LT-2292-1, 2, 3

Cables for the redundant head tank level transmitters are in proximity. Failures in these cables could initiate a spurious lo-lo-head tank level isolation signal. This in turn would result in closure of the PCCW containment isolation valves. These valves are only required when it is necessary to maintain containment habitable for containment entry to manually operate the RHR isolation valves and the SI accumulator isolation valves. The circuitry for these valves is not affected by a fire in this area; hence, they would be operable from the MCR. Therefore, the spurious operation of these transmitters will not prevent safe shutdown.

The safe shutdown requirements are satisfied.

3. Component Cooling Water Pumps CC-P-11A, CC-P-11C and Component Cooling Water Containment Isolation Valves CC-V175, CC-V257

A fire could cause loss of all PCCW to containment. It should be noted, however, that these valves are required to remain operable only for containment entry when manual operation of the safety injection isolation valves SI-V3, SI-V17, SI-V32 and SI-V47 and the reactor coolant - RHR isolation valves RC-V22, RC-V23, RC-V87 and RC-V88 are required. Cables for these valves are not routed through this fire area; hence, the valves would be operable from the main control room or the RSS control panels and containment entry would not be required.

The safe shutdown requirements are satisfied.

4. RHR Heat Exchanger Outlet Valves CC-V145, CC-V272

Cables for redundant valves CC-V145 and CC-V272 are routed in proximity to one another. The valves are normally open to their shutdown cooling position and their position is inconsequential until the plant is cooled down to 350°F and the RH system is placed in operation. At that time, it is necessary to assure that the valve supplying PCCW to the operational RH train is opened. This can be accomplished manually if required in the appropriate equipment vault. Manual operation can be delayed as much as 9 hours into the event. Therefore, no fire protection other than the existing separation is needed.

The provision of a capability to position the valve outside the fire area satisfies the safe shutdown requirements.

5. Charging Pump Discharge Valve CS-FCV-121

This zone contains cables in tray required for operation of Train A valves CS-FCV-121, which provides one of the required hot standby charging flow paths. The redundant Train B SI-V139 cables are located in Fire Area DCT-F-3B-0.

For cooldown, the operators will manually align the Train B charging pump discharge and bypass valves (CS-V219 and CS-V220) to the seal injection flow path and throttle the bypass valve as required. This operator action can be delayed for up to of 4 hours.

The Appendix R separation and safe shutdown requirements are satisfied.

6. Boric Acid Tank Level Transmitter CS-LT-102, CS-LT-106

This zone contains cables routed in tray for the redundant boric acid tank level transmitters CS-LT-102 and CS-LT-106. These tank levels are only required once cooldown has been initiated. Should both transmitter cables be damaged by a fire, the operators can utilize the Train B level transmitter CS-LT-7464 whose cable is not routed through this fire area. The indicator for this transmitter is located at the RSS panel in the Train B switchgear room (Fire Area: CB-F-1B-A).

The provision of a redundant transmitter with its cable routed in another fire area satisfies the safe shutdown requirements.

7. Seal Injection Isolation Valves CS-V154, CS-V158, CS-V162 and CS-V166

Under normal conditions, the seal injection isolation valves CS-V154, CS-V158, CS-V162 and CS-V166 are utilized for the seal injection flow path. Spurious closure of one of these valves will not prevent safe shutdown. The operators will prevent further spurious operations by tripping the power supply breakers in the Train A switchgear room (Fire Area: CB-F-1A-A).

The safe shutdown requirements are satisfied.

8. RC Pump Seal Water Isolation Valve CS-V167

Valve CS-V167 is a normally open valve which should remain open for safe shutdown. Spurious isolation of this Train A valve could result in loss of RC inventory through the upstream relief valve. This inventory is directed to the PRT and is therefore, non-recoverable. To preclude this loss of inventory, functionally redundant isolation capability is provided by the RC pump seal return lines by means of Train A valves CS-V10, CS-V28, CS-V44, and CS-V59. The cables, controls and equipment required for operation of valves CS-V10, CS-V28, CS-V44, and CS-V59, are not contained in this fire area.

The Appendix R separation requirements are satisfied.

9. BAT to Charging Pump Isolation Valve CS-V426

Valve CS-V426 is a normally closed valve which is opened to provide a path from the boric acid tanks to the charging pump suction. This path is required to begin cooldown. In the event that this valve is inoperable, the operators can provide a redundant path by manually positioning valves in the boric acid tank room (Fire Area: PAB-F-2B-Z). The operators can maintain the plant in hot standby for the time required to perform this manual action.

The safe shutdown requirements are satisfied.

10. SI-CS Suction Cross Connection Valves CS-V460, CS-V461, CS-V475

Valves CS-V460, CS-V461 and CS-V475 are located in proximity. Prior to beginning cooldown the normally closed CS-V460 and CS-V461 valves should remain closed or the functionally redundant valve CS-V475 should be closed. The isolation of this path will prevent loss of boric acid tank inventory to the RWST during cooldown. In the event of a spurious valve operation which renders this flow path open, the plant can be maintained in hot standby for as long as 4 hours.

Should the operators desire to initiate the cooldown sooner than 4 hours, a gravity feed can be established from the boric acid tanks to the charging pumps. As the BAT head is lower than that required to return inventory to the RWST, there would be no loss of BAT inventory through this path and the position of these valves would be inconsequential. The safe shutdown requirements are satisfied.

11. Containment Enclosure Isolation Damper, PAH-DP-35A, PAH-DP-36A, PAH-DP-35B, PAH-DP-36B

Cables for outboard isolation dampers PAH-DP-35A and PAH-DP-36A and inboard isolation dampers PAH-DP-35B and PAH-DP-36B are routed in trays and conduits in proximity to one another. Under normal operation both outboard and both inboard dampers are open. If both outboard or both inboard dampers go closed, the Containment Enclosure Air Handling (EAH) system operates in recirculation mode. The normal and recirculation modes for EAH system operation both satisfy the safe shutdown function. If the outboard dampers and the inboard dampers operate independently such that either the supply or the exhaust path but not both are isolated, there could be an air flow problem in EAH system.

Outboard dampers are powered from a single Train A power supply. Inboard dampers are powered from a single Train B power supply. The circuit design for the outboard and inboard dampers is such that a spurious signal in either or both circuits will cause both outboard and inboard dampers to operate together, either both open (normal mode) or both closed (recirculation mode).

The safe shutdown requirements are satisfied.

12. RHR Isolation Valves RC-V22, RC-V23, RC-V87, RC-V88

Cables for redundant valves are located in proximity. As the RHR isolation valves are permanently disabled in the closed position, failures in the cables cannot cause a spurious operation. Valves RC-V87 and RC-V88 are required to be opened for cooldown below 350°F when the RH system is placed in operation. Should the cable damage be such that the valves cannot be operated from the MCR, the affected portion of the circuit can be isolated at the RSS panels in the Train A and Train B switchgear rooms (Fire Areas: CB-F-1A-A and CB-F-1B-A) and the valves repositioned for safe shutdown.

The safe shutdown requirements are satisfied.

13. RHR Heat Exchanger Outlet Flow Control and Bypass Flow Control Valves RH-FCV-618, RH-HCV-606, RH-FCV-619, RH-HCV-607

Cables for the redundant flow control valves are routed in proximity. The RH-HCV-606 and RH-HCV-607 valves are normally closed and are required to open whereas the RH-FCV-618 and RH-FCV-619 are normally open and are required to close. These valves are only required to operate when the RH system is placed in operation (cold shutdown). The valves have air operators controlled by dc solenoids. These solenoids when deenergized vent the air from the operators and cause the valves to fail to their safe shutdown position. In the event this positioning cannot be performed in the MCR, the operators will position these valves by tripping the power supply breakers in the Train A and Train B switchgear rooms (Fire Areas: CB-F-1A-A and CB-F-1B-A).

The safe shutdown requirements are satisfied.

14. RH Pump to Cold Leg Isolation Valves RH-V14, RH-V26

Cables for redundant valves RH-V14 and RH-V26 are routed in proximity. These valves are normally open valves which are required to remain open for RH systems operation (cold shutdown). If one of the valves spuriously closes, the operators will prevent further spurious operation of these valves by tripping the power supply breakers in the Train A and Train B switchgear rooms (Fire Areas: CB-F-1A-A and CB-F-1B-A).

The safe shutdown requirements are satisfied.

15. RH Pump to Hot Leg Isolation Valves RH-V70, RH-V32

Cables for redundant valves RH-V70 and RH-V32 are routed in proximity. These valves are normally closed valves which are required to remain closed for RH system operation (cold shutdown). If one of the valves spuriously opens, the operators will prevent further spurious operation of these valves by tripping the power supply breakers in the Train A and Train B switchgear rooms (Fire Areas: CB-F-1A-A and CB-F-1B-A).

The safe shutdown requirements are satisfied.

16. RH Heat Exchanger to CS/SI Pump Isolation Valves RH-V35, RH-V36

Cables for the redundant valves RH-V35 and RH-V36 are routed in proximity. Valves RH-V35 and RH-V36 are normally closed and their position is inconsequential until the plant is cooled down to 350°F and the RH system is placed in operation. At that time it is necessary to assure that the valves remain closed. Should one of the valves open spuriously the operators can disable its power supply in either the Train A or Train B switchgear rooms (Fire Areas: CB-F-1A-A or CB-F-1B-A) and manually reposition the valves located in the equipment vaults (Fire Zone RHR-F-4B-Z or RHR-F-2A-Z).

Manual operation of the valves can be delayed as much as 9 hours into the event. Therefore, no fire protection other than the existing separation is needed.

The provision of a capability to mitigate the spurious operation of the valves outside the fire area satisfies the safe shutdown requirements.

17. Containment Pressure Transmitters SI-PT-936, SI-PT-937

Redundant channels of containment pressure cables are located in proximity. Spurious operation of these channels will initiate containment spray and containment isolation Phase B. The operators will have the capability to terminate these protective actions by use of manual reset switches. All ESF equipment which has been started will be tripped and locked out. To preclude further spurious operations, the operators will disable the engineered safety features logic cabinets in the Train A and Train B switchgear rooms (Fire Areas: CB-F-1A-A and CB-F-1B-A).

The provision of a capability to mitigate the spurious operation of the pressure transmitters outside the fire area satisfies the safe shutdown requirements.

18. Volume Control Tank Isolation Valve CS-LCV-112B and Charging Pump CS-P-2A & CS-P-2B

Volume control tank (VCT) isolation valves CS-LCV-112B & -112C are normally open to provide a suction path from the VCT to the normally operating charging pump (CS-P-2A or -2B). These valves must stay open until RWST valve CS-LCV-112D or -112E is manually opened to provide a charging pump suction path from the RWST, or the boric acid tanks are manually aligned as a charging pump suction source. Spurious closure of a VCT isolation valve caused by a hot short would interrupt suction flow to the operating charging pump causing it to be damaged. If the standby charging pump has cables in the same area then its operation can also be degraded. The result would be no charging system flow. Since this fire area contains cables for CS-LCV-112B and CS-P-2A, this condition is potentially applicable for the system alignment with CS-P-2A the standby pump and CS-P-2B the operating pump.

The CS-LCV-112B circuit design prevents spurious valve closure from hot shorts as follows. The field cable conductors for the motor control center (MCC) contactor close coil circuit are in different cables than the 120 V "hot" circuit conductors eliminating the hot short failure mode within the cables. Cable-to-cable hot shorts need not be postulated for thermoset cable insulation as used at Seabrook. Since CS-LCV-112B will not spuriously close, CS-P-2B as the operating charging pump will not be damaged.

Since charging flow is available, the safe shutdown requirements are satisfied.

19. Boration/Dilution Flow Control Valves, CS-FCV-110A, -111A, -110B, -111B

This area contains cables for CS-FCV-110A, -111A, -110B, -111B. Spurious opening of these valves in conjunction with spurious start of a boric acid transfer pump or reactor makeup water pump may divert boric acid from the reactor coolant system affecting cold shutdown reacivity control, or result in an unplanned dilution affecting hot standby and cold shutdown reactivity control. The operators isolate the diversion flow by closing CS-FCV-110B and –111B using the main control board control switches. The operators isolate the dilution flow by closing CS-LCV-112C using the main control broad switch.

The safe shutdown requirements are satisfied.

C. Evaluation

The safe shutdown requirements and Appendix R separation requirements are satisfied.

Tabulation 3.2.7.78

Primary Auxiliary Building - Stairwell (N)

Fire Area – PAB-F-S1-0

A. Equipment And Cables Located In The Fire Area

Train A			Train B		
Description	Equip.	Cable	Description	Equip.	Cable
None			None		

B. Analysis

There are no safe shutdown cables or equipment in this fire area.

C. Evaluation

The Appendix R separation requirements do not apply to this fire area.

Tabulation 3.2.7.79

Primary Auxiliary Building - Stairwell (S)

Fire Area – PAB-F-S2-0

A. Equipment And Cables Located In The Fire Area

Train A			Train B		
Description	Equip.	Cable	Description	Equip.	Cable
None			None		

B. Analysis

There are no safe shutdown cables or equipment in this fire area.

C. Evaluation

The Appendix R separation requirements do not apply to this fire area.

Tabulation 3.2.7.80

Equipment Vault - Train B (Vault #2)

Fire Area – RHR-F-1A-Z, RHR-F-1C-Z, RHR-F-2A-Z, RHR-F-3A-Z, RHR-F-4A-Z

A. Equipment And Cables Located In The Fire Area

Train A			Train B		
Description	Equip.	Cable	Description	Equip.	Cable
			CC-V272	x	x
			CS-V461		x
			CS-V475		x
			RC-V22		x
RC-V88		x	RC-V87		x
			RH-E-9B	x	
			RH-HCV-607	x	x
			RH-FCV-619	x	x
			RH-P-8B	x	x
			RH-V26		x
			RH-V32		x
RH-V35		x	RH-V36	x	x
			RH-V44	x	
SI-V89	x	x	SI-V89	x	x

B. Analysis

1. General Systems/Equipment Analysis

With the exception of the systems/equipment discussed below, a fire in this area will only affect the Train B safe shutdown equipment and cables. The redundant Train A safe shutdown equipment and cables are located in Train A Vault (Vault #1) (Fire Areas: RHR-F-1B-Z, RHR-F-1D-Z, RHR-F-2B-Z, RHR-F-3B-Z, RHR-F-4B-Z) or other fire areas.

The Appendix R separation requirements are satisfied.

2. SI-CS Suction Cross Connection Valves CS-V461, CS-V475

Valves CS-V461 and CS-V475 are located in proximity. Prior to beginning cool down the normally closed valve CS-V461 should remain closed or the functionally redundant valve CS-V475 should be closed. The isolation of this path will prevent loss of boric acid tank inventory to the RWST during cooldown. In the event of a spurious valve operation, which renders this flow path open, the plant can be maintained in hot standby for as long as 4 hours.

Should this area be inaccessible due to the fire or should the operators desire to initiate the cooldown sooner than 4 hours, a gravity feed can be established from the boric acid tanks to the charging pumps. As the BAT head is lower than that required to return inventory to the RWST, there would be no loss of BAT inventory through this path and the position of these valves would be inconsequential.

The safe shutdown requirements are satisfied.

3. RHR Isolation Valves RC-V22, RC-V87, RC-V88

Cables, for functionally redundant valves are located in proximity. As the RHR isolation valves are permanently disabled in the closed position, failures in the cables cannot cause a spurious operation. Valve RC-V22 is required to be opened for cool down below 350°F when the RH System is placed in operation. Should the cable damage be such that the valve cannot be operated from the MCR, the affected portion of the circuit can be isolated at the RSS panel in the Train B switchgear room (Fire Area: CB-F-1B-A) and the valve repositioned for safe shutdown.

The safe shutdown requirements are satisfied.

4. RH Heat Exchanger to CS/SI Pump Isolation Valves RH-V35 and RH-V36 and SI Isolation Valve SI-V89

Cables for the redundant valves RH-V35 and RH-V36 are routed in proximity to one another. Valves RH-V35 and RH-V36 are normally closed and their position is inconsequential during all modes of plant operation with the exception of cooldown below 350°F when the RH System is placed in operation. At that time, it is necessary to insure that the valves remain closed. Should valve RH-V35 open spuriously, the operators can disable its power supply in the Train A switchgear room (Fire Area: CB-F-1A-A) and manually reposition the valves located in the Equipment Vault - Train A (Vault #1) (Fire Zone: RHR-F-4B-Z).

Manual operation of the valve can be delayed as much as 9 hours into the event. Therefore, no fire protection other than the existing separation is needed.

The provision of a capability to mitigate the spurious operation of the valve outside the fire area satisfies the safe shutdown requirements.

C. Evaluation

The safe shutdown requirements and Appendix R separation requirements are satisfied.

Tabulation 3.2.7.81

Equipment Vault - Train A (Vault #1)

Fire Area – RHR-F-1B-Z, RHR-F-1D-Z, RHR-F-2B-Z, RHR-F-3B-Z, RHR-F-4B-Z

A. Equipment And Cables Located In The Fire Area

	Train A			Train B	
Description	Equip.	Cable	Description	Equip.	Cable
CC-V145	x	x			
CC-V1101		x			
CC-V1109		x			
CS-V142		x			
CS-V154		x			
CS-V162		x			
CS-V166		x			
CS-V167		x			
CS-V460	x	x	CS-V475	x	x
			CS-V461	x	x
RC-V23		x	RC-V22		x
RC-V88		x			
RH-E-9A	x				
RH-HCV-606	x	x			
RH-FCV-618	x	x			
RH-P-8A	x	x			
RH-V8	x				
RH-V14		x			
RH-V35	x	x	RH-V36		x
RH-V70		x			
SI-V90	x	x	SI-V90	x	x
SI-V93	x	x	SI-V93	x	x

Equipment Vault - Train A (Vault #1)

Fire Area – RHR-F-1B-Z, RHR-F-1D-Z, RHR-F-2B-Z, RHR-F-3B-Z, RHR-F-4B-Z

A. Equipment And Cables Located In The Fire Area

	Train A			Train B	
Description	Equip.	Cable	Description	Equip.	Cable
SI-V138		x			
MM-IR-14	x	x			

B. ANALYSIS

1. General Systems/Equipment Analysis

With the exception of the systems/equipment discussed below, a fire in this area will only affect the Train A safe shutdown equipment and cables. The redundant Train B safe shutdown equipment and cables are located in equipment Vault Train B (Vault #2) (Fire Areas: RHR-F-1A-Z, RHR-F-1C-Z, RHR-F-2A-Z, RHR-F-3A-Z, RHR-F-4A-Z) or other fire areas.

The Appendix R separation requirements are satisfied.

2. `Seal Injection Isolation Valves CS-V154, CS-V162 and CS-V166

Under normal conditions, the seal injection isolation valves CS-V154, CS-V158, CS-V162 and CS-V166 are utilized for the seal injection flow path, spurious closure of one of these valves will not prevent safe shutdown. The operators will prevent further spurious operations by tripping the power supply breakers in the Train A switchgear room (Fire Area: CB-F-1A-A).

The safe shutdown requirements are satisfied.

3. RC Pump Seal Water Isolation Valve CS-V167

Valve CS-V167 is a normally open valve which should remain open for safe shutdown. Spurious isolation of this Train A valve could result in loss of RC inventory through the upstream relief valve. This inventory is directed to the PRT and is therefore, non-recoverable. To preclude this loss of inventory, functionally redundant isolation capability is provided by the RC pump seal return lines by means of Train A valves CS-V10, CS-V28, CS-V44, and CS-V59 and the excess letdown line by means of normally closed, fail closed valves CS-V175 or CS-V176. The cables, controls and equipment required for operation of valves CS-V10, CS-V28, CS-V44, CS-V59, CS-V175 and CS-V176 are not contained in this fire area.

The Appendix R separation requirements are satisfied.

4. SI-CS Suction Cross Connection Valves CS-V460, CS-V461, CS-V475

Valves CS-V460, CS-V461 and CS-V475 are located in proximity. Prior to beginning cooldown the normally closed CS-V460 and CS-V461 valves should remain closed or the functionally redundant valve CS-V475 should be closed. The isolation of this path will prevent loss of boric acid tank inventory to the RWST during cooldown. In the event of a spurious valve operation which renders this flow path open, the plant can be maintained in hot standby for as long as 4 hours.

Should this area be inaccessible due to the fire or should the operators desire to initiate the cooldown sooner than 4 hours, a gravity feed can be established from the boric acid tanks to the charging pumps. As the BAT head is lower than that required to return inventory to the RWST, there would be no loss of BAT inventory through this path and the position of these valves would be inconsequential.

The safe shutdown requirements are satisfied.

5. RHR Isolation Valves RC-V22, RC-V23, RC-V88

Cables for redundant valves are located in proximity. As the RHR isolation valves are permanently disabled in the closed position, failures in the cables cannot cause a spurious operation. Valve RC-V88 is required to be opened for cooldown below 350°F when the RH system is placed in operation. Should the cable damage be such that the valve cannot be operated from the MCR, the affected portion of the circuit can be isolated at the RSS panel in the Train A switchgear room (Fire Area: CB-F-1A-A) and the valve repositioned for safe shutdown.

The safe shutdown requirements are satisfied.

6. RH Heat Exchanger to CS/SI Pump Isolation Valves RH-V35, RH-V36 and SI Isolation Valves SI-V90, SI-V93

Cables for the redundant valves RH-V35 and RH-V36 are routed in proximity to one another. Valves RH-V35 and RH-V36 are normally closed and their position is inconsequential during all modes of plant operation with the exception of cooldown below 350°F when the RH System is placed in operation.

At that time, it is necessary to assure that valve RH-V36 remains closed. Should valve RH-V36 open spuriously, the operators can disable its power supply in the Train B switchgear room (Fire Area: CB-F-1B-A) and manually reposition the valve located in the equipment Vault Train B (Vault #2) (Fire Zone: RHR-F-2A-Z).

Manual operation of the valve can be delayed as much as 9 hours into the event. Therefore, no fire protection other than the existing separation is needed.

The provision of a capability to mitigate the spurious operation of the valves outside the fire area satisfies the safe shutdown requirements.

C. Evaluation

The safe shutdown requirements and Appendix R separation requirements are satisfied.

Tabulation 3.2.7.82

Circulating Water Pump House

Fire Area – SW-F-1A-Z

A. Equipment And Cables Located In The Fire Area

Train A			Train B		
Description	Equip.	Cable	Description	Equip.	Cable
None			None		

B. Analysis

There are no safe shutdown cables or equipment in this fire area.

C. Evaluation

The Appendix R separation requirements do not apply to this fire area.

Tabulation 3.2.7.83

Service Water Pump House

Fire Area – SW-F-1B-A

A. Equipment And Cables Located In The Fire Area

	Train A			Train B	
Description	Equip.	Cable	Description	Equip.	Cable
EDE-CP-248		x			
EDE-MCC-514	x	x			
SW-P-41A		x			
SW-P-41C		x			
SW-PT-8272		x			
SW-PT-8273		x			
SW-PT-8274		x			
SW-V2		x			
SW-V22		x			
SWA-FN-40A		x	SWA-FN-40B		x
SWA-TSH-5614-1	x	x	SWA-TSH-5615-2	x	x

B. Analysis

1. General System/Equipment Analysis

With the exception of the systems/equipment discussed below, a fire in this area will only affect the Train A safe shutdown equipment and cables. The redundant Train B equipment and cables are located in fire area SW-F-1C-A separated from this area by a 3-hour fire wall.

2. Service Water Pump House Electrical Room Fans SWA-FN-40A, SWA-FN-40B and Temperature Switches SWA-TSH-5614-1, SWA-TSH-5615-2

This area contains the electrical rooms' supply fans SW-FN-40A and SW-FN-40B temperature switches whose failure could cause increase in temperature in the electrical rooms. This could result in the loss of electrical distribution equipment necessary for operation of both Train A and Train B service water equipment. In the event this occurs, the cooling towers will be utilized. This transfer can be initiated from the MCR manually or automatically with Train B tower actuation. The cables, controls and equipment required for operation of the cooling towers are not contained in the fire area.

C. Evaluation

The Appendix R separation requirements are satisfied.

Tabulation 3.2.7.84

Service Water Pump House

Fire Area – SW-F-1C-A

A. Equipment And Cables Located In The Fire Area

Train A			Train B		
Description	Equip.	Cable	Description	Equip.	Cable
			EDE-CP-249		x
			EDE-MCC-614	x	x
			SW-P-41B		x
			SW-P-41D		x
			SW-PT-8282		x
			SW-PT-8283		x
			SW-PT-8284		x
			SW-V29		x
			SW-V31		x
SWA-FN-40A		x	SWA-FN-40B		x
SWA-TSH-5614-2	x	x	SWA-TSH-5615-1	x	x

B. Analysis

1. General System/Equipment Analysis

With the exception of the systems/equipment discussed below, a fire in this area will only affect the Train B safe shutdown equipment and cables. The redundant Train A equipment and cables are located in fire area SW-F-1B-A separated from this area by a 3-hour fire wall.

2. Service Water Pump House Electrical Room Fans SWA-FN-40A, SWA-FN-40B and Temperature Switches SWA-TSH-5614-2, SWA-TSH-5615-1

This area contains the electrical rooms' supply fans SW-FN-40A and SW-FN-40B temperature switches whose failure could cause increase in temperature in the electrical rooms. This could result in the loss of electrical distribution equipment necessary for operation of both Train A and Train B service water equipment. In the event this occurs, the cooling towers will be utilized. This transfer can be initiated from the MCR manually or automatically with Train B tower actuation. The cables, controls and equipment required for operation of the cooling towers are not contained in the fire area.

C. Evaluation

The Appendix R separation requirements are satisfied.

Tabulation 3.2.7.85

Service Water Pump House

Fire Area – SW-F-1D-A

A. Equipment And Cables Located In The Fire Area

	Train A			Train B	
Description	Equip.	Cable	Description	Equip.	Cable
SWA-FN-40A	x	x	SWA-FN-40B	x	x

B. Analysis

Service water pump house electrical rooms' fans SWA-FN-40A and SWA-FN-40B are in this fire area. They cool the SW electrical control rooms Train A and B. Loss of cooling would cause a heat up in these rooms which may damage electrical distribution equipment for both trains of the Service Water pumps. Loss of the normally operating service water pumps would cause a "TA" actuation signal to transfer the system to the cooling towers which are not affected by the fire. The transfer is not affected by the fire or by the loss of cooling due to the fire.

C. Evaluation

The Appendix R separation requirements are satisfied.

Tabulation 3.2.7.86

Service Water Pump House

Fire Area – SW-F-1E-A

A. Equipment And Cables Located In The Fire Area

	Train A			Train B	
Description	Equip.	Cable	Description	Equip.	Cable
EDE-CP-248		x	EDE-CP-249		x
MM-IR-73	x	x	MM-IR-73	x	x
SW-P-41A	x	x	SW-P-41B	x	x
SW-P-41C	x	x	SW-P-41D	x	x
SW-PT-8272	x	x	SW-PT-8282	x	x
SW-PT-8273	x	x	SW-PT-8283	x	x
SW-PT-8274	x	x	SW-PT-8284	x	x
SW-V2	x	x	SW-V29	x	x
SW-V22	x	x	SW-V31	x	x

B. Analysis

A fire in this zone could affect all four service water pumps and their associated discharge valves. Two of the four pumps would normally be operating. A fire in this area will not affect the operability of the cooling tower and its associated fans, pumps and valves for utilization in satisfying safe shutdown. Transfer to the cooling towers will be either automatic by a "TA" actuation generated by low discharge service water pump pressure or by manual actuation from the Main Control Room. Automatic transfer is actuated by SW-PT-8272, 8273, 8274, 8282, 8283, 8284 which are in this fire zone. Loss of the pressure transmitters or their associated instrument racks due to fire will also cause transfer.

C. Evaluation

The Appendix R separation requirements are satisfied.

Tabulation 3.2.7.87

Intake And Discharge Structure

Fire Area – SW-F-2-0

A. Equipment And Cables Located In The Fire Area

	Train A			Train B	
Description	Equip.	Cable	Description	Equip.	Cable
SW-V44	x				
SW-V63	x				

B. Analysis

Valves SW-V44, SW-V63 are normally open valves which should remain open for safe shutdown. The valves are permanently disabled in the open position.

C. Evaluation

The safe shutdown requirements are satisfied.

Tabulation 3.2.7.88

Turbine Building

Fire Area – TB-F-1A-Z, TB-F-1C-Z, TB-F-2-Z, TB-F-3-Z

A. Equipment And Cables Located In The Fire Area

	Train A			Train B	
Description	Equip.	Cable	Description	Equip.	Cable
CBA-DP-24A		x			
CBA-DP-24B		x			
CBA-DP-24C		x			
CO-LT-4096		x			
ED-B-2A		x			
ED-B-2B		x			
ED-BC-2A	x	x			
ED-BC-2B	x	x			
ED-I-4		x			
ED-PP-121B		x			
ED-PP-122A	x	x			
ED-PP-122B		x			
ED-SWG-12A	x	x			
ED-SWG-12B	x	x			
EDE-MCC-523	x	x			
EDE-SWG-5		x	EDE-SWG-6		x
FP-CP-558	x	x			
FW-P-113	x	x			
FW-P-161	x	x			
FW-V163	x	x			
IA-SKD-18A	x		IA-SKD-18B	x	

Turbine Building

Fire Area – TB-F-1A-Z, TB-F-1C-Z, TB-F-2-Z, TB-F-3-Z

A. Equipment And Cables Located In The Fire Area

	Train A			Train B	
Description	Equip.	Cable	Description	Equip.	Cable
MM-IR-33A	x	x			
SA-V92	x	x			
SA-V93	x	x			
SA-TK-23A	x		SA-TK-23B	x	
SA-SKD-137A	x	x	SA-SKD-137B	x	x
SY-CP-84	x	x	SY-CP-84	x	x
SY-CP-85	x	x	SY-CP-85	x	x
SY-CP-86	x	x	SY-CP-86	x	x
SCC-FV-7050	x	x	SCC-FV-7050	x	x
SY-CP-87	x	x	SY-CP-87	x	x
SCC-FV-7050A-1	x	x	SCC-FV-7050A-1	x	x
SCC-FV-7050A-2	x	x	SCC-FV-7050A-2	x	x
			SCC-PCV-7035	x	

B. Analysis

1. Control Building Air Handling (CBA) System Dampers CBA-DP-24A, B, C and Fire Protection Panel FP-CP-558

   All equipment and cables are Train A, the redundant Train B equipment are located in fire area CB-F-2B-A, separated from this area by a 3-hour fire wall.

   The Appendix R separation requirements are satisfied.

2. Condensate Storage Tank (CST) Level Transmitter CO-LT-4096

   Cables for CO-LT-4096 and its instrument bus (ED-I-4) are located in this fire area. Redundant cable and equipment is located in the EFW Pump House (fire area EFW-F-l-A).

The Appendix R separation requirements are satisfied.

3. Battery Chargers ED-BC-2A & ED-BC-2B, Batteries ED-B-2A & ED-B-2B, Switchgear ED-SWG-12A & ED-SWG-12B, and Power Panels ED-PP-121B & ED-PP-122A

   Loss of these buses could cause loss of RC Pump Control Power. The operator will manually trip the switchgear in the non-essential switchgear room (Fire Area: NES-F-1A-Z). Pressurizer heaters C, D and control group control power could be lost. If the heaters require tripping, an operator will manually trip them in the Train A switchgear room (Fire Area: CB-F-1A-A). Alternatively, the operator can reduce pressure by operating a PORV. Redundant heaters are available with control power from the emergency DC buses.

   The safe shutdown requirements are satisfied.

4. Electrical Distribution Emergency (EDE) System (4160 Swgr. E5, E6; Control Panels SY-CP-84, 85, 86, 87, and 460V MCC E523)

   Redundant equipment and cables for the 4160 switchgear are located in the same fire area. A short circuit in this equipment or cables can cause a trip of the 4160V emergency switchgear E5 and E6 incoming line breakers from the UAT and RAT, resulting in loss of the offsite power supply. Loss of the offsite power supply will require starting of the diesel generators. The emergency buses will be powered from the diesel generators. This is the design base for safe shutdown.

   The safe shutdown requirements are satisfied.

   For the 460V MCC's all equipment and cables are Train A, the functionally redundant Train B cables and equipment are located in fire area CB-F-1B-A, separated from this area by a 3-hour fire wall.

   The Appendix R separation requirements are satisfied.

5. Instrument Air (IA) System

Redundant equipment and cables for instrument air dryers are located in the same fire area. Dryers IA-SKD-18A and IA-SKD-18B provide instrument air for the primary component cooling water system containment isolation valves, Train A and Train B switchgear room dampers CBA-DP-24A, B, C, D, E, F, and MCR dampers CBA-DP-26A and CBA-DP-26B. Component cooling water to containment is required to maintain containment habitability. For a fire in this area, containment entry is not required as operators have the capability to operate safety injection accumulator isolation valves SI-V3, SI-V17, SI-V32 and SI-V47 and RHR isolation valves RC-V22, RC-V23, RC-V87 and RC-V88 from the main control room (Fire Area: CB-F-3A-A) or the RSS control panels (Fire Areas: CB-F-1A-A and CB-F-1B-A), separated from this area by a 3-hour fire wall. The operators have the capability to manually position the Main Control Room air conditioning condenser units face and bypass dampers in the Diesel Generator Building HVAC equipment area (Fire Areas DG-F-3A-Z & DG-F-3B-Z). As these dampers fail “as is”, this action would only be required to maintain long term habitability required by 9 hours into the event. Therefore, the air dryers are not required for safe shutdown for a fire in this area.

The safe shutdown requirements are satisfied.

6. Service Air (SA) System

Redundant equipment and cables for the service air system and secondary component cooling system with its tie-in to the fire protection system are located in the same fire area. Compressor skids SA-SKD-137A and SA-SKD-137B and their associated equipment provide instrument air for the primary component cooling water system containment isolation valves, and MCR dampers CBA-DP-26A and CBA-DP-26B. Component cooling water to containment is required to maintain containment habitability. For a fire in this area, containment entry is not required as operators have the capability to operate safety injection accumulator isolation valves SI-V3, SI-V17, SI-V32 and SI-V47 and RHR isolation valves RC-V22, RC-V23, RC-V87 and RC-V88 from the main control room (Fire Areas: CB-F-3A-A) or the RSS control panels (Fire Areas: CB-F-1A-A and CB-F-1B-A), separated from this area by a 3-hour fire wall. The operators have the capability to manually position the MCR dampers in the Control Room HVAC Room (Fire Area: CB-F-3B-A), separated from this area by a 3-hour fire wall. The operators have the capability to manually position the switchgear room dampers in the control building mechanical equipment rooms (Fire Areas: CB-F-2B-A and CB-F-2C-A). As the Train A and Train B switchgear room intake and recirculation dampers fail "as is" and the exhaust damper fails open, this action would only be required to maintain long term habitability required by 9 hours into the event. Therefore, the SA system is not required for safe shutdown for a fire in this area.

The safe shutdown requirements are satisfied.

C. Evaluation

The safe shutdown requirements and Appendix R separation requirements are satisfied.

Tabulation 3.2.7.89

Turbine Building

Fire Area – TB-F-1B-A

A. Equipment And Cables Located In The Fire Area

	Train A			Train B	
Description	Equip.	Cable	Description	Equip.	Cable
ED-B-2A	x	x			
ED-B-2B	x	x			

B. Analysis

Fire in this area will cause loss of DC power Bus ED-SWG-12B. Loss of this bus will cause loss of CST level instrumentation CO-LT-4096. Redundant equipment is located in fire area EFW-F-1A.

Also RC pump switchgear control power is lost. When the RCP's are required to be tripped (during cooldown) the operator will manually trip them in the non-essential switchgear room (Fire Area: NES-F-1A-Z).

Pressurizer Heaters C, D, and control group control power will be lost. An operator, if the heaters require tripping, will do so in the Train A switchgear room (Fire Area: CB-F-1A-A). Alternatively, the operator can reduce pressure by operating a PORV. Redundant heaters are available with control power from the emergency DC bus.

C. Evaluation

The safe shutdown requirements are satisfied.

Tabulation 3.2.7.90

Tank Farm

Fire Area – T-F-1-0

A. Equipment And Cables Located In The Fire Area

	Train A			Train B	
Description	Equip.	Cable	Description	Equip.	Cable
CS-LCV-112B		x	CS-LCV-112C		x
CS-LCV-112D	x	x	CS-LCV-112E	x	x

B. Analysis

Redundant valves CS-LCV-112D and CS-LCV-112E are located in the same fire area. The cables for VCT isolation valves CS-LCV-112B and CS-LCV-112C, are also located in this fire area. These are normally open valves.

A fire in this area will prevent opening the normally closed RWST to charging pump isolation valves from the control room. The normally open VCT isolation valves may experience a loss of control power but can not spuriously close as described below.

A fire in this area does not affect the normal charging, letdown, and boric acid makeup functions so safe shutdown can be achieved and maintained using a charging pump aligned to the VCT through CS-LCV-112 B & -112C. The RWST is not needed for this normal shutdown so the inability to open CS-LCV-112D & -112E does not affect safe shutdown. If there was a need to use the RWST, the RWST valves could be manually opened, and the VCT isolation valves could be closed from the RSS panels or manually closed.

Volume control tank (VCT) isolation valves CS-LCV-112B & -112C are normally open to provide a suction path from the VCT to the normally operating charging pump (CS-P-2A or -2B). These valves must stay open to provide a charging pump suction path from the VCT. Spurious closure of a VCT isolation valve caused by a hot short would interrupt suction flow to the operating charging pump causing it to be damaged. If the standby charging pump has cables in the same area then its operation can also be degraded. The result would be no charging system flow. Since this fire area does not contain cables for CS-P-2A or CS-P-2B, this condition is not applicable to this fire zone.

Furthermore, the CS-LCV-112B and -112C circuit design prevents spurious valve closure from hot shorts as follows. The field cable conductors for the motor control center (MCC) contactor close coil circuit are in different cables from the 120 V "hot" circuit conductors eliminating the hot short failure mode within the cables. Cable-to-cable hot shorts need not be postulated for thermoset cable insulation as used at Seabrook. Since CS-LCV-112B and -112C will not spuriously close, CS-P-2A or -2B as the operating charging pump will not be damaged.

C. Evaluation

The safe shutdown requirements are satisfied.

Tabulation 3.2.7.91

Waste Building

Fire Area - W-F-1A-Z, W-F-1B-Z, W-F-1K-Z, W-F-2A-Z, W-F-2B-Z, W-F-2C-Z, W-F-2D-Z, W-F-2E-Z

A. Equipment And Cables Located In The Fire Area

Train A			Train B		
Description	Equip.	Cable	Description	Equip.	Cable
None			None		

B. Analysis

There are no safe shutdown cables or equipment in this fire area.

C. Evaluation

The Appendix R separation requirements do not apply to this fire area.

3.3 ALTERNATIVE SAFE SHUTDOWN USING REMOTE SAFE SHUTDOWN FACILITIES

3.3.1 General

Remote safe shutdown (RSS) is a design feature which allows plant shutdown from locations other than the main control room in the event of a fire or other condition which requires evacuation of the main control room. The fire areas of concern are the main control room, control room HVAC room, and the cable spreading room. Remote safe shutdown contains the necessary complement of systems and equipment required to satisfy the performance goals delineated in Appendix R, Paragraph III.L.2.

Technical Specification (T/S) 3/4.3.3.5 requires surveillance testing of selected equipment used for safe shutdown from outside the Control Room at Remote Safe Shutdown (RSS) locations. The required equipment is listed in Table 3.3-9. The selection criteria for the Transfer Switch/Control Circuit portion of the table is the primary equipment which has remote/local selector switches and is required to perform the reactor coolant system inventory and pressure control, reactivity control, and decay heat removal functions to achieve and maintain hot standby. For Appendix R shutdown, only one train of equipment (safety or non-safety related) is required; redundancy is not a requirement. Seabrook is a hot standby safe shutdown design basis plant (see UFSAR Section 5.4.7.2.i). Support equipment, and equipment required only to achieve and maintain cold shutdown, are not required to be included in the T/S table. Process monitoring instruments also have surveillance requirements.

3.3.2 Safe Shutdown Control Locations

Normally safe shutdown will be accomplished from the main control room, utilizing the safe shutdown equipment along with other equipment which may be available to the operators. Upon detection of a fire, the fire brigade will be dispatched to the affected area and a determination will be made as to the severity of the fire. If it is determined that the fire has a potential for impacting safe shutdown from the main control room, the operators will proceed with a planned evacuation of the main control room and manning of the Train B remote safe shutdown control panel (MM-CP-108B) and man the following remote safe shutdown (RSS) facilities as necessary:

a. Train B Switchgear Room (Switchgear E6, and various Unit Substations, Motor Control Centers (MCC) and Distribution Panels) and RSS Aux Panel in Electrical Tunnel B.

b. Train A Switchgear Room (MM-CP-108A, Switchgear E5, and various Unit Substations, Motor Control Centers (MCC), and Distribution Panels) and RSS Aux Panel in Electrical Tunnel A.

c. Diesel Generator Room A

d. Diesel Generator Room B

e. Primary Auxiliary Building El. 53'-0" Primary Component Coolant Water Heat Exchanger Area

f. Primary Auxiliary Building El. 25'-0" Boric Acid Tank Area

g. Primary Auxiliary Building El. 7'-0" Train B Charging Pump Room

h. Control Building Mechanical Equipment Rooms - El. 50'-0"

i. Equipment Vault - Train B (Vault #2)

j. Condensate Storage Tank

k. Non-Essential Switchgear Room

The term “prompt action” refers to an action taken after receipt of a valid fire alarm in the main control room. The term “expeditious action” or “expeditiously” refers to an action taken quickly upon entry into the applicable safe shutdown procedure. These type actions are considered to be completed prior to a spurious operation of the equipment operated by the prompt and expeditious actions. Therefore, no associated timing calculation is required for these actions.

3.3.3 Safe Shutdown Functions for Hot Standby

The following are equipment necessary for Hot Standby:

3.3.3.1 Reactor Coolant (RC) Inventory and Pressure Control

To compensate for miscellaneous RC system leakage, RC pump seal leakage and cooldown volume shrink, portions of the chemical and volume control (CS) system including centrifugal charging pumps, boric acid transfer pumps, and a borated water supply, either the refueling water storage tank (RWST) or the boric acid tanks (BAT) are used. The injection path to the RC system will be either through the seal injection flow path or the high head injection flow path. The preferred seal injection path requires that a flow control valve (CS-FCV-121) and that a minimum of two of the four seal injection valves (CS-V154, CS-V158, CS-V162 or CS-V166) be operable. Additionally, the normal charging flow to the RC system is isolated. This can be accomplished by temporarily stopping a charging pump to prevent overfill of the pressurizer. It can also be accomplished by use of any one of two functionally redundant but non-credited valves (CS-V142 or CS-V143). Should the seal injection path not be operable e.g., due to spurious closure of a flowpath valve (CS-FCV-121), the high head injection flow path (SI-V138 or SI-V139) can be utilized initially to maintain hot standby by batch charging from the RWST to maintain pressurizer level.

During cooldown as RC system pressure decreases, it is necessary to provide a flow restricted path to prevent charging pump cavitation. This is due to the limited flow capability from the BAT. If the high head injection path cannot be isolated at this time and/or if the flow controlled path through CS-FCV-121 is not operable, a capability is provided to manually align and throttle the charging pumps to the seal injection flow paths. The necessary operator actions and valve alignments are unique for each fire area where these flow paths are affected and are described in the analysis for each area.

RC pump seal cooling is provided by a redundant thermal barrier cooling system. Should the redundant thermal barrier system not be available, the seals will be cooled by the seal injection capability. A control room or cable spreading room fire can result in a temporary loss of all cooling to the RCP seals. The operator action to accomplish restoration of cooling to the seals is to restore power to an emergency bus, restart of a thermal barrier cooling pump and a CC water pump. Then, a charging pump and SW pump are started for long term seal cooling via seal cooling, as well as inventory control. The operator action to restore RCP seal cooling is accomplished prior to the time that there would be potential damage to the seals. The reactor coolant pumps (RCPs) are stopped from the main control board prior to evacuating the main control room. Circuit analysis shows that the RCPs can not spuriously restart due to fire-induced cable damage.

The RC system pressure is controlled by use of a portion of the RC system which includes the pressurizer heaters (Group A and B) to increase pressure and the pressurizer power operated relief valves (PORV) which depressurize the RC system by discharging reactor coolant fluid to the pressurizer relief tank (PRT).

Considering worst case scenarios for spurious actuation of affected equipment, the required times for operator actions regarding RC inventory and pressure control for safe shutdown from the remote safe shutdown facilities are provided below:

Action	Time
Close PORV block valve	Prompt
Open the RWST outlet valves	Prompt
Place the standby charging pump in pull-to-lock	Prompt
Restore RCP seal cooling	9.9 to 19.8 minutes, depending on the highest RCP seal rate
Trip RCPs	10 minutes
Restore cooling to charging pump oil cooler	9.6 minutes
Isolate letdown	15 minutes
Swap charging pump suction from VCT to RWST	15.4 minutes. Should SI-V138, SI-V139, or CS-HCV-182 spuriously open, this action must be completed no later than 5.0 minutes following letdown line isolation.
Restore SW to emergency diesel generators	17.6 minutes
Open a PORV to reduce pressurizer pressure in the event of spurious pressurizer heater operation or trip pressurizer heaters	23 minutes
Start a charging pump, or open a high head safety injection valve SI-V-138 or SI-V-139 if normal charging pump path is not available	31.1 minutes
Isolate charging flow, except for seal injection	35.4 minutes
Trip spuriously operating containment building spray pumps	46 minutes
Trip spuriously operating SI pump	<4 hours, prior to commencement of plant cooldown

Action	Time
Isolate the potential diversion path from the BAT to the RWST or align BAT for gravity feed.	<4 hours, prior to commencement of plant cooldown
Align BAT for makeup source	<4 hours, prior to commencement of plant cooldown

3.3.3.2 Reactivity Control

Reactivity for hot standby at normal operating temperature (NOT) is provided by insertion of the control rods. Reactivity conditions required for cooldown and maintaining cold shutdown are provided by a portion of the chemical and volume control (CS) system which includes a centrifugal charging pump taking suction from the BAT's. During cooldown, the borated source must be the BAT volume until expended to at least the point that the volume injected or a boron sample demonstrates that sufficient shutdown margin for cold shutdown has been achieved, at which time the RWST would be aligned. The credited path for boration is gravity feed with the RWSP isolated. The boric acid transfer pumps can be used if available.

Considering worst case scenarios for spurious actuation of affected equipment, the required times for operator actions regarding reactivity control for safe shutdown from the remote safe shutdown facilities are provided below:

Action	Time
Trip the Reactor	Expeditiously
Provide borated water from the BATs, via boric acid transfer pump or gravity feed.	<4 hours, prior to commencement of plant cooldown
Isolate boric acid flow diversion path.	<4 hours, prior to commencement of plant cooldown

3.3.3.3 Decay Heat Removal

The reactor coolant (RC) system temperature is controlled by use of portions of the feedwater (FW) system and the main steam (MS) system. The main steam safety/relief valves will maintain a heat dump capability. The steam generator water inventory is controlled by operating the motor driven emergency feedwater pump and associated emergency feedwater control valves. Inventory for the emergency feedwater is from the condensate storage tank. Long term water capability exists using a temporary connection between the suction of the emergency feed pumps and the fire protection system but is not required to meet Appendix R requirements. To assure main steam system integrity the MSIV's and MSIV bypass are maintained closed. The MSIV bypass valves are normally locked closed and depowered with breakers locked open to preclude spurious opening. Decay heat transfer is made possible by natural convection flow in the RC System.

Considering worst case scenarios for spurious actuation of affected equipment, the required times for operator actions regarding decay heat removal for safe shutdown from the remote safe shutdown facilities are provided below:

Action	Time
Isolate MSIVs	Expeditiously following a reactor trip
Place the mode selector switches for the ASDVs to the closed position	Prompt
Gain Control of excessive Emergency Feedwater Flow	20 minutes
Start motor driven EFW pump to preclude steam generator dry out	39 minutes
Time allotted for operator actions to preclude emptying CO tank to accommodate RHR Cut-in, and ultimately achieve cold safe shutdown within 72 hours	9 hours; 4 hours at hot standby plus 5 hours cooldown to RHR Cut-in

3.3.3.4 Process Monitoring

Instrumentation is provided at the Train B remote safe shutdown control panel for monitoring the following process variables:

a. Steam generator emergency feedwater flow

b. Reactor coolant loop hot and cold leg temperatures

c. Steam generator wide-range level

d. Steam generator pressure

e. Pressurizer level

f. Pressurizer pressure

g. Wide-range neutron monitoring (excore)

h. Primary component cooling water temperature

i. Boric acid tank level

j. Condensate storage tank level (local)

3.3.3.5 Service Water

The service water system will supply cooling water to the primary component cooling water system, diesel generators, and if required, fire protection system. Service water supply will be from the service water pumps taking suction from the tunnels to the ocean. Section 3.3.3.1 provides the required times for operator actions, based on worst case scenarios for spurious actuation.

3.3.3.6 Primary Component Cooling Water (CC)

The CC system is utilized to maintain cooling water to the charging pumps, RH pumps, RH heat exchangers, and reactor coolant pumps (RCP) thermal barrier heat exchanger. The PCCW pumps, temperature control valves, and RCP thermal barrier cooling pumps are necessary for system operations. Section 3.3.3.1 provides the required times for operator actions, based on worst case scenarios for spurious actuation.

3.3.3.7 Sampling

Sampling of the reactor coolant system is not required at hot standby and cold shutdown conditions since make-up during cool-down will only be provided to the RCS from the boric acid tanks (two) which are maintained at 4 wt% boric acid. During all phases of cool-down, the core will be maintained to the shutdown margin greater than or equal to the limit specified in the Core Operating Limits Report (COLR).

3.3.3.8 Diesel-Generator Building Air Handling (DAH)

The DAH system is utilized to maintain long-term habitability and equipment protection for the diesel-generator rooms. The DAH system includes the fans and dampers for air handling in these areas.

3.3.3.9 Containment Enclosure Air Handling (EAH)

The EAH system is utilized to maintain long-term habitability of the mechanical penetration area, and provide equipment cooling in the charging pump rooms, and the hydrogen analyzer and electrical room. The EAH system includes the coolers, fans, and dampers required for air handling in these areas.

3.3.3.10 Emergency Feedwater Pumphouse Air Handling (EPA)

The EPA system is utilized to maintain long-term habitability and equipment protection in the emergency feedwater pump building. The EPA system includes the fans and dampers required for air handling in this area.

3.3.3.11 Primary Auxiliary Building Air Handling (PAH)

Portions of the PAH system are utilized to maintain long-term habitability and equipment protection in the PCCW area of the primary auxiliary building. The PAH system includes the fans and dampers required for ventilation in this area.

3.3.3.12 Service Water Air Handling (SWA)

Portions of the SWA system are utilized for equipment protection in the SW pump house electrical control rooms. The SWA system includes the fans and dampers required for air handling in these areas.

3.3.3.13 Electrical Distribution Emergency (EDE)

Portions of the EDE system are required to power the various pumps, fans, valves, etc. required for safe shutdown. Included in the EDE system are the 4160 Volt ac emergency switchgear, 460 Volt ac emergency unit substations and motor control centers, the uninterruptible power supplies, 120 Volt ac vital distribution panels, 125 Volt dc batteries, battery chargers, and 125 Volt dc distribution panels.

3.3.3.14 Diesel-Generators (DG)

The diesel-generators provide power to the electrical distribution emergency system upon loss of off-site power. The DG system includes the diesel, generators, control panels, engine-driven auxiliaries, fuel oil transfer pumps, starting air compressors and backup operating air compressors.

3.3.3.15 Safeguard Actuation System

The safeguard actuation system could be actuated. A portion of this system is used to deactivate the system for recovery.

3.3.3.16 Communication

The Gaitronics or radio systems are used to announce the fire event, dispatch the fire brigade, and to dispatch an NSO to perform local actions in the emergency diesel generator rooms. The Gaitronics system is also used to provide a fire alarm. Face-to-face communications is used to dispatch a control room operator (CRO) to the Train B switchgear room to perform local actions. A sound powered telephone loop (SPC) is provided for the CRO and NSO to communicate between the switchgear and the diesel generator rooms. Headsets or handsets are stored at these RSS locations for operator use. All actions required to achieve and maintain hot standby are taken in these areas. When field actions are required to commence cooldown, and achieve and maintain cold shutdown, an operator would: a) be dispatched to take the required action, b) go to the field and take the action, and c) then return and report the action completed. The RSS SPC loop also includes two SPC jacks in the RHR equipment vaults. Radios and Gaitronics are not credited but would be used as additional means of communications, if not damaged by the fire.

3.3.4 Safe Shutdown Functions for Cooldown

The following equipment in addition to that which is listed in Section 3.3.3 are necessary for cooldown.

3.3.4.1 Decay Heat Removal

In addition to equipment discussed in Section 3.3.3.3, the steam generator atmospheric relief valves will be used for cooldown until the residual heat removal (RH) system can be used. The residual heat removal system will be the long term heat sink at the end of cooldown. An RH pump will be operated along with various control, manual and motor operated valves.

3.3.4.2 Sample System

For cold shutdown, the operators will draw a manual sample from RH system to verify boron concentration before line-up to RCS. The operator will use manual valves in RH system.

3.3.5 Initial Operator Actions

Remote safe shutdown procedures will require that prior to main control room evacuation the reactor, the main steam isolation valves, and the reactor coolant pumps be tripped, thus establishing a hot standby condition. Closure of the pressurizer PORV's block valves, placing the switches for the ASDVs to the closed position, placing the standby centrifugal charging pump in pull-to-lock, and opening the RWST outlet valves to the charging pump suction will be accomplished from the main control board after alarm confirmation (promptly) to prevent over cooling situations from either the primary or secondary side of the plant and ensuring proper RCS inventory control. Additionally, capabilities to trip the four MSIV'S, the four RCP's and the pressurizer PORV's and atmospheric relief valves exist outside the main control room. After a confirmed fire alarm for a main control room or cable spreading room fire, a control room operator (CRO) and nuclear systems operator (NSO) are dispatched to the Train B switchgear and emergency diesel generator rooms to take actions as directed by procedure. In the time interval required for the operators to evacuate the main control room and man the RSS facilities, decay heat removal is accomplished automatically by the steam generator safety valves. No other function is required initially to maintain a decay heat sink for the reactor.

Upon arrival at the RSS facilities, the operators will transfer control capability to the RSS facility by means of “Remote-Local” selector switches at the RSS locations and take the actions necessary to maintain control of the RCS inventory and pressure, and decay heat removal functions within the time frames described in sections 3.3.3.1 and 3.3.3.3. Control of the Train B Diesel Generator will be taken and if a Loss of Offsite Power (LOOP) occurs, clear and load EDE-SWG-6 to support safe shutdown. The operators will also trip the power supplies for engineered safety features actuation system (ESFAS) logic and cooling tower actuation logic to prevent inadvertent activation of these functions. The operators will then disable (trip power supply breakers) all equipment which is properly positioned in its safe shutdown position. Any additional recovery actions needed to maintain hot standby or to start a cooldown will be completed if inadvertent safeguard operation, tower actuation or “HOT SHORT” actuation occurs.

3.3.6 Manual Operator Actions

The following equipment may require manual operation:

1. Mechanical room dampers CBA-DP-24A, CBA-DP-24B, CBA-DP-24C, CBA-DP-24D, CBA-DP-24E and CBA-DP-24F.

2. Component cooling water valves CC-V145 and CC-V272.

3. Charging pump discharge and bypass valves CS-V210, CS-V219, CS-V220 and CS-V221.

4. RHR sampling valves RH-V8 and RH-V44.

5. Boric acid tank gravity feed valves CS-V410, CS-V416, CS-V437, CS-V439, CS-V442, and CS-V1207.

The cables for valves CC-V145 and CC-V272 are not included in the review. Equipment CBA-DP-24D, CBA-DP-24E, CBA-DP-24F, CS-V210, CS-V219, CS-V220, CS-V221, CS-V410, CS-V416, CS-V437, CS-V439, CS-V442, CS-V1207, RH-V8, and RH-V44, are not electrically operated; hence, they have no cables.

3.3.7 Disabled (tripped power supply) Equipment

The following equipment will be disabled:

a. Containment spray pumps CBS-P-9A and CBS-P-9B

b. Primary component cooling valves CC-V1092, CC-V1095, CC-V1101 and CC-V1109.

c. Chemical and volume control valves CS-V154, CS-V158, CS-V162, CS-V166, CS-V167, CS-V168, CS-V175, CS-V176, CS-V196, CS-V197, CS-V460, CS-V461, CS-FCV-110A, -111A, -110B, -111B.

d. Not used.

e. Main steam atmospheric relief valves MS-PV-3001, MS-PV-3003 (Train B power supply) and MS-PV-3002, MS-PV-3004 (Train A power supply).

f. Not Used.

g. Reactor coolant valves RC-V323, RC-FV-2881, RC-LCV-459* and RC-LCV-460*

h. Pressurizer heaters Group C, Group D and Control Group

i. Residual heat removal valves RH-V14, RH-V26, RH-V32, RH-V35, RH-V36, RH-V70, RH-HCV-606, RH-HCV-607, RH-FCV-618, and RH-FCV-619

j. Steam generator blowdown valves SB-V9*, SB-V10*, SB-V11* and SB-V12*

k. Safety injection valves SI-V158 and SI-V159

l. Safety injection pumps SI-P-6A and SI-P-6B

m. Service water valves SW-V15, SW-V16*, SW-V18*, SW-V20, SW-V23, and SW-V34.

n. Engineered safety features-actuation system logic cabinets

o. Tower actuation logics

The valves noted with an asterisk (*) fail to their safe shutdown position upon de-energization.

3.3.8 Safe Shutdown Equipment List

Tables that list all equipment, including instrumentation and vital support systems equipment required to achieve hot standby or cold shutdown using the RSS facilities are provided in Appendix III. However, analysis can be also provided to justify not listing components and cables in Appendix III. The tables provide the following requested information for each equipment listed:

a) A column which notes whether the equipment is required for hot standby or cold shutdown.

b) A column which defines each equipment's location by fire zone/area.

c) A column which defines each equipment's redundant counterpart.

d) A column which lists each equipment's essential cabling.

e) The table also delineates the following additional information:

1) P & I Diagram Drawing No.

2) Physical Location Drawing No.

3) Power Supply

4) Electrical Node Number

5) Supporting Control and Instrumentation Equipment

6) Electrical Schematic Drawing No.

7) Electrical Cable Schematic Drawing No.

8) Supporting Systems

9) Remarks

Separate tables are furnished for each of the safe shutdown functions. In several instances a safe shutdown function requires components from several systems to perform its safe shutdown function.

Appendix R Section III.L requires that only one train of equipment necessary to achieve and maintain hot standby must be available from alternate or dedicated RSS shutdown facilities. Redundancy is not required. Equipment required to achieve and maintain cold shutdown can be repaired within 72 hours. For Seabrook, the preferred RSS shutdown equipment is Train B. The Train B RSS equipment with R/L selector and control switches have redundant control circuit fuses. This ensures that the local control circuit will still be operable in case the MCR control circuit blows the circuit fuse before control is transferred to local. For conservatism, redundant Train A equipment is typically listed in the RSS equipment lists in Appendix III, for example, both the Train A and the Train B charging pumps are listed whereas only one (Train B) is required to provide the safe shutdown function. This Train A equipment is desired, but not required, for safe shutdown. In some cases the Train A equipment is not listed just for conservative redundancy but is actually required for safe shutdown, for example, the SI accumulator isolation valves where there are two Train A and two Train B required valves.

In order to simplify the tabulation, the following are not listed: manual valves in the process flow path; mechanical check valves which provide a Safe Shutdown system boundary; normally closed manual valves which provide a Safe Shutdown system boundary; mechanical relief valves; and root valves on small instrument lines. The review of these valves is documented by the marked P & I Diagrams.

Tables are provided for the following functions which satisfy the performance goals stated in Appendix R, Paragraph III.L.2

Function	Table No.
Decay Heat Removal	3.1.3.1
Reactor Coolant Inventory and Pressure Control	3.1.3.2
Reactivity Control	3.1.3.3
Process Monitoring	3.1.3.4
Safeguard Actuation System	3.1.3.5
Cold Shutdown	3.1.3.6
Service Water	3.1.3.7
Primary Component Cooling Water	3.1.3.8
(Deleted)	3.1.3.9

Function	Table No.
Control Building Air Handling	3.1.3.10
Diesel Generator Building Air Handling	3.1.3.11
Containment Enclosure Air Handling	3.1.3.12
Emergency Feedwater Pumphouse Air Handling	3.1.3.13
Primary Auxiliary Building Air Handling	3.1.3.14
Service Water Air Handling	3.1.3.15
(Deleted)	3.1.3.16
Electrical Distribution Emergency	3.1.3.17
Diesel Generators	3.1.3.18
Communication	3.1.3.19

3.3.9 Analysis and Evaluation of Fire Areas

An evaluation is provided as to whether the Appendix R requirements or safe shutdown requirement are satisfied. If a deviation from Appendix R requirements exists, this deviation is justified by Analysis.

The following fire areas are considered:

Building	Fire Area	Tabulation
Control Bldg. - El. 50'-0" Cable Spreading Room	CB-F-2A-A	3.3.9.1
Control Bldg. - El. 75'-0" Main Control Room	CB-F-3A-A	3.3.9.2
Control Bldg. - El. 75'-0" HVAC Equipment & Duct Area	CB-F-3B-A	3.3.9.3

Tabulation 3.3.9.1

Control Building - El. 50'-0"
Cable Spreading Room

Fire Area: CB-F-2A-A

A. Equipment And Cables Located In The Fire Area

	Train A			Train B	
Description	Equip.	Cable	Description	Equip.	Cable
PAH-DP-35A		X	PAH-DP-35B		X
PAH-DP-36A		X	PAH-DP-36B		X

B. Analysis

The cable spreading room fire area CB-F-2A-A does not contain any cables or equipment which are required for safe shutdown from the RSS facilities except for the equipment listed.

1. Containment Enclosure Isolation Damper, PAH-DP-35A, PAH-DP-36A, PAH-DP-35B, PAH-DP-36B

Cables for outboard isolation dampers PAH-DP-35A and PAH-DP-36A and inboard isolation dampers PAH-DP-35B and PAH-DP-36B are routed in trays and conduits in proximity to one another. Under normal operation both outboard and both inboard dampers are open. If both outboard or both inboard dampers go closed, the Containment Enclosure Air Handling (EAH) system operates in recirculation mode. The normal and recirculation modes for EAH system operation both satisfy the safe shutdown function. If the outboard dampers and the inboard dampers operate independently such that either the supply or the exhaust path but not both are isolated, there could be an air flow problem in EAH system.

Outboard dampers are powered from a single Train A power supply. Inboard dampers are powered from a single Train B power supply. The circuit design for the outboard and inboard dampers is such that a spurious signal in either or both circuits will cause both outboard and inboard dampers to operate together, either both open (normal mode) or both closed (recirculation mode).

The safe shutdown requirements are satisfied.

A fixed fire suppression system in accordance with Appendix R, Paragraph III.G.3 has been provided.

Detectors are provided throughout the area.

C. Evaluation

The Appendix R Paragraphs III.G.3 and III.L. alternative shutdown capability requirements are satisfied.

Tabulation 3.3.9.2

Control Building - El. 75'-0"
Main Control Room

Fire Area: CB-F-3A-A

A. Equipment And Cables Located In The Fire Area

Train A			Train B		
Description	Equip.	Cable	Description	Equip.	Cable
PAH-DP-35A		X	PAH-DP-35B		X
PAH-DP-36A		X	PAH-DP-36B		X

B. Analysis

The Main Control Room fire area CB-F-3A-A does not contain any cables or equipment which are required for safe shutdown from the RSS facilities except for the equipment listed.

1. Containment Enclosure Isolation Damper, PAH-DP-35A, PAH-DP-36A, PAH-DP-35B, PAH-DP-36B

Cables for outboard isolation dampers PAH-DP-35A and PAH-DP-36A and inboard isolation dampers PAH-DP-35B and PAH-DP-36B are routed in trays and conduits in proximity to one another. Under normal operation both outboard and both inboard dampers are open. If both outboard or both inboard dampers go closed, the Containment Enclosure Air Handling (EAH) system operates in recirculation mode. The normal and recirculation modes for EAH system operation both satisfy the safe shutdown function. If the outboard dampers and the inboard dampers operate independently such that either the supply or the exhaust path but not both are isolated, there could be an air flow problem in EAH system.

Outboard dampers are powered from a single Train A power supply. Inboard dampers are powered from a single Train B power supply. The circuit design for the outboard and inboard dampers is such that a spurious signal in either or both circuits will cause both outboard and inboard dampers to operate together, either both open (normal mode) or both closed (recirculation mode).

The safe shutdown requirements are satisfied.

A fixed fire suppression system in accordance with Appendix R Paragraph III.G.3 has not been provided in this continually manned area.

Detectors are provided throughout the area.

C. Evaluation

The Appendix R Paragraphs III.L alternative shutdown capability requirements are satisfied.

Deviations from Appendix R, Paragraph III.G.3, fixed fire suppression requirement, exist in the main control room. This deviation is justified based on the analysis and our assertion that additional modification would not enhance fire protection safety.

Tabulation 3.3.9.3

Control Building - El. 75'-0"
HVAC Equipment & Duct Area

Fire Area: CB-F-3B-A

A. Equipment And Cables Located In The Fire Area

Train A			Train B		
Description	Equip.	Cable	Description	Equip.	Cable
None			None		

B. Analysis

The HVAC Equipment and Duct Area CB-F-3B-A does not contain any cables or equipment which are required for safe shutdown from the RSS facilities.

A fixed fire suppression system in accordance with Appendix R Paragraph III.G.3 has not been provided in this area which contains equipment required for the main control room ventilation system.

Detectors are provided throughout the area.

Carbon monoxide detectors are provided in CBA-F-38 and CBA-F-8038 for early charcoal fire detection.

C. Evaluation

The Appendix R Paragraphs III.L alternative shutdown capability requirements are satisfied.

Deviations from Appendix R, Paragraph III.G.3, fixed fire suppression requirement, exist in the HVAC equipment and duct area. This deviation is justified based on the analysis and our assertion that additional modification would not enhance protection safety.

3.4 ALTERNATIVE SAFE SHUTDOWN - EMERGENCY FEEDWATER PUMPHOUSE FIRE

A fire in this area disables both emergency feedwater (EFW) pumps, associated EFW flow control valves, and related instrumentation. An immediate plant trip in response to this fire event is not desirable since this would place a demand on the EFW system which may not be available. Instead, plant operation will be maintained stable at 100% power conditions using the normal feedwater system while the fire event is assessed and appropriate mitigating actions are determined. The plant will not be perturbed by any action, including a power change, that might result in a plant trip and demand on the EFW system. If it is determined that plant shutdown is warranted, then normal procedures will be used eliminating an EFW system demand. This approach is consistent with the Technical Specification 3/4.7.1.2 Bases. Plant shutdown using normal procedures does not require use of the EFW system so the time critical operator action response times related to the EFW system do not apply (see Section 3.2.2.3) for this fire area.

If an immediate plant shutdown was required, then the startup feedwater pump (SUFP) would be used to provide the EFW function. Since both EFW trains are disabled by a fire in this area, this is considered an alternate shutdown capability area. Safe shutdown would be controlled from the main control room. Since this is not the preferred response, immediate plant shutdown is considered a beyond design basis condition analyzed for defense in depth. If the EFW flow control valves are disabled, then the EFW pumps may have to be tripped to control excessive EFW flow. The SUFP and its valves can provide throttled flow to prevent overfill/over cooling conditions. Since this is a beyond design basis, defense in depth, response, the time critical operator action response times related to the EFW system do not apply for this fire area.

The following analysis evaluates the beyond design bases response of shutdown controlled from the main control room with an immediate plant trip using the SUFP to provide the EFW function. Plant shutdown using normal procedures does not require use of equipment in this fire area so no further analysis of normal shutdown is required.

3.4.1 Main Control Room Safe Shutdown

Safe shutdown will be accomplished with control from the main control room, utilizing the safe shutdown equipment in the following locations:

a. Non-Essential Switchgear Area

b. Condensate Storage Tank Valve Room (CST)

c. Train A Switchgear Room

d. Train B Switchgear Room

e. Turbine Building

Actions required in the additional areas would be to realign the suction of the startup feedpump; realign the power supply of the startup feedpump from Bus ED-SWG-4 to Bus EDE-SWG-5 (if offsite power is not available and not already aligned to Bus EDE-SWG-5); bypass the startup feedpump low suction pressure trip (prior to commencing cooldown) and trip the power supply breakers for the feedwater flow control valves. Safe shutdown will then be performed from the main control room.

3.4.2 Safe Shutdown Equipment List

Tables that list all equipment, including instrumentation and vital support systems equipment, required to achieve hot standby and cold shutdown are provided in Appendix III. The tables provide the following requested information for each equipment listed.

a. A column which notes whether the equipment is required for hot standby and cold shutdown.

b. A column which defines each equipment's location by fire zone/area.

c. A column which defines each equipment's redundant counterpart.

d. A column which lists each equipment's essential cabling.

e. The table also delineates the following additional information:

1) P & I Diagram Drawing No.

2) Physical Location Drawing No.

3) Power Supply

4) Electrical Node Number

5) Supporting Control and Instrumentation Equipment

6) Electrical Schematic Drawing No.

7) Electrical Cable Schematic Drawing No.

8) Supporting Systems

9) Remarks

Separate tables are furnished for each of the safe shutdown functions. In several instances a safe shutdown function requires components from several systems to perform its safe shutdown function.

In order to simplify the tabulation, the following are not listed: manual valves in the process flow path; mechanical check valves which provide a Safe Shutdown system boundary; normally closed manual valves which provide a Safe Shutdown system boundary; mechanical relief valves; and root valves on small instrument lines. The review of these valves is documented by the marked P & I Diagrams.

3.4.3 Analysis and Evaluation of Fire Area EFP-F-l-A, Emergency Feedwater Pump Bldg.

A. Equipment And Cables Located In The Fire Area

	Train A			Train B	
Description	Equip.	Cable	Description	Equip.	Cable
FW-FT-4214-2	x	x	FW-FT-4214-4	x	x
FW-FT-4224-4	x	x	FW-FT-4224-2	x	x
FW-FT-4234-2	x	x	FW-FT-4234-4	x	x
FW-FT-4244-4	x	x	FW-FT-4244-2	x	x
FW-FV-4214A	x	x	FW-FV-4214B	x	x
FW-FV-4224A	x	x	FW-FV-4224B	x	x
FW-FV-4234A	x	x	FW-FV-4234B	x	x
FW-FV-4244A	x	x	FW-FV-4244B	x	x

B. Analysis

With the exception of the systems/equipment discussed below, a fire in this area will only affect the Train B safe shutdown equipment and cables. The redundant Train A safe shutdown equipment and cables are located in other fire areas. Additional details on the fire protection measures and physical separation for this fire area are contained in Tabulation 3.2.7.48.

Redundant emergency feedwater flow control valves and associated flow transmitters which are part of the alternative shutdown capability are located in the fire area. These valves are normally open valves and remain open for the initial phases of safe shutdown. Only two steam generators are required to satisfy the safe shutdown requirements: hence, only two valves on each of two lines need to be disabled (e.g., FW-FV-4214A, FW-FV-4214B, FW-FV-4224A and FW-FV-4224B). The operators will prevent additional spurious operations by tripping the power supply breakers for these valves in the Train A and Train B switchgear rooms (Fire Areas: CB-F-1A-A and CB-F-1B-A).

C. Evaluation

A deviation from the Appendix R, Paragraph III.L.3 requirements exists in the emergency feedwater pump building. This deviation is justified based on the analysis and our assertion that additional modifications would not enhance fire protection safety.

3.5 HIGH LOW PRESSURE INTERFACES

3.5.1 List of Interfaces

The following is a list of the high-low pressure interfaces connected to the reactor coolant system (RCS).

3.5.1.1 Chemical and Volume Control System (CS)

a. Excess letdown line

b. Normal letdown line

c. Reactor coolant pumps seal bleedoff lines

3.5.1.2 Residual Heat Removal (RH) System

3.5.1.3 Pressurizer Power Operated Relief Valves (PORV)

3.5.1.4 Reactor Vessel Head Vent

3.5.2 High-Low Pressure Interface Safe Shutdown Equipment List

A list of all high-low pressure interface valves is provided in Appendix, Section III. The table provides the following requested information for each equipment listed:

a. A column which notes whether the equipment is required for hot and/or cold shutdown.

b. A column which defines each equipment's location by fire zones/area.

c. A column which defines each equipment's redundant counterpart.

d. A column which lists each equipment's essential cabling. For each cable's routing by fire zone/area, see computer report "Cables with Associated Fire Zones" in the Appendix, Section V.G (High-Low Pressure Interface Reports).

e. The table also delineates the following additional information:

1) P & I Diagram Drawing No.

2) Physical Location Drawing No.

3) Power Supply

4) Electrical Node Number

5) Supporting Control and Instrumentation Equipment

6) Electrical Schematic Drawing No.

7) Electrical Cable Schematic Drawing No.

8) Supporting Systems

9) Remarks

3.5.3 Review and Analysis

A review of each of the lines listed in subsection 3.5.1 is provided to identify lines which could open and cause a LOCA. The flow through each high-low interface path will be evaluated. If the flow is less then the capacity of one charging pump, then the open path is not considered a LOCA and no further circuit analysis is required. The effect of the flow on system operation would still need to be evaluated. If the flow exceeds the capacity of one charging pump, then further circuit analysis is required per the criteria in Section 3.1.8 to demonstrate that spurious valve operation can not result in an open path. A specific flow value may not be documented for cases where it is obviously unacceptable (ex. RHR/RCS isolation valves). Alternatively, a circuit analysis per the criteria in Section 3.1.8 can be used to demonstrate that spurious valve operation cannot result in an open high-low interface path so no flow analysis is needed.

3.5.3.1 Chemical and Volume Control System

a. Excess letdown line

The high-low pressure interface is downstream of control valve CS-HCV-123. This is a normally closed, fail close diaphragm valve. Upstream of CS-HCV-123 are two normally closed, fail close diaphragm valves, CS-V175 and CS-V176.

Spurious opening of one valve will not open the path and prevent safe shutdown. The operators will prevent further spurious openings by tripping the 125 Volt dc power supply breaker for valves CS-V175 and CS-V176 in the Train B switchgear room. An additional disabling capability exists at the disabling panel for CS-V-175 in the Train B diesel generator room (Fire Area: DG-F-2B-A) should the primary capability be inaccessible due to a fire in the switchgear room.

b. Normal letdown line

The high-low pressure interface is downstream of parallel valves CS-HCV-189 and CS-HCV-190 (letdown flow control valves). These valves are motor operated drag valves. Upstream of CS-HCV-189 and CS-HCV-190 are fail close diaphragm valves CS-V145, RC-LCV-459, and RC-LCV-460. CS-HCV-189 or 190 failing full open results in a maximum flow rate that exceeds the charging pump capability.

To isolate this path, the operator will close CS-V-145, RC-LCV-459 or RC-LCV-460. RC-LCV-459 and RC-LCV-460 can also be closed by tripping a circuit breaker at the 125 Volt distribution panels in the A Train switchgear room (Fire Area: CB-F-1A-A). An additional disabling capability exists in the Train A diesel generator room (Fire Area: DG-F-2A-A) for RC-LCV-459.

c. Reactor coolant pumps seal bleedoff lines

The high-low pressure interface is downstream of valves CS-V44 (Loop 3), CS-V59 (Loop 4), CS-V10 (Loop 1), CS-V28 (Loop 2). These valves are fail open diaphragm valves. However, these valves are not used for pressure reduction. The RCP seals are the pressure reduction device. If the bleedoff line is isolated downstream of the high/low interface, the pressure would equalize across the seals and pressurize the bleed lines. The low pressure portion of the bleedoff line is protected with relief valves CS-V173, CS-V794, and CS-V250.

Bleedoff from the RCP seals will equal a maximum of 12 GPM either discharging to the reactor drain tank (RDT) if containment isolation valves CS-V168 or CS-V167 (normally open motor operated valves) close or to the charging pump suction. RCS fluid to the RDT is not recoverable but will be made up by flow to the charging suction from BAT or RWST.

3.5.3.2 Residual Heat Removal System

The high-low pressure interface is downstream of motor operated valves (MOV) RV-V23 (Loop 1) and RC-V88 (Loop 4).

Upstream of each MOV is MOV RC-V22 and RC-V87. All four valves are normally closed when the RCS is above RHR design pressure of 600 psig and interlocked to prevent opening when RCS pressure is above 365 psig.

During normal operation these normally closed MOV's will also be deenergized at their respective motor control center, thus there is no possibility of a short circuit, or hot short circuit opening the valves.

3.5.3.3 Pressurizer Power Operated Relief Valves

The high-low pressure interface is downstream of paralleled valves RC-PCV-456A and RCV-PCV-456B. These valves are normally closed, fail closed solenoid operated valves. Upstream of each of these valves are the PORV block valves RC-V122 and RC-V124. These MOV's are normally open.

Since the PORV block valves are normally open MOVs and will be closed for all fires which could cause spurious PORV operation, a hot short to the control logic or power to the PORV or block valves will not cause PORV blowdown.

The operators will prevent the opening of the solenoid operated valves RC-PCV-456A and RC-PCV-456B by tripping their respective power supply breakers in the Train A and Train B switchgear rooms (Fire Areas: CB-F-1A-A and CB-F-1B-A). An additional disabling capability exists in the Train A and Train B diesel generator rooms (Fire Areas: DG-F-2A-A and DG-F-2B-A) respectively should the primary capability be inaccessible due to a fire in the switchgear room.

3.5.3.4 Reactor Vessel Head Vent

The high-low pressure interface is downstream of valve, RC-V323. This is a normally closed MOV. Upstream of RC-V323 is a normally closed, solenoid valve, RC-FV-2881. Spurious opening of one valve will not open the path. The operators will prevent further spurious openings by disabling the normally closed MOV RC-V323 and solenoid RC-FV-2881 at the motor control center and 125 volt dc distribution panel, respectively, in the B Train switchgear room (Fire Area: CB-F-1B-A). An additional disabling capability exists for RC-FV-2881 in the Train B diesel generator room (Fire Area: DG-F-2B-A) should the primary capability be inaccessible due to a fire in the switchgear room.

3.5.4 Evaluation

3.5.4.1 Chemical and Volume Control System

a. Excess letdown line

The safe shutdown requirements are satisfied.

b. Normal letdown line

The safe shutdown requirements are satisfied

c. Reactor coolant pumps seal bleedoff lines

The safe shutdown requirements are satisfied

3.5.4.2 Residual Heat Removal System

The safe shutdown requirements are satisfied.

3.5.4.3 Pressurizer Power Operated Relief Valves

The safe shutdown requirements are satisfied.

3.5.4.4 Reactor Vessel Head Vent

The safe shutdown requirements are satisfied.

3.6 ASSOCIATED CIRCUITS

3.6.1 Definition of Associated Circuits of Concern

Circuits other than those directly required for the safe shutdown functions which have the potential to affect or prevent post-fire safe shutdown are considered associated circuits of concern. Associated circuits of concern are defined as those cables (Class 1E and non-Class 1E) that:

a. Have a physical separation less than that required by Section III.G.2 of Appendix R, and

b. Have one of the following:

1) a common power source with the safe shutdown equipment (redundant or alternative) and the power source is not electrically protected from the circuit of concern by coordinated breakers, fuses or similar devices, or

2) a connection to circuits of equipment whose spurious operation would adversely affect the safe shutdown capability (e.g., RHR/RCS isolation valves, PORVS, steam atmospheric dump valves, etc.), or

3) a common enclosure (e.g., panel) with the shutdown cables (redundant or alternative) and

a) are not electrically protected by circuit breakers, fuses or similar devices, or

b) will allow propagation of fire into the common enclosure.

3.6.2 Discussion of Methodology

Sections 3.6.2.1, 3.6.2.2 and 3.6.2.3 in conjunction with Figure 3.6-1 describes the methodology utilized to address the following types of associated circuits:

a. Common power source

b. Spurious operation

c. Common enclosure

3.6.2.1 Common Power Source

As stated in FSAR Section 8.3.1.4, all non-Class 1E circuits are associated relative to electrical separation with either Train A or Train B in accordance with the provisions of FSAR Appendix 8A Section 4.5a. Based on these design considerations, associated circuits can be powered from the Class 1E electrical distribution emergency (EDE) system or from the non-Class 1E electrical distribution (ED) system and further may be routed in the same raceways and terminate in the same enclosure as Class 1E circuits. Although all safe shutdown circuits are powered from the EDE system, not all safe shutdown circuits are considered to be Class 1E. There are no Safe shutdown circuits, which require electrical power to operate, powered from the ED system.

Associated circuits that are powered from the EDE system, and are associated with the safe shutdown circuits by a common power supply, are protected by a coordinated circuit breaker and; hence, are not considered to be associated circuits of concern.

The above design considerations eliminates as associated circuits of concern all circuits which have no deleterious impact on safe shutdown.

3.6.2.2 Spurious Operation

The review of each system required to satisfy the safe shutdown functions included all valves necessary to operate the system or maintain the system process boundaries. This assures that the safe shutdown system will operate as designed. If valves or other equipment from one train (i.e., Train A) are required for operation or could prevent operation of the other train (i.e., Train B), then additional reviews are performed to determine the failure modes and provide manual actions or operations of other equipment that would prevent the spurious operation from affecting safe shutdown. An example of this is the primary component cooling water containment isolation function which requires that both Train A and Train B valves remain open. The inboard containment isolation valve is the same train as the pumps which supply primary component cooling water while the outboard valve is of the opposite train but could be operated manually upon loss of power or damage to electrical circuit.

To prevent the spurious operation of various safety injection system valves, containment isolation valves and service water valves, the engineered safety features actuation system logic and the tower actuation logic are disabled by tripping their power supplies after a control room evacuation.

In several instances (e.g., RHR/RCS isolation valves), the power supplies are permanently disabled (breaker tripped and locked out) to prevent spurious operation.

The spurious operation of valves protecting high-low pressure interfaces is discussed in Section 3.5.

See Section 3.1.8 for criteria to evaluate components for spurious operation.

3.6.2.3 Common Enclosures

The deleterious effects of fire on associated circuits in common enclosures is eliminated by the following three design considerations:

a. Coordinated circuit breakers, fuses or similar devices will assure that the associated circuit failure does not prevent the redundant train from performing its safe shutdown function.

b. The cables are qualified to IEEE Standard 383; hence, the propagation of the fire from one train to the redundant train in another fire area/zone is very unlikely.

c. Train and channel separation for cable routing is assured by a computerized cable routing program which does not allow cables with different circuit code assignments to be routed in the same raceways.

Based on the above design considerations, associated circuits in common enclosures are not considered associated circuits of concern.

3.7 DEVIATIONS FROM 10CFR50 APPENDIX R

Fire Area	Section Located In Report	Equipment/System	Type Of Deviation From Appendix
C-F-1-Z/C-F-2-Z/	3.2.7.1 B.2.c	CC-V-57, 121, 176, 256	III.G.2.d
C-F-3-Z	3.2.7.1 B.2.k	Pressurizer Heaters	III.G.2.d
	3.2.7.1 B.2.l	RC-PCV-456A, B	III.G.2.d
	3.2.7.1 B.2.n	SI-V3, SI-FV-2475, 2476	III.G.2.d
	3.2.7.1 B.2.o	SI-V32, SI-FV-2477, 2486	III.G.2.d
	3.2.7.1 B.2.p	SI-V-17, SI-FV-2482, 2483	III.G.2.d
	3.2.7.1 B.2.q	SI-V-47, SI-FV-2495, 2496	III.G.2.d
	3.2.7.1 B.2.u	NI-NE-6690, 6691	III.G.2.d
	3.2.7.1 B.2.v	RC-LT-459, 460	III.G.2.d
	3.2.7.1 B.2.x	RC Hot Leg Temp.	III.G.2.d
CB-F-2C-A	3.2.7.10.B.2	CBA	III.G.2.c Auto Fire Suppression
CB-F-3A-A	3.3.9.2	Control Room/RSS	III.G.3 - Fixed Fire Suppression
CB-F-3B-A	3.3.9.3	HVAC Equipment & Duct Area - Control Room	III.G.3 - Fixed Fire Suppression
CE-F-1A-Z/	3.2.7.17 B.f	EAH-AC-2A, -2B, EAH-FN-5A,	III.G.2.b - Separation 20'
PP-F-XX-Z		-5B, EAH-DP-3A, -3B	III.G.2.c - Auto Fire Suppression
DG-F-3A-Z/	3.2.7.41 B.2.b	DAH-FN-25A, -25B	III.G.2.b - Separation 20'
DG-F-3B-Z			III.G.2.c - Auto Fire Suppression

Fire Area	Section Located In Report	Equipment/System	Type Of Deviation From Appendix
EFP-F-1-A	3.2.7.48	EFW Room	III.G.3 - Fixed Fire Suppression
	3.4.3	EFW Room	III.L.3 - Independence
PAB-F-1A-Z*	3.2.7.63	CC, CS, EAH, PAH, SI, SW	III.G.2.c - Auto Fire Suppression
PAB-F-1J-Z*	3.2.7.66	CC, SI, CS	III.G.2.c - Auto Fire Suppression
PAB-F-1K-Z*	3.2.7.67	CS, SW, PAH	III.G.2.b - Separation 20'
			III.G.2.c - Auto Fire Suppression
PAB-F-2A-Z*	3.2.7.68	EAH, PAH, SW	III.G.2.c - Auto Fire Suppression
PAB-F-2B-Z*	3.2.7.69	PAH	III.G.2.c - Auto Fire Suppression
PAB-F-2C-Z*	3.2.7.70	PAH	III.G.2.b - Separation 20'
PAB-F-3A-Z*	3.2.7.71	CS, SW	III.G.2.c - Auto Fire Suppression
PAB-F-3B-Z*	3.2.7.72	CS	III.G.2.c - Auto Fire Suppression

* Denotes Group of Fire Zones which form one Fire Area in PAB. In addition to the deviations requested, a general deviation to the requirements at III.G.2.a is requested for this area.

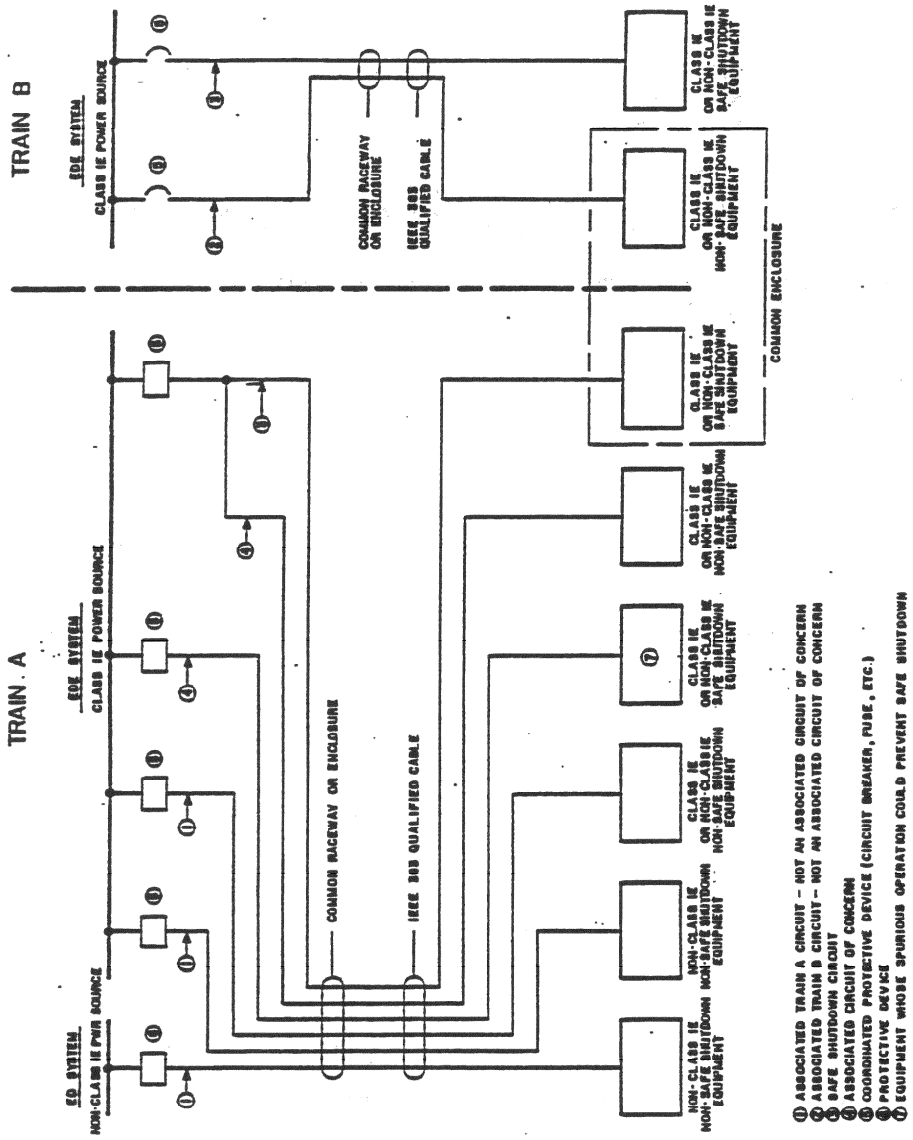

APPENDIX R	ASSOCIATED CIRCUITS OF CONCERN	
		Figure 3.6-1

FUNCTION: EMERGENCY FEEDWATER PUMPHOUSE BUILDING[1]

ITEM NO.	EQUIPMENT ID NO.	EQUIPMENT DESCRIPTION	P&ID/1-LINE DRAWING NO.	TRAIN	PHYSICAL LOCATION DRAWING NO.	FIRE AREA/ZONE	REQUIRED FOR		POWER		ELEC NODE	SUPPORTING CONTROL AND INSTRUMENTATION EQUIPMENT				CABLES	ELECTRICAL DRAWING NO.		SUPPORTING SYSTEMS	REDUNDANT COUNTERPART	REMARKS
							HOT STAND BY	COLD SHUT DOWN	ELEC	AIR		EQUIPMENT ID NO.	EQUIPMENT DESCRIPTION	ELEC NODE	FIRE AREA/ZONE		SCHEM.	CABLE			
1	FW-P-113	Start-up Feedwater Pump	CO-20426	A	310326	TB-F-1A-Z	X	X	X	-	M12	FW-A93-52	4160 V AC Circuit Breaker	A93	CB-F-1A-A	A47-A93 A47-A93/1 A47-A93/2 A47-A93/3 A47-N12 A47-P82	310844 A93a A93b A93c A93d A47a	A93g A93h A47g	EDE-SWG-5 CBA-FN-19 CBA-FN-20	FW-P-37B	
												FW-A93-FU	Fuses	A93	CB-F-1A-A						
												FW-CS-4268-1	Control Switch with Indication	F60	CB-F-3A-A						
												FW-SS-4268	Selector Switch	A47	NES-F-1A-Z						
												FW-A93-CS	Test Control Switch	A93	CB-F-1A-A						
												FW-A93-G,R,W	Indicating Lights	A93	CB-F-1A-A	A93-F60/1 A93-F60/2 A93-F60/3 A93-F60/4 A93-ED7 A93-G8L A93-HR2 G8L-P2V (Non-CASP)					
												EDE-A53-94-2	Bus Undervoltage	A53	CB-F-1A-A						
												FW-A93-R1	Auxiliary Relay	A93	CB-F-1A-A						
												FW-PSLH-PS5	Lube Oil Pressure Switch	P82	TB-F-1A-Z						
												FW-A93-PS5X	Pressure Switch Auxiliary Relay	A93	CB-F-1A-A						
												FW-A93-52S	Mechanically Operated Contact	A93	CB-F-1A-A						
												FW-A93-52H	Truck Operated Contact	A93	CB-F-1A-A						
												FW-A93-62	P85 Starting Blocking Time Delay Relay	A93	CB-F-1A-A						
												FW-ED7-2	Pre-Lube Pump Starting Auxiliary Time Delay Relay	ED7	TB-F-2A-Z						
												FW-A93-86	Lockout Relay	A93	CB-F-1A-A						
												FW-A93-TD2	Lockout Relay Test Device	A93	CB-F-1A-A						
												FW-A93-CT	Current Transformers 300/5A	A93	CB-F-1A-A						
												FW-A93-TD1	CT Test Device	A93	CB-F-1A-A						
												FW-A93-50/51	Inst./Time Overcurrent Relays ØA, ØC	A93	CB-F-1A-A						
												FW-A93-AM	Ammeter	A93	CB-F-1A-A						
												FW-A93-AS	Ammeter Switch	A93	CB-F-1A-A						
												FW-A93-ATR	Transducer	A93	CB-F-1A-A						
												FW-AM-4268-1	Ammeter	F60	CB-F-3A-A						
												FW-A47-52	4160 V AC Circuit Breaker	A47	NES-F-1A-Z						
												FW-A93-51GS	Ground Sensor Relay	A93	CB-F-1A-A						
												FW-PSL-4233-2	Pressure Switch Low Suction	P2V	TB-F-1A-Z						
												FW-A93-R2	Auxiliary Relay	A93	CB-F-1A-A						
												FW-HR2-RMO	EPS Manual Override Relay (K27)	HR2	CB-F-1A-A						
												FW-CS-4233	Suction Pressure Bypass Switch	G8L	TB-F-1A-Z						

1. This equipment is mechanical with no electrical requirements.

FUNCTION: EMERGENCY FEEDWATER PUMPHOUSE BUILDING

ITEM NO.	EQUIPMENT ID NO.	EQUIPMENT DESCRIPTION	P&ID/1-LINE DRAWING NO.	TRAIN	PHYSICAL LOCATION DRAWING NO.	FIRE AREA/ZONE	REQUIRED FOR		POWER		ELEC NODE	SUPPORTING CONTROL AND INSTRUMENTATION EQUIPMENT				CABLES	ELECTRICAL DRAWING NO.		SUPPORTING SYSTEMS	REDUNDANT COUNTERPART	REMARKS
							HOT STAND BY	COLD SHUT DOWN	ELEC	AIR		EQUIPMENT ID NO.	EQUIPMENT DESCRIPTION	ELEC NODE	FIRE AREA/ZONE		SCHEM.	CABLE			
2	FW-P-161	Start-up Feedwater Pump FW-P-113 Prelube Pump	CO-20426	A	310326	TB-F-1A-Z	X	X	X	-	NU0	FW-CN1-52	460 V AC Circuit Breaker	CN1	TB-F-2-Z	CNA-NU0 CN1-F60 CN1-F81 A47-F60/4 EA1-F60 F60-FB7/5	310844 CN1a	CN1c	EDE-MCC-523	None	
												FW-CN1-FU	Fuse	CN1	TB-F-2-Z						
												FW-CS-4268	Control Switch with Indication	F60	CB-F-3A-A						
												FW-SS-4268	Selector Switch	A47	NES-F-1A-Z						
												FW-CS-4268-1	Control Switch with Indication	F60	CB-F-3A-A						
												FW-CS-4278	Control Switch	F60	CB-F-3A-A						
												FW-ED7-2	Pump Starting Time Delay Relay	ED7	TB-F-2-Z						
												FW-PSLH-PS4	Lube Oil Pressure Switch	P81	TB-F-1A-Z						
												FW-CN1-42	Motor Starter	CN1	TB-F-2-Z						
												FW-CN1-49	Overload Relays	CN1	TB-F-2-Z						
												FW-FB7-K620A	SSPS Output Relay	FB7	CB-F-3A-A						
												FW-ED7-3	Time Delay Relay	ED7	TB-F-2-2						
												FW-EA1-3A	Auxiliary Relay	EA1	CB-F-1A-A						
												FW-EA1-3B	Auxiliary Relay	EA1	CB-F-1A-A						

FUNCTION: EMERGENCY FEEDWATER PUMPHOUSE BUILDING

ITEM NO.	EQUIPMENT ID NO.	EQUIPMENT DESCRIPTION	P&ID/1-LINE DRAWING NO.	TRAIN	PHYSICAL LOCATION DRAWING NO.	FIRE AREA/ZONE	REQUIRED FOR		POWER		ELEC NODE	SUPPORTING CONTROL AND INSTRUMENTATION EQUIPMENT				CABLES	ELECTRICAL DRAWING NO.		SUPPORTING SYSTEMS	REDUNDANT COUNTERPART	REMARKS
							HOT STAND BY	COLD SHUT DOWN	ELEC	AIR		EQUIPMENT ID NO.	EQUIPMENT DESCRIPTION	ELEC NODE	FIRE AREA/ZONE		SCHEM.	CABLE			
3	FW-FV-4214A	Emergency Feedwater Header Flow Valve	FW-20688	A	310708	EFP-F-1-A	X	X	X	-	V2E	FW-B3V-52	460 V AC Circuit Breaker	B3V	CB-F-1A-A	B3V-V2E B3V-V2E/1 E3C-G2G G2G-V2E E3C-F51 F51-G2G B3V-G5X B3V-G5X/1 E3C-FN6 F51-FN6 FN6-G5X FN6-G5X/1	310844 B3Va B3Vd B3ve		CBA-FN-19 CBA-FN-20 EDE-MCC-515	FW-FV-4214B	
												FW-B3V-FU	Fuse	B3V	CB-F-1A-A						
												FW-CS-4214-A2	Control Switch with Indication	G2G	CB-F-1A-A						
												FW-SS-4214-A	Selector Switch	G2G	CB-F-1A-A						
												FW-SS-4214-A1	Selector Switch	G5X	DG-F-2A-A						
												FW-CS-4214-A1	Control Switch with Indication	F51	CB-F-3A-A						
												FW-B3V-42/O,C	Motor Starters	B3V	CB-F-1A-A						
												FW-B3V-49	Overload Relays	B3V	CB-F-1A-A						
												FW-ZS-4214-A	Valve Position Switch	V2E	EFP-F-1-A						
												FW-FN6-4214AX	Auxiliary Relay	FN6	CB-F-2B-A						
												FW-FN6-MSO-1	Auxiliary Relay	FN6	CB-F-2B-A						
												FW-FN6-R1A	Auxiliary Relay	FN6	CB-F-2B-A						
												FW-E3P-62-1	Timing Relay	E3P	CB-F-1A-A						
												FW-E3C-R1	Auxiliary Relay (FYY-4214-2)	E3C	CB-F-1A-A						
												FW-E3P-62-2	Timing Relay	E3P	CB-F-1A-A						
												FW-E3C-R2	Auxiliary Relay (FYY-4224-4)	E3C	CB-F-1A-A						
												FW-E3P-62-3	Timing Relay	E3P	CB-F-1A-A						
												FW-E3C-R3	Auxiliary Relay (FYY-4234-2)	E3C	CB-F-1A-A						
												FW-E3P-62-4	Timing Relay	E3P	CB-F-1A-A						
												FW-E3C-R4	Auxiliary Relay (FYY-4244-4)	E3C	CB-F-1A-A						

FUNCTION: EMERGENCY FEEDWATER PUMPHOUSE BUILDING

ITEM NO.	EQUIPMENT ID NO.	EQUIPMENT DESCRIPTION	P&ID/1-LINE DRAWING NO.	TRAIN	PHYSICAL LOCATION DRAWING NO.	FIRE AREA/ZONE	REQUIRED FOR		POWER		ELEC NODE	SUPPORTING CONTROL AND INSTRUMENTATION EQUIPMENT				CABLES	ELECTRICAL DRAWING NO.		SUPPORTING SYSTEMS	REDUNDANT COUNTERPART	REMARKS
							HOT STAND BY	COLD SHUT DOWN	ELEC	AIR		EQUIPMENT ID NO.	EQUIPMENT DESCRIPTION	ELEC NODE	FIRE AREA/ZONE		SCHEM.	CABLE			
4	FW-FV-4214B	Emergency Feedwater Header Flow Valve	FW-20688	B	310708	EFP-F-1-A	X	X	X	-	V2J	FW-B3Z-52	460 V AC Circuit Breaker	B3Z	CB-F-1B-A	B3Z-V2J B3Z-V2J/1 E3D-G2J G2J-V2J E3D-F51 F51-G2J B3Z-G2J B3Z-G5Y B3Z-G5Y/1 E3D-FN7 F51-FN7 FN7-G5Y FN7-G5Y/1	310844 B3Za	B3Zd B3Ze	CBA-FN-32 CBA-FN-33 EDE-MCC-615	FW-FV-4214A	
												FW-B3Z-FU	Fuse	B3Z	CB-F-1B-A						
												FW-CS-4214-B2	Control Switch with Indication	G2J	CB-F-1B-A						
												FW-SS-4214-B	Selector Switch	G2J	CB-F-1B-A						
												FW-SS-4214-B1	Selector Switch	G5Y	DG-F-2B-A						
												FW-CS-4214-B1	Control Switch with Indication	F51	CB-F-3A-A						
												FW-B3Z-42/O,C	Motor Starters	B3Z	CB-F-1B-A						
												FW-B3Z-49	Overload Relays	B3Z	CB-F-1B-A						
												FW-ZS-4214-B	Valve Position Switch	V2J	EFP-F-1-A						
												FW-FN7-4214BX	Auxiliary Relay	FN7	CB-F-2C-A						
												FW-FN7-MSO-1	Auxiliary Relay	FN7	CB-F-2C-A						
												FW-FN7-R1B	Auxiliary Relay	FN7	CB-F-2C-A						
												FW-E3Q-62-1	Timing Relay	E3Q	CB-F-1B-A						
												FW-E3D-R1	Auxiliary Relay (FYY-4214-4)	E3D	CB-F-1B-A						
												FW-E3Q-62-2	Timing Relay	E3Q	CB-F-1B-A						
												FW-E3D-R2	Auxiliary Relay (FYY-4224-2)	E3D	CB-F-1B-A						
												FW-E3Q-62-3	Timing Relay	E3Q	CB-F-1B-A						
												FW-E3D-R3	Auxiliary Relay (FYY-4234-4)	E3D	CB-F-1B-A						
												FW-E3Q-62-4	Timing Relay	E3Q	CB-F-1B-A						
												FW-E3D-R4	Auxiliary Relay (FYY-4244-2)	E3D	CB-F-1B-A						

FUNCTION: EMERGENCY FEEDWATER PUMPHOUSE BUILDING

ITEM NO.	EQUIPMENT ID NO.	EQUIPMENT DESCRIPTION	P&ID/1-LINE DRAWING NO.	TRAIN	PHYSICAL LOCATION DRAWING NO.	FIRE AREA/ZONE	REQUIRED FOR		POWER		ELEC NODE	SUPPORTING CONTROL AND INSTRUMENTATION EQUIPMENT				CABLES	ELECTRICAL DRAWING NO.		SUPPORTING SYSTEMS	REDUNDANT COUNTERPART	REMARKS
							HOT STAND BY	COLD SHUT DOWN	ELEC	AIR		EQUIPMENT ID NO.	EQUIPMENT DESCRIPTION	ELEC NODE	FIRE AREA/ZONE		SCHEM.	CABLE			
5	FW-FV-4224A	Emergency Feedwater Header Flow Valve	FW-20688	A	310708	EFP-F-1-A	X	X	X	-	V2F	FW-B3W-52	460 V AC Circuit Breaker	B3W	CB-F-1A-A	B3W-V2F B3W-V2F/1 E3C-G2G/1 G2G-V2F E3C-F51/1 F51-G2G/1 B3W-G5X B3W-G5X/1 E3C-FN6/1 F51-FN6/1 FN6-G5X/2 FN6-G5X/3	310844 B3Wa	B3Wd B3We	CBA-FN-19 CBA-FN-20 EDE-MCC-515	FW-FV-4224B	
												FW-B3W-FU	Fuse	B3W	CB-F-1A-A						
												FW-CS-4224-A2	Control Switch with Indication	G2G	CB-F-1A-A						
												FW-SS-4224-A	Selector Switch	G2G	CB-F-1A-A						
												FW-SS-4224-A1	Selector Switch	G5X	DG-F-2A-A						
												FW-CS-4224-A1	Control Switch with Indication	F51	CB-F-3A-A						
												FW-B3W-42/O,C	Motor Starters	B3W	CB-F-1A-A						
												FW-B3W-49	Overload Relays	B3W	CB-F-1A-A						
												FW-ZS-4224-A	Valve Position Switch	V2F	EFP-F-1-A						
												FW-FN6-4224AX	Auxiliary Relay	FN6	CB-F-2B-A						
												FW-FN6-MSO-2	Auxiliary Relay	FN6	CB-F-2B-A						
												FW-FN6-R2A	Auxiliary Relay	FN6	CB-F-2B-A						
												FW-E3C-R1	Auxiliary Relay (FYY-4214-2)	E3C	CB-F-1A-A						
												FW-E3C-R2	Auxiliary Relay (FYY-4224-4)	E3C	CB-F-1A-A						
												FW-E3C-R3	Auxiliary Relay (FYY-4234-2)	E3C	CB-F-1A-A						
												FW-E3C-R4	Auxiliary Relay (FYY-4244-4)	E3C	CB-F-1A-A						

FUNCTION: EMERGENCY FEEDWATER PUMPHOUSE BUILDING

ITEM NO.	EQUIPMENT ID NO.	EQUIPMENT DESCRIPTION	P&ID/1-LINE DRAWING NO.	TRAIN	PHYSICAL LOCATION DRAWING NO.	FIRE AREA/ZONE	REQUIRED FOR		POWER		ELEC NODE	SUPPORTING CONTROL AND INSTRUMENTATION EQUIPMENT				CABLES	ELECTRICAL DRAWING NO.		SUPPORTING SYSTEMS	REDUNDANT COUNTERPART	REMARKS
							HOT STAND BY	COLD SHUT DOWN	ELEC	AIR		EQUIPMENT ID NO.	EQUIPMENT DESCRIPTION	ELEC NODE	FIRE AREA/ZONE		SCHEM.	CABLE			
6	FW-FV-4224B	Emergency Feedwater Header Flow Valve	FW-20688	B	310708	EFP-F-1-A	X	X	X	-	V2K	FW-B4A-52	460 V AC Circuit Breaker	B4A	CB-F-1B-A	B4A-V2K B4A-V2K/1 E3D/G2J/1 G2J-V2K E3D-F51/1 F51-G2J/1 B4A-G2J B4A-G5Y B4A-G5Y/1 E3D-FN7/1 F51-FN7/1 FN7-G5Y/2 FN7-G5Y/3	310844 B4Aa B4Ad B4Ae		CBA-FN-32 CBA-FN-33 EDE-MCC-615	FW-FV-4224A	
												FW-B3W-FU	Fuse	B4A	CB-F-1B-A						
												FW-CS-4224-B2	Control Switch with Indication	G2J	CB-F-1B-A						
												FW-SS-4224-B	Selector Switch	G2J	CB-F-1B-A						
												FW-SS-4224-B1	Selector Switch	G5Y	DG-F-2B-A						
												FW-CS-4224-B1	Control Switch with Indication	F51	CB-F-3A-A						
												FW-B4A-42/O,C	Motor Starters	B4A	CB-F-1B-A						
												FW-B4A-49	Overload Relays	B4A	CB-F-1B-A						
												FW-ZS-4224-B	Valve Position Switch	V2K	EFP-F-1-A						
												FW-FN7-4224BX	Auxiliary Relay	FN7	CB-F-2C-A						
												FW-FN7-MSO-2	Auxiliary Relay	FN7	CB-F-2C-A						
												FW-FN7-R2B	Auxiliary Relay	FN7	CB-F-2C-A						
												FW-E3D-R1	Auxiliary Relay (FYY-4214-4)	E3D	CB-F-1B-A						
												FW-E3Q-62-1	Timing Relay	E3Q	CB-F-1B-A						
												FW-E3D-R2	Auxiliary Relay (FYY-4224-2)	E3D	CB-F-1B-A						
												FW-E3Q-62-2	Timing Relay	E3Q	CB-F-1B-A						
												FW-E3D-R3	Auxiliary Relay (FYY-4234-4)	E3D	CB-F-1B-A						
												FW-E3Q-62-3	Timing Relay	E3Q	CB-F-1B-A						
												FW-E3D-R4	Auxiliary Relay (FYY-4244-2)	E3D	CB-F-1B-A						
												FW-E3Q-62-4	Timing Relay	E3Q	CB-F-1B-A						

FUNCTION: EMERGENCY FEEDWATER PUMPHOUSE BUILDING

ITEM NO.	EQUIPMENT ID NO.	EQUIPMENT DESCRIPTION	P&ID/1-LINE DRAWING NO.	TRAIN	PHYSICAL LOCATION DRAWING NO.	FIRE AREA/ZONE	REQUIRED FOR		POWER		ELEC NODE	SUPPORTING CONTROL AND INSTRUMENTATION EQUIPMENT				CABLES	ELECTRICAL DRAWING NO.		SUPPORTING SYSTEMS	REDUNDANT COUNTERPART	REMARKS
							HOT STAND BY	COLD SHUT DOWN	ELEC	AIR		EQUIPMENT ID NO.	EQUIPMENT DESCRIPTION	ELEC NODE	FIRE AREA/ZONE		SCHEM.	CABLE			
7	FW-FV-4234A	Emergency Feedwater Header Flow Valve	FW-20688	A	310708	EFP-F-1-A	X	X	X	-	V2G	FW-B3X-52	460 V AC Circuit Breaker	B3X	CB-F-1A-A	B3X-V2G B3X-V2G/1 G2G-V2G	310844 B3Xa	B3Xd B3Xe	CBA-FN-19 CBA-FN-20 EDE-MCC-515	FW-FV-4234B	
												FW-B3X-FU	Fuse	B3X	CB-F-1A-A	E3C-G2G/2 E3C-F51/2 F51-G2G/2 B3X-G5X B3X-G5X/1 E3C-FN6/2 F51-FN6/2 FN6-G5X/4 FN6-G5X/5					
												FW-CS-4234-A2	Control Switch with Indication	G2G	CB-F-1A-A						
												FW-SS-4214-A	Selector Switch	G2G	CB-F-1A-A						
												FW-SS-4214-A1	Selector Switch	G5X	DG-F-2A-A						
												FW-CS-4234-A1	Control Switch with Indication	F51	CB-F-3A-A						
												FW-B3X-42/O,C	Motor Starters	B3X	CB-F-1A-A						
												FW-B3X-49	Overload Relays	B3X	CB-F-1A-A						
												FW-ZS-4234-A	Valve Position Switch	V2G	EFP-F-1-A						
												FW-FN6-4234AX	Auxiliary Relay	FN6	CB-F-2B-A						
												FW-FN6-MSO-3	Auxiliary Relay	FN6	CB-F-2B-A						
												FW-FN6-R3A	Auxiliary Relay	FN6	CB-F-2B-A						
												FW-E3C-R1	Auxiliary Relay (FYY-4214-2)	E3C	CB-F-1A-A						
												FW-E3P-62-1	Timing Relay	E3Q	CB-F-1A-A						
												FW-E3C-R2	Auxiliary Relay (FYY-4224-4)	E3C	CB-F-1A-A						
												FW-E3P-62-2	Timing Relay	E3Q	CB-F-1A-A						
												FW-E3C-R3	Auxiliary Relay (FYY-4234-2)	E3C	CB-F-1A-A						
												FW-E3P-62-3	Timing Relay	E3Q	CB-F-1A-A						
												FW-E3C-R4	Auxiliary Relay (FYY-4244-4)	E3C	CB-F-1A-A						
												FW-E3P-62-4	Timing Relay	E3Q	CB-F-1A-A						

FUNCTION: EMERGENCY FEEDWATER PUMPHOUSE BUILDING

ITEM NO.	EQUIPMENT ID NO.	EQUIPMENT DESCRIPTION	P&ID/1-LINE DRAWING NO.	TRAIN	PHYSICAL LOCATION DRAWING NO.	FIRE AREA/ZONE	REQUIRED FOR		POWER		ELEC NODE	SUPPORTING CONTROL AND INSTRUMENTATION EQUIPMENT				CABLES	ELECTRICAL DRAWING NO.		SUPPORTING SYSTEMS	REDUNDANT COUNTERPART	REMARKS
							HOT STAND BY	COLD SHUT DOWN	ELEC	AIR		EQUIPMENT ID NO.	EQUIPMENT DESCRIPTION	ELEC NODE	FIRE AREA/ZONE		SCHEM.	CABLE			
8	FW-FV-4234B	Emergency Feedwater Header Flow Valve	FW-20688	B	310708	EFP-F-1-A	X	X	X	-	V2L	FW-B4B-52	460 V AC Circuit Breaker	B4B	CB-F-1B-A	B4B-V2L B4B-V2L/1 E3D/G2J/2 G2J-V2L E3D-F51/2 F51-G2J/2 B4B-G2J B4B-G5Y B4B-G5Y/1 E3D-FN7/2 F51-FN7/2 FN7-G5Y/4 FN7-G5Y/5	310844 B4Ba B4Bd B4Be		CBA-FN-32 CBA-FN-33 EDE-MCC-615	FW-FV-4234A	
												FW-B4B-FU	Fuse	B4B	CB-F-1B-A						
												FW-CS-4234-B2	Control Switch with Indication	G2J	CB-F-1B-A						
												FW-SS-4214-B	Selector Switch	G2J	CB-F-1B-A						
												FW-SS-4214-B1	Selector Switch	G5Y	DG-F-2B-A						
												FW-CS-4234-B1	Control Switch with Indication	F51	CB-F-3A-A						
												FW-B4B-42/O,C	Motor Starters	B4B	CB-F-1B-A						
												FW-B4B-49	Overload Relays	B4B	CB-F-1B-A						
												FW-ZS-4234-B	Valve Position Switch	V2L	EFP-F-1-A						
												FW-FN7-4234BX	Auxiliary Relay	FN7	CB-F-2C-A						
												FW-FN7-MSO-3	Auxiliary Relay	FN7	CB-F-2C-A						
												FW-FN7-R3B	Auxiliary Relay	FN7	CB-F-2C-A						
												FW-E3D-R1	Auxiliary Relay (FYY-4214-4)	E3D	CB-F-1B-A						
												FW-E3D-R2	Auxiliary Relay (FYY-4224-2)	E3D	CB-F-1B-A						
												FW-E3D-R3	Auxiliary Relay (FYY-4234-4)	E3D	CB-F-1B-A						
												FW-E3D-R4	Auxiliary Relay (FYY-4244-2)	E3D	CB-F-1B-A						

FUNCTION: EMERGENCY FEEDWATER PUMPHOUSE BUILDING

ITEM NO.	EQUIPMENT ID NO.	EQUIPMENT DESCRIPTION	P&ID/1-LINE DRAWING NO.	TRAIN	PHYSICAL LOCATION DRAWING NO.	FIRE AREA/ZONE	REQUIRED FOR		POWER		ELEC NODE	SUPPORTING CONTROL AND INSTRUMENTATION EQUIPMENT				CABLES	ELECTRICAL DRAWING NO.		SUPPORTING SYSTEMS	REDUNDANT COUNTERPART	REMARKS
							HOT STAND BY	COLD SHUT DOWN	ELEC	AIR		EQUIPMENT ID NO.	EQUIPMENT DESCRIPTION	ELEC NODE	FIRE AREA/ZONE		SCHEM.	CABLE			
9	FW-FV-4244A	Emergency Feedwater Header Flow Valve	FW-20688	A	310708	EFP-F-1-A	X	X	X	-	V2H	FW-B3Y-52	460 V AC Circuit Breaker	B3Y	CB-F-1A-A	B3Y-V2H B3Y-V2H/1 E3C-G2G/3 G2G-V2H E3C-F51/3 F51-G2G/3 B3Y-G5X B3Y-G5X/1 E3C-FN6/3 F51-FN6/3 FN6-G5X/6 FN6-G5X/7	310844 B3Ya B3Yd B3Ye		CBA-FN-19 CBA-FN-20 EDE-MCC-515	FW-FV-4244B	
												FW-B3Y-FU	Fuse	B3Y	CB-F-1A-A						
												FW-CS-4244-A2	Control Switch with Indication	G2G	CB-F-1A-A						
												FW-SS-4224-A	Selector Switch	G2G	CB-F-1A-A						
												FW-SS-4224-A1	Selector Switch	G5X	DG-F-2A-A						
												FW-CS-4244-A1	Control Switch with Indication	F51	CB-F-3A-A						
												FW-B3Y-42/O,C	Motor Starters	B3Y	CB-F-1A-A						
												FW-B3Y-49	Overload Relays	B3Y	CB-F-1A-A						
												FW-ZS-4244-A	Valve Position Switch	V2H	EFP-F-1-A						
												FW-FN6-4244AX	Auxiliary Relay	FN6	CB-F-2B-A						
												FW-FN6-MSO-4	Auxiliary Relay	FN6	CB-F-2B-A						
												FW-FN6-R4A	Auxiliary Relay	FN6	CB-F-2B-A						
												FW-E3C-R1	Auxiliary Relay (FYY-4214-2)	E3C	CB-F-1A-A						
												FW-E3P-62-1	Timing Relay	E3P	CB-F-1A-A						
												FW-E3C-R2	Auxiliary Relay (FYY-4224-4)	E3C	CB-F-1A-A						
												FW-E3P-62-2	Timing Relay	E3P	CB-F-1A-A						
												FW-E3C-R3	Auxiliary Relay (FYY-4234-2)	E3C	CB-F-1A-A						
												FW-E3P-62-3	Timing Relay	E3P	CB-F-1A-A						
												FW-E3C-R4	Auxiliary Relay (FYY-4244-4)	E3C	CB-F-1A-A						
												FW-E3P-62-4	Timing Relay	E3P	CB-F-1A-A						

FUNCTION: EMERGENCY FEEDWATER PUMPHOUSE BUILDING

ITEM NO.	EQUIPMENT ID NO.	EQUIPMENT DESCRIPTION	P&ID/1-LINE DRAWING NO.	TRAIN	PHYSICAL LOCATION DRAWING NO.	FIRE AREA/ZONE	REQUIRED FOR		POWER		ELEC NODE	SUPPORTING CONTROL AND INSTRUMENTATION EQUIPMENT				CABLES	ELECTRICAL DRAWING NO.		SUPPORTING SYSTEMS	REDUNDANT COUNTERPART	REMARKS
							HOT STAND BY	COLD SHUT DOWN	ELEC	AIR		EQUIPMENT ID NO.	EQUIPMENT DESCRIPTION	ELEC NODE	FIRE AREA/ZONE		SCHEM.	CABLE			
10	FW-FV-4244B	Emergency Feedwater Header Flow Valve	FW-20688	B	310708	EFP-F-1-A	X	X	X	-	V2M	FW-B4C-52	460 V AC Circuit Breaker	B4C	CB-F-1B-A	B4C-V2M B4C-V2M/1 E3D/G2J/3 GJ2-V2M E3D-F51/3 F51-G2J/3 B4C-G2J B4C-G5Y B4C-G5Y/1 E3D-FN7/3 F51-FN7/3 FN7-G5Y/6 FN7-G5Y/7	310844 B4Ca	B4Cd B4Ce	CBA-FN-32 CBA-FN-33 EDE-MCC-615	FW-FV-4244A	
												FW-B4C-FU	Fuse	B4C	CB-F-1B-A						
												FW-CS-4244-B2	Control Switch with Indication	G2J	CB-F-1B-A						
												FW-SS-4224-B	Selector Switch	G2J	CB-F-1B-A						
												FW-SS-4224-B1	Selector Switch	G5Y	DG-F-2B-A						
												FW-CS-4244-B1	Control Switch with Indication	F51	CB-F-3A-A						
												FW-B4C-42/O,C	Motor Starters	B4C	CB-F-1B-A						
												FW-B4C-49	Overload Relays	B4C	CB-F-1B-A						
												FW-ZS-4244-B	Valve Position Switch	V2M	EFP-F-1-A						
												FW-FN7-4244BX	Auxiliary Relay	FN7	CB-F-2C-A						
												FW-FN7-MSO-4	Auxiliary Relay	FN7	CB-F-2C-A						
												FW-FN7-R4B	Auxiliary Relay	FN7	CB-F-2C-A						
												FW-E3D-R1	Auxiliary Relay (FYY-4214-4)	E3D	CB-F-1B-A						
												FW-E3Q-62-1	Timing Relay	E3Q	CB-F-1B-A						
												FW-E3D-R2	Auxiliary Relay (FYY-4224-2)	E3D	CB-F-1B-A						
												FW-E3Q-62-2	Timing Relay	E3Q	CB-F-1B-A						
												FW-E3D-R3	Auxiliary Relay (FYY-4234-4)	E3D	CB-F-1B-A						
												FW-E3Q-62-3	Timing Relay	E3Q	CB-F-1B-A						
												FW-E3D-R4	Auxiliary Relay (FYY-4244-2)	E3D	CB-F-1B-A						
												FW-E3Q-62-4	Timing Relay	E3Q	CB-F-1B-A						
11	FW-V-156	Start-up Feed Pump to EFW Header Valve	FW-20688	A	310589	MS-F-1B-Z	X	X	X	-	V3L	FW-B4S-52	460 V AC Circuit Breaker	B4S	CB-F-1A-A	B4S-V3L B4S-V3L/1 B4S-F60 B4S-F60/1	310844 B4Sa	B4Sc	CBA-FN-19 CBA-FN-20 EDE-MCC-531	None	
												FW-F4S-FU	Fuse	B4S	CB-F-1A-A						
												FW-CS-4261	Control Switch with Indication	F60	CB-F-3A-A						
												FW-B4S-42/O,C	Motor Starters	B4S	CB-F-1A-A						
												FW-B4S-49	Overload Relays	B4S	CB-F-1A-A						
												FW-ZS-V156	Valve Position and Open/Close Torque Switches	V3L	MS-F-1B-Z						

FUNCTION: EMERGENCY FEEDWATER PUMPHOUSE BUILDING

ITEM NO.	EQUIPMENT ID NO.	EQUIPMENT DESCRIPTION	P&ID/1-LINE DRAWING NO.	TRAIN	PHYSICAL LOCATION DRAWING NO.	FIRE AREA/ZONE	REQUIRED FOR		POWER		ELEC NODE	SUPPORTING CONTROL AND INSTRUMENTATION EQUIPMENT				CABLES	ELECTRICAL DRAWING NO.		SUPPORTING SYSTEMS	REDUNDANT COUNTERPART	REMARKS
							HOT STAND BY	COLD SHUT DOWN	ELEC	AIR		EQUIPMENT ID NO.	EQUIPMENT DESCRIPTION	ELEC NODE	FIRE AREA/ZONE		SCHEM.	CABLE			
12	FW-V-163	Start-up Feed Pump Bypass to EFW Pump Valve	FW-20687	A	310326	TB-F-1A-Z	X	X	X	-	V3M	FW-C2R-52	460 V AC Circuit Breaker	C2R	TB-F-2A-Z	C2R-V3M C2R-V3M/1 C2R-F60	310844 C2Ra	C2Rc	EDE-MCC-523	None	
												FW-C2R-FU	Fuse	C2R	TB-F-2A-Z						
												FW-CS-4262	Control Switch with Indication	F60	CB-F-3A-A						
												FW-C2R-42/O,C	Motor Starter	C2R	TB-F-2A-Z						
												FW-C2R-49	Overload Relays	C2R	TB-F-2A-Z						
												FW-ZS-V163	Valve Position and Open/Close Torque Switches	V3M	TB-F-1A-Z						
13	FW-E3C	Emergency Feedwater Valves Train "A" Vital Controls Relay Compt. (MCC-515)	-	A	310442	CB-F-1A-A	X	X	X	-	E3C	FW-E3E-52	120 V AC Circuit Breaker	E3E	CB-F-1A-A	E3C-FK0 E3C-F56 E3C-FN6/4 FK0-FN6 FK0-FN6/1	310844 E3E/1a, 1e	E3E/1c	CBA-FN-19 CBA-FN-20 EDE-MCC-515 120 V AC Distribution Panel	None	
												FW-E3C-R1	Auxiliary Relay (FYY-4214-2)	E3C	CB-F-1A-A						
												FW-E3C-R2	Auxiliary Relay (FYY-4224-4)	E3C	CB-F-1A-A						
												FW-E3C-R3	Auxiliary Relay (FYY-4234-2)	E3C	CB-F-1A-A						
												FW-E3C-R4	Auxiliary Relay (FYY-4244-4)	E3C	CB-F-1A-A						
												FW-CS-4241-A1	Control Switch	F51	CB-F-3A-A						
												FW-CS-4224-A1	Control Switch	F51	CB-F-3A-A						
												FW-CS-4234-A1	Control Switch	F51	CB-F-3A-A						
												FW-CS-4244-A1	Control Switch	F51	CB-F-3A-A						
												MM-CP-279	"A" Train BOP-PCC	FK0	CB-F-3A-A						
14	FW-E3D	Emergency Feedwater Valves Train "B" Vital Controls Relay Compt. (MCC-615)	-	B	310442	CB-F-1B-A	X	X	X	-	E3D	FW-E3F-52	120 V AC Circuit Breaker	E3F	CB-F-1B-A	E3D-FL2 E3D-F51/4 E3D-FN7/4 FL2-FN7 FL2-FN7/1	310844 E3F/1a, 1e	E3F/1c	CBA-FN-32 CBA-FN-33 EDE-MCC-615 120 V AC Distribution Panel	None	
												FW-E3D-R1	Auxiliary Relay (FYY-4214-4)	E3D	CB-F-1B-A						
												FW-E3D-R2	Auxiliary Relay (FYY-4224-2)	E3D	CB-F-1B-A						
												FW-E3D-R3	Auxiliary Relay (FYY-4234-4)	E3D	CB-F-1B-A						
												FW-E3D-R4	Auxiliary Relay (FYY-4244-2)	E3D	CB-F-1B-A						
												FW-CS-4241-B1	Control Switch	F51	CB-F-3A-A						
												FW-CS-4224-B1	Control Switch	F51	CB-F-3A-A						
												FW-CS-4234-B1	Control Switch	F51	CB-F-3A-A						
												FW-CS-4234-B1	Control Switch	F51	CB-F-3A-A						
												MM-CP-279B	"B" Train BOP-PCC	FL2	CB-F-3A-A						

FUNCTION: EMERGENCY FEEDWATER PUMPHOUSE BUILDING

ITEM NO.	EQUIPMENT ID NO.	EQUIPMENT DESCRIPTION	P&ID/1-LINE DRAWING NO.	TRAIN	PHYSICAL LOCATION DRAWING NO.	FIRE AREA/ZONE	REQUIRED FOR		POWER		ELEC NODE	SUPPORTING CONTROL AND INSTRUMENTATION EQUIPMENT				CABLES	ELECTRICAL DRAWING NO.		SUPPORTING SYSTEMS	REDUNDANT COUNTERPART	REMARKS
							HOT STAND BY	COLD SHUT DOWN	ELEC	AIR		EQUIPMENT ID NO.	EQUIPMENT DESCRIPTION	ELEC NODE	FIRE AREA/ZONE		SCHEM.	CABLE			
15	FW-FT-4214-2	RC-E-11A Emergency Feedwater Header Flow Transmitter	FW-20688	A	310708	EFP-F-1-A	X	X	X	-	GL3	MM-CP-297A	"A" Train BOP Process Control Panel	FK0	CB-F-3A-A	FK0-GL3	310844 FP 72179 FK0a		MM-CP-297A	FW-LT-501	
16	FW-FT-4214-4	RC-E-11A Emergency Feedwater Header Flow Transmitter	FW-20688	B	310708	EFP-F-1A-A	X	X	X	-	GL4	MM-CP-297B	Train "B" BOP Process Control Panel	FL2	CB-F-3A-A	FL2-GL4	310844 FP 72181 FL2a				
17	FW-FT-4224-4	RC-E-11B Emergency Feedwater Header Flow Transmitter	FW-20688	A	310708	EFP-F-1A-A	X	X	X	-	GL3	MM-CP-297A	Train "A" BOP Process Control Panel	FK0	CB-F-3A-A	FK0-GL3	310844 FP 72179 FK0a				
18	FW-FT-4224-2	RC-E-11B Emergency Feedwater Header Flow Transmitter	FW-20688	B	310708	EFP-F-1A-A	X	X	X	-	GL4	MM-CP-297B	Train "B" BOP Process Control Panel	FL2	CB-F-3A-A	FL2-GL4	310844 FP 72181 FL2a		MM-CP-297B	FW-LT-502	
19	FW-FT-4234-2	RC-E-11C Emergency Feedwater Header Flow Transmitter	FW-20688	A	310708	EFP-F-1A-A	X	X	X	-	GL3	MM-CP-297A	Train "A" BOP Process Control Panel	FK0	CB-F-3A-A	FK0-GL3	310844 FP 72179 FK0a		MM-CP-297A	FW-LT-503	
20	FW-FT-4234-4	RC-E-11C Emergency Feedwater Header Flow Transmitter	FW-20688	B	310708	EFP-F-1A-A	X	X	X	-	GL4	MM-CP-297B	Train "B" BOP Process Control Panel	FL2	CB-F-3A-A	FL2-GL4	310844 FP 72181 FL2a				
21	FW-FT-4244-4	RC-E-11D Emergency Feedwater Header Flow Transmitter	FW-20688	A	310708	EFP-F-1A-A	X	X	X	-	GL3	MM-CP-297A	Train "A" BOP Process Control Panel	FK0	CB-F-3A-A	FK0-GL3	310844 FP 72179 FK0a				
22	FW-FT-4244-2	RC-E-11D Emergency Feedwater Header Flow Transmitter	FW-20688	B	310708	EFP-F-1A-A	X	X	X	-	GL4	MM-CP-297B	Train "B" BOP Process Control Panel	FL2	CB-F-3A-A	FL2-GL4	310844 FP 72181 FL2a		MM-CP-297B	FW-LT-504	
23	FW-LT-501	RC-E-11A SG Wide Range Level Transmitter	FW-20686	A	310576	C-F-1-Z	X	X	X	-	R1D	FW-LQY-501 FW-LI-501 EDE-MM-120 MM-CP-1	Signal Converter Level Indicator Electrical Penetration PPC #1	FA1 F51 H44 FA1	CB-F-3A-A CB-F-3A-A C-F-2-Z, ET-F-1A-A CB-F-3A-A	FA1-H44 H44-R1D F56-FA1 F56-FA1/4	310942 FP 55315 FA1h Sh. 13		MM-CP-1		
24	FW-LT-502	RC-E-11B SG Wide Range Level Transmitter	FW-20686	B	310576	C-F-1-Z	X	X	X	-	R1E	FW-LQY-502 FW-LI-502 EDE-MM-131 MM-CP-2	Signal Converter Level Indicator Electrical Penetration PPC #2	FA2 F51 H55 FA2	CB-F-3A-A CB-F-3A-A C-F-1-Z, ET-F-1C-A CB-F-3A-A	FA2-H55 H55-R1E F56-FA2/1	310942 FP 55316 FA2h Sh. 13		MM-CP-2		

FUNCTION: EMERGENCY FEEDWATER PUMPHOUSE BUILDING

ITEM NO.	EQUIPMENT ID NO.	EQUIPMENT DESCRIPTION	P&ID/1-LINE DRAWING NO.	TRAIN	PHYSICAL LOCATION DRAWING NO.	FIRE AREA/ZONE	REQUIRED FOR		POWER		ELEC NODE	SUPPORTING CONTROL AND INSTRUMENTATION EQUIPMENT				CABLES	ELECTRICAL DRAWING NO.		SUPPORTING SYSTEMS	REDUNDANT COUNTERPART	REMARKS
							HOT STAND BY	COLD SHUT DOWN	ELEC	AIR		EQUIPMENT ID NO.	EQUIPMENT DESCRIPTION	ELEC NODE	FIRE AREA/ZONE		SCHEM.	CABLE			
25	FW-LT-503	RC-E-11C SG Wide Range Level Transmitter	FW-20686	A	310577	C-F-1-Z	X	X	X	-	R1F	FW-LQY-503 FW-LI-503 EDE-MM-123 MM-CP-3	Signal Converter Level Indicator Electrical Penetration PPC #3	FA3 F51 H47 FA3	CB-F-3A-A CB-F-3A-A C-F-2-Z, ET-F-1A-A CB-F-3A-A	FA3-H47/1 H47-R1F F56-FA3/2	310942 FP 55317 FA3h Sh. 13		MM-CP-3		
26	FW-LT-504	RC-E-11D SG Wide Range Level Transmitter	FW-20686	B	310577	C-F-1-Z	X	X	X	-	R1G	FW-LQY-504 FW-LI-504 EDE-MM-128 MM-CP-4	Signal Converter Level Indicator Electrical Penetration PPC #4	FA4 F51 H52 FA4	CB-F-3A-A CB-F-3A-A C-F-1-Z, ET-F-1C-A CB-F-3A-A	FA4-H52/1 H52-R1G F56-FA4	310942 FP 55318 FA4h Sh. 13		MM-CP-4	-	
27	CO-V-142	Condensate Tank Emergency Outlet Valve	CO-20426	A	310248 202319	CST-F-1-0	X	X	-	-	-	-	-	-	-	-	-		-	-	Note 1
28	CO-LT-4096	CO-TK-25 Condenser Storage Tank Level	CO-20426	A	310828	CST-F-1-0	-	X	X	-	R53	CO-LI-4096 MM-CP-153	Level Indicator BOP-PCC	F61 FJ7	CB-F-3A-A CB-F-3A-A	FJ7-R53 F66-FJ8	310953	FJ7f FJ7g	MM-CP-153		

FUNCTION: HIGH-LOW PRESSURE BOUNDARIES*

ITEM NO.	EQUIPMENT ID NO.	EQUIPMENT DESCRIPTION	P&ID/1-LINE DRAWING NO.	TRAIN	PHYSICAL LOCATION DRAWING NO.	FIRE AREA/ZONE	REQUIRED FOR		POWER		ELEC NODE	SUPPORTING CONTROL AND INSTRUMENTATION EQUIPMENT				CABLES	ELECTRICAL DRAWING NO.		SUPPORTING SYSTEMS	REDUNDANT COUNTERPART	REMARKS
							HOT STAND BY	COLD SHUT DOWN	ELEC	AIR		EQUIPMENT ID NO.	EQUIPMENT DESCRIPTION	ELEC NODE	FIRE AREA/ZONE		SCHEM.	CABLE			
1	CS-V-175	Excess Letdown Line Isolation Valve	CS-20722	B	310577	C-F-1-Z	X	X	X	X	L95	CS-E95/2-72	125 V DC Circuit Breaker	E95	CB-F-1B-A	E95-E4D F48-G5Y F48-H39/3 GE5-H39/1 GE5-L95/1 E4D-F48 F48-H39/2	310891 E95/2a	E95/2c E95/2d	CBA-FN-32 CBA-FN-33	CS-V176	Note 1
												CS-CS-7418	Control Switch with Indication	F41	CB-F-3A-A						
												CS-E4D-FU	Fuses	E4D	CB-F-1B-A						
												CS-SS-7418	Selector Switch	G5Y	DG-F-2B-A						
												CS-FY-7418	Pilot Solenoid	GE5	C-F-1-Z						
												CS-ZS-V175	Valve Position Switch	L95	C-F-1-Z						
												EDE-MM-115	Electrical Penetration	H39	C-F-1-Z, ET-F-1C-A						
2	CS-V-176	Excess Letdown Line Isolation Valve	CS-20722	B	310577	C-F-1-Z	X	X	X	X	LA5	CS-E95/4-72	125 V DC Circuit Breaker	E95	CB-F-1B-A	F48-H39/1 GE5-H39/5 E95-E4D/1 E4D-F26 F48-H39 GE5-H39/4 GE5-LA5/1	310891 E95/4a E95/4b	E95/4d E95/4e E95/4f	CBA-FN-32 CBA-FN-33	CS-V175	Note 1
												CS-CS-7417	Control Switch with Indication	F41	CB-F-3A-A						
												CS-FY-7417	Pilot Solenoid	GE5	C-F-1-Z						
												CS-ZS-V176	Valve Position Switch	LA5	C-F-1-Z						
												CS-E4D-FU	Fuses	E4D	CB-F-1B-A						
												EDE-MM-115	Electrical Penetration	H39	C-F-1-Z, ET-F-1C-A						
3	RC-LCV-459	Regen. Heat Exchanger Letdown Isolation Valve (Outside Missile Barrier)	RC-20843	A	310577	C-F-1-Z	X	X	X	X	L99	RC-E89/17-72	125 V DC Circuit Breaker	E89	CB-F-1A-A	F40-H36 GE5-L99 GE5-H36/2 GE5-LH2/1 L99-LH2 F40-FB1/2 F40-G5X E4F-G5X E89-34F/8	310882 E89/17a	E89/17c E89/17d	CBA-FN-19 CBA-FN-20	RC-LCV-460	Note 1
												RC-CS-459	Control Switch with Indication	F40	CB-F-3A-A						
												RC-LY-459B	Pilot Solenoid	GE5	C-F-1-Z						
												RC-ZS-LCV-459	Valve Position Switch	L99	C-F-1-Z						
												CS-ZS-V145	Valve Position Switch	LH2	C-F-1-Z						
												RC-LY/459-CX1	Level Auxiliary Relay	FB1	CB-F-3A-A						
												RC-E4F-FU	Fuses	E4F	CB-F-1A-A						
												RC-SS-459	Selector Switch	G5X	DG-F-2A-A						
												EDE-MM-112	Electrical Penetration	H36	C-F-2-Z, ET-F-1A-A						
4	RC-LCV-460	Regen. Heat Exchanger Letdown Isolation Valve (Inside Missile Barrier)	RC-20843	A	310577	C-F-1-Z	X	X	X	X	LF7	RC-E89/1-72	125 V DC Circuit Breaker	E89	CB-F-1A-A	GE4-H36 GE4-LF7/1 E89-E4F E4F-F40 F40-FB1 F40-H36/1 F40-H36/3 GE4-LH2	310882 E89/1b	E89/1d E89/1e E89/1f	CBA-FN-19 CBA-FN-20	RC-LCV-459	Note 1
												RC-CS-460	Control Switch with Indication	F40	CB-F-3A-A						
												RC-LY-460E	Pilot Solenoid	GE4	C-F-1-Z						
												RC-ZS-LCV-460	Valve Position Switch	LF7	C-F-1-Z						
												RC-LY/460-DX1	Level Auxiliary Relay	FB1	CB-F-3A-A						
												FC-E4F-FU	Fuses	E4F	CB-F-1A-A						
												EDE-MM-112	Electrical Penetration	H36	C-F-2-Z, ET-F-1A-A						
												CS-ZS-V145	Valve Position Switch	LH2	C-F-1-Z						

*1. Electrical power and air are not required for support since the valve fails closed.
2. During normal operation, the valve is in its hot shutdown position. To prevent spurious operation, this equipment is permanently disabled (circuit breaker tripped).
3. These valves are fail open diaphragm valves. See Section 3.5.3.1.c for analysis.

FUNCTION: HIGH-LOW PRESSURE BOUNDARIES

ITEM NO.	EQUIPMENT ID NO.	EQUIPMENT DESCRIPTION	P&ID/1-LINE DRAWING NO.	TRAIN	PHYSICAL LOCATION DRAWING NO.	FIRE AREA/ZONE	REQUIRED FOR		POWER		ELEC NODE	SUPPORTING CONTROL AND INSTRUMENTATION EQUIPMENT				CABLES	ELECTRICAL DRAWING NO.		SUPPORTING SYSTEMS	REDUNDANT COUNTERPART	REMARKS
							HOT STAND BY	COLD SHUT DOWN	ELEC	AIR		EQUIPMENT ID NO.	EQUIPMENT DESCRIPTION	ELEC NODE	FIRE AREA/ZONE		SCHEM.	CABLE			
5	RC-FV-2881	Reactor Head Vent. Sol. Valve	RC-20845	B	310581	C-F-3-Z	X	X	X	X	U04	RC-E88/1-72	125 V Circuit Breaker	E88	CB-F-1B-A	E88-E4C/4	310882		CBA-FN-32	RC-V323	Note 1
												RC-CS-2881	Control Switch with Indication	F31	CB-F-3A-A	E4C-GN0/5	E88/1g	E88/1d	CBA-FN-33		
																F31-GN0		E88/1e			
												RC-FV-2881	Solenoid Valve	U04	C-F-3-Z	F31-G5Y		E88/1f			
																F31-H41/1					
												RC-GN0-R7	Auxiliary Relay	GN0	CB-F-1B-A	H41/U04					
												RC-ZS-FV-2881	Valve Position Switch	U04	C-F-3-Z						
												RC-E4C-FU	Fuses	E4C	CB-F-1B-A						
												RC-SS-2881	Selector Switch	G5Y	DG-F-2B-A						
												EDE-MM-117	Electrical Penetration	H41	C-F-1-Z, ET-F-1C-A						
												EDE-MM-115	Electrical Penetration	H39	C-F-1-Z, ET-F-1C-A	H39-U04 F26-H39					
6	RC-V-323	Reactor Head Venting Valve	RC-20845	B	310581	C-F-3-Z	X	X	X	-	VB2	RC-BV9-52-1	460 V AC Circuit Breaker	BV9	CB-F-1B-A	BV9-F31	310882		CBA-FN-32	RC-FV-2881	
																BV9-H41	BV9a	BV9c	CBA-FN-33		
																BV9-H15		BV9d			
												RC-BV9-52-2	460 V AC Circuit Breaker	BV9	CB-F-1B-A	F31-H41/2					
																H41-VB2					
												RC-CS-2885	Control Switch with Indication	F31	CB-F-3A-A	H41-VB2/1					
																H15-VB2					
												RC-BV9-42-1(O)	Motor Starter (Open)	BV9	CB-F-1B-A						
												RC-BV9-42-1(C)	Motor Starter (Close)	BV9	CB-F-1B-A						
												RC-BV9-42-2	Motor Starter	BV9	CB-F-1B-A						
												RC-BV9-49-1	Overload Relay	BV9	CB-F-1B-A						
												RC-BV9-49-2	Overload Relay	BV9	CB-F-1B-A						
												RC-ZS-V323	Valve Position Switch and Valve Open/Close Torque Switches	VB2	C-F-3-Z						
												EDE-MM-91	Electrical Penetration	H15	C-F-1-Z, ET-F-1C-A						
												EDE-MM-117	Electrical Penetration	H41	C-F-1-Z, ET-F-1C-A						
												RC-BV9-FU	Fuse	BV9	CB-F-1B-A						

FUNCTION: HIGH-LOW PRESSURE BOUNDARIES

ITEM NO.	EQUIPMENT ID NO.	EQUIPMENT DESCRIPTION	P&ID/1-LINE DRAWING NO.	TRAIN	PHYSICAL LOCATION DRAWING NO.	FIRE AREA/ZONE	REQUIRED FOR		POWER		ELEC NODE	SUPPORTING CONTROL AND INSTRUMENTATION EQUIPMENT				CABLES	ELECTRICAL DRAWING NO.		SUPPORTING SYSTEMS	REDUNDANT COUNTERPART	REMARKS
							HOT STAND BY	COLD SHUT DOWN	ELEC	AIR		EQUIPMENT ID NO.	EQUIPMENT DESCRIPTION	ELEC NODE	FIRE AREA/ZONE		SCHEM.	CABLE			
7	RC-V-22	RHR Inlet Isolation Valve	RC-20841	B	310582	C-F-1-Z	D	D	X	-	V27	RC-B54-52-1	460 V AC Circuit Breaker	B54	CB-F-1B-A	B54-G2J B54-G2J/1 B54-H24 B54-H39 B54-V53 F20-G2J H24-V27 H39-V27 F20-FF9/2	310882 B54a	B54c B54d		RC-V-23	Note 2
												RC-B54-52-2	460 V AC Circuit Breaker	B54	CB-F-1B-A						
												RC-CS-7302-1	Control Switch With Indication	F20	CB-F-3A-A						
												RC-CS-7302-2	Control Switch With Indication	G2J	CB-F-1B-A						
												RC-SS-7302	Selector Switch	G2J	CB-F-1B-A						
												RC-B54-42-1(O)	Motor Starter (Open)	B54	CB-F-1B-A						
												RC-B54-42-1(C)	Motor Starter (Close)	B54	CB-F-1B-A						
												RC-B54-42-2	Motor Starter	B54	CB-F-1B-A						
												RC-B54-49-1	Overload Relay	B54	CB-F-1B-A						
												RC-B54-49-2	Overload Relay	B54	CB-F-1B-A						
												RC-FF9-K-734B	SSPC Output Relay	FF9	CB-F-3A-A						
												RC-ZS-7302B	Valve Position Switch and Valve Open/Close Torque Switches	V27	C-F-1-Z						
												RH-ZS-2465B	RH-V35 Position Switch	V53	RHR-F-4B-Z						
												EDE-MM-100	Electrical Penetration	H24	C-F-1-Z, ET-F-1C-A						
												EDE-MM-115	Electrical Penetration	H39	C-F-1-Z, ET-F-1C-A						
												RC-ZL-7302-1	Pilot Light	G2J	CB-F-1B-A						
												RC-ZL-7302-2	Pilot Light	F20	CB-F-3A-A						
												RC-B54-FU	Fuse	B54	CB-F-1B-A						

FUNCTION: HIGH-LOW PRESSURE BOUNDARIES

ITEM NO.	EQUIPMENT ID NO.	EQUIPMENT DESCRIPTION	P&ID/1-LINE DRAWING NO.	TRAIN	PHYSICAL LOCATION DRAWING NO.	FIRE AREA/ZONE	REQUIRED FOR		POWER		ELEC NODE	SUPPORTING CONTROL AND INSTRUMENTATION EQUIPMENT				CABLES	ELECTRICAL DRAWING NO.		SUPPORTING SYSTEMS	REDUNDANT COUNTERPART	REMARKS
							HOT STAND BY	COLD SHUT DOWN	ELEC	AIR		EQUIPMENT ID NO.	EQUIPMENT DESCRIPTION	ELEC NODE	FIRE AREA/ZONE		SCHEM.	CABLE			
8	RC-V-23	RHR Inlet Isolation Valve	RC-20841	A	310576	C-F-1-Z	D	D	X	-	V25	RC-B53-52-1	460 V AC Circuit Breaker	B53	CB-F-1A-A	B53-G2G B53-G2G/1 B53-H19 B53-H36 B53-V53 F20-G2G F20-FF8/2 H19-V25 H36-V25/2	310882 B53a	B53c B53d		RC-V-22	Note 2
												RC-B53-52-2	460 V AC Circuit Breaker	B53	CB-F-1A-A						
												RC-CS-7303-1	Control Switch with Indication	F20	CB-F-3A-A						
												RC-CS-7303-2	Control Switch with Indication	G2G	CB-F-1A-A						
												RC-SS-7303	Selector Switch	G2G	CB-F-1A-A						
												RC-ZL-7303-1	Pilot Light	G2G	CB-F-1A-A						
												RC-ZL-7303-2	Pilot Light	F20	CB-F-3A-A						
												RC-B53-42-1(O)	Motor Starter (Open)	B53	CB-F-1A-A						
												RC-B53-42-1(C)	Motor Starter (Close)	B53	CB-F-1A-A						
												RC-B53-42-2	Motor Starter	B53	CB-F-1A-A						
												RC-B53-49-1	Overload Relay	B53	CB-F-1A-A						
												RC-B53-49-2	Overload Relay	B53	CB-F-1A-A						
												RC-FF8-K-734A	SSPS Output Relay	FF8	CB-F-3A-A						
												RC-ZS-V23	Valve Position Switch and Valve Open/Close Torque Switches	V25	C-F-1-Z						
												RH-ZS-2465A	RH-V35 Position Switch	V53	RHR-F-4B-Z						
												EDE-MM-95	Electrical Penetration	H19	C-F-2-Z, ET-F-1A-A						
												EDE-MM-112	Electrical Penetration	H36	C-F-2-Z, ET-F-1A-A						
												RC-B53-FU	Fuse	B54	CB-F-1A-A						

FUNCTION: HIGH-LOW PRESSURE BOUNDARIES

ITEM NO.	EQUIPMENT ID NO.	EQUIPMENT DESCRIPTION	P&ID/1-LINE DRAWING NO.	TRAIN	PHYSICAL LOCATION DRAWING NO.	FIRE AREA/ZONE	REQUIRED FOR		POWER		ELEC NODE	SUPPORTING CONTROL AND INSTRUMENTATION EQUIPMENT				CABLES	ELECTRICAL DRAWING NO.		SUPPORTING SYSTEMS	REDUNDANT COUNTERPART	REMARKS
							HOT STAND BY	COLD SHUT DOWN	ELEC	AIR		EQUIPMENT ID NO.	EQUIPMENT DESCRIPTION	ELEC NODE	FIRE AREA/ZONE		SCHEM.	CABLE			
9	RC-V-87	RHR Inlet Isolation Valve	RC-20844	B	310582	C-F-1-Z	D	D	X	-	V26	RC-B61-52-1	460 V AC Circuit Breaker	B61	CB-F-1B-A	B61-G2J B61-G2J/1 B61-H24 B61-H39 B61-V54 F20-G2J/1 F20-FF9/1 H24-V26 H39-V26/2	310882 B61a	B61c B61d		RC-V-88	Note 2
												RC-B61-52-2	460 V AC Circuit Breaker	B61	CB-F-1B-A						
												RC-CS-7310-1	Control Switch with Indication	F20	CB-F-3A-A						
												RC-CS-7310-2	Control Switch with Indication	G2J	CB-F-1B-A						
												RC-SS-7310	Selector Switch	G2J	CB-F-1B-A						
												RC-ZL-7310-1	Pilot Light	G2J	CB-F-1B-A						
												RC-ZL-7310-2	Pilot Light	F20	CB-F-3A-A						
												RC-B61-42-1(O)	Motor Starter (Open)	B61	CB-F-1B-A						
												RC-B61-42-1(C)	Motor Starter (Close)	B61	CB-F-1B-A						
												RC-B61-42-2	Motor Starter	B61	CB-F-1B-A						
												RC-B61-49-1	Overload Relay	B61	CB-F-1B-A						
												RC-B61-49-2	Overload Relay	B61	CB-F-1B-A						
												RC-FF9-K-734B	SSPS Output Relay	FF9	CB-F-3A-A						
												RC-ZS-V87	Valve Position Switch and Valve Open/Close Torque Switches	V26	C-F-1-Z						
												RH-ZS-2466B	RH-E-9B to SI Pump Isolation Valve RH-V36 Position Switch	V54	RHR-F-2A-Z						
												EDE-MM-100	Electrical Penetration	H24	C-F-2-Z, ET-F-1C-A						
												EDE-MM-115	Electrical Penetration	H39	C-F-2-Z, ET-F-1C-A						
												RC-B61-FU	Fuse	B61	CB-F-1B-A						

FUNCTION: HIGH-LOW PRESSURE BOUNDARIES

ITEM NO.	EQUIPMENT ID NO.	EQUIPMENT DESCRIPTION	P&ID/1-LINE DRAWING NO.	TRAIN	PHYSICAL LOCATION DRAWING NO.	FIRE AREA/ZONE	REQUIRED FOR		POWER		ELEC NODE	SUPPORTING CONTROL AND INSTRUMENTATION EQUIPMENT				CABLES	ELECTRICAL DRAWING NO.		SUPPORTING SYSTEMS	REDUNDANT COUNTERPART	REMARKS
							HOT STAND BY	COLD SHUT DOWN	ELEC	AIR		EQUIPMENT ID NO.	EQUIPMENT DESCRIPTION	ELEC NODE	FIRE AREA/ZONE		SCHEM.	CABLE			
10	RC-V-88	RHR Inlet Isolation Valve	RC-20844	A	310577	C-F-1-Z	D	D	X	-	V28	RC-B62-52-1	460 V AC Circuit Breaker	B62	CB-F-1A-A	B62-G2G B62-G2G/1 B62-H19 B62-H36 B62-V54 F20-G2G/1 F20-FF8/3 H19-V28 H36-V28	310882 B62a	B62c B62d		RC-V-87	Note 2
												RC-B62-52-2	460 V AC Circuit Breaker	B62	CB-F-1A-A						
												RC-CS-7311-1	Control Switch with Indication	F20	CB-F-3A-A						
												RC-CS-7311-2	Control Switch with Indication	G2G	CB-F-1A-A						
												RC-SS-7311	Selector Switch	G2G	CB-F-1A-A						
												RC-ZL-7311-1	Pilot Light	G2G	CB-F-1A-A						
												RC-ZL-7311-2	Pilot Light	F20	CB-F-3A-A						
												RC-B62-42-1(O)	Motor Starter (Open)	B62	CB-F-1A-A						
												RC-B62-42-1(C)	Motor Starter (Close)	B62	CB-F-1A-A						
												RC-B62-42-2	Motor Starter	B62	CB-F-1A-A						
												RC-B62-49-1	Overload Relay	B62	CB-F-1A-A						
												RC-B62-49-2	Overload Relay	B62	CB-F-1A-A						
												RC-FF9-K-734A	SSPS Output Relay	FF8	CB-F-3A-A						
												RC-ZS-7311A	Valve Position Switch and Valve Open/Close Torque Switches	V28	C-F-1-Z						
												RH-ZS-2466A	RH-E-9B to SI Pump Isolation Valve RH-V36 Position Switch	V54	RHR-F-2A-Z						
												EDE-MM-95	Electrical Penetration	H19	C-F-2-Z, ET-F-1A-A						
												EDE-MM-112	Electrical Penetration	H36	C-F-2-Z, ET-F-1A-A						
												RC-B62-FU	Fuse	B62	CB-F-1A-A						

FUNCTION: HIGH-LOW PRESSURE BOUNDARIES

ITEM NO.	EQUIPMENT ID NO.	EQUIPMENT DESCRIPTION	P&ID/1-LINE DRAWING NO.	TRAIN	PHYSICAL LOCATION DRAWING NO.	FIRE AREA/ZONE	REQUIRED FOR		POWER		ELEC NODE	SUPPORTING CONTROL AND INSTRUMENTATION EQUIPMENT				CABLES	ELECTRICAL DRAWING NO.		SUPPORTING SYSTEMS	REDUNDANT COUNTERPART	REMARKS
							HOT STAND BY	COLD SHUT DOWN	ELEC	AIR		EQUIPMENT ID NO.	EQUIPMENT DESCRIPTION	ELEC NODE	FIRE AREA/ZONE		SCHEM.	CABLE			
11	RC-PCV-456A	RC-E-10 Pressurizer Relief Control Valve	RC-20846	A	310581	C-F-3-Z	X	X	X	X	LD3	RC-E87/19-72	125 V DC Circuit Breaker	E87	CB-F-1A-A	F38-FB1/2 F38-G81/1 G81-H35 H35-X56/2 LD3-X56 E87-E4A/4 E4A-J3M G5X-J3M H18-J3M H18-LD3 G81-J3M F38-G5X	310882 E87/19a	E87/19c E87/19d	CBA-FN-19 CBA-FN-20 DAH-FN-25A DAH-FN-26A	RC-V122	Note 1
												RC-CS-456A-1	Control Switch with Indication	F31	CB-F-3A-A						
												RC-CS-456A-2	Control Switch with Indication	G81	CB-F-1A-A						
												RC-SS-456A-1	Selector Switch	G81	CB-F-1A-A						
												RC-PCV-456A-20	Solenoid Operated Valve	LD3	C-F-3-Z						
												RC-ZS-PCV-456A	Valve Position Switch	LD3	C-F-3-Z						
												RC-PY-405CX	Auxiliary Relay	FB1	CB-F-3A-A						
												RC-PY-455EX	Auxiliary Relay	FB1	CB-F-3A-A						
												RC-PY-458BX	Auxiliary Relay	FB1	CB-F-3A-A						
												RC-TY-413KX	Auxiliary Relay	FB1	CB-F-3A-A						
												RC-SS-456A-2	Selector Switch	G5X	DG-F-2A-A						
												RC-J3M-42	125 V DC Contactor	J3M	DG-F-2A-A						
												RC-E4A-FU	Fuses	E4A	CB-F-1A-A						
												EDE-TBX-X56	Terminal Box	X56	C-F-3-Z						
												EDE-MM-94	Electrical Penetration	H18	C-F-2-Z, ET-F-1A-A						
												EDE-MM-111	Electrical Penetration	H35	C-F-2-Z, ET-F-1A-A						

FUNCTION: HIGH-LOW PRESSURE BOUNDARIES

ITEM NO.	EQUIPMENT ID NO.	EQUIPMENT DESCRIPTION	P&ID/1-LINE DRAWING NO.	TRAIN	PHYSICAL LOCATION DRAWING NO.	FIRE AREA/ZONE	REQUIRED FOR		POWER		ELEC NODE	SUPPORTING CONTROL AND INSTRUMENTATION EQUIPMENT				CABLES	ELECTRICAL DRAWING NO.		SUPPORTING SYSTEMS	REDUNDANT COUNTERPART	REMARKS
							HOT STAND BY	COLD SHUT DOWN	ELEC	AIR		EQUIPMENT ID NO.	EQUIPMENT DESCRIPTION	ELEC NODE	FIRE AREA/ZONE		SCHEM.	CABLE			
12	RC-PCV-456B	RC-E-10 Pressurizer Relief Control Valve	RC-20846	B	310581	C-F-3-Z	X	X	X	X	LD4	RC-E88/19-72	125 V DC Circuit Breaker	E88	CB-F-1B-A	F31-FT0/2 F31-GZ0/2 GZ0-H39 H39-X35 LD4-X35 GZ0-J3P E88-E4C/7 E4C-J3P G5Y-J3P H24-J3P H24-LD4 E4C-GZ0/2 F31-G5Y/1	310882 E88/19a E88/19c E88/19d		CBA-FN-32 CBA-FN-33 DAH-FN-25B DAH-FN-26B	RC-V124	Note 1
												RC-CS-456B-1	Control Switch with Indication	F31	CB-F-3A-A						
												RC-CS-456B-2	Control Switch with Indication	GZ0	CB-F-1B-A						
												RC-SS-456B-1	Selector Switch	GZ0	CB-F-1B-A						
												RC-PCV-456B-20	Solenoid Operated Valve	LD4	C-F-3-Z						
												RC-ZS-PCV-456B	Valve Position Switch	LD4	C-F-3-Z						
												RC-FT0-KA7	Isolation Relay	FT0	CB-F-3A-A						
												RC-SS-456B-1	Selector Switch	G5Y	DG-F-2B-A						
												RC-J3P-42	125 V DC Contactor	J3P	DG-F-2B-A						
												RC-E4C-FU	Fuses	E4C	CB-F-1B-A						
												EDE-TBX-X35	Terminal Box	X35	C-F-3-Z						
												EDE-MM-100	Electrical Penetration	H24	C-F-1-Z, ET-F-1C-A						
												EDE-MM-115	Electrical Penetration	H39	C-F-1-Z, ET-F-1C-A						
13	RC-V-122	RC-E-10 Pressurizer Relief Isolation Valve	RC-20846	A	310581	C-F-3-Z	X	X	X	-	V01	RC-B97-52-1	460 V AC Circuit Breaker	B97	CB-F-1A-A	B97-H18 B97-H35 ED1-F38 H18-V01 H35-X56 V01-X56 F38-G81/2 F38-G81/3 B97-G81 B97-G81/1	310882 B97a B97c B97e B97d		EDE-MCC-521 CBA-FN-19 CBA-FN-20	RC-PCV-456A	
												RC-B97-52-2	460 V AC Circuit Breaker	B97	CB-F-1A-A						
												RC-CS-7313-1	Control Switch with Indication	F31	CB-F-3A-A						
												RC-CS-7313-2	Control Switch with Indication	G81	CB-F-1A-A						
												RC-SS-7313	Selector Switch	G81	CB-F-1A-A						
												RC-B97-FU	Fuse	B97	CB-F-1A-A						
												RC-B97-42-1(O)	Motor Starter (Open)	B97	CB-F-1A-A						
												RC-B97-42-1(C)	Motor Starter (Close)	B97	CB-F-1A-A						
												RC-B97-42-2	Motor Starter	B97	CB-F-1A-A						
												RC-B97-49-1	Overload Relay	B97	CB-F-1A-A						
												RC-B97-49-2	Overload Relay	B97	CB-F-1A-A						
												RC-ZS-V122	Valve Position Switch and Valve Open/Close Torque Switches	V01	C-F-3-Z						
												RC-ED1-R1	Auxiliary Relay	ED1	CB-F-1A-A						
												EDE-MM-94	Electrical Penetration	H18	C-F-2-Z, ET-F-1A-A						
												EDE-MM-111	Electrical Penetration	H35	C-F-2-Z, ET-F-1A-A						
												EDE-TBX-X56	Terminal Box	X56	C-F-3-Z						

FUNCTION: HIGH-LOW PRESSURE BOUNDARIES

ITEM NO.	EQUIPMENT ID NO.	EQUIPMENT DESCRIPTION	P&ID/1-LINE DRAWING NO.	TRAIN	PHYSICAL LOCATION DRAWING NO.	FIRE AREA/ZONE	REQUIRED FOR		POWER		ELEC NODE	SUPPORTING CONTROL AND INSTRUMENTATION EQUIPMENT				CABLES	ELECTRICAL DRAWING NO.		SUPPORTING SYSTEMS	REDUNDANT COUNTERPART	REMARKS
							HOT STAND BY	COLD SHUT DOWN	ELEC	AIR		EQUIPMENT ID NO.	EQUIPMENT DESCRIPTION	ELEC NODE	FIRE AREA/ZONE		SCHEM.	CABLE			
14	RC-V-124	RC-E-10 Pressurizer Relief Control Valve	RC-20846	B	310581	C-F-3-Z	X	X	X	-	V02	RC-B98-52-1	460 V AC Circuit Breaker	B98	CB-F-1B-A	B98-H15 B98-H41 F31-FT0/1 H15-V02 H41-X35 V02-X35 B98-GZ0 B98-GZ0/1 F31-GZ0/5 F31-GZ0/6 B98/GZ0/2	310882 B98a B98e	B98c B98d	EDE-MCC-621 CBA-FN-32 CBA-FN-33	RC-PCV-456B	
												RC-B98-52-2	460 V AC Circuit Breaker	B98	CB-F-1B-A						
												RC-CS-7314-1	Control Switch with Indication	F31	CB-F-3A-A						
												RC-CS-7314-2	Control Switch with Indication	GZ0	CB-F-1B-A						
												RC-SS-7314	Selector Switch	GZ0	CB-F-1B-A						
												RC-B98-42-1(O)	Motor Starter (Open)	B98	CB-F-1B-A						
												RC-B98-42-1(C)	Motor Starter (Close)	B98	CB-F-1B-A						
												C-B98-42-2	Motor Starter	B98	CB-F-1B-A						
												RC-B98-49-1	Overload Relay	B98	CB-F-1B-A						
												RC-B98-49-2	Overload Relay	B98	CB-F-1B-A						
												RC-ZS-V124	Valve Position Switch and Valve Open/Close Torque Switches	V02	C-F-3-Z						
												RC-FT0-KA6	Isolation Relay	FT0	CB-F-3A-A						
												EDE-MM-91	Electrical Penetration	H15	C-F-2-Z, ET-F-1C-A						
												EDE-MM-117	Electrical Penetration	H41	C-F-1-Z, ET-F-1C-A						
												EDE-TBX-X35	Terminal Box	X35	C-F-3-Z						
												RC-B98-FU	Fuses	B98	CB-F-1B-A						
15	CS-V-10	Reactor Coolant Pump Seal Leakoff Isolation Valve	CS-20726	A	310576	C-F-1-Z	X	X	X	X	LA6										Note 3
16	CS-V-28	Reactor Coolant Pump Seal Leakoff Isolation Valve	CS-20726	A	310576	C-F-1-Z	X	X	X	X	LA7										Note 3
17	CS-V-44	Reactor Coolant Pump Seal Leakoff Isolation Valve	CS-20726	A	310583	C-F-1-Z	X	X	X	X	LA8										Note 3
18	CS-V-59	Reactor Coolant Pump Seal Leakoff Isolation Valve	CS-20726	A	310577	C-F-1-Z	X	X	X	X	LA9										Note 3

P & I DIAGRAMS (TYPICAL)

This section originally contained photographs of the marked P & I Diagrams for the decay heat removal safe shutdown function. These drawings were typical of the P & I Diagrams which were marked for each safe shutdown function and not all inclusive, thus they have been removed from this appendicies.

The typical diagrams included in this section were only to show the methodology used for the original report preparation and were not intended to be updated for report revisions.

The latest design documents, not these typical drawings, should be used to evaluate the Safe Shutdown Capability.

Schematic Diagrams & Cable Schematics (Typical)

This section originally contained drawings that were typical of those which were marked for each safe shutdown function. The typical drawings included in this section were only to show the methodology used for the original report preparation. These typical drawings were not intended to be updated for report revision.

The original drawings were provided to show marked-up electrical schematic diagrams, cable schematics, and cable tables for the Train A decay heat removal safe shutdown function. The drawings were marked by shading and by cross-hatching. The equipment and cables which were shaded were isolated by a "Local Remote" selector switch or other isolation device and were not considered for further review. The equipment and cables which have been cross-hatched were analyzed, and it was determined that there was no effect on safe shutdown capability. These equipment and cables were not considered for further review.

The latest design documents, not these typical drawings, should be used to evaluate the Safe Shutdown Capability.

Equipment Lists (Tables)

This section contains the following tables which list all equipment required for performance of the safe shutdown function.

Main Control Room

Function	Table Number
Decay Heat Removal	MCR 3.1.3.1
Reactor Coolant Inventory and Pressure Control	MCR 3.1.3.2
Reactivity Control	MCR 3.1.3.3
Process Monitoring	MCR 3.1.3.4
Safeguard Actuation System	MCR 3.1.3.5
Cold Shutdown	MCR 3.1.3.6
Service Water	MCR 3.1.3.7
Primary Component Cooling Water	MCR 3.1.3.8
Containment Building Air Handling	MCR 3.1.3.9
Control Building Air Handling	MCR 3.1.3.10
Diesel Generator Building Air Handling	MCR 3.1.3.11
Containment Enclosure Air Handling	MCR 3.1.3.12
Emergency Feedwater Pumphouse Air Handling	MCR 3.1.3.13
Primary Auxiliary Building Air Handling	MCR 3.1.3.14
Service Water Air Handling	MCR 3.1.3.15
Service/Instrument Air	MCR 3.1.3.16
Electrical Distribution Emergency	MCR 3.1.3.17
Diesel Generators	MCR 3.1.3.18

Alternative Safe Shutdown

Function	Table Number
Decay Heat Removal	RSS 3.1.3.1
Reactor Coolant Inventory and Pressure Control	RSS 3.1.3.2
Reactivity Control	RSS 3.1.3.3
Process Monitoring	RSS 3.1.3.4
Safeguards Actuation	RSS 3.1.3.5
Cold Shutdown	RSS 3.1.3.6
Service Water	RSS 3.1.3.7
Primary Component Cooling Water	RSS 3.1.3.8
Deleted	RSS 3.1.3.9
Control Building Air Handling	RSS 3.1.3.10
Diesel Generator Building Air Handling	RSS 3.1.3.11
Containment Enclosure Air Handling	RSS 3.1.3.12
Emergency Feedwater Pumphouse Air Handling	RSS 3.1.3.13
Primary Auxiliary Building Air Handling	RSS 3.1.3.14
Service Water Air Handling	RSS 3.1.3.15
Deleted	RSS 3.1.3.16
Electrical Distribution Emergency	RSS 3.1.3.17
Diesel Generators	RSS 3.1.3.18
Communication	RSS 3.1.3.19
Emergency Feedwater Pumphouse Building	3.2.3
High-Low Pressure Boundaries	3.3.2

FUNCTION: DECAY HEAT REMOVAL

ITEM NO.	EQUIPMENT ID NO.	EQUIPMENT DESCRIPTION	P&ID/1-LINE DRAWING NO.	TRAIN	PHYSICAL LOCATION DRAWING NO.	FIRE AREA/ZONE	REQUIRED FOR		POWER		ELEC NODE	SUPPORTING CONTROL AND INSTRUMENTATION EQUIPMENT				CABLES	ELECTRICAL DRAWING NO.		SUPPORTING SYSTEMS	REDUNDANT COUNTERPART	REMARKS
							HOT STAND BY	COLD SHUT DOWN	ELEC	AIR		EQUIPMENT ID NO.	EQUIPMENT DESCRIPTION	ELEC NODE	FIRE AREA/ZONE		SCHEM.	CABLE			
1	CO-TK-25	Condensate Storage Tank	CO-20426	A/B	310248	CST-P-1-0	X	X	-	-	-	-	-	-	-	-	-	-	-	-	Note 1
2	FW-P-113	Start-Up Feedwater Pump	CO-20426	A	310326	TB-F-1A-Z	X	X	X	-	N12	FW-A93-52	4160 V AC Circuit Breaker	A93	CB-F-1A-1	A47-A93 A47-A93/1 A47-A93/2 A47-A93/3 A47-N12 A47-P82 A93-F60/1 A93-F60/2 A93-F60/3 A93-F50/4 A93-ED7 A93-G8L A93-HR2 G8L-P2V (Non-CASP)	310844 A93a A93b A93c A93d A47a	A93g A93h A47g	EDE-SWG-5 CBA-FN-19 CBA-FN-20	FW-P-37B	
												FW-A93-FU	Fuses	A93	CB-F-1A-A						
												FW-CS-4268-1	Control Switch with Indication	F60	CB-F-3A-A						
												FW-SS-4268	Selector Switch	A47	NES-F-1A-Z						
												FW-A93-CS	Test Control Switch	A93	CB-F-1A-A						
												FW-A93-G, R, W	Indicating Lights	A93	CB-F-1A-A						
												EDE-A53-94-2	Bus Undervoltage	A53	CB-F-1A-A						
												FW-A93-R1	Auxiliary Relay	A93	CB-F-1A-A						
												FW-PSLH-PS5	Lube Oil Pressure Switch	P82	TB-F-1A-Z						
												FW-A93-PS5X	Pressure Switch Auxiliary Relay	A93	CB-F-1A-A						
												FW-A93-52S	Mechanically Operated Contact	A93	CB-F-1A-A						
												FW-A93-52H	Truck-Operated Contact	A93	CB-F-1A-A						
												FW-A93-62	PS5 Starting Blocking Time Delay Relay	A93	CB-F-1A-A						
												FW-ED7-2	Prelube Pump Starting Auxiliary Time Delay Relay	ED7	TB-F-2-Z						
												FW-A93-R2	Auxiliary Relay	A93	CB-F-1A-A						
												FW-A93-86	Lockout Relay	A93	CB-F-1A-A						
												FW-A93-TD2	Lockout Relay Test Device	A93	CB-F-1A-A						
												FW-A93-CT	Current Transformers 300/5A	A93	CB-F-1A-A						
												FW-A93-TD1	CT Test Device	A93	CB-F-1A-A						
												FW-A93-50/51	Inst/Time Overcurrent Relays øA, øC	A93	CB-F-1A-A						
												FW-A93-AM	Ammeter	A93	CB-F-1A-A						
												FW-A93-AS	Ammeter Switch	A93	CB-F-1A-A						
												FW-A93-ATR	Transducer	A93	CB-F-1A-A						
												FW-AM-4268-1	Ammeter	F60	CB-F-3A-A						

NOTES

1. The equipment is mechanical with no electrical requirement.
2. Air is not needed to position or to reposition the valve for safe shutdown.
3. During normal operation, this equipment is in its safe shutdown position (locked closed) with its circuit breaker administratively controlled locked open (off) to prevent its spurious operation.

FUNCTION: DECAY HEAT REMOVAL

ITEM NO.	EQUIPMENT ID NO.	EQUIPMENT DESCRIPTION	P&ID/1-LINE DRAWING NO.	TRAIN	PHYSICAL LOCATION DRAWING NO.	FIRE AREA/ZONE	REQUIRED FOR		POWER		ELEC NODE	SUPPORTING CONTROL AND INSTRUMENTATION EQUIPMENT				CABLES	ELECTRICAL DRAWING NO.		SUPPORTING SYSTEMS	REDUNDANT COUNTERPART	REMARKS
							HOT STAND BY	COLD SHUT DOWN	ELEC	AIR		EQUIPMENT ID NO.	EQUIPMENT DESCRIPTION	ELEC NODE	FIRE AREA/ZONE		SCHEM.	CABLE			
2	FW-P-113	Start-Up Feedwater Pump (Continued)										FW-A47-52	4160 V AC Circuit Breaker	A47	NES-F-1A-Z						
												FW-A93-S1GS	Ground Sensor Relay	A93	CB-F-1A-A						
												FW-PSL-4233-2	Pressure Switch Low Suction	P2V	TB-F-1A-Z						
												FW-CS-4233	Suction Pressure Bypass Switch	G8L	TB-F-1A-Z						
												FW-HR2-RMO	EPS Manual Override Relay (K27)	HR2	CB-F-1A-A						
3	FW-P-161	Start-Up Feedwater Pump FW-P-113 Prelube Pump	CO-20426	A	310326	TB-F-1A-Z	X	X	X	-	NU0	FW-CN1-52	460 V AC Circuit Breaker	CN1	TB-F-2-Z	CN1-NU0 CN1-F60 CN1-P81 A47-F60/4 EA1-F60 F60-FB7/5	310884		EDE-MCC-523	None	
												FW-CN1-FU	Fuse	CN1	TB-F-2-Z		CN1a	CN1c			
												FW-CS-4268	Control Switch with Indication	F60	CB-F-3A-A						
												FW-SS-4268	Selector Switch	A47	NES-F-1A-Z						
												FW-CS-4268-1	Control Switch with Indication	F60	CB-F-3A-A						
												FW-CS-4278	Control Switch	F60	CB-F-3A-A						
												FW-ED7-2	Pump Starting Time Delay Relay	ED7	TB-F-2-Z						
												FW-PSLH-PS4	Lube Oil Pressure Switch	P81	TB-F-1A-Z						
												FW-CN1-42	Motor Starter	CN1	TB-F-2-Z						
												FW-CN1-49	Overload Relays	CN1	TB-F-2-Z						
												FW-FB7-K620A	SSPS Output Relay	FB7	CB-F-3A-A						
												FW-ED7-3	Time Delay Relay	ED7	TB-F-2-2						
												FW-EA1-3A	Auxiliary Relay	EA1	CB-F-1A-A						
												FW-EA1-3B	Auxiliary Relay	EA1	CB-F-1A-A						

FUNCTION: DECAY HEAT REMOVAL

ITEM NO.	EQUIPMENT ID NO.	EQUIPMENT DESCRIPTION	P&ID/1-LINE DRAWING NO.	TRAIN	PHYSICAL LOCATION DRAWING NO.	FIRE AREA/ZONE	REQUIRED FOR		POWER		ELEC NODE	SUPPORTING CONTROL AND INSTRUMENTATION EQUIPMENT				CABLES	ELECTRICAL DRAWING NO.		SUPPORTING SYSTEMS	REDUNDANT COUNTERPART	REMARKS
							HOT STAND BY	COLD SHUT DOWN	ELEC	AIR		EQUIPMENT ID NO.	EQUIPMENT DESCRIPTION	ELEC NODE	FIRE AREA/ZONE		SCHEM.	CABLE			
4	FW-V-156	Start-Up Feed Pump to EFW Header Valve	FW-20688	A	310589	MS-F-1B-Z	X	X	X	-	V3L	FW-B4S-52	460 V AC Circuit Breaker	B4S	CB-F-1A-A	B4S-V3L B4S-V3L/1 B4S-F60 B4S-F60/1	310844 B4Sa	B4Sc	CBA-FN-19 CBA-FN-20 EDE-MCC-531	None	
												FW-B4S-FU	Fuse	B4S	CB-F-1A-A						
												FW-CS-4261	Control Switch with Indication	F60	CB-F-3A-A						
												FW-B4S-42/O,C	Motor Starters	B4S	CB-F-1A-A						
												FW-B4S-49	Overload Relays	B4S	CB-F-1A-A						
												FW-ZS-V156	Valve Position and Open/Close Torque Switches	V3L	MS-F-1B-Z						
4A	FW-V-163	Start-Up Feed Pump Bypass to EFW Pump Valve	FW-20687	A	310326	TB-F-1A-Z	X	X	X	-	V3H	FW-C2R-52	460 V AC Circuit Breaker	C2R	TB-F-2-Z	C2R-V3M C2R-V3M/1 C2R-F60	310884 CN1a	CN1c	EDE-MCC-523	None	
												FW-C2R-FU	Fuse	C2R	TB-F-2-Z						
												FW-CS-4262	Control Switch with Indication	F60	CB-F-3A-A						
												FW-C2R-42/O,C	Motor Starter	C2R	TB-F-2-Z						
												FW-C2R-49	Overload Relays	C2R	TB-F-2-Z						
												FW-ZS-V163	Valve Position and Open/Close Torque Switches	V3M	TB-F-1A-Z						

FUNCTION: DECAY HEAT REMOVAL

ITEM NO.	EQUIPMENT ID NO.	EQUIPMENT DESCRIPTION	P&ID/1-LINE DRAWING NO.	TRAIN	PHYSICAL LOCATION DRAWING NO.	FIRE AREA/ZONE	REQUIRED FOR		POWER		ELEC NODE	SUPPORTING CONTROL AND INSTRUMENTATION EQUIPMENT				CABLES	ELECTRICAL DRAWING NO.		SUPPORTING SYSTEMS	REDUNDANT COUNTERPART	REMARKS
							HOT STAND BY	COLD SHUT DOWN	ELEC	AIR		EQUIPMENT ID NO.	EQUIPMENT DESCRIPTION	ELEC NODE	FIRE AREA/ZONE		SCHEM.	CABLE			
5	FW-P-37B	Emergency Feed Pump	FW-20688	B	310708	EFP-F-1-A	X	X	X	-	N14	FW-A80-52	4160 V AC Circuit Breaker	A80	CB-F-1B-A	A80-N14 A80-F66/1 A80-F66/2 A80-HR4 FB0-HR4	310844 A80a A80b A80c A80d	A80h	CBA-FN-32 CBA-FN-33 EPA-FN-47B EDE-SWG-6	FW-P-113	
												FW-A80-FU	Fuses	A80	CB-F-1B-A	FB0-FT0/1					
												FW-A80-R	Auxiliary Relay	A80	CB-F-1B-A						
												FW-CS-4255-2	Control Switch	A80	CB-F-1B-A						
												FW-SS-4255	Selector Switch	A80	CB-F-1B-A						
												EDE-A73-94-1B	Bus Under Voltage Relay	A73	CB-F-1B-A						
												FW-A80-86	Lockout Relay	A80	CB-F-1B-A						
												FW-A80-52H	Truck-Operated Contact	A80	CB-F-1B-A						
												FW-A80-50/51	Instrument/Time Overcurrent Relays øA, øC	A80	CB-F-1B-A						
												FW-A80-AM	Ammeter	A80	CB-F-1B-A						
												FW-A80-AS	Ammeter Switch	A80	CB-F-1B-A						
												FW-A80-CT	Current Transformers (200/5)	A80	CB-F-1B-A						
												FW-A80-TD1	CT Test Device	A80	CB-F-1B-A						
												FW-A80-ATR	Transducer	A80	CB-F-1B-A						
												FW-A80-TD2	Lockout Relay Test Device	A80	CB-F-1B-A						
												FW-A80-G,R,W,A	Indicating Lights	A80	CB-F-1B-A						
												FW-A80-52Z	Time Delay Relay	A80	CB-F-1B-A						
												FW-A80-51GS	Ground Sensor Relay	A80	CB-F-1B-A						
												FW-CS-4255-1	Control Switch	F60	CB-F-3A-A						
												FW-EPS-PR1,RM0,SR6	Emergency Power Sequencer	HR2	CB-F-1A-A						
												FW-FB0-K615B,K640B	Auxiliary Relays	FB0	CB-F-3A-A						
												EDE-FT0-KA24	Isolation Relay	FT0	CB-F-3A-A						
5A	FW-V347	Emergency Feedwater Recirculating Valve	FW-20688	B	310708	EFP-F-1-A	X	X	X	-	V4P	FW-C3T-52	460 V AC Circuit Breaker	C3T	CB-F-1B-A	C3T-V4P C3T-V4P/1 C3T-G2J F66-G2J/6	310884 CN1a	CN1c	EDE-MCC-523	None	
												FW-C3T-FU	Fuses	C3T	CB-F-1B-A						
												FW-CS-4369-2	Control Switch with Indication	G2J	CB-F-1B-A						
												MS-SS-3064	Selector Switch	G2J	CB-F-1B-A						
												FW-C3T-42/O,C	Motor Starters	C3T	CB-F-1B-A						
												FW-C3T-49	Overload Relays	C3T	CB-F-1B-A						
												FW-ZS-V347	Valve Position Switch	V4P	EFP-F-1-A						
												FW-CS-4369-1	Control Switch with Indication	F60	CB-F-3A-A						

FUNCTION: DECAY HEAT REMOVAL

ITEM NO.	EQUIPMENT ID NO.	EQUIPMENT DESCRIPTION	P&ID/1-LINE DRAWING NO.	TRAIN	PHYSICAL LOCATION DRAWING NO.	FIRE AREA/ZONE	REQUIRED FOR		POWER		ELEC NODE	SUPPORTING CONTROL AND INSTRUMENTATION EQUIPMENT				CABLES	ELECTRICAL DRAWING NO.		SUPPORTING SYSTEMS	REDUNDANT COUNTERPART	REMARKS
							HOT STAND BY	COLD SHUT DOWN	ELEC	AIR		EQUIPMENT ID NO.	EQUIPMENT DESCRIPTION	ELEC NODE	FIRE AREA/ZONE		SCHEM.	CABLE			
6	FW-FV-4214A	Emergency Feedwater Header Flow Valve	FW-20688	A	310708	EFP-F-1-A	X	X	X	-	V2E	FW-B3V-52	460 V AC Circuit Breaker	B3V	CB-F-1A-A	B3V-V2E B3V-V2E/1 E3C-G2G G2G-V2E	310844 B3Va	B3Vd B3Ve	CBA-FN-19 CBA-FN-20 EPA-FN-47A EDE-MCC-515	FW-FV-4214-B	
												FW-B3V-FU	Fuse	B3V	CB-F-1A-A	B3V-G5X B3V-G5X/1					
												FW-CS-4214-A2	Control Switch with Indication	G2G	CB-F-1A-A	E3C-FN6 F51-FN6					
												FW-SS-4214-A	Selector Switch	G2G	CB-F-1A-A	FN6-G5X FN6-G5X/1					
												FW-SS-4214-A1	Selector Switch	G5X	DG-F-2A-A						
												FW-FN6-MSO-1	Auxiliary Relay	FN6	CB-F-2B-A						
												FW-B3V-42/O,C	Motor Starters	B3V	CB-F-1A-A						
												FW-B3V-49	Overload Relays	B3V	CB-F-1A-A						
												FW-ZS-4214-A	Valve Position Switch	V2E	EFP-F-1-A						
												FW-FN6-4214AX	Auxiliary Relay	FN6	CB-F-2B-A						
												FW-CS-4214-A1	Control Switch with Indication	F51	CB-F-3A-A	E3C-F51 F51-G2G					
												FW-E3C-R1,R2,R3,R4	Auxiliary Relays	E3C	CB-F-1A-A	E3C-FKO E3C-FN6/4	E3E/1a, 1e E3E/1c				
												FW-E3P-62-1	Timing Relay	E3P	CB-F-1A-A	FKO-FN6					
												FW-E3P-62-2	Timing Relay	E3P	CB-F-1A-A	FKO-FN6/1					
												FW-E3P-62-3	Timing Relay	E3P	CB-F-1A-A						
												FW-E3P-62-4	Timing Relay	E3P	CB-F-1A-A						
												FW-FN6-R1A	Auxiliary Relay	FN6	CB-F-2B-A						
												MM-CP-297A	"A" Train BOP-PCC	FKO	CB-F-3A-A	E3C-F56	310952				
												FW-FR-4214	Flow Recorder	F86	CB-F-3A-A	F56-FKO F86-FKO		FKOa			
												FW-FT-4214-2	Flow Transmitter	GL3	EFP-F-1A-A	FKO-GL3					
												FW-FI-4214-2	Flow Indicators	F56	CB-F-3A-A						

FUNCTION: DECAY HEAT REMOVAL

ITEM NO.	EQUIPMENT ID NO.	EQUIPMENT DESCRIPTION	P&ID/1-LINE DRAWING NO.	TRAIN	PHYSICAL LOCATION DRAWING NO.	FIRE AREA/ZONE	REQUIRED FOR		POWER		ELEC NODE	SUPPORTING CONTROL AND INSTRUMENTATION EQUIPMENT				CABLES	ELECTRICAL DRAWING NO.		SUPPORTING SYSTEMS	REDUNDANT COUNTERPART	REMARKS
							HOT STAND BY	COLD SHUT DOWN	ELEC	AIR		EQUIPMENT ID NO.	EQUIPMENT DESCRIPTION	ELEC NODE	FIRE AREA/ZONE		SCHEM.	CABLE			
7	FW-FV-4214B	Emergency Feedwater Header Flow Valve	FW-20688	B	310708	EFP-F-1-A	X	X	X	-	V2J	FW-B3Z-52	460 V AC Circuit Breaker	B3Z	CB-F-1B-A	B3Z-V2J B3Z-V2J/1 E3D-G2J	310844	B3Za	B3Zd B3Ze	CBA-FN-32 CBA-FN-33 EPA-FN-47B EDE-MCC-615	FW-FV-4214-A	
												FW-B3Z-FU	Fuse	B3Z	CB-F-1B-A	G2J-V2J B3Z-G2J B3Z-G5Y B3Z-G5Y/1					
												FW-CS-4214-B2	Control Switch with Indication	G2J	CB-F-1B-A						
												FW-SS-4214-B	Selector Switch	G2J	CB-F-1B-A	E3D-FN7 F51-FN7 FN7-G5Y FN7-G5Y/1					
												FW-SS-4214-B1	Selector Switch	G5Y	DG-F-2B-A						
												FW-FN7-MSO-1	Auxiliary Relay	FN7	CB-F-2C-A						
												FW-B3Z-42/0,C	Motor Starters	B3Z	CB-F-1B-A						
												FW-B3Z-49	Overload Relays	B3Z	CB-F-1B-A						
												FW-ZS-4214-B	Valve Position Switch	V2J	EFP-F-1-A						
												FW-FN7-4214BX	Auxiliary Relay	FN7	CB-F-2C-A						
												FW-CS-4214-B1	Control Switch with Indication	F51	CB-F-3A-A	E3D-F51 F51-G2J					
												FW-E3D-R1,R2,R3,R4	Auxiliary Relays	E3D	CB-F-1B-A	E3D-FL2 E3D-FN7/4 FL2-FN7 FL2-FN7/1	E3F/1a, 1e E3F/1c				
												FW-E3Q-62-1	Timing Relay	E3Q	CB-F-1B-A						
												FW-E3Q-62-2	Timing Relay	E3Q	CB-F-1B-A						
												FW-E3Q-62-3	Timing Relay	E3Q	CB-F-1B-A						
												FW-E3Q-62-4	Timing Relay	E3Q	CB-F-1B-A						
												FW-FN7-R1B	Auxiliary Relay	FN7	CB-F-2C-A						
												FW-FT-4214-4	Flow Transmitter	GL4	EFP-F-1A-A	E3D-F51/4	310952				
												MM-CP-297B	"B" Train BOP-PCC	FL2	CB-F-3A-A	FL2-GL4		FL2a			
8	FW-FV-4224A	Emergency Feedwater Header Flow Valve	FW-20688	A	310708	EFP-F-1-A	X	X	X	-	V2F	FW-B3W-52	460 V AC Circuit Breaker	B3W	CB-F-1A-A	B3W-V2F B3W-V2F/1 E3C-G2G/1 G2G-V2F	310844	B3Wa	B3Wd B3We	CBA-FN-19 CBA-FN-20 EPA-FN-47A EDE-MCC-515	FW-FV-4224-B	
												FW-B3W-FU	Fuse	B3W	CB-F-1A-A	B3W-G5X B3W-G5X/1 E3C-FN6/1 F51-FN6/1 FN6-G5X/2 FN6-G5X/3					
												FW-CS-4224-A2	Control Switch with Indication	G2G	CB-F-1A-A						
												FW-SS-4224-A	Selector Switch	G2G	CB-F-1A-A						
												FW-SS-4224-A1	Selector Switch	G5X	DG-F-2A-A						
												FW-FN6-MSO-2	Auxiliary Relay	FN6	CB-F-2B-A						
												FW-B3W-42/0,C	Motor Starters	B3W	CB-F-1A-A						
												FW-B3W-49	Overload Relays	B3W	CB-F-1A-A						
												FW-ZS-4224-A	Valve Position Switch	V2F	EFP-F-1-A						
												FW-FN6-4224AX	Auxiliary Relay	FN6	CB-F-2B-A						
												FW-CS-4224-A1	Control Switch with Indication	F51	CB-F-3A-A	E3C-F51/1 F51-G2G/1					
												FW-E3C-R1,R2,R3,R4	Auxiliary Relays	E3C	CB-F-1A-A	E3C-FKO E3C-F56 E3C-FN6/4 FKO-FN6 FKO-FN6/1	E3E/1a, 1e E3E/1c				
												FW-E3P-62-1	Timing Relay	E3P	CB-F-1A-A						
												FW-E3P-62-2	Timing Relay	E3P	CB-F-1A-A						
												FW-E3P-62-3	Timing Relay	E3P	CB-F-1A-A						
												FW-E3P-62-4	Timing Relay	E3P	CB-F-1A-A						
												FW-FN6-R2A	Auxiliary Relay	FN6	CB-F-2B-A						
												FW-FT-4224-4	Flow Transmitter	GL3	EFP-F-1A-A		310952				
												MM-CP-297A	"A" Train BOP-PCC	FKO	CB-F-3A-A	FKO-GL3		FKOa			

FUNCTION: DECAY HEAT REMOVAL

ITEM NO.	EQUIPMENT ID NO.	EQUIPMENT DESCRIPTION	P&ID/1-LINE DRAWING NO.	TRAIN	PHYSICAL LOCATION DRAWING NO.	FIRE AREA/ZONE	REQUIRED FOR		POWER		ELEC NODE	SUPPORTING CONTROL AND INSTRUMENTATION EQUIPMENT				CABLES	ELECTRICAL DRAWING NO.		SUPPORTING SYSTEMS	REDUNDANT COUNTERPART	REMARKS
							HOT STAND BY	COLD SHUT DOWN	ELEC	AIR		EQUIPMENT ID NO.	EQUIPMENT DESCRIPTION	ELEC NODE	FIRE AREA/ZONE		SCHEM.	CABLE			
9	FW-FV-4224B	Emergency Feedwater Header Flow Valve	FW-20688	B	310708	EFP-F-1-A	X	X	X	-	V2K	FW-B4A-52	460 V AC Circuit Breaker	B4A	CB-F-1B-A	B4A-V2K B4A-V2K/1 E3D-G2J/1	310844 B4Aa	B4Ad B4Ae	CBA-FN-32 CBA-FN-33 EPA-FN-47B EDE-MCC-615	FW-FV-4224-A	
												FW-B4A-FU	Fuse	B4A	CB-F-1B-A	G2G-V2K B4A-G2J B4A-G5Y B4A-G5Y/1 E3D-FN7/1 F51-FN7/1 FN7-G5Y/2 FN7-G5Y/3					
												FW-CS-4224-B2	Control Switch with Indication	G2J	CB-F-1B-A						
												FW-SS-4224-B	Selector Switch	G2J	CB-F-1B-A						
												FW-SS-4224-B1	Selector Switch	G5Y	DG-F-2B-A						
												FW-FN7-MSO-2	Auxiliary Relay	FN7	CB-F-2C-A						
												FW-B4A-42/O,C	Motor Starters	B4A	CB-F-1B-A						
												FW-B4A-49	Overload Relays	B4A	CB-F-1B-A						
												FW-ZS-4224-B	Valve Position Switch	V2K	EFP-F-1-A						
												FW-FN7-4224BX	Auxiliary Relay	FN7	CB-F-2C-A						
												FW-CS-4224-B1	Control Switch with Indication	F51	CB-F-3A-A	E3D-F51/1 F51-G2J/1					
												FW-E3D-R1,R2,R3,R4	Auxiliary Relays	E3Q	CB-F-1B-A	E3D-FL2 E3D-F51/4 E3D-FN7/4 FL2-FN7 FL2-FN7/1	E3F/1a, 1e E3F/1c				
												FW-E3Q-62-1	Timing Relay	E3Q	CB-F-1B-A						
												FW-E3Q-62-2	Timing Relay	E3Q	CB-F-1B-A						
												FW-E3Q-62-3	Timing Relay	E3Q	CB-F-1B-A						
												FW-E3Q-62-4	Timing Relay	E3Q	CB-F-1B-A						
												FW-FN7-R2B	Auxiliary Relay	FN7	CB-F-2C-A						
												MM-CP-297B	"B" Train BOP-PCC	FL2	CB-F-3A-A		310952	FL2a			
												FW-FR-4224	Flow Recorder	F86	CB-F-3A-A	F56-FL2 F88-FL2 FL2-GL4					
												FW-FT-4224-2	Flow Transmitter	GL4	EFP-F-1A-A						
												FW-FI-4224-2	Flow Indicator	F56	CB-F-3A-A						

FUNCTION: DECAY HEAT REMOVAL

ITEM NO.	EQUIPMENT ID NO.	EQUIPMENT DESCRIPTION	P&ID/1-LINE DRAWING NO.	TRAIN	PHYSICAL LOCATION DRAWING NO.	FIRE AREA/ZONE	REQUIRED FOR		POWER		ELEC NODE	SUPPORTING CONTROL AND INSTRUMENTATION EQUIPMENT				CABLES	ELECTRICAL DRAWING NO.		SUPPORTING SYSTEMS	REDUNDANT COUNTERPART	REMARKS
							HOT STAND BY	COLD SHUT DOWN	ELEC	AIR		EQUIPMENT ID NO.	EQUIPMENT DESCRIPTION	ELEC NODE	FIRE AREA/ZONE		SCHEM.	CABLE			
10	FW-FV-4234A	Emergency Feedwater Header Flow Valve	FW-20688	A	310708	EFP-F-1-A	X	X	X	-	V2G	FW-B3X-52	460 V AC Circuit Breaker	B3X	CB-F-1A-A	B3X-V2G B3X-V2G/1 G2G-V2G	310844 B3Xa	B3Xd B3Xe	CBA-FN-19 CBA-FN-20 EPA-FN-47A EDE-MCC-515	FW-FV-4234-B	
												FW-B3X-FU	Fuse	B3X	CB-F-1A-A	E3C-G2G/2 B3X-G5X B3X-G5X/1 E3C-FN6/2 F51-FN6/2 FN6-G5X/4 FN6-G5X/5					
												FW-CS-4234-A2	Control Switch with Indication	G2G	CB-F-1A-A						
												FW-SS-4214-A	Selector Switch	G2G	CB-F-1A-A						
												FW-SS-4214-A1	Selector Switch	G5X	DG-F-2A-A						
												FW-FN6-MSO-3	Auxiliary Relay	FN6	CB-F-2B-A						
												FW-B3X-42/O,C	Motor Starters	B3X	CB-F-1A-A						
												FW-B3X-49	Overload Relays	B3X	CB-F-1A-A						
												FW-ZS-4234-A	Valve Position Switch	V2G	EFP-F-1-A						
												FW-FN6-4234AX	Auxiliary Relay	FN6	CB-F-2B-A						
												FW-CS-4234-A1	Control Switch with Indication	F51	CB-F-3A-A	E3C-F51/2 F51-G2G/2					
												FW-E3C-R1,R2,R3,R4	Auxiliary Relays	E3C	CB-F-1A-A	E3C-FKO E3C-FN6/4 FKO-FN6 FKO-FN6/1	E3E/1a, 1e E3E/1c				
												FW-E3P-62-1	Timing Relay	E3P	CB-F-1A-A						
												FW-E3P-62-2	Timing Relay	E3P	CB-F-1A-A						
												FW-E3P-62-3	Timing Relay	E3P	CB-F-1A-A						
												FW-E3P-62-4	Timing Relay	E3P	CB-F-1A-A						
												FW-FN6-R3A	Auxiliary Relay	FN6	CB-F-2B-A						
												MM-CP-297A	"A" Train BOP-PCC	FKO	CB-F-3A-A	E3C-F56 FKO-GL3 F56-FKO F86-KFO	310952	FKOa			
												FW-FR-4214	Flow Recorder	F86	CB-F-3A-A						
												FW-FT-4234-2	Flow Transmitter	GL3	EFP-F-1A-A						
												FW-FI-4234-2	Flow Indicator	F56	CB-F-3A-A						

FUNCTION: DECAY HEAT REMOVAL

ITEM NO.	EQUIPMENT ID NO.	EQUIPMENT DESCRIPTION	P&ID/1-LINE DRAWING NO.	TRAIN	PHYSICAL LOCATION DRAWING NO.	FIRE AREA/ZONE	REQUIRED FOR		POWER		ELEC NODE	SUPPORTING CONTROL AND INSTRUMENTATION EQUIPMENT				CABLES	ELECTRICAL DRAWING NO.		SUPPORTING SYSTEMS	REDUNDANT COUNTERPART	REMARKS
							HOT STAND BY	COLD SHUT DOWN	ELEC	AIR		EQUIPMENT ID NO.	EQUIPMENT DESCRIPTION	ELEC NODE	FIRE AREA/ZONE		SCHEM.	CABLE			
11	FW-FV-4234B	Emergency Feedwater Header Flow Valve	FW-20688	B	310708	EFP-F-1-A	X	X	X	-	V2L	FW-B4B-52	460 V AC Circuit Breaker	B4B	CB-F-1B-A	B4B-V2L B4B-V2L/1 E3D-G2J/2	310844 B4Ba	B4Bd	CBA-FN-32 CBA-FN-33 EPA-FN-47B	FW-FV-4234-A	
												FW-B4B-FU	Fuse	B4B	CB-F-1B-A	G2J-V2L B4B-G2J B4B-G5Y B4B-G5Y/1 E3D-FN7/2 F51-FN7/2 FN7-G5Y/4 FN7-G5Y/5		B4Be	EDE-MCC-615		
												FW-CS-4234-B2	Control Switch with Indication	G2J	CB-F-1B-A						
												FW-SS-4214-B	Selector Switch	G2J	CB-F-1B-A						
												FW-SS-4214-B1	Selector Switch	G5Y	DG-F-2B-A						
												FW-FN7-MSO-3	Auxiliary Relay	FN7	CB-F-2C-A						
												FW-B4B-42/O,C	Motor Starters	B4B	CB-F-1B-A						
												FW-B4B-49	Overload Relays	B4B	CB-F-1B-A						
												FW-ZS-4234-B	Valve Position Switch	V2L	EFP-F-1-A						
												FW-FN7-4234BX	Auxiliary Relay	FN7	CB-F-2C-A						
												FW-CS-4234-B1	Control Switch with Indication	F51	CB-F-3A-A	E3D-F51/2 F51-G2J/2	E3F/1a, 1e E3F/1c				
												FW-E3D-R1,R2,R3,R4	Auxiliary Relays	E3D	CB-F-1B-A	E3D-FL2 E3D-F51/4 E3D-FN7/4 FL2-FN7 FL2-FN7/1					
												FW-E3Q-62-1	Timing Relay	E3Q	CB-F-1B-A						
												FW-E3Q-62-2	Timing Relay	E3Q	CB-F-1B-A						
												FW-E3Q-62-3	Timing Relay	E3Q	CB-F-1B-A						
												FW-E3Q-62-4	Timing Relay	E3Q	CB-F-1B-A						
												FW-FN7-R3B	Auxiliary Relay	FN7	CB-F-2C-A						
												FW-FT-4234-4	Flow Transmitter	GL4	EFP-F-1A-A	FL2-GL4					
												MM-CP-297B	"B" Train BOP-PCC	FL2	CB-F-3A-A		310952	FL2a			
12	FW-FV-4244A	Emergency Feedwater Header Flow Valve	FW-20688	A	310708	EFP-F-1-A	X	X	X	-	V2H	FW-B3Y-52	460 V AC Circuit Breaker	B3Y	CB-F-1A-A	B3Y-V2H B3Y-V2H/1 E3C-G2G/3	310844 B3Ya	B3Yd	CBA-FN-19 CBA-FN-20 EPA-FN-47A	FW-FV-4244-B	
												FW-B3Y-FU	Fuse	B3Y	CB-F-1A-A	G2G-V2H B3Y-G5X B3Y-G5X/1 E3C-FN6/3 F51-FN6/3 FN6-G5X/6 FN6-G5X/7		B3Ye	EDE-MCC-515		
												FW-CS-4244-A2	Control Switch with Indication	G2G	CB-F-1A-A						
												FW-SS-4224-A	Selector Switch	G2G	CB-F-1A-A						
												FW-SS-4224-A1	Selector Switch	G5X	DG-F-2A-A						
												FW-FN6-MSO-4	Auxiliary Relay	FN6	CB-F-2B-A						
												FW-B3Y-42/O,C	Motor Starters	B3Y	CB-F-1A-A						
												FW-B3Y-49	Overload Relays	B3Y	CB-F-1A-A						
												FW-ZS-4244-A	Valve Position Switch	V2H	EFP-F-1-A						
												FW-FN6-4244AX	Auxiliary Relay	FN6	CB-F-2B-A						
												FW-CS-4244-A1	Control Switch with Indication	F51	CB-F-3A-A	E3C-F51/3 F51-G2G/3					
												FW-E3C-R1,R2,R3,R4	Auxiliary Relays	E3C	CB-F-1A-A	E3C-FKO E3C-F56 E3C-FN6/4 FKO-FN6 FKO-FN6/1	E3E/1a, 1e E3E/1c				
												FW-E3P-62-1	Timing Relay	E3P	CB-F-1A-A						
												FW-E3P-62-2	Timing Relay	E3P	CB-F-1A-A						
												FW-E3P-62-3	Timing Relay	E3P	CB-F-1A-A						
												FW-E3P-62-4	Timing Relay	E3P	CB-F-1A-A						
												FW-FN6-R4A	Auxiliary Relay	FN6	CB-F-2B-A						
												FW-FT-4244-4	Flow Transmitter	GL3	EFP-F-1A-A	FKO-GL3	310952				
												MM-CP-279A	"A" Train BOP-PCC	FKO	CB-F-3A-A			FKOa			

FUNCTION: DECAY HEAT REMOVAL

ITEM NO.	EQUIPMENT ID NO.	EQUIPMENT DESCRIPTION	P&ID/1-LINE DRAWING NO.	TRAIN	PHYSICAL LOCATION DRAWING NO.	FIRE AREA/ZONE	REQUIRED FOR		POWER		ELEC NODE	SUPPORTING CONTROL AND INSTRUMENTATION EQUIPMENT				CABLES	ELECTRICAL DRAWING NO.		SUPPORTING SYSTEMS	REDUNDANT COUNTERPART	REMARKS
							HOT STAND BY	COLD SHUT DOWN	ELEC	AIR		EQUIPMENT ID NO.	EQUIPMENT DESCRIPTION	ELEC NODE	FIRE AREA/ZONE		SCHEM.	CABLE			
13	FW-FV-4244B	Emergency Feedwater Header Flow Valve	FW-20688	B	310708	EFP-F-1-A	X	X	X	-	V2M	FW-B4C-52	460 V AC Circuit Breaker	B4C	CB-F-1B-A	B4C-V2M B4C-V2M/1 E3D-G2J/3	310844 B4Ca	B4Cd B4Ce	CBA-FN-32 CBA-FN-33 EPA-FN-47B EDE-MCC-615	FW-FV-4244-A	
												FW-B4C-FU	Fuse	B4C	CB-F-1B-A	GJ2-V2M B4C-G2J B4C-G5Y B4C-G5Y/1 E3D-FN7/3 F51-FN7/3 FN7-G5Y/6 FN7-G5Y/7					
												FW-CS-4244-B2	Control Switch with Indication	G2J	CB-F-1B-A						
												FW-SS-4224-B	Selector Switch	G2J	CB-F-1B-A						
												FW-B4C-42/O,C	Motor Starters	B4C	CB-F-1B-A						
												FW-SS-4224-B1	Selector Switch	G5Y	DG-F-2B-A						
												FW-FN7-MSO-4	Auxiliary Relay	FN7	CB-F-2C-A						
												FW-B4C-49	Overload Relays	B4C	CB-F-1B-A						
												FW-ZS-4244-B	Valve Position Switch	V2M	EFP-F-1-A						
												FW-E3D-4244BX	Auxiliary Relay	E3D	CB-F-1B-A						
												FW-FN7-4244BX	Control Switch with Indication	FN7	CB-F-2C-A	E3D-F51/3 F51-G2J/3					
												FW-E3D-R1,R2,R3,R4	Auxiliary Relays	E3D	CB-F-1B-A	E3D-FL2 E3D-F51/4 E3D-FN7/4 FL2-FN7 FL2-FN7/1	E3F/1a, 1e E3F/1c				
												FW-E3Q-62-1	Timing Relay	E3Q	CB-F-1B-A						
												FW-E3Q-62-2	Timing Relay	E3Q	CB-F-1B-A						
												FW-E3Q-62-3	Timing Relay	E3Q	CB-F-1B-A						
												FW-E3Q-62-4	Timing Relay	E3Q	CB-F-1B-A						
												FW-FN7-R4B	Auxiliary Relay	FN7	CB-F-2C-A						
												MM-CP-297B	"B" Train BOP-PCC	FL2	CB-F-3A-A	FL2-GL4 F56-FL2 F88-FL2	310952	FL2a			
												FW-FR-4224	Flow Recorder	F86	CB-F-3A-A						
												FW-FT-4244-2	Flow Transmitter	GL4	EFP-F-1A-A						
												FW-FI-4244-2	Flow Indicator	F56	CB-F-3A-A						
14	MS-PV-3001	Main Steam Header	MS-20580	A/B	310589	MS-F-2B-Z	X	X	X	X	V2N	MS-E2T/8-72	125 V DC Circuit Breaker	E2T	CB-F-1A-A	G2G-V2N F60-G2G/9 E2T-G5X G2G-C5X FN8-U0A FN8-U0B FN8-G2G/1 F60-FN8	310841 E2T/8a	E2T/8e E2T/8f	CBA-FN-19 CBA-FN-20 EDE-PP-113A INST AIR	MS-PV-3002 or MS-PV-3004	
												MS-SS-3001-2	Selector Switch	G5X	DG-F-2A-A						
												MS-PY-3001-1	Solenoid Valve	U0A	MS-F-2B-Z						
												MS-PY-3001-2	Solenoid Valve	U0A	MS-F-2B-Z						
												MS-PY-3001-3	Solenoid Valve	U0B	MS-F-2B-Z						
												MS-PY-3001-4	Solenoid Valve	U0B	MS-F-2B-Z						
												MS-CS-3001-1	Control Switch with Indication	F60	CB-F-3A-A						
												MS-CS-3001-2	Control Switch with Indication	G2G	CB-F-1A-A						
												MS-SS-3001-1	Selector Switch	G2G	CB-F-1A-A						
												MS-ZS-3001-A	Valve Position Switch	V2N	MS-F-2B-Z						
												MS-PY-3001-5	Solenoid Valve	U0C	MS-F-2B-Z	E2U-F66 F66-U0C	310841 E2U/15	E2U/15	EDE-PP-113B		
												MS-SS-3001-3	Selector Switch	FN8	ET-F-1B-A						
												MS-PY-3001-6	Solenoid Valve	U0C	MS-F-2B-Z						
												MS-EZU/15-72	125 V DC Circuit Breaker	E2U	CB-F-1B-A						
												MS-CS-3001-1	Control Switch	F60	CB-F-3A-A						

FUNCTION: DECAY HEAT REMOVAL

ITEM NO.	EQUIPMENT ID NO.	EQUIPMENT DESCRIPTION	P&ID/1-LINE DRAWING NO.	TRAIN	PHYSICAL LOCATION DRAWING NO.	FIRE AREA/ZONE	REQUIRED FOR		POWER		ELEC NODE	SUPPORTING CONTROL AND INSTRUMENTATION EQUIPMENT				CABLES	ELECTRICAL DRAWING NO.		SUPPORTING SYSTEMS	REDUNDANT COUNTERPART	REMARKS
							HOT STAND BY	COLD SHUT DOWN	ELEC	AIR		EQUIPMENT ID NO.	EQUIPMENT DESCRIPTION	ELEC NODE	FIRE AREA/ZONE		SCHEM.	CABLE			
15	MS-PV-3003	Main Steam Header Atmospheric Relief Valve	MS-20580	A/B	310586	MS-F-2A-Z	X	X	X	X	V2Q	MS-SS-3003-2	Selector Switch	G5X	DG-F-2A-A	G2G-V2Q F60-G2G/B E2T-G5X/1 G2G-G5X/1 FN8-U0K FN8-U0L FN8-G2G/2 F60-FN8/1	310841 E2T/10a	E2T/10e E2T/10f	EDE-PP-113A CBA-FN-19 CBA-FN-20 INST AIR	MS-PV-3002 or MS-PV-3004	
												MS-CS-3003-2	Control Switch with Indication	G2G	CB-F-1A-A						
												MS-CS-3003-1	Control Switch with Indication	F60	CB-F-3A-A						
												MS-E2T/10-72	125 V DC Circuit Breaker	E2T	CB-F-1A-A						
												MS-SS-3003-1	Selector Switch	G2G	CB-F-1A-A						
												MS-ZS-3003-A	Valve Position Switch	V2Q	MS-F-2A-Z						
												MS-PY-3003-1	Solenoid Valve	U0K	MS-F-2A-Z						
												MS-PY-3003-2	Solenoid Valve	U0K	MS-F-2A-Z						
												MS-PY-3003-3	Solenoid Valve	U0L	MS-F-2A-Z						
												MS-PY-3003-4	Solenoid Valve	U0L	MS-F-2A-Z						
												MS-PY-3003-5	Solenoid Valve	U0M	MS-F-2A-Z	E2U-F66/1 F66-U0M	E2U/16	E2U/16	EDE-PP-113B		
												MS-SS-3003-3	Selector Switch	FN8	ET-F-1B-A						
												MS-PY-3003-6	Solenoid Valve	U0M	MS-F-2A-Z						
												MS-E2U/16-72	125 V DC Circuit Breaker	E2U	CB-F-1B-A						
												MS-CS-3003-1	Control Switch	F60	CB-F-3A-A						
16	MS-PV-3002	Main Steam Header Atmospheric Relief Valve	MS-20580	A/B	310586	MS-F-2A-Z	X	X	X	X	V2P	MS-SS-3002-1	Selector Switch	G2J	CB-F-1B-A	G2J-V2P F66-G2J/1 E2U-G5Y G2J-G5Y FN9-U0G FN9-U0H FN9-G2J/1 F66-FN9	310841 E2U/8a	E2U/8e E2U/8f	CBA-FN-32 CBA-FN-33 EDE-PP-113B INST AIR	MS-PV-3001 or MS-PV-3003	
												MS-CS-3002-2	Control Switch with Indication	G2J	CB-F-1B-A						
												MS-CS-3002-1	Control Switch with Indication	F60	CB-F-3A-A						
												MS-E2U/8-72	125 V DC Circuit Breaker	E2U	CB-F-1B-A						
												MS-SS-3002-2	Selector Switch	G5Y	DG-F-2B-A						
												MS-ZS-3002-B	Valve Position Switch	V2P	MS-F-2A-Z						
												MS-PY-3002-1	Solenoid Valve	U0G	MS-F-2A-Z						
												MS-PY-3002-2	Solenoid Valve	U0G	MS-F-2A-Z						
												MS-PY-3002-3	Solenoid Valve	U0H	MS-F-2A-Z						
												MS-PY-3002-4	Solenoid Valve	U0H	MS-F-2A-Z						
												MS-PY-3002-5	Solenoid Valve	U0J	MS-F-2A-Z	E2T-F60 F60-U0J	E2T/15	E2T/15	EDE-PP-113A		
												MS-SS-3002-3	Selector Switch	FN9	ET-F-1D-A						
												MS-PY-3002-6	Solenoid Valve	U0J	MS-F-2A-Z						
												MS-E2T/15-72	125 V DC Circuit Breaker	E2T	CB-F-1A-A						
												MS-CS-3002-1	Control Switch	F60	CB-F-3A-A						

FUNCTION: DECAY HEAT REMOVAL

ITEM NO.	EQUIPMENT ID NO.	EQUIPMENT DESCRIPTION	P&ID/1-LINE DRAWING NO.	TRAIN	PHYSICAL LOCATION DRAWING NO.	FIRE AREA/ZONE	REQUIRED FOR		POWER		ELEC NODE	SUPPORTING CONTROL AND INSTRUMENTATION EQUIPMENT				CABLES	ELECTRICAL DRAWING NO.		SUPPORTING SYSTEMS	REDUNDANT COUNTERPART	REMARKS
							HOT STAND BY	COLD SHUT DOWN	ELEC	AIR		EQUIPMENT ID NO.	EQUIPMENT DESCRIPTION	ELEC NODE	FIRE AREA/ZONE		SCHEM.	CABLE			
17	MS-PV-3004	Main Steam Header Atmospheric Relief Valve	MS-20580	A/B	310586	MS-F-2B-Z	X	X	X	X	V2R	MS-SS-3004-1	Selector Switch	G2J	CB-F-1B-A	G2J-V2R G2J-G5Y/1 F66-G2J/3 E2U-G5Y/1 FN9-U0D FN9-U0E FN9-G2J/2 F66-FN9/1	310841 E2U/10a	E2U/10e E2U/10f	EDE-PP-113B CBA-FN-32 CBA-FN-33 INST AIR	MS-PV-3001 or MS-PV-3003	
												MS-CS-3004-2	Control Switch with Indication	G2J	CB-F-1B-A						
												MS-CS-3004-1	Control Switch with Indication	F60	CB-F-3A-A						
												MS-E2U/10-72	125 V DC Circuit Breaker	E2U	CB-F-1B-A						
												MS-SS-3004-2	Selector Switch	G5Y	DG-F-2B-A						
												MS-ZS-3004-B	Valve Position Switch	V2R	MS-F-2B-Z						
												MS-PY-3004-1	Solenoid Valve	U0D	MS-F-2B-Z						
												MS-PY-3004-2	Solenoid Valve	U0D	MS-F-2B-Z						
												MS-PY-3004-3	Solenoid Valve	U0E	MS-F-2B-Z						
												MS-PY-3004-4	Solenoid Valve	U0E	MS-F-2B-Z						
												MS-PY-3004-5	Solenoid Valve	U0F	MS-F-2B-Z	E2T-F60/1 F60-U0F	E2T/16	E2T/16	EDE-PP-113A		
												MS-PY-3004-6	Solenoid Valve	U0F	MS-F-2B-Z						
												MS-E2T/16-72	125 V DC Circuit Breaker	F60	CB-F-3A-A						
												MS-SS-3004-3	Selector Switch	FN9	ET-F-1D-A						
												MS-CS-3004-1	Control Switch	E2T	CB-F-1A-A						

FUNCTION: DECAY HEAT REMOVAL

ITEM NO.	EQUIPMENT ID NO.	EQUIPMENT DESCRIPTION	P&ID/1-LINE DRAWING NO.	TRAIN	PHYSICAL LOCATION DRAWING NO.	FIRE AREA/ZONE	REQUIRED FOR		POWER		ELEC NODE	SUPPORTING CONTROL AND INSTRUMENTATION EQUIPMENT				CABLES	ELECTRICAL DRAWING NO.		SUPPORTING SYSTEMS	REDUNDANT COUNTERPART	REMARKS
							HOT STAND BY	COLD SHUT DOWN	ELEC	AIR		EQUIPMENT ID NO.	EQUIPMENT DESCRIPTION	ELEC NODE	FIRE AREA/ZONE		SCHEM.	CABLE			
18	MS-V-86	Main Steam Isolation Valve	MS-20583	A/B	310589	MS-F-2B-Z	X	X	X	X	ZV0 ZV1 ZV2 ZW1	MS-E87/14-72	125 V DC Circuit Breaker	E87	CB-F-1A-A	E87-GX6 GX6-ZV1	310841 E87/14a	E87/14b	CBA-FN-19 CBA-FN-20 EDE-PP-112A	None	Note 2
												MS-FY-89A-1	Pilot Solenoid	ZV1	MS-F-2B-Z						
												MS-FY-10A-1	Pilot Solenoid	ZV1	MS-F-2B-Z						
												MS-FY-102A-1	Solenoid Valve	ZV1	MS-F-2B-Z						
												MS-FY-102B-1	Solenoid Valve	ZV1	MS-F-2B-Z						
												MS-GX6-K103	Output Relay	GX6	MS-F-3A-Z						
												MS-GX6-K104	Output Relay	GX6	MS-F-3A-Z						
												MS-GX6-CS-3005A	Control Switch	GX6	MS-F-3A-Z						
												MS-E1S/7-52	120 V AC Circuit Breaker	E1S	CB-F-1A-A	E1S-GX6/1 G2G-GX6/4 G2G-GX6/5 GX6-ZV0 G2G-GX6/3 F20-GX6 GX6-ZV0/1 FC1-GX6 F60-GX6/1 FB7-FC1/E F60-G2G/2 F60-GX6 FB7-GX6	E1S/7a E1S/7b E1S/7c E1S/7d	E1S/7h E1S/7i E1S/7j E1S/7k	CBA-FN-19 CBA-FN-20 EDE-PP-11E		
												MS-GX6-FU-101,102	120 V AC Fuses	GX6	MS-F-3A-Z						
												MS-GX6-K101	Output Relay	GX6	MS-F-3A-Z						
												MS-GX6-K102	Output Relay	GX6	MS-F-3A-Z						
												MS-ZS-V86-1	Valve Position Switch	ZV0	MS-F-2B-Z						
												MS-ZS-V86-2	Valve Position Switch	ZV0	MS-F-2B-Z						
												MS-ZL-3005-1	Valve Position Indicating Lights	G2G	CB-F-1A-A						
												MS-SS-3005-1	Selector Switch	G2G	CB-F-1A-A						
												MS-CP-184	MSIV Logic Cabinet (Train A)	GX6	MS-F-3A-Z						
												MS-FC1-K-804	Auxiliary Relay SSPS Test	FC1	CB-F-3A-A						
												MS-CS-3085-2	Control Switch	F20	CB-F-3A-A						
												MS-CS-3005	Control Switch with Indication	F60	CB-F-3A-A						
												MS-DS-8029	Isolation Indication	FC1	CB-F-3A-A						
												MS-FB7-K634A	SSPS Auxiliary Relay	FB7	CB-F-3A-A						
												MS-E88/14-72	125 V DC Circuit Breaker	E88	CB-F-1B-A	E88-GX9 GX9-ZV2	E88/14a	E88/14b	CBA-FN-32 CBA-FN-33 EDE-PP-112B		
												MS-FY-89B-1	Pilot Solenoid	ZV2	MS-F-2B-Z						
												MS-FY-10B-1	Pilot Solenoid	ZV2	MS-F-2B-Z						
												MS-FY-117A-1	Solenoid Valve	ZV2	MS-F-2B-Z						
												MS-FY-117B-1	Solenoid Valve	ZV2	MS-F-2B-Z						
												MS-GX9-K103	Output Relay	GX9	CB-F-1B-A						
												MS-GX9-K104	Output Relay	GX9	CB-F-1B-A						
												MS-GX9-CS-3005-B	Control Switch	GX9	CB-F-1B-A						

FUNCTION: DECAY HEAT REMOVAL

ITEM NO.	EQUIPMENT ID NO.	EQUIPMENT DESCRIPTION	P&ID/1-LINE DRAWING NO.	TRAIN	PHYSICAL LOCATION DRAWING NO.	FIRE AREA/ZONE	REQUIRED FOR		POWER		ELEC NODE	SUPPORTING CONTROL AND INSTRUMENTATION EQUIPMENT				CABLES	ELECTRICAL DRAWING NO.		SUPPORTING SYSTEMS	REDUNDANT COUNTERPART	REMARKS
							HOT STAND BY	COLD SHUT DOWN	ELEC	AIR		EQUIPMENT ID NO.	EQUIPMENT DESCRIPTION	ELEC NODE	FIRE AREA/ZONE		SCHEM.	CABLE			
18	MS-V-86	Main Steam Isolation Valve (Continued)										MS-E1T/7-52	120 V AC Circuit Breaker	E1T	CB-F-1B-A	E1T-GX9/3 G2J-GX9/1 GX9-ZW1 G2J-GX9 FBO-GX9 F51-GX9 GX9-ZW1/1 FC2-GX9 FBO-FC2/E	E1T/7a E1T/7b E1T/7c	E1T/7f E1T/7g E1T/7h E1T/7i	CBA-FN-32 CBA-FN-33 EDE-PP-11F		
												MS-GX9-FU-101,102	120 V AC Fuses	GX9	CB-F-1B-A						
												MS-GX9-K101	Output Relay	GX9	CB-F-1B-A						
												MS-GX9-K102	Output Relay	GX9	CB-F-1B-A						
												MS-ZS-V86B-1	Valve Position Switch	ZW1	MS-F-2B-Z						
												MS-ZS-V86B-2	Valve Position Switch	ZW1	MS-F-2B-Z						
												MS-ZL-3005-2	Valve Position Indicating Lights	G2J	CB-F-1B-A						
												MS-SS-3005-2	Selector Switch	G2J	CB-F-1B-A						
												MS-CP-185	MSIV Logic Cabinet (Train B)	GX9	CB-F-1B-A						
												MS-FC2-K-804	Auxiliary Relay SSPS Test	FC2	CB-F-3A-A						
												MS-CS-3085-1	Control Switch	F50	CB-F-3A-A						
												MS-DS-8029	Isolation Indication	FC2	CB-F-3A-A						
												MS-FBO-K634B	SSPS Auxiliary Relay	FBO	CB-F-3A-A						

FUNCTION: DECAY HEAT REMOVAL

ITEM NO.	EQUIPMENT ID NO.	EQUIPMENT DESCRIPTION	P&ID/1-LINE DRAWING NO.	TRAIN	PHYSICAL LOCATION DRAWING NO.	FIRE AREA/ZONE	REQUIRED FOR		POWER		ELEC NODE	SUPPORTING CONTROL AND INSTRUMENTATION EQUIPMENT				CABLES	ELECTRICAL DRAWING NO.		SUPPORTING SYSTEMS	REDUNDANT COUNTERPART	REMARKS
							HOT STAND BY	COLD SHUT DOWN	ELEC	AIR		EQUIPMENT ID NO.	EQUIPMENT DESCRIPTION	ELEC NODE	FIRE AREA/ZONE		SCHEM.	CABLE			
19	MS-V-88	Main Steam Isolation Valve	MS-20583	A/B	310586	MS-F-2A-Z	X	X	X	X	ZW3 ZW4 ZW5 ZW6	MS-E2T/12-72	125 V DC Circuit Breaker	E2T	CB-F-1A-A	E2T-GX7 GX7-ZW3	310841 E2T/12a	E2T/12c	CBA-FN-19 DBA-FN-20 EDE-PP-113A	None	Note 2
												MS-FY-89A-2	Pilot Solenoid	ZW3	MS-F-2A-Z						
												MS-FY-10A-2	Pilot Solenoid	ZW3	MS-F-2A-Z						
												MS-FY-102A-2	Solenoid Valve	ZW3	MS-F-2A-Z						
												MS-FY-102B-2	Solenoid Valve	ZW3	MS-F-2A-Z						
												MS-GX7-K103	Output Relay	GX7	MS-F-3A-Z						
												MS-GX7-K104	Output Relay	GX7	MS-F-3A-Z						
												MS-GX7-CS-3006-A	Control Switch	GX7	MS-F-3A-Z						
												MS-E1S/9-52	120 V AC Circuit Breaker	E1S	CB-F-1A-A	E1S-GX7/1 G2G-GX7/4 G2G-GX7/5 GX7-ZW5 G2G-GX7/3 FB7-GX7 F20-GX7 GX7-ZW5/1 FC1-GX7 F60-GX7/1 FC1-GX7/1 FB7-FC1/F F60-G2G/5 F60-GX7	E1S/9a E1S/9b E1S/9c E1S/9d	E1S/9h E1S/9i E1S/9j E1S/9k	CBA-FN-19 CBA-FN-20 EDE-PP-11E		
												MS-GX7-FU-101,102	120 V AC Fuses	GX7	MS-F-3A-Z						
												MS-GX7-K101	Output Relay	GX7	MS-F-3A-Z						
												MS-GX7-K102	Output Relay	GX7	MS-F-3A-Z						
												MS-ZS-V88A-1	Valve Position Switch	ZW5	MS-F-2A-Z						
												MS-ZS-V88A-2	Valve Position Switch	ZW5	MS-F-2A-Z						
												MS-ZL-3006-1	Valve Position Indicating Lights	G2G	CB-F-1A-A						
												MS-SS-3005-1	Selector Switch	G2G	CB-F-1A-A						
												MS-CP-182	MSIV Logic Cabinet (Train A)	GX7	MS-F-3A-Z						
												MS-CS-3006	Control Switch with Indication	F60	CB-F-3A-A						
												MS-FC1-K-804	Auxiliary Relay SSPS Test	FC1	CB-F-3A-A						
												MS-CS-3085-2	Control Switch	F20	CB-F-3A-A						
												MS-DS-8030	Isolation Indication	FC1	CB-F-3A-A						
												MS-FB7-K634A	SSPS Auxiliary Relay	FB7	CB-F-3A-A						
												MS-E2U/12-72	125 V DC Circuit Breaker	E2U	CB-F-1B-A	E2U-GX8 GX8-ZW4	E2U/12a	E2U/12c	CBA-FN-32 CBA-FN-33 EDE-PP-113B		
												MS-GX8-K103	Output Relay	GX8	CB-F-1B-A						
												MS-GX8-K104	Output Relay	GX8	CB-F-1B-A						
												MS-FY-89B-2	Pilot Solenoid	ZW4	MS-F-2A-Z						
												MS-FY-10B-2	Pilot Solenoid	ZW4	MS-F-2A-Z						
												MS-FY-117A-2	Solenoid Valve	ZW4	MS-F-2A-Z						
												MS-FY-117B-2	Solenoid Valve	ZW4	MS-F-2A-Z						
												MS-GX8-CS-3006-B	Control Switch	GX8	CB-F-1B-A						

FUNCTION: DECAY HEAT REMOVAL

ITEM NO.	EQUIPMENT ID NO.	EQUIPMENT DESCRIPTION	P&ID/1-LINE DRAWING NO.	TRAIN	PHYSICAL LOCATION DRAWING NO.	FIRE AREA/ZONE	REQUIRED FOR		POWER		ELEC NODE	SUPPORTING CONTROL AND INSTRUMENTATION EQUIPMENT				CABLES	ELECTRICAL DRAWING NO.		SUPPORTING SYSTEMS	REDUNDANT COUNTERPART	REMARKS
							HOT STAND BY	COLD SHUT DOWN	ELEC	AIR		EQUIPMENT ID NO.	EQUIPMENT DESCRIPTION	ELEC NODE	FIRE AREA/ZONE		SCHEM.	CABLE			
19	MS-V-88	Main Steam Isolation Valve (Continued)										MS-E1T/9-52	125 V AC Circuit Breaker	E1T	CB-F-1B-A	E1T-GX8/3 G2J-GX8 GX8-ZW6 G2J-GX8/1 FBO-GX8 F51-GX8 GX8-ZW6/1 FC2-GX8 FBO-FC2/F	310841 E1T/9a E1T/9b E1T/9c	E1T/9f E1T/9g E1T/9h E1T/9i	CBA-FN-32 CBA-FN-33 EDE-PP-11F		
												MS-GX8-FU-101,102	120 V AC Fuses	GX8	CB-F-1B-A						
												MS-GX8-K101	Output Relay	GX8	CB-F-1B-A						
												MS-GX8-K102	Output Relay	GX8	CB-F-1B-A						
												MS-ZS-V88B-1	Valve Position Switch	ZW6	MS-F-2A-Z						
												MS-ZS-V88B-2	Valve Position Switch	ZW6	MS-F-2A-Z						
												MS-ZL-3006-2	Valve Position Indicating Lights	G2J	CB-F-1B-A						
												MS-SS-3005-2	Selector Switch	G2J	CB-F-1B-A						
												MS-CP-183	MSIV Logic Cabinet (Train B)	GX8	CB-F-1B-A						
												MS-FC2-K-804	Auxiliary Relay SSPS Test	FC2	CB-F-3A-A						
												MS-CS-3085-1	Control Switch	F50	CB-F-3A-A						
												MS-DS-8030	Isolation Indication	FC2	CB-F-3A-A						
												MS-FBO-K634B	SSPS Auxiliary Relay	FBO	CB-F-3A-A						

FUNCTION: DECAY HEAT REMOVAL

ITEM NO.	EQUIPMENT ID NO.	EQUIPMENT DESCRIPTION	P&ID/1-LINE DRAWING NO.	TRAIN	PHYSICAL LOCATION DRAWING NO.	FIRE AREA/ZONE	REQUIRED FOR		POWER		ELEC NODE	SUPPORTING CONTROL AND INSTRUMENTATION EQUIPMENT				CABLES	ELECTRICAL DRAWING NO.		SUPPORTING SYSTEMS	REDUNDANT COUNTERPART	REMARKS
							HOT STAND BY	COLD SHUT DOWN	ELEC	AIR		EQUIPMENT ID NO.	EQUIPMENT DESCRIPTION	ELEC NODE	FIRE AREA/ZONE		SCHEM.	CABLE			
20	MS-V-90	Main Steam Isolation Valve	MS-20583	A/B	310586	MS-F-2A-Z	X	X	X	X	ZX1 ZW0 ZW8 ZW9	MS-E2T/14-72	125 V DC Circuit Breaker	E2T	CB-F-1A-A	E2T-GX7/1 GX7-ZW8	310841 E2T/14a	E2T/14c	CBA-FN-19 CBA-FN-20 EDE-PP-113A	None	Note 2
												MS-FY-89A-3	Pilot Solenoid	ZW8	MS-F-2A-Z						
												MS-FY-10A-3	Pilot Solenoid	ZW8	MS-F-2A-Z						
												MS-FY-102A-3	Solenoid Valve	ZW8	MS-F-2A-Z						
												MS-FY-102B-3	Solenoid Valve	ZW8	MS-F-2A-Z						
												MS-GX7-K111	Output Relay	GX7	MS-F-3A-Z						
												MS-GX7-K112	Output Relay	GX7	MS-F-3A-Z						
												MS-GX7-CS-3007-A	Control Switch	GX7	MS-F-3A-Z						
												MS-E1S/9-52	120 V AC Circuit Breaker	E1S	CB-F-1A-A	E1S-GX7/1 G2G-GX7/3 G2G-GX7/4 G2G-GX7/5	E1S/9a E1S/9b E1S/9c E1S/9d	E1S/9h E1S/9i E1S/9j E1S/9k	CBA-FN-19 CBA-FN-20 EDE-PP-11E		
												MS-GX7-FU-103,104	120 V AC Fuses	GX7	MS-F-3A-Z						
												MS-GX7-K109	Output Relay	GX7	MS-F-3A-Z	GX7-ZW0 FB7-GX7 GX7-ZW0/1 FC1-GX7 F60-GX7/1 F20-GX7/1 FC1-GX7/1 F60-GX7 FB7-FC1/F F60-G2G/5					
												MS-GX7-K110	Output Relay	GX7	MS-F-3A-Z						
												MS-ZS-V90A-1	Valve Position Switch	ZW0	MS-F-2A-A						
												MS-ZS-V90A-2	Valve Position Switch	ZW0	MS-F-2A-A						
												MS-ZL-3007-1	Valve Position Indicating Lights	G2G	CB-F-1A-A						
												MS-SS-3005-1	Selector Switch	G2G	CB-F-1A-A						
												MS-CP-182	MSIV Logic Cabinet (Train A)	GX7	MS-F-3A-Z						
												MS-CS-3007	Control Switch with Indication	F60	CB-F-3A-A						
												MS-CS-3085-2	Control Switch	F20	CB-F-3A-A						
												MS-DS-8031	Isolation Indication	FC1	CB-F-3A-A						
												MS-FB7-K634A	SSPS Auxiliary Relay	FB7	CB-F-3A-A						
												MS-FC1-K804	Auxiliary Relay SSPS Test	FC1	CB-F-3A-A						
												MS-E2U/14-72	125 V DC Circuit Breaker	E2U	CB-F-1A-A	E2U-GX8/1 GX8-ZW9	E2U/14a	E2U/14c	CBA-FN-32 CBA-FN-33 EDE-PP-113B		
												MS-GX8-K111	Output Relay	GX8	CB-F-1B-A						
												MS-GX8-K112	Output Relay	GX8	CB-F-1B-A						
												MS-FY-89B-3	Pilot Solenoid	ZW9	MS-F-2A-Z						
												MS-FY-10B-3	Pilot Solenoid	ZW9	MS-F-2A-Z						
												MS-FY-117A-3	Solenoid Valve	ZW9	MS-F-2A-Z						
												MS-FY-117B-3	Solenoid Valve	ZW9	MS-F-2A-Z						
												MS-CP-183	MSIV Logic Cabinet (Train B)	GX8	CB-F-1B-A						
												MS-GX8-CS-3007-B	Control Switch	GX8	CB-F-1B-A						

FUNCTION: DECAY HEAT REMOVAL

ITEM NO.	EQUIPMENT ID NO.	EQUIPMENT DESCRIPTION	P&ID/1-LINE DRAWING NO.	TRAIN	PHYSICAL LOCATION DRAWING NO.	FIRE AREA/ZONE	REQUIRED FOR		POWER		ELEC NODE	SUPPORTING CONTROL AND INSTRUMENTATION EQUIPMENT				CABLES	ELECTRICAL DRAWING NO.		SUPPORTING SYSTEMS	REDUNDANT COUNTERPART	REMARKS
							HOT STAND BY	COLD SHUT DOWN	ELEC	AIR		EQUIPMENT ID NO.	EQUIPMENT DESCRIPTION	ELEC NODE	FIRE AREA/ZONE		SCHEM.	CABLE			
20	MS-V-90	Main Steam Isolation Valve (Continued)										MS-E1T/9-52	125 V AC Circuit Breaker	E1T	CB-F-1B-A	E1T-GX8/3 G2J-GX8 G2J-GX8/1 GX8-ZX1 FB0-GX8 F51-GX8 FC2-GX8 GX8-ZX1/2 FB0-FC2/F	310841 E1T/9a E1T/9b E1T/9c	E1T/9f E1T/9g E1T/9h E1T/9i	CBA-FN-32 CBA-FN-33 EDE-PP-11F		
												MS-GX8-FU-103,104	120 V AC Fuses	GX8	CB-F-1B-A						
												MS-GX8-K109	Output Relay	GX8	CB-F-1B-A						
												MS-GX8-K110	Output Relay	GX8	CB-F-1B-A						
												MS-ZS-V90B-1	Valve Position Switch	ZX1	MS-F-2A-Z						
												MS-ZS-V90B-1	Valve Position Switch	ZX1	MS-F-2A-Z						
												MS-ZL-3007-2	Valve Position Indicating Lights	G2J	CB-F-1B-A						
												MS-CP-183	MSIV Logic Cabinet (Train B)	GX8	CB-F-1B-A						
												MS-SS-3005-2	Selector Switch	G2J	CB-F-1B-A						
												MS-CS-3085-1	Control Switch	F50	CB-F-3A-A						
												MS-DS-8031	Isolation Indication	FC2	CB-F-3A-A						
												MS-FB0-K634B	SSPS Auxiliary Relay	FB0	CB-F-3A-A						
												MS-FC2-K804	Auxiliary Relay SSPS Test	FC2	CB-F-3A-A						

FUNCTION: DECAY HEAT REMOVAL

ITEM NO.	EQUIPMENT ID NO.	EQUIPMENT DESCRIPTION	P&ID/1-LINE DRAWING NO.	TRAIN	PHYSICAL LOCATION DRAWING NO.	FIRE AREA/ZONE	REQUIRED FOR		POWER		ELEC NODE	SUPPORTING CONTROL AND INSTRUMENTATION EQUIPMENT				CABLES	ELECTRICAL DRAWING NO.		SUPPORTING SYSTEMS	REDUNDANT COUNTERPART	REMARKS
							HOT STAND BY	COLD SHUT DOWN	ELEC	AIR		EQUIPMENT ID NO.	EQUIPMENT DESCRIPTION	ELEC NODE	FIRE AREA/ZONE		SCHEM.	CABLE			
21	MS-V-92	Main Steam Isolation Valve	MS-20583	A/B	310589	MS-F-2B-Z	X	X	X	X	ZX3 Z1A Z1B Z1C	MS-E87/18-52	125 V DC Circuit Breaker	E87	CB-F-1A-A	E87-GX6/1 GX6-ZX3	310841 E87/18a	E87/18c	CBA-FN-19 CBA-FN-20 EDE-PP-112A	None	Note 2
												MS-GX6-K111	Output Relay	GX6	MS-F-3A-Z						
												MS-GX6-K112	Output Relay	GX6	MS-F-3A-Z						
												MS-FY-89A-4	Pilot Solenoid	ZX3	MS-F-2B-Z						
												MS-FY-10A-4	Pilot Solenoid	ZX3	MS-F-2B-Z						
												MS-FY-102A-4	Solenoid Valve	ZX3	MS-F-2B-Z						
												MS-FY-102B-4	Solenoid Valve	ZX3	MS-F-2B-Z						
												MS-CP-184	MSIV Logic Cabinet (Train A)	GX6	CB-F-1A-A						
												MS-GX6-CS-3008-A	Control Switch	GX6	MS-F-3A-Z						
												MS-E1S/7-52	120 V AC Circuit Breaker	E1S	CB-F-1A-A	E1S-GX6/1 G2G-GX6/3 G2G-GX6/4 G2G-GX6/5 GX6-Z1B FB7-GX6 GX6-Z1B/1 F20-GX6/1 FC1-GX6 F60-GX6/1 FB7-PC1/E F60-GX6 F60-G2G/2	E1S/7a E1S/7b E1S/7c E1S/7d	E1S/7h E1S/7i E1S/7j E1S/7k	CBA-FN-19 CBA-FN-20 EDE-PP-11E		
												MS-GX6-FU-103,104	120 V AC Fuses	GX6	MS-F-3A-Z						
												MS-GX6-K109	Output Relay	GX6	MS-F-3A-Z						
												MS-GX6-K110	Output Relay	GX6	MS-F-3A-Z						
												MS-ZS-V92A-1	Valve Position Switch	Z1B	MS-F-2B-Z						
												MS-ZS-V92A-2	Valve Position Switch	Z1B	MS-F-2B-Z						
												MS-ZL-3008-1	Valve Position Indicating Lights	G2G	CB-F-1A-A						
												MS-SS-3005-1	Selector Switch	G2G	CB-F-1A-A						
												MS-CP-184	MSIV Logic Cabinet (Train A)	GX6	MS-F-3A-Z						
												MS-CS-3008	Control Switch with Indication	F60	CB-F-3A-A						
												MS-CS-3085-2	Control Switch	F20	CB-F-3A-A						
												MS-DS-8032	Isolation Indication	FC1	CB-F-3A-A						
												MS-FB7-K634A	SSPS Auxiliary Relay	FB7	CB-F-3A-A						
												MS-FC1-K804	Auxiliary Relay SSPS Test	FC1	CB-F-3A-A						
												MS-E88/14-72	125 V DC Circuit Breaker	E88	CB-F-1B-A	E88-GX9/1 GX9-Z1A	E88/9a	E88/9c	CBA-FN-32 CBA-FN-33 EDE-PP-112B		
												MS-GX9-K111	Output Relay	GX9	CB-F-1B-A						
												MS-GX9-K112	Output Relay	GX9	CB-F-1B-A						
												MS-FY-89B-4	Pilot Solenoid	Z1A	MS-F-2B-Z						
												MS-FY-10B-4	Pilot Solenoid	Z1A	MS-F-2B-Z						
												MS-FY-117A-4	Solenoid Valve	Z1A	MS-F-2B-Z						
												MS-FY-117B-4	Solenoid Valve	Z1A	MS-F-2B-Z						
												MS-CP-185	MSIV Logic Cabinet (Train B)	GX9	CB-F-1B-A						
												MS-GX9-3008-B	Control Switch	GX9	CB-F-1B-A						

FUNCTION: DECAY HEAT REMOVAL

ITEM NO.	EQUIPMENT ID NO.	EQUIPMENT DESCRIPTION	P&ID/1-LINE DRAWING NO.	TRAIN	PHYSICAL LOCATION DRAWING NO.	FIRE AREA/ZONE	REQUIRED FOR		POWER		ELEC NODE	SUPPORTING CONTROL AND INSTRUMENTATION EQUIPMENT				CABLES	ELECTRICAL DRAWING NO.		SUPPORTING SYSTEMS	REDUNDANT COUNTERPART	REMARKS
							HOT STAND BY	COLD SHUT DOWN	ELEC	AIR		EQUIPMENT ID NO.	EQUIPMENT DESCRIPTION	ELEC NODE	FIRE AREA/ZONE		SCHEM.	CABLE			
21	MS-V-92	Main Steam Isolation Valve (Continued)										MS-E1T/7-52	125 V AC Circuit Breaker	E1T	CB-F-1B-A	E1T-GX9/3 GX9-Z1C G2J-GX9 G2J-GX9/1 FB0-GX9 F51-GX9 GX9-Z1C/1 FB0-FC2/E FC2-GX9	310841 E1T/7a E1T/7b E1T/7c	E1T/7f E1T/7g E1T/7h E1T/7i	CBA-FN-32 CBA-FN-33 EDE-PP-11F		
												MS-GX9-FU-103,104	120 V AC Fuses	GX9	CB-F-1B-A						
												MS-GX9-K109	Output Relay	GX9	CB-F-1B-A						
												MS-GX9-K110	Output Relay	GX9	CB-F-1B-A						
												MS-ZS-V92B-1	Valve Position Switch	Z1C	MS-F-2B-Z						
												MS-ZS-V92B-2	Valve Position Switch	Z1C	MS-F-2B-Z						
												MS-ZL-3008-2	Valve Position Indicating Lights	G2J	CB-F-1B-A						
												MS-SS-3005-2	Selector Switch	G2J	CB-F-1B-A						
												MS-CP-185	MSIV Logic Cabinet (Train B)	GX9	CB-F-1B-A						
												MS-CS-3085-1	Control Switch	F50	CB-F-3A-A						
												MS-DS-8032	Isolation Indication	FC2	CB-F-3A-A						
												MS-FB0-K634B	SSPS Auxiliary Relay	FB0	CB-F-3A-A						
												MS-FC2-K804	Auxiliary Relay SSPS Test	FC2	CB-F-3A-A						

FUNCTION: DECAY HEAT REMOVAL

ITEM NO.	EQUIPMENT ID NO.	EQUIPMENT DESCRIPTION	P&ID/1-LINE DRAWING NO.	TRAIN	PHYSICAL LOCATION DRAWING NO.	FIRE AREA/ZONE	REQUIRED FOR		POWER		ELEC NODE	SUPPORTING CONTROL AND INSTRUMENTATION EQUIPMENT				CABLES	ELECTRICAL DRAWING NO.		SUPPORTING SYSTEMS	REDUNDANT COUNTERPART	REMARKS
							HOT STAND BY	COLD SHUT DOWN	ELEC	AIR		EQUIPMENT ID NO.	EQUIPMENT DESCRIPTION	ELEC NODE	FIRE AREA/ZONE		SCHEM.	CABLE			
22	MS-V-204	Main Steam Isolation Valve Bypass Valve	MS-20583	A	310589	MS-F-2B-Z	X	X	X	-	VU6	MS-B1X-52	460 VAC Circuit Breaker	B1X	CB-F-1A-A	-	-	-	-	None	Note 3
23	MS-V-205	Main Steam Isolation Valve Bypass Valve	MS-20583	A	310586	MS-F-2A-Z	X	X	X	-	VU7	MS-B1Y-52	460 VAC Circuit Breaker	B1Y	CB-F-1A-A	-	-	-	-	None	Note 3
24	MS-V-206	Main Steam Isolation Valve Bypass Valve	MS-20583	A	310586	MS-F-2A-Z	X	X	X	-	VU8	MS-B1Z-52	460 VAC Circuit Breaker	B1Z	CB-F-1A-A	-	-	-	-	None	Note 3
25	MS-V-207	Main Steam Isolation Valve Bypass Valve	MS-20583	A	310589	MS-F-2B-Z	X	X	X	-	VU9	MS-B2A-52	460 VAC Circuit Breaker	B2A	CB-F-1A-A	-	-	-	-	None	Note 3
26	RC-E-11A	Steam Generator	RC-20841	A	310576 310582 310578	C-F-1-Z C-F-1-Z C-F-2-Z	X	X	-	-	-	-	-	-	-	-	-	-	-	RC-E-11B or RC-E-11D	Note 1
27	RC-E-11B	Steam Generator	RC-20842	B	310576 310582 310578	C-F-1-Z C-F-1-Z C-F-2-Z	X	X	-	-	-	-	-	-	-	-	-	-	-	RC-E-11A or RC-E-11C	Note 1
28	RC-E-11C	Steam Generator	RC-20843	A	310577 310583 310579	C-F-1-Z C-F-1-Z C-F-2-Z	X	X	-	-	-	-	-	-	-	-	-	-	-	RC-E-11B or RC-E-11D	Note 1
29	RC-E-11D	Steam Generator	RC-20844	B	310577 310583 310579	C-F-1-Z C-F-1-Z C-F-2-Z	X	X	-	-	-	-	-	-	-	-	-	-	-	RC-E-11A or RC-E-11C	Note 1
30	SB-V9	Outboard Blowdown Isolation Valve	SB-20626	B	310589	MS-F-1B-Z	X	X	X	X	UM4	SB-CS-1900	Control Switch with Indication	F28	CB-F-3A-A	F26-U6V F26-UM4 F26-FB0/4	310901 E88/18a	E88/18c E88/18d		SB-V-1	Note 2
												SB-FB0-K630B	SSPS Output Relay	FB0	CB-F-3A-A						
												SS-FY-1900B	Pilot Solenoid	U6V	MS-F-1B-Z						
												SB-ZS-V9	Valve Position Switch	UM4	MS-F-1B-Z						
31	SB-V10	Outboard Blowdown Isolation Valve	SB-20626	B	310589	MS-F-1B-Z	X	X	X	X	UM5	SB-CS-1901	Control Switch with Indication	F28	CB-F-3A-A	F26-U6W F26-UM5 F26-FB0/4	310901 E88/18a	E88/18c E88/18d		SB-V-3	Note 2
												SB-FB0-K630B	SSPS Output Relay	FB0	CB-F-3A-A						
												SS-FY-1901-B	Pilot Solenoid	U6W	MS-F-1B-Z						
												SB-ZS-V10	Valve Position Switch	UM5	MS-F-1B-Z						
32	SB-V11	Outboard Blowdown Isolation Valve	SB-20626	B	310589	MS-F-1B-Z	X	X	X	X	UM6	SB-CS-1902	Control Switch with Indication	F28	CB-F-3A-A	F26-U6X F26-UM6 F26-FB0/4	310901 E88/18a	E88/18c E88/18d		SB-V-5	Note 2
												SB-FB0-K630B	SSPS Output Relay	FB0	CB-F-3A-A						
												SS-FY-1902-B	Pilot Solenoid	U6X	MS-F-1B-Z						
												SB-ZS-V11	Valve Position Switch	UM6	MS-F-1B-Z						

FUNCTION: DECAY HEAT REMOVAL

ITEM NO.	EQUIPMENT ID NO.	EQUIPMENT DESCRIPTION	P&ID/1-LINE DRAWING NO.	TRAIN	PHYSICAL LOCATION DRAWING NO.	FIRE AREA/ZONE	REQUIRED FOR		POWER		ELEC NODE	SUPPORTING CONTROL AND INSTRUMENTATION EQUIPMENT				CABLES	ELECTRICAL DRAWING NO.		SUPPORTING SYSTEMS	REDUNDANT COUNTERPART	REMARKS
							HOT STAND BY	COLD SHUT DOWN	ELEC	AIR		EQUIPMENT ID NO.	EQUIPMENT DESCRIPTION	ELEC NODE	FIRE AREA/ZONE		SCHEM.	CABLE			
33	SB-V12	Outboard Blowdown Isolation Valve	SB-20626	B	310589	MS-F-1B-Z	X	X	X	X	UM7	SB-CS-1903	Control Switch with Indication	F28	CB-F-3A-A	F26-U6Y F26-UM7 F26-FB0/5	310901 E88/18a	E88/18c E88/18d		SB-V-7	Note 2
												SB-FB0-K630B	SSPS Output Relay	FB7	CB-F-3A-A						
												SS-FY-1903-B	Pilot Solenoid	U6Y	MS-F-1B-Z						
												SB-ZS-V12	Valve Position Switch	UM7	MS-F-1B-Z						
34	SB-V-1	RC-E-11A Inboard Blowdown Isolation Valve	SB-20626	A	310578	C-F-2-Z	X	X	X	X	VB7	SB-CS-1987	Control Switch with Indication	F28	CB-F-3A-A	F28-H36/4 F28-H36/5 H36-VB7/1	310901 E93/14a E93/14b	E93/14d		SB-V-9	Note 2
												SB-FY-V1-20	Solenoid Valve	VB7	C-F-2-Z						
												SB-ZS-V1	Valve Position Switches	VB7	C-F-2-Z						
												EDE-MM-112	Electrical Penetration	H36	C-F-2-Z, ET-F-1A-A						
35	SB-V-3	RC-E-11B Inboard Blowdown Isolation Valve	SB-20626	A	310579	C-F-2-Z	X	X	X	X	VC6	SB-CS-1988	Control Switch with Indication	F28	CB-F-3A-A	F28-H36/4 F28-H36/5 H36-VC6/1	310901 E93/14a E93/14b	E93/14d E93/14e		SB-V-10	Note 2
												SB-FY-V3-20	Solenoid Valve	VC6	C-F-2-Z						
												SB-ZS-V3	Valve Position Switches	VC6	C-F-2-Z						
												EDE-MM-112	Electrical Penetration	H36	C-F-2-Z, ET-F-1A-A						
36	SB-V-5	RC-E-11C Inboard Blowdown Isolation Valve	SB-20626	A	310579	C-F-2-Z	X	X	X	X	VC7	SB-CS-1989	Control Switch with Indication	F28	CB-F-3A-A	F28-H36/4 F28-H36/5 F28-H36/6 H36-VC7/1	310901 E93/14a E93/14b	E93/14d E93/14e		SB-V-11	Note 2
												SB-FY-V5-20	Solenoid Valve	VC7	C-F-2-Z						
												SB-ZS-V5	Valve Position Switches	VC7	C-F-2-Z						
												EDE-MM-112	Electrical Penetration	H36	C-F-2-Z, ET-F-1A-A						
37	SB-V-7	RC-E-11D Inboard Blowdown Isolation Valve	SB-20626	A	310579	C-F-2-Z	X	X	X	X	VC8	SB-CS-1990	Control Switch with Indication	F28	CB-F-3A-A	F28-H36/5 F28-H36/6 H36-VC8/1	310901 E93/14a E93/14b	E93/14d E93/14e		SB-V-12	
												SB-FY-V7-20	Solenoid Valve	VC8	C-F-2-Z						
												SB-ZS-V7	Valve Position Switches	VC8	C-F-2-Z						
												EDE-MM-112	Electrical Penetration	H36	C-F-2-Z, ET-F-1A-A						Note 2
38	CO-V-142	Condensate Tank Emergency Outlet Valve	CO-20426	A	310248 202319	CST-F-1-0	X	X	-	-	-	-	-	-	-	-	-	-	-	-	Note 1

FUNCTION: REACTOR COOLANT INVENTORY AND PRESSURE CONTROL

ITEM NO.	EQUIPMENT ID NO*	EQUIPMENT DESCRIPTION	P&ID/1-LINE DRAWING NO.	TRAIN	PHYSICAL LOCATION DRAWING NO.	FIRE AREA/ZONE	REQUIRED FOR		POWER		ELEC NODE	SUPPORTING CONTROL AND INSTRUMENTATION EQUIPMENT				CABLES	ELECTRICAL DRAWING NO.		SUPPORTING SYSTEMS	REDUNDANT COUNTERPART	REMARKS
							HOT STAND BY	COLD SHUT DOWN	ELEC	AIR		EQUIPMENT ID NO.	EQUIPMENT DESCRIPTION	ELEC NODE	FIRE AREA/ZONE		SCHEM.	CABLE			
1	RC-E-10	Reactor Coolant System Pressurizer	RC-20846	A/B	310598	C-F-1-Z	X	X	-	-	-	-	-	-	-	-	-	-	-	None	Note 1
2	RC-E-10	Pressurizer Heaters Group A	RC-20846	A	310598	C-F-1-Z	X	X	X	-	M26	RC-AB4-52	480 V AC Circuit Breaker	AB4	CB-F-1A-A	AB4-E07 AB4-E07/1 AB4-G81 AB4-G81/1 E07-H14 E07-H14/1 E07-H14/2 E07-H14/3 E07-H14/4 H14-X47 H14-X47/1 H14-X47/2 H14-X47/3 H14-X47/4 M26-X47 M26-X47/1 M26-X47/2 M26-X47/3 M26-X47/4 M26-X47/5 M26-X47/6 M26-X47/7 M26-X47/8 M26-X47/9 M26-X47/A M26-X47/B M26-X47/C M26-X47/D M26-X47/E FB1-HR2 F38-FB1 F38-G81	310882 AB4a AB4g AB4b AB4h AB4c AB4i		CBA-FN-19 CBA-FN-20 EDE-US-52	Pressurizer - Heaters Group B	
												RC-AB4-FV	Fuses	AB4	CB-F-1A-A						
												RC-CS-7318-2	Control Switch with Indication	G81	CB-F-1A-A						
												RC-SS-7318	Selector Switch	G81	CB-F-1A-A						
												EDE-AC3-94-3	Bus Undervoltage Relay	AC3	CB-F-1A-A						
												RC-AB4-52H-1	Truck Operated Contact	AB4	CB-F-1A-A						
												EDE-TBX-X47	Terminal Box	X47	C-F-1-Z						
												RC-AB4-G,R	Indicating Lights	AB4	CB-F-1A-A						
												RC-AB4-CT1	Current Transformer (600/5) ØB Bus Side	AB4	CB-F-1A-A						
												RC-AB4-AM	Ammeter	AB4	CB-F-1A-A						
												RC-AB4-CT2	Current Transformer (600/5) ØA, ØC Load Side	AB4	CB-F-1A-A						
												RC-AC3-WTR	Watt Transducer	AC3	CB-F-1A-A						
												RC-PP-6A	Distribution Panel	E07	ET-F-1A-A						
												EDE-MM-90	Electrical Penetration	H14	ET-F-1A-A, C-F-2-Z						
												RC-HR2-RMO, PR1	Emergency Power Sequence Auxiliary Relays	HR2	CB-F-1A-A						
												RC-CS-7318-1	Control Switch with Indication	F31	CB-F-3A-A						
												RC-PYY-455GX1	Low Pressure Auxiliary Relay	FB1	CB-F-3A-A						
												RC-LYY-459CX1	Low Level Auxiliary Relay	FB1	CB-F-3A-A						
												RC-LYY-460DX1	Low Level Auxiliary Relay	FB1	CB-F-3A-A						
												RC-LYY-459EX1	High Level Auxiliary Relay	FB1	CB-F-3A-A						
												EDE-AC3-94-3	Undervoltage Tripping Relay	AC3	CB-F-1A-A						
												RC-LT-459	Pressurizer Level Transmitter	GN5	C-F-2-Z	GN5-H45/1 FA1-H45/1	C509011 C509027 FP30001 SH125	310942 FA1s FA1w	MM-CP-1		
												MM-CP-1	Process Protection System Cabinet No. 1	FA1	CB-F-3A-A						
												EDE-MM-121	Electrical Penetration	H45	C-F-2-Z, ET-F-1A-1						
												MM-CP-5	Process Control GP No. 1 Cabinet	FA5	CB-F-3A-A						
												RC-LT-460	Pressurizer Level Transmitter	GN5	C-F-2-Z	GN5-H55/2 FA2-H55/3	C509011 C509027 FP30001 SH125	310942 FA2r FA2w	MM-CP-2		
												EDE-MM-131	Electrical Penetration	H55	C-F-1-Z ET-F-1C-Z						

* Table notes on last page of table

FUNCTION: REACTOR COOLANT INVENTORY AND PRESSURE CONTROL

ITEM NO.	EQUIPMENT ID NO.	EQUIPMENT DESCRIPTION	P&ID/1-LINE DRAWING NO.	TRAIN	PHYSICAL LOCATION DRAWING NO.	FIRE AREA/ZONE	REQUIRED FOR		POWER		ELEC NODE	SUPPORTING CONTROL AND INSTRUMENTATION EQUIPMENT				CABLES	ELECTRICAL DRAWING NO.		SUPPORTING SYSTEMS	REDUNDANT COUNTERPART	REMARKS
							HOT STAND BY	COLD SHUT DOWN	ELEC	AIR		EQUIPMENT ID NO.	EQUIPMENT DESCRIPTION	ELEC NODE	FIRE AREA/ZONE		SCHEM.	CABLE			
2	RC-E-10 (Continued)											MM-CP-2	Process Protection System Cabinet No. 2	FA2	CB-F-3A-A						
												MM-CP-6	Process Control GP No. 2 Cabinet	FA6	CB-F-3A-A						
3	RC-E-10	Pressurizer Heaters Group B	RC-20846	B	310598	C-F-1-Z	X	X	X	-	M26	RC-AD4-52	480 V AC Circuit Breaker	AD4	CB-F-1B-A	AD4-E08 AD4-E08/1 AD4-GZ0 AD4-GZ0/1 E08-H20 E08-H20/1 E08-H20/2 E08-H20/3 E08-H20/4 H20-X44 H20-X44/1 H20-X44/2 H20-X44/3 H20-X44/4 M26-X44 M26-X44/1 M26-X44/2 M26-X44/3 M26-X44/4 M26-X44/5 M26-X44/6 M26-X44/7 M26-X44/8 M26-X44/9 M26-X44/A M26-X44/B M26-X44/C M26-X44/D M26-X44/E F31-FT0 F31-HR4 F31-GZ0 AE3-GZ0	310882 AD4a AD4f AD4b AD4g AD4c AD4p AD4n		CBA-FN-32 CBA-FN-33 EDE-US-62	Pressurizer Heaters Group A	
												RC-AD4-FU	Fuses	AD4	CB-F-1B-A						
												RC-CS-7319-2	Control Switch with Indication	GZ0	CB-F-1B-A						
												RC-SS-7319	Selector Switch	GZ0	CB-F-1B-A						
												EDE-AE3-94-3	Bus Undervoltage Relay	AE3	CB-F-1B-A						
												RC-AD4-52H-1	Truck Operated Contact	AD4	CB-F-1B-A						
												RC-AD4-G,R	Indicating Lights	AD4	CB-F-1B-A						
												EDE-TBX-X44	Terminal Box	X44	C-F-1-Z						
												RC-AD4-CT1	Current Transformer (600/5) ØB Bus Side	AD4	CB-F-1B-A						
												RC-AD4-AM	Ammeter	AD4	CB-F-1B-A						
												RC-AD4-CT2	Current Transformer (600/5) ØA, ØC Load Side	AD4	CB-F-1B-A						
												RC-AE3-WTR	Watt Transducer	AE3	CB-F-1B-A						
												RC-PP-6B	Distribution Panel	E08	ET-F-1C-A						
												EDE-MM-96	Electrical Penetration	H20	ET-F-1C-A, C-F-1-Z						
												RC-AE3-R1	Auxiliary Relay	AE3	CB-F-1B-A						
												RC-HR4-RM0,PR1	Emergency Power Sequencer Auxiliary Relays	HR4	CB-F-1B-A						
												RC-CS-7319-1	Control Switch with Indication	F31	CB-F-3A-A						
												EDE-FT0-KA2,KA3 KA4,KA5	Auxiliary Relays Isolation Cabinet	FT0	CB-F-3A-A						
												EDE-AE3-94-3	Undervoltage Tripping Relay	AE3	CB-F-1B-A						
												RC-FS9-FU	Fuses	FS9	CB-F-3A-A	FB2-FS9/1 FB2-FS9/2	310966 EH9/15a EH9/15s EH9/15b EH9/15t EH9/15c EH9/15d EH9/15e EH9/15f EH9/15g EH9/15h EH9/15i					
												RC-LYY-459CX2	Low Level Auxiliary Relay	FB2	CB-F-3A-A						
												RC-LYY-460DX2	Low Level Auxiliary Relay	FB2	CB-F-3A-A						
												EDE-FT0-KA3,KA5	Auxiliary Relays Isolation Cabinet	FT0	CB-F-3A-A						
												MM-CP-5	Process Control Cabinet	FA5	CB-F-3A-A	GN5-H45/1 FA1-H45/1	C509011 310942 C509027 FA1s FP30001 FA1w FP129				
												EDE-MM-121	Electrical Penetration	H45	C-F-2-Z ET-F-1A-A						
												MM-CP-1	Process Protection Cabinet No. 1	FA1	CB-F-3A-A						
												RC-LT-459	Pressurizer Level Transmitter	GN5	C-F-2-Z						

FUNCTION: REACTOR COOLANT INVENTORY AND PRESSURE CONTROL

ITEM NO.	EQUIPMENT ID NO.	EQUIPMENT DESCRIPTION	P&ID/1-LINE DRAWING NO.	TRAIN	PHYSICAL LOCATION DRAWING NO.	FIRE AREA/ZONE	REQUIRED FOR		POWER		ELEC NODE	SUPPORTING CONTROL AND INSTRUMENTATION EQUIPMENT				CABLES	ELECTRICAL DRAWING NO.		SUPPORTING SYSTEMS	REDUNDANT COUNTERPART	REMARKS
							HOT STAND BY	COLD SHUT DOWN	ELEC	AIR		EQUIPMENT ID NO.	EQUIPMENT DESCRIPTION	ELEC NODE	FIRE AREA/ZONE		SCHEM.	CABLE			
3	RC-E-10 (Continued)											RC-LT-460	Pressurizer Level Transmitter	GN5	C-F-2-Z	GN5-H55/2 FA2-H55/3	C509011 C509027 FP30001 SH129	310942 FA2r FA2w			
												EDE-MM-131	Electrical Penetration	H55	C-F-1-Z ET-F-1C-Z						
												MM-CP-2	Process Protection System Cabinet No. 2	FA2	CB-F-3A-A						
												MM-CP-6	Process Control GP No. 2 Cabinet	FA6	CB-F-3A-A						

FUNCTION: REACTOR COOLANT INVENTORY AND PRESSURE CONTROL

ITEM NO.	EQUIPMENT ID NO.	EQUIPMENT DESCRIPTION	P&ID/1-LINE DRAWING NO.	TRAIN	PHYSICAL LOCATION DRAWING NO.	FIRE AREA/ZONE	REQUIRED FOR		POWER		ELEC NODE	SUPPORTING CONTROL AND INSTRUMENTATION EQUIPMENT				CABLES	ELECTRICAL DRAWING NO.		SUPPORTING SYSTEMS	REDUNDANT COUNTERPART	REMARKS
							HOT STAND BY	COLD SHUT DOWN	ELEC	AIR		EQUIPMENT ID NO.	EQUIPMENT DESCRIPTION	ELEC NODE	FIRE AREA/ZONE		SCHEM.	CABLE			
4	RC-V-122	RC-E-10 Pressurizer Relief Isolation Valve	RC-20846	A	310581	C-F-3-Z	X	X	X	-	V01	RC-B97-52-1,2	460 V AC Circuit Breakers	B97	CB-F-1A-A	B97-G81 B97-G81/1 B97-H18 B97-H35 H18-V01 H35-X56 V01-X56 ED1-F38 F38-G81/2 F38-G81/3	310882 B97a B97c B97e B97d		CBA-FN-19 CBA-FN-20 EDE-MCC-521	RC-V-124 or RC-PCV-456A	
												RC-B97-FU	Fuse	B97	CB-F-1A-A						
												RC-CS-7313-2	Control Switch with Indication	G81	CB-F-1A-A						
												RC-SS-7313	Selector Switch	G81	CB-F-1A-A						
												RC-B97-42-1/0,C	Motor Starters	B97	CB-F-1A-A						
												RC-B97-42-2	Motor Starter	B97	CB-F-1A-A						
												RC-B97-49-1,2	Overload Relays	B97	CB-F-1A-A						
												EDE-TBX-X56	Terminal Box	X56	C-F-3-Z						
												RC-ZS-V122	Valve Position Switch and Valve Open/Close Torque Switches	V01	C-F-3-Z						
												EDE-MM-94	Electrical Penetration	H18	C-F-2-Z, ET-F-1A-A						
												EDE-MM-111	Electrical Penetration	H35	C-F-2-Z, ET-F-1A-A						
												RC-CS-7313-1	Control Switch with Indication	F31	CB-F-3A-A						
												RC-ED1-R1	Auxiliary Relay	ED1	CB-F-1A-A						
5	RC-V-124	RC-E-10 Pressurizer Relief Isolation Valve	RC-20846	B	310581	C-F-3-Z	X	X	X	-	V02	RC-B98-52-1,2	460 V AC Circuit Breakers	B98	CB-F-1B-A	B98-GZ0 B98-GZ0/1 B98-H15 B98-H41 H15-V02 H41-X35 V02-X35 B98-GZ0/2 F31-FT0/1 F31-GZ0/5 F31-GZ0/6	310882 B98a B98c B98e B98d		CBA-FN-32 CBA-FN-33 EDE-MCC-621	RC-V-122 or RC-PCV-456B	
												RC-B98-FU	Fuses	B98	CB-F-1B-A						
												RC-CS-7314-2	Control Switch with Indication	GZ0	CB-F-1B-A						
												RC-SS-7314	Selector Switch	GZ0	CB-F-1B-A						
												RC-B98-42-1/0,C	Motor Starters	B98	CB-F-1B-A						
												RC-B98-42-2	Motor Starter	B98	CB-F-1B-A						
												RC-B98-49-1,2	Overload Relays	B98	CB-F-1B-A						
												EDE-TBX-X35	Terminal Box	X35	C-F-3-Z						
												RC-ZS-V124	Valve Position Switch and Valve Open/Close Torque Switches	V02	C-F-3-Z						
												EDE-MM-91	Electrical Penetration	H15	C-F-1-Z, ET-F-1C-A						
												EDE-MM-117	Electrical Penetration	H41	C-F-1-Z, ET-F-1C-A						
												RC-CS-7314-1	Control Switch with Indication	F31	CB-F-3A-A						
												RC-FT0-KA6	Auxiliary Relay	FT0	CB-F-3A-A						

FUNCTION: REACTOR COOLANT INVENTORY AND PRESSURE CONTROL

ITEM NO.	EQUIPMENT ID NO.	EQUIPMENT DESCRIPTION	P&ID/1-LINE DRAWING NO.	TRAIN	PHYSICAL LOCATION DRAWING NO.	FIRE AREA/ZONE	REQUIRED FOR		POWER		ELEC NODE	SUPPORTING CONTROL AND INSTRUMENTATION EQUIPMENT				CABLES	ELECTRICAL DRAWING NO.		SUPPORTING SYSTEMS	REDUNDANT COUNTERPART	REMARKS
							HOT STAND BY	COLD SHUT DOWN	ELEC	AIR		EQUIPMENT ID NO.	EQUIPMENT DESCRIPTION	ELEC NODE	FIRE AREA/ZONE		SCHEM.	CABLE			
6	RC-PCV-456A	RC-E-10 Pressurizer Relief Control Valve	RC-20846	A	310581	C-F-3-Z	X	X	X	-	LD3	RC-E87/19-72	125 V DC Circuit Breaker	E87	CB-F-1A-A	E87-E4A/4 E4A-J3M G81-J3M G81-H35 G5X-J3M H18-J3M H18-LD3 H35-X56/2 LD3-X56 F38-G81/1 F38-FB1/2 F38-G5X	310882 E87/19a	E87/19c E87/19d	CBA-FN-19 CBA-FN-20 EDE-PP-112A	RC-PCV-456B or RC-V-122	
												RC-CS-456A-2	Control Switch with Indication	G81	CB-F-1A-A						
												RC-SS-456-A1	Selector Switch	G81	CB-F-1A-A						
												RC-SS-456-A2	Selector Switch	G5X	DG-F-2A-A						
												RC-J3M-42	Auxiliary Relay	J3M	DG-F-2A-A						
												RC-PCV-456A-20	Solenoid Operating Coil	LD3	C-F-3-Z						
												RC-ZS-PCV-456A	Valve Position Switch	LD3	C-F-3-Z						
												RC-E4A-FU11,12	30 A Fuses	E4A	CB-F-1A-A						
												EDE-TBX-X56	Terminal Box	X56	C-F-3-Z						
												EDE-MM-94	Electrical Penetration	H18	C-F-2-Z, ET-F-1A-A						
												EDE-MM-111	Electrical Penetration	H35	C-F-2-Z, ET-F-1A-A						
												RC-CS-456A-1	Control Switch with Indication	F31	CB-F-3A-A						
												RC-PY-405CX	Auxiliary Relay	FB1	CB-F-3A-A						
												RC-TY-413KK	Auxiliary Relay	FB1	CB-F-3A-A						
												RC-PY-455EX	Auxiliary Relay	FB1	CB-F-3A-A						
												RC-PY-458BX	Auxiliary Relay	FB1	CB-F-3A-A						

FUNCTION: REACTOR COOLANT INVENTORY AND PRESSURE CONTROL

ITEM NO.	EQUIPMENT ID NO.	EQUIPMENT DESCRIPTION	P&ID/1-LINE DRAWING NO.	TRAIN	PHYSICAL LOCATION DRAWING NO.	FIRE AREA/ZONE	REQUIRED FOR		POWER		ELEC NODE	SUPPORTING CONTROL AND INSTRUMENTATION EQUIPMENT				CABLES	ELECTRICAL DRAWING NO.		SUPPORTING SYSTEMS	REDUNDANT COUNTERPART	REMARKS
							HOT STAND BY	COLD SHUT DOWN	ELEC	AIR		EQUIPMENT ID NO.	EQUIPMENT DESCRIPTION	ELEC NODE	FIRE AREA/ZONE		SCHEM.	CABLE			
7	RC-PCV-456B	RC-E-10 Pressurizer Relief Control Valve	RC-20846	B	310581	C-F-3-Z	X	X	X	-	LD4	RC-E88/19-72	125 V DC Circuit Breaker	E88	CB-F-1B-A	E88-E4C/7 E4C-J3P GZ0-J3P GZ0-H39 G5Y-J3P H24-J3P H24-LD4 H39-X35 LD4-X35 F31-FT0/2 F31-GZ0/2 E4C-GZ0/2 F31-G5Y/1	310882 E88/19a	E88/19c E88/19d	CBA-FN-32 CBA-FN-33 EDE-PP-112B	RC-PCV-456A or RC-V-124	
												RC-CS-456B-2	Control Switch with Indication	GZ0	CB-F-1B-A						
												RC-SS-456-B1	Selector Switch	GZ0	CB-F-1B-A						
												RC-SS-456-B2	Selector Switch	G5Y	DG-F-2B-A						
												RC-J3P-42	Auxiliary Relay	J3P	DG-F-2B-A						
												RC-PCV-456B-20	Solenoid Operating Coil	LD4	C-F-3-Z						
												RC-ZS-PCV-456B	Valve Position Switch	LD4	C-F-3-Z						
												RC-E4C-FU19,20	30 A Fuses	E4C	CB-F-1B-A						
												EDE-TBX-X35	Terminal Box	X35	C-F-3-Z						
												EDE-MM-100	Electrical Penetration	H24	C-F-1-Z, ET-F-1C-A						
												EDE-MM-115	Electrical Penetration	H39	C-F-1-Z, ET-F-1C-A						
												RC-CS-456B-1	Control Switch with Indication	F31	CB-F-3A-A						
												EDE-FT0-KA7	Auxiliary Relays Isolation Cabinet	FT0	CB-F-3A-A						
												RC-E4C-FU-23,24	30 A Fuses	E4C	CB-F-1B-A						
8	RC-TK11	Pressurizer Relief Tank	RC-20846	A/B	310577	C-F-1-Z	X	X	-	-	-	-	-	-	-	-	-			None	Note 1
9	RC-V-323	Reactor Vessel Venting Valve	RC-20485	B	310581	C-F-3-Z	X	X	X	-	VB2	RC-BV9-42-1,2	Starter	BV9	CB-F-1B-A	BV9-F31	310882 BV9a	BV9c BV9d		RC-FV-2881	
												RC-BV9-49-1,2	Overload Relays	BV9	CB-F-1B-A						
												RC-CS-2885	Control Switch with Indication	F31	CB-F-3A-A	BV9-H41 F31-H41/2 H41-VB2 H41-VB2/1					
												RC-V-323	Valve Position and Open/Close Torque Switches	VB2	C-F-3-Z						
												EDE-MM-91	Electrical Penetration	H15	C-F-1-Z, ET-F-1C-A						
												EDE-MM-117	Electrical Penetration	H41	C-F-1-Z, ET-F-1C-A						
10	RC-FV-2881	Reactor Vessel Venting Valve	RC-20845	B	310581	C-F-3-Z	X	X	X	-	U04	RC-CS-2881	Control Switch with Indication	F31	CB-F-3A-A	F31-GN0 F31-G5Y F31-H41/1 H41-U04	310882 E88/1g	E88/1e E88/1d E88/1f		RC-V-323	
												RC-SS-2881	Selector Switch	G5Y	CB-F-1B-A						
												RC-GN0-R7	Auxiliary Relay EDE-CP-249	GN0	CB-F-1B-A						
												EDE-MM-117	Electrical Penetration	H41	C-F-1-Z, ET-F-1C-A						
												EDE-MM-115	Electrical Penetration	H39	C-F-1-Z, ET-F-1C-A	H39-U04 F26-H39					

FUNCTION: REACTOR COOLANT INVENTORY AND PRESSURE CONTROL

ITEM NO.	EQUIPMENT ID NO.	EQUIPMENT DESCRIPTION	P&ID/1-LINE DRAWING NO.	TRAIN	PHYSICAL LOCATION DRAWING NO.	FIRE AREA/ZONE	REQUIRED FOR		POWER		ELEC NODE	SUPPORTING CONTROL AND INSTRUMENTATION EQUIPMENT				CABLES	ELECTRICAL DRAWING NO.		SUPPORTING SYSTEMS	REDUNDANT COUNTERPART	REMARKS
							HOT STAND BY	COLD SHUT DOWN	ELEC	AIR		EQUIPMENT ID NO.	EQUIPMENT DESCRIPTION	ELEC NODE	FIRE AREA/ZONE		SCHEM.	CABLE			
11	RC-LCV-459	Letdown Isolation Valve	RC-20843	A	310577	C-F-1-Z	X	X	X	X	L99	RC-SS-459	Selector Switch	G5X	DG-F-2A-A	F40-FB1/2 F40-G5X F40-H36 GE5-H36/2 GE5-LH2/1 GE5-L99 L99-LH2	310882 E89/17a E89/17c E89/17d			RC-LCV-460 CS-V-145	
												CS-ZS-V-145	Position Switch	LH2	C-F-1-Z						
												RC-CS-459	Control Switch with Indication	F40	CB-F-3A-A						
												RC-LY/459-CX1	Auxiliary Relay Auxiliary Rack No. 1	FB1	CB-F-3A-A						
												EDE-MM-112	Electrical Penetration	H36	C-F-2-Z ET-F-1A-A						
12	RC-LCV-460	Letdown Isolation Valve	RC-20843	A	310577	C-F-1-Z	X	X	X	X	LF7	RC-CS-460	Control Switch with Indication	F40	CB-F-3A-A	F40-FB1 F40-H36/1 F40-H36/3 GE4-H36 GE4-LH2 GE4-LF7/1	310882 E89/1b E89/1d E89/1e E89/1f			RC-V-459 CS-V-145	
												CS-ZS-V-145	Position Switch	LH2	C-F-1-Z						
												RC-LY/460-DX1	Auxiliary Relay Auxiliary Rack No. 1	FB1	CB-F-3A-A						
												EDE-MM-112	Electrical Penetration	H36	C-F-2-Z ET-F-1A-A						

FUNCTION: REACTOR COOLANT INVENTORY AND PRESSURE CONTROL

ITEM NO.	EQUIPMENT ID NO.	EQUIPMENT DESCRIPTION	P&ID/1-LINE DRAWING NO.	TRAIN	PHYSICAL LOCATION DRAWING NO.	FIRE AREA/ZONE	REQUIRED FOR		POWER		ELEC NODE	SUPPORTING CONTROL AND INSTRUMENTATION EQUIPMENT				CABLES	ELECTRICAL DRAWING NO.		SUPPORTING SYSTEMS	REDUNDANT COUNTERPART	REMARKS
							HOT STAND BY	COLD SHUT DOWN	ELEC	AIR		EQUIPMENT ID NO.	EQUIPMENT DESCRIPTION	ELEC NODE	FIRE AREA/ZONE		SCHEM.	CABLE			
13	CS-P-2A	Charging Pump	CS-20725	A	310764	PAB-F-1C-A	X	X	X	-	M17	CS-A62-52	4160 V AC Circuit Breaker			A62-M17 A62-P01 A62-F41 A62-F41/2 A62-HR2 F41-FB7 F10-F41	310891 A62a A62b A62c A62d	A62h	CBA-FN-19 CBA-FN-20 EAH-FN-5A EDE-SWG-5	CS-P-2B	
												CS-CS-7424-2	Control Switch	A62	CB-F-1A-A						
												CS-SS-7424	Selector Switch	A62	CB-F-1A-A						
												CS-A62-86	Lockout Relay	A62	CB-F-1A-A						
												CS-A62-52H	Truck Operated Contact	A62	CB-F-1A-A						
												CS-A62-50/51	Inst./Time Over Current Relays Øa, ØC	A62	CB-F-1A-A						
												CS-PS-7467-1	Pressure Switch	P01	PAB-F-1C-A						
												CS-A62-AM	Ammeter	A62	CB-F-1A-A						
												CS-A62-AS	Ammeter Switch	A62	CB-F-1A-A						
												CS-A62-CT	Current Transformer (100/5)	A62	CB-F-1A-A						
												CS-A62-TD1	CT Test Device	A62	CB-F-1A-A						
												CS-A62-ATR	Transducer	A62	CB-F-1A-A						
												CS-A62-TD2	Lockout Relay Test Device	A62	CB-F-1A-A						
												CS-A62-TDR	Timing Relay	A62	CB-F-1A-A						
												CS-A62-FU	Fuses	A62	CB-F-1A-A						
												CS-A62-52Z	Timing Relay	A62	CB-F-1A-A						
												CS-A62-G,R,W	Indicating Lights	A62	CB-F-1A-A						
												CS-A62-51GS	Ground Sensor Relay	A62	CB-F-1A-A						
												CS-CS-7424-1	Control Switch with Indication	F41	CB-F-3A-A						
												CS-FB7-K616A	Auxiliary Relay SSPS 'A' CAB	FB7	CB-F-3A-A						
												CS-HR2-RM0,PR1	Emergency Power Sequencer Auxiliary Relays	HR2	CB-F-1A-A						
												CS-HR9-R2X	Emergency Power Sequencer Auxiliary Relays	HR9	CB-F-1A-A						
												CS-ZL-7424-2	Indicating Light	F10	CB-F-3A-A						

FUNCTION: REACTOR COOLANT INVENTORY AND PRESSURE CONTROL

ITEM NO.	EQUIPMENT ID NO.	EQUIPMENT DESCRIPTION	P&ID/1-LINE DRAWING NO.	TRAIN	PHYSICAL LOCATION DRAWING NO.	FIRE AREA/ZONE	REQUIRED FOR		POWER		ELEC NODE	SUPPORTING CONTROL AND INSTRUMENTATION EQUIPMENT				CABLES	ELECTRICAL DRAWING NO.		SUPPORTING SYSTEMS	REDUNDANT COUNTERPART	REMARKS
							HOT STAND BY	COLD SHUT DOWN	ELEC	AIR		EQUIPMENT ID NO.	EQUIPMENT DESCRIPTION	ELEC NODE	FIRE AREA/ZONE		SCHEM.	CABLE			
14	CS-P-2B	Charging Pump	CS-20725	B	310764	PAB-F-1D-A	X	X	X	-	M18	CS-A82-52	4160 V AC Circuit Breaker	A82	CB-F-1B-A	A82-M18 A82-P02 A82-F48/1 A82-F48/2 A82-HR4 F48-FB0 F10-F48	310891 A82a A82b A82c A82d	A82h	CBA-FN-32 CBA-FN-33 EAH-FN-5B EDE-SWG-6	CS-P-2A	
												CS-CS-7425-2	Control Switch	A82	CB-F-1B-A						
												CS-SS-7425	Selector Switch	A82	CB-F-1B-A						
												CS-A82-86	Lockout Relay	A82	CB-F-1B-A						
												CS-A82-52H	Truck Operated Contact	A82	CB-F-1B-A						
												CS-A82-50/51	Inst./Time Over Current Relays øA, øB	A82	CB-F-1B-A						
												CS-PS-7468-1	Pressure Switch	P02	PAB-F-1D-A						
												CS-A82-AM	Ammeter	A82	CB-F-1B-A						
												CS-A82-AS	Ammeter Switch	A82	CB-F-1B-A						
												CS-A82-CT	Current Transformer (100/5)	A82	CB-F-1B-A						
												CS-A82-TD1	CT Test Device	A82	CB-F-1B-A						
												CS-A82-ATR	Transducer	A82	CB-F-1B-A						
												CS-A82-TD2	Lockout Relay Test Device	A82	CB-F-1B-A						
												CS-A82-TDR	Timing Relay	A82	CB-F-1B-A						
												CS-A82-FU	Fuses	A82	CB-F-1B-A						
												CS-A82-52Z	Timing Relay	A82	CB-F-1B-A						
												CS-A82-G,R,W	Indicating Lights	A82	CB-F-1B-A						
												CS-A82-51GS	Ground Sensor Relay	A82	CB-F-1B-A						
												CS-CS-7425-1	Control Switch with Indication	F41	CB-F-3A-A						
												CS-FB0-K616B	Auxiliary Relay SSPS 'A' CAB	FB0	CB-F-3A-A						
												CS-HR4-RM0,PR1	Emergency Power Sequencer Auxiliary Relays	HR4	CB-F-1B-A						
												CS-A82-R2	Auxiliary Relay	A82	CB-F-1B-A						
												CS-HR0-R2X	Emergency Power Sequencer Auxiliary Relays	HR0	CB-F-1B-A						
												CS-ZL-7425-2	Indicating Light	F10	CB-F-3A-A						

FUNCTION: REACTOR COOLANT INVENTORY AND PRESSURE CONTROL

ITEM NO.	EQUIPMENT ID NO.	EQUIPMENT DESCRIPTION	P&ID/1-LINE DRAWING NO.	TRAIN	PHYSICAL LOCATION DRAWING NO.	FIRE AREA/ZONE	REQUIRED FOR		POWER		ELEC NODE	SUPPORTING CONTROL AND INSTRUMENTATION EQUIPMENT				CABLES	ELECTRICAL DRAWING NO.		SUPPORTING SYSTEMS	REDUNDANT COUNTERPART	REMARKS
							HOT STAND BY	COLD SHUT DOWN	ELEC	AIR		EQUIPMENT ID NO.	EQUIPMENT DESCRIPTION	ELEC NODE	FIRE AREA/ZONE		SCHEM.	CABLE			
15	CS-V-142	Charging Line Isolation Valve	CS-20722	A	310769	PP-F-1A-Z	X	X	X	-	V12	CS-B82-52	460 V AC Circuit Breaker	B82	CB-F-1A-A	B82-G2G B82-G2G/1 B82-V12 B82-V12/1 F41-FB7/1 F41-G2G/4 F41-G2G/5	310891 B82a	B82c B82d	CBA-FN-19 CBA-FN-20 EAH-FN-5A EDE-MCC-512	CS-V-143 or CS-HCV-182	
												CS-CS-7410-2	Control Switch with Indication	G2G	CB-F-1A-A						
												CS-SS-7410	Selector Switch	G2G	CB-F-1A-A						
												CS-B82-42/0,C	Motor Starters	B82	CB-F-1A-A						
												CS-B82-49	Overload Relay	B82	CB-F-1A-A						
												CS-ZS-V142	Valve Position and Open/Close Torque Switches	V12	PP-F-1A-Z						
												CS-B82-FU	Fuse	B82	CB-F-1A-A						
												CS-CS-7410-1	Control Switch with Indication	F41	CB-F-3A-A						
												CS-FB7-K601A	Auxiliary Relay SSPS 'A' CAB	FB7	CB-F-3A-A						
16	CS-V-143	Charging Line Isolation Valve	CS-20722	B	310769	PP-F-1A-Z	X	X	X	-	V11	CS-B87-52	460 V AC Circuit Breaker	B87	CB-F-1B-A	B87-G2J B87-G2J/1 B87-V11 B87-V11/1 F48-FB0/3 F48-G2J/2 F48-G2J/3	310891 B87a	B87c B87d	CBA-FN-32 CBA-FN-33 EAH-FN-5B EDE-MCC-612	CS-V-142 or CS-HCV-182	
												CS-CS-7411-2	Control Switch with Indication	G2J	CB-F-1B-A						
												CS-SS-7411	Selector Switch	G2J	CB-F-1B-A						
												CS-B87-42/0,C	Motor Starters	B87	CB-F-1B-A						
												CS-B87-49	Overload Relay	B87	CB-F-1B-A						
												CS-ZS-V143	Valve Position and Open/Close Torque Switches	V11	PP-F-1A-Z						
												CS-B87-FU	Fuse	B87	CB-F-1B-A						
												CS-CS-7411-1	Control Switch with Indication	F41	CB-F-3A-A						
												CS-FB0-K601B	Auxiliary Relay SSPS 'A' CAB	FB0	CB-F-3A-A						
17	RC-P-1A	Reactor Coolant Pump	RC-20841	A	310576 310582 310578	C-F-1-Z C-F-1-Z C-F-2-Z	X	-	X	-	M01	RC-A05-52	13.8 kV Circuit Breaker	A05	NES-F-1A-Z		310882 A05a A05b A05c A05d A05i	A05g A05h	ED-SWG-1	None	
												ED-E97-72	125 V DC Circuit Breaker	E97	NES-F-1A-Z	A05-F31/2					
												RC-A05-FU	Fuses (Trip Circuit)	A05	NES-F-1A-Z						
												RC-CS-7300	Control Switch with Indication	F31	CB-F-3A-A						
18	RC-P-1B	Reactor Coolant Pump	RC-20842	A	310576 310582 310578	C-F-1-Z C-F-1-Z C-F-2-Z	X	-	X	-	M02	RC-A20-52	13.8 kV Circuit Breaker	A20	NES-F-1A-Z		310882 A20a	A20g	ED-SWG-1	None	
												ED-E97-72	125 V DC Circuit Breaker	E97	NES-F-1A-Z	A20-F31/2					
												RC-A20-FU	Fuses (Trip Circuit)	A20	NES-F-1A-Z		A20b A20c A20d A20i	A20K			
												RC-CS-7304	Control Switch with Indication	F31	CB-F-3A-A						

FUNCTION: REACTOR COOLANT INVENTORY AND PRESSURE CONTROL

ITEM NO.	EQUIPMENT ID NO.	EQUIPMENT DESCRIPTION	P&ID/1-LINE DRAWING NO.	TRAIN	PHYSICAL LOCATION DRAWING NO.	FIRE AREA/ZONE	REQUIRED FOR		POWER		ELEC NODE	SUPPORTING CONTROL AND INSTRUMENTATION EQUIPMENT				CABLES	ELECTRICAL DRAWING NO.		SUPPORTING SYSTEMS	REDUNDANT COUNTERPART	REMARKS
							HOT STAND BY	COLD SHUT DOWN	ELEC	AIR		EQUIPMENT ID NO.	EQUIPMENT DESCRIPTION	ELEC NODE	FIRE AREA/ZONE		SCHEM.	CABLE			
19	RC-P-1C	Reactor Coolant Pump	RC-20843	A	310577 310583 310579	C-F-1-Z C-F-1-Z C-F-2-Z	X	-	X	-	M03	RC-A09-52	13.8 kV Circuit Breaker	A09	NES-F-1A-Z		31088			None	
												ED-E91-72	125 V DC Circuit Breaker	E91	TB-F-1A-Z	A09-F38/2	A09a	A09g	ED-SWG-2		
												RC-A09-FU	Fuses (Trip Circuit)	A09	NES-F-1A-Z		A09b A09c	A09h			
												RC-CS-7306	Control Switch with Indication	F31	CB-F-3A-A		A09d A09i				
20	RC-P-1D	Reactor Coolant Pump	RC-20844	A	310577 310583 310579	C-F-1-Z C-F-1-Z C-F-2-Z	X	-	X	-	M04	RC-A24-52	13.8 kV Circuit Breaker	A24	NES-F-1A-Z		310882 A24a	A24g		None	
												ED-E91-72	125 V DC Circuit Breaker	E91	TB-F-1A-Z	A24-F31/2			ED-SWG-2		
												RC-A24-FU	Fuses (Trip Circuit)	A24	NES-F-1A-Z		A24b A24c	A24h			
												RC-CS-7308	Control Switch with Indication	F31	CB-F-3A-A		A24d A24i				
21	RC-V-22	RC-E-11A Hot Leg-RHR Isolation Valve	RC-20841	B	310582	C-F-1-Z	-	X	X	-	V27	RC-B54-52-1	460 V AC Circuit Breaker	B54	CB-F-1B-A		310882 B54a B54d	B54c		RC-V-23	Note 4 7 and 8
22	RC-V-23	RC-E-11A Hot Leg-RHR Isolation Valve	RC-20841	A	310576	C-F-1-Z	-	X	X	-	V25	RC-B53-52-1	460 V AC Circuit Breaker	B52	CB-F-1A-A		310882 B53a B53d	B53c		RC-V-22	Note 4, 7 and 8
23	RC-V-87	RC-E-11D Hot Leg-RHR Isolation Valve	RC-20844	B	310582	C-F-1-Z	-	X	X	-	V26	RC-B61-52-1	460 V AC Circuit Breaker	B61	CB-F-1B-A		310882 B61a B61d	B61c		RC-V-88	Note 4, 7 and 8
24	RC-V-88	RC-E-11D Hot Leg-RHR Isolation Valve	RC-20844	A	310577	C-F-1-Z	-	X	X	-	V28	RC-B62-52-1	460 V AC Circuit Breaker	B62	CB-F-1A-A		310882 B62a B62d	B62c		RC-V-87	Note 4, 7 and 8

FUNCTION: REACTOR COOLANT INVENTORY AND PRESSURE CONTROL

ITEM NO.	EQUIPMENT ID NO.	EQUIPMENT DESCRIPTION	P&ID/1-LINE DRAWING NO.	TRAIN	PHYSICAL LOCATION DRAWING NO.	FIRE AREA/ZONE	REQUIRED FOR		POWER		ELEC NODE	SUPPORTING CONTROL AND INSTRUMENTATION EQUIPMENT				CABLES	ELECTRICAL DRAWING NO.		SUPPORTING SYSTEMS	REDUNDANT COUNTERPART	REMARKS
							HOT STAND BY	COLD SHUT DOWN	ELEC	AIR		EQUIPMENT ID NO.	EQUIPMENT DESCRIPTION	ELEC NODE	FIRE AREA/ZONE		SCHEM.	CABLE			
25	SI-V-3	Accumulator TK-9A Outlet Isolation Valve	SI-20450	A	310576	C-F-1-Z	-	X	X	-	V39	SI-B35-5-1,2	460 V AC Circuit Breakers	B35	CB-F-1A-A	B35-G81 B35-H19 B35-H36 H19-V39 H36-V39 F20-FB7/5 F20-G81/1	310890 B35a	B35c	CBA-FN-19 CBA-FN-20 EDE-MCC-522	SI-FV-2475 SI-FV-2476	
												SI-B35-FU	Fuse	B35	CB-F-1A-A						
												SI-CS-2403-2	Control Switch with Indication	G81	CB-F-1A-A						
												SI-SS-2403	Selector Switch	G81	CB-F-1A-A						
												SI-ZL-2403-4	Pilot Light	G81	CB-F-1A-A						
												SI-B35-42/O,C	Motor Starters	B35	CB-F-1A-A						
												SI-B35-49	Overload Relay	B35	CB-F-1A-A						
												SI-ZS-V3	Valve Position and Open/Close Torque Switches	V39	C-F-1-Z						
												EDE-MM-95	Electrical Penetration	H19	C-F-2-Z, ET-F-1A-A						
												EDE-MM-112	Electrical Penetration	H36	C-F-2-Z, ET-F-1A-A						
												SI-FB7-K603A,K621A	Auxiliary Relays	FB7	CB-F-3A-A						
												SI-CS-2403-1	Control Switch	F20	CB-F-3A-A						
												SI-EH9/9-52	120 V AC Circuit Breaker	EH9	CB-F-1A-A	G81-H35/5 G81-H36/6 H35-V41/1 H36-V39/1 E4H-EH9 E4H-G81 F20-G81	EH9/9a	EH9/9b	CBA-FN-19 CBA-FN-20 EDE-PP-1E		
												SI-CS-2403-2	Control Switch with Indication	G81	CB-F-1A-A						
												SI-SS-2403	Selector Switch	G81	CB-F-1A-A						
												SI-ZS-V3	Valve Position and Open/Close Torque Switches	V39	C-F-1-Z						
												SI-E4H-FU7,8	30 A Fuses	E4H	CB-F-1A-A						
												EDE-MM-112	Electrical Penetration	H36	C-F-2-Z, ET-F-1A-A						
												SI-CS-2403-1	Control Switch with Indication	F20	CB-F-3A-A						

FUNCTION: REACTOR COOLANT INVENTORY AND PRESSURE CONTROL

ITEM NO.	EQUIPMENT ID NO.	EQUIPMENT DESCRIPTION	P&ID/1-LINE DRAWING NO.	TRAIN	PHYSICAL LOCATION DRAWING NO.	FIRE AREA/ZONE	REQUIRED FOR		POWER		ELEC NODE	SUPPORTING CONTROL AND INSTRUMENTATION EQUIPMENT				CABLES	ELECTRICAL DRAWING NO.		SUPPORTING SYSTEMS	REDUNDANT COUNTERPART	REMARKS
							HOT STAND BY	COLD SHUT DOWN	ELEC	AIR		EQUIPMENT ID NO.	EQUIPMENT DESCRIPTION	ELEC NODE	FIRE AREA/ZONE		SCHEM.	CABLE			
26	SI-V-17	Accumulator TK-9B Outlet Isolation Valve	SI-20450	B	310576	C-F-1-Z	-	X	X	-	V40	SI-B36-52-1,2	460 V AC Circuit Breakers	B36	CB-F-1B-A	B36-GZ0 B36-H15 B36-H41 H15-V40 H41-V40 F20-FB0/6 F20-GZ0/1	310890 B36a	B36c	CBA-FN-32 CBA-FN-33 EDE-MCC-622	SI-FV-2482 SI-FV-2483	
												SI-B36-FU	Fuse	B36	CB-F-1B-A						
												SI-CS-2413-2	Control Switch with Indication	GZ0	CB-F-1B-A						
												SI-SS-2413	Selector Switch	GZ0	CB-F-1B-A						
												SI-ZL-2413-4	Pilot Light	GZ0	CB-F-1B-A						
												SI-B36-42/0,C	Motor Starters	B36	CB-F-1B-A						
												SI-B36-49	Overload Relay	B36	CB-F-1B-A						
												SI-ZS-V17	Valve Position and Open/Close Torque Switches	V40	C-F-1-Z						
												EDE-MM-91	Electrical Penetration	H15	C-F-1-Z, ET-F-1C-A						
												EDE-MM-117	Electrical Penetration	H41	C-F-1-Z, ET-F-1C-A						
												SI-FB0-K603B,K621B	Auxiliary Relays	FB0	CB-F-3A-A						
												SI-CS-2413-1	Control Switch with Indication	F20	CB-F-3A-A						
												SI-EH0/9-52	120 V AC Circuit Breaker	EH0	CB-F-1B-A	GZ0-H39/5 GZ0-H41/4 H39-V42/1 H41-V40/1 E4J-EH0 E4J-GZ0 F20-GZ0	EH0/9a EH0/9c	EH0/9b	CBA-FN-32 CBA-FN-33 EDE-PP-1F		
												SI-CS-2413-2	Control Switch with Indication	GZ0	CB-F-1B-A						
												SI-SS-2413	Selector Switch	GZ0	CB-F-1B-A						
												SI-ZS-V17	Valve Position and Open/Close Torque Switches	V40	C-F-1-Z						
												SI-E4J-FU7,8	30 A Fuses	E4J	CB-F-1B-A						
												EDE-MM-117	Electrical Penetration	H41	C-F-1-Z, ET-F-1C-A						
												SI-CS-2413-1	Control Switch with Indication	F20	CB-F-3A-A						

FUNCTION: REACTOR COOLANT INVENTORY AND PRESSURE CONTROL

ITEM NO.	EQUIPMENT ID NO.	EQUIPMENT DESCRIPTION	P&ID/1-LINE DRAWING NO.	TRAIN	PHYSICAL LOCATION DRAWING NO.	FIRE AREA/ZONE	REQUIRED FOR		POWER		ELEC NODE	SUPPORTING CONTROL AND INSTRUMENTATION EQUIPMENT				CABLES	ELECTRICAL DRAWING NO.		SUPPORTING SYSTEMS	REDUNDANT COUNTERPART	REMARKS
							HOT STAND BY	COLD SHUT DOWN	ELEC	AIR		EQUIPMENT ID NO.	EQUIPMENT DESCRIPTION	ELEC NODE	FIRE AREA/ZONE		SCHEM.	CABLE			
27	SI-V-32	Accumulator TK-9C Outlet Isolation Valve	SI-20450	A	310577	C-F-1-Z	-	X	X	-	V41	SI-B37-52-1,2	460 V AC Circuit Breakers	B37	CB-F-1A-A	B37-G81 B37-H18 B37-H35 H18-V41 H35-V41 F20-FB7/6 F20-G81/2	310890 B37a	B37c	CBA-FN-19 CBA-FN-20 EDE-MCC-522	SI-FV-2477 SI-FV-2486	
												SI-B37-FU	Fuse	B37	CB-F-1A-A						
												SI-CS-2423-2	Control Switch with Indication	G81	CB-F-1A-A						
												SI-SS-2423	Selector Switch	G81	CB-F-1A-A						
												SI-ZL-2423-4	Pilot Light	G81	CB-F-1A-A						
												SI-B37-42/O,C	Motor Starters	B37	CB-F-1A-A						
												SI-B37-49	Overload Relay	B37	CB-F-1A-A						
												EDE-MM-94	Electrical Penetration	H18	C-F-2-Z, ET-F-1A-A						
												EDE-MM-111	Electrical Penetration	H35	C-F-2-Z, ET-F-1A-Z						
												SI-ZS-V32	Valve Position and Open/Close Torque Switches	V41	C-F-1-Z						
												SI-FB7-K608A,K621A	Auxiliary Relays	FB7	CB-F-3A-A						
												SI-CS-2423-1	Control Switch with Indication	F20	CB-F-3A-A						
												SI-EH9/9-52	120 V AC Circuit Breaker	EH9	CB-F-1A-A	G81-H35/5 G81-H36/6 H35-V41/1 H36-V39/1 E4H-EH9 E4H-G81 F20-G81	EH9/9a	EH9/9b EH9/9c	CBA-FN-19 CBA-FN-20 EDE-PP-1E		
												SI-CS-2423-2	Control Switch with Indication	G81	CB-F-1A-A						
												SI-SS-2423	Selector Switch	G81	CB-F-1A-A						
												SI-ZS-V32	Valve Position and Open/Close Torque Switches	V41	C-F-1-Z						
												SI-E4H-FU7,8	30 A Fuses	E4H	CB-F-1A-A						
												EDE-MM-111	Electrical Penetration	H35	C-F-2-Z, ET-F-1A-A	F20-G81					
												SI-CS-2423-1	Control Switch with Indication	F20	CB-F-3A-A						

FUNCTION: REACTOR COOLANT INVENTORY AND PRESSURE CONTROL

ITEM NO.	EQUIPMENT ID NO.	EQUIPMENT DESCRIPTION	P&ID/1-LINE DRAWING NO.	TRAIN	PHYSICAL LOCATION DRAWING NO.	FIRE AREA/ZONE	REQUIRED FOR		POWER		ELEC NODE	SUPPORTING CONTROL AND INSTRUMENTATION EQUIPMENT				CABLES	ELECTRICAL DRAWING NO.		SUPPORTING SYSTEMS	REDUNDANT COUNTERPART	REMARKS
							HOT STAND BY	COLD SHUT DOWN	ELEC	AIR		EQUIPMENT ID NO.	EQUIPMENT DESCRIPTION	ELEC NODE	FIRE AREA/ZONE		SCHEM.	CABLE			
28	SI-V-47	Accumulator TK-9D Outlet Isolation Valve	SI-20450	B	310577	C-F-1-Z	-	X	X	-	V42	SI-B38-52-1,2	460 V AC Circuit Breakers	B38	CB-F-1B-A	B38-GZ0 B38-H24 B38-H39 H24-V42 H39-V42 F20-FB0/7 F20-GZ0/2	310890 B38a	B38c	CBA-FN-32 CBA-FN-33 EDE-MCC-622	SI-FV-2495 SI-FV-2496	
												SI-B38-FU	Fuse	B38	CB-F-1B-A						
												SI-CS-2433-2	Control Switch with Indication	GZ0	CB-F-1B-A						
												SI-SS-2433	Selector Switch	GZ0	CB-F-1B-A						
												SI-ZL-2433-4	Pilot Light	GZ0	CB-F-1B-A						
												SI-B38-42/0,C	Motor Starters	B38	CB-F-1B-A						
												SI-B38-49	Overload Relay	B38	CB-F-1B-A						
												SI-ZS-V47	Valve Position and Open/Close Torque Switches	V42	C-F-1-Z						
												EDE-MM-100	Electrical Penetration	H24	C-F-1-Z, ET-F-1C-A						
												EDE-MM-115	Electrical Penetration	H39	C-F-1-Z, ET-F-1C-A						
												SI-FB0-K608B,K621B	Auxiliary Relays	FB0	CB-F-3A-A						
												SI-CS-2433-1	Control Switch with Indication	F20	CB-F-3A-A						
												SI-EH0/9-52	120 V AC Circuit Breaker	EH0	CB-F-1B-A	GZ0-H39/5 GZ0-H41/4 H39-V42/1 H41-V40/1 E4J-EH0 E4J-GZ0 F20-GZ0	EH0/9a	EH0/9b EH0/9c	CBA-FN-32 CBA-FN-33 EDE-PP-1F		
												SI-CS-2433-2	Control Switch with Indication	GZ0	CB-F-1B-A						
												SI-SS-2433	Selector Switch	GZ0	CB-F-1B-A						
												SI-ZS-V47	Valve Position and Open/Close Torque Switches	V42	C-F-1-Z						
												SI-E4J-FU7,8	30 A Fuses	E4J	CB-F-1B-A						
												EDE-MM-115	Electrical Penetration	H39	C-F-1-Z, ET-F-1C-A						
												SI-CS-2433-1	Control Switch with Indication	F20	CB-F-3A-A						
29	CS-P-2A	Charging Pump Lube Oil Cooler	CS-20725	A	310764 805213	PAB-F-1C-A	X	X	-	-	-	-	-	-	-	-	-	-	Component Cooling	CS-P-2B	Note 9
30	CS-P-2B	Charging Pump Lube Oil Cooler	CS-20725	B	310764 815214	PAB-F-1D-A	X	X	-	-	-	-	-	-	-	-	-	-	Component Cooling	CS-P-2A	Note 9
31	CS-V-460	SI-P-6A Suction Valve	CS-20725	A	310761	RHR-F-2B-Z	-	X	X	-	V59	CS-B44-42/0,C	Motor Starters	B44	CB-F-1A-A	B44-F10 B44-V59/1 B44-V59/2	310891 B44a	B44c		CS-V-475	
												CS-B44-49	Overload Relays	B44	CB-F-1A-A						
												CS-ZS-V460	Limit Switches and Open/Close Torque Switches	V59	RHR-2B-Z						
												CS-CS-2442	Control Switch with Indication	F10	CB-F-3A-A						
32	CS-V-461	SI-P-6A Suction Valve	CS-20725	B	310761	RHR-F-2B-Z	-	X	X	-	V60	CS-B45-42/0,C	Motor Starters	B45	CB-F-1B-A	B45-F10 B45-V60/1 B45-V60/2	310891 B45a	B45c		None	
												CS-B45-49	Overload Relays	B45	CB-F-1B-A						
												CS-ZS-V461	Limit Switches and Open/Close Torque Switches	V60	RHR-2B-Z						
												CS-CS-2452	Control Switch with Indication	F10	CB-F-3A-A						

FUNCTION: REACTOR COOLANT INVENTORY AND PRESSURE CONTROL

ITEM NO.	EQUIPMENT ID NO.	EQUIPMENT DESCRIPTION	P&ID/1-LINE DRAWING NO.	TRAIN	PHYSICAL LOCATION DRAWING NO.	FIRE AREA/ZONE	REQUIRED FOR		POWER		ELEC NODE	SUPPORTING CONTROL AND INSTRUMENTATION EQUIPMENT				CABLES	ELECTRICAL DRAWING NO.		SUPPORTING SYSTEMS	REDUNDANT COUNTERPART	REMARKS
							HOT STAND BY	COLD SHUT DOWN	ELEC	AIR		EQUIPMENT ID NO.	EQUIPMENT DESCRIPTION	ELEC NODE	FIRE AREA/ZONE		SCHEM.	CABLE			
33	CS-V-167	RC Pump Seal Water Isolation Valve	CS-20726	A	310769	PP-F-5B-Z	X	X	X	-	V05	CS-B73-42/0,C	Motor Starters	B73	CB-F-1A-A	B73-F41 B73-V05/1 B73-V05/2 FB7-FC1/9 F41-FC1	310891 B73a	B73c		CS-V-10 CS-V-28 CS-V-44 CS-V-59 CS-V-175 CS-V-176	
												CS-B73-49	Overload Relays	B73	CB-F-1A-A						
												CS-ZS-V167	Limit Switches and Open/Close Torque Switches	V05	PP-F-5B-Z						
												CS-CS-7405	Control Switch with Indication	F41	CB-F-3A-A						
												CS-FC1-K802A	Auxiliary Relay MM-CP-14	FC1	CB-F-3A-A						
												CS-FB7-K631A	Auxiliary Relay MM-CP-12	FB7	CB-F-3A-A						
34	CS-V-168	RC Pump Seal Water Isolation Valve	CS-20726	B	310577	C-F-1-Z	X	X	X	-	V06	CS-B72-42-1,2	Motor Starters	B72	CB-F-1B-A	B72-H39 B72-F48 FB0-FC2/9 H39-V06 F48-FC2	310891 B72a	B72c		CS-V-10 CS-V-28 CS-V-44 CS-V-59 CS-V-175 CS-V-176	
												CS-B72-49-1,2	Overload Relays	B72	CB-F-1B-A						
												CS-CS-7404	Control Switch with Indication	F41	CB-F-3A-A						
												CS-ZS-V168	Limit Switches and Open/Close Torque Switches	V06	C-F-1-Z						
												CS-FC2-K802B	Auxiliary Relay MM-CP-15	FC2	CB-F-3A-A						
												CS-FB0-K631B	Auxiliary Relay MM-CP-13	FB0	CB-F-3A-A						
												CS-ED0-R1	Auxiliary Relay EDE-MCC-E612	ED0	CB-F-1B-A						
												EDE-MM-115	Electrical Penetration	H39	C-F-1-Z, ET-F-1C-A						
35	CS-V-175	Excess Letdown Isolation Valve	CS-20722	B	310577	C-F-1-Z	X	X	X	X	L95	CS-ZS-V175	Valve Position Switch	L95	C-F-1-Z	F48-H39/2 GE5-H39/1	310891 E95/2a E95/2d	E95/2c		CS-V-176	Note 2
												CS-CS-7418	Control Switch with Indication	F41	CB-F-3A-A						
												CS-FY-7418	Solenoid Valve	GE5	C-F-1-Z						
												EDE-MM-115	Electrical Penetration	H39	C-F-1-Z, ET-F-1C-A						
36	CS-V-176	Excess Letdown Isolation Valve	CS-20722	B	310577	C-F-1-Z	X	X	X	X	LA5	CS-ZS-V176	Valve Position Switch	LA5	C-F-1-Z	F48-H39/1 GE5-H39/5 GE5-LA5/1	310891 E95/4a E95/4b	E95/4d E95/4e E95/4f		CS-V-175	Note 2
												CS-FX-7417	Control Switch with Indication	F41	CB-F-1A-A						
												CS-FY-7417	Solenoid Valve	GE5	C-F-1-Z						
												EDE-MM-115	Electrical Penetration	H39	C-F-1-Z, ET-F-1C-A						

FUNCTION: REACTOR COOLANT INVENTORY AND PRESSURE CONTROL

ITEM NO.	EQUIPMENT ID NO.	EQUIPMENT DESCRIPTION	P&ID/1-LINE DRAWING NO.	TRAIN	PHYSICAL LOCATION DRAWING NO.	FIRE AREA/ZONE	REQUIRED FOR		POWER		ELEC NODE	SUPPORTING CONTROL AND INSTRUMENTATION EQUIPMENT				CABLES	ELECTRICAL DRAWING NO.		SUPPORTING SYSTEMS	REDUNDANT COUNTERPART	REMARKS
							HOT STAND BY	COLD SHUT DOWN	ELEC	AIR		EQUIPMENT ID NO.	EQUIPMENT DESCRIPTION	ELEC NODE	FIRE AREA/ZONE		SCHEM.	CABLE			
37	CS-V-196	Charging Pump Miniflow Isolation Valve	CS-20725	A	310762	PAB-F-1J-Z	X	X	X	-	V13	CS-B81-42/0,C	Motor Starters	B81	CB-F-1A-A	B81-F41 B81-F41/1 B81-V13/1 F41-FB7/2 F41-FK0 B81-V13/2	310891 B81a	B81c		CS-V-197	
												CS-B81-49	Overload Relays	B81	CB-F-1A-A						
												CS-ZS-V196	Limit Switch and Open/Close Torque Switches	V13	PAB-F-1J-Z						
												CS-CS-7421	Control Switch with Indication	F41	CB-F-3A-A						
												CS-FYY-7325	Auxiliary Relay MM-CP-297A	FK0	CB-F-3A-A						
												CS-FB7-K603A	Auxiliary Relay MM-CP-12	FB7	CB-F-3A-A						
38	CS-V-197	Charging Pump Miniflow Isolation Valve	CS-20725	B	310762	PAB-F-1J-Z	X	X	X	-	V14	CS-B86-42/0,C	Motor Starters	B86	CB-F-1B-A	B86-F48 B86-F48/1 B86-V14/1 B86-V14/2 F48-FB0/2 F48-FL2	310891 B86a B86d	B86c		CS-V-196	
												CS-B86-49	Overload Relays	B86	CB-F-1B-A						
												CS-ZS-V197	Limit Switch and Open/Close Torque Switches	V14	PAB-F-1J-Z						
												CS-CS-7422-1	Control Switch with Indication	F41	CB-F-3A-A						
												CS-FYY-7326	Auxiliary Relay MM-CP-297B	FL2	CB-F-3A-A						
												CS-FB0-K603B	Auxiliary Relay MM-CP-13	FB0	CB-F-3A-A						
												CS-CS-7422-2	Control Switch	ED0	CB-F-1B-A						
												CC-SS-7422	Selector Switch	ED0	CB-F-1B-A						
39	CS-LCV-112B	Chemical and Volume Control Tank Outlet Isolation Valve	CS-20725	A	310768	PAB-F-3B-Z	X	X	X	-	VE4	CS-B50-52	460 V AC Circuit Breaker	B50	CB-F-1A-A	B50-G2G B50-G2G/1 B50-VE4 B50-VE4/1 B50-VE4/2 F40-FB7 F40-G2G F40-G2G/1 B50-VE6 B50-E3P E3P-G2G	310891 B50a B50d	B50c B50f	CBA-FN-19 CBA-FN-20 EDE-MCC-512	CS-LCV-112C	
												CS-B50-FU	Fuse	B50	CB-F-1A-A						
												CS-CS-112B-2	Control Switch with Indication	G2G	CB-F-1A-A						
												CS-SS-112B	Selector Switch	G2G	CB-F-1A-A						
												CS-B50-42/0,C	Motor Starters	B50	CB-F-1A-A						
												CS-B50-49	Overload Relay	B50	CB-F-1A-A						
												CS-ZS-LCV-112B	Valve Position and Open/Close Torque Switches	VE4	PAB-F-3B-Z						
												CS-EC8-R1	Auxiliary Relay	EC8	CB-F-1A-A						
												CS-CS-112B-1	Control Switch with Indication	F41	CB-F-3A-A						
												CS-FB7-K701A, K602A,K706A	Auxiliary Relays MM-CP-12	FB7	CB-F-3A-A						
												CS-ZS-LCV-112D	Valve Position Switch	VE6	TF-F-1-0						
												CS-E3P-R2	Auxiliary Relay	E3P	CB-F-1A-A						

FUNCTION: REACTOR COOLANT INVENTORY AND PRESSURE CONTROL

ITEM NO.	EQUIPMENT ID NO.	EQUIPMENT DESCRIPTION	P&ID/1-LINE DRAWING NO.	TRAIN	PHYSICAL LOCATION DRAWING NO.	FIRE AREA/ZONE	REQUIRED FOR		POWER		ELEC NODE	SUPPORTING CONTROL AND INSTRUMENTATION EQUIPMENT				CABLES	ELECTRICAL DRAWING NO.		SUPPORTING SYSTEMS	REDUNDANT COUNTERPART	REMARKS
							HOT STAND BY	COLD SHUT DOWN	ELEC	AIR		EQUIPMENT ID NO.	EQUIPMENT DESCRIPTION	ELEC NODE	FIRE AREA/ZONE		SCHEM.	CABLE			
40	CS-LCV-112C	Chemical and Volume Control Tank Outlet Isolation Valve	CS-20725	B	310768	PAB-F-3B-Z	X	X	X	-	VE7	CS-B83-52	460 V AC Circuit Breaker	B83	CB-F-1B-A	B83-G2J B83-G2J/1 B83-VE7 B83-VE7/1 B83-VE7/2 B83-VE5/1 F48-FB0/1 F48-G2J/4 F48-G2J/5 B83-E3Q E3Q-G2J	310891 B83a B83c B83d B83f		CBA-FN-32 CBA-FN-33 EDE-MCC-612	CS-LCV-112B	
												CS-B83-FU	Fuses	B83	CB-F-1B-A						
												CS-CS-112C-2	Control Switch with Indication	G2J	CB-F-1B-A						
												CS-SS-112C	Selector Switch	G2J	CB-F-1B-A						
												CS-B83-42/0,C	Motor Starters	B83	CB-F-1B-A						
												CS-B83-49	Overload Relay	B83	CB-F-1B-A						
												CS-ZS-LCV-112C	Valve Position and Open/Close Torque Switches	VE7	PAB-F-3B-Z						
												CS-ED0-R1	Auxiliary Relay	ED0	CB-F-1B-A						
												CS-CS-112C-1	Control Switch with Indication	F41	CB-F-3A-A						
												CS-FB0-K701B, K602B,K706B	Auxiliary Relays MM-CP-13	FB0	CB-F-3A-A						
												CS-ZS-LCV-112E	Valve Position Switch	VE5	TF-F-1-0						
												CS-E3Q-R2	Auxiliary Relay	E3Q	CB-F-1B-A						
41	CS-LCV-112D	Refueling Water Storage Tank to Charging Pump 2A Isolation Valve	CBS-20233	A	301254	TF-F-1-0	X	X	X	-	VE6	CS-B78-52	460 V AC Circuit Breaker	B78	CB-F-1A-A	B78-G2G B78-G2G/1 B78-VE6 B78-VE6/1 B78-VE6/2 F10-FB7/4 F10-G2G/2 F10-G2G/3 B78-E3P/1	310891 B78a B78c B78d B78f		CBA-FN-19 CBA-FN-20 EDE-MCC-512	CS-LCV-112E	
												CS-CS-112D-2	Control Switch with Indication	G2G	CB-F-1A-A						
												CS-SS-112D	Selector Switch	G2G	CB-F-1A-A						
												CS-B78-42/0,C	Motor Starters	B78	CB-F-1A-A						
												CS-B78-49	Overload Relay	B78	CB-F-1A-A						
												CS-ZS-LCV-112D	Valve Position and Open/Close Torque Switches	VE6	TF-F-1-0						
												CS-EC8-R1	Auxiliary Relay	EC8	CB-F-1A-A						
												CS-B78-FU	Fuse	B78	CB-F-1A-A						
												CS-FB7-K701A, K602A, K706A	Auxiliary Relays MM-CP-12	FB7	CB-F-3A-A						
												CS-CS-112D-1	Control Switch with Indication	F10	CB-F-3A-A						
												CS-SS-112D-1	Selector Switch	F10	CB-F-3A-A						
												CS-E3P-R0	Auxiliary Relay	E3P	CB-F-1A-A						
												CS-ZS-112-C-1	Valve Position Switch	VE7	PAB-F-3B-Z	B78-E2P B78-VE6/1 VE4-VE6 VE4-VE7 (non-CASP)	E3E/3a E3E/3b				
												CS-E3P-R0	Auxiliary Relay	E3P	CB-F-1A-A						

FUNCTION: REACTOR COOLANT INVENTORY AND PRESSURE CONTROL

ITEM NO.	EQUIPMENT ID NO.	EQUIPMENT DESCRIPTION	P&ID/1-LINE DRAWING NO.	TRAIN	PHYSICAL LOCATION DRAWING NO.	FIRE AREA/ZONE	REQUIRED FOR		POWER		ELEC NODE	SUPPORTING CONTROL AND INSTRUMENTATION EQUIPMENT				CABLES	ELECTRICAL DRAWING NO.		SUPPORTING SYSTEMS	REDUNDANT COUNTERPART	REMARKS
							HOT STAND BY	COLD SHUT DOWN	ELEC	AIR		EQUIPMENT ID NO.	EQUIPMENT DESCRIPTION	ELEC NODE	FIRE AREA/ZONE		SCHEM.	CABLE			
42	CS-LCV-112E	RWST CBS-TK-8 to Charging Pump 2B Isolation Valve	CBS-20233	B	301254	TF-F-1-0	X	X	X	-	VE5	CS-B79-52	460 V AC Circuit Breaker	B79	CB-F-1B-A	B79-G2J B79-G2J/1 B79-VE5	310891 B79a B79c B79d B79f		CBA-FN-32 CBA-FN-33 EDE-MCC-612	CS-LCV-112D	
												CS-CS-112E-2	Control Switch with Indication	G2J	CB-F-1B-A	B79-VE5/1 B79-VE5/2 F10-FB0/4 F10-G2J/2 F10-G2J/3 B79-E3Q/1					
												CS-SS-112E	Selector Switch	G2J	CB-F-1B-A						
												CS-B79-42/0,C	Motor Starters	B79	CB-F-1B-A						
												CS-B79-49	Overload Relay	B79	CB-F-1B-A						
												CS-ZS-LCV-112E	Valve Position and Open/Close Torque Switches	VE5	TF-F-1-0						
												CS-ED0-R1	Auxiliary Relay	ED0	CB-F-1B-A						
												CS-B79-FU	Fuse	B79	CB-F-1B-A						
												CS-FB0-K701B, K602B, K706B	Auxiliary Relays MM-CP-13	FB0	CB-F-3A-A						
												CS-CS-112E-1	Control Switch with Indication	F10	CB-F-3A-A						
												CS-SS-112E-1	Selector Switch	F10	CB-F-3A-A						
												CS-E3Q-R0	Auxiliary Relay	E3Q	CB-F-1B-A						
												CS-ZS-112-B-1	Valve Position Switch	VE4	PAB-F-3B-Z	B79-E2Q B79-VE5//1 VE5-VE7 VE4-VE7/1 (non-CASP)	E3F/3a	E3F/3b			
												CS-E3Q-R0	Auxiliary Relay	E3Q	CB-F-1B-A						

FUNCTION: REACTOR COOLANT INVENTORY AND PRESSURE CONTROL

ITEM NO.	EQUIPMENT ID NO.	EQUIPMENT DESCRIPTION	P&ID/1-LINE DRAWING NO.	TRAIN	PHYSICAL LOCATION DRAWING NO.	FIRE AREA/ZONE	REQUIRED FOR		POWER		ELEC NODE	SUPPORTING CONTROL AND INSTRUMENTATION EQUIPMENT				CABLES	ELECTRICAL DRAWING NO.		SUPPORTING SYSTEMS	REDUNDANT COUNTERPART	REMARKS
							HOT STAND BY	COLD SHUT DOWN	ELEC	AIR		EQUIPMENT ID NO.	EQUIPMENT DESCRIPTION	ELEC NODE	FIRE AREA/ZONE		SCHEM.	CABLE			
43	SI-V-138	Charging Pump To Cold Leg Isolation Valve	SI-20447	A	310769	PP-F-1B-Z	X	X	X	-	V31	SI-B31-52	460 V AC Circuit Breaker	B31	CB-F-1A-A	B31-G2G B31-G2G/2 B31-V31 B31-V31/1 B31-V31/2 F10-FB7 F10-G2G/4 F10-G2G/5 F10-FC1 F10-FN8 F10-FB7/9 B31-FN8 B31-FN8/1	310890 B31a B31c B31d		CBA-FN-19 CBA-FN-20 EDE-MCC-521	SI-V-139 or CS-FCV-121	
												SI-CS-2437-2	Control Switch with Indication	G81	CB-F-1A-A						
												SI-SS-2437	Selector Switch	G81	CB-F-1A-A						
												SI-SS-2437-1	Selector Switch	FN8	ET-F-1B-A						
												MSO-5	Auxiliary Relay	FN8	ET-F-1B-A						
												SI-B31-42/0,C	Motor Starters	B31	CB-F-1A-A						
												SI-B31-49	Overload Relay	B31	CB-F-1A-A						
												SI-ZS-V138	Valve Position and Open/Close Torque Switches	V31	PP-F-1B-Z						
												SI-B31-FU	Fuse	B31	CB-F-1A-A						
												SI-FB7-K616A	Auxiliary Relays MM-CP-12	FB7	CB-F-3A-A						
												SI-CS-2437-1	Control Switch with Indication	F10	CB-F-3A-A						
												SI-FC1-K801A	Auxiliary Relay MM-CP-14	FC1	CB-F-3A-A						
												SI-FC1-W	Indicating Light	FC1	CB-F-3A-A						
												SI-FC1-RES	Resistor	FC1	CB-F-3A-A						
44	SI-V-139	Charging Pump To Cold Leg Isolation Valve	SI-20447	B	310769	PP-F-1B-Z	X	X	X	-	V32	SI-B32-52	460 V AC Circuit Breaker	B32	CB-F-1B-A	B32-G2J B32-G2J/2 B32-V32 B32-V32/1 B32-V32/2 F10-FB0 F10-G2J/4 F10-G2J/5 F10-FC2 F10-FB0/A F10-FN9 B32-FN9 B32-FN9/1	310890 B32a B32c B32d		CBA-FN-32 CBA-FN-33 EDE-MCC-621	SI-V-138 or CS-FCV-121	
												SI-CS-2447-2	Control Switch with Indication	GZ0	CB-F-1B-A						
												SI-SS-2447	Selector Switch	GZ0	CB-F-1B-A						
												SI-SS-2447-1	Selector Switch	FN9	ET-F-1D-A						
												MSO-5	Auxiliary Relay	FN9	ET-F-1D-A						
												SI-B32-42/0,C	Motor Starters	B32	CB-F-1B-A						
												SI-B32-49	Overload Relay	B32	CB-F-1B-A						
												SI-ZS-V139	Valve Position and Open/Close Torque Switches	V32	PP-F-1B-Z						
												SI-B32-FU	Fuses	B32	CB-F-1B-A						
												SI-FB0-K616B	Auxiliary Relays MM-CP-13	FB0	CB-F-3A-A						
												SI-CS-2447-1	Control Switch with Indication	F10	CB-F-3A-A						
												SI-FC2-K801B	Auxiliary Relay MM-CP-15	FC2	CB-F-3A-A						
												SI-FC2-W	Indicating Light	FC2	CB-F-3A-A						
												SI-FC2-RES	Resistor	FC2	CB-F-3A-A						

FUNCTION: REACTOR COOLANT INVENTORY AND PRESSURE CONTROL

ITEM NO.	EQUIPMENT ID NO.	EQUIPMENT DESCRIPTION	P&ID/1-LINE DRAWING NO.	TRAIN	PHYSICAL LOCATION DRAWING NO.	FIRE AREA/ZONE	REQUIRED FOR		POWER		ELEC NODE	SUPPORTING CONTROL AND INSTRUMENTATION EQUIPMENT				CABLES	ELECTRICAL DRAWING NO.		SUPPORTING SYSTEMS	REDUNDANT COUNTERPART	REMARKS
							HOT STAND BY	COLD SHUT DOWN	ELEC	AIR		EQUIPMENT ID NO.	EQUIPMENT DESCRIPTION	ELEC NODE	FIRE AREA/ZONE		SCHEM.	CABLE			
45	RC-E-10	Pressurizer Heaters Group C	RC-20846	A	310598	C-F-1-Z	X	-	X	-	M26	RC-AG4-52	480 V AC Circuit Breaker	AG4	CB-F-1A-A	F31-FB1/3 AG4-F31	310882 AG4a AG4d AG4f	AG4b AG4e		None	
												RC-AG4-FU	Fuses	AG4	CB-F-1A-A						
												RC-CS-7321	Control Switch with Indication	F31	CB-F-3A-A						
												RC-AG4-52H-1	Truck Operated Contact	AG4	CB-F-1A-A						
												RC-AG4-G,R	Indicating Lights	AG4	CB-F-1A-A						
												RC-FB1-LYY-459 EXA	High Level Auxiliary Relay	FB1	CB-F-3A-A						
												RC-FB1-LYY-459 CXA	Low Level Auxiliary Relay	FB1	CB-F-3A-A						
												RC-FB1-LYY-460 DXA	Low Level Auxiliary Relay	FB1	CB-F-3A-A						
												RC-FB1-PYY-455 GXA	Low Pressure Auxiliary Relay	FB1	CB-F-3A-A						
46	RC-E-10	Pressurizer Heaters Group D	RC-20846	A	310598	C-F-1-Z	X	-	X	-	M26	RC-AM5-52	480 V AC Circuit Breaker	AM5	CB-F-1A-A	F31-FB2/2 AM5-F31	310882 AM5a AM5b	AM5d AM5e AM5f		None	
												RC-AM5-FU	Fuses	AM5	CB-F-1A-A						
												RC-AM5-52H-1	Truck Operated Contact	AM5	CB-F-1A-A						
												RC-AM5-G,R	Indicating Lights	AM5	CB-F-1A-A						
												RC-CS-7322	Control Switch with Indication	F31	CB-F-3A-A						
												RC-FB2-PYY-455 GXB	Low Pressure Auxiliary Relay	FB2	CB-F-3A-A						
												RC-FB2-LYY-459 CXB	Low Level Auxiliary Relay	FB2	CB-F-3A-A						
												RC-FB2-LYY-459 EXB	High Level Auxiliary Relay	FB2	CB-F-3A-A						
												RC-FB2-LYY-460 DXB	Low Level Auxiliary Relay	FB2	CB-F-3A-A						
												RC-FB2-LYY-459 CXB	Low Level Auxiliary Relay	FB2	CB-F-3A-A						

FUNCTION: REACTOR COOLANT INVENTORY AND PRESSURE CONTROL

ITEM NO.	EQUIPMENT ID NO.	EQUIPMENT DESCRIPTION	P&ID/1-LINE DRAWING NO.	TRAIN	PHYSICAL LOCATION DRAWING NO.	FIRE AREA/ZONE	REQUIRED FOR		POWER		ELEC NODE	SUPPORTING CONTROL AND INSTRUMENTATION EQUIPMENT				CABLES	ELECTRICAL DRAWING NO.		SUPPORTING SYSTEMS	REDUNDANT COUNTERPART	REMARKS
							HOT STAND BY	COLD SHUT DOWN	ELEC	AIR		EQUIPMENT ID NO.	EQUIPMENT DESCRIPTION	ELEC NODE	FIRE AREA/ZONE		SCHEM.	CABLE			
47	CBS-P-9A	Containment Spray Pump	CBS-20233	A	310761	RHR-F-1B-Z	X	-	X	-	M15	CBS-A61-52	4160 V AC Circuit Breaker	A61	CB-F-1A-A	A61-F20/1 A61-F20/2 A61-HR9 F20-FB7/1 HR2-HR9	310900 A61a A61c A61h	A61b A61d		None	
												CBS-A61-AM	Ammeter	A61	CB-F-1A-A						
												CBS-A61-AS	Ammeter Switch	A61	CB-F-1A-A						
												CBS-A61-50/51	Overcurrent Relay	A61	CB-F-1A-A						
												CBS-A61-CT	Current Transformer (100/5)	A61	CB-F-1A-A						
												CBS-CS-2300	Control Switch with Indication	F20	CB-F-3A-A						
												CBS-AU2-52S	Circuit Breaker Operated Contact	AU2	CB-F-1A-A						
												CBS-A61-86	Lockout Relay	A61	CB-F-1A-A						
												CBS-A61-G,R,W	Indicating Lights	A61	CB-F-1A-A						
												CBS-A61-52Z	Timing Relay	A61	CB-F-1A-A						
												CBS-A61-R1,R2	Auxiliary Relays	A61	CB-F-1A-A						
												CBS-FB7-K644A	Auxiliary Relay MM-CP-12	FB7	CB-F-3A-A						
												CBS-HR2-RM0	Emergency Power Sequence Relay	HR2	CB-F-1A-A						
												CBS-HR9-SR3,LR8	Emergency Power Sequence Relay	HR9	CB-F-1A-A						
												CBS-A53-94-1B	Bus Undervoltage Trip Relay	A53	CB-F-1A-A						
												CBS-A61-TD1	Test Device	A61	CB-F-1A-A						
												CBS-A61-TD2	Test Device	A61	CB-F-1A-A						
												CBS-A61-52H	Truck Operated Contact	A61	CB-F-1A-A						
												CBS-A61-CS	Control Switch	A61	CB-F-1A-A						
												CBS-A61-51GS	Ground Sensor Relay	A61	CB-F-1A-A						

FUNCTION: REACTOR COOLANT INVENTORY AND PRESSURE CONTROL

ITEM NO.	EQUIPMENT ID NO.	EQUIPMENT DESCRIPTION	P&ID/1-LINE DRAWING NO.	TRAIN	PHYSICAL LOCATION DRAWING NO.	FIRE AREA/ZONE	REQUIRED FOR		POWER		ELEC NODE	SUPPORTING CONTROL AND INSTRUMENTATION EQUIPMENT				CABLES	ELECTRICAL DRAWING NO.		SUPPORTING SYSTEMS	REDUNDANT COUNTERPART	REMARKS
							HOT STAND BY	COLD SHUT DOWN	ELEC	AIR		EQUIPMENT ID NO.	EQUIPMENT DESCRIPTION	ELEC NODE	FIRE AREA/ZONE		SCHEM.	CABLE			
48	CBS-P-9B	Containment Spray Pump	CBS-20233	B	310761	RHR-F-1A-Z	X	-	X	-	M16	CBS-A81-52	4160 V AC Circuit Breaker	A81	CB-F-1B-A	A81-F20/1 A81-F20/2 A81-HR0 F20-FB0/1 HR4-HR0	310900				
																	A81a	A81b			
																	A81c	A81d			
																	A81h				
												CBS-A81-AM	Ammeter	A81	CB-F-1B-A						
												CBS-A81-AS	Ammeter Switch	A81	CB-F-1B-A						
												CBS-A81-50/51	Overcurrent Relay	A81	CB-F-1B-A						
												CBS-A81-CT1	Current Transformer (100/5)	A81	CB-F-1B-A						
												CBS-CS-2301	Control Switch with Indication	F20	CB-F-3A-A						
												CBS-HR4-RM0	Emergency Power Sequence Relay	HR4	CB-F-1B-A						
												CS-HR0-SR3,LR8	Emergency Power Sequence Relay	HR0	CB-F-1B-A						
												CBS-AU6-52S	Circuit Breaker Operated Contact	AU6	CB-F-1B-A						
												CBS-A73-94-1B	Bus Undervoltage Trip Relay	A73	CB-F-1B-A						
												CBS-FB0-R644B	Auxiliary Relay MM-CP-13	FB0	CB-F-3A-A						
												CBS-A81-86	Lockout Relay	A81	CB-F-1B-A						
												CBS-A81-G,R,W	Indicating Lights	A81	CB-F-1B-A						
												CBS-A81-52Z	Timing Relay	A81	CB-F-1B-A						
												CBS-A81-R1,R2	Auxiliary Relays	A81	CB-F-1B-A						
												CBS-A81-TD1	Test Device	A81	CB-F-1B-A						
												CBS-A81-TD2	Test Device	A81	CB-F-1B-A						
												CBS-A81-52H	Truck Operated Contact	A81	CB-F-1B-A						
												CBS-A81-CS	Control Switch	A81	CB-F-1B-A						
												CBS-A81-51GS	Ground Sensor Relay	A81	CB-F-1B-A						

FUNCTION: REACTOR COOLANT INVENTORY AND PRESSURE CONTROL

ITEM NO.	EQUIPMENT ID NO.	EQUIPMENT DESCRIPTION	P&ID/1-LINE DRAWING NO.	TRAIN	PHYSICAL LOCATION DRAWING NO.	FIRE AREA/ZONE	REQUIRED FOR		POWER		ELEC NODE	SUPPORTING CONTROL AND INSTRUMENTATION EQUIPMENT				CABLES	ELECTRICAL DRAWING NO.		SUPPORTING SYSTEMS	REDUNDANT COUNTERPART	REMARKS
							HOT STAND BY	COLD SHUT DOWN	ELEC	AIR		EQUIPMENT ID NO.	EQUIPMENT DESCRIPTION	ELEC NODE	FIRE AREA/ZONE		SCHEM.	CABLE			
49	SI-P-6A	Safety Injection Pump	SI-20446	A	310761	RHR-F-2B-Z	-	X	X	-	M09	SI-A56-52	4160 V AC Circuit Breaker	A56	CB-F-1A-A	A56-F10 F10-FB7/2 A56-F10/2 A56-HR9	310890 A56a A56c A56h	A56b A56d		None	
												SI-A56-AM	Ammeter	A56	CB-F-1A-A						
												SI-A56-AS	Ammeter Switch	A56	CB-F-1A-A						
												SI-A56-50/51	Overcurrent Relay	A56	CB-F-1A-A						
												SI-A53-94-1A	Bus Undervoltage Trip Relay	A53	CB-F-1A-A						
												SI-A56-CT	Current Transformer (100/5)	A56	CB-F-1A-A						
												SI-CS-2449	Control Switch with Indication	F10	CB-F-3A-A						
												SI-FB7-K601A	Auxiliary Relay MM-CP-12	FB7	CB-F-3A-A						
												SI-HR9-RM0,SR1	Emergency Power Sequence Relays	HR9	CB-F-1A-A						
												SI-A56-TD1	Test Device	A56	CB-F-1A-A						
												SI-A56-TD2	Test Device	A56	CB-F-1A-A						
												SI-A56-51GS	Ground Sensor Relay	A56	CB-F-1A-A						
												SI-A56-86	Lockout Relay	A56	CB-F-1A-A						
												SI-A56-G,R,W	Indicating Lights	A56	CB-F-1A-A						
												SI-A56-CS	Control Switch	A56	CB-F-1A-A						
												SI-A56-52Z	Timing Relay	A56	CB-F-1A-A						
												SI-A56-52H	Truck Operated Contact	A56	CB-F-1A-A						
50	SI-P-6B	Safety Injection	SI-20446	B	310761	RHR-F-2A-Z	-	X	X	-	M10	SI-A76-52	4160 V AC Circuit Breaker	A76	CB-F-1B-A	A76-F10 F10-FB0/1 A76-F10/2 A76-HR0	310890 A76a A76c A76h	A76b A76d		None	
												SI-A76-AM	Ammeter	A76	CB-F-1B-A						
												SI-A76-AS	Ammeter Switch	A76	CB-F-1B-A						
												SI-A76-50/51	Overcurrent Relay	A76	CB-F-1B-A						
												SI-A73-94-1A	Bus Undervoltage Trip Relay	A73	CB-F-1B-A						
												SI-A76-CT	Current Transformer (100/5)	A76	CB-F-1B-A						
												SI-CS-2459	Control Switch with Indication	F10	CB-F-3A-A						
												SI-FB0-K610B	Auxiliary Relay MM-CP-13	FB0	CB-F-3A-A						
												SI-HR0-RM0,SR1	Emergency Power Sequence Relays	HR0	CB-F-1B-A						
												SI-A76-TD1	Test Device	A76	CB-F-1B-A						
												SI-A76-TD2	Test Device	A76	CB-F-1B-A						
												SI-A76-51GS	Ground Sensor Relay	A76	CB-F-1B-A						
												SI-A76-86	Lockout Relay	A76	CB-F-1B-A						
												SI-A76-G,R,W	Indicating Lights	A76	CB-F-1B-A						
												SI-A76-CS	Control Switch	A76	CB-F-1B-A						
												SI-A76-52Z	Timing Relay	A76	CB-F-1B-A						
												SI-A76-52H	Truck Operated Contact	A76	CB-F-1B-A						

FUNCTION: REACTOR COOLANT INVENTORY AND PRESSURE CONTROL

ITEM NO.	EQUIPMENT ID NO.	EQUIPMENT DESCRIPTION	P&ID/1-LINE DRAWING NO.	TRAIN	PHYSICAL LOCATION DRAWING NO.	FIRE AREA/ZONE	REQUIRED FOR		POWER		ELEC NODE	SUPPORTING CONTROL AND INSTRUMENTATION EQUIPMENT				CABLES	ELECTRICAL DRAWING NO.		SUPPORTING SYSTEMS	REDUNDANT COUNTERPART	REMARKS
							HOT STAND BY	COLD SHUT DOWN	ELEC	AIR		EQUIPMENT ID NO.	EQUIPMENT DESCRIPTION	ELEC NODE	FIRE AREA/ZONE		SCHEM.	CABLE			
51	SI-FV-2482 SI-FV-2483	Accumulator TK-9B Relief Valve	SI-20450 SI-20450	A A	310576 310576	C-F-1-Z C-F-1-Z	- -	X X	X X	- -	V3B V3C	SI-E4H-FU	Fuse	E4H	CB-F-1A-A	E2T-E4H/2 E4H-G81/2 F20-G81/4	310890 E2T/7a E2T/7c	E2T/7b E2T/7d	EDE-PP-113A	SI-V-17 SI-V-47	
	SI-FV-2495 SI-FV-2496	Accumulator TK-9D Relief Valve	SI-20450 SI-20450	A A	310577 310577	C-F-1-Z C-F-1-Z	- -	X X	X X	- -	V3F V3G	SI-SS-2482	Selector Switch	G81	CB-F-1A-A	F20-G81/5 F20-G81/6 G81-H35/6 G81-H35/7 G81-H36/9 G81-H36/A H35-V3B H35-V3C H36-V3F H36-V3G	E2T/7f E2T/7h	E2T/7g			
												SI-CS-2482-1	Control Switch with Indication	F20	CB-F-3A-A						
												SI-CS-2482-2	Control Switch with Indication	G81	CB-F-1A-A						
												SI-CS-2483	Control Switch with Indication	G81	CB-F-1A-A						
												SI-CS-2495-1	Control Switch with Indication	F20	CB-F-3A-A						
												SI-CS-2495-2	Control Switch with Indication	G81	CB-F-1A-A						
												SI-CS-2496	Control Switch with Indication	F20	CB-F-3A-A						
												EDE-MM-111	Electrical Penetration	H35	C-F-2-Z, ET-F-1A-A						
												EDE-MM-112	Electrical Penetration	H36	C-F-2-Z, ET-F-1A-A						
												SI-CS-2482-1X	Auxiliary Relay	F20	CB-F-3A-A						
												SI-CS-2483-X	Auxiliary Relay	F20	CB-F-3A-A						
												SI-CS-2495-1X	Auxiliary Relay	F20	CB-F-3A-A						
												SI-CS-2496-X	Auxiliary Relay	F20	CB-F-3A-A						

FUNCTION: REACTOR COOLANT INVENTORY AND PRESSURE CONTROL

ITEM NO.	EQUIPMENT ID NO.	EQUIPMENT DESCRIPTION	P&ID/1-LINE DRAWING NO.	TRAIN	PHYSICAL LOCATION DRAWING NO.	FIRE AREA/ZONE	REQUIRED FOR		POWER		ELEC NODE	SUPPORTING CONTROL AND INSTRUMENTATION EQUIPMENT				CABLES	ELECTRICAL DRAWING NO.		SUPPORTING SYSTEMS	REDUNDANT COUNTERPART	REMARKS
							HOT STAND BY	COLD SHUT DOWN	ELEC	AIR		EQUIPMENT ID NO.	EQUIPMENT DESCRIPTION	ELEC NODE	FIRE AREA/ZONE		SCHEM.	CABLE			
52	SI-FV-2475 SI-FV-2476 SI-FV-2477 SI-FV-2486	Accumulator TK-9A Relief Valves Accumulator TK-9C Relief Valves	SI-20450 SI-20450 SI-20450 SI-20450	B B B B	310576 310576 310577 310577	C-F-1-Z C-F-1-Z C-F-1-Z C-F-1-Z	- - - -	X X X X	X X X X	- - - -	V2Z V3A V3D V3E	SI-E4C-FU	Fuse	E4C	CB-F-1B-A	E2U-E4C/3 E4C-GZ0/1 F20-GZ0/4 F20-GZ0/5 F20-GZ0/6 GZ0-H39/6 GZ0-H39/7 GZ0-H41/5 GZ0-H41/6 H39-V2Z H39-V3A H41-V3D H41-V3E	310890 E2U/7a E2U/7b E2U/7c E2U/7d E2U/7f E2U/7g E2U/7h		EDE-PP-113B	SI-V-3 SI-V-32	
												SI-SS-2475	Selector Switch	GZ0	CB-F-1B-A						
												SI-CS-2475-1	Control Switch with Indication	F20	CB-F-3A-A						
												SI-CS-2475-2	Control Switch with Indication	GZ0	CB-F-1B-A						
												SI-CS-2476	Control Switch with Indication	F20	CB-F-3A-A						
												SI-CS-2477-1	Control Switch with Indication	F20	CB-F-3A-A						
												SI-CS-2477-2	Control Switch with Indication	GZ0	CB-F-1B-A						
												SI-CS-2486	Control Switch with Indication	F20	CB-F-3A-A						
												EDE-MM-115	Electrical Penetration	H39	C-F-1-Z, ET-F-1C-A						
												EDE-MM-117	Electrical Penetration	H41	C-F-1-Z, ET-F-1C-A						
												SI-CS-2475-1X	Auxiliary Relay	F20	CB-F-3A-A						
												SI-CS-2476-X	Auxiliary Relay	F20	CB-F-3A-A						
												SI-CS-2477-1X	Auxiliary Relay	F20	CB-F-3A-A						
												SI-CS-2486-X	Auxiliary Relay	F20	CB-F-3A-A						
53	CS-V-475	SI-CS-P-6A Suction Cross Connection Valve	CS-20725	B	310761	RHR-F-2B-Z	-	X	X	-	V52	CS-B46-52	460 V AC Circuit Breakers	B46	CB-F-1B-A	B46-V52 B46-V52/1 B46-V52/2 B46-F10 B46-F10/1	310891 B46a B46c		EDE-MCC-612	None	
												CS-B46-CPT	Control Power Transformer	B46	CB-F-1B-A						
												CS-B46-42/O,C	Motor Starter	B46	CB-F-1B-A						
												CS-B46-49	Overload Relays	B46	CB-F-1B-A						
												CS-B46-FU	Fuse	B46	CB-F-1B-A						
												CS-CS-2478	Control Switch with Indication	F10	CB-F-3A-A						
54	CS-FT-121 CS-FCV-121	Pressurizer Level Control - Flow	CS-20725	A	310763 310762	PAB-F-1A-Z PAB-F-1J-Z	X X	X X	X X	- x	S1E S82	CS-FQY-121	Power Supply	FA7	CB-F-3A-A	FA7-S1E FA7-S42 F41-FA7 F47-FA7 FA7-S82	310891 FP55321 310940 Sh. 23 FA7a Sh. 24 Sh. 25		MM-CP-7 ED-PP-3C Inst. Air	SI-V-139	
												CS-FI-121B	Flow Indicator	S42	PAB-F-1E-A						
												CS-FY-121A	Square Root Extractor	FA7	CB-F-3A-A						
												CS-FC-121	Controller	FA7	CB-F-3A-A						
												CS-FCY-121	Driver (Auto)	FA7	CB-F-3A-A						
												CS-FCY-121A	Driver (Manual)	FA7	CB-F-3A-A						
												CS-FK-121	Manual/Auto Control Station	F41	CB-F-3A-A						
												CS-FY-121C	Relays	FA7	CB-F-3A-A						
												CS-FB-121A/B	Comparator	FA7	CB-F-3A-A						
												CS-FI-121A	Flow Indicator	F41	CB-F-3A-A						
												CS-FY-121B	I/D Converter	S82	PAB-F-1J-Z						

FUNCTION: REACTOR COOLANT INVENTORY AND PRESSURE CONTROL

ITEM NO.	EQUIPMENT ID NO.	EQUIPMENT DESCRIPTION	P&ID/1-LINE DRAWING NO.	TRAIN	PHYSICAL LOCATION DRAWING NO.	FIRE AREA/ZONE	REQUIRED FOR		POWER		ELEC NODE	SUPPORTING CONTROL AND INSTRUMENTATION EQUIPMENT				CABLES	ELECTRICAL DRAWING NO.		SUPPORTING SYSTEMS	REDUNDANT COUNTERPART	REMARKS
							HOT STAND BY	COLD SHUT DOWN	ELEC	AIR		EQUIPMENT ID NO.	EQUIPMENT DESCRIPTION	ELEC NODE	FIRE AREA/ZONE		SCHEM.	CABLE			
55	SI-V-158	Charging Pump Test Line Isolation Valve	SI-20447	B	310577	C-F-1-Z	-	X	X	X	L89	SI-CS-2416	Control Switch with Indication	F26	CB-F-3A-A	F26-H39/9 GE5-H39/7 GE5-L89	310890 E88/7f E88/7a E88/7b	E88/7d E88/7e E88/7g		None	
												EDE-MM-115	Electrical Penetration	H39	C-F-1-Z, ET-F-1C-A						
												SI-ZS-V158	Valve Position Switches	L89	C-F-1-Z						
												SI-FY-2416	Solenoid Valve	GE5	C-F-1-Z						
56	SI-V-159	Charging Pump Test Line Isolation Valve	SI-20447	A	310577	C-F-1-Z	-	X	X	X	L90	SI-CS-2406	Control Switch with Indication	F26	CB-F-3A-A	F26-H36/5 GE5-H36/5 GE5-L90	310890 E89/4d E89/4a E89/4b E89/4c	E89/4g E89/4h E89/4i E89/4j E89/4k		None	
												EDE-MM-11	Electrical Penetration	H36	C-F-2-Z, ET-F-1A-A						
												SI-ZS-V159	Valve Position Switches	L90	C-F-1-Z						
												SI-FY-2406	Solenoid Valve	GE5	C-F-1-Z						
57	CS-HCV-182	Charging Line Control Valve	CS-20722	A	310763	PAB-F-1A-Z	X	X	X	X	-	EDE-EH9-52	120 V AC Circuit Breaker	EH9	CB-F-1A-A	EH9-F20/2 F40-GP5	310105 EH9a	EH9b	EDE-PP-1E Inst. Air	CS-V-143	
												MM-UQ-771A	Power Supply	F41	CB-F-3A-A		310891 F41c	F41c			
												CS-HC-182	Manual Controller	F41	CB-F-3A-A		310940 EH9/7				
58	CS-V-154	RC Pump ID Seal Injection Isolation Valve	CS-20726	A	310769	PP-F-5B-Z	X	X	X	-	V18	CS-CS-7409-1	Control Switch with Indication	F41	CB-F-3A-A	B77-V18/1 B77-V18/2 B77-F41 B77-F41/1 B77-E3P	310891 B77a	B77c	CBA-FN-19 CBA-FN-20 EAH-FN-5A	SI-V-139	
												CS-CS-7409-2	Control Switch with Indication	B77	CB-F-1A-A						
												CS-SS-7409	Selector Switch	B77	CB-F-1A-A						
												CS-B77-42/C	Motor Starter	B77	CB-F-1A-A						
												CS-B77-49	Overload Relays	B77	CB-F-1A-A						
												CS-ZS-V154	Valve Position and Torque Switch	V18	PP-F-5B-Z						
												CS-B77-R1	Aux. Relay	E3P	CB-F-1A-A						
59	CS-V-158	RC Pump 1C Seal Injection Isolation Valve	CS-20726	A	310769	PP-F-5B-Z	X	X	X	-	V17	CS-CS-7408-1	Control Switch with Indication	F41	CB-F-3A-A	B76-V17/1 B76-V17/2 B76-F41 B76-F41/1 B76-E3P	310891 B76a	B76c	CBA-FN-19 CBA-FN-20 EAH-FN-5A	SI-V-139	
												CS-CS-7408-2	Control Switch with Indication	B76	CB-F-1A-A						
												CS-SS-7408	Selector Switch	B76	CB-F-1A-A						
												CS-B76-42/0,C	Motor Starter	B76	CB-F-1A-A						
												CS-B76-49	Overload Relays	B76	CB-F-1A-A						
												CS-ZS-V158	Valve Position and Torque Switch	V17	PP-F-5B-Z						
												CS-B76-R1	Aux. Relay	E3P	CB-F-1A-A						
60	CS-V-162	PC Pump 1B Seal Injection Isolation	CS-20726	A	310769	PP-F-1A-Z	X	X	X	-	V16	CS-CS-7407-1	Control Switch with Indication	F41	CB-F-3A-A	B75-V16/1 B75-V16/2 B75-F41 B75-F41/1	310891 B75a	B75c	CBA-FN-19 CBA-FN-20 EAH-FN-5A	SI-V-139	
												CS-CS-7407-2	Control Switch with Indication	B75	CB-F-1A-A						
												CS-SS-7407	Selector Switch	B75	CB-F-1A-A						
												CS-B75-42/0,C	Motor Starters	B75	CB-F-1A-A						
												CS-B75-49	Overload Relays	B75	CB-F-1A-A						
												CS-ZS-V162	Valve Position and Torque Switches	V16	PP-F-1A-Z						

FUNCTION: REACTOR COOLANT INVENTORY AND PRESSURE CONTROL

ITEM NO.	EQUIPMENT ID NO.	EQUIPMENT DESCRIPTION	P&ID/1-LINE DRAWING NO.	TRAIN	PHYSICAL LOCATION DRAWING NO.	FIRE AREA/ZONE	REQUIRED FOR		POWER		ELEC NODE	SUPPORTING CONTROL AND INSTRUMENTATION EQUIPMENT				CABLES	ELECTRICAL DRAWING NO.		SUPPORTING SYSTEMS	REDUNDANT COUNTERPART	REMARKS
							HOT STAND BY	COLD SHUT DOWN	ELEC	AIR		EQUIPMENT ID NO.	EQUIPMENT DESCRIPTION	ELEC NODE	FIRE AREA/ZONE		SCHEM.	CABLE			
61	CS-V-166	RC Pump 1A Seal Injection Isolation Valve	CS-20726	A	310769	PP-F-1A-Z	X	X	X	-	V15	CS-CS-7406-1	Control Switch with Indication	F41	CB-F-3A-A	B74-V15/1 B74-V15/2 B74-F41 B74-F41/1	310891 B74a B74c			CBA-FN-19 CBA-FN-20 EAH-FN-5A	SI-V-139	
												CS-CS-7406-2	Control Switch with Indication	B74	CB-F-1A-A						
												CS-SS-7406	Selector Switch	B74	CB-F-1A-A						
												CS-B74-42/0,C	Motor Starters	B74	CB-F-1A-A						
												CS-B74-49	Overload Relays	B74	CB-F-1A-A						
												CS-ZS-V166	Valve Position and Torque Switches	V15	PP-F-1A-Z						
62	CS-E-5A	Seal Water Heat Exchanger	CS-20726	A	310764	PAB-F-1A-Z	X	X	-	-	-	-	-	-	-	-	-	-	-	CS-E-5B	Note 1
63	CS-E-5B	Seal Water Heat Exchanger	CS-20726	A	310764	PAB-F-1A-Z	X	X	-	-	-	-	-	-	-	-	-	-	-	CS-E-5A	Note 1

FUNCTION: REACTOR COOLANT INVENTORY AND PRESSURE CONTROL

ITEM NO.	EQUIPMENT ID NO.	EQUIPMENT DESCRIPTION	P&ID/1-LINE DRAWING NO.	TRAIN	PHYSICAL LOCATION DRAWING NO.	FIRE AREA/ZONE	REQUIRED FOR		POWER		ELEC NODE	SUPPORTING CONTROL AND INSTRUMENTATION EQUIPMENT				CABLES	ELECTRICAL DRAWING NO.		SUPPORTING SYSTEMS	REDUNDANT COUNTERPART	REMARKS
							HOT STAND BY	COLD SHUT DOWN	ELEC	AIR		EQUIPMENT ID NO.	EQUIPMENT DESCRIPTION	ELEC NODE	FIRE AREA/ZONE		SCHEM.	CABLE			
64	CS-V-10 CS-V-28 CS-V-44 CS-V-59	Reactor Coolant Pumps Seal Leakoff Isolation	CS-20726 CS-20726 CS-20726 CS-20726	A A A A	310576 310576 310583 310577	C-F-1-Z C-F-1-Z C-F-1-Z C-F-1-Z	X X X X	X X X X	X X X X	X X X X	LA6 LA7 LA8 LA9	EDE-E89-72	125 V DC Circuit Breakers	E89	CB-F-1A-A	E89-E4F/1 E4F-F38 F31-H36/2 F38-H36 GA4-H36/4	310891 E89/7a E89/7b E89/7c	E89/7e E89/7f E89/7g	ED-PP-122B Inst. Air	CS-V-167 CS-V-168	
												CS-E4F-FU-5,6,7,8	Fuses	E4F	CB-F-1A-A	GA4-LA6/1 GE5-H36/6 GE5-H36/7 GE4-H35/3 GA5-H35/3 F41-H36/3 F38-H35/3 F38-H35/2 GA5-LA7/1 GE4-LA8/1 GE5-LA9/1 GE5-L96/1 GE5-L98/1					
												CS-CS-7400	Control Switch with Indication	F31	CB-F-3A-A						
												CS-CS-7400-1X	Auxiliary Relay	F31	CB-F-3A-A						
												EDE-MM-112	Electrical Penetration	H36	C-F-2-Z, ET-F-1A-A						
												CS-FY-7400	Solenoid Valve	GA4	C-F-1-Z						
												CS-ZS-V10	Valve Position Switches	LA6	C-F-1-Z						
												CS-CS-7401	Control Switch with Indication	F31	CB-F-3A-A						
												CS-CS-7401-1X	Auxiliary Relay	F31	CB-F-3A-A						
												EDE-MM-111	Electrical Penetration	H35	C-F-2-Z, ET-F-1A-A						
												CS-FY-7401	Solenoid Valve	GA5	C-F-1-Z						
												CS-ZS-V28	Valve Position Switches	LA7	C-F-1-Z						
												CS-CS-7402	Control Switch with Indication	F31	CB-F-3A-A						
												CS-CS-7402-1X	Auxiliary Relay	F31	CB-F-3A-A						
												CS-FY-7402	Solenoid Valve	GE4	C-F-1-Z						
												CS-ZS-V44	Valve Position Switches	LA8	C-F-1-Z						
												CS-CS-7403	Control Switch with Indication	F31	CB-F-3A-A						
												CS-CS-7403-1X	Auxiliary Relay	F31	CB-F-3A-A						
												CS-FY-7403	Solenoid Valve	GE5	C-F-1-Z						
												CS-ZS-V59	Valve Position Switches	LA9	C-F-1-Z						
												CS-CS-7413	Control Switch with Indication	F41	CB-F-3A-A						
												CS-FY-7413	Solenoid Valve	GE5	C-F-1-Z						
												CS-ZS-V177	Valve Position Switches	L96	C-F-1-Z						
												CS-CS-7414	Control Switch with Indication	F31	CB-F-3A-A						
												CS-FY-7414	Solenoid Valve	GE5	C-F-1-Z						
												CS-ZS-V185	Valve Position Switches	L98	C-F-1-Z						
												CS-CS-7403	Control Switch with Indication	F31	CB-F-3A-A						
												CS-CS-7403-1X	Auxiliary Relay	F31	CB-F-3A-A						
												CS-FY-7403	Solenoid Valve	GE5	C-F-1-Z						
												CS-ZS-V59	Valve Position Switches	LA9	C-F-1-Z						
												CS-CS-7413	Control Switch with Indication	F41	CB-F-3A-A						
												CS-FY-7413	Solenoid Valve	GE5	C-F-1-Z						

FUNCTION: REACTOR COOLANT INVENTORY AND PRESSURE CONTROL

ITEM NO.	EQUIPMENT ID NO.	EQUIPMENT DESCRIPTION	P&ID/1-LINE DRAWING NO.	TRAIN	PHYSICAL LOCATION DRAWING NO.	FIRE AREA/ZONE	REQUIRED FOR		POWER		ELEC NODE	SUPPORTING CONTROL AND INSTRUMENTATION EQUIPMENT				CABLES	ELECTRICAL DRAWING NO.		SUPPORTING SYSTEMS	REDUNDANT COUNTERPART	REMARKS
							HOT STAND BY	COLD SHUT DOWN	ELEC	AIR		EQUIPMENT ID NO.	EQUIPMENT DESCRIPTION	ELEC NODE	FIRE AREA/ZONE		SCHEM.	CABLE			
64	CS-V-10 CS-V-28 CS-V-44 CS-V-59 (Continued)	Reactor Coolant Pumps Seal Leakoff Isolation										CS-ZS-V177	Valve Position Switches	L96	C-F-1-Z						
												CS-CS-7414	Control Switch with Indication	F31	CB-F-3A-A						
												CS-FY-7414	Solenoid Valve	GE5	C-F-1-Z						
												CS-ZS-V185	Valve Position Switches	L98	C-F-1-Z						

FUNCTION: REACTOR COOLANT INVENTORY AND PRESSURE CONTROL

ITEM NO.	EQUIPMENT ID NO.	EQUIPMENT DESCRIPTION	P&ID/1-LINE DRAWING NO.	TRAIN	PHYSICAL LOCATION DRAWING NO.	FIRE AREA/ZONE	REQUIRED FOR		POWER		ELEC NODE	SUPPORTING CONTROL AND INSTRUMENTATION EQUIPMENT				CABLES	ELECTRICAL DRAWING NO.		SUPPORTING SYSTEMS	REDUNDANT COUNTERPART	REMARKS
							HOT STAND BY	COLD SHUT DOWN	ELEC	AIR		EQUIPMENT ID NO.	EQUIPMENT DESCRIPTION	ELEC NODE	FIRE AREA/ZONE		SCHEM.	CABLE			
65	CS-V-145	Letdown Heat Exchanger E-2 to E-8 Isolation Valve	CS-20722	A	310577	C-F-1-Z	X	X	X	X	LH2	CS-CS-7447	Control Switch with Indication	F40	CB-F-3A-A	F40-FB1/1 F40-H36/2 GE4-H36/1 GE4-LF7/2 GE5-H36/8 GE5-L99/1 GE5-LH2/3 FB1-F59	310891 E97/11a E97/11b E97/11c E97/11d	E97/11g E97/11h E97/11i E97/11j E98/11k		RC-LCV-459 RC-LCV-460	
												RC-LY/459CX1	Low Level Auxiliary Relay	FB1	CB-F-3A-A						
												RC-LY/460DX1	Low Level Auxiliary Relay	FB1	CB-F-3A-A						
												EDE-MM-112	Electrical Penetration	H36	C-F-2-Z, ET-F-1A-A						
												RC-ZS-LCV-460	Letdown Isolation Valve Position Switch	LF7	C-F-1-Z						
												RC-ZS-LCV-459	Letdown Isolation Valve Position Switch	L99	C-F-1-Z						
												CS-FY-7447	Solenoid Valve	GE5	C-F-1-Z						
												CS-ZS-V145	Valve Position Switches	LH2	C-F-1-Z						
												CS-F42-R1	Aux. Rly	F42	CB-F-3A-A						
												EDE-FS9-KB20	Aux. Rly	FS9	CB-F-3A-A						
66	RC-E-10	Pressurizer Heaters Control Group	RC-20846	A	310598	C-F-1-Z	X	-	X	-	M26	RC-AM4-52H	Truck Operated Switch Contacts	AM4	CB-F-1A-A	AM4-F31 F31-FB1/4	310882 AM4b	AM4d AM4e AM4f AM4g	CBA-FN-19 CBA-FN-20		
												RC-CS-7320	Control Switch with Indication	F31	CB-F-3A-A						
												RC-LYY-459CXA	Level Auxiliary Relay	FB1	CB-F-3A-A						
												RC-LYY-460DXA	Level Auxiliary Relay	FB1	CB-F-3A-A						
												RC-AM4-FU	15 A Fuses	AM4	CB-F-1A-A						
												RC-AM4-52	480 V AC Circuit Breaker	AM4	CB-F-1A-A						
67	CS-V-210	Charging Pump 2A Discharge Valve	CS-20725	A	310764	PAB-F-1C-A	-	X	-	-	-	-	-	-	-	-	-		-	CS-V-220	Note 1
68	CS-V-219	Charging Pump 2B Bypass Valve	CS-20725	B	310764	PAB-F-1D-A	-	X	-	-	-	-	-	-	-	-	-		-	CS-V-221	Note 1
69	CS-V-220	Charging Pump 2B Discharge Valve	CS-20725	B	310764	PAB-F-1D-A	-	X	-	-	-	-	-	-	-	-	-		-	CS-V-210	Note 1
70	CS-V-221	Charging Pump 2A Bypass Valve	CS-20725	A	310764	PAB-F-1C-A	-	X	-	-	-	-	-	-	-	-	-		-	CS-V-219	Note 1

Notes:
1. The equipment is mechanical with no electrical requirement.
2. During normal operation, the valve is in its safe shutdown position. To prevent spurious operations, this equipment will be disabled at the appropriate control location.
3. Disabling the valve at the appropriate control location will reposition it for shut shutdown.
4. Air is not needed to position or to reposition the valve for safe shutdown.
5. This valve is permanently disabled by tripping its circuit breaker at the MCC.
6. During normal operation, the valve is in its hot shutdown position. To prevent spurious operations, this equipment will be disabled at the appropriate control location. For cold shutdown, the valve will be energized for repositioning.
7. These valves are closed with their circuit breakers locked open during 100% power operation. This will prevent spurious operation. For cold shutdown, these valves are energized for repositioning.
8. These valves are also listed in Table MCR 3.1.3.6.
9. Electrical group conduit drawing, 9763-F-310764, is listed only to show the fire zone corresponding to the area where the charging pump oil coolers are located (9763-F-805213 and -F-815214).

FUNCTION: REACTIVITY CONTROL

ITEM NO.	EQUIPMENT ID NO.	EQUIPMENT DESCRIPTION	P&ID/1-LINE DRAWING NO.	TRAIN	PHYSICAL LOCATION DRAWING NO.	FIRE AREA/ZONE	REQUIRED FOR		POWER		ELEC NODE	SUPPORTING CONTROL AND INSTRUMENTATION EQUIPMENT				CABLES	ELECTRICAL DRAWING NO.		SUPPORTING SYSTEMS	REDUNDANT COUNTERPART	REMARKS
							HOT STAND BY	COLD SHUT DOWN	ELEC	AIR		EQUIPMENT ID NO.	EQUIPMENT DESCRIPTION	ELEC NODE	FIRE AREA/ZONE		SCHEM.	CABLE			
1	CS-TK-4A	Boric Acid Storage Tank	CS-20729	A/B	310766	PAB-F-2B-Z	-	X	-	-	-	-	-	-	-	-	-	-	-	CS-TK-4B	Note 1
2	CS-TK-4B	Boric Acid Storage Tank	CS-20729	A/B	310766	PAB-F-2B-Z	-	X	-	-	-	-	-	-	-	-	-	-	-	CS-TK-4A	Note 1
3	CS-V-410	Boric Acid Tank 4A Outlet Valve	CS-20729	A/B	310766 805216 805229	PAB-F-2B-Z	-	X	-	-	-	-	-	-	-	-	-	-	-	CS-V-416 CS-V-1207	Notes 1, 2, 3
4	CS-V-416	Boric Acid Tank 4B Outlet Valve	CS-20729	A/B	310766 805216	PAB-F-2B-Z	-	X	-	-	-	-	-	-	-	-	-	-	-	CS-V-410 CS-V-1207	Notes 1, 2, 3
5	CS-V-423	Boric Acid Recirculation Valve	CS-20729	A	310766 805216 805230	PAB-F-2B-Z	-	X	-	-	-	-	-	-	-	-	-	-	-	CS-V-431 CS-V-1207	Notes 1, 2, 3
6	CS-V-431	Boric Acid Recirculation Valve	CS-20729	B	310766 805216 805230	PAB-F-2B-Z	-	X	-	-	-	-	-	-	-	-	-	-	-	CS-V-423 CS-V-1207	Notes 1, 2, 3
7	CS-V-437	Boric Acid Transfer Pump's Suction Cross-Over Line Isolation Valve	CS-20729	A	310766 805216	PAB-F-2B-Z	-	X	-	-	-	-	-	-	-	-	-	-	-	CS-V-1207	Notes 1, 2, 3
8	CS-V-439	Charging Pump Isolation Valve	CS-20729	A/B	310766 805216 805229	PAB-F-2B-Z	-	X	-	-	-	-	-	-	-	-	-	-	-	CS-V-426	Notes 1, 2, 3
9	CS-V-442	Charging Pump Isolation Valve	CS-20729	A/B	310766 805216 805229	PAB-F-2B-Z	-	X	-	-	-	-	-	-	-	-	-	-	-	CS-V-426	Notes 1, 2, 3
10	CS-P-3A	Boric Acid Transfer Pump	CS-20729	A	310766	PAB-F-2B-Z	-	X	X	-	M43	CS-B88-52	460 V AC Circuit Breaker	B88	CB-F-1A-A	B88-F41 B88-M43 B88-M43/1	310891 B88a	B88c	CBA-FN-19 CBA-FN-20 EDE-MCC-512	CS-P-3B	
												CS-B88-CPT	Control Transformer	B88	CB-F-1A-A						
												CS-B88-42	Motor Starter	B88	CB-F-1A-A						
												CS-B88-49	Overload Relay	B88	CB-F-1A-A						
												CS-M43-49	Overload	M43	PAB-F-2B-Z						
												CS-B88-FU	Fuse	B88	CB-F-1A-A						
												CS-SS-7435	Selector Switch	B88	CB-F-1A-A						
												CS-CS-7435-2	Control Switch with Indication	B88	CB-F-1A-A						
												CS-CS-7435-1	Control Switch with Indication	F41	CB-F-3A-A						
												CS-EC8-R1	Auxiliary Relay	EC8	CB-F-1A-A						

* Table notes on last page of table

FUNCTION: REACTIVITY CONTROL

ITEM NO.	EQUIPMENT ID NO.	EQUIPMENT DESCRIPTION	P&ID/1-LINE DRAWING NO.	TRAIN	PHYSICAL LOCATION DRAWING NO.	FIRE AREA/ZONE	REQUIRED FOR		POWER		ELEC NODE	SUPPORTING CONTROL AND INSTRUMENTATION EQUIPMENT				CABLES	ELECTRICAL DRAWING NO.		SUPPORTING SYSTEMS	REDUNDANT COUNTERPART	REMARKS
							HOT STAND BY	COLD SHUT DOWN	ELEC	AIR		EQUIPMENT ID NO.	EQUIPMENT DESCRIPTION	ELEC NODE	FIRE AREA/ZONE		SCHEM.	CABLE			
11	CS-P-3B	Boric Acid Transfer Pump	CS-20729	B	310766	PAB-F-2B-Z	-	X	X	-	M44	CS-B89-52	460 V AC Circuit Breaker	B89	CB-F-1B-A	B89-F48 B89-M44 B89-M44/1 F48-FT0	310891 B89a	B89c	CBA-FN-32 CBA-FN-33 EDE-MCC-612	CS-P-3A	
												CS-B89-CPT	Control Transformer	B89	CB-F-1B-A						
												CS-B89-42	Motor Starter	B89	CB-F-1B-A						
												CS-B89-49	Overload Relay	B89	CB-F-1B-A						
												CS-M44-49	Overload	M44	PAB-F-2B-Z						
												CS-SS-7436	Selector Switch	B89	CB-F-1B-A						
												CS-CS-7436-2	Control Switch with Indication	B89	CB-F-1B-A						
												CS-CS-7436-1	Control Switch with Indication	F41	CB-F-3A-A						
												CS-FT0-KA1	Auxiliary Relay Isolation Cab	FT0	CB-F-3A-A						
												CS-B89-FU	Fuse	B89	CB-F-1B-A						
12	CS-V-426	Boric Acid F-5 to Charging Pumps Isolation Valve	CS-20729	B	310766	PAB-F-2B-Z	-	X	X	-	V04	CS-B94-52	460 V Circuit Breaker	B94	CB-F-1B-A	B94-V04 B94-V04/1 B94-V04/2 B94-F48 B94-F48/1	310891 B94a	B94c	CBA-FN-32 CBA-FN-33 EDE-MCC-612	CS-V-439 CS-V-442	
												CS-B94-CPT	Control Transformer	B94	CB-F-1B-A						
												CS-B94-42/O,C	Motor Starter	B94	CB-F-1B-A						
												CS-B94-49	Overload Relay	B94	CB-F-1B-A						
												CS-B94-FU	Fuse	B94	CB-F-1B-A						
												CS-SS-7437	Selector Switch	B94	CB-F-1B-A						
												CS-CS-7437-2	Control Switch with Indication	B94	CB-F-1B-A						
												CS-CS-7437-1	Control Switch	F41	CB-F-2A-A						
												CS-ZS-V426	Valve Position and Open/Close Torque Switches	V04	PAB-F-2B-Z						

FUNCTION: REACTIVITY CONTROL

ITEM NO.	EQUIPMENT ID NO.	EQUIPMENT DESCRIPTION	P&ID/1-LINE DRAWING NO.	TRAIN	PHYSICAL LOCATION DRAWING NO.	FIRE AREA/ZONE	REQUIRED FOR		POWER		ELEC NODE	SUPPORTING CONTROL AND INSTRUMENTATION EQUIPMENT				CABLES	ELECTRICAL DRAWING NO.		SUPPORTING SYSTEMS	REDUNDANT COUNTERPART	REMARKS
							HOT STAND BY	COLD SHUT DOWN	ELEC	AIR		EQUIPMENT ID NO.	EQUIPMENT DESCRIPTION	ELEC NODE	FIRE AREA/ZONE		SCHEM.	CABLE			
13	CP-CP-111	Reactor Trip Switchgear Cab 1	-	B	310442	CB-F-1A-A	X	-	X	-	HD2	CP-CS-6611-1	Control Switch	F42	CB-F-3A-A	E94-HD2 F10-HD2 F48-HD2/1 F48-HD2	310944 HD2a	HD2d	EDE-PP-111B	CP-CP-111 Train A	
												CP-CS-6601-1	Control Switch	F42	CB-F-3A-A		HD2b				
												CP-CS-6601-2	Control Switch	F10	CB-F-3A-A						
												SI-CS-2471-1	Control Switch	F10	CB-F-3A-A						
												SI-CS-2471-2	Control Switch	F50	CB-F-3A-A						
												CP-ZL-6601-3	Indicator Light	F42	CB-F-3A-A						
												CP-ZL-6601-6	Indicator Light	F42	CB-F-3A-A						
												CP-ZL-6601-2	Indicator Light	F10	CB-F-3A-A						
												CP-HD2-52H	Truck Operated Contact	HD2	CB-F-1A-A						
												CP-HD3-52H	Truck Operated Contact	HD3	CB-F-1A-A						
												CP-HD2-STB	Shunt Trip	HD2	CB-F-1A-A						
												CP-HD2-S1	Pushbutton	HD2	CB-F-1A-A						
												CP-HD3-X1B	Auxiliary Relay	HD3	CB-F-1A-A						
												CP-HD2-X5B	Auxiliary Relay	HD2	CB-F-1A-A						
												CP-HD2-FU	Fuses	HD2	CB-F-1A-A						
												CP-HD3-X2B	Auxiliary Relay	HD3	CB-F-1A-A						
												CP-HD3-X4B	Auxiliary Relay	HD3	CB-F-1A-A						
												CP-HD2-X3B	Auxiliary Relay	HD2	CB-F-1A-A						
												CP-HD2-XB	Auxiliary Relay	HD2	CB-F-1A-A						
												CP-HD2-X6B	Auxiliary Relay	HD3	CB-F-1A-A						
												CP-HD3-52	Circuit Breaker	HD3	CB-F-1A-A						
												CP-HD3-X3A	Auxiliary Relay	HD3	CB-F-1A-A						

FUNCTION: REACTIVITY CONTROL

ITEM NO.	EQUIPMENT ID NO.	EQUIPMENT DESCRIPTION	P&ID/1-LINE DRAWING NO.	TRAIN	PHYSICAL LOCATION DRAWING NO.	FIRE AREA/ZONE	REQUIRED FOR		POWER		ELEC NODE	SUPPORTING CONTROL AND INSTRUMENTATION EQUIPMENT				CABLES	ELECTRICAL DRAWING NO.		SUPPORTING SYSTEMS	REDUNDANT COUNTERPART	REMARKS
							HOT STAND BY	COLD SHUT DOWN	ELEC	AIR		EQUIPMENT ID NO.	EQUIPMENT DESCRIPTION	ELEC NODE	FIRE AREA/ZONE		SCHEM.	CABLE			
14	CP-CP-111	Reactor Trip Switchgear Cab 2	-	A	310442	CB-F-1A-A	X	-	X	-	HD3	CP-CS-6611-1	Control Switch	F42	CB-F-3A-A	E93-HD3 F10-HD3 F42-HD3/1 F42-HD3	310944 HD3a HD3b	HD3f	EDE-PP-111A	CP-CP-111 Train B	
												CP-CS-6601-1	Control Switch	F42	CB-F-3A-A						
												CP-CS-6601-2	Control Switch	F10	CB-F-3A-A						
												SI-CS-2471-1	Control Switch	F10	CB-F-3A-A						
												SI-CS-2471-2	Control Switch	F50	CB-F-3A-A						
												CP-ZL-6601-4	Indicator Light	F10	CB-F-3A-A						
												CP-ZL-6601-5	Indicator Light	F42	CB-F-3A-A						
												CP-ZL-6601-1	Indicator Light	F42	CB-F-3A-A						
												CP-HD2-S1	Pushbutton	HD2	CB-F-1A-A						
												CP-HD2-STA	Shunt Trip	HD2	CB-F-1A-A						
												CP-HD2-52	Circuit Breaker	HD2	CB-F-1A-A						
												CP-HD2-52H	Truck Operated Contact	HD2	CB-F-1A-A						
												CP-HD3-FU	Fuses	HD3	CB-F-1A-A						
												CP-HD3-52H	Truck Operated Contact	HD3	CB-F-1A-A						
												CP-HD2-X3A	Auxiliary Relay	HD2	CB-F-1A-A						
												CP-HD2-X3B	Auxiliary Relay	HD2	CB-F-1A-A						
												CP-HD2-XA	Auxiliary Relay	HD2	CB-F-1A-A						
												CP-HD3-X2A	Auxiliary Relay	HD3	CB-F-1A-A						
												CP-HD3-X4A	Auxiliary Relay	HD3	CB-F-1A-A						
												CP-HD3-X6A	Auxiliary Relay	HD3	CB-F-1A-A						
15	CS-V-1207	Boric Acid Transfer Pump's suction Cross-over line isolation Valve	CS-20729	B	310766 805216	PAB-F-2B-Z	-	X	-	-	-	-	-	-	-	-	-		-	CS-V-437	Notes 1,2,3

FUNCTION: REACTIVITY CONTROL

ITEM NO.	EQUIPMENT ID NO.	EQUIPMENT DESCRIPTION	P&ID/1-LINE DRAWING NO.	TRAIN	PHYSICAL LOCATION DRAWING NO.	FIRE AREA/ZONE	REQUIRED FOR		POWER		ELEC NODE	SUPPORTING CONTROL AND INSTRUMENTATION EQUIPMENT				CABLES	ELECTRICAL DRAWING NO.		SUPPORTING SYSTEMS	REDUNDANT COUNTERPART	REMARKS
							HOT STAND BY	COLD SHUT DOWN	ELEC	AIR		EQUIPMENT ID NO.	EQUIPMENT DESCRIPTION	ELEC NODE	FIRE AREA/ZONE		SCHEM.	CABLE			
16	CS-FCV-110A CS-FCV-111A CS-FCV-110B CS-FCV-111B	Boration & Dilution Flow Control Valves	CS-20729	A	310766	PAB-F-2B-Z PAB-F-2B-Z PAB-F-2B-Z PAB-F-2B-Z	-	X	X	X	LG2 LG1 LG4 LG5	CS-E97/11-72	125 V DC Circuit Breaker	E97	NES-F-1A-Z	F41-YB5 F41-YB5/1 LG2-YB5 LG4-YB5 LG5-YB5 LG1-YB5 LG2-YB5/1 GP7-YB5 LG1-YB5/1 F41-FB1/1 F41-FB1/2 F41-GP7/1 F41-GP7	310891 E97/11a,c,d E97/11g,h,k		-	-	-
												CS-CS-110A	Control Switch with Indication	F41	CB-F-3A-A						
												CS-FB1-MUX5	Auxiliary Relay	FB1	CB-F-3A-A						
												CS-FY-110-A1,-A2	Pilot Solenoid	LG2	PAB-F-2B-Z						
												CS-ZS-110A	Valve Position Switch	LG2	PAB-F-2B-Z						
												CS-D1,D2	Noise Suppression Diode	LG2	PAB-F-2B-Z						
												CS-CS-110B	Control Switch with Indication	F41	CB-F-3A-A						
												CS-CS-110C	Control Switch	F41	CB-F-3A-A						
												CS-FB1-MUX3,4,5,6,7	Auxiliary Relay	FB1	CB-F-3A-A						
												CS-FY-110F	Pilot Solenoid	GP7	PAB-F-2C-Z						
												CS-ZS-110B	Valve Position Switch	LG4	PAB-F-2B-Z						
												CS-D3	Noise Suppression Diode	GP7	PAB-F-2C-Z						
												CS-CS-111A	Control Switch with Indication	F41	CB-F-3A-A						
												CS-FY-111A-1	Pilot Solenoid	LG1	PAB-F-2B-Z						
												CS-ZS-111A	Valve Position Switch	LG1	PAB-F-2B-Z						
												CS-D4	Noise Suppression Diode	LG1	PAB-F-2B-Z						
												CS-CS-111B	Control Switch with Indication	F41	CB-F-3A-A						
												CS-FY-111F	Pilot Solenoid	GP7	PAB-F-2C-Z						
												CS-ZS-111B	Valve Position Switch	LG5	PAB-F-2B-Z						
												CS-D5	Noise Suppression Diode	GP7	PAB-F-2C-Z						
												CS-CS-110D	Control Switch	F41	CB-F-3A-A	F41-FB1/3 F41-FB1/4	FB1/1a,b	FB1/1e			
												CS-FB1-MUX1,2,3,4,5,5A,8A,9	Auxiliary Relay	FB1	CB-F-3A-A						
												CS-FB1-X	Auxiliary Relay	FB1	CB-F-3A-A						
												CS-F41-R,G	Indicator Light	F41	CB-F-3A-A						
												CS-CS-110C	Control Switch	F41	CB-F-3A-A						
												CS-ITB-111Q	Input/Output Module	F41	CB-F-3A-A						
												CS-LY-112DX	Auxiliary Relay	FB1	CB-F-3A-A						
												CS-RC	RC Noise Suppression	FB1	CB-F-3A-A						
												CS-FIY-110	Flow Indicating Converter	S60	PAB-F-2B-Z	EH5-S60 S60-S71 F47-S60 F47-LG2	EH5/1a	EH5/1c			
												CS-FIC-110	Flow Controller	F41	CB-F-3A-A						
												CS-FT-110	Flow Transmitter	S71	PAB-F-2B-Z						
												CS-ZY-110A	Positioner for CS-FCV-110A	LG2	PAB-F-2B-Z						

FUNCTION: REACTIVITY CONTROL

ITEM NO.	EQUIPMENT ID NO.	EQUIPMENT DESCRIPTION	P&ID/1-LINE DRAWING NO.	TRAIN	PHYSICAL LOCATION DRAWING NO.	FIRE AREA/ZONE	REQUIRED FOR		POWER		ELEC NODE	SUPPORTING CONTROL AND INSTRUMENTATION EQUIPMENT				CABLES	ELECTRICAL DRAWING NO.		SUPPORTING SYSTEMS	REDUNDANT COUNTERPART	REMARKS
							HOT STAND BY	COLD SHUT DOWN	ELEC	AIR		EQUIPMENT ID NO.	EQUIPMENT DESCRIPTION	ELEC NODE	FIRE AREA/ZONE		SCHEM.	CABLE			
16 (Cont)												CS-FIC-110,111	Flow Controller	F41	CB-F-3A-A	F47-SR5 F47-LG1	EJ9/15ca,cb,cd,ce	EJ9/15cc			
												CS-FIQ-111	Flow Indicating Controller	F41	CB-F-3A-A						
												CS-ZY-111A	Positioner for CS-FCV-111A	LG1	PAB-F-2B-Z						
												CS-UQ-111	Power Supply	F41	CB-F-3A-A						
												CS-FT-111-1,2	Flow Transmitter	SR5	PAB-F-2B-Z						
												CS-ITB-110C,111C, 111Q	Input/Output Module	F41	CB-F-3A-A						
												CS-CS-110C,110D	Control Switch	F41	CB-F-3A-A						
												CS-FB1-MUX4	Auxiliary Relay	FB1	CB-F-3A-A						
												CS-FB1-MUX3,4,5,6,7	Auxiliary Relay	FB1	CB-F-3A-A	F47-FB1	FB1/2a	FB1/2d			
												CS-ITB-110C,111C	Input/Output Module	F41	CB-F-3A-A						
												CS-FB1-MUX5A,8A	Auxiliary Relay	FB1	CB-F-3A-A	FB1-FB3 FB2-FB3	FB3/2a	FB3/2a			
												CS-FB2-MUX5B,8B	Auxiliary Relay	FB2	CB-F-3A-A						
												CS-LT-112	Level Transmitter	GP9	PAB-F-3B-Z	FA5-GP9 FA5-FB1	ILD-1-CS-L00112 310940 FA5a FA5b	FA5h FA5d			
												CS-LQY-112	Level Loop Pwr Supply	FA5	CB-F-3A-A						
												CS-LB-112C/D	& I/E Converter	FA5	CB-F-3A-A						
												CS-LYY-112D	Level Bistable	FA5	CB-F-3A-A						
												CS-LY/112DX	Auxiliary Relay	FB1	CB-F-3A-A						
												CS-LI-112	Level Indication	GP9	PAB-F-3B-Z						
												CS-LDY-112	Isolation Resistors	FA5	CB-F-3A-A						
												CS-IRTU-1	Computer Termination Cabinet	FD1	CB-F-3A-A	F41-FD1/1	310181 FD1r ILD-1-CS-F00111	FD1s			
17	RMW-P-16A	Reactor Makeup Water Pump	CS-20360	A	310763	PAB-F-1A-Z	-	X	X	-	M36	-	-	-	-	-	-		-	-	Note 4
18	RMW-P-16B	Reactor Makeup Water Pump	CS-20360	A	310763	PAB-F-1A-Z	-	X	X	-	M37	-	-	-	-	-	-		-	-	Note 4

Notes

1. Equipment is mechanical with no electrical requirement.
2. CS-V-423, 410, 416, 431, 437, 439, 442 are non-electrically operated valves and will be manually positioned as required to provide their reactivity control function during safe shutdown.
3. Electrical conduit plan drawing, 310766, listed only to show fire zone correlation reference to Primary Auxiliary Building area covered by piping Drawings 805216, 805229, 805230, where Valves CS-V-410, 416, 423, 431, 437, 439, 442 are identified in plan and section.
4. This equipment is listed because it can spuriously start due to cable failure in the boration & dilution flow control valve control circuits. Spurious pump start by itself from failure of its cables is not of concern since CS-FCV-111A remains closed.

FUNCTION: PROCESS MONITORING

ITEM NO	EQUIPMENT ID NO	EQUIPMENT DESCRIPTION	P&ID/1-LINE DRAWING NO.	TRAIN	PHYSICAL LOCATION DRAWING NO.	FIRE AREA/ZONE	REQUIRED FOR		POWER		ELEC NODE	SUPPORTING CONTROL AND INSTRUMENTATION EQUIPMENT				CABLES	ELECTRICAL DRAWING NO.		SUPPORTING SYSTEMS	REDUNDANT COUNTERPART	REMARKS
							HOT STAND BY	COLD SHUT DOWN	ELEC	AIR		EQUIPMENT ID NO.	EQUIPMENT DESCRIPTION	ELEC NODE	FIRE AREA/ZONE		SCHEM.	CABLE			
1	NI-NE-6690	Intermediate Range Thermal Neutron Flux Monitoring Detector	-	A	310565	C-F-1-Z	X	X	X	-	Q05	NI-E1S/13-52	120 V AC Circuit Breaker	E1S	CB-F-1A-1	H40-XP8 H40-KD0 KD0-QC1 QCI-QI0 G2H-QC1 Q05-XP8 E1S-KD0 E1S-QC1 E1S-QI0 F10-QCI	310943 E1S/13a	E1S/13b E1S/13c	CBA-FN-19 CBA-FN-20 EDE-PP-11E	NI-NE-6691	
												NI-E1S/14-52	120 V AC Circuit Breaker	E1S	CB-F-1A-A						
												NI-E1S/15-52	120 V AC Circuit Breaker	E1S	CB-F-1A-A						
												NI-NI-6690-3&4	Excore Wide-Range Thermal Neutron Flux Indicators	F10	CB-F-3A-A						
												NI-NT-6690	Excore Wide-Range Transmitter	KD0	ET-F-1A-A						
												NI-NM-6690	Excore Wide-Range Signal Processor	QC1	CB-F-1A-A						
												NI-NM-6690J	Excore Wide-Range Signal Processor Expansion Box	QI0	CB-F-1A-A						
												EDE-TBX-XP8	Junction Box	XP8	C-F-1-Z						
												EDE-NM-116	Electrical Penetration	H40	C-F-2-Z, ET-F-1A-A						
2	NI-NE-6691	Intermediate Range Thermal Neutron Flux Monitoring Detector	-	B	310565	C-F-1-Z	X	X	X	-	Q07	NI-E1T/13-52	120 V AC Circuit Breaker	E1T	CB-F-1B-A	H21-XP9 H21-KD1 KD1-QD0 QD0-QJ1 G2K-QD0 Q07-XP9 E1T-KD1 E1T-QD0 E1T-QJ1 F20-QD0	310943 E1T/13a	E1T/13b E1T/13c	CBA-FN-32 CBA-FN-33 EDE-PP-11F	NI-NE-6690	
												NI-E1T/14-52	120 V AC Circuit Breaker	E1T	CB-F-1B-A						
												NI-E1T/15-52	120 V AC Circuit Breaker	E1T	CB-F-1B-A						
												NI-NI-6691-3&4	Excore Wide-Range Thermal Neutron Flux Indicators	G2K	CB-F-1B-A						
												NI-NT-6691	Excore Wide-Range Transmitter	KD1	ET-F-1C-A						
												NI-NM-6691	Excore Wide-Range Signal Processor	QD0	CB-F-1B-A						
												NI-NM-6691J	Excore Wide-Range Signal Processor Expansion Box	QJ1	CB-F-1B-A						
												EDE-TBX-XP9	Junction Box	XP9	C-F-1-Z						
												EDE-NM-97	Electrical Penetration	H21	C-F-1-Z, ET-F-1C-A						
												NI-NI-6691-1&2	Excore Wide-Range Thermal Neutron Flux Indicators	F20	CB-F-3A-A						
3	CS-LT-102	CS-TK-4A Boric Acid Tank Level	CS-20729	A	310766	PAB-F-2B-Z	-	X	X	-	RJ7	CS-LI-102	Level Indicator	F41	CB-F-3A-A	FA1-RJ7	310942		MM-CP-1	CS-LT-106	
												MM-CP-1	Process Protection System Cabinet (PPC) No. 1	FA1	CB-F-3A-A	F47-FA1		FA1a FA1d			

FUNCTION: PROCESS MONITORING

ITEM NO	EQUIPMENT ID NO	EQUIPMENT DESCRIPTION	P&ID/1-LINE DRAWING NO.	TRAIN	PHYSICAL LOCATION DRAWING NO.	FIRE AREA/ZONE	REQUIRED FOR		POWER		ELEC NODE	SUPPORTING CONTROL AND INSTRUMENTATION EQUIPMENT				CABLES	ELECTRICAL DRAWING NO.		SUPPORTING SYSTEMS	REDUNDANT COUNTERPART	REMARKS
							HOT STAND BY	COLD SHUT DOWN	ELEC	AIR		EQUIPMENT ID NO.	EQUIPMENT DESCRIPTION	ELEC NODE	FIRE AREA/ZONE		SCHEM.	CABLE			
4	RC-TE-413A	RC Loop 1 Wide-Range Hot Leg Temperature	RC-20841	A	310582	C-F-1-Z	X	X	X	-	TB7	RC-TI-413A RC-TR-413A MM-CP-1 EDE-TBX-X40 EDE-MM-120	Temperature Indicator Temperature Recorder PPC No. 1 Terminal Box Electrical Penetration	F41 F41 FA1 X40 H44	CB-F-3A-A CB-F-3A-A CB-F-3A-A C-F-1-Z C-F-2-Z, ET-F-1A-A	TB7-X40 H44-X40/1 FA1-H44/3 F47-FA1/1	310942	FA1r FA1v E01/9	MM-CP-1	IC-TE-XX	
5	RC-TE-443A	RC Loop 4 Wide-Range Hot Leg Temperature	RC-20844	A	310583	C-F-1-Z	X	X	X	-	TB0	RC-TI-443A MM-CP-1 EDE-TBX-X40 EDE-MM-120	Temperature Indicator PPC No. 1 Terminal Box Electrical Penetration	F41 FA1 X40 H44	CB-F-3A-A CB-F-3A-A C-F-1-Z C-F-2-Z, ET-F-1A-A	TB0-X40 H44-X40/1 FA1-H44/3 F47-FA1/2	310942	FA1r FA1v FA1y	MM-CP-1	IC-TE-XX	
6	RC-PT-405	RC Loop 1 Wide-Range Hot Leg Pressure	RC-20845	A	310694	ET-F-1C-A	X	X	X	-	P78	RC-PI-405-1 RC-PR-405 MM-CP-1 RC-PI-405A-1 RC-PI-405-2 RC-PI-405A-2	Pressure Indicator Pressure Recorder PPC No. 1 Pressure Indicator Pressure Indicator Pressure Indicator	F40 F41 FA1 F40 F10 F10	CB-F-3A-A CB-F-3A-A CB-F-3A-A CB-F-3A-A CB-F-3A-A CB-F-3A-A	FA1-P78/1 F47-FA1/3 F47-FA1/2 F10-F47 F10-F47/1	310942	FA1r FA1v FA1w FA1z	MM-CP-1	RC-PT-403	
7	RC-TE-423A	RC Loop 2 Wide-Range Hot Leg Temperature	RC-20842	A	310582	C-F-1-Z	X	X	X	-	TB8	RC-TI-423A MM-CP-1 EDE-TBX-X48 EDE-MM-121	Temperature Indicator PPC No. 1 Terminal Box Electrical Penetration	F41 FA1 X48 H45	CB-F-3A-A CB-F-3A-A C-F-1-Z C-F-2-Z, ET-F-1A-A	TB8-X48 H45-X48 FA1-H45/2 F47-FA1/1	310942	FA1r FA1s FA1y	MM-CP-1	IC-TE-XX	
8	RC-TE-433A	RC Loop 3 Wide-Range Hot Leg Temperature	RC-20843	A	310583	C-F-1-Z	X	X	X	-	TB9	RC-TI-433A RC-TR-433A MM-CP-1 EDE-TBX-X94 EDE-MM-121	Temperature Indicator Temperature Recorder PPC No. 1 Terminal Box Electrical Penetration	F41 F41 FA1 X94 H4	CB-F-3A-A CB-F-3A-A CB-F-3A-A C-F-1-Z C-F-2-Z, ET-F-1A-A	H45-X94 TB9-X94 FA1-H45/2 F47-FA1/2	310942	FA1r FA1s FA1w FA1y	MM-CP-1	IC-TE-XX	
9	RC-LT-459	RC-E-10 Pressurizer Level	RC-20846	A	310579	C-F-2-Z	X	X	X	-	GN5	RC-LI-459A RC-LR-459A MM-CP-1 EDE-MM-121	Level Indicator Level Recorder PPC No. 1 Electrical Penetration	F31 F40 FA1 H45	CB-F-3A-A CB-F-3A-A CB-F-3A-A C-F-2-Z, ET-F-1A-A	GN5-H45/1 FA1-H45/1 F38-FA1/1	310942	FA1s FA1v FA1w	MM-CP-1	RC-LT-460	
10	CS-LT-106	CS-TK-4B Boric Acid Tank Level	CS-20729	B	310766	PAB-F-2B-Z	-	X	X	-	RJ0	CS-LI-106 MM-CP-2	Level Indicator PPC No. 2	F41 FA2	CB-F-3A-A CB-F-3A-A	FA2-RJ0 F48-FA2	310942	FA2a FA2d	MM-CP-2	CS-LT-102	

FUNCTION: PROCESS MONITORING

ITEM NO	EQUIPMENT ID NO	EQUIPMENT DESCRIPTION	P&ID/1-LINE DRAWING NO.	TRAIN	PHYSICAL LOCATION DRAWING NO.	FIRE AREA/ZONE	REQUIRED FOR		POWER		ELEC NODE	SUPPORTING CONTROL AND INSTRUMENTATION EQUIPMENT				CABLES	ELECTRICAL DRAWING NO.		SUPPORTING SYSTEMS	REDUNDANT COUNTERPART	REMARKS
							HOT STAND BY	COLD SHUT DOWN	ELEC	AIR		EQUIPMENT ID NO.	EQUIPMENT DESCRIPTION	ELEC NODE	FIRE AREA/ZONE		SCHEM.	CABLE			
11	RC-TE-423B	RC Loop 2 Wide-Range Cold Leg Temperature	RC-20842	B	310582	C-F-1-Z	X	X	X	-	TC2	RC-TI-423B	Level Indicator	F41	CB-F-3A-A	TC2-X52	310942		MM-CP-2	FW-PT-524	
												MM-CP-2	PPC No. 2	FA2	CB-F-3A-A	H55-X52/1		FA2r			
												EDE-TBX-X52	Terminal Box	X52	C-F-1-Z	F48-FA2/1		FA2s			
												EDE-MM-131	Electrical Penetration	H55	C-F-1-Z, ET-F-1C-A	FA2-H55/6		FA2w FA2x			
12	RC-TE-413B	RC Loop 1 Wide-Range Cold Leg Temperature	RC-20841	B	310582	C-F-1-Z	X	X	X	-	TC1	RC-TI-413B	Temperature Indicator	F41	CB-F-3A-A	TC1-X14	310942		MM-CP-2	FW-PT-514	
												RC-TR-413B	Temperature Recorder	F41	CB-F-3A-A	H55-X14		FA2r			
												MM-CP-2	PPC No. 2	FA2	CB-F-3A-A	F48-FA2/1		FA2s			
												EDE-TBX-X14	Terminal Box	X14	C-F-1-Z	FA2-H55/6		FA2w FA2x			
												EDE-MM-131	Electrical Penetration	H55	C-F-1-Z, ET-F-1C-A						
13	RC-TE-433B	RC Loop 3 Wide-Range Cold Leg Temperature	RC-20843	B	310583	C-F-1-Z	X	X	X	-	TC3	RC-TI-433B	Temperature Indicator	F41	CB-F-3A-A	TC3-X69	310942		MM-CP-2	FW-PT-514	
												RC-TR-433B	Temperature Recorder	F41	CB-F-3A-A	H55-X69		FA2t			
												MM-CP-2	PPC No. 2	FA2	CB-F-3A-A	FA2-H55/7		FA2y			
												EDE-TBX-X69	Terminal Box	X69	C-F-1-Z	F48-FA2/2		FA2z			
												EDE-MM-131	Electrical Penetration	H55	C-F-1-Z, ET-F-1C-A						
14	RC-TE-443B	RC Loop 4 Wide-Range Cold Leg Temperature	RC-20844	B	310583	C-F-1-Z	X	X	X	-	TC4	RC-TI-443B	Temperature Indicator	F41	CB-F-3A-A	TC4-X86	310942		MM-CP-2	FW-PT-544	
												MM-CP-2	PPC No. 2	FA2	CB-F-3A-A	H55-X86		FA2r			
												EDE-TBX-X86	Terminal Box	X86	C-F-1-Z	FA2-H55/7		FA2t			
												EDE-MM-131	Electrical Penetration	H55	C-F-1-Z, ET-F-1C-A	F48-FA2/2		FA2y FA2z			
15	RC-PT-403	RC Loop 4 Wide-Range Hot Leg Pressure	RC-20845	D	310694	ET-F-1C-A	X	X	X	-	P76	RC-PI-403-1	Pressure Indicator	F41	CB-F-3A-A	FA4-P76/1	310942		MM-CP-4	RC-PT-405	
												RC-PR-403	Pressure Recorder	F41	CB-F-3A-A	F48-FA4/2		FA4r			
												MM-CP-4	PPC No. 4	FA4	CB-F-3A-A	F48-FA4		FA4u			
												RC-PI-403A-1	Pressure Indicator	F41	CB-F-3A-A	F20-F48		FA4v			
												RC-PI-403-2	Pressure Indicator	F20	CB-F-3A-A						
												RC-PI-403A-2	Pressure Indicator	F20	CB-F-3A-A						
16	RC-LT-460	RC-E-10 Pressurizer Level	RC-20846	B	310579	C-F-2-Z	X	X	X	-	GN5	RC-LI-460A	Level Indicator	F31	CF-F-3A-A	GN5-H55/2	310942		MM-CP-2	RC-LT-459	
												MM-CP-2	PPC No. 2	FA2	CB-F-3A-A	FA2-H55/3		FA2r			
												EDE-MM-131	Electrical Penetration	H55	C-F-1-Z, ET-F-1C-A	F39-FA2/1		FA2w			
17	CO-LT-4096	CO-TK-25 Condenser Storage Tank Level	FW-20426	A	310828	CST-F-1-0	-	X	X	-	R53	CO-LI-4096	Level Indicator	F61	CB-F-3A-A	FJ7-R53	310953				
																F66-FJ8		FJ7g FJ7f			
												MM-CP-153	BOP - Process Control Cabinet	FJ7	CB-F-3A-A				MM-CP-153	FW-LT-4252 FW-LT-4257	
												MM-CP-153	BOP - Process Control Cabinet	FJ8	CB-F-3A-A						

FUNCTION: PROCESS MONITORING

ITEM NO	EQUIPMENT ID NO	EQUIPMENT DESCRIPTION	P&ID/1-LINE DRAWING NO.	TRAIN	PHYSICAL LOCATION DRAWING NO.	FIRE AREA/ZONE	REQUIRED FOR		POWER		ELEC NODE	SUPPORTING CONTROL AND INSTRUMENTATION EQUIPMENT				CABLES	ELECTRICAL DRAWING NO.		SUPPORTING SYSTEMS	REDUNDANT COUNTERPART	REMARKS
							HOT STAND BY	COLD SHUT DOWN	ELEC	AIR		EQUIPMENT ID NO.	EQUIPMENT DESCRIPTION	ELEC NODE	FIRE AREA/ZONE		SCHEM.	CABLE			
18	FW-FT-4214-2	RC-E-11A Emergency FW Header Flow	FW-20688	A	310708	EFP-F-1-A	X	X	X	-	GL3	FW-FI-4214-2 FW-FR-4214 MM-CP-297A	Flow Indicator Flow Recorder BOP - Process Control Cabinet (PCC)	F51 F86 FK0	CB-F-3A-A CB-F-3A-A CB-F-3A-A	FK0-GL3 F56-FK0 F86-FK0	310952	FK0a	MM-CP-297A	FW-FT-4224-2 FT-FT-4244-2 FW-LT-519	
19	FW-FT-4224-2	RC-E-11B Emergency FW Header Flow	FW-20688	B	310708	EFP-F-1-A	X	X	X	-	GL4	FW-FI-4224-2 FW-FR-4224 MM-CP-297B	Flow Indicator Flow Recorder BOP - PCC	F51 F86 FL2	CB-F-3A-A CB-F-3A-A CB-F-3A-A	FL2-GL4 F56-FL2 F88-FL2	310952	FL2a	MM-CP-297B	FW-FT-4214-2 FW-FT-4234-2 FW-LT-529	
20	FW-FT-4234-2	RC-E-11C Emergency FW Header Flow	FW-20688	A	310708	EFP-F-1-A	X	X	X	-	GL3	FW-FI-4234-2 FW-FR-4214 MM-CP-297A	Flow Indicator Flow Recorder BOP - PCC	F51 F86 FK0	CB-F-3A-A CB-F-3A-A CB-F-3A-A	FK0-GL3 F56-FK0 F86-FK0	310952	FK0a	MM-CP-297A	FW-FT-4224-2 FW-FT-4244-2 FW-LT-537	
21	FW-FT-4244-2	RC-E-11D Emergency FW Header Flow	FW-20688	B	310708	EFP-F-1-A	X	X	X	-	GL4	FW-FI-4244-2 FW-FR-4224 MM-CP-297B	Flow Indicator Flow Recorder BOP - PCC	F51 F86 FL2	CB-F-3A-A CB-F-3A-A CB-F-3A-A	FL2-GL4 F56-FL2 F88-FL2	310952	FL2a	MM-CP-297B	FW-FT-4214-2 FW-FT-4234-2 FW-LT-548	
22	FW-LT-501	RC-E-11A Steam Generator Wide-Range Level	FW-20686	A	310576	C-F-1-Z	X	X	X	-	R1D	FW-LI-501 MM-CP-1 FW-XR-501 EDE-MM-120	Level Indicator PPC No. 1 Recorder Electrical Penetration	F51 FA1 F51 H44	CB-F-3A-A CB-F-3A-A CB-F-3A-A C-F-2-Z, ET-F-1A-A	FA1-H44 F56-FA1/4 H44-R1D F56-FA1/3 F56/FA1	310942	FA1h FA1l FA1m	MM-CP-1	FW-LT-502 FW-LT-504 FW-LT-519	
23	FW-LT-502	RC-E-11B Steam Generator Wide-Range Level	FW-20686	B	310576	C-F-1-Z	X	X	X	-	R1E	FW-LI-502 MM-CP-2 FW-XR-502 EDE-MM-131	Level Indicator PPC No. 2 Recorder Electrical Penetration	F51 FA2 F51 H55	CB-F-3A-A CB-F-3A-A CB-F-3A-A C-F-1-Z, ET-F-1C-A	FA2-H55 H55-R1E F56-FA2/1	310942	FA2h FA2l FA2m	MM-CP-2	FW-LT-501 FW-LT-503 FW-LT-529	
24	FW-LT-503	RC-E-11C Steam Generator Wide-Range Level	FW-20686	C	310577	C-F-1-Z	X	X	X	-	R1F	FW-LI-503 MM-CP-3 FW-XR-503 EDE-MM-123	Level Indicator PPC No. 3 Recorder Electrical Penetration	F51 FA3 F51 H47	CB-F-3A-A CB-F-3A-A CB-F-3A-A C-F-2-Z, ET-F-1A-A	FA3-H47/1 F56-FA3/2 H47-R1F	310942	FA3h FA3l	MM-CP-3	FW-LT-502 FW-LT-504 FW-LT-537	
25	FW-LT-504	RC-E-11D Steam Generator Wide-Range Level	FW-20686	D	310577	C-F-1-Z	X	X	X	-	R1G	FW-LI-504 MM-CP-4 FW-XR-504 EDE-MM-128	Level Indicator PPC No. 4 Recorder Electrical Penetration	F51 FA4 F51 H52	CB-F-3A-A CB-F-3A-A CB-F-3A-A C-F-1-Z, ET-F-1C-A	F56-FA4 FA4-H52/1 H52-R1G	310942	FA4h FA4l	MM-CP-4	FW-LT-501 FW-LT-503 FW-LT-548	
26	FW-PT-514	RC-E-11A Steam Generator Steam Pressure	MS-20580	A	310589	MS-F-1B-Z	X	X	X	-	GL6	FW-PI-514A MM-CP-1	Pressure Indicator PPC No. 1	F51 FA1	CB-F-3A-A CB-F-3A-A	FA1-GL6 F56-FA1	310942	FA1h FA1l FA1m	MM-CP-1	FW-PT-525 FW-PT-545 FW-PT-515	

FUNCTION: PROCESS MONITORING

ITEM NO	EQUIPMENT ID NO	EQUIPMENT DESCRIPTION	P&ID/1-LINE DRAWING NO.	TRAIN	PHYSICAL LOCATION DRAWING NO.	FIRE AREA/ZONE	REQUIRED FOR		POWER		ELEC NODE	SUPPORTING CONTROL AND INSTRUMENTATION EQUIPMENT				CABLES	ELECTRICAL DRAWING NO.		SUPPORTING SYSTEMS	REDUNDANT COUNTERPART	REMARKS
							HOT STAND BY	COLD SHUT DOWN	ELEC	AIR		EQUIPMENT ID NO.	EQUIPMENT DESCRIPTION	ELEC NODE	FIRE AREA/ZONE		SCHEM.	CABLE			
27	FW-PT-525	RC-E-11B Steam Generator Steam Pressure	MS-20581	B	310586	MS-F-3A-Z	X	X	X	-	GZ4	FW-PI-525A MM-CP-2	Pressure Indicator PPC No. 2	F51 FA2	CB-F-3A-A CB-F-3A-A	FA2-GZ4 F56-FA2/1	310942	FA2l FA2h FA2m	MM-CP-2	FW-PT-514 FW-PT-534 FW-PT-524	
28	FW-PT-534	RC-E-11C Steam Generator Steam Pressure	MS-20581	A	310586	MS-F-3A-Z	X	X	X	-	GL5	FW-PI-534A MM-CP-1	Pressure Indicator PPC No. 1	F51 FA1	CB-F-3A-A CB-F-3A-A	FA1-GL5 F56-FA1	310942	FA1h FA1l FA1m	MM-CP-1	FW-PT-525 FW-PT-545 FW-PT-535	
29	FW-PT-545	RC-E-11D Steam Generator Steam Pressure	MS-20580	B	310589	MS-F-1B-Z	X	X	X	-	GZ6	FW-PI-545A MM-CP-2	Pressure Indicator PPC No. 2	F51 FA2	CB-F-3A-A CB-F-3A-A	FA2-GZ6 F56-FA2/1	310942	FA2l FA2h FA2m	MM-CP-2	FW-PT-514 FW-PT-534 FW-PT-544	
30	FW-LT-4252	FW-P-37A CST Level	CO-20426	A	310708	EFP-F-1-A	-	X	X	-	P1G	FW-LI-4252 MM-CP-297A	Level Indicator BOP - PCC	F51 FKO	CB-F-3A-A CB-F-3A-A	FKO-P1G F56-FKO/1	310952	FKOa	MM-CP-297A	CO-LT-4096 FW-LT-4257	
31	FW-LT-4257	FW-P-37B CST Level	CO-20426	B	310708	EFP-F-1-A	-	X	X	-	P1F	FW-LI-4257 MM-CP-297B	Level Indicator BOP - PCC	F51 FL2	CB-F-3A-A CB-F-3A-A	FL2-P1F F56-FL2/1	310952	FL2a	MM-CP-297B	CO-LT-4096 FW-LT-4252	
32	IC-TE-1	Incore Temperature E-6 Core Grid Location J-8		B	310572	C-F-2-2	X	X	X	-	HN9	MM-CP-486B EDE-MM-130	RVLIS/HELB Cabinet Electrical Penetration	F97 H54	CB-F-3A-A C-F-1-Z, ET-F-1C-A	F97-H54 H54-HN9/M	310965 310181	F97g JWOn JWOs	MM-CP-486B	RC-TE-413A RC-TE-423A RC-TE-433A RC-TE-443A	
33	IC-TE-4	Incore Temperature A-5 Core Grid Location H-6		B	310572	C-F-2-2	X	X	X	-	HN9	MM-CP-486B EDE-MM-130	RVLIS/HELB Cabinet Electrical Penetration	F97 H54	CB-F-3A-A C-F-1-Z, ET-F-1C-A	F97-H54 H54-HN9/1	310965 310181	F97g JWOn JWOr	MM-CP-486B	RC-TE-413A RC-TE-423A RC-TE-433A RC-TE-443A	
34	IC-TE-6	Incore Temperature Cal. Core Grid Location J-10		B	310572	C-F-2-2	X	X	X	-	HN9	MM-CP-486B EDE-MM-130	RVLIS/HELB Cabinet Electrical Penetration	F97 H54	CB-F-3A-A C-F-1-Z, ET-F-1C-A	F97-H54 H54-NH9/F	310965 310181	F97g JWOn JWOs	MM-CP-486B	RC-TE-413A RC-TE-423A RC-TE-433A RC-TE-443A	
35	IC-TE-7	Incore Temperature B-5 Core Grid Location F-7		B	310572	C-F-2-2	X	X	X	-	HN9	MM-CP-486B EDE-MM-130	RVLIS/HELB Cabinet Electrical Penetration	F97 H54	CB-F-3A-A C-F-1-Z, ET-F-1C-A	F97-H54 H54-NH9/6	310965 310181	F97g JWOn JWOr	MM-CP-486B	RC-TE-413A RC-TE-423A RC-TE-433A RC-TE-443A	
36	IC-TE-8	Incore Temperature B-3 Core Grid Location K-6		B	310572	C-F-2-2	X	X	X	-	HN9	MM-CP-486B EDE-MM-130	RVLIS/HELB Cabinet Electrical Penetration	F97 H54	CB-F-3A-A C-F-1-Z, ET-F-1C-A	F97-H54 H54-HN9/5	310965 310181	F97g JWOn JWOr	MM-CP-486B	RC-TE-413A RC-TE-423A RC-TE-433A RC-TE-443A	
37	IC-TE-12	Incore Temperature A-8 Core Grid Location E-9		B	310572	C-F-2-2	X	X	X	-	HN9	MM-CP-486B EDE-MM-130	RVLIS/HELB Cabinet Electrical Penetration	F97 F97	CB-F-3A-A C-F-1-Z, ET-F-1C-A	F97-H54 H54-HN9/4	310965 310181	F97g JWOn JWOr	MM-CP-486B	RC-TE-413A RC-TE-423A RC-TE-433A RC-TE-443A	
38	IC-TE-14	Incore Temperature E-3 Core Grid Location H-4		B	310572	C-F-2-Z	X	X	X	-	HN9	MM-CP-486B EDE-MM-130	RVLIS/HELB Cabinet Electrical Penetration	F97 H54	CB-F-3A-A C-F-1-Z, ET-F-1C-A	F97-H54 H54-HN9/J	310965 310181	F97g JWOn JWOs	MM-CP-486B	RC-TE-413A RC-TE-423A RC-TE-433A RC-TE-443A	

FUNCTION: PROCESS MONITORING

ITEM NO	EQUIPMENT ID NO	EQUIPMENT DESCRIPTION	P&ID/1-LINE DRAWING NO.	TRAIN	PHYSICAL LOCATION DRAWING NO.	FIRE AREA/ZONE	REQUIRED FOR		POWER		ELEC NODE	SUPPORTING CONTROL AND INSTRUMENTATION EQUIPMENT				CABLES	ELECTRICAL DRAWING NO.		SUPPORTING SYSTEMS	REDUNDANT COUNTERPART	REMARKS
							HOT STAND BY	COLD SHUT DOWN	ELEC	AIR		EQUIPMENT ID NO.	EQUIPMENT DESCRIPTION	ELEC NODE	FIRE AREA/ZONE		SCHEM.	CABLE			
39	IC-TE-15	Incore Temperature F-1 Core Grid Location D-8		B	310572	C-F-2-Z	X	X	X	-	HN9	MM-CP-486B EDE-MM-130	RVLIS/HELB Cabinet Electrical Penetration	F97 H54	CB-F-3A-A C-F-1-Z, ET-F-1C-A	F97-H54 H54-HN9/P	310965 310181	F97g JW0n JW0s	MM-CP-486B	RC-TE-413A RC-TE-423A RC-TE-433A RC-TE-443A	
40	IC-TE-16	Incore Temperature E-4 Core Grid Location M-7		B	310572	C-F-2-Z	X	X	X	-	HN9	MM-CP-486B EDE-MM-130	RVLIS/HELB Cabinet Electrical Penetration	F97 H54	CB-F-3A-A C-F-1-Z, ET-F-1C-A	F97-H54 H54-HN9/K	310965 310181	F97g JW0n JW0s	MM-CP-486B	RC-TE-413A RC-TE-423A RC-TE-433A RC-TE-443A	
41	IC-TE-18	Incore Temperature D-10 Core Grid Location L-11		B	310572	C-F-2-Z	X	X	X	-	HN9	MM-CP-486B EDE-MM-130	RVLIS/HELB Cabinet Electrical Penetration	F97 H54	CB-F-3A-A C-F-1-Z, ET-F-1C-A	F97-H54 H54-HN9/G	310965 310181	F97g JW0n JW0s	MM-CP-486B	RC-TE-413A RC-TE-423A RC-TE-433A RC-TE-443A	
42	IC-TE-20	Incore Temperature C-10 Core Grid Location E-5		B	310572	C-F-2-Z	X	X	X	-	HN9	MM-CP-486B EDE-MM-130	RVLIS/HELB Cabinet Electrical Penetration	F97 H54	CB-F-3A-A C-F-1-Z, ET-F-1C-A	F97-H54 H54-HN9/C	310965 310181	F97g JW0n JW0s	MM-CP-486B	RC-TE-413A RC-TE-423A RC-TE-433A RC-TE-443A	
43	IC-TE-21	Incore Temperature B-10 Core Grid Location E-11		B	310572	C-F-2-Z	X	X	X	-	HN9	MM-CP-486B EDE-MM-130	RVLIS/HELB Cabinet Electrical Penetration	F97 H54	CB-F-3A-A C-F-1-Z, ET-F-1C-A	F97-H54 H54-HN9/9	310965 310181	F97g JW0n JW0r	MM-CP-486B	RC-TE-413A RC-TE-423A RC-TE-433A RC-TE-443A	
44	IC-TE-24	Incore Temperature B-9 Core Grid Location H-13		B	310572	C-F-2-Z	X	X	X	-	HN9	MM-CP-486B EDE-MM-130	RVLIS/HELB Cabinet Electrical Penetration	F97 H54	CB-F-3A-A C-F-1-Z, ET-F-1C-A	F97-H54 H54-HN9/8	310965 310181	F97g JW0n JW0r	MM-CP-486B	RC-TE-413A RC-TE-423A RC-TE-433A RC-TE-443A	
45	IC-TE-27	Incore Temperature B-9 Core Grid Location C-8		B	310572	C-F-2-Z	X	X	X	-	HN9	MM-CP-486B EDE-MM-130	RVLIS/HELB Cabinet Electrical Penetration	F97 H54	CB-F-3A-A C-F-1-Z, ET-F-1C-A	F97-H54 H54-HN9/N	310965 310181	F97g JW0n JW0s	MM-CP-486B	RC-TE-413A RC-TE-423A RC-TE-433A RC-TE-443A	
46	IC-TE-30	Incore Temperature C-9 Core Grid Location E-3		B	310572	C-F-2-Z	X	X	X	-	HN9	MM-CP-486B EDE-MM-130	RVLIS/HELB Cabinet Electrical Penetration	F97 H54	CB-F-3A-A C-F-1-Z, ET-F-1C-A	F97-H54 H54-HN9/B	310965 310181	F97g JW0n JW0r	MM-CP-486B	RC-TE-413A RC-TE-423A RC-TE-433A RC-TE-443A	
47	IC-TE-31	Incore Temperature A-6 Core Grid Location D-12		B	310572	C-F-2-Z	X	X	X	-	HN9	MM-CP-486B EDE-MM-130	RVLIS/HELB Cabinet Electrical Penetration	F97 H54	CB-F-3A-A C-F-1-Z, ET-F-1C-A	F97-H54 H54-HN9/2	310965 310181	F97g JW0n JW0r	MM-CP-486B	RC-TE-413A RC-TE-423A RC-TE-433A RC-TE-443A	
48	IC-TE-32	Incore Temperature D-4 Core Grid Location L-13		B	310572	C-F-2-Z	X	X	X	-	HN9	MM-CP-486B EDE-MM-130	RVLIS/HELB Cabinet Electrical Penetration	F97 H54	CB-F-3A-A C-F-1-Z, ET-F-1C-A	F97-H54 H54-HN9/D	310965 310181	F97g JW0n JW0s	MM-CP-486B	RC-TE-413A RC-TE-423A RC-TE-433A RC-TE-443A	

FUNCTION: PROCESS MONITORING

ITEM NO	EQUIPMENT ID NO	EQUIPMENT DESCRIPTION	P&ID/1-LINE DRAWING NO.	TRAIN	PHYSICAL LOCATION DRAWING NO.	FIRE AREA/ZONE	REQUIRED FOR		POWER		ELEC NODE	SUPPORTING CONTROL AND INSTRUMENTATION EQUIPMENT				CABLES	ELECTRICAL DRAWING NO.		SUPPORTING SYSTEMS	REDUNDANT COUNTERPART	REMARKS
							HOT STAND BY	COLD SHUT DOWN	ELEC	AIR		EQUIPMENT ID NO.	EQUIPMENT DESCRIPTION	ELEC NODE	FIRE AREA/ZONE		SCHEM.	CABLE			
49	IC-TE-34	Incore Temperature F-2 Core Grid Location H-2		B	310572	C-F-2-Z	X	X	X	-	HN9	MM-CP-486B EDE-MM-130	RVLIS/HELB Cabinet Electrical Penetration	F97 H54	CB-F-3A-A C-F-1-Z, ET-F-1C-A	F97-H54 H54-HN9/Q	310965 310181	F97g JW0n JW0t	MM-CP-486B	RC-TE-413A RC-TE-423A RC-TE-433A RC-TE-443A	
50	IC-TE-37	Incore Temperature F-8 Core Grid Location P-9		B	310572	C-F-2-Z	X	X	X	-	HN9	MM-CP-486B EDE-MM-130	RVLIS/HELB Cabinet Electrical Penetration	F97 H54	CB-F-3A-A C-F-1-Z, ET-F-1C-A	F97-H54 H54-HN9/U	310965 310181	F97g JW0n JW0t	MM-CP-486B	RC-TE-413A RC-TE-423A RC-TE-433A RC-TE-443A	
51	IC-TE-38	Incore Temperature A-2 Core Grid Location K-2		B	310572	C-F-2-Z	X	X	X	-	HN9	MM-CP-486B EDE-MM-130	RVLIS/HELB Cabinet Electrical Penetration	F97 H54	CB-F-3A-A C-F-1-Z, ET-F-1C-A	F97-H54 H54-HN9	310965 310181	F97g JW0n JW0r	MM-CP-486B	RC-TE-413A RC-TE-423A RC-TE-433A RC-TE-443A	
52	IC-TE-39	Incore Temperature A-7 Core Grid Location B-6		B	310572	C-F-2-Z	X	X	X	-	HN9	MM-CP-486B EDE-MM-130	Electrical Penetration Electrical Penetration	F97 H54	CB-F-3A-A C-F-1-Z, ET-F-1C-A	F97-H54 H54-HN9/3	310965 310181	F97g JW0n JW0r	MM-CP-486B	RC-TE-413A RC-TE-423A RC-TE-433A RC-TE-443A	
53	IC-TE-40	Incore Temperature E-2 Core Grid Location F-14		B	310572	C-F-2-Z	X	X	X	-	HN9	MM-CP-486B EDE-MM-130	RVLIS/HELB Cabinet Electrical Penetration	F97 H54	CB-F-3A-A C-F-1-Z, ET-F-1C-A	F97-H54 H54-HN9/H	310965 310181	F97g JW0n JW0s	MM-CP-486B	RC-TE-413A RC-TE-423A RC-TE-433A RC-TE-443A	
54	IC-TE-41	Incore Temperature D-5 Core Grid Location N-4		B	310572	C-F-2-Z	X	X	X	-	HN9	MM-CP-486B EDE-MM-130	RVLIS/HELB Cabinet Electrical Penetration	F97 H54	CB-F-3A-A C-F-1-Z, ET-F-1C-A	F97-H54 H54-HN9/E	310965 310181	F97g JW0n JW0s	MM-CP-486B	RC-TE-413A RC-TE-423A RC-TE-433A RC-TE-443A	
55	IC-TE-45	Incore Temperature E-5 Core Grid Location N-13		B	310572	C-F-2-Z	X	X	X	-	HN9	MM-CP-486B EDE-MM-130	RVLIS/HELB Cabinet Electrical Penetration	F97 H54	CB-F-3A-A C-F-1-Z, ET-F-1C-A	F97-H54 H54-HN9/L	310965 310181	F97g JW0n JW0s	MM-CP-486B	RC-TE-413A RC-TE-423A RC-TE-433A RC-TE-443A	
56	IC-TE-47	Incore Temperature F-7 Core Grid Location A-9		B	310572	C-F-2-Z	X	X	X	-	HN9	MM-CP-486B EDE-MM-130	RVLIS/HELB Cabinet Electrical Penetration	F97 H54	CB-F-3A-A C-F-1-Z, ET-F-1C-A	F97-H54 H54-HN9/T	310965 310181	F97g JW0n JW0t	MM-CP-486B	RC-TE-413A RC-TE-423A RC-TE-433A RC-TE-443A	
57	IC-TE-50	Incore Temperature R-6 Core Grid Location R-6		B	310572	C-F-2-Z	X	X	X	-	HN9	MM-CP-486B EDE-MM-130	RVLIS/HELB Cabinet Electrical Penetration	F97 H54	CB-F-3A-A C-F-1-Z, ET-F-1C-A	F97-H54 H54-HN9/7	310965 310181	F97g JW0n JW0r	MM-CP-486B	RC-TE-413A RC-TE-423A RC-TE-433A RC-TE-443A	
58	IC-TE-52	Incore Temperature F-4 Core Grid Location L-15		B	310572	C-F-2-Z	X	X	X	-	HN9	MM-CP-486B EDE-MM-130	RVLIS/HELB Cabinet Electrical Penetration	F97 H54	CB-F-3A-A C-F-1-Z, ET-F-1C-A	F97-H54 H54-HN9/S	310965 310181	F97g JW0n JW0t	MM-CP-486B	RC-TE-413A RC-TE-423A RC-TE-433A RC-TE-443A	

FUNCTION: PROCESS MONITORING

ITEM NO	EQUIPMENT ID NO	EQUIPMENT DESCRIPTION	P&ID/1-LINE DRAWING NO.	TRAIN	PHYSICAL LOCATION DRAWING NO.	FIRE AREA/ZONE	REQUIRED FOR		POWER		ELEC NODE	SUPPORTING CONTROL AND INSTRUMENTATION EQUIPMENT				CABLES	ELECTRICAL DRAWING NO.		SUPPORTING SYSTEMS	REDUNDANT COUNTERPART	REMARKS
							HOT STAND BY	COLD SHUT DOWN	ELEC	AIR		EQUIPMENT ID NO.	EQUIPMENT DESCRIPTION	ELEC NODE	FIRE AREA/ZONE		SCHEM.	CABLE			
59	IC-TE-57	Incore Temperature F-3 Core Grid Location B-3		B	310572	C-F-2-Z	X	X	X	-	HN9	MM-CP-486B EDE-MM-130	RVLIS/HELB Cabinet Electrical Penetration	F97 H54	CB-F-3A-A C-F-1-Z, ET-F-1C-A	F97-H54 H54-HN9/R	310965 310181	F97g JW0n JW0t	MM-CP-486B	RC-TE-413A RC-TE-423A RC-TE-433A RC-TE-443A	
60	IC-TE-58	Incore Temperature C-4 Core Grid Location B-13		B	310572	C-F-2-Z	X	X	X	-	HN9	MM-CP-486B EDE-MM-130	RVLIS/HELB Cabinet Electrical Penetration	F97 H54	CB-F-3A-A C-F-1-Z, ET-F-1C-A	F97-H54 H54-HN9/A	310965 310181	F97g JW0n JW0r	MM-CP-486B	RC-TE-413A RC-TE-423A RC-TE-433A RC-TE-443A	
61	MM-CP-486B	RVLIS/HELB Incore Temperature Display		B	310501	CB-F-3A-A	X	X	X	-	F97	RC-XX-7315-4	Plasma Display	FT1	CB-F-3A-A	F97-FT1 E53-FT1	310965 E53/18	E53/18	EDE-MCC-631	MM-CP-1	
62	FW-LT-529	RC-E-11B Steam Generator Narrow-Range Level	FW-20686	A	310578	C-F-2-Z	X	X	X	-	GE9	FW-LR-529 FW-LI-529 MM-CP-1 EDE-MM-121	Level Recorder Level Indicator PPC No. 1 Electrical Penetration	F51 F51 FA1 H45	CB-F-3A-A CB-F-3A-A CB-F-3A-A C-F-2-Z, ET-F-1A-A	GE9-H45 FA1-H45 F56-FA1	310942	FA1h	MM-CP-1	FW-LT-502	
63	FW-LT-519	RC-E-11A Steam Generator Narrow-Range Level	FW-20686	B	310578	C-F-2-Z	X	X	X	-	R15	FW-LI-519 FW-LR-519 MM-CP-2 EDE-MM-131	Level Indicator Level Recorder PPC No. 2 Electrical Penetration	F51 F51 FA2 H55	CB-F-3A-A CB-F-3A-A CB-F-3A-A C-F-1-Z, ET-F-1C-A	H55-R1S FA2-H55 F56-FA2/1	310942	FA2h	MM-CP-2	FW-LT-501	
64	FW-LT-548	RC-E-11D Steam Generator Narrow-Range Level	FW-20686	C	310579	C-F-2-Z	X	X	X	-	GF8	FW-LI-548 MM-CP-3 EDE-MM-123	Level Indicator PPC No. 3 Electrical Penetration	F51 FA3 H47	CB-F-3A-A CB-F-3A-A C-F-2-Z, ET-F-1A-A	GF8-H47 FA3-H47/1 F56-FA3/2	310942	FA3h	MM-CP-3	FW-LT-504	
65	FW-LT-537	RC-E-11C Steam Generator Narrow-Range Level	FW-20686	D	310579	C-F-2-Z	X	X	X	-	GF7	FW-LI-537 MM-CP-4 EDE-MM-128	Level Indicator PPC No. 4 Electrical Penetration	F51 FA4 H52	CB-F-3A-A CB-F-3A-A C-F-1-Z, ET-F-1C-A	GN5-H52 FA4-H52 F56-FA4	310942	FA4h	MM-CP-4	FW-LT-503	
66	FW-PT-524	RC-E-11B Steam Generator Steam Pressure	MS-20581	A	310586	MS-F-3A-Z	X	X	X	-	GL5	FW-PI-524A MM-CP-1	Pressure Indicator PPC No. 1	F51 FA1	CB-F-3A-A CB-F-3A-A	FA1-GL5 F56-FA1	310942	FA1h	MM-CP-1	FW-PT-525	
67	FW-PT-544	RC-E-11D Steam Generator Steam Pressure	MS-20580	A	310589	MS-F-1B-Z	X	X	X	-	GL6	FW-PI-544A MM-CP-1	Pressure Indicator PPC No. 1	F51 FA1	CB-F-3A-A CB-F-3A-A	FA1-GL6 F56-FA1	310942	FA1h	MM-CP-1	FW-PT-545	
68	CC-TE-2171	PCCW Loop A Sup. Header Temperature	CC-20205	A	310765	PAB-F-2C-X	X	X	X	-	TM0	MM-CP-297A CC-TI-2171-1	BOP - Process Control Cabinet Temperature Indicator	FK0 F30	CB-F-3A-A CB-F-3A-A	FK0-TM0 F30-FK0/4	310952	FK0d FK0f	MM-CP-297A	CC-TE-2271	

FUNCTION: PROCESS MONITORING

ITEM NO	EQUIPMENT ID NO	EQUIPMENT DESCRIPTION	P&ID/1-LINE DRAWING NO.	TRAIN	PHYSICAL LOCATION DRAWING NO.	FIRE AREA/ZONE	REQUIRED FOR		POWER		ELEC NODE	SUPPORTING CONTROL AND INSTRUMENTATION EQUIPMENT				CABLES	ELECTRICAL DRAWING NO.		SUPPORTING SYSTEMS	REDUNDANT COUNTERPART	REMARKS
							HOT STAND BY	COLD SHUT DOWN	ELEC	AIR		EQUIPMENT ID NO.	EQUIPMENT DESCRIPTION	ELEC NODE	FIRE AREA/ZONE		SCHEM.	CABLE			
69	CC-TE-2271	PCCW Loop B Sup. Header Temperature	CC-20211	B	310765	PAB-F-2C-Z	X	X	X	-	TM8	MM-CP-152B CC-TI-2271-1	BOP - Process Control Cabinet Temperature Indicator	FJ4 F30	CB-F-3A-A CB-F-3A-A	FJ4-TM8/10 F39-FJ4/4	310952	FJ4j FJ4n	MM-CP-152B	CC-TE-2171	
70	MM-CP-153	BOP - Process Control Cabinet	-	A	310499	CB-F-3A-A	X	-	X	-	FJ7	-	-	-	-	EJ9-FJ7	310953 EJ9/12	EJ9/12	ED-PP-5	MM-CP-297B	
71	MM-CP-153	BOP - Process Control Cabinet	-	A	310499	CB-F-3A-A	X	-	X	-	FJ8	-	-	-	-	EJ9-FJ7	310953 EJ9/12	EJ9/12	ED-PP-5	MM-CP-297B	
72	MM-CP-297A	BOP - Process Control Cabinet	-	A	310499	CB-F-3A-A	X	X	X	-	FK0	-	-	-	-	EH9-FK0	310952 EH9/19	EH9/19	EDE-PP-1E	MM-CP-297B	
73	MM-CP-297B	BOP - Process Control Cabinet	-	B	310499	CB-F-3A-A	X	X	X	-	FL2	-	-	-	-	EH0-FL2	310952 EH0/19	EH0/19	EDE-PP-1F	MM-CP-297A	
74	MM-CP-152B	BOP - Process Control Cabinet	-	B	310499	CB-F-3A-A	X	X	X	-	FJ4	-	-	-	-	EH0-FJ4	310952 EH0/1	EH0/1	EDE-PP-1F	MM-CP-297A MM-CP-152A	
75	FW-PT-515	RC-E-11D Steam Generator Steam Pressure	MS-20580	B	310589	MS-F-1B-Z	X	X	X	-	GZ6	MM-CP-2 FW-PI-515A	PPC No. 2 Pressure Indicator	FA2 F51	CB-F-3A-A CB-F-3A-A	FA2-GZ6 F56-FA2/1	310492 FA2l FA2m	FA2h	MM-CP-2	FW-PT-514 FW-PT-534 FW-PT-544	
76	FW-PT-535	RC-E-11B Steam Generator Steam Pressure	MS-20581	B	310586	MS-F-3A-Z	X	X	X	-	GZ4	MM-CP-2 FW-PI-535	PPC No. 2 Pressure Indicator	FA2 F51	CB-F-3A-A CB-F-3A-A	FA2-GZ4 F56-FA2/1	310942 FA2l FA2m	FA2h	MM-CP-2	FW-PT-514 FW-PT-534 FW-PT-524	
77	MM-CP-7	Process Control System Cabinet 3	-	A	310499	CB-F-3A-A	X	X	X	-	FA7	-	-	-	-	EH7-FA7	310940 EH7/9	EH7/9	ED-PP-3C	-	

FUNCTION: SAFEGUARD ACTUATION SYSTEM

ITEM NO	EQUIPMENT ID NO	EQUIPMENT DESCRIPTION	P&ID/1-LINE DRAWING NO.	TRAIN	PHYSICAL LOCATION DRAWING NO.	FIRE AREA/ZONE	REQUIRED FOR		POWER		ELEC NODE	SUPPORTING CONTROL AND INSTRUMENTATION EQUIPMENT				CABLES	ELECTRICAL DRAWING NO.		SUPPORTING SYSTEMS	REDUNDANT COUNTERPART	REMARKS
							HOT STAND BY	COLD SHUT DOWN	ELEC	AIR		EQUIPMENT ID NO.	EQUIPMENT DESCRIPTION	ELEC NODE	FIRE AREA/ZONE		SCHEM.	CABLE			
1	MM-CP-12	Solid State Protection System Cabinet	-	A	310501	CB-F-3A-A	X	X	X	-	FB6 FB7 FF8	CBS-CS-2318-1	Control Switch Containment Spray and Isolation Phase B Actuation	F10	CB-F-3A-A	F10-F50 F10-F86/2 F10/F86/3 F10/FB7/7 F10-F50/1 F10-FB6/1 F10-FB6 F10-FB7/5	310949 FB6e FB6f	FB6h FB6j FB6k	EDE-PP-1A	MM-CP-13	
												CBS-CS-2318-2	Control Switch Containment Spray and Isolation Phase B Actuation	F10	CB-F-3A-A						
												CBS-CS-2318-3	Control Switch Containment Spray and Isolation Phase B Actuation	F50	CB-F-3A-A						
												CBS-CS-2318-4	Control Switch Containment Spray and Isolation Phase B Actuation	F50	CB-F-3A-A						
												CBS-CS-2319	Control Switch Containment Spray Reset	F10	CB-F-3A-A						
												CS-CS-2572-1	Control Switch "T" Signal Containment Isolation Phase A Actuation	F10	CB-F-3A-A						
												CS-CS-2572-2	Control Switch "T" Signal Containment Isolation Phase A Actuation	F50	CB-F-3A-A						
												CS-CS-2573	Control Switch "T" Signal Containment Isolation Phase A Reset	F10	CB-F-3A-A						
												CBS-CS-2358	Control Switch "P" Signal Containment Isolation Phase B Reset	F10	CB-F-3A-A						
												SI-CS-2471-1	Control Switch Safety Injection Actuation	F10	CB-F-3A-A						
												SI-CS-2471-2	Control Switch Safety Injection Actuation	F50	CB-F-3A-A						
												SI-CS-2489	Control Switch Safety Injection Reset and Block	F10	CB-F-3A-A						
												PSC-E01/11-52	120 V AC Circuit Breaker	E01	CB-F-1A-A						
												MM-CP-450A	Remote Disabling Control Panel	G5X	DG-F-2A-A	E01-G5X FF8-G5X	E01/2a	E01/2b			

FUNCTION: SAFEGUARD ACTUATION SYSTEM

ITEM NO	EQUIPMENT ID NO	EQUIPMENT DESCRIPTION	P&ID/1-LINE DRAWING NO.	TRAIN	PHYSICAL LOCATION DRAWING NO.	FIRE AREA/ZONE	REQUIRED FOR		POWER		ELEC NODE	SUPPORTING CONTROL AND INSTRUMENTATION EQUIPMENT				CABLES	ELECTRICAL DRAWING NO.		SUPPORTING SYSTEMS	REDUNDANT COUNTERPART	REMARKS
							HOT STAND BY	COLD SHUT DOWN	ELEC	AIR		EQUIPMENT ID NO.	EQUIPMENT DESCRIPTION	ELEC NODE	FIRE AREA/ZONE		SCHEM.	CABLE			
2	MM-CP-13	Solid State Protection System Cabinet	-	B	310501	CB-F-3A-A	X	X	X	-	FB0 FB9 FF9	CBS-CS-2328-1	Control Switch Containment Spray and Isolation Phase B Actuation	F20	CB-F-3A-A	F10-F51 F10-FB9 F20-F51 F20-F51/2 F20-FB0/B F20-FB0/H F20-FB9 F20-FB9/1 F20-FB9/2 F20-FB9/3	310949 FB9e FB9f	FB9h FB9j FB9k	EDE-PP-1B	MM-CP-12	
												CBS-CS-2328-2	Control Switch Containment Spray and Isolation Phase B Actuation	F20	CB-F-3A-A						
												CBS-CS-2328-3	Control Switch Containment Spray and Isolation Phase B Actuation	F50	CB-F-3A-A						
												CBS-CS-2328-4	Control Switch Containment Spray and Isolation Phase B Actuation	F50	CB-F-3A-A						
												CBS-CS-2329	Control Switch Containment Spray Reset	F20	CB-F-3A-A						
												CS-CS-2582-1	Control Switch "T" Signal Containment Isolation Phase A Actuation	F20	CB-F-3A-A						
												CS-CS-2582-2	Control Switch "T" Signal Containment Isolation Phase A Actuation	F50	CB-F-3A-A						
												CS-CS-2583	Control Switch "T" Signal Containment Isolation Phase A Reset	F20	CB-F-3A-A						
												CBS-CS-2359	Control Switch "P" Signal Containment Isolation Phase B Reset	F20	CB-F-3A-A						
												SI-CS-2471-1	Control Switch Safety Injection Actuation	F10	CB-F-3A-A						
												SI-CS-2471-2	Control Switch Safety Injection Actuation	F50	CB-F-3A-A						
												SI-CS-2499	Control Switch Safety Injection Reset and Block	F20	CB-F-3A-A						
												PSC-E02/11-52	120 V AC Circuit Breaker	E02	CB-F-1B-A						
												MM-CP-450B	Remote Disabling Control Panel	G5Y	DG-F-2B-A	E02-G5Y FF9-G5Y	E02/4a	E02/4b			
3	MM-CP-1	Process Protection System Cabinet No. 1	-	A	310501	CB-F-3A-A	X	X	X	-	FA1	PSC-E01/9-52	120 V AC Circuit Breaker	E01	CB-F-1A-A	E01-FA1	310942 E01/9	E01/9	EDE-PP-1A	MM-CP-2 MM-CP-4	
4	MM-CP-2	Process Protection System Cabinet No. 2	-	B	310501	CB-F-3A-A	X	X	X	-	FA2	PSC-E02/9-52	120 V AC Circuit Breaker	E02	CB-F-1B-A	E02-FA2	310942 E02/9	E02/9	EDE-PP-1B	MM-CP-1 MM-CP-3	
5	MM-CP-3	Process Protection System Cabinet No. 3	-	C	310501	CB-F-3A-A	X	X	X	-	FA3	PSC-E03/9-52	120 V AC Circuit Breaker	E03	CB-F-1A-A	E03-FA3	310942 E03/9	E03/9	EDE-PP-1C	MM-CP-2 MM-CP-4	
6	MM-CP-4	Process Protection System Cabinet No. 4	-	D	310501	CB-F-3A-A	X	X	X	-	FA4	PSC-E04/9-52	120 V AC Circuit Breaker	E04	CB-F-1B-A	E04-FA4	310942 E04/10	E04/10	EDE-PP-1D	MM-CP-1 MM-CP-3	

FUNCTION: SAFEGUARD ACTUATION SYSTEM

ITEM NO	EQUIPMENT ID NO	EQUIPMENT DESCRIPTION	P&ID/1-LINE DRAWING NO.	TRAIN	PHYSICAL LOCATION DRAWING NO.	FIRE AREA/ZONE	REQUIRED FOR		POWER		ELEC NODE	SUPPORTING CONTROL AND INSTRUMENTATION EQUIPMENT				CABLES	ELECTRICAL DRAWING NO.		SUPPORTING SYSTEMS	REDUNDANT COUNTERPART	REMARKS
							HOT STAND BY	COLD SHUT DOWN	ELEC	AIR		EQUIPMENT ID NO.	EQUIPMENT DESCRIPTION	ELEC NODE	FIRE AREA/ZONE		SCHEM.	CABLE			
7	RC-PT-455	Protection Set I Pressurizer Pressure - Safety Injection Actuation, Clear Manual Block of Safety Injection	RC-20846	A	310579	C-F-2-Z	X	-	X	-	GN5	EDE-MM-121 MM-CP-1 MM-CP-12 MM-CP-13	Electrical Penetration Process Protection System Cabinet No. 1 Solid State Protection System Cabinet Solid State Protection System Cabinet	H45 FA1 FB5 FB8	C-F-2-Z ET-F-1A-A CB-F-3A-A CB-F-3A-A CB-F-3A-A	GN5-H45/2 FA1-H45/1 FA1-FB5 FA1-FB8	9763-C-509012 9763-C-509046 9763-C-509048 310942	FA1b FA1s FA1e FA1w	MM-CP-1 MM-CP-12 MM-CP-13	-	
8	RC-PT-456	Protection Set II Pressurizer Pressure - Safety Injection Actuation, Clear Manual Block of Safety Injection	RC-20846	B	310579	C-F-2-Z	X	-	X	-	GN5	EDE-MM-131 MM-CP-2 MM-CP-12 MM-CP-13	Electrical Penetration Process Protection System Cabinet No. 2 Solid State Protection System Cabinet Solid State Protection System Cabinet	H55 FA2 FB5 FB8	C-F-1-Z ET-F-1A-A CB-F-3A-A CB-F-3A-A CB-F-3A-A	GN5-H55/5 FA2-H55/3 FA2-FB5 FA2-FB8	9763-C-509012 9763-C-509046 9763-C-509048 310942	FA2b FA2r FA2e FA2w	MM-CP-2 MM-CP-12 MM-CP-13	-	
9	RC-PT-457	Protection Set III Pressurizer Pressure - Safety Injection Actuation, Clear Manual Block of Safety Injection	RC-20846	C	310579	C-F-2-Z	X	-	X	-	GN5	EDE-MM-123 MM-CP-3 MM-CP-12 MM-CP-13	Electrical Penetration Process Protection System Cabinet No. 3 Solid State Protection System Cabinet Solid State Protection System Cabinet	H47 FA3 FB5 FB8	C-F-2-Z ET-F-1A-A CB-F-3A-A CB-F-3A-A CB-F-3A-A	GN5-H47/3 FA3-H47/3 FA3-FB5 FA3-FB8	9763-C-509012 9763-C-509046 9763-C-509048 310942	FA3b FA3r FA3e FA3v	MM-CP-3 MM-CP-12 MM-CP-13	-	
10	RC-PT-458	Protection Set IV Pressurizer Pressure - Safety Injection Actuation	RC-20846	D	310579	C-F-2-Z	X	-	X	-	GN5	EDE-MM-128 MM-CP-4 MM-CP-12 MM-CP-13	Electrical Penetration Process Protection System Cabinet No. 4 Solid State Protection System Cabinet Solid State Protection System Cabinet	H52 FA4 FB5 FB8	C-F-1-Z ET-F-1A-A CB-F-3A-A CB-F-3A-A CB-F-3A-A	GN5-H52/1 FA4-H52/2 FA4-FB5 FA4-FB8	9763-C-509012 9763-C-509046 9763-C-509048 310942	FA4b FA4r FA4e FA4u	MM-CP-4 MM-CP-12 MM-CP-13	-	
11	SI-CS-2480	Control Switch - Steam Line Safety Injection Block Control	-	A	310443	CB-F-3A-A	X	-	X	-	F51	MM-CP-12	Solid State Protection System Cabinet	FB6	CB-F-3A-A	F51-FB6	310949 FB6g	FB6h FB6k	MM-CP-12	-	
12	SI-CS-2490	Control Switch - Steam Line Safety Injection Block Control	-	B	310443	CB-F-3A-A	X	-	X	-	F51	MM-CP-13	Solid State Protection System Cabinet	FB9	CB-F-3A-A	F51-FB9	310949 FB9g	FB9h FB9k	MM-CP-13	-	
13	SI-CS-2488	Control Switch - Pressurizer Pressure Safety Injection Block Control	-	A	310443	CB-F-3A-A	X	-	X	-	F40	MM-CP-12	Solid State Protection System Cabinet	FB6	CB-F-3A-A	F40-FB6	310949 FB6g	FB6h FB6k	MM-CP-12	-	
14	SI-CS-2498	Control Switch - Pressurizer Pressure Safety Injection Block Control	-	B	310443	CB-F-3A-A	X	-	X	-	F41	MM-CP-13	Solid State Protection System Cabinet	FB9	CB-F-3A-A	F48-FB9/2	310949 FB9g	FB9h FB9k	MM-CP-13	-	

FUNCTION: SAFEGUARD ACTUATION SYSTEM

ITEM NO	EQUIPMENT ID NO	EQUIPMENT DESCRIPTION	P&ID/1-LINE DRAWING NO.	TRAIN	PHYSICAL LOCATION DRAWING NO.	FIRE AREA/ZONE	REQUIRED FOR		POWER		ELEC NODE	SUPPORTING CONTROL AND INSTRUMENTATION EQUIPMENT				CABLES	ELECTRICAL DRAWING NO.		SUPPORTING SYSTEMS	REDUNDANT COUNTERPART	REMARKS
							HOT STAND BY	COLD SHUT DOWN	ELEC	AIR		EQUIPMENT ID NO.	EQUIPMENT DESCRIPTION	ELEC NODE	FIRE AREA/ZONE		SCHEM.	CABLE			
15	FW-PT-514	Protection Set I/ Steam Generator Loop 1 - Safety Injection	MS-20580	A	310589	MS-F-1B-Z	X	-	X	-	GL6	MM-CP-1 MM-CP-12 MM-CP-13	Process Protection Cabinet No. 1 Solid State Protection System Cabinet Solid State Protection System Cabinet	FA1 FB5 FB8	CB-F-3A-A CB-F-3A-A CB-F-3A-A	FA1-GL6 FA1-FB5 FA1-FB8	9763-C-509013 9763-C-509047 9763-C-509048 310942	FA1b FA1h FA1e FA1l	MM-CP-1 MM-CP-12 MM-CP-13	-	
16	FW-PT-515	Protection Set II/ Steam Generator Loop 1 - Safety Injection	MS-20580	B	310589	MS-F-1B-Z	X	-	X	-	GZ6	MM-CP-2 MM-CP-12 MM-CP-13	Process Protection Cabinet No. 2 Solid State Protection System Cabinet Solid State Protection System Cabinet	FA2 FB5 FB8	CB-F-3A-A CB-F-3A-A CB-F-3A-A	FA2-GZ6 FA2-FB5 FA2-FB8	9763-C-509015 9763-C-509047 9763-C-509048 310942	FA2b FA2h FA2e FA2l	MM-CP-2 MM-CP-12 MM-CP-13	-	
17	FW-PT-516	Protection Set IV/ Steam Generator Loop 1 - Safety Injection	MS-20580	D	310589	MS-F-1B-Z	X	-	X	-	PS3	MM-CP-4 MM-CP-12 MM-CP-13	Process Protection Cabinet No. 4 Solid State Protection System Cabinet Solid State Protection System Cabinet	FA4 FB5 FB8	CB-F-3A-A CB-F-3A-A CB-F-3A-A	FA4-PS3 FA4-FB5/1 FA4-FB8/1	9763-C-509021 9763-C-509047 9763-C-509048 310942	FA4b FA4h FA4e FA4l	MM-CP-4 MM-CP-12 MM-CP-13	-	
18	FW-PT-524	Protection Set I/ Steam Generator Loop 2 - Safety Injection	MS-20581	A	310586	MS-F-3A-Z	X	-	X	-	GL5	MM-CP-1 MM-CP-12 MM-CP-13	Process Protection Cabinet No. 1 Solid State Protection System Cabinet Solid State Protection System Cabinet	FA1 FB5 FB8	CB-F-3A-A CB-F-3A-A CB-F-3A-A	FA1-GL5 FA1-FB5 FA1-FB8	9763-C-509013 9763-C-509047 9763-C-509048 310942	FA1b FA1h FA1e FA1l	MM-CP-1 MM-CP-12 MM-CP-13	-	
19	FW-PT-525	Protection Set II/ Steam Generator Loop 2 - Safety Injection	MS-20581	B	310586	MS-F-3A-Z	X	-	X	-	GZ4	MM-CP-2 MM-CP-12 MM-CP-13	Process Protection Cabinet No. 2 Solid State Protection System Cabinet Solid State Protection System Cabinet	FA2 FB5 FB8	CB-F-3A-A CB-F-3A-A CB-F-3A-A	FA2-GZ4 FA2-FB5 FA2-FB8	9763-C-509016 9763-C-509047 9763-C-509048 310942	FA2b FA2h FA2e FA2l	MM-CP-2 MM-CP-12 MM-CP-13	-	
20	FW-PT-526	Protection Set III/ Steam Generator Loop 2 - Safety Injection	MS-20581	C	310586	MS-F-3A-Z	X	-	X	-	PS1	MM-CP-3 MM-CP-12 MM-CP-13	Process Protection Cabinet No. 3 Solid State Protection System Cabinet Solid State Protection System Cabinet	FA3 FB5 FB8	CB-F-3A-A CB-F-3A-A CB-F-3A-A	FA3-PS1 FA3-FB5/1 FA3-FB8/1	9763-C-509021 9763-C-509047 9763-C-509048 310942	FA3b FA3h FA3e FA3l FA3f	MM-CP-3 MM-CP-12 MM-CP-13	-	
21	FW-PT-534	Protection Set I/ Steam Generator Loop 3 - Safety Injection	MS-20581	A	310586	MS-F-3A-Z	X	-	X	-	GL5	MM-CP-1 MM-CP-12 MM-CP-13	Process Protection System Cabinet No. 1 Solid State Protection System Cabinet Solid State Protection System Cabinet	FA1 FB5 FB8	CB-F-3A-A CB-F-3A-A CB-F-3A-A	FA1-GL5 FA1-FB5/2 FA1-FB8/2	9763-C-509014 9763-C-509047 9763-C-509048 310942	FA1b FA1h FA1e FA1f FA1l	MM-CP-1 MM-CP-12 MM-CP-13		

FUNCTION: SAFEGUARD ACTUATION SYSTEM

ITEM NO	EQUIPMENT ID NO	EQUIPMENT DESCRIPTION	P&ID/1-LINE DRAWING NO.	TRAIN	PHYSICAL LOCATION DRAWING NO.	FIRE AREA/ZONE	REQUIRED FOR POWER: HOT STAND BY	REQUIRED FOR POWER: COLD SHUT DOWN	REQUIRED FOR POWER: ELEC	REQUIRED FOR POWER: AIR	ELEC NODE	SUPPORTING CONTROL AND INSTRUMENTATION EQUIPMENT: EQUIPMENT ID NO.	SUPPORTING CONTROL AND INSTRUMENTATION EQUIPMENT: EQUIPMENT DESCRIPTION	SUPPORTING CONTROL AND INSTRUMENTATION EQUIPMENT: ELEC NODE	SUPPORTING CONTROL AND INSTRUMENTATION EQUIPMENT: FIRE AREA/ZONE	CABLES	ELECTRICAL DRAWING NO.: SCHEM.	ELECTRICAL DRAWING NO.: CABLE	SUPPORTING SYSTEMS	REDUNDANT COUNTERPART	REMARKS
22	FW-PT-535	Protection Set II/ Steam Generator Loop 3 - Safety Injection	MS-20581	B	310586	MS-F-3A-Z	X	-	X	-	GZ4	MM-CP-2 MM-CP-12 MM-CP-13	Process Protection System Cabinet No. 2 Solid State Protection System Cabinet Solid State Protection System Cabinet	FA2 FB5 FB8	CB-F-3A-A CB-F-3A-A CB-F-3A-A	FA2-GZ4 FA2-FB5/2 FA2-FB8/2	9763-C-509015 9763-C-509047 9763-C-509048 310942	FA2b FA2h FA2e FA2f FA2l	MM-CP-2 MM-CP-12 MM-CP-13		
23	FW-PT-536	Protection Set III/ Steam Generator Loop 3 - Safety Injection	MS-20581	C	310586	MS-F-3A-Z	X	-	X	-	PS2	MM-CP-3 MM-CP-12 MM-CP-13	Process Protection System Cabinet No. 3 Solid State Protection System Cabinet Solid State Protection System Cabinet	FA3 FB5 FB8	CB-F-3A-A CB-F-3A-A CB-F-3A-A	FA3-PS2 FA3-FB5/1 FA3-FB8/1	9763-C-509021 9763-C-509047 9763-C-509048 310942	FA3b FA3h FA3e FA3f FA3l	MM-CP-3 MM-CP-12 MM-CP-13		
24	FW-PT-544	Protection Set I/ Steam Generator Loop 4 - Safety Injection	MS-20580	A	310589	MS-F-1B-Z	X	-	X	-	GL6	MM-CP-1 MM-CP-12 MM-CP-13	Process Protection System Cabinet No. 1 Solid State Protection System Cabinet Solid State Protection System Cabinet	FA1 FB5 FB8	CB-F-3A-A CB-F-3A-A CB-F-3A-A	FA1-GL6 FA1-FB5/2 FA1-FB8/2	9763-C-509014 9763-C-509047 9763-C-509048 310942	FA1b FA1h FA1e FA1f FA1l	MM-CP-1 MM-CP-12 MM-CP-13		
25	FW-PT-545	Protection Set II/ Steam Generator Loop 4 - Safety Injection	MS-20580	B	310589	MS-F-1B-Z	X	-	X	-	GZ6	MM-CP-2 MM-CP-12 MM-CP-13	Process Protection System Cabinet No. 2 Solid State Protection System Cabinet Solid State Protection System Cabinet	FA2 FB5 FB8	CB-F-3A-A CB-F-3A-A CB-F-3A-A	FA2-GZ6 FA2-FB5/2 FA2-FB8/2	9763-C-509016 9763-C-509047 9763-C-509048 310942	FA2b FA2h FA2e FA2f FA2l	MM-CP-2 MM-CP-12 MM-CP-13		
26	FW-PT-546	Protection Set IV/ Steam Generator Loop 4 - Safety Injection	MS-20580	D	310586	MS-F-1B-Z	X	-	X	-	PS4	MM-CP-4 MM-CP-12 MM-CP-13	Process Protection System Cabinet No. 4 Solid State Protection System Cabinet Solid State Protection System Cabinet	FA4 FB5 FB8	CB-F-3A-A CB-F-3A-A CB-F-3A-A	FA4-PS4 FA4-FB5/1 FA4-FB8/1	9763-C-509021 9763-C-509047 9763-C-509048 310942	FA4b FA4h FA4e FA4f FA4l	MM-CP-4 MM-CP-12 MM-CP-13		
27	SI-PT-934	Protection Set IV, Containment Pressure - P Signal Containment Isolation Phase B Actuation, Safety Injection Actuation, Containment Spray Actuation	-	D	310694	ET-F-1C-A	X	-	X	-	P85	MM-CP-4 MM-CP-12 MM-CP-13	Process Protection System Cabinet No. 4 Solid State Protection System Cabinet Solid State Protection System Cabinet	FA4 FB5 FB8	CB-F-3A-A CB-F-3A-A CB-F-3A-A	FA4-P85/1 FA4-FB5/1 FA4-FB8/1	9763-C-509022 9763-C-509048 310942	FA4a FA4b FA4d FA4e	MM-CP-4 MM-CP-12 MM-CP-13	-	
28	SI-PT-935	Protection Set III, Containment Pressure - P Signal Containment Isolation Phase B Actuation, Safety Injection Actuation, Containment Spray Actuation	-	C	310694	ET-F-1C-A	X	-	X	-	P86	MM-CP-3 MM-CP-12 MM-CP-13	Process Protection System Cabinet No. 3 Solid State Protection System Cabinet Solid State Protection System Cabinet	FA3 FB5 FB8	CB-F-3A-A CB-F-3A-A CB-F-3A-A	FA3-P86/1 FA3-FB5/1 FA3-FB8/1	9763-C-509022 9763-C-509048 310942	FA3a FA3b FA3d FA3e FA3f	MM-CP-3 MM-CP-12 MM-CP-13	-	

FUNCTION: SAFEGUARD ACTUATION SYSTEM

ITEM NO	EQUIPMENT ID NO	EQUIPMENT DESCRIPTION	P&ID/1-LINE DRAWING NO.	TRAIN	PHYSICAL LOCATION DRAWING NO.	FIRE AREA/ZONE	REQUIRED FOR		POWER		ELEC NODE	SUPPORTING CONTROL AND INSTRUMENTATION EQUIPMENT				CABLES	ELECTRICAL DRAWING NO.		SUPPORTING SYSTEMS	REDUNDANT COUNTERPART	REMARKS
							HOT STAND BY	COLD SHUT DOWN	ELEC	AIR		EQUIPMENT ID NO.	EQUIPMENT DESCRIPTION	ELEC NODE	FIRE AREA/ZONE		SCHEM.	CABLE			
29	SI-PT-936	Protection Set II, Containment Pressure - P Signal Containment Isolation Phase B Actuation, Safety Injection Actuation, Containment Spray Actuation	-	B	310769	PP-F-4B-Z	X	-	X	-	P87	MM-CP-2 MM-CP-12 MM-CP-13	Process Protection System Cabinet No. 2 Solid State Protection System Cabinet Solid State Protection System Cabinet	FA2 FB5 FB8	CB-F-3A-A CB-F-3A-A CB-F-3A-A	FA2-P87 FA2-FB5/2 FA2-FB8/2	9763-C-509022 9763-C-509048 310942	FA2a FA2b FA2d FA2e FA2f	MM-CP-2 MM-CP-12 MM-CP-13	-	
30	SI-PT-937	Protection Set I, Containment Pressure - P Signal Containment Isolation Phase B Actuation, Containment Spray Actuation	-	A	310769	PP-F-4B-Z	X	-	X	-	P88	MM-CP-1 MM-CP-12 MM-CP-13	Process Protection System Cabinet No. 1 Solid State Protection System Cabinet Solid State Protection System Cabinet	FA1 FB5 FB8	CB-F-3A-A CB-F-3A-A CB-F-3A-A	FA1-P88/1 FA1-FB5/2 FA1-FB8/2	9763-C-509022 9763-C-509048 310942	FA1a FA1b FA1d FA1e FA1f	MM-CP-1 MM-CP-12 MM-CP-13	-	

FUNCTION: COLD SHUTDOWN

ITEM NO.	EQUIPMENT ID NO	EQUIPMENT DESCRIPTION	P&ID/1-LINE DRAWING NO.	TRAIN	PHYSICAL LOCATION DRAWING NO.	FIRE AREA/ZONE	REQUIRED FOR		POWER		ELEC NODE	SUPPORTING CONTROL AND INSTRUMENTATION EQUIPMENT				CABLES	ELECTRICAL DRAWING NO.		SUPPORTING SYSTEMS	REDUNDANT COUNTERPART	REMARKS
							HOT STAND BY	COLD SHUT DOWN	ELEC	AIR		EQUIPMENT ID NO.	EQUIPMENT DESCRIPTION	ELEC NODE	FIRE AREA/ZONE		SCHEM.	CABLE			
1	RH-P-8A	Residual Heat Removal Pump	SI-20448	A	310761	RHR-F-1D-Z	-	X	X	-	H11	RH-A57-52	4160 V AC Circuit Breaker	A57	CB-F-1A-A	A57-M11 A57-F20/1 A57-F20/2 A57-HR9 F20-FB7	310887 A57a A57b A57c A57d	A57g	CBA-FN-19 CBA-FN-20 EAH-FN-5A EAH-FN-31A EDE-SWG-5	RH-P-8B	
												RH-A57-FU	Fuses	A57	CB-F-1A-A						
												RH-CS-2467-2	Control Switch	A57	CB-F-1A-A						
												RH-SS-2467	Selector Switch	A57	CB-F-1A-A						
												EDE-A53-94-1A	Bus Under Voltage Relay	A53	CB-F-1A-A						
												RH-A57-G,R,W	Indicating Lights	A57	CB-F-1A-A						
												RH-A57-86	Lockout Relay	A57	CB-F-1A-A						
												RH-A57-52H	Truck-Operated Contact	A57	CB-F-1A-A						
												RH-A57-50/51	Instrument/Time Overcurrent Relays øA, øC	A57	CB-F-1A-A						
												RH-A57-51GS	Ground Sensor Relay	A57	CB-F-1A-A						
												RH-A57-AM	Ammeter	A57	CB-F-1A-A						
												RH-A57-AS	Ammeter Switch	A57	CB-F-1A-A						
												RH-A57-CT	Current Transformers (75/5)	A57	CB-F-1A-A						
												RH-A57-TD1	CT Test Device	A57	CB-F-1A-A						
												RH-A57-ATR	Transducer	A57	CB-F-1A-A						
												RH-A57-TD2	Lockout Relay Test Device	A57	CB-F-1A-A						
												RH-A57-52Z	Time Delay Relay	A57	CB-F-1A-A						
												RH-CS-2467-1	Control Switch with Indication	F20	CB-F-3A-A						
												RH-HR9-PR1,RMO,SR2	Emergency Power Sequencer Relays	HR9	CB-F-1A-A						
												RH-FB7-K-601A	Safety Injection Signal Actuating Relay	FB7	CB-F-3A-A						

Notes:
1. This equipment is mechanical with no electrical requirements.
2. Electrical Conduit Plan Drawing 310761 is listed to show fire zone corresponding to the location of the RHR pump oil cooler which is identified in Drawing 805020.
3. Electrical Conduit Plan Drawings 310761 and 310762 are listed to show fire zone corresponding to the location of the RHR heat exchanger which is identified in Drawings 805202 and 805203.
4. Electrical Conduit Plan Drawing 310761 is listed corresponding to the location of the RHR sampling valve which is identified in Drawing 805201.
5. Air and power are not required for support as valve fails to safe shutdown position.
6. These valves are also listed in Table MCR 3.1.3.2.
7. These valves are closed with their circuit breakers locked open during 100% power operation. This will prevent spurious operation. For cold shutdown, these valves are energized for repositioning.

FUNCTION: COLD SHUTDOWN

ITEM NO.	EQUIPMENT ID NO	EQUIPMENT DESCRIPTION	P&ID/1-LINE DRAWING NO.	TRAIN	PHYSICAL LOCATION DRAWING NO.	FIRE AREA/ZONE	REQUIRED FOR		POWER		ELEC NODE	SUPPORTING CONTROL AND INSTRUMENTATION EQUIPMENT				CABLES	ELECTRICAL DRAWING NO.		SUPPORTING SYSTEMS	REDUNDANT COUNTERPART	REMARKS
							HOT STAND BY	COLD SHUT DOWN	ELEC	AIR		EQUIPMENT ID NO.	EQUIPMENT DESCRIPTION	ELEC NODE	FIRE AREA/ZONE		SCHEM.	CABLE			
2	RH-P-8B	Residual Heat Removal Pump	RH-20663	B	310761	RHR-F-1C-Z	-	X	X	-	H12	RH-A77-52	4160 V AC Circuit Breaker	A77	CB-F-1B-A	A77-M12 A77-F20/1 A77-F20/2 A77-HR0 F20-FB0	310887 A77a A77b A77c A77d	A77g	CBA-FN-32 CBA-FN-33 EAH-FN-5B EAH-FN-31B EDE-SWG-6	RH-P-8A	
												RH-A77-FU	Fuses	A77	CB-F-1B-A						
												RH-CS-2468-2	Control Switch	A77	CB-F-1B-A						
												RH-SS-2468	Selector Switch	A77	CB-F-1B-A						
												EDE-A73-94-1A	Bus Under Voltage Relay	A53	CB-F-1B-A						
												RH-A77-G,R,W	Indicating Lights	A77	CB-F-1B-A						
												RH-A77-86	Lockout Relay	A77	CB-F-1B-A						
												RH-A77-52H	Truck-Operated Contact	A77	CB-F-1B-A						
												RH-A77-50/51	Instrument/Time Overcurrent Relays øA, øC	A77	CB-F-1B-A						
												RH-A77-51GS	Ground Sensor Relay	A77	CB-F-1B-A						
												RH-A77-AM	Ammeter	A77	CB-F-1B-A						
												RH-A77-AS	Ammeter Switch	A77	CB-F-1B-A						
												RH-A77-CT	Current Transformers (75/5)	A77	CB-F-1B-A						
												RH-A77-TD1	CT Test Device	A77	CB-F-1B-A						
												RH-A77-ATR	Transducer	A77	CB-F-1B-A						
												RH-A77-TD2	Lockout Relay Test Device	A77	CB-F-1B-A						
												RH-A77-52Z	Time Delay Relay	A77	CB-F-1B-A						
												RH-CS-2468-1	Control Switch with Indication	F20	CB-F-3A-A						
												RH-HR0-PR1,RMO,SR2	Emergency Power Sequencer Relays	HR0	CB-F-1B-A						
												RH-FB0-K-601B	Safety Injection Signal Actuating Relay	FB0	CB-F-3A-A						
3	RH-V-14	RH-P-8A to Cold Leg Isolation Valve	RH-20662	A	310769	PP-F-1A-Z	-	X	X	-	V47	RH-B57-52	460 V AC Circuit Breaker	B57	CB-F-1A-A	B57-V47 B57-F20	310887 B57a	B57c	CBA-FN-19 CBA-FN-20	RH-V-26	
												RH-CS-2461	Control Switch	F20	CB-F-3A-A						
												RH-ZL-2461-3	Pilot Light	F20	CB-F-3A-A						
												RH-B57-42	Motor Starter	B57	CB-F-1A-A						
												RH-B57-49	Thermal Overload	B57	CB-F-1A-A						
												RH-ZS-V14	Position Switch	V47	PP-F-1A-Z						
4	RH-V-26	RH-P-8B to Cold Leg Isolation Valve	RH-20663	B	310769	PP-F-1B-Z	-	X	X	-	V48	RH-B65-52	460 V AC Circuit Breaker	B65	CB-F-1B-A	B65-V48 B65-F20	310887 B65a	B65c	CBA-FN-32 CBA-FN-33	RH-V-14	
												RH-CS-2462	Control Switch	F20	CB-F-3A-A						
												RH-ZL-2462-3	Pilot Light	F20	CB-F-3A-A						
												RH-B65-42	Motor Starter	B65	CB-F-1B-A						
												RH-B65-49	Thermal Overload	B65	CB-F-1B-A						
												RH-ZS-V26	Position Switch	V48	PP-F-1B-Z						

FUNCTION: COLD SHUTDOWN

ITEM NO.	EQUIPMENT ID NO	EQUIPMENT DESCRIPTION	P&ID/1-LINE DRAWING NO.	TRAIN	PHYSICAL LOCATION DRAWING NO.	FIRE AREA/ZONE	REQUIRED FOR		POWER		ELEC NODE	SUPPORTING CONTROL AND INSTRUMENTATION EQUIPMENT				CABLES	ELECTRICAL DRAWING NO.		SUPPORTING SYSTEMS	REDUNDANT COUNTERPART	REMARKS
							HOT STAND BY	COLD SHUT DOWN	ELEC	AIR		EQUIPMENT ID NO.	EQUIPMENT DESCRIPTION	ELEC NODE	FIRE AREA/ZONE		SCHEM.	CABLE			
5	RH-V-35	RH-E-9A to Charging Pump Isolation Valve	RH-20662	A	310761	RHR-F-4B-Z	-	X	X	-	V53	RH-B59-52	460 V AC Circuit Breaker	B59	CB-F-1A-A	V49-V57 V49-V58 B59-V49 B59-F20 B59-F20/1 B59-H36 H36-V25 B59-V53/1 B59-V53/2 V25-V27 B59-Y32	310887 B59a	B59c	CBA-FN-19 CBA-FN-20	None	
												RH-CS-2465	Control Switch with Indication	F20	CB-F-3A-A						
												RH-B59-42/O,C	Motor Starters	B59	CB-F-1A-A						
												RH-ZS-V35	Position Switch	V53	RHR-F-4B-Z						
												SI-ZS-V89	Isolation Valve	V58	RHR-F-2A-Z						
												SI-ZS-V90	Isolation Valve	V49	RHR-F-2B-Z						
												SI-ZS-V93	Isolation Valve	V57	RHR-F-2B-Z						
												CBS-ZS-V8	Containment Sump Isolation Valve	V35	PP-F-1A-Z						
												RC-ZS-V23	RHR Letdown and Inlet Isolation Valve	V25	C-F-1-Z						
												RC-ZS-V22	RHR Letdown and Inlet Isolation Valve	V27	C-F-1-Z						
												RH-B59-49	Thermal Overload Relay	B59	CB-F-1A-A						
												EDE-TBX-X32	Terminal Box	Y32	PP-F-1A-Z						
6	RH-V-36	RH-E-9B to SI Pump Isolation Valve	SI-20449	B	310761	RHR-F-2A-Z	-	X	X	-	V54	RH-B66-52	460 V AC Circuit Breaker	B66	CB-F-1B-A	V49-V57/1 V57-V58 B66-V57 B66-V54/2 B66-V54/1 B66-F20 H36-V25 B66-F20/1 B66-Y35 B66-H39 H39-V26 V26-V28	310887 B66a	B66c	CBA-FN-32 CBA-FN-33	None	
												RH-CS-2466	Control Switch with Indication	F20	CB-F-3A-A						
												RH-B66-42/O,C	Motor Starters	B66	CB-F-1B-A						
												RH-B66-49	Thermal Overload	B66	CB-F-1B-A						
												RH-ZS-V36	Position Switch	V54	RHR-F-2A-Z						
												SI-ZS-V90	Isolation Valve	V49	RHR-F-2B-Z						
												SI-ZS-V89	Isolation Valve	V58	RHR-F-2A-Z						
												SI-ZS-V93	Isolation Valve	V57	RHR-F-2B-Z						
												CBS-ZS-V14	Containment Sump Isolation Valve	V36	PP-F-1B-Z						
												RC-ZS-V87	RHR Letdown and Inlet Isolation Valve	V26	C-F-1-Z						
												RC-ZS-V88	RHR Letdown and Inlet Isolation Valve	V28	C-F-1-Z						
												EDE-TBX-Y35	Terminal Box	Y35	PP-F-1B-Z						
7	RH-V-32	RHR PP to Hot Leg Isolation Valve	RH-20663	B	310769	PP-F-1A-Z	-	X	X	-	V51	RH-B58-52	460 V AC Circuit Breaker	B58	CB-F-1B-A	B58-V51 B58-F20	310887 B58a	B58c	CBA-FN-32 CBA-FN-33	None	
												RH-CS-2460	Control Switch	F20	CB-F-3A-A						
												RH-ZL-2460-3	Pilot Light	F20	CB-F-3A-A						
												RH-B58-42	Motor Starter	B58	CB-F-1B-A						
												RH-B58-49	Thermal Overload	B58	CB-F-1B-A						
												RH-ZS-V32	Position Switch	V51	PP-F-1A-Z						

FUNCTION: COLD SHUTDOWN

ITEM NO.	EQUIPMENT ID NO	EQUIPMENT DESCRIPTION	P&ID/1-LINE DRAWING NO.	TRAIN	PHYSICAL LOCATION DRAWING NO.	FIRE AREA/ZONE	REQUIRED FOR		POWER		ELEC NODE	SUPPORTING CONTROL AND INSTRUMENTATION EQUIPMENT				CABLES	ELECTRICAL DRAWING NO.		SUPPORTING SYSTEMS	REDUNDANT COUNTERPART	REMARKS
							HOT STAND BY	COLD SHUT DOWN	ELEC	AIR		EQUIPMENT ID NO.	EQUIPMENT DESCRIPTION	ELEC NODE	FIRE AREA/ZONE		SCHEM.	CABLE			
8	RH-V-70	RHR to Hot Leg Isolation Valve	RH-20663	A	310769	PP-F-1A-Z	-	X	X	-	VB4	RH-D90-52	460 V AC Circuit Breaker	D90	CB-F-1A-A	D90-VB4/1 D90-F20	310887 D90a	D90c	CBA-FN-19 CBA-FN-20	None	
												RH-CS-2479	Control Switch	F20	CB-F-3A-A						
												RH-ZL-2479-3	Pilot Light	F20	CB-F-3A-A						
												RH-D90-42	Motor Starter	D90	CB-F-1A-A						
												RH-D90-49	Thermal Overload	D90	CB-F-1A-A						
												RH-ZS-V70	Position Switch	VB4	PP-F-1A-Z						
9	RH-HCV-606 RH-FCV-618	RH-E-9A Outlet Flow control Valve and Bypass Flow Control Valve	RH-20662	A	310761	RHR-F-4B-Z	-	X	X	X	LG8 LH3	RC-CS-618	Control Switch	F20	CB-F-3A-A	F20-GK0 F20-VW3	310887 E87/2a E87/2e	E87/2c E87/2d E87/2f	CBA-FN-19 CBA-FN-20	RH-HCV-607 RH-FCV-619	Note 5
												RC-CS-606	Control Switch	F20	CB-F-3A-A						
												RC-FY-618-1	E-9A RC Bypass Solenoid Valve	VW3	RHR-F-4B-Z						
												RC-HY-606-1	E-9A Outlet Valve	GK0	RHR-F-4B-Z						
10	RH-HCV-607 RH-FCV-619	RH-E-9B Outlet Flow control Valve and Bypass Flow Control Valve	RH-20663	B	310761	RHR-F-4A-Z	-	X	X	X	LG9 LH4	RC-CS-619	Control Switch	F20	CB-F-3A-A	F20-U7W F20-VW4	310887 E88/2a E88/2e	E88/2c E88/2d E88/2f	CBA-FN-32 CBA-FN-33	RH-HCV-606 RH-FCV-618	Note 5
												RC-CS-607	Control Switch	F20	CB-F-3A-A						
												RC-FY-619-1	E-9B RC Bypass Solenoid Valve	VW4	RHR-F-4A-Z						
												RC-HY-607-1	E-9B Outlet Valve	U7W	RHR-F-4A-Z						

FUNCTION: COLD SHUTDOWN

ITEM NO.	EQUIPMENT ID NO	EQUIPMENT DESCRIPTION	P&ID/1-LINE DRAWING NO.	TRAIN	PHYSICAL LOCATION DRAWING NO.	FIRE AREA/ZONE	REQUIRED FOR		POWER		ELEC NODE	SUPPORTING CONTROL AND INSTRUMENTATION EQUIPMENT				CABLES	ELECTRICAL DRAWING NO.		SUPPORTING SYSTEMS	REDUNDANT COUNTERPART	REMARKS
							HOT STAND BY	COLD SHUT DOWN	ELEC	AIR		EQUIPMENT ID NO.	EQUIPMENT DESCRIPTION	ELEC NODE	FIRE AREA/ZONE		SCHEM.	CABLE			
11	RC-V-22	RHR Inlet Isolation Valve	RH-20841	B	310582	C-F-1-Z	-	X	X	-	V27	RC-B54-52-1,2	460 V AC Circuit Breakers	B54	CB-F-1B-A	B54-G2J B54-G2J/1 B54-H39 B54-H24 H24-V27 H39-V27 F20-G2J F20-FF9/2 B54-V53	310882 B54a	B54c B54d	EDE-MCC-621 CBA-FN-32 CBA-FN-33 CAH-FN-1A CAH-FN-1B CAH-FN-1D	RC-V-88	Notes 6 and 7
												RC-B54-FU	Fuse	B54	CB-F-1B-A						
												RC-CS-7302-2	Control Switch with Indication	G2J	CB-F-1B-A						
												RC-SS-7302	Selector Switch	G2J	CB-F-1B-A						
												RC-B54-42-1/0,C	Motor Starters	B54	CB-F-1B-A						
												RC-B54-42-2	Motor Starter	B54	CB-F-1B-A						
												RC-B54-49-1,2	Overload Relays	B54	CB-F-1B-A						
												EDE-MM-100	Electrical Penetration	H24	C-F-1-Z, ET-F-1C-A						
												RC-ZS-7302B	Valve Position and Open/Close Torque Switches	V27	C-F-1-Z						
												RC-ZL-7302-1	Pilot Light	G2J	CB-F-1B-A						
												EDE-MM-115	Electrical Penetration	H39	C-F-1-Z, ET-F-1C-A						
												RC-CS-7302-1	Control Switch with Indication	F20	CB-F-3A-A						
												RC-ZL-7302-2	Pilot Light	F20	CB-F-3A-A						
												RH-ZS-2465B	Valve Position Limit Switch and Open/Close Torque Switches	V53	RHR-F-4B-Z						
												RC-FF9-K734B	PSC Actuating Auxiliary Relay	FF9	CB-F-3A-A						
												RC-EH0/16-52	120 V AC Circuit Breaker	EH0	CB-F-1B-A	E4J-EH0/1 E4J-G2J G2J-H39/6 H39-V26/3 GZ0-U8U ED0-GZ0/1 H39-V27/1 F20-G2J/2 F26-GZ0/4	EH0/16a EH0/16b	EH0/16c EH0/16d	EDE-PP-1F CBA-FN-32 CBA-FN-33		
												RC-CS-7310-2	Control Switch with Indication	G2J	CB-F-1B-A						
												RC-SS-7310	Selection Switch	G2J	CB-F-1B-A						
												RC-ZS-V87	Valve Position and Open/Close Torque Switches	V26	C-F-1-Z						
												EDE-MM-115	Electrical Penetration	H39	C-F-1-Z						
												RC-EJ4-FU9 & 10	30 Amp Fuses	E4J	ET-F-1C-A						
												RC-CS-7302-2	Control Switch with Indication	G2J	CB-F-1B-A						
												RC-SS-7302	Selector Switch	G2J	CB-F-1B-A						
												RC-ZS-7302B	Valve Position and Open/Close Torque Switches	V27	C-F-1-Z						
												RC-CS-2896-2	Control Switch with Indication	GZ0	CB-F-1B-A						
												RC-SS-2896	Selector Switch	GZ0	CB-F-1B-A						
												RC-ZS-FV-2896	Valve Position Switch	U8U	PP-F-1B-Z						
												RC-ED0-R1	Auxiliary Relay	ED0	CB-F-1B-A						

FUNCTION: COLD SHUTDOWN

ITEM NO.	EQUIPMENT ID NO	EQUIPMENT DESCRIPTION	P&ID/1-LINE DRAWING NO.	TRAIN	PHYSICAL LOCATION DRAWING NO.	FIRE AREA/ZONE	REQUIRED FOR		POWER		ELEC NODE	SUPPORTING CONTROL AND INSTRUMENTATION EQUIPMENT				CABLES	ELECTRICAL DRAWING NO.		SUPPORTING SYSTEMS	REDUNDANT COUNTERPART	REMARKS
							HOT STAND BY	COLD SHUT DOWN	ELEC	AIR		EQUIPMENT ID NO.	EQUIPMENT DESCRIPTION	ELEC NODE	FIRE AREA/ZONE		SCHEM.	CABLE			
	RC-V-22 (Continued)											RC-CS-7302-1	Control Switch with Indication	F20	CB-F-3A-A						
												RC-CS-7310-1	Control Switch with Indication	F20	CB-F-3A-A						
												RC-CS-2896-1	Control Switch with Indication	F29	CB-F-3A-A						
												RC-PT-403	Wide-Range Pressure Transmitter	P76	ET-F-1C-A	FA4-P76/1 FA4-FB8	C-509036	310942 FA4r FA4w FA4b FA4e	MM-CP-4 MM-CP-13		
												MM-CP-4	Process Protection System Cabinet No. 4	FA4	CB-F-3A-A						
												MC-CP-13	Solid State Protection System Output No. 2 Cabinet	FF9	CB-F-3A-A						

FUNCTION: COLD SHUTDOWN

ITEM NO.	EQUIPMENT ID NO	EQUIPMENT DESCRIPTION	P&ID/1-LINE DRAWING NO.	TRAIN	PHYSICAL LOCATION DRAWING NO.	FIRE AREA/ZONE	REQUIRED FOR		POWER		ELEC NODE	SUPPORTING CONTROL AND INSTRUMENTATION EQUIPMENT				CABLES	ELECTRICAL DRAWING NO.		SUPPORTING SYSTEMS	REDUNDANT COUNTERPART	REMARKS
							HOT STAND BY	COLD SHUT DOWN	ELEC	AIR		EQUIPMENT ID NO.	EQUIPMENT DESCRIPTION	ELEC NODE	FIRE AREA/ZONE		SCHEM.	CABLE			
12	RC-V-23	RHR Inlet Isolation Valve	RC-20841	A	310576	C-F-1-Z	X	X	X	-	V25	RC-B53-52-1,2	460 V AC Circuit Breakers	B53	CB-F-1A-A	B53-G2G B53-G2G/1 B53-H36 B53-H19 H36-V25/2 H19-V25 F20-G2G F20-FF8/2 B53-V53	310882 B53a	B53c B53d	EDE-MCC-521 CBA-FN-19 CBA-FN-20 CAH-FN-1C CAH-FN-1E CAH-FN-1F	RC-V-87	Notes 6 and 7
												RC-B53-FU	Fuse	B53	CB-F-1A-A						
												RC-CS-7303-2	Control Switch with Indication	G2G	CB-F-1A-A						
												RC-SS-7303	Selector Switch	G2G	CB-F-1A-A						
												RC-ZL-7303-1	Pilot Light	G2G	CB-F-1A-A						
												RC-B53-42-1/0,C	Motor Starters	B53	CB-F-1A-A						
												RC-B53-42-2	Motor Starter	B53	CB-F-1A-A						
												RC-B53-49-1,2	Overload Relays	B53	CF-F-1A-A						
												EDE-MM-95	Electrical Penetration	H19	C-F-2-Z, ET-F-1A-A						
												RC-ZS-V23	Valve Position and Open/Close Torque Switches	V25	C-F-1-Z						
												EDE-MM-112	Electrical Penetration	H36	C-F-2-Z, ET-F-1A-A						
												RC-CS-7303-1	Control Switch with Indication	F20	CB-F-3A-A						
												RC-ZL-7303-2	Pilot Light	F20	CB-F-3A-A						
												RH-ZS-2465A	Valve Position Switch	V53	RHR-F-1B-Z						
												RC-FF8-K-734A	PSC Actuating Auxiliary Relay	FF8	CB-F-3A-A						
												RC-PT-405	Wide-Range Pressure Transmitter	P78	ET-F-1C-A	FA1-P78/1 FA1-FB5/2	C-509036	310942 FA1r FA1w FA1b FA1e	MM-CP-1 MM-CP-12		
												MM-CP-1	Process Protection System Cabinet No. 1	FA1	CB-F-3A-A						
												MM-CP-12	Solid State Protection System Output No. 2 Cabinet	FF8	CB-F-3A-A						
												RC-EH9/16-52	120 V AC Circuit Breaker	EH9	CB-F-1A-A	E4H-EH9/1 E4H-G2G G2G-H36/8 H36-V25/3 H36-V28/1 G81-U8T EC8-G81 F20-G2G/2 F29-G81/2 EC8-G81/1	EH9/16a EH9/16b	EH9/16c EH9/16d	EDE-PP-1E CBA-FN-19 CBA-FN-20		
												RC-CS-7303-2	Control Switch with Indication	G2G	CB-F-1A-A						
												RC-SS-7303	Selection Switch	G2G	CB-F-1A-A						
												RC-ZS-V23	Valve Position and Open/Close Torque Switches	V25	C-F-1-Z						
												EDE-MM-112	Electrical Penetration	H36	ET-F-1A-A, C-F-2-Z						
												RC-E4H-FU-9,10	30 Amp Fuses	E4H	CB-F-1A-A						
												RC-CS-7311-2	Control Switch with Indication	G2G	CB-F-1A-A						
												RC-SS-7311	Selector Switch	G2G	CB-F-1A-A						
												RC-ZS-7311A	Valve Position and Open/Close Torque Switches	V28	C-F-1-Z						
												RC-CS-2894-2	Control Switch with Indication	G81	CB-F-1A-A						
												RC-SS-2894	Selector Switch	G81	CB-F-1A-A						

FUNCTION: COLD SHUTDOWN

ITEM NO.	EQUIPMENT ID NO	EQUIPMENT DESCRIPTION	P&ID/1-LINE DRAWING NO.	TRAIN	PHYSICAL LOCATION DRAWING NO.	FIRE AREA/ZONE	REQUIRED FOR		POWER		ELEC NODE	SUPPORTING CONTROL AND INSTRUMENTATION EQUIPMENT				CABLES	ELECTRICAL DRAWING NO.		SUPPORTING SYSTEMS	REDUNDANT COUNTERPART	REMARKS
							HOT STAND BY	COLD SHUT DOWN	ELEC	AIR		EQUIPMENT ID NO.	EQUIPMENT DESCRIPTION	ELEC NODE	FIRE AREA/ZONE		SCHEM.	CABLE			
	RC-V-23 (Continued)											RC-ZS-FV-2894	Valve Position Switch	U8T	PP-F-1B-Z						
												RC-EC8-R1	Auxiliary Relay	EC8	CB-F-1A-Z						
												RC-CS-7311-1	Control Switch with Indication	F20	CB-F-3A-A						
												RC-CS-7303-1	Control Switch with Indication	F20	CB-F-3A-A						
												RC-CS-2894-1	Control Switch with Indication	F29	CB-F-3A-A						

FUNCTION: COLD SHUTDOWN

ITEM NO.	EQUIPMENT ID NO	EQUIPMENT DESCRIPTION	P&ID/1-LINE DRAWING NO.	TRAIN	PHYSICAL LOCATION DRAWING NO.	FIRE AREA/ZONE	REQUIRED FOR		POWER		ELEC NODE	SUPPORTING CONTROL AND INSTRUMENTATION EQUIPMENT				CABLES	ELECTRICAL DRAWING NO.		SUPPORTING SYSTEMS	REDUNDANT COUNTERPART	REMARKS
							HOT STAND BY	COLD SHUT DOWN	ELEC	AIR		EQUIPMENT ID NO.	EQUIPMENT DESCRIPTION	ELEC NODE	FIRE AREA/ZONE		SCHEM.	CABLE			
13	RC-V-87	RHR Inlet Isolation Valve	RC-20844	B	310582	C-F-1-Z	X	X	X	-	V26	RC-B61-52-1,2	460 V AC Circuit Breakers	B61	CB-F-1B-A	B61-G2J B61-G2J/1 B61-H39 B61-H24 H39-V26/2 H24-V26 F20-G2J/1 F20-FF9/1 B61-V54	310882 B61a	B61c B61d	EDE-MCC-621 CBA-FN-32 CBA-FN-33 CAH-FN-1A CAH-FN-1B CAH-FN-1D	RC-V-23	Notes 6 and 7
												RC-B61-FU	Fuse	B61	CB-F-1B-A						
												RC-CS-7310-2	Control Switch with Indicator	G2J	CB-F-1B-A						
												RC-SS-7310	Selector Switch	G2J	CB-F-1B-A						
												RC-ZL-7310-1	Pilot Light	G2J	CB-F-1B-A						
												RC-B61-42-1/0,C	Motor Starters	B61	CB-F-1B-A						
												RC-B61-42-2	Motor Starter	B61	CB-F-1B-A						
												RC-B61-49-1,2	Overload Relays	B61	CB-F-1B-A						
												RC-ZS-V87	Valve Position and Open/Close Torque Switches	V26	C-F-1-Z						
												EDE-MM-100	Electrical Penetration	H24	C-F-1-Z, ET-F-1C-A						
												EDE-MM-115	Electrical Penetration	H39	C-F-1-Z, ET-F-1C-A						
												RC-CS-7310-1	Control Switch with Indication	F20	CB-F-3A-A						
												RC-ZL-7310-2	Pilot Light	F20	CB-F-3A-A						
												RH-ZS-2466B	Valve Position Limit Switch	V54	RHR-F-1A-Z						
												RC-FF9-K734B	PSC Actuating Auxiliary Relay	FF9	CB-F-3A-A						
												RC-PT-403	Wide-Range Pressure Transmitter	P76	ET-F-1C-A	FA4-P76/1 FA4-FB8	C-509036	310942 FA4r FA4w FA4b FA4e	MM-CP-4 MM-CP-13		
												MM-CP-4	Process Protection System Cabinet No. 4	FA4	CB-F-3A-A						
												MM-CP-13	Solid State Protection System Output No. 2 Cabinet	FF9	CB-F-3A-A						
												RC-EH0/16-52	120 v AC Circuit Breaker	EH0	CB-F-1B-A	E4J-EH0/1 E4J-GZJ G2J-H39/6 H39-V26/3 GZ0-U8U ED0-GZ0/1 H39-V27/1 F20-G2J/2 F26-GZ0/4	EH0/16a EH0/16b	EH0/16c EH0/16d	EDE-PP-1F CBA-FN-32 CBA-FN-33		
												RC-CS-7310-2	Control Switch with Indication	G2J	CB-F-1B-A						
												RC-SS-7310	Selector Switch	G2J	CB-F-1B-A						
												RC-ZS-V87	Valve Position and Open/Close Torque Switches	V26	C-F-1-Z						
												EDE-MM-115	Electrical Penetration	H39	C-F-1-Z, ET-F-1C-A						
												RC-E4J-FU-9,10	30 Amp Fuses	E4J	CB-F-1B-A						
												RC-CS-7302-2	Control Switch with Indication	G2J	CB-F-1B-A						
												RC-SS-7302	Selector Switch	G2J	CB-F-1B-A						
												RC-ZS-7302B	Valve Position and Open/Close Torque Switches	V27	C-F-1-Z						
												RC-CS-2896-2	Control Switch with Indication	GZ0	CB-F-1B-A						

FUNCTION: COLD SHUTDOWN

ITEM NO.	EQUIPMENT ID NO	EQUIPMENT DESCRIPTION	P&ID/1-LINE DRAWING NO.	TRAIN	PHYSICAL LOCATION DRAWING NO.	FIRE AREA/ZONE	REQUIRED FOR		POWER		ELEC NODE	SUPPORTING CONTROL AND INSTRUMENTATION EQUIPMENT				CABLES	ELECTRICAL DRAWING NO.		SUPPORTING SYSTEMS	REDUNDANT COUNTERPART	REMARKS
							HOT STAND BY	COLD SHUT DOWN	ELEC	AIR		EQUIPMENT ID NO.	EQUIPMENT DESCRIPTION	ELEC NODE	FIRE AREA/ZONE		SCHEM.	CABLE			
	RC-V-87 (Continued)											RC-SS-2896	Selector Switch	GZ0	CB-F-1B-A						
												RC-ZS-FV-2896	Valve Position Switch	U8U	PP-F-1B-Z						
												RC-EC0-R1	Auxiliary Relay	ED0	CB-F-1B-A						
												RC-CS-7302-1	Control Switch with Indication	F20	CB-F-3B-A						
												RC-CS-7310-1	Control Switch with Indication	F20	CB-F-3B-A						
												RC-CS-2896-1	Control Switch with Indication	F29	CB-F-3B-A						

FUNCTION: COLD SHUTDOWN

ITEM NO.	EQUIPMENT ID NO	EQUIPMENT DESCRIPTION	P&ID/1-LINE DRAWING NO.	TRAIN	PHYSICAL LOCATION DRAWING NO.	FIRE AREA/ZONE	REQUIRED FOR		POWER		ELEC NODE	SUPPORTING CONTROL AND INSTRUMENTATION EQUIPMENT				CABLES	ELECTRICAL DRAWING NO.		SUPPORTING SYSTEMS	REDUNDANT COUNTERPART	REMARKS
							HOT STAND BY	COLD SHUT DOWN	ELEC	AIR		EQUIPMENT ID NO.	EQUIPMENT DESCRIPTION	ELEC NODE	FIRE AREA/ZONE		SCHEM.	CABLE			
14	RC-V-88	RHR Inlet Isolation Valve	RH-20662	A	310577	C-F-1-Z	X	X	X	-	V28	RC-B62-52-1,2	460 V AC Circuit Breakers	B62	CB-F-1A-A	B62-G2G B62-G2G/1 B62-H36 B62-H19 H36-V28 H19-V28 F20-G2G/1 F20-FF8/3 B62-V54	310882 B62a	B62c B62d	EDE-MCC-521 CBA-FN-19 CBA-FN-20 CAH-FN-1C CAH-FN-1E CAH-FN-1F	RC-V-22	Notes 6 and 7
												RC-B62-FU	Fuse	B62	CB-F-1A-A						
												RC-CS-7311-2	Control Switch with Indication	G2G	CB-F-1A-A						
												RC-SS-7311	Selector Switch	G2G	CB-F-1A-A						
												RC-ZL-7311-1	Pilot Light	G2G	CB-F-1A-A						
												RC-B62-42-1/0,C	Motor Starters	B62	CB-F-1A-A						
												RC-B62-42-2	Motor Starter	B62	CB-F-1A-A						
												RC-B62-49-1,2	Overload Relays	B62	CB-F-1A-A						
												RC-ZS-7311A	Valve Position and Open/Close Torque Switches	V28	C-F-1-Z						
												EDE-MM-95	Electrical Penetration	H19	C-F-2-Z, ET-F-1A-A						
												EDE-MM-112	Electrical Penetration	H36	C-F-2-Z, ET-F-1A-A						
												RC-CS-7311-1	Control Switch with Indication	F20	CB-F-3A-A						
												RC-ZL-7311-2	Pilot Light	F20	CB-F-3A-A						
												RH-ZS-2466A	Valve Position Limit Switch	V54	RHR-F-1A-Z						
												RC-FF8-K734A	PSC Actuating Auxiliary Relay	FF8	CB-F-3A-A						
												RC-PT-405	Wide-Range Pressure Transmitter	P78	ET-F-1C-A	FA1-P78/1 FA1-FB5/2	C-509036	310942 FA1r FA1w FA1b FA1e	MM-CP-1 MM-CP-12		
												MM-CP-1	Process Protection System Cabinet No. 1	FA1	CB-F-3A-A						
												MM-CP-12	Solid State Protection System Output No. 2 Cabinet	FF8	CB-F-3A-A						
												RC-EH9/16-52	120 V AC Circuit Breaker	EH9	CB-F-1A-A	E4H-EH9/1 E4H-G2G G2G-H36/8 H36-V28/1 H36-V25/3 G81-U8T EC8-G81 F20-G2G/2 F29-G81/2 EC8-G81/1	EH9/16a EH9/16b	EH9/16c EH9/16d	EDE-PP-1E CBA-FN-19 CBA-FN-20		
												RC-CS-7311-2	Control Switch with Indication	G2G	CB-F-1A-A						
												RC-SS-7311	Selector Switch	G2G	CB-F-1A-A						
												RC-ZS-7311A	Valve Position and Open/Close Torque Switches	V28	C-F-1-Z						
												EDE-MM-112	Electrical Penetration	H36	C-F-2-Z, ET-F-1A-A						
												RC-E4H-FU-9,10	30 Amp Fuses	E4H	CB-F-1A-A						
												RC-CS-7303-2	Control Switch with Indication	G2G	CB-F-1A-A						
												RC-SS-7303	Selector Switch	G2G	CB-F-1A-A						
												RC-ZS-V23	Valve Position and Open/Close Torque Switches	V25	C-F-1-Z						

FUNCTION: COLD SHUTDOWN

ITEM NO.	EQUIPMENT ID NO	EQUIPMENT DESCRIPTION	P&ID/1-LINE DRAWING NO.	TRAIN	PHYSICAL LOCATION DRAWING NO.	FIRE AREA/ZONE	REQUIRED FOR		POWER		ELEC NODE	SUPPORTING CONTROL AND INSTRUMENTATION EQUIPMENT				CABLES	ELECTRICAL DRAWING NO.		SUPPORTING SYSTEMS	REDUNDANT COUNTERPART	REMARKS
							HOT STAND BY	COLD SHUT DOWN	ELEC	AIR		EQUIPMENT ID NO.	EQUIPMENT DESCRIPTION	ELEC NODE	FIRE AREA/ZONE		SCHEM.	CABLE			
	RC-V-88 (Continued)											RC-CS-2894-2	Control Switch with Indication	G81	CB-F-1A-A						
												RC-SS-2894	Selector Switch	G81	CB-F-1A-A						
												RC-ZS-FV-2894	Valve Position Switch	U8T	PP-F-1B-Z						
												RC-EC8-R1	Auxiliary Relay	EC8	CB-F-1A-A						
												RC-CS-7303-1	Control Switch with Indication	F20	CB-F-3A-A						
												RC-CS-7311-1	Control Switch with Indication	F20	CB-F-3A-A						
												RC-CS-2894-1	Control Switch with Indication	F29	CB-F-3A-A						
15	RH-P-8A	RHR Pump Lube Oil Cooler	RH-20662	A	310761 805200	RHR-F-1D-Z	-	X	-	-	-	-	-	-	-	-	-	-	Component Cooling	RH-P-8B	Notes 1 and 2
16	RH-P-8B	RHR Pump Lube Oil Cooler	RH-20663	B	310761 805200	RHR-F-1C-Z	-	X	-	-	-	-	-	-	-	-	-	-	Component Cooling	RH-P-8A	Notes 1 and 2
17	RH-E-9A	Residual Heat Removal Heat Exchanger	SI-20448	A	310761 310762 805202 805203	RHR-F-3B-Z	-	X	-	-	-	-	-	-	-	-	-	-	Component Cooling	RH-E-9B	Notes 1 and 3
18	RH-E-9B	Residual Heat Removal Heat Exchanger	RH-20663	B	310761 310762 805202 805203	RHR-F-3A-Z	-	X	-	-	-	-	-	-	-	-	-	-	Component Cooling	RH-E-9A	Notes 1 and 3
19	RH-V-8	RHR Loop A Sample Valve	RH-20662	A	310761 805201	RHR-F-4B-Z	-	X	-	-	-	-	-	-	-	-	-	-	EAH-FN-5A EAH-FN-31A	RH-V-44	Notes 1 and 4
20	RH-V-44	RHR Loop B Sample Valve	RH-20663	B	310761 805201	RHR-F-4A-Z	-	X	-	-	-	-	-	-	-	-	-	-	EAH-FN-5B EAH-FN-31B	RH-V-8	Notes 1 and 4

FUNCTION: SERVICE WATER

ITEM NO.	EQUIPMENT ID NO	EQUIPMENT DESCRIPTION	P&ID/1-LINE DRAWING NO.	TRAIN	PHYSICAL LOCATION DRAWING NO.	FIRE AREA/ZONE	REQUIRED FOR		POWER		ELEC NODE	SUPPORTING CONTROL AND INSTRUMENTATION EQUIPMENT				CABLES	ELECTRICAL DRAWING NO.		SUPPORTING SYSTEMS	REDUNDANT COUNTERPART	REMARKS
							HOT STAND BY	COLD SHUT DOWN	ELEC	AIR		EQUIPMENT ID NO.	EQUIPMENT DESCRIPTION	ELEC NODE	FIRE AREA/ZONE		SCHEM.	CABLE			
1	SW-P-41A	Service Water Loop "A" - Pump "A"	SW-20794	A	301140	SW-F-1E-Z	X	X	X	-	N81	SW-AQ3-52	4160 V AC Circuit Breaker	AQ3	CB-F-1A-A	AQ3-GN9 AQ3-VL3 AQ3-N81 AQ4-HR2 AQ4-F72/2 AQ3-F72/1	301107 AQ3a AQ3b AQ3c AQ3d	AQ3h	CBA-FN-19 CBA-FN-20 EDE-SWG-5	SW-P-41B or SW-P-41D	
												SW-AQ3-FU	Fuses	AQ3	CB-F-1A-A						
												SW-CS-6101-2	Control Switch	AQ3	CB-F-1A-A						
												SW-SS-6101	Selector Switch	AQ3	CB-F-1A-A						
												SW-ZS-V2	Valve Position Switch	VL3	SW-F-1E-Z						
												EDE-A53-94-2	Bus Undervoltage Relay	A53	CB-F-1A-A						
												SW-AQ3-52H	Truck Operated Contact	AQ3	CB-F-1A-A						
												SW-AQ3-50/51	Inst/Time Overcurrent Relays ØA, ØC	AQ3	CB-F-1A-A						
												SW-AQ3-51GS	Ground Sensor Relay	AQ3	CB-F-1A-A						
												SW-AQ3-86	Lockout Relay	AQ3	CB-F-1A-A						
												SW-AQ3-CT	Current Transformers 100/5A	AQ3	CB-F-1A-A						
												SW-AQ3-TD1	Test Device	AQ3	CB-F-1A-A						
												SW-AQ3-AM	Ammeter	AQ3	CB-F-1A-A						
												SW-AQ3-AS	Ammeter Switch	AQ3	CB-F-1A-A						
												SW-AQ3-G,R,W	Indicating Lights	AQ3	CB-F-1A-A						
												SW-AQ3-ATR	Transducer	AQ3	CB-F-1A-A						
												SW-AQ3-TD2	Lockout Relay Test Device	AQ3	CB-F-1A-A						
												SW-GN9-RV54	Auxiliary Relay	GN9	CB-F-1A-A						
												SW-AQ3-52Z	Time Delay Relay	AQ3	CB-F-1A-A						
												SW-AQ3-R1	Auxiliary Relay	AQ3	CB-F-1A-A						
												SW-CS-6102-1	Control Switch	F72	CB-F-3A-A						
												SW-CS-6101-1	Control Switch with Indication	F72	CB-F-3A-A						
												SW-HR2-PR1	EPS Permit Relay (K8 and K10)	HR2	CB-F-1A-A						
												SW-HR2-SR5	EPS Starting Relay (K80)	HR2	CB-F-1A-A						
												SW-HR2-RM0	EPS Manual Override Relay (K32)	HR2	CB-F-1A-A						
												SW-AW-4-52S	Mechanical Operated Switch	AQ4	CB-F-1A-A						

Notes

1. Air is not needed to position or to reposition the valve for safe shutdown.
2. Circuit shown in 301107, Sheet E2T/1a, involving Auxiliary Relay SW-GN9-RV54 of SW-P-41A also affects SW-P-41C.
3. Circuit shown in 301107, Sheet E2U/1a, involving Auxiliary Relay SW-GN0-RV25 of SW-P-41B also affects SW-P-41D.
4. Electrical power not required for support.
5. The equipment is permanently disabled.
6. During normal operation, this equipment is in its safe shutdown position with its circuit breaker administratively controlled off to prevent its spurious operation.

FUNCTION: SERVICE WATER

ITEM NO.	EQUIPMENT ID NO	EQUIPMENT DESCRIPTION	P&ID/1-LINE DRAWING NO.	TRAIN	PHYSICAL LOCATION DRAWING NO.	FIRE AREA/ZONE	REQUIRED FOR		POWER		ELEC NODE	SUPPORTING CONTROL AND INSTRUMENTATION EQUIPMENT				CABLES	ELECTRICAL DRAWING NO.		SUPPORTING SYSTEMS	REDUNDANT COUNTERPART	REMARKS
							HOT STAND BY	COLD SHUT DOWN	ELEC	AIR		EQUIPMENT ID NO.	EQUIPMENT DESCRIPTION	ELEC NODE	FIRE AREA/ZONE		SCHEM.	CABLE			
1	SW-P-41A (Continued)											SW-GN9-RTA	Tower Actuation Sig. Auxiliary Relay	GN9	CB-F-1A-A						
												SW-GN9-RX1	TA Signal Relay	GN9	CB-F-1A-A						
												SW-ZS-V54	Valve Position Switch and Valve Open/Close Torque Switches	VM5	CT-F-2B-A						
												SW-GN9-RV54	Auxiliary Relay	GN9	CB-F-1A-A	GN9-VM5	E2T/1a	E2T/1b	CBA-FN-19 CBA-FN-20		Notes 2,4

FUNCTION: SERVICE WATER

ITEM NO.	EQUIPMENT ID NO	EQUIPMENT DESCRIPTION	P&ID/1-LINE DRAWING NO.	TRAIN	PHYSICAL LOCATION DRAWING NO.	FIRE AREA/ZONE	REQUIRED FOR		POWER		ELEC NODE	SUPPORTING CONTROL AND INSTRUMENTATION EQUIPMENT				CABLES	ELECTRICAL DRAWING NO.		SUPPORTING SYSTEMS	REDUNDANT COUNTERPART	REMARKS
							HOT STAND BY	COLD SHUT DOWN	ELEC	AIR		EQUIPMENT ID NO.	EQUIPMENT DESCRIPTION	ELEC NODE	FIRE AREA/ZONE		SCHEM.	CABLE			
2	SW-P-41B	Service Water Loop "B" - Pump "B"	SW-20794	B	301140	SW-F-1E-Z	X	X	X	-	N82	SW-AR3-52	4160 V AC Circuit Breaker	AR3	CB-F-1B-A	AR3-GN0 AR3-VL4 AR3-N82	301107 AR3a AR3b	AR3h	CBA-FN-32 CBA-FN-33 EDE-SWG-6	SW-P-41A or SW-P-41C Cooling Towers	
												SW-AR3-FU	Fuses	AR3	CB-F-1B-A	AR3-F71/1 AR3-F71/3 AR4-HR4	AR3c AR3d				
												SW-CS-6111-2	Control Switch	AR3	CB-F-1B-A						
												SW-SS-6111	Selector Switch	AR3	CB-F-1B-A						
												SW-ZS-V29	Valve Position Switch	VL4	SW-F-1E-Z						
												EDE-A73-94-2	Bus Undervoltage Relay	A73	CB-F-1B-A						
												SW-AR3-52H	Truck Operated Contact	AR3	CB-F-1B-A						
												SW-AR3-50/51	Inst/Time Overcurrent Relays ØA, ØC	AR3	CB-F-1B-A						
												SW-AR3-51GS	Ground Sensor Relay	AR3	CB-F-1B-A						
												SW-AR3-86	Lockout Relay	AR3	CB-F-1B-A						
												SW-AR3-CT	Current Transformers 100/5A	AR3	CB-F-1B-A						
												SW-AR3-TD1	Test Device	AR3	CB-F-1B-A						
												SW-AR3-AM	Ammeter	AR3	CB-F-1B-A						
												SW-AR3-AS	Ammeter Switch	AR3	CB-F-1B-A						
												SW-AR3-G,R,W	Indicating Lights	AR3	CB-F-1B-A						
												SW-AR3-ATR	Transducer	AR3	CB-F-1B-A						
												SW-AR3-TD2	Lockout Relay Test Device	AR3	CB-F-1B-A						
												SW-GN0-RV25	Auxiliary Relay	GN0	CB-F-1B-A						
												SW-AR3-52Z	Time Delay Relay	AR3	CB-F-1B-A						
												SW-AR3-R1	Auxiliary Relay	AR3	CB-F-1B-A						
												SW-CS-6112-1	Control Switch	F71	CB-F-3A-A						
												SW-CS-6111-1	Control Switch with Indication	F71	CB-F-3A-A						
												SW-HR4-PR1	EPS Permit Relay (K8 and K10)	HR4	CB-F-1B-A						
												SW-HR0-SR5	EPS Starting Relay (K80)	HR0	CB-F-1B-A						
												SW-HR4-RM0	EPS Manual Override Relay (K32)	HR4	CB-F-1B-A						
												SW-AR4-52S	Mechanical Operated Switch	AR4	CB-F-1B-A						
												SW-GN0-RTB	Tower Actuation Sig. Auxiliary Relay	GN0	CB-F-1B-A						
												SW-GN0-RX1	TA Signal Relay	GN0	CB-F-1B-A						
												SW-ZS-V25	Valve Position Switch and Valve Open/Close Torque Switches	VM8	CT-F-2B-A						
												SW-GN0-RV25	Auxiliary Relay	GN0	CB-F-1B-A	GN0-VM8	E2U/1a	E2U/1b	CBA-FN-32 CBA-FN-33		Notes 3,4

FUNCTION: SERVICE WATER

ITEM NO.	EQUIPMENT ID NO	EQUIPMENT DESCRIPTION	P&ID/1-LINE DRAWING NO.	TRAIN	PHYSICAL LOCATION DRAWING NO.	FIRE AREA/ZONE	REQUIRED FOR		POWER		ELEC NODE	SUPPORTING CONTROL AND INSTRUMENTATION EQUIPMENT				CABLES	ELECTRICAL DRAWING NO.		SUPPORTING SYSTEMS	REDUNDANT COUNTERPART	REMARKS
							HOT STAND BY	COLD SHUT DOWN	ELEC	AIR		EQUIPMENT ID NO.	EQUIPMENT DESCRIPTION	ELEC NODE	FIRE AREA/ZONE		SCHEM.	CABLE			
3	SW-P-41C	Service Water Loop "A" - Pump "C"	SW-20794	A	301140	SW-F-1E-Z	X	X	X	-	N83	SW-AQ4-52	4160 V AC Circuit Breaker	AQ4	CB-F-1A-A	AQ4-GN9 AQ4-VL5 AQ4-N83 AQ3-F72/2 AQ4-F72/1 AQ3-HR2	301107 AQ4a AQ4b AQ4c AQ4d	AQ4h	CBA-FN-19 CBA-FN-20 EDE-SWG-5	SW-P-41B or SW-P-41D	Note 2
												SW-AQ4-FU	Fuses	AQ4	CB-F-1A-A						
												SW-CS-6102-2	Control Switch	AQ4	CB-F-1A-A						
												SW-SS-6102	Selector Switch	AQ4	CB-F-1A-A						
												SW-ZS-V22	Valve Position Switch	VL5	SW-F-1E-Z						
												EDE-A53-94-2	Bus Undervoltage Relay	A53	CB-F-1A-A						
												SW-AQ4-52H	Truck Operated Contact	AQ4	CB-F-1A-A						
												SW-AQ4-50/51	Inst/Time Overcurrent Relays ØA, ØC	AQ4	CB-F-1A-A						
												SW-AQ4-51GS	Ground Sensor Relay	AQ4	CB-F-1A-A						
												SW-AQ4-86	Lockout Relay	AQ4	CB-F-1A-A						
												SW-AQ4-CT	Current Transformers 100/5A	AQ4	CB-F-1A-A						
												SW-AQ4-TD1	Test Device	AQ4	CB-F-1A-A						
												SW-AQ4-AM	Ammeter	AQ4	CB-F-1A-A						
												SW-AQ4-AS	Ammeter Switch	AQ4	CB-F-1A-A						
												SW-AQ4-G,R,W	Indicating Lights	AQ4	CB-F-1A-A						
												SW-AQ4-ATR	Transducer	AQ4	CB-F-1A-A						
												SW-AQ4-TD2	Lockout Relay Test Device	AQ4	CB-F-1A-A						
												SW-GN9-RV54	Auxiliary Relay	GN9	CB-F-1A-A						
												SW-AQ4-52Z	Time Delay Relay	AQ4	CB-F-1A-A						
												SW-CS-6102-1	Control Switch	F72	CB-F-3A-A						
												SW-CS-6101-1	Control Switch with Indication	F72	CB-F-3A-A						
												SW-HR2-PR1	EPS Permit Relay (K8 and K10)	HR2	CB-F-1A-A						
												SW-HR2-SR5	EPS Starting Relay (K80)	HR2	CB-F-1A-A						
												SW-HR2-RMO	EPS Manual Override Relay (K32)	HR2	CB-F-1A-A						
												SW-AQ3-52S	Mechanical Operated Switch	AQ3	CB-F-1A-A						
												SW-GN9-RTA	Tower Actuation Sig. Auxiliary Relay	GN9	CB-F-1A-A						
												SW-GN9-RX1	TA Signal Relay	GN9	CB-F-1A-A						
												SW-AQ4-R1	Auxiliary Relay	AR4	CB-F-1A-A						

FUNCTION: SERVICE WATER

ITEM NO.	EQUIPMENT ID NO	EQUIPMENT DESCRIPTION	P&ID/1-LINE DRAWING NO.	TRAIN	PHYSICAL LOCATION DRAWING NO.	FIRE AREA/ZONE	REQUIRED FOR		POWER		ELEC NODE	SUPPORTING CONTROL AND INSTRUMENTATION EQUIPMENT				CABLES	ELECTRICAL DRAWING NO.		SUPPORTING SYSTEMS	REDUNDANT COUNTERPART	REMARKS
							HOT STAND BY	COLD SHUT DOWN	ELEC	AIR		EQUIPMENT ID NO.	EQUIPMENT DESCRIPTION	ELEC NODE	FIRE AREA/ZONE		SCHEM.	CABLE			
4	SW-P-41D	Service Water Loop "B" - Pump "D"	SW-20794	B	301140	SW-F-1E-Z	X	X	X	-	N84	SW-AR4-52	4160 V AC Circuit Breaker	AR4	CB-F-1B-A	AR4-GNO AR4-VL6 AR4-N84 AR3-F71/3 AR4-F71/1 AR3-HR4	301107 AR4a AR4b AR4c AR4d	AR4h	CBA-FN-32 CBA-FN-33 EDE-SWG-6	SW-P-41A SW-P-41C Cooling Towers	Note 3
												SW-AR4-FU	Fuses	AR4	CB-F-1B-A						
												SW-CS-6112-2	Control Switch	AR4	CB-F-1B-A						
												SW-SS-6112	Selector Switch	AR4	CB-F-1B-A						
												SW-ZS-V31	Valve Position Switch	VL6	SW-F-1E-Z						
												EDE-A73-94-2	Bus Undervoltage Relay	A73	CB-F-1B-A						
												SW-AR4-52H	Truck Operated Contact	AR4	CB-F-1B-A						
												SW-AR4-50/51	Inst/Time Overcurrent Relays ØA, ØC	AR4	CB-F-1B-A						
												SW-AR4-51GS	Ground Sensor Relay	AR4	CB-F-1B-A						
												SW-AR4-86	Lockout Relay	AR4	CB-F-1B-A						
												SW-AR4-CT	Current Transformers 100/5A	AR4	CB-F-1B-A						
												SW-AR4-TD1	Test Device	AR4	CB-F-1B-A						
												SW-AR4-AM	Ammeter	AR4	CB-F-1B-A						
												SW-AR4-AS	Ammeter Switch	AR4	CB-F-1B-A						
												SW-AR4-G,R,W	Indicating Lights	AR4	CB-F-1B-A						
												SW-AR4-ATR	Transducer	AR4	CB-F-1B-A						
												SW-AR4-TD2	Lockout Relay Test Device	AR4	CB-F-1B-A						
												SW-GNO-RV25	Auxiliary Relay	GNO	CB-F-1B-A						
												SW-AR4-52Z	Time Delay Relay	AR4	CB-F-1B-A						
												SW-CS-6112-1	Control Switch	F71	CB-F-3A-A						
												SW-CS-6111-1	Control Switch with Indication	F71	CB-F-3A-A						
												SW-HR4-PR1	EPS Permit Relay (K8 and K10)	HR4	CB-F-1B-A						
												SW-HR4-SR5	EPS Starting Relay (K80)	HR4	CB-F-1B-A						
												SW-HR4-RMO	EPS Manual Override Relay (K32)	HR4	CB-F-1B-A						
												SW-AR3-52S	Mechanical Operated Switch	AR3	CB-F-1B-A						
												SW-GNO-RTB	Tower Actuation Sig. Auxiliary Relay	GNO	CB-F-1B-A						
												SW-GNO-RX1	TA Signal Relay	GNO	CB-F-1B-A						
												SW-AR4-R1	Auxiliary Relay	AR4	CB-F-1B-A						
												SW-AR4-R2	Auxiliary Relay	AR4	CB-F-1B-A						

FUNCTION: SERVICE WATER

ITEM NO.	EQUIPMENT ID NO	EQUIPMENT DESCRIPTION	P&ID/1-LINE DRAWING NO.	TRAIN	PHYSICAL LOCATION DRAWING NO.	FIRE AREA/ZONE	REQUIRED FOR		POWER		ELEC NODE	SUPPORTING CONTROL AND INSTRUMENTATION EQUIPMENT				CABLES	ELECTRICAL DRAWING NO.		SUPPORTING SYSTEMS	REDUNDANT COUNTERPART	REMARKS
							HOT STAND BY	COLD SHUT DOWN	ELEC	AIR		EQUIPMENT ID NO.	EQUIPMENT DESCRIPTION	ELEC NODE	FIRE AREA/ZONE		SCHEM.	CABLE			
5	SW-V2	Service Water Pump "A" Discharge Valve	SW-20794	A	301140	SW-F-1E-Z	X	X	X	-	VL3	SW-CR6-52	460 V AC Circuit Breaker	CR6	SW-F-1B-A	AQ3-CR6 CR6-VL3/1 CR6-VL3	301107 CR6a	CR6c	SWA-FN-40A EDE-MCC-514	SW-V-29 or SW-V-31	
												SW-AQ3-52S	Mechanically Operated Contact	AQ3	CB-F-1A-A						
												SW-ZS-V2	Valve Position Switch and Valve Open/Close Torque Switches	VL3	SW-F-1E-Z						
												SW-CR6-42/O,C	Motor Starters	CR6	SW-F-1B-A						
												SW-CR6-49	Overload Relay	CR6	SW-F-1B-A						
												SW-CR6-FU	Fuses	CR6	SW-F-1B-A						
												SW-ECO-TDR	Time Delay Relay	ECO	SW-F-1B-A						
6	SW-V22	Service Water Pump "C" Discharge Valve	SW-20794	A	301140	SW-F-1E-Z	X	X	X	-	VL5	SW-CR7-52	460 V AC Circuit Breaker	CR7	SW-F-1B-A	AQ4-CR7 CR7-VL5/1 CR7-VL5	301107 CR7a	CR7c	SWA-FN-40A EDE-MCC-514	SW-V-29 or SW-V-31	
												SW-AQ4-52S	Mechanically Operated Contact	AQ4	CB-F-1A-A						
												SW-ZS-V22	Valve Position Switch and Valve Open/Close Torque Switches	VL5	SW-F-1E-Z						
												SW-CR7-42/O,C	Motor Starters	CR7	SW-F-1B-A						
												SW-CR7-49	Overload Relay	CR7	SW-F-1B-A						
												SW-CR7-FU	Fuses	CR7	SW-F-1B-A						
												SW-ECO-TDR	Time Delay Relay	ECO	SW-F-1B-A						
7	SW-V29	Service Water Pump "B" Discharge Valve	SW-20794	B	301140	SW-F-1E-Z	X	X	X	-	VL4	SW-CS1-52	460 V AC Circuit Breaker	CS1	SW-F-1C-A	AR3-CS1 CS1-VL4/1 CS1-VL4	301107 CS1a	CS1c	SWA-FN-40B EDE-MCC-614	SW-V-2 SW-V-22 Cooling Towers	
												SW-AR3-52S	Mechanically Operated Contact	AR3	CB-F-1B-A						
												SW-ZS-V29	Valve Position Switch and Valve Open/Close Torque Switches	VL4	SW-F-1E-Z						
												SW-CS1-42/O,C	Motor Starters	CS1	SW-F-1C-A						
												SW-CS1-49	Overload Relay	CS1	SW-F-1C-A						
												SW-CS1-FU	Fuses	CS1	SW-F-1C-A						
												SW-EE2-TDR	Time Delay Relay	EE2	SW-F-1C-A						
8	SW-V31	Service Water Pump "D" Discharge Valve	SW-20794	B	301140	SW-F-1E-Z	X	X	X	-	VL6	SW-CS2-52	460 V AC Circuit Breaker	CS2	SW-F-1C-A	AR4-CS2 CS2-VL6/1 CS2-VL6	301107 CS2a	CS2c	SWA-FN-40B EDE-MCC-614	SW-V-2 SW-V-22 Cooling Towers	
												SW-AR4-52S	Mechanically Operated Contact	AR4	CB-F-1B-A						
												SW-ZS-V31	Valve Position Switch and Valve Open/Close Torque Switches	VL6	SW-F-1E-Z						
												SW-CS2-42/O,C	Motor Starters	CS2	SW-F-1C-A						
												SW-CS2-49	Overload Relay	CS2	SW-F-1C-A						
												SW-CS2-FU	Fuses	CS2	SW-F-1C-A						
												SW-EE2-TDR	Time Delay Relay	EE2	SW-F-1C-A						

FUNCTION: SERVICE WATER

ITEM NO.	EQUIPMENT ID NO	EQUIPMENT DESCRIPTION	P&ID/1-LINE DRAWING NO.	TRAIN	PHYSICAL LOCATION DRAWING NO.	FIRE AREA/ZONE	REQUIRED FOR		POWER		ELEC NODE	SUPPORTING CONTROL AND INSTRUMENTATION EQUIPMENT				CABLES	ELECTRICAL DRAWING NO.		SUPPORTING SYSTEMS	REDUNDANT COUNTERPART	REMARKS
							HOT STAND BY	COLD SHUT DOWN	ELEC	AIR		EQUIPMENT ID NO.	EQUIPMENT DESCRIPTION	ELEC NODE	FIRE AREA/ZONE		SCHEM.	CABLE			
9	SW-V4	Secondary Component Cooling Water Heat Exchanger Header Supply Valve	SW-20795	A	310767	PAB-F-1K-Z	X	X	X	-	VP0	SW-DA6-52	460 V AC Circuit Breaker	DA6	CB-F-1A-A	DA6-VP0 DA6-G2H DA6-G2H/2 DA6-G2H/1 DA6-VP0/1 F72-G2H/3 F72-G2H/5 F72-FB7 DA6-GN9 DA6-HR2	301107 DA6a		DA6c DA6d	CBA-FN-19 CBA-FN-20 EDE-MCC-512	SW-V5	
												SW-CS-6117-2	Control Switch with Indication	G2H	CB-F-1A-A						
												SW-SS-6117	Selector Switch	G2H	CB-F-1A-A						
												SW-DA6-42/0,C	Motor Starters	DA6	CB-F-1A-A						
												SW-DA6-49	Overload Relays	DA6	CB-F-1A-A						
												SW-ZS-V4	Valve Position Switch and Valve Open/Close Torque Switches	VP0	PAB-F-1K-Z						
												SW-DA6-FU	Fuse	DA6	CB-F-1A-A						
												SW-CS-6117-1	Control Switch with Indication	F72	CB-F-3A-A						
												SW-HR2-PR1	EPS Permit Auxiliary Relay (K8 and K11)	HR2	CB-F-1A-A						
												SW-FB7-K603A	SI Actuating Auxiliary Relay	FB7	CB-F-3A-A						
												SW-GN9-RTA	Tower Actuation Sig. Auxiliary Relay	GN9	CB-F-1A-A						
10	SW-V5	Secondary Component Cooling Water Heat Exchanger Header Supply Valve	SW-20795	B	310767	PAB-F-1K-Z	X	X	X	-	VQ1	SW-DA2-52	460 V AC Circuit Breaker	DA2	CB-F-1B-A	DA2-VQ1 DA2-G2K DA2-G2K/1 DA2-G2K/2 DA2-VQ1/1 F71-G2K/3 F71-G2K/5 F71-FB0 DA2-GN0 DA2-HR4	301107 DA2a		DA2c DA2d	CBA-FN-32 CBA-FN-33 EDE-MCC-612	SW-V4	
												SW-CS-6137-2	Control Switch with Indication	G2K	CB-F-1B-A						
												SW-SS-6137	Selector Switch	G2K	CB-F-1B-A						
												SW-DA2-42/0,C	Motor Starters	DA2	CB-F-1B-A						
												SW-DA2-49	Overload Relays	DA2	CB-F-1B-A						
												SW-ZS-V5	Valve Position Switch and Valve Open/Close Torque Switches	VQ1	PAB-F-1K-Z						
												SW-DA2-FU	Fuse	DA2	CB-F-1B-A						
												SW-CS-6137-1	Control Switch with Indication	F71	CB-F-3A-A						
												SW-HR4-PR1	EPS Permit Auxiliary Relay (K8 and K11)	HR4	CB-F-1B-A						
												SW-FB0-K603B	SI Actuating Auxiliary Relay	FB0	CB-F-3A-A						
												SW-GN0-RTB	Tower Actuation Sig. Auxiliary Relay	GN0	CB-F-1B-A						

FUNCTION: SERVICE WATER

ITEM NO.	EQUIPMENT ID NO	EQUIPMENT DESCRIPTION	P&ID/1-LINE DRAWING NO.	TRAIN	PHYSICAL LOCATION DRAWING NO.	FIRE AREA/ZONE	REQUIRED FOR		POWER		ELEC NODE	SUPPORTING CONTROL AND INSTRUMENTATION EQUIPMENT				CABLES	ELECTRICAL DRAWING NO.		SUPPORTING SYSTEMS	REDUNDANT COUNTERPART	REMARKS
							HOT STAND BY	COLD SHUT DOWN	ELEC	AIR		EQUIPMENT ID NO.	EQUIPMENT DESCRIPTION	ELEC NODE	FIRE AREA/ZONE		SCHEM.	CABLE			
11	SW-V15	CC-E-17A Outlet Valve	SW-20795	A	310767	PAB-F-3A-Z	X	X	X	-	VN1	SW-CS-6160	Control Switch with Indication	F72	CB-F-3A-A	DA7-VN1/1 DA7-F72 DA7-GN9 DA7-VN1/2	301107 DA7a	DA7c	CBA-FN-19 CBA-FN-20	SW-V17	Note 4
												SW-DA7-42/0,C	Motor Starter	DA7	CB-F-1A-A						
												SW-GN9-RTA	Twr. Act. Sig. Auxiliary Relay	GN9	CB-F-1A-A						
												SW-ZS-V15	Position Switch	VN1	PAB-F-3A-Z						
												SW-DA7-52	460 V AC Circuit Breaker	DA7	CB-F-1A-A						
12	SW-V16	Diesel Generator "A" Water Jacket Heat Exchanger Solenoid-Operated Valve	SW-20795	A	310767	PAB-F-3A-Z	X	X	X	X	UK6	EDE-E2T/2-72	125 V DC Circuit Breaker	E2T	CB-F-1A-A	F72-G06 F72-GN9/1 F72-GN9/5 GN9-UK6	301107 E2T/2a	E2T/2c	CBA-FN-19 CBA-FN-20	SW-V18	Notes 1,4
												SW-CS-6182	Control Switch with Indication	F72	CB-F-3A-A						
												SW-GN9-R1	Auxiliary Relay	GN9	CB-F-1A-A						
												SW-G06-LSRX	Low Speed Relay	G06	DG-F-2A-A						
												SW-ZS-V16	SW DG Water Jacket VLV-V16 Position Switch and Solenoid	UK6	PAB-F-3A-Z						
13	SW-V17	CC-E-17B Outlet Valve	SW-20795	B	310767	PAB-F-3A-Z	X	X	X	-	VN2	SW-DA3-52	460 V AC Circuit Breaker	DA3	CB-F-1B-A	-	-		CBA-FN-32 CBA-FN-33	SW-V15	Note 6
14	SW-V18	Diesel Generator "B" Water Jacket Heat Exchanger Solenoid-Operated Valve	SW-20795	B	310767	PAB-F-3A-Z	X	X	X	X	UK7	EDE-E2U/2-72	125 V DC Circuit Breaker	E2U	CB-F-1B-A	F71-GN0/1 F71-GN0/5 F71-G18 GN0-UK7	301107 E2U/2a	E2U/2c	CBA-FN-32 CBA-FN-33	SW-V16	Notes 1,4
												SW-CS-6192	Control Switch with Indication	F71	CB-F-3A-A						
												SW-GN0-R1	Auxiliary Relay	GN0	CB-F-1B-A						
												SW-G18-LSRX	Low Speed Relay	G18	DG-F-2B-A						
												SW-ZS-V18	SW DG Water Jacket VLV-V18 Position Switch and Solenoid	UK7	PAB-F-3A-Z						
15	SW-V19	Service Water Discharge to Sea Isolation Valve	SW-20795	B	310765	PAB-F-2C-Z	X	X	X	-	VN3	SW-DA4-52	460 V AC Circuit Breaker	DA4	CB-F-1B-A	DA4-VN3/1 DA4-VN3/2 DA4-F71 DA4-GN0 DA4-E3Q	301107 DA4a	DA4c	CBA-FN-32 CBA-FN-33	SW-V20	Note 4
												SW-CS-6172	Control Switch with Indication	F71	CB-F-3A-A						
												SW-CS-6172-1	Control Switch with Indication	DA4	CB-F-1B-A						
												SW-SS-8257	Selector Switch	DA4	CB-F-1B-A						
												SW-DA4-42/0,C	Motor Starters	DA4	CB-F-1B-A						
												SW-DA4-49	Thermal Overload	DA4	CB-F-1B-A						
												SW-GN0-RTB-2	Twr. Act. Sig. Auxiliary Relay	GN0	CB-F-1B-A						
												SW-ZS-V19	Position Switch	VN3	PAB-F-2C-Z						
												SW-DA4-R1	Auxiliary Relay	E3Q	CB-F-1B-A						

FUNCTION: SERVICE WATER

ITEM NO.	EQUIPMENT ID NO	EQUIPMENT DESCRIPTION	P&ID/1-LINE DRAWING NO.	TRAIN	PHYSICAL LOCATION DRAWING NO.	FIRE AREA/ZONE	REQUIRED FOR		POWER		ELEC NODE	SUPPORTING CONTROL AND INSTRUMENTATION EQUIPMENT				CABLES	ELECTRICAL DRAWING NO.		SUPPORTING SYSTEMS	REDUNDANT COUNTERPART	REMARKS
							HOT STAND BY	COLD SHUT DOWN	ELEC	AIR		EQUIPMENT ID NO.	EQUIPMENT DESCRIPTION	ELEC NODE	FIRE AREA/ZONE		SCHEM.	CABLE			
16	SW-V20	Service Water Discharge to Sea Isolation Valve	SW-20795	A	310765	PAB-F-2C-Z	X	X	X	-	VN4	SW-DA8-52	460 V AC Circuit Breaker	DA8	CB-F-1A-A	DA8-VN4 DA8-VN4/1 DA8-VN4/2 DA8-F72 DA8-GN9	301107 DA8a	DA8c	CBA-FN-19 CBA-FN-20 EDE-MCC-512	SW-V19	
												SW-CS-6162	Control Switch with Indication	F72	CB-F-3A-A						
												SW-DA8-42/0,C	Motor Starters	DA8	CB-F-1A-A						
												SW-DA8-49	Thermal Overload	DA8	CB-F-1A-A						
												SW-GN9-RTA-2	Twr. Act. Sig. Auxiliary Relay	GN9	CB-F-1A-A						
												SW-ZS-V20	Position Switch	VN4	PAB-F-2C-Z						
17	SW-V23	Service Water to Cooling Tower Isolation Valve	SW-20795	B	310765	PAB-F-2C-Z	X	X	X	-	VN5	SW-DA5-52	460 V AC Circuit Breaker	DA5	CB-F-1B-A	DA5-VN5/1 DA5-VN5/2 DA5-F71 DA5-F71/1 DA5-GN0	301107 DA5a	DA5c	CBA-FN-32 CBA-FN-33	SW-V34	Note 4
												SW-CS-6171	Control Switch with Indication	F71	CB-F-3A-A						
												SW-DA5-42/0,C	Motor Starters	DA5	CB-F-1B-A						
												SW-DA5-49	Thermal Overload	DA5	CB-F-1B-A						
												SW-GN0-RTB-2	Twr. Act. Sig. Auxiliary Relay	GN0	CB-F-1B-A						
												SW-ZS-V23	Position Switch	VN5	PAB-F-2C-Z						

FUNCTION: SERVICE WATER

ITEM NO.	EQUIPMENT ID NO	EQUIPMENT DESCRIPTION	P&ID/1-LINE DRAWING NO.	TRAIN	PHYSICAL LOCATION DRAWING NO.	FIRE AREA/ZONE	REQUIRED FOR		POWER		ELEC NODE	SUPPORTING CONTROL AND INSTRUMENTATION EQUIPMENT				CABLES	ELECTRICAL DRAWING NO.		SUPPORTING SYSTEMS	REDUNDANT COUNTERPART	REMARKS
							HOT STAND BY	COLD SHUT DOWN	ELEC	AIR		EQUIPMENT ID NO.	EQUIPMENT DESCRIPTION	ELEC NODE	FIRE AREA/ZONE		SCHEM.	CABLE			
18	SW-V25	Cooling Tower Pump Discharge Valve	SW-20794	B	310717	CT-F-2B-A	X	X	X	-	VH8	SW-CQ7-52	460 V AC Circuit Breaker	CQ7	CT-F-1C-A	CQ7-G2K CQ7-VM8/1 CQ7-VM8/2	301107 CQ7a	CQ7c	CBA-FN-32 CBA-FN-33	SW-V54	Note 4
												SW-CS-6174-2	Control Switch with Indication	G2K	CB-F-1B-A	F71-G2K AU6-G2K G2K-GNO EE7-G2K G2K-GNO/3					
												SW-SS-6174	Selector Switch	G2K	CB-F-1B-A						
												SW-CQ7-42/O,C	Motor Starters	CQ7	CT-F-1C-A						
												SW-CQ7-49	Overload Relay	CQ7	CT-F-1C-A						
												SW-ZS-V25	Valve Position Switch and Valve Open/Close Torque Switches	VM8	CT-F-2B-A						
												SW-CS-6174-1	Control Switch with Indication	F71	CB-F-3A-A						
												SW-AU6-52S	Mechanical Operated Switch	AU6	CB-F-1B-A						
												SW-GNO-RTB1	Tower Actuation Signal Auxiliary Relay	GNO	CB-F-1B-A						
												SW-EE7-TDR	Time Delay Relay	EE7	CT-F-1C-A						
												SW-GNO-RV25	Auxiliary Relay	GNO	CB-F-1B-A						
												SW-ZS-V25	Position Switch	VM8	CT-F-2B-A						
												SW-GNO-RV25	Auxiliary Relay	GNO	CB-F-1B-A	GNO-VM8	E2U/1a	E2U/1b			Note 4
												SW-CQ7-R1	Auxiliary Relay	EE7	CT-F-1C-A						
19	SW-V34	Service Water to Cooling Tower Outlet Valve	SW-20795	A	310765	PAB-F-2C-Z	X	X	X	-	VN6	SW-DA9-52	460 v AC Circuit Breaker	DA9	CB-F-1A-A	DA9-VN6 DA9-VN6/1 DA9-VN6/2 DA9-F72 DA9-F72/1 DA9-GN9	301107 DA9a	DA9c	CBA-FN-19 CBA-FN-20 EDE-MCC-512	SW-V23	
												SW-CS-6161	Control Switch with Indication	F72	CB-F-3A-A						
												SW-DA9-42/O,C	Motor Starters	DA9	CB-F-1A-A						
												SW-DA9-49	Thermal Overload	DA9	CB-F-1A-A						
												SW-GN9-RTA-2	Tower Actuation Signal Auxiliary Relay	GN9	CB-F-1A-A						
												SW-ZS-V34	Position Switch	VN6	PAB-F-2C-Z						
20	SW-V44	Service Water Unit Pumps Intake Valve	SW-20794	A	301037	SW-F-2-0	X	X	X	-	VM1	SW-CU5-52	460 V ac Circuit Breaker	CU5	SW-F-1B-A					None	Note 5

FUNCTION: SERVICE WATER

ITEM NO.	EQUIPMENT ID NO	EQUIPMENT DESCRIPTION	P&ID/1-LINE DRAWING NO.	TRAIN	PHYSICAL LOCATION DRAWING NO.	FIRE AREA/ZONE	REQUIRED FOR		POWER		ELEC NODE	SUPPORTING CONTROL AND INSTRUMENTATION EQUIPMENT				CABLES	ELECTRICAL DRAWING NO.		SUPPORTING SYSTEMS	REDUNDANT COUNTERPART	REMARKS
							HOT STAND BY	COLD SHUT DOWN	ELEC	AIR		EQUIPMENT ID NO.	EQUIPMENT DESCRIPTION	ELEC NODE	FIRE AREA/ZONE		SCHEM.	CABLE			
21	SW-V54	Cooling Tower Pump Discharge Valve	SW-20794	A	301717	CT-F-2B-A	X	X	X	-	VM5	SW-CP8-52	460 V ac Circuit Breaker	CP8	CT-F-1D-A	CP8-G2H CP8-VM5 CP8-VM5/1 CP8-VM5/2 F72-G2H AU2-G2H G2H-GN9/1 G2H-GN9/5 ED6-G2H	301107 CP8a	CP8c	CBA-FN-19 CBA-FN-20 EDE-MCC-513	SW-V25	
												SW-CS-6164-2	Control Switch with Indication	G2H	CB-F-1A-A						
												SW-SS-6164	Selector Switch	G2H	CB-F-1A-A						
												SW-CP8-42/O,C	Motor Starters	CP8	CT-F-1D-A						
												SW-CP8-49	Overload Relay	CP8	CT-F-1D-A						
												SW-ZS-V54	Valve Position Switch and Valve Open/Close Torque Switches	VM5	CT-F-2B-A						
												SW-CP8-FU	Fuse	CP8	CT-F-1D-A						
												SW-CS-6164-1	Control Switch with Indication	F72	CB-F-3A-A						
												SW-AU2-52S	Mechanical Operated Switch	AU2	CB-F-1A-A						
												SW-GN9-RTA-1	Tower Actuation Signal Auxiliary Relay	GN9	CB-F-1A-A						
												SW-ED6-TDR	Timing Relay	ED6	CB-F-1A-A						
												SW-ZS-V54	Position Switch	VM5	CT-F-2B-A						
												SW-GN9-RV54	Auxiliary Relay	GN9	CB-F-1A-A	GN9-VM5	E2T/1a	E2T/1b			Note 4
22	SW-V63	Service Water Discharge Valve to Intake	SW-20794	A	301037	SW-F-2-0	X	X	X	-	VQ0	SW-DZ3-52	460 V ac Circuit Breaker	DZ3	SW-F-1B-A					None	Note 5

FUNCTION: SERVICE WATER

ITEM NO.	EQUIPMENT ID NO	EQUIPMENT DESCRIPTION	P&ID/1-LINE DRAWING NO.	TRAIN	PHYSICAL LOCATION DRAWING NO.	FIRE AREA/ZONE	REQUIRED FOR		POWER		ELEC NODE	SUPPORTING CONTROL AND INSTRUMENTATION EQUIPMENT				CABLES	ELECTRICAL DRAWING NO.		SUPPORTING SYSTEMS	REDUNDANT COUNTERPART	REMARKS
							HOT STAND BY	COLD SHUT DOWN	ELEC	AIR		EQUIPMENT ID NO.	EQUIPMENT DESCRIPTION	ELEC NODE	FIRE AREA/ZONE		SCHEM.	CABLE			
23	EDE-CP-248	Service Water Cooling Tower Actuation Logic (TA)	SW-20794	A	310442	CB-F-1A-A	X	X	X	-	GN9	SW-CS-6149-2	Control Switch	F77	CB-F-3A-A	EF4-GN9/1 F72-GN9 AQ3-GN9/1 ED4-F72	301107 E87/4a	E87/4g E87/4b	CBA-FN-19 CBA-FN-20	EDE-CP-249	Note 4
												SW-CS-6148-1	Control Switch	F72	CB-F-3A-A						
												SW-CS-6148-2	Control Switch	F72	CB-F-3A-A						
												SW-CS-6149-1	Control Switch	F77	CB-F-3A-A						
												SW-AQ3-52S	Circuit Breaker	AQ3	CB-F-1A-A						
												SW-AQ4-52S	Circuit Breaker	AW4	CB-F-1A-A						
												SW-GN9-RX1	Auxiliary Relay	GN9	CB-F-1A-A						
												SW-GN9-TD1	Time Delay Relay	GN9	CB-F-1A-A						
												SW-EF4-RP1	Auxiliary Relay	EF4	CB-F-1A-A						
												SW-EF4-RP2	Auxiliary Relay	EF4	CB-F-1A-A						
												SW-EF4-RP3	Auxiliary Relay	EF4	CB-F-1A-A						
												SW-GN9-RTA	Tower Actuation Relay	GN9	CB-F-1A-A						
												SW-GN9-RTA1	Tower Actuation Relay	GN9	CB-F-1A-A						
												SW-GN9-RTA2	Tower Actuation Relay	GN9	CB-F-1A-A						
												SW-ZL-6149	Pilot Light	F77	CB-F-3A-A						
												SW-GN9-TD2	Time Delay Relay	GN9	CB-F-1A-A						
												SW-CS-6101-1	Control Switch	F72	CB-F-3A-A						
												SW-CS-6102-1	Control Switch	F72	CB-F-3A-A						
												SW-CS-6167-1	Control Switch	F72	CB-F-3A-A						
												SW-ED4-94-5	Aux Relay	ED4	CB-F-1A-A						
												SW-PYY-8272-2	Auxiliary Relay	FJ1	CB-F-3A-A	EF4-FJ1/2	EH9/10a	EH9/10b			Note 4
												SW-PYY-8273	Auxiliary Relay	FJ1	CB-F-3A-A						
												SW-PYY-8274-2	Auxiliary Relay	FJ1	CB-F-3A-A						
												SW-EF4-RP1	Auxiliary Relay	EF4	CB-F-1A-A						
												SW-EF4-RP2	Auxiliary Relay	EF4	CB-F-1A-A						
												SW-EF4-RP3	Auxiliary Relay	EF4	CB-F-1A-A						
												SW-PT-8272 MM-CP-152A	SW-Discharge HDR PR BOP-PCC	GRO FJ1	SW-F-1E-Z CB-F-3A-A	FJ1-GRO	310952	FJ1c FJ1e			
												SW-PT-8273 MM-CP-152A	SW-Discharge HDR PR BOP-PCC	GRO FJ1	SW-F-1E-Z CB-F-3A-A	FJ1-GRO		FJ1c FJ1e			
												SW-PT-8274 MM-CP-152A	SW-Discharge HDR PR BOP-PCC	GRO FJ1	SW-F-1E-Z CB-F-3A-A	FJ1-GRO		FJ1c FJ1e			

FUNCTION: SERVICE WATER

ITEM NO.	EQUIPMENT ID NO	EQUIPMENT DESCRIPTION	P&ID/1-LINE DRAWING NO.	TRAIN	PHYSICAL LOCATION DRAWING NO.	FIRE AREA/ZONE	REQUIRED FOR		POWER		ELEC NODE	SUPPORTING CONTROL AND INSTRUMENTATION EQUIPMENT				CABLES	ELECTRICAL DRAWING NO.		SUPPORTING SYSTEMS	REDUNDANT COUNTERPART	REMARKS
							HOT STAND BY	COLD SHUT DOWN	ELEC	AIR		EQUIPMENT ID NO.	EQUIPMENT DESCRIPTION	ELEC NODE	FIRE AREA/ZONE		SCHEM.	CABLE			
24	EDE-CP-249	Service Water Cooling Water Actuation Logic (TA)	SW-20794	B	310442	CB-F-1B-A	X	X	X	-	GNO	SW-CS-6159-2	Control Switch	F77	CB-F-3A-A	EE3-GNO/1 F71-GNO AR3-GNO/1	301107 E88/4a E88/4b	E88/4g	CBA-FN-32 CBA-FN-33	EDE-CP-248	Note 4
												SW-CS-6158-1	Control Switch	F71	CB-F-3A-A	EE6-F71					
												SW-CS-6158-2	Control Switch	F71	CB-F-3A-A						
												SW-CS-6159-1	Control Switch	F77	CB-F-3A-A						
												SW-AR3-52S	Circuit Breaker	AR3	CB-F-1B-A						
												SW-AR4-52S	Circuit Breaker	AR4	CB-F-1B-A						
												SW-GNO-RX1	Auxiliary Relay	GNO	CB-F-1B-A						
												SW-GNO-TD1	Time Delay Relay	GNO	CB-F-1B-A						
												SW-EE3-RP1	Auxiliary Relay	EE3	CB-F-1B-A						
												SW-EE3-RP2	Auxiliary Relay	EE3	CB-F-1B-A						
												SW-EE3-RP3	Auxiliary Relay	EE3	CB-F-1B-A						
												SW-GNO-RTA	Tower Actuation Relay	GNO	CB-F-1B-A						
												SW-GNO-RTA1	Tower Actuation Relay	GNO	CB-F-1B-A						
												SW-GNO-RTA2	Tower Actuation Relay	GNO	CB-F-1B-A						
												SW-ZL-6159	Pilot Light	F77	CB-F-3A-A						
												SW-GN9-TD2	Time Delay Relay	GNO	CB-F-1B-A						
												SW-CS-6111-1	Control Switch	F71	CB-F-3A-A						
												SW-CS-6112-1	Control Switch	F71	CB-F-3A-A						
												SW-CS-6177-1	Control Switch	F71	CB-F-3A-A						
												SW-EE6-94-6	Aux Relay	EE6	CB-F-3A-A						Note 4
												SW-PYY-8282-2	Auxiliary Relay	FJ4	CB-F-3A-A	EE3-FJ4/2	EHO/10a	EHO/10c			
												SW-PYY-8283	Auxiliary Relay	FJ4	CB-F-3A-A						
												SW-PYY-8284-2	Auxiliary Relay	FJ4	CB-F-3A-A						
												SW-EE3-RP1	Auxiliary Relay	EE3	CB-F-1B-A						
												SW-EE3-RP2	Auxiliary Relay	EE3	CB-F-1B-A						
												SW-EE3-RP3	Auxiliary Relay	EE3	CB-F-1B-A						
												SW-PT-8282 MM-CP-152B	SW-Discharge HDR PR BOP-PCC	GRO FJ4	SW-F-1E-Z CB-F-3A-A	FJ4-GRO	310952	FJ4g FJ4h			
												SW-PT-8283 MM-CP-152B	SW-Discharge HDR PR BOP-PCC	GRO FJ4	SW-F-1E-Z CB-F-3A-A	FJ4-GRO		FJ4g FJ4h			
												SW-PT-8284 MM-CP-152B	SW-Discharge HDR PR BOP-PCC	GRO FJ4	SW-F-1E-Z CB-F-3A-A	FJ4-GRO		FJ4g FJ4h			

FUNCTION: SERVICE WATER

ITEM NO.	EQUIPMENT ID NO	EQUIPMENT DESCRIPTION	P&ID/1-LINE DRAWING NO.	TRAIN	PHYSICAL LOCATION DRAWING NO.	FIRE AREA/ZONE	REQUIRED FOR		POWER		ELEC NODE	SUPPORTING CONTROL AND INSTRUMENTATION EQUIPMENT				CABLES	ELECTRICAL DRAWING NO.		SUPPORTING SYSTEMS	REDUNDANT COUNTERPART	REMARKS
							HOT STAND BY	COLD SHUT DOWN	ELEC	AIR		EQUIPMENT ID NO.	EQUIPMENT DESCRIPTION	ELEC NODE	FIRE AREA/ZONE		SCHEM.	CABLE			
25	SW-P-110A	Cooling Tower Pump	SW-20794	A	301717	CT-F-2B-A	X	X	X	-	NG4	SW-AU2-52	4160 Volt Circuit Breaker	AU2	CB-F-1A-A	AU2-F72/1 AU2-F72/2 AU2-GN9 AU2-HR9 AU2-VM5 AU2-VM5/1 VM5-VM7/1 AU2-NG4	301107 AU2a AU2b AU2c AU2d	AU2h AU2i	EDE-SWG-5	SW Pumphouse	
												SW-AU2-FU	Fuses	AU2	CB-F-1A-A						
												SW-CS-6167-2	Control Switch	AU2	CB-F-1A-A						
												SW-SS-6167	Selector Switch	AU2	CB-F-1A-A						
												EDE-A53-94-1B	Bus Undervoltage Relay	A53	CB-F-1A-A						
												SW-AU2-52H	Truck Operated Contact	AU2	CB-F-1A-A						
												SW-AU2-50/51	Inst/Time Overcurrent Relays ØA, ØC	AU2	CB-F-1A-A						
												SW-AU2-51GS	Ground Sensor Relay	AU2	CB-F-1A-A						
												SW-AU2-86	Lockout Relay	AU2	CB-F-1A-A						
												SW-AU2-CT	Current Transformers 150/5A	AU2	CB-F-1A-A						
												SW-AU2-TD1	Test Device	AU2	CB-F-1A-A						
												SW-AU2-AM	Ammeter	AU2	CB-F-1A-A						
												SW-AU2-AS	Ammeter Switch	AU2	CB-F-1A-A						
												SW-AU2-G,R,W	Indicating Lights	AU2	CB-F-1A-A						
												SW-AU2-ATR	Transducer Test Device	AU2	CB-F-1A-A						
												SW-AU2-52Z	Time Delay Relay	AU2	CB-F-1A-A						
												SW-ZS-V54	Valve Position Switch & Valve Open/Close Torque Switches	VM5	CT-F-2B-A						
												SW-ZS-V56	Valve Position Switch & Valve Open/Close Torque Switches	VM7	CT-F-2B-A						
												SW-CS-6102-1	Control Switch	F72	CB-F-3A-A						
												SW-CS-6101-1	Control Switch	F72	CB-F-3A-A						
												SW-HR2-PR1	E.P.S. Permit Relay (K8 & K10)	HR2	CB-F-1A-A						
												SW-HR2-RMO	E.P.S. Manual Override Relay (K32)	HR2	CB-F-1A-A						
												SW-GN9-RTA	Tower Actuation Signal Auxiliary Relay	GN9	CB-F-1A-A						
												SW-HR9-HR8	E.P.S. Start Relay	HR9	CB-F-1A-A						
												CBS-A61-52S	Mechanical Operated Switch	A61	CB-F-1A-A						
												SW-AU2-R1	Auxiliary Relay	AU2	CB-F-1A-A						
												SW-AU2-R1X	Auxiliary Relay	AU2	CB-F-1A-A						
												SW-AU2-R4	Auxiliary Relay	AU2	CB-F-1A-A						

FUNCTION: SERVICE WATER

ITEM NO.	EQUIPMENT ID NO	EQUIPMENT DESCRIPTION	P&ID/1-LINE DRAWING NO.	TRAIN	PHYSICAL LOCATION DRAWING NO.	FIRE AREA/ZONE	REQUIRED FOR		POWER		ELEC NODE	SUPPORTING CONTROL AND INSTRUMENTATION EQUIPMENT				CABLES	ELECTRICAL DRAWING NO.		SUPPORTING SYSTEMS	REDUNDANT COUNTERPART	REMARKS
							HOT STAND BY	COLD SHUT DOWN	ELEC	AIR		EQUIPMENT ID NO.	EQUIPMENT DESCRIPTION	ELEC NODE	FIRE AREA/ZONE		SCHEM.	CABLE			
26	SW-FN-51A	Cooling Tower Fan	SW-20794	A	301717	CT-F-3-0	X	X	X	-	NG6	SW-AV4-52	4160 Volt Circuit Breaker	AV4	CB-F-1A-A	AV4-HR2 AV4-F72/2 AV4-F72/1 AV4-NG6	301107 AV4a AV4b AV4c AV4d	AV4h	EDE-SWG-5	SW Pumphouse	
												SW-AV4-FU	Fuses	AV4	CB-F-1A-A						
												SW-CS-6185-2	Control Switch	AV4	CB-F-1A-A						
												SW-SS-6185	Selector Switch	AV4	CB-F-1A-A						
												EDE-A53-94-1B	Bus Undervoltage Relay	A53	CB-F-1A-A						
												SW-AV4-52H	Truck Operated Contact	AV4	CB-F-1A-A						
												SW-AV4-50/51	Inst/Time Overcurrent Relays ØA, ØC	AV4	CB-F-1A-A						
												SW-AV4-51GS	Ground Sensor Relay	AV4	CB-F-1A-A						
												SW-AV4-86	Lockout Relay	AV4	CB-F-1A-A						
												SW-AV4-CT	Current Transformers 5/50	AV4	CB-F-1A-A						
												SW-AV4-TD1	Test Device	AV4	CB-F-1A-A						
												SW-AV4-AM	Ammeter	AV4	CB-F-1A-A						
												SW-AV4-AS	Ammeter Switch	AV4	CB-F-1A-A						
												SW-AV4-G,R,W	Indicating Lights	AV4	CB-F-1A-A						
												SW-AV4-ATR	Transducer	AV4	CB-F-1A-A						
												SW-AV4-TD2	Lockout Relay Test Device	AV4	CB-F-1A-A						
												SW-AV4-52Z	Time Delay Relay	AV4	CB-F-1A-A						
												SW-CS-6285-1	Control Switch	F72	CB-F-3A-A						
												SW-HR2-RMO	E.P.S. Manual Override Relay (K32)	HR2	CB-F-1A-A						
27	SW-V74	Loop A Discharge to Cooling Tower	SW-20795	A	310765	PAB-F-1K-Z	X	X	X	-	VM2	SW-BX8-52	460 V ac Circuit Breaker	BX8	CB-F-1A-A	F72-FB7/1 BX8-F72 FX8-F72/1 BX8-GN9 BX8-VM2 BX8-VM2/1 BX8-VM2/2	301107 BX8a	BS8c	EDE-MCC-512	SW Pumphouse	
												SW-CS-8271	Control Switch with Indication	F72	CB-F-3A-A						
												SW-BX8-42/O,C	Motor Starters	BX8	CB-F-1A-A						
												SW-GN9-RTA	Tower Actuation Signal Auxiliary Relay	GN9	CB-F-1A-A						
												SW-ZS-V74	Position Switch	VM2	PAB-F-1K-Z						
												SW-FB7-K608A	SI Actuating Auxiliary Relay	FB7	CB-F-3A-A						
28	SW-V55	Cooling Tower PP A Test/Bypass	SW-20794	A	301717	CT-F-2B-A	X	X	X	-	VM6	SW-CP9-52	460 V ac Circuit Breaker	CP9	CT-F-1D-A					SW Pumphouse	Note 5

FUNCTION: SERVICE WATER

ITEM NO.	EQUIPMENT ID NO	EQUIPMENT DESCRIPTION	P&ID/1-LINE DRAWING NO.	TRAIN	PHYSICAL LOCATION DRAWING NO.	FIRE AREA/ZONE	REQUIRED FOR		POWER		ELEC NODE	SUPPORTING CONTROL AND INSTRUMENTATION EQUIPMENT				CABLES	ELECTRICAL DRAWING NO.		SUPPORTING SYSTEMS	REDUNDANT COUNTERPART	REMARKS
							HOT STAND BY	COLD SHUT DOWN	ELEC	AIR		EQUIPMENT ID NO.	EQUIPMENT DESCRIPTION	ELEC NODE	FIRE AREA/ZONE		SCHEM.	CABLE			
29	SW-V56	Cooling Tower Loop A Test Recirculation	SW-20794	A	301717	CT-F-2B-A	X	X	X	-	VM7	SW-CP0-52	460 V ac Circuit Breaker	CP0	CT-F-1D-A	CP0-F72 CP0-F72/1 AU2-F72/3 AU2-VM5/3 VM5-VM7 CP0-VM7 CP0-VM7/1 CP0-VM7/2	301107 CP0a	CP0c	EDE-MCC-513	SW Pumphouse	
												SW-CS-6165	Control Switch with Indication	F72	CB-F-3A-A						
												SW-CP0-42/O,C	Motor Starters	CP0	CT-F-1D-A						
												SW-ZS-V54	Position Switch	VM5	CT-F-2B-A						
												SW-ZS-V56	Position Switch	VM7	CT-F-2B-A						
												SW-AU2-52S	Mechanical Operated Switch	AU2	CB-F-1A-A						
												SW-CP0-49	Thermal Overload	CP0	CT-F-1D-A						
30	SW-V139	Cooling Tower Spray Bypass Recirculation Valve	SW-20794	A	301717	CT-F-3-0	X	X	X	-	V3Q	SW-C3D-52	460 V ac Circuit Breaker	C3D	CT-F-1D-A	C3D-V3Q C3D-V3Q/1 C3D-V3Q/3 C3D-F72	301107 C3Da	C3Dc	EDE-MCC-513	SW Pumphouse	
												SW-CS-6168	Control Switch with Indication	F72	CB-F-1A-A						
												SW-C3D-42/O,C	Motor Starters	C3D	CT-F-1D-A						
												SW-ZS-V139	Position Switch	V3Q	CT-F-3-0						
												SW-C3D-49	Thermal Overload	C3D	CT-F-1D-A						

FUNCTION: PRIMARY COMPONENT COOLING WATER

ITEM NO.	EQUIPMENT ID NO	EQUIPMENT DESCRIPTION	P&ID/1-LINE DRAWING NO.	TRAIN	PHYSICAL LOCATION DRAWING NO.	FIRE AREA/ZONE	REQUIRED FOR		POWER		ELEC NODE	SUPPORTING CONTROL AND INSTRUMENTATION EQUIPMENT				CABLES	ELECTRICAL DRAWING NO.		SUPPORTING SYSTEMS	REDUNDANT COUNTERPART	REMARKS
							HOT STAND BY	COLD SHUT DOWN	ELEC	AIR		EQUIPMENT ID NO.	EQUIPMENT DESCRIPTION	ELEC NODE	FIRE AREA/ZONE		SCHEM.	CABLE			
1	CC-P-11A	PCCW Loop "A" Pump "A"	CC-20205	A	310765	PAB-F-2C-Z	X	X	X	-	H05	CC-A58-52	4160 V AC Circuit Breaker	A58	CB-F-1A-A	A58-M05/1 A58-F30/1 A58-F30/2 A58-F30/3 A58-HR9 A58-E3C	310895 A58a A58b A58c A58d	A58h	CBA-FN-19 CBA-FN-20 PAH-FN-42A EDE-SWG-5	CC-P-11B or CC-P-11D	
												CC-CS-2140-2	Control Switch	A58	CB-F-1A-A						
												CC-SS-2140	Selector Switch	A58	CB-F-1A-A						
												EDE-A53-94-1A	Bus Undervoltage Relay	A53	CB-F-1A-A						
												CC-A58-52H	Truck-Operated Contact	A58	CB-F-1A-A						
												CC-A58-50/51	Instrument/Time Overcurrent Relays øA, øC	A58	CB-F-1A-A						
												CC-A58-86	Lockout Relay	A58	CB-F-1A-A						
												CC-A58-AM	Ammeter	A58	CB-F-1A-A						
												CC-A58-AS	Ammeter Switch	A58	CB-F-1A-A						
												CC-A58-CT	Current Transformer (150/5)	A58	CB-F-1A-A						
												CC-A58-TD1	CT Test Device	A58	CB-F-1A-A						
												CC-A58-ATR	Transducer	A58	CB-F-1A-A						
												CC-A58-TD2	Lockout Relay Test Device	A58	CB-F-1A-A						
												CC-A58-FU	Fuses	A58	CB-F-1A-A						
												CC-A58-52Z	Timing Relay	A58	CB-F-1A-A						
												CC-A58-G,R,W	Indicating Lights	A58	CB-F-1A-A						
												CC-A58-51GS	Ground Sensor Relay	A58	CB-F-1A-A						
												CC-CS-2140-1	Control Switch with Indication	F30	CB-F-3A-A						
												CC-CS-2141-1	Control Switch	F30	CB-F-3A-A						
												CC-A59-52S	Mechanical-Operated Switch	A59	CB-F-1A-A						
												CC-HR2-PR1	EPS Permissive Relay (K7 and K10)	HR2	CB-F-1A-A						
												CC-HR2-RMO	EPS Relay (K31)	HR2	CB-F-1A-A						
												CC-HR9-SR4	EPS Starting Relay (K78)	HR9	CB-F-1A-A						
												CC-A58-62	Time Delay Relay	A58	CB-F-1A-A						
												CC-E3C-TDRX	Auxiliary Relay	E3C	CB-F-1A-A						
												EDE-E42/12-52	120 V AC Circuit Breaker	E42	CB-F-1A-A	E42-E3C E3C-FK0/1	E42/12a	E42/12b	EDE-MCC-521		
												CC-TYY-2171A	Auxiliary Temporary Relay	FK0	CB-F-3A-A						
												CC-TTY-2197A	Auxiliary Temporary Relay	FK0	CB-F-3A-A						

Notes

1. The equipment is mechanical with no electrical requirement.
2. These valves are in the open position with their circuit breakers locked open to prevent spurious operation.
3. Electrical conduit plan drawing, 310765, is listed only to show the fire zone corresponding to the location of the Heat Exchangers CC-E-17A and CC-E-17B as identified in Drawing 805217.
4. Electrical conduit plan drawing, 310581, is listed only to show the fire zone corresponding to the location of CC-TK-196 as identified in Drawing 805193.

FUNCTION: PRIMARY COMPONENT COOLING WATER

ITEM NO.	EQUIPMENT ID NO	EQUIPMENT DESCRIPTION	P&ID/1-LINE DRAWING NO.	TRAIN	PHYSICAL LOCATION DRAWING NO.	FIRE AREA/ZONE	REQUIRED FOR		POWER		ELEC NODE	SUPPORTING CONTROL AND INSTRUMENTATION EQUIPMENT				CABLES	ELECTRICAL DRAWING NO.		SUPPORTING SYSTEMS	REDUNDANT COUNTERPART	REMARKS
							HOT STAND BY	COLD SHUT DOWN	ELEC	AIR		EQUIPMENT ID NO.	EQUIPMENT DESCRIPTION	ELEC NODE	FIRE AREA/ZONE		SCHEM.	CABLE			
1	CC-P-11A (Continued)											CC-E3C-TDR	Time Delay Relay	E3C	CB-F-1A-A						
												CC-E3C-TDRX	Auxiliary Relay	E3C	CB-F-1A-A						
												CC-TE-2171	Temporary Element	TMO	PAB-F-2C-Z	FKO-TMO/1 FKO-T3A	310952		MM-CP-297A		
												CC-TE-2197	Temporary Element	T3A	PAB-F-2C-Z			FKOd			
												MM-CP-297A	BOP-PCC	FKO	CB-F-3A-A			FKOf			

FUNCTION: PRIMARY COMPONENT COOLING WATER

ITEM NO.	EQUIPMENT ID NO	EQUIPMENT DESCRIPTION	P&ID/1-LINE DRAWING NO.	TRAIN	PHYSICAL LOCATION DRAWING NO.	FIRE AREA/ZONE	REQUIRED FOR		POWER		ELEC NODE	SUPPORTING CONTROL AND INSTRUMENTATION EQUIPMENT				CABLES	ELECTRICAL DRAWING NO.		SUPPORTING SYSTEMS	REDUNDANT COUNTERPART	REMARKS
							HOT STAND BY	COLD SHUT DOWN	ELEC	AIR		EQUIPMENT ID NO.	EQUIPMENT DESCRIPTION	ELEC NODE	FIRE AREA/ZONE		SCHEM.	CABLE			
2	CC-P-11B	PCCW Loop "B" Pump "B"	CC-20211	B	310765	PAB-F-2C-Z	X	X	X	-	M06	CC-A78-52	4160 V AC Circuit Breaker	A78	CB-F-1B-A	A78-M06/1 A78-F31 A78-F31/1 A78-F31/2 A78-HR0 A78-E3D	310895 A78a A78b A78c A78d	A78h	CBA-FN-32 CBA-FN-33 PAH-FN-42B EDE-SWG-6	CC-P-11A or CC-P-11C	
												CC-CS-2240-2	Control Switch	A78	CB-F-1B-A						
												CC-SS-2240	Selector Switch	A78	CB-F-1B-A						
												EDE-A73-94-1A	Bus Undervoltage Relay	A73	CB-F-1B-A						
												CC-A78-52H	Truck-Operated Contact	A78	CB-F-1B-A						
												CC-A78-50/51	Instrument/Time Overcurrent Relays øA, øC	A78	CB-F-1B-A						
												CC-A78-86	Lockout Relay	A78	CB-F-1B-A						
												CC-A78-AM	Ammeter	A78	CB-F-1B-A						
												CC-A78-AS	Ammeter Switch	A78	CB-F-1B-A						
												CC-A78-CT	Current Transformer (150/5)	A78	CB-F-1B-A						
												CC-A78-TD1	CT Test Device	A78	CB-F-1B-A						
												CC-A78-ATR	Transducer	A78	CB-F-1B-A						
												CC-A78-TD2	Lockout Relay Test Device	A78	CB-F-1B-A						
												CC-A78-FU	Fuses	A78	CB-F-1B-A						
												CC-A78-52Z	Timing Relay	A78	CB-F-1B-A						
												CC-A78-G,R,W	Indicating Lights	A78	CB-F-1B-A						
												CC-A78-51GS	Ground Sensor Relay	A78	CB-F-1B-A						
												CC-CS-2240-1	Control Switch with Indication	F30	CB-F-3A-A						
												CC-CS-2241-1	Control Switch	F30	CB-F-3A-A						
												CC-A79-52S	Mechanical-Operated Switch	A79	CB-F-1B-A						
												CC-HR4-PR1	EPS Permissive Relay (K7 and K10)	HR4	CB-F-1B-A						
												CC-HR4-RM0	EPS Relay (K31)	HR4	CB-F-1B-A						
												CC-HR0-SR4	EPS Starting Relay (K78)	HR0	CB-F-1B-A						
												CC-A78-62	Time Delay Relay	A78	CB-F-1B-A						
												CC-E3D-TDRX	Auxiliary Relay	E3D	CB-F-1B-A						
												EDE-E50/12-52	120 V AC Circuit Breaker	E50	CB-F-1B-A	E3D-E50 E3D-FJ4	E50/12a	E50/12b	EDE-MCC-621		
												CC-TYY-2271A	Auxiliary Temporary Relay	FJ4	CB-F-3A-A						
												CC-TTY-2297A	Auxiliary Temporary Relay	FJ4	CB-F-3A-A						
												CC-E3D-TDR	Time Delay Relay	E3D	CB-F-1B-A						
												CC-E3D-TDRX	Auxiliary Relay	E3D	CB-F-1B-A						
												CC-TE-2271	Temporary Element	TM8	PAB-F-2C-Z	FJ4-TM8/2 FJ4-T2Z	310952		MM-CP-152B		
												CC-TE-2297	Temporary Element	T2Z	PAB-F-2C-Z			FJ4j FJ4n			
												MM-CP-152B	BOP-PCC	FJ4	CB-F-3A-A						

FUNCTION: PRIMARY COMPONENT COOLING WATER

ITEM NO.	EQUIPMENT ID NO	EQUIPMENT DESCRIPTION	P&ID/1-LINE DRAWING NO.	TRAIN	PHYSICAL LOCATION DRAWING NO.	FIRE AREA/ZONE	REQUIRED FOR		POWER		ELEC NODE	SUPPORTING CONTROL AND INSTRUMENTATION EQUIPMENT				CABLES	ELECTRICAL DRAWING NO.		SUPPORTING SYSTEMS	REDUNDANT COUNTERPART	REMARKS
							HOT STAND BY	COLD SHUT DOWN	ELEC	AIR		EQUIPMENT ID NO.	EQUIPMENT DESCRIPTION	ELEC NODE	FIRE AREA/ZONE		SCHEM.	CABLE			
3	CC-P-11C	PCCW Loop "A" Pump "C"	CC-20205	A	310766	PAB-F-2C-Z	X	X	X	-	H07	CC-A59-52	4160 V AC Circuit Breaker	A59	CB-F-1A-A	A59-M07/1 A59-F30/1 A59-F30/2 A59-F30/3 A59-HR9 A59-E3C	310895 A59a A59b A59c A59d	A59h	CBA-FN-19 CBA-FN-20 PAH-FN-42A EDE-SWG-5	CC-P-11B or CC-P-11D	
												CC-CS-2141-2	Control Switch	A59	CB-F-1A-A						
												CC-SS-2141	Selector Switch	A59	CB-F-1A-A						
												EDE-A53-94-1A	Bus Undervoltage Relay	A53	CB-F-1A-A						
												CC-A59-52H	Truck-Operated Contact	A59	CB-F-1A-A						
												CC-A59-50/51	Instrument/Time Overcurrent Relays øA, øC	A59	CB-F-1A-A						
												CC-A59-86	Lockout Relay	A59	CB-F-1A-A						
												CC-A59-AM	Ammeter	A59	CB-F-1A-A						
												CC-A59-AS	Ammeter Switch	A59	CB-F-1A-A						
												CC-A59-CT	Current Transformer (150/5)	A59	CB-F-1A-A						
												CC-A59-TD1	CT Test Device	A59	CB-F-1A-A						
												CC-A59-ATR	Transducer	A59	CB-F-1A-A						
												CC-A59-TD2	Lockout Relay Test Device	A59	CB-F-1A-A						
												CC-A59-FU	Fuses	A59	CB-F-1A-A						
												CC-A59-52Z	Timing Relay	A59	CB-F-1A-A						
												CC-A59-G,R,W	Indicating Lights	A59	CB-F-1A-A						
												CC-A59-51GS	Ground Sensor Relay	A59	CB-F-1A-A						
												CC-CS-2141-1	Control Switch with Indication	F30	CB-F-3A-A						
												CC-CS-2140-1	Control Switch	F30	CB-F-3A-A						
												CC-A58-52S	Mechanical-Operated Switch	A58	CB-F-1A-A						
												CC-HR2-PR1	EPS Permissive Relay (K8 and K10)	HR2	CB-F-1A-A						
												CC-HR2-RMO	EPS Relay (K31)	HR2	CB-F-1A-A						
												CC-HR9-SR4	EPS Starting Relay (K78)	HR9	CB-F-1A-A						
												CC-A59-62	Time Delay Relay	A59	CB-F-1A-A						
												CC-E3C-TDRX	Auxiliary Relay	E3C	CB-F-1A-A						
												EDE-E42/12-52	120 V AC Circuit Breaker	E42	CB-F-1A-A	E42-E3C E3C-FK0/1	E42/12a	E42/12b	EDE-MCC-521		
												CC-TYY-2171A	Auxiliary Temporary Relay	FK0	CB-F-3A-A						
												CC-TTY-2197A	Auxiliary Temporary Relay	FK0	CB-F-3A-A						
												CC-E3C-TDR	Time Delay Relay	E3C	CB-F-1A-A						
												CC-E3C-TDRX	Auxiliary Relay	E3C	CB-F-1A-A						
												CC-TE-2171	Temporary Element	TM0	PAB-F-2C-Z	FK0-TM0/1 FK0-T3A	310952	FK0d FK0f	MM-CP-297A		
												CC-TE-2197	Temporary Element	T3A	PAB-F-2C-Z						
												MM-CP-297A	BOP-PCC	FK0	CB-F-3A-A						

FUNCTION: PRIMARY COMPONENT COOLING WATER

ITEM NO.	EQUIPMENT ID NO	EQUIPMENT DESCRIPTION	P&ID/1-LINE DRAWING NO.	TRAIN	PHYSICAL LOCATION DRAWING NO.	FIRE AREA/ZONE	REQUIRED FOR		POWER		ELEC NODE	SUPPORTING CONTROL AND INSTRUMENTATION EQUIPMENT				CABLES	ELECTRICAL DRAWING NO.		SUPPORTING SYSTEMS	REDUNDANT COUNTERPART	REMARKS
							HOT STAND BY	COLD SHUT DOWN	ELEC	AIR		EQUIPMENT ID NO.	EQUIPMENT DESCRIPTION	ELEC NODE	FIRE AREA/ZONE		SCHEM.	CABLE			
4	CC-P-11D	PCCW Loop "B" Pump "D"	CC-20211	B	310766	PAB-F-2C-Z	X	X	X	-	M08	CC-A79-52	4160 V AC Circuit Breaker	A79	CB-F-1B-A	A79-M08/1 A79-F31 A79-F31/1 A79-F31/2 A79-HR0 A79-E3D	310895 A79a A79b A79c A79d	A79h	CBA-FN-32 CBA-FN-33 PAH-FN-42B EDE-SWG-6	CC-P-11A or CC-P-11C	
												CC-CS-2241-2	Control Switch	A79	CB-F-1B-A						
												CC-SS-2241	Selector Switch	A79	CB-F-1B-A						
												EDE-A73-94-1A	Bus Undervoltage Relay	A73	CB-F-1B-A						
												CC-A79-52H	Truck-Operated Contact	A79	CB-F-1B-A						
												CC-A79-50/51	Instrument/Time Overcurrent Relays øA, øC	A79	CB-F-1B-A						
												CC-A79-86	Lockout Relay	A79	CB-F-1B-A						
												CC-A79-AM	Ammeter	A79	CB-F-1B-A						
												CC-A79-AS	Ammeter Switch	A79	CB-F-1B-A						
												CC-A79-CT	Current Transformer (150/5)	A79	CB-F-1B-A						
												CC-A79-TD1	CT Test Device	A79	CB-F-1B-A						
												CC-A79-ATR	Transducer	A79	CB-F-1B-A						
												CC-A79-TD2	Lockout Relay Test Device	A79	CB-F-1B-A						
												CC-A79-FU	Fuses	A79	CB-F-1B-A						
												CC-A79-52Z	Timing Relay	A79	CB-F-1B-A						
												CC-A79-G,R,W	Indicating Lights	A79	CB-F-1B-A						
												CC-A79-51GS	Ground Sensor Relay	A79	CB-F-1B-A						
												CC-CS-2241-1	Control Switch with Indication	F30	CB-F-3A-A						
												CC-CS-2240-1	Control Switch	F30	CB-F-3A-A						
												CC-A78-52S	Mechanical-Operated Switch	A78	CB-F-1B-A						
												CC-HR4-PR1	EPS Permissive Relay (K8 and K10)	HR4	CB-F-1B-A						
												CC-HR4-RM0	EPS Relay (K31)	HR4	CB-F-1B-A						
												CC-HR0-SR4	EPS Starting Relay (K78)	HR0	CB-F-1B-A						
												CC-A79-62	Time Delay Relay	A79	CB-F-1B-A						
												CC-E3D-TDRX	Auxiliary Relay	E3D	CB-F-1B-A						
												EDE-E50/12-52	120 V AC Circuit Breaker	E50	CB-F-1B-A	E3D-E50 E3D-FJ4	E50/12a	E50/12b	EDE-MCC-621		
												CC-TYY-2271A	Auxiliary Temporary Relay	FJ4	CB-F-3A-A						
												CC-TYY-2297A	Auxiliary Temporary Relay	FJ4	CB-F-3A-A						
												CC-E3D-TDR	Time Delay Relay	E3D	CB-F-1B-A						
												CC-E3D-TDRX	Auxiliary Relay	E3D	CB-F-1B-A						
												CC-TE-2271	Temporary Element	TM8	PAB-F-2C-Z	FJ4-TM8/2 FJ4-T2Z	310952	FJ4j FJ4n	MM-CP-152B		
												CC-TE-2297	Temporary Element	T2Z	PAB-F-2C-Z						
												MM-CP-152B	BOP-PCC	FJ4	CB-F-3A-A						

FUNCTION: PRIMARY COMPONENT COOLING WATER

ITEM NO.	EQUIPMENT ID NO	EQUIPMENT DESCRIPTION	P&ID/1-LINE DRAWING NO.	TRAIN	PHYSICAL LOCATION DRAWING NO.	FIRE AREA/ZONE	REQUIRED FOR		POWER		ELEC NODE	SUPPORTING CONTROL AND INSTRUMENTATION EQUIPMENT				CABLES	ELECTRICAL DRAWING NO.		SUPPORTING SYSTEMS	REDUNDANT COUNTERPART	REMARKS
							HOT STAND BY	COLD SHUT DOWN	ELEC	AIR		EQUIPMENT ID NO.	EQUIPMENT DESCRIPTION	ELEC NODE	FIRE AREA/ZONE		SCHEM.	CABLE			
5	CC-V-57	Primary Component Cooling Water Loop "A" Header Isolation Inboard Supply Valve	CC-20207	A	310578	C-F-2-Z	-	X	X	X	VA8	CC-E2T/4-72	125 V DC Circuit Breaker	E2T	CB-F-1A-A	E2T-E4H E4H-G81/1 G81-H36/7 G81-H36/8 H36-VA8 H36-VB1	310895 E2T/4b E2T/4a	E2T/4d E2T/4e E2T/4f	CBA-FN-19 CBA-FN-20 Instrument Air EDE-PP-113A	CC-V-176	
												CC-CS-2099-2	Control Switch with Indication	G81	CB-F-1A-A						
												CC-SS-2099	Selector Switch	G81	CB-F-1A-A						
												CC-ZS-V57	Valve Position Switch	VA8	C-F-2-Z						
												CC-E4H-FU3,4	30A Fuses	E4H	CB-F-1A-A						
												EDE-MM-112	Electrical Penetration	H36	C-F-2-Z, ET-F-1A-A						
												CC-V57-20-1	Pilot Solenoid	VA8	C-F-2-Z						
												CC-V57-20-2	Pilot Solenoid	VA8	C-F-2-Z						
												CC-CS-2099-1	Control Switch with Indication	F30	CB-F-3A-A	F30-G81/B F30-G81/9 F30-FB7/5 G81-GN9/D FB7-G81 FC1-G81 FC1-G81/1 F30-G81/8 G81-GN9/B					
												CC-FB7-K-633A	Protection System Relay	FB7	CB-F-3A-A						
												CC-FB7-K-632A	Protection System Relay	FB7	CB-F-3A-A						
												CC-ATR-LLA1	Isolation Signal Auxiliary Relay	GN9	CB-F-1A-A						
												CC-FC1-K803	Safeguard Test Cabinet Relay	FC1	CB-F-3A-A						
												CC-FC1-K811	Safeguard Test Cabinet Relay	FC1	CB-F-3A-A						
6	CC-V-121	Primary Component Cooling Water Loop "A" Header Isolation Inboard Return Valve	CC-20207	A	310579	C-F-2-Z	-	X	X	X	VB1	CC-E2T/4-72	125 V DC Circuit Breaker	E2T	CB-F-1A-A	E2T-E4H G81-H36/8 G81-H36/7 H36-VB1 H36-VA8 E4H-G81/1	310895 E2T/4a E2T/4b	E2T/4d E2T/4e E2T/4f	CBA-FN-19 CBA-FN-20 Instrument Air EDE-PP-113A	CC-V-256	
												CC-CS-2150-2	Control Switch with Indication	G81	CB-F-1A-A						
												CC-SS-2150	Selector Switch	G81	CB-F-1A-A						
												CC-ZS-V121	Valve Position Switch	VB1	C-F-2-Z						
												CC-E4H-FU3,4	30A Fuses	E4H	CB-F-1A-A						
												EDE-MM-112	Electrical Penetration	H36	C-F-2-Z, ET-F-1A-A						
												CC-V121-20-1	Pilot Solenoid	VB1	C-F-2-Z						
												CC-V121-20-2	Pilot Solenoid	VB1	C-F-2-Z						
												CC-CS-2150-1	Control Switch with Indication	F30	CB-F-3A-A	F30-G81/8 F30-G81/9 F30-FB7/5 G81-GN9/B FB7-G81 FC1-G81 FC1-G81/1 FC1-G81/B G81-GN9/D					
												CC-FB7-K-633A	Protection System Relay	FB7	CB-F-3A-A						
												CC-FB7-K-632A	Protection System Relay	FB7	CB-F-3A-A						
												CC-ATR-LLA1	Isolation Signal Auxiliary Relay	GN9	CB-F-1A-A						
												CC-FC1-K803	Safeguard Test Cabinet Relay	FC1	CB-F-3A-A						
												CC-FC1-K811	Safeguard Test Cabinet Relay	FC1	CB-F-3A-A						

FUNCTION: PRIMARY COMPONENT COOLING WATER

ITEM NO.	EQUIPMENT ID NO	EQUIPMENT DESCRIPTION	P&ID/1-LINE DRAWING NO.	TRAIN	PHYSICAL LOCATION DRAWING NO.	FIRE AREA/ZONE	REQUIRED FOR		POWER		ELEC NODE	SUPPORTING CONTROL AND INSTRUMENTATION EQUIPMENT				CABLES	ELECTRICAL DRAWING NO.		SUPPORTING SYSTEMS	REDUNDANT COUNTERPART	REMARKS
							HOT STAND BY	COLD SHUT DOWN	ELEC	AIR		EQUIPMENT ID NO.	EQUIPMENT DESCRIPTION	ELEC NODE	FIRE AREA/ZONE		SCHEM.	CABLE			
7	CC-V-122	Primary Component Cooling Water Loop "A" Header Isolation Outboard Return Valve	CC-20207	B	310769	PP-F-4B-Z	-	X	X	X	UZ1	CC-E2U/6-72	125 V DC Circuit Breaker	E2U	CB-F-1B-A	E2U-GZO/2 GZO-UZ1 GZO-UZ2	310895 E2U/6a E2U/6b	 E2U/6d E2U/6e	CBA-FN-32 CBA-FN-33 Instrument Air EDE-PP-113B EAH-FN-31B	CC-V-257	
												CC-CS-2149-2	Control Switch with Indication	GZO	CB-F-1B-A						
												CC-SS-2149	Selector Switch	GZO	CB-F-1B-A						
												CC-ZS-V122	Valve Position Switch	UZ1	PP-F-4B-Z						
												CC-V122-20-1	Pilot Solenoid	UZ1	PP-F-4B-Z						
												CC-V122-20-2	Pilot Solenoid	UZ1	PP-F-4B-Z						
												CC-CS-2149-1	Control Switch with Indication	F3O	CB-F-3A-A	F3O-GZO/6 F3O-GZO/7 F3O-FBO/5 GNO-GZO/6 FBO-GZO FC2-GZO FC2-GZO/1 F3O-GZO/9 GNO-GZO/8						
												CC-FBO-K-633B	Protection System Relay	FBO	CB-F-3A-A						
												CC-FBO-K-632B	Protection System Relay	FBO	CB-F-3A-A						
												CC-BTR-LLA1	Isolation Signal Auxiliary Relay	GNO	CB-F-1B-A						
												CC-FC2-K803	Safeguard Test Cabinet Relay	FC2	CB-F-3A-A						
												CC-FC2-K811	Safeguard Test Cabinet Relay	FC2	CB-F-3A-A						
8	CC-V-168	Primary Component Cooling Water Loop "A" Header Isolation Outboard Supply Valve	CC-20207	B	310769	PP-F-4B-Z	-	X	X	X	UZ2	CC-E2U/6-72	125 V DC Circuit Breaker	E2U	CB-F-1B-A	E2U-GZO/2 GZO-UZ2 GZO-UZ1	310895 E2U/6b E2U/6a	 E2U/4d E2U/4e	CBA-FN-32 CBA-FN-33 Instrument Air EDE-PP-113B EAH-FN-5B EAH-FN-31B	CC-V-175	
												CC-CS-2151-2	Control Switch with Indication	GZO	CB-F-1B-A						
												CC-SS-2151	Selector Switch	GZO	CB-F-1B-A						
												CC-ZS-V168	Valve Position Switch	UZ2	PP-F-4B-Z						
												CC-V168-20-1	Pilot Solenoid	UZ2	PP-F-4B-Z						
												CC-V168-20-2	Pilot Solenoid	UZ2	PP-F-4B-Z						
												CC-CS-2151-1	Control Switch with Indication	F3O	CB-F-3A-A	F3O-GZO/7 F3O-GZO/9 F3O-FBO/5 GNO-GZO/8 FBO-GZO FC2-GZO FC2-GZO/1 F3O-GZO/6 GNO-GZO/6						
												CC-FBO-K-633B	Protection System Relay	FBO	CB-F-3A-A						
												CC-FBO-K-632B	Protection System Relay	FBO	CB-F-3A-A						
												CC-BTR-LLA1	Isolation Signal Auxiliary Relay	GNO	CB-F-1B-A						
												CC-FC2-K803	Safeguard Test Cabinet Relay	FC2	CB-F-3A-A						
												CC-FC2-K811	Safeguard Test Cabinet Relay	FC2	CB-F-3A-A						

FUNCTION: PRIMARY COMPONENT COOLING WATER

ITEM NO.	EQUIPMENT ID NO	EQUIPMENT DESCRIPTION	P&ID/1-LINE DRAWING NO.	TRAIN	PHYSICAL LOCATION DRAWING NO.	FIRE AREA/ZONE	REQUIRED FOR		POWER		ELEC NODE	SUPPORTING CONTROL AND INSTRUMENTATION EQUIPMENT				CABLES	ELECTRICAL DRAWING NO.		SUPPORTING SYSTEMS	REDUNDANT COUNTERPART	REMARKS
							HOT STAND BY	COLD SHUT DOWN	ELEC	AIR		EQUIPMENT ID NO.	EQUIPMENT DESCRIPTION	ELEC NODE	FIRE AREA/ZONE		SCHEM.	CABLE			
9	CC-V-175	Primary Component Cooling Water Loop "B" Header Isolation Outboard Supply Valve	CC-20213	A	310769	PP-F-4B-Z	-	X	X	X	UZ4	CC-E2T/6-72	125 V DC Circuit Breaker	E2T	CB-F-1A-A	E2T-G2G G2G-UZ4 G2G-UZ3	310895 E2T/6a E2T/6b	 E2T/6d E2T/6e	CBA-FN-19 CBA-FN-20 Instrument Air EDE-PP-113A EAH-FN-5A EAH-FN-31A	CC-V-168	
												CC-CS-2251-2	Control Switch with Indication	G2G	CB-F-1A-A						
												CC-SS-2251	Selector Switch	G2G	CB-F-1A-A						
												CC-ZS-V175	Valve Position Switch	UZ4	PP-F-4B-Z						
												CC-V175-20-1	Pilot Solenoid	UZ4	PP-F-4B-Z						
												CC-V175-20-2	Pilot Solenoid	UZ4	PP-F-4B-Z						
												CC-CS-2251-1	Control Switch with Indication	F30	CB-F-3A-A	F30-G2G F30-G2G/1 F30-FB7/6 G2G-GN9 FB7-G2G FC1-G2G FC1-G2G/1 F30-G2G/5 G2G-GN9/3					
												CC-FB7-K-633A	Protection System Relay	FB7	CB-F-3A-A						
												CC-FB7-K-632A	Protection System Relay	FB7	CB-F-3A-A						
												CC-ATR-LLB1	Isolation Signal Auxiliary Relay	GN9	CB-F-1A-A						
												CC-FC1-K803	Safeguard Test Cabinet Relay	FC1	CB-F-3A-A						
												CC-FC1-K812	Safeguard Test Cabinet Relay	FC1	CB-F-3A-A						
10	CC-V-176	Primary Component Cooling Water Loop "B" Header Isolation Inboard Supply Valve	CC-20213	B	310579	C-F-2-Z	-	X	X	X	VA9	CC-E2U/4-72	125 V DC Circuit Breaker	E2U	CB-F-1B-A	E2U-E4C E4C-G2J G2J-H39 G2J-H39/1 H39-VA9 H39-VA0	310895 E2U/4a E2U/4b	 E2U/4d E2U/4e E2U/4f	CBA-FN-32 CBA-FN-33 Instrument Air EDE-PP-113B	CC-V-57	
												CC-CS-2299-2	Control Switch with Indication	G2J	CB-F-1B-A						
												CC-SS-2299	Selector Switch	G2J	CB-F-1B-A						
												CC-ZS-V176	Valve Position Switch	VA9	C-F-2-Z						
												CC-E4C-FU15,16	30A Fuses	E4C	CB-F-1B-A						
												EDE-MM-115	Electrical Penetration	H39	C-F-1-Z, ET-F-1C-A						
												CC-V176-20-1	Pilot Solenoid	VA9	C-F-2-Z						
												CC-V176-20-2	Pilot Solenoid	VA9	C-F-2-Z						
												CC-CS-2299-1	Control Switch with Indication	F30	CB-F-3A-A	F30-G2J/1 F30-G2J/6 F30-FB0/4 G2J-GN0/2 FB0-G2J FC2-G2J FC2-G2J/2 F30-G2J G2J-GN0/3					
												CC-FB0-K-633B	Protection System Relay	FB0	CB-F-3A-A						
												CC-FB0-K-632B	Protection System Relay	FB0	CB-F-3A-A						
												CC-BTR-LLB1	Isolation Signal Auxiliary Relay	GN0	CB-F-1B-A						
												CC-FC2-K803	Safeguard Test Cabinet Relay	FC2	CB-F-3A-A						
												CC-FC2-K812	Safeguard Test Cabinet Relay	FC2	CB-F-3A-A						

FUNCTION: PRIMARY COMPONENT COOLING WATER

ITEM NO.	EQUIPMENT ID NO	EQUIPMENT DESCRIPTION	P&ID/1-LINE DRAWING NO.	TRAIN	PHYSICAL LOCATION DRAWING NO.	FIRE AREA/ZONE	REQUIRED FOR		POWER		ELEC NODE	SUPPORTING CONTROL AND INSTRUMENTATION EQUIPMENT				CABLES	ELECTRICAL DRAWING NO.		SUPPORTING SYSTEMS	REDUNDANT COUNTERPART	REMARKS
							HOT STAND BY	COLD SHUT DOWN	ELEC	AIR		EQUIPMENT ID NO.	EQUIPMENT DESCRIPTION	ELEC NODE	FIRE AREA/ZONE		SCHEM.	CABLE			
11	CC-V-256	Primary Component Cooling Water Loop "B" Header Isolation Inboard Return Valve	CC-20213	B	310579	C-F-2-Z	-	X	X	X	VA0	CC-E2U/4-72	125 V DC Circuit Breaker	E2U	CB-F-1B-A	E2U-E4C E4C-G2J G2J-H39 H39-VA0 H39-VA9 G2J-H39/1	310895 E2U/4a E2U/4b	E2U/4d E2U/4e E2U/4f	CBA-FN-32 CBA-FN-33 Instrument Air EDE-PP-113B	CC-V-121	
												CC-CS-2250-2	Control Switch with Indication	G2J	CB-F-1B-A						
												CC-SS-2250	Selector Switch	G2J	CB-F-1B-A						
												CC-ZS-V256	Valve Position Switch	VA0	C-F-2-Z						
												CC-E4C-FU15,16	30A Fuses	E4C	CB-F-1B-A						
												EDE-MM-115	Electrical Penetration	H39	C-F-1-Z, ET-F-1C-A						
												CC-V256-20-1	Pilot Solenoid	VA0	C-F-2-Z						
												CC-V256-20-2	Pilot Solenoid	VA0	C-F-2-Z						
												CC-V176-20-2	Pilot Solenoid	VA9	C-F-2-Z						
												CC-CS-2250-1	Control Switch with Indication	F30	CB-F-3A-A	F30-G2J F30-G2J/1 F30-FB0/4 G2J-GN0/3 FB0-G2J FC2-G2J FC2-G2J/2 G2J-GN0/2 F30-G2J/6					
												CC-FB0-K-633B	Protection System Relay	FB0	CB-F-3A-A						
												CC-FB0-K-632B	Protection System Relay	FB0	CB-F-3A-A						
												CC-BTR-LLB1	Isolation Signal Auxiliary Relay	GN0	CB-F-1B-A						
												CC-FC2-K803	Safeguard Test Cabinet Relay	FC2	CB-F-3A-A						
												CC-FC2-K812	Safeguard Test Cabinet Relay	FC2	CB-F-3A-A						
12	CC-V-257	Primary Component Cooling Water Loop "B" Header Isolation Outboard Return Valve	CC-20213	A	310769	PP-F-4B-Z	-	X	X	X	UZ3	CC-E2T/6-72	125 V DC Circuit Breaker	E2T	CB-F-1A-A	E2T-G2G G2G-UZ3 G2G-UZ4	310895 E2T/6a E2T/6b	E2T/6d E2T/6e	CBA-FN-19 CBA-FN-20 Instrument Air EDE-PP-113A EAH-FN-5A EAH-FN-31A	CC-V-122	
												CC-CS-2249-2	Control Switch with Indication	G2G	CB-F-1A-A						
												CC-SS-2249	Selector Switch	G2G	CB-F-1A-A						
												CC-ZS-V257	Valve Position Switch	UZ3	PP-F-4B-Z						
												CC-V257-20-1	Pilot Solenoid	UZ3	PP-F-4B-Z						
												CC-V257-20-2	Pilot Solenoid	UZ3	PP-F-4B-Z						
												CC-CS-2249-1	Control Switch with Indication	F30	CB-F-3A-A	F30-G2G/1 F30-G2G/5 F30-FB7/6 G2G-GN9/3 FB7-G2G FC1-G2G FC1-G2G/1 F30-G2G G2G-GN9					
												CC-FB7-K-633A	Protection System Relay	FB7	CB-F-3A-A						
												CC-FB7-K-632A	Protection System Relay	FB7	CB-F-3A-A						
												CC-ATR-LLB1	Isolation Signal Auxiliary Relay	GN9	CB-F-1A-A						
												CC-FC1-K803	Safeguard Test Cabinet Relay	FC1	CB-F-3A-A						
												CC-FC1-K812	Safeguard Test Cabinet Relay	FC1	CB-F-3A-A						

FUNCTION: PRIMARY COMPONENT COOLING WATER

ITEM NO.	EQUIPMENT ID NO	EQUIPMENT DESCRIPTION	P&ID/1-LINE DRAWING NO.	TRAIN	PHYSICAL LOCATION DRAWING NO.	FIRE AREA/ZONE	REQUIRED FOR		POWER		ELEC NODE	SUPPORTING CONTROL AND INSTRUMENTATION EQUIPMENT				CABLES	ELECTRICAL DRAWING NO.		SUPPORTING SYSTEMS	REDUNDANT COUNTERPART	REMARKS
							HOT STAND BY	COLD SHUT DOWN	ELEC	AIR		EQUIPMENT ID NO.	EQUIPMENT DESCRIPTION	ELEC NODE	FIRE AREA/ZONE		SCHEM.	CABLE			
13	CC-TV-2171-1	Primary Component Cooling Water Heat Exchanger E-17A Temperature Control Valve	CC-20205	A	310765	PAB-F-2C-Z	X	X	X	X	UN6	CC-E2T/3-72	125 V DC Circuit Breaker	E2T	CB-F-1A-A	E2T-G81 G81-G2M G81-UN6/1 G81-UN7/1 G81-GN9/A F30-G81/6 F30-G81/7	310895 E2T/3a	E2T/3c E2T/3d	CBA-FN-19 CBA-FN-20 PAH-FN-42A EDE-PP-113A Instrument Air	CC-TV-2271-1	
												CC-SS-2171	Selector Switch	G81	CB-F-1A-A						
												CC-GN9-R1	Auxiliary Relay	GN9	CB-F-1A-A						
												CC-TY-2171-1	Pilot Solenoid	G2M	PAB-F-2C-Z						
												CC-ZL-2171-5	Valve Position Indicating Lights	G81	CB-F-1A-A						
												CC-ZS-TV-2171-1	Valve Position Switch	UN6	PAB-F-2C-Z						
												CC-CS-2171	Control Switch	F30	CB-F-3A-A	G81-G2M/2 F30-FK0/3 FK0-G81/1 FK0-TM0					
												CC-GN9-R1	Auxiliary Relay	GN9	CB-F-1A-A						
												CC-ZL-2171-1	Indicating Lights	F30	CB-F-3A-A						
												CC-SS-2171	Selector Switch	G81	CB-F-1A-A		310895 4c	310952 FK0d FK0f FK0h	CBA-FN-19 CB-FN-20 PAH-FN-42A Instrument Air MM-CP-297A		
												CC-TY-2171-4	I/P Converter	G2M	PAB-F-2C-Z						
												CC-TY-2171-5	I/P Converter	G2M	PAB-F-2C-Z						
												CC-TE-2171	Temperature Element	TM0	PAB-F-2C-Z						
												CC-TYY-2171-2	PCCW Loop "A" Relay	FK0	CB-F-3A-A						
												CC-TK-2171	Manual Controller	F30	CB-F-3A-A						
												MM-CP-297A	BOP-PCC	FK0	CB-F-3A-A						
14	CC-TV-2171-2	Primary Component Cooling Water Heat Exchanger E-17A Temperature Control Valve	CC-20205	A	310765	PAB-F-2C-Z	X	X	X	X	UN7	CC-E2T/3-72	125 V DC Circuit Breaker	E2T	CB-F-1A-A	E2T-G81 G81-G2M G81-UN6/1 G81-UN7/1 G81-GN9/A F30-G81/6 F30-G81/7	310895 E2T/3a	E2T/3c E2T/3d	CBA-FN-19 CBA-FN-20 PAH-FN-42A EDE-PP-113A Instrument Air	CC-TV-2271-2	
												CC-SS-2171	Selector Switch	G81	CB-F-1A-A						
												CC-GN9-R1	Auxiliary Relay	GN9	CB-F-1A-A						
												CC-TY-2171-2	Pilot Solenoid	G2M	PAB-F-2C-Z						
												CC-ZL-2171-6	Valve Position Indicating Lights	G81	CB-F-1A-A						
												CC-ZS-TV-2171-2	Valve Position Switch	UN7	PAB-F-2C-Z						
												CC-CS-2171	Control Switch	F30	CB-F-3A-A						
												CC-GN9-R1	Auxiliary Relay	GN9	CB-F-1A-A						
												CC-ZL-2171-2	Indicating Lights	F30	CB-F-3A-A						
												CC-SS-2171	Selector Switch	G81	CB-F-1A-A	G81-G2M/2 F30-FK0/3 FK0-G81/1 FK0-TM0	310895 4c	310952 FK0d FK0f FK0h	CBA-FN-19 CB-FN-20 PAH-FN-42A Instrument Air		
												CC-TY-2171-4	I/P Converter	G2M	PAB-F-2C-Z						
												CC-TY-2171-5	I/P Converter	G2M	PAB-F-2C-Z						
												CC-TE-2171	Temperature Element	TM0	PAB-F-2C-Z						
												CC-TYY-2171-2	PCCW Loop "A" Relay	FK0	CB-F-3A-A						
												CC-TK-2171	Manual Controller	F30	CB-F-3A-A						
												MM-CP-297A	BOP-PCC	FK0	CB-F-3A-A						

FUNCTION: PRIMARY COMPONENT COOLING WATER

ITEM NO.	EQUIPMENT ID NO	EQUIPMENT DESCRIPTION	P&ID/1-LINE DRAWING NO.	TRAIN	PHYSICAL LOCATION DRAWING NO.	FIRE AREA/ZONE	REQUIRED FOR		POWER		ELEC NODE	SUPPORTING CONTROL AND INSTRUMENTATION EQUIPMENT				CABLES	ELECTRICAL DRAWING NO.		SUPPORTING SYSTEMS	REDUNDANT COUNTERPART	REMARKS
							HOT STAND BY	COLD SHUT DOWN	ELEC	AIR		EQUIPMENT ID NO.	EQUIPMENT DESCRIPTION	ELEC NODE	FIRE AREA/ZONE		SCHEM.	CABLE			
15	CC-TV-2271-1	Primary Component Cooling Water Heat Exchanger E-17B Temperature Control Valve	CC-20211	B	310765	PAB-F-2C-Z	X	X	X	X	UP9	CC-E2U/3-72	125 V DC Circuit Breaker	E2U	CB-F-1B-A	E2U-GZ0 GN0-GZ0/5 GZ0-UP9/1 GZ0-UP0/1 GN0-GZ0/9 E2U-GN0/6 GZ0-UI2 F31-GZ0/3 F31-GZ0/4	310895 E2U/3a	E2U/3c E2U/3d	CBA-FN-32 CBA-FN-33 PAH-FN-42B EDE-PP-113B Instrument Air	CC-TV-2171-1	
												CC-SS-2271	Selector Switch	GZ0	CB-F-1B-A						
												CC-GN0-R1	Auxiliary Relay	GN0	CB-F-1B-A						
												CC-GN0-R2	Auxiliary Relay	GN0	CB-F-1B-A						
												CC-TY-2271-1	Pilot Solenoid	UI2	PAB-F-2C-Z						
												CC-ZL-2271-5	Valve Position Indicating Lights	GZ0	CB-F-1B-A						
												CC-ZS-TV-2271-1	Valve Position Switch	UP9	PAB-F-2C-Z						
												CC-CS-2271	Control Switch	F30	CB-F-3A-A						
												CC-ZL-2271-1	Indicating Lights	F30	CB-F-3A-A						
												CC-SS-2271	Selector Switch	GZ0	CB-F-1B-A	GZ0-Q60 FJ4-TM8/1 FJ4-GZ0/3 F30-FJ4/1	310895 4c	310952 FJ4j FJ4l FJ4m	CBA-FN-32 CB-FN-33 PAH-FN-42B Instrument Air MM-CP-152B		
												CC-TY-2271-5	I/P Converter	Q60	PAB-F-2C-Z						
												CC-TY-2271-4	I/P Converter	Q60	PAB-F-2C-Z						
												CC-TE-2271	Temperature Element	TM8	PAB-F-2C-Z						
												CC-TYY-2271-2	PCCW Loop "B" Relay	FJ4	CB-F-3A-A						
												CC-TK-2271	Manual Controller	F30	CB-F-3A-A						
												MM-CP-152B	BOP-PCC	FJ4	CB-F-3A-A						
16	CC-TV-2271-2	Primary Component Cooling Water Heat Exchanger E-17B Temperature Control Valve	CC-20211	B	310765	PAB-F-2C-Z	X	X	X	X	UP0	CC-E2U/3-72	125 V DC Circuit Breaker	E2U	CB-F-1B-A	E2U-GZ0 GN0-GZ0/5 GZ0-UP9/1 GZ0-UP0/1 GN0-GZ0/9 E2U-GN0/6 GZ0-UI2 F31-GZ0/3 F31-GZ0/4	310895 E2U/3a	E2U/3c E2U/3d	CBA-FN-32 CBA-FN-33 PAH-FN-42B EDE-PP-113B Instrument Air	CC-TV-2171-2	
												CC-SS-2271	Selector Switch	GZ0	CB-F-1B-A						
												CC-GN0-R1	Auxiliary Relay	GN0	CB-F-1B-A						
												CC-GN0-R2	Auxiliary Relay	GN0	CB-F-1B-A						
												CC-TY-2271-2	Pilot Solenoid	UI2	PAB-F-2C-Z						
												CC-ZL-2271-6	Valve Position Indicating Lights	GZ0	CB-F-1B-A						
												CC-ZS-TV-2271-2	Valve Position Switch	UP0	PAB-F-2C-Z						
												CC-CS-2271	Control Switch	F30	CB-F-3A-A						
												CC-ZL-2271-2	Indicating Lights	F30	CB-F-3A-A						
												CC-SS-2271	Selector Switch	GZ0	CB-F-1B-A	GZ0-Q60 FJ4-TM8/1 FJ4-GZ0/3 F30-FJ4/1	310895 4c	310952 FJ4j FJ4l FJ4m	CBA-FN-32 CB-FN-33 PAH-FN-42B Instrument Air MM-CP-152B		
												CC-TY-2271-5	I/P Converter	Q60	PAB-F-2C-Z						
												CC-TY-2271-4	I/P Converter	Q60	PAB-F-2C-Z						
												CC-TE-2271	Temperature Element	TM8	PAB-F-2C-Z						
												CC-TYY-2271-2	PCCW Loop "B" Relay	FJ4	CB-F-3A-A						
												CC-TK-2271	Manual Controller	F30	CB-F-3A-A						
												MM-CP-152B	BOP-PCC	FJ4	CB-F-3A-A						
17	CC-E-17A	Primary Component Cooling Water Heat Exchanger	CC-20205	A	310765 805217	PAB-F-2C-Z PAB-F-3A-Z	X	X	-	-	-	-	-	-	-	-	-	-	Service Water	CC-E-17B	Notes 1 and 3
18	CC-E-17B	Primary Component Cooling Water Heat Exchanger	CC-20211	B	310765 805217	PAB-F-2C-Z PAB-F-3A-Z	X	X	-	-	-	-	-	-	-	-	-	-	Service Water	CC-E-17A	Notes 1 and 3

FUNCTION: PRIMARY COMPONENT COOLING WATER

ITEM NO.	EQUIPMENT ID NO	EQUIPMENT DESCRIPTION	P&ID/1-LINE DRAWING NO.	TRAIN	PHYSICAL LOCATION DRAWING NO.	FIRE AREA/ZONE	REQUIRED FOR		POWER		ELEC NODE	SUPPORTING CONTROL AND INSTRUMENTATION EQUIPMENT				CABLES	ELECTRICAL DRAWING NO.		SUPPORTING SYSTEMS	REDUNDANT COUNTERPART	REMARKS
							HOT STAND BY	COLD SHUT DOWN	ELEC	AIR		EQUIPMENT ID NO.	EQUIPMENT DESCRIPTION	ELEC NODE	FIRE AREA/ZONE		SCHEM.	CABLE			
19	CC-V-145	RH-E-9A Return Header Isolation Valve V-145	CC-20207	A	310763	RHR-F-3B-Z	-	X	X	-	V78	CC-BY2-52	460 V AC Circuit Breaker	BY2	CB-F-1A-A	BY2-F30 BY2-F30/1 F30-FB7/1 BY2-V78 BY2-V78/1 BY2-V78/2	310895 BY2a	BY2c	EAH-FN-5A EAH-FN-31A EDE-MCC-512	CC-V-272	
												CC-CS-2144	Control Switch with Indication	F30	CB-F-3A-A						
												CC-BY2-42	Motor Starter	BY2	CB-F-1A-A						
												CC-BY2-49	Thermal Overload	BY2	CB-F-1A-A						
												CC-V78-V145	Position Switch	V78	RHR-F-3B-Z						
												CC-FB7-K624A	Containment Isolation Auxiliary Relay	FB7	CB-F-3A-A						
20	CC-V-272	RHR-E-9B Return Header Isolation Valve V-272	CC-20213	B	310763	RHR-F-3A-Z	-	X	X	-	V72	CC-BY8-52	460 V AC Circuit Breaker	BY8	CB-F-1A-A	BY8-F31 BY8-F31/1 F31-FB0/3 BY8-V72 BY8-V72/1 BY8-V72/2 BY8-E3Q	BY8a	BY8c	EAH-FN-5B EAH-FN-31B EDE-MCC-612	CC-V-145	
												CC-CS-2244	Control Switch with Indication	F30	CB-F-3A-A						
												CC-BY8-42	Motor Starter	BY8	CB-F-1B-A						
												CC-BY8-49	Thermal Overload	BY8	CB-F-1B-A						
												CC-V72-V272	Position Switch	V72	RHR-F-3A-Z						
												CC-FB0-K623B	Containment Isolation Auxiliary Relay	FB0	CB-F-3A-A						
												CC-BY8-R1	Auxiliary Relay	E3Q	CB-F-1B-A						
21	CC-P-322A	Thermal Barrier PCCW Recirculation Pump	CC-20209	A	310576	C-F-1-Z	X	X	X	-	M1D	CC-B4M-52-1,2	460 V AC Circuit Breakers	B4M	CB-F-1A-A	B4M-H18 H18-M1D B4M-G81 F30-FK0/2 F30-G81/A	B4Ma	B4Mc B4Md	CBA-FN-19 CBA-FN-20 EDE-MCC-515	CC-P-322B	
												CC-CS-2077-2	Control Switch with Indication	G2G	CB-F-1A-A						
												CC-SS-2077	Selector Switch	G2G	CB-F-1A-A						
												CC-B4M-42	Motor Starter	B4M	CB-F-1A-A						
												CC-B4M-49	Overload Relay	B4M	CB-F-1A-A						
												EDE-MM-94	Electrical Penetration	H18	C-F-2-Z, ET-F-1A-A						
												CC-B4M-FU	Fuse	B4M	CB-F-1A-A						
												CC-CS-2077-1	Control Switch with Indication	F30	CB-F-3A-A						
												CC-FYY-2175A	Flow Relay	FK0	CB-F-3A-A						

FUNCTION: PRIMARY COMPONENT COOLING WATER

ITEM NO.	EQUIPMENT ID NO	EQUIPMENT DESCRIPTION	P&ID/1-LINE DRAWING NO.	TRAIN	PHYSICAL LOCATION DRAWING NO.	FIRE AREA/ZONE	REQUIRED FOR		POWER		ELEC NODE	SUPPORTING CONTROL AND INSTRUMENTATION EQUIPMENT				CABLES	ELECTRICAL DRAWING NO.		SUPPORTING SYSTEMS	REDUNDANT COUNTERPART	REMARKS
							HOT STAND BY	COLD SHUT DOWN	ELEC	AIR		EQUIPMENT ID NO.	EQUIPMENT DESCRIPTION	ELEC NODE	FIRE AREA/ZONE		SCHEM.	CABLE			
22	CC-P-322B	Thermal Barrier PCCW Recirculation Pump	CC-20209	B	310577	C-F-1-Z	X	X	X	-	M1E	CC-B4Q-52-1,2	460 V AC Circuit Breaker	B4Q	CB-F-1B-A	B4Q-H15 H15-M1E B4Q-GZ0 F30-FL2 F30-GZ0/8	B4Qa	B4Qc B4Qd	CBA-FN-32 CBA-FN-33 EDE-MCC-615	CC-P-322A	
												CC-CS-2078-2	Control Switch with Indication	G2J	CB-F-1B-A						
												CC-SS-2078	Selector Switch	G2J	CB-F-1B-A						
												CC-B4Q-42	Motor Starter	B4Q	CB-F-1B-A						
												CC-B4Q-49	Overload Relay	B4Q	CB-F-1B-A						
												EDE-MM-91	Electrical Penetration	H15	C-F-1-Z, ET-F-1C-A						
												CC-B4Q-FU	Fuses	B4Q	CB-F-1B-A						
												CC-CS-2078-1	Control Switch with Indication	F30	CB-F-3A-A						
												CC-FYY-2175B	Flow Relay	FL2	CB-F-3A-A						
23	CC-E-153A	Thermal Barrier Heat Exchanger	CC-20209	A	310576	C-F-1-Z	X	X	-	-	-	-	-	-	-	-	-	-	-	CC-E-153B	Note 1
24	CC-E-153B	Thermal Barrier Heat Exchanger	CC-20209	B	310577	C-F-1-Z	X	X	-	-	-	-	-	-	-	-	-	-	-	CC-E-153A	Note 1
25	CC-V-1101	Thermal Barrier HX CC-E-153A Isolation Valve	CC-20209	A	310769	PP-F-3A-Z	X	X	X	-	V2S	CC-B4K-52	460 V AC Circuit Breaker	B4K	CB-F-1A-A	B4K-V2S/1 B4K-F29 B4K-F29/1	310895 B4Ka	B4Kc B4Kd	CBA-FN-19 CBA-FN-20	CC-V-1092	
												CC-CS-2073	Control Switch with Indication	F29	CB-F-3A-A						
												CC-B4K-42	Motor Starter	B4K	CB-F-1A-A						
												CC-B4K-49	Thermal Overload	B4K	CB-F-1A-A						
												CC-V2S-V1101	Position Switch	V2S	PP-F-3A-Z						
26	CC-V-1109	Thermal Barrier HX CC-E-153A Isolation Valve	CC-20209	A	310769	PP-F-3A-Z	X	X	X	-	V2T	CC-B4L-52	460 V AC Circuit Breaker	B4L	CB-F-1A-A	B4L-V2T/1 B4L-F29 B4L-F29/1	310895 B4La	B4Lc B4Ld	CBA-FN-19 CBA-FN-20	CC-V-1095	
												CC-CS-2074	Control Switch with Indication	F29	CB-F-3A-A						
												CC-B4L-42	Motor Starter	B4L	CB-F-1A-A						
												CC-B4L-49	Thermal Overload	B4L	CB-F-1A-A						
												CC-V2T-V1109	Position Switch	V2T	PP-F-3A-Z						
27	CC-V-1092	Thermal Barrier HX CC-E-153B Isolation Valve	CC-20209	B	310769	PP-F-4B-Z	X	X	X	-	V2V	CC-B4P-52	460 V AC Circuit Breaker	B4P	CB-F-1B-A	B4P-V2V/1 B4P-F20 B4P-F20/1	310895 B4Pa	B4Pc B4Pd	CBA-FN-32 CBA-FN-33	CC-V-1101	
												CC-CS-2075	Control Switch with Indication	F29	CB-F-3A-A						
												CC-B4P-42	Motor Starter	B4P	CB-F-1B-A						
												CC-B4P-49	Thermal Overload	B4P	CB-F-1B-A						
												CC-V2V-V1092	Position Switch	V2V	PP-F-4B-Z						
												CC-B4P-R1	Auxiliary Relay	E3Q	CB-F-1B-A						

FUNCTION: PRIMARY COMPONENT COOLING WATER

ITEM NO.	EQUIPMENT ID NO	EQUIPMENT DESCRIPTION	P&ID/1-LINE DRAWING NO.	TRAIN	PHYSICAL LOCATION DRAWING NO.	FIRE AREA/ZONE	REQUIRED FOR		POWER		ELEC NODE	SUPPORTING CONTROL AND INSTRUMENTATION EQUIPMENT				CABLES	ELECTRICAL DRAWING NO.		SUPPORTING SYSTEMS	REDUNDANT COUNTERPART	REMARKS
							HOT STAND BY	COLD SHUT DOWN	ELEC	AIR		EQUIPMENT ID NO.	EQUIPMENT DESCRIPTION	ELEC NODE	FIRE AREA/ZONE		SCHEM.	CABLE			
28	CC-V-1095	Thermal Barrier HX CC-E-153B Isolation Valve	CC-20209	B	310769	PP-F-4B-Z	X	X	X	-	V20	CC-B4N-52	460 V AC Circuit Breaker	B4N	CB-F-1B-A	B4N-V2U/1 B4N-F20 B4N-F20/1	310895 B4Na	B4Nc B4Nd	CBA-FN-32 CBA-FN-33	CC-V-1109	
												CC-CS-2076	Control Switch with Indication	F29	CB-F-3A-A						
												CC-B4N-42	Motor Starter	B4N	CB-F-1B-A						
												CC-B4N-49	Thermal Overload	B4N	CB-F-1B-A						
												CC-V2U-V1095	Position Switch	V2U	PP-F-4B-Z						
												CC-B4N-R1	Auxiliary Relay	E3Q	CB-F-1B-A						
29	CC-V-428	RC-P-1A Thermal Barrier Isolation Valve	CC-20209	A	310578	C-F-2-Z	X	X	X	-	V74	CC-BY4-52-1	460 V AC Circuit Breaker	BY4	CB-F-1A-A	-	-	-	CBA-FN-19 CBA-FN-20	None	Note 2
30	CC-V-438	RC-P-1C Thermal Barrier Isolation Valve	CC-20209	B	310579	C-F-2-Z	X	X	X	-	V76	CC-BY6-52-1	460 V AC Circuit Breaker	BY6	CB-F-1B-A	-	-	-	CBA-FN-32 CBA-FN-33	None	Note 2
31	CC-V-439	RC-P-1D Thermal Barrier Isolation Valve	CC-20209	A	310579	C-F-2-Z	X	X	X	-	V70	CC-BY7-52-1	460 V AC Circuit Breaker	BY7	CB-F-1A-A	-	-	-	CBA-FN-19 CBA-FN-20	None	Note 2
32	CC-V-395	RC-P-1B Thermal Barrier Isolation Valve	CC-20209	B	310578	C-F-2-Z	X	X	X	-	V69	CC-BY5-52-1	460 V AC Circuit Breaker	BY5	CB-F-1B-A	-	-	-	CBA-FN-32 CBA-FN-33	None	Note 2
33	CC-TK-196	Thermal Barrier Loop Head Tank	CC-20209	A/B	310581 805193	C-F-3-Z	X	X	-	-	-	-	-	-	-	-	-	-	-	None	Notes 1 and 4
34	CC-TK-19A	Primary Component Cooling Water Head Tank	CC-20205	A	310767	PAB-F-3A-Z	X	X	-	-	-	-	-	-	-	-	-	-	-	CC-TK-19B	Note 1
35	CC-TK-19B	Primary Component Cooling Water Head Tank	CC-20211	B	310767	PAB-F-3A-Z	X	X	-	-	-	-	-	-	-	-	-	-	-	CC-TK-19A	Note 1

FUNCTION: PRIMARY COMPONENT COOLING WATER

ITEM NO.	EQUIPMENT ID NO	EQUIPMENT DESCRIPTION	P&ID/1-LINE DRAWING NO.	TRAIN	PHYSICAL LOCATION DRAWING NO.	FIRE AREA/ZONE	REQUIRED FOR		POWER		ELEC NODE	SUPPORTING CONTROL AND INSTRUMENTATION EQUIPMENT				CABLES	ELECTRICAL DRAWING NO.		SUPPORTING SYSTEMS	REDUNDANT COUNTERPART	REMARKS
							HOT STAND BY	COLD SHUT DOWN	ELEC	AIR		EQUIPMENT ID NO.	EQUIPMENT DESCRIPTION	ELEC NODE	FIRE AREA/ZONE		SCHEM.	CABLE			
36	CC-LT-2172-1 CC-LT-2172-2 CC-LT-2172-3	Head Tank CC-TK-19A Level	CC-20205	A	310767	PAB-F-3A-Z	X	X	X	-	RG5 RW1 RW2	MM-CP-152A EDE-TBX-YH4	BOP-PCC Terminal Box	FJ1 YH4	CB-F-3A-A PAB-F-3A-Z	FJ1-YH4 RG5-YH4 RW1-YH4 RW2-YH4	310952	FJ1g FJ1j			
	CC-LT-2272-1 CC-LT-2272-2 CC-LT-2272-3	Head Tank CC-TK-19B Level	CC-20211	B	310768	PAB-F-3B-Z	X	X	X	-	RG6 RW3 RW4	MM-CP-152A EDE-TBX-YH4	BOP-PCC Terminal Box	FJ1 YH4	CB-F-3A-A PAB-F-3A-Z	FJ1-YH4/1 RG6-YH4 RW3-YH4 RW4-YH4					
												CC-E42/10-52	120 V AC Circuit Breaker	E42	CB-F-1A-A	EF4-FJ1 EF4-FJ1/1 E4E-EF4 E4E-H36/3 H36-S4P GF8-H36	310895 E42/10a	E42/10c E42/10d	EDE-MCC-521		
												CC-LYY-2172-1, 2, 3	Level Relay	FJ1	CB-F-3A-A						
												CC-LYY-2272-1, 2, 3	Level Relay	FJ1	CB-F-3A-A						
												CC-RYY-2172-1LL	Auxiliary Relay	EF4	CB-F-1A-A						
												CC-RYY-2172-2LL	Auxiliary Relay	EF4	CB-F-1A-A						
												CC-RYY-2172-3LL	Auxiliary Relay	EF4	CB-F-1A-A						
												CC-RYY-2272-1LL	Auxiliary Relay	EF4	CB-F-1A-A						
												CC-RYY-2272-2LL	Auxiliary Relay	EF4	CB-F-1A-A						
												CC-RYY-2272-3LL	Auxiliary Relay	EF4	CB-F-1A-A						
												MM-CP-152A	BOP-PCC	FJ1	CB-F-3A-A						
												EDE-MM-582	Fuse Panel	E4E	ET-F-1A-A						
												EDE-MM-112	Electrical Penetration	H36	C-F-2-Z, ET-F-1A-A						
												CC-FISHL-2147	Flow Switch	S4P	C-F-2-Z						
												CC-FISHL-2248	Flow Switch	GF8	C-F-2-Z						
												MM-CP-14	Safeguards Cabinet	FC1	CB-F-3A-A	EF4-GN9 FC1-GN9/1	310895 E87/10a E87/10b	E87/10d E87/10e E87/10f			
												CC-RYY-2172-1LL	Auxiliary Relay	EF4	CB-F-1A-A						
												CC-RYY-2172-2LL	Auxiliary Relay	EF4	CB-F-1A-A						
												CC-RYY-2172-3LL	Auxiliary Relay	EF4	CB-F-1A-A						
												CC-RYY-2272-1LL	Auxiliary Relay	EF4	CB-F-1A-A						
												CC-RYY-2272-2LL	Auxiliary Relay	EF4	CB-F-1A-A						
												CC-RYY-2272-3LL	Auxiliary Relay	EF4	CB-F-1A-A						
												CC-ATR-LLA1	Containment Isolation Relay	GN9	CB-F-1A-A						
												CC-ATR-LLB1	Containment Isolation Relay	GN9	CB-F-1A-A						

FUNCTION: PRIMARY COMPONENT COOLING WATER

ITEM NO.	EQUIPMENT ID NO	EQUIPMENT DESCRIPTION	P&ID/1-LINE DRAWING NO.	TRAIN	PHYSICAL LOCATION DRAWING NO.	FIRE AREA/ZONE	REQUIRED FOR		POWER		ELEC NODE	SUPPORTING CONTROL AND INSTRUMENTATION EQUIPMENT				CABLES	ELECTRICAL DRAWING NO.		SUPPORTING SYSTEMS	REDUNDANT COUNTERPART	REMARKS
							HOT STAND BY	COLD SHUT DOWN	ELEC	AIR		EQUIPMENT ID NO.	EQUIPMENT DESCRIPTION	ELEC NODE	FIRE AREA/ZONE		SCHEM.	CABLE			
37	CC-LT-2192-1 CC-LT-2192-2 CC-LT-2192-3	Head Tank CC-TK-19A Level	CC-20205	A	310767	PAB-F-3A-Z	X	X	X	-	R81 RW5 RW6	MM-CP-152B EDE-TBX-YH5	BOP-PCC Terminal Box	FJ4 YH5	CB-F-3A-A PAB-F-3A-Z	FJ4-YH5 R81-YH5 RW5-YH5 RW6-YH5	310952	FJ4j FJ4l			
	CC-LT-2292-1 CC-LT-2292-2 CC-LT-2292-3	Head Tank CC-TK-19B Level	CC-20211	B	310768	PAB-F-3B-Z	X	X	X	-	R82 RW7 RW8	MM-CP-152B EDE-TBX-YH5	BOP-PCC Terminal Box	FJ4 YH5	CB-F-3A-A PAB-F-3A-Z	FJ4-YH5/1 R82-YH5 RW7-YH5 RW8-YH5					
												CC-E50/6-52	120 V AC Circuit Breaker	E50	CB-F-1B-A	EE3-FJ4 E4J-EDO/1 E50-E4J/1 EE3-FJ4/1 EDO-H41 H41-S4Q GN5-H41	310895			EDE-MCC-621		
												CC-LYY-2192-1,2,3	Level Relay	FJ4	CB-F-3A-A		E50/6a E50/6b	E50/6c E50/6e			
												CC-LYY-2292-1,2,3	Level Relay	FJ4	CB-F-3A-A						
												CC-RYY-2192-1LL	Auxiliary Relay	EE3	CB-F-1B-A						
												CC-RYY-2192-2LL	Auxiliary Relay	EE3	CB-F-1B-A						
												CC-RYY-2192-3LL	Auxiliary Relay	EE3	CB-F-1B-A						
												CC-RYY-2292-1LL	Auxiliary Relay	EE3	CB-F-1B-A						
												CC-RYY-2292-2LL	Auxiliary Relay	EE3	CB-F-1B-A						
												CC-RYY-2292-3LL	Auxiliary Relay	EE3	CB-F-1B-A						
												MM-CP-152B	BOP-PCC	FJ4	CB-F-3B-A						
												EDE-MM-586	Fuse Panel	E4J	ET-F-1B-A						
												EDE-MM-117	Electrical Penetration	H41	C-F-1-Z, ET-F-1C-A						
												CC-FISHL-2247	Flow Switch	H41	C-F-2-Z						
												CC-FISHL-2148	Flow Switch	S4Q GN5	C-F-2-Z						
												MM-CP-15	Safeguards Cabinet	FC2	CB-F-3A-A	FC2-GN0/2 EE3-GN0	310895				
																	E88/8a E88/8b	E88/8d E88/8e E88/8f			
												BTR-LLA1	Isolation Relay	GN0	CB-F-1B-A						
												BTR-LLB1	Isolation Relay	GN0	CB-F-1B-A						
												CC-RYY-2192-1LL	Auxiliary Relay	EE3	CB-F-1B-A						
												CC-RYY-2192-2LL	Auxiliary Relay	EE3	CB-F-1B-A						
												CC-RYY-2192-3LL	Auxiliary Relay	EE3	CB-F-1B-A						
												CC-RYY-2292-1LL	Auxiliary Relay	EE3	CB-F-1B-A						
												CC-RYY-2292-2LL	Auxiliary Relay	EE3	CB-F-1B-A						
												CC-RYY-2292-3LL	Auxiliary Relay	EE3	CB-F-1B-A						
38	MM-CP-152A	BOP Process Control Cabinet	-	A	310499	CB-F-3A-A	X	X	X	-	FJ1	-	-	-	-	EH9-FJ1	310952 EH9/1	EH9/1	EDE-PP-1E	MM-CP-152B	

FUNCTION: CONTAINMENT BUILDING AIR HANDLING

ITEM NO	EQUIPMENT ID NO	EQUIPMENT DESCRIPTION	P&ID/1-LINE DRAWING NO.	TRAIN	PHYSICAL LOCATION DRAWING NO.	FIRE AREA/ZONE	REQUIRED FOR		POWER		ELEC NODE	SUPPORTING CONTROL AND INSTRUMENTATION EQUIPMENT				CABLES	ELECTRICAL DRAWING NO.		SUPPORTING SYSTEMS	REDUNDANT COUNTERPART	REMARKS
							HOT STAND BY	COLD SHUT DOWN	ELEC	AIR		EQUIPMENT ID NO.	EQUIPMENT DESCRIPTION	ELEC NODE	FIRE AREA/ZONE		SCHEM.	CABLE			
1	CAH-FN-1A	Containment Structure Cooler AC-1A-Fan	MAH-20506	B	301578	C-F-2-Z		X	X	-	M19	CAH-AC5-52	480 V AC Circuit Breaker	AC5	CB-F-1B-A	AC5-G2K AC5-G2K/1 AC5-GNO AC5-H13 AC5-H13/1 G2K-H41 G2K-H41/1 H13-JV7 H13-JV7/1 H41-M19/1 H41-SD1 JV7-JV8 JV7-M19 JV7-M19/1 JV8-M19 JV8-M19/1 F37-FBO/1 F37-G2K/9 F37-G2K/A F37-G2K/B G2K-HR4/2 G2K-HR4/7	310931 AC5a AC5d AC5b		CBA-FN-32 CBA-FN-33 EDE-US-63 Primary Component Cooling Water	CAH-FN-1C CAH-FN-1E CAH-FN-1F	
												CAH-JV7-43	Safety Switch Speed Changer	JV7	C-F-2-Z						
												CAH-JV8-43	Safety Switch Speed Changer	JV8	C-F-2-Z						
												CAH-CS-5660-2	Control Switch with Indication	G2K	CB-F-1B-A						
												CAH-SS-5660	Selector Switch	G2K	CB-F-1B-A						
												EDE-AF8-94-4	Bus Undervoltage Relay	AF8	CB-F-1B-A						
												CAH-GNO-R1	Time Delay Relay	GNO	CB-F-1B-A						
												CC-FISL-2122	Flow Indication Switch	SD1	C-F-2-Z						
												CAH-AC5-52H-1	Truck Operated Contact	AC5	CB-F-1B-A						
												CAH-AC5-G,R	Indicating Lights	AC5	CB-F-1B-A						
												CAH-AC5-AM	Ammeter	AC5	CB-F-1B-A						
												CAH-AC5-CT	Current Transformer (300/5)	AC5	CB-F-1B-A						
												CAH-AC5-ATR	Transducer	AC5	CB-F-1B-A						
												CAH-ZL-5660-2	Outlet Damper Position Lights	G2K	CB-F-1B-A						
												CAH-DP-312	Outlet Damper Position Switch	M19	C-F-2-Z						
												EDE-MM-89	Electrical Penetration	H13	C-F-1-Z, ET-F-1C-A						
												EDE-MM-117	Electrical Penetration	H41	C-F-1-Z, ET-F-1C-A						
												CAH-AC5-FU	15A Fuses	AC5	CB-F-1B-A						
												CAH-CS-5660-1	Control Switch with Indication	F37	CB-F-3A-A						
												EPS-HR4-PR1, RA, RMO, SR3	Emergency Power Sequencer Relays	HR4	CB-F-1B-A						
												CAH-FBO-K610B	SI Actuating Auxiliary Relay	FBO	CB-F-3A-A						
												CAH-ZL-5660-1	Outlet Damper Position Lights	F37	CB-F-3A-A						
												CC-FISL-2122	Flow Indication Switch	SD1	C-F-2-Z	E4G-H41/1 E53-E4G/1 H41-SD1/1 E53-E4G H41-SD2/1 E4G-H39/1 H39-SD4/1	310895 E53/10a E53/10c		EDE-MCC-631		
												CC-E4G-FU6	30A Fuse	E4G	ET-F-1C-A						
												EDE-MM-117	Electrical Penetration	H41	ET-F-1C-A, C-F-1-Z						
												CAH-E53/10-52	120 V AC Circuit Breaker	E53	CB-F-1B-A						
												CC-FISL-2123	Flow Indication Switch	SD2	C-F-2-Z						
												EDE-MM-115	Electrical Penetration	H39	ET-F-1C-A, C-F-1-Z						
												CC-FISL-2222	Flow Indication Switch	SD4	C-F-2-Z						

FUNCTION: CONTAINMENT BUILDING AIR HANDLING

ITEM NO	EQUIPMENT ID NO	EQUIPMENT DESCRIPTION	P&ID/1-LINE DRAWING NO.	TRAIN	PHYSICAL LOCATION DRAWING NO.	FIRE AREA/ZONE	REQUIRED FOR		POWER		ELEC NODE	SUPPORTING CONTROL AND INSTRUMENTATION EQUIPMENT				CABLES	ELECTRICAL DRAWING NO.		SUPPORTING SYSTEMS	REDUNDANT COUNTERPART	REMARKS
							HOT STAND BY	COLD SHUT DOWN	ELEC	AIR		EQUIPMENT ID NO.	EQUIPMENT DESCRIPTION	ELEC NODE	FIRE AREA/ZONE		SCHEM.	CABLE			
2	CAH-FN-1B	Containment Structure Cooler AC-1B Fan	MAH-20506	B	310579	C-F-2-Z		X	X	-	M20	CAH-AE5-52	480 V AC Circuit Breaker	AE5	CB-F-1B-A	AE5-G2K AE5-G2K/1 AE5-GNO G2K-H41/2 G2K-H41/3 AE5-H13 AE5-H13/1 H13-M20 H13-M20/1 H41-M20/1 H41-SD2 F37-FBO/2 F37-G2K/3 F37-G2K/4 F37-G2K/5 G2K-HR4/3 G2K-HR4/5	310931 AE5a AE5d AE5b		CBA-FN-32 CBA-FN-33 EDE-US-63 Primary Component Cooling Water	CAH-FN-1C CAH-FN-1E CAH-FN-1F	
												CAH-CS-5661-2	Control Switch with Indication	G2K	CB-F-1B-A						
												CAH-SS-5661	Selector Switch	G2K	CB-F-1B-A						
												EDE-AF8-94-4	Bus Undervoltage Relay	AF8	CB-F-1B-A						
												CAH-GNO-R1	Time Delay Relay	GNO	CB-F-1B-A						
												CC-FISL-2123	Flow Indication Switch	SD2	C-F-2-Z						
												CAH-AE5-52H-1	Truck Operated Contact	AE5	CB-F-1B-A						
												CAH-AE5-G,R	Indicating Lights	AE5	CB-F-1B-A						
												CAH-AE5-AM	Ammeter	AE5	CB-F-1B-A						
												CAH-AE5-CT	Current Transformer (300/5)	AE5	CB-F-1B-A						
												CAH-AE5-ATR	Transducer	AE5	CB-F-1B-A						
												CAH-ZL-5661-2	Outlet Damper Position Lights	G2K	CB-F-1B-A						
												CAH-DP-313	Outlet Damper Position Switch	M20	C-F-2-Z						
												EDE-MM-89	Electrical Penetration	H13	C-F-1-Z, ET-F-1C-A						
												EDE-MM-117	Electrical Penetration	H41	C-F-1-Z, ET-F-1C-A						
												CAH-AE5-FU	15A Fuses	AE5	CB-F-1B-A						
												CAH-CS-5661-1	Control Switch with Indication	F37	CB-F-3A-A						
												EPS-HR4-PR1, RA, RMO, SR3	Emergency Power Sequencer Relays	HR4	CB-F-1A-A						
												CAH-FBO-K-610B	SI Actuating Auxiliary Relay	FBO	CB-F-3A-A						
												CAH-ZL-5661-1	Outlet Damper Position Lights	F37	CB-F-3A-A						
												CC-FISL-2123	Flow Indication Switch	SD2	C-F-2-Z	H41-SD2/1 E53-E4G/1 E4G-H41/1 E53-E4G H41-SD1/1 E4G-H39/1 H39-SD4/1	301895 E53/10a E53/10c		EDE-MCC-631		
												CC-E4G-FU6	30A Fuse	E4G	ET-F-1C-A						
												EDE-MM-117	Electrical Penetration	H41	ET-F-1C-A, C-F-1-Z						
												CAH-E53/10-52	120 V AC Circuit Breaker	E53	CB-F-1B-A						
												CC-FISL-2122	Flow Indication Switch	SD1	C-F-2-Z						
												EDE-MM-115	Electrical Penetration	H39	ET-F-1C-A, C-F-1-Z						
												CC-FISL-2222	Flow Indication Switch	SD4	C-F-2-Z						

FUNCTION: CONTAINMENT BUILDING AIR HANDLING

ITEM NO	EQUIPMENT ID NO	EQUIPMENT DESCRIPTION	P&ID/1-LINE DRAWING NO.	TRAIN	PHYSICAL LOCATION DRAWING NO.	FIRE AREA/ZONE	REQUIRED FOR		POWER		ELEC NODE	SUPPORTING CONTROL AND INSTRUMENTATION EQUIPMENT				CABLES	ELECTRICAL DRAWING NO.		SUPPORTING SYSTEMS	REDUNDANT COUNTERPART	REMARKS
							HOT STAND BY	COLD SHUT DOWN	ELEC	AIR		EQUIPMENT ID NO.	EQUIPMENT DESCRIPTION	ELEC NODE	FIRE AREA/ZONE		SCHEM.	CABLE			
3	CAH-FN-1C	Containment Structure Cooler AC-1C Fan	MAH-20506	A	310579	C-F-2-Z		X	X	-	M21	CAH-AE7-52	480 V AC Circuit Breaker	AE7	CB-F-1A-A	AE7-G2H AE7-G2H/1 AE7-GN9 AE7-HO8 AE7-HO8/1 G2H-H35 G2H-H35/1 HO8-JV3 HO8-JV3/1 H35-M21/1 H35-SD3/1 JV3-JV4 JV3-M21 JV3-M21/1 JV4-M21 JV4-M21/1 F36-FB7/4 F36-G2H/9 F36-G2H/A F36-G2H/B G2H-HR2/4 G2H-HR2/5	310931 AE7a AE7d AE7b		CBA-FN-19 CBA-FN-20 EDE-US-53 Primary Component Cooling Water	CAH-FN-1A CAH-FN-1B CAH-FN-1D	
												CAH-JV3-43	Safety Switch Speed Changer	JV3	C-F-2-Z						
												CAH-JV4-43	Safety Switch Speed Changer	JV4	C-F-2-Z						
												CAH-CS-5662-2	Control Switch with Indication	G2H	CB-F-1A-A						
												CAH-SS-5662	Selector Switch	G2H	CB-F-1A-A						
												EDE-AF3-94-4	Bus Undervoltage Relay	AF3	CB-F-1A-A						
												CAH-GN9-R1	Time Delay Relay	GN9	CB-F-1A-A						
												CC-FISL-2124	Flow Indication Switch	SD3	C-F-2-Z						
												CAH-AE7-52H-1	Truck Operated Contact	AE7	CB-F-1A-A						
												CAH-AE7-G,R	Indicating Lights	AE7	CB-F-1A-A						
												CAH-AE7-AM	Ammeter	AE7	CB-F-1A-A						
												CAH-AE7-CT	Current Transformer (300/5)	AE7	CB-F-1A-A						
												CAH-AE7-ATR	Transducer	AE7	CB-F-1A-A						
												CAH-ZL-5662-2	Outlet Damper Position Lights	G2H	CB-F-1A-A						
												CAH-DP-314	Outlet Damper Position Switch	M21	C-F-2-Z						
												EDE-MM-84	Electrical Penetration	HO8	C-F-2-Z, ET-F-1A-A						
												EDE-MM-111	Electrical Penetration	H35	C-F-2-Z, ET-F-1A-A						
												CAH-AE7-FU	15A Fuses	AE7	CB-F-1A-A						
												CAH-CS-5662-1	Control Switch with Indication	F36	CB-F-3A-A						
												EPS-HR4-PR1, RA, RMO, SR3	Emergency Power Sequencer Relays	HR2	CB-F-1A-A						
												CAH-FB7-K-610A	SI Actuating Auxiliary Relay	FB7	CB-F-3A-A						
												CAH-ZL-5662-1	Outlet Damper Position Lights	F36	CB-F-3A-A						
												CC-FISL-2124	Flow Indication Switch	SD3	C-F-2-Z	E4H-H35 E45-E4H H35-SD3 E45-E4E E4E-H36/4 H36-SD5/1 H36-SD6/1	301895 E45/11a E45/11C		EDE-MCC-531		
												CC-E4H-FU20	30A Fuse	E4H	CB-F-1A-A						
												EDE-MM-111	Electrical Penetration	H35	ET-F-1A-A, C-F-2-Z						
												CAH-E45/11-52	120 V AC Circuit Breaker	E45	CB-F-1A-A						
												EDE-MM-112	Electrical Penetration	H36	ET-F-1A-A, C-F-2-Z						
												CC-FISL-2223	Flow Indication Switch	SD5	C-F-2-Z						
												CC-FISL-2224	Flow Indication Switch	SD6	C-F-2-Z						

FUNCTION: CONTAINMENT BUILDING AIR HANDLING

ITEM NO	EQUIPMENT ID NO	EQUIPMENT DESCRIPTION	P&ID/1-LINE DRAWING NO.	TRAIN	PHYSICAL LOCATION DRAWING NO.	FIRE AREA/ZONE	REQUIRED FOR		POWER		ELEC NODE	SUPPORTING CONTROL AND INSTRUMENTATION EQUIPMENT				CABLES	ELECTRICAL DRAWING NO.		SUPPORTING SYSTEMS	REDUNDANT COUNTERPART	REMARKS
							HOT STAND BY	COLD SHUT DOWN	ELEC	AIR		EQUIPMENT ID NO.	EQUIPMENT DESCRIPTION	ELEC NODE	FIRE AREA/ZONE		SCHEM.	CABLE			
4	CAH-FN-1D	Containment Structure Cooler AC-1D Fan	MAH-20505	B	310579	C-F-2-Z		X	X	-	M22	CAH-AE6-52	480 V AC Circuit Breaker	AE6	CB-F-1B-A	AE6-G2K AE6-G2K/1 AE6-GNO AE6-HO9 AE6-HO9/1 G2K-H39 G2K-H39/1 HO9-M22 HO9-M22/1 H39-M22/1 H39-SD4 F37-FBO/3 F37-G2K/6 F37-G2K/7 F37-G2K/8 G2K-HR4/4 G2K-HR4/6	310931 AE6a AE6d AE6b		CBA-FN-32 CBA-FN-33 EDE-US-63 Primary Component Cooling Water	CAH-FN-1C CAH-FN-1E CAH-FN-1F	
												CAH-CS-5663-2	Control Switch with Indication	G2K	CB-F-1B-A						
												CAH-SS-5663	Selector Switch	G2K	CB-F-1B-A						
												EDE-AF8-94-4	Bus Undervoltage Relay	AF8	CB-F-1B-A						
												CAH-GNO-R1	Time Delay Relay	GNO	CB-F-1B-A						
												CC-FISL-2222	Flow Indication Switch	SD4	C-F-2-Z						
												CAH-AE6-52H-1	Truck Operated Contact	AE6	CB-F-1B-A						
												CAH-AE6-G,R	Indicating Lights	AE6	CB-F-1B-A						
												CAH-AE6-AM	Ammeter	AE6	CB-F-1B-A						
												CAH-AE6-CT	Current Transformer (300/5)	AE6	CB-F-1B-A						
												CAH-AE6-ATR	Transducer	AE6	CB-F-1B-A						
												CAH-ZL-5663-2	Outlet Damper Position Lights	G2K	CB-F-1B-A						
												CAH-DP-315	Outlet Damper Position Switch	M22	C-F-2-Z						
												EDE-MM-85	Electrical Penetration	HO9	C-F-1-Z, ET-F-1C-A						
												EDE-MM-115	Electrical Penetration	H39	C-F-1-Z, ET-F-1C-A						
												CAH-AE6-FU	15A Fuses	AE6	CB-F-1B-A						
												CAH-CS-5663-1	Control Switch with Indication	F37	CB-F-3A-A						
												EPS-HR4-PR1, RA, RMO, SR3	Emergency Power Sequencer Relays	HR4	CB-F-1B-A						
												CAH-FBO-K610B	SI Actuating Auxiliary Relay	FBO	CB-F-3A-A						
												CAH-ZL-5663-1	Outlet Damper Position Lights	F37	CB-F-3A-A						
												CC-FISL-2222	Flow Indication Switch	SD4	C-F-2-Z	E4G-H39/1 E53-E4G H39-SD4/1 E53-E4G/1 E4G-H41/1 H41-SD1/1 H41-SD2/1	310895 E53/10a E53/10c		EDE-MCC-631		
												CC-E4G-FU5	30A Fuse	E4G	ET-F-1C-A						
												EDE-MM-115	Electrical Penetration	H39	ET-F-1C-A, C-F-1-Z						
												CAH-E53/10-52	120 V AC Circuit Breaker	E53	CB-F-1B-A						
												EDE-MM-117	Electrical Penetration	M41	ET-F-1C-A, C-F-1-Z						
												CC-FISL-2123	Flow Indication Switch	SD2	C-F-2-Z						
												CC-FISL-2122	Flow Indication Switch	SD1	C-F-2-Z						

FUNCTION: CONTAINMENT BUILDING AIR HANDLING

ITEM NO	EQUIPMENT ID NO	EQUIPMENT DESCRIPTION	P&ID/1-LINE DRAWING NO.	TRAIN	PHYSICAL LOCATION DRAWING NO.	FIRE AREA/ZONE	REQUIRED FOR		POWER		ELEC NODE	SUPPORTING CONTROL AND INSTRUMENTATION EQUIPMENT				CABLES	ELECTRICAL DRAWING NO.		SUPPORTING SYSTEMS	REDUNDANT COUNTERPART	REMARKS
							HOT STAND BY	COLD SHUT DOWN	ELEC	AIR		EQUIPMENT ID NO.	EQUIPMENT DESCRIPTION	ELEC NODE	FIRE AREA/ZONE		SCHEM.	CABLE			
5	CAH-FN-1E	Containment Structure Cooler AC-1E Fan	MAH-20505	A	310579	C-F-2-Z		X	X	-	M23	CAH-AC6-52	480 V AC Circuit Breaker	AC6	CB-F-1A-A	AC6-G2H AC6-G2H/1 AC6-GN9 AC6-HO7 AC6-HO7/1 G2H-H36 G2H-H36/1 HO7-JV5 HO7-JV5/1 H36-H23/1 H36-SD5 JV5-JV6 JV5-M23 JV5-M23/1 JV6-M23 JV6-M23/1 F36-FB7/5 F36-G2H/3 F36-G2H/4 F36-G2H/5 G2H-HR2 G2H-HR2/1	310931 AE6a AE6d AE6b		CBA-FN-19 CBA-FN-20 EDE-US-53 Primary Component Cooling Water	CAH-FN-1A CAH-FN-1B CAH-FN-1D	
												CAH-JV5-43	Safety Switch Speed Changer	JV5	C-F-2-Z						
												CAH-JV6-43	Safety Switch Speed Switch	JV6	C-F-2-Z						
												CAH-AC6-G,R	Indicating Lights	AC6	CB-F-1A-A						
												CAH-CS-5664-2	Control Switch with Indication	G2H	CB-F-1A-A						
												CAH-SS-5664	Selector Switch	G2H	CB-F-1A-A						
												EDE-AF3-94-4	Bus Undervoltage Relay	AF3	CB-F-1A-A						
												CAH-GN9-R1	Time Delay Relay	GN9	CB-F-1A-A						
												CC-FISL-2223	Flow Indication Switch	SD5	C-F-2-Z						
												CAH-AC6-52H-1	Truck Operated Contact	AC6	CB-F-1A-A						
												CAH-AC6-AM	Ammeter	AC6	CB-F-1A-A						
												CAH-AC6-CT	Current Transformer (300/5)	AC6	CB-F-1A-A						
												CAH-AC6-ATR	Transducer	AC6	CB-F-1A-A						
												CAH-ZL-5664-2	Outlet Damper Position Lights	G2H	CB-F-1A-A						
												CAH-DP-316	Outlet Damper Position Switch	M23	C-F-2-Z						
												EDE-MM-83	Electrical Penetration	HO7	C-F-2-Z, ET-F-1A-A						
												EDE-MM-112	Electrical Penetration	H36	C-F-2-Z, ET-F-1A-A						
												CAH-AC-FU	15A Fuses	AC6	CB-F-1A-A						
												CAH-CS-5664-1	Control Switch with Indication	F36	CB-F-3A-A						
												EPS-HR2-PR1, RA, RMO, SR3	Emergency Power Sequencer Relays	HR2	CB-F-1A-A						
												CAH-FB7-K610A	SI Actuating Auxiliary Relay	FB7	CB-F-3A-A						
												CAH-ZL-5664-1	Outlet Damper Position Lights	F36	CB-F-3A-A						
												CC-FISL-2223	Flow Indication Switch	SD5	C-F-2-Z	E45-E4E E4E-H36/4 H36-SD5/1 H36-SD6/1 E45-E4H E4H-H35 H35-SD3	301895 E45/11a E45/11C		EDE-MCC-531		
												CC-E4E-FU39	30A Fuse	E4E	ET-F-1A-A						
												EDE-MM-112	Electrical Penetration	H36	ET-F-1A-A, C-F-2-Z						
												CAH-E45/11-52	120 V AC Circuit Breaker	E45	CB-F-1A-A						
												CC-FISL-2224	Flow Indication Switch	SD6	C-F-2-Z						
												EDE-MM-111	Electrical Penetration	H35	ET-F-1A-A, C-F-2-Z						
												CC-FISL-2124	Flow Indication Switch	SD3	C-F-2-Z						

FUNCTION: CONTAINMENT BUILDING AIR HANDLING

ITEM NO	EQUIPMENT ID NO	EQUIPMENT DESCRIPTION	P&ID/1-LINE DRAWING NO.	TRAIN	PHYSICAL LOCATION DRAWING NO.	FIRE AREA/ZONE	REQUIRED FOR		POWER		ELEC NODE	SUPPORTING CONTROL AND INSTRUMENTATION EQUIPMENT				CABLES	ELECTRICAL DRAWING NO.		SUPPORTING SYSTEMS	REDUNDANT COUNTERPART	REMARKS
							HOT STAND BY	COLD SHUT DOWN	ELEC	AIR		EQUIPMENT ID NO.	EQUIPMENT DESCRIPTION	ELEC NODE	FIRE AREA/ZONE		SCHEM.	CABLE			
6	CAH-FN-1F	Containment Structure Cooler AC-1F Fan	MAH-20505	A	310578	C-F-2-Z		X	X	-	M24	CAH-AC7-52	480 V AC Circuit Breaker	AC7	CB-F-1A-A	AC7-G2H AC7-G2H/1 AC7-GN9 AC7-HO7 G2H-HO7/1 G2H-H36/2 G2H-H36/3 HO7-M24 HO7-M24/1 H36-M24/1 H36-SD6 F36-FB7/6 F36-G2H/6 F36-G2H/7 F36-G2H/8 G2H-HR2/2 G2H-HR2/3	310931 AC7a AC7d AC7b		CBA-FN-19 CBA-FN-20 EDE-US-53 Primary Component Cooling Water	CAH-FN-1A CAH-FN-1B CAH-FN-1D	
												CAH-CS-5665-2	Control Switch with Indication	G2H	CB-F-1A-A						
												CAH-SS-5665	Selector Switch	G2H	CB-F-1A-A						
												EDE-AF3-94-4	Bus Undervoltage Relay	AF3	CB-F-1A-A						
												CAH-GN9-R1	Time Delay Relay	GN9	CB-F-1A-A						
												CC-FISL-2224	Flow Indication Switch	SD6	C-F-2-Z						
												CAH-AC7-52H-1	Truck Operated Contact	AC7	CB-F-1A-A						
												CAH-AC7-G,R	Indicating Lights	AC7	CB-F-1A-A						
												CAH-AC7-AM	Ammeter	AC7	CB-F-1A-A						
												CAH-AC7-CT	Current Transformer (300/5)	AC7	CB-F-1A-A						
												CAH-AC7-ATR	Transducer	AC7	CB-F-1A-A						
												CAH-ZL-5665-2	Outlet Damper Position Lights	G2H	CB-F-1A-A						
												CAH-DP-317	Outlet Damper Position Switch	M24	C-F-2-Z						
												EDE-MM-83	Electrical Penetration	HO7	C-F-2-Z, ET-F-1A-A						
												EDE-MM-112	Electrical Penetration	H36	C-F-2-Z, ET-F-1A-A						
												CAH-AC7-FU	15A Fuses	AC7	CB-F-1A-A						
												CAH-CS-5665-1	Control Switch with Indication	F36	CB-F-3A-A						
												EPS-HR2-PR1, RA, RMO, SR3	Emergency Power Sequencer Relays	HR2	CB-F-1A-A						
												CAH-FB7-K610A	SI Actuating Auxiliary Relay	FB7	CB-F-3A-A						
												CAH-ZL-5665-1	Outlet Damper Position Lights	F36	CB-F-3A-A						
												CC-FISL-2224	Flow Indication Switch	SD6	C-F-2-Z	H36-SD6/1 E45-E4E E4E-H36/4 H36-SD5/1 E45-E4H E4H-H35 H35-SD3	310895 E45/11a E45/11c		EDE-MCC-531		
												CC-E4E-FU39	30A Fuse	E4E	ET-F-1A-A						
												EDE-MM-112	Electrical Penetration	H36	ET-F-1A-A, C-F-2-Z						
												CAH-E45/11-52	120 V AC Circuit Breaker	E45	CB-F-1A-A						
												CC-FISL-2223	Flow Indication Switch	SD5	C-F-2-Z						
												EDE-MM-111	Electrical Penetration	H35	ET-F-1A-A, C-F-2-Z						
												CC-FISL-2124	Flow Indication Switch	SD3	C-F-2-Z						

SEABROOK STATION	Fire Protection of Safe Shutdown Capability 10CFR50, Appendix R Safe Shutdown Capability	Revision 7 Table MCR 3.1.3.10-1

FUNCTION: CONTROL BUILDING AIR HANDLING

ITEM NO.	EQUIPMENT ID NO	EQUIPMENT DESCRIPTION	P&ID/1-LINE DRAWING NO.	TRAIN	PHYSICAL LOCATION DRAWING NO.	FIRE AREA/ZONE	REQUIRED FOR		POWER		ELEC NODE	SUPPORTING CONTROL AND INSTRUMENTATION EQUIPMENT				CABLES	ELECTRICAL DRAWING NO.		SUPPORTING SYSTEMS	REDUNDANT COUNTERPART	REMARKS
							HOT STAND BY	COLD SHUT DOWN	ELEC	AIR		EQUIPMENT ID NO.	EQUIPMENT DESCRIPTION	ELEC NODE	FIRE AREA/ZONE		SCHEM.	CABLE			
1	CBA-DP-24A	Mechanical Room "A" Outside Air Damper	CBA-20303	A	310443	CB-F-2B-A	X	X	X	X	V1A	CBA-FY-5550A	Pilot Solenoid	V1A	CB-F-2B-A	G4P-V1A G4P-V1B G4P-V1C G3C-G4P/5	310926 BK4a	BK4c	Instrument Air	CBA-DP-24F	Note 4
												FP-R1	Signal Actuating Output Relay	G3C	TB-F-2-Z						
												FP-CP-558	Fire Protection Control Panel	G4P	TB-F-2-Z						
												CBA-TIC-5571	Temperature Indicating Control (Pneumatic)	-	CB-F-2B-A						
												CBA-FY-5550B	Pilot Solenoid	V1B	CB-F-2B-A						
												CBA-FY-5550C	Pilot Solenoid	V1C	CB-F-2B-A						
2	CBA-DP-24B	Mechanical Room "A" Recirculating Air Damper	CBA-20303	A	310443	CB-F-2B-A	X	X	X	X	V1B	CBA-FY-5550B	Pilot Solenoid	V1B	CB-F-2B-A	G4P-V1A G4P-V1B G4P-V1C G3C-G4P/5	BK4a	BK4c	Instrument Air	CBA-DP-24E	Note 4
												FP-CP-558	Fire Protection Control Panel	G4P	TB-F-2-Z						
												FP-R1	Signal Actuating Output Relay	G3C	TB-F-2-Z						
												CBA-TIC-5571	Temperature Indicating Controller (Pneumatic)	-	CB-F-2B-A						
												CBA-FY-5550A	Pilot Solenoid	V1A	CB-F-2B-A						
												CBA-FY-5550C	Pilot Solenoid	V1C	CB-F-2B-A						
3	CBA-DP-24C	Mechanical Room "A" Return Air Damper	CBA-20303	A	310443	CB-F-2B-A	X	X	X	X	V1C	CBA-FY-5550C	Pilot Solenoid	V1C	CB-F-2B-A	G4P-V1A G4P-V1B G4P-V1C G3C-G4P/5	310926 BK4a	BK4c	Instrument Air	CB-DP-24D	Note 4
												FP-CP-558	Fire Protection Control Panel	G4P	TB-F-2-Z						
												FP-R1	Signal Actuating Output Relay	G3c	TB-F-2-Z						
												CBA-TIC-5571	Temperature Indicating Controller (Pneumatic)	-	CB-F-2B-A						
												CBA-FY-5550A	Pilot Solenoid	V1A	CB-F-2B-A						
												CBA-FY-5550B	Pilot Solenoid	V1C	CB-F-2B-A						
4	CBA-DP-24D	Mechanical Room "B" Return Air Damper	CBA-20303	B	310443 604094	CB-F-2C-A	X	X	-	X	-	CBA-TIC-5572	Temperature Indicating Controller (Pneumatic)	-	CB-F-2C-A	-	-	-	Instrument Air	CBA-DP-24C	Notes 1,2,4
5	CBA-DP-24E	Mechanical Room "B" Recirculating Air	CBA-20303	B	310443 604094	CB-F-2C-A	X	X	-	X	-	CBA-TIC-5572	Temperature Indicating Controller (Pneumatic)	-	CB-F-2C-A	-	-	-	Instrument Air	CBA-DP-24B	Notes 1,2,4
6	CBA-DP-24F	Mechanical Room "B" Outside Air Damper	CBA-20303	B	310443 604094	CB-F-2C-A	X	X	-	X	-	CBA-TIC-5572	Temperature Indicating Controller (Pneumatic)	-	CB-F-2C-A	-	-	-	Instrument Air	CBA-DP-24A	Notes 1,2,4

Notes

1. Equipment is mechanical with no electrical requirements.
2. Electrical conduit Plan Drawing 310443, listed only to show fire zone correlation reference to control building area covered by HVAC Drawing 604094 where CBA Dampers 24 D, E, and F are identified in plan.
3. Air is not required for support as damper fails open.
4. Process connections showing positioning of air operated dampers, DP-24A-F, by pneumatic temperature indicating controllers, CBA-TIC-5571 and 5572, are detailed on I&C Loop Diagrams 506159 and 506160.
5. Air is not required for support as damper fails closed.

FUNCTION: CONTROL BUILDING AIR HANDLING

ITEM NO.	EQUIPMENT ID NO	EQUIPMENT DESCRIPTION	P&ID/1-LINE DRAWING NO.	TRAIN	PHYSICAL LOCATION DRAWING NO.	FIRE AREA/ZONE	REQUIRED FOR		POWER		ELEC NODE	SUPPORTING CONTROL AND INSTRUMENTATION EQUIPMENT				CABLES	ELECTRICAL DRAWING NO.		SUPPORTING SYSTEMS	REDUNDANT COUNTERPART	REMARKS
							HOT STAND BY	COLD SHUT DOWN	ELEC	AIR		EQUIPMENT ID NO.	EQUIPMENT DESCRIPTION	ELEC NODE	FIRE AREA/ZONE		SCHEM.	CABLE			
7	CBA-FN-19	Control Building Train "A" SWGR Supply Fan	CBA-20303	A	310443	CB-F-2B-A	X	X	X	-	N28	CBA-BL6-52	460 V ac Circuit Breaker	BL6	CB-F-1A-A	BL6-HR2/1 BL6-N28/2	BL6a	BL6c	EDE-MCC-515	CBA-FN-32	-
												CBA-CS-5552	Control Switch with Indication	BL6	CB-F-1A-A						
												DG-HR2-HR9X	EPS Step Loading Relay	HR2	CB-F-1A-A						
												DG-HR2-RMO	EPS Manual Override Relay	HR2	CB-F-1A-A						
												CBA-BL6-42	Motor Starter	BL6	CB-F-1A-A						
												CBA-BL6-42X	Motor Starter Auxiliary Relay	BL6	CB-F-1A-A						
												CBA-BL6-49	Overload Relays	BL6	CB-F-1A-A						
												CBA-BL6-FU	Fuse	BL6	CB-F-1A-A						
8	CBA-FN-20	Control Building Train "A" SWGR Return Fan	CBA-20303	A	310443	CB-F-2B-A	X	X	X	-	N30	CBA-BL7-52	460 V ac Circuit Breaker	BL7	CB-F-1A-A	BL7-HR2 BL7-N30/2	BL7a	BL7c	EDE-MCC-521	CBA-FN-33	-
												DG-HR2-RMO	EPS Manual Override Relay	HR2	CB-F-1A-A						
												CBA-BL7-42	Motor Starter	BL7	CB-F-1A-A						
												CBA-BL7-49	Overload Relays	BL7	CB-F-1A-A						
												CBA-BL7-FU	Fuse	BL7	CB-F-1A-A						
												CBA-CS-5554	Control Switch with Indication	BL7	CB-F-1A-A						
												DG-HR2-HR9X	EPS Step Loading Relay	HR2	CB-F-1A-A						
												CBA-BL7-42X	Motor Starter Auxiliary Relay	BL7	CB-F-1A-A						
9	CBA-FN-21A	Control Building Battery Room Exhaust Fan "A"	CBA-20303	A	310443	CB-F-2B-A	X	X	X	-	N32	CBA-BL8-52	460 V ac Circuit Breaker	BL8	CB-F-1A-A	BL8-N32 BL8-VV5/1 BL8-VV5	BL8a	BL8c	EDE-MCC-521	CBA-FN-21B	
												CBA-CS-5556	Control Switch with Indication	BL8	CB-F-1A-A						
												CBA-ZS-DP-21A	Damper Position Switch	VV5	CB-F-2B-A						
												CBA-BL8-42	Motor Starter	BL8	CB-F-1A-A						
												CBA-ZL-5556	Damper 21A Indicating Lights	BL8	CB-F-1A-A						
												CBA-BL8-49	Overload Relays	BL8	CB-F-1A-A						
												CBA-DP-21A-20	Pilot Solenoid	VV5	CB-F-2B-A						
												CBA-BL8-FU	Fuse	BL8	CB-F-1A-A						
10	CBA-DP-21A	Battery Room Exhaust Fan "A" Damper	CBA-20303	A	310443	CB-F-2B-A	X	X	X	X	VV5	CBA-BL8-52	460 V ac Circuit Breaker	BL8	CB-F-1A-A	BL8-VV5 BL8-VV5/1	BL8a	BL8c	EDE-MCC-521	CBA-DP-21B	Note 3
												CBA-BL8-FU	Fuse	BL8	CB-F-1A-A						
												CBA-CS-5556	Control Switch with Indication	BL8	CB-F-1A-A						
												CBA-DP-21A-20	Pilot Solenoid	VV5	CB-F-2B-A						

FUNCTION: CONTROL BUILDING AIR HANDLING

ITEM NO.	EQUIPMENT ID NO	EQUIPMENT DESCRIPTION	P&ID/1-LINE DRAWING NO.	TRAIN	PHYSICAL LOCATION DRAWING NO.	FIRE AREA/ZONE	REQUIRED FOR		POWER		ELEC NODE	SUPPORTING CONTROL AND INSTRUMENTATION EQUIPMENT				CABLES	ELECTRICAL DRAWING NO.		SUPPORTING SYSTEMS	REDUNDANT COUNTERPART	REMARKS
							HOT STAND BY	COLD SHUT DOWN	ELEC	AIR		EQUIPMENT ID NO.	EQUIPMENT DESCRIPTION	ELEC NODE	FIRE AREA/ZONE		SCHEM.	CABLE			
11	CBA-FN-21B	Control Building Battery Room Exhaust Fan "B"	CBA-20303	B	310443	CB-F-2C-A	X	X	X	-	N33	CBA-BL5-52	460 V ac Circuit Breaker	BL5	CB-F-1B-A	BL5-N33 BL5-VV4/1 BL5-VV4	310926 BL5a	BL5c	EDE-MCC-621	CBA-FN-21A	
												CBA-CS-5557	Control Switch with Indication	BL5	CB-F-1B-A						
												CBA-ZS-DP-21B	Damper Position Switch	VV4	CB-F-2C-A						
												CBA-BL5-42	Motor Starter	BL5	CB-F-1B-A						
												CBA-ZL-5557	Damper 21B Indicating Lights	BL5	CB-F-1B-A						
												CBA-BL5-49	Overload Relays	BL5	CB-F-1B-A						
												CBA-DP-21B-20	Pilot Solenoid	VV4	CB-F-2C-A						
												CBA-BL5-FU	Fuse	BL5	CB-F-1B-A						
12	CBA-DP-21B	Battery Room Exhaust Fan "B" Damper	CBA-20303	B	310443	CB-F-2C-A	X	X	X	X	VV4	CBA-BL5-52	460 V ac Circuit Breaker	BL5	CB-F-1B-A	BL5-VV4 BL5-VV4/1	310926 BL5a	BL5c	EDE-MCC-621	CBA-DP-21A	Note 3
												CBA-BL5-FU	Fuse	BL5	CB-F-1B-A						
												CBA-CS-5557	Control Switch	BL5	CB-F-1B-A						
												CBA-DP-21B-20	Pilot Solenoid	VV4	CB-F-2C-A						
13	CBA-FN-32	Control Building Train "B" SWGR Supply Fan	CBA-20303	B	310443	CB-F-2C-A	X	X	X	-	NH3	CBA-BL3-52	460 V ac Circuit Breaker	BL3	CB-F-1B-A	BL3-HR4 BL3-NH3	BL3a	BL3c	EDE-MCC-621	CBA-FN-19	
												CBA-CS-5559	Control Switch with Indication	BL3	CB-F-1B-A						
												DG-HR4-HR9X	EPS Step Loading Relay	HR4	CB-F-1B-A						
												DG-HR4-RMO	EPS Manual Override Relay	HR4	CB-F-1B-A						
												CBA-BL3-42	Motor Starter	BL3	CB-F-1B-A						
												CBA-BL3-42X	Motor Starter Auxiliary Relay	BL3	CB-F-1B-A						
												CBA-BL3-49	Overload Relays	BL3	CB-F-1B-A						
												CBA-BL3-FU	Fuse	BL3	CB-F-1B-A						
14	CBA-FN-33	Control Building Train "B" SWGR Return Fan	CBA-20303	B	310443	CB-F-2C-A	X	X	X	-	NH5	CBA-BL4-52	460 V ac Circuit Breaker	BL4	CB-F-1B-A	BL4-HR4 BL4-NH5	BL4a	BL4c	EDE-MCC-621	CBA-FN-20	
												CBA-CS-5561	Control Switch with Indication	BL4	CB-F-1B-A						
												DG-HR4-HR9X	EPS Step Loading Relay	HR4	CB-F-1B-A						
												CBA-BL4-42	Motor Starter	BL4	CB-F-1B-A						
												CBA-BL4-49	Overload Relays	BL4	CB-F-1B-A						
												CBA-BL4-FU	Fuse	BL4	CB-F-1B-A						
												DG-HR4-RMO	EPS Manual Override Relay	HR4	CB-F-1B-A						

FUNCTION: CONTROL BUILDING AIR HANDLING

ITEM NO.	EQUIPMENT ID NO	EQUIPMENT DESCRIPTION	P&ID/1-LINE DRAWING NO.	TRAIN	PHYSICAL LOCATION DRAWING NO.	FIRE AREA/ZONE	REQUIRED FOR		POWER		ELEC NODE	SUPPORTING CONTROL AND INSTRUMENTATION EQUIPMENT				CABLES	ELECTRICAL DRAWING NO.		SUPPORTING SYSTEMS	REDUNDANT COUNTERPART	REMARKS
							HOT STAND BY	COLD SHUT DOWN	ELEC	AIR		EQUIPMENT ID NO.	EQUIPMENT DESCRIPTION	ELEC NODE	FIRE AREA/ZONE		SCHEM.	CABLE			
15	CBA-CP-177	Control Room A/C Unit A Control Panel	CBA-20303 CBA-20304	A	310444	CB-F-3B-A	X	X	X	-	GU1	CBA-AC4-52	460V ac Circuit Breaker	AC4	CB-F-1A-A	AC4-GU1 AC4-HR2 GU1-N21 GU1-N21/1 GU1-NN1 GU1-NN1/1 GU1-PV1 GU1-UG1 F38-GU1 F38-GU1/1	310926 AC4a AC4e	AC4b AC4f	EDE-US-52 Instrument Air	CBA-CP-178	
												CBA-FN-14A	AC Unit Fan	N21	CB-F-3B-A						
												CBA-FN-211A	Condenser Exhaust Fan	NN1	DG-F-3A-Z						
												CBA-PDS-21206A1/A2	FN-211A Diff Pressure	PV1	DG-F-3A-Z						
										X		CBA-DP-26A	Damper	UG1	CB-F-3B-A						
												CBA-CS-5300-1	FN-14A Control Switch	F36	CB-F-3A-A						
												CBA-CS-21222A	FN-211A Control Switch	F36	CB-F-3A-A						
												CBA-AC4-FU	Breaker Fuse	AC4	CB-F-1A-A						
												CBA-AC4-52H	Breaker Truck Switch	AC4	CB-F-1A-A						
												CBA-CS-5300-3	Breaker Control Switch	AC3	CB-F-1A-A						
												DG-HR2-RMO, PR1, LR1	Sequencer Relays	HR2	CB-F-1A-A	GU1-HR2					
												DG-HR9 - SR5	Sequencer Relay	HR9	CB-F-1A-A						
												EDE-AC3-94-3	Undervoltage Relay	AC3	CB-F-1A-A						
												CBA-E-230A	Chiller	HW4	DG-F-3A-Z	GU1-HW4 GU1-HW4/1 GU1-HW4/2 GU1-HW4/3 GU1-HW4/4 B6B-HW4 B6C-HW4 HW4-PK8 HW4-PK9	AC4ma	AC4me			
												CBA-PDS-21202A	Evaporator Diff Pressure	PK8	DG-F-3A-Z						
												CBA-ZL-21221A	Chiller Indication	F36	CB-F-3A-A						
												CBA-TCV-21200A	Chilled Water TCV	LV1	CB-F-3B-A	GU1-LV1 LV1-TOL	AC4na	AC4nc			
												CBA-TC-21200A	Chilled Water Temp Cont.	TOL	CB-F-3A-A						
												CBA-B6B-52	460V ac Circuit Breaker	B6B	CB-F-1A-A	B6B-NM5	B6Ba B6Ca	B6Bc B6Cc			
												CBA-B6B-FU	Fuse	B6B	CB-F-1A-A						
												CBA-SS-21220A	Selector Switch	HW4	CB-F-1A-A						
												CBA-6K13	Signal Relay	HW4	CB-F-1A-A						
												CBA-B6B-42	Motor Starter	B6B	CB-F-1A-A						
												CBA-B6B-49	Overload Relays	B6B	CB-F-1A-A						
												CBA-B6C-52	460V ac Circuit Breaker	B6C	CB-F-1A-A	B6C-NM6					
												CBA-B6C-FU	Fuse	B6C	CB-F-1A-A						
												CBA-B6C-42	Motor Starter	B6C	CB-F-1A-A						
												CBA-B6C-49	Overload Relays	B6C	CB-F-1A-A						
												CBA-P-434A	Chiller Circ. Water Pump	NM5	DG-F-3A-Z						
												CBA-P-435A	Chiller Circ. Water Pump	NM6	DG-F-3A-Z						

FUNCTION: CONTROL BUILDING AIR HANDLING

ITEM NO.	EQUIPMENT ID NO	EQUIPMENT DESCRIPTION	P&ID/1-LINE DRAWING NO.	TRAIN	PHYSICAL LOCATION DRAWING NO.	FIRE AREA/ZONE	REQUIRED FOR		POWER		ELEC NODE	SUPPORTING CONTROL AND INSTRUMENTATION EQUIPMENT				CABLES	ELECTRICAL DRAWING NO.		SUPPORTING SYSTEMS	REDUNDANT COUNTERPART	REMARKS
							HOT STAND BY	COLD SHUT DOWN	ELEC	AIR		EQUIPMENT ID NO.	EQUIPMENT DESCRIPTION	ELEC NODE	FIRE AREA/ZONE		SCHEM.	CABLE			
16	CBA-CP-178	Control Room A/C Unit B Control Panel	CBA-20303 CBA-20304	B	310444	CB-F-3B-A	X	X	X	-	GU2	CBA-AE4-52	460V ac Circuit Breaker	AE4	CB-F-1B-A	AE4-GU2 AE4-HR4 GU2-N22 GU2-N22/1 GU2-NN3 GU2-NN3/1 GU2-PV0 GU2-UG2 F37-GU2 F37-GU2/1	310926 AE4a AE4e	AE4b AE4f	EDE-US-62 Instrument Air	CBA-CP-177	
												CBA-FN-14B	AC Unit Fan	N22	CB-F-3B-A						
												CBA-FN-211B	Condenser Exhaust Fan	NN3	DG-F-3B-Z						
												CBA-PDS-21206B1/B2	FN-211B Diff Pressure	PV0	DG-F-3B-Z						
										X		CBA-DP-26B	Damper	UG2	CB-F-3B-A						
												CBA-CS-5301-1	FN-14B Control Switch	F37	CB-F-3A-A						
												CBA-CS-21222B	FN-211B Control Switch	F37	CB-F-3A-A						
												CBA-AE4-FU	Breaker Fuse	AE4	CB-F-1B-A						
												CBA-AE4-52H	Breaker Truck Switch	AE4	CB-F-1B-A						
												CBA-CS-5301-3	Breaker Control Switch	AE3	CB-F-1B-A						
												DG-HR4-RM0,PR1,LR1	Sequencer Relays	HR4	CB-F-1B-A	GU2-HR4					
												DG-HR0 - SR5	Sequencer Relay	HR0	CB-F-1B-A						
												EDE-AE3-94-3	Undervoltage Relay	AE3	CB-F-1B-A						
												CBA-E-230B	Chiller	HW5	DG-F-3B-Z	GU2-HW5 GU2-HW5/1 GU2-HW5/2 GU2-HW5/3 GU2-HW5/4 B6H-HW5 B6I-HW5 HW5-PL0 HW5-PL5	AE4ma	AE4me			
												CBA-PDS-21202B	Evaporator Diff Pressure	PL0	DG-F-3B-Z						
												CBA-ZL-21221B	Chiller Indication	F37	CB-F-3A-A						
												CBA-TCV-21200B	Chilled Water TCV	LV2	CB-F-3B-A	GU2-LV2 LV2-TON	AE4na	AE4nc			
												CBA-TC-21200B	Chilled Water Temp Cont.	TON	CB-F-3A-A						
												CBA-B6H-52	460V ac Circuit Breaker	B6H	CB-F-1B-A	B6H-NM7	B6Ha B6Ia	B6Hc B6Ic			
												CBA-B6H-FU	Fuse	B6H	CB-F-1B-A						
												CBA-SS-21220B	Selector Switch	HW5	CB-F-1B-A						
												CBA-6K13	Signal Relay	HW5	CB-F-1B-A						
												CBA-B6H-42	Motor Starter	B6H	CB-F-1B-A						
												CBA-B6H-49	Overload Relays	B6H	CB-F-1B-A						
												CBA-B6I-52	460V ac Circuit Breaker	B6I	CB-F-1B-A	B6I-NM8					
												CBA-B6I-FU	Fuse	B6I	CB-F-1B-A						
												CBA-B6I-42	Motor Starter	B6I	CB-F-1B-A						
												CBA-B6I-49	Overload Relays	B6I	CB-F-1B-A						
												CBA-P-434B	Chiller Circ. Water Pump	NM7	DG-F-3B-Z						
												CBA-P-435B	Chiller Circ. Water Pump	NM8	DG-F-3B-Z						
17	CBA-DP-52	Control Building Recirculation Air Damper	CBA-20304	A	310444	CB-F-3B-A	X	X	X	X	UH2	CBA-CS-5302	Control Switch	F36	CB-F-3A-A	GN8-P64 GN8-UH2 F36-GN8 GN8-P65	E16/29a E16/29e E16/29g	E16/29c E16/29d E16/29h			Note 5
												CBA-PDSH-5305	Pressure Differential Switch	P64	CB-F-3B-A						
												CBA-PDSH-5306	Pressure Differential Switch	P65	CB-F-3B-A						

FUNCTION: DIESEL GENERATOR BUILDING AIR HANDLING

ITEM NO.	EQUIPMENT ID NO.	EQUIPMENT DESCRIPTION	P&ID/1-LINE DRAWING NO.	TRAIN	PHYSICAL LOCATION DRAWING NO.	FIRE AREA/ZONE	REQUIRED FOR		POWER		ELEC NODE	SUPPORTING CONTROL AND INSTRUMENTATION EQUIPMENT				CABLES	ELECTRICAL DRAWING NO.		SUPPORTING SYSTEMS	REDUNDANT COUNTERPART	REMARKS
							HOT STAND BY	COLD SHUT DOWN	ELEC	AIR		EQUIPMENT ID NO.	EQUIPMENT DESCRIPTION	ELEC NODE	FIRE AREA/ZONE		SCHEM.	CABLE			
1	DAH-FN-25A	DG-1A Room Supply Air Fan	DAH-20624	A	310525	DG-F-3A-Z	X	X	X	-	N37	DAH-B01-52	460 V AC Circuit Breaker	B01	CB-F-1A-A	B01-N37/1 B01-G29 B01-J1E B01-GN9	310928 B01a	B01c B01d	EDE-MCC-521 EDE-PP-11E	DAH-FN-25B	
												DAH-CS-5529	Control Switch with Fan Indicating Lights	B01	CB-F-1A-A						
												DAH-FISH-5529	Flow Switch	S40	DG-F-3A-Z						
												DAH-J1E-RTB	Temperature Bistable Auxiliary Relay	J1E	DG-F-2A-A						
												DAH-ED1-R2	Auxiliary Relay	ED1	CB-F-1A-A						
												DG-G29-HSR	DG-1A High Speed Relay	G29	DG-F-2A-A						
												DAH-B01-42	Motor Starter	B01	CB-F-1A-A						
												DAH-B01-42X	Motor Starter Auxiliary Relay	B01	CB-F-1A-A						
												DAH-B01-49	Overload Relays	B01	CB-F-1A-A						
												DAH-B01-FU	Fuse	B01	CB-F-1A-A						
												DAH-EDI-RI	Control Circuit Power Monitor Auxiliary Relay	EDI	CB-F-1A-A						
												DAH-GN9-RS	EPS Permissive Auxiliary Relay	GN9	CB-F-1A-A						
												DAH-GN9-RD	Damper Position Auxiliary Relay	GN9	CB-F-1A-A						
												DAH-E3E/7-52	120 V AC Circuit Breaker	E3E	CB-F-1A-A	J1E-T3P (Non CASP) E3E-J1E	E3E/7a	E3E/7b	EDE-MCC-515 EDE-PP-E3E		
												DAH-TB-5529-1	Temperature Bistable	J1E	DG-F-2A-A						
												DAH-J1E-RTB	Temperature Bistable Auxiliary Relay	J1E	DG-F-2A-A						
												DAH-TE-5529-1	Temperature Element	T3P	DG-F-2A-A						
												DAH-TT-5529-1	Temperature Transmitter	J1E	DG-F-2A-A						
												DAH-CP-295	DG-A Room Air Handling Fans and Damper Control Panel	J1E	DG-F-2A-A						

FUNCTION: DIESEL GENERATOR BUILDING AIR HANDLING

ITEM NO.	EQUIPMENT ID NO.	EQUIPMENT DESCRIPTION	P&ID/1-LINE DRAWING NO.	TRAIN	PHYSICAL LOCATION DRAWING NO.	FIRE AREA/ZONE	REQUIRED FOR		POWER		ELEC NODE	SUPPORTING CONTROL AND INSTRUMENTATION EQUIPMENT				CABLES	ELECTRICAL DRAWING NO.		SUPPORTING SYSTEMS	REDUNDANT COUNTERPART	REMARKS
							HOT STAND BY	COLD SHUT DOWN	ELEC	AIR		EQUIPMENT ID NO.	EQUIPMENT DESCRIPTION	ELEC NODE	FIRE AREA/ZONE		SCHEM.	CABLE			
2	DAH-DP-16A	DG-1A Room Return Air Damper	DAH-20624	A	310524	DG-F-2A-Z	X	X	X	X	UF9	DAH-ED1-R2 (B01 & B03)	Auxiliary Relays	ED1	CB-F-1A-A	B01-UF9/1 B01-J1E/1 EIS-GN9 EDI-GN9 B03-UF9 B01-HR2	EIS/6a	EIS/6c	EDE-MCC-521 EDE-PP-11E	DAH-DP-16B	Note 1
												DAH-DP-16A-20	Pilot Solenoid	UF9	DG-F-2A-A						
												DAH-TB-5529-1	Temperature Bistable	J1E	DG-F-2A-A						
												DAH-ZS-DP-16A	Damper 16A Position Switch	UF9	DG-F-2A-A						
												DG-HR2-PR1	EPS Permissive Auxiliary Relay	HR2	CB-F-1A-A						
												DG-HR2-HR8	EPS Permissive Auxiliary Relay	HR2	CB-F-1A-A						
												DG-HR2-SR1	EPS Permissive Auxiliary Relay	HR2	CB-F-1A-A						
												DAH-GN9-RS	EPS Permissive Auxiliary Relay	GN9	CB-F-1A-A						
												DAH-GN9-RD	Damper Position Auxiliary Relay	GN9	CB-F-1A-A						
												DAH-E1S/6-52	120 V AC Circuit Breaker	E1S	CB-F-1A-A						
												DAH-ZL-5529-4	Damper Position Indicating Lights	B03	CB-F-1A-A						
												DAH-E3E/7-52	120 V AC Circuit Breaker	E3E	CB-F-1A-A	J1E-T3P (Non CASP) E3E-J1E	E3E/7a	E3E/7b	EDE-MCC-515 EDE-PP-E3E		
												DAH-TB-5529-1	Temperature Bistable	J1E	DG-F-2A-A						
												DAH-TE-5529-1	Temperature Element	T3P	DG-F-2A-A						
												DAH-TT-5529-1	Temperature Transmitter	J1E	DG-F-2A-A						
												DAH-CP-295	DG-A Room Air Handling Fans And Damper Control Panel	J1E	DG-F-2A-A						

Notes:
1. Air is not required for support as damper is open

FUNCTION: DIESEL GENERATOR BUILDING AIR HANDLING

ITEM NO.	EQUIPMENT ID NO.	EQUIPMENT DESCRIPTION	P&ID/1-LINE DRAWING NO.	TRAIN	PHYSICAL LOCATION DRAWING NO.	FIRE AREA/ZONE	REQUIRED FOR		POWER		ELEC NODE	SUPPORTING CONTROL AND INSTRUMENTATION EQUIPMENT				CABLES	ELECTRICAL DRAWING NO.		SUPPORTING SYSTEMS	REDUNDANT COUNTERPART	REMARKS
							HOT STAND BY	COLD SHUT DOWN	ELEC	AIR		EQUIPMENT ID NO.	EQUIPMENT DESCRIPTION	ELEC NODE	FIRE AREA/ZONE		SCHEM.	CABLE			
3	DAH-FN-25B	DG-1B Room Supply Air Fan	DAH-20624	B	310525	DG-F-3B-Z	X	X	X	-	N38	DAH-B02-52	460 V AC Circuit Breaker	B02	CB-F-1B-A	B02-N38/1 B02-G30 B02-S41 B02-J1F B02-GN0 EE3-E3D	310928 B02a	B02c B02d	EDE-MCC-621 EDE-PP-11F	DAH-FN-25A	
												DAH-CS-5530	Control Switch with Fan Indicating Lights	B02	CB-F-1B-A						
												DAH-FISH-5530	Flow Switch	S41	DG-F-3B-Z						
												DAH-J1F-RTB	Temperature Bistable Auxiliary Relay	J1F	DG-F-2B-A						
												DAH-EE3-R2	Auxiliary Relay	EE3	CB-F-1B-A						
												DAH-B02-FU	Fuse	B02	CB-F-1B-A						
												DG-G30-HSR	DG-1B High Speed Relay	G30	DG-F-2B-A						
												DAH-B02-42	Motor Starter	B02	CB-F-1B-A						
												DAH-B02-42X	Motor Starter Auxiliary Relay	B02	CB-F-1B-A						
												DAH-B02-49	Overload Relays	B02	CB-F-1B-A						
												DAH-E3D-R1	Control Circuit Power Monitor Auxiliary Relay	E3D	CB-F-1B-A						
												DAH-GN0-RS	EPS Permissive Auxiliary Relay	GN0	CB-F-1B-A						
												DAH-GN0-RD	Damper Position Auxiliary Relay	GN0	CB-F-1B-A						
												DAH-E3F/7-52	120 V AC Circuit Breaker	E3F	CB-F-1B-A	J1F-T3Q (Non CASP) E3F-J1F	E3F/7a	E3F/7b	EDE-MCC-615 EDE-PP-E3F		
												DAH-TB-5530-1	Temperature Bistable	J1F	DG-F-2B-A						
												DAH-J1F-RTB	Temperature Bistable Auxiliary Relay	J1F	DG-F-2B-A						
												DAH-TE-5530-1	Temperature Element	T3Q	DG-F-2B-A						
												DAH-TT-5530-1	Temperature Transmitter	J1F	DG-F-2B-A						
												DAH-CP-296	DG-B Room Air Handling Fans and Damper Control Panel	J1F	DG-F-2B-A						

FUNCTION: DIESEL GENERATOR BUILDING AIR HANDLING

ITEM NO.	EQUIPMENT ID NO.	EQUIPMENT DESCRIPTION	P&ID/1-LINE DRAWING NO.	TRAIN	PHYSICAL LOCATION DRAWING NO.	FIRE AREA/ZONE	REQUIRED FOR		POWER		ELEC NODE	SUPPORTING CONTROL AND INSTRUMENTATION EQUIPMENT				CABLES	ELECTRICAL DRAWING NO.		SUPPORTING SYSTEMS	REDUNDANT COUNTERPART	REMARKS
							HOT STAND BY	COLD SHUT DOWN	ELEC	AIR		EQUIPMENT ID NO.	EQUIPMENT DESCRIPTION	ELEC NODE	FIRE AREA/ZONE		SCHEM.	CABLE			
4	DAH-DP-16B	DG-1B Room Return Air Damper	DAH-20624	B	310524	DG-F-2B-Z	X	X	X	X	UF0	DAH-EE3-R2 (B02 & B04)	Auxiliary Relay	EE3	CB-F-1B-A	B02-UF0/1 ED0-J1F B02-ED0 EE3-GN0/2 EIT-GN0 B01-HR4 B04-UF0	EIT/6a	EIT/6c	EDE-MCC-621 EDE-PP-11F	DAH-DP-16A	Note 1
												DAH-DP-16B-20	Pilot Solenoid	UF0	DG-F-2B-A						
												DAH-TB-5530-1	Temperature Bistable	J1F	DG-F-2B-A						
												DAH-ZS-DP-16B	Damper 16B Position Switch	UF0	DG-F-2B-A						
												DG-HR4-HRB	EPS Permissive Auxiliary Relay	HR4	CB-F-1B-A						
												DG-HR4-PR1	EPS Permissive Auxiliary Relay	HR4	CB-F-1B-A						
												DG-HR4-SR1	EPS Permissive Auxiliary Relay	HR4	CB-F-1B-A						
												DAH-GN0-RS	EPS Permissive Auxiliary Relay	GN0	CB-F-1B-A						
												DAH-GN0-RD	Damper Position Auxiliary Relay	GN0	CB-F-1B-A						
												DAH-E1T/6-52	120 V AC Circuit Breaker	E1T	CB-F-1B-A						
												DAH-ZL-5530-4	Damper Position Indicating Lights	B04	CB-F-1B-A						
												DAH-E3F/7-52	120 V AC Circuit Breaker	E3F	CB-F-1B-A	J1F-T3Q (Non CASP) E3F-J1F	E3F/7a	E3F/7b	EDE-MCC-615 EDE-PP-E3F		
												DAH-TB-5530-1	Temperature Bistable	J1F	DG-F-2B-A						
												DAH-TE-5530-1	Temperature Element	T3Q	DG-F-2B-A						
												DAH-TT-5530-1	Temperature Transmitter	J1F	DG-F-2B-A						
												DAH-CP-296	DG-B Room Air Handling Fans and Damper Control Panel	J1F	DG-F-2B-A						

FUNCTION: DIESEL GENERATOR BUILDING AIR HANDLING

ITEM NO.	EQUIPMENT ID NO.	EQUIPMENT DESCRIPTION	P&ID/1-LINE DRAWING NO.	TRAIN	PHYSICAL LOCATION DRAWING NO.	FIRE AREA/ZONE	REQUIRED FOR		POWER		ELEC NODE	SUPPORTING CONTROL AND INSTRUMENTATION EQUIPMENT				CABLES	ELECTRICAL DRAWING NO.		SUPPORTING SYSTEMS	REDUNDANT COUNTERPART	REMARKS
							HOT STAND BY	COLD SHUT DOWN	ELEC	AIR		EQUIPMENT ID NO.	EQUIPMENT DESCRIPTION	ELEC NODE	FIRE AREA/ZONE		SCHEM.	CABLE			
5	DAH-FN-26A	DG-1A Room Return Air Fan	DAH-20624	A	310525	DG-F-2A-A	X	X	X	-	N39	DAH-B03-52	460 V AC Circuit Breaker	B03	CB-F-1A-A	B03-N39/1 B03-J1E G29-J1E B03-GN9	310928 B03a	B03c B03d	EDE-MCC-521 EDE-PP-11E	DAH-FN-26B	
												DAH-B03-42	Motor Starter	B03	CB-F-1A-A						
												DAH-B03-42X	Motor Starter Auxiliary Relays	B03	CB-F-1A-A						
												DAH-B03-49	Overload Relays	B03	CB-F-1A-A						
												DAH-B03-FU	Fuse	B03	CB-F-1A-A						
												DAH-J1E-RTB	Temperature Bistable Auxiliary Relay	J1E	DG-F-2A-A						
												DG-G29-HSR	DG-1A High Speed Relay	G29	DG-F-2A-A						
												DAH-CS-6058	Control Switch with Indicating Lights	B03	CB-F-1A-A						
												DAH-ED1-R2	Auxiliary Relay	ED1	CB-F-1A-A						
												DAH-ED1-R1	Control Circuit Power Monitor Auxiliary Relay	ED1	CB-F-1A-A						
												DAH-GN9-RS	EPS Permissive Auxiliary Relay	GN9	CB-F-1A-A						
												DAH-GN9-RD	Damper Position Auxiliary Relay	GN9	CB-F-1A-A						
												DAH-E3E/7-52	120 V DC Circuit Breaker	E3E	CB-F-1A-A	J1E-T3P (Non CASP) E3E-J1E	E3E/7a	E3E/7b	EDE-MCC-515 EDE-PP-E3E		
												DAH-TB-5229-1	Temperature Bistable	J1E	DG-F-2A-A						
												DAH-J1E-RTB	Temperature Bistable Auxiliary Relay	J1E	DG-F-2A-A						
												DAH-TE-5529-1	Temperature Element	T3P	DG-F-2A-A						
												DAH-TT-5529-1	Temperature Transmitter	J1E	DG-F-2A-A						
												DAH-CP-295	DG-A Room Air Handling Fans and Damper Control Panel	J1E	DG-F-2A-A						

FUNCTION: DIESEL GENERATOR BUILDING AIR HANDLING

ITEM NO.	EQUIPMENT ID NO.	EQUIPMENT DESCRIPTION	P&ID/1-LINE DRAWING NO.	TRAIN	PHYSICAL LOCATION DRAWING NO.	FIRE AREA/ZONE	REQUIRED FOR		POWER		ELEC NODE	SUPPORTING CONTROL AND INSTRUMENTATION EQUIPMENT				CABLES	ELECTRICAL DRAWING NO.		SUPPORTING SYSTEMS	REDUNDANT COUNTERPART	REMARKS
							HOT STAND BY	COLD SHUT DOWN	ELEC	AIR		EQUIPMENT ID NO.	EQUIPMENT DESCRIPTION	ELEC NODE	FIRE AREA/ZONE		SCHEM.	CABLE			
6	DAH-FN-26B	DG-1B Room Return Air Fan	DAH-20624	B	310525	DG-F-2B-A	X	X	X	-	N40	DAH-B04-52	460 V AC Circuit Breaker	B04	CB-F-1B-A	B04-N40/1 B04-J1F G30-J1F B04-GN0	B04a	B04c B04d	EDE-MCC-621 EDE-PP-11F	DAH-FN-26A	
												DAH-B04-42	Motor Starter	B04	CB-F-1B-A						
												DAH-B04-42X	Motor Starter Auxiliary Relays	B04	CB-F-1B-A						
												DAH-B04-49	Overload Relays	B04	CB-F-1B-A						
												DAH-B04-FU	Fuse	B04	CB-F-1B-A						
												DAH-J1F-RTB	Temperature Bistable Auxiliary Relay	J1F	DG-F-2B-A						
												DG-G30-HSR	DG-1B High Speed Relay	G30	DG-F-2B-A						
												DAH-CS-6059	Control Switch with Indicating Lights	B04	CB-F-1B-A						
												DAH-EE3-R2	Auxiliary Relay	EE3	CB-F-1B-A						
												DAH-EE3-R1	Control Circuit Power Monitor Auxiliary Relay	EE3	CB-F-1B-A						
												DAH-GN0-RS	EPS Permissive Auxiliary Relay	GN0	CB-F-1B-A						
												DAH-GN0-RD	Damper Position Auxiliary Relay	GN0	CB-F-1B-A						
												DAH-E3F/7-52	120 V AC Circuit Breaker	E3F	CB-F-1B-A	J1F-T3Q (Non CASP) E3F-J1F	E3F/7a	E3F/7b	EDE-MCC-615 EDE-PP-E3F		
												DAH-TB-5530-1	Temperature Bistable	J1F	DG-F-2B-A						
												DAH-J1F-RTB	Temperature Bistable Auxiliary Relay	J1F	DG-F-2B-A						
												DAH-TE-5530-1	Temperature Element	T3Q	DG-F-2B-A						
												DAH-TT-5530-1	Temperature Transmitter	J1F	DG-F-2B-A						
												DAH-CP-296	DG-B Room Air Handling Fans and Damper Control Panel	J1F	DG-F-2B-A						

FUNCTION: CONTAINMENT ENCLOSURE AIR HANDLING[.]

ITEM NO.	EQUIPMENT ID NO.	EQUIPMENT DESCRIPTION	P&ID/1-LINE DRAWING NO.	TRAIN	PHYSICAL LOCATION DRAWING NO.	FIRE AREA/ZONE	REQUIRED FOR		POWER		ELEC NODE	SUPPORTING CONTROL AND INSTRUMENTATION EQUIPMENT				CABLES	ELECTRICAL DRAWING NO.		SUPPORTING SYSTEMS	REDUNDANT COUNTERPART	REMARKS
							HOT STAND BY	COLD SHUT DOWN	ELEC	AIR		EQUIPMENT ID NO.	EQUIPMENT DESCRIPTION	ELEC NODE	FIRE AREA/ZONE		SCHEM.	CABLE			
1	EAH-FN-5A	Containment Enclosure Cooler AC-2A Fan	MAH-20495	A	310766	CE-F-1-Z	X	X	X	-	M80	EAH-AF5-52	480 V AC Circuit Breaker	AF5	CB-F-1A-A	AF5-G2H AF5-G2H/1 AF5/M80 AF5-YC3 L41-YC3 F36-G2H F36-G2H/1 AF5-HR2 AF5-E3C	310932 AF5a AF5b AF5f	AF5e AF5g	EAH-FN-31A EDE-US-52 Primary Component Cooling Water	EAH-FN-5B	
												EAH-AF5-G, R	Indicating Lights	AF5	CB-F-1A-A						
												EAH-CS-5767-2	Control Switch with Indication	G2H	CB-F-1A-A						
												EAH-SS-5767	Selector Switch	G2H	CB-F-1A-A						
												EAH-ZL-5767-2	Outlet Damper Position Lights	G2H	CB-F-1A-A						
												EAH-ZS-DP-3A	Damper Position Switch	L41	CE-F-1-Z						
												EAH-AF5-AM	Ammeter	AF5	CB-F-1A-A						
												EAH-AF5-CT	Current Transformer (200/5)	AF5	CB-F-1A-A						
												EDE-AC3-94-3	Bus Undervoltage Relay	AC3	CB-F-1A-A						
												EAH-AF5-52H-1	Truck-Operated Contact	AF5	CB-F-1A-A						
												EDE-TBX-YC3	Terminal Box	YC3	CE-F-1-Z						
												EAH-AF5-FU	Fuses	AF5	CB-F-1A-A						
												EAH-CS-5767-1	Control Switch with Indication	F36	CB-F-3A-A						
												DG-HR2-SR1	EPS Permit Auxiliary Relay	HR2	CB-F-1A-A						
												DG-HR2-PR1	EPS Permit Auxiliary Relay	HR2	CB-F-1A-A						
												DG-HR2-RMO	EPS Permit Auxiliary Relay Pressure Switch	HR2	CB-F-1A-A						
												EAH-ZL-5767-1	Outlet Damper Position Lights	F36	CB-F-3A-A						
												EAH-E3C-R1	Auxiliary Relay	E3C	CB-F-1A-A						

[.] Notes
1. Equipment is mechanical with no electrical requirements.
2. Air and electrical power are not required for support as damper fails closed.

FUNCTION: CONTAINMENT ENCLOSURE AIR HANDLING

ITEM NO.	EQUIPMENT ID NO.	EQUIPMENT DESCRIPTION	P&ID/1-LINE DRAWING NO.	TRAIN	PHYSICAL LOCATION DRAWING NO.	FIRE AREA/ZONE	REQUIRED FOR		POWER		ELEC NODE	SUPPORTING CONTROL AND INSTRUMENTATION EQUIPMENT				CABLES	ELECTRICAL DRAWING NO.		SUPPORTING SYSTEMS	REDUNDANT COUNTERPART	REMARKS
							HOT STAND BY	COLD SHUT DOWN	ELEC	AIR		EQUIPMENT ID NO.	EQUIPMENT DESCRIPTION	ELEC NODE	FIRE AREA/ZONE		SCHEM.	CABLE			
2	EAH-FN-5B	Containment Enclosure Cooler AC-2B Fan	MAH-20495	B	310766	CE-F-1-Z	X	X	X	-	M81	EAH-AF9-52	480 V AC Circuit Breaker	AF9	CB-F-1B-A	AF9-G2K AF9-G2K/1 AF9/M81 AF9-YB3 L42-YB3 F37-G2K F37-G2K/1 AF9-HR4 AF9-G2K/2 AF9-E3D	AF9a AF9b AF9f	AF9e AF9g	EAH-FN-31B EDE-US-62 Primary Component Cooling Water	EAH-FN-5A	
												EAH-AF9-G, R	Indicating Lights	AF9	CB-F-1B-A						
												EAH-CS-5768-2	Control Switch with Indication	G2K	CB-F-1B-A						
												EAH-SS-5768	Selector Switch	G2K	CB-F-1B-A						
												EAH-ZL-5768-2	Outlet Damper Position Lights	G2K	CB-F-1B-A						
												EAH-ZS-DP-3B	Damper Position Switch	L42	CE-F-1-Z						
												EAH-AF9-AM	Ammeter	AF9	CB-F-1B-A						
												EAH-AF9-CT	Current Transformer (200/5)	AF9	CB-F-1B-A						
												EDE-AE3-94-3	Bus Undervoltage Relay	AE3	CB-F-1B-A						
												EAH-AF9-52H-1	Truck-Operated Contact	AF9	CB-F-1B-A						
												EDE-TBX-YB3	Terminal Box	YB3	CE-F-1-Z						
												EAH-AF9-FU	Fuses	AF9	CB-F-1B-A						
												EAH-CS-5768-1	Control Switch with Indication	F37	CB-F-3A-A						
												DG-HR4-SR1	EPS Permit Auxiliary Relay	HR4	CB-F-1B-A						
												DG-HR4-PR1	EPS Permit Auxiliary Relay	HR4	CB-F-1B-A						
												DG-HR4-RMO	EPS Permit Auxiliary Relay Pressure Switch	HR4	CB-F-1B-A						
												EAH-ZL-5768-1	Outlet Damper Position Lights	F37	CB-F-3A-A						
												EAH-AE3-R1	Auxiliary Relay	AE3	CB-F-1B-A						
												EAH-E3D-R2	Auxiliary Relay	E3D	CB-F-1B-A						

FUNCTION: CONTAINMENT ENCLOSURE AIR HANDLING

ITEM NO.	EQUIPMENT ID NO.	EQUIPMENT DESCRIPTION	P&ID/1-LINE DRAWING NO.	TRAIN	PHYSICAL LOCATION DRAWING NO.	FIRE AREA/ZONE	REQUIRED FOR		POWER		ELEC NODE	SUPPORTING CONTROL AND INSTRUMENTATION EQUIPMENT				CABLES	ELECTRICAL DRAWING NO.		SUPPORTING SYSTEMS	REDUNDANT COUNTERPART	REMARKS
							HOT STAND BY	COLD SHUT DOWN	ELEC	AIR		EQUIPMENT ID NO.	EQUIPMENT DESCRIPTION	ELEC NODE	FIRE AREA/ZONE		SCHEM.	CABLE			
3	EAH-FN-31A	Containment Enclosure Return Fan "A"	MAH-20495	A	310765	CE-F-1-Z	-	X	X	-	ND5	EAH-BB2-52	460 V Ac Circuit Breaker	BB2	CB-F-1A-A	BB2-ND5 BB2-VQ2 BB2-F36 BB2-F36/1 AF5-BB2 BB2-HR2	310932 BB2a	BB2c	EDE-MCC-512	EAH-FN-31B	
												EAH-BB2-FU	Fuses	BB2	CB-F-1A-A						
												EAH-CS-5769-2	Control Switch	BB2	CB-F-1A-A						
												EAH-BB2-G, R	Indication Lights	BB2	CB-F-1A-A						
												EAH-SS-5769	Selector Switch	BB2	CB-F-1A-A						
												EAH-BB2-42	Motor Starter	BB2	CB-F-1A-A						
												EAH-BB2-42X	Motor Starter Auxiliary Relay	BB2	CB-F-1A-A						
												EAH-BB2-49	Overload Relays	BB2	CB-F-1A-A						
												EAH-ZS-DP-25A	Damper Position Switch	VQ2	CE-F-1-Z						
												EAH-CS-5769-1	Control Switch with Indication	F36	CB-F-3A-A						
												EAH-ZL-5769-1	Inlet Damper Position Lights	F36	CB-F-3A-A						
												DG-HR2-RMO	EPS Permit Auxiliary Relay	HR2	CB-F-1A-A						
												EAH-AF5-52	480 V AC Circuit Breaker Auxiliary Switch	AF5	CB-F-1A-A						
4	EAH-FN-31B	Containment Enclosure Return Fan "B"	MAH-20495	B	310765	CE-F-1-Z	-	X	X	-	NJ7	EAH-BC1-52	460 V Ac Circuit Breaker	BC1	CB-F-1B-A	BC1-NJ7 BC1-VQ3 BC1-F37 BC1-F37/1 AF9-BC1 BC1-HR4	BC1a	BC1c	EDE-MCC-612	EAH-FN-31A	
												EAH-BC1-FU	Fuses	BC1	CB-F-1B-A						
												EAH-CS-5770-2	Control Switch	BC1	CB-F-1B-A						
												EAH-BC1-G, R	Indication Lights	BC1	CB-F-1B-A						
												EAH-SS-5770	Selector Switch	BC1	CB-F-1B-A						
												EAH-BC1-42	Motor Starter	BC1	CB-F-1B-A						
												EAH-BC1-42X	Motor Starter Auxiliary Relay	BC1	CB-F-1B-A						
												EAH-BC1-49	Overload Relays	BC1	CB-F-1B-A						
												EAH-ZS-DP-25B	Damper Position Switch	VQ3	CE-F-1-Z						
												EAH-CS-5770-1	Control Switch with Indication	F37	CB-F-3A-A						
												EAH-ZL-5770-1	Inlet Damper Position Lights	F37	CB-F-3A-A						
												DG-HR4-RMO	EPS Permit Auxiliary Relay	HR4	CB-F-1B-A						
												EAH-AF9-52	480 V AC Circuit Breaker Auxiliary Switch	AF9	CB-F-1B-A						

FUNCTION: CONTAINMENT ENCLOSURE AIR HANDLING

ITEM NO.	EQUIPMENT ID NO.	EQUIPMENT DESCRIPTION	P&ID/1-LINE DRAWING NO.	TRAIN	PHYSICAL LOCATION DRAWING NO.	FIRE AREA/ZONE	REQUIRED FOR		POWER		ELEC NODE	SUPPORTING CONTROL AND INSTRUMENTATION EQUIPMENT				CABLES	ELECTRICAL DRAWING NO.		SUPPORTING SYSTEMS	REDUNDANT COUNTERPART	REMARKS
							HOT STAND BY	COLD SHUT DOWN	ELEC	AIR		EQUIPMENT ID NO.	EQUIPMENT DESCRIPTION	ELEC NODE	FIRE AREA/ZONE		SCHEM.	CABLE			
5	EAH-DP-3A	Containment Enclosure Cooler AC-2A Damper	MAH-20495	A	310766	CE-F-1-Z	X	X	-	-	L41	-	-	-	-	-	-	-	-	EAH-DP-3B	Note 1
6	EAH-DP-3B	Containment Enclosure Cooler AC-2B Damper	MAH-20495	B	310766	CE-F-1-Z	X	X	-	-	L42	-	-	-	-	-	-	-	-	EAH-DP-3A	Note 1
7	EAH-FN-174A	MS & FWPC Analyzer Room Supply Fan	MAH-20503	A	310586	MS-F-4A-Z	X	X	X	-	M4T	EAH-B8C-52	460 V AC Circuit Breaker	B8C	CB-F-1A-A	B8C-M4T B8C-S5G	B8Ca	B8Cc	CBA-FN-19 CBA-FN-20 EDE-MCC-515	EAH-FN-174B	
												EAH-B8C-FU	Fuse	B8C	CB-F-1A-A						
												EAH-CS-5136	Control Switch with Indication	B8C	CB-F-1A-A						
												EAH-B8C-42	Motor Starter	B8C	CB-F-1A-A						
												EAH-B8C-49	Overload Relays	B8C	CB-F-1A-A						
												EAH-TSH-5136	Temperature Switch	S5G	MS-F-4A-Z						
8	EAH-FN-174B	MS & FWPC Analyzer Room Supply Fan	MAH-20503	B	310586	MS-F-4A-Z	X	X	X	-	M4U	EAH-B8E-52	460 V AC Circuit Breaker	B8E	CB-F-1B-A	B8E-M4U B8E-S5H	310932 B8Ea	B8Ec	EDE-MCC-615 CBA-FN-32 CBA-FN-33	EAH-FN-174A	
												EAH-B8E-FU	Starter	B8E	CB-F-1B-A						
												EAH-B8E-49	Overload Relays	B8E	CB-F-1B-A						
												EAH-CS-5763	Control Switch with Indication	B8E	CB-F-1B-A						
												EAH-TSH-5763	Temperature Switch	S5H	MS-F-4A-Z						
												EAH-B8E-FU	Fuse	B8E	CB-F-1B-A						
9	PAH-DP-35A PAH-DP-36A	CE Outboard Isolation Dampers	MAH-20495	A A	310766 310765	PAB-F-2A-Z PAB-F-2C-Z	X X	X X	X X	X X	VN8 VN0	PAH-CS-5370	Control Switch	F36	CB-F-3A-A	F36-VN8 F36-VN0	310930 E42/8a E42/8d	E42/8c			Note 2
												PAH-ZS-DP-35A	Position Switch	VN8	PAB-F-2A-Z						
												PAH-ZS-DP-36A	Position Switch	VN0	PAB-F-2C-Z						
												PAH-FY-DP-35A	Solenoid Valve	VN8	PAB-F-2A-Z						
												PAH-FY-DP-36A	Solenoid Valve	VN0	PAB-F-2C-Z						
10	PAH-DP-35B PAH-DP-36B	CE Inboard Isolation Dampers	MAH-20495	B B	310766 310765	CE-F-1-Z CE-F-1-Z	X X	X X	X X	X X	VN9 VP1	PAH-CS-5371	PAH-CS-5371	F37	CB-F-3A-A	F37-VP1 F37-VN9	310930 E50/8a	E50/8c			Note 2
												PAH-ZS-DP-35B	PAH-ZS-DP-35B	VN9	CE-F-1-Z						
												PAH-ZS-DP-36B	PAH-ZS-DP-36B	VP1	CE-F-1-Z						
												PAH-FY-DP-35B	PAH-FY-DP-35B	VN9	CE-F-1-Z						
												PAH-FY-DP-36B	PAH-FY-DP-36B	VP1	CE-F-1-Z						

FUNCTION: EMERGENCY FEEDWATER PUMPHOUSE AIR HANDLING

ITEM NO.	EQUIPMENT ID NO.	EQUIPMENT DESCRIPTION	P&ID/1-LINE DRAWING NO.	TRAIN	PHYSICAL LOCATION DRAWING NO.	FIRE AREA/ZONE	REQUIRED FOR		POWER		ELEC NODE	SUPPORTING CONTROL AND INSTRUMENTATION EQUIPMENT				CABLES	ELECTRICAL DRAWING NO.		SUPPORTING SYSTEMS	REDUNDANT COUNTERPART	REMARKS
							HOT STAND BY	COLD SHUT DOWN	ELEC	AIR		EQUIPMENT ID NO.	EQUIPMENT DESCRIPTION	ELEC NODE	FIRE AREA/ZONE		SCHEM.	CABLE			
1	EPA-FN-47A	Emergency Feedwater Pumphouse Intake Fan	MAH-20503	A	310708	EFP-F-1-A	X	X	X	-	NL8	EPA-BB7-52	460 V ac Circuit Breaker	BB7	CB-F-1A-A	BB7-NL8 BB7-UH3 BB7-VV6	310922 BB7a	BB7c BB7d	CBA-FN-19 CBA-FN-20 EDE-MCC-512	EPA-FN-47B	
												EPA-BB7-FU	Fuse	BB7	CB-F-1A-A						
												EPA-CS-5430-2	Control Switch	BB7	CB-F-1A-A						
												EPA-ZL-5430-4	Fan Indicating Lights	BB7	CB-F-1A-A						
												EPA-SS-5430	Selector Switch	BB7	CB-F-1A-A						
												EPA-EC8-RBB7	Damper Auxiliary Relay	EC8	CB-F-1A-A						
												EPA-ZS-DP-373	Damper Position Switch	UH3	EFP-F-1-A						
												EPA-ZS-DP-371	Damper Position Switch	VV6	EFP-F-1-A						
												EPA-ZL-5430-5	Damper DP-373 Position Lights	BB7	CB-F-1A-A						
												EPA-ZL-5430-6	Damper DP-371 Position Lights	BB7	CB-F-1A-A						
												EPA-BB7-42	Motor Starter	BB7	CB-F-1A-A						
												EPA-BB7-49	Overload Relays	BB7	CB-F-1A-A						
												EPA-ZL-5430-1	Fan Indicating Lights	F36	CB-F-3A-A	F36-TU9 BB7-F36 BB7-F36/1 BB7-F36/2					
												EPA-ZL-5430-2	Damper DP-373 Position Lights	F36	CB-F-3A-A						
												EPA-ZL-5430-3	Damper DP-371 Position Lights	F36	CB-F-3A-A						
												EPA-CS-5430-1	Control Switch	F36	CB-F-3A-A						
												EPA-TSH-5430	Temperature Switch	TU9	EFP-F-1-A						
												EPA-DP-373-20	Pilot Solenoid	UH3	EFP-F-1-A						
2	EPA-DP-373	Emergency Feedwater Pumphouse Exhaust Damper	MAH-20503	A	310708	EFP-F-1-A	X	X	X	X	UH3	EPA-DP-373-20	Fuse	EC8	CB-F-1A-A	BB7-UH3	BB7a	BB7c BB7d	CBA-FN-19 CBA-FN-20 EDE-MCC-512	EPA-DP-374	Note 1
												EPA-BB7-FU	Auxiliary Relay	BB7	CB-F-1A-A						
												EPA-EC8-RBB7	Pilot Solenoid	UH3	EFP-F-1-A						

Notes
1. Air is not required for support as damper fails open.

FUNCTION: EMERGENCY FEEDWATER PUMPHOUSE AIR HANDLING

ITEM NO.	EQUIPMENT ID NO.	EQUIPMENT DESCRIPTION	P&ID/1-LINE DRAWING NO.	TRAIN	PHYSICAL LOCATION DRAWING NO.	FIRE AREA/ZONE	REQUIRED FOR		POWER		ELEC NODE	SUPPORTING CONTROL AND INSTRUMENTATION EQUIPMENT				CABLES	ELECTRICAL DRAWING NO.		SUPPORTING SYSTEMS	REDUNDANT COUNTERPART	REMARKS
							HOT STAND BY	COLD SHUT DOWN	ELEC	AIR		EQUIPMENT ID NO.	EQUIPMENT DESCRIPTION	ELEC NODE	FIRE AREA/ZONE		SCHEM.	CABLE			
3	EPA-FN-47B	Emergency Feedwater Pumphouse Intake Fan	MAH-20503	B	310708	EFP-F-1-A	X	X	X	-	NL9	EPA-BC7-52	460 V ac Circuit Breaker	BC7	CB-F-1B-A	BC7-NL9 BC7-UH4 BC7-VV7	BC7a	BC7c BC7d	CBA-FN-32 CBA-FN-33 EDE-MCC-612	EPA-FN-47A	
												EPA-BC7-FU	Fuses	BC7	CB-F-1B-A						
												EPA-ZL-5431-4	Fan Indicating Lights	BC7	CB-F-1B-A						
												EPA-SS-5431	Selector Switch	BC7	CB-F-1B-A						
												EPA-EDO-RBC7	Damper Auxiliary Relay	EDO	CB-F-1B-A						
												EPA-ZS-DP-374	Damper Position Switch	UH4	EFP-F-1-A						
												EPA-ZS-DP-372	Damper Position Switch	VV7	EFP-F-1-A						
												EPA-BC7-42	Motor Starter	BC7	CB-F-1B-A						
												EPA-BC7-49	Overload Relays	BC7	CB-F-1B-A						
												EPA-ZL-5431-5	Damper DP-374 Position Lights	BC7	CB-F-1B-A						
												EPA-EDO-R1	Auxiliary Relay	EDO	CB-F-1B-A						
												EPA-ZL-5431-6	Damper DP-372 Position Lights	BC7	CB-F-1B-A	F37-TUO BC7-F37 BC7-F37/1 BC7-F37/2					
												EPA-CS-5431-2	Control Switch	BC7	CB-F-1B-A						
												EPA-BC7-CPT	Control Power Transformer	BC7	CB-F-1B-A						
												EPA-ZL-5431-1	Fan Indicating Lights	F37	CB-F-3A-A						
												EPA-ZL-5431-2	Damper DP-374 Indicating Lights	F37	CB-F-3A-A						
												EPA-ZL-5431-3	Damper DP-372 Indicating Lights	F37	CB-F-3A-A						
												EPA-CS-5431-1	Control Switch	F37	CB-F-3A-A						
												EPA-TSH-5431	Temperature Switch	TUO	EFP-F-1-A						
												EPA-DP-374-20	Pilot Solenoid	UH4	EFP-F-1-A						
4	EPA-DP-374	Emergency Feedwater Pumphouse Exhaust Damper	MAH-20503	B	310708	EFP-F-1-A	X	X	X	X	UH4	EPA-BC7-FU	Fuses	BC7	CB-F-1B-A	BC7-UH4	BC7a	BC7c BC7d	CBA-FN-32 CBA-FN-33 EDE-MCC-612	EPA-DP-373	Note 1
												EPA-EDO-RBC7	Auxiliary Relay	EDO	CB-F-1B-A						
												EPA-DP-374-20	Pilot Solenoid	UH4	EFP-F-1-A						
												EPA-EDO-R1	Auxiliary Relay	EDO	CB-F-1B-A						

FUNCTION: PRIMARY AUXILIARY BUILDING AIR HANDLING

ITEM NO.	EQUIPMENT ID NO.	EQUIPMENT DESCRIPTION	P&ID/1-LINE DRAWING NO.	TRAIN	PHYSICAL LOCATION DRAWING NO.	FIRE AREA/ZONE	REQUIRED FOR HOT STAND BY	REQUIRED FOR COLD SHUT DOWN	POWER ELEC	POWER AIR	ELEC NODE	SUPPORTING CONTROL AND INSTRUMENTATION EQUIPMENT: EQUIPMENT ID NO.	EQUIPMENT DESCRIPTION	ELEC NODE	FIRE AREA/ZONE	CABLES	ELECTRICAL DRAWING NO. SCHEM.	ELECTRICAL DRAWING NO. CABLE	SUPPORTING SYSTEMS	REDUNDANT COUNTERPART	REMARKS
1	PAH-FN-42A	PAB Auxiliary Supply Fan "A"	MAH-20495	A	310765	PAB-F-2C-Z	X	X	X	-	M61	PAH-BF6-52	460 V ac Circuit Breaker	BF6	CB-F-1A-A	BF6-M61 BF6-ED1 BF6-UG5 BF6-UG7 UG5-UG7 BF6-UG5/1 BF6-F36 BF6-F36/1 BF6-TY3	310930 BF6a	BF6c BF6d	CBA-FN-19 CBA-FN-20 EDE-MCC-512	PAH-FN-42B	
												PAH-CS-5391-2	Control Switch	BF6	CB-F-1A-A						
												PAH-ZL-5391-4	Fan Indicating Lights	BF6	CB-F-1A-A						
												PAH-SS-5391	Selector Switch	BF6	CB-F-1A-A						
												PAH-ED1-R1	Damper Auxiliary Relay	ED1	CB-F-1A-A						
												PAH-ZS-DP-43A-1A PAH-ZS-DP-43A-1B PAH-ZS-DP-43A-2A	Damper Position Switches	UG5	PAB-F-1K-Z						
												PAH-ZS-DP-357-1 PAH-ZS-DP-357-2	Damper Position Switches	UG7	PAB-F-2C-Z						
												PAH-BF6-42	Motor Starter	BF6	CB-F-1A-A						
												PAH-BF6-49	Overload Relays	BF6	CB-F-1A-A						
												PAH-DP-43A-20	Pilot Solenoid	UG5	PAB-F-1K-Z						
												PAH-DP-357-20	Pilot Solenoid	UG7	PAB-F-2C-Z						
												PAH-ZL-5391-5	Damper DP-43A Position Lights	BF6	CB-F-1A-A						
												PAH-ZL-5391-6	Damper DP-357 Position Lights	BF6	CB-F-1A-A						
												PAH-BF6-FU	Fuse	BF6	CB-F-1A-A						
												PAH-CS-5391-1	Control Switch	F36	CB-F-3A-A						
												PAH-ZL-5391-1	Fan Indicating Lights	F36	CB-F-3A-A						
												PAH-TSH-5391	Temperature Switch High	TY3	PAB-F-2C-Z						
												PAH-ZL-5391-2	Damper DP-43A Position Lights	F36	CB-F-3A-A						
												PAH-ZL-5391-3	Damper DP-357 Position Lights	F36	CB-F-3A-A						
2	PAH-DP-43A	PAB Auxiliary Fan Supply Damper	MAH-20495	A	310765	PAB-F-1K-Z	X	X	X	X	UG5	PAH-ED1-R1	Damper Auxiliary Relay	ED1	CB-F-1A-A	BF6-ED1 BF6-UG5	310930 BF6a	BF6c BF6d	CBA-FN-19 CBA-FN-20	PAH-DP-43B	Note 1
												PAH-DP-43A-20	Pilot Solenoid	UG5	PAB-F-1K-Z	BF6-UG7 UG5-UG7 BF6-UG5/1					
3	PAH-DP-357	PAB Auxiliary Fan Exhaust Damper	MAH-20495	A	310766	PAB-F-2C-Z	X	X	X	X	UG7	PAH-ED1-R1	Damper Auxiliary Relay	ED1	CB-F-1A-A	BF6-ED1 BF6-UG5	310930 BF6a	BF6c	CBA-FN-19 CBA-FN-20	PAH-DP-358	Note 1
												PAH-DP-357-20	Pilot Solenoid	UG7	PAB-F-2C-Z	BF6-UG7 UG5-UG7					

Notes:

1. Air and electrical power are not required for support as damper fails open.
2. See Table RSS 3.1.3.12 for operation of dampers PAH-DP-35A, -35B, -36A & -36B.

FUNCTION: PRIMARY AUXILIARY BUILDING AIR HANDLING

ITEM NO.	EQUIPMENT ID NO.	EQUIPMENT DESCRIPTION	P&ID/1-LINE DRAWING NO.	TRAIN	PHYSICAL LOCATION DRAWING NO.	FIRE AREA/ZONE	REQUIRED FOR		POWER		ELEC NODE	SUPPORTING CONTROL AND INSTRUMENTATION EQUIPMENT				CABLES	ELECTRICAL DRAWING NO.		SUPPORTING SYSTEMS	REDUNDANT COUNTERPART	REMARKS
							HOT STAND BY	COLD SHUT DOWN	ELEC	AIR		EQUIPMENT ID NO.	EQUIPMENT DESCRIPTION	ELEC NODE	FIRE AREA/ZONE		SCHEM.	CABLE			
4	PAH-FN-42B	PAB Auxiliary Supply Fan "B"	MAH-20495	B	310765	PAB-F-2C-Z	X	X	X	-	M62	PAH-BF7-52	460 V ac Circuit Breaker	BF7	CB-F-1B-A	BF7-M62 BF7-UG6 BF7-UG8 UG6-UG8 BF7-E3D/1 BF7-F37 BF7-F37/1 BF7-TY4	310930 BF7a	BF7c	CBA-FN-32 CBA-FN-33 EDE-MCC-612	PAH-FN-42A	
												PAH-CS-5393-2	Control Switch	BF7	CB-F-1B-A						
												PAH-ZL-5393-4	Fan Indicating Lights	BF7	CB-F-1B-A						
												PAH-SS-5393	Selector Switch	BF7	CB-F-1B-A						
												PAH-EDO-R1	Damper Auxiliary Relay	EDO	CB-F-1B-A						
												PAH-ZS-DP-43B-1A PAH-ZS-DP-43B-1B PAH-ZS-DP-43B-2A	Damper Position Switches	UG6	PAB-F-1K-Z						
												PAH-ZS-DP-358	Damper Position Switch	UG8	PAB-F-2C-Z						
												PAH-ZL-5393-5	Damper DP-43B Position Lights	BF7	CB-F-1B-A						
												PAH-DP-43B-20	Pilot Solenoid	UG6	PAB-F-1K-Z						
												PAH-E3D-R2	Auxiliary Relay	E3D	CB-F-1B-A						
												PAH-ZL-5393-2	Damper DP-43B Position Lights	F37	CB-F-3A-A						
												PAH-ZL-5393-3	Damper DP-358 Position Lights	F37	CB-F-3A-A						
												PAH-DP-35B-20	Pilot Solenoid	UG8	PAB-F-2C-Z						
												PAH-BF7-42	Motor Starter	BF7	CB-F-1B-A						
												PAH-BF7-49	Overload Relays	BF7	CB-F-1B-A						
												PAH-BF7-FU	Fuses	BF7	CB-F-1B-A						
												PAH-ZL-5393-6	Damper DP-358 Position Lights	BF7	CB-F-1B-A						
												PAH-CS-5393-1	Control Switch	F37	CB-F-3A-A						
												PAH-ZL-5393-1	Fan indicating Lights	F37	CB-F-3A-A						
												PAH-TSH-5393	Temperature Switch High	TY4	PAB-F-2C-Z						
5	PAH-DP-43B	PAB Auxiliary Fan Supply Damper	MAH-20495	B	310765	PAB-F-1K-Z	X	X	X	X	UG6	PAH-EDO-R1	Damper Auxiliary Relay	EDO	CB-F-1B-A	BF7-UG6 BF7-UG8	310930 BF7a	BF7c	CBA-FN-32 CBA-FN-33	PAH-DP-43A	Note 1
												PAH-DP-43B-20	Pilot Solenoid	UG6	PAB-F-1K-Z	UG6-UG8					
6	PAH-DP-358	PAB Auxiliary Fan Exhaust Damper	MAH-20495	B	310766	PAB-F-2C-Z	X	X	X	X	UG8	PAH-EDO-R1	Damper Auxiliary Relay	EDO	CB-F-1B-A	BF7-UG6 BF7-UG8	310930 BF7a	BF7c	CBA-FN-32 CBA-FN-33	PAH-DP-357	Note 1
												PAH-DP-358-20	Pilot Solenoid	UG8	PAB-F-2C-Z	UG6-UG8					
7	PAH-DP-35A	-	-	-	-	-	-	-	-	-	-	-	-	-	-	-	-		-	-	Note 2
8	PAH-DP-36A	-	-	-	-	-	-	-	-	-	-	-	-	-	-	-	-		-	-	Note 2
9	PAH-DP-35B	-	-	-	-	-	-	-	-	-	-	-	-	-	-	-	-		-	-	Note 2
10	PAH-DP-36B	-	-	-	-	-	-	-	-	-	-	-	-	-	-	-	-		-	-	Note 2

FUNCTION: SERVICE WATER AIR HANDLING

ITEM NO.	EQUIPMENT ID NO.	EQUIPMENT DESCRIPTION	P&ID/1-LINE DRAWING NO.	TRAIN	PHYSICAL LOCATION DRAWING NO.	FIRE AREA/ZONE	REQUIRED FOR		POWER		ELEC NODE	SUPPORTING CONTROL AND INSTRUMENTATION EQUIPMENT				CABLES	ELECTRICAL DRAWING NO.		SUPPORTING SYSTEMS	REDUNDANT COUNTERPART	REMARKS
							HOT STAND BY	COLD SHUT DOWN	ELEC	AIR		EQUIPMENT ID NO.	EQUIPMENT DESCRIPTION	ELEC NODE	FIRE AREA/ZONE		SCHEM.	CABLE			
1	SWA-FN-40A	Service Water Pumphouse Train "A" Switchgear Room Supply Fan	SWA-20372	A	301139	SW-F-ID-A	X	X	X	-	NJO	SWA-CR5-52	460 V ac Circuit Breaker	CR5	SW-F-1B-A	CR5-NJO CR5-G2H/1 CR5-G2H F36-G2H/2 CR5-TV7 CR5-TW9	301115 CR5a	CR5c	EDE-MCC-514	SWA-FN-40B	
												SWA-CR5-42	Motor Starter	CR5	SW-F-1B-A						
												SWA-CR5-49	Overload Relays	CR5	SW-F-1B-A						
												SWA-CS-5614-2	Control Switch with Indication	G2H	CB-F-1A-A						
												SWA-SS-5614	Selector Switch	G2H	CB-F-1A-A						
												SWA-CR5-FU	Fuse	CR5	SW-F-1B-A						
												SWA-CS-5614-1	Control Switch with Indication	F36	CB-F-3A-A						
												SWA-TSH-5614-1	Temperature Switch	TV7	SW-F-1B-A						
												SWA-TSH-5614-2	Temperature Switch	TW9	SW-F-1C-A						
2	SWA-FN-40B	Service Water Pumphouse Train "B" Switchgear Room Supply Fan	SWA-20372	B	301139	SW-F-ID-A	X	X	X	-	NK1	SWA-CRO-52	460 V ac Circuit Breaker	CRO	SW-F-1C-A	CRO-NK1 CRO-G2K/1 CRO-G2K F37-G2K/2 F37-G2K/C CRO-TV8 CRO-TWO CRO-G2K/2	CROa	CROc	EDE-MCC-614	SWA-FN-40A SWA-FN-64 SWA-FN-71	
												SWA-CRO-42	Motor Starter	CRO	SW-F-1C-A						
												SWA-CRO-49	Overload Relays	CRO	SW-F-1C-A						
												SWA-CS-5615-2	Control Switch with Indication	G2K	CB-F-1B-A						
												SWA-SS-5615	Selector Switch	G2K	CB-F-1B-A						
												SWA-CRO-FU	Fuses	CRO	SW-F-1C-A						
												SWA-CS-5615-1	Control Switch with Indication	F37	CB-F-3A-A						
												SWA-TSH-5615-1	Temperature Switch	TV8	SW-F-1C-A						
												SWA-TSH-5615-2	Temperature Switch	TWO	SW-F-1B-C						
3	SWA-FN-64	Service Water Cooling Tower Switchgear Room Supply Fan	SWA-20372	A	301717	CT-F-2B-A	X	X	X	-	NW1	SWA-CQO-52	460 V ac Circuit Breaker	CQO	CT-F-1D-A	CQO-NW1 CQO-NW1/2 CQO-NW1/3 CQO-F36 ED6-T5V ED6-F36/1	9763-M-301115 CQOa	CQOc CQOd	EDE-MCC-513	SWA-FN-40B	
												SWA-CQO-42	Motor Starter	CQO	CT-F-1D-A						
												SWA-CQO-49	Overload Relay	CQO	CT-F-1D-A						
												SWA-CS-5669	Control Switch	F36	CB-F-3A-A						
												SWA-ZL-5669	Indicating Light	F36	CB-F-3A-A						
												SWA-CQO-FU	Fuse	CQO	CT-F-1D-A						
												SWA-TSH-5669	Temperature Switch	T5V	CT-F-1D-A						
												SWA-FY-5669-1	Solenoid Valve	NW1	CT-F-2B-A						
												SWA-FY-5669-2	Solenoid Valve	NW1	CT-F-2B-A						
												SWA-DP-66	Position Switch	NW1	CT-F-2B-A						
												SWA-ED6-R1	Auxiliary Relay	ED6	CT-F-1D-A						

FUNCTION: SERVICE WATER AIR HANDLING

ITEM NO.	EQUIPMENT ID NO.	EQUIPMENT DESCRIPTION	P&ID/1-LINE DRAWING NO.	TRAIN	PHYSICAL LOCATION DRAWING NO.	FIRE AREA/ZONE	REQUIRED FOR		POWER		ELEC NODE	SUPPORTING CONTROL AND INSTRUMENTATION EQUIPMENT				CABLES	ELECTRICAL DRAWING NO.		SUPPORTING SYSTEMS	REDUNDANT COUNTERPART	REMARKS
							HOT STAND BY	COLD SHUT DOWN	ELEC	AIR		EQUIPMENT ID NO.	EQUIPMENT DESCRIPTION	ELEC NODE	FIRE AREA/ZONE		SCHEM.	CABLE			
4	SWA-DP-66	Service Water Cooling Tower Switchgear Room Supply Damper	SWA-20372	A	301717	CT-F-2B-A	X	X	X	-	NW1	SWA-CQO-52	460 V ac Circuit Breaker	CQO	CT-F-1D-A	CQO-NW1 CQO-NW1/2 CQO-NW1/3 CQO-F36 ED6-T5V ED6-F36/1	CQOa	CQOc CQOd	EDE-MCC-513 Instrument Air	SWA-FN-40B	
												SWA-CQO-42	Motor Starter	CQO	CT-F-1D-A						
												SWA-CQO-49	Overload Relay	CQO	CT-F-1D-A						
												SWA-CS-5669	Control Switch	F36	CB-F-3A-A						
												SWA-ZL-5669	Indicating Lights	F36	CB-F-3A-A						
												SWA-CQO-FU	Fuse	CQO	CT-F-1D-A						
												SWA-TSH-5669	Temperature Switch	T5V	CT-F-1D-A						
												SWA-FY-5669-1	Solenoid Valve	NW1	CT-F-2B-A						
												SWA-FY-5669-2	Solenoid Valve	NW1	CT-F-2B-A						
												SWA-DP-66	Position Switch	NW1	CT-F-2B-A						
												SWA-ED6-R1	Auxiliary Relay	ED6	CT-F-1D-A						
5	SWA-FN-71	Service Water Tower Roof Exhaust Fan	SWA-20372	A	301717	CT-F-2B-A	X	X	X	-	NW2	SWA-CR1-52	460 V ac Circuit Breaker	CR1	CT-F-1D-A	CR1-NW2 CR1-F36 CR1-T5T	CR1a	CR1c	EDE-MCC-513	SWA-FN-40B	
												SWA-CR1-42	Motor Starter	CR1	CT-F-1D-A						
												SWA-CR1-49	Overload Relay	CR1	CT-F-1D-A						
												SWA-CS-5667	Control Switch with Indication	F36	CB-F-3A-A						
												SWA-TSH-5667	Temperature Switch	T5T	CT-F-2B-A						
												SWA-CR1-FU	Fuse	CR1	CT-F-1D-A						

FUNCTION: SERVICE/INSTRUMENT AIR

ITEM NO.	EQUIPMENT ID NO.	EQUIPMENT DESCRIPTION	P&ID/1-LINE DRAWING NO.	TRAIN	PHYSICAL LOCATION DRAWING NO.	FIRE AREA/ZONE	REQUIRED FOR		POWER		ELEC NODE	SUPPORTING CONTROL AND INSTRUMENTATION EQUIPMENT				CABLES	ELECTRICAL DRAWING NO.		SUPPORTING SYSTEMS	REDUNDANT COUNTERPART	REMARKS
							HOT STAND BY	COLD SHUT DOWN	ELEC	AIR		EQUIPMENT ID NO.	EQUIPMENT DESCRIPTION	ELEC NODE	FIRE AREA/ZONE		SCHEM.	CABLE			
1	SA-SKD-137A	Service Air Compressor 16A	SA-20650	A	310328	TB-F-1A-Z	X	X	X	-	NN2	SA-AA2-52	460 V AC Circuit Breaker	AA2	CB-F-1A-A	AA2-ED4 AA2-HR2 AA2-NH2	310863 AA2a AA2b AA2c	AA2d AA2e	U5-52 CBA-FN-19 CBA-FN-20	SA-SKD-137b	
												SA-AA2-FU	Fuses	AA2	CB-F-1A-A						
												SA-CS-8501-A	Control Switch with Indication	AC3	CB-F-1A-A						
												SA-AA2-52H-1	Truck Operated Switch	AA2	CB-F-1A-A						
												DG-HR2-HR9X-RMO	EPS Relay	HR2	CB-F-1A-A						
												EDE-ED4-94-5	Undervoltage Relay	ED4	CB-F-1A-A						
2	SA-TK-23A	Service Air Tank Receiver	SA-20650	A	310328	TB-F-1A-Z	X	X	-	-	-	-	-	-	-	-	-	-	-	-	
3	SA-V-92	Service Air Isolation Valve	SA-20650	A	310328	TB-F-1A-Z	X	X	X	X	UM9	SA-E46/8-52	120 V AC Circuit Breaker	E46	TB-F-2-Z	ED8-F71 ED8-GZ9/1 ED8-UM9 ED8-UMO UM9-UMO GZ9-UM9/ GZ9-UMO	E46/8a	E46/8c E46/8d	-	-	Note [1]
												SA-CS-8540	Control Switch with Indication	F71	CB-F-3A-A						
												SA-PSL-8540	Pressure Switch	GZ9	TB-F-1A-Z						
												SA-PIS-8509	Pressure Indication Switch	GZ9	TB-F-1A-Z						
												SA-UM9-20-1	Solenoid Valve	UM9	TB-F-1A-Z						
												SA-ED8-3	Interlocking Relay	ED8	TB-F-1A-Z						
												SA-ZS-V92	Position Switch	UM9	TB-F-1A-Z						
												SA-PSL-8545	Pressure Switch	GZ9	TB-F-1A-Z						
4	SA-SKD-137B	Service Air Compressor 16B	SA-20650	B	310328	TB-F-1A-Z	X	X	X	-	NT4	SA-AT2-52	460 V AC Circuit Breaker	AT2	CB-F-1B-A	AT2-HR4 AT2-NT4	310863 AT2a AT2b AT2c	AT2d AT2e	CBA-FN-32 CBA-FN-33 US-63	SA-SKD-137A	
												SA-AT2-FU	Fuses	AT2	CB-F-1B-A						
												SA-CS-8501-B	Control Switch with Indication	AF8	CB-F-1B-A						
												SA-AT2-52H-1	Truck Operated Switch	AT2	CB-F-1B-A						
												DG-HR4-HR9X-RMO	EPS Relay	HR4	CB-F-1B-A						
												EDE-EF8-94-3	Undervoltage Relay	AF8	CB-F-1B-A						
5	SA-TK-23B	Service Air Tank Receiver	SA-20650	B	310328	TB-F-1A-Z	X	X	-	-	-	-	-	-	-	-	-	-	-	-	

Notes:
1. Air and electrical power are not required for support as valve fails closed.
2. Fail open mechanical valve.
3. Manual valve.
4. Electrical operation of valve not credited so cables are not listed.

FUNCTION: SERVICE/INSTRUMENT AIR

ITEM NO.	EQUIPMENT ID NO.	EQUIPMENT DESCRIPTION	P&ID/1-LINE DRAWING NO.	TRAIN	PHYSICAL LOCATION DRAWING NO.	FIRE AREA/ZONE	REQUIRED FOR		POWER		ELEC NODE	SUPPORTING CONTROL AND INSTRUMENTATION EQUIPMENT				CABLES	ELECTRICAL DRAWING NO.		SUPPORTING SYSTEMS	REDUNDANT COUNTERPART	REMARKS
							HOT STAND BY	COLD SHUT DOWN	ELEC	AIR		EQUIPMENT ID NO.	EQUIPMENT DESCRIPTION	ELEC NODE	FIRE AREA/ZONE		SCHEM.	CABLE			
6	SA-V-93	Service Air Isolation Valve	SA-20650	A	310328	TB-F-1A-Z	X	X	X	X	UMO	SA-E46/8-52	120 V AC Circuit Breaker	E46	TB-F-2-Z	ED8-F71 ED8-GZ9/1 ED8-UM9 ED8-UMO UM9-UMO GZ9-UMO GZ9-UM9	E46/8a	E46/8c E46/8d	-	-	Notes 1 and 2
												SA-CS-8540	Control Switch with Indication	F71	CB-F-3A-A						
												SA-PSL-8540	Pressure Switch	G29	TB-F-1A-Z						
												SA-PIS-8509	Pressure Indication Switch	G29	TB-F-1A-Z						
												SA-UMO-20-2	Solenoid Valve	UMO	TB-F-1A-Z						
												SA-ED8-3	Interlocking Relay	ED8	TB-F-1A-Z						
												SA-ZS-V93	Position Switch	UMO	TB-F-1A-Z						
												SA-PSL-8545	Pressure Switch	GZ9	TB-F-1A-Z						
7	IA-SKD-18A	Instrument Air Dryer (Skid 18A)	IA-20637	A	310328	TB-F-1A-Z	X	X	X	-	HF1	IA-C68-52	460 V AC Circuit Breaker	C68	TB-F-2-Z	C68-HF1/1	310864 C68a	C68b		IA-SKD-18B	
8	IA-SKD-18B	Instrument Air Dryer (Skid 18B)	IA-20637	B	310328	TB-F-1A-Z	X	X	X	-	HF2	IA-C74-52	460 V AC Circuit Breaker	C74	CB-F-1B-A	C74-HF2/1	310864 C74a	C74b	CBA-FN-32 CBA-FN-33 EDE-MCC-631	IA-SKD-18A	
9	SA-C-4A	Containment Air Compressor 4A (Skid 16A) with Control Panel	IA-20643	A	310578	C-F-2-Z	-	X	X	-	M38	SA-D93-52-1,2	460 V AC Circuit Breaker	D93	CB-F-1A-A	D93-F71 D93-F71/1 D93-HR2 D93-H19 D93-H36/1 D93-H36/2 G44-H36 G44-H36/1 H19-M38	310863 D93a	D93c D93d	EDE-MCC-531 Primary Component Cooling Water CAH-FN-1C CAH-FN-1E CAH-FN-1F CAH-FN-19 CAH-FN-20	SA-C-4B	
												SA-D93-FU	Fuse	D93	CB-F-1A-A						
												SA-CS-8531	Control Switch with Indication	F71	CB-F-3A-A						
												SA-HR2-HR9	EPS Permit Auxiliary Relay	HR2	CB-F-1A-A						
												SA-D93-42	Motor Starter	D93	CB-F-1A-A						
												SA-D93-49	Overload Relays	D93	CB-F-1A-A						
												SA-CS-4A-T	Control Switch Load-Unload	G44	C-F-2-Z						
												SA-CS-4A-PB	Reset Push Button	G44	C-F-2-Z						
												SA-PS-4A-1	Pressure Switch Lube Oil	G44	C-F-2-Z						
												SA-PS-4A-2	Pressure Switch Air Header	G44	C-F-2-Z						
												SA-TS-4A-1	Temperature Switch Compressor Outlet Air	G44	C-F-2-Z						
												SA-G44-R	Compressor Shutdown Relay	G44	C-F-2-Z						
												SA-SV-4A	Loading Solenoid	G44	C-F-2-Z						
												SA-G44-TR1	Compressor Loading Time Delay Relay	G44	C-F-2-Z						
												SA-G44-TR2	Compressor Auto Stop Time Delay Relay	G44	C-F-2-Z						
												SA-G44-TR3	Compressor Auto Restart Time Delay Relay	G44	C-F-2-Z						
												EDE-MM-95	Electrical Penetration	H19	C-F-2-Z, ET-F-1A-A						
												EDE-MM-112	Electrical Penetration	H36	C-F-2-Z, ET-F-1A-A						

FUNCTION: SERVICE/INSTRUMENT AIR

ITEM NO.	EQUIPMENT ID NO.	EQUIPMENT DESCRIPTION	P&ID/1-LINE DRAWING NO.	TRAIN	PHYSICAL LOCATION DRAWING NO.	FIRE AREA/ZONE	REQUIRED FOR		POWER		ELEC NODE	SUPPORTING CONTROL AND INSTRUMENTATION EQUIPMENT				CABLES	ELECTRICAL DRAWING NO.		SUPPORTING SYSTEMS	REDUNDANT COUNTERPART	REMARKS
							HOT STAND BY	COLD SHUT DOWN	ELEC	AIR		EQUIPMENT ID NO.	EQUIPMENT DESCRIPTION	ELEC NODE	FIRE AREA/ZONE		SCHEM.	CABLE			
10	SC-C-4B	Containment Air Compressor 4B (Skid 16B) with Control Panel	IA-20643	B	310578	C-F-2-Z	-	X	X	-	M39	SA-D95-52-1,2	460 V AC Circuit Breaker	D95	CB-F-1B-A	D95-F71 D95-F71/1 D95-HR4 D95-H24 D95-H39/1 D95-H39/2 G45-H39 G45-H39/1 H24-M39	310863 D95a	D95c D95d	EDE-MCC-631 Primary Component Cooling Water CAH-FN-1A CAH-FN-1B CAH-FN-1D CBA-FN-32 CBA-FN-33	SA-C-4A	
												SA-D95-FU	Fuse	D95	CB-F-1B-A						
												SA-CS-8541	Control Switch with Indication	F71	CB-F-3A-A						
												SA-HR4-HR9	EPS Permit Auxiliary Relay	HR4	CB-F-1B-A						
												SA-D95-42	Motor Starter	D95	CB-F-1B-A						
												SA-D95-49	Overload Relays	D95	CB-F-1B-A						
												SA-CS-4B-T	Control Switch Load-Unload	G45	C-F-2-Z						
												SA-CS-4B-PB	Reset Push Button	G45	C-F-2-Z						
												SA-PS-4B-1	Pressure Switch Lube Oil	G45	C-F-2-Z						
												SA-PS-4B-2	Pressure Switch Air Header	G45	C-F-2-Z						
												SA-TS-4B-1	Temperature Switch Compressor Outlet Air	G45	C-F-2-Z						
												SA-G45-R	Compressor Shutdown Relay	G45	C-F-2-Z						
												SA-SV-4B	Loading Solenoid	G45	C-F-2-Z						
												SA-G45-TR1	Compressor Loading Time Delay Relay	G45	C-F-2-Z						
												SA-G45-TR2	Compressor Auto Stop Time Delay Relay	G45	C-F-2-Z						
												SA-G45-TR3	Compressor Auto Restart Time Delay Relay	G45	C-F-2-Z						
												EDE-MM-100	Electrical Penetration	H24	C-F-1-Z, ET-F-1C-A						
												EDE-MM-115	Electrical Penetration	H39	C-F-1-Z, ET-F-1C-A						
11	IA-D-2A	Containment Instrument Air Dryer 2A	IA-20643	A	310578	C-F-2-Z	X	X	X	-	HF3	IA-E9L/3-52	120 V AC Circuit Breaker	E9L	ET-F-1A-A	EM9-J97 HF3-J97 E4E-E9L/2 E4E-H19/2 H19-J97	310864 E9L/3a	E9L/3b	ED-PP-8J CAH-FN-1C CAH-FN-1E CAH-FN-1F	IA-D-2B	
												EDE-MM-582	Fuse Panel	E4E	ET-F-1A-A						
												EDE-MM-95	Penetration	H19	C-F-2-Z, ET-F-1C-A						
12	IA-D-2B	Containment Instrument Air Dryer 2B	IA-20643	B	310578	C-F-2-Z	X	X	X	-	HF4	IA-EMO/1-52	120 V AC Circuit Breaker	EMO	C-F-1-Z	EMO-J98 HF4-J98	EMO/1a	EMO/1b	ED-PP-8B CAH-FN-1A CAH-FN-1B CAH-FN-1D	IA-D-2A	
13	IA-V50	Instrument Air Dryers Outlet Cross Connect Isolation	IA-20637	-	202206	TB-F-1A-Z	-	X	-	-	-	-	-	-	-	-	-		-	-	Note 3
14	IA-V530	Instrument Air to Containment Isolation ORC	IA-20645	A	310589	MS-F-1B-Z	-	X	-	X	-	-	-	-	-	-	-		-	-	Note 4

FUNCTION: ELECTRICAL DISTRIBUTION EMERGENCY

ITEM NO.	EQUIPMENT ID NO.	EQUIPMENT DESCRIPTION	P&ID/1-LINE DRAWING NO.	TRAIN	PHYSICAL LOCATION DRAWING NO.	FIRE AREA/ZONE	REQUIRED FOR		POWER		ELEC NODE	SUPPORTING CONTROL AND INSTRUMENTATION EQUIPMENT				CABLES	ELECTRICAL DRAWING NO.		SUPPORTING SYSTEMS	REDUNDANT COUNTERPART	REMARKS
							HOT STAND BY	COLD SHUT DOWN	ELEC	AIR		EQUIPMENT ID NO.	EQUIPMENT DESCRIPTION	ELEC NODE	FIRE AREA/ZONE		SCHEM.	CABLE			
1	EDE-SWG-5	4160 V Bus E5 UAT Incoming Line SWGR	310007	A	310442	CB-F-1A-A	X	X	X	-	A51	EDE-A51-52	4160 V Circuit Breaker	A51	CB-F-1A-A	A51-G07 A51-G07/2 A51-G10 A51-HR9 GA6-GB0/4 A51-G07/1 A51-G07/3 A51-GB4 GA0-GB3/4 GC4-GC6/4 A51-G5X A51-G5X/1 G07-HR9 F80-G07/H F80-G07/C F80-G07 G07-HR2 F80-G07/A A55-A5A A54-A5A/1	310102 A51a A51b A51c A51d A51e	A51h	CBA-FN-19 CBA-FN-20 ED-X-2A EDE-PP-111A DAH-FN-25A DAH-FN-26A	EDE-SWG-6 UAT	
												EDE-CS-9709-2	Control Switch	A51	CB-F-1A-A						
												EDE-CS-9709-3	Control Switch with Indication	G07	DG-F-2A-A						
												EDE-A51-G,R,W	Indicating Lights	A51	CB-F-1A-A						
												EDE-SS-9707	Selector Switch	G07	DG-F-2A-A						
												EDE-SS-9709	Selector Switch	G07	DG-F-2A-A						
												EDE-A51-52H	Truck Operated Contact	A51	CB-F-1A-A						
												EDE-A51-FU	Fuses	A51	CB-F-1A-A						
												EDE-A51-CT1	Current Transformer (2000/5)	A51	CB-F-1A-A						
												EDE-A51-TD-1	CT Test Device	A51	CB-F-1A-A						
												EDE-A51-AM	Ammeter	A51	CB-F-1A-A						
												EDE-A51-AS	Ammeter Switch	A51	CB-F-1A-A						
												EDE-A51-ATR	Transducer Current	A51	CB-F-1A-A						
												EDE-A51-CT2	Transformers (4000/5)	A51	CB-F-1A-A						
												EDE-A67-PT	Potential Transformer (4200-120 V)	A67	CB-F-1A-A						
												EDE-A51-TD-3	PT Test Device	A51	CB-F-1A-A						
												EDE-A51-VM	Voltmeter	A51	CB-F-1A-A						
												EDE-A51-86	Lockout Relay	A51	CB-F-1A-A						
												EDE-A54-52S	Mechanically Operated Contact	A54	CB-F-1A-A						
												EDE-A52-52S	Mechanically Operated Contact	A52	CB-F-1A-A						
												DG-G10-25Y1	Auxiliary Synchronizing Check Relay	G10	DG-F-2A-A						
												EDE-A53-25U	Synchronizing Check Relay	A53	CB-F-1A-A						
												EDE-SS-9709-1	Selector Switch	G5X	DG-F-2A-A						
												EDE-CS-9707-3	Control Switch	G07	DG-F-2A-A						
												EDE-SNS-9736-2	Synchronizing Switch	G06	DG-F-2A-A						
												EDE-A52-86	Lockout Relay	A52	CB-F-1A-A						
												EDE-A69-86B	Lockout Relay	A69	CB-F-1A-A						
												ED-86SB/2/1X-1	Lockout Relay	GA0	TB-F-1C-Z						
												ED-86-2/2/B3	Lockout Relay	GA6	TB-F-1C-Z						
												ED-86UB/2/1X-2A	Lockout Relay	GA8	TB-F-1C-Z						
												ED-86UB/2/1X-2B	Lockout Relay	GA8	TB-F-1C-Z						
												ED-86BF/2/2/52/TG1	Lockout Relay	GA9	TB-F-1C-Z						
												ED-86GT/2/TG1	Lockout Relay	GA9	TB-F-1C-Z						
												ED-86-1/2/B3	Lockout Relay	GB0	TB-F-1C-Z						
												ED-86BF-2/2H	Lockout Relay	GB3	TB-F-1C-Z						

FUNCTION: ELECTRICAL DISTRIBUTION EMERGENCY

ITEM NO.	EQUIPMENT ID NO.	EQUIPMENT DESCRIPTION	P&ID/1-LINE DRAWING NO.	TRAIN	PHYSICAL LOCATION DRAWING NO.	FIRE AREA/ZONE	REQUIRED FOR		POWER		ELEC NODE	SUPPORTING CONTROL AND INSTRUMENTATION EQUIPMENT				CABLES	ELECTRICAL DRAWING NO.		SUPPORTING SYSTEMS	REDUNDANT COUNTERPART	REMARKS
							HOT STAND BY	COLD SHUT DOWN	ELEC	AIR		EQUIPMENT ID NO.	EQUIPMENT DESCRIPTION	ELEC NODE	FIRE AREA/ZONE		SCHEM.	CABLE			
1	EDE-SWG-5 (Continued)											ED-86BF-2/2E	Lockout Relay	GB4	TB-F-1C-Z						
												ED-86UP/2/1X-2A	Lockout Relay	GC2	TB-F-1C-Z						
												ED-86UP/2/1X-2B	Lockout Relay	GC2	TB-F-1C-Z						
												ED-86BF-1/2/52/TG1	Lockout Relay	GC3	TB-F-1C-Z						
												ED-86SP/2/1X-1	Lockout Relay	GC4	TB-F-1C-Z						
												ED-86BF-1/2H	Lockout Relay	GC6	TB-F-1C-Z						
												ED-86BF-1/2E	Lockout Relay	GC7	TB-F-1C-Z						
												DG-HR9-RMO	EPS Auxiliary Relay	HR9	CB-F-1A-A						
												EDE-A51-3	Interposing Relay for SWYD Lockout Relays	A51	CB-F-1A-A						
												EDE-A51-TD-2	Lockout Relay Test Device (A51-86)	A51	CB-F-1A-A						
												EDE-A51-TD-4	Interposing Relay Test Device (A51-3)	A51	CB-F-1A-A						
												EDE-CS-9707-4	Control Switch	F80	CB-F-3A-A						
												ED-GA0-TD-2	Lockout Relay Test Device (86SB/2/1X-1)	GA0	TB-F-1C-Z						
												ED-GA6-TD-2	Lockout Relay Test Device (86-2/2/B3)	GA6	TB-F-1C-Z						
												ED-GA8-TD-2	Lockout Relay Test Device (86UB/2/1X-2A)	GA8	TB-F-1C-Z						
												ED-GA8-TD-2	Lockout Relay Test Device (86UB/2/1X-2B)	GA8	TB-F-1C-Z						
												ED-GA9-TD-2	Lockout Relay Test Device (86BF-2/2/52/TG1)	GA9	TB-F-1C-Z						
												ED-GA9-TD-2	Lockout Relay Test Device (86GT/2/TG1)	GA9	TB-F-1C-Z						
												ED-GB0-TD-2	Lockout Relay Test Device (86-1/2/B3)	GB0	TB-F-1C-Z						
												ED-GB3-TD-2	Lockout Relay Test Device (86BF-2/2H)	GB3	TB-F-1C-Z						
												ED-GB4-TD-2	Lockout Relay Test Device (86BF-2/2E)	GB4	TB-F-1C-Z						
												ED-GC2-TD-2	Lockout Relay Test Device (86UP/2/1X-2A)	GC2	TB-F-1C-Z						
												ED-GC2-TD-2	Lockout Relay Test Device (86UP/2/1X-2B)	GC2	TB-F-1C-Z						
												ED-GC3-TD-2	Lockout Relay Test Device (86BF-1/2/52/TG1)	GC3	TB-F-1C-Z						
												ED-GC4-TD-2	Lockout Relay Test Device (86SP/2/1X-1)	GC4	TB-F-1C-Z						
												ED-GC6-TD-2	Lockout Relay Test Device (86BF-1/2H)	GC6	TB-F-1C-Z						
												ED-GC7-TD-2	Lockout Relay Test Device (86BF-1/2E)	GC7	TB-F-1C-Z						
												EDE-A51-51	Time Overcurrent Relays øA, øB, øC	A51	CB-F-1A-A						

FUNCTION: ELECTRICAL DISTRIBUTION EMERGENCY

ITEM NO.	EQUIPMENT ID NO.	EQUIPMENT DESCRIPTION	P&ID/1-LINE DRAWING NO.	TRAIN	PHYSICAL LOCATION DRAWING NO.	FIRE AREA/ZONE	REQUIRED FOR		POWER		ELEC NODE	SUPPORTING CONTROL AND INSTRUMENTATION EQUIPMENT				CABLES	ELECTRICAL DRAWING NO.		SUPPORTING SYSTEMS	REDUNDANT COUNTERPART	REMARKS
							HOT STAND BY	COLD SHUT DOWN	ELEC	AIR		EQUIPMENT ID NO.	EQUIPMENT DESCRIPTION	ELEC NODE	FIRE AREA/ZONE		SCHEM.	CABLE			
1	EDE-SWG-5 (Continued)											EDE-A51-51GS	Ground Sensor Relay	A51	CB-F-1A-A						
												EDE-SNS-9736-1	Synchronizing Switch	F80	CB-F-3A-A						
												EDE-CS-9709-1	Control Switch with Indicating Light	F80	CB-F-3A-A						
												DG-HR2-RM0	EPS Auxiliary Relay	HR2	CB-F-1A-A						
												EDE-CS-9707-1	Control Switch	F80	CB-F-3A-A						
												EDE-A5A-52S	Mechanically Operated Contact	A5A	CB-F-1A-A						
2	EDE-SWG-5	Grounding Transformer	310007	A	310442	CB-F-1A-A	X	X	X	-	A67	EDE-A67-XFMR	3-1ø 15 KVA Transformers	A67	CB-F-1A-A		310102 A67a		CBA-FN-19 CBA-FN-20 EDE-SWG-5	EDE-SWG-6 GRD XFMR	
												EDE-A67-FU	3-10A Fuses	A67	CB-F-1A-A						
												EDE-A67-52	120 V AC Circuit Breaker	A67	CB-F-1A-A						
												EDE-A67-RES	Grounding Resistor	A67	CB-F-1A-A						
												EDE-A67-64	Grounding Relay	A67	CB-F-1A-A						
												EDE-A67-TD-3	VM Test Device	A67	CB-F-1A-A						
												EDE-A67-VM	(3) Ground Voltmeters	A67	CB-F-1A-A						

FUNCTION: ELECTRICAL DISTRIBUTION EMERGENCY

ITEM NO.	EQUIPMENT ID NO.	EQUIPMENT DESCRIPTION	P&ID/1-LINE DRAWING NO.	TRAIN	PHYSICAL LOCATION DRAWING NO.	FIRE AREA/ZONE	REQUIRED FOR		POWER		ELEC NODE	SUPPORTING CONTROL AND INSTRUMENTATION EQUIPMENT				CABLES	ELECTRICAL DRAWING NO.		SUPPORTING SYSTEMS	REDUNDANT COUNTERPART	REMARKS
							HOT STAND BY	COLD SHUT DOWN	ELEC	AIR		EQUIPMENT ID NO.	EQUIPMENT DESCRIPTION	ELEC NODE	FIRE AREA/ZONE		SCHEM.	CABLE			
3	EDE-SWG-5	4160 V Bus E5 RAT Incoming Line SWGR	310007	A	310442	CB-F-1A-A	X	X	X	-	A52	EDE-A52-52	4160 V Circuit Breaker	A52	CB-F-1A-A	A52-G07/1 A52-G07/3 A52-G10 A52-HR2 GA7-GB7/4 GE6-GE7/4 A52-G5X A52-G5X/1 A52-G07/2 A52-G07/4 A52-GB7 AG2-HR9 GC1-GC0/4 F80-G07/J A52-F80 F80-G07/D F80-G07/4 A54-A5A/2	310102 A52a A52b A52c A52d A52e	A52j A52k A52l	CBA-FN-19 CBA-FN-20 ED-X-3A EDE-PP-111A DAH-FN-25A DAH-FN-26A	EDE-SWG-6 RAT	
												EDE-CS-9707-2	Control Switch	A52	CB-F-1A-A						
												EDE-CS-9707-3	Control Switch with Indication	G07	DG-F-2A-A						
												EDE-A52-G,R,W	Indicating Lights	A52	CB-F-1A-A						
												EDE-SS-9707	Selector Switch	G07	DG-F-2A-A						
												EDE-SS-9709	Selector Switch	G07	DG-F-2A-A						
												EDE-A52-52H	Truck Operated Contact	A52	CB-F-1A-A						
												EDE-A52-FU	Fuses	A52	CB-F-1A-A						
												EDE-A52-27/59	Under/Over Voltage Relay	A52	CB-F-1A-A						
												EDE-A52-27/59X1,X2	Under/Over Voltage Auxiliary Relay	A52	CB-F-1A-A						
												EDE-A52-52Z	Time Delay Relay	A52	CB-F-1A-A						
												EDE-SS-9707-1	Selector Switch	G5X	DG-F-2A-A						
												EDE-CS-9709-3	Control Switch	G07	DG-F-2A-A						
												EDE-A52-CT-1	Current Transformer (2000/5)	A52	CB-F-1A-A						
												EDE-A52-TD-1	CT Test Device	A52	CB-F-1A-A						
												EDE-A52-AM	Ammeter	A52	CB-F-1A-A						
												EDE-A52-AS	Ammeter Switch	A52	CB-F-1A-A						
												EDE-A52-ATR	Transducer	A52	CB-F-1A-A						
												EDE-A52-CT-2	Current Transformer (4000/5)	A52	CB-F-1A-A						
												EDE-A53-PT	Potential Transformer	A53	CB-F-1A-A						
												EDE-A52-TD-3	PT Test Device	A52	CB-F-1A-A						
												EDE-A52-VM	Voltmeter	A52	CB-F-1A-A						
												EDE-A52-52S	Mechanically Operated Contact	A52	CB-F-1A-A						
												EDE-A69-86B	Lockout Relay	A69	CB-F-1A-A						
												EDE-A52-86	Lockout Relay	A52	CB-F-1A-A						
												EDE-A51-86	Lockout Relay	A51	CB-F-1A-A						
												DG-HR2-RMO	EPS Auxiliary Relay	HR2	CB-F-1A-A						
												DG-HR9-RMO	EPS Auxiliary Relay	HR9	CB-F-1A-A						
												EDE-A51-52S	Mechanically Operated Contact	A51	CB-F-1A-A						
												EDE-A54-52S	Mechanically Operated Contact	A54	CB-F-1A-A						
												EDE-SNS-9736-2	Synchronizing Switch	G06	DG-F-2A-A						

FUNCTION: ELECTRICAL DISTRIBUTION EMERGENCY

ITEM NO.	EQUIPMENT ID NO.	EQUIPMENT DESCRIPTION	P&ID/1-LINE DRAWING NO.	TRAIN	PHYSICAL LOCATION DRAWING NO.	FIRE AREA/ZONE	REQUIRED FOR		POWER		ELEC NODE	SUPPORTING CONTROL AND INSTRUMENTATION EQUIPMENT				CABLES	ELECTRICAL DRAWING NO.		SUPPORTING SYSTEMS	REDUNDANT COUNTERPART	REMARKS
							HOT STAND BY	COLD SHUT DOWN	ELEC	AIR		EQUIPMENT ID NO.	EQUIPMENT DESCRIPTION	ELEC NODE	FIRE AREA/ZONE		SCHEM.	CABLE			
3	EDE-SWG-5 (Continued)											DG-G10-25Y1	Auxiliary Synchronizing Check Relay	G10	DG-F-2A-A						
												EDE-CS-9707-4	Control Switch	F80	CB-F-3A-A						
												EDE-A53-25RX	Auxiliary Synchronizing Check Relay	A53	CB-F-1A-A						
												EDE-A53-25R	Synchronizing Check Relay	A53	CB-F-1A-A						
												EDE-A52-62	Time Delay Relay	A52	CB-F-1A-A						
												EDE-A51-3	Interposing Relay for SWG Lockout Relays	A51	CB-F-1A-A						
												EDE-A52-TD-2	Lockout Relay Test Device (A52-86)	A52	CB-F-1A-A						
												EDE-A52-TD-4	Interposing Relay Test Device (A52-3)	A52	CB-F-1A-A						
												ED-86RB/2/1X-3A	Lockout Relay	GA7	TB-F-1C-Z						
												ED-86-2/2/B2	Lockout Relay	GB7	TB-F-1C-Z						
												ED-86-1/2/B2	Lockout Relay	GC0	TB-F-1C-Z						
												ED-86RP/2/1X-3A	Lockout Relay	GC1	TB-F-1C-Z						
												ED-86RP/2/1X-3B	Lockout Relay	GE6	TB-F-1C-Z						
												ED-86RB/2/1X-3B	Lockout Relay	GE7	TB-F-1C-Z						
												ED-GA7-TD-2	Lockout Relay Test Device (86RB/2/1X-3A)	GA7	TB-F-1C-Z						
												ED-GB7-TD-2	Lockout Relay Test Device (86-2/2/B2)	GB7	TB-F-1C-Z						
												ED-GC0-TD-2	Lockout Relay Test Device (86-1/2/B2)	GC0	TB-F-1C-Z						
												ED-GC1-TD-2	Lockout Relay Test Device (86RP/2/1X-3A)	GC1	TB-F-1C-Z						
												ED-GE6-TD-2	Lockout Relay Test Device (86RP/2/1X-3B)	GE6	TB-F-1C-Z						
												ED-GE7-TD-2	Lockout Relay Test Device (86RP/2/1X-3B)	GE7	TB-F-1C-Z						
												EDE-A52-51	Time Overcurrent Relays øA, øB, øC	A52	CB-F-1A-A						
												EDE-A52-51GS	Ground Sensor Relay	A52	CB-F-1A-A						
												EDE-SNS-9736-1	Synchronizing Switch	F80	CB-F-3A-A						
												EDE-CS-9707-1	Control Switch with Indication Light	F80	CB-F-3A-A						
												EDE-A53-62BX	Auxiliary Latch Relay	A53	CB-F-1A-A						
												EDE-A52-27RB-1	Residual Undervoltage Relay	A52	CB-F-1A-A						
												EDE-A52-27RB-2	Residual Undervoltage Relay	A52	CB-F-1A-A						
												EDE-CS-9709-1	Control Switch	F80	CB-F-3A-A						
												EDE-A52-62X	Auxiliary Relay	A52	CB-F-1A-A						
												EDE-A5A-52S	Mechanically Operated Contact	A5A	CB-F-1A-A						

FUNCTION: ELECTRICAL DISTRIBUTION EMERGENCY

ITEM NO.	EQUIPMENT ID NO.	EQUIPMENT DESCRIPTION	P&ID/1-LINE DRAWING NO.	TRAIN	PHYSICAL LOCATION DRAWING NO.	FIRE AREA/ZONE	REQUIRED FOR		POWER		ELEC NODE	SUPPORTING CONTROL AND INSTRUMENTATION EQUIPMENT				CABLES	ELECTRICAL DRAWING NO.		SUPPORTING SYSTEMS	REDUNDANT COUNTERPART	REMARKS
							HOT STAND BY	COLD SHUT DOWN	ELEC	AIR		EQUIPMENT ID NO.	EQUIPMENT DESCRIPTION	ELEC NODE	FIRE AREA/ZONE		SCHEM.	CABLE			
4	EDE-SWG-5	4160 V Bus E5 PT Compartment	310007	A	310442	CB-F-1A-A	X	X	X	-	A53	EDE-A53-PT	Potential Transformers	A53	CB-F-1A-A	A53-AC2 A53-HR2 AF2-ED4 A53-G07 AC2-AF2 A53-FB7 F80-G07/5 A54-A5A/4 A54-A5A/5 A55-A5A/1 A55-A5A/2	310102 A53a A53e A53h	A53d	CBA-FN-19 CBA-FN-20 EDE-SWG-5 EDE-PP-111A DAH-FN-25A DAH-FN-26A	EDE-SWG-6 PT	
												EDE-A53-VM	Voltmeter	A53	CB-F-1A-A						
												EDE-A53-VS	Voltmeter Switch	A53	CB-F-1A-A						
												EDE-A53-TD-3	PT Test Device	A53	CB-F-1A-A						
												EDE-A53-VTR-1	Voltage Transducer	A53	CB-F-1A-A						
												EDE-A53-VTR-2	Voltage Transducer	A53	CB-F-1A-A						
												EDE-SS-9709	Selector Switch	G07	DG-F-2A-A						
												EDE-SNS-9736-2	Synchronizing Switch	G06	DG-F-2A-A						
												EDE-A53-25U	Synchronizing Check Relay	A53	CB-F-1A-A						
												EDE-A53-25R	Synchronizing Check Relay	A53	CB-F-1A-A						
												EDE-A54-52S	Mechanically Operated Contact	A54	CB-F-1A-A						
												EDE-A53-27B-1	Instantaneous Undervoltage Relay	A53	CB-F-1A-A						
												EDE-A53-27B-2	Instantaneous Undervoltage Relay	A53	CB-F-1A-A						
												EDE-A53-TS-3	Undervoltage Relays Test Switch	A53	CB-F-1A-A						
												EDE-A53-27D-1	Instantaneous Undervoltage Relay	A53	CB-F-1A-A						
												EDE-A53-27D-1-RES	Resistor	A53	CB-F-1A-A						
												EDE-A53-27D-2	Instantaneous Undervoltage Relay	A53	CB-F-1A-A						
												EDE-A53-27D-2-RES	Resistor	A53	CB-F-1A-A						
												EDE-A53-TS-1	Undervoltage Relays Test Switch	A53	CB-F-1A-A						
												EDE-A52-27RB-1,2	Residual Undervoltage Relay	A52	CB-F-1A-A						
												EDE-A53-62B	Time Delay Relay	A53	CB-F-1A-A						
												EDE-A53-62B-RES	Resistor	A53	CB-F-1A-A						
												EDE-A53-TS-4	Test Switch EDE-62B	A53	CB-F-1A-A						
												EDE-A53-62BX-1	Auxiliary Relay	A53	CB-F-1A-A						
												EDE-A53-62BX	Auxiliary Latch Relay	A53	CB-F-1A-A						
												EDE-A51-52S	Mechanically Operated Contact	A51	CB-F-1A-A						
												EDE-ED4-94-5	Undervoltage Tripping Relay	ED4	CB-F-1A-A						
												EDE-A52-27/59X1	Under/Over Voltage Auxiliary Relay	A52	CB-F-1A-A						
												EDE-AF3-94-4	Undervoltage Tripping Relay	AF3	CB-F-1A-A						

FUNCTION: ELECTRICAL DISTRIBUTION EMERGENCY

ITEM NO.	EQUIPMENT ID NO.	EQUIPMENT DESCRIPTION	P&ID/1-LINE DRAWING NO.	TRAIN	PHYSICAL LOCATION DRAWING NO.	FIRE AREA/ZONE	REQUIRED FOR		POWER		ELEC NODE	SUPPORTING CONTROL AND INSTRUMENTATION EQUIPMENT				CABLES	ELECTRICAL DRAWING NO.		SUPPORTING SYSTEMS	REDUNDANT COUNTERPART	REMARKS
							HOT STAND BY	COLD SHUT DOWN	ELEC	AIR		EQUIPMENT ID NO.	EQUIPMENT DESCRIPTION	ELEC NODE	FIRE AREA/ZONE		SCHEM.	CABLE			
4	EDE-SWG-5 (Continued)											DG-HR2-RMO	EPS Auxiliary Relay	HR2	CB-F-1A-A						
												EDE-A53-94-1A	Undervoltage Tripping Relay	A53	CB-F-1A-A						
												EDE-A53-94-1B	Undervoltage Tripping Relay	A53	CB-F-1A-A						
												EDE-A53-94-2	Undervoltage Tripping Relay	A53	CB-F-1A-A						
												EDE-AC3-94-3	Undervoltage Tripping Relay	AC3	CB-F-1A-A						
												EDE-A53-FU	120 V AC 3A Fuses	A53	CB-F-1A-A						
												EDE-A53-FU	125 V DC 10A Fuses (2)	A53	CB-F-1A-A						
												EDE-A53-62D	Time Delay Relay	A53	CB-F-1A-A						
												EDE-A53-62D-RES	Resistor	A53	CB-F-1A-A						
												EDE-A53-TS-2	Test Switch Relay 62D	A53	CB-F-1A-A						
												EDE-A53-62DX	Auxiliary Relay	A53	CB-F-1A-A						
												EDE-SNS-9736-1	Synchronizing Switch	F8O	CB-F-3A-A						
												EDE-FB7-K609A	SI Sig. Act. Auxiliary Relay	FB7	CB-F-3A-A						
												EDE-A5A-52S	Mechanically Operated Contact	A5A	CB-F-1A-A						

FUNCTION: ELECTRICAL DISTRIBUTION EMERGENCY

ITEM NO.	EQUIPMENT ID NO.	EQUIPMENT DESCRIPTION	P&ID/1-LINE DRAWING NO.	TRAIN	PHYSICAL LOCATION DRAWING NO.	FIRE AREA/ZONE	REQUIRED FOR		POWER		ELEC NODE	SUPPORTING CONTROL AND INSTRUMENTATION EQUIPMENT				CABLES	ELECTRICAL DRAWING NO.		SUPPORTING SYSTEMS	REDUNDANT COUNTERPART	REMARKS
							HOT STAND BY	COLD SHUT DOWN	ELEC	AIR		EQUIPMENT ID NO.	EQUIPMENT DESCRIPTION	ELEC NODE	FIRE AREA/ZONE		SCHEM.	CABLE			
5	EDE-SWG-5	4160 V Bus E5 DG-1A Incoming Line SWGR	310010 310007	A	310442	CB-F-1A-A	X	X	X	-	A54	EDE-A54-52	4160 V Circuit Breaker	A54	CB-F-1A-A	A54-G06/2 A54-G06/4 A54-G07/1 A54-HN0 A54-G06/3 A54-G07 A54-G07/2 G06-G29/7 F80-G06/1 A54-F80/1 A54-HR9 A54-FB7 A54-F80 A5A-A5A/3	310102 A54a A54b A54c A54d A54e A54f	A54k	CBA-FN-19 CBA-FN-20 DG-DG-1A DAH-FN-25A DAH-FN-26A EDE-PP-111A	EDE-SWG-6 DG-1B	
												EDE-CS-9700-2	Control Switch	A54	CB-F-1A-A						
												EDE-CS-9700-3	Control Switch with Indication	G06	DG-F-2A-A						
												EDE-A54-G,R,W	Indicating Lights	A54	CB-F-1A-A						
												EDE-SS-9700	Selector Switch	G06	DG-F-2A-A						
												EDE-SNS-9736-2	Synchronizing Switch	G06	DG-F-2A-A						
												EDE-A54-52H	Truck Operated Contact	A54	CB-F-1A-A						
												EDE-A54-FU	Fuses	A54	CB-F-1A-A						
												EDE-A54-CT	Current Transformers (2000/5)	A54	CB-F-1A-A						
												EDE-A54-DCT	Differential Current Transformers (2000/5)	A54	CB-F-1A-A						
												DG-HN0-DCT	DG-1A Neut. Diff. Current Transformers (2000/5)	HN0	DG-F-2A-A						
												DG-G06-CT	Auxiliary Current Transformer (5:10)	G06	DG-F-2A-A						
												EDE-A54-AM	Ammeter	A54	CB-F-1A-A						
												EDE-A54-AS-1	Ammeter Switch	A54	CB-F-1A-A						
												EDE-A54-ATR-1	Current Transducer	A54	CB-F-1A-A						
												EDE-A54-ATR-2	Current Transducer	A54	CB-F-1A-A						
												EDE-AM-9700-2	Ammeter	G06	DG-F-2A-A						
												EDE-G06-AS	Ammeter Switch	G06	DG-F-2A-A						
												DG-SM-9585	Governor Control (2301A)	G06	DG-F-2A-A						
												EDE-A69-PT	DG-1A Inc. Line Pot. Transformer (2) 4200-120 V	A69	CB-F-1A-A						
												EDE-A69-VM	Voltmeter	A69	CB-F-1A-A						
												EDE-A69-VS	Voltmeter Switch	A69	CB-F-1A-A						
												EDE-A69-TD-3	PT Test Device	A69	CB-F-1A-A						
												EDE-A69-VTR-1	Voltage Transducer	A69	CB-F-1A-A						
												EDE-A69-VTR-2	Voltage Transducer	A69	CB-F-1A-A						
												EDE-A54-27DG	Undervoltage Relay	A54	CB-F-1A-A						
												EDE-A69-FTR-1	Frequency Transducer	A69	CB-F-1A-A						
												EDE-A69-FTR-2	Frequency Transducer	A69	CB-F-1A-A						
												EDE-A69-W/WH-TR	Watt/Watthour Transducer	A69	CB-F-1A-A						
												EDE-A69-W/TR	Watt Transducer	A69	CB-F-1A-A						
												EDE-A69-VAR-TR	Var Transducer	A69	CB-F-1A-A						
												EDE-A54-TS	Test Start Switch	A54	CB-F-1A-A						
												EDE-A54-52Z	Time Delay Relay	A54	CB-F-1A-A						

FUNCTION: ELECTRICAL DISTRIBUTION EMERGENCY

ITEM NO.	EQUIPMENT ID NO.	EQUIPMENT DESCRIPTION	P&ID/1-LINE DRAWING NO.	TRAIN	PHYSICAL LOCATION DRAWING NO.	FIRE AREA/ZONE	REQUIRED FOR		POWER		ELEC NODE	SUPPORTING CONTROL AND INSTRUMENTATION EQUIPMENT				CABLES	ELECTRICAL DRAWING NO.		SUPPORTING SYSTEMS	REDUNDANT COUNTERPART	REMARKS
							HOT STAND BY	COLD SHUT DOWN	ELEC	AIR		EQUIPMENT ID NO.	EQUIPMENT DESCRIPTION	ELEC NODE	FIRE AREA/ZONE		SCHEM.	CABLE			
5	EDE-SWG-5 (Continued)											EDE-A54-81-RES	Resistor	A54	CB-F-1A-A						
												EDE-A54-86DP	Primary Lockout Relay	A54	CB-F-1A-A						
												EDE-A54-W	Indicating Light (A54-86DP)	A54	CB-F-1A-A						
												EDE-A69-86B	Lockout Relay	A69	CB-F-1A-A						
												EDE-A69-86DB	Back-Up Lockout Relay	A69	CB-F-1A-A						
												EDE-A69-W	Indicating Light (A69-86B & A69-86DB)	A69	CB-F-1A-A						
												EDE-A51-86	Lockout Relay	A51	CB-F-1A-A						
												EDE-A52-86	Lockout Relay	A52	CB-F-1A-A						
												EDE-A51-52S	Mechanically Operated Contact	A51	CB-F-1A-A						
												EDE-A52-52S	Mechanically Operated Contact	A52	CB-F-1A-A						
												EDE-A54-52S	Mechanically Operated Contact	A54	CB-F-1A-A						
												EDE-A69-RLA	LOCA Seal Relay	A69	CB-F-1A-A						
												DG-G10-25Y	Auxiliary Sync Check Relay	G10	DG-F-2A-A						
												EDE-A69-RS	Fast Closure Relay	A69	CB-F-1A-A						
												EDE-A54-81	Frequency Relay	A54	CB-F-1A-A						
												EDE-A54-87DP	Primary Differential Relay	A54	CB-F-1A-A						
												EDE-A69-51B	Time Overcurrent Relays, øA, øB, øC	A69	CB-F-1A-A						
												EDE-A54-81X	Auxiliary Frequency Relay	A54	CB-F-1A-A						
												EDE-A69-60	Voltage Balance Relay	A69	CB-F-1A-A						
												EDE-A69-60AX	Auxiliary Voltage Balance Relay	A69	CB-F-1A-A						
												EDE-A69-60BX	Auxiliary Voltage Balance Relay	A69	CB-F-1A-A						
												EDE-A69-40	Loss of Field Relays øA, øB	A69	CB-F-1A-A						
												EDE-A54-40X	Auxiliary Loss of Field Relay	A54	CB-F-1A-A						
												EDE-A69-32	Power Directional Relay	A69	CB-F-1A-A						
												EDE-A69-TD-1	Lockout Relay Test Device (86B)	A69	CB-F-1A-A						
												EDE-A69-TD-2	Lockout Relay Test Device (86DB)	A69	CB-F-1A-A						
												EDE-A54-TD-2	Lockout Relay Test Device (86DP)	A54	CB-F-1A-A						
												DG-G07-R43L5	Selector Switch Auxiliary Relay (Local)	G07	DG-F-2A-A						
												DG-G07-R43R3	Selector Switch Auxiliary Relay (Remote)	G07	DG-F-2A-A						

FUNCTION: ELECTRICAL DISTRIBUTION EMERGENCY

ITEM NO.	EQUIPMENT ID NO.	EQUIPMENT DESCRIPTION	P&ID/1-LINE DRAWING NO.	TRAIN	PHYSICAL LOCATION DRAWING NO.	FIRE AREA/ZONE	REQUIRED FOR		POWER		ELEC NODE	SUPPORTING CONTROL AND INSTRUMENTATION EQUIPMENT				CABLES	ELECTRICAL DRAWING NO.		SUPPORTING SYSTEMS	REDUNDANT COUNTERPART	REMARKS
							HOT STAND BY	COLD SHUT DOWN	ELEC	AIR		EQUIPMENT ID NO.	EQUIPMENT DESCRIPTION	ELEC NODE	FIRE AREA/ZONE		SCHEM.	CABLE			
5	EDE-SWG-5 (Continued)											DG-G07-R43R4	Selector Switch Auxiliary Relay (Remote)	G07	DG-F-2A-A						
												DG-G07-R43R6	Selector Switch Auxiliary Relay (Remote)	G07	DG-F-2A-A						
												DG-G29-5A	Shutdown Relay	G29	DG-F-2A-A						
												EDE-A69-51V	Time Overcurrent Voltage Restraint Relays, øA, øB, øC	A69	CB-F-1A-A						
												EDE-A69-FU	120 V AC 3A Fuses	A69	CB-F-1A-A						
												EDE-A54-87DP Reactor	Primary Differential Relay Reactor Assembly	A54	CB-F-1A-A						
												EDE-A69-51GS	Ground Sensor Relay	A69	CB-F-1A-A						
												EDE-A54-TD-1	Test Device	A54	CB-F-1A-A						
												EDE-CS-9700-1	Control Switch with Indicating Light	F80	CB-F-3A-A						
												DG-HR9-PRIX	EPS Auxiliary Relay	HR9	CB-F-1A-A						
												EDE-SNS-9736-1	Synchronizing Switch	F80	CB-F-3A-A						
												MM-FB7-K601A	SI Signal Act. Output Relay	FB7	CB-F-3A-A						
												DG-G07-ESS	Emergency Start Auxiliary Relay	G07	DG-F-2A-A						
												EDE-A54-81Y	Time Delay Relay	A54	CB-F-1A-A						
												EDE-A5A-52S	Mechanically Operated Contact	A5A	CB-F-1A-A						

FUNCTION: ELECTRICAL DISTRIBUTION EMERGENCY

ITEM NO.	EQUIPMENT ID NO.	EQUIPMENT DESCRIPTION	P&ID/1-LINE DRAWING NO.	TRAIN	PHYSICAL LOCATION DRAWING NO.	FIRE AREA/ZONE	REQUIRED FOR		POWER		ELEC NODE	SUPPORTING CONTROL AND INSTRUMENTATION EQUIPMENT				CABLES	ELECTRICAL DRAWING NO.		SUPPORTING SYSTEMS	REDUNDANT COUNTERPART	REMARKS
							HOT STAND BY	COLD SHUT DOWN	ELEC	AIR		EQUIPMENT ID NO.	EQUIPMENT DESCRIPTION	ELEC NODE	FIRE AREA/ZONE		SCHEM.	CABLE			
6	DG-CP-75A	Diesel Generator 1A Control Panel Cubicle 2 Synchronizing System	310010	A	310524	DG-F-2A-A	X	X	X	-	G07	DG-G07-FU-17&18	125 V DC Fuses (6A)	G07	DG-F-2A-A	F80-G07/B F80-G07/1	310102 G07/2c G07/2g 7b 7f		DAH-FN-25A DAH-FN-26A EDE-SWG-11A	DG-CP-76A	
												EDE-SS-9700	Selector Switch	G06	DG-F-2A-A						
												EDE-SS-9709	Selector Switch	G07	DG-F-2A-A						
												EDE-SS-9707	Selector Switch	G07	DG-F-2A-A						
												DG-G07-R43R4	Selector Switch Auxiliary Relay (Remote)	G07	DG-F-2A-A						
												DG-G07-R43R6	Selector Switch Auxiliary Relay (Remote)	G07	DG-F-2A-A						
												DG-G07-RAX	Auxiliary Relay, Latch	G07	DG-F-2A-A						
												DG-G07-R43L4	Selector Switch Auxiliary Relay (Local)	G07	DG-F-2A-A						
												EDE-SNS-9736-2	Synchronizing Switch	G06	DG-F-2A-A						
												EDE-CS-9700-3	Control Switch	G06	DG-F-2A-A						
												EDE-CS-9707-3	Control Switch	G07	DG-F-2A-A						
												EDE-CS-9709-3	Control Switch	G07	DG-F-2A-A						
												DG-G06-25DG	Synchronizing Check Relay	G06	DG-F-2A-A						
												DG-G10-25Y	Auxiliary Synchronizing Check Relay	G10	DG-F-2A-A						
												DG-G10-25Y1	Auxiliary Synchronizing Check Relay	G10	DG-F-2A-A						
												EDE-SNS-9763-1	Synchronizing Switch	F80	CB-F-3A-A						
												EDE-CS-9700-1	Control Switch	F80	CB-F-3A-A						
												EDE-CS-9707-1	Control Switch	F80	CB-F-3A-A						
												EDE-CS-9709-1	Control Switch	F80	CB-F-3A-A						
												EDE-A67-PT	UAT X-2A Inc. Line Potential Transformer	A67	CB-F-1A-A						
												EDE-A53-PT	RAT X-3A Inc. Line Potential Transformer	A53	CB-F-1A-A						
												EDE-A53-PT	Bus E5 Potential Transformer	A53	CB-F-1A-A						
												EDE-A69-PT	DG-1A Inc. Line Potential Transformer	A69	CB-F-1A-A						
												EDE-SNS-9736-2	Synchronizing Switch	G06	DG-F-2A-A						
												EDE-SS-9707	Selector Switch	G07	DG-F-2A-A						
												EDE-SS-9709	Selector Switch	G07	DG-F-2A-A						
												DG-G07-R43R3	Selector Switch Auxiliary Relay (Remote)	G07	DG-F-2A-A						
												DG-G07-R43R4	Selector Switch Auxiliary Relay (Remote)	G07	DG-F-2A-A						
												DG-G07-RAX	Auxiliary Relay, Latch	G07	DG-F-2A-A						

FUNCTION: ELECTRICAL DISTRIBUTION EMERGENCY

ITEM NO.	EQUIPMENT ID NO.	EQUIPMENT DESCRIPTION	P&ID/1-LINE DRAWING NO.	TRAIN	PHYSICAL LOCATION DRAWING NO.	FIRE AREA/ZONE	REQUIRED FOR		POWER		ELEC NODE	SUPPORTING CONTROL AND INSTRUMENTATION EQUIPMENT				CABLES	ELECTRICAL DRAWING NO.		SUPPORTING SYSTEMS	REDUNDANT COUNTERPART	REMARKS
							HOT STAND BY	COLD SHUT DOWN	ELEC	AIR		EQUIPMENT ID NO.	EQUIPMENT DESCRIPTION	ELEC NODE	FIRE AREA/ZONE		SCHEM.	CABLE			
6	DG-CP-75A (Continued)											DG-G06-25DG	Synchronizing Check Relay	G06	DG-F-2A-A						
												EDE-SYN-9701	Synchroscope	G06	DG-F-2A-A						
												EDE-ZL-9701	Synchronizing Lights	G06	DG-F-2A-A						
												EDE-VM-9701-1	Synchronizing Voltmeter Incoming	G06	DG-F-2A-A						
												EDE-VM-9701-2	Synchronizing Voltmeter Running	G06	DG-F-2A-A						
												EDE-SYN-9891	Synchroscope	F80	CB-F-3A-A						
												EDE-ZL-9891	Synchronizing Lights	F80	CB-F-3A-A						
												EDE-VM-9891-1	Voltmeter	F80	CB-F-3A-A						
												EDE-VM-9891-2	Voltmeter	F80	CB-F-3A-A						

FUNCTION: ELECTRICAL DISTRIBUTION EMERGENCY

ITEM NO.	EQUIPMENT ID NO.	EQUIPMENT DESCRIPTION	P&ID/1-LINE DRAWING NO.	TRAIN	PHYSICAL LOCATION DRAWING NO.	FIRE AREA/ZONE	REQUIRED FOR		POWER		ELEC NODE	SUPPORTING CONTROL AND INSTRUMENTATION EQUIPMENT				CABLES	ELECTRICAL DRAWING NO.		SUPPORTING SYSTEMS	REDUNDANT COUNTERPART	REMARKS
							HOT STAND BY	COLD SHUT DOWN	ELEC	AIR		EQUIPMENT ID NO.	EQUIPMENT DESCRIPTION	ELEC NODE	FIRE AREA/ZONE		SCHEM.	CABLE			
7	EDE-SWG-5	4160 V Feed to 480 V Transformer EDE-X-5A for Substation Bus EDE-US-51	310007	A	310442	CB-F-1A-A	X	X	X	-	A55	EDE-A55-52	4160 V Circuit Breaker	A55	CB-F-1A-A	A55-AB1 A55-F80/1	310102 A55a A55b A55c A55d	A55g	CBA-FN-19 CBA-FN-20 EDE-PP-111A EDE-SWG-5	EDE-SWG-6 EDE-X-5C EDE-US-61	
												EDE-A55-FU	Fuses	A55	CB-F-1A-A						
												EDE-CS-9706	Control Switch	A55	CB-F-1A-A						
												EDE-A55-G,R,W	Indicating Lights	A55	CB-F-1A-A						
												EDE-SS-9706	Selector Switch	A55	CB-F-1A-A						
												EDE-A55-52H	Truck Operated Contact	A55	CB-F-1A-A						
												EDE-A55-86	Lockout Relay	A55	CB-F-1A-A						
												EDE-A55-TD2	Lockout Relay Test Device	A55	CB-F-1A-A						
												EDE-A55-50/51	Inst/Time Overcurrent Relays øA, øB, øC	A55	CB-F-1A-A						
												EDE-A55-CT	Current Transformers (300/5)	A55	CB-F-1A-A						
												EDE-A55-AM	Ammeter	A55	CB-F-1A-A						
												EDE-A55-AS	Ammeter Switch	A55	CB-F-1A-A						
												EDE-A55-ATR	Transducer	A55	CB-F-1A-A						
												EDE-A55-TD1	CT Test Device	A55	CB-F-1A-A						
												EDE-A55-51GS	Ground Sensor Relay	A55	CB-F-1A-A						
												EDE-ZL-9706	Indicating Lights	F80	CB-F-3A-A						
8	EDE-SWG-5	4160 V Feed to 480 V Transformer EDE-X-5B for Substation Bus EDE-US-52	310007	A	310442	CB-F-1A-A	X	X	X	-	A63	EDE-A63-52	4160 V Circuit Breaker	A63	CB-F-1A-A	A63-AC1 A63-F80/1	310102 A63a A63b A63c A63d	A63g	CBA-FN-19 CBA-FN-20 EDE-PP-111A EDE-SWG-5	EDE-SWG-6 EDE-X-5D EDE-US-62	
												EDE-A63-FU	Fuses	A63	CB-F-1A-A						
												EDE-CS-9703	Control Switch	A63	CB-F-1A-A						
												EDE-A63-G,R,W	Indicating Lights	A63	CB-F-1A-A						
												EDE-SS-9703	Selector Switch	A63	CB-F-1A-A						
												EDE-A63-52H	Truck Operated Contact	A63	CB-F-1A-A						
												EDE-A63-86	Lockout Relay	A63	CB-F-1A-A						
												EDE-A63-TD2	Lockout Relay Test Device	A63	CB-F-1A-A						
												EDE-A63-50/51	Inst/Time Overcurrent Relays øA, øB, øC	A63	CB-F-1A-A						
												EDE-A63-CT	Current Transformers (300/5)	A63	CB-F-1A-A						
												EDE-A63-AM	Ammeter	A63	CB-F-1A-A						
												EDE-A63-AS	Ammeter Switch	A63	CB-F-1A-A						
												EDE-A63-ATR	Transducer	A63	CB-F-1A-A						
												EDE-A63-TD1	CT Test Device	A63	CB-F-1A-A						
												EDE-A63-51GS	Ground Sensor Relay	A63	CB-F-1A-A						
												EDE-ZL-9703	Indicating Lights	F80	CB-F-3A-A						

FUNCTION: ELECTRICAL DISTRIBUTION EMERGENCY

ITEM NO.	EQUIPMENT ID NO.	EQUIPMENT DESCRIPTION	P&ID/1-LINE DRAWING NO.	TRAIN	PHYSICAL LOCATION DRAWING NO.	FIRE AREA/ZONE	REQUIRED FOR		POWER		ELEC NODE	SUPPORTING CONTROL AND INSTRUMENTATION EQUIPMENT				CABLES	ELECTRICAL DRAWING NO.		SUPPORTING SYSTEMS	REDUNDANT COUNTERPART	REMARKS
							HOT STAND BY	COLD SHUT DOWN	ELEC	AIR		EQUIPMENT ID NO.	EQUIPMENT DESCRIPTION	ELEC NODE	FIRE AREA/ZONE		SCHEM.	CABLE			
9	EDE-SWG-5	4160 V Feed to 480 V Transformer EDE-X-5E for Substation Bus EDE-US-53	310007	A	310442	CB-F-1A-A	X	X	X	-	A60	EDE-A60-52	4160 V Circuit Breaker	A60	CB-F-1A-A	A60/AF1 A60/F80/1	310102 A60a A60b A60c A60d	A60g	CBA-FN-19 CBA-FN-20 EDE-PP-111A EDE-SWG-5	EDE-SWG-6 EDE-X-5F EDE-US-63	
												EDE-A60-FU	Fuses	A60	CB-F-1A-A						
												EDE-CS-9742	Control Switch	A60	CB-F-1A-A						
												EDE-A60-G,R,W	Indicating Lights	A60	CB-F-1A-A						
												EDE-SS-9742	Selector Switch	A60	CB-F-1A-A						
												EDE-A60-52H	Truck Operated Contact	A60	CB-F-1A-A						
												EDE-A60-86	Lockout Relay	A60	CB-F-1A-A						
												EDE-A60-TD2	Lockout Relay Test Device	A60	CB-F-1A-A						
												EDE-A60-50/51	Inst/Time Overcurrent Relays øA, øB, øC	A60	CB-F-1A-A						
												EDE-A60-CT	Current Transformers (300/5)	A60	CB-F-1A-A						
												EDE-A60-AM	Ammeter	A60	CB-F-1A-A						
												EDE-A60-AS	Ammeter Switch	A60	CB-F-1A-A						
												EDE-A60-ATR	Transducer	A60	CB-F-1A-A						
												EDE-A60-TD1	CT Test Device	A60	CB-F-1A-A						
												EDE-A60-51GS	Ground Sensor Relay	A60	CB-F-1A-A						
												EDE-ZL-9742	Indicating Lights	F80	CB-F-3A-A						
10	EDE-US-51	480 V Bus 51 Unit Substation	310013	A	310442	CB-F-1A-A	X	X	X	-	AB2	EDE-AB2-52	480 V AC Circuit Breaker	AB2	CB-F-1A-A		310103 AB2a	AB2b	CBA-FN-19 CBA-FN-20 EDE-X-5A	EDE-US-61	
												EDE-X-5A	4160-480 V Distribution Transformer	AB1	CB-F-1A-A						
												EDE-AB3-FU	Fuses	AB3	CB-F-1A-A						
												EDE-AB1-LA	6 KV Lightning Arrestors (3)	AB1	CB-F-1A-A						
												EDE-AB2-CT	Current Transformers (2000/5)	AB2	CB-F-1A-A						
												EDE-AB3-AM	Ammeter	AB3	CB-F-1A-A						
												EDE-AB3-AS	Ammeter Switch	AB3	CB-F-1A-A						
11	EDE-US-52	480 V Bus 52 Unit Substation	310013	A	310442	CB-F-1A-A	X	X	X	-	AC2	EDE-AC2-52	480 V AC Circuit Breaker	AC2	CB-F-1A-A		310103 AC2a	AC2b	CBA-FN-19 CBA-FN-20 EDE-X-5B	EDE-US-62	
												EDE-X-5B	4160-480 V Distribution Transformer	AC1	CB-F-1A-A						
												EDE-AC3-FU	Fuses	AC3	CB-F-1A-A						
												EDE-AC1-LA	6 KV Lightning Arrestors (3)	AC1	CB-F-1A-A						
												EDE-AC2-CT	Current Transformers (2000/5)	AC2	CB-F-1A-A						
												EDE-AC3-AM	Ammeter	AC3	CB-F-1A-A						
												EDE-AC3-AS	Ammeter Switch	AC3	CB-F-1A-A						

FUNCTION: ELECTRICAL DISTRIBUTION EMERGENCY

ITEM NO.	EQUIPMENT ID NO.	EQUIPMENT DESCRIPTION	P&ID/1-LINE DRAWING NO.	TRAIN	PHYSICAL LOCATION DRAWING NO.	FIRE AREA/ZONE	REQUIRED FOR		POWER		ELEC NODE	SUPPORTING CONTROL AND INSTRUMENTATION EQUIPMENT				CABLES	ELECTRICAL DRAWING NO.		SUPPORTING SYSTEMS	REDUNDANT COUNTERPART	REMARKS
							HOT STAND BY	COLD SHUT DOWN	ELEC	AIR		EQUIPMENT ID NO.	EQUIPMENT DESCRIPTION	ELEC NODE	FIRE AREA/ZONE		SCHEM.	CABLE			
12	EDE-US-53	480 V Bus 53 Unit Substation	310051	A	310442	CB-F-1A-A	X	X	X	-	AF2	EDE-AF2-52	480 V AC Circuit Breaker	AF2	CB-F-1A-A		310103 AF2a	AF2c	CBA-FN-19 CBA-FN-20 EDE-X-5E	EDE-US-63	
												EDE-X-5E	4160-480 V Distribution Transformer	AF1	CB-F-1A-A						
												EDE-AF3-FU	Fuses	AF3	CB-F-1A-A						
												EDE-AF1-LA	6 KV Lightning Arrestors (3)	AF1	CB-F-1A-A						
												EDE-AF2-CT	Current Transformers (2000/5)	AF2	CB-F-1A-A						
												EDE-AF3-AM	Ammeter	AF3	CB-F-1A-A						
												EDE-AF3-AS	Ammeter Switch	AF3	CB-F-1A-A						
13	EDE-US-51	480 V Feed to 460 V Motor Control Center 512	310013	A	310442	CB-F-1A-A	X	X	X	-	AB6	EDE-AB6-52	480 V AC Circuit Breaker	AB6	CB-F-1A-A	AB6-B10 AB6-B10/1	310103 AB6	AB6	CBA-FN-19 CBA-FN-20 EDE-US-51	EDE-US-61 EDE-MCC-612	
14	EDE-US-51	480 V Feed to 460 V Motor Control Center 514	310013	A	310442	CB-F-1A-A	X	X	X	-	A94	EDE-A94-52	480 V AC Circuit Breaker	A94	CB-F-1A-A	A94-C11	310103 A94	A94	CBA-FN-19 CBA-FN-20 EDE-US-51	EDE-US-61 EDE-MCC-614	
15	EDE-US-51	480 V Feed to 460 V Motor Control Center 515	310013	A	310442	CB-F-1A-A	X	X	X	-	AX8	EDE-AX8-52	480 V AC Circuit Breaker	AX8	CB-F-1A-A	AX8-B4D AX8-B4D/1	310103 AX8	AX8	CBA-FN-19 CBA-FN-20 EDE-US-51	EDE-US-61 EDE-MCC-615	
16	EDE-US-52	480 V Feed to 460 V Motor Control Center 521	310013	A	310442	CB-F-1A-A	X	X	X	-	AC8	EDE-AC8-52	480 V AC Circuit Breaker	AC8	CB-F-1A-A	AC8-B13 AC8-B13/1	310103 AC8	AC8	CBA-FN-19 CBA-FN-20 EDE-US-52	EDE-US-62 EDE-MCC-621	
17	EDE-US-52	480 V Feed to 460 V Motor Control Center 522	310013	A	310442	CB-F-1A-A	X	X	X	-	AW9	EDE-AW9-52	480 V AC Circuit Breaker	AW9	CB-F-1A-A	AW9-D12 AW9-G81/1 AW9-G81 F80-G81	310103 AW9a AW9b AW9c	AW9e	CBA-FN-19 CBA-FN-20 EDE-US-52	EDE-US-62 EDE-MCC-622	
												EDE-CS-9787-2	Control Switch with Indication	G81	CB-F-1A-A						
												EDE-SS-9787	Selector Switch	G81	CB-F-1A-A						
												EDE-AW9-52H	Truck Operated Contact	AW9	CB-F-1A-A						
												EDE-AW9-FU	Fuses	AW9	CB-F-1A-A						
												EDE-CS-9787-1	Control Switch with Indication	F80	CB-F-3A-A						
												EDE-AW9-G,R	Indicating Lights	AW9	CB-F-1A-A						
17a	EDE-US-51	480 V Feed to 460 V Motor Control Center 511	310013	A	310442	CB-F-1A-A	X	X	X	-	AB5	EDE-AB5-52	480 V AC Circuit Breaker	AB5	CB-F-1A-A	AB5-B09 AB5-B09/1	310103 AB5	AB5	CBA-FN-19 CBA-FN-20 EDE-US-51	EDE-US-61 EDE-MCC-611	
18	EDE-US-52	480 V Feed to Motor Control Center 523	310013	A	310442	CB-F-1A-A	X	X	X	-	AF4	EDE-AF4-52	480 V AC Circuit Breaker	AF4	CB-F-1A-A	AF4-C99 AF4-C99/1	310103 AF4	AF4	CBA-FN-19 CBA-FN-20 EDE-US-52	EDE-US-63 EDE-MCC-631	
19	EDE-US-53	480 V Feed to Motor Control Center 531	310051	A	310442	CB-F-1A-A	X	X	X	-	AB8	EDE-AB8-52	480 V AC Circuit Breaker	AB8	CB-F-1A-A	AB8-B12 AB8-B12/1	310103 AB8	AB8	CBA-FN-19 CBA-FN-20 EDE-US-53	EDE-US-63 EDE-MCC-631	

FUNCTION: ELECTRICAL DISTRIBUTION EMERGENCY

ITEM NO.	EQUIPMENT ID NO.	EQUIPMENT DESCRIPTION	P&ID/1-LINE DRAWING NO.	TRAIN	PHYSICAL LOCATION DRAWING NO.	FIRE AREA/ZONE	REQUIRED FOR		POWER		ELEC NODE	SUPPORTING CONTROL AND INSTRUMENTATION EQUIPMENT				CABLES	ELECTRICAL DRAWING NO.		SUPPORTING SYSTEMS	REDUNDANT COUNTERPART	REMARKS
							HOT STAND BY	COLD SHUT DOWN	ELEC	AIR		EQUIPMENT ID NO.	EQUIPMENT DESCRIPTION	ELEC NODE	FIRE AREA/ZONE		SCHEM.	CABLE			
20	EDE-US-51	Grounding Transformer	310012	A	310442	CB-F-1A-A	X	X	X	-	AB3	EDE-AB3-XFMR	3-1ø KVA Transformers	AB3	CB-F-1A-A		310103 AB3b	-	CBA-FN-19 CBA-FN-20 EDE-US-51	EDE-US-61 GRD XFMR	
												EDE-AB3-FU	Fuses	AB3	CB-F-1A-A						
												EDE-AB3-RES	Grounding Resistor	AB3	CB-F-1A-A						
												EDE-AB3-VM	Ground Voltmeters (3)	AB3	CB-F-1A-A						
												EDE-AB3-64	Ground Relay	AB3	CB-F-1A-A						
21	EDE-US-52	Grounding Transformer	310013	A	310442	CB-F-1A-A	X	X	X	-	AC3	EDE-AC3-XFMR	3-1ø KVA Transformers	AC3	CB-F-1A-A		310103 AC3b	-	CBA-FN-19 CBA-FN-20 EDE-US-52	EDE-US-62 GRD XFMR	
												EDE-AC3-FU	Fuses	AC3	CB-F-1A-A						
												EDE-AC3-RES	Grounding Resistor	AC3	CB-F-1A-A						
												EDE-AC3-VM	Ground Voltmeters (3)	AC3	CB-F-1A-A						
												EDE-AC3-64	Ground Relay	AC3	CB-F-1A-A						
22	EDE-US-53	Grounding Transformer	310051	A	310442	CB-F-1A-A	X	X	X	-	AF3	EDE-AF3-XFMR	3-1ø KVA Transformers	AF3	CB-F-1A-A		310103 AF3b	-	CBA-FN-19 CBA-FN-20 EDE-US-53	EDE-US-63 GRD XFMR	
												EDE-AF3-FU	Fuses	AF3	CB-F-1A-A						
												EDE-AF3-RES	Grounding Resistor	AF3	CB-F-1A-A						
												EDE-AF3-VM	Ground Voltmeters (3)	AF3	CB-F-1A-A						
												EDE-AF3-64	Ground Relay	AF3	CB-F-1A-A						
23	EDE-I-1E	Uninterruptible Power Supply	310043	A	310442	CB-F-1A-A	X	X	X	-	HF5	EDE-DD3-52	460 V AC Circuit Breaker	DD3	CB-F-1A-A	DD3-HF5/1 DM7-HF5/1	310105 DD3a	DD3b	CBA-FN-19 CBA-FN-20 EDE-MCC-512 EDE-SWG-11A	EDE-I-1F	
												EDE-DM7-72	125 V DC Circuit Breaker	DM7	CB-F-1A-A						
												EDE-HF5/2-52	460 V AC Inc. Line Circuit Breaker	HF5	CB-F-1A-A						
												EDE-HF5/1-72	125 V DC Inc. Line Circuit Breaker	HF5	CB-F-1A-A						
												EDE-HF5/3-52	120 V AC Output Circuit Breaker	HF5	CB-F-1A-A						
23A	EDE-CP-1E	Static Transfer Switch	310043	A	310442	CB-F-1A-A	X	X	X	-	E1Y	EDE-E1Y-F1	300 A, 600 V Fuse	E1Y	CB-F-1A-A	E1Y-HF5 E1Y-HF5/1	310105 DD3a	DD3b	EDE-I-1E CBA-FN-19 CBA-FN-20	EDE-CP-1F	
24	EDE-PP-1E	Vital Instrument Bus	310043	A	310442	CB-F-1A-A	X	X	X	-	EH9	EDE-EH9/NC-52	120 V AC Circuit Breaker - Inc. Feed from EDE-CP-1E (Norm. Closed)	EH9	CB-F-1A-A	EH9-E1Y	310105 DD3a EH9a	DD3b	CBA-FN-19 CBA-FN-20 EDE-CP-1E	EDE-PP-1F	
25	EDE-PP-11E	Vital Instrument Bus	310043	A	310442	CB-F-1A-A	X	X	X	-	E1S	EDE-EH9/13-52	120 V AC Circuit Breaker	EH9	CB-F-1A-A	E1S-EH9	310105 DD3a E1Sa	DD3b	CBA-FN-19 CBA-FN-20 EDE-PP-1E	EDE-PP-11F	

FUNCTION: ELECTRICAL DISTRIBUTION EMERGENCY

ITEM NO.	EQUIPMENT ID NO.	EQUIPMENT DESCRIPTION	P&ID/1-LINE DRAWING NO.	TRAIN	PHYSICAL LOCATION DRAWING NO.	FIRE AREA/ZONE	REQUIRED FOR		POWER		ELEC NODE	SUPPORTING CONTROL AND INSTRUMENTATION EQUIPMENT				CABLES	ELECTRICAL DRAWING NO.		SUPPORTING SYSTEMS	REDUNDANT COUNTERPART	REMARKS
							HOT STAND BY	COLD SHUT DOWN	ELEC	AIR		EQUIPMENT ID NO.	EQUIPMENT DESCRIPTION	ELEC NODE	FIRE AREA/ZONE		SCHEM.	CABLE			
26	ED-X-14J	480-120/240 V Transformer	310026	A	310691	ET-F-1A-A	X	X	X	-	EG4	ED-BOM-52	460 V AC Circuit Breaker	BOM	CB-F-1A-A	BOM-EG4	310104 BOM		CBA-FN-19 CBA-FN-20 EDE-MCC-531 CAH-FN-1C CAH-FN-1E CAH-FN-1F	ED-X-16A	
27	ED-PP-8J	120/240 V Distribution Panel	310026	A	310691	ET-F-1A-A	X	X	X	-	E9L	ED-X-14J ED-E9L-52	Transformer 250 V AC Circuit Breaker (Main)	EG4 E9L	ET-F-1A-A ET-F-1A-A	EG4-E9L	310104 BOM 310106 E9La		CAH-FN-1C CAH-FN-1E CAH-FN-1F ED-X-14J	ED-PP-8B	
28	Deleted																				
29	EDE-BC-1A	125 V DC Battery Charger	310042	A	310442	CB-F-1A-A	X	X	X	-	HR5	EDE-DB1-52 EDE-DB1-42 EDE-DB1-42X DG-HR2-HR9(K20) EDE-HR5/1-52 EDE-DB1-FU	460 V AC Circuit Breaker Contactor Auxiliary Relay EPS Relay 460 V AC Circuit Breaker - Incoming Feed Fuse	DB1 DB1 DB1 HR2 HR5 DB1	CB-F-1A-A CB-F-1A-A CB-F-1A-A CB-F-1A-A CB-F-1A-A CB-F-1A-A	DB1-HR2 DB1-HR5	310107 DB1a DB1b DB1c	DB1f	CBA-FN-19 CBA-FN-20 EDE-MCC-512	EDE-BC-1B	
30	EDE-B-1A	125 V DC Battery	310042	A	310442	CB-F-1D-A	X	X	X	-	HV4	EDE-J75-FU-1,2,3,4 EDE-J75-SH EDE-J75-ATR	1600A Fuses 1000A, 100 MV Shunt Transducer	J75 J75 J75	CB-F-1A-A CB-F-1A-A CB-F-1A-A	HV4-J75 HV4-J75/1	310107 DB1a DB1b DB1c	DB1f	CBA-FN-19 CBA-FN-20 CBA-FN-21A EDE-BC-1A EDE-SWG-11A	EDE-B-1B	

FUNCTION: ELECTRICAL DISTRIBUTION EMERGENCY

ITEM NO.	EQUIPMENT ID NO.	EQUIPMENT DESCRIPTION	P&ID/1-LINE DRAWING NO.	TRAIN	PHYSICAL LOCATION DRAWING NO.	FIRE AREA/ZONE	REQUIRED FOR		POWER		ELEC NODE	SUPPORTING CONTROL AND INSTRUMENTATION EQUIPMENT				CABLES	ELECTRICAL DRAWING NO.		SUPPORTING SYSTEMS	REDUNDANT COUNTERPART	REMARKS
							HOT STAND BY	COLD SHUT DOWN	ELEC	AIR		EQUIPMENT ID NO.	EQUIPMENT DESCRIPTION	ELEC NODE	FIRE AREA/ZONE		SCHEM.	CABLE			
31	EDE-SWG-11A	125 V DC Switchboard Auxiliary Buses 120 V AC and 125 V DC	310042	A	310442	CB-F-1A-A	X	X	X	-	DM1	EDE-HR5/2-72	125 V DC Circuit Breaker	HR5	CB-F-1A-A	DM3-J75 DM3-J75/1 DM2-HR5 DM1-J75/1 G1W-J75	310107 DB1a DB1b DB1c 5a	DB1f	CBA-FN-19 CBA-FN-20 EDE-SWG-11A EDE-B-1A EDE-BC-1A EDE-PP-1E	EDE-SWG-11B	
												EDE-DL4-72	125 V DC Circuit Breaker	DL4	CB-F-1A-A						
												EDE-DM2-72	125 V DC Circuit Breaker	DM2	CB-F-1A-A						
												EDE-DM3-72	125 V DC Circuit Breaker	DM3	CB-F-1A-A						
												EDE-DM1-FU-1&2	125 V DC 15A Fuses	DM1	CB-F-1A-A						
												EDE-DM1-27BL	Undervoltage Relay	DM1	CB-F-1A-A						
												EDE-DM1-27BLL	Undervoltage Relay	DM1	CB-F-1A-A						
												EDE-DM1-VM	DC Voltmeter	DM1	CB-F-1A-A						
												EDE-DM1-VTR	Voltage Transducer	DM1	CB-F-1A-A						
												EDE-DM1-DIO	Diodes	DM1	CB-F-1A-A						
												EDE-DM1-XS	Selector Switch	DM1	CB-F-1A-A						
												EDE-DM1-AMY	Ammeter Relay	DM1	CB-F-1A-A						
												EDE-EH9/5-52	120 V AC Circuit Breaker	EH9	CB-F-1A-A	DM1-EH9	310105 EH9a	EH9b			
												EDE-DM1-62BL	Timing Relay	DM1	CB-F-1A-A						
												EDE-DM1-62BLL	Timing Relay	DM1	CB-F-1A-A						
												EDE-DM2-72	Breaker Operated Contact	DM2	CB-F-1A-A						
												EDE-DM2-72STC	Circuit Breaker Shut Trip Coil	DM2	CB-F-1A-A						
												EDE-J75-ATR	Current Transducer	J75	CB-F-1A-A						
												EDE-DM1-52	120 V AC Inc. Feed Circuit Breaker	DM1	CB-F-1A-A						
												EDE-DM1-FU	120 V AC 15A and 1A Fuses	DM1	CB-F-1A-A						
32	EDE-PP-111A	125 V DC Distribution Panel	310042	A	310442	CB-F-1A-A	X	X	X	-	E93	EDE-DM5-72	125 V DC Circuit Breaker	DM5	CB-F-1A-A	DM5-E93	310107 DB1a E93a	DB1f	CBA-FN-19 CBA-FN-20 EDE-SWG-11A	EDE-PP-111B	
												EDE-E93-72	125 V DC Circuit Breaker (Main)	E93	CB-F-1A-A						
33	EDE-PP-112A	125 V DC Distribution Panel	310042	A	310442	CB-F-1A-A	X	X	X	-	E87	EDE-DM8-72	125 V DC Circuit Breaker	DM8	CB-F-1A-A	DM8-E87	310107 DB1a E87a	DB1f	CBA-FN-19 CBA-FN-20 EDE-SWG-11A	EDE-PP-112B	
												EDE-E87-72	125 V DC Circuit Breaker (Main)	E87	CB-F-1A-A						
34	EDE-PP-113A	125 V DC Distribution Panel	310042	A	310442	CB-F-1A-A	X	X	X	-	E2T	EDE-DMO-72	125 V DC Circuit Breaker	DMO	CB-F-1A-A	DMO-E2T	310107 DB1a DB1b E2Ta	DB1f	CBA-FN-19 CBA-FN-20 EDE-SWG-11A	EDE-PP-113B	
												EDE-E2T-72	125 V DC Circuit Breaker (Main)	E2T	CB-F-1A-A						
35	EDE-SWG-5	4160 V SWGR 125 V DC Control Bus		A	310442	CB-F-1A-A	X	X	X	-	A53	EDE-E93/1-72	125 V DC Circuit Breaker	E93	CB-F-1A-A	A53-E93	310107 E93a	E93b	CBA-FN-19 CBA-FN-20 EDE-PP-111A	EDE-SWG-6	
												EDE-A53-8	125 V DC Circuit Breaker (Main)	A53	CB-F-1A-A		310102 5a, 5f, 5g, 5h				

FUNCTION: ELECTRICAL DISTRIBUTION EMERGENCY

ITEM NO.	EQUIPMENT ID NO.	EQUIPMENT DESCRIPTION	P&ID/1-LINE DRAWING NO.	TRAIN	PHYSICAL LOCATION DRAWING NO.	FIRE AREA/ZONE	REQUIRED FOR		POWER		ELEC NODE	SUPPORTING CONTROL AND INSTRUMENTATION EQUIPMENT				CABLES	ELECTRICAL DRAWING NO.		SUPPORTING SYSTEMS	REDUNDANT COUNTERPART	REMARKS
							HOT STAND BY	COLD SHUT DOWN	ELEC	AIR		EQUIPMENT ID NO.	EQUIPMENT DESCRIPTION	ELEC NODE	FIRE AREA/ZONE		SCHEM.	CABLE			
36	EDE-US-51	480 V Unit Substation 125 V DC Control Bus		A	310442	CB-F-1A-A	X	X	X	-	AB3	EDE-E93/2-72 EDE-AB3-8	125 V DC Circuit Breaker 125 V DC Circuit Breaker (Main)	E93 AB3	CB-F-1A-A CB-F-1A-A	AB3-E93	310107 E93a 310103 5m	E93b	CBA-FN-19 CBA-FN-20 EDE-PP-111A	EDE-US-61	
37	EDE-US-52	480 V Unit Substation 125 V DC Control Bus		A	310442	CB-F-1A-A	X	X	X	-	AC3	EDE-E93/3-72 EDE-AC3-8	125 V DC Circuit Breaker 125 V DC Circuit Breaker (Main)	E93 AC3	CB-F-1A-A CB-F-1A-A	AC3-E93	310107 E93a 310103 5n	E93b	CBA-FN-19 CBA-FN-20 EDE-PP-111A	EDE-US-62	
38	EDE-US-53	480 V Unit Substation 125 V DC Control Bus		A	310442	CB-F-1A-A	X	X	X	-	AF3	EDE-E93/4-72 EDE-AF3-8	125 V DC Circuit Breaker 125 V DC Circuit Breaker (Main)	E93 AF3	CB-F-1A-A CB-F-1A-A	AF3-E93	310107 E93a 310103 5o	E93b	CBA-FN-19 CBA-FN-20 EDE-PP-111A	EDE-US-63	
39	DG-CP-75A	Diesel Generator 1A Control Panel Cubicle 3 125 V DC Supply	310010 310042	A	310524	DG-F-2A-A	X	X	X	-	G10	EDE-DM9-72 DG-G10-72	125 V DC Circuit Breaker 125 V DC Circuit Breaker (Main)	DM9 G10	CB-F-1A-A DG-F-2A-A	DM9-G10	310102 DM9a 310107 DB1a	DM9b	DAH-FN-25A DAH-FN-26A EDE-SWG-11A CBA-FN-19 CBA-FN-20	DG-CP-76A	
40	ED-US-11	480 V Unit Substation 125 V DC Control Bus	310002 310011	A	310442	CB-F-1A-A	X	X	X	-	AG3	EDE-E97/13-72 EDE-AG3-72	125 V DC Circuit Breaker (Main) 125 V DC Circuit Breaker	E97 AG3	NES-F-1A-Z CB-F-1A-A	AG3-E97	310107 E97a 310103 5a	E97b	EDE-AG1-X-4A CBA-FN-19 CBA-FN-20	ED-US-23	
41	ED-US-23	480 V Unit Substation 125 V DC Control Bus	310002 310011	B	310442	CB-F-1A-A	X	X	X	-	AM3	EDE-E97/14-72 EDE-AM3-72	125 V DC Circuit Breaker 125 V DC Circuit Breaker	E97 AM3	NES-F-1A-Z CB-F-1A-A	AM3-E97	310107 E97a 310103 5h	E97b	EDE-AM1-X-4F CBA-FN-19 CBA-FN-20	ED-US-11	

FUNCTION: ELECTRICAL DISTRIBUTION EMERGENCY

ITEM NO.	EQUIPMENT ID NO.	EQUIPMENT DESCRIPTION	P&ID/1-LINE DRAWING NO.	TRAIN	PHYSICAL LOCATION DRAWING NO.	FIRE AREA/ZONE	REQUIRED FOR		POWER		ELEC NODE	SUPPORTING CONTROL AND INSTRUMENTATION EQUIPMENT				CABLES	ELECTRICAL DRAWING NO.		SUPPORTING SYSTEMS	REDUNDANT COUNTERPART	REMARKS
							HOT STAND BY	COLD SHUT DOWN	ELEC	AIR		EQUIPMENT ID NO.	EQUIPMENT DESCRIPTION	ELEC NODE	FIRE AREA/ZONE		SCHEM.	CABLE			
42	EDE-SWG-6	4160 V Bus E6 UAT Incoming Line SWGR	310008	B	310442	CB-F-1B-A	X	X	X	-	A71	EDE-A71-52	4160 V Circuit Breaker	A71	CB-F-1B-A	A71-G19 A71-G19/2 A71-G20 A71-HR0 GA6-GB0/5 A71-G19/1 A71-G19/3 A71-GB4 GA0-GB3/5 GC4-GC6/5 A71-G5Y A71-G5Y/1 G19-HR0 F81-G19/G F81-G19/C F81-G19/6 G19-HR4 F81-G19/A A75-A7A A74-A7A/1	310102 A71a A71b A71c A71d A71e	A71h A71i A71k	CBA-FN-32 CBA-FN-33 ED-X-2B EDE-PP-111B DAH-FN-25B DAH-FN-26B	EDE-SWG-5 UAT	
												EDE-CS-9719-2	Control Switch	A71	CB-F-1B-A						
												EDE-CS-9719-3	Control Switch with Indication	G19	DG-F-2B-A						
												EDE-A71-G,R,W	Indicating Lights	A71	CB-F-1B-A						
												EDE-SS-9717	Selector Switch	G19	DG-F-2B-A						
												EDE-SS-9719	Selector Switch	G19	DG-F-2B-A						
												EDE-A71-52H	Truck Operated Contact	A71	CB-F-1B-A						
												EDE-A71-FU	Fuses	A71	CB-F-1B-A						
												EDE-A71-CT1	Current Transformers (2000/5)	A71	CB-F-1B-A						
												EDE-A71-TD-1	CT Test Device	A71	CB-F-1B-A						
												EDE-A71-AM	Ammeter	A71	CB-F-1B-A						
												EDE-A71-AS	Ammeter Switch	A71	CB-F-1B-A						
												EDE-A71-ATR	Transducer	A71	CB-F-1B-A						
												EDE-A71-CT2	Current Transformers (4000/5)	A71	CB-F-1B-A						
												EDE-A87-PT	Potential Transformer	A87	CB-F-1B-A						
												EDE-A71-TD-3	PT Test Device	A71	CB-F-1B-A						
												EDE-A71-VM	Voltmeter	A71	CB-F-1B-A						
												EDE-A71-86	Lockout Relay	A71	CB-F-1B-A						
												EDE-A74-52S	Mechanically Operated Contact	A74	CB-F-1B-A						
												EDE-A72-52S	Mechanically Operated Contact	A72	CB-F-1B-A						
												DG-G20-25Y1	Auxiliary Sync Check Relay	G20	DG-F-2B-A						
												EDE-A73-25U	Synchronizing Check Relay	A73	CB-F-1B-A						
												EDE-SS-9719-1	Selector Switch	G5Y	DG-F-2B-A						
												EDE-CS-9717-3	Control Switch	G19	DG-F-2B-A						
												EDE-SNS-9737-2	Synchronizing Switch	G18	DG-F-2B-A						
												EDE-A72-86	Lockout Relay	A72	CB-F-1B-A						
												EDE-A89-86B	Lockout Relay	A89	CB-F-1B-A						
												ED-86SB/2/1X-1	Lockout Relay	GA0	TB-F-1C-Z						
												ED-86-2/2/B3	Lockout Relay	GA6	TB-F-1C-Z						
												ED-86UB/2/1X-2A	Lockout Relay	GA8	TB-F-1C-Z						
												ED-86UB/2/1X-2B	Lockout Relay	GA8	TB-F-1C-Z						
												ED-86BF-2/2/52/TG1	Lockout Relay	GA9	TB-F-1C-Z						
												ED-86GT/2/TG-1	Lockout Relay	GA9	TB-F-1C-Z						
												ED-86-1/2/B3	Lockout Relay	GB0	TB-F-1C-Z						

FUNCTION: ELECTRICAL DISTRIBUTION EMERGENCY

ITEM NO.	EQUIPMENT ID NO.	EQUIPMENT DESCRIPTION	P&ID/1-LINE DRAWING NO.	TRAIN	PHYSICAL LOCATION DRAWING NO.	FIRE AREA/ZONE	REQUIRED FOR		POWER		ELEC NODE	SUPPORTING CONTROL AND INSTRUMENTATION EQUIPMENT				CABLES	ELECTRICAL DRAWING NO.		SUPPORTING SYSTEMS	REDUNDANT COUNTERPART	REMARKS
							HOT STAND BY	COLD SHUT DOWN	ELEC	AIR		EQUIPMENT ID NO.	EQUIPMENT DESCRIPTION	ELEC NODE	FIRE AREA/ZONE		SCHEM.	CABLE			
42	EDE-SWG-6 (Continued)											ED-86BF-2/2H	Lockout Relay	GB3	TB-F-1C-Z						
												ED-86BF-2/2E	Lockout Relay	GB4	TB-F-1C-Z						
												ED-86UP/2/1X-2A	Lockout Relay	GC2	TB-F-1C-Z						
												ED-86UP/2/1X-2B	Lockout Relay	GC2	TB-F-1C-Z						
												ED-86BF-1/2/52/TG1	Lockout Relay	GC3	TB-F-1C-Z						
												ED-86SP/2/1X-1	Lockout Relay	GC4	TB-F-1C-Z						
												ED-86BF-1/2H	Lockout Relay	GC6	TB-F-1C-Z						
												ED-86BF-1/2E	Lockout Relay	GC7	TB-F-1C-Z						
												DG-HR0-RM0	EPS Auxiliary Relay	HR0	CB-F-1B-A						
												EDE-A71-3	Interposing Relay for SWYD Lockout Relays	A71	CB-F-1B-A						
												EDE-A71-TD-2	Lockout Relay Test Device (A71-86)	A71	CB-F-1B-A						
												EDE-A71-TD-4	Interposing Relay Test Device (A71-3)	A71	CB-F-1B-A						
												EDE-CS-9719-4	Control Switch	F81	CB-F-3A-A						
												ED-GA0-TD-2	Lockout Relay Test Device (86SB/2/1X-1)	GA0	TB-F-1C-Z						
												ED-GA6-TD-2	Lockout Relay Test Device (86-2/2/B3)	GA6	TB-F-1C-Z						
												ED-GA8-TD-2	Lockout Relay Test Device (86UB/2/1X-2A)	GA8	TB-F-1C-Z						
												ED-GA8-TD-2	Lockout Relay Test Device (86UB/2/1X-2B)	GA8	TB-F-1C-Z						
												ED-GA9-TD-2	Lockout Relay Test Device (86BF-2/2/52/TG1)	GA9	TB-F-1C-Z						
												ED-GA9-TD-2	Lockout Relay Test Device (86GT/2/TG-1)	GA9	TB-F-1C-Z						
												ED-GB0-TD-2	Lockout Relay Test Device (86-1/2/B3)	GB0	TB-F-1C-Z						
												ED-GB3-TD-2	Lockout Relay Test Device (86BF-2/2H)	GB3	TB-F-1C-Z						
												ED-GB4-TD-2	Lockout Relay Test Device (86BF-2/2E)	GB4	TB-F-1C-Z						
												ED-GC2-TD-2	Lockout Relay Test Device (86UP/2/1X-2A)	GC2	TB-F-1C-Z						
												ED-GC2-TD-2	Lockout Relay Test Device (86UP/2/1X-2B)	GC2	TB-F-1C-Z						
												ED-GC3-TD-2	Lockout Relay Test Device (86BF-1/2/52/TG1)	GC3	TB-F-1C-Z						
												ED-GC4-TD-2	Lockout Relay Test Device (86SP/2/1X-1)	GC4	TB-F-1C-Z						
												ED-GC6-TD-2	Lockout Relay Test Device (86BF-1/2H)	GC6	TB-F-1C-Z						
												ED-GC7-TD-2	Lockout Relay Test Device (86BF-1/2E)	GC7	TB-F-1C-Z						

FUNCTION: ELECTRICAL DISTRIBUTION EMERGENCY

ITEM NO.	EQUIPMENT ID NO.	EQUIPMENT DESCRIPTION	P&ID/1-LINE DRAWING NO.	TRAIN	PHYSICAL LOCATION DRAWING NO.	FIRE AREA/ZONE	REQUIRED FOR		POWER		ELEC NODE	SUPPORTING CONTROL AND INSTRUMENTATION EQUIPMENT				CABLES	ELECTRICAL DRAWING NO.		SUPPORTING SYSTEMS	REDUNDANT COUNTERPART	REMARKS
							HOT STAND BY	COLD SHUT DOWN	ELEC	AIR		EQUIPMENT ID NO.	EQUIPMENT DESCRIPTION	ELEC NODE	FIRE AREA/ZONE		SCHEM.	CABLE			
42	EDE-SWG-6 (Continued)											EDE-A71-51	Time Overcurrent Relays øA, øB, øC	A71	CB-F-1B-A						
												EDE-A71-51GS	Ground Sensor Relay	A71	CB-F-1B-A						
												EDE-SNS-9737-1	Synchronizing Switch	F81	CB-F-3A-A						
												EDE-CS-9719-1	Control Switch with Indicating Lights	F81	CB-F-3A-A						
												DG-HR4-RMO	EPS Auxiliary Relay	HR4	CB-F-1B-A						
												EDE-CS-9717-1	Control Switch	F81	CB-F-3A-A						
												EDE-A7A-52S	Mechanically Operated Contact	A7A	CB-F-1B-A						
43	EDE-SWG-6	Grounding Transformer	310008	B	310442	CB-F-1B-A	X	X	X	-	A87	EDE-A87-XFMR	3-1ø 15 KVA Transformers	A87	CB-F-1B-A		310102 A87a		CBA-FN-32 CBA-FN-33 EDE-SWG-6	EDE-SWG-5 GRD XFMR	
												EDE-A87-FU	3-10A Fuses	A87	CB-F-1B-A						
												EDE-A87-52	120 V AC Circuit Breaker	A87	CB-F-1B-A						
												EDE-A87-RES	Grounding Resistor	A87	CB-F-1B-A						
												EDE-A87-64	Ground Relay	A87	CB-F-1B-A						
												EDE-A87-TD-3	VM Test Device	A87	CB-F-1B-A						
												EDE-A87-VM	(3) Ground Voltmeters	A87	CB-F-1B-A						

FUNCTION: ELECTRICAL DISTRIBUTION EMERGENCY

ITEM NO.	EQUIPMENT ID NO.	EQUIPMENT DESCRIPTION	P&ID/1-LINE DRAWING NO.	TRAIN	PHYSICAL LOCATION DRAWING NO.	FIRE AREA/ZONE	REQUIRED FOR		POWER		ELEC NODE	SUPPORTING CONTROL AND INSTRUMENTATION EQUIPMENT				CABLES	ELECTRICAL DRAWING NO.		SUPPORTING SYSTEMS	REDUNDANT COUNTERPART	REMARKS
							HOT STAND BY	COLD SHUT DOWN	ELEC	AIR		EQUIPMENT ID NO.	EQUIPMENT DESCRIPTION	ELEC NODE	FIRE AREA/ZONE		SCHEM.	CABLE			
44	EDE-SWG-6	4160 V Bus E6 RAT Incoming Line SWGR	310008	B	310442	CB-F-1B-A	X	X	X	-	A72	EDE-A72-52	4160 V Circuit Breaker	A72	CB-F-1B-A	A72-G19 A72-G19/2 A72-G20 A72-HR4 GA7-GB7/5 GE6-GE7/5 A72-G19/1 A72-G19/3 A72-GB7 A72-HR0 GC1-GC0/5 A72-G5Y A72-G5Y/1 F81-G19/H A72-F81 F81-G19/B F81-G19/4 A74-A7A/2	310102 A72a A72b A72c A72d A72e	 A72j A72k A72l	CBA-FN-32 CBA-FN-33 ED-X-3B EDE-PP-111B DAH-FN-25B DAH-FN-26B	EDE-SWG-5 RAT	
												EDE-CS-9717-2	Control Switch	A72	CB-F-1B-A						
												EDE-CS-9717-3	Control Switch with Indication	G19	DG-F-2B-A						
												EDE-A72-G,R,W	Indicating Lights	A72	CB-F-1B-A						
												EDE-SS-9717	Selector Switch	G19	DG-F-2B-A						
												EDE-SS-9719	Selector Switch	G19	DG-F-2B-A						
												EDE-A72-52H	Truck Operated Contact	A72	CB-F-1B-A						
												EDE-A72-FU	Fuses	A72	CB-F-1B-A						
												EDE-A72-27/59	Under/Over Voltage Relay	A72	CB-F-1B-A						
												EDE-A72-27/59X1,X2	Under/Over Voltage Auxiliary Relay	A72	CB-F-1B-A						
												EDE-A72-CT-1	Current Transformer (2000/5)	A72	CB-F-1B-A						
												EDE-A72-52Z	Time Delay Relay	A72	CB-F-1B-A						
												EDE-SS-9717-1	Selector Switch	G5Y	DG-F-2B-A						
												EDE-CS-9719-3	Control Switch	G19	DG-F-2B-A						
												EDE-A72-TD-1	CT Test Device	A72	CB-F-1B-A						
												EDE-A72-AM	Ammeter	A72	CB-F-1B-A						
												EDE-A72-AS	Ammeter Switch	A72	CB-F-1B-A						
												EDE-A72-ATR	Transducer	A72	CB-F-1B-A						
												EDE-A72-CT-2	Current Transformer (4000/5)	A72	CB-F-1B-A						
												EDE-A73-PT	Potential Transformer	A73	CB-F-1B-A						
												EDE-A72-TD-3	PT Test Device	A72	CB-F-1B-A						
												EE-A72-VM	Voltmeter	A72	CB-F-1B-A						
												EDE-A72-52S	Mechanically Operated Contact	A72	CB-F-1B-A						
												EDE-A89-86B	Lockout Relay	A89	CB-F-1B-A						
												EDE-A72-86	Lockout Relay	A72	CB-F-1B-A						
												EDE-A71-86	Lockout Relay	A71	CB-F-1B-A						
												DG-HR4-RM0	EPS Auxiliary Relay	HR4	CB-F-1B-A						
												DG-HR0-RM0	EPS Auxiliary Relay	HR0	CB-F-1B-A						
												EDE-A71-52S	Mechanically Operated Contact	A71	CB-F-1B-A						
												EDE-A74-52S	Mechanically Operated Contact	A74	CB-F-1B-A						
												EDE-SNS-9737-2	Synchronizing Switch	G18	DG-F-2B-A						
												DG-G20-25Y	Auxiliary Synchronizing Check Relay	G20	DG-F-2B-A						
												EDE-A73-25RX	Auxiliary Synchronizing Check Relay	A73	CB-F-1B-A						

FUNCTION: ELECTRICAL DISTRIBUTION EMERGENCY

ITEM NO.	EQUIPMENT ID NO.	EQUIPMENT DESCRIPTION	P&ID/1-LINE DRAWING NO.	TRAIN	PHYSICAL LOCATION DRAWING NO.	FIRE AREA/ZONE	REQUIRED FOR		POWER		ELEC NODE	SUPPORTING CONTROL AND INSTRUMENTATION EQUIPMENT				CABLES	ELECTRICAL DRAWING NO.		SUPPORTING SYSTEMS	REDUNDANT COUNTERPART	REMARKS
							HOT STAND BY	COLD SHUT DOWN	ELEC	AIR		EQUIPMENT ID NO.	EQUIPMENT DESCRIPTION	ELEC NODE	FIRE AREA/ZONE		SCHEM.	CABLE			
44	EDE-SWG-6 (Continued)											EDE-A73-25R	Synchronizing Check Relay	A73	CB-F-1B-A						
												EDE-CS-9717-4	Control Switch	F81	CB-F-3A-A						
												EDE-CS-9719-1	Control Switch	F81	CB-F-3A-A						
												EDE-A72-62	Time Delay Relay	A72	CB-F-1B-A						
												EDE-A72-3	Interposing Relay for SWYD Lockout Relays	A71	CB-F-1B-A						
												EDE-A72-TD-2	Lockout Relay Test Device (A72-86)	A72	CB-F-1B-A						
												EDE-A72-TD-4	Interposing Relay Test Device (A72-3)	A72	CB-F-1B-A						
												EDE-SNS-9737-1	Synchronizing Switch	F81	CB-F-3A-A						
												EDE-CS-9717-1	Control Switch with Indicating Light	F81	CB-F-3A-A						
												EDE-A73-62BX	Auxiliary Latch Relay	A73	CB-F-1B-A						
												EDE-A73-25R	Synchronizing Check Relay	A73	CB-F-1B-A						
												EDE-A73-27RB-1	Residual Undervoltage Relay	A73	CB-F-1B-A						
												EDE-A73-27RB-2	Residual Undervoltage Relay	A73	CB-F-1B-A						
												EDE-A72-62X	Auxiliary Relay	A72	CB-F-1B-A						
												ED-86RB/2/1X-3A	Lockout Relay	GA7	TB-F-1C-Z						
												ED-86-2/2/B2	Lockout Relay	GB7	TB-F-1C-Z						
												ED-86-1/2/B2	Lockout Relay	GC0	TB-F-1C-Z						
												ED-86RP/2/1X-3A	Lockout Relay	GC1	TB-F-1C-Z						
												ED-86RP/2/1X-3B	Lockout Relay	GE6	TB-F-1C-Z						
												ED-86RB/2/1X-3B	Lockout Relay	GE7	TB-F-1C-Z						
												ED-GA7-TD-2	Lockout Relay Test Device (86RB/2/1X-3A)	GA7	TB-F-1C-Z						
												ED-GB7-TD-2	Lockout Relay Test Device (86-2/2/B2)	GB7	TB-F-1C-Z						
												ED-GC0-TD-2	Lockout Relay Test Device (86-1/2/B2)	GC0	TB-F-1C-Z						
												ED-GC1-TD-2	Lockout Relay Test Device (86RP/2/1X-3A)	GC1	TB-F-1C-Z						
												ED-GE6-TD-2	Lockout Relay Test Device (86RP/2/1X-3B)	GE6	TB-F-1C-Z						
												ED-GE7-TD-2	Lockout Relay Test Device (86RB/2/1X-3B)	GE7	TB-F-1C-Z						
												EDE-A72-51	Time Overcurrent Relays øA, øB, øC	A72	CB-F-1B-A						
												EDE-A72-51GS	Ground Sensor Relay	A72	CB-F-1B-A						
												EDE-A7A-52S	Mechanically Operated Contact	A7A	CB-F-1B-A						

FUNCTION: ELECTRICAL DISTRIBUTION EMERGENCY

ITEM NO.	EQUIPMENT ID NO.	EQUIPMENT DESCRIPTION	P&ID/1-LINE DRAWING NO.	TRAIN	PHYSICAL LOCATION DRAWING NO.	FIRE AREA/ZONE	REQUIRED FOR		POWER		ELEC NODE	SUPPORTING CONTROL AND INSTRUMENTATION EQUIPMENT				CABLES	ELECTRICAL DRAWING NO.		SUPPORTING SYSTEMS	REDUNDANT COUNTERPART	REMARKS
							HOT STAND BY	COLD SHUT DOWN	ELEC	AIR		EQUIPMENT ID NO.	EQUIPMENT DESCRIPTION	ELEC NODE	FIRE AREA/ZONE		SCHEM.	CABLE			
45	EDE-SWG-6	4160 V Bus E6 PT Compartment	310008	B	310442	CB-F-1B-A	X	X	X	-	A73	EDE-A73-PT	Potential Transformer	A73	CB-F-1B-A	A73-AE2 A73-G19 A73-HR4 AE2-AF7 AF7-EE6 AW2-EE6 F81-G19/5 A73-FB0 A74-A7A/4 A74-A7A/5 A75-A7A/1 A75-A7A/2	310102 A73a A73e A73h	A73d	CBA-FN-32 CBA-FN-33 EDE-SWG-6 EDE-PP-111B DAH-FN-25B DAH-FN-26B	EDE-SWG-5 PT	
												EDE-A73-VM	Voltmeter	A73	CB-F-1B-A						
												EDE-A73-VS	Voltmeter Switch	A73	CB-F-1B-A						
												EDE-A73-TD-3	PT Test Device	A73	CB-F-1B-A						
												EDE-A73-VTR-1	Voltage Transducer	A73	CB-F-1B-A						
												EDE-A73-VTR-2	Voltage Transducer	A73	CB-F-1B-A						
												EDE-SS-9719	Selector Switch	G19	DG-F-2B-A						
												EDE-SNS-9737-2	Synchronizing Switch	G18	DG-F-2B-A						
												EDE-A73-25U	Synchronizing Check Relay	A73	CB-F-1B-A						
												EDE-A73-25R	Synchronizing Check Relay	A73	CB-F-1B-A						
												EDE-A74-52S	Mechanically Operated Contact	A74	CB-F-1B-A						
												EDE-A73-27B-1	Instantaneous Undervoltage Relay	A73	CB-F-1B-A						
												EDE-A73-27B-2	Instantaneous Undervoltage Relay	A73	CB-F-1B-A						
												EDE-A73-TS-3	UV Relays Test Switch	A73	CB-F-1B-A						
												EDE-A73-27D-1	Instantaneous Undervoltage Relay	A73	CB-F-1B-A						
												EDE-A73-27D-1-RES	Resistor	A73	CB-F-1B-A						
												EDE-A73-27D-2	Instantaneous Undervoltage Relay	A73	CB-F-1B-A						
												EDE-A73-27D-2-RES	Resistor	A73	CB-F-1B-A						
												EDE-A73-TS-1	UV Relays Test Switch	A73	CB-F-1B-A						
												EDE-A72-27RB-1,2	Residual Undervoltage Relay	A72	CB-F-1B-A						
												EDE-A73-62B	Time Delay Relay	A73	CB-F-1B-A						
												EDE-A73-62B-RES	Resistor	A73	CB-F-1B-A						
												EDE-A73-TS-4	Test Switch EDE-62B	A73	CB-F-1B-A						
												EDE-A73-62BX-1	Auxiliary Relay	A73	CB-F-1B-A						
												EDE-A73-62BX	Auxiliary Latch Relay	A73	CB-F-1B-A						
												EDE-A71-52S	Mechanically Operated Contact	A71	CB-F-1B-A						
												EDE-AW3-94-5	Undervoltage Tripping Relay	AW3	CB-F-1B-A						
												EDE-A72-27/59X1	Under/Over Voltage Auxiliary Relay	A72	CB-F-1B-A						
												EDE-AF8-94-4	Undervoltage Tripping Relay	AF8	CB-F-1B-A						
												DG-HR4-RM0	EPS Auxiliary Relay	HR4	CB-F-1B-A						
												EDE-A73-94-1A	Undervoltage Tripping Relay	A73	CB-F-1B-A						
												EDE-A73-94-1B	Undervoltage Tripping Relay	A73	CB-F-1B-A						

FUNCTION: ELECTRICAL DISTRIBUTION EMERGENCY

ITEM NO.	EQUIPMENT ID NO.	EQUIPMENT DESCRIPTION	P&ID/1-LINE DRAWING NO.	TRAIN	PHYSICAL LOCATION DRAWING NO.	FIRE AREA/ZONE	REQUIRED FOR		POWER		ELEC NODE	SUPPORTING CONTROL AND INSTRUMENTATION EQUIPMENT				CABLES	ELECTRICAL DRAWING NO.		SUPPORTING SYSTEMS	REDUNDANT COUNTERPART	REMARKS
							HOT STAND BY	COLD SHUT DOWN	ELEC	AIR		EQUIPMENT ID NO.	EQUIPMENT DESCRIPTION	ELEC NODE	FIRE AREA/ZONE		SCHEM.	CABLE			
45	EDE-SWG-6 (Continued)											EDE-A73-94-2	Undervoltage Tripping Relay	A73	CB-F-1B-A						
												EDE-AE3-94-3	Undervoltage Tripping Relay	AE3	CB-F-1B-A						
												EDE-EE6-94-6	Tripping Relay	EE6	CB-F-1B-A						
												EDE-A73-FU	10A Fuses	A73	CB-F-1B-A						
												EDE-A73-62D	Time Delay Relay	A73	CB-F-1B-A						
												EDE-A73-62D-RES	Resistor	A73	CB-F-1B-A						
												EDE-A73-TS-2	Test Switch Relay 62D	A73	CB-F-1B-A						
												EDE-A73-62DX	Auxiliary Relay	A73	CB-F-1B-A						
												EDE-SNS-9737-1	Synchronizing Switch	F81	CB-F-3A-A						
												EDE-A73-FU	3A Fuse	A73	CB-F-1B-A						
												EDE-FB0-K609B	SI Sig. Act. Auxiliary Relay	FB0	CB-F-3A-A						
												EDE-A7A-52S	Mechanically Operated Contact	A7A	CB-F-1B-A						

FUNCTION: ELECTRICAL DISTRIBUTION EMERGENCY

ITEM NO.	EQUIPMENT ID NO.	EQUIPMENT DESCRIPTION	P&ID/1-LINE DRAWING NO.	TRAIN	PHYSICAL LOCATION DRAWING NO.	FIRE AREA/ZONE	REQUIRED FOR		POWER		ELEC NODE	SUPPORTING CONTROL AND INSTRUMENTATION EQUIPMENT				CABLES	ELECTRICAL DRAWING NO.		SUPPORTING SYSTEMS	REDUNDANT COUNTERPART	REMARKS
							HOT STAND BY	COLD SHUT DOWN	ELEC	AIR		EQUIPMENT ID NO.	EQUIPMENT DESCRIPTION	ELEC NODE	FIRE AREA/ZONE		SCHEM.	CABLE			
46	EDE-SWG-6	4160 V Bus E6 DG-1B Incoming Line SWGR	310010 310008	B	310442	CB-F-1B-A	X	X	X	-	A74	EDE-A74-52	4160 V Circuit Breaker	A74	CB-F-1B-A	A74-G18/2 A74-G18/3 A74-G18/4 A74-G19 A74-G19/1 A74-G19/2 A74-HP1 G18-G30/7 A74-G18/8 F81-G18/3 A74-F81 A74-F81/1 A74-FB0 A74-HR0 A74-A7A/3	310102 A74a A74b A74c A74d A74e A74f	A74k A74n	CBA-FN-32 CBA-FN-33 DAH-FN-25B DAH-FN-26B EDE-PP-111B DG-DG-1B	EDE-SWG-5 DG-1A	
												EDE-CS-9710-2	Control Switch	A74	CB-F-1B-A						
												EDE-CS-9710-3	Control Switch with Indication	G18	DG-F-2B-A						
												EDE-A74-G,R,W	Indicating Lights	A74	CB-F-1B-A						
												EDE-SS-9710	Selector Switch	G18	DG-F-2B-A						
												EDE-SNS-9737-2	Synchronizing Switch	G18	DG-F-2B-A						
												EDE-A74-52H	Truck Operated Contact	A74	CB-F-1B-A						
												EDE-A74-FU	Fuses	A74	CB-F-1B-A						
												EDE-A74-CT	Current Transformers (2000/5)	A74	CB-F-1B-A						
												EDE-A74-DCT	Differential Current Transformers (2000/5)	A74	CB-F-1B-A						
												DG-HP1-DCT	DG-1B Neutral Differential Current Transformers (2000/5)	HP1	DG-F-2B-A						
												DG-G18-CT	Auxiliary Current Transformer (5:10)	G18	DG-F-2B-A						
												EDE-A74-AM	Ammeter	A74	CB-F-1B-A						
												EDE-A74-AS-1	Ammeter Switch	A74	CB-F-1B-A						
												EDE-A74-ATR-1	Current Transducer	A74	CB-F-1B-A						
												EDE-A74-ATR-2	Current Transducer	A74	CB-F-1B-A						
												EDE-AM-9710-2	Ammeter	G18	DG-F-2B-A						
												EDE-G18-AS	Ammeter Switch	G18	DG-F-2B-A						
												DG-SM-9587	Governor Control (2301A)	G18	DG-F-2B-A						
												EDE-A89-PT	DG-1B Inc. Line Pot. Transformer (2) 4200-120 V	A89	CB-F-1B-A						
												EDE-A89-VM	Voltmeter	A89	CB-F-1B-A						
												EDE-A89-VS	Voltmeter Switch	A89	CB-F-1B-A						
												EDE-A89-TD-3	PT Test Device	A89	CB-F-1B-A						
												EDE-A89-VTR-1	Voltage Transducer	A89	CB-F-1B-A						
												EDE-A89-VTR-2	Voltage Transducer	A89	CB-F-1B-A						
												EDE-A74-27DG	Undervoltage Relay	A74	CB-F-1B-A						
												EDE-A89-FTR-1	Frequency Transducer	A89	CB-F-1B-A						
												EDE-A89-FTR-2	Frequency Transducer	A89	CB-F-1B-A						
												EDE-A89-W/WH-TR	Watt/Watthour Transducer	A89	CB-F-1B-A						
												EDE-A89-W/TR	Watt Transducer	A89	CB-F-1B-A						
												EDE-A89-VAR-TR	Var Transducer	A89	CB-F-1B-A						
												EDE-A74-TS	Test Start Switch	A74	CB-F-1B-A						
												EDE-A74-52Z	Time Delay Relay	A74	CB-F-1B-A						

FUNCTION: ELECTRICAL DISTRIBUTION EMERGENCY

ITEM NO.	EQUIPMENT ID NO.	EQUIPMENT DESCRIPTION	P&ID/1-LINE DRAWING NO.	TRAIN	PHYSICAL LOCATION DRAWING NO.	FIRE AREA/ZONE	REQUIRED FOR		POWER		ELEC NODE	SUPPORTING CONTROL AND INSTRUMENTATION EQUIPMENT				CABLES	ELECTRICAL DRAWING NO.		SUPPORTING SYSTEMS	REDUNDANT COUNTERPART	REMARKS
							HOT STAND BY	COLD SHUT DOWN	ELEC	AIR		EQUIPMENT ID NO.	EQUIPMENT DESCRIPTION	ELEC NODE	FIRE AREA/ZONE		SCHEM.	CABLE			
46	EDE-SWG-6											EDE-A74-81-RES	Resistor	A74	CB-F-1B-A						
												EDE-A89-86B	Lockout Relay	A89	CB-F-1B-A						
												EDE-A89-86DB	Back-Up Lockout Relay	A89	CB-F-1B-A						
												EDE-A89-W	Indicating Lights (A89-86B & A89-86DB)	A89	CB-F-1B-A						
												EDE-A74-W	Indicating Light (A74-86DP)	A74	CB-F-1B-A						
												EDE-A74-86DP	Primary Lockout Relay	A74	CB-F-1B-A						
												EDE-A71-86	Lockout Relay	A71	CB-F-1B-A						
												EDE-A72-86	Lockout Relay	A72	CB-F-1B-A						
												EDE-A71-52S	Mechanically Operated Contact	A71	CB-F-1B-A						
												EDE-A72-52S	Mechanically Operated Contact	A72	CB-F-1B-A						
												EDE-A74-52S	Mechanically Operated Contact	A74	CB-F-1B-A						
												EDE-A89-RLA	LOCA Seal Relay	A89	CB-F-1B-A						
												DG-G20-25Y	Auxiliary Sync Check Relay	G20	DG-F-2B-A						
												EDE-A89-RS	Fast Closure Relay	A89	CB-F-1B-A						
												EDE-A74-81	Frequency Relay	A74	CB-F-1B-A						
												EDE-A74-87DP	Primary Differential Relay	A74	CB-F-1B-A						
												EDE-A89-51B	Time Overcurrent Relays øA, øB, øC	A89	CB-F-1B-A						
												EDE-A74-81X	Auxiliary Frequency Relay	A74	CB-F-1B-A						
												EDE-A89-60	Voltage Balance Relay	A89	CB-F-1B-A						
												EDE-A89-60AX	Auxiliary Voltage Balance Relay	A89	CB-F-1B-A						
												EDE-A89-60BX	Auxiliary Voltage Balance Relay	A89	CB-F-1B-A						
												EDE-A89-40	Loss of Field Relays øA, øB	A89	CB-F-1B-A						
												EDE-A74-40X	Auxiliary Loss of Field Relay	A74	CB-F-1B-A						
												EDE-A89-32	Power Directional Relay	A89	CB-F-1B-A						
												EDE-A89-TD-1	Lockout Relay Test Device (86B)	A89	CB-F-1B-A						
												EDE-A89-TD-2	Lockout Relay Test Device (86DB)	A89	CB-F-1B-A						
												EDE-A74-TD-2	Lockout Relay Test Device (86DP)	A74	CB-F-1B-A						
												DG-G19-R43L5 & R43L6	Selector Switch Auxiliary Relay (Local)	G19	DG-F-2B-A						
												DG-G19-R43R4	Selector Switch Auxiliary Relay (Remote)	G19	DG-F-2B-A						

FUNCTION: ELECTRICAL DISTRIBUTION EMERGENCY

ITEM NO.	EQUIPMENT ID NO.	EQUIPMENT DESCRIPTION	P&ID/1-LINE DRAWING NO.	TRAIN	PHYSICAL LOCATION DRAWING NO.	FIRE AREA/ZONE	REQUIRED FOR		POWER		ELEC NODE	SUPPORTING CONTROL AND INSTRUMENTATION EQUIPMENT				CABLES	ELECTRICAL DRAWING NO.		SUPPORTING SYSTEMS	REDUNDANT COUNTERPART	REMARKS
							HOT STAND BY	COLD SHUT DOWN	ELEC	AIR		EQUIPMENT ID NO.	EQUIPMENT DESCRIPTION	ELEC NODE	FIRE AREA/ZONE		SCHEM.	CABLE			
46	EDE-SWG-6 (Continued)											DG-G19-R43R6	Selector Switch Auxiliary Relay (Remote)	G19	DG-F-2B-A						
												DG-G30-5A	Shutdown Relay	G30	DG-F-2B-A						
												EDE-A89-51V	Time Overcurrent Voltage Restraint Relays øA, øB, øC	A89	CB-F-1B-A						
												DG-G19-R43R3	Selector Switch Auxiliary Relay (Remote)	G19	DG-F-2B-A						
												EDE-A89-51GS	Ground Sensor Relay	A89	CB-F-1B-A						
												EDE-A74-TD-1	Test Device	A74	CB-F-1B-A						
												EDE-CS-9710-1	Control Switch with Indication	F81	CB-F-3A-A						
												EDE-HR0-PRIX	EPS Auxiliary Relay	HR0	CB-F-1B-A						
												EDE-SNS-9737-1	Synchronizing Switch	F81	CB-F-3A-A						
												EDE-A74-81X-RES	Auxiliary Frequency Relay Resistors	A74	CB-F-1B-A						
												EDE-A7A-52S	Mechanically Operated Contact	A7A	CB-F-1B-A						
												EDE-A74-87DP Reactor	Primary Differential Relay Reactor Assembly	A74	CB-F-1B-A						
												EDE-FB0-K601B	SI Signal Act. Output Relay	FB0	CB-F-3A-A						
												EDE-G19-ESS	Emergency Start Auxiliary Relay	G19	DG-F-2B-A						
												EDE-A74-81Y	Time Delay Relay	A74	CB-F-1B-A						

FUNCTION: ELECTRICAL DISTRIBUTION EMERGENCY

ITEM NO.	EQUIPMENT ID NO.	EQUIPMENT DESCRIPTION	P&ID/1-LINE DRAWING NO.	TRAIN	PHYSICAL LOCATION DRAWING NO.	FIRE AREA/ZONE	REQUIRED FOR		POWER		ELEC NODE	SUPPORTING CONTROL AND INSTRUMENTATION EQUIPMENT				CABLES	ELECTRICAL DRAWING NO.		SUPPORTING SYSTEMS	REDUNDANT COUNTERPART	REMARKS
							HOT STAND BY	COLD SHUT DOWN	ELEC	AIR		EQUIPMENT ID NO.	EQUIPMENT DESCRIPTION	ELEC NODE	FIRE AREA/ZONE		SCHEM.	CABLE			
47	DG-CP-76A	Diesel Generator 1B Control Panel Cubicle 2 Synchronizing System	310010	B	310524	DG-F-2B-A	X	X	X	-	G19	EDE-SS-9710	Selector Switch	G18	DG-F-2B-A	F81-G19/9 F81-G19/1	310102 G19/2c 7c	G19/2g 7g	DAH-FN-25B DAH-FN-26B EDE-SWG-11B	DG-CP-75A	
												EDE-SS-9719	Selector Switch	G19	DG-F-2B-A						
												EDE-SS-9717	Selector Switch	G19	DG-F-2B-A						
												DG-G19-FU	125 V DC Fuses	G19	DG-F-2B-A						
												DG-G19-R43R4	Selector Switch Auxiliary Relay (Remote)	G19	DG-F-2B-A						
												DG-G19-R43R6	Selector Switch Auxiliary Relay (Remote)	G19	DG-F-2B-A						
												DG-G19-RAX	Auxiliary Relay, Latch	G19	DG-F-2B-A						
												DG-G19-R43L4	Selector Switch Auxiliary Relay (Local)	G19	DG-F-2B-A						
												EDE-SNS-9737-2	Synchronizing Switch	G18	DG-F-2B-A						
												EDE-CS-9710-3	Control Switch	G18	DG-F-2B-A						
												EDE-CS-9717-3	Control Switch	G19	DG-F-2B-A						
												EDE-CS-9719-3	Control Switch	G19	DG-F-2B-A						
												DG-G18-25DG	Synchronizing Check Relay	G18	DG-F-2B-A						
												DG-G20-25Y	Auxiliary Synchronizing Check Relay	G20	DG-F-2B-A						
												DG-G20-25Y1	Auxiliary Synchronizing Check Relay	G20	DG-F-2B-A						
												EDE-SNS-9737-1	Synchronizing Switch	F81	CB-F-3A-A						
												EDE-CS-9710-1	Control Switch	F81	CB-F-3A-A						
												EDE-CS-9717-1	Control Switch	F81	CB-F-3A-A						
												EDE-CS-9719-1	Control Switch	F81	CB-F-3A-A						
												EDE-A87-PT	UAT X-2B Inc. Line Potential Transformer	A87	CB-F-1B-A						
												EDE-A73-PT	RAT X-3B Inc. Line Potential Transformer	A73	CB-F-1B-A						
												EDE-A73-PT	Bus E6 Potential Transformer	A73	CB-F-1B-A						
												EDE-A89-PT	DG-1B Inc. Line Potential Transformer	A89	CB-F-1B-A						
												EDE-SNS-9737-2	Synchronizing Switch	G18	DG-F-2B-A						
												EDE-SS-9717	Selector Switch	G19	DG-F-2B-A						
												EDE-SS-9719	Selector Switch	G19	DG-F-2B-A						
												DG-G19-R43R3	Selector Switch Auxiliary Relay (Remote)	G19	DG-F-2B-A						
												DG-G19-R43R4	Selector Switch Auxiliary Relay (Remote)	G19	DG-F-2B-A						
												DG-G19-RAX	Auxiliary Relay, Latch	G19	DG-F-2B-A						

FUNCTION: ELECTRICAL DISTRIBUTION EMERGENCY

ITEM NO.	EQUIPMENT ID NO.	EQUIPMENT DESCRIPTION	P&ID/1-LINE DRAWING NO.	TRAIN	PHYSICAL LOCATION DRAWING NO.	FIRE AREA/ZONE	REQUIRED FOR		POWER		ELEC NODE	SUPPORTING CONTROL AND INSTRUMENTATION EQUIPMENT				CABLES	ELECTRICAL DRAWING NO.		SUPPORTING SYSTEMS	REDUNDANT COUNTERPART	REMARKS
							HOT STAND BY	COLD SHUT DOWN	ELEC	AIR		EQUIPMENT ID NO.	EQUIPMENT DESCRIPTION	ELEC NODE	FIRE AREA/ZONE		SCHEM.	CABLE			
47	DG-CP-76A (Continued)											DG-G18-25DG	Synchronizing Check Relay	G18	DG-F-2B-A						
												EDE-SYN-9711	Synchroscope	G18	DG-F-2B-A						
												EDE-ZL-9711	Synchronizing Lights	G18	DG-F-2B-A						
												EDE-VM-9711-1	Synchronizing Voltmeter Incoming	G18	DG-F-2B-A						
												EDE-VM-9711-2	Synchronizing Voltmeter Running	G18	DG-F-2B-A						
												EDE-SYN-9746	Synchroscope	F81	CB-F-3A-A						
												EDE-ZL-9746	Synchronizing Lights	F81	CB-F-3A-A						
												EDE-VM-9746-1	Voltmeter	F81	CB-F-3A-A						
												EDE-VM-9746-2	Voltmeter	F81	CB-F-3A-A						
48	EDE-SWG-6	4160 V Feed to 480 V Transformer EDE-X-5C for Substation Bus EDE-US-61	310008	B	310442	CB-F-1B-A	X	X	X	-	A75	EDE-A75-52	4160 V Circuit Breaker	A75	CB-F-1B-A	A75-AD1 A75-F81/1	310102 A75a A75b A75c A75d	A75g	CBA-FN-32 CBA-FN-33 EDE-PP-111B EDE-SWG-6	EDE-SWG-5 EDE-X-5A EDE-US-51	
												EDE-A75-FU	Fuses	A75	CB-F-1B-A						
												EDE-CS-9716	Control Switch	A75	CB-F-1B-A						
												EDE-A75-G,R,W	Indicating Lights	A75	CB-F-1B-A						
												EDE-SS-9716	Selector Switch	A75	CB-F-1B-A						
												EDE-A75-52H	Truck Operated Contact	A75	CB-F-1B-A						
												EDE-A75-86	Lockout Relay	A75	CB-F-1B-A						
												EDE-A75-TD-2	Lockout Relay Test Device	A75	CB-F-1B-A						
												EDE-A75-50/51	Inst/Time Overcurrent Relays øA, øB, øC	A75	CB-F-1B-A						
												EDE-A75-CT	Current Transformers (300/5)	A75	CB-F-1B-A						
												EDE-A75-AM	Ammeter	A75	CB-F-1B-A						
												EDE-A75-AS	Ammeter Switch	A75	CB-F-1B-A						
												EDE-A75-ATR	Transducer	A75	CB-F-1B-A						
												EDE-A75-TD-1	CT Test Device	A75	CB-F-1B-A						
												EDE-A75-51GS	Ground Sensor Relay	A75	CB-F-1B-A						
												EDE-ZL-9716	Indicating Lights	F81	CB-F-3A-A						

FUNCTION: ELECTRICAL DISTRIBUTION EMERGENCY

ITEM NO.	EQUIPMENT ID NO.	EQUIPMENT DESCRIPTION	P&ID/1-LINE DRAWING NO.	TRAIN	PHYSICAL LOCATION DRAWING NO.	FIRE AREA/ZONE	REQUIRED FOR		POWER		ELEC NODE	SUPPORTING CONTROL AND INSTRUMENTATION EQUIPMENT				CABLES	ELECTRICAL DRAWING NO.		SUPPORTING SYSTEMS	REDUNDANT COUNTERPART	REMARKS
							HOT STAND BY	COLD SHUT DOWN	ELEC	AIR		EQUIPMENT ID NO.	EQUIPMENT DESCRIPTION	ELEC NODE	FIRE AREA/ZONE		SCHEM.	CABLE			
49	EDE-SWG-6	4160 V Feed to 480 V Transformer EDE-X-5D for Substation Bus EDE-US-62	310008	B	310442	CB-F-1B-A	X	X	X	-	A83	EDE-A83-52	4160 V Circuit Breaker	A83	CB-F-1B-A	A83-AE1 A83-F81/1	310102 A83a A83b A83c A83d	A83g	CBA-FN-32 CBA-FN-33 EDE-PP-111B EDE-SWG-6	EDE-SWG-5 EDE-X-5B EDE-US-52	
												EDE-A83-FU	Fuses	A83	CB-F-1B-A						
												EDE-CS-9713	Control Switch	A83	CB-F-1B-A						
												EDE-A83-G,R,W	Indicating Lights	A83	CB-F-1B-A						
												EDE-SS-9713	Selector Switch	A83	CB-F-1B-A						
												EDE-A83-52H	Truck Operated Contact	A83	CB-F-1B-A						
												EDE-A83-86	Lockout Relay	A83	CB-F-1B-A						
												EDE-A83-TD-2	Lockout Relay Test Device	A83	CB-F-1B-A						
												EDE-A83-50/51	Inst/Time Overcurrent Relays øA, øB, øC	A83	CB-F-1B-A						
												EDE-A83-CT	Current Transformers (300/5)	A83	CB-F-1B-A						
												EDE-A83-AM	Ammeter	A83	CB-F-1B-A						
												EDE-A83-AS	Ammeter Switch	A83	CB-F-1B-A						
												EDE-A83-ATR	Transducer	A83	CB-F-1B-A						
												EDE-A83-TD-1	CT Test Device	A83	CB-F-1B-A						
												EDE-A83-51GS	Ground Sensor Relay	A83	CB-F-1B-A						
												EDE-ZL-9713	Indicating Lights	F81	CB-F-3A-A						

FUNCTION: ELECTRICAL DISTRIBUTION EMERGENCY

ITEM NO.	EQUIPMENT ID NO.	EQUIPMENT DESCRIPTION	P&ID/1-LINE DRAWING NO.	TRAIN	PHYSICAL LOCATION DRAWING NO.	FIRE AREA/ZONE	REQUIRED FOR		POWER		ELEC NODE	SUPPORTING CONTROL AND INSTRUMENTATION EQUIPMENT				CABLES	ELECTRICAL DRAWING NO.		SUPPORTING SYSTEMS	REDUNDANT COUNTERPART	REMARKS
							HOT STAND BY	COLD SHUT DOWN	ELEC	AIR		EQUIPMENT ID NO.	EQUIPMENT DESCRIPTION	ELEC NODE	FIRE AREA/ZONE		SCHEM.	CABLE			
50	EDE-SWG-6	4160 V Feed to 480 V Transformer EDE-X-5F for Substation Bus EDE-US-63	310008	B	310442	CB-F-1B-A	X	X	X	-	A90	EDE-A90-52	4160 V Circuit Breaker	A90	CB-F-1B-A	A90-AF6 A90-F81/1	310102 A90a A90b A90c A90d	A90g	CBA-FN-32 CBA-FN-33 EDE-PP-111B EDE-SWG-6	EDE-SWG-5 EDE-X-5E EDE-US-53	
												EDE-A90-FU	Fuses	A90	CB-F-1B-A						
												EDE-CS-9743	Control Switch	A90	CB-F-1B-A						
												EDE-A90-G,R,W	Indicating Lights	A90	CB-F-1B-A						
												EDE-SS-9743	Selector Switch	A90	CB-F-1B-A						
												EDE-A90-52H	Truck Operated Contact	A90	CB-F-1B-A						
												EDE-A90-86	Lockout Relay	A90	CB-F-1B-A						
												EDE-A90-TD2	Lockout Relay Test Device	A90	CB-F-1B-A						
												EDE-A90-50/51	Inst/Time Overcurrent Relays øA, øB, øC	A90	CB-F-1B-A						
												EDE-A90-CT	Current Transformers (300/5)	A90	CB-F-1B-A						
												EDE-A90-AM	Ammeter	A90	CB-F-1B-A						
												EDE-A90-AS	Ammeter Switch	A90	CB-F-1B-A						
												EDE-A90-ATR	Transducer	A90	CB-F-1B-A						
												EDE-A90-TD1	CT Test Device	A90	CB-F-1B-A						
												EDE-A90-51GS	Ground Sensor Relay	A90	CB-F-1B-A						
												EDE-ZL-9743	Indicating Lights	A90	CB-F-1B-A						
51	EDE-US-61	480 V Bus 61 Unit Substation	310014	B	310442	CB-F-1B-A	X	X	X	-	AD2	EDE-AD2-52	480 V AC Circuit Breaker	AD2	CB-F-1B-A		310103 AD2a	AD2b	CBA-FN-32 CBA-FN-33 EDE-X-5C	EDE-US-51	
												EDE-X-5C	4160-480 V Distribution Transformer	AD1	CB-F-1B-A						
												EDE-AD3-FU	Fuses	AD3	CB-F-1B-A						
												EDE-AD1-LA	6 KV Lightning Arrestors (3)	AD1	CB-F-1B-A						
												EDE-AD2-CT	Current Transformers (2000/5)	AD2	CB-F-1B-A						
												EDE-AD3-AM	Ammeter	AD3	CB-F-1B-A						
												EDE-AD3-AS	Ammeter Switch	AD3	CB-F-1B-A						
52	EDE-US-62	480 V Bus 62 Unit Substation	310014	B	310442	CB-F-1B-A	X	X	X	-	AE2	EDE-AE2-52	480 V AC Circuit Breaker	AE2	CB-F-1B-A		310103 AE2a	AE2b	CBA-FN-32 CBA-FN-33 EDE-X-5D	EDE-US-52	
												EDE-X-5D	4160-480 V Distribution Transformer	AE1	CB-F-1B-A						
												EDE-AE3-FU	Fuses	AE3	CB-F-1B-A						
												EDE-AE1-LA	6 KV Lightning Arrestors (3)	AE1	CB-F-1B-A						
												EDE-AE2-CT	Current Transformers (2000/5)	AE2	CB-F-1B-A						
												EDE-AE3-AM	Ammeter	AE3	CB-F-1B-A						
												EDE-AE3-AS	Ammeter Switch	AE3	CB-F-1B-A						

FUNCTION: ELECTRICAL DISTRIBUTION EMERGENCY

ITEM NO.	EQUIPMENT ID NO.	EQUIPMENT DESCRIPTION	P&ID/1-LINE DRAWING NO.	TRAIN	PHYSICAL LOCATION DRAWING NO.	FIRE AREA/ZONE	REQUIRED FOR		POWER		ELEC NODE	SUPPORTING CONTROL AND INSTRUMENTATION EQUIPMENT				CABLES	ELECTRICAL DRAWING NO.		SUPPORTING SYSTEMS	REDUNDANT COUNTERPART	REMARKS
							HOT STAND BY	COLD SHUT DOWN	ELEC	AIR		EQUIPMENT ID NO.	EQUIPMENT DESCRIPTION	ELEC NODE	FIRE AREA/ZONE		SCHEM.	CABLE			
53	EDE-US-63	480 V Bus 63 Unit Substation	310052	B	310442	CB-F-1B-A	X	X	X	-	AF7	EDE-AF7-52	480 V AC Circuit Breaker	AF7	CB-F-1B-A		310103 AF7a	AF7b	CBA-FN-32 CBA-FN-33 EDE-X-5V	EDE-US-53	
												EDE-X-5F	4160-480 V Distribution Transformer	AF6	CB-F-1B-A						
												EDE-AF8-FU	Fuses	AF8	CB-F-1B-A						
												EDE-AF6-LA	6 KV Lightning Arrestors (3)	AF7	CB-F-1B-A						
												EDE-AF7-CT	Current Transformers (2000/5)	AF7	CB-F-1B-A						
												EDE-AF8-AM	Ammeter	AF8	CB-F-1B-A						
												EDE-AF8-AS	Ammeter Switch	AF8	CB-F-1B-A						
54	EDE-US-61	480 V Feed to 460 V Motor Control Center 612	310014	B	310442	CB-F-1B-A	X	X	X	-	AD6	EDE-AD6-52	480 V AC Circuit Breaker	AD6	CB-F-1B-A	AD6-B16 AD6-B16/1	310103 AD6	AD6	CBA-FN-32 CBA-FN-33 EDE-US-61	EDE-US-51 EDE-MCC-512	
55	EDE-US-61	480 V Feed to 460 V Motor Control Center 614	310014	B	310442	CB-F-1B-A	X	X	X	-	AA4	EDE-AA4-52	480 V AC Circuit Breaker	AA4	CB-F-1B-A	AA4-BF0	310103 AA4	AA4	CBA-FN-32 CBA-FN-33 EDE-US-61	EDE-US-51 EDE-MCC-514	
56	EDE-US-61	480 V Feed to 460 V Motor Control Center 615	310014	B	310442	CB-F-1B-A	X	X	X	-	AX9	EDE-AX9-52	480 V AC Circuit Breaker	AX9	CB-F-1B-A	AX9-B4E AX9-B4E/1	310103 AX9	AX9	CBA-FN-32 CBA-FN-33 EDE-US-61	EDE-US-51 EDE-MCC-515	
57	EDE-US-62	480 V Feed to 460 V Motor Control Center 621	310014	B	310442	CB-F-1B-A	X	X	X	-	AE8	EDE-AE8-52	480 V AC Circuit Breaker	AE8	CB-F-1B-A	AE8-B19 AE8-B19/1	310103 AE8	AE8	CBA-FN-32 CBA-FN-33 EDE-US-62	EDE-US-51 EDE-MCC-521	
58	EDE-US-62	480 V Feed to 460 V Motor Control Center 622	310014	B	310442	CB-F-1B-A	X	X	X	-	AW0	EDE-AW0-52	480 V AC Circuit Breaker	AW0	CB-F-1B-A	AW0-D13 AW0-GZ0 AW0-GZ0/1 F81-GZ0	310103 AW0a AW0b AW0c	AW0e	CBA-FN-32 CBA-FN-33 EDE-US-62	EDE-US-51 EDE-MCC-522	
												EDE-CS-9788-2	Control Switch with Indication	GZ0	CB-F-1B-A						
												EDE-SS-9788	Selector Switch	GZ0	CB-F-1B-A						
												EDE-AW0-52H	Truck Operated Contact	AW0	CB-F-1B-A						
												EDE-AW0-FU	Fuses	AW0	CB-F-1B-A						
												EDE-CS-9788-1	Control Switch with Indication	F81	CB-F-3A-A						
												EDE-AW0-R,G	Indicating Lights	AW0	CB-F-1B-A						
59	EDE-US-63	480 V Feed to 460 V Motor Control Center 631	310052	B	310442	CB-F-1B-A	X	X	X	-	AD8	EDE-AD8-52	480 V AC Circuit Breaker	AD8	CB-F-1B-A	AD8-D18 AD8-B18/1	310103 AD8	AD8	CBA-FN-32 CBA-FN-33 EDE-US-63	EDE-US-53 EDE-MCC-531	

FUNCTION: ELECTRICAL DISTRIBUTION EMERGENCY

ITEM NO.	EQUIPMENT ID NO.	EQUIPMENT DESCRIPTION	P&ID/1-LINE DRAWING NO.	TRAIN	PHYSICAL LOCATION DRAWING NO.	FIRE AREA/ZONE	REQUIRED FOR		POWER		ELEC NODE	SUPPORTING CONTROL AND INSTRUMENTATION EQUIPMENT				CABLES	ELECTRICAL DRAWING NO.		SUPPORTING SYSTEMS	REDUNDANT COUNTERPART	REMARKS
							HOT STAND BY	COLD SHUT DOWN	ELEC	AIR		EQUIPMENT ID NO.	EQUIPMENT DESCRIPTION	ELEC NODE	FIRE AREA/ZONE		SCHEM.	CABLE			
60	EDE-US-61	Grounding Transformer	310014	B	310442	CB-F-1B-A	X	X	X	-	AD3	EDE-AD3-XFMR	3-1ø 1 KVA Transformers	AD3	CB-F-1B-A	-	310103 AD3b	-	CBA-FN-32 CBA-FN-33 EDE-US-61	EDE-US-51 GRD XFMR	
												EDE-AD3-FU	Fuses	AD3	CB-F-1B-A						
												EDE-AD3-RES	Grounding Resistor	AD3	CB-F-1B-A						
												EDE-AD3-VM	Ground Voltmeters (3)	AD3	CB-F-1B-A						
												EDE-AD3-64	Ground Relay	AD3	CB-F-1B-A						
61	EDE-US-62	Grounding Transformer	310014	B	310442	CB-F-1B-A	X	X	X	-	AE3	EDE-AE3-XFMR	3-1ø 1 KVA Transformers	AE3	CB-F-1B-A	-	310103 AE3b	-	CBA-FN-32 CBA-FN-33 EDE-US-62	EDE-US-52 GRD XFMR	
												EDE-AE3-FU	Fuses	AE3	CB-F-1B-A						
												EDE-AE3-RES	Grounding Resistor	AE3	CB-F-1B-A						
												EDE-AE3-VM	Ground Voltmeters (3)	AE3	CB-F-1B-A						
												EDE-AE3-64	Ground Relay	AE3	CB-F-1B-A						
61a	EDE-US-61	480 V Feed to 460 V Motor Control Center 611	310014	B	310442	CB-F-1B-A	X	X	X	-	AD5	EDE-AD5-52	480 V AC Circuit Breaker	AD5	CB-F-1B-A	AD5-B15 AD5-B15/1	310103 AD5	AD5	CBA-FN-32 CBA-FN-33 EDE-US-61	EDE-US-51 EDE-MCC-511	
62	EDE-US-63	Grounding Transformer	310052	B	310442	CB-F-1B-A	X	X	X	-	AF8	EDE-AF8-XFMR	3-1ø 1 KVA Transformers	AF8	CB-F-1B-A	-	310103 AF8b	-	CBA-FN-32 CBA-FN-33 EDE-US-63	EDE-US-53 GRD XFMR	
												EDE-AF8-FU	Fuses	AF8	CB-F-1B-A						
												EDE-AF8-RES	Grounding Resistor	AF8	CB-F-1B-A						
												EDE-AF8-VM	Ground Voltmeters (3)	AF8	CB-F-1B-A						
												EDE-AF8-64	Ground Relay	AF8	CB-F-1B-A						
63	EDE-I-1F	Uninterruptible Power Supply	310043	B	310442	CB-F-1B-A	X	X	X	-	HF6	EDE-DD5-52	460 V AC Circuit Breaker	DD5	CB-F-1B-A	DD5-HF6/1 DN0-HF6/1	310105 DD5a	DD5b	CBA-FN-32 CBA-FN-33 EDE-MCC-612 EDE-SWG-11B	EDE-I-1E	
												EDE-DN0-72	125 V DC Circuit Breaker	DN0	CB-F-1B-A						
												EDE-HF6/2-52	460 V AC Inc. Line Circuit Breaker	HF6	CB-F-1B-A						
												EDE-HF6/1-72	125 V DC Inc. Line Circuit Breaker	HF6	CB-F-1B-A						
												EDE-HF6/3-52	120 V AC Output Circuit Breaker	HF6	CB-F-1B-A						
63A	EDE-CP-1F	Static Transfer Switch	310043	B	310442	CB-F-1B-A	X	X	X	-	E2B	EDE-E2B-F1	300A, 600 V Fuse	E2B	CB-F-1B-A	E2B-HF6 E2B-HF6/1	310105 DD5a	DD5b	EDE-I-1F CBA-FN-32 CBA-FN-33	EDE-CP-1E	
64	EDE-PP-1F	Vital Instrument Bus	310043	B	310442	CB-F-1B-A	X	X	X	-	EH0	EDE-EH0/NC-52	120 V AC Circuit Breaker - Inc. Line from EDE-CP-1F (Norm. Closed)	EH0	CB-F-1B-A	EH0-E2B	310105 DD5a EH0a	DD5b	CBA-FN-32 CBA-FN-33 EDE-CP-1F	EDE-PP-1E	
65	EDE-PP-11F	Vital Instrument Bus	310043	B	310442	CB-F-1B-A	X	X	X	-	E1T	EDE-EH0/13-52	120 V AC Circuit Breaker	EH0	CB-F-1B-A	E1T-EH0	310105 DD5a E1Ta	DD5b	CBA-FN-32 CBA-FN-33 EDE-PP-1F	EDE-PP-11E	

FUNCTION: ELECTRICAL DISTRIBUTION EMERGENCY

ITEM NO.	EQUIPMENT ID NO.	EQUIPMENT DESCRIPTION	P&ID/1-LINE DRAWING NO.	TRAIN	PHYSICAL LOCATION DRAWING NO.	FIRE AREA/ZONE	REQUIRED FOR		POWER		ELEC NODE	SUPPORTING CONTROL AND INSTRUMENTATION EQUIPMENT				CABLES	ELECTRICAL DRAWING NO.		SUPPORTING SYSTEMS	REDUNDANT COUNTERPART	REMARKS
							HOT STAND BY	COLD SHUT DOWN	ELEC	AIR		EQUIPMENT ID NO.	EQUIPMENT DESCRIPTION	ELEC NODE	FIRE AREA/ZONE		SCHEM.	CABLE			
66	ED-X-16A	480-120/240 V Containment Lighting Transformer	310032	B	310576	C-F-1-Z	X	X	X	-	EX6	EDE-DO5-52-1	460 V AC Circuit Breaker	DO5	CB-F-1B-A	DO5-H20 EX6-H20	310104 DO5a	DO5b	CBA-FN-32 CBA-FN-33 EDE-MCC-631 CAH-FN-1A CAH-FN-1B CAH-FN-1D	ED-X-14J	
												EDE-DO5-52-2	460 V AC Circuit Breaker	DO5	CB-F-1B-A						
												EDE-MM-96	Electrical Penetration	H20	C-F-1-Z, ET-F-1C-A						
67	ED-PP-8B	120/240 V Distribution Panel	310032	B	310582	C-F-1-Z	X	X	X	-	EM0	ED-X-16A	Containment Lighting Transformer	EX6	C-F-1-Z	EM0-EX6 ER1-JX3 EX6-JX3 E4G-H41 H41-JX3	310104 DO5a 310106 EM0a	DO5b	CAH-FN-1A CAH-FN-1B CAH-FN-1D ED-X-16A	ED-PP-8J	
												ED-EM0-52	250 V AC Circuit Breaker (Main)	EM0	C-F-1-Z						
												ED-JX3-42	Lighting Contactor	JX3	C-F-2-Z						
												ED-ER1-52	Lighting Panel 250 v AC Circuit Breaker (Main)	ER1	C-F-2-Z						
												EDE-MM-584	Fuse Panel	E4G	ET-F-1C-A						
												EDE-MM-117	Electrical Penetration	H41	C-F-1-Z, ET-F-1C-A						
68	EDE-BC-1B	125 V DC Battery Charger	310042	B	310442	CB-F-1B-A	X	X	X	-	HR6	EDE-DA1-52	460 V AC Circuit Breaker	DA1	CB-F-1B-A	DA1-HR4 DA1-HR6	310107 DA1a DA1b DA1c	DA1f	CBA-FN-32 CBA-FN-33 EDE-MCC-E612	EDE-BC-1A	
												EDE-DA1-42	Contactor	DA1	CB-F-1B-A						
												EDE-DA1-42X	Auxiliary Relay	DA1	CB-F-1B-A						
												DG-HR4-HR9(K20)	EPS Relay	HR4	CB-F-1B-A						
												EDE-HR6/1-52	460 V AC Circuit Breaker - Incoming Feed	HR6	CB-F-1B-A						
												EDE-DA1-FU	Fuse	DA1	CB-F-1B-A						
69	EDE-B-1B	125 V DC Battery	310042	B	310442	CB-F-1F-A	X	X	X	-	HV5	EDE-J76-FU-1,2,3,4	1600A Fuses	J76	CB-F-1B-A	HV5-J76 HV5-J76/1	310107 DA1a DA1b DA1c	DA1f	CBA-FN-32 CBA-FN-33 CBA-FN-21B EDE-BC-1B EDE-SWG-11B	EDE-B-1A	
												EDE-J76-SH	1000A, 100 MV Shunt	J76	CB-F-1B-A						
												EDE-J76-ATR	Transducer	J76	CB-F-1B-A						

FUNCTION: ELECTRICAL DISTRIBUTION EMERGENCY

ITEM NO.	EQUIPMENT ID NO.	EQUIPMENT DESCRIPTION	P&ID/1-LINE DRAWING NO.	TRAIN	PHYSICAL LOCATION DRAWING NO.	FIRE AREA/ZONE	REQUIRED FOR		POWER		ELEC NODE	SUPPORTING CONTROL AND INSTRUMENTATION EQUIPMENT				CABLES	ELECTRICAL DRAWING NO.		SUPPORTING SYSTEMS	REDUNDANT COUNTERPART	REMARKS
							HOT STAND BY	COLD SHUT DOWN	ELEC	AIR		EQUIPMENT ID NO.	EQUIPMENT DESCRIPTION	ELEC NODE	FIRE AREA/ZONE		SCHEM.	CABLE			
70	EDE-SWG-11B	125 V DC Switchboard Auxiliary Buses 120 V AC and 125 V DC	310042	B	310442	CB-F-1B-A	X	X	X	-	DN3	EDE-HR6/2-72	125 V DC Circuit Breaker	HR6	CB-F-1B-A	DN5-J76 DN5-J76/1 DN4-HR6	310107 DA1a DA1b DA1c 5b	DA1f	CBA-FN-32 CBA-FN-33 EDE-SWG-11B EDE-PP-1F EDE-B-1A EDE-BC-1A	EDE-SWG-11A	
												EDE-DL5-72	125 V DC Circuit Breaker	DL5	CB-F-1B-A						
												EDE-DN4-72	125 V DC Circuit Breaker	DN4	CB-F-1B-A						
												EDE-DN5-72	125 V DC Circuit Breaker	DN5	CB-F-1B-A						
												EDE-DN3-FU-1,2	125 V DC 10A Fuses	DN3	CB-F-1B-A						
												EDE-DN3-27BL	Undervoltage Relay	DN3	CB-F-1B-A						
												EDE-DN3-27BLL	Undervoltage Relay	DN3	CB-F-1B-A						
												EDE-DN3-VM	DC Voltmeter	DN3	CB-F-1B-A						
												EDE-DN3-VTR	Voltage Transducer	DN3	CB-F-1B-A						
												EDE-DN3-DIO	Diodes	DN3	CB-F-1B-A						
												EDE-DN3-XS	Selector Switch	DN3	CB-F-1B-A						
												EDE-DN3-AMY	Ammeter Relay	DN3	CB-F-1B-A						
												EDE-EHO/5-52	120 V AC Circuit Breaker	EHO	CB-F-1B-A	DN3-EHO DN3-J76/1 G1X-J76	310105 EHOa	EHOb			
												EDE-DN3-62BL	Timing Relay	DN3	CB-F-1B-A						
												EDE-DN3-62BLL	Timing Relay	DN3	CB-F-1B-A						
												EDE-DN4-72	Breaker Operated Contact	DN4	CB-F-1B-A						
												EDE-DN4-72STC	Circuit Breaker Shut Trip Coil	DN4	CB-F-1B-A						
												EDE-J76-ATR	Current Transducer	J76	CB-F-1B-A						
												EDE-DN3-FU	120 V AC 15A and 1A Fuses	DN3	CB-F-1B-A						
												EDE-DN3-52	120 V AC Incoming Feed Circuit Breaker	DN3	CB-F-1B-A						
71	EDE-PP-111B	125 V DC Distribution Panel	310042	B	310442	CB-F-1B-A	X	X	X	-	E94	EDE-DN7-72	125 V DC Circuit Breaker	DN7	CB-F-1B-A	DN7-E94	310107 DA1a E94a	DA1f	CBA-FN-32 CBA-FN-33 EDE-SWG-11B	EDE-PP-111A	
												EDE-E94-72	125 V DC Circuit Breaker (Main)	E94	CB-F-1B-A						
72	EDE-PP-112B	125 V DC Distribution Panel	310042	B	310442	CB-F-1B-A	X	X	X	-	E88	EDE-DN9-72	125 V DC Circuit Breaker	DN9	CB-F-1B-A	DN9-E88	310107 DA1a E88a	DA1f	CBA-FN-32 CBA-FN-33 EDE-SWG-11B	EDE-PP-112A	
												EDE-E88-72	125 V DC Circuit Breaker (Main)	E88	CB-F-1B-A						
73	EDE-PP-113B	125 V DC Distribution Panel	310042	B	310442	CB-F-1B-A	X	X	X	-	E2U	EDE-DP2-72	125 V DC Circuit Breaker	DP2	CB-F-1B-A	DP2-E2U	310107 DA1a DA1b E2Ua	DA1f	CBA-FN-32 CBA-FN-33 EDE-SWG-11B	EDE-PP-113A	
												EDE-E2U-72	125 V DC Circuit Breaker (Main)	E2U	CB-F-1B-A						

FUNCTION: ELECTRICAL DISTRIBUTION EMERGENCY

ITEM NO.	EQUIPMENT ID NO.	EQUIPMENT DESCRIPTION	P&ID/1-LINE DRAWING NO.	TRAIN	PHYSICAL LOCATION DRAWING NO.	FIRE AREA/ZONE	REQUIRED FOR		POWER		ELEC NODE	SUPPORTING CONTROL AND INSTRUMENTATION EQUIPMENT				CABLES	ELECTRICAL DRAWING NO.		SUPPORTING SYSTEMS	REDUNDANT COUNTERPART	REMARKS
							HOT STAND BY	COLD SHUT DOWN	ELEC	AIR		EQUIPMENT ID NO.	EQUIPMENT DESCRIPTION	ELEC NODE	FIRE AREA/ZONE		SCHEM.	CABLE			
74	EDE-SWG-6	4160 V SWG 125 V DC Control Bus		B	310442	CB-F-1B-A	X	X	X	-	A73	EDE-E94/1-72 EDE-A73-8	125 V DC Circuit Breaker 125 V DC Circuit Breaker (Main)	E94 A73	CB-F-1B-A CB-F-1B-A	A73-E94	310107 E94a 310102 5i, 5j, 5k, 5l	E94b	CBA-FN-32 CBA-FN-33 EDE-PP-111B	EDE-SWG-5	
75	EDE-US-61	480 V Unit Substation 125 V DC Control Bus		B	310442	CB-F-1B-A	X	X	X	-	AD3	EDE-E94/2-72 EDE-AD3-8	125 V DC Circuit Breaker 125 V DC Circuit Breaker (Main)	E94 AD3	CB-F-1B-A CB-F-1B-A	AD3-E94	310107 E94a 310103 5q	E94b	CBA-FN-32 CBA-FN-33 EDE-PP-111B	EDE-US-51	
76	EDE-US-62	480 V Unit Substation 125 V DC Control Bus		B	310442	CB-F-1B-A	X	X	X	-	AE3	EDE-E94/3-72 EDE-AE3-8	125 V DC Circuit Breaker 125 V DC Circuit Breaker (Main)	E94 AE3	CB-F-1B-A CB-F-1B-A	AE3-E94	310107 E94a 310103 5r	E94b	CBA-FN-32 CBA-FN-33 EDE-PP-111B	EDE-US-52	
77	EDE-US-63	480 V Unit Substation 125 V DC Control Bus		B	310442	CB-F-1B-A	X	X	X	-	AF8	EDE-E94/4-72 EDE-AF8-8	125 V DC Circuit Breaker 125 V DC Circuit Breaker (Main)	E94 AF8	CB-F-1B-A CB-F-1B-A	AF8-E94	310107 E94a 310103 5s	E94b	CBA-FN-32 CBA-FN-33 EDE-PP-111B	EDE-US-53	
78	DG-CP-76A	Diesel Generator 1B Control Panel Cubicle 3 125 V DC Supply	310010 310042	B	310524	DG-F-2B-A	X	X	X	-	G20	EDE-DP1-72 DG-G20-72	125 V DC Circuit Breaker 125 V DC Circuit Breaker (Main)	DP1 G20	CB-F-1B-A DG-F-2B-A	DP1-G20	310102 DP1a 310107 DA1a	DP1b	DAH-FN-25B DAH-FN-26B EDE-SWG-11B CBA-FN-32 CBA-FN-33	DG-CP-75A	
79	DG-CP-80	Emergency Power Sequencer	310008	B	310442	CB-F-1B-A	X	X	X	-	HR3	ED-X-2B ED-X-3B EDE-SWG-6 EDE-SGW-6 MM-CP-13	Bus E6 UAT Transformer Bus E6 RAT Transformer UAT Potential Transformer Bus E6 DG-1B Prot. Cabinet Main Control Board	A71 A72 A73 A74 FB0 F81	CB-F-1B-A CB-F-1B-A CB-F-1B-A CB-F-1B-A CB-F-3A-A CB-F-3A-A	F81-HR3/3 FB0-HR3 A71-HR3 A72-HR3 A73-HR3 A74-HR3	310108 FP31417 FP31418 FP31429	E94/5a E94/5b		DG-CP-79	
80	DG-CP-79	Emergency Power Sequencer	310007	A	310442	CB-F-1A-A	X	X	X	-	HR1	ED-X-2A ED-X-3A EDE-SWG-5 EDE-SGW-5 MM-CP-12	Bus E5 UAT Transformer Bus E5 RAT Transformer UAT Potential Transformer Bus E5 DG-1A Prot. Cabinet Main Control Board	A51 A52 A53 A54 FB7 F80	CB-F-1A-A CB-F-1A-A CB-F-1A-A CB-F-1A-A CB-F-3A-A CB-F-3A-A	F80-HR1 FB7-HR1 A51-HR1 A52-HR1 A53-HR1 A54-HR1	310108 FP31417 FP31418 FP31429	E93/5a E93/5b		DG-CP-80	

FUNCTION: ELECTRICAL DISTRIBUTION EMERGENCY

ITEM NO.	EQUIPMENT ID NO.	EQUIPMENT DESCRIPTION	P&ID/1-LINE DRAWING NO.	TRAIN	PHYSICAL LOCATION DRAWING NO.	FIRE AREA/ZONE	REQUIRED FOR		POWER		ELEC NODE	SUPPORTING CONTROL AND INSTRUMENTATION EQUIPMENT				CABLES	ELECTRICAL DRAWING NO.		SUPPORTING SYSTEMS	REDUNDANT COUNTERPART	REMARKS
							HOT STAND BY	COLD SHUT DOWN	ELEC	AIR		EQUIPMENT ID NO.	EQUIPMENT DESCRIPTION	ELEC NODE	FIRE AREA/ZONE		SCHEM.	CABLE			
81	EDE-I-1A	Uninterruptible Power Supply	310043	A	310435	CB-F-1A-A	X	X	X	-	HE1	EDE-D27-52	460 V AC Circuit Breaker	D27	CB-F-1A-A	D27-HE1 DM6-HE1	310105 D27a FP50513 to FP50517	D27b	CBA-FN-19 CBA-FN-20 EDE-SWG-11A	EDE-I-1B	
												EDE-DM6-72	125 V DC Circuit Breaker	DM6	CB-F-1A-A						
												EDE-HE1/2-52	460 V AC Inc. Line Circuit Breaker	HE1	CB-F-1A-A						
												EDE-HE1/1-72	125 V DC Inc. Line Circuit Breaker	HE1	CB-F-1A-A						
												EDE-HE1/3-52	120 V AC Output Circuit Breaker	HE1	CB-F-1A-A						
82	EDE-PP-1A	Vital Instrument Bus	310043	A	310435	CB-F-1A-A	X	X	X	-	E01	EDE-E01-52	120 V AC Circuit Breaker	E01	CB-F-1A-A	E01-HE1	310105 D27a E01a	D27b	CBA-FN-19 CBA-FN-20 EDE-I-1A	EDE-PP-1B	
83	EDE-I-1B	Uninterruptible Power Supply	310043	B	310435	CB-F-1B-A	X	X	X	-	HE2	EDE-D26-52	460 V AC Circuit Breaker	D26	CB-F-1B-A	D26-HE2 DN8-HE2	310105 D26a FP50513 to FP50517	D26b	CBA-FN-32 CBA-FN-33 EDE-SWG-11B	EDE-I-1A	
												EDE-DN8-72	125 V DC Circuit Breaker	DN8	CB-F-1B-A						
												EDE-HE2/2-52	460 V AC Inc. Line Circuit Breaker	HE2	CB-F-1B-A						
												EDE-HE2/1-72	125 V DC Inc. Line Circuit Breaker	HE2	CB-F-1B-A						
												EDE-HE2/3-52	120 V AC Output Circuit Breaker	HE2	CB-F-1B-A						
84	EDE-PP-1B	Vital Instrument Bus	310043	B	310435	CB-F-1B-A	X	X	X	-	E02	EDE-E02-52	120 V AC Circuit Breaker	E02	CB-F-1B-A	E02-HE2	310105 D26a E02a	D26b	CBA-FN-32 CBA-FN-33 EDE-I-1B	EDE-PP-1A	
85	EDE-I-1C	Uninterruptible Power Supply	310043	A	310442	CB-F-1A-A	X	X	X		HE3	EDE-D30-52	460 V AC Circuit Breaker	D30	CB-F-1A-A	D30-HE3 DP9-HE3	310105 D30a FP50513 to FP50517	D30b	CBA-FN-19 CBA-FN-20 EDE-SWG-11C	EDE-I-1D	
												EDE-DP9-72	125 V DC Circuit Breaker	DP9	CB-F-1A-A						
												EDE-HE3/2-52	460 V AC Inc. Line Circuit Breaker	HE3	CB-F-1A-A						
												EDE-HE3/1-72	125 V DC Inc. Line Circuit Breaker	HE3	CB-F-1A-A						
												EDE-HE3/3-52	120 V AC Output Circuit Breaker	HE3	CB-F-1A-A						
86	EDE-PP-1C	Vital Instrument Bus	310043	C	310442	CB-F-1A-A	X	X	X		E03	EDE-E03-52	120 V AC Circuit Breaker	E03	CB-F-1A-A	E03-HE3	310105 D30a E03a	D30b	CBA-FN-19 CBA-FN-20 EDE-I-1C	EDE-PP-1D	

FUNCTION: ELECTRICAL DISTRIBUTION EMERGENCY

ITEM NO.	EQUIPMENT ID NO.	EQUIPMENT DESCRIPTION	P&ID/1-LINE DRAWING NO.	TRAIN	PHYSICAL LOCATION DRAWING NO.	FIRE AREA/ZONE	REQUIRED FOR		POWER		ELEC NODE	SUPPORTING CONTROL AND INSTRUMENTATION EQUIPMENT				CABLES	ELECTRICAL DRAWING NO.		SUPPORTING SYSTEMS	REDUNDANT COUNTERPART	REMARKS
							HOT STAND BY	COLD SHUT DOWN	ELEC	AIR		EQUIPMENT ID NO.	EQUIPMENT DESCRIPTION	ELEC NODE	FIRE AREA/ZONE		SCHEM.	CABLE			
87	EDE-I-1D	Uninterruptible Power Supply	310043	B	310435	CB-F-1B-A	X	X	X		HE4	EDE-D23-52	460 V AC Circuit Breaker	D23	CB-F-1B-A	D23-HE4 DR1-HE4	310105 D23a D23b FPS0513 to FPS0517		CBA-FN-32 CBA-FN-33 EDE-SWG-11D	EDE-I-1C	
												EDE-DR1-72	125 V DC Circuit Breaker	DR1	CB-F-1B-A						
												EDE-HE4/2-52	460 V AC Inc. Line Circuit Breaker	HE4	CB-F-1B-A						
												EDE-HE4/1-72	125 V DC Inc. Line Circuit Breaker	HE4	CB-F-1B-A						
												EDE-HE4/3-52	120 V AC Output Circuit Breaker	HE4	CB-F-1B-A						
88	EDE-PP-1D	Vital Instrument Bus	310043	D	310435	CB-F-1B-A	X	X	X		E04	EDE-E04-52	120 V AC Circuit Breaker	E04	CB-F-1B-A	E04-HE4	310105 D23a D23b E04a		CBA-FN-32 CBA-FN-33 EDE-I-1D	EDE-PP-1C	

FUNCTION: ELECTRICAL DISTRIBUTION EMERGENCY

ITEM NO.	EQUIPMENT ID NO.	EQUIPMENT DESCRIPTION	P&ID/1-LINE DRAWING NO.	TRAIN	PHYSICAL LOCATION DRAWING NO.	FIRE AREA/ZONE	REQUIRED FOR		POWER		ELEC NODE	SUPPORTING CONTROL AND INSTRUMENTATION EQUIPMENT				CABLES	ELECTRICAL DRAWING NO.		SUPPORTING SYSTEMS	REDUNDANT COUNTERPART	REMARKS
							HOT STAND BY	COLD SHUT DOWN	ELEC	AIR		EQUIPMENT ID NO.	EQUIPMENT DESCRIPTION	ELEC NODE	FIRE AREA/ZONE		SCHEM.	CABLE			
89	EDE-SWG-11C	125 V DC Switchboard Auxiliary Buses 120 V AC and 125 V DC	310042	A	310442	CB-F-1A-A	X	X	X	-	DP5	EDE-HR7/2-72	125 V DC Circuit Breaker	HR7	CB-F-1A-A	DP7-J77 DP7-J77/1 DP6-HR7 G1Y-J77 DP5-J77/1 DP5-EH9	310107 D88a D88f D88c 5c 310105 EH9a EH9b		CBA-FN-19 CBA-FN-20 EDE-BC-1C EDE-B-1C	EDE-SWG-11D	
												EDE-DL6-72	125 V DC Circuit Breaker	DL6	CB-F-1A-A						
												EDE-DP6-72	125 V DC Circuit Breaker	DP6	CB-F-1A-A						
												EDE-DP7-72	125 V DC Circuit Breaker	DP7	CB-F-1A-A						
												EDE-DP8-72	125 V DC Circuit Breaker	DP8	CB-F-1A-A						
												EDE-DP5-FU-1,2	Fuses	DP5	CB-F-1A-A						
												EDE-DP5-27BL	Undervoltage Relay	DP5	CB-F-1A-A						
												EDE-DP5-VM	DC Voltmeter	DP5	CB-F-1A-A						
												EDE-DP5-VTR	Voltage Transducer	DP5	CB-F-1A-A						
												EDE-DP5-DIO	Diodes	DP5	CB-F-1A-A						
												EDE-DP5-XS	Selector Switch	DP5	CB-F-1A-A						
												EDE-DP5-AMY	Ammeter Relay	DP5	CB-F-1A-A						
												EDE-EH9/6-52	120 V AC Circuit Breaker	EH9	CB-F-1A-A						
												EDE-DP5-27BLL	Undervoltage Relay	DP5	CB-F-1A-A						
												EDE-DP5-62BL	Timing Relay	DP5	CB-F-1A-A						
												EDE-DP5-62BLL	Timing Relay	DP5	CB-F-1A-A						
												EDE-DP6-72	Breaker Operated Contact	DP6	CB-F-1A-A						
												EDE-DP6-72STC	Circuit Breaker Shunt Trip Coil	DP6	CB-F-1A-A						
												EDE-J77-ATR	Current Transducer	J77	CB-F-1A-A						
												EDE-DP5-52	120 V AC Inc. Feed Circuit Breaker	DP5	CB-F-1A-A						
												EDE-DP5-FU	120 V AC 15A and 1A Fuses	DP5	CB-F-1A-A						
90	EDE-BC-1C	125 V DC Battery Charger	310042	A	310442	CB-F-1A-A	X	X	X	-	HR7	EDE-D88-52	460 V AC Circuit Breaker	D88	CB-F-1A-A	D88-HR7 D88-HR2	310107 D88a D88f D88b		CBA-FN-19 CBA-FN-20 EDE-MCC-E521	EDE-BC-1D	
												EDE-D88-42	Contactor	D88	CB-F-1A-A						
												EDE-D88-42X	Auxiliary Relay	D88	CB-F-1A-A						
												DG-HR2-HR9	EPS Relay	HR2	CB-F-1A-A						
												EDE-HR7/1-52	460 V AC Circuit Breaker - Incoming Feed	HR7	CB-F-1A-A						
												EDE-D88-FU	Fuse	D88	CB-F-1A-A						
91	EDE-B-1C	125 V DC Battery	310042	A	310442	CB-F-1E-A	X	X	X	-	HV6	EDE-J77-FU-1,2,3,4	1600A Fuses	J77	CB-F-1A-A	HV6-J77 HV6-J77/1	310107 D88a D88f		CBA-FN-19 CBA-FN-20	EDE-B-1C	
												EDE-J77-SH	1000A, 100 MW Shunt	J77	CB-F-1A-A						
												EDE-J77-ATR	Transducer	J77	CB-F-1A-A						

FUNCTION: ELECTRICAL DISTRIBUTION EMERGENCY

ITEM NO.	EQUIPMENT ID NO.	EQUIPMENT DESCRIPTION	P&ID/1-LINE DRAWING NO.	TRAIN	PHYSICAL LOCATION DRAWING NO.	FIRE AREA/ZONE	REQUIRED FOR		POWER		ELEC NODE	SUPPORTING CONTROL AND INSTRUMENTATION EQUIPMENT				CABLES	ELECTRICAL DRAWING NO.		SUPPORTING SYSTEMS	REDUNDANT COUNTERPART	REMARKS
							HOT STAND BY	COLD SHUT DOWN	ELEC	AIR		EQUIPMENT ID NO.	EQUIPMENT DESCRIPTION	ELEC NODE	FIRE AREA/ZONE		SCHEM.	CABLE			
92	EDE-SWG-11D	125 V DC Switchboard Auxiliary Buses 120 V DC and 125 V DC	310042	B	310442	CB-F-1B-A	X	X	X	-	DQ7	EDE-HR8/2-72	125 V DC Circuit Breaker	HR8	CB-F-1B-A	DQ7-J78/1 DQ9-J78 DQ9-J78/1 DQ8-HR8 D1Z-J78	310107 DB2a DB2b DB2c 5d	DB2f	CBA-FN-32 CBA-FN-33 EDE-BC-1D EDE-B-1D	EDE-SWG-11C	
												EDE-DL7-72	125 V DC Circuit Breaker	DL7	CB-F-1B-A						
												EDE-DQ8-72	125 V DC Circuit Breaker	DQ8	CB-F-1B-A						
												EDE-DQ9-72	125 V DC Circuit Breaker	DQ9	CB-F-1B-A						
												EDE-DQ0-72	125 V DC Circuit Breaker	DQ0	CB-F-1B-A	DQ7-EH0	310105 EH0a	EH0b			
												EDE-DQ7-FU-1,2	Fuses	DQ7	CB-F-1B-A						
												EDE-DQ7-27BL	Undervoltage Relay	DQ7	CB-F-1B-A						
												EDE-DQ7-VM	DC Voltmeter	DQ7	CB-F-1B-A						
												EDE-DQ7-VTR	Voltage Transducer	DQ7	CB-F-1B-A						
												EDE-DQ7-DIO	Diodes	DQ7	CB-F-1B-A						
												EDE-DQ7-XS	Selector Switch	DQ7	CB-F-1B-A						
												EDE-DQ7-AMY	Ammeter Relay	DQ7	CB-F-1B-A						
												EDE-DQ7-27BLL	Undervoltage Relay	DQ7	CB-F-1B-A						
												EDE-EH0/6-52	120 V AC Circuit Breaker	EH0	CB-F-1B-A						
												EDE-DQ7-62BL	Timing Relay	DQ7	CB-F-1B-A						
												EDE-DQ7-62BLL	Timing Relay	DQ7	CB-F-1B-A						
												EDE-DQ8-72	Breaker Operated Contact	DQ8	CB-F-1B-A						
												EDE-DQ8-72STC	Circuit Breaker Shunt Trip Coil	DQ8	CB-F-1B-A						
												EDE-J77-ATR	Current Transducer	J77	CB-F-1B-A						
												EDE-DQ7-52	120 V AC Inc. Feed Circuit Breaker	DQ7	CB-F-1B-A						
												EDE-DQ7-FU	120 V AC 15A and 1A Fuses	DQ7	CB-F-1B-A						
93	EDE-BC-1D	125 V DC Battery Charger	310042	B	310442	CB-F-1A-A	X	X	X	-	HR8	EDE-DB2-52	460 V AC Circuit Breaker	DB2	CB-F-1B-A	DB2-HR8 DB2-HR4	310107 DB2a DB2b	DB2f	CBA-FN-19 CBA-FN-20 EDE-MCC-E621	EDE-BC-1C	
												EDE-DB2-42	Contactor	DB2	CB-F-1B-A						
												EDE-DB2-42X	Auxiliary Relay	DB2	CB-F-1B-A						
												DG-HR4-HR9	EPS Relay	HR4	CB-F-1B-A						
												EDE-HR8/1-52	460 V AC Circuit Breaker - Incoming Feed	HR8	CB-F-1B-A						
												EDE-DB2-FU	Fuse	DB2	CB-F-1B-A						
94	EDE-B-1D	125 V DC Battery	310042	B	310442	CB-F-1G-A	X	X	X	-	HV7	EDE-J78-FU-1,2,3,4	1600A Fuses	J78	CB-F-1B-A	HV7-J78 HV7-J78/1	310107 DB2a DB2a	DB2f DB2f	CBA-FN-32 CBA-FN-33	EDE-B-1C	
												EDE-J78-SH	1000A, 100 MW Shunt	J78	CB-F-1B-A						
												EDE-J78-ATR	Transducer	J78	CB-F-1B-A						

FUNCTION: ELECTRICAL DISTRIBUTION EMERGENCY

ITEM NO.	EQUIPMENT ID NO.	EQUIPMENT DESCRIPTION	P&ID/1-LINE DRAWING NO.	TRAIN	PHYSICAL LOCATION DRAWING NO.	FIRE AREA/ZONE	REQUIRED FOR		POWER		ELEC NODE	SUPPORTING CONTROL AND INSTRUMENTATION EQUIPMENT				CABLES	ELECTRICAL DRAWING NO.		SUPPORTING SYSTEMS	REDUNDANT COUNTERPART	REMARKS
							HOT STAND BY	COLD SHUT DOWN	ELEC	AIR		EQUIPMENT ID NO.	EQUIPMENT DESCRIPTION	ELEC NODE	FIRE AREA/ZONE		SCHEM.	CABLE			
95	ED-I-4	Uninterruptible Power Supply	310054	A	310292	NES-F-1A-Z	X	X	X	-	HS7	EDE-BR3-52	460 V AC Circuit Breaker	BR3	DG-F-2A-A	BR3-HR2 BR3-HS7 DR2-HS7	310105 BR3a BR3b	BR3c	ED-SWG-12B		
												ED-DR2-72	125 V DC Circuit Breaker	DR2	TB-F-1A-Z						
												ED-HS7-52	460 V AC Inc. Line Breaker	HS7	NES-F-1A-Z						
												ED-HS7-72	125 V DC Inc. Line Breaker	HS7	NES-F-1A-Z						
												ED-HS7-52	120 V AC Output Breaker	HS7	NES-F-1A-Z						
												EDE-BR3-42	Contactor	BR3	DG-F-2A-A						
												EDE-BR3-42X	Auxiliary Relay	BR3	DG-F-2A-A						
												EDE-BR3-FU	2A Fuse	BR3	DG-F-2A-A						
												DG-HR2-HR9	EPS Relay	HR2	CB-F-1A-A						
96	ED-PP-5	Non-Vital Instrument Bus	310054	A	310292	NES-F-1A-Z	X	X	X	-	EJ9	ED-EJ9-52	120 V AC Inc. Line Breaker Non-Automatic	EJ9	NES-F-1A-Z	EJ9-JB9 EJ9-JB9/1	310105 BR3a	BR3c	ED-I-4 ED-CP-532		
96A	ED-CP-532	Transfer Switch for ED-PP-5	310054	A	310292	NES-F-1A-Z	X	X	X	-	JB9	-	-	HS7 EJ9	NES-F-1A-Z NES-F-1A-Z	HS7-JB9 HS7-JB9/1 EJ9-JB9 EJ9-JB9/1	310105 BR3a	BR3c	ED-I-4 ED-PP-5		
97	ED-BC-2B	125 V DC Battery Charger	310059	A	310328	TB-F-1A-Z	X	X	X	-	HS4	ED-CW3-52	460 V AC Circuit Breaker	CW3	TB-F-2-Z	CW3-HS4 CW3-HR2	310107 CW3a CW3b	CW3f	ED-MCC-E523		
												ED-CW3-42	Contactor	CW3	TB-F-2-Z						
												ED-CW3-42X	Auxiliary Relay	CW3	TB-F-2-Z						
												DG-HR2-HR9	EPS Relay	HR2	CB-F-1A-A						
												ED-HS4-52	460 V AC Circuit Breaker - Inc. Feed	HS4	TB-F-1A-Z						
												ED-CW3-FU	Fuse	CW3	TB-F-2-Z						
98	ED-B-2B	125 V DC Battery	310059	A	310328	TB-F-1B-A	X	X	X	-	HS5	ED-DS8-SH	1500A, 100 mV Shunt	DS8	TB-F-1A-Z	DS8-HS5 DS8-HS5/1	310107 CW3a	CW3f			
												ED-DS6-ATR	Transducer	DS6	TB-F-1A-Z						

FUNCTION: ELECTRICAL DISTRIBUTION EMERGENCY

ITEM NO.	EQUIPMENT ID NO.	EQUIPMENT DESCRIPTION	P&ID/1-LINE DRAWING NO.	TRAIN	PHYSICAL LOCATION DRAWING NO.	FIRE AREA/ZONE	REQUIRED FOR		POWER		ELEC NODE	SUPPORTING CONTROL AND INSTRUMENTATION EQUIPMENT				CABLES	ELECTRICAL DRAWING NO.		SUPPORTING SYSTEMS	REDUNDANT COUNTERPART	REMARKS
							HOT STAND BY	COLD SHUT DOWN	ELEC	AIR		EQUIPMENT ID NO.	EQUIPMENT DESCRIPTION	ELEC NODE	FIRE AREA/ZONE		SCHEM.	CABLE			
99	ED-SWG-12B	125 V DC Switchgear Auxiliary Buses 120 V AC and 125 V DC	310059	A	310328	TB-F-1A-Z	X	X	X	-	DS6	ED-HS4-72	125 V DC Circuit Breaker	HS4	TB-F-1A-Z	DS7-HS4	310107 CW3a	CW3f	ED-BC-2B ED-B-2B		
												ED-DL9-72	125 V DC Circuit Breaker	DL9	TB-F-1A-Z						
												ED-DS7-72	125 V DC Circuit Breaker	DS7	TB-F-1A-Z						
												ED-DS8-72	125 V DC Circuit Breaker	DS8	TB-F-1A-Z						
												ED-DS6-FU-1,2	15A Fuses	DS6	TB-F-1A-Z						
												ED-DS6-27BL	Undervoltage Relay	DS6	TB-F-1A-Z						
												ED-DS6-27BLL	Undervoltage Relay	DS6	TB-F-1A-Z						
												ED-DS6-VM	DC Voltmeter	DS6	TB-F-1A-Z						
												ED-DS6-VTR	Voltage Transducer	DS6	TB-F-1A-Z						
												ED-DS6-DIO	Diodes	DS6	TB-F-1A-Z						
												ED-DS6-XS	Selector Switch	DS6	TB-F-1A-Z						
												ED-DS6-AMY	Ammeter Relay	DS6	TB-F-1A-Z						
												ED-E20/8-52	120 V AC Circuit Breaker	E20	TB-F-1A-Z	DS6-E20	310106 E20a	E20c			
												ED-DS6-62BL	Timing Relay	DS6	TB-F-1A-Z						
												ED-DS6-62BLL	Timing Relay	DS6	TB-F-1A-Z						
												ED-DS7-72STC	Circuit Breaker Shunt Trip Coil	DS7	TB-F-1A-Z						
												ED-DS7-72	Breaker Operated Contact	DS7	TB-F-1A-Z						
												ED-DS6-ATR	Current Transducer	DS6	TB-F-1A-Z						
100	ED-PP-121B	125 V DC Distribution Panel	310059	A	310292	NES-F-1A-Z	X	X	X	-	E97	ED-DQ1-72	125 V DC Circuit Breaker	DQ1	TB-F-1A-Z	DQ1-E97 A03-E97 A18-E97	310107 CW3a E97a	CW3f	ED-SWG-12B		
												ED-E97-72	125 V DC Circuit Breaker	E97	NES-F-1A-Z						
101	ED-PP-122B	125 V DC Distribution Panel	310059	A	310431	CB-F-1A-A	X	X	X	-	E89	ED-DQ3-72	125 V DC Circuit Breaker	DQ3	TB-F-1A-Z	DQ3-E89	310107 CW3a E89a	CW3f	ED-SWG-12B		
												ED-E89-72	125 V DC Circuit Breaker	E89	CB-F-1A-A						
102	EDE-US-51	480 V Feed to 460 V Motor Control Center 511	310023	A	310442	CB-F-1A-A	X	X	X	-	AB5	EDE-AB5-52	480 V AC Circuit Breaker	AB5	CB-F-1A-A	AB5-B09 AB5-B09/1	310103 AB5	AB5	CBA-FN-19 CBA-FN-20 EDE-US-51		
103	EDE-US-51	480 V Feed to 460 V Motor Control Center 513	310023	A	310442	CB-F-1A-A	X	X	X	-	AV6	EDE-AV6-52	480 V AC Circuit Breaker	AV6	CB-F-1A-A	AV6-C14	310103 AV6	AV6	CBA-FN-19 CBA-FN-20 EDE-US-51		

FUNCTION: ELECTRICAL DISTRIBUTION EMERGENCY

ITEM NO.	EQUIPMENT ID NO.	EQUIPMENT DESCRIPTION	P&ID/1-LINE DRAWING NO.	TRAIN	PHYSICAL LOCATION DRAWING NO.	FIRE AREA/ZONE	REQUIRED FOR		POWER		ELEC NODE	SUPPORTING CONTROL AND INSTRUMENTATION EQUIPMENT				CABLES	ELECTRICAL DRAWING NO.		SUPPORTING SYSTEMS	REDUNDANT COUNTERPART	REMARKS
							HOT STAND BY	COLD SHUT DOWN	ELEC	AIR		EQUIPMENT ID NO.	EQUIPMENT DESCRIPTION	ELEC NODE	FIRE AREA/ZONE		SCHEM.	CABLE			
104	ED-BC-2A	125 V DC Battery Charger	310059	A	310328	TB-F-1A-Z	X	X	X	-	HS2	ED-CN3-52	460 V AC Circuit Breaker	CN3	TB-F-2-Z	CN3-HS2 CN3-HR2	310107 CN3a CN3b	CN3f	ED-MCC-E523		
												ED-CN3-42	Contactor	CN3	TB-F-2-Z						
												ED-CN3-42X	Auxiliary Relay	CN3	TB-F-2-Z						
												DG-HR2-HR9	EPS Relay	HR2	CB-F-1A-A						
												ED-HS2-52	460 V AC Circuit Breaker - Inc. Feed	HS2	TB-F-1A-Z						
												ED-CN3-FU	Fuse	CN3	TB-F-2-Z						
105	ED-B-2A	125 V DC Battery	310059	A	310328	TB-F-1B-A	X	X	X	-	HS3	ED-DR8-SH	1500A, 100 mV Shunt	DR8	TB-F-1A-Z	DR8-HS3	310107 CN3a	CN3f			
												ED-DR6-ATR	Transducer	DR6	TB-F-1A-Z	DR8-HS3/1					
106	ED-SWG-12A	125 V DC Switchgear Auxiliary Buses 120 V AC and 125 V DC	310059	A	310328	TB-F-1A-Z	X	X	X	-	DR6	ED-HS2-72	125 V DC circuit Breaker	HS2	TB-F-1A-Z	DR7-HS2	310107 CN3a	CN3f	ED-BC-2A ED-B-2A		
												ED-DL8-72	125 V DC circuit Breaker	DL8	TB-F-1A-Z						
												ED-DR7-72	125 V DC circuit Breaker	DR7	TB-F-1A-Z						
												ED-DR8-72	125 V DC circuit Breaker	DR8	TB-F-1A-Z						
												ED-DR6-FU-1,2	15A Fuses	DR6	TB-F-1A-Z						
												ED-DR6-27BL	Undervoltage Relay	DR6	TB-F-1A-Z						
												ED-DR6-27BLL	Undervoltage Relay	DR6	TB-F-1A-Z						
												ED-DR6-VM	DC Voltmeter	DR6	TB-F-1A-Z						
												ED-DR6-VTR	Voltage Transducer	DR6	TB-F-1A-Z						
												ED-DR6-DIO	Diodes	DR6	TB-F-1A-Z						
												ED-DR6-XS	Selector Switch	DR6	TB-F-1A-Z						
												ED-DR6-AMY	Ammeter Relay	DR6	TB-F-1A-Z						
												ED-E20/17-52	120 V DC Circuit Breaker	E20	TB-F-1A-Z	DR6-E20	310106 E20a	E20c			
												ED-DR6-62BL	Timing Relay	DR6	TB-F-1A-Z						
												ED-DR6-62BLL	Timing Relay	DR6	TB-F-1A-Z						
												ED-DR7-72STC	Circuit Breaker Shunt Trip Coil	DR7	TB-F-1A-Z						
												ED-DR7-72	Breaker Operated Contact	DR7	TB-F-1A-Z						
												ED-DR6-ATR	Current Transducer	DR6	TB-F-1A-Z						

FUNCTION: ELECTRICAL DISTRIBUTION EMERGENCY

ITEM NO.	EQUIPMENT ID NO.	EQUIPMENT DESCRIPTION	P&ID/1-LINE DRAWING NO.	TRAIN	PHYSICAL LOCATION DRAWING NO.	FIRE AREA/ZONE	REQUIRED FOR		POWER		ELEC NODE	SUPPORTING CONTROL AND INSTRUMENTATION EQUIPMENT				CABLES	ELECTRICAL DRAWING NO.		SUPPORTING SYSTEMS	REDUNDANT COUNTERPART	REMARKS
							HOT STAND BY	COLD SHUT DOWN	ELEC	AIR		EQUIPMENT ID NO.	EQUIPMENT DESCRIPTION	ELEC NODE	FIRE AREA/ZONE		SCHEM.	CABLE			
107	ED-PP-122A	125 V DC Distribution Panel	310059	A	310328	TB-F-1A-A	X	X	X	-	E91	ED-DS4-72 ED-E91-72	125 V DC Circuit Breaker 125 V DC Circuit Breaker	DS4 E91	TB-F-1A-Z TB-F-1A-A	DS4-E91 DS4-E91/1 A16-E91	310107 CN3a E91a	CN3f E91b	ED-SWG-12A		
108	ED-PP-3C	Non-Vital Instrument Bus	310043	A	310442	CB-F-1A-A	X	X	X	-	EH7	ED-EH7-52	120 V AC Circuit Breaker	EH7	CB-F-1A-A	E03-EH7	310105 D30a EH7a	D30b	CBA-FN-19 CBA-FN-20 EDE-I-1C EDE-PP-1C		

FUNCTION: DIESEL GENERATORS

ITEM NO.	EQUIPMENT ID NO.	EQUIPMENT DESCRIPTION	P&ID/1-LINE DRAWING NO.	TRAIN	PHYSICAL LOCATION DRAWING NO.	FIRE AREA/ZONE	REQUIRED FOR		POWER		ELEC NODE	SUPPORTING CONTROL AND INSTRUMENTATION EQUIPMENT				CABLES	ELECTRICAL DRAWING NO.		SUPPORTING SYSTEMS	REDUNDANT COUNTERPART	REMARKS
							HOT STAND BY	COLD SHUT DOWN	ELEC	AIR		EQUIPMENT ID NO.	EQUIPMENT DESCRIPTION	ELEC NODE	FIRE AREA/ZONE		SCHEM.	CABLE			
1	DG-DG-1A	Diesel Generator 1A	DG-20462	A	310524	DG-F-2A-A	X	X	X	X	HA1	DG-CS-9510-2	Control Switch (Push Button)	G07	DG-F-2A-A	A54-G06/5 A54-G29 G06-G29 G06-G29/1 G06-HR2 G06-G29/2 G07-G29 E93-G29/1 F80-FB7 F80-G06/8 F80-G06/9 F80-G07/9 F80-G07/F F80-G07/G	310857 E93/8a E93/8b E93/8c E93/8d E93/8e E93/8f E93/8g E93/8r	E93/8n E93/8p	CBA-FN-19 CBA-FN-20 DAH-FN-25A DAH-FN-26A EDE-PP-111A D/G Starting Air	DG-DG-1B	
												DG-CS-9511	Control Switch (Push Button)	G07	DG-F-2A-A						
												DG-CS-9512-3	Control Switch (Push Button)	G07	DG-F-2A-A						
												DG-CS-9512-4	Control Switch (Push Button)	G07	DG-F-2A-A						
												DG-CS-9517-2	Control Switch (Push Button)	G07	DG-F-2A-A						
												DG-CS-9518-2	Control Switch (Push Button)	G07	DG-F-2A-A						
												EDE-SS-9700	Selector Switch	G06	DG-F-2A-A						
												DG-G29-OP2	Oil Pressure Relay	G29	DG-F-2A-A						
												DG-G29-CR1	Ready for Auto Start Relay	G29	DG-F-2A-A						
												DG-G29-4A	Start Relay	G29	DG-F-2A-A						
												DG-G29-T2A	Cranking Time Control Time Delay Relay	G29	DG-F-2A-A						
												DG-ZL-9580-9	Start Ckt No 1 Signal Indicating Light	G07	DG-F-2A-A						
												DG-G29-ES1	Emergency Start Relay	G29	DG-F-2A-A						
												DG-G10-TSR1	Test Start Relay	G10	DG-F-2A-A						
												DG-G10-TSR2	Test Start Relay	G10	DG-F-2A-A						
												DG-G10-TSR3	Test Start Relay	G10	DG-F-2A-A						
												DG-G10-RDT	Ramp Down Time Relay	G10	DG-F-2A-A						
												DG-G07-IOT	Idle Operate Time Relay	G07	DG-F-2A-A						
												DG-G06-LSRX	Low Speed Aux Relay	G06	DG-F-2A-A						
												DG-FY-AS1	Air Start Solenoid Valve	G29	DG-F-2A-A						
												DG-G29-OP3	Oil Pressure Relay	G29	DG-F-2A-A						
												DG-G29-CR2	Ready for Auto Start Relay	G29	DG-F-2A-A						
												DG-G29-4B	Start Relay	G29	DG-F-2A-A						
												DG-G29-T2B	Cranking Time Control Time Delay Relay	G29	DG-F-2A-A						

* Table notes on last page of table

FUNCTION: DIESEL GENERATORS

ITEM NO.	EQUIPMENT ID NO.	EQUIPMENT DESCRIPTION	P&ID/1-LINE DRAWING NO.	TRAIN	PHYSICAL LOCATION DRAWING NO.	FIRE AREA/ZONE	REQUIRED FOR		POWER		ELEC NODE	SUPPORTING CONTROL AND INSTRUMENTATION EQUIPMENT				CABLES	ELECTRICAL DRAWING NO.		SUPPORTING SYSTEMS	REDUNDANT COUNTERPART	REMARKS
							HOT STAND BY	COLD SHUT DOWN	ELEC	AIR		EQUIPMENT ID NO.	EQUIPMENT DESCRIPTION	ELEC NODE	FIRE AREA/ZONE		SCHEM.	CABLE			
	DG-DG-1A (Continued)											DG-ZL-9580-10	Start Ckt No 2 Signal Indicating Light	G07	DG-F-2A-A						
												DG-G29-ES2	Emergency Start Relay	G29	DG-F-2A-A						
												DG-FY-AS2	Air Start Solenoid Valve	G29	DG-F-2A-A						
												DG-G29-OP4	Oil Pressure Relay	G29	DG-F-2A-A						
												DG-G29-5E	Emergency Stop Relay	G29	DG-F-2A-A						
												DG-G29-5	Normal Stop Relay	G29	DG-F-2A-A						
												DG-G29-5A	Shutdown Relay	G29	DG-F-2A-A						
												DG-FY-SDS	Shutdown Solenoid Valve	G29	DG-F-2A-A						
												DG-FY-ACO	Air Supply Cutoff Solenoid Valve	G29	DG-F-2A-A						
												DG-FY-CSV-A	Jacket Coolant Auxiliary Valves Solenoid	G29	DG-F-2A-A						
												DG-G29-T3A	Alarm Set Time Delay Relay	G29	DG-F-2A-A						
												DG-G29-TR	Engine Velocity Transmitter	G29	DG-F-2A-A						
												DG-FY-ISV-A	Intercooler Auxiliary Valves Solenoid	G29	DG-F-2A-A						
												DG-G29-SG	Signal Generator	G29	DG-F-2A-A						
												DG-G29-HSR	High-Speed Relay	G29	DG-F-2A-A						
												DG-G29-LSR	Low-Speed Relay	G29	DG-F-2A-A						
												DG-G29-ASR	Starting Air Shutoff Relay	G29	DG-F-2A-A						
												DG-G29-IPC	Coolant Pump Control Relay	G29	DG-F-2A-A						
												DG-G29-BDR	Barring Device Relay	G29	DG-F-2A-A						
												DG-G29-ASA	Air Start Relay	G29	DG-F-2A-A						
												DG-G29-ASB	Air Start Relay	G29	DG-F-2A-A						
												DG-FB7-K603A	Protection System Relay	FB7	CB-F-3A-A						
												EDE-CS-9518-1	Control Switch	F80	CB-F-3A-A						
												EDE-CS-9517-1	Control Switch	F80	CB-F-3A-A						
												EDE-CS-9510-1	Control Switch	F80	CB-F-3A-A						
												DG-FB7-K608A	Protection System Output Relay	FB7	CB-F-3A-A						
												EDE-CS-9512-1	Control Switch	F80	CB-F-3A-A						
												EDE-CS-9512-2	Control Switch	F80	CB-F-3A-A						
												EDE-ZL-9574	Monitoring Circuit Indication Light	G07	DG-F-2A-A						
												DG-G29-TACH	Tachometer	G29	DG-F-2A-A						
												DG-G29-SFR	Start Failure Relay	G29	DG-F-2A-A						

FUNCTION: DIESEL GENERATORS

ITEM NO.	EQUIPMENT ID NO.	EQUIPMENT DESCRIPTION	P&ID/1-LINE DRAWING NO.	TRAIN	PHYSICAL LOCATION DRAWING NO.	FIRE AREA/ZONE	REQUIRED FOR		POWER		ELEC NODE	SUPPORTING CONTROL AND INSTRUMENTATION EQUIPMENT				CABLES	ELECTRICAL DRAWING NO.		SUPPORTING SYSTEMS	REDUNDANT COUNTERPART	REMARKS
							HOT STAND BY	COLD SHUT DOWN	ELEC	AIR		EQUIPMENT ID NO.	EQUIPMENT DESCRIPTION	ELEC NODE	FIRE AREA/ZONE		SCHEM.	CABLE			
	DG-DG-1A (Continued)											EDE-ZL-9574-1	Monitoring Circuit Indicating Light	G29	DG-F-2A-A						
												DG-G29-SDR	Engine Trouble Shutdown Relay	G29	DG-F-2A-A						
												DG-G29-EOR	Engine Overspeed Relay	G29	DG-F-2A-A						
												EDE-A69-RLA	SI Signal Lockout Relay	A69	CB-F-1A-A						
												DG-G29-OTH	High Oil Temperature Relay	G29	DG-F-2A-A						
												DG-G29-CTH	High Coolant Temperature Relay	G29	DG-F-2A-A						
												EDE-A54-TD2	Test Device	A54	CB-F-1A-A						
												EDE-A69-TD2	Test Device	A69	CB-F-1A-A						
												DG-G29-EST	Emergency Start Time Delay Relay	G29	DG-F-2A-A						
												DG-G29-ESX	Emergency Start Auxiliary Relay	G29	DG-F-2A-A						
												DG-G29-RA1	Air Pressure Auxiliary Relay	G29	DG-F-2A-A						
												DG-G29-RA2	Air Pressure Auxiliary Relay	G29	DG-F-2A-A						
												DG-G29-CF3	Power Available Relay	G29	DG-F-2A-A						
												DG-G29-CF1	Power Available Relay	G29	DG-F-2A-A						
												DG-G29-CF2	Power Available Relay	G29	DG-F-2A-A						
												DG-G29-CF5	Power Available Relay	G29	DG-F-2A-A						
												DG-G29-OP1	Oil Pressure Relay	G29	DG-F-2A-A						
												DG-G29-FPL	Fuel Pressure Relay	G29	DG-F-2A-A						
												DG-G29-CPL	Jacket Coolant Pressure Relay	G29	DG-F-2A-A						
												DG-G29-IPL	Intercooler Pressure Relay	G29	DG-F-2A-A						
												DG-PS-OPL1	Oil Low Pressure Switch	G29	DG-F-2A-A						
												DG-PS-FPLA	Fuel Low Pressure Switch	G29	DG-F-2A-A						
												DG-PS-CPLA	Jacket Coolant Low Pressure Switch	G29	DG-F-2A-A						
												DG-PS-IPLA	Intercooler Low Pressure Switch	G29	DG-F-2A-A						

FUNCTION: DIESEL GENERATORS

ITEM NO.	EQUIPMENT ID NO.	EQUIPMENT DESCRIPTION	P&ID/1-LINE DRAWING NO.	TRAIN	PHYSICAL LOCATION DRAWING NO.	FIRE AREA/ZONE	REQUIRED FOR		POWER		ELEC NODE	SUPPORTING CONTROL AND INSTRUMENTATION EQUIPMENT				CABLES	ELECTRICAL DRAWING NO.		SUPPORTING SYSTEMS	REDUNDANT COUNTERPART	REMARKS
							HOT STAND BY	COLD SHUT DOWN	ELEC	AIR		EQUIPMENT ID NO.	EQUIPMENT DESCRIPTION	ELEC NODE	FIRE AREA/ZONE		SCHEM.	CABLE			
	DG-DG-1A (Continued)											DG-G29-OPC	Oil Pump Control Relay	G29	DG-F-2A-A						
												DG-G29-FPC	Auxiliary Fuel Oil Pump Control Relay	G29	DG-F-2A-A						
												DG-G29-CPC	Coolant Pump Control Relay	G29	DG-F-2A-A						
												DG-G29-CF4	Power Available Relay	G29	DG-F-2A-A						
												DG-G07-R43L1	Selector Switch Auxiliary Latch Relay (Local)	G07	DG-F-2A-A						
												DG-G07-R43L2	Selector Switch Auxiliary Relay (Local)	G07	DG-F-2A-A						
												DG-G07-R43L4	Selector Switch Auxiliary Relay (Local)	G07	DG-F-2A-A						
												DG-G07-R43M1	Selector Switch Auxiliary Latch Relay (Maintenance)	G07	DG-F-2A-A						
												DG-G07-R43R1	Selector Switch Auxiliary Latch Relay (Remote)	G07	DG-F-2A-A						
												DG-G07-R43R2	Selector Switch Auxiliary Latch Relay (Remote)	G07	DG-F-2A-A						
												DG-G07-R43R5	Selector Switch Auxiliary Relay (Remote)	G07	DG-F-2A-A						
												DG-HR2-PR1	EPS Auxiliary Relay	HR2	CB-F-1A-A						
												DG-HR2-PR1X	EPS Auxiliary Relay	HR2	CB-F-1A-A						
												DG-G29-D1	P-N Junction Diode	G29	DG-F-2A-A						
												DG-SS-EOS	Engine Overspeed Switch	G29	DG-F-2A-A						
												DG-PS-APL1	Air Pressure Low Switch	G29	DG-F-2A-A						
												DG-PS-APL2	Air Pressure Low Switch	G29	DG-F-2A-A						
												DG-PS-CPS	Coolant Pressure Switch	G29	DG-F-2A-A						
												DG-PS-OPL2	Oil Low Pressure Switch	G29	DG-F-2A-A						
												DG-PS-OPL3	Oil Low Pressure Switch	G29	DG-F-2A-A						
												DG-PS-OPL4	Oil Low Pressure Switch	G29	DG-F-2A-A						
												DG-G29-CTH-1	Coolant High Temperature Auxiliary Relay	G29	DG-F-2A-A						
												DG-G29-OTH-1	Oil High Temperature Auxiliary Relay	G29	DG-F-2A-A						

FUNCTION: DIESEL GENERATORS

ITEM NO.	EQUIPMENT ID NO.	EQUIPMENT DESCRIPTION	P&ID/1-LINE DRAWING NO.	TRAIN	PHYSICAL LOCATION DRAWING NO.	FIRE AREA/ZONE	REQUIRED FOR		POWER		ELEC NODE	SUPPORTING CONTROL AND INSTRUMENTATION EQUIPMENT				CABLES	ELECTRICAL DRAWING NO.		SUPPORTING SYSTEMS	REDUNDANT COUNTERPART	REMARKS
							HOT STAND BY	COLD SHUT DOWN	ELEC	AIR		EQUIPMENT ID NO.	EQUIPMENT DESCRIPTION	ELEC NODE	FIRE AREA/ZONE		SCHEM.	CABLE			
	DG-DG-1A (Continued)											DG-ZS-BD1	Barring Device Position Switch	G29	DG-F-2A-A						
												DG-ZS-BD2	Barring Device Position Switch	G29	DG-F-2A-A						
												DG-G29-FU	10 Amp Fuses (10)	G29	DG-F-2A-A						
												EDE-A54-86DP	DG Primary Protection Lockout Relay	A54	CB-F-1A-A						
												EDE-A69-86DB	DG Backup Protection Lockout Relay	A69	CB-F-1A-A						
												DG-G29-TRP	TR Control Power Relay	G29	DG-F-2A-A						
												DG-G29-5B	Shutdown Auxiliary Relay	G29	DG-F-2A-A						
												EDE-A54-TS	Test Start Control Switch	A54	CB-F-1A-A						
												EDE-G07-FU-17,18	6 Amp Fuses (2)	G07	DG-F-2A-A	DM9-G10 F80-G07/8	310102		DAH-FN-25A		
												EDE-SS-9700	Selector Switch	G06	DG-F-2A-A		G07/2a	G07/2g	DAH-FN-25B		
												DG-G07-CF6	Auxiliary Relay	G07	DG-F-2A-A		G07/2b G07/2c DM9a	DM9b	DG-CP-75A EDE-SWG-11A		
												DG-G07-R43L1	Selector Switch Auxiliary Latch Relay (Local)	G07	DG-F-2A-A						
												DG-G07-R43L2	Selector Switch Auxiliary Relay (Local)	G07	DG-F-2A-A						
												DG-G07-R43L3	Selector Switch Auxiliary Relay (Local)	G07	DG-F-2A-A						
												DG-G07-R43L4	Selector Switch Auxiliary Relay (Local)	G07	DG-F-2A-A						
												DG-G07-R43L5	Selector Switch Auxiliary Relay (Local)	G07	DG-F-2A-A						
												DG-G07-R43R6	Selector Switch Auxiliary Relay (Remote)	G07	DG-F-2A-A						
												DG-G07-R43R2	Selector Switch Auxiliary Relay (Remote)	G07	DG-F-2A-A						
												DG-G07-R43R3	Selector Switch Auxiliary Relay (Remote)	G07	DG-F-2A-A						
												DG-G07-R43R4	Selector Switch Auxiliary Relay (Remote)	G07	DG-F-2A-A						
												DG-G07-R43R5	Selector Switch Auxiliary Relay (Remote)	G07	DG-F-2A-A						
												DG-G07-R43M1	Selector Switch Auxiliary Latch Relay (Maintenance)	G07	DG-F-2A-A						
												DG-G07-R43R1	Selector Switch Auxiliary Latch Relay (Remote)	G07	DG-F-2A-A						

FUNCTION: DIESEL GENERATORS

ITEM NO.	EQUIPMENT ID NO.	EQUIPMENT DESCRIPTION	P&ID/1-LINE DRAWING NO.	TRAIN	PHYSICAL LOCATION DRAWING NO.	FIRE AREA/ZONE	REQUIRED FOR		POWER		ELEC NODE	SUPPORTING CONTROL AND INSTRUMENTATION EQUIPMENT				CABLES	ELECTRICAL DRAWING NO.		SUPPORTING SYSTEMS	REDUNDANT COUNTERPART	REMARKS
							HOT STAND BY	COLD SHUT DOWN	ELEC	AIR		EQUIPMENT ID NO.	EQUIPMENT DESCRIPTION	ELEC NODE	FIRE AREA/ZONE		SCHEM.	CABLE			
	DG-DG-1A (Continued)											EDE-SNS-9763-1	Selector Switch	F80	CB-F-3A-A						
												EDE-CS-9707-1	Control Switch	F80	CB-F-3A-A						
												EDE-SNS-9763-2	Selector Switch	G06	DG-F-2A-A						
												EDE-CS-9707-3	Control Switch	G07	DG-F-2A-A						
												EDE-G06-FU-9,10	50 Amp Fuses	G06	DG-F-2A-A	A69-G06	310102		DAH-FN-25A		
												DG-A69,XFMR	Grounding Transformer	A69	CB-F-1A-A	G06-HF7	HA1a	HA1c	DAH-FN-26A		
												DG-HF7-XF	DG Field	HF7	DG-F-2A-A	A69-HN0	HA1b	HA1d	CBA-FN-19		
												DG-G07-SEVR-PC	Static Exciter Voltage Regulator Power Chassis	G06	DG-F-2A-A	DM9-G10	DM9a	DM9b	CBA-FN-29		
																			EDE-SWG-11A		
												DG-SM-9585	Governor Control (2301A)	G06	DG-F-2A-A						
												DG-GT3-PT1	Potential Transformer	GT3	DG-F-2A-A						
												DG-GT3-PT2	Potential Transformer	GT3	DB-F-2A-A						
												DG-GT3-PPT4	Power Transformer	GT3	DB-F-2A-A						
												DG-HN0-NCB	DG Neutral Connection Box	HN0	DG-F-2A-A						
												DG-GT3-CCT	Current Transformer 2000/5	GT3	DG-F-2A-A						
												DG-G06-K2	Field Flashing Contractor	G06	DB-F-2A-A						
												DG-G10-IDR1	Isochronous Droop Relay	G10	DG-F-2A-A						
												EDE-A69-60	Voltage Balance Relays	A69	CB-F-1A-A						
												DG-G06-64F	Generator Field Failure Relay	G06	DG-F-2A-A						
												DG-G10-SEVR-CC	Static Exciter Voltage Regulator Control Chassis	G10	DG-F-2A-A						
												DG-GT3-XCT1,2,3	Generator Current Transformers (2000/5)	GT3	DG-F-2A-A						
												DG-VM-9702-2	Field Voltmeter	G10	DG-F-2A-A						
												DG-G10-DCT	Field Voltage Transducer	G10	DG-F-2A-A						
												DG-G06-SH	50 MV Field Shunt	G06	DG-F-2A-A						
												DG-AM-9702-2	DC Field Ammeter	G10	DG-F-2A-A						
												DG-G10-ATR	Current Transducer	G10	DG-F-2A-A						
												DG-G10-CF10	Loss of Power Relay	G10	DG-F-2A-A						
												DG-A69-64	Ground Fault Sensing Relay	A69	CB-F-1A-A						
												DG-G10-FU-22,23	1 Amp Fuses	G10	DG-F-2A-A						
												DG-G07-IL10	Diode Failure Light	G07	DG-F-2A-A						

FUNCTION: DIESEL GENERATORS

ITEM NO.	EQUIPMENT ID NO.	EQUIPMENT DESCRIPTION	P&ID/1-LINE DRAWING NO.	TRAIN	PHYSICAL LOCATION DRAWING NO.	FIRE AREA/ZONE	REQUIRED FOR		POWER		ELEC NODE	SUPPORTING CONTROL AND INSTRUMENTATION EQUIPMENT				CABLES	ELECTRICAL DRAWING NO.		SUPPORTING SYSTEMS	REDUNDANT COUNTERPART	REMARKS
							HOT STAND BY	COLD SHUT DOWN	ELEC	AIR		EQUIPMENT ID NO.	EQUIPMENT DESCRIPTION	ELEC NODE	FIRE AREA/ZONE		SCHEM.	CABLE			
	DG-DG-1A (Continued)											EDE-G06-FU-1,2	10 Amp Fuses (2)	G06	DG-F-2A-A	G06-G29/5 DM9-G10 F80-G06/3 F80-G06/4 F80-G06/5 F80-G10/1	310102 G06/1a G06/1b G06/1c G06/1d DM9a	G06/1f DM9b	DAH-FN-25A DAH-FN-26A DG-CP-75A EDE-SWG-11A		
												DG-G07-R43R5	Selector Switch Auxiliary Relay (Remote)	G07	DG-F-2A-A						
												EDE-CS-9820-2	Control Switch (Push Button)	G10	DG-F-2A-A						
												DG-G29-HSR	High Speed Relay	G29	DG-F-2A-A						
												DG-G29-LSR	Low Speed Relay	G29	DG-F-2A-A						
												DG-G29-ES1	Emergency Start Relay	G29	DG-F-2A-A						
												DG-G29-ES2	Emergency Start Relay	G29	DG-F-2A-A						
												DG-SS-9585	Selector Switch	G07	DG-F-2A-A						
												DG-ZL-9580-11	Field Flash Signal Indicating Light	G10	DG-F-2A-A						
												DG-G07-R43M1	Selector Switch Auxiliary Latch Relay (Maintenance)	G07	DG-F-2A-A						
												DG-G29-5A	DG - Shutdown Relay	G29	DG-F-2A-A						
												DG-G06-LSRX	Low Speed Auxiliary Relay	G06	DG-F-2A-A						
												DG-G06-LSRXX	Time Delay Relay	G06	DG-F-2A-A						
												EDE-CS-9801-1	Push Button	G10	DG-F-2A-A						
												EDE-CS-9801-2	Push Button	G10	DG-F-2A-A						
												DG-G06-SERV-PC	Static Exciter Voltage Regulatory Power Chassis	G06	DG-F-2A-A						
												DG-G10-NM	Null Meter	G10	DG-F-2A-A						
												EDE-SS-9700	Selector Switch	G06	DG-F-2A-A						
												EDE-CS-9821-2	Control Switch	G10	DG-F-2A-A						
												EDE-CS-9822-2	Control Switch	G10	DG-F-2A-A						
												DG-G10-RR	Regulator Relay	G10	DG-F-2A-A						
												DG-G10-SERV-CC	Static Exciter Voltage Regulator Control Chassis	G10	DG-F-2A-A						
												DG-G10-CF-8	Loss of Power Relay	G10	DG-F-2A-A						
												EDE-CS-9820-1	Push Button Switch	F80	CB-F-3A-A						
												EDE-CS-9822-1	Control Switch	F80	CB-F-3A-A						
												EDE-CS-9821-1	Control Switch	F80	CB-F-3A-A						
												EDE-VM-9782	Null Voltmeter	F80	CB-F-3A-A						
												DG-G07-R43R6	Selector Switch Auxiliary Relay (Remote)	G07	DG-F-2A-A						

FUNCTION: DIESEL GENERATORS

ITEM NO.	EQUIPMENT ID NO.	EQUIPMENT DESCRIPTION	P&ID/1-LINE DRAWING NO.	TRAIN	PHYSICAL LOCATION DRAWING NO.	FIRE AREA/ZONE	REQUIRED FOR		POWER		ELEC NODE	SUPPORTING CONTROL AND INSTRUMENTATION EQUIPMENT				CABLES	ELECTRICAL DRAWING NO.		SUPPORTING SYSTEMS	REDUNDANT COUNTERPART	REMARKS
							HOT STAND BY	COLD SHUT DOWN	ELEC	AIR		EQUIPMENT ID NO.	EQUIPMENT DESCRIPTION	ELEC NODE	FIRE AREA/ZONE		SCHEM.	CABLE			
	DG-DG-1A (Continued)											EDE-G06-FU-3,4	6 Amp Fuses (2)	G06	DG-F-2A-A	G06-G29/8 G06-G29/9 G06-G29/6 F80-G06/6 EC7-G10 EC7-G07 EC7-HR2 DM9-G10	310102 G06/2a G06/2b G06/2e DM9a	G06/2d DM9b	DAH-FN-25A DAH-FN-26A DG-CP-75A EDE-SWG-11A		
												DG-G10-IDR2	Isochronous Droop Relay	G10	DG-F-2A-A						
												DG-SZ-9585	Governor Actuator	G29	DG-F-2A-A						
												DG-SC-9585	Digital Reference Unit (DRU)	G06	DG-F-2A-A						
												DG-SM-9585	2301A Governor Controller	G06	DG-F-2A-A						
												DG-ST-9585	Magnetic Pickup (MPU-1)	G29	DG-F-2A-A						
												DG-SS-9585	Selector Switch	G07	DG-F-2A-A						
												DG-G10-TSR1	Test Start Relay	G10	DG-F-2A-A						
												DG-G10-TSR2	Test Start Relay	G10	DG-F-2A-A						
												DG-G10-TSR3	Test Start Relay	G10	DG-F-2A-A						
												DG-G10-R21	Speed Adjust Auxiliary Relay	G10	DG-F-2A-A						
												DG-G10-RDT	Ramp Down Time Relay	G10	DG-F-2A-A						
												DG-G07-IOT	Idle Operate Time Relay	G07	DG-F-2A-A						
												EDE-SS-9700	Selector Switch	G06	DG-F-2A-A						
												EDE-CS-9823-2	Control Switch	G06	DG-F-2A-A						
												DG-G06-LSRX	Low Speed Auxiliary	G06	DG-F-2A-A						
												DG-G29-ES1	Emergency Start Auxiliary Relay	G29	DG-F-2A-A						
												DG-G29-ES2	Emergency Start Auxiliary Relay	G29	DG-F-2A-A						
												DG-G07-ESS	Emergency Start Auxiliary Relay	G07	DG-F-2A-A						
												DG-G10-CF-9	Loss of Power Relay	G10	DG-F-2A-A						
												EDE-CS-9823-1	Control Switch	F80	CB-F-3A-A						
												DG-G07-R43R3	Selector Switch Auxiliary Relay (Remote)	G07	DG-F-2A-A						
												DG-HR2-PR1	EPS Auxiliary Relay	HR2	CB-F-1A-A						
												DG-HR2-HR8	EPS Auxiliary Relay	HR2	CB-F-1A-A						
												DG-EC7-R1	Auxiliary Relay	EC7	CB-F-1A-A						
												DG-G10-IDR4	Isochronous Droop Relay	G10	DG-F-2A-A						

FUNCTION: DIESEL GENERATORS

ITEM NO.	EQUIPMENT ID NO.	EQUIPMENT DESCRIPTION	P&ID/1-LINE DRAWING NO.	TRAIN	PHYSICAL LOCATION DRAWING NO.	FIRE AREA/ZONE	REQUIRED FOR		POWER		ELEC NODE	SUPPORTING CONTROL AND INSTRUMENTATION EQUIPMENT				CABLES	ELECTRICAL DRAWING NO.		SUPPORTING SYSTEMS	REDUNDANT COUNTERPART	REMARKS
							HOT STAND BY	COLD SHUT DOWN	ELEC	AIR		EQUIPMENT ID NO.	EQUIPMENT DESCRIPTION	ELEC NODE	FIRE AREA/ZONE		SCHEM.	CABLE			
	DG-DG-1A (Continued)											EDE-G10-FU-7,8	10 Amp Fuses (2)	G10	DG-F-2A-A	A54-G10/1 A69-G10 G10-G29 DM9-G10 G06-G29/4 F80-G07/8 A54-G07/4 F80-G06/7 F80-G07/7	G10a G10b G10c DM9a	G10e DM9b	DAH-FN-25A DAH-FN-26A CBA-FN-19 CBA-FN-20 DG-CP-75A EDE-SWG-11A		
												DG-G29-CR1	Auto Start Ready Relay	G29	DG-F-2A-A						
												DG-G29-CR2	Auto Start Ready Relay	G29	DG-F-2A-A						
												DG-G29-RA1	Air Pressure Auxiliary Relay	G29	DG-F-2A-A						
												DG-G29-RA2	Air Pressure Auxiliary Relay	G29	DG-F-2A-A						
												DG-G07-R43L3	Selector Switch Auxiliary Relay (Local)	G07	DG-F-2A-A						
												DG-G07-ESS	Emergency Start Auxiliary Relay	G07	DG-F-2A-A						
												DG-G10-RR	Regulator Relay	G10	DG-F-2A-A						
												DG-G07-R43L4	Selector Switch Auxiliary Relay (Local)	G07	DG-F-2A-A						
												DG-G07-R43L5	Selector Switch Auxiliary Relay (Local)	G07	DG-F-2A-A						
												DG-G07-R43R3	Selector Switch Auxiliary Relay (Remote)	G07	DG-F-2A-A						
												DG-G07-R43R4	Selector Switch Auxiliary Relay (Remote)	G07	DG-F-2A-A						
												DG-G07-R43R5	Selector Switch Auxiliary Relay (Remote)	G07	DG-F-2A-A						
												DG-G07-R43R6	Selector Switch Auxiliary Relay (Remote)	G07	DG-F-2A-A						
												DG-G07-64F	Generator Field Ground Relay	G06	DG-F-2A-A						
												DG-G10-64FX	Generator Field Ground Auxiliary Relay	G10	DG-F-2A-A						
												DG-G07-64FXA	Generator Field Ground Auxiliary Relay	G07	DG-F-2A-A						
												EDE-CS-9824-2	Control Switch	G10	DG-F-2A-A						
												DG-G10-23	Thermostat	G10	DG-F-2A-A						
												DG-G07-R-DNA	Diesel Not Available Auxiliary Relay	G07	DG-F-2A-A						
												DG-G07-R-B/I	SW CT Bypass/MOP Auxiliary Relay	G07	DG-F-2A-A						
												DG-G10-23X	Thermostat Auxiliary Relay	G10	DG-F-2A-A						

FUNCTION: DIESEL GENERATORS

ITEM NO.	EQUIPMENT ID NO.	EQUIPMENT DESCRIPTION	P&ID/1-LINE DRAWING NO.	TRAIN	PHYSICAL LOCATION DRAWING NO.	FIRE AREA/ZONE	REQUIRED FOR		POWER		ELEC NODE	SUPPORTING CONTROL AND INSTRUMENTATION EQUIPMENT				CABLES	ELECTRICAL DRAWING NO.		SUPPORTING SYSTEMS	REDUNDANT COUNTERPART	REMARKS
							HOT STAND BY	COLD SHUT DOWN	ELEC	AIR		EQUIPMENT ID NO.	EQUIPMENT DESCRIPTION	ELEC NODE	FIRE AREA/ZONE		SCHEM.	CABLE			
	DG-DG-1A (Continued)											DG-ZL-9580-12	Indicating Light	F80	CB-F-3A-A						
												DG-G29-ESX	Emergency Start Aux Relay	G29	DG-F-2A-A						
												EDE-ZL-9580-8	Indicating Light	F80	CB-F-3A-A						
												EDE-ZL-9518-1	Indicating Light	F80	CG-F-3A-A						
												EDE-CS-9824-1	Indicating Light	F80	CB-F-3A-A						
												EDE-ZL-9824-1	Indicating Light	F80	CB-F-3A-A						
												EDE-SNS-9763-1	Synchronizing Switch	F80	CB-F-3A-A						
												EDE-ZL-9802-1	Indicating Light	F80	CB-F-3A-A						
												EDE-CS-9824-1	Control Switch	F80	CB-F-3A-A						
												DG-A69-RLA	LOCA Seal Relay	A69	CB-F-1A-A						
												EDE-ZL-9580-6	Indicating Light	F80	CB-F-3A-A						
												DG-G10-IDR1	Isochronous Droop Relay	G10	DG-F-2A-A						
												DG-G10-IDR2	Isochronous Droop Relay	G10	DG-F-2A-A						
												DG-G10-IDR3	Isochronous Droop Relay	G10	DG-F-2A-A						
												EDE-ZL-9802-2	Indicating Light	G07	DG-F-2A-A						
												DG-G07-IDR4	Isochronous Droop Relay	G10	DG-F-2A-A						
												EDE-SS-9700	Selector Switch	G06	DG-F-2A-A						
												EDS-SNS-9736-2	Synchronizing Switch	G06	DG-F-2A-A						
												EDE-A51-52S	Circuit Breaker Operated Contact	A51	CB-F-1A-A						
												EDE-A52-52S	Circuit Breaker Operated Contact	A52	CB-F-1A-A						
												EDE-A54-52S	Circuit Breaker Operated Contact	A54	CB-F-1A-A						
												EDE-A69-60AX	Voltage Balance Auxiliary Relay	A69	CB-F-1A-A						
												DG-ZL-9580-3	Indicating Light	G07	DG-F-2A-A						
												DG-ZL-9518-2	Indicating Light	G07	DG-F-2A-A						
												EDE-ZL-9824-1	Indicating Light	G10	DG-F-2A-A						
												EDE-ZL-9824-2	Indicating Light	G10	DG-F-2A-A						

FUNCTION: DIESEL GENERATORS

ITEM NO.	EQUIPMENT ID NO.	EQUIPMENT DESCRIPTION	P&ID/1-LINE DRAWING NO.	TRAIN	PHYSICAL LOCATION DRAWING NO.	FIRE AREA/ZONE	REQUIRED FOR		POWER		ELEC NODE	SUPPORTING CONTROL AND INSTRUMENTATION EQUIPMENT				CABLES	ELECTRICAL DRAWING NO.		SUPPORTING SYSTEMS	REDUNDANT COUNTERPART	REMARKS
							HOT STAND BY	COLD SHUT DOWN	ELEC	AIR		EQUIPMENT ID NO.	EQUIPMENT DESCRIPTION	ELEC NODE	FIRE AREA/ZONE		SCHEM.	CABLE			
	DG-DG-1A (Continued)											DG-ZL-9580-2	Indicating Light	G07	DG-F-2A-A						
												DG-ZL-9580-4	Indicating Light	G07	DG-F-2A-A						
												DG-ZL-9580-5	Indicating Light	G07	DG-F-2A-A						
												MM-CS-6651	Test Push Button with Indicating Light	F80	CB-F-3A-A						
												DG-G10-CF8	Loss of Control Power Relay	G10	DG-F-2A-A						
												DG-G10-CF9	Loss of Control Power Relay	G10	DG-F-2A-A						
												DG-G10-CF10	Loss of Control Power Relay	G10	DG-F-2A-A						
												DG-G10-CR45	Annunciator Auxiliary Relay	G10	DG-F-2A-A						
												DG-G10-CR42	Annunciator Auxiliary Relay	G10	DG-F-2A-A						

FUNCTION: DIESEL GENERATORS

ITEM NO.	EQUIPMENT ID NO.	EQUIPMENT DESCRIPTION	P&ID/1-LINE DRAWING NO.	TRAIN	PHYSICAL LOCATION DRAWING NO.	FIRE AREA/ZONE	REQUIRED FOR		POWER		ELEC NODE	SUPPORTING CONTROL AND INSTRUMENTATION EQUIPMENT				CABLES	ELECTRICAL DRAWING NO.		SUPPORTING SYSTEMS	REDUNDANT COUNTERPART	REMARKS
							HOT STAND BY	COLD SHUT DOWN	ELEC	AIR		EQUIPMENT ID NO.	EQUIPMENT DESCRIPTION	ELEC NODE	FIRE AREA/ZONE		SCHEM.	CABLE			
2	DG-TK-45A	Starting Air Compressor Skid Air Receiver Tank	DG-20460	A	310524	DG-F-2A-A	X	X	-	-	HM2	-	-	-	-	-	-	-	-	DG-TK-45C	Notes 1 and 5
3	DG-TK-45B	Starting Air Compressor Skid Air Receiver tank	DG-20460	A	310524	DG-F-2A-A	X	X	-	-	HM2	-	-	-	-	-	-	-	-	DG-TK-45D	Notes 1 and 5
4	DG-MM-8A	Exhaust Silencer	DG-20462	A	310525	DG-F-3E-A	X	X	-	-	-	-	-	-	-	-	-	-	-	DG-MM-8B	Note 1
5	DG-F-36A	Air Intake Filter	DG-20462	A	310525	DG-F-3E-A	X	X	-	-	-	-	-	-	-	-	-	-	-	DF-F-36B	Note 1
6	DG-TK-26A	Fuel Oil Storage Tank	DG-20459	A	310525 202264	DG-F-1A-A	X	X	-	-	-	-	-	-	-	-	-	-	-	DG-TK-26B	Notes 1 and 2
7	DG-TK-78A	Fuel Oil Day Tank	DG-20459	A	310525	DG-F-3C-A	X	X	-	-	-	-	-	-	-	-	-	-	-	DG-TK-78B	Note 1
8	DG-P-38A	Fuel Oil Transfer Pump	DG-20459	A	310524 202265	DG-F-1A-A	X	X	X	-	N75	DG-BM7-52 DG-CS-9503 DG-LS-FLC DG-BM7-42 DG-BM7-49 DG-BM7-FU	460 V AC Circuit Breaker Control Switch with Indication Fuel Low Level Switch Motor Starter Thermal Overload Relay Fuse	BM7 BE4 RT8 BM7 BM7 BM7	CB-F-1A-A DG-F-2A-A DG-F-3C-A CB-F-1A-A CB-F-1A-A CB-F-1A-A	BE4-BM7 BM7-RT8 BM7-N75	310857 BM7a BM7c		CBA-FN-19 CBA-FN-20 DAH-FN-25A DAH-FN-26A EDE-MCC-521	DG-P-38B	
9	DG-P-119A	Engine-Driven Fuel Oil Pump	DG-20459	A	310524	DG-F-2A-A	X	X	-	-	-	-	-	-	-	-	-	-	-	DG-P-119B	Notes 1 and 4
10	DG-P-115A	Engine-Driven Lube Oil Pump	DG-20458	A	310524	DG-F-2A-A	X	X	-	-	-	-	-	-	-	-	-	-	-	DG-P-115B	Notes 1 and 4
11	DG-TK-102A	Lube Oil Reservoir	DG-20458	A	310524	DG-F-2A-A	X	X	-	-	-	-	-	-	-	-	-	-	-	DG-TK-102B	Notes 1 and 4
12	DG-P-228A	Engine-Driven Rocker Arm Lube Pump	DG-20458	A	310524	DG-F-2A-A	X	X	-	-	-	-	-	-	-	-	-	-	-	DG-P-228B	Notes 1 and 4

FUNCTION: DIESEL GENERATORS

ITEM NO.	EQUIPMENT ID NO.	EQUIPMENT DESCRIPTION	P&ID/1-LINE DRAWING NO.	TRAIN	PHYSICAL LOCATION DRAWING NO.	FIRE AREA/ZONE	REQUIRED FOR		POWER		ELEC NODE	SUPPORTING CONTROL AND INSTRUMENTATION EQUIPMENT				CABLES	ELECTRICAL DRAWING NO.		SUPPORTING SYSTEMS	REDUNDANT COUNTERPART	REMARKS
							HOT STAND BY	COLD SHUT DOWN	ELEC	AIR		EQUIPMENT ID NO.	EQUIPMENT DESCRIPTION	ELEC NODE	FIRE AREA/ZONE		SCHEM.	CABLE			
13	DG-E-41A	Lube Oil Heat Exchanger	DG-20458	A	310524	DG-F-2A-A	X	X	-	-	-	-	-	-	-	-	-	-	-	DG-E-41B	Notes 1 and 4
14	DG-TK-46A	Diesel Generator 1A Component Cooling Water Expansion Tank	DG-20461	A	310525	DG-F-3C-A	X	X	-	-	-	-	-	-	-	-	-	-	-	DG-TK-46B	Notes 1 and 4
15	DG-E-42A	Diesel Generator 1A Component Cooling Water Heat Exchanger	DG-20461	A	310767 805217	PAB-F-3A-Z	X	X	-	-	-	-	-	-	-	-	-	-	Service Water	DG-E-42B	Notes 1 and 3
16	DG-P-121A	Engine-Driven Jacket Coolant Pump	DG-20461	A	310524	DG-F-2A-A	X	X	-	-	-	-	-	-	-	-	-	-	-	DG-P-121B	Notes 1 and 4
17	DG-P-231A	Engine-Driven Air Coolant Pump	DG-20461	A	310524	DG-F-2A-A	X	X	-	-	-	-	-	-	-	-	-	-	-	DG-P-231B	Notes 1 and 4
17a	DG-C-2A	DG Starting Air Compressor	DG-20460	A	310524	DG-F-2A-A	X	X	X	-	NC3	DG-BM3-52	460 v AC Circuit Breaker	BM3	DG-F-2A-A	BM3-NC3 BM3-HM2 BM3-HR2	310857 BM3a	BM3c	DAH-FN-25A DAH-FN-26A EDE-MCC-511	DG-C-2-B	Note 5
												DG-CS-9559	Control Switch	BM3	DG-F-2A-A						
												DGA-PS-APCI	Pressure Switch	HM2	DG-F-2A-A						
												DG-PS-APCZ	Pressure Switch	HM2	DG-F-2A-A						
												DG-HR2-HR9	EPS Relay	HR2	CB-F-1A-A						
												DG-BM3-42	Motor Starter	BM3	CB-F-1A-A						
												DG-BM3-49	Thermal O. L.	BM3	CB-F-1A-A						
												DG-BM3-FU	Fuse	BM3	CB-F-1A-A						
17b	DG-SKD-17A	Diesel Generator 1A Starting Air Compressor Skid	DG-20460	A	310524	DG-F-2A-A	X	X	X	-	HM2	DG-E39/4-52	120 v AC Circuit Breaker	E39	DG-F-2A-A	E39-HM2 BM3-HM2	310857 E39/4a	E39/4b	DAH-FN-25A DAH-FN-26A EDE-MCC-E511 120 v AC Dist. Panel	DG-SKD-17B	Note 5
												DG-HM2-52	120 v AC Circuit Breaker	HM2	DG-F-2A-A						
												DG-HM2-ATM	Auto Drain Timer	HM2	DG-F-2A-A						
												DG-V-253A	Auto Drain Solenoid Vlv.	HM2	DG-F-2A-A						
												DG-HM2-ICT	Motor Synchronous Timer	HM2	DG-F-2A-A						
												DG-V-279A	Left Chamber Inlet Sol. Vlv.	HM2	DG-F-2A-A						
												DG-V-280A	Right Chamber Inlet Sol. Vlv.	HM2	DG-F-2A-A						
												DG-V-285A	Repressurizing Sol. Vlv.	HM2	DG-F-2A-A						
												DG-V-288A	Left Chamber Exhaust Sol. Vlv.	HM2	DG-F-2A-A						
												DG-V-289A	Right Chamber Exhaust Sol. Vlv.	HM2	DG-F-2A-A						
												DG-V-HM2-KR	Aux. Relay	HM2	DG-F-2A-A						
												DG-BM3-42	Motor Starter	BM3	CB-F-1A-A						

FUNCTION: DIESEL GENERATORS

ITEM NO.	EQUIPMENT ID NO.	EQUIPMENT DESCRIPTION	P&ID/1-LINE DRAWING NO.	TRAIN	PHYSICAL LOCATION DRAWING NO.	FIRE AREA/ZONE	REQUIRED FOR		POWER		ELEC NODE	SUPPORTING CONTROL AND INSTRUMENTATION EQUIPMENT				CABLES	ELECTRICAL DRAWING NO.		SUPPORTING SYSTEMS	REDUNDANT COUNTERPART	REMARKS
							HOT STAND BY	COLD SHUT DOWN	ELEC	AIR		EQUIPMENT ID NO.	EQUIPMENT DESCRIPTION	ELEC NODE	FIRE AREA/ZONE		SCHEM.	CABLE			
17c	DG-C-18A	DG Backup Operating Air Compressor	DG-20460	A	310524	DG-F-2A-A	X	X	X	-	ML7	DG-BS3-52 DG-BS3-42 DG-BS3-49 DG-BS3-FU DG-CS-9526 DGA-PS-APC3 DG-PS-APC4 DG-V-325A	460 v AC Ckt Bkr. Motor Starter Thermal O. L. Fuse Control Switch Pressure Switch Pressure Switch Unloader Sol. Vlv.	BS3 BS3 BS3 BS3 BS3 HM2 HM2 UBO	DG-F-2A-A DG-F-2A-A DG-F-2A-A DG-F-2A-A DG-F-2A-A DG-F-2A-A DG-F-2A-A DG-F-2A-A	BS3-ML7 BS3-HM2 BS3-UBO	310857 BS3a	BS3c	DAH-FN-25A DAH-FN-26A EDE-MCC-511	DG-C-18B	Note 5

FUNCTION: DIESEL GENERATORS

ITEM NO.	EQUIPMENT ID NO.	EQUIPMENT DESCRIPTION	P&ID/1-LINE DRAWING NO.	TRAIN	PHYSICAL LOCATION DRAWING NO.	FIRE AREA/ZONE	REQUIRED FOR		POWER		ELEC NODE	SUPPORTING CONTROL AND INSTRUMENTATION EQUIPMENT				CABLES	ELECTRICAL DRAWING NO.		SUPPORTING SYSTEMS	REDUNDANT COUNTERPART	REMARKS
							HOT STAND BY	COLD SHUT DOWN	ELEC	AIR		EQUIPMENT ID NO.	EQUIPMENT DESCRIPTION	ELEC NODE	FIRE AREA/ZONE		SCHEM.	CABLE			
18	DG-DG-1B	Diesel Generator 1B	DG-20467	B	310524	DG-F-2B-A	X	X	X	X	HA2	DG-CS-9520-2	Control Switch (Push Button)	G19	DG-F-2B-A	A74-G18/7 A74-G30/6 E94-G30/1 G18-G30 G18-G30/1 G18-G30/2 G18-HR4 G19-G30 G19-G30/6 G18-G30/8 F81-FB0 F81-G18 F81-G18/1 F81-G19 F81-G19/E F81-G19/F	310857 E94/8a E94/8b E94/8c E94/8d E94/8e E94/8f E94/8g E94/8s	E94/8n E94/8p E94/8r	DBA-FN-32 DBA-FN-33 DAH-FN-25B DAH-FN-26B EDE-PP-111B D/G Starting Air	DG-DG-1A	
												DC-CS-9521	Control Switch (Push Button)	G19	DG-F-2B-A						
												DG-CS-9522-3	Control Switch (Push Button)	G19	DG-F-2B-A						
												DG-CS-9522-4	Control Switch (Push Button)	G19	DG-F-2B-A						
												DG-CS-9527-2	Control Switch (Push Button)	G19	DG-F-2B-A						
												DG-CS-9528-2	Control Switch (Push Button)	G19	DG-F-2B-A						
												EDE-SS-9710	Selector Switch	G18	DG-F-2B-A						
												DG-G30-OP2	Oil Pressure Relay	G30	DG-F-2B-A						
												DG-G30-CR1	Ready for Auto Start Relay	G30	DG-F-2B-A						
												DG-G30-4A	Start Relay	G30	DG-F-2B-A						
												DG-G30-T2A	Cranking Time Control Time Delay Relay	G30	DG-F-2B-A						
												DG-ZL-9590-9	Start Ckt No 1 Signal Indicating Light	G19	DG-F-2B-A						
												DG-G30-ES1	Emergency Start Relay	G30	DG-F-2B-A						
												DG-G20-TSR1	Test Start Relay	G20	DG-F-2B-A						
												DG-G20-TSR2	Test Start Relay	G20	DG-F-2B-A						
												DG-G20-TSR3	Test Start Relay	G20	DG-F-2B-A						
												DG-G20-RDT	Ramp Down Time Relay	G20	DG-F-2B-A						
												DG-G19-IOT	Idle Operate Time Relay	G19	DG-F-2B-A						
												DG-G18-LSRX	Low Speed Auxiliary Relay	G18	DG-F-2B-A						
												DG-FY-AS1	Air Start Solenoid Valve	G30	DG-F-2B-A						
												DG-G30-OP3	Oil Pressure Relay	G30	DG-F-2B-A						
												DG-G30-CR2	Ready for Auto Start Relay	G30	DG-F-2B-A						
												DG-G30-TACH	Tachometer	G30	DG-F-2B-A						
												DG-G30-4B	Start Relay	G30	DG-F-2B-A						
												DG-G30-T2B	Cranking Time Control Time Delay Relay	G30	DG-F-2B-A						
												DG-ZL-9590-10	Start Ckt No 2 Signal Indicating Light	G19	DG-F-2B-A						
												DG-G30-ES2	Emergency Start Relay	G30	DG-F-2B-A						
												DG-FY-AS2	Air Start Solenoid Valve	G30	DG-F-2B-A						
												DG-G30-OP4	Oil Pressure Relay	G30	DG-F-2B-A						
												DG-G30-5E	Emergency Stop Relay	G30	DG-F-2B-A						
												DG-G30-5	Normal Stop Relay	G30	DG-F-2B-A						

FUNCTION: DIESEL GENERATORS

ITEM NO.	EQUIPMENT ID NO.	EQUIPMENT DESCRIPTION	P&ID/1-LINE DRAWING NO.	TRAIN	PHYSICAL LOCATION DRAWING NO.	FIRE AREA/ZONE	REQUIRED FOR		POWER		ELEC NODE	SUPPORTING CONTROL AND INSTRUMENTATION EQUIPMENT				CABLES	ELECTRICAL DRAWING NO.		SUPPORTING SYSTEMS	REDUNDANT COUNTERPART	REMARKS
							HOT STAND BY	COLD SHUT DOWN	ELEC	AIR		EQUIPMENT ID NO.	EQUIPMENT DESCRIPTION	ELEC NODE	FIRE AREA/ZONE		SCHEM.	CABLE			
	DG-DG-1B (Continued)											DG-G30-5A	Shutdown Relay	G30	DG-F-2B-A						
												DG-G30-5B	Shutdown Relay	G30	DG-F-2B-A						
												DG-FY-SDS	Shutdown Solenoid Valve	G30	DG-F-2B-A						
												DG-FY-ACO	Air Supply Cutoff Solenoid	G30	DG-F-2B-A						
												DG-G30-T3A	Alarm Set Time Delay Relay	G30	DG-F-2B-A						
												DG-G30-ASA	Air Start Relay	G30	DG-F-2B-A						
												DG-G30-ASB	Air Start Relay	G30	DG-F-2B-A						
												DG-G30-TR	Engine Velocity Transmitter	G30	DG-F-2B-A						
												DG-G30-SG	Signal Generator	G30	DG-F-2B-A						
												DG-G30-HSR	High Speed Relay	G30	DG-F-2B-A						
												DG-G30-LSR	Low Speed Relay	G30	DG-F-2B-A						
												DG-G30-ASR	Starting Air Shutoff Relay	G30	DG-F-2B-A						
												DG-G30-BDR	Barring Device Relay	G30	DG-F-2B-A						
												DG-G30-SFR	Start Failure Relay	G30	DG-F-2B-A						
												SG-G30-SDR	Engine Trouble Shutdown Relay	G30	DG-F-2B-A						
												DG-G30-EOR	Engine Overspeed Relay	G30	DG-F-2B-A						
												EDE-A89-RLA	SI Signal Lockout Relay	A89	CB-F-1B-A						
												DG-G30-OTH	High Oil Temperature Relay	G30	DG-F-2B-A						
												DG-G30-CTH	High Coolant Temperature Relay	G30	DG-F-2B-A						
												EDE-A74-TD2	Test Device	A74	CB-F-1B-A						
												EDE-A89-TD2	Test Device	A89	CB-F-1B-A						
												DG-G30-EST	Emergency Start Time Delay Relay	G30	DG-F-2B-A						
												DG-G30-ESX	Emergency Start Auxiliary Relay	G30	DG-F-2B-A						
												DG-G30-RA1	Air Pressure Auxiliary Relay	G30	DG-F-2B-A						
												DG-G30-RA2	Air Pressure Auxiliary Relay	G30	DG-F-2B-A						
												DG-G30-CF3	Power Available Relay	G30	DG-F-2B-A						
												DG-G30-CF4	Power Available Relay	G30	DG-F-2B-A						

FUNCTION: DIESEL GENERATORS

ITEM NO.	EQUIPMENT ID NO.	EQUIPMENT DESCRIPTION	P&ID/1-LINE DRAWING NO.	TRAIN	PHYSICAL LOCATION DRAWING NO.	FIRE AREA/ZONE	REQUIRED FOR		POWER		ELEC NODE	SUPPORTING CONTROL AND INSTRUMENTATION EQUIPMENT				CABLES	ELECTRICAL DRAWING NO.		SUPPORTING SYSTEMS	REDUNDANT COUNTERPART	REMARKS
							HOT STAND BY	COLD SHUT DOWN	ELEC	AIR		EQUIPMENT ID NO.	EQUIPMENT DESCRIPTION	ELEC NODE	FIRE AREA/ZONE		SCHEM.	CABLE			
	DG-DG-1B (Continued)											DG-G19-R43L1	Selector Switch Auxiliary Latch Relay (Local)	G19	DG-F-2B-A						
												DG-G19-R43L2	Selector Switch Auxiliary Relay (Local)	G19	DG-F-2B-A						
												DG-G19-R43L4	Selector Switch Auxiliary Relay (Local)	G19	DG-F-2B-A						
												DG-G19-R43M1	Selector Switch Auxiliary Latch Relay (Maintenance)	G19	DG-F-2B-A						
												DG-G30-FU	10 Amp Fuses (10)	G30	DG-F-2B-A						
												DG-G19-R43R1	Selector Switch Auxiliary Latch Relay (Remote)	G19	DG-F-2B-A						
												DG-G19-R43R2	Selector Switch Auxiliary Relay (Remote)	G19	DG-F-2B-A						
												DG-G19-R43R5	Selector Switch Auxiliary Relay (Remote)	G19	DG-F-2B-A						
												DG-HR4-PR1	EPS Auxiliary Relay	HR4	CB-F-1B-A						
												DG-HR4-PRIX	EPS Auxiliary Relay	HR4	CB-F-1B-A						
												DG-SS-EOS	Engine Overspeed Switch	G30	DG-F-2B-A						
												DG-PS-APL1	Air Pressure Low Switch	G30	DG-F-2B-A						
												DG-PS-APL2	Air Pressure Low Switch	G30	DG-F-2B-A						
												DG-G19-FU	10 Amp Fuses (20)	G19	DG-F-2B-A						
												DG-G19-R43L5	Selector Switch Auxiliary Relay (Local)	G19	DG-F-2B-A						
												DG-PS-CPS	Coolant Pressure Switch	G30	DG-F-2B-A						
												DG-PS-OPL2	Oil Low Pressure Switch	G30	DG-F-2B-A						
												DG-PS-OPL3	Oil Low Pressure Switch	G30	DG-F-2B-A						
												DG-PS-OPL4	Oil Low Pressure Switch	G30	DG-F-2B-A						
												DG-G30-CTH-1	Coolant High Temperature Auxiliary Relay	G30	DG-F-2B-A						
												DG-G30-OTH-1	Oil High Temperature Auxiliary Relay	G30	DG-F-2B-A						
												DG-ZS-BD1	Barring Device Position Switch	G30	DG-F-2B-A						
												DG-G30-D1	P-N Junction Diode	G30	DG-F-2B-A						
												DG-ZS-BD2	Barring Device Position Switch	G30	DG-F-2B-A						

FUNCTION: DIESEL GENERATORS

ITEM NO.	EQUIPMENT ID NO.	EQUIPMENT DESCRIPTION	P&ID/1-LINE DRAWING NO.	TRAIN	PHYSICAL LOCATION DRAWING NO.	FIRE AREA/ZONE	REQUIRED FOR		POWER		ELEC NODE	SUPPORTING CONTROL AND INSTRUMENTATION EQUIPMENT				CABLES	ELECTRICAL DRAWING NO.		SUPPORTING SYSTEMS	REDUNDANT COUNTERPART	REMARKS
							HOT STAND BY	COLD SHUT DOWN	ELEC	AIR		EQUIPMENT ID NO.	EQUIPMENT DESCRIPTION	ELEC NODE	FIRE AREA/ZONE		SCHEM.	CABLE			
	DG-DG-1B (Continued)											EDE-A74-86DP	DG Primary Protection Lockout Relay	A74	CB-F-1B-A						
												EDE-A89-86DB	DG Backup Protection Lockout Relay	A89	CB-F-1B-A						
												EDE-A74-TS	Test Start Control Switch	A74	CB-F-1B-A						
												DG-G30-CF1	Power Available Relay	G30	DG-F-2B-A						
												DG-G30-CF2	Power Available Relay	G30	DG-F-2B-A						
												EDE-ZL-9594	Monitoring Circuit Indicating Light	G19	DG-F-2B-A						
												EDE-ZL-9594-1	Monitoring Circuit Indicating Light	G30	DG-F-2B-A						
												DG-PS-OPL1	Oil Low Pressure Switch	G30	DG-F-2B-A						
												DG-G30-OP1	Oil Pressure Relay	G30	DG-F-2B-A						
												DG-PS-FPLA	Fuel Low Pressure Switch	G30	DG-F-2B-A						
												DG-G30-FPL	Fuel Pressure Relay	G30	DG-F-2B-A						
												DG-PS-CPLA	Jacket Coolant Low Pressure Switch	G30	DG-F-2B-A						
												DG-G30-CPL	Jacket Coolant Pressure Relay	G30	DG-F-2B-A						
												DG-PS-IPLA	Intercooler Low Pressure Switch	G30	DG-F-2B-A						
												DG-G30-IPL	Intercoolant Pressure Relay	G30	DG-F-2B-A						
												DG-G30-CF5	Power Available Relay	G30	DG-F-2B-A						
												DG-G30-OPC	Oil Pump Control Relay	G30	DG-F-2B-A						
												DG-G30-5B	Shutdown Auxiliary Relay	G30	DG-F-2B-A						
												DG-G30-TRP	TR Control Power Relay	G30	DG-F-2B-A						
												DG-G30-FPC	Auxiliary Fuel Oil Pump Control Relay	G30	DG-F-2B-A						
												DG-G30-CPC	Coolant Pump Control Relay	G30	DG-F-2B-A						
												DG-FY-CSV-B	Jacket Coolant Auxiliary Valves Solenoid	G30	DG-F-2B-A						
												DG-G30-IPC	Coolant Pump Control Relay	G30	DG-F-2B-A						
												DG-FY-ISV-B	Intercooler Auxiliary Valves Solenoid	G30	DG-F-2B-A						
												DG-FB0-K603B	Protection System Output Relay	FB0	CB-F-3A-A						
												EDE-CS-9528-1	Control Switch	F81	CB-F-3A-A						

FUNCTION: DIESEL GENERATORS

ITEM NO.	EQUIPMENT ID NO.	EQUIPMENT DESCRIPTION	P&ID/1-LINE DRAWING NO.	TRAIN	PHYSICAL LOCATION DRAWING NO.	FIRE AREA/ZONE	REQUIRED FOR		POWER		ELEC NODE	SUPPORTING CONTROL AND INSTRUMENTATION EQUIPMENT				CABLES	ELECTRICAL DRAWING NO.		SUPPORTING SYSTEMS	REDUNDANT COUNTERPART	REMARKS
							HOT STAND BY	COLD SHUT DOWN	ELEC	AIR		EQUIPMENT ID NO.	EQUIPMENT DESCRIPTION	ELEC NODE	FIRE AREA/ZONE		SCHEM.	CABLE			
	DG-DG-1B (Continued)											EDE-CS-9527-1	Control Switch	F81	CB-F-3A-A						
												EDE-CS-9520-1	Control Switch	F81	CB-F-3A-A						
												DG-FB0-K-608B	Protection System Output Relay	FB0	CB-F-3A-A						
												EDE-CS-9522-1	Control Switch	F81	CB-F-3A-A						
												EDE-CS-9522-2	Control Switch	F81	CB-F-3A-A						
												EDE-G19-FU-17,18	6 Amp Fuses (2)	G19	DG-F-2B-A	DP1-G20 F81-G19/9	310102 G19/2a G19/2g G19/2b G19/2c DP1a DP1b		DAH-FN-25B DAH-FN-26B DC-CP-75B EDE-SWG-11B		
												EDE-SS-9710	Selector Switch	G18	DG-F-2B-A						
												DG-G19-CF6	Auxiliary Relay	G19	DG-F-2B-A						
												DG-G19-R43L1	Selector Switch Auxiliary Latch Relay (Local)	G19	DG-F-2B-A						
												DG-G19-R43L2	Selector Switch Auxiliary Relay (Local)	G19	DG-F-2B-A						
												DG-G19-R43L3	Selector Switch Auxiliary Relay (Local)	G19	DG-F-2B-A						
												DG-G19-R43L4	Selector Switch Auxiliary Relay (Local)	G19	DG-F-2B-A						
												DG-G19-R43L5, R43L6	Selector Switch Auxiliary Relay (Local)	G19	DG-F-2B-A						
												DG-G19-R43R1	Selector Switch Auxiliary Latch Relay (Remote)	G19	DG-F-2B-A						
												DG-G19-R43M1	Selector Switch Auxiliary Latch Relay (Maintenance)	G19	DG-F-2B-A						
												DG-G19-R43R2	Selector Switch Auxiliary Relay (Remote)	G19	DG-F-2B-A						
												DG-G19-R43R3	Selector Switch Auxiliary Relay (Remote)	G19	DG-F-2B-A						
												DG-G19-R43R4	Selector Switch Auxiliary Relay (Remote)	G19	DG-F-2B-A						
												DG-G19-R43R5	Selector Switch Auxiliary Relay (Remote)	G19	DG-F-2B-A						
												DG-G19-R43R6	Selector Switch Auxiliary Relay (Remote)	G19	DG-F-2B-A						
												EDE-SNS-9737-1	Selector Switch	F81	CP-F-3A-A						

FUNCTION: DIESEL GENERATORS

ITEM NO.	EQUIPMENT ID NO.	EQUIPMENT DESCRIPTION	P&ID/1-LINE DRAWING NO.	TRAIN	PHYSICAL LOCATION DRAWING NO.	FIRE AREA/ZONE	REQUIRED FOR		POWER		ELEC NODE	SUPPORTING CONTROL AND INSTRUMENTATION EQUIPMENT				CABLES	ELECTRICAL DRAWING NO.		SUPPORTING SYSTEMS	REDUNDANT COUNTERPART	REMARKS
							HOT STAND BY	COLD SHUT DOWN	ELEC	AIR		EQUIPMENT ID NO.	EQUIPMENT DESCRIPTION	ELEC NODE	FIRE AREA/ZONE		SCHEM.	CABLE			
	DG-DG-1B (Continued)											EDE-CS-9717-1	Control Switch	F81	DG-F-2B-A						
												EDE-CS-9719-1	Control Switch	F81	DG-F-2B-A						
												EDE-CS-9710-1	Control Switch	F81	DG-F-2B-A						
												EDE-SNS-9737-2	Selector Switch	G18	DG-F-2B-A						
												EDE-CS-9717-3	Control Switch	G19	DG-F-2B-A						
												EDE-CS-9719-3	Control Switch	G19	DG-F-2B-A						
												EDE-CS-9710-3	Control Switch	G19	DG-F-2B-A						
												DG-G19-FU17B, 18B	6 Amp Fuses	G19	DG-F-2B-A						
												EDE-G18-FU-9,10	50 Amp Fuses	G18	DG-F-2B-A		310102		DAH-FN-25B		
												DG-A89-XFMR	Grounding Transformer	A89	CB-F-1B-A	A89-G18 G18-HF8 A89-HP1 DP1-G20	HA2a HA2b DP1a	HA2c HA2d DP1b	DAH-FN-26B CBA-FN-32 CBA-FN-33 EDE-SWG-11B		
												DG-HF8-XF	DG Field	HF8	DG-F-2B-A						
												DG-G18-SEVR-PC	Static Exciter Voltage Regulator Power Chassis	G18	DG-F-2B-A						
												DG-SM-9587	Governor Control (2301A)	G18	DG-F-2B-A						
												DG-G20-SEVR-CC	Voltage Regulator Control Chassis	G20	DG-F-2B-A						
												DG-GT4-PT1	Potential Transformer	GT4	DG-F-2B-A						
												DG-GT4-PT2	Potential Transformer	GT4	DG-F-2B-A						
												DG-GTR-PPT4	Power Transformer	GT4	DG-F-2B-A						
												DG-GTR-CCT	Current Transformer 2000/5	GT4	DG-F-2B-A						
												DG-G20-IDR1	Isochronous Droop Relay	G20	DG-F-2B-A						
												EDE-A89-60	Voltage Balance Relays	A89	CB-F-1B-A						
												DG-G20-64F	Generator Field Failure Relay	G20	DG-F-2B-A						
												DG-HP1-NCB	DG Neutral Connection Box	HP1	DG-F-2B-A						
												DG-GT4-XCT1,2,3	Generator Current Transformers (2000/5) øA,øB, øC	GT4	DG-F-2B-A						
												DG-VM-9712-2	Field Voltmeter	G20	DG-F-2B-A						
												DG-G20-DCT	Field Voltage Transducer	G20	DG-F-2B-A						
												DG-G18-SH	50 MV Field Shunt	G18	DG-F-2B-A						
												DG-AM-9712-2	DC Field Ammeter	G20	DG-F-2B-A						

FUNCTION: DIESEL GENERATORS

ITEM NO.	EQUIPMENT ID NO.	EQUIPMENT DESCRIPTION	P&ID/1-LINE DRAWING NO.	TRAIN	PHYSICAL LOCATION DRAWING NO.	FIRE AREA/ZONE	REQUIRED FOR		POWER		ELEC NODE	SUPPORTING CONTROL AND INSTRUMENTATION EQUIPMENT				CABLES	ELECTRICAL DRAWING NO.		SUPPORTING SYSTEMS	REDUNDANT COUNTERPART	REMARKS
							HOT STAND BY	COLD SHUT DOWN	ELEC	AIR		EQUIPMENT ID NO.	EQUIPMENT DESCRIPTION	ELEC NODE	FIRE AREA/ZONE		SCHEM.	CABLE			
	DG-DG-1B (Continued)											DG-G20-ATR	Current Transducer	G20	DG-F-2B-A						
												DG-G20-CF10	Loss of Power Relay	G20	DG-F-2B-A						
												DG-A89-64	Ground Fault Sensing Relay	A89	CB-F-1B-A						
												DG-G20-FU-22,23	1 Amp Fuses	G20	DG-F-2B-A						
												DG-G19-IL10	Diode Failure Light	G19	DG-F-2B-A						
												DG-G20-K2	Field Flashing Contactor	G20	DG-F-2B-A						
												EDE-G18-FU-1,2 1B,2B	10 Amp Fuses (4)	G18	DG-F-2B-A	G18-G30/5 DP1-G20 F81-G18/4 F81-G18/5 F81-G18/6 F81-G20/1	310102 G18/1a G18/1f G18/1b G18/1c G18/1d DP1a DP1b		DAH-FN-25B DAH-FN-26B DG-CP-75B EDE-SWG-11B		
												DG-G19-R43R5	Selector Switch Auxiliary Relay (Remote)	G19	DG-F-2B-A						
												EDE-CS-9825-2	Control Switch (Push Button)	G20	DG-F-2B-A						
												DG-G30-HSR	High Speed Relay	G30	DG-F-2B-A						
												DG-G30-LSR	Low Speed Relay	G30	DG-F-2B-A						
												DG-G30-ES1	Emergency Start Relay	G30	DG-F-2B-A						
												DG-G30-ES2	Emergency Start Relay	G30	DG-F-2B-A						
												DG-SS-9587	Selector Switch	G19	DG-F-2B-A						
												DG-ZL-9590-11	Field Flash Signal Indicating Light	G20	DG-F-2B-A						
												DG-G19-R43M1	Selector Switch Auxiliary Latch Relay (Maintenance)	G19	DG-F-2B-A						
												DG-G30-5A	DG Shutdown Relay	G30	DG-F-2B-A						
												DG-G19-R43R6	Selector Switch Auxiliary Relay (Remote)	G19	DG-F-2B-A						
												DG-G18-LSRX	Low Speed Auxiliary Relay	G18	DG-F-2B-A						
												DG-G18-LSRXX	Time Delay Relay	G18	DG-F-2B-A						
												EDE-CS-9811-1	Push Button	G20	DG-F-2B-A						
												EDE-CS-9811-2	Push Button	G20	DG-F-2B-A						
												DG-G18-SEVR-PC	Static Exciter Voltage Regulator Power Chassis	G18	DG-F-2B-A						
												EDE-G20-NM	Null Meter	G20	DG-F-2B-A						
												EDE-SS-9710	Selector Switch	G18	DG-F-2B-A						
												EDE-CS-9826-2	Control Switch	G20	DG-F-2B-A						
												EDE-CS-9827-2	Control Switch	G20	DG-F-2B-A						
												DG-G20-RR	Regulator Relay	G20	DG-F-2B-A						

FUNCTION: DIESEL GENERATORS

ITEM NO.	EQUIPMENT ID NO.	EQUIPMENT DESCRIPTION	P&ID/1-LINE DRAWING NO.	TRAIN	PHYSICAL LOCATION DRAWING NO.	FIRE AREA/ZONE	REQUIRED FOR		POWER		ELEC NODE	SUPPORTING CONTROL AND INSTRUMENTATION EQUIPMENT				CABLES	ELECTRICAL DRAWING NO.		SUPPORTING SYSTEMS	REDUNDANT COUNTERPART	REMARKS
							HOT STAND BY	COLD SHUT DOWN	ELEC	AIR		EQUIPMENT ID NO.	EQUIPMENT DESCRIPTION	ELEC NODE	FIRE AREA/ZONE		SCHEM.	CABLE			
	DG-DG-1B (Continued)											DG-G20-SEVR-CC	Static Exciter Voltage Regulator Control Chassis	G20	DG-F-2B-A						
												DG-G20-CF8	Loss of Power Relay	G20	DG-F-2B-A						
												EDE-CS-9825-1	Push Button Switch	F81	CB-F-3A-A						
												EDE-CS-9827-1	Control Switch	F81	CB-F-3A-A						
												EDE-CS-9826-1	Control Switch	F81	CB-F-3A-A						
												EDE-VM-9783	Null Voltmeter	F81	CB-F-3A-A						
												EDE-G18-FU-3,4 3B, 4B	6 Amp Fuses (4)	G18	DG-F-2B-A	G18-G30/6 G18-G30/9 G18-G30/A	G18/2a G18/2b G18/2e	G18/2d	DAH-FN-25B DAH-FN-26B DG-CP-75B EDE-SWG-11B		
												DG-G20-IDR1	Isochronous Droop Relay	G20	DG-F-2B-A						
												DG-G20-IDR2	Isochronous Droop Relay	G20	DG-F-2B-A	F81-G18/8 ED9-G19 ED9-G20 ED9-HR4 DP1-G20					
												DG-SZ-9587	Governor Actuator	G30	DG-F-2B-A						
												DG-SC-9587	Digital Reference Unit (DRU)	G18	DG-F-2B-A		DP1a	DP1b			
												DG-SM-9587	2301A Governor Controller	G18	DG-F-2B-A						
												DG-ST-9587	Magnetic Pickup (MPU-1)	G30	DG-F-2B-A						
												DG-SS-9587	Selector Switch	G19	DG-F-2B-A						
												DG-G20-TSR1	Test Start Relay	G20	DG-F-2B-A						
												DG-G20-TSR2	Test Start Relay	G20	DG-F-2B-A						
												DG-G20-TSR3	Test Start Relay	G20	DG-F-2B-A						
												DG-G20-R21	Speed Adjust Auxiliary Relay	G20	DG-F-2B-A						
												DG-G20-RDT	Ramp Down Time Relay	G20	DG-F-2B-A						
												DG-G19-IOT	Idle Operate Time Relay	G19	DG-F-2B-A						
												EDE-SS-9710	Selector Switch	G18	DG-F-2B-A						
												EDE-CS-9828-2	Control Switch	G18	DG-F-2B-A						
												DG-G18-LSRX	Auxiliary Relay	G18	DG-F-2B-A						
												DG-G30-ES1	Emergency Start Auxiliary Relay	G30	DG-F-2B-A						
												DG-G19-ESS	Emergency Start Auxiliary Relay	G19	DG-F-2B-A						
												DG-G30-ES2	Emergency Start Auxiliary Relay	G30	DG-F-2B-A						
												DG-G20-CF-9	Loss of Power Relay	G20	DG-F-2B-A						
												EDE-CS-9828-1	Control Switch	F81	CB-F-3A-A						
												DG-G19-R43R3	Selector Switch Auxiliary Relay (Remote)	G19	DG-F-2B-A						

FUNCTION: DIESEL GENERATORS

ITEM NO.	EQUIPMENT ID NO.	EQUIPMENT DESCRIPTION	P&ID/1-LINE DRAWING NO.	TRAIN	PHYSICAL LOCATION DRAWING NO.	FIRE AREA/ZONE	REQUIRED FOR		POWER		ELEC NODE	SUPPORTING CONTROL AND INSTRUMENTATION EQUIPMENT				CABLES	ELECTRICAL DRAWING NO.		SUPPORTING SYSTEMS	REDUNDANT COUNTERPART	REMARKS
							HOT STAND BY	COLD SHUT DOWN	ELEC	AIR		EQUIPMENT ID NO.	EQUIPMENT DESCRIPTION	ELEC NODE	FIRE AREA/ZONE		SCHEM.	CABLE			
	DG-DG-1B (Continued)											DG-HR4-PR1	EPS Auxiliary Relay	HR4	CF-F-1B-A						
												DG-HR4-HR8	EPS Auxiliary Relay	HR4	CB-F-1B-A						
												DG-ED9-R1	Auxiliary Relay	ED9	CB-F-1B-A						
												DG-G20-IDR4	Isochronous Droop Relay	G20	DG-F-2B-A						
												EDE-G20-FU-7,8 7B, 8B	10 Amp Fuses (4)	G20	DG-F-2B-A	A74-G20/1 G20-G30 A89-G20 DP1-G20 F81-G19/8 A74-G19/4 F81-G18/7 F81-G19/7 G18-G30/4	G20a G20b G20c DP1a	G20e DP1b	DAH-FN-25B DAH-FN-26B CBA-FN-32 CBA-FN-33 DG-CP-75B EDE-SWG-11B		
												DG-G30-CR1	Auto Start Ready Relay	G30	DG-F-2B-A						
												DG-G30-CR2	Auto Start Ready Relay	G30	DG-F-2B-A						
												DG-G30-RA1	Air Pressure Auxiliary Relay	G30	DG-F-2B-A						
												DG-G30-RA2	Air Pressure Auxiliary Relay	G30	DG-F-2B-A						
												DG-G19-R43L3	Selector Switch Auxiliary Relay (Local)	G19	DG-F-2B-A						
												DG-G19-ESS	Emergency Start Auxiliary Relay	G19	DG-F-2B-A						
												DG-G20-RR	Regulator Relay	G20	DG-F-2B-A						
												DG-G19-R43L4	Selector Switch Auxiliary Relay (Local)	G19	DG-F-2B-A						
												DG-G19-R43L6	Selector Switch Auxiliary Relay (Local)	G19	DG-F-2B-A						
												DG-G19-R43L5	Selector Switch Auxiliary Relay (Local)	G19	DG-F-2B-A						
												DG-G19-R-DNA	Diesel Not Available Auxiliary Relay	G19	DG-F-2B-A						
												DG-G19-R-B/I	Switch Circuit Bypass/Inoperable Auxiliary Relay	G19	DG-F-2B-A						
												DG-G19-R43R3	Selector Switch Auxiliary Relay (Remote)	G19	DG-F-2B-A						
												DG-G19-R43R4	Selector Switch Auxiliary Relay (Remote)	G19	DG-F-2B-A						
												DG-G19-R43R5	Selector Switch Auxiliary Relay (Remote)	G19	DG-F-2B-A						
												DG-G19-R43R6	Selector Switch Auxiliary Relay (Remote)	G19	DG-F-2B-A						

FUNCTION: DIESEL GENERATORS

ITEM NO.	EQUIPMENT ID NO.	EQUIPMENT DESCRIPTION	P&ID/1-LINE DRAWING NO.	TRAIN	PHYSICAL LOCATION DRAWING NO.	FIRE AREA/ZONE	REQUIRED FOR		POWER		ELEC NODE	SUPPORTING CONTROL AND INSTRUMENTATION EQUIPMENT				CABLES	ELECTRICAL DRAWING NO.		SUPPORTING SYSTEMS	REDUNDANT COUNTERPART	REMARKS
							HOT STAND BY	COLD SHUT DOWN	ELEC	AIR		EQUIPMENT ID NO.	EQUIPMENT DESCRIPTION	ELEC NODE	FIRE AREA/ZONE		SCHEM.	CABLE			
	DG-DG-1B (Continued)											DG-G18-64F	Generator Field Ground Relay	G18	DG-F-2B-A						
												DG-G20-64FX	Generator Field Ground Auxiliary Relay	G20	DG-F-2B-A						
												DG-G19-64FXA	Generator Field Ground Auxiliary Relay	G19	DG-F-2B-A						
												EDE-CS-9829-2	Control Switch	G20	DG-F-2B-A						
												DG-G20-23	Thermostat	G20	DG-F-2B-A						
												DG-G20-23X	Thermostat Auxiliary Relay	G20	DG-F-2B-A						
												DG-G20-IDR1	Isochronous Droop Relay	G20	DG-F-2B-A						
												DG-G20-IDR2	Isochronous Droop Relay	G20	DG-F-2B-A						
												DG-G20-IDR3	Isochronous Droop Relay	G20	DG-F-2B-A						
												DG-G20-IDR4	Isochronous Droop Relay	G20	DG-F-2B-A						
												EDE-SS-9710	Selector Switch	G18	DG-F-2B-A						
												EDE-SNS-9737-2	Synchronizing Switch	G18	DG-F-2B-A						
												EDE-A71-52S	Circuit Breaker Operated Contact	A71	CB-F-1B-A						
												EDE-A72-52S	Circuit Breaker Operated Contact	A72	CB-F-1B-A						
												EDE-A74-52S	Circuit Breaker Operated Contact	A74	CB-F-1B-A						
												EDE-A89-60AX	Voltage Balance Auxiliary Relay	A89	CB-F-1B-A						
												DG-ZL-9590-2	Indicating Light	G19	DG-F-2B-A						
												DG-ZL-9590-3	Indicating Light	G19	DG-F-2B-A						
												DG-ZL-9528-2	Indicating Light	G19	DG-F-2B-A						
												EDE-ZL-9829-1	Indicating Light	G20	DG-F-2B-A						
												EDE-ZL-9812-2	Indicating Light	G19	DG-F-2B-A						
												EDE-ZL-9829-2	Indicating Light	G20	DG-F-2B-A						
												DG-G20-CF8	Loss of Control Power Relay	G20	DG-F-2B-A						
												DG-G20-CF9	Loss of Control Power Relay	G20	DG-F-2B-A						
												DG-G20-CF10	Loss of Control Power Relay	G20	DG-F-2B-A						
												DG-G20-CR45	Annunciator Auxiliary Relay	G20	DG-F-2B-A						
												DG-C20-CR42	Annunciator Auxiliary Relay	G20	DG-F-2B-A						
												DG-ZL-9590-12	Indicating Light	F81	CB-F-3A-A						
												DG-G30-ESX	Emergency Start Aux Relay	G30	DG-F-2B-A						

FUNCTION: DIESEL GENERATORS

ITEM NO.	EQUIPMENT ID NO.	EQUIPMENT DESCRIPTION	P&ID/1-LINE DRAWING NO.	TRAIN	PHYSICAL LOCATION DRAWING NO.	FIRE AREA/ZONE	REQUIRED FOR		POWER		ELEC NODE	SUPPORTING CONTROL AND INSTRUMENTATION EQUIPMENT				CABLES	ELECTRICAL DRAWING NO.		SUPPORTING SYSTEMS	REDUNDANT COUNTERPART	REMARKS
							HOT STAND BY	COLD SHUT DOWN	ELEC	AIR		EQUIPMENT ID NO.	EQUIPMENT DESCRIPTION	ELEC NODE	FIRE AREA/ZONE		SCHEM.	CABLE			
	DG-DG-1B (Continued)											DG-ZL-9590-4	Indicating Light	G19	DG-F-2B-A						
												DG-ZL-9590-5	Indicating Light	G19	DG-F-2B-A						
												DG-ZL-9590-8	Indicating Light	F81	CB-F-3A-A						
												DG-ZL-9528-1	Indicating Light	F81	CB-F-3A-A						
												EDE-ZL-9829-4	Indicating Light	F81	CB-F-3A-A						
												EDE-CS-9829-1	Indicating Light	F81	CB-F-3A-A						
												EDE-SNS-9737-1	Synchronizing Switch	F81	CB-F-3A-A						
												EDE-CS-9829-1	Control Switch	F81	CB-F-3A-A						
												DG-A89-RLA	LOCA Seal Relay	A89	CB-F-1B-A						
												DG-ZL-9590-6	Indicating Light	F81	CB-F-3A-A						
												MM-CS-6653	Test Push Button and Indicating Light	F81	CB-F-3A-A						

FUNCTION: DIESEL GENERATORS

ITEM NO.	EQUIPMENT ID NO.	EQUIPMENT DESCRIPTION	P&ID/1-LINE DRAWING NO.	TRAIN	PHYSICAL LOCATION DRAWING NO.	FIRE AREA/ZONE	REQUIRED FOR		POWER		ELEC NODE	SUPPORTING CONTROL AND INSTRUMENTATION EQUIPMENT				CABLES	ELECTRICAL DRAWING NO.		SUPPORTING SYSTEMS	REDUNDANT COUNTERPART	REMARKS
							HOT STAND BY	COLD SHUT DOWN	ELEC	AIR		EQUIPMENT ID NO.	EQUIPMENT DESCRIPTION	ELEC NODE	FIRE AREA/ZONE		SCHEM.	CABLE			
19	DG-TK-45C	Starting Air Compressor Skid Air Receiver Tank	DG-20465	B	310524	DG-F-2B-A	X	X	-	-	HM3	-	-	-	-	-	-	-	-	DG-TK-45A	Notes 1 and 7
20	DG-TK-45D	Starting Air Compressor Skid Air Receiver Tank	DG-20465	B	310524	DG-F-2B-A	X	X	-	-	HM3	-	-	-	-	-	-	-	-	DG-TK-45B	Notes 1 and 7
21	DG-MM-8B	Exhaust Silencer	DG-20467	B	310525	DG-F-3F-A	X	X	-	-	-	-	-	-	-	-	-	-	-	DG-MM-8A	Note 1
22	DG-F-36B	Air Intake Filter	DG-20467	B	310525	DG-F-3F-A	X	X	-	-	-	-	-	-	-	-	-	-	-	DG-F-36A	Note 1
23	DG-TK-26B	Fuel Oil Storage Tank	DG-20464	B	310524 202264	DG-F-1B-A	X	X	-	-	-	-	-	-	-	-	-	-	-	DG-TK-26A	Notes 1 and 2
24	DG-TK-78B	Fuel Oil Day Tank	DG-20459	B	310525	DG-F-3D-A	X	X	-	-	-	-	-	-	-	-	-	-	-	DG-TK-78A	Note 1
25	DG-P-38B	Fuel Oil Transfer Pump	DG-20464	B	310524 202264	DG-F-1B-A	X	X	X	-	N76	DG-BP7-52 DG-CS-9506 DG-LS-FLC DG-BP7-42 DG-BP7-49 DG-BP7-FU	460 V AC Circuit Breaker Control Switch with Indication Fuel Low Level Control Switch Motor Starter Thermal Overload Relay Fuse	BP7 BE5 RU1 BP7 BP7 BP7	CB-F-1B-A DG-F-2B-A DG-F-3D-A CB-F-1B-A CB-F-1B-A CB-F-1B-A	BE5-BP7 BP7-RU1 BP7-N76	310857 BP7a	BP7c	CBA-FN-32 CBA-FN-33 DAH-FN-25B DAH-FN-26B EDE-MCC-621	DG-P-38A	-
26	DG-P-119B	Engine-Driven Fuel Oil Pump	DG-20464	B	310524	DG-F-2B-A	X	X	-	-	-	-	-	-	-	-	-	-	-	DG-P-119A	Notes 1 and 6
27	DG-P-115B	Engine-Drive Lube Oil Pump	DG-20463	B	310524	DG-F-2B-A	X	X	-	-	-	-	-	-	-	-	-	-	-	DG-P-115A	Notes 1 and 6
28	DG-TK-102B	Lube Oil Reservoir	DG-20463	B	310524	DG-F-2B-A	X	X	-	-	-	-	-	-	-	-	-	-	-	DG-P-102A	Notes 1 and 6
29	DG-P-228B	Engine-Driven Rocker Arm Lube Pump	DG-20463	B	310524	DG-F-2B-A	X	X	-	-	-	-	-	-	-	-	-	-	-	DG-P-228A	Notes 1 and 6
30	DG-E-41B	Lube Oil Heat Exchanger	DG-20463	B	310524	DG-F-2B-A	X	X	-	-	-	-	-	-	-	-	-	-	-	DG-E-41A	Notes 1 and 6
31	DG-TK-46B	Diesel Generator 1B Component Cooling Water Expansion Tank	DG-20466	B	310525	DG-F-3D-A	X	X	-	-	-	-	-	-	-	-	-	-	-	DG-TK-46A	Note 1
32	DG-E-42B	Diesel Generator 1B Component Cooling Water Heat Exchanger	DG-20466	B	310767 805217	PAB-F-3A-Z	X	X	-	-	-	-	-	-	-	-	-	-	Service Water	DG-E-42A	Notes 1 and 3

FUNCTION: DIESEL GENERATORS

ITEM NO.	EQUIPMENT ID NO.	EQUIPMENT DESCRIPTION	P&ID/1-LINE DRAWING NO.	TRAIN	PHYSICAL LOCATION DRAWING NO.	FIRE AREA/ZONE	REQUIRED FOR		POWER		ELEC NODE	SUPPORTING CONTROL AND INSTRUMENTATION EQUIPMENT				CABLES	ELECTRICAL DRAWING NO.		SUPPORTING SYSTEMS	REDUNDANT COUNTERPART	REMARKS
							HOT STAND BY	COLD SHUT DOWN	ELEC	AIR		EQUIPMENT ID NO.	EQUIPMENT DESCRIPTION	ELEC NODE	FIRE AREA/ZONE		SCHEM.	CABLE			
33	DG-P-121B	Engine-Driven Jacket Coolant Pump	DG-20466	B	310524	DG-F-2B-A	X	X	-	-	-	-	-	-	-	-	-	-	-	DG-P-121A	Notes 1 and 4
34	DG-P-231B	Engine-Driven Air Coolant Pump	DG-20466	B	310524	DG-F-2B-A	X	X	-	-	-	-	-	-	-	-	-	-	-	DG-F-231A	Notes 1 and 6
35	DG-PV-7A-2	Lube Oil Cooler Differential Pressure Control Valve	DG-20461	A	310524	DG-F-2A-A	X	X	-	X	HA1 HA1 HA1 HA1	DG-PT-7A-3 DG-PT-7A-4 DG-PDT-7A-2 DG-PDC-7A-2	Pressure Relay Pneumatic Transmitter Pressure Relay Pneumatic Transmitter Differential Pressure Transmitter Differential Pressure Controller	HA1 HA1 HA1 HA1	DG-F-2A-A DG-F-2A-A DG-F-2A-A DG-F-2A-A	-	-	-	DAH-FN-25A DAH-FN-26A D/G Starting Air	DG-PV-7B-2	Note 8
36	DG-TCV-7A-2	Air Cooler Coolant Temperature Control Valve	DG-20461	A	310524	DG-F-2A-A	X	X	-	X	HA1	DG-TT-7A-2 DG-TC-7A-2	Temperature Transmitter Temperature Controller	HA1 HA1	DG-F-2A-A DG-F-2A-A	-	-	-	DAH-FN-25A DAH-FN-26A D/G Starting Air	DG-TCV-7B-2	Note 8
37	DG-PV-7A-1	Jacket Coolant Differential Pressure Control Valve	DG-20461	A	310524	DG-F-2A-A	X	X	-	X	HA1	DG-PT-7A-1 DG-PT-7A-2 DG-PDT-7A-1 DG-PDC-7A-1	Pressure Relay Pneumatic Transmitter Pressure Relay Pneumatic Transmitter Differential Pressure Transmitter Differential Pressure Controller	HA1 HA1 HA1 HA1	DG-F-2A-A DG-F-2A-A DG-F-2A-A DG-F-2A-A	-	-	-	DAH-FN-25A DAH-FN-26A D/G Starting Air	DG-PV-7B-1	Note 9
38	DG-TCV-7A-1	Air Cooler Coolant Temperature Control Valve	DG-20461	A	310524	DG-F-2A-A	X	X	-	X	HA1	DG-TT-7A-1 DG-TC-7A-1	Temperature Transmitter Temperature Controller	HA1 HA1	DG-F-2A-A DG-F-2A-A	-	-	-	DAH-FN-25A DAH-FN-26A D/G Starting Air	DG-TCV-7B-1	Note 9
39	DG-F-64A	Lube Oil Filter	DG-20458	A	310524	DG-F-2A-A	X	X	-	-	-	-	-	-	-	-	-	-	-	DG-F-64B	Notes 1 and 4
40	DG-F-23A	Lube Oil Duplex Filter	DG-20458	A	310524	DG-F-2A-A	X	X	-	-	-	-	-	-	-	-	-	-	-	DG-F-23B	Notes 1 and 4
41	DG-S-4A	Lube Oil Strainer	DG-20458	A	310524	DG-F-2A-A	X	X	-	-	-	-	-	-	-	-	-	-	-	DG-S-4B	Notes 1 and 4
42	DG-S-85A	Lube Oil Sump Suction Strainer	DG-20458	A	310524	DG-F-2A-A	X	X	-	-	-	-	-	-	-	-	-	-	-	DG-S-85B	Notes 1 and 4
43	DG-S-5A	Fuel Oil Storage Tank Duplex Strainer	DG-20459	A	310524 202264	DG-F-1A-A	X	X	-	-	-	-	-	-	-	-	-	-	-	DG-S-5B	Notes 1 and 2
44	DG-S-6A	Fuel Oil Day Tank Duplex Strainer	DG-20459	A	310524	DG-F-2A-A	X	X	-	-	-	-	-	-	-	-	-	-	-	DG-S-6B	Notes 1 and 4
45	DG-F-65A	Fuel Oil Duplex Filter	DG-20459	A	310524	DG-F-2A-A	X	X	-	-	-	-	-	-	-	-	-	-	-	DG-F-65B	Notes 1 and 4
46	DG-TK-110A	Fuel Oil Accumulator Tank	DG-20459	A	310524	DG-F-2A-A	X	X	-	-	-	-	-	-	-	-	-	-	-	DG-TK-110B	Notes 1 and 4

FUNCTION: DIESEL GENERATORS

ITEM NO.	EQUIPMENT ID NO.	EQUIPMENT DESCRIPTION	P&ID/1-LINE DRAWING NO.	TRAIN	PHYSICAL LOCATION DRAWING NO.	FIRE AREA/ZONE	REQUIRED FOR		POWER		ELEC NODE	SUPPORTING CONTROL AND INSTRUMENTATION EQUIPMENT				CABLES	ELECTRICAL DRAWING NO.		SUPPORTING SYSTEMS	REDUNDANT COUNTERPART	REMARKS
							HOT STAND BY	COLD SHUT DOWN	ELEC	AIR		EQUIPMENT ID NO.	EQUIPMENT DESCRIPTION	ELEC NODE	FIRE AREA/ZONE		SCHEM.	CABLE			
47	DG-PV-7B-2	Lube Oil Cooler Differential Pressure Control Valve	DG-20466	B	310524	DG-F-2B-A	X	X	-	X	HA2	DG-PT-7B-3 DG-PT-7B-4 DG-PDT-7B-2 DG-PDC-7B-2	Pressure Relay Pneumatic Transmitter Pressure Relay Pneumatic Transmitter Differential Pressure Transmitter Differential Pressure Controller	HA2 HA2 HA2 HA2	DG-F-2B-A DG-F-2B-A DG-F-2B-A DG-F-2B-A	-	-	-	DAH-FN-25B DAH-FN-26B D/G Starting Air	DC-PV-7A-2	Note 10
48	DG-TCV-7B-2	Air Cooler Coolant Temperature Control Valve	DG-20466	B	310524	DG-F-2B-A	X	X	-	X	HA2	DG-TT-7B-2 DG-TC-7B-2	Temperature Transmitter Temperature Controller	HA2 HA2	DG-F-2B-A DG-F-2B-A	-	-	-	DAH-FN-25B DAH-FN-26B D/G Starting Air	DG-TCV-7A-2	Note 10
49	DG-PV-7B-1	Jacket Coolant Differential Pressure Control Valve	DG-20466	B	310524	DG-F-2B-A	X	X	-	X	HA2	DG-PT-7B-1 DG-PT-7B-2 DG-PDT-7B-1 DG-PDC-7B-1	Pressure Relay Pneumatic Transmitter Pressure Relay Pneumatic Transmitter Differential Pressure Transmitter Differential Pressure Controller	HA2 HA2 HA2 HA2	DG-F-2B-A DG-F-2B-A DG-F-2B-A DG-F-2B-A	-	-	-	DAH-FN-25B DAH-FN-26B D/G Starting Air	DG-PV-7A-1	Note 11
50	DG-TCV-7B-1	Jacket Coolant Temperature Control Valve	DG-20466	B	310524	DG-F-2B-A	X	X	-	X	HA2	DG-TT-7B-1 DG-TC-7B-1	Temperature Transmitter Temperature Controller	HA2 HA2	DG-F-2B-A DG-F-2B-A	- -	- -	- -	DAH-FN-25B DAH-FN-26B D/G Starting Air	DG-TCV-7A-1	Note 11
51	DG-F-64B	Lube Oil Filter	DG-20464	B	310524	DG-F-2B-A	X	X	-	-	-	-	-	-	-	-	-	-	-	DG-F-64A	Notes 1 and 6
52	DG-F-23B	Lube Oil Duplex Filter	DG-20463	B	310524	DG-F-2B-A	X	X	-	-	-	-	-	-	-	-	-	-	-	DG-F-23A	Notes 1 and 6
53	DG-S-4B	Lube Oil Strainer	DG-20463	B	310524	DG-F-2B-A	X	X	-	-	-	-	-	-	-	-	-	-	-	DG-S-4A	Notes 1 and 6
54	DG-S-85B	Lube Oil Sump Suction Strainer	DG-20463	B	310524	DG-F-2B-A	X	X	-	-	-	-	-	-	-	-	-	-	-	DG-S-85A	Notes 1 and 6
55	DG-S-5B	Fuel Oil Storage Tank Duplex Strainer	DG-20464	B	310524 202264	DG-F-1B-A	X	X	-	-	-	-	-	-	-	-	-	-	-	DG-S-5A	Notes 1 and 2
56	DG-S-6B	Fuel Oil Day Tank Duplex Strainer	DG-20464	B	310524	DG-F-2B-A	X	X	-	-	-	-	-	-	-	-	-	-	-	DG-S-6A	Notes 1 and 6
57	DG-F-65B	Fuel Oil Duplex Filter	DG-20464	B	310524	DG-F-2B-A	X	X	-	-	-	-	-	-	-	-	-	-	-	DG-F-65A	Notes 1 and 6
58	DG-TK-110B	Fuel Oil Accumulator Tank	DG-20464	B	310524	DG-F-2B-A	X	X	-	-	-	-	-	-	-	-	-	-	-	DG-TK-110A	Notes 1 and 6

FUNCTION: DIESEL GENERATORS

ITEM NO.	EQUIPMENT ID NO.	EQUIPMENT DESCRIPTION	P&ID/1-LINE DRAWING NO.	TRAIN	PHYSICAL LOCATION DRAWING NO.	FIRE AREA/ZONE	REQUIRED FOR		POWER		ELEC NODE	SUPPORTING CONTROL AND INSTRUMENTATION EQUIPMENT				CABLES	ELECTRICAL DRAWING NO.		SUPPORTING SYSTEMS	REDUNDANT COUNTERPART	REMARKS
							HOT STAND BY	COLD SHUT DOWN	ELEC	AIR		EQUIPMENT ID NO.	EQUIPMENT DESCRIPTION	ELEC NODE	FIRE AREA/ZONE		SCHEM.	CABLE			
59	DG-C-2B	DG Starting Air Compressor	DG-220465	B	310524	DG-F-2B-A	X	X	X	-	NC4	DG-BP3-52	460 v AC Circuit Breaker	BP3	DG-F-2B-A	BP3-NC4 BP3-HM3 BP3-HR4	310857 BP3a	BP3c	DAH-FN-25B DAH-FN-26B EDE-MCC-611	DG-C-2A	Note 7
												DG-CS-9569	Control Switch	BP3	DG-F-2B-A						
												DGB-PS-APCI	Pressure Switch	HM3	DG-F-2B-A						
												DGB-PS-APCZ	Pressure Switch	HM3	DG-F-2B-A						
												DG-HR4-HR9	EPS Relay	HR3	CB-F-1B-A						
												DG-BP3-42	Motor Starter	BP3	CB-F-1B-A						
												DG-BP3-49	Thermal O. L.	BP3	CB-F-1B-A						
												DG-BP3-FU	Fuse	BP3	CB-F-1B-A						
59a	DG-C-18B	DG Backup Operating Air Compressor	DG-20465	B	310524	DG-F-2B-A	X	X	X	-	ML8	DG-BS5-52	460 v AC Ckt Bkr.	BS5	DG-F-2B-A	BS5-ML8 BS5-HM3	310857 BS5a	BS5c	DAH-FN-25B DAH-FN-26B EDE-MCC-611	DG-C-18A	Note 7
												DG-BS5-42	Motor Starter	BS5	DG-F-2B-A						
												DG-BS5-49	Thermal O. L.	BS5	DG-F-2B-A						
												DG-BS5-FU	Fuse	BS5	DG-F-2B-A						
												DG-CS-9536	Control Switch	BS5	DG-F-2B-A						
												DGB-PS-APC3	Pressure Switch	HM3	DG-F-2B-A						
												DGB-PS-APC4	Pressure Switch	HM3	DG-F-2B-A						
												DG-V-325B	Unloader Sol. Vlv.	UB1	DG-F-2B-A	BS5-UB1					
60	DG-SKD-17B	Diesel Generator 1B Starting Air Compressor Skid	DG-20465	B	310524	DG-F-2B-A	X	X	X	-	HM3	DG-E47/4-52	120 v AC Circuit Breaker	E47	DG-F-2B-A	E47-HM3 BP3-HM3/1	310857 E47/4a	E47/4b	DAH-FN-25B DAH-FN-26B EDE-MCC-E611 120 v AC Dist. Panel	DG-SKD-17A	Note 7
												DG-HM3-52	120 v AC Circuit Breaker	HM3	DG-F-2B-A						
												DG-HM3-ATM	Auto Drain Timer	HM3	DG-F-2B-A						
												DG-V-253B	Auto Drain Solenoid Vlv.	HM3	DG-F-2B-A						
												DG-HM3-ICT	Motor Synchronous Timer	HM3	DG-F-2B-A						
												DG-V-279B	Left Chamber inlet Sol. Vlv.	HM3	DG-F-2B-A						
												DG-V-280B	Right Chamber inlet Sol. Vlv.	HM3	DG-F-2B-A						
												DG-V-285B	Repressurizing Sol. Vlv.	HM3	DG-F-2B-A						
												DG-V-288B	Left Chamber Exhaust Sol. Vlv.	HM3	DG-F-2B-A						
												DG-V-289B	Right Chamber Exhaust Sol. Vlv.	HM3	DG-F-2B-A						
												DG-V-HM3-KR	Aux. Relay	HM3	DG-F-2B-A						
												DG-BP3-42	Motor Starter	BP3	CB-F-1B-A						

NOTES

1. The equipment is mechanical with no electrical requirement.
2. Electrical conduit plan drawing, 310524, is listed only to show the fire zone corresponding to the location of this equipment in the Diesel Generator Building as identified in 202263.
3. Electrical conduit plan drawing, 310767, is listed only to show fire zone corresponding to the location of this equipment in the Primary Auxiliary Building as identified in 805217.
4. This equipment is located in the Diesel Generator Skid DG-SKD-7A.
5. This equipment is located in the Diesel Generator Skid DG-SKD-17A.
6. This equipment is located in the Diesel Generator Skid DG-SKD-7B.
7. This equipment is located in the Diesel Generator Skid DG-SKD-17B.
8. The pneumatic control diagram of this equipment is shown in the DG air cooler water control loop diagram, 506403.
9. The pneumatic control diagram of this equipment is shown in the diesel engine jacket cooling water control loop diagram, 506404.
10. The pneumatic control diagram of this equipment is shown in the DG air cooler water control loop diagram, 506405.
11. The pneumatic control diagram of this equipment is shown in the DG diesel engine jacket cooling water loop diagram, 506406.

FUNCTION: DECAY HEAT REMOVAL

ITEM NO.	EQUIPMENT ID NO.	EQUIPMENT DESCRIPTION	P&ID/1-LINE DRAWING NO.	TRAIN	PHYSICAL LOCATION DRAWING NO.	FIRE AREA/ZONE	REQUIRED FOR		POWER		ELEC NODE	SUPPORTING CONTROL AND INSTRUMENTATION EQUIPMENT				CABLES	ELECTRICAL DRAWING NO.		SUPPORTING SYSTEMS	REDUNDANT COUNTERPART	REMARKS
							HOT STAND BY	COLD SHUT DOWN	ELEC	AIR		EQUIPMENT ID NO.	EQUIPMENT DESCRIPTION	ELEC NODE	FIRE AREA/ZONE		SCHEM.	CABLE			
1	CO-TK-25	Condensate Storage Tank	CO-20426	A/B	310248	CST-F-1-0	X	X	-	-	-	-	-	-	-	-	-	-	-	-	Note 1
2	FW-P-37B	Emergency Feed Pump	FW-20688	B	310708	EFP-F-1-A	X	X	X	-	N14	FW-A80-52	416 V AC Circuit Breaker	A80	CB-F-1B-A	A80-N14	310844		CBA-FN-32 CBA-FN-33 EPA-FN-47B EDE-SWG-6	None	
												FW-A80-FU	Fuses	A80	CB-F-1B-A		A80a A80b A80c A80d	A80h			
												FW-A80-R	Auxiliary Relay	A80	CB-F-1B-A						
												FW-CS-4255-2	Control Switch	A80	CB-F-1B-A						
												FW-SS-4255	Selector Switch	A80	CB-F-1B-A						
												EDE-A73-94-1B	Bus Under Voltage Relay	A73	CB-F-1B-A						
												FW-A80-86	Lockout Relay	A80	CB-F-1B-A						
												FW-A80-52H	Truck-Operated Contact	A80	CB-F-1B-A						
												FW-A80-50/51	Instrument/Time Overcurrent Relays øA, øC	A80	CB-F-1B-A						
												FW-A80-AM	Ammeter	A80	CB-F-1B-A						
												FW-A80-AS	Ammeter Switch	A80	CB-F-1B-A						
												FW-A80-CT	Current Transformers (200/5)	A80	CB-F-1B-A						
												FW-A80-TD1	CT Test Device	A80	CB-F-1B-A						
												FW-A80-ATR	Transducer	A80	CB-F-1B-A						
												FW-A80-TD2	Lockout Relay Test Device	A80	CB-F-1B-A						
												FW-A80-G,R,W	Indicating Lights	A80	CB-F-1B-A						
												FW-A80-52Z	Time Delay Relay	A80	CB-F-1B-A						
												FW-A80-51GS	Ground Sensor Relay	A80	CB-F-1B-A						
2A	FW-V347	Emergency Feedwater Recirculating Valve	FW-20688	B	310708	EFP-F-1-A	X	X	X	-	V4P	FW-C3T-52	460 V AC Circuit Breaker	C3T	CB-F-1B-A	C3T-V4P C3T-V4P/1 C3T-G2J	310844		EDE-MCC-615 CBA-FN-32 CBA-FN-33 EPA-FN-47B	None	
												FW-C3T-FU	Fuses	C3T	CB-F-1B-A		C3Ta	C3Tc			
												FW-CS-4369-2	Control Switch with Indication	G2J	CB-F-1B-A						
												MS-SS-3064	Selector Switch	G2J	CB-F-1B-A						
												FW-C3T-42/O,C	Motor Starters	C3T	CB-F-1B-A						
												FW-C3T-49	Overload Relays	C3T	CB-F-1B-A						
												FW-ZS-V347	Valve Position Switch	V4P	EFP-F-1-A						

Notes

1. The equipment is mechanical with no electrical requirement.
2. During normal operation, this equipment is in its safe shutdown position (locked closed). To prevent spurious operation, its circuit breaker is administratively controlled locked open (off).
3. Disabling the valve at the appropriate control location will reposition it for safe shutdown.
4. Air is not needed to position or to reposition the valve for safe shutdown.
5. The review of this valve was conducted with the assumption that it will be closed from the Control Room prior to evacuation and that a fire will not reset its logic before the operator could man the remote shutdown station and throw the "Remote-Local" switches to "Local". Its cables and supporting controls were listed to analyze the possibility of the valve reopening after the isolation switch has been positioned to "Local".
6. Circuit breaker tripped to disable the redundant controls.

FUNCTION: DECAY HEAT REMOVAL

ITEM NO.	EQUIPMENT ID NO.	EQUIPMENT DESCRIPTION	P&ID/1-LINE DRAWING NO.	TRAIN	PHYSICAL LOCATION DRAWING NO.	FIRE AREA/ZONE	REQUIRED FOR		POWER		ELEC NODE	SUPPORTING CONTROL AND INSTRUMENTATION EQUIPMENT				CABLES	ELECTRICAL DRAWING NO.		SUPPORTING SYSTEMS	REDUNDANT COUNTERPART	REMARKS
							HOT STAND BY	COLD SHUT DOWN	ELEC	AIR		EQUIPMENT ID NO.	EQUIPMENT DESCRIPTION	ELEC NODE	FIRE AREA/ZONE		SCHEM.	CABLE			
3	FW-FV-4214A	Emergency Feedwater Header Flow Valve	FW-20688	A	310708	EFP-F-1-A	X	X	X	-	V2E	FW-B3V-52	460 V AC Circuit Breaker	B3V	CB-F-1A-A	B3V-V2E B3V-V2E/1 E3C-G2G G2G-V2E B3V-G5X B3V-G5X/1	310844 B3Va	B3Vd B3Ve	CBA-FN-19 CBA-FN-20 EPA-FN-47A EDE-MCC-515	FW-FV-4214-B	
												FW-B3V-FU	Fuse	B3V	CB-F-1A-A						
												FW-CS-4214-A2	Control Switch with Indication	G2G	CB-F-1A-A						
												FW-SS-4214-A	Selector Switch	G2G	CB-F-1A-A						
												FW-SS-4214-A1	Selector Switch	G5X	DG-F-2A-A						
												FW-B3V-42/O,C	Motor Starters	B3V	CB-F-1A-A						
												FW-B3V-49	Overload Relays	B3V	CB-F-1A-A						
												FW-ZS-4214-A	Valve Position Switch	V2E	EFP-F-1-A						
4	FW-FV-4214B	Emergency Feedwater Header Flow Valve	FW-20688	B	310708	EFP-F-1-A	X	X	X	-	V2J	FW-B3Z-52	460 V AC Circuit Breaker	B3Z	CB-F-1B-A	B3Z-V2J B3Z-V2J/1 E3D-G2J G2J-V2J B3Z-G2J B3Z-G5Y B3Z-G5Y/1	310844 B3Za	B3Zd B3Ze	CBA-FN-32 CBA-FN-33 EPA-FN-47B EDE-MCC-615	FW-FV-4214-A	
												FW-B3Z-FU	Fuse	B3Z	CB-F-1B-A						
												FW-CS-4214-B2	Control Switch with Indication	G2J	CB-F-1B-A						
												FW-SS-4214-B	Selector Switch	G2J	CB-F-1B-A						
												FW-SS-4214-B1	Selector Switch	G5Y	DG-F-2B-A						
												FW-B3Z-42/O,C	Motor Starters	B3Z	CB-F-1B-A						
												FW-B3Z-49	Overload Relays	B3Z	CB-F-1B-A						
												FW-ZS-4214-B	Valve Position Switch	V2J	EFP-F-1-A						
5	FW-FV-4224A	Emergency Feedwater Header Flow Valve	FW-20688	A	310708	EFP-F-1-A	X	X	X	-	V2F	FW-B3W-52	460 V AC Circuit Breaker	B3W	CB-F-1A-A	B3W-V2F B3W-V2F/1 E3C-G2G/1 G2G-V2F B3W-G5X B3W-G5X/1	310844 B3WA	B3WD B3WE	CBA-FN-19 CBA-FN-20 EPA-FN-47A EDE-MCC-515	FW-FV-4224-B	
												FW-B3W-FU	Fuse	B3W	CB-F-1A-A						
												FW-CS-4244-A2	Control Switch with Indication	G2G	CB-F-1A-A						
												FW-SS-4224-A	Selector Switch	G2G	CB-F-1A-A						
												FW-SS-4224-A1	Selector Switch	G5X	DG-F-2A-A						
												FW-B3W-42/O,C	Motor Starters	B3W	CB-F-1A-A						
												FW-B3W-49	Overload Relays	B3W	CB-F-1A-A						
												FW-ZS-4224-A	Valve Position Switch	V2F	EFP-F-1-A						
6	FW-FV-4224B	Emergency Feedwater Header Flow Valve	FW-20688	B	310708	EFP-F-1-A	X	X	X	-	V2K	FW-B4A-52	460 V AC Circuit Breaker	B4A	CB-F-1B-A	B4A-V2K B4A-V2K/1 E3D-G2J/1 G2J-V2K B4A-G2J B4A-G5Y B4A-G5Y/1	310844 B4Aa	B4Ad B4Ae	CBA-FN-32 CBA-FN-33 EPA-FN-47B EDE-MCC-615	FW-FV-4224-A	
												FW-B3W-FU	Fuse	B4A	CB-F-1B-A						
												FW-CS-4224-B2	Control Switch with Indication	G2J	CB-F-1B-A						
												FW-SS-4224-B	Selector Switch	G2J	CB-F-1B-A						
												FW-SS-4224-B1	Selector Switch	G5Y	DG-F-2B-A						
												FW-B4A-42/O,C	Motor Starters	B4A	CB-F-1B-A						
												FW-B4A-49	Overload Relays	B4A	CB-F-1B-A						
												FW-ZS-4224-B	Valve Position Switch	V2K	EFP-F-1-A						

FUNCTION: DECAY HEAT REMOVAL

ITEM NO.	EQUIPMENT ID NO.	EQUIPMENT DESCRIPTION	P&ID/1-LINE DRAWING NO.	TRAIN	PHYSICAL LOCATION DRAWING NO.	FIRE AREA/ZONE	REQUIRED FOR		POWER		ELEC NODE	SUPPORTING CONTROL AND INSTRUMENTATION EQUIPMENT				CABLES	ELECTRICAL DRAWING NO.		SUPPORTING SYSTEMS	REDUNDANT COUNTERPART	REMARKS
							HOT STAND BY	COLD SHUT DOWN	ELEC	AIR		EQUIPMENT ID NO.	EQUIPMENT DESCRIPTION	ELEC NODE	FIRE AREA/ZONE		SCHEM.	CABLE			
7	FW-FV-4234A	Emergency Feedwater Header Flow Valve	FW-20688	A	310708	EFP-F-1-A	X	X	X	-	V2G	FW-B3X-52	460 V AC Circuit Breaker	B3X	CB-F-1A-A	B3X-V2G B3X-V2G/1 G2G-V2G E3C-G2G/2 B3X-G5X B3X-G5X/1	310844 B3Xa	B3Xd B3Xe	CBA-FN-19 CBA-FN-20 EPA-FN-47A EDE-MCC-515	FW-FV-4234-B	
												FW-B3X-FU	Fuse	B3X	CB-F-1A-A						
												FW-CS-4234-A2	Control Switch with Indication	G2G	CB-F-1A-A						
												FW-SS-4214-A	Selector Switch	G2G	CB-F-1A-A						
												FW-SS-4214-A1	Selector Switch	G5X	DG-F-2A-A						
												FW-B3X-42/O,C	Motor Starters	B3X	CB-F-1A-A						
												FW-B3X-49	Overload Relays	B3X	CB-F-1A-A						
												FW-ZS-4234-A	Valve Position Switch	V2G	EFP-F-1-A						
8	FW-FV-4234B	Emergency Feedwater Header Flow Valve	FW-20688	B	310708	EPF-F-1-A	X	X	X	-	V2L	FW-B4B-52	460 V AC Circuit Breaker	B4B	CB-F-1B-A	B4B-V2L B4B-V2L/1 E3D-G2J/2 G2J-V2L B4B-G2J B4B-G5Y B4B-G5Y/1	310844 B4Ba	B4Bd B4Be	CBA-FN-32 CBA-FN-33 EPA-FN-47B EDE-MCC-615	FW-FV-4234-A	
												FW-B4B-FU	Fuse	B4B	CB-F-1B-A						
												FW-CS-4234-B2	Control Switch with Indication	G2J	CB-F-1B-A						
												FW-SS-4214-B	Selector Switch	G2J	CB-F-1B-A						
												FW-SS-4214-B1	Selector Switch	G5Y	DG-F-2B-A						
												FW-B4B-42/O,C	Motor Starters	B4B	CB-F-1B-A						
												FW-B4B-49	Overload Relays	B4B	CB-F-1B-A						
												FW-ZS-4234-B	Valve Position Switch	V2L	EFP-F-1-A						
9	FW-FV-4244A	Emergency Feedwater Header Flow Valve	FW-20688	A	310708	EFP-F-1-A	X	X	X	-	V2H	FW-B3Y-52	460 V AC Circuit Breaker	B3Y	CB-F-1A-A	B3Y-V2H B3Y-V2H/1 E3C-G2G/3 G2G-V2H B3Y-G5X B3Y-G5X/1	310844 B3Ya	B3Yd B3Ye	CBA-FN-19 CBA-FN-20 EPA-FN-47A EDE-MCC-515	FW-FV-4244-B	
												FW-B3Y-FU	Fuse	B3Y	CB-F-1A-A						
												FW-CS-4244-A2	Control Switch with Indication	G2G	CB-F-1A-A						
												FW-SS-4224-A	Selector Switch	G2G	CB-F-1A-A						
												FW-SS-4224-A1	Selector Switch	G5X	DG-F-2A-A						
												FW-B3Y-42/O,C	Motor Starters	B3Y	CB-F-1A-A						
												FW-B3Y-49	Overload Relays	B3Y	CB-F-1A-A						
												FW-ZS-4244-A	Valve Position Switch	V2H	EFP-F-1-A						
10	FW-FV-4244B	Emergency Feedwater Header Flow Valve	FW-20688	B	310708	EFP-F-1-A	X	X	X	-	V2M	FW-B4C-52	460 V AC Circuit Breaker	B4C	CB-F-1B-A	B4C-V2M B4C-V2M/1 E3D-G2J/3 GJ2-V2M B4C-G2J B4C-G5Y B4C-G5Y/1	310844 B4Ca	B4Cd B4Ce	CBA-FN-32 CBA-FN-33 EPA-FN-47B EDE-MCC-615	FW-FV-4244-A	
												FW-B4C-FU	Fuse	B4C	CB-F-1B-A						
												FW-CS-4244-B2	Control Switch with Indication	G2J	CB-F-1B-A						
												FW-SS-4224-B	Selector Switch	G2J	CB-F-1B-A						
												FW-SS-4224-B1	Selector Switch	G5Y	DG-F-2B-A						
												FW-B4C-42/O,C	Motor Starters	B4C	CB-F-1B-A						
												FW-B4C-49	Overload Relays	B4C	CB-F-1B-A						
												FW-ZS-4244-B	Valve Position Switch	V2M	EFP-F-1-A						

FUNCTION: DECAY HEAT REMOVAL

ITEM NO.	EQUIPMENT ID NO.	EQUIPMENT DESCRIPTION	P&ID/1-LINE DRAWING NO.	TRAIN	PHYSICAL LOCATION DRAWING NO.	FIRE AREA/ZONE	REQUIRED FOR		POWER		ELEC NODE	SUPPORTING CONTROL AND INSTRUMENTATION EQUIPMENT				CABLES	ELECTRICAL DRAWING NO.		SUPPORTING SYSTEMS	REDUNDANT COUNTERPART	REMARKS
							HOT STAND BY	COLD SHUT DOWN	ELEC	AIR		EQUIPMENT ID NO.	EQUIPMENT DESCRIPTION	ELEC NODE	FIRE AREA/ZONE		SCHEM.	CABLE			
11	MS-PV-3001	Main Steam Header Atmospheric Relief Valve	MS-20580	A/B	310589	MS-F-2B-Z	X	X	X	X	V2N	MS-HIC-3001	Auto/Manual Controller with Indicator	G2G	CB-F-1A-A	G2G-GL6 G2G-V2N E2T-G5X G2G-G5X FN8-U0A FN8-U0B FN8-G2G/1	310841 310953 G2Ga FJ71 310841 E2T/8a E2T/8e E2T/8f		CBA-FN-19 CBA-FN-20 MM-UQ-5868 MM-UQ-5869 Instrument Air EDE-PP-113A CBA-FN-19 CBA-FN-20 Instrument Air	MS-PV-3002 or MS-PV-3004	
												MS-HQY-3001	Mixing Amplifier	G2H	CB-F-1A-A						
												MS-HY-3001	Signal Converter	G2H	CB-F-1A-A						
												MS-SS-3001-1	Selector Switch	G2G	CB-F-1A-A						
												MS-CS-3001-2	Control Switch with Indication	G2G	CB-F-1A-A						
												MS-PY-3001	I/P Converter	GL6	MS-F-1B-Z						
												MS-E2T/8-72	125 V DC Circuit Breaker	E2T	CB-F-1A-A						
												MS-CS-3001-2	Control Switch with Indication	G2G	CB-F-1A-A						
												MS-SS-3001-1	Selector Switch	G2G	CB-F-1A-A						
												MS-ZS-3001-A	Valve Position Switch	V2N	MS-F-2B-Z						
												MS-PY-3001-1	Solenoid Valve	UOA	MS-F-2B-Z						
												MS-SS-3001-3	Selector Switch	FN8	ET-F-1B-A						
												MS-PY-3001-2	Solenoid Valve	UOA	MS-F-2B-Z						
												MS-PY-3001-3	Solenoid Valve	UOB	MS-F-2B-Z						
												MS-PY-3001-4	Solenoid Valve	UOB	MS-F-2B-Z						
												MS-SS-3001-2	Selector Switch	G5X	DG-F-2A-A						
											UOC	MS-PY-3001-5 + 6	Solenoid Valve	E2U	CB-F-1B-A	-	-		-	-	Note 6
12	MS-PV-3003	Main Steam Header Atmospheric Relief Valve	MS-20580	A/B	310586	MS-F-2A-Z	X	X	X	X	V2Q	MS-HIC-3003	Auto/Manual Controller with Indicator	G2G	CB-F-1A-A	G2G-GL5 G2G-V2Q E2T-G5X/1 G2G-G5X/1 FN8-U0K FN8-U0L FN8-G2G/2	310841 310953 G2Ga FJ71 310841 E2T/10a E2T/10e E2T/10f		CBA-FN-19 CBA-FN-20 MM-UQ-5868 MM-UQ-5869 Instrument Air EDE-PP-113A CBA-FN-19 CBA-FN-20 Instrument Air	MS-PV-3002 or MS-PV-3004	
												MS-HQY-3003	Mixing Amplifier	G2H	CB-F-1A-A						
												MS-HY-3003	Signal Converter	G2H	CB-F-1A-A						
												MS-SS-3003-1	Selector Switch	G2G	CB-F-1A-A						
												MS-CS-3003-2	Control Switch with Indication	G2G	CB-F-1A-A						
												MS-PY-3003	I/P Converter	GL5	MS-F-3A-Z						
												MS-E2T/10-72	125 V DC Circuit Breaker	E2T	CB-F-1A-A						
												MS-CS-3003-2	Control Switch with Indication	G2G	CB-F-1A-A						
												MS-SS-3003-1	Selector Switch	G2G	CB-F-1A-A						
												MS-ZS-3003-A	Valve Position Switch	V2Q	MS-F-2A-Z						
												MS-SS-3003-3	Selector Switch	FN8	ET-F-1B-A						
												MS-PY-3003-1	Solenoid Valve	UOK	MS-F-2A-Z						
												MS-PY-3003-2	Solenoid Valve	UOK	MS-F-2A-Z						
												MS-PY-3003-3	Solenoid Valve	UOL	MS-F-2A-Z						
												MS-PY-3003-4	Solenoid Valve	UOL	MS-F-2A-Z						
												MS-SS-3003-2	Selector Switch	G5X	DG-F-2A-A						
											UOM	MS-PY-3003-5 + 6	Solenoid Valve	E2U	CB-F-1B-A	-	-		-	-	Note 6

FUNCTION: DECAY HEAT REMOVAL

ITEM NO.	EQUIPMENT ID NO.	EQUIPMENT DESCRIPTION	P&ID/1-LINE DRAWING NO.	TRAIN	PHYSICAL LOCATION DRAWING NO.	FIRE AREA/ZONE	REQUIRED FOR		POWER		ELEC NODE	SUPPORTING CONTROL AND INSTRUMENTATION EQUIPMENT				CABLES	ELECTRICAL DRAWING NO.		SUPPORTING SYSTEMS	REDUNDANT COUNTERPART	REMARKS
							HOT STAND BY	COLD SHUT DOWN	ELEC	AIR		EQUIPMENT ID NO.	EQUIPMENT DESCRIPTION	ELEC NODE	FIRE AREA/ZONE		SCHEM.	CABLE			
13	MS-PV-3002	Main Steam Header Atmospheric Relief Valve	MS-20580	A/B	310586	MS-F-2A-Z	X	X	X	X	V2P	MS-HIC-3002	Auto/Manual Controller with Indicator	G2J	CB-F-1B-A	G2J-GZ4 G2J-V2P E2U-G5Y G2J-G5Y FN9-U0G FN9-U0H FN9-G2J/1	310841 G2Ja E2U/8a	FJ4d E2U/8e E2U/8f	CBA-FN-32 CBA-FN-33 MM-UQ-5866 MM-UQ-5867 Instrument Air EDE-PP-113B CBA-FN-32 CBA-FN-33 Instrument Air	MS-PV-3001 or MS-PV-3003	
												MS-HQY-3002	Mixing Amplifier	GZO	CB-F-1B-A						
												MS-HY-3002	Signal Converter	GZO	CB-F-1B-A						
												MS-SS-3002-1	Selector Switch	G2J	CB-F-1B-A						
												MS-CS-3002-2	Control Switch with Indication	G2J	CB-F-1B-A						
												MS-PY-3002	I/P Converter	GZ4	MS-F-3A-Z						
												MS-E2U/8-72	125 V DC Circuit Breaker	E2U	CB-F-1B-A						
												MS-CS-3002-2	Control Switch with Indication	G2J	CB-F-1B-A						
												MS-SS-3002-3	Selector Switch	FN9	ET-F-1D-A						
												MS-SS-3002-1	Selector Switch	G2J	CB-F-1B-A						
												MS-ZS-3002-B	Valve Position Switch	V2P	MS-F-2A-Z						
												MS-PY-3002-1	Solenoid Valve	UOG	MS-F-2A-Z						
												MS-PY-3002-2	Solenoid Valve	UOG	MS-F-2A-Z						
												MS-PY-3002-3	Solenoid Valve	UOH	MS-F-2A-Z						
												MS-PY-3002-4	Solenoid Valve	UOH	MS-F-2A-Z						
												MS-SS-3002-2	Selector Switch	G5Y	DG-F-2B-A						
											UOJ	MS-PY-3002-5 + 6	Solenoid Valve	E2T	CB-F-1A-A	-	-		-	-	Note 6
14	MS-PV-3004	Main Steam Header Atmospheric Relief Valve	MS-20580	A/B	310589	MS-F-2B-Z	X	X	X	X	V2R	MS-HIC-3004	Auto/Manual Controller with Indicator	G2J	CB-F-1B-A	G2J-GZ6 G2J-V2R E2U-G5Y/1 G2J-G5Y/1 FN9-U0D FN9-U0E FN9-G2J/2	310841 G2Ja E2U/10a	FJ4d E2U/10e E2U/10f	CBA-FN-32 CBA-FN-33 MM-UQ-5866 MM-UQ-5867 Instrument Air EDE-PP-113B CBA-FN-32 CBA-FN-33 Instrument Air	MS-PV-3001 or MS-PV-3003	
												MS-HQY-3004	Mixing Amplifier	GZO	CB-F-1B-A						
												MS-HY-3004	Signal Converter	GZO	CB-F-1B-A						
												MS-SS-3004	Selector Switch	G2J	CB-F-1B-A						
												MS-CS-3004-2	Control Switch with Indication	G2J	CB-F-1B-A						
												MS-PY-3004	I/P Converter	GZ6	MS-F-1B-Z						
												MS-E2U/10-72	125 V DC Circuit Breaker	E2U	CB-F-1B-A						
												MS-SS-3004-3	Selector Switch	FN9	ET-F-1D-A						
												MS-CS-3004-2	Control Switch with Indication	G2J	CB-F-1B-A						
												MS-SS-3004-1	Selector Switch	G2J	CB-F-1B-A						
												MS-ZS-3004-B	Valve Position Switch	V2R	MS-F-2B-Z						
												MS-PY-3004-1	Solenoid Valve	UOD	MS-F-2B-Z						
												MS-PY-3004-2	Solenoid Valve	UOD	MS-F-2B-Z						
												MS-PY-3004-3	Solenoid Valve	UOE	MS-F-2B-Z						
												MS-PY-3004-4	Solenoid Valve	UOE	MS-F-2B-Z						
												MS-SS-3004-2	Selector Switch	G5Y	DG-F-2B-A						
											UOF	MS-PY-3004-5 + 6	Solenoid Valve	E2T	CB-F-1A-A	-	-		-	-	Note 6

FUNCTION: DECAY HEAT REMOVAL

ITEM NO.	EQUIPMENT ID NO.	EQUIPMENT DESCRIPTION	P&ID/1-LINE DRAWING NO.	TRAIN	PHYSICAL LOCATION DRAWING NO.	FIRE AREA/ZONE	REQUIRED FOR		POWER		ELEC NODE	SUPPORTING CONTROL AND INSTRUMENTATION EQUIPMENT				CABLES	ELECTRICAL DRAWING NO.		SUPPORTING SYSTEMS	REDUNDANT COUNTERPART	REMARKS
							HOT STAND BY	COLD SHUT DOWN	ELEC	AIR		EQUIPMENT ID NO.	EQUIPMENT DESCRIPTION	ELEC NODE	FIRE AREA/ZONE		SCHEM.	CABLE			
15	MS-V-86	Main Steam Isolation Valve	MS-20583	A/B	310589	MS-F-2B-Z	X	X	X	X	ZV0 ZV1 ZV2 ZW1	MS-E87/14-72	125 V DC Circuit Breaker	E87	CB-F-1A-A	E87-GX6 GX6-ZV1	310841 E87/14a	E87/14b	CBA-FN-19 CBA-FN-20 EDE-PP-112A	None	Notes 4 and 5
												MS-FY-89A-1	Pilot Solenoid	ZV1	MS-F-2B-Z						
												MS-FY-10A-1	Pilot Solenoid	ZV1	MS-F-2B-Z						
												MS-FY-102A-1	Solenoid Valve	ZV1	MS-F-2B-Z						
												MS-FY-102B-1	Solenoid Valve	ZV1	MS-F-2B-Z						
												MS-GX6-K103	Output Relay	GX6	MS-F-3A-Z						
												MS-GX6-K104	Output Relay	GX6	MS-F-3A-Z						
												MS-GX6-CS-3005-A	Control Switch	GX6	MS-F-3A-Z						
												MS-E1S/7-52	120 V AC Circuit Breaker	E1S	CB-F-1A-A	E1S-GX6/1 G2G-GX6/4 G2G-GX6/5 GX6-ZV0 G2G-GX6/3	E1S/7a E1S/7b E1S/7c E1S/7d	E1S/7h E1S/7i E1S/7j E1S/7k	CBA-FN-19 CBA-FN-20 EDE-PP-11E		
												MS-GX6-FU-101&102	120 V AC Fuses	GX6	MS-F-3A-Z						
												MS-GX6-K101	Output Relay	GX6	MS-F-3A-Z						
												MS-GX6-K102	Output Relay	GX6	MS-F-3A-Z						
												MS-ZS-V86A-1	Valve Position Switch	ZV0	MS-F-2B-Z						
												MS-ZS-V86A-2	Valve Position Switch	ZV0	MS-F-2B-Z						
												MS-ZL-3005-1	Valve Position Indicating Lights	G2G	CB-F-1A-A						
												MS-SS-3005-1	Selector Switch	G2G	CB-F-1A-A						
												MS-CP-184	MSIV Logic Cabinet (Train A)	GX6	MS-F-3A-Z						
												MS-E88/14-72	125 V DC Circuit Breaker	E88	CB-F-1B-A	E88-GX9 GX9-ZV2	E88/14a	E88/14b	CBA-FN-32 CBA-FN-33 EDE-PP-112B		
												MS-FY-89B-1	Pilot Solenoid	ZV2	MS-F-2B-Z						
												MS-FY-10B-1	Pilot Solenoid	ZV2	MS-F-2B-Z						
												MS-FY-117A-1	Solenoid Valve	ZV2	MS-F-2B-Z						
												MS-FY-117B-1	Solenoid Valve	ZV2	MS-F-2B-Z						
												MS-GX9-K103	Output Relay	GX9	CB-F-1B-A						
												MS-GX9-K104	Output Relay	GX9	CB-F-1B-A						
												MS-GX9-CS-3005-B	Control Switch	GX9	CB-F-1B-A						
												MS-E1T/7-52	120 V AC Circuit Breaker	E1T	CB-F-1B-A	E1T-GX9/3 G2J-GX9/1 G2J-GX9 GX9-Z1C	E1T/7a E1T/7b E1T/7c	E1T/7f	CBA-FN-32 CBA-FN-33 EDE-PP-11F		
												MS-GX9-FU-101&102	120 V AC Fuses	GX9	CB-F-1B-A						
												MS-GX9-K101	Output Relay	GX9	CB-F-1B-A						
												MS-GX9-K102	Output Relay	GX9	CB-F-1B-A						
												MS-ZS-V86B-1	Valve Position Switch	ZW1	MS-F-2B-Z						
												MS-ZS-V86B-2	Valve Position Switch	ZW1	MS-F-2B-Z						
												MS-ZL-3005-2	Valve Position Indicating Lights	G2J	CB-F-1B-A						
												MS-CP-185	MSIV Logic Cabinet (Train B)	GX9	CB-F-1B-A						
												MS-SS-3005-2	Selector Switch	G2J	CB-F-1B-A						

FUNCTION: DECAY HEAT REMOVAL

ITEM NO.	EQUIPMENT ID NO.	EQUIPMENT DESCRIPTION	P&ID/1-LINE DRAWING NO.	TRAIN	PHYSICAL LOCATION DRAWING NO.	FIRE AREA/ZONE	REQUIRED FOR		POWER		ELEC NODE	SUPPORTING CONTROL AND INSTRUMENTATION EQUIPMENT				CABLES	ELECTRICAL DRAWING NO.		SUPPORTING SYSTEMS	REDUNDANT COUNTERPART	REMARKS
							HOT STAND BY	COLD SHUT DOWN	ELEC	AIR		EQUIPMENT ID NO.	EQUIPMENT DESCRIPTION	ELEC NODE	FIRE AREA/ZONE		SCHEM.	CABLE			
16	MS-V-88	Main Steam Isolation Valve	MS-20583	A/B	310586	MS-F-2A-Z	X	X	X	X	ZW3 ZW4 ZW5 ZW6	MS-E2T/12-72	125 V DC Circuit Breaker	E2T	CB-F-1A-A	E2T-GX7 GX7-ZW3	310841 E2T/12a	E3T/12c	CBA-FN-19 CBA-FN-20 EDE-PP-113A	None	Notes 4 and 5
												MS-FY-89A-2	Pilot Solenoid	ZW3	MS-F-2A-Z						
												MS-FY-10A-2	Pilot Solenoid	ZW3	MS-F-2A-Z						
												MS-FY-102A-2	Solenoid Valve	ZW3	MS-F-2A-Z						
												MS-FY-102B-2	Solenoid Valve	ZW3	MS-F-2A-Z						
												MS-GX7-K103	Output Relay	GX7	MS-F-3A-Z						
												MS-GX7-K104	Output Relay	GX7	MS-F-3A-Z						
												MS-GX7-CS-3006-A	Control Switch	GX7	MS-F-3A-Z						
												MS-E1S/9-52	120 V AC Circuit Breaker	E1S	CB-F-1A-A	E1S-GX7/1 G2G-GX7/4 G2G-GX7/5 GX7-ZW5 G2G-GX7/3	E1S/9a E1S/9b E1S/9c E1S/9D	E1S/9h E1S/9i E1S/9j E1S/9k	CBA-FN-19 CBA-FN-20 EDE-PP-11E		
												MS-GX7-FU-101&102	120 V AC Fuses	GX7	MS-F-3A-Z						
												MS-GX7-K101	Output Relay	GX7	MS-F-3A-Z						
												MS-GX7-K102	Output Relay	GX7	MS-F-3A-Z						
												MS-ZS-V88A-1	Valve Position Switch	ZW5	MS-F-2A-Z						
												MS-ZS-V88A-2	Valve Position Switch	ZW5	MS-F-2A-Z						
												MS-ZL-3006-1	Valve Position Indicating Lights	G2G	CB-F-1A-A						
												MS-SS-3005-1	Selector Switch	G2G	CB-F-1A-A						
												MS-CP-182	MSIV Logic Cabinet (Train A)	GX7	MS-F-3A-Z						
												MS-E2U/12-72	125 V DC Circuit Breaker	E2U	CB-F-1B-A	E2U-GX8 GX8-ZW4	E2U/12a	E2U/12c	CBA-FN-32 CBA-FN-33 EDE-PP-113B		
												MS-GX8-K103	Output Relay	GX8	CB-F-1B-A						
												MS-GX8-K104	Output Relay	GX8	CB-F-1B-A						
												MS-FY-89B-2	Pilot Solenoid	ZW4	MS-F-2A-Z						
												MS-FY-10B-2	Pilot Solenoid	ZW4	MS-F-2A-Z						
												MS-FY-117A-2	Solenoid Valve	ZW4	MS-F-2A-Z						
												MS-FY-117B-2	Solenoid Valve	ZW4	MS-F-2A-Z						
												MS-GX8-CS-3006B	Control Switch	GX8	CB-F-1B-A						
												MS-E1T/9-52	120 V AC Circuit Breaker	E1T	CB-F-1B-A	E1T-GX8/3 G2J-GX8 GX8-ZW6 G2J-GX8/1	E1T/9a E1T/9b E1T/9c	E1T/9f E1T/9g E1T/9h E1T/9i	CBA-FN-32 CBA-FN-33 EDE-PP-11F		
												MS-GX8-FU-101&102	120 V AC Fuses	GX8	CB-F-1B-A						
												MS-GX8-K101	Output Relay	GX8	CB-F-1B-A						
												MS-GX8-K102	Output Relay	GX8	CB-F-1B-A						
												MS-ZS-V88B-1	Valve Position Switch	ZW6	MS-F-2A-Z						
												MS-ZS-V88B-2	Valve Position Switch	ZW6	MS-F-2A-Z						
												MS-ZL-3006-2	Valve Position Indicating Lights	G2J	CB-F-1B-A						
												MS-SS-3005-2	Selector Switch	G2J	CB-F-1B-A						
												MS-CP-183	MSIV Logic Cabinet (Train B)	GX8	CB-F-1B-A						

FUNCTION: DECAY HEAT REMOVAL

ITEM NO.	EQUIPMENT ID NO.	EQUIPMENT DESCRIPTION	P&ID/1-LINE DRAWING NO.	TRAIN	PHYSICAL LOCATION DRAWING NO.	FIRE AREA/ZONE	REQUIRED FOR		POWER		ELEC NODE	SUPPORTING CONTROL AND INSTRUMENTATION EQUIPMENT				CABLES	ELECTRICAL DRAWING NO.		SUPPORTING SYSTEMS	REDUNDANT COUNTERPART	REMARKS
							HOT STAND BY	COLD SHUT DOWN	ELEC	AIR		EQUIPMENT ID NO.	EQUIPMENT DESCRIPTION	ELEC NODE	FIRE AREA/ZONE		SCHEM.	CABLE			
17	MS-V-90	Main Steam Isolation Valve	MS-20583	A/B	310586	MS-F-2A-Z	X	X	X	X	ZX1 ZWO ZW8 ZW9	MS-E2T/14-72	125 V DC Circuit Breaker	E2T	CB-F-1A-A	E2T-GX7/1 GX7-ZW8	310841 E2T/14a	E2T/14c	CBA-FN-19 CBA-FN-20 EDE-PP-113A	None	Notes 4 and 5
												MS-FY-89A-3	Pilot Solenoid	ZW8	MS-F-2A-Z						
												MS-FY-10A-3	Pilot Solenoid	ZW8	MS-F-2A-Z						
												MS-FY-102A-3	Solenoid Valve	ZW8	MS-F-2A-Z						
												MS-FY-102B-3	Solenoid Valve	ZW8	MS-F-2A-Z						
												MS-GX7-K111	Output Relay	GX7	MS-F-3A-Z						
												MS-GX7-K112	Output Relay	GX7	MS-F-3A-Z						
												MS-GX7-3007-A	Control Switch	Gx7	MS-F-3A-Z						
												MS-E1S/9-52	120 V AC Circuit Breaker	E1S	CB-F-1A-A	E1S-GX7/1 G2G-GX7/3 G2G-GX7/4 G2G-GX7/5 GX7-ZWO	E1S/9a E1S/9b E1S/9c E1S/9d	E1S/9h E1S/9i E1S/9j E1S/9k	CBA-FN-19 CBA-FN-20 EDE-PP-11E		
												MS-GX7-FU-103&104	120 V AC Fuses	GX7	MS-F-3A-Z						
												MS-GX7-K109	Output Relay	GX7	MS-F-3A-Z						
												MS-GX7-K110	Output Relay	GX7	MS-F-3A-Z						
												MS-ZS-V90A-1	Valve Position Switch	ZWO	MS-F-2A-Z						
												MS-ZS-V90A-2	Valve Position Switch	ZWO	MS-F-2A-Z						
												MS-ZL-3007-1	Valve Position Indicating Lights	G2G	CB-F-1A-A						
												MS-SS-3005-1	Selector Switch	G2G	CB-F-1A-A						
												MS-CP-182	MSIV Logic Cabinet (Train A)	GX7	MS-F-3A-Z						
												MS-E2U/14-72	125 V DC Circuit Breaker	E2U	CB-F-1B-A	E2U-GX8/1 GX8-ZW9	E2U/14a	E2U/14c	CBA-FN-32 CBA-FN-33 EDE-PP-113B		
												MS-GX8-K111	Output Relay	GX8	CB-F-1B-A						
												MS-GX8-K112	Output Relay	GX8	CB-F-1B-A						
												MS-FY-89B-3	Pilot Solenoid	ZW9	MS-F-2A-Z						
												MS-FY-10B-3	Pilot Solenoid	ZW9	MS-F-2A-Z						
												MS-FY-117A-3	Solenoid Valve	ZW9	MS-F-2A-Z						
												MS-FY-117B-3	Solenoid Valve	ZW9	MS-F-2A-Z						
												MS-GX8-CS-3007-B	Control Switch	GX8	CB-F-1B-A						
												MS-E1T/9-52	120 V AC Circuit Breaker	E1T	CB-F-1B-A	E1T-GX8/3 G2J-GX8 G2J-GX8/1 GX8-ZX1	E1T/9a E1T/9b E1T/9c	E1T/9f E1T/9g E1T/9h E1T/9i	CBA-FN-32 CBA-FN-33 EDE-PP-11F		
												MS-GX8-FU-103&104	120 V AC Fuses	GX8	CB-F-1B-A						
												MS-GX8-K109	Output Relay	GX8	CB-F-1B-A						
												MS-GX8-K110	Output Relay	GX8	CB-F-1B-A						
												MS-ZS-V90B-1	Valve Position Switch	ZX1	MS-F-2A-Z						
												MS-ZS-V90B-2	Valve Position Switch	ZX1	MS-F-2A-Z						
												MS-ZL-3007-2	Valve Position Indicating Lights	G2J	CB-F-1B-A						
												MS-CP-183	MSIV Logic Cabinet (Train B)	GX8	CB-F-1B-A						
												MS-SS-3005-2	Selector Switch	G2J	CB-F-1B-A						

FUNCTION: DECAY HEAT REMOVAL

ITEM NO.	EQUIPMENT ID NO.	EQUIPMENT DESCRIPTION	P&ID/1-LINE DRAWING NO.	TRAIN	PHYSICAL LOCATION DRAWING NO.	FIRE AREA/ZONE	REQUIRED FOR		POWER		ELEC NODE	SUPPORTING CONTROL AND INSTRUMENTATION EQUIPMENT				CABLES	ELECTRICAL DRAWING NO.		SUPPORTING SYSTEMS	REDUNDANT COUNTERPART	REMARKS
							HOT STAND BY	COLD SHUT DOWN	ELEC	AIR		EQUIPMENT ID NO.	EQUIPMENT DESCRIPTION	ELEC NODE	FIRE AREA/ZONE		SCHEM.	CABLE			
18	MS-V-92	Main Steam Isolation Valve	MS-20583	A/B	310589	MS-F-2B-Z	X	X	X	X	ZX3 Z1A Z1B Z1C	MS-E87/18-52	125 V DC Circuit Breaker	E87	CB-F-1A-A	E87-GX6/1 GX6-ZX3	310841 E87/18a	E87/18b	CBA-FN-19 CBA-FN-20 EDE-PP-112A	None	Notes 4 and 5
												MS-GX6-K111	Output Relay	GX6	MS-F-3A-Z						
												MS-GX6-K112	Output Relay	GX6	MS-F-3A-Z						
												MS-FY-89A-4	Pilot Solenoid	ZX3	MS-F-2B-Z						
												MS-FY-10A-4	Pilot Solenoid	ZX3	MS-F-2B-Z						
												MS-FY-102A-4	Solenoid Valve	ZX3	MS-F-2B-Z						
												MS-FY-102B-4	Solenoid Valve	ZX3	MS-F-2B-Z						
												MS-GX6-CS-3008-A	Control Switch	GX-6	MS-F-3A-Z						
												MS-E1S/7-52	120 V AC Circuit Breaker	E1S	CB-F-1A-A	E1S-GX6/1 G2G-GX6/3 G2G-GX6/4 G2G-GX6/5 GX6-Z1B	E1S/7a E1S/7b E1S/7c E1S/7d	E1S/7h E1S/7i E1S/7j E1S/7k	CBA-FN-19 CBA-FN-20 EDE-PP-11E		
												MS-GX6-FU-103&104	120 V AC Fuses	GX6	MS-F-3A-Z						
												MS-GX6-K109	Output Relay	GX6	MS-F-3A-Z						
												MS-GX6-K110	Output Relay	GX6	MS-F-3A-Z						
												MS-ZS-V92A-1	Valve Position Switch	Z1B	MS-F-2B-Z						
												MS-ZS-V92A-2	Valve Position Switch	Z1B	MS-F-2B-Z						
												MS-ZL-3008-1	Valve Position Indicating Lights	G2G	CB-F-1A-A						
												MS-SS-3005-1	Selector Switch	G2G	CB-F-1A-A						
												MS-CP-184	MSIV Logic Cabinet (Train A)	GX6	MS-F-3A-Z						
												MS-E88/9-72	125 V DC Circuit Breaker	E88	CB-F-1B-A	E88-GX9/1 GX9-Z1A	E88/9aE88/9b		CBA-FN-32 CBA-FN-33 EDE-PP-112B		
												MS-GX9-K111	Output Relay	GX9	CB-F-1B-A						
												MS-GX9-K112	Output Relay	GX9	CB-F-1B-A						
												MS-FY-89B-4	Pilot Solenoid	Z1A	MS-F-2B-Z						
												MS-FY-10B-4	Pilot Solenoid	Z1A	MS-F-2B-Z						
												MS-FY-117A-4	Solenoid Valve	Z1A	MS-F-2B-Z						
												MS-FY-117B-4	Solenoid Valve	Z1A	MS-F-2B-Z						
												MS-GX9-CS-3008-B	Control Switch	GX9	CB-F-1B-A						
												MS-E1T/7-52	125 V AC Circuit Breaker	E1T	CB-F-1B-A	E1T-GX9/3 GX9-Z1C G2J-GX9 G2J-GX9/1	E1T/7a E1T/7b E1T/7c	E1T/7f E1T/7g E1T/7h E1T/7i	CBA-FN-32 CBA-FN-33 EDE-PP-11F		
												MS-GX9-FU-103&104	120 V AC Fuses	GX9	CB-F-1B-A						
												MS-GX9-K109	Output Relay	GX9	CB-F-1B-A						
												MS-GX9-K110	Output Relay	GX9	CB-F-1B-A						
												MS-ZS-V92B-1	Valve Position Switch	Z1C	MS-F-2B-Z						
												MS-ZS-V92B-2	Valve Position Switch	Z1C	MS-F-2B-Z						
												MS-ZL-3008-2	Valve Position Indicating Lights	G2J	CB-F-1B-A						
												MS-SS-3005-2	Selector Switch	G2J	CB-F-1B-A						
												MS-CP-185	MSIV Logic Cabinet (Train B)	GX9	CB-F-1B-A						

FUNCTION: DECAY HEAT REMOVAL

ITEM NO.	EQUIPMENT ID NO.	EQUIPMENT DESCRIPTION	P&ID/1-LINE DRAWING NO.	TRAIN	PHYSICAL LOCATION DRAWING NO.	FIRE AREA/ZONE	REQUIRED FOR		POWER		ELEC NODE	SUPPORTING CONTROL AND INSTRUMENTATION EQUIPMENT				CABLES	ELECTRICAL DRAWING NO.		SUPPORTING SYSTEMS	REDUNDANT COUNTERPART	REMARKS
							HOT STAND BY	COLD SHUT DOWN	ELEC	AIR		EQUIPMENT ID NO.	EQUIPMENT DESCRIPTION	ELEC NODE	FIRE AREA/ZONE		SCHEM.	CABLE			
19	MS-V-204	Main Steam Isolation Valve Bypass Valve	MS-20583	A	310589	MS-F-2B-Z	X	X	X	-	VU6	MS-B1X-52	460 V AC Circuit Breaker	B1X	CB-F-1A-A	-	-	-	-	None	Note 2
20	MS-V-205	Main Steam Isolation Valve Bypass Valve	MS-20583	A	310589	MS-F-2A-Z	X	X	X	-	VU7	MS-B1Y-52	460 V AC Circuit Breaker	B1Y	CB-F-1A-A	-	-	-	-	None	Note 2
21	MS-V-206	Main Steam Isolation Valve Bypass Valve	MS-20583	A	310589	MS-F-2A-Z	X	X	X	-	VU8	MS-B1Z-52	460 V AC Circuit Breaker	B1Z	CB-F-1A-A	-	-	-	-	None	Note 2
22	MS-V-207	Main Steam Isolation Valve Bypass Valve	MS-20583	A	310589	MS-F-2B-Z	X	X	X	-	VU9	MS-B2A-52	460 V AC Circuit Breaker	B2A	CB-F-1A-A	-	-	-	-	None	Note 2
23	RC-E-11A	Steam Generator	RC-20841	A	310576 310582 310578	C-F-1-Z C-F-1-Z C-F-2-Z	X	X	-	-	-	-	-	-	-	-	-	-	-	RC-E-11B or RC-E-11D	Note 1

FUNCTION: DECAY HEAT REMOVAL

ITEM NO.	EQUIPMENT ID NO.	EQUIPMENT DESCRIPTION	P&ID/1-LINE DRAWING NO.	TRAIN	PHYSICAL LOCATION DRAWING NO.	FIRE AREA/ZONE	REQUIRED FOR		POWER		ELEC NODE	SUPPORTING CONTROL AND INSTRUMENTATION EQUIPMENT				CABLES	ELECTRICAL DRAWING NO.		SUPPORTING SYSTEMS	REDUNDANT COUNTERPART	REMARKS
							HOT STAND BY	COLD SHUT DOWN	ELEC	AIR		EQUIPMENT ID NO.	EQUIPMENT DESCRIPTION	ELEC NODE	FIRE AREA/ZONE		SCHEM.	CABLE			
24	RC-E-11B	Steam Generator	RC-20842	B	310576 310582 310578	C-F-1-Z C-F-1-Z C-F-2-Z	X	X	-	-	-	-	-	-	-	-	-	-	-	RC-E-11A or RC-E-11C	Note 1
25	RC-E-11C	Steam Generator	RC-20843	A	310577 310583 310579	C-F-1-Z C-F-1-Z C-F-2-Z	X	X	-	-	-	-	-	-	-	-	-	-	-	RC-E-11B or RC-E-11D	Note 1
26	RC-E-11D	Steam Generator	RC-20844	B	310577 310583 310579	C-F-1-Z C-F-1-Z C-F-2-Z	X	X	-	-	-	-	-	-	-	-	-	-	-	RC-E-11A or RC-E-11C	Note 1
27	SB-V9	Outboard Blowdown Isolation Valve	SB-20626	B	310589	MS-F-1B-Z	X	X	X	X	UM4	SB-E88/18-72	125 V DC Circuit Breaker	E88	CB-F-1B-A	-	-	-	-	SB-V-1	Notes 3 and 4
28	SB-V10	Outboard Blowdown Isolation Valve	SB-20626	B	310589	MS-F-1B-Z	X	X	X	X	UM5	SB-E88/18-72	125 V DC Circuit Breaker	E88	CB-F-1B-A	-	-	-	-	SB-V-3	Notes 3 and 4
29	SB-V11	Outboard Blowdown Isolation Valve	SB-20626	B	310589	MS-F-1B-Z	X	X	X	X	UM6	SB-E88/18-72	125 V DC Circuit Breaker	E88	CB-F-1B-A	-	-	-	-	SB-V-5	Notes 3 and 4
30	SB-V12	Outboard Blowdown Isolation Valve	SB-20626	B	310589	MS-F-1B-Z	X	X	X	X	UM7	SB-E88/18-72	125 V DC Circuit Breaker	E88	CB-F-1B-A	-	-	-	-	SB-V-7	Notes 3 and 4

FUNCTION: REACTOR COOLANT INVENTORY AND PRESSURE CONTROL

ITEM NO.	EQUIPMENT ID NO.	EQUIPMENT DESCRIPTION	P&ID/1-LINE DRAWING NO.	TRAIN	PHYSICAL LOCATION DRAWING NO.	FIRE AREA/ZONE	REQUIRED FOR		POWER		ELEC NODE	SUPPORTING CONTROL AND INSTRUMENTATION EQUIPMENT				CABLES	ELECTRICAL DRAWING NO.		SUPPORTING SYSTEMS	REDUNDANT COUNTERPART	REMARKS
							HOT STAND BY	COLD SHUT DOWN	ELEC	AIR		EQUIPMENT ID NO.	EQUIPMENT DESCRIPTION	ELEC NODE	FIRE AREA/ZONE		SCHEM.	CABLE			
1	RC-E-10	Reactor Coolant System Pressurizer	RC-20846	A/B	310598	C-F-1-Z	X	X	-	-	-	-	-	-	-	-	-		-	None	Note 1
2	RC-E-10	Pressurizer Heaters Group A	RC-20846	A	310598	C-F-1-Z	X	X	X	-	M26	RC-AB4-52	480 V AC Circuit Breaker	AB4	CB-F-1A-A	AB4-E07 AB4-E07/1 AB4-G81 AB4-G81/1 E07-H14 E07-H14/1 E07-H14/2 E07-H14/3 E07-H14/4 H14-X47 H14-X47/1 H14-X47/2 H14-X47/3 H14-X47/4 M26-X47 M26-X47/1 M26-X47/2 M26-X47/3 M26-X47/4 M26-X47/5 M26-X47/6 M26-X47/7 M26-X47/8 M26-X47/9 M26-X47/A M26-X47/B M26-X47/C M26-X47/D M26-X47/E	310882 AB4a AB4g AB4b AB4c		CBA-FN-19 CBA-FN-20 EDE-US-52	Pressurizer Heaters Group B	
												RC-AB4-FU	Fuses	AB4	CB-F-1A-A						
												RC-CS-7318-2	Control Switch with Indication	G81	CB-F-1A-A						
												RC-SS-7318	Selector Switch	G81	CB-F-1A-A						
												EDE-AC3-94-3	Bus Undervoltage Relay	AC3	CB-F-1A-A						
												RC-AB4-52H-1	Truck Operated Contact	AB4	CB-F-1A-A						
												EDE-TBX-X47	Terminal Box	X47	C-F-1-Z						
												RC-AB4-G,R	Indicating Lights	AB4	CB-F-1A-A						
												RC-AB4-CT1	Current Transformer (600/5) øB Bus Side	AB4	CB-F-1A-A						
												RC-AB4-AM	Ammeter	AB4	CB-F-1A-A						
												RC-AB4-CT2	Current Transformer (600/5) øA, øC Load Side	AB4	CB-F-1A-A						
												RC-AC3-WTR	Watt Transducer	AC3	CB-F-1A-A						
												RC-PP-6A	Distribution Panel	E07	ET-F-1A-A						
												EDE-MM-90	Electrical Penetration	H14	ET-F-1A-A, C-F-2-Z						

Notes
1. The equipment is mechanical with no electrical requirement.
2. During normal operation, the valve is in its safe shutdown position. To prevent spurious operations, this equipment will be disabled at the appropriate control location.
3. Disabling the valve at the appropriate control location will reposition it for safe shutdown.
4. Air is not needed to position or to reposition the valve for safe shutdown.
5. These valves are closed with their circuit breakers locked open during 100% power operation. This will prevent spurious operation. For cold shutdown, these valves are energized for repositioning.
6. Not Used.

FUNCTION: REACTOR COOLANT INVENTORY AND PRESSURE CONTROL

ITEM NO.	EQUIPMENT ID NO.	EQUIPMENT DESCRIPTION	P&ID/1-LINE DRAWING NO.	TRAIN	PHYSICAL LOCATION DRAWING NO.	FIRE AREA/ZONE	REQUIRED FOR		POWER		ELEC NODE	SUPPORTING CONTROL AND INSTRUMENTATION EQUIPMENT				CABLES	ELECTRICAL DRAWING NO.		SUPPORTING SYSTEMS	REDUNDANT COUNTERPART	REMARKS
							HOT STAND BY	COLD SHUT DOWN	ELEC	AIR		EQUIPMENT ID NO.	EQUIPMENT DESCRIPTION	ELEC NODE	FIRE AREA/ZONE		SCHEM.	CABLE			
3	RC-E-10	Pressurizer Heaters Group B	RC-20846	B	310598	C-F-1-Z	X	X	X	-	M26	RC-AD4-52	480 V AC Circuit Breaker	AD4	CB-F-1B-A	AD4-E08 AD4-E08/1 AD4-GZ0 AD4-GZ0/1 AE3-GZ0 E08-H20 E08-H20/1 E08-H20/2 E08-H20/3 E08-H20/4 H20-X44 H20-X44/1 H20-X44/2 H20-X44/3 H20-X44/4 M26-X44 M26-X44/1 M26-X44/2 M26-X44/3 M26-X44/4 M26-X44/5 M26-X44/6 M26-X44/7 M26-X44/8 M26-X44/9 M26-X44/A M26-X44/B M26-X44/C M26-X44/D M26-X44/E	310882 AD4a AD4b AD4c	AD4f	CBA-FN-32 CBA-FN-33 EDE-US-62	Pressurizer Heaters Group A	
												RC-AD4-FU	Fuses	AD4	CB-F-1B-A						
												RC-CS-7319-2	Control Switch with Indication	GZ0	CB-F-1B-A						
												RC-SS-7319	Selector Switch	GZ0	CB-F-1B-A						
												EDE-AE3-94-3	Bus Undervoltage Relay	AE3	CB-F-1B-A						
												RC-AD4-52H-1	Truck Operated Contact	AD4	CB-F-1B-A						
												RC-AD4-G,R	Indicating Lights	AD4	CB-F-1B-A						
												EDE-TBX-X44	Terminal Box	X44	C-F-1-Z						
												RC-AD4-CT1	Current Transformer (600/5) øB Bus Side	AD4	CB-F-1B-A						
												RC-AD4-AM	Ammeter	AD4	CB-F-1B-A						
												RC-AD4-CT2	Current Transformer (600/5) øA, øC Load Side	AD4	CB-F-1B-A						
												RC-AE3-WTR	Watt Transducer	AE3	CB-F-1B-A						
												RC-PP-6B	Distribution Panel	E08	ET-F-1C-A						
												EDE-MM-96	Electrical Penetration	H20	ET-F-1C-A, C-F-1-Z						
												RC-AE3-R1	Auxiliary Relay	AE3	CB-F-1B-A						
4	RC-V-122	RC-E-10 Pressurizer Relief Isolation Valve	RC-20846	A	310581	C-F-3-Z	X	X	X	-	V01	RC-B97-52-1,2	460 V AC Circuit Breakers	B97	CB-F-1A-A	B97-G81 B97-G81/1 B97-H18 B97-H35 H18-V01 H35-X56 V01-X56	310882 B97a B97e	B97c	CBA-FN-19 CBA-FN-20 EDE-MCC-521	RC-V-124 RC-PCV-456A	
												RC-B97-FU	Fuse	B97	CB-F-1A-A						
												RC-CS-7313-2	Control Switch with Indication	G81	CB-F-1A-A						
												RC-SS-7313	Selector Switch	G81	CB-F-1A-A						
												RC-B97-42-1/0,C	Motor Starters	B97	CB-F-1A-A						
												RC-B97-42-2	Motor Starter	B97	CB-F-1A-A						
												RC-B97-49-1,2	Overload Relays	B97	CB-F-1A-A						
												EDE-TBX-X56	Terminal Box	X56	C-F-3-Z						
												RC-ZS-V122	Valve Position Switch and Valve Open/Close Torque Switches	V01	C-F-3-Z						
												EDE-MM-94	Electrical Penetration	H18	C-F-2-Z, ET-F-1A-A						
												EDE-MM-111	Electrical Penetration	H35	C-F-2-Z, ET-F-1A-A						

Notes
7. These valves are also listed in Table RSS 3.1.3.6.
8. This group of pressurizer heaters will be disabled at the appropriate control location to prevent spurious operation.
9. Electrical conduit plan drawing, 9763-F-310764, is listed only to show the fire zone corresponding to the area where the charging pump oil coolers are located (9763-F-805213 and -F815214).
10. Reactor Coolant Pumps will be tripped prior to main control room evacuation or they can be tripped in Non-Essential Switchgear Room, if required.
11. This equipment will be disabled by tripping and racking-out its circuit breaker at the switchgear.

FUNCTION: REACTOR COOLANT INVENTORY AND PRESSURE CONTROL

ITEM NO.	EQUIPMENT ID NO.	EQUIPMENT DESCRIPTION	P&ID/1-LINE DRAWING NO.	TRAIN	PHYSICAL LOCATION DRAWING NO.	FIRE AREA/ZONE	REQUIRED FOR		POWER		ELEC NODE	SUPPORTING CONTROL AND INSTRUMENTATION EQUIPMENT				CABLES	ELECTRICAL DRAWING NO.		SUPPORTING SYSTEMS	REDUNDANT COUNTERPART	REMARKS
							HOT STAND BY	COLD SHUT DOWN	ELEC	AIR		EQUIPMENT ID NO.	EQUIPMENT DESCRIPTION	ELEC NODE	FIRE AREA/ZONE		SCHEM.	CABLE			
5	RC-V-124	RC-E-10 Pressurizer Relief Isolation Valve	RC-20846	B	310581	C-F-3-Z	X	X	X	-	V02	RC-B98-52-1,2	460 V AC Circuit Breakers	B98	CB-F-1B-A	B98-GZ0 B98-GZ0/1 B98-GZ0/2 B98-H15 B98-H41 H15-V02 H41-X35 V02-X35	310882 B98a B98c B98e			CBA-FN-32 CBA-FN-33 EDE-MCC-621	RC-V-122 RC-PCV-456B	
												RC-B98-FU	Fuse	B98	CB-F-1B-A						
												FC-CS-7314-2	Control Switch with Indication	GZ0	CB-F-1B-A						
												RC-SS-7314	Selector Switch	GZ0	CB-F-1B-A						
												RC-B98-42-1/0,C	Motor Starters	B98	CB-F-1B-A						
												RC-B98-42-2	Motor Starter	B98	CB-F-1B-A						
												RC-B98-49-1,2	Overload Relays	B98	CB-F-1B-A						
												EDE-TBX-X35	Terminal Box	X35	C-F-3-Z						
												RC-ZS-V124	Valve Position Switch and Valve Open/Close Torque Switches	V02	C-F-3-Z						
												EDE-MM-91	Electrical Penetration	H15	C-F-1-Z, ET-F-1C-A						
												EDE-MM-117	Electrical Penetration	H41	C-F-1-Z, ET-F-1C-A						
6	RC-PCV-456A	RC-E-10 Pressurizer Relief Control Valve	RC-20846	A	310581	C-F-3-Z	X	X	X		LD3	RC-E87/19-72	125 V DC Circuit Breaker	E87	CB-F-1A-A	E87-E4A/4 E4A-J3M G81-J3M G81-H35 G5X-J3M H18-J3M H18-LD3 H35-X56/2 LD3-X56	310882 E87/19a E87/19c			CBA-FN-19 CBA-FN-20 EDE-PP-112A	RC-PCV-456B RC-V-122	
												RC-CS-456A-2	Control Switch with Indication	G81	CB-F-1A-A						
												RC-SS-456-A1	Selector Switch	G81	CB-F-1A-A						
												RC-SS-456-A2	Selector Switch	G5X	DG-F-2A-A						
												RC-J3M-42	Auxiliary Relay	J3M	DG-F-2A-A						
												RC-PCV-456A-20	Solenoid Operating Coil	LD3	C-F-3-Z						
												RC-ZS-PCV-456A	Valve Position Switch	LD3	C-F-3-Z						
												RC-E4A-FU11,12	30 A Fuses	E4A	CB-F-1A-A						
												EDE-TBX-X56	Terminal Box	X56	C-F-3-Z						
												EDE-MM-94	Electrical Penetration	H18	C-F-2-Z, ET-F-1A-A						
												EDE-MM-111	Electrical Penetration	H35	C-F-2-Z, ET-F-1A-A						

FUNCTION: REACTOR COOLANT INVENTORY AND PRESSURE CONTROL

ITEM NO.	EQUIPMENT ID NO.	EQUIPMENT DESCRIPTION	P&ID/1-LINE DRAWING NO.	TRAIN	PHYSICAL LOCATION DRAWING NO.	FIRE AREA/ZONE	REQUIRED FOR		POWER		ELEC NODE	SUPPORTING CONTROL AND INSTRUMENTATION EQUIPMENT				CABLES	ELECTRICAL DRAWING NO.		SUPPORTING SYSTEMS	REDUNDANT COUNTERPART	REMARKS
							HOT STAND BY	COLD SHUT DOWN	ELEC	AIR		EQUIPMENT ID NO.	EQUIPMENT DESCRIPTION	ELEC NODE	FIRE AREA/ZONE		SCHEM.	CABLE			
7	RC-PCV-456B	RC-E-10 Pressurizer Relief Control Valve	RC-20846	B	310581	C-F-3-Z	X	X	X		LD4	RC-E88/19-72	125 V DC Circuit Breaker	E88	CB-F-1B-A	E88-E4C/7 E4C-GZO/2 E4C-J3P GZO-J3P GZO-H39 G5Y-J3P H24-J3P H24-LD4 H39-X35 LD4-X35	310882 E88/19a	E88/19c	CBA-FN-32 CBA-FN-33 EDE-PP-112B	RC-PCV-456A or RC-V-124	
												RC-CS-456B-2	Control Switch with Indication	GZO	CB-F-1B-A						
												RC-SS-456-B1	Selector Switch	GZO	CB-F-1B-A						
												RC-SS-456-B2	Selector Switch	G5Y	DG-F-2B-A						
												RC-J3P-42	Auxiliary Relay	J3P	DG-F-2B-A						
												RC-PCV-456B-20	Solenoid Operating Coil	LD4	C-F-3-Z						
												RC-ZS-PCV-456B	Valve Position Switch	LD4	C-F-3-Z						
												RC-E4C-FU19 & 20	30 A Fuses	E4C	CB-F-1B-A						
												EDE-TBX-X35	Terminal Box	X35	C-F-3-Z						
												EDE-MM-100	Electrical Penetration	H24	C-F-1-Z, ET-F-1C-A						
												EDE-MM-115	Electrical Penetration	H39	C-F-1-Z, ET-F-1C-A						
												RC-E4C-FU-23,24	30 A Fuses	E4C	CB-F-1B-A						
8	RC-TK11	Pressurizer Relief Tank	RC-20846	A/B	310577	C-F-1-Z	X	X	-	-	-	-	-	-	-	-	-	-	-	None	Note 1
9	RC-V-323	Reactor Vessel Venting Valve	RC-20845	B	310581	C-F-3-Z	X	X	X	-	VB2	RC-BV9-52-1	460 V AC Circuit Breaker	BV9	CB-F-1B-A	-	-	-	CBA-FN-32 CBA-FN-33	RC-FV-2881	Note 2
10	RC-FV-2881	Reactor Vessel Venting Valve	RC-20845	B	310581	C-F-3-Z	X	X	X		U04	RC-E88/1-72	125 V DC Circuit Breaker	E88	CB-F-1B-A	-	-	-	CBA-FN-32 CBA-FN-33 DAH-FN-25B DAH-FN-26B	RC-V-323	Note 2
												RC-SS-2881	Selector Switch	G5Y	DG-F-2B-A						
11	RC-LCV-459	Letdown Isolation Valve	RC-20843	A	310577	C-F-1-Z	X	X	X	X	L99	RC-E89/17-72	125 V DC Circuit Breaker	E89	CB-F-1A-A	-	-	-	CBA-FN-19 CBA-FN-20 DAH-FN-25A DAH-FN-26A	RC-LCV-460	Note 3, 4
												RC-SS-459	Selector Switch	G5X	DG-F-2A-A						
12	RC-LCV-460	Letdown Isolation Valve	RC-20843	A	310577	C-F-1-Z	X	X	X	X	LF7	RC-E89/1-72	125 V DC Circuit Breaker	E89	CB-F-1A-A	-	-	-	CBA-FN-19 CBA-FN-20	RC-LCV-459	Note 3, 4

FUNCTION: REACTOR COOLANT INVENTORY AND PRESSURE CONTROL

ITEM NO.	EQUIPMENT ID NO.	EQUIPMENT DESCRIPTION	P&ID/1-LINE DRAWING NO.	TRAIN	PHYSICAL LOCATION DRAWING NO.	FIRE AREA/ZONE	REQUIRED FOR		POWER		ELEC NODE	SUPPORTING CONTROL AND INSTRUMENTATION EQUIPMENT				CABLES	ELECTRICAL DRAWING NO.		SUPPORTING SYSTEMS	REDUNDANT COUNTERPART	REMARKS
							HOT STAND BY	COLD SHUT DOWN	ELEC	AIR		EQUIPMENT ID NO.	EQUIPMENT DESCRIPTION	ELEC NODE	FIRE AREA/ZONE		SCHEM.	CABLE			
13	CS-P-2A	Charging Pump	CS-20725	A	310764	PAB-F-1C-A	X	X	X	-	M17	CS-A62-52	4160 V AC Circuit Breaker	A62	CB-F-1A-A	A62-M17 A62-P01	310891 A62a	A62h	CBA-FN-19 CBA-FN-20 EAH-FN-5A EDE-SWG-5	CS-P-2B	
												CS-CS-7424-2	Control Switch	A62	CB-F-1A-A		A62b				
												CS-SS-7424	Selector Switch	A62	CB-F-1A-A		A62c				
												CS-A62-86	Lockout Relay	A62	CB-F-1A-A		A62d				
												CS-A62-52H	Truck Operated Contact	A62	CB-F-1A-A						
												CS-A62-50/51	Inst./Time Over Current Relays øA, øC	A62	CB-F-1A-A						
												CS-PS-7467-1	Pressure Switch	P01	PAB-F-1C-A						
												CS-A62-AM	Ammeter	A62	CB-F-1A-A						
												CS-A62-AS	Ammeter Switch	A62	CB-F-1A-A						
												CS-A62-CT	Current Transformer (100/5)	A62	CB-F-1A-A						
												CS-A62-TD1	CT Test Device	A62	CB-F-1A-A						
												CS-A62-ATR	Transducer	A62	CB-F-1A-A						
												CS-A62-TD2	Lockout Relay Test Device	A62	CB-F-1A-A						
												CS-A62-TDR	Timing Relay	A62	CB-F-1A-A						
												CS-A62-FU	Fuses	A62	CB-F-1A-A						
												CS-A62-52Z	Timing Relay	A62	CB-F-1A-A						
												CS-A62-G,R,W	Indicating Lights	A62	CB-F-1A-A						
												CS-A62-51GS	Ground Sensor Relay	A62	CB-F-1A-A						

FUNCTION: REACTOR COOLANT INVENTORY AND PRESSURE CONTROL

ITEM NO.	EQUIPMENT ID NO.	EQUIPMENT DESCRIPTION	P&ID/1-LINE DRAWING NO.	TRAIN	PHYSICAL LOCATION DRAWING NO.	FIRE AREA/ZONE	REQUIRED FOR		POWER		ELEC NODE	SUPPORTING CONTROL AND INSTRUMENTATION EQUIPMENT				CABLES	ELECTRICAL DRAWING NO.		SUPPORTING SYSTEMS	REDUNDANT COUNTERPART	REMARKS
							HOT STAND BY	COLD SHUT DOWN	ELEC	AIR		EQUIPMENT ID NO.	EQUIPMENT DESCRIPTION	ELEC NODE	FIRE AREA/ZONE		SCHEM.	CABLE			
14	CS-P-2B	Charging Pump	CS-20725	B	310764	PAB-F-1D-A	X	X	X	-	M18	CS-A82-52	4160 V AC Circuit Breaker	A82	CB-F-1B-A	A82-M18 A82-P02	310891 A82a A82b A82c A82d	A82h	CBA-FN-32 CBA-FN-33 EAH-FN-5B EDE-SWG-6	CS-P-2A	
												CS-CS-7425-2	Control Switch	A82	CB-F-1B-A						
												CS-SS-7425	Selector Switch	A82	CB-F-1B-A						
												CS-A82-86	Lockout Relay	A82	CB-F-1B-A						
												CS-A82-52H	Truck Operated Contact	A82	CB-F-1B-A						
												CS-A82-50/51	Inst./Time Over Current Relays øA, øB	A82	CB-F-1B-A						
												CS-PS-7468-1	Pressure Switch	P02	PAB-F-1D-A						
												CS-A82-AM	Ammeter	A82	CB-F-1B-A						
												CS-A82-AS	Ammeter Switch	A82	CB-F-1B-A						
												CS-A82-CT	Current Transformer (100/5)	A82	CB-F-1B-A						
												CS-A82-TD1	CT Test Device	A82	CB-F-1B-A						
												CS-A82-ATR	Transducer	A82	CB-F-1B-A						
												CS-A82-TD2	Lockout Relay Test Device	A82	CB-F-1B-A						
												CS-A82-TDR	Timing Relay	A82	CB-F-1B-A						
												CS-A82-FU	Fuses	A82	CB-F-1B-A						
												CS-A82-52Z	Timing Relay	A82	CB-F-1B-A						
												CS-A82-G,R,W	Indicating Lights	A82	CB-F-1B-A						
												CS-A82-51GS	Ground Sensor Relay	A82	CB-F-1B-A						
												CS-A82-R2	Auxiliary Relay	A82	CB-F-1B-A						
15	RC-P-1A	Reactor Coolant Pump	RC-20841	A	310576 310582 310578	C-F-1-Z C-F-1-Z C-F-2-Z	X	-	X	-	M01	RC-A05-52	13.8 kV AC Circuit Breaker	A05	NES-F-1A-Z	-	-	-	-	None	Note 10
16	RC-P-1B	Reactor Coolant Pump	RC-20842	A	310576 310582 310578	C-F-1-Z C-F-1-Z C-F-2-Z	X	-	X	-	M02	RC-A20-52	13.8 kV AC Circuit Breaker	A20	NES-F-1A-Z	-	-	-	-	None	Note 10

FUNCTION: REACTOR COOLANT INVENTORY AND PRESSURE CONTROL

ITEM NO.	EQUIPMENT ID NO.	EQUIPMENT DESCRIPTION	P&ID/1-LINE DRAWING NO.	TRAIN	PHYSICAL LOCATION DRAWING NO.	FIRE AREA/ZONE	REQUIRED FOR		POWER		ELEC NODE	SUPPORTING CONTROL AND INSTRUMENTATION EQUIPMENT				CABLES	ELECTRICAL DRAWING NO.		SUPPORTING SYSTEMS	REDUNDANT COUNTERPART	REMARKS
							HOT STAND BY	COLD SHUT DOWN	ELEC	AIR		EQUIPMENT ID NO.	EQUIPMENT DESCRIPTION	ELEC NODE	FIRE AREA/ZONE		SCHEM.	CABLE			
17	RC-P-1C	Reactor Coolant Pump	RC-20843	A	310577 310583 310579	C-F-1-Z C-F-1-Z C-F-2-Z	X	-	X	-	M03	RC-A09-52	13.8 kV AC Circuit Breaker	A09	NES-F-1A-Z	-	-	-	-	None	Note 10
18	RC-P-1D	Reactor Coolant Pump	RC-20844	A	310577 310583 310579	C-F-1-Z C-F-1-Z C-F-2-Z	X	-	X	-	M04	RC-A24-52	13.8 kV AC Circuit Breaker	A24	NES-F-1A-Z	-	-	-	-	None	Note 10
19	RC-V-22	RC-E-11A Hot Leg-RHR Isolation Valve	RC-20841	B	310582	C-F-1-Z	-	X	X	-	V27	RC-B54-52-1	460 V AC Circuit Breaker	B54	CB-F-1B-A	-	-	-	-	RC-V-23	Notes 5 and 7
20	RC-V-23	RC-E-11A Hot Leg-RHR Isolation Valve	RC-20841	A	310576	C-F-1-Z	-	X	X	-	V25	RC-B53-52-1	460 V AC Circuit Breaker	B53	CB-F-1A-A	-	-	-	-	RC-V-22	Notes 5 and 7
21	RC-V-87	RC-E-11D Hot Leg-RHR Isolation Valve	RC-20844	B	310582	C-F-1-Z	-	X	X	-	V26	RC-B61-52-1	460 V AC Circuit Breaker	B61	CB-F-1B-A	-	-	-	-	RC-V-87	Notes 5 and 7
22	RC-V-88	RC-E-11D Hot Leg-RHR Isolation Valve	RC-20844	A	310577	C-F-1-Z	-	X	X	-	V28	RC-B62-52-1	460 V AC Circuit Breaker	B62	CB-F-1A-A	-	-	-	-	RC-V-88	Notes 5 and 7
23	SI-V-3	Accumulator TK-9A Outlet Isolation Valve	SI-20450	A	310576	C-F-1-Z		X	X	-	V39	SI-B35-5-1,2	460 V AC Circuit Breakers	B35	CB-F-1A-A	B35-G81 B35-H19 B35-H36 H19-V39 H36-V39	310890 B35a	B35c	CBA-FN-19 CBA-FN-20 EDE-MCC-522	SI-FV-2475 SI-FV-2476	
												SI-B35-FU	Fuse	B35	CB-F-1A-A						
												SI-CS-2403-2	Control Switch with Indication	G81	CB-F-1A-A						
												SI-SS-2403	Selector Switch	G81	CB-F-1A-A						
												SI-ZL-2403-4	Pilot Light	G81	CB-F-1A-A						
												SI-B35-42/O,C	Motor Starters	B35	CB-F-1A-A						
												SI-B35-49	Overload Relay	B35	CB-F-1A-A						
												SI-ZS-V3	Valve Position and Open/Close Torque Switches	V39	C-F-1-Z						
												EDE-MM-95	Electrical Penetration	H19	C-F-2-Z, ET-F-1A-A						
												EDE-MM-112	Electrical Penetration	H36	C-F-2-Z, ET-F-1A-A						
												SI-EH9/9-52	120 V AC Circuit Breaker	EH9	CB-F-1A-A	G81-H35/5 G81-H36/6 H35-V41/1 H36-V39/1 E4H-EH9 E4H-G81	EH9/9a	EH9/9b	CBA-FN-19 CBA-FN-20 EDE-PP-1E		
												SI-CS-2403-2	Control Switch with Indication	G81	CB-F-1A-A						
												SI-SS-2403	Selector Switch	G81	CB-F-1A-A						
												SI-ZS-V3	Valve Position and Open/Close Torque Switches	V39	C-F-1-Z						
												SI-E4H-FU7,8	30 A Fuses	E4H	CB-F-1A-A						
												EDE-MM-112	Electrical Penetration	H36	C-F-2-Z, ET-F-1A-A						

FUNCTION: REACTOR COOLANT INVENTORY AND PRESSURE CONTROL

ITEM NO.	EQUIPMENT ID NO.	EQUIPMENT DESCRIPTION	P&ID/1-LINE DRAWING NO.	TRAIN	PHYSICAL LOCATION DRAWING NO.	FIRE AREA/ZONE	REQUIRED FOR		POWER		ELEC NODE	SUPPORTING CONTROL AND INSTRUMENTATION EQUIPMENT				CABLES	ELECTRICAL DRAWING NO.		SUPPORTING SYSTEMS	REDUNDANT COUNTERPART	REMARKS
							HOT STAND BY	COLD SHUT DOWN	ELEC	AIR		EQUIPMENT ID NO.	EQUIPMENT DESCRIPTION	ELEC NODE	FIRE AREA/ZONE		SCHEM.	CABLE			
24	SI-V-17	Accumulator TK-9B Outlet Isolation Valve	SI-20450	B	310576	C-F-1-Z		X	X	-	V40	SI-B36-52-1,2	460 V AC Circuit Breakers	B36	CB-F-1B-A	B36-GZ0 B36-H15 B36-H41 H15-V40 H41-V40	310890 B36a	B36c	CBA-FN-32 CBA-FN-33 EDE-MCC-622	SI-FV-2482 SI-FV-2483	
												SI-B36-FU	Fuse	B36	CB-F-1B-A						
												SI-CS-2413-2	Control Switch with Indication	GZ0	CB-F-1B-A						
												SI-SS-2413	Selector Switch	GZ0	CB-F-1B-A						
												SI-ZL-2413-4	Pilot Light	GZ0	CB-F-1B-A						
												SI-B36-42/O,C	Motor Starters	B36	CB-F-1B-A						
												SI-B36-49	Overload Relay	B36	CB-F-1B-A						
												SI-ZS-V17	Valve Position and Open/Close Torque Switches	V40	C-F-1-Z						
												EDE-MM-91	Electrical Penetration	H15	C-F-1-Z, ET-F-1C-A						
												EDE-MM-117	Electrical Penetration	H41	C-F-1-Z, ET-F-1C-A						
												SI-EH0/9-52	120 V AC Circuit Breaker	EH0	CB-F-1B-A	GZ0-H39/5 GZ0-H41/4 H39-V42/1 H41-V40/1 E4J-EH0	EH0/9a	EH0/9b	CBA-FN-32 CBA-FN-33 EDE-PP-1F		
												SI-CS-2413-2	Control Switch with Indication	GZ0	CB-F-1B-A						
												SI-SS-2413	Selector Switch	GZ0	CB-F-1B-A	E4J-GZ0					
												SI-ZS-V17	Valve Position and Open/Close Torque Switches	V40	C-F-1-Z						
												SI-E4J-FU7,8	30 A Fuses	E4J	CB-F-1B-A						
												EDE-MM-117	Electrical Penetration	H41	C-F-1-Z, ET-F-1C-A						

FUNCTION: REACTOR COOLANT INVENTORY AND PRESSURE CONTROL

ITEM NO.	EQUIPMENT ID NO.	EQUIPMENT DESCRIPTION	P&ID/1-LINE DRAWING NO.	TRAIN	PHYSICAL LOCATION DRAWING NO.	FIRE AREA/ZONE	REQUIRED FOR		POWER		ELEC NODE	SUPPORTING CONTROL AND INSTRUMENTATION EQUIPMENT				CABLES	ELECTRICAL DRAWING NO.		SUPPORTING SYSTEMS	REDUNDANT COUNTERPART	REMARKS
							HOT STAND BY	COLD SHUT DOWN	ELEC	AIR		EQUIPMENT ID NO.	EQUIPMENT DESCRIPTION	ELEC NODE	FIRE AREA/ZONE		SCHEM.	CABLE			
25	SI-V-32	Accumulator TK-9C Outlet Isolation Valve	SI-20450	A	310577	C-F-1-Z		X	X	-	V41	SI-B37-52-1,2	460 V AC Circuit Breakers	B37	CB-F-1A-A	B37-G81 B37-H18 B37-H35 H18-V41 H35-V41	B37a	B37c	CBA-FN-19 CBA-FN-20 EDE-MCC-522	SI-FV-2477 SI-FV-2486	
												SI-B37-FU	Fuse	B37	CB-F-1A-A						
												SI-CS-2423-2	Control Switch with Indication	G81	CB-F-1A-A						
												SI-SS-2423	Selector Switch	G81	CB-F-1A-A						
												SI-ZL-2423-4	Pilot Light	G81	CB-F-1A-A						
												SI-B37-42/O,C	Motor Starters	B37	CB-F-1A-A						
												SI-B37-49	Overload Relay	B37	CB-F-1A-A						
												EDE-MM-94	Electrical Penetration	H18	C-F-2-Z, ET-F-1A-A						
												EDE-MM-111	Electrical Penetration	H35	C-F-2-Z, ET-F-1A-A						
												SI-ZS-V32	Valve Position and Open/Close Torque Switches	V41	C-F-1-Z						
												SI-EH9/9-52	120 V AC Circuit Breakers	EH9	CB-F-1A-A	G81-H35/5 G81-H36/6 H35-V41/1 H36-V39/1 E4H-EH9 E4H-G81	EH9/9a	EH9/9b	CBA-FN-19 CBA-FN-20 EDE-PP-1E		
												SI-CS-2423-2	Control Switch with Indication	G81	CB-F-1A-A						
												SI-SS-2423	Selector Switch	G81	CB-F-1A-A						
												SI-ZS-V32	Valve Position and Open/Close Torque Switches	V41	C-F-1-Z						
												SI-E4H-FU7,8	30 A Fuses	E4H	CB-F-1A-A						
												EDE-MM-111	Electrical Penetration	H35	C-F-2-Z, ET-F-1A-A						

FUNCTION: REACTOR COOLANT INVENTORY AND PRESSURE CONTROL

ITEM NO.	EQUIPMENT ID NO.	EQUIPMENT DESCRIPTION	P&ID/1-LINE DRAWING NO.	TRAIN	PHYSICAL LOCATION DRAWING NO.	FIRE AREA/ZONE	REQUIRED FOR		POWER		ELEC NODE	SUPPORTING CONTROL AND INSTRUMENTATION EQUIPMENT				CABLES	ELECTRICAL DRAWING NO.		SUPPORTING SYSTEMS	REDUNDANT COUNTERPART	REMARKS
							HOT STAND BY	COLD SHUT DOWN	ELEC	AIR		EQUIPMENT ID NO.	EQUIPMENT DESCRIPTION	ELEC NODE	FIRE AREA/ZONE		SCHEM.	CABLE			
26	SI-V-47	Accumulator TK-9D Outlet Isolation Valve	SI-20450	B	310577	C-F-1-Z		X	X	-	V42	SI-B38-52-1,2	460 V AC Circuit Breakers	B38	CB-F-1B-A	B38-GZ0 B38-H24 B38-H39 H24-V42 H39-V42	310890 B38a	B38c	CBA-FN-32 CBA-FN-33 EDE-MCC-622	SI-FV-2495 SI-FV-2496	
												SI-B38-FU	Fuse	B38	CB-F-1B-A						
												SI-CS-2433-2	Control Switch with Indication	GZ0	CB-F-1B-A						
												SI-SS-2433	Selector Switch	GZ0	CB-F-1B-A						
												SI-ZL-2433-4	Pilot Light	GZ0	CB-F-1B-A						
												SI-B38-42/O,C	Motor Starters	B38	CB-F-1B-A						
												SI-B38-49	Overload Relay	B38	CB-F-1B-A						
												SI-ZS-V47	Valve Position and Open/Close Torque Switches	V42	C-F-1-Z						
												EDE-MM-100	Electrical Penetration	H24	C-F-1-Z, ET-F-1C-A						
												EDE-MM-115	Electrical Penetration	H39	C-F-1-Z, ET-F-1C-A						
												SI-EH0/9-52	120 V AC Circuit Breaker	EH0	CB-F-1B-A	GZ0-H39/5 GZ0-H41/4 H39-V42/1 H41-V40/1 E4J-EH0	EH0/9a	EH0/9b	CBA-FN-32 CBA-FN-33 EDE-PP-1F		
												SI-CS-2433-2	Control Switch with Indication	GZ0	CB-F-1B-A						
												SI-SS-2433	Selector Switch	GZ0	CB-F-1B-A	E4J-GZ0					
												SI-ZS-V47	Valve Position and Open/Close Torque Switches	V42	C-F-1-Z						
												SI-E4J-FU7,8	30 A Fuses	E4J	CB-F-1B-A						
												EDE-MM-115	Electrical Penetration	H39	C-F-1-Z, ET-F-1C-A						
27	CS-P-2A	Charging Pump Lube Oil Cooler	CS-20725	A	310764 805213	PAB-F-1C-A	X	X	-	-	-	-	-	-	-	-	-	-	Component Cooling	CS-P-2B	Note 9
28	CS-P-2B	Charging Pump Lube Oil Cooler	CS-20725	B	310764 815214	PAB-F-1D-A	X	X	-	-	-	-	-	-	-	-	-	-	Component Cooling	CS-P-2A	Note 9
29	CS-V-460	SI-P-6A Suction Valve	CS-20725	A	310761	RHR-F-2B-Z	-	X	X	-	V59	CS-B44-52	460 V AC Circuit Breaker	B44	CB-F-1A-A	-	-	-	CBA-FN-19 CBA-FN-20	None	Note 2
30	CS-V-461	SI-P-6A Suction Valve	CS-20725	B	310761	RHR-F-2B-Z	-	X	X	-	V60	VS-B45-52	460 V AC Circuit Breaker	B45	CB-F-1B-A	-	-	-	CBA-FN-32 CBA-FN-33	None	Note 2
31	CS-V-167	RC Pump Seal Water Isolation Valve	CS-20726	A	310769	PP-F-5B-Z	X	X	X	-	V05	CS-B73-52	460 V AC Circuit Breaker	B73	CB-F-1A-A	-	-	-	CBA-FN-19 CBA-FN-20	None	Note 2
32	CS-V-168	RC Pump Seal Water Isolation Valve	CS-20726	B	310577	C-F-1-Z	X	X	X	-	V06	CS-B72-52-1	450 V AC Circuit Breaker	B72	CB-F-1B-A	-	-	-	CBA-FN-32 CBA-FN-33	None	Note 2
33	CS-V-175	Excess Letdown Isolation Valve	CS-20722	B	310577	C-F-1-Z	X	X	X	X	L95	CS-E95/2-72	125 V DC Circuit Breaker	E95	C-F-1B-A				CBA-FN-32 CBA-FN-33 DAH-FN-25B DAH-FN-26B	CS-V-176	Notes 2 and 4
												CS-SS-7418	Selector Switch	G5Y	DG-F-2B-A						

FUNCTION: REACTOR COOLANT INVENTORY AND PRESSURE CONTROL

ITEM NO.	EQUIPMENT ID NO.	EQUIPMENT DESCRIPTION	P&ID/1-LINE DRAWING NO.	TRAIN	PHYSICAL LOCATION DRAWING NO.	FIRE AREA/ZONE	REQUIRED FOR		POWER		ELEC NODE	SUPPORTING CONTROL AND INSTRUMENTATION EQUIPMENT				CABLES	ELECTRICAL DRAWING NO.		SUPPORTING SYSTEMS	REDUNDANT COUNTERPART	REMARKS
							HOT STAND BY	COLD SHUT DOWN	ELEC	AIR		EQUIPMENT ID NO.	EQUIPMENT DESCRIPTION	ELEC NODE	FIRE AREA/ZONE		SCHEM.	CABLE			
34	CS-V-176	Excess Letdown Isolation Valve	CS-20722	B	310577	C-F-1-Z	X	X	X	X	LA5	CS-E95/4-72	125 V DC Circuit Breaker	E95	CB-F-1B-A				CBA-FN-32 CBA-FN-33	CS-V-175	Notes 2 and 4
35	CS-V-196	Charging Pump Miniflow Isolation Valve	CS-20725	A	310762	PAB-F-1J-Z	X	X	X	-	V13	CS-B81-52	460 V AC Circuit Breaker	B81	CB-F-1A-A				CBA-FN-19 CBA-FN-20	CS-V-197	Note 2
36	CS-V-197	Charging Pump Miniflow Isolation Valve	CS-20725	B	310762	PAB-F-1J-Z	X	X	X	-	V14	CS-B86-52	460 V AC Circuit Breaker	B86	CB-F-1B-A				CBA-FN-32 CBA-FN-33	CS-V-196	Note 2
37	CS-LCV-112B	Chemical and Volume Control Tank Outlet Isolation Valve	CS-20725	A	310768	PAB-F-3B-Z	X	X	X	-	VE4	CS-B50-52	460 V AC Circuit Breaker	B50	CB-F-1A-A	B50-G2G B50-G2G/1 B50-VE4 B50-VE4/1 B50-VE4/2 E3P-G2G B50-E3P	310891 B50a B50d	B50c	CBA-FN-19 CBA-FN-20 EDE-MCC-512	CS-LCV-112C	
												CS-B50-FU	Fuse	B50	CB-F-1A-A						
												CS-CS-112B-2	Control Switch with Indication	G2G	CB-F-1A-A						
												CS-SS-112B	Selector Switch	G2G	CB-F-1A-A						
												CS-B50-42/0,C	Motor Starters	B50	CB-F-1A-A						
												CS-B50-49	Overload Relay	B50	CB-F-1A-A						
												CS-ZS-LCV-112B	Valve Position and Open/Close Torque Switches	VE4	PAB-F-3B-Z						
												CS-EC8-R1	Auxiliary Relay	EC8	CB-F-1A-A						
												CS-E3P-R2	Auxiliary Relay	E3P	CB-F-1A-A						
38	CS-LCV-112C	Chemical and Volume Control Tank Outlet Isolation Valve	CS-20725	B	310768	PAB-F-3B-Z	X	X	X	-	VE7	CS-B83-52	460 V AC Circuit Breaker	B83	CB-F-1B-A	B83-G2J B83-G2J/1 B83-VE7 B83-VE7/1 B83-VE7/2 E3Q-G2J B83-E3Q	310891 B83a B83d	B83c	CBA-FN-32 CBA-FN-33 EDE-MCC-612	CS-LCV-112B	
												CS-B83-FU	Fuse	B83	CB-F-1B-A						
												CS-CS-112C-2	Control Switch with Indication	G2J	CB-F-1B-A						
												CS-SS-112C	Selector Switch	G2J	CB-F-1B-A						
												CS-B83-42/0,C	Motor Starters	B83	CB-F-1B-A						
												CS-B83-49	Overload Relay	B83	CB-F-1B-A						
												CS-ZS-LCV-112C	Valve Position and Open/Close Torque Switches	VE7	PAB-F-3B-Z						
												CS-ED0-R1	Auxiliary Relay	ED0	CB-F-1B-A						
												CS-E3Q-R2	Auxiliary Relay	E3Q	CB-F-1B-A						
39	CS-LCV-112D	Refueling Water Storage Tank to Charging Pump 2A Isolation Valve	CBS-20233	A	301254	TF-F-1-0	X	X	X	-	VE6	CS-B78-52	460 V AC Circuit Breaker	B78	CB-F-1A-A	B78-G2G B78-G2G/1 B78-VE6 B78-VE6/1 B78-VE6/2	310891 B78a B78d	B78c	CBA-FN-19 CBA-FN-20 EDE-MCC-512	CS-LCV-112E	
												CS-CS-122D-2	Control Switch with Indication	G2G	CB-F-1A-A						
												CS-SS-112D	Selector Switch	G2G	CB-F-1A-A						
												CS-B78-42/0,C	Motor Starters	B78	CB-F-1A-A						
												CS-B78-49	Overload Relay	B78	CB-F-1A-A						
												CS-ZS-LCV-112D	Valve Position and Open/Close Torque Switches	VE6	TF-F-1-0						
												CS-EC8-R1	Auxiliary Relay	EC8	CB-F-1A-A						
												CS-B78-FU	Fuse	B78	CB-F-1A-A						

FUNCTION: REACTOR COOLANT INVENTORY AND PRESSURE CONTROL

ITEM NO.	EQUIPMENT ID NO.	EQUIPMENT DESCRIPTION	P&ID/1-LINE DRAWING NO.	TRAIN	PHYSICAL LOCATION DRAWING NO.	FIRE AREA/ZONE	REQUIRED FOR		POWER		ELEC NODE	SUPPORTING CONTROL AND INSTRUMENTATION EQUIPMENT				CABLES	ELECTRICAL DRAWING NO.		SUPPORTING SYSTEMS	REDUNDANT COUNTERPART	REMARKS
							HOT STAND BY	COLD SHUT DOWN	ELEC	AIR		EQUIPMENT ID NO.	EQUIPMENT DESCRIPTION	ELEC NODE	FIRE AREA/ZONE		SCHEM.	CABLE			
40	CS-LCV-112E	RWST CBS-TK-8 to Charging Pump 2B Isolation Valve	CBS-20233	B	301254	TF-F-1-0	X	X	X	-	VE5	CS-B79-52	460 V AC Circuit Breaker	B79	CB-F-1B-A	B79-G2J B79-G2J/1 B79-VE5 B79-VE5/1 B79-VE5/2	310891 B79a B79d	B79c	CBA-FN-32 CBA-FN-33 EDE-MCC-612	CS-LCV-112D	
												CS-CS-122E-2	Control Switch with Indication	G2J	CB-F-1B-A						
												CS-SS-112E	Selector Switch	G2J	CB-F-1B-A						
												CS-B79-42/0,C	Motor Starters	B79	CB-F-1B-A						
												CS-B79-49	Overload Relay	B79	CB-F-1B-A						
												CS-ZS-LCV-112E	Valve Position and Open/Close Torque Switches	VE5	TF-F-1-0						
												CS-EDO-R1	Auxiliary Relay	EDO	CB-F-1B-A						
												CS-B79-FU	Fuse	B79	CB-F-1B-A						
41	SI-V-138	Charging Pump To Cold Leg Isolation Valve	SI-20447	A	310769	PP-F-1B-Z	X	X	X	-	V31	SI-B31-52	460 V AC Circuit Breaker	B31	CB-F-1A-A	B31-G2G B31-G2G/2 B31-V31 B31-V31/1 B31-V31/2 B31-FN8 B31-FN8/1	310890 B31a B31d	B31c	CBA-FN-19 CBA-FN-20 EDE-MCC-521	SI-V-139	
												SI-CS-2437-2	Control Switch with Indication	G81	CB-F-1A-A						
												SI-SS-2437	Selector Switch	G81	CB-F-1A-A						
												SI-SS-2437-1	Selector Switch	FN8	ET-F-1B-A						
												SI-B31-42/0,C	Motor Starters	B31	CB-F-1A-A						
												SI-B31-49	Overload Relay	B31	CB-F-1A-A						
												SI-ZS-V138	Valve Position and Open/Close Torque Switches	V31	PP-F-1B-Z						
												SI-B31-FU	Fuse	B31	CB-F-1A-A						
42	SI-V-139	Charging Pump To Cold Leg Isolation Valve	SI-20447	B	310769	PP-F-1B-Z	X	X	X	-	V32	SI-B32-52	460 V AC Circuit Breaker	B32	CB-F-1B-A	B32-G2J B32-G2J/2 B32-V32 B32-V32/1 B32-V32/2 B32-FN9 B32-FN9/1	310890 B32a B32d	B32c	CBA-FN-32 CBA-FN-33 EDE-MCC-621	SI-V-138	
												SI-CS-2447-2	Control Switch with Indication	GZO	CB-F-1B-A						
												SI-SS-2447	Selector Switch	GZO	CB-F-1B-A						
												SI-SS-2447-1	Selector Switch	FN9	ET-F-1D-A						
												SI-B32-42/0,C	Motor Starters	B32	CB-F-1B-A						
												SI-B32-49	Overload Relay	B32	CB-F-1B-A						
												SI-ZS-V139	Valve Position and Open/Close Torque Switches	V32	PP-F-1B-Z						
												SI-B32-FU	Fuses	B32	CB-F-1B-A						
43	RC-E-10	Pressurizer Heaters Group C	RC-20846	A	310598	C-F-1-Z	X	-	X	-	M26	RC-AG4-52	480 V AC Circuit Breaker	AG4	CB-F-1A-A	-	-	-	CBA-FN-19 CBA-FN-20	None	Note 8
44	RC-E-10	Pressurizer Heaters Group D	RC-20846	A	310598	C-F-1-Z	X	-	X	-	M26	RC-AM5-52	480 V AC Circuit Breaker	AM5	CB-F-1A-A	-	-	-	CBA-FN-19 CBA-FN-20	None	Note 8
45	CBS-P-9A	Containment Spray Pump	CSB-20233	A	310761	RHR-F-1B-Z	X	-	X	-	M15	CBS-A61-52	4160 V AC Circuit Breaker	A61	CB-F-1A-A	-	-	-	CBA-FN-19 CBA-FN-20	None	Note 11
46	CBS-P-9B	Containment Spray Pump	CBS-20233	B	310761	RHR-F-1A-Z	X	-	X	-	M16	CBS-A81-52	4160 V AC Circuit Breaker	A81	CB-F-1B-A	-	-	-	CBA-FN-32 CBA-FN-33	None	Note 11
47	SI-P-6A	Safety Injection Pump	SI-20446	A	310761	RHR-F-2B-Z	-	X	X	-	M09	SI-A56-52	4160 V AC Circuit Breaker	A56	CB-F-1A-A	-	-	-	CBA-FN-19 CBA-FN-20	None	Note 11

FUNCTION: REACTOR COOLANT INVENTORY AND PRESSURE CONTROL

ITEM NO.	EQUIPMENT ID NO.	EQUIPMENT DESCRIPTION	P&ID/1-LINE DRAWING NO.	TRAIN	PHYSICAL LOCATION DRAWING NO.	FIRE AREA/ZONE	REQUIRED FOR		POWER		ELEC NODE	SUPPORTING CONTROL AND INSTRUMENTATION EQUIPMENT				CABLES	ELECTRICAL DRAWING NO.		SUPPORTING SYSTEMS	REDUNDANT COUNTERPART	REMARKS
							HOT STAND BY	COLD SHUT DOWN	ELEC	AIR		EQUIPMENT ID NO.	EQUIPMENT DESCRIPTION	ELEC NODE	FIRE AREA/ZONE		SCHEM.	CABLE			
48	SI-P-6B	Safety Injection Pump	SI-20446	B	310761	RHR-F-2A-Z	-	X	X	-	M10	SI-A76-52	4160 V AC Circuit Breaker	A76	CB-F-1B-A	-	-	-	CBA-FN-32 CBA-FN-33	None	Note 11
49	SI-V-158	Charging Pump Test Line Isolation Valve	SI-20447	B	310577	C-F-1-Z	-	X	X	X	L89	RC-E88/7-72	125 V DC Circuit Breaker	E88	CB-F-1B-A	-	-	-	-	-	Note 2, 4
50	SI-V-159	Charging Pump Test Line Isolation Valve	SI-20447	A	310577	C-F-1-Z	-	X	X	X	L90	RC-E89/4-72	125 V DC Circuit Breaker	E89	CB-F-1A-A	-	-	-	-	-	Note 2, 4
51	SI-FV-2475	Accumulator TK-9A Relief Valve	SI-20450	B	310578	C-F-2-Z	-	X	X	-	V2Z	SI-E2U/7-72	125 V DC Circuit Breaker	E2U	CB-F-1B-A	E2U-E4C/3 E4C-GZO/1 GZO-H39/6 H39-V2Z	310890 E2U/7a	E2U/7f E2U/7g E2U/7h	EDE-PP-113B		
												SI-E4C-FU	Fuses	E4C	CB-F-1B-A						
												SI-SS-2475	Selector Switch	GZO	CB-F-1B-A						
												SI-CS-2475-2	Control Switch with Indication	GZO	CB-F-1B-A						
												EDE-MM-115	Electrical Penetration	H39	C-F-1-Z, ET-F-1C-A						
												SI-20-FV-2475	Solenoid Valve	V2Z	C-F-2-Z						
												SI-ZS-FV-2475	Valve Position Switch	V2Z	C-F-2-Z						
52	SI-FV-2476	Accumulator TK-9A Relief Valve	SI-20450	B	310578	C-F-2-Z	-	X	X	-	V3A	SI-E2U/7-72	125 V DC Circuit Breaker	E2U	CB-F-1B-A	E2U-E4C/3 E4C-GZO/1 GZO-H39/6 GZO-H39/7 H39-V3A	E2U/7b	E2U/7f E2U/7g E2U/7h	EDE-PP-113B		
												SI-E4C-FU	Fuses	E4C	CB-F-1B-A						
												SI-SS-2475	Selector Switch	GZO	CB-F-1B-A						
												SI-CS-2475-2	Control Switch with Indication	GZO	CB-F-1B-A						
												EDE-MM-115	Electrical Penetration	H39	C-F-1-Z, ET-F-1C-A						
												SI-20-FV-2476	Solenoid Valve	V3A	C-F-2-Z						
												SI-ZS-FV-2476	Valve Position Switch	V3A	C-F-2-Z						
53	SI-FV-2477	Accumulator TK-9C Relief Valve	SI-20450	B	310578	C-F-2-Z	-	X	X	-	V3D	SI-E2U/7-72	125 V DC Circuit Breaker	E2U	CB-F-1B-A	E2U-E4C/3 E4C-GZO/1 GZO-H41/5 H41-V3D	E2U/7c	E2U/7f E2U/7g E2U/7h	EDE-PP-113B		
												SI-E4C-FU	Fuses	E4C	CB-F-1B-A						
												SI-SS-2475	Selector Switch	GZO	CB-F-1B-A						
												SI-CS-2477-2	Control Switch with Indication	GZO	CB-F-1B-A						
												EDE-MM-117	Electrical Penetration	H41	C-F-1-Z, ET-F-1C-A						
												SI-20-FV-2477	Solenoid Valve	V3D	C-F-2-Z						
												SI-ZS-FV-2477	Valve Position Switch	V3D	C-F-2-Z						

FUNCTION: REACTOR COOLANT INVENTORY AND PRESSURE CONTROL

ITEM NO.	EQUIPMENT ID NO.	EQUIPMENT DESCRIPTION	P&ID/1-LINE DRAWING NO.	TRAIN	PHYSICAL LOCATION DRAWING NO.	FIRE AREA/ZONE	REQUIRED FOR		POWER		ELEC NODE	SUPPORTING CONTROL AND INSTRUMENTATION EQUIPMENT				CABLES	ELECTRICAL DRAWING NO.		SUPPORTING SYSTEMS	REDUNDANT COUNTERPART	REMARKS
							HOT STAND BY	COLD SHUT DOWN	ELEC	AIR		EQUIPMENT ID NO.	EQUIPMENT DESCRIPTION	ELEC NODE	FIRE AREA/ZONE		SCHEM.	CABLE			
54	SI-FV-2486	Accumulator TK-9C Relief Valve	SI-20450	B	310578	C-F-2-Z	-	X	X	-	V3E	SI-E2U/7-72	125 V DC Circuit Breaker	E2U	CB-F-1B-A	E2U-E4C/3 E4C-GZO/1 GZO-H41/5 GZO-H41/6 H41-V3E	E2U/7d	E2U/7f E2U/7g E2U/7h	EDE-PP-113B		
												SI-E4C-FU	Fuses	E4C	CB-F-1B-A						
												SI-SS-2475	Selector Switch	GZO	CB-F-1B-A						
												SI-CS-2477-2	Control Switch with Indication	GZO	CB-F-1B-A						
												EDE-MM-117	Electrical Penetration	H41	C-F-1-Z, ET-F-1C-A						
												SI-20-FV-2486	Solenoid Valve	V3E	C-F-2-Z						
												SI-ZS-FV-2486	Valve Position Switch	V3E	C-F-2-Z						
55	SI-FV-2482	Accumulator TK-9B Relief Valve	SI-20450	A	310578	C-F-2-Z	-	X	X	-	V3B	SI-E2T/7-72	125 V DC Circuit Breaker	E2T	CB-F-1A-A	E2T-E4H/2 E4H-G81/2 G81-H35/6 H35-V3B	310890 E2T/7a	E2T/7f E2T/7g E2T/7h	EDE-PP-113A		
												SI-E4H-FU	Fuses	E4H	CB-F-1A-A						
												SI-SS-2482	Selector Switch	G81	CB-F-1A-A						
												SI-CS-2482-2	Control Switch with Indication	G81	CB-F-1A-A						
												EDE-MM-111	Electrical Penetration	H35	C-F-2-Z, ET-F-1A-A						
												SI-20-FV-2482	Solenoid Valve	V3B	C-F-2-Z						
												SI-ZS-FV-2482	Valve Position Switch	V3B	C-F-2-Z						
56	SI-FV-2483	Accumulator TK-9B Relief Valve	SI-20450	A	310578	C-F-2-Z	-	X	X	-	V3C	SI-E2T/7-72	125 V DC Circuit Breaker	E2T	CB-F-1A-A	E2T-E4H/2 E4H-G81/2 G81-H35/6 G81-H35/7 H35-V3C	E2T/7b	E2T/7f E2T/7g E2T/7h	EDE-PP-113A		
												SI-E4H-FU	Fuses	E4H	CB-F-1A-A						
												SI-SS-2482	Selector Switch	G81	CB-F-1A-A						
												SI-CS-2482-2	Control Switch with Indication	G81	CB-F-1A-A						
												EDE-MM-111	Electrical Penetration	H35	C-F-2-Z, ET-F-1A-A						
												SI-20-FV-2483	Solenoid Valve	V3C	C-F-2-Z						
												SI-ZS-FV-2483	Valve Position Switch	V3C	C-F-2-Z						
57	SI-FV-2495	Accumulator TK-9D Relief Valve	SI-20450	A	310579	C-F-2-Z	-	X	X	-	V3F	SI-E2T/7-72	125 V DC Circuit Breaker	E2T	CB-F-1A-A	E2T-E4H/2 E4H-G81/2 G81-H36/9 H36-V3F	E2T/7c	E2T/7f E2T/7g E2T/7h	EDE-PP-113A		
												SI-E4H-FU	Fuses	E4H	CB-F-1A-A						
												SI-SS-2482	Selector Switch	G81	CB-F-1A-A						
												SI-CS-2495-2	Control Switch with Indication	G81	CB-F-1A-A						
												EDE-MM-112	Electrical Penetration	H36	C-F-2-Z, ET-F-1A-A						
												SI-20-FV-2495	Solenoid Valve	V3F	C-F-2-Z						
												SI-ZS-FV-2495	Valve Position Switch	V3F	C-F-2-Z						

FUNCTION: REACTOR COOLANT INVENTORY AND PRESSURE CONTROL

ITEM NO.	EQUIPMENT ID NO.	EQUIPMENT DESCRIPTION	P&ID/1-LINE DRAWING NO.	TRAIN	PHYSICAL LOCATION DRAWING NO.	FIRE AREA/ZONE	REQUIRED FOR		POWER		ELEC NODE	SUPPORTING CONTROL AND INSTRUMENTATION EQUIPMENT				CABLES	ELECTRICAL DRAWING NO.		SUPPORTING SYSTEMS	REDUNDANT COUNTERPART	REMARKS
							HOT STAND BY	COLD SHUT DOWN	ELEC	AIR		EQUIPMENT ID NO.	EQUIPMENT DESCRIPTION	ELEC NODE	FIRE AREA/ZONE		SCHEM.	CABLE			
58	SI-FV-2496	Accumulator TK-9D Relief Valve	SI-20450	A	310579	C-F-2-Z	-	X	X	-	V3G	SI-E2T/7-72	125 V DC Circuit Breaker	E2T	CB-F-1A-A	E2T-E4H/2 E4H-G81/2 G81-H36/9 G81-H36/A H36-V3G	E2T/7d	E2T/7f E2T/7g	EDE-PP-113A		
												SI-E4H-FU	Fuses	E4H	CB-F-1A-A						
												SI-SS-2482	Selector Switch	G81	CB-F-1A-A						
												SI-CS-2495-2	Control Switch with Indication	G81	CB-F-1A-A						
												EDE-MM-112	Electrical Penetration	H36	C-F-2-Z, ET-F-1A-A						
												SI-20-FV-2496	Solenoid Valve	V3G	C-F-2-Z						
												SI-ZS-FV-2496	Valve Position Switch	V3G	C-F-2-Z						
59	CS-E-5A	Seal Water Heat Exchanger	CS-20726	A	310764	PAB-F-1B-Z	X	X	-	-	-	-	-	-	-	-	-	-	-	-	Note 1
60	CS-E-5B	Seal Water Heat Exchanger	CS-20726	B	310764	PAB-F-1B-Z	X	X	-	-	-	-	-	-	-	-	-	-	-	-	Note 1
61	RC-E-10	Pressurizer Heaters Control Group	RC-20846	A	310598	C-F-1-Z	X	-	X	-	M26	RC-AM4-52	480 V AC Circuit Breaker	AM4	CB-F-1A-A	-	-	-	CBA-FN-19 CBA-FN-20	None	Note 8
62	CS-V-142	Charging Line Isolation Valve	CS-20722	A	310769	PP-F-1A-Z	X	X	X	-	V12	CS-B82-52	460 V AC Circuit Breaker	B82	CB-F-1A-A	B82-G2G B82-G2G/1 B82-V12	310891 B82a	B82c B82d	CBA-FN-19 CBA-FN-20 EAH-FN-5A EDE-MCC-512	CS-V-143	
												CS-CS-7410-2	Control Switch with Indication	G2G	CB-F-1A-A						
												CS-SS-7410	Selector Switch	G2G	CB-F-1A-A						
												CS-B82-42/O,C	Motor Starters	B82	CB-F-1A-A						
												CS-B82-49	Overload Relay	B82	CB-F-1A-A						
												CS-ZS-V142	Valve Position and Open/Close Torque Switches	V12	PP-F-1A-Z						
												CS-B82-FU	Fuse	B82	CB-F-1A-A						
63	CS-V-143	Charging Line Isolation Valve	CS-20722	B	310769	PP-F-1A-Z	X	X	X	-	V11	CS-B87-52	460 V AC Circuit Breaker	B87	CB-F-1B-A	B87-G2J B87-G2J/1 B87-V11 B87-V11/1	B87a	B87c B87d	CBA-FN-32 CBA-FN-33 EAH-FN-5B EDE-MCC-612	CS-V-142	
												CS-CS-7411-2	control Switch with Indication	G2J	CB-F-1B-A						
												CS-SS-7411	Selector Switch	G2J	CB-F-1B-A						
												CS-B87-42/O,C	Motor Starters	B87	CB-F-1B-A						
												CS-B87-49	Overload Relay	B87	CB-F-1B-A						
												CS-ZS-V143	Valve Position and Open/Close Torque Switches	V11	PP-F-1A-Z						
												CS-B87-FU	Fuses	B87	CB-F-1B-A						
64	CS-V-210	Charging Pump 2A Discharge Valve	CS-20725	A	310764	PAB-F-1C-A	-	X	-	-	-	-	-	-	-	-	-	-	-	CS-V-220	Note 1
65	CS-V-219	Charging Pump 2B Bypass Valve	CS-20725	B	310764	PAB-F-1D-A	-	X	-	-	-	-	-	-	-	-	-	-	-	CS-V-221	Note 1

FUNCTION: REACTOR COOLANT INVENTORY AND PRESSURE CONTROL

ITEM NO.	EQUIPMENT ID NO.	EQUIPMENT DESCRIPTION	P&ID/1-LINE DRAWING NO.	TRAIN	PHYSICAL LOCATION DRAWING NO.	FIRE AREA/ZONE	REQUIRED FOR		POWER		ELEC NODE	SUPPORTING CONTROL AND INSTRUMENTATION EQUIPMENT				CABLES	ELECTRICAL DRAWING NO.		SUPPORTING SYSTEMS	REDUNDANT COUNTERPART	REMARKS
							HOT STAND BY	COLD SHUT DOWN	ELEC	AIR		EQUIPMENT ID NO.	EQUIPMENT DESCRIPTION	ELEC NODE	FIRE AREA/ZONE		SCHEM.	CABLE			
66	CS-V-220	Charging Pump 2B Discharge Valve	CS-20725	B	310764	PAB-F-1D-A	-	X	-	-	-	-	-	-	-	-	-	-	-	CS-V-210	Note 1
67	CS-V-221	Charging Pump 2A Bypass Valve	CS-20725	A	310764	PAB-F-1C-A	-	X	-	-	-	-	-	-	-	-	-	-	-	CS-V-219	Note 1
68	CS-V-154	RCP-1D Seal Injection Isolation Valve	CS-20726	A	310769	PP-F-5B-Z	X	X	-	-	-	-	480 V AC Circuit Breaker	B77	CB-F-1A-A	-	-	-	-	None	Note 2
69	CS-V-158	RCP-1C Seal Injection Isolation Valve	CS-20726	A	310769	PP-F-5B-Z	X	X	-	-	-	-	480 V AC Circuit Breaker	B76	CB-F-1A-A	-	-	-	-	None	Note 2
70	CS-V-162	RCP-1B Seal Injection Isolation Valve	CS-20726	A	310769	PP-F-1A-Z	X	X	-	-	-	-	480 V AC Circuit Breaker	B75	CB-F-1A-A	-	-	-	-	None	Note 2
71	CS-V-166	RCP-1A Seal Injection Isolation Valve	CS-20726	A	310769	PP-F-1A-Z	X	X	-	-	-	-	480 V AC Circuit Breaker	B74	CB-F-1A-A	-	-	-	-	None	Note 2

FUNCTION: REACTIVITY CONTROL

ITEM NO.	EQUIPMENT ID NO.	EQUIPMENT DESCRIPTION	P&ID/1-LINE DRAWING NO.	TRAIN	PHYSICAL LOCATION DRAWING NO.	FIRE AREA/ZONE	REQUIRED FOR		POWER		ELEC NODE	SUPPORTING CONTROL AND INSTRUMENTATION EQUIPMENT				CABLES	ELECTRICAL DRAWING NO.		SUPPORTING SYSTEMS	REDUNDANT COUNTERPART	REMARKS
							HOT STAND BY	COLD SHUT DOWN	ELEC	AIR		EQUIPMENT ID NO.	EQUIPMENT DESCRIPTION	ELEC NODE	FIRE AREA/ZONE		SCHEM.	CABLE			
1	CS-TK-4A	Boric Acid Storage Tank	CS-20729	A/B	310766	PAB-F-2B-Z	-	X	-	-	-	-	-	-	-	-	-	-	-	CS-TK-4B	Note 1
2	CS-TK-4B	Boric Acid Storage Tank	CS-20729	A/B	310766	PAB-F-2B-Z	-	X	-	-	-	-	-	-	-	-	-	-	-	CS-TK-4A	Note 1
3	CS-V-410	Boric Acid Tank 4A Outlet Valve	CS-20729	A/B	310766 805216 805229	PAB-F-2B-Z	-	X	-	-	-	-	-	-	-	-	-	-	-	CS-V-416 CS-V-1207	Notes 1, 2 and 3
4	CS-V-416	Boric Acid Tank 4B Outlet Valve	CS-20729	A/B	310766 805216	PAB-F-2B-Z	-	X	-	-	-	-	-	-	-	-	-	-	-	CS-V-410 CS-V-1207	Notes 1, 2 and 3
5	CS-V-423	Boric Acid Recirculation Valve	CS-20729	A	310766 805216 805230	PAB-F-2B-Z	-	X	-	-	-	-	-	-	-	-	-	-	-	CS-V-431 CS-V-1207	Notes 1, 2 and 3
6	CS-V-431	Boric Acid Recirculation Valve	CS-20729	B	310766 805216 805230	PAB-F-2B-Z	-	X	-	-	-	-	-	-	-	-	-	-	-	CS-V-423 CS-V-1207	Notes 1, 2 and 3
7	CS-V-437	Boric Acid Transfer Pump's Suction Cross-Over Line Isolation Valve	CS-20729	A	310766 805216	PAB-F-2B-Z	-	X	-	-	-	-	-	-	-	-	-	-	-	CS-V-1207	Notes 1, 2 and 3
8	CS-V-439	Charging Pump Isolation Valve	CS-20729	A/B	310766 805216 805229	PAB-F-2B-Z	-	X	-	-	-	-	-	-	-	-	-	-	-	CS-V-426	Notes 1, 2 and 3
9	CS-V-442	Charging Pump Isolation Valve	CS-20729	A/B	310766 805216 805229	PAB-F-2B-Z	-	X	-	-	-	-	-	-	-	-	-	-	-	CS-V-426	Notes 1, 2 and 3
10	CS-P-3A	Boric Acid Transfer Pump	CS-20729	A	310766 805216 805230	PAB-F-2B-Z	-	X	X	-	M43	CS-B88-52	460 V AC Circuit Breaker	B88	CB-F-1A-A	B88-M43 B88-M43/1	310891 B88a B88c		CBA-FN-19 CBA-FN-20 EDE-MCC-512	CS-P-3B	
												CS-B88-FU	Fuse	B88	CB-F-1A-A						
												CS-CS-7435-2	Control Switch	B88	CB-F-1A-A						
												CS-SS-7435	Selector Switch	B88	CB-F-1A-A						
												CS-B88-42	Motor Starter	B88	CB-F-1A-A						
												CS-M43-49	Overload Relay	M43	PAB-F-2B-Z						
												CS-B88-49	Overload Relay	B88	CB-F-1A-A						

Notes
1. Equipment is mechanical with no electrical requirement.
2. CS-V-423, 410, 416, 431, 437, 439, 442 are non-electrically operated valves and will be manually positioned as required to provide their reactivity control function during safe shutdown.
3. Electrical conduit plan drawing, 310766, listed only to show fire zone correlation reference to Primary Auxiliary Building area covered by piping Drawings 805216, 805229, 805230, where Valves CS-V-410, 416, 423, 431, 437, 439, 442 are identified in plan and section.
4. This equipment is listed because it can spuriously start due to cable failure in the boration and dilution flow control valve control circuits. Spurious pump start by itself from failure of its cable is not of concern since CS-FCV-111A remains closed so the pump cables are not listed.
5. Disabling the valves at the appropriate control location will reposition CS-FCV-110B and CS-FCV-111B for safe shutdown. Air is not needed to position or to reposition the valve for safe shutdown.

FUNCTION: REACTIVITY CONTROL

ITEM NO.	EQUIPMENT ID NO.	EQUIPMENT DESCRIPTION	P&ID/1-LINE DRAWING NO.	TRAIN	PHYSICAL LOCATION DRAWING NO.	FIRE AREA/ZONE	REQUIRED FOR		POWER		ELEC NODE	SUPPORTING CONTROL AND INSTRUMENTATION EQUIPMENT				CABLES	ELECTRICAL DRAWING NO.		SUPPORTING SYSTEMS	REDUNDANT COUNTERPART	REMARKS
							HOT STAND BY	COLD SHUT DOWN	ELEC	AIR		EQUIPMENT ID NO.	EQUIPMENT DESCRIPTION	ELEC NODE	FIRE AREA/ZONE		SCHEM.	CABLE			
11	CS-P-3B	Boric Acid Transfer Pump	CS-20729	B	310766 805216 805230	PAB-F-2B-Z	-	X	X	-	M44	CS-B89-52	460 V AC Circuit Breaker	B89	CB-F-1B-A	B89-M44 B89-M44/1	310891 B89a	B89c	CBA-FN-32 CBA-FN-33 EDE-MCC-612	CS-P-3A	
												CS-B89-FU	Fuse	B89	CB-F-1B-A						
												CS-CS-7436-2	Control Switch	B89	CB-F-1B-A						
												CS-SS-7436	Selector Switch	B89	CB-F-1B-A						
												CS-B89-42	Motor Starter	B89	CF-F-1B-A						
												CS-M44-49	Overload Relay	M44	PAB-F-2B-Z						
												CS-B89-49	Overload Relay	B89	CB-F-1B-A						
12	CS-V-426	Boric Acid F-5 to Charging Pumps Isolation Valve	CS-20729	B	310766	PAB-F-2B-Z	-	X	X		V04	CS-B94-52	460 V Circuit Breaker	B94	CB-F-1B-1A	B94-V04 B94-V04/1 B94-V04/2	310891 B94a	B94c	CBA-FN-32 CBA-FN-33 EDE-MCC-612	CS-V-439 CS-V-442	
												CS-CS-7437-2	Control Switch with Indicator	B94	CB-F-1B-1A						
												CS-SS-7437	Selector Switch	B94	CB-F-1B-1A						
												CS-B94-42/O,C	Motor Starter	B94	CB-F-1B-1A						
												CS-B94-49	Overload Relay	B94	CB-F-1B-1A						
												CS-ZS-V426	Valve Position and Open/Close Torque Switches	V04	PAB-F-2B-Z						
												CS-B94-FU	Fuse	B94	CB-F-1B-1A						
13	CP-CP-111	Reactor Trip Switchgear Cab	-	A/B	310442	CB-F-1A-A	X	-	X		HD2/ HD3	-	-	-	-	-	-	-	-		
14	CS-V-1207	Boric Acid Transfer Pump's Suction Cross-Over Line Isolation Valve	CS-20729	B	310766 805216	PAB-F-2B-Z	-	X	-	-	-	-	-	-	-	-	-		-	-	Notes 1, 2 and 3
15	CS-FCV-110A CS-FCV-111A CS-FCV-110B CS-FCV-111B	Boration and Dilution Flow Control Valves	CS-20729	A	310766	PAB-F-2B-Z PAB-F-2B-Z PAB-F-2B-Z PAB-F-2B-Z	X	X	X	-	LG2 LG1 LG4 LG5	CS-E97/11-72	125 V DC Circuit Breaker	E97	NES-F-1A-Z	-	-		-	-	Note 5
16	RMW-P-16A	Reactor Makeup Water Pump	CS-20360	A	310763	PAB-F-1A-Z	X	X	X	-	M36	-	-	-	-	-	-		-	-	Note 4
17	RMW-P-16B	Reactor Makeup Water Pump	CS-20360	A	310763	PAB-F-1A-Z	X	X	X	-	M37	-	-	-	-	-	-		-	-	Note 4

FUNCTION: PROCESS MONITORING

ITEM NO.	EQUIPMENT ID NO.	EQUIPMENT DESCRIPTION	P&ID/1-LINE DRAWING NO.	TRAIN	PHYSICAL LOCATION DRAWING NO.	FIRE AREA/ZONE	REQUIRED FOR		POWER		ELEC NODE	SUPPORTING CONTROL AND INSTRUMENTATION EQUIPMENT				CABLES	ELECTRICAL DRAWING NO.		SUPPORTING SYSTEMS	REDUNDANT COUNTERPART	REMARKS
							HOT STAND BY	COLD SHUT DOWN	ELEC	AIR		EQUIPMENT ID NO.	EQUIPMENT DESCRIPTION	ELEC NODE	FIRE AREA/ZONE		SCHEM.	CABLE			
1	CC-TE-2297	Primary Component Cooling Water Loop "B" Supply Header Temperature Element	CC-20211	B	310763	PAB-F-2C-Z	X	X	X	-	T2Z	CC-TY-2297 CC-TI-2297	I/E Converter Temp. Indicator	GZO GZO	CB-F-1B-A CB-F-1B-A	CZO-T2Z	FP 71336 M-310952 4	 GZOc	CBA-FN-32 CBA-FN-33 MM-UQ-5868 MM-UQ-5869	CC-TE-2197	
2	FW-FT-4224-5	RC-E-11B Steam Generator Emergency Feedwater Header Flow Transmitter	FW-20688	B	310708	EFP-F-1-A	X	X	X	-	GL4	FW-FQY-4224-5 FW-FY-4224-5 FW-FI-4224-5	I/E Converter Square Root Extractor Flow Indicator	GZO GZO G2J	CB-F-1B-A CB-F-1B-A CB-F-1B-A	GL4-GZO/1	6	GZOa	CBA-FN-32 CBA-FN-33 MM-UQ-5868 MM-UQ-5869 EPA-FN-47B	FW-FT-4214-5 FW-FT-4234-5	
3	FW-FT-4244-5	RC-E-11D Steam Generator Emergency Feedwater Header Flow Transmitter	FW-20688	B	310708	EFP-F-1-A	X	X	X	-	GL4	FW-FQY-4244-5 FW-FY-4244-5 FW-FI-4244-5	I/E Converter Square Root Extractor Flow Indicator	GZO GXO G2J	CB-F-1B-A CB-F-1B-A CB-F-1B-A	GL4-GZO/1	6	GZOa	CBA-FN-32 CBA-FN-33 MM-UQ-5868 MM-UQ-5869 EPA-FN-47B	FW-FT-4214-5 FW-FT-4234-5	
4	FW-LT-4320	RC-E-11B Steam Generator Wide Range Level Transmitter	FW-20686	B	310576	C-F-1-Z	X	X	X	-	R1N	FW-LQY-4320 FW-LI-4320 FW-LR-4320 EDE-MM-131	I/E Converter Level Indicator Level Recorder Electrical Penetration	GZO G2J G2J H55	CB-F-1B-A CB-F-1B-A CB-F-1B-A C-F-1-Z, ET-F-1C-A	H55-R1N GZO-H55	7	GZOa	CBA-FN-32 CBA-FN-33 MM-UQ-5868 MM-UQ-5869 MM-UQ-5897	FW-LT-4310 FW-LT-4330	
5	FW-LT-4340	RC-E-11D Steam Generator Wide Range Level Transmitter	FW-20686	B	310577	C-F-1-Z	X	X	X	-	R1Q	FW-LQY-4340 FW-LI-4340 FW-LR-4320 EDE-MM-131	I/E Converter Level Indicator Level Recorder Electrical Penetration	GZO G2J G2J H55	CB-F-1B-A CB-F-1B-A CB-F-1B-A C-F-1-Z, ET-F-1C-A	H55-R1Q GZO-H55	7	GZOa	CBA-FN-32 CBA-FN-33 MM-UQ-5868 MM-UQ-5869 MM-UQ-5897	FW-LT-4310 FW-LT-4330	
6	MS-PT-3174	RC-E-11B Steam Generator Header Pressure Transmitter	MS-20581	B	310586	MS-F-1A-Z	X	X	X	-	GZ4	MS-PQY-3174 MS-PI-3174	I/E Converter Press. Indicator	GZO G2J	CB-F-1B-A CB-F-1B-A	GZO-GZ4	10	GZOc	CBA-FN-32 CBA-FN-33 MM-UQ-5868 MM-UQ-5869	MS-PT-3173 MS-PT-3178	
7	MS-PT-3179	RC-E-11D Steam Generator Header Pressure Transmitter	MS-20581	B	310589	MS-F-1B-A	X	X	X	-	GZ6	MS-PQY-3179 MS-PI-3179	I/E Converter Press. Indicator	GZO G2J	CB-F-1B-A CB-F-1B-A	GZO-GZ6	10	GZOc	CBA-FN-32 CBA-FN-33 MM-UQ-5868 MM-UQ-5869	MS-PT-3173 MS-PT-3178	
8	RC-LT-7333	RC-E-10 Pressurizer Level Transmitter	RC-20846	B	310579	C-F-2-Z	X	X	X	-	GN5	RC-LQY-7333 RC-LI-7333 RC-LR-7333 EDE-MM-131	I/E Converter Level Indicator Level Recorder Electrical Penetration	GZO GZO GZO H55	CB-F-1B-A CB-F-1B-A CB-F-1B-A C-F-1-Z, ET-F-1C-A	H55-PR8/1 GZO-H55/1	11	GZOa	CBA-FN-32 CBA-FN-33 MM-UQ-5868 MM-UQ-5869 MM-UQ-5897	RC-LT-7334	

*Notes
1. Underground duct Plan Drawing 310248 is listed only to show the fire zone corresponding to the locations of the condensate storage tank level Indicator CO-LISL-4052 which is identified in Drawing 509066.

FUNCTION: PROCESS MONITORING

ITEM NO.	EQUIPMENT ID NO.	EQUIPMENT DESCRIPTION	P&ID/1-LINE DRAWING NO.	TRAIN	PHYSICAL LOCATION DRAWING NO.	FIRE AREA/ZONE	REQUIRED FOR		POWER		ELEC NODE	SUPPORTING CONTROL AND INSTRUMENTATION EQUIPMENT				CABLES	ELECTRICAL DRAWING NO.		SUPPORTING SYSTEMS	REDUNDANT COUNTERPART	REMARKS
							HOT STAND BY	COLD SHUT DOWN	ELEC	AIR		EQUIPMENT ID NO.	EQUIPMENT DESCRIPTION	ELEC NODE	FIRE AREA/ZONE		SCHEM.	CABLE			
9	RC-PT-7335	RC-E-10 Pressurizer Pressure Transmitter	RC-20846	B	310579	C-F-2-Z	X	X	X	-	PR8	RC-PQY-7335 RC-PI-7335 EDE-MM-131	I/E Converter Press. Indicator Electrical Penetration	GZ0 GZ0 H55	CB-F-1B-A CB-F-1B-A C-F-1-Z, ET-F-1C-A	H55-PR8 GZ0-H55/1	FP 71336 12	310952 GZ0a	CBA-FN-32 CBA-FN-33 MM-UQ-5868 MM-UQ-5869	RC-PT-7336	
10	RC-TE-9407	Reactor Coolant Loop 4 Wide Range Hot Leg Temperature Element	RC-20844	B	310583	C-F-1-Z	X	X	X	-	TS7	RC-TY-9407 RC-TI-9407 RC-TR-9407 EDE-MM-131	R/E Converter Temp. Indicator Temp. Recorder Electrical Penetration	GZ0 GZ0 GZ0 H55	CB-F-1B-A CB-F-1B-A CB-F-1B-A C-F-1-Z, ET-F-1C-A	H55-TS7 GZ0-H55/2	13	GZ0a	CBA-FN-32 CBA-FN-33 MM-UQ-5868 MM-UQ-5869 MM-UQ-5897	RC-TE-9406	
11	RC-TE-9411	Reactor Coolant Loop 4 Wide Range Cold Leg Temperature Element	RC-20844	B	310583	C-F-1-Z	X	X	X	-	T3E	RC-TY-9411 RC-TI-9411 RC-TR-9407 EDE-MM-131	R/E Converter Temp. Indicator Temp. Recorder Electrical Penetration	GZ0 GZ0 GZ0 H55	CB-F-1B-A CB-F-1B-A CB-F-1B-A C-F-1-Z, ET-F-1C-A	H55-T3E GZ0-H55/2	13	GZ0a	CBA-FN-32 CBA-FN-33 MM-UQ-5868 MM-UQ-5869 MM-UQ-5897	RC-TE-9410	
12	CS-LT-7464	Boric Acid Tank CS-TK-4B Level Transmitter	CS-20729	B	310766	PAB-F-2B-Z	-	X	X	-	RJ9	CS-LSY-7464 CS-LQY-7464 CS-LI-7464	Comparator I/E Converter Level Indicator	C2J C2J G2J	CB-F-1B-A CB-F-1B-A CB-F-1B-A	G2K-RJ9		GZ0c	CBA-FN-32 CBA-FN-33 MM-UQ-5868 MM-UQ-5869	CS-LT-7446	
13	MM-UQ-5868	Remote Shutdown Panel MM-CP-108B Power Supply	-	B	310442	CB-F-1B-A	X	X	X	-	G2J	VI-G2J-FU9 VI-G2J-FU10	20A Fuse 20A Fuse	G2J G2J	CB-F-1B-A CB-F-1B-A	EH0-G2J	M-310952 EH0/2	EH0/2	CBA-FN-32 CBA-FN-33 EDE-PP-1F	MM-UQ-5866	
14	MM-UQ-5869	Remote Shutdown Panel MM-CP-108B Power Supply	-	B	310442	CB-F-1B-A	X	X	X	-	G2J	VI-G2J-FU11 VI-G2J-FU12	20A Fuse 20A Fuse	G2J G2J	CB-F-1B-A CB-F-1B-A	EH0-G2J	EH0/2	EH0/2	CBA-FN-32 CBA-FN-33 EDE-PP-1F	MM-UQ-5867	
15	MM-UQ-5897	Remote shutdown Panel MM-CP-108B Recorders' Power Supply	-	B	310442	CB-F-1B-A	X	X	X	-	G2K	VI-E1T/4-52	120 V ac Circuit Breaker	E1T	CB-F-1B-A	E1T-G2K	E1T/4	EH0/2	CBA-FN-32 CBA-FN-32 EDE-PP-11F	MM-UQ-5896	
16	CC-TE-2197	Primary Component Cooling Water Loop "A" Supply Header Temperature Element	CC-20205	A	310763	PAB-F-2C-Z	X	X	X	-	T3A	CC-TY-2197 CC-TI-2197	I/E Converter Temp. Indicator	G2H G81	CB-F-1A-A CB-F-1A-A	G2H-T3A	FP 71337 11	M-310952 G81d	CBA-FN-19 CBA-FN-20 MM-UQ-5866 MM-UQ-5867	CC-TE-2297	
17	FW-FT-4214-5	RC-E-11A Steam Generator Emergency Feedwater Header Flow Transmitter	FW-20688	A	310708	EFP-F-1-A	X	X	X	-	GL3	FW-FQY-4214-5 FW-FY-4214-5 FW-FI-4214-5	I/E Converter Square Root Extractor Flow Indicator	G81 G81 G2G	CB-F-1A-A CB-F-1A-A CB-F-1A-A	G81-GL3	4	G81a	CBA-FN-19 CBA-FN-20 MM-UQ-5866 MM-UQ-5867 EPA-FN-47A	FW-FT-4224-5 FW-FT-4244-5	
18	FW-FT-4234-5	RC-E-11C Steam Generator Emergency Feedwater Header Flow Transmitter	FW-20688	A	310708	EFP-F-1-A	X	X	X	-	GL3	FW-FQY-4234-5 FW-FY-4234-5 FW-FI-4234-5	I/E Converter Square Root Extractor Flow Indicator	G81 G81 G2G	CB-F-1A-A CB-F-1A-A CB-F-1A-A	G81-GL3	FP 71337 4	310952 G81a	CBA-FN-19 CBA-FN-20 MM-UQ-5866 MM-UQ-5867 EPA-FN-47A	FW-FT-4224-5 FW-FT-4244-5	

FUNCTION: PROCESS MONITORING

ITEM NO.	EQUIPMENT ID NO.	EQUIPMENT DESCRIPTION	P&ID/1-LINE DRAWING NO.	TRAIN	PHYSICAL LOCATION DRAWING NO.	FIRE AREA/ZONE	REQUIRED FOR		POWER		ELEC NODE	SUPPORTING CONTROL AND INSTRUMENTATION EQUIPMENT				CABLES	ELECTRICAL DRAWING NO.		SUPPORTING SYSTEMS	REDUNDANT COUNTERPART	REMARKS
							HOT STAND BY	COLD SHUT DOWN	ELEC	AIR		EQUIPMENT ID NO.	EQUIPMENT DESCRIPTION	ELEC NODE	FIRE AREA/ZONE		SCHEM.	CABLE			
19	FW-LT-4310	RC-E-11A Steam Generator Wide Range Level Transmitter	FW-20686	A	310576	C-F-1-Z	X	X	X	-	R1M	FW-LQY-4310 FW-LI-4310 FW-LR-4310 EDE-MM-120	I/E Converter Level Indicator Level Recorder Electrical Penetration	G2H G2G G2G H44	CB-F-1A-A CB-F-1A-A CB-F-1A-A C-F-2-Z, ET-F-1A-A	H44-R1M G2H-H44	17	G81d	CBA-FN-19 CBA-FN-20 MM-UQ-5866 MM-UQ-5867 MM-UQ-5896	FW-LT-4320 FW-LT-4340	
20	FW-LT-4330	RC-E-11C Steam Generator Wide Range Level Transmitter	FW-20686	A	310577	C-F-1-Z	X	X	X	-	R1P	FW-LQY-4330 FW-LI-4330 FW-LR-4310 EDE-MM-121	I/E Converter Level Indicator Level Recorder Electrical Penetration	G2H G2G G2G H45	CB-F-1A-A CB-F-1A-A CB-F-1A-A C-F-2-Z, ET-F-1A-A	H45-R1P G2H-H45	17	G81d	CBA-FN-19 CBA-FN-20 MM-UQ-5866 MM-UQ-5867 MM-UQ-5896	FW-LT-4320 FW-LT-4340	
21	MS-PT-3173	RC-E-11A Steam Generator Header Pressure Transmitter	MS-20580	A	310589	MS-F-1B-Z	X	X	X	-	GL6	MS-PQY-3173 MS-PI-3173	I/E Converter Press. Indicator	G2H G2G	CB-F-1A-A CB-F-1A-A	G2H-GL6	13	G81d	CBA-FN-19 CBA-FN-20 MM-UQ-5866 MM-UQ-5867	MS-PT-3174 MS-PT-3179	
22	MS-PT-3178	RC-E-11C Steam Generator Header Pressure Transmitter	MS-20581	A	310586	MS-F-1A-Z	X	X	X	-	GL5	MS-PQY-3178 MS-PI-3178	I/E Converter Press. Indicator	G2H G2G	CB-F-1A-A CB-F-1A-A	G2H-GL5/1	13	G81d	CBA-FN-19 CBA-FN-20 MM-UQ-5866 MM-UQ-5867	MS-PT-3174 MS-PT-3179	
23	RC-LT-7334	RC-E-10 Pressurizer Level Transmitter	RC-20846	A	310579	C-F-2-Z	X	X	X	-	GK5	RC-LQY-7334 RC-LI-7334 RC-LR-7334 EDE-MM-121	I/E Converter Level Indicator Level Recorder Electrical Penetration	G81 G81 G81 H45	CB-F-1A-A CB-F-1A-A CB-F-1A-A C-F-2-Z, ET-F-1A-A	H45-PR9 G81-H45	6	G81a	CBA-FN-19 CBA-FN-20 MM-UQ-5866 MM-UQ-5867 MM-UQ-5896	RC-LT-7333	
24	RC-PT-7336	RC-E-10 Pressurizer Pressure Transmitter	RC-20846	A	310579	C-F-2-Z	X	X	X	-	GK5	RC-PQY-7336 RC-PI-7336 EDE-MM-121	I/E Converter Press. Indicator Electrical Penetration	G2H G81 H45	CB-F-1A-A CB-F-1A-A C-F-2-Z, ET-F-1A-A	H45-PR9/1 G2H-H45/1	12	G81d	CBA-FN-19 CBA-FN-20 MM-UQ-5866 MM-UQ-5867	RC-PT-7335	
25	RC-TE-9406	Reactor Coolant Loop 1 Wide Range Hot Leg Temperature Element	RC-20841	A	310582	C-F-1-Z	X	X	X	-	TS6	RC-TY-9406 RC-TI-9406 RC-TR-9406 EDE-MM-120	R/E Converter Temp. Indicator Temp. Recorder Electrical Penetration	G81 G81 G81 H44	CB-F-1A-A CB-F-1A-A CB-F-1A-A C-F-2-Z, ET-F-1A-A	H44-TS6 G81-H44	FP 71336 3	310952 G81a	CBA-FN-19 CBA-FN-20 MM-UQ-5866 MM-UQ-5867 MM-UQ-5896	RC-TE-9407	
26	RC-TE-9410	Reactor Coolant Loop 1 Wide Range Cold Leg Temperature Element	RC-20841	A	310582	C-F-1-Z	X	X	X	-	T3D	RC-TY-9410 RC-TI-9410 RC-TR-9406 EDE-MM-120	R/E Converter Temp. Indicator Temp. Recorder Electrical Penetration	G81 G81 G81 H44	CB-F-1A-A CB-F-1A-A CB-F-1A-A C-F-2-Z, ET-F-1A-A	H44-T3D G81-H44/1	3	G81a	CBA-FN-19 CBA-FN-20 MM-UQ-5866 MM-UQ-5867 MM-UQ-5896	RC-TE-9411	
27	CS-LT-7446	Boric Acid Tank CS-TK-4A Level Transmitter	CS-20729	A	310766	PAB-F-2B-Z	-	X	X	-	RJ8	CS-LSY-7446 CS-LQY-7446 CS-LI-7446	Comparator I/E Converter Level Indicator	G2H G2H G2H	CB-F-1A-A CB-F-1A-A CB-F-1A-A	G2H-RJ8		G81d	CBA-FN-19 CBA-FN-20 MM-UQ-5866 MM-UQ-5867	CS-LT-7464	

FUNCTION: PROCESS MONITORING

ITEM NO.	EQUIPMENT ID NO.	EQUIPMENT DESCRIPTION	P&ID/1-LINE DRAWING NO.	TRAIN	PHYSICAL LOCATION DRAWING NO.	FIRE AREA/ZONE	REQUIRED FOR		POWER		ELEC NODE	SUPPORTING CONTROL AND INSTRUMENTATION EQUIPMENT				CABLES	ELECTRICAL DRAWING NO.		SUPPORTING SYSTEMS	REDUNDANT COUNTERPART	REMARKS
							HOT STAND BY	COLD SHUT DOWN	ELEC	AIR		EQUIPMENT ID NO.	EQUIPMENT DESCRIPTION	ELEC NODE	FIRE AREA/ZONE		SCHEM.	CABLE			
28	MM-UQ-5866	Remote Shutdown Panel MM-CP-108A Power Supply	-	A	310442	CB-F-1A-A	X	X	X	-	G2G	VI-G2G-FU9 VI-G2G-FU10	20A Fuse 20A Fuse	G2G G2G	CB-F-1A-A CB-F-1A-A	EH9-G2G	M-310952 EH9/2	EH9/2	CBA-FN-19 CBA-FN-20 EDE-PP-1E	MM-UQ-5868	
29	MM-UQ-5867	Remote Shutdown Panel MM-CP-108A Power Supply	-	A	310442	CB-F-1A-A	X	X	X	-	G2G	VI-G2G-FU11 VI-G2G-FU12	20A Fuse 20A Fuse	G2G G2G	CB-F-1A-A CB-F-1A-A	EH9-G2G	EH9/2	EH9/2	CBA-FN-19 CBA-FN-20 EDE-PP-1E	MM-UQ-5869	
30	MM-UQ-5896	Remote Shutdown Panel MM-CP-108A Recorders' Power Supply	-	A	310442	CB-F-1A-A	X	X	X	-	G2H	VI-E1S/4-52	120 V ac Circuit Breaker	E1S	CB-F-1A-A	E1S-G2H	E1S/4	EH9/2	CBA-FN-19 CBA-FN-20 EDE-PP-11E	MM-UQ-5897	
31	NI-NE-6690	Intermediate Range Thermal Neutron Flux Monitoring Detector	-	A	310565	C-F-1-Z	X	X	X	-	QO5	NI-E1S/13-52 NI-E1S/14-52 NI-E1S/15-52 NI-NI-6690-3&4 NI-NT-6690 NI-NM-6690 NI-NM-6690J EDE-TBX-XP8 EDE-MM-116	120 V ac Circuit Breaker 120 V ac Circuit Breaker 120 V ac Circuit Breaker Excore Wide Range Thermal Neutron Flux Indicators Excore Wide Range Transmitters Excore Wide Range Signal Processor Excore Wide Range Signal Processor Expansion Box Junction Box Electrical Penetration	E1S E1S E1S G2H KDO QC1 QIO XP8 H4O	CB-F-1A-A CB-F-1A-A CB-F-1A-A CB-F-1A-A ET-F-1A-A CB-F-1A-A CB-F-1A-A C-F-1-Z C-F-2-Z, ET-F-1A-A	H4O-XP8 H4O-KDO KDO-QC1 QC1-QIO G2H-QC1 QO5-XP8 E1S-KDO E1S-QC1 E1S-QIO	310943 E1S/13a	E1S/13b	CBA-FN-19 CBA-FN-20 EDE-PP-11E	NI-NE-6691	

FUNCTION: PROCESS MONITORING

ITEM NO.	EQUIPMENT ID NO.	EQUIPMENT DESCRIPTION	P&ID/1-LINE DRAWING NO.	TRAIN	PHYSICAL LOCATION DRAWING NO.	FIRE AREA/ZONE	REQUIRED FOR		POWER		ELEC NODE	SUPPORTING CONTROL AND INSTRUMENTATION EQUIPMENT				CABLES	ELECTRICAL DRAWING NO.		SUPPORTING SYSTEMS	REDUNDANT COUNTERPART	REMARKS
							HOT STAND BY	COLD SHUT DOWN	ELEC	AIR		EQUIPMENT ID NO.	EQUIPMENT DESCRIPTION	ELEC NODE	FIRE AREA/ZONE		SCHEM.	CABLE			
32	NI-NE-6691	Intermediate Range Thermal Neutron Flux Monitoring Detector	-	B	310565	C-F-1-Z	X	X	X	-	Q07	NI-EIT/13-52 NI-E1T/14-52 NI-E1T/15-52 NI-NI-6691-3&4 NI-NT-6691 NI-NM-6691 NI-NM-6691J EDE-TBX-XP9 EDE-MM-97	120 V ac Circuit Breaker 120 V ac Circuit Breaker 120 V ac Circuit Breaker Excore Wide Range Thermal Neutron Flux Indicators Excore Wide Range Transmitters Excore Wide Range Signal Processor Excore Wide Range Signal Processor Expansion Box Junction Box Electrical Penetration	E1T E1T E1T G2K KD1 QDO QJ1 XP9 H21	CB-F-1B-A CB-F-1B-A CB-F-1B-A CB-F-1B-A ET-F-1C-A CB-F-1B-A CB-F-1B-A C-F-1-Z C-F-1-Z, ET-F-1C-A	H21-XP9 H21-KD1 KD1-QDO QDO-QJ1 G2K-QDO Q07-XP9 E1T-KD1 E1T-QDO E1T-QJ1	310943 E1T/13a	E1T/13b	CBA-FN-32 CBA-FN-33 EDE-PP-11F	NI-NE-6690	
33	CO-LISL-4052	Condensate Storage Tank Level Indicator	CO-20426	A/B	310248 509066	CST-F-1-O	-	X	-	-	R10	-	-	-	-	-	-	-	-	-	Note 1

FUNCTION: SAFGEGUARDS ACTUATION

ITEM NO.	EQUIPMENT ID NO.	EQUIPMENT DESCRIPTION	P&ID/1-LINE DRAWING NO.	TRAIN	PHYSICAL LOCATION DRAWING NO.	FIRE AREA/ZONE	REQUIRED FOR		POWER		ELEC NODE	SUPPORTING CONTROL AND INSTRUMENTATION EQUIPMENT				CABLES	ELECTRICAL DRAWING NO.		SUPPORTING SYSTEMS	REDUNDANT COUNTERPART	REMARKS
							HOT STAND BY	COLD SHUT DOWN	ELEC	AIR		EQUIPMENT ID NO.	EQUIPMENT DESCRIPTION	ELEC NODE	FIRE AREA/ZONE		SCHEM.	CABLE			
1	MM-CP-12	Solid State Protection System Cabinet (Train A Load Group)	-	A	310501	CB-F-3A-A	X	X	X	-	FF8	PSC-E01/11-52 MM-SS-5807	120 V ac Circuit Breaker Selector Switch	E01 G5X	CB-F-1A-A DG-F-2A-A	-	-	-	CBA-FN-19 CBA-FN-20 DAH-FN-25A DAH-FN-26A	None	Note 1
2	MM-CP-13	Solid State Protection System Cabinet (Train B Load Group)	-	B	310501	CB-F-3A-A	X	X	X	-	FF9	PSC-E02/11-52 MM-SS-5808	120 V ac Circuit Breaker Selector Switch	E02 G5Y	CB-F-1B-A DG-F-2B-A	-	-	-	CBA-FN-32 CBA-FN-33 DAH-FN-25B DAH-FN-26B	None	Note 1

Notes
1. The Solid State Protection Cabinet will be disabled at the appropriate location to prevent the output from initiating spurious operation of various valves and pumps.

FUNCTION: COLD SHUTDOWN

ITEM NO.	EQUIPMENT ID NO.	EQUIPMENT DESCRIPTION	P and ID/1-LINE DRAWING NO.	TRAIN	PHYSICAL LOCATION DRAWING NO.	FIRE AREA/ZONE	REQUIRED FOR		POWER		ELEC NODE	SUPPORTING CONTROL AND INSTRUMENTATION EQUIPMENT				CABLES	ELECTRICAL DRAWING NO.		SUPPORTING SYSTEMS	REDUNDANT COUNTERPART	REMARKS
							HOT STAND BY	COLD SHUT DOWN	ELEC	AIR		EQUIPMENT ID NO.	EQUIPMENT DESCRIPTION	ELEC NODE	FIRE AREA/ZONE		SCHEM.	CABLE			
1	RH-P-8A	Residual Heat Removal Pump	SI-20448	A	310761	RHR-F-1D-Z	-	X	X	-	M11	RH-A57-52	4160 V ac Circuit Breaker	A57	CB-F-1A-A	A57-M11	310887		CBA-FN-19	RH-P-8B	
												RHR-A57-FU	Fuses	A57	CB-F-1A-A		A57a A57b A57c A57d	A57g	CBA-FN-20 EAH-FN-5A EAH-FN-31A EDE-SWG-5		
												RH-CS-2467-2	Control Switch	A57	CB-F-1A-A						
												RH-SS-2467	Selector Switch	A57	CB-F-1A-A						
												EDE-A53-94-1A	Bus Under Voltage Relay	A53	CB-F-1A-A						
												RH-A57-G,R,W	Indicating Lights	A57	CB-F-1A-A						
												RH-A57-86	Lockout Relay	A57	CB-F-1A-A						
												RH-A57-52H	Truck Operated Contact	A57	CB-F-1A-A						
												RH-A57-50/51	Inst/Time Overcurrent Relays øA, øC	A57	CB-F-1A-A						
												RH-A57-51GS	Ground Sensor Relay	A57	CB-F-1A-A						
												RH-A57-AM	Ammeter	A57	CB-F-1A-A						
												RH-A57-AS	Ammeter Switch	A57	CB-F-1A-A						
												RH-A57-CT	Current Transformers (75/5)	A57	CB-F-1A-A						
												RH-A57-TD1	CT Test Device	A57	CB-F-1A-A						
												RH-A57-ATR	Transducer	A57	CB-F-1A-A						
												RH-A57-TD2	Lockout Relay Test Device	A57	CB-F-1A-A						
												RH-A57-52Z	Time Delay Relay	A57	CB-F-1A-A						

Notes
1. This equipment is mechanical with no electrical requirements.
2. During normal operation, the valve is in its safe shutdown position. To prevent spurious operation, this equipment will be disabled at the appropriate control location.
3. Not used.
4. Air is not needed to position or to reposition the valve for safe shutdown.
5. The valve will be operated manually utilizing handwheels.

FUNCTION: COLD SHUTDOWN

ITEM NO.	EQUIPMENT ID NO.	EQUIPMENT DESCRIPTION	P and ID/1-LINE DRAWING NO.	TRAIN	PHYSICAL LOCATION DRAWING NO.	FIRE AREA/ZONE	REQUIRED FOR		POWER		ELEC NODE	SUPPORTING CONTROL AND INSTRUMENTATION EQUIPMENT				CABLES	ELECTRICAL DRAWING NO.		SUPPORTING SYSTEMS	REDUNDANT COUNTERPART	REMARKS
							HOT STAND BY	COLD SHUT DOWN	ELEC	AIR		EQUIPMENT ID NO.	EQUIPMENT DESCRIPTION	ELEC NODE	FIRE AREA/ZONE		SCHEM.	CABLE			
2	RH-P-8B	Residual Heat Removal Pump	RH-20663	B	310761	RHR-F-1C-Z	-	X	X	-	M12	RH-A77-52	4160 V ac Circuit Breaker	A77	CB-F-1B-A	A77-M12	A77a A77b A77c A77d	A77g	CBA-FN-32 CBA-FN-33 EAH-FN-5B EAH-FN-31B EDE-SWG-6	RH-P-8A	
												RHR-A77-FU	Fuses	A77	CB-F-1B-A						
												RH-CS-2468-2	Control Switch	A77	CB-F-1B-A						
												RH-SS-2468	Selector Switch	A77	CB-F-1B-A						
												EDE-A73-94-1A	Bus Under Voltage Relay	A73	CB-F-1B-A						
												RH-A77-G,R,W	Indicating Lights	A77	CB-F-1B-A						
												RH-A77-86	Lockout Relay	A77	CB-F-1B-A						
												RH-A77-52H	Truck Operated Contact	A77	CB-F-1B-A						
												RH-A77-50/51	Inst/Time Overcurrent Relays øA, øC	A77	CB-F-1B-A						
												RH-A77-51GS	Ground Sensor Relay	A77	CB-F-1B-A						
												RH-A77-AM	Ammeter	A77	CB-F-1B-A						
												RH-A77-AS	Ammeter Switch	A77	CB-F-1B-A						
												RH-A77-CT	Current Transformers (75/5)	A77	CB-F-1B-A						
												RH-A77-TD1	CT Test Device	A77	CB-F-1B-A						
												RH-A77-ATR	Transducer	A77	CB-F-1B-A						
												RH-A77-TD2	Lockout Relay Test Device	A77	CB-F-1B-A						
												RH-A77-52Z	Time Delay Relay	A77	CB-F-1B-A						
3	RH-V-14	RH-P-8A to Cold Leg Isolation Valve	RH-20662	A	310769	PP-F-1A-Z	-	X	X	-	V47	RH-B57-52	460 V ac Circuit Breaker	B57	CB-F-1A-A	-	-	-	CBA-FN-19 CBA-FN-20	RH-V-26	Note 2
4	RH-V-26	RH-P-8B to Cold Leg Isolation Valve	RH-20663	B	310769	PP-F-1B-Z	-	X	X	-	V48	RH-B65-52	460 V ac Circuit Breaker	B65	CB-F-1B-A	-	-	-	CBA-FN-32 CBA-FN-33	RH-V-14	Note 2
5	RH-V-35	RH-E-9A to Charging Pump Isolation Valve	RH-20662	A	310761	RHR-F-4B-Z	-	X	X	-	V53	RH-B59-52	460 V ac Circuit Breaker	B59	CB-F-1A-A	-	-	-	CBA-FN-19 CBA-FN-20	None	Note 2
6	RH-V-36	RH-E-9B to SI Pump Isolation Valve	SI-20449	B	310761	RHR-F-2A-Z	-	X	X	-	V54	RH-B66-52	460 V ac Circuit Breaker	B66	CBA-F-1B-A	-	-	-	CBA-FN-32 CBA-FN-33	None	Note 2
7	RH-V-32	RHR PP to Hot Leg Isolation Valve	RH-20663	B	310769	PP-F-1A-Z	-	X	X	-	V51	RH-B58-52	460 V ac Circuit Breaker	B58	CB-F-1B-A	-	-	-	CBA-FN-32 CBA-FN-33	None	Note 2
8	RH-V-70	RHR to Hot Leg Isolation Valve	RH-20663	A	310769	PP-F-1A-Z	-	X	X	-	VB4	RH-D90-52	460 V ac Circuit Breaker	D90	CB-F-1A-A	-	-	-	CBA-FN-19 CBA-FN-20	None	Note 2
9	RH-HCV-606	RH-E-9A Outlet Flow Control Valve	RH-20662	A	310761	RHR-F-4B-Z	-	X	X	X	LG8	EDE-E87/2-72	125 V dc Circuit	E87	CB-F-1A-A	-	-	-	CBA-FN-19 CBA-FN-20	RH-HCV-607	Notes 2 and 4
10	RH-HCV-607	RH-E-9B Outlet Flow Control Valve	RH-20663	B	310761	RHR-F-4A-Z	-	X	X	X	LG9	EDE-E88/2-72	125 V dc Circuit Breaker	E88	CB-F-1B-A	-	-	-	CBA-FN-32 CBA-FN-33	RH-HCV-606	Notes 2 and 4

FUNCTION: COLD SHUTDOWN

ITEM NO.	EQUIPMENT ID NO.	EQUIPMENT DESCRIPTION	P and ID/1-LINE DRAWING NO.	TRAIN	PHYSICAL LOCATION DRAWING NO.	FIRE AREA/ZONE	REQUIRED FOR		POWER		ELEC NODE	SUPPORTING CONTROL AND INSTRUMENTATION EQUIPMENT				CABLES	ELECTRICAL DRAWING NO.		SUPPORTING SYSTEMS	REDUNDANT COUNTERPART	REMARKS
							HOT STAND BY	COLD SHUT DOWN	ELEC	AIR		EQUIPMENT ID NO.	EQUIPMENT DESCRIPTION	ELEC NODE	FIRE AREA/ZONE		SCHEM.	CABLE			
11	RH-FCV-618	RH-E-9A Outlet Bypass Flow Control Valve	RH-20662	A	310761	RHR-F-4B-Z	-	X	X	X	LH3	EDE-E87/2-72	125 V dc Circuit Breaker	E87	CB-F-1A-A	-	-	-	CBA-FN-19 CBA-FN-20	RH-FCV-619	Notes 2 and 4
12	RH-FCV-619	RH-E-9B Outlet Bypass Flow Control Valve	RH-20663	B	310761	RHR-F-4A-Z	-	X	X	X	LH4	EDE-E88/2-72	125 V dc Circuit Breaker	E88	CB-F-1B-A	-	-	-	CBA-FN-32 CBA-FN-33	RH-FCV-618	Notes 2 and 4
13	RH-V-8	RHR Loop A Sample Valve	RH-20662	A	310761 805201	RHR-F-4B-Z	-	X	-	-	-	-	-	-	-	-	-	-	EAH-FN-5A EAH-FN-31A	RH-V-44	Notes 1 and 9
14	RH-V-44	RHR Loop B Sample Valve	RH-20663	B	310761 805201	RHR-F-4A-Z	-	X	-	-	-	-	-	-	-	-	-	-	EAH-FN-5B EAH-FN-31B	RH-V-8	Notes 1 and 9

Notes

6. Electrical conduit plan drawing 9763-F-310761 is listed to show fire zone corresponding to the location of the RHR pump oil cooler which is identified in drawing 9763-F-805020.
7. Electrical conduit plan drawings 9763-F-310761 and 9763-F-310762 are listed to show fire zone corresponding to the location of the RHR heat exchanger which is identified in drawings 9763-F-805202 and 9763-F-805203.
8. During normal operation, the valve is in its hot shutdown position. To prevent spurious operation, this equipment will be disabled at the appropriate control location. For cold shutdown, the valve will be energized for positioning.
9. Electrical conduit plan drawing 9763-F-310761 is listed corresponding to the location of the RHR sampling valve which is identified in drawing 9763-F-805201.
10. These valves are also listed in Table RSS 3.1.3.2.

FUNCTION: COLD SHUTDOWN

ITEM NO.	EQUIPMENT ID NO.	EQUIPMENT DESCRIPTION	P and ID/1-LINE DRAWING NO.	TRAIN	PHYSICAL LOCATION DRAWING NO.	FIRE AREA/ZONE	REQUIRED FOR		POWER		ELEC NODE	SUPPORTING CONTROL AND INSTRUMENTATION EQUIPMENT				CABLES	ELECTRICAL DRAWING NO.		SUPPORTING SYSTEMS	REDUNDANT COUNTERPART	REMARKS
							HOT STAND BY	COLD SHUT DOWN	ELEC	AIR		EQUIPMENT ID NO.	EQUIPMENT DESCRIPTION	ELEC NODE	FIRE AREA/ZONE		SCHEM.	CABLE			
15	RC-V-22	RHR Inlet Isolation Valve	RC-20841	B	310582	C-F-1-Z	-	X	X	-	V27	RC-B54-52-1,2	460 V ac Circuit Breakers	B54	CB-F-1B-A	B54-G2J B54-G2J/1 B54-H39	310882 B54a	B54c	EDE-MCC-621 CBA-FN-32 CBA-FN-33	RC-V-88	Notes 8 and 10
												RC-B54-FU	Fuse	B54	CB-F-1B-A	B54-H24 H24-V27 H39-V27					
												RC-CS-7302-2	Control Switch with Indication	G2J	CB-F-1B-A						
												RC-SS-7302	Selector Switch	G2J	CB-F-1B-A						
												RC-B54-42-1/O,C	Motor Starters	B54	CB-F-1B-A						
												RC-B54-42-2	Motor Starter	B54	CB-F-1B-A						
												RC-B54-49-1,2	Overload Relays	B54	CB-F-1B-A						
												EDE-MM-100	Electrical Penetration	H24	C-F-1-Z, ET-F-1C-A						
												RC-ZS-7302B	Valve Position and Open/Close Torque Switches	V27	C-F-1-Z						
												RC-ZL-7302-1	Pilot Light	G2J	CB-F-1B-A						
												EDE-MM-115	Electrical Penetration	H39	C-F-1-Z, ET-F-1C-A						
												RC-EHO/16-52	120 V ac Circuit Breaker	EHO	CB-F-1B-A	E4J-EHO/1 E4J-G2J GJ2-H39/6 H39-V27/1 H39-V26/3 GZO-U8U EDO-GZO/1	EHO/16a EHO/16b	EHO/16c EHO/16d	EDE-PP-1F CBA-FN-32 CBA-FN-33		
												RC-CS-7302-2	Control Switch with Indication	G2J	CB-F-1B-A						
												RC-SS-7302	Selector Switch	G2J	CB-F-1B-A						
												RC-ZS-7302B	Valve Position and Open/Close Torque Switches	V27	C-F-1-Z						
												RC-E4J-FU-9 and 10	30 Amp Fuses	E4J	CB-F-1B-A						
												EDE-MM-115	Electrical Penetration	H39	ET-F-1C-A, C-F-1-Z						
												RC-CS-7310-2	Control Switch with Indication	G2J	CB-F-1B-A						
												RC-SS-7310	Selector Switch	G2J	CB-F-1B-A						
												RC-ZS-V87	Valve Position and Open/Close Torque Switches	V26	C-F-1-Z						
												RC-CS-2896-2	Control Switch with Indication	GZO	CB-F-1B-A						
												RC-SS-2896	Selector Switch	GZO	CB-F-1B-A						
												RC-ZS-FV-2896	Valve Position Switch	U8U	PP-F-1B-Z						
												RC-EDO-R1	Auxiliary Relay	EDO	CB-F-1B-A						

FUNCTION: COLD SHUTDOWN

ITEM NO.	EQUIPMENT ID NO.	EQUIPMENT DESCRIPTION	P and ID/1-LINE DRAWING NO.	TRAIN	PHYSICAL LOCATION DRAWING NO.	FIRE AREA/ZONE	REQUIRED FOR		POWER		ELEC NODE	SUPPORTING CONTROL AND INSTRUMENTATION EQUIPMENT				CABLES	ELECTRICAL DRAWING NO.		SUPPORTING SYSTEMS	REDUNDANT COUNTERPART	REMARKS
							HOT STAND BY	COLD SHUT DOWN	ELEC	AIR		EQUIPMENT ID NO.	EQUIPMENT DESCRIPTION	ELEC NODE	FIRE AREA/ZONE		SCHEM.	CABLE			
16	RC-V-23	RHR Inlet Isolation Valve	RC-20841	A	310576	C-F-1-Z	-	X	X	-	V25	RC-B53-52-1,2	460 V ac Circuit Breakers	B53	CB-F-1A-A	B53-G2G B53-G2G/1 B53-H36 B53-H19 H36-V25/2 H19-V25	B53a	B53c	EDE-MCC-521 CBA-FN-19 CBA-FN-20	RC-V-87	Notes 8 and 10
												RC-B53-FU	Fuse	B53	CB-F-1A-A						
												RC-CS-7303-2	Control Switch with Indication	G2G	CB-F-1A-A						
												RC-SS-7303	Selector Switch	G2G	CB-F-1A-A						
												RC-ZL-7303-1	Pilot Light	G2G	CB-F-1A-A						
												RC-B53-42-1/0,C	Motor Starters	B53	CB-F-1A-A						
												RC-B53-42-2	Motor Starter	B53	CB-F-1A-A						
												RC-B53-49-1,2	Overload Relays	B53	CB-F-1A-A						
												EDE-MM-95	Electrical Penetration	H19	C-F-2-Z, ET-F-1A-A						
												RC-ZS-V23	Valve Position and Open/Close Torque Switches	V25	C-F-1-Z						
												EDE-MM-112	Electrical Penetration	H36	C-F-2-Z, ET-F-1A-A						
												RC-EH9/16-52	120 V ac Circuit Breaker	EH9	CB-F-1A-A	E4H-EH9/1 E4H-G2G G2G-H36/8 H36-V25/3 H36-V28/1 G81-U8T EC8-G81 EC8-G81/1	310882 EH9/16a EH9/16b	EH9/16c EH9/16d	EDE-PP-1E CBA-FN-19 CBA-FN-20		
												RC-CS-7303-2	Control Switch with Indication	G2G	CB-F-1A-A						
												RC-SS-7303	Selector Switch	G2G	CB-F-1A-A						
												RC-ZS-V23	Valve Position and Open/Close Torque Switches	V25	C-F-1-Z						
												EDE-MM-112	Electrical Penetration	H36	ET-F-1A-A and C-F-2-Z						
												RC-E4H-FU-9 and 10	30 Amp Fuses	E4H	CB-F-1A-A						
												RC-CS-7311-2	Control Switch with Indication	G2G	CB-F-1A-A						
												RC-SS-7311	Selector Switch	G2G	CB-F-1A-A						
												RC-ZS-7311A	Valve Position and Open/Close Torque Switches	V28	C-F-1-Z						
												RC-CS-2894-2	Control Switch with Indication	G81	CB-F-1A-A						
												RC-SS-2894	Selector Switch	G81	CB-F-1A-A						
												RC-ZS-FV-2894	Valve Position Switch	U8T	PP-F-1B-Z						
												RC-EC8-R1	Auxiliary Relay	EC8	CB-F-1A-Z						

FUNCTION: COLD SHUTDOWN

ITEM NO.	EQUIPMENT ID NO.	EQUIPMENT DESCRIPTION	P and ID/1-LINE DRAWING NO.	TRAIN	PHYSICAL LOCATION DRAWING NO.	FIRE AREA/ZONE	REQUIRED FOR		POWER		ELEC NODE	SUPPORTING CONTROL AND INSTRUMENTATION EQUIPMENT				CABLES	ELECTRICAL DRAWING NO.		SUPPORTING SYSTEMS	REDUNDANT COUNTERPART	REMARKS
							HOT STAND BY	COLD SHUT DOWN	ELEC	AIR		EQUIPMENT ID NO.	EQUIPMENT DESCRIPTION	ELEC NODE	FIRE AREA/ZONE		SCHEM.	CABLE			
17	RC-V-87	RHR Inlet Isolation Valve	RC-20844	B	310582	C-F-1-Z	-	X	X	-	V26	RC-B61-52-1,2	460 V ac Circuit Breaker	B61	CB-F-1B-A	B61-G2J B61-G2J/1 B61-H39 B61-H24 H39-V26/2 H24-V26	B61a	B61c	EDE-MCC-621 CBA-FN-32 CBA-FN-33	RC-V-23	Notes 8 and 10
												RC-B61-FU	Fuse	B61	CB-F-1B-A						
												RC-CS-7310-2	Control Switch with Indicator	G2J	CB-F-1B-A						
												RC-SS-7310	Selector Switch	G2J	CB-F-1B-A						
												RC-ZL-7310-1	Pilot Light	G2J	CB-F-1B-A						
												RC-B61-42-1/0,C	Motor Starters	B61	CB-F-1B-A						
												RC-B61-42-2	Motor Starter	B61	CB-F-1B-A						
												RC-B61-49-1,2	Overload Relays	B61	CB-F-1B-A						
												RC-ZS-V87	Valve Position and Open/Close Torque Switches	V26	C-F-1Z-A						
												EDE-MM-100	Electrical Penetration	H24	C-F-1-Z, ET-F-1C-A						
												EDE-MM-115	Electrical Penetration	H39	C-F-1-Z, ET-F-1C-A						
												RC-EHO/16-52	120 V ac Circuit Breaker	EHO	CB-F-1B-A	E4J-EHO/1 E4J-G2J G2J-H39/6 H39-V26/3 GZO-U8U EDO-GZO/1 H39-V27/1	EHO/16a EHO/16b	EHO/16c EHO/16d	EDE-PP-1F CBA-FN-32 CBA-FN-33		
												RC-CS-7310-2	Control Switch with Indication	G2J	CB-F-1B-A						
												RC-SS-7310	Selector Switch	G2J	CB-F-1B-A						
												RC-ZS-V87	Valve Position and Open/Close Torque Switches	V26	C-F-1-Z						
												EDE-MM-115	Electrical Penetration	H39	C-F-1-Z, ET-F-1C-A						
												RC-E4J-FU-9 and 10	30 Amp Fuses	E4J	CB-F-1B-A						
												RC-CS-7302-2	Control Switch with Indication	G2J	CB-F-1B-A						
												RC-SS-7302	Selector Switch	G2J	CB-F-1B-A						
												RC-ZS-7302B	Valve Position and Open/Close Torque Switches	V27	C-F-1-Z						
												RC-CS-2896-2	Control Switch with Indication	GZO	CB-F-1B-A						
												RC-SS-2896	Selector Switch	GZO	CB-F-1B-A						
												RC-ZS-FV-2896	Valve Position Switch	U8U	PP-F-1B-Z						
												RC-EDO-R1	Auxiliary Relay	EDO	CB-F-1B-A						

FUNCTION: COLD SHUTDOWN

ITEM NO.	EQUIPMENT ID NO.	EQUIPMENT DESCRIPTION	P and ID/1-LINE DRAWING NO.	TRAIN	PHYSICAL LOCATION DRAWING NO.	FIRE AREA/ZONE	REQUIRED FOR		POWER		ELEC NODE	SUPPORTING CONTROL AND INSTRUMENTATION EQUIPMENT				CABLES	ELECTRICAL DRAWING NO.		SUPPORTING SYSTEMS	REDUNDANT COUNTERPART	REMARKS
							HOT STAND BY	COLD SHUT DOWN	ELEC	AIR		EQUIPMENT ID NO.	EQUIPMENT DESCRIPTION	ELEC NODE	FIRE AREA/ZONE		SCHEM.	CABLE			
18	RC-V-88	RHR Inlet Isolation Valve	RH-20662	A	310577	C-F-1-Z	-	X	X	-	V28	RC-B62-52-1,2	460 V ac Circuit Breaker	B62	CB-F-1A-A	B62-G2G B62-G2G/1 B62-H36 B62-H19 H36-V28 H19-V28	310882 B62a	B62c	EDE-MCC-521 CBA-FN-19 CBA-FN-20	RC-V-22	Notes 8 and 10
												RC-B62-FU	Fuse	B62	CB-F-1A-A						
												RC-CS-7311-2	Control Switch with Indication	G2G	CB-F-1A-A						
												RC-SS-7311	Selector Switch	G2G	CB-F-1A-A						
												RC-ZL-7311-1	Pilot Light	G2G	CB-F-1A-A						
												RC-B62-42-1/0,C	Motor Starters	B62	CB-F-1A-A						
												RC-B62-42-2	Motor Starter	B62	CB-F-1A-A						
												RC-B62-49-1,2	Overload Relays	B62	CB-F-1A-A						
												RC-ZS-7311A	Valve Position and Open/Close Torque Switches	V28	C-F-1-Z						
												EDE-MM-25	Electrical Penetration	H19	C-F-2-Z, ET-F-1A-A						
												EDE-MM-112	Electrical Penetration	H36	C-F-2-Z, ET-F-1A-A						
												RC-EH9/16-52	120 V ac Circuit Breaker	EH9	CB-F-1A-A	E4H-EH9/1 E4H-G2G G2G-H36/8 H36-V28/1 H36-V25/3 G81-U8T EC8-G81 EC8-G81/1	EH9/16a EH9/16b	EH9/16c EH9/16d	EDE-PP-1E CBA-FN-19 CBA-FN-20		
												RC-CS-7311-2	Control Switch with Indication	G2G	CB-F-1A-A						
												RC-SS-7311	Selector Switch	G2G	CB-F-1A-A						
												RC-ZS-7311A	Valve Position and Open/Close Torque Switches	V28	C-F-1-Z						
												EDE-MM-112	Electrical Penetration	H36	C-F-2-Z, ET-F-1A-A						
												RC-E4H-FU-9 and 10	30 Amp Fuses	E4H	CB-F-1A-A						
												RC-CS-7303-2	Control Switch with Indication	G2G	CB-F-1A-A						
												RC-SS-7303	Selector Switch	G2G	CB-F-1A-A						
												RC-ZS-V23	Valve Position and Open/Close Torque Switches	V25	C-F-1-Z						
												RC-CS-2894-2	Control Switch with Indication	G81	CB-F-1A-A						
												RC-SS-2894	Selector Switch	G81	CB-F-1A-A						
												RC-ZS-FV-2894	Valve Position Switch	U8T	PP-F-1B-Z						
												RC-EC8-R1	Auxiliary Relay	EC8	CB-F-1A-A						

FUNCTION: COLD SHUTDOWN

ITEM NO.	EQUIPMENT ID NO.	EQUIPMENT DESCRIPTION	P and ID/1-LINE DRAWING NO.	TRAIN	PHYSICAL LOCATION DRAWING NO.	FIRE AREA/ZONE	REQUIRED FOR		POWER		ELEC NODE	SUPPORTING CONTROL AND INSTRUMENTATION EQUIPMENT				CABLES	ELECTRICAL DRAWING NO.		SUPPORTING SYSTEMS	REDUNDANT COUNTERPART	REMARKS
							HOT STAND BY	COLD SHUT DOWN	ELEC	AIR		EQUIPMENT ID NO.	EQUIPMENT DESCRIPTION	ELEC NODE	FIRE AREA/ZONE		SCHEM.	CABLE			
19	RH-P-8A	RHR Pump Lube Oil Cooler	RH-20662	A	310761 805200	RHR-F-1D-Z	-	X	-	-	-	-	-	-	-	-	-	-	Component Cooling	RH-P-8B	Notes 1 and 6
20	RH-P-8B	RHR Pump Lube Oil Cooler	RH-20663	B	310761 805200	RHR-F-1C-Z	-	X	-	-	-	-	-	-	-	-	-	-	Component Cooling	RH-P-8A	Notes 1 and 6
21	RH-E-9A	Residual Heat Removal Heat Exchanger	SI-20448	A	310761 310762 805202 805203	RHR-F-3B-Z	-	X	-	-	-	-	-	-	-	-	-	-	Component Cooling	RH-E-9B	Notes 1 and 7
22	RH-E-9B	Residual Heat Removal Heat Exchanger	RH-20663	B	310761 310762 805202 805203	RHR-F-3A-Z	-	X	-	-	-	-	-	-	-	-	-	-	Component Cooling	RH-E-9A	Notes 1 and 7

FUNCTION: SERVICE WATER

ITEM NO.	EQUIPMENT ID NO.	EQUIPMENT DESCRIPTION	P&ID/1-LINE DRAWING NO.	TRAIN	PHYSICAL LOCATION DRAWING NO.	FIRE AREA/ZONE	REQUIRED FOR		POWER		ELEC NODE	SUPPORTING CONTROL AND INSTRUMENTATION EQUIPMENT				CABLES	ELECTRICAL DRAWING NO.		SUPPORTING SYSTEMS	REDUNDANT COUNTERPART	REMARKS
							HOT STAND BY	COLD SHUT DOWN	ELEC	AIR		EQUIPMENT ID NO.	EQUIPMENT DESCRIPTION	ELEC NODE	FIRE AREA/ZONE		SCHEM.	CABLE			
1	SW-P-41A	Service Water Loop "A" - Pump "A"	SW-20794	A	301140	SW-F-1E-Z	X	X	X	-	N81	SW-AQ3-52	4160 V AC Circuit Breaker	AQ3	CB-F-1A-A	AQ3-GN9 AQ3-VL3 AQ3-N81	301107 AQ3a AQ3b AQ3c AQ3d	AQ3h	CBA-FN-19 CBA-FN-20 EDE-SWG-5	SW-P-41B or SW-P-41D	
												SW-AQ3-FU	Fuses	AQ3	CB-F-1A-A						
												SW-CS-6101-2	Control Switch	AQ3	CB-F-1A-A						
												SW-SS-6101	Selector Switch	AQ3	CB-F-1A-A						
												SW-ZS-V2	Valve Position Switch	VL3	SW-F-1E-Z						
												EDE-A53-94-2	Bus Undervoltage Relay	A53	CB-F-1A-A						
												SW-AQ3-52H	Truck Operated Contact	AQ3	CB-F-1A-A						
												SW-AQ3-50/51	Inst/Time Overcurrent Relays øA, øC	AQ3	CB-F-1A-A						
												SW-AQ3-51GS	Ground Sensor Relay	AQ3	CB-F-1A-A						
												SW-AQ3-86	Lockout Relay	AQ3	CB-F-1A-A						
												SW-AQ3-CT	Current Transformers 100/5A	AQ3	CB-F-1A-A						
												SW-AQ3-TD1	Test Device	AQ3	CB-F-1A-A						
												SW-AQ3-AM	Ammeter	AQ3	CB-F-1A-A						
												SW-AQ3-AS	Ammeter Switch	AQ3	CB-F-1A-A						
												SW-AQ3-G,R,W	Indicating Lights	AQ3	CB-F-1A-A						
												SW-AQ3-ATR	Transducer	AQ3	CB-F-1A-A						
												SW-AQ3-TD2	Lockout Relay Test Device	AQ3	CB-F-1A-A						
												SW-GN9-RV54	Auxiliary Relay	GN9	CB-F-1A-A						
												SW-AQ3-52Z	Time Delay Relay	AQ3	CB-F-1A-A						
												SW-AQ3-R1	Auxiliary Relay	AQ3	CB-F-1A-A						
												SW-ZS-V54	Valve Position Switch and Valve Open/Close Torque Switches	VM5	CT-F-2B-A	GN9-VM5	E2T/1a	E2T/1b	CBA-FN-19 CBA-FN-20		Notes 4 and 5
												SW-GN9-RV54	Auxiliary Relay	GN9	CB-F-1A-A						

Notes

1. During normal operation, this equipment is in its safe shutdown position. To prevent spurious operation, this equipment will be disabled or isolated at the appropriate control locations.
2. Air is not needed to position or to reposition the valve for safe shutdown.
3. This valve will be de-energized to cause it to fail to its safe shutdown position.
4. Circuit shown in 301107, Sheet E2T/1a, involving Auxiliary Relay SW-GN9-RV54 of SW-P-41A also affects SW-P-41C.
5. Circuit shown in 301107, Sheet E2U/1a, involving Auxiliary Relay SW-GN0-RV25 of SW-P-41B also affects SW-P-41D.
6. Electrical power not required for support.
7. The equipment is permanently disabled.
8. During normal operation, this equipment is in its safe shutdown position with its circuit breaker administratively controlled off to prevent its spurious operation.

FUNCTION: SERVICE WATER

ITEM NO.	EQUIPMENT ID NO.	EQUIPMENT DESCRIPTION	P&ID/1-LINE DRAWING NO.	TRAIN	PHYSICAL LOCATION DRAWING NO.	FIRE AREA/ZONE	REQUIRED FOR		POWER		ELEC NODE	SUPPORTING CONTROL AND INSTRUMENTATION EQUIPMENT				CABLES	ELECTRICAL DRAWING NO.		SUPPORTING SYSTEMS	REDUNDANT COUNTERPART	REMARKS
							HOT STAND BY	COLD SHUT DOWN	ELEC	AIR		EQUIPMENT ID NO.	EQUIPMENT DESCRIPTION	ELEC NODE	FIRE AREA/ZONE		SCHEM.	CABLE			
2	SW-P-41B	Service Water Loop "B" - Pump "B"	SW-20794	B	301140	SW-F-1E-Z	X	X	X	-	N82	SW-AR3-52	4160 V AC Circuit Breaker	AR3	CB-F-1B-A	AR3-GNO AR3-VL4 AR3-N82	301107 AR3a AR3b AR3c AR3d	AR3h	CBA-FN-32 CBA-FN-33 EDE-SWG-6	SW-P-41A or SW-P-41C	
												SW-AR3-FU	Fuses	AR3	CB-F-1B-A						
												SW-CS-6111-2	Control Switch	AR3	CB-F-1B-A						
												SW-SS-6111	Selector Switch	AR3	CB-F-1B-A						
												SW-ZS-V29	Valve Position Switch	VL4	SW-F-1E-Z						
												EDE-A73-94-2	Bus Undervoltage Relay	A73	CB-F-1B-A						
												SW-AR3-52H	Truck Operated Contact	AR3	CB-F-1B-A						
												SW-AR3-50/51	Inst/Time Overcurrent Relays øA, øC	AR3	CB-F-1B-A						
												SW-AR3-51GS	Ground Sensor Relay	AR3	CB-F-1B-A						
												SW-AR3-86	Lockout Relay	AR3	CB-F-1B-A						
												SW-AR3-CT	Current Transformers 100/5A	AR3	CB-F-1B-A						
												SW-AR3-TD1	Test Device	AR3	CB-F-1B-A						
												SW-AR3-AM	Ammeter	AR3	CB-F-1B-A						
												SW-AR3-AS	Ammeter Switch	AR3	CB-F-1B-A						
												SW-AR3-G,R,W	Indicating Lights	AR3	CB-F-1B-A						
												SW-AR3-ATR	Transducer	AR3	CB-F-1B-A						
												SW-AR3-TD2	Lockout Relay Test Device	AR3	CB-F-1B-A						
												SW-GNO-RV25	Auxiliary Relay	GNO	CB-F-1B-A						
												SW-AR3-52Z	Time Delay Relay	AR3	CB-F-1B-A						
												SW-AR3-R1	Auxiliary Relay	AR3	CB-F-1B-A						
												SW-ZS-V25	Valve Position Switch and Valve Open/Close Torque Switches	VM8	CT-F-2B-A	GNO-VM8	E2U/1a	E2U/1b	CBA-FN-32 CBA-FN-33		Notes 5 and 6
												SW-GNO-RV25	Auxiliary Relay	GNO	CB-F-1B-A						

FUNCTION: SERVICE WATER

ITEM NO.	EQUIPMENT ID NO.	EQUIPMENT DESCRIPTION	P&ID/1-LINE DRAWING NO.	TRAIN	PHYSICAL LOCATION DRAWING NO.	FIRE AREA/ZONE	REQUIRED FOR		POWER		ELEC NODE	SUPPORTING CONTROL AND INSTRUMENTATION EQUIPMENT				CABLES	ELECTRICAL DRAWING NO.		SUPPORTING SYSTEMS	REDUNDANT COUNTERPART	REMARKS
							HOT STAND BY	COLD SHUT DOWN	ELEC	AIR		EQUIPMENT ID NO.	EQUIPMENT DESCRIPTION	ELEC NODE	FIRE AREA/ZONE		SCHEM.	CABLE			
3	SW-P-41C	Service Water Loop "A" - Pump "C"	SW-20794	A	301140	SW-F-1E-Z	X	X	X	-	N83	SW-AQ4-52	4160 V AC Circuit Breaker	AQ4	CB-F-1A-A	AQ4-GN9 AQ4-VL5 AQ4-N83	301107 AQ4a AQ4b AQ4c AQ4d	AQ4h	CBA-FN-19 CBA-FN-20 EDE-SWG-5	SW-P-41B or SW-P-41D	Note 4
												SW-AQ4-FU	Fuses	AQ4	CB-F-1A-A						
												SW-CS-6102-2	Control Switch	AQ4	CB-F-1A-A						
												SW-SS-6102	Selector Switch	AQ4	CB-F-1A-A						
												SW-ZS-V22	Valve Position Switch	VL5	SW-F-1E-Z						
												EDE-A53-94-2	Bus Undervoltage Relay	A53	CB-F-1A-A						
												SW-AQ4-52H	Truck Operated Contact	AQ4	CB-F-1A-A						
												SW-AQ4-50/51	Inst/Time Overcurrent Relays øA, øC	AQ4	CB-F-1A-A						
												SW-AQ4-51GS	Ground Sensor Relay	AQ4	CB-F-1A-A						
												SW-AQ4-86	Lockout Relay	AQ4	CB-F-1A-A						
												SW-AQ4-CT	Current Transformers 100/5A	AQ4	CB-F-1A-A						
												SW-AQ4-TD1	Test Device	AQ4	CB-F-1A-A						
												SW-AQ4-AM	Ammeter	AQ4	CB-F-1A-A						
												SW-AQ4-AS	Ammeter Switch	AQ4	CB-F-1A-A						
												SW-AQ4-G,R,W	Indicating Lights	AQ4	CB-F-1A-A						
												SW-AQ4-ATR	Transducer	AQ4	CB-F-1A-A						
												SW-AQ4-TD2	Lockout Relay Test Device	AQ4	CB-F-1A-A						
												SW-GN9-RV54	Auxiliary Relay	GN9	CB-F-1A-A						
												SW-AQ4-52Z	Time Delay Relay	AQ4	CB-F-1A-A						
												SW-AQ4-R1	Auxiliary Relay	AQ4	CB-F-1A-A						

FUNCTION: SERVICE WATER

ITEM NO.	EQUIPMENT ID NO.	EQUIPMENT DESCRIPTION	P&ID/1-LINE DRAWING NO.	TRAIN	PHYSICAL LOCATION DRAWING NO.	FIRE AREA/ZONE	REQUIRED FOR		POWER		ELEC NODE	SUPPORTING CONTROL AND INSTRUMENTATION EQUIPMENT				CABLES	ELECTRICAL DRAWING NO.		SUPPORTING SYSTEMS	REDUNDANT COUNTERPART	REMARKS
							HOT STAND BY	COLD SHUT DOWN	ELEC	AIR		EQUIPMENT ID NO.	EQUIPMENT DESCRIPTION	ELEC NODE	FIRE AREA/ZONE		SCHEM.	CABLE			
4	SW-P-41D	Service Water Loop "B" - Pump "D"	SW-20794	B	301140	SW-F-1E-Z	X	X	X	-	N84	SW-AR4-52	4160 V AC Circuit Breaker	AR4	CB-F-1B-A	AR4-GNO AR4-VL6 AR4-N84	301107 AR4a AR4b AR4c AR4d	AR4h	CBA-FN-32 CBA-FN-33 EDE-SWG-6	SW-P-41A or SW-P-41C	Note 5
												SW-AR4-FU	Fuses	AR4	CB-F-1B-A						
												SW-CS-6112-2	Control Switch	AR4	CB-F-1B-A						
												SW-SS-6112	Selector Switch	AR4	CB-F-1B-A						
												SW-ZS-V31	Valve Position Switch	VL6	SW-F-1E-Z						
												EDE-A73-94-2	Bus Undervoltage Relay	A73	CB-F-1B-A						
												SW-AR4-52H	Truck Operated Contact	AR4	CB-F-1B-A						
												SW-AR4-50/51	Inst/Time Overcurrent Relays øA, øC	AR4	CB-F-1B-A						
												SW-AR4-51GS	Ground Sensor Relay	AR4	CB-F-1B-A						
												SW-AR4-86	Lockout Relay	AR4	CB-F-1B-A						
												SW-AR4-CT	Current Transformer 100/5A	AR4	CB-F-1B-A						
												SW-AR4-TD1	Test Device	AR4	CB-F-1B-A						
												SW-AR4-AM	Ammeter	AR4	CB-F-1B-A						
												SW-AR4-AS	Ammeter Switch	AR4	CB-F-1B-A						
												SW-AR4-G,R,W	Indicating Lights	AR4	CB-F-1B-A						
												SW-AR4-ATR	Transducer	AR4	CB-F-1B-A						
												SW-AR4-TD2	Lockout Relay Test Device	AR4	CB-F-1B-A						
												SW-GNO-RV25	Auxiliary Relay	GNO	CB-F-1B-A						
												SW-AR4-52Z	Time Delay Relay	AR4	CB-F-1B-A						
												SW-AR4-R1	Auxiliary Relay	AR4	CB-F-1B-A						
												SW-AR4-R2	Auxiliary Relay	AR4	CB-F-1B-A						
5	SW-V2	Service Water Pump "A" Discharge Valve	SW-20794	A	301140	SW-F-1E-Z	X	X	X	-	VL3	SW-CR6-52	460 V AC Circuit Breaker	CR6	SW-F-1B-A	AQ3-CR6 CR6-VL3/1 CR6-VL3	301107 CR6a	CR6c	SWA-FN-40A EDE-MCC-514	SW-V-29 or SW-V-31	
												SW-AQ3-52S	Mechanically Operated Contact	AQ3	CB-F-1A-A						
												SW-ZS-V2	Valve Position Switch and Valve Open/Close Torque Switches	VL3	SW-F-1E-Z						
												SW-CR6-42/O,C	Motor Starters	CR6	SW-F-1B-A						
												SW-CR6-49	Overload Relay	CR6	SW-F-1B-A						
												SW-CR6-FU	Fuses	CR6	SW-F-1B-A						
												SW-ECO-TDR	Time Delay Relay	ECO	SW-F-1B-A						

FUNCTION: SERVICE WATER

ITEM NO.	EQUIPMENT ID NO.	EQUIPMENT DESCRIPTION	P&ID/1-LINE DRAWING NO.	TRAIN	PHYSICAL LOCATION DRAWING NO.	FIRE AREA/ZONE	REQUIRED FOR		POWER		ELEC NODE	SUPPORTING CONTROL AND INSTRUMENTATION EQUIPMENT				CABLES	ELECTRICAL DRAWING NO.		SUPPORTING SYSTEMS	REDUNDANT COUNTERPART	REMARKS
							HOT STAND BY	COLD SHUT DOWN	ELEC	AIR		EQUIPMENT ID NO.	EQUIPMENT DESCRIPTION	ELEC NODE	FIRE AREA/ZONE		SCHEM.	CABLE			
6	SW-V22	Service Water Pump "C" Discharge Valve	SW-20794	A	301140	SW-F-1E-Z	X	X	X	-	VL5	SW-CR7-52	460 V AC Circuit Breaker	CR7	SW-F-1B-A	AQ4-CR7 CR7-VL5/1 CR7-VL5	301107 CR7a	CR7c	SWA-FN-40A EDE-MCC-514	SW-V-29 or SW-V-31	
												SW-AQ4-52S	Mechanically Operated Contact	AQ4	CB-F-1A-A						
												SW-ZS-V22	Valve Position Switch and Valve Open/Close Torque Switches	VL5	SW-F-1E-Z						
												SW-CR7-42/O,C	Motor Starters	CR7	SW-F-1B-A						
												SW-CR7-49	Overload Relay	CR7	SW-F-1B-A						
												SW-CR7-FU	Fuses	CR7	SW-F-1B-A						
												SW-ECO-TDR	Time Delay Relay	ECO	SW-F-1B-A						
7	SW-V29	Service Water Pump "B" Discharge Valve	SW-20794	B	301140	SW-F-1E-Z	X	X	X	-	VL4	SW-CS1-52	460 V AC Circuit Breaker	CS1	SW-F-1C-A	AR3-CS1 CS1-VL4/1 CS1-VL4	301107 CS1a	CS1c	SWA-FN-40B EDE-MCC-614	SW-V-2 or SW-V-22	
												SW-AR3-52S	Mechanically Operated Contact	AR3	CB-F-1B-A						
												SW-ZS-V29	Valve Position Switch and Valve Open/Close Torque Switches	VL4	SW-F-1E-Z						
												SW-CS1-42/O,C	Motor Starters	CS1	SW-F-1C-A						
												SW-CS1-49	Overload Relay	CS1	SW-F-1C-A						
												SW-CS1-FU	Fuses	CS1	SW-F-1C-A						
												SW-EE2-TDR	Time Delay Relay	EE2	SW-F-1C-A						
8	SW-V31	Service Water Pump "D" Discharge Valve	SW-20794	B	301140	SW-F-1E-Z	X	X	X	-	VL6	SW-CS2-52	460 V AC Circuit Breaker	CS2	SW-F-1C-A	AR4-CS2 CS2-VL6/1 CS2-VL6	301107 CS2a	CS2c	SWA-FN-40B EDE-MCC-614	SW-V-2 or SW-V-22	
												SW-AR4-52S	Mechanically Operated Contact	AR4	CB-F-1B-A						
												SW-ZS-V31	Valve Position Switch and Valve Open/Close Torque Switches	VL6	SW-F-1E-Z						
												SW-CS2-42/O,C	Motor Starters	CS2	SW-F-1C-A						
												SW-CS2-49	Overload Relay	CS2	SW-F-1C-A						
												SW-CS2-FU	Fuses	CS2	SW-F-1C-A						
												SW-EE2-TDR	Time Delay Relay	EE2	SW-F-1C-A						
9	SW-V4	Secondary Component Cooling Water Heat Exchanger Header Supply Valve	SW-20795	A	310767	PAB-F-1K-Z	X	X	X	-	VPO	SW-DA6-52	460 V AC Circuit Breaker	DA6	CB-F-1A-A	DA6-VPO DA6-G2H DA6-G2H/2 DA6-G2H/1 DA6-VPO/1	301107 DA6a	DA6c DA6d	CBA-FN-19 CBA-FN-20 EDE-MCC-512	SW-V5	
												SW-CS-6117-2	Control Switch with Indication	G2H	CB-F-1A-A						
												SW-SS-6117	Selector Switch	G2H	CB-F-1A-A						
												SW-DA6-42/O,C	Motor Starters	DA6	CB-F-1A-A						
												SW-DA6-49	Overload Relays	DA6	CB-F-1A-A						
												SW-ZS-V4	Valve Position Switch and Valve Open/Close Torque Switches	VPO	PAB-F-1K-Z						
												SW-DA6-FU	Fuse	DA6	CB-F-1A-A						

FUNCTION: SERVICE WATER

ITEM NO.	EQUIPMENT ID NO.	EQUIPMENT DESCRIPTION	P&ID/1-LINE DRAWING NO.	TRAIN	PHYSICAL LOCATION DRAWING NO.	FIRE AREA/ZONE	REQUIRED FOR		POWER		ELEC NODE	SUPPORTING CONTROL AND INSTRUMENTATION EQUIPMENT				CABLES	ELECTRICAL DRAWING NO.		SUPPORTING SYSTEMS	REDUNDANT COUNTERPART	REMARKS
							HOT STAND BY	COLD SHUT DOWN	ELEC	AIR		EQUIPMENT ID NO.	EQUIPMENT DESCRIPTION	ELEC NODE	FIRE AREA/ZONE		SCHEM.	CABLE			
10	SW-V5	Secondary Component Cooling Water Heat Exchanger Header Supply Valve	SW-20795	B	310767	PAB-F-1K-Z	X	X	X	-	VQ1	SW-DA2-52	460 V AC Circuit Breaker	DA2	CB-F-1B-A	DA2-VQ1 DA2-G2K DA2-G2K/1 DA2-G2K/2 DA2-VQ1/1	301107 DA2a	DA2c DA2d	CBA-FN-32 CBA-FN-33 EDE-MCC-612	SW-V4	
												SW-CS-6137-2	Control Switch with Indication	G2K	CB-F-1B-A						
												SW-SS-6137	Selector Switch	G2K	CB-F-1B-A						
												SW-DA2-42/O,C	Motor Starters	DA2	CB-F-1B-A						
												SW-DA2-49	Overload Relays	DA2	CB-F-1B-A						
												SW-ZS-V5	Valve Position Switch and Valve Open/Close Torque Switches	VQ1	PAB-F-1K-Z						
												SW-DA2-FU	Fuse	DA2	CB-F-1B-A						
11	SW-V15	CC-E-17A Outlet Valve	SW-20795	A	310767	PAB-F-3A-Z	X	X	X	-	VN1	SW-DA7-52	460 V AC Circuit Breaker	DA7	CB-F-1A-A	-	-	-	CBA-FN-19 CBA-FN-20	SW-V17	Note 1
12	SW-V16	Diesel Generator "A" Water Jacket Heat Exchanger Solenoid-Operated Valve	SW-20795	A	310767	PAB-F-3A-Z	X	X	X	X	UK6	EDE-E2T/2-72	125 V DC Circuit Breaker	E2T	CB-F-1A-A	-	-	-	CBA-FN-19 CBA-FN-20	SW-V18	Notes 2 and 3
13	SW-V17	CC-E-17B Outlet Valve	SW-20795	B	310767	PAB-F-3A-Z	X	X	X	-	VN2	SW-DA3-52	460 V AC Circuit Breaker	DA3	CB-F-1B-A	-	-	-	CBA-FN-32 CBA-FN-33	SW-V15	Note 1
14	SW-V18	Diesel Generator "B" Water Jacket Heat Exchanger Solenoid-Operated Valve	SW-20795	B	310767	PAB-F-3A-Z	X	X	X	X	UK7	EDE-E2U/2-72	125 V DC Circuit Breaker	E2U	CB-F-1B-A	-	-	-	CBA-FN-32 CBA-FN-33	SW-V16	Notes 2 and 3
15	SW-V19	Service Water Discharge to Sea Isolation Valve	SW-20795	B	310765	PAB-F-2C-Z	X	X	X	-	VN3	SW-DA4-52	460 V AC Circuit Breaker	DA4	CB-F-1B-A	DA4-VN3 DA4-VN3/1 DA4-VN3/2 DA4-GN0 DA4-E3Q	301107 DA4a	DA4c	CBA-FN-32 CBA-FN-33 EDE-MCC-612	SW-V20	
												SW-CS-6172-1	Control Switch with Indication	DA4	CB-F-1B-A						
												SW-SS-8257	Selector Switch	DA4	CB-F-1B-A						
												SW-DA4-42/O,C	Motor Starters	DA4	CB-F-1B-A						
												SW-DA4-49	Overload Relays	DA4	CB-F-1B-A						
												SW-ZS-V19	Valve Position Switch and Valve Open/Close Torque Switches	VN3	PAB-F-2C-Z						
												SW-DA4-FU2/FU	Fuse	DA4	CB-F-1B-A						
												SW-GN0-RTB-2	Auxiliary Relay	GN0	CB-F-1B-A						
												SW-DA4-R1	Auxiliary Relay	E3Q	CB-F-1B-A						
16	SW-V20	Service Water Discharge to Sea Isolation Valve	SW-20795	A	310765	PAB-F-2C-Z	X	X	X	-	VN4	SW-DA8-52	460 V AC Circuit Breaker	DA8	CB-F-1A-A	-	-	-	CBA-FN-19 CBA-FN-20	SW-V19	Note 1
17	SW-V23	Service Water to Cooling Tower Isolation Valve	SW-20795	B	310765	PAB-F-2C-Z	X	X	X	-	VN5	SW-DA5-52	460 V AC Circuit Breaker	DA5	CB-F-1B-A	-	-	-	CBA-FN-32 CBA-FN-33	SW-V34	Note 1

FUNCTION: SERVICE WATER

ITEM NO.	EQUIPMENT ID NO.	EQUIPMENT DESCRIPTION	P&ID/1-LINE DRAWING NO.	TRAIN	PHYSICAL LOCATION DRAWING NO.	FIRE AREA/ZONE	REQUIRED FOR		POWER		ELEC NODE	SUPPORTING CONTROL AND INSTRUMENTATION EQUIPMENT				CABLES	ELECTRICAL DRAWING NO.		SUPPORTING SYSTEMS	REDUNDANT COUNTERPART	REMARKS
							HOT STAND BY	COLD SHUT DOWN	ELEC	AIR		EQUIPMENT ID NO.	EQUIPMENT DESCRIPTION	ELEC NODE	FIRE AREA/ZONE		SCHEM.	CABLE			
18	SW-V25	Cooling Tower Pump Discharge Valve	SW-20794	B	310717	CT-F-2B-A	X	X	X	-	VM8	SW-CQ7-52	460 V AC Circuit Breaker	CQ7	CT-F-1C-A	CQ7-G2K CQ7-VM8/1 CQ7-VM8/2 G2K-GNO/3	301107 CQ7a	CQ7c	CBA-FN-32 CBA-FN-33	SW-V54	Notes 1 and 6
												SW-CS-6174-2	Control Switch with Indication	G2K	CB-F-1B-A						
												SW-SS-6174	Selector Switch	G2K	CB-F-1B-A						
												SW-CQ7-42/O,C	Motor Starters	CQ7	CT-F-1C-A						
												SW-CQ7-49	Overload Relay	CQ7	CT-F-1C-A						
												SW-ZS-V25	Valve Position Switch and Valve Open/Close Torque Switches	VM8	CT-F-2B-A						
												SW-GNO-RV25	Auxiliary Relay	GNO	CB-F-1B-A	GNO-VM8	E2U/1a	E2U/1b	CBA-FN-32 CBA-FN-33		Note 6
												SW-VM8-V25	Position Switch	VM8	CT-F-2B-A						
												SW-CQ7-R1	Auxiliary Relay	EE7	CT-F-1C-A						
19	SW-V34	Service Water to Cooling Tower Outlet Valve	SW-20795	A	310765	PAB-F-2C-Z	X	X	X	-	VN6	SW-DA9-52	460 V ac Circuit Breaker	DA9	CB-F-1A-A	-	-	-	CBA-FN-19 CBA-FN-20	SW-V23	Note 1
20	SW-V44	Service Water Unit Pumps Intake Valve	SW-20794	A	301037	SW-F-2-0	X	X	X	-	VM1	SW-CU5-52	460 V ac Circuit Breaker	CU5	SW-F-1B-A	-	-	-		None	Note 7
21	SW-V54	Cooling Tower Pump Discharge Valve	SW-20794	A	301717	CT-F-2B-A	X	X	X	-	VM5	SW-CP8-52	460 V ac Circuit Breaker	CP8	CT-F-1D-A	CP8-G2H CP8-VM5 CP8-VM5/1 CP8-VM5/2 G2H-GN9/5	310107 CP8a	CP8c	CBA-FN-19 CBA-FN-20	SW-V25	Notes 1 and 6
												SW-CS-6164-2	Control Switch with Indication	G2H	CB-F-1A-A						
												SW-SS-6164	Selector Switch	G2H	CB-F-1A-A						
												SW-CP8-42/O,C	Motor Starters	CP8	CT-F-1D-A						
												SW-CP8-49	Overload Relay	CP8	CT-F-1D-A						
												SW-ZS-V54	Valve Position Switch and Valve Open/Close Torque Switches	VM5	CT-F-2B-A						
												SW-CP8-FU	Fuse	CP8	CT-F-1D-A						
												SW-GN9-RV54	Auxiliary Relay	GN9	CB-F-1A-A	GN9-VM5	E2T/1a	E2T/1b	CBA-FN-19 CBA-FN-20		Note 6
												SW-ZS-V54	Position Switch	VM5	CT-F-2B-A						
22	SW-V63	Service Water Discharge Valve to Intake	SW-20794	A	301037	SW-F-2-0	X	X	X	-	VQ0	SW-DZ3-52	460 V AC Circuit Breaker	DZ3	SW-F-1B-A	-	-	-		None	Note 7
23	EDE-CP-248	Service Water Cooling Tower Actuation Logic (TA)	-	A	310442	CB-F-1A-A	X	X	X	-	GN9	SW-E87/4-72	125 V DC Circuit Breaker	E87	CB-F-1A-A	-	-	-	CBA-FN-19 CBA-FN-20	EDE-CP-249	Note 1
24	EDE-CP-249	Service Water Cooling Water Actuation Logic (TA)	-	B	310442	CB-F-1B-A	X	X	X	-	GNO	SW-E88/4-72	125 V DC Circuit Breaker	E88	CB-F-1B-A	-	-	-	CBA-FN-32 CBA-FN-33	EDE-CP-248	Note 1

FUNCTION: PRIMARY COMPONENT COOLING WATER

ITEM NO.	EQUIPMENT ID NO.	EQUIPMENT DESCRIPTION	P&ID/1-LINE DRAWING NO.	TRAIN	PHYSICAL LOCATION DRAWING NO.	FIRE AREA/ZONE	REQUIRED FOR		POWER		ELEC NODE	SUPPORTING CONTROL AND INSTRUMENTATION EQUIPMENT				CABLES	ELECTRICAL DRAWING NO.		SUPPORTING SYSTEMS	REDUNDANT COUNTERPART	REMARKS
							HOT STAND BY	COLD SHUT DOWN	ELEC	AIR		EQUIPMENT ID NO.	EQUIPMENT DESCRIPTION	ELEC NODE	FIRE AREA/ZONE		SCHEM.	CABLE			
1	CC-P-11A	PCCW Loop "A" Pump "A"	CC-20205	A	310765	PAB-F-2C-Z	X	X	X	-	M05	CC-A58-52	4160 V AC Circuit Breaker	A58	CB-F-1A-A	A58-M05/1	310895 A58a A58b A58c A58d	A58h	CBA-FN-19 CBA-FN-20 PAH-FN-42A EDE-SWG-5	CC-P-11B or CC-P-11D	
												CC-CS-2140-2	Control Switch	A58	CB-F-1A-A						
												CC-SS-2140	Selector Switch	A58	CB-F-1A-A						
												EDE-A53-94-1A	Bus Undervoltage Relay	A53	CB-F-1A-A						
												CC-A58-52H	Truck-Operated Contact	A58	CB-F-1A-A						
												CC-A58-50/51	Instrument/Time Overcurrent Relays øA, øC	A58	CB-F-1A-A						
												CC-A58-86	Lockout Relay	A58	CB-F-1A-A						
												CC-A58-AM	Ammeter	A58	CB-F-1A-A						
												CC-A58-AS	Ammeter Switch	A58	CB-F-1A-A						
												CC-A58-CT	Current Transformer (150/5)	A58	CB-F-1A-A						
												CC-A58-TD1	CT Test Device	A58	CB-F-1A-A						
												CC-A58-ATR	Transducer	A58	CB-F-1A-A						
												CC-A58-TD2	Lockout Relay Test Device	A58	CB-F-1A-A						
												CC-A58-FU	Fuses	A58	CB-F-1A-A						
												CC-A58-52Z	Timing Relay	A58	CB-F-1A-A						
												CC-A58-G,R,W	Indicating Lights	A58	CB-F-1A-A						
												CC-A58-51GS	Ground Sensor Relay	A58	CB-F-1A-A						
												CC-A59-52S	Mechanical Operated Switch	A59	CB-F-1A-A						
												CC-A58-62	Time Delay Relay	A58	CB-F-1A-A						

Notes
1. The equipment is mechanical with no electrical requirement.
2. During normal operation, the valve is in its safe shutdown position. To prevent spurious operation, this equipment will be disabled at the appropriate control location.
3. Electrical Conduit Plan Drawing 310765 is listed only to show the fire zone corresponding to the location of the Heat Exchangers CC-E-17A and CC-E-17B as identified in Drawing 805217.
4. The valve will be operated locally using the handwheel when establishing RHR flow for the second phase of cooldown.
5. Electrical Conduit Plan Drawings 310581 is listed only to show the fire zone corresponding to the location of CC-TK-196 as identified in Drawing 805193.
6. Refer to Table 3.1.3-4 for MM-UQ-5866, MM-UQ-5867, MM-UQ-5868, and MM-UQ-5869.
7. These valves are in the open position with their circuit breakers locked open to prevent spurious operation.

FUNCTION: PRIMARY COMPONENT COOLING WATER

ITEM NO.	EQUIPMENT ID NO.	EQUIPMENT DESCRIPTION	P&ID/1-LINE DRAWING NO.	TRAIN	PHYSICAL LOCATION DRAWING NO.	FIRE AREA/ZONE	REQUIRED FOR		POWER		ELEC NODE	SUPPORTING CONTROL AND INSTRUMENTATION EQUIPMENT				CABLES	ELECTRICAL DRAWING NO.		SUPPORTING SYSTEMS	REDUNDANT COUNTERPART	REMARKS
							HOT STAND BY	COLD SHUT DOWN	ELEC	AIR		EQUIPMENT ID NO.	EQUIPMENT DESCRIPTION	ELEC NODE	FIRE AREA/ZONE		SCHEM.	CABLE			
2	CC-P-11B	PCCW Loop "B" Pump "B"	CC-20211	B	310765	PAB-F-2C-Z	X	X	X	-	M06	CC-A78-52	4160 V AC Circuit Breaker	A78	CB-F-1B-A	A78-M06/1	310895 A78a A78b A78c A78d	A78h	CBA-FN-32 CBA-FN-33 PAH-FN-42B EDE-SWG-6	CC-P-11A or CC-P-11C	
												CC-CS-2240-2	Control Switch	A78	CB-F-1B-A						
												CC-SS-2240	Selector Switch	A78	CB-F-1B-A						
												EDE-A73-94-1A	Bus Undervoltage Relay	A73	CB-F-1B-A						
												CC-A78-52H	Truck-Operated Contact	A78	CB-F-1B-A						
												CC-A78-50/51	Instrument/Time Overcurrent Relays øA, øC	A78	CB-F-1B-A						
												CC-A78-86	Lockout Relay	A78	CB-F-1B-A						
												CC-A78-AM	Ammeter	A78	CB-F-1B-A						
												CC-A78-AS	Ammeter Switch	A78	CB-F-1B-A						
												CC-A78-CT	Current Transformer (150/5)	A78	CB-F-1B-A						
												CC-A78-TD1	CT Test Device	A78	CB-F-1B-A						
												CC-A78-ATR	Transducer	A78	CB-F-1B-A						
												CC-A78-TD2	Lockout Relay Test Device	A78	CB-F-1B-A						
												CC-A78-FU	Fuses	A78	CB-F-1B-A						
												CC-A78-52Z	Timing Relay	A78	CB-F-1B-A						
												CC-A78-G,R,W	Indicating Lights	A78	CB-F-1B-A						
												CC-A78-51GS	Ground Sensor Relay	A78	CB-F-1B-A						
												CC-A79-52S	Mechanical-Operated Switch	A79	CB-F-1B-A						
												CC-A78-62	Time Delay Relay	A78	CB-F-1B-A						

FUNCTION: PRIMARY COMPONENT COOLING WATER

ITEM NO.	EQUIPMENT ID NO.	EQUIPMENT DESCRIPTION	P&ID/1-LINE DRAWING NO.	TRAIN	PHYSICAL LOCATION DRAWING NO.	FIRE AREA/ZONE	REQUIRED FOR		POWER		ELEC NODE	SUPPORTING CONTROL AND INSTRUMENTATION EQUIPMENT				CABLES	ELECTRICAL DRAWING NO.		SUPPORTING SYSTEMS	REDUNDANT COUNTERPART	REMARKS
							HOT STAND BY	COLD SHUT DOWN	ELEC	AIR		EQUIPMENT ID NO.	EQUIPMENT DESCRIPTION	ELEC NODE	FIRE AREA/ZONE		SCHEM.	CABLE			
3	CC-P-11C	PCCW Loop "A" Pump "C"	CC-20205	A	310766	PAB-F-2C-Z	X	X	X	-	M07	CC-A59-52	4160 V AC Circuit Breaker	A59	CB-F-1A-A	A59-M07/1	310895 A59a A59b A59c A59d	A59h	CBA-FN-19 CBA-FN-20 PAH-FN-42A EDE-SWG-5	CC-P-11B or CC-P-11D	
												CC-CS-2141-2	Control Switch	A59	CB-F-1A-A						
												CC-SS-2141	Selector Switch	A59	CB-F-1A-A						
												EDE-A53-94-1A	Bus Undervoltage Relay	A53	CB-F-1A-A						
												CC-A59-52H	Truck-Operated Contact	A59	CB-F-1A-A						
												CC-A59-50/51	Instrument/Time Overcurrent Relays øA, øC	A59	CB-F-1A-A						
												CC-A59-86	Lockout Relay	A59	CB-F-1A-A						
												CC-A59-AM	Ammeter	A59	CB-F-1A-A						
												CC-A59-AS	Ammeter Switch	A59	CB-F-1A-A						
												CC-A59-CT	Current Transformer (150/5)	A59	CB-F-1A-A						
												CC-A59-TD1	CT Test Device	A59	CB-F-1A-A						
												CC-A59-ATR	Transducer	A59	CB-F-1A-A						
												CC-A59-TD2	Lockout Relay Test Device	A59	CB-F-1A-A						
												CC-A59-FU	Fuses	A59	CB-F-1A-A						
												CC-A59-52Z	Timing Relay	A59	CB-F-1A-A						
												CC-A59-G,R,W	Indicating Lights	A59	CB-F-1A-A						
												CC-A59-51GS	Ground Sensor Relay	A59	CB-F-1A-A						
												CC-A58-52S	Mechanical-Operated Switch	A58	CB-F-1A-A						
												CC-A59-62	Time Delay Relay	A59	CB-F-1A-A						

FUNCTION: PRIMARY COMPONENT COOLING WATER

ITEM NO.	EQUIPMENT ID NO.	EQUIPMENT DESCRIPTION	P&ID/1-LINE DRAWING NO.	TRAIN	PHYSICAL LOCATION DRAWING NO.	FIRE AREA/ZONE	REQUIRED FOR		POWER		ELEC NODE	SUPPORTING CONTROL AND INSTRUMENTATION EQUIPMENT				CABLES	ELECTRICAL DRAWING NO.		SUPPORTING SYSTEMS	REDUNDANT COUNTERPART	REMARKS
							HOT STAND BY	COLD SHUT DOWN	ELEC	AIR		EQUIPMENT ID NO.	EQUIPMENT DESCRIPTION	ELEC NODE	FIRE AREA/ZONE		SCHEM.	CABLE			
4	CC-P-11D	PCCW Loop "B" Pump "D"	CC-20211	B	310766	PAB-F-2C-Z	X	X	X	-	M08	CC-A79-52	4160 V AC Circuit Breaker	A79	CB-F-1B-A	A79-M08/1	310895 A79a A79b A79c A79d	A79h	CBA-FN-32 CBA-FN-33 PAH-FN-42B EDE-SWG-6	CC-P-11A or CC-P-11C	
												CC-CS-2241-2	Control Switch	A79	CB-F-1B-A						
												CC-SS-2241	Selector Switch	A79	CB-F-1B-A						
												EDE-A73-94-1A	Bus Undervoltage Relay	A73	CB-F-1B-A						
												CC-A79-52H	Truck-Operated Contact	A79	CB-F-1B-A						
												CC-A79-50/51	Instrument/Time Overcurrent Relays øA, øC	A79	CB-F-1B-A						
												CC-A79-86	Lockout Relay	A79	CB-F-1B-A						
												CC-A79-AM	Ammeter	A79	CB-F-1B-A						
												CC-A79-AS	Ammeter Switch	A79	CB-F-1B-A						
												CC-A79-CT	Current Transformer (150/5)	A79	CB-F-1B-A						
												CC-A79-TD1	CT Test Device	A79	CB-F-1B-A						
												CC-A79-ATR	Transducer	A79	CB-F-1B-A						
												CC-A79-TD2	Lockout Relay Test Device	A79	CB-F-1B-A						
												CC-A79-FU	Fuses	A79	CB-F-1B-A						
												CC-A79-52Z	Timing Relay	A79	CB-F-1B-A						
												CC-A79-G,R,W	Indicating Lights	A79	CB-F-1B-A						
												CC-A79-51GS	Ground Sensor Relay	A79	CB-F-1B-A						
												CC-A78-52S	Mechanical-Operated Switch	A78	CB-F-1B-A						
												CC-A79-62	Time Delay Relay	A79	CB-F-1B-A						
5	CC-TV-2171-1	Primary Component Cooling Water Heat Exchanger E-17A Temperature Control Valve	CC-20205	A	310765	PAB-F-2C-Z	X	X	X	X	UN6	CC-E2T/3-72	125 V DC Circuit Breaker	E2T	CB-F-1A-A	E2T-G81 G81-G2M G81-UN6/1 G81-UN7/1 G81-GN9/A	310895 E2T/3a	E2T/3c E2T/3d	CBA-FN-19 CBA-FN-20 PAH-FN-42A EDE-PP-113A Instrument Air	CC-TV-2271-1	Note 6
												CC-SS-2171	Selector Switch	G81	CB-F-1A-A						
												CC-GN9-R1	Auxiliary Relay	GN9	CB-F-1A-A						
												CC-TY-2171-1	Pilot Solenoid	G2M	PAB-F-2C-Z						
												CC-ZL-2171-5	Valve Position Indicating Lights	G81	CB-F-1A-A						
												CC-ZS-TV-2171-1	Valve Position Switch	UN6	PAB-F-2C-Z						
												CC-SS-2171	Selector Switch	G81	CB-F-1A-A	G81-G2M/2	310895 4c FP 71337 16	310952 FK0d FK0f	CBA-FN-19 CBA-FN-20 PAH-FN-42A MM-UQ-5866 NM-UQ-5867 Instrument Air		
												CC-HIC-2171	Auto/Manual Controller with Indicator	G81	CB-F-1A-A						
												CC-HQY-2171	E/E Converter	G2H	CB-F-1A-A						
												CC-HY-2171	E/I Converter	G2H	CB-F-1A-A						
												CC-TY-2171-4	I/P Converter	G2M	PAB-F-2C-Z						
												CC-TY-2171-5	I/P Converter	G2M	PAB-F-2C-Z						

FUNCTION: PRIMARY COMPONENT COOLING WATER

ITEM NO.	EQUIPMENT ID NO.	EQUIPMENT DESCRIPTION	P&ID/1-LINE DRAWING NO.	TRAIN	PHYSICAL LOCATION DRAWING NO.	FIRE AREA/ZONE	REQUIRED FOR		POWER		ELEC NODE	SUPPORTING CONTROL AND INSTRUMENTATION EQUIPMENT				CABLES	ELECTRICAL DRAWING NO.		SUPPORTING SYSTEMS	REDUNDANT COUNTERPART	REMARKS
							HOT STAND BY	COLD SHUT DOWN	ELEC	AIR		EQUIPMENT ID NO.	EQUIPMENT DESCRIPTION	ELEC NODE	FIRE AREA/ZONE		SCHEM.	CABLE			
6	CC-TV-2171-2	Primary Component Cooling Water Heat Exchanger E-17A Temperature Control Valve	CC-20205	A	310765	PAB-F-2C-E	X	X	X	X	UN7	CC-E2T/3-72	125 V DC Circuit Breaker	E2T	CB-F-1A-A	E2T-G81 G81-G2M G81-UN6/1 G81-UN7/1 G81-GN9/A	310895 E2T/3a	E2T/3c E2T/3d	CBA-FN-19 CBA-FN-20 PAH-FN-42A EDE-PP-113A Instrument Air	CC-TV-2271-2	Note 6
												CC-SS-2171	Selector Switch	G81	CB-F-1A-A						
												CC-GN9-R1	Auxiliary Relay	GN9	CB-F-1A-A						
												CC-TY-2171-2	Pilot Solenoid	G2M	PAB-F-2C-Z						
												CC-ZL-2171-6	Valve Position Indicating Lights	G81	CB-F-1A-A						
												CC-ZS-TV-2171-2	Valve Position Switch	UN7	PAB-F-2C-Z						
												CC-SS-2171	Selector Switch	G81	CB-F-1A-A	G81-G2M/2	310895 4c FP 71337 16	310952 FK0d FK0f	CBA-FN-19 CBA-FN-20 PAH-FN-42A MM-UQ-5866 MM-UQ-5867 Instrument Air		
												CC-HIC-2171	Auto/Manual Controller with Indicator	G81	CB-F-1A-A						
												CC-HQY-2171	E/E Converter	G2H	CB-F-1A-A						
												CC-HY-2171	E/I Converter	G2H	CB-F-1A-A						
												CC-TY-2171-4	I/P Converter	G2M	PAB-F-2C-Z						
												CC-TY-2171-5	I/P Converter	G2M	PAB-F-2C-Z						
7	CC-TV-2271-1	Primary Component Cooling Water Heat Exchanger E-17B Temperature Control Valve	CC-20211	B	310765	PAB-F-2C-Z	X	X	X	X	UP9	CC-E2U/3-72	125 V DC Circuit Breaker	E2U	CB-F-1B-A	E2U-GN0/6 E2U-GZ0 GN0-GZ0/5 GN0-GZ0/9 GZ0-UP9/1 GZ0-UP0/1 GZ0-UI2	310895 E2U/3a	E2U/3c E2U/3d	CBA-FN-32 CBA-FN-33 PAH-FN-42B EDE-PP-113B Instrument Air	CC-TV-2171-1	Note 6
												CC-SS-2271	Selector Switch	GZ0	CB-F-1B-A						
												CC-GN0-R1	Auxiliary Relay	GN0	CB-F-1B-A						
												CC-TY-2271-1	Pilot Solenoid	UI2	PAB-F-2C-Z						
												CC-ZL-2271-5	Valve Position Indicating Lights	GZ0	CB-F-1B-A						
												CC-ZS-TV-2271-1	Valve Position Switch	UP9	PAB-F-2C-Z						
												CC-GN0-R2	Auxiliary Relay	GN0	CB-F-1B-A						
												CC-SS-2271	Selector Switch	GZ0	CB-F-1B-A	GZ0-Q60	310895 4c FP 71336 3	3108952 FJ4j FJ4n	CBA-FN-32 CBA-FN-33 PAH-FN-42B MM-UQ-5868 MM-UQ-5869 Instrument Air		
												CC-HIC-2271	Auto/Manual Controller with Indicator	GZ0	CB-F-1B-A						
												CC-HQY-2271	E/E Converter	GZ0	CB-F-1B-A						
												CC-HY-2271	E/I Converter	GZ0	CB-F-1B-A						
												CC-TY-2271-4	I/P Converter	Q60	PAB-F-2C-Z						
												CC-TY-2271-5	I/P Converter	Q60	PAB-F-2C-Z						

FUNCTION: PRIMARY COMPONENT COOLING WATER

ITEM NO.	EQUIPMENT ID NO.	EQUIPMENT DESCRIPTION	P&ID/1-LINE DRAWING NO.	TRAIN	PHYSICAL LOCATION DRAWING NO.	FIRE AREA/ZONE	REQUIRED FOR		POWER		ELEC NODE	SUPPORTING CONTROL AND INSTRUMENTATION EQUIPMENT				CABLES	ELECTRICAL DRAWING NO.		SUPPORTING SYSTEMS	REDUNDANT COUNTERPART	REMARKS
							HOT STAND BY	COLD SHUT DOWN	ELEC	AIR		EQUIPMENT ID NO.	EQUIPMENT DESCRIPTION	ELEC NODE	FIRE AREA/ZONE		SCHEM.	CABLE			
8	CC-TV-2271-2	Primary Component Cooling Water Heat Exchanger E-17B Temperature Control Valve	CC-20211	B	310765	PAB-F-2C-Z	X	X	X	X	UP0	CC-E2U/3-72	125 V DC Circuit Breaker	E2U	CB-F-1B-A	E2U-GN0/6 E2U-GZ0 GN0-GZ0/5 GN0-GZ0/9 GZ0-UP9/1 GZ0-UP0/1 GZ0-UI2	310895 E2U/3a	E2U/3c E2U/3d	CBA-FN-32 CBA-FN-33 PAH-FN-42B EDE-PP-113B Instrument Air	CC-TV-2171-2	Note 6
												CC-SS-2271	Selector Switch	GZ0	CB-F-1B-A						
												CC-GN0-R1	Auxiliary Relay	GN0	CB-F-1B-A						
												CC-TY-2271-2	Pilot Solenoid	UI2	PAB-F-2C-Z						
												CC-ZL-2271-6	Valve Position Indicating Lights	GZ0	CB-F-1B-A						
												CC-ZS-TV-2271-2	Valve Position Switch	UP0	PAB-F-2C-Z						
												CC-GN0-R2	Auxiliary Relay	GN0	CB-F-1B-A						
												CC-SS-2271	Selector Switch	GZ0	CB-F-1B-A	GZ0-Q60	310895 4c FP 71336 3	3108952 FJ4j FJ4n	CBA-FN-32 CBA-FN-33 PAH-FN-42B MM-UQ-5868 MM-UQ-5869 Instrument Air		
												CC-HIC-2271	Auto/Manual Controller with Indicator	GZ0	CB-F-1B-A						
												CC-HQY-2271	E/E Converter	GZ0	CB-F-1B-A						
												CC-HY-2271	E/I Converter	GZ0	CB-F-1B-A						
												CC-TY-2271-4	I/P Converter	Q60	PAB-F-2C-Z						
												CC-TY-2271-5	I/P Converter	Q60	PAB-F-2C-Z						
9	CC-E-17A	Primary Component Cooling Water Heater Exchanger	CC-20205	A	310765 805217	PAB-F-2C-Z PAB-F-3A-Z	X	X	-	-	-	-	-	-	-	-	-	-	Service Water	CC-E-17B	Notes 1,3
10	CC-E-17B	Primary Component Cooling Water Heater Exchanger	CC-20211	B	310765 805217	PAB-F-2C-Z PAB-F-3A-Z	X	X	-	-	-	-	-	-	-	-	-	-	Service Water	CC-E-17A	Notes 1,3
11	CC-V-145	RH-E-9A Return Header Isolation Valve	CC-20207	A	310763	RHR-F-3B-Z	-	X	X	-	V78	CC-BY2-52	460 V AC Circuit Breaker	BY2	CB-F-1A-A	-	-	-	EAH-FN-5A EAH-FN-31A	CC-V-272	Note 4
12	CC-V-272	RH-E-9B Return Header Isolation Valve	CC-20213	B	310763	RHR-F-3A-Z	-	X	X	-	V72	CC-BY8-52	460 V AC Circuit Breaker	BY8	CB-F-1B-A	-	-	-	EAH-FN-5B EAH-FN-31B	CC-V-145	Note 4
13	CC-P-322A	Thermal Barrier PCCW Recirc Pump	CC-20209	A	310576	C-F-1-Z	X	X	X	-	M1D	CC-B4M-52-1,2	460 V AC Circuit Breakers	B4M	CB-F-1A-A	B4M-H18 H18-M1D B4M-G81	310895 B4Ma	B4Mc	CBA-FN-19 CBA-FN-20 EDE-MCC-515	CC-P-322B	
												CC-CS-2077-2	Control Switch with Indication	G2G	CB-F-1A-A						
												CC-SS-2077	Selector Switch	G2G	CB-F-1A-A						
												CC-B4M-42	Motor Starter	B4M	CB-F-1A-A						
												CC-B4M-49	Overload Relay	B4M	CB-F-1A-A						
												EDE-MM-94	Electrical Penetration	H18	C-F-2-Z, ET-F-1A-A						
												CC-B4M-FU	Fuse	B4M	CB-F-1A-A						

FUNCTION: PRIMARY COMPONENT COOLING WATER

ITEM NO.	EQUIPMENT ID NO.	EQUIPMENT DESCRIPTION	P&ID/1-LINE DRAWING NO.	TRAIN	PHYSICAL LOCATION DRAWING NO.	FIRE AREA/ZONE	REQUIRED FOR		POWER		ELEC NODE	SUPPORTING CONTROL AND INSTRUMENTATION EQUIPMENT				CABLES	ELECTRICAL DRAWING NO.		SUPPORTING SYSTEMS	REDUNDANT COUNTERPART	REMARKS
							HOT STAND BY	COLD SHUT DOWN	ELEC	AIR		EQUIPMENT ID NO.	EQUIPMENT DESCRIPTION	ELEC NODE	FIRE AREA/ZONE		SCHEM.	CABLE			
14	CC-P-322B	Thermal Barrier PCCW Recirc Pump	CC-20209	B	310577	C-F-1-Z	X	X	X	-	M1E	CC-B4Q-52-1,2	460 V AC Circuit Breaker	B4Q	CB-F-1B-A	B4Q-H15 H15-M1E B4Q-GZ0	310895 B4Qa	B4Qc	CBA-FN-32 CBA-FN-33 EDE-MCC-615	CC-P-322A	
												CC-CS-2078-2	Control Switch with Indication	G2J	CB-F-1B-A						
												CC-SS-2078	Selector Switch	G2J	CB-F-1B-A						
												CC-B4Q-42	Motor Starter	B4Q	CB-F-1B-A						
												CC-B4Q-49	Overload Relay	B4Q	CB-F-1B-A						
												EDE-MM-91	Electrical Penetration	H15	C-F-1-Z, ET-F-1C-A						
												CC-B4Q-FU	Fuse	B4Q	CB-F-1B-A						
15	CC-E-153A	Thermal Barrier Heat Exchanger	CC-20209	A	310576	C-F-1-Z	X	X	-	-	-	-	-	-	-	-	-	-	-	CC-E-153B	Note 1
16	CC-E-153B	Thermal Barrier Heat Exchanger	CC-20209	B	310577	C-F-1-Z	X	X	-	-	-	-	-	-	-	-	-	-	-	CC-E-153A	Note 1
17	CC-V-1101	Thermal Barrier HX CC-E-153A Isolation Valve	CC-20209	A	310769	PP-F-3A-Z	X	X	X	-	V2S	CC-B4K-52	460 V AC Circuit Breaker	B4K	CB-F-1A-A	-	-	-	CBA-FN-19 CBA-FN-20	CC-V-1092	Note 2
18	CC-V-1109	Thermal Barrier HX CC-E-153A Isolation Valve	CC-20209	A	310769	PP-F-3A-Z	X	X	X	-	V2T	CC-B4L-52	460 V AC Circuit Breaker	B4L	CB-F-1A-A	-	-	-	CBA-FN-19 CBA-FN-20	CC-V-1095	Note 2
19	CC-V-1092	Thermal Barrier HX CC-E-153B Isolation Valve	CC-20209	B	310769	PP-F-4B-Z	X	X	X	-	V2V	CC-B4P-52	460 V AC Circuit Breaker	B4P	CB-F-1B-A	-	-	-	CBA-FN-32 CBA-FN-33	CC-V-1101	Note 2
20	CC-V-1095	Thermal Barrier HX CC-E-153B Isolation Valve	CC-20209	B	310769	PP-F-4B-Z	X	X	X	-	V2U	CC-B4N-52	460 V AC Circuit Breaker	B4N	CB-F-1B-A	-	-	-	CBA-FN-32 CBA-FN-33	CC-V-1109	Note 2
21	CC-V-428	RC-P-1A Thermal Barrier Isolation Valve	CC-20209	A	310578	C-F-2-Z	X	X	X	-	V74	CC-BY4-52-1	460 V AC Circuit Breaker	BY4	CB-F-1A-A	-	-	-	CBA-FN-19 CBA-FN-20	None	Note 7
22	CC-V-438	RC-P-1C Thermal Barrier Isolation Valve	CC-20209	B	310579	C-F-2-Z	X	X	X	-	V76	CC-BY6-52-1	460 V AC Circuit Breaker	BY6	CB-F-1B-A	-	-	-	CBA-FN-32 CBA-FN-33	None	Note 7
23	CC-V-439	RC-P-1D Thermal Barrier Isolation Valve	CC-20209	A	310579	C-F-2-Z	X	X	X	-	V70	CC-BY7-52-1	460 V AC Circuit Breaker	BY7	CB-F-1A-A	-	-	-	CBA-FN-19 CBA-FN-20	None	Note 7
24	CC-V-395	RC-P-1B Thermal Barrier Isolation Valve	CC-20209	B	310578	C-F-2-Z	X	X	X	-	V69	CC-BY5-52-1	460 V AC Circuit Breaker	BY5	CB-F-1B-A	-	-	-	CBA-FN-32 CBA-FN-33	None	Note 7
25	CC-TK-196	Thermal Barrier Loop Head Tank	CC-20209	A/B	310581 805193	C-F-3-Z	X	X	-	-	-	-	-	-	-	-	-	-	-	None	Notes 1,5

FUNCTION: PRIMARY COMPONENT COOLING WATER

ITEM NO.	EQUIPMENT ID NO.	EQUIPMENT DESCRIPTION	P&ID/1-LINE DRAWING NO.	TRAIN	PHYSICAL LOCATION DRAWING NO.	FIRE AREA/ZONE	REQUIRED FOR		POWER		ELEC NODE	SUPPORTING CONTROL AND INSTRUMENTATION EQUIPMENT				CABLES	ELECTRICAL DRAWING NO.		SUPPORTING SYSTEMS	REDUNDANT COUNTERPART	REMARKS
							HOT STAND BY	COLD SHUT DOWN	ELEC	AIR		EQUIPMENT ID NO.	EQUIPMENT DESCRIPTION	ELEC NODE	FIRE AREA/ZONE		SCHEM.	CABLE			
26	CC-TK-19A	Primary Component Cooling Water Head Tank	CC-20205	A	310767	PAB-F-3A-Z	X	X	-	-	-	-	-	-	-	-	-	-	-	CC-TK-19B	Note 1
27	CC-TK-19B	Primary Component Cooling Water Head Tank	CC-20211	B	310767	PAB-F-3A-Z	X	X	-	-	-	-	-	-	-	-	-	-	-	CC-TK-19A	Note 1

Table RSS 3.1.3.9 Deleted

FUNCTION: CONTROL BUILDING AIR HANDLING

ITEM NO.	EQUIPMENT ID NO.	EQUIPMENT DESCRIPTION	P&ID/1-LINE DRAWING NO.	TRAIN	PHYSICAL LOCATION DRAWING NO.	FIRE AREA/ZONE	REQUIRED FOR		POWER		ELEC NODE	SUPPORTING CONTROL AND INSTRUMENTATION EQUIPMENT				CABLES	ELECTRICAL DRAWING NO.		SUPPORTING SYSTEMS	REDUNDANT COUNTERPART	REMARKS
							HOT STAND BY	COLD SHUT DOWN	ELEC	AIR		EQUIPMENT ID NO.	EQUIPMENT DESCRIPTION	ELEC NODE	FIRE AREA/ZONE		SCHEM.	CABLE			
1	CBA-DP-24A	Mechanical Room "A" Outside Air Damper	CBA-20303	A	310443	CB-F-2B-A	X	X	X	X	V1A	CBA-FY-5550A	Pilot Solenoid	V1A	CB-F-2B-A	G4P-V1A G4P-V1B G4P-V1C G3C-G4P/5	310926		Instrument Air	CBA-DP-24F	Note 3,4
												FP-R1	Signal Actuating Output Relay	GP4	TB-F-2-Z		BK4a	BK4c			
												CBA-TIC-5571	Temperature Indicating Control (Pneumatic)	G3C	CB-F-2B-A						
												CBA-FY-5550B	Pilot Solenoid	V1B	CB-F-2B-A						
												CBA-FY-5550C	Pilot Solenoid	V1C	CB-F-2B-A						
2	CBA-DP-24B	Mechanical Room "A" Recirculating Air Damper	CBA-20303	A	310443	CB-F-2B-A	X	X	X	X	V1B	CBA-FY-5550B	Pilot Solenoid	V1B	CB-F-2B-A	G4P-V1A G4P-V1B G4P-V1C G3C-G4P/5	BK4a	BK4c	Instrument Air	CBA-DP-24E	Note 3,4
												FP-R1	Signal Actuating Output Relay	G4P	TB-F-2-Z						
												CBA-TIC-5571	Temperature Indicating Controller (Pneumatic)	G3C	CB-F-2B-A						
												CBA-FY-5550A	Pilot Solenoid	V1A	CB-F-2B-A						
												CBA-FY-5550C	Pilot Solenoid	V1C	CB-F-2B-A						
3	CBA-DP-24C	Mechanical Room "A" Return Air Damper	CBA-20303	A	310443	CB-F-2B-A	X	X	X	X	V1C	CBA-FY-5550C	Pilot Solenoid	V1C	CB-F-2B-A	G4P-V1A G4P-V1B G4P-V1C G3C-G4P/5	BK4a	BK4c	Instrument Air	CB-DP-24D	Note 3,4
												FP-R1	Signal Actuating Output Relay	G4P	TB-F-2-Z						
												CBA-TIC-5571	Temperature Indicating Controller (Pneumatic)	G3C	CB-F-2B-A						
												CBA-FY-5550A	Pilot Solenoid	V1A	CB-F-2B-A						
												CBA-FY-5550B	Pilot Solenoid	V1B	CB-F-2B-A						
4	CBA-DP-24D	Mechanical Room "B" Return Air Damper	CBA-20303	B	310443 604094	CB-F-2C-A	X	X	-	X	-	CBA-TIC-5572	Temperature Indicating Controller (Pneumatic)	-	CB-F-2C-A	-	-	-	Instrument Air	CBA-DP-24C	Notes 1,2,3,4
5	CBA-DP-24E	Mechanical Room "B" Recirculating Air	CBA-20303	B	310443 604094	CB-F-2C-A	X	X	-	X	-	CBA-TIC-5572	Temperature Indicating Controller (Pneumatic)	-	CB-F-2C-A	-	-	-	Instrument Air	CBA-DP-24B	Notes 1,2,3,4
6	CBA-DP-24F	Mechanical Room "B" Outside Air Damper	CBA-20303	B	310443 604094	CB-F-2C-A	X	X	-	X	-	CBA-TIC-5572	Temperature Indicating Controller (Pneumatic)	-	CB-F-2C-A	-	-	-	Instrument Air	CBA-DP-24A	Notes 1,2,3,4

Notes
1. Equipment is mechanical with no electrical requirements.
2. Electrical conduit Plan Drawing 310443, listed only to show fire zone correlation reference to control building area covered by HVAC Drawing 604094 where CBA Dampers 24 D, E, and F are identified in plan.
3. Process connections showing positioning of air operated dampers, DP-24A-F, by pneumatic temperature indicating controllers, CBA-TIC-5571 and 5572, are detailed on I&C Loop Diagrams 510159 and 510160.
4. Instrument air is required for normal positioning of dampers for area temperature control. Should IA fail, dampers 24A, 24B, 24E and 24F will fail "as is" and 24C and 24D fail open. The operators can start and stop fans to maintain switchgear room habitability.
5. Dampers fail open on loss of instrument air, which is the safe shutdown position.

FUNCTION: CONTROL BUILDING AIR HANDLING

ITEM NO.	EQUIPMENT ID NO.	EQUIPMENT DESCRIPTION	P&ID/1-LINE DRAWING NO.	TRAIN	PHYSICAL LOCATION DRAWING NO.	FIRE AREA/ZONE	REQUIRED FOR		POWER		ELEC NODE	SUPPORTING CONTROL AND INSTRUMENTATION EQUIPMENT				CABLES	ELECTRICAL DRAWING NO.		SUPPORTING SYSTEMS	REDUNDANT COUNTERPART	REMARKS
							HOT STAND BY	COLD SHUT DOWN	ELEC	AIR		EQUIPMENT ID NO.	EQUIPMENT DESCRIPTION	ELEC NODE	FIRE AREA/ZONE		SCHEM.	CABLE			
7	CBA-FN-19	Control Building Train "A" SWGR Supply Fan	CBA-20303	A	310443	CB-F-2B-A	X	X	X	-	N28	CBA-BL6-52	460 V ac Circuit Breaker	BL6	CB-F-1A-A	BL6-HR2/1 BL6-N28/2	310926 BL6a	BL6c	EDE-MCC-515	CBA-FN-32	
												CBA-CS-5552	Control Switch with Indication	BL6	CB-F-1A-A						
												DG-HR2-HR9X	EPS Step Loading Relay	HR2	CB-F-1A-A						
												DG-HR2-RMO	EPS Manual Override Relay	HR2	CB-F-1A-A						
												CBA-BL6-42	Motor Starter	BL6	CB-F-1A-A						
												CBA-BL6-42X	Motor Starter Auxiliary Relay	BL6	CB-F-1A-A						
												CBA-BL6-49	Overload Relays	BL6	CB-F-1A-A						
												CBA-BL6-FU	Fuse	BL6	CB-F-1A-A						
8	CBA-FN-20	Control Building Train "A" SWGR Return Fan	CBA-20303	A	310443	CB-F-2B-A	X	X	X	-	N30	CBA-BL7-52	460 V ac Circuit Breaker	BL7	CB-F-1A-A	BL7-HR2 BL7-N30/2	BL7a	BL7c	EDE-MCC-521	CBA-FN-33	-
												DG-HR2-RMO	EPS Manual Override Relay	HR2	CB-F-1A-A						
												CBA-BL7-42	Motor Starter	BL7	CB-F-1A-A						
												CBA-BL7-49	Overload Relays	BL7	CB-F-1A-A						
												CBA-BL7-FU	Fuse	BL7	CB-F-1A-A						
												CBA-CS-5554	Control Switch with Indication	BL7	CB-F-1A-A						
												DG-HR2-HR9X	EPS Step Loading Relay	HR2	CB-F-1A-A						
												CBA-BL7-42X	Motor Starter Auxiliary Relay	BL7	CB-F-1A-A						
9	CBA-FN-21A	Control Building Battery Room Exhaust Fan "A"	CBA-20303	A	310443	CB-F-2B-A	X	X	X	-	N32	CBA-BL8-52	460 V ac Circuit Breaker	BL8	CB-F-1A-A	BL8-N32 BL8-VV5/1 BL8-VV5	BL8a	BL8c	EDE-MCC-521	CBA-FN-21B	
												CBA-CS-5556	Control Switch with Indication	BL8	CB-F-1A-A						
												CBA-ZS-DP-21A	Damper Position Switch	VV5	CB-F-2B-A						
												CBA-BL8-42	Motor Starter	BL8	CB-F-1A-A						
												CBA-ZL-5556	Damper 21A Indicating Lights	BL8	CB-F-1A-A						
												CBA-BL8-49	Overload Relays	BL8	CB-F-1A-A						
												CBA-DP-21A-20	Pilot Solenoid	VV5	CB-F-2B-A						
												CBA-BL8-FU	Fuse	BL8	CB-F-1A-A						
10	CBA-DP-21A	Battery Room Exhaust Fan "A" Damper	CBA-20303	A	310443	CB-F-2B-A	X	X	X	X	VV5	CBA-BL8-52	460 V ac Circuit Breaker	BL8	CB-F-1A-A	BL8-VV5 BL8-VV5/1	BL8a	BL8c	EDE-MCC-521	CBA-DP-21B	Note 5
												CBA-BL8-FU	Fuse	BL8	CB-F-1A-A						
												CBA-CS-5556	Control Switch with Indication	BL8	CB-F-1A-A						
												CBA-DP-21A-20	Pilot Solenoid	VV5	CB-F-2B-A						

FUNCTION: CONTROL BUILDING AIR HANDLING

ITEM NO.	EQUIPMENT ID NO.	EQUIPMENT DESCRIPTION	P&ID/1-LINE DRAWING NO.	TRAIN	PHYSICAL LOCATION DRAWING NO.	FIRE AREA/ZONE	REQUIRED FOR		POWER		ELEC NODE	SUPPORTING CONTROL AND INSTRUMENTATION EQUIPMENT				CABLES	ELECTRICAL DRAWING NO.		SUPPORTING SYSTEMS	REDUNDANT COUNTERPART	REMARKS
							HOT STAND BY	COLD SHUT DOWN	ELEC	AIR		EQUIPMENT ID NO.	EQUIPMENT DESCRIPTION	ELEC NODE	FIRE AREA/ZONE		SCHEM.	CABLE			
11	CBA-FN-21B	Control Building Battery Room Exhaust Fan "B"	CBA-20303	B	310443	CB-F-2C-A	X	X	X	-	N33	CBA-BL5-52	460 V ac Circuit Breaker	BL5	CB-F-1B-A	BL5-N33 BL5-VV4/1 BL5-VV4	310926 BL5a	BL5c	EDE-MCC-621	CBA-FN-21A	
												CBA-CS-5557	Control Switch with Indication	BL5	CB-F-1B-A						
												CBA-ZS-DP-21B	Damper Position Switch	VV4	CB-F-2C-A						
												CBA-BL5-42	Motor Starter	BL5	CB-F-1B-A						
												CBA-ZL-5557	Damper 21B Indicating Lights	BL5	CB-F-1B-A						
												CBA-BL5-49	Overload Relays	BL5	CB-F-1B-A						
												CBA-DP-21B-20	Pilot Solenoid	VV4	CB-F-2C-A						
												CBA-BL5-FU	Fuse	BL5	CB-F-1B-A						
12	CBA-DP-21B	Battery Room Exhaust Fan "B" Damper	CBA-20303	B	310443	CB-F-2C-A	X	X	X	X	VV4	CBA-BL5-52	460 V ac Circuit Breaker	BL5	CB-F-1B-A	BL5-VV4 BL5-VV4/1	BL5a	BL5c	EDE-MCC-621	CBA-DP-21A	Note 5
												CBA-BL5-FU	Fuse	BL5	CB-F-1B-A						
												CBA-CS-5557	Control Switch	BL5	CB-F-1B-A						
												CBA-DP-21B-20	Pilot Solenoid	VV4	CB-F-2C-A						
13	CBA-FN-32	Control Building Train "B" SWGR Supply Fan	CBA-20303	B	310443	CB-F-2C-A	X	X	X	-	NH3	CBA-BL3-52	460 V ac Circuit Breaker	BL3	CB-F-1B-A	BL3-HR4 BL3-NH3	BL3a	BL3c	EDE-MCC-621	CBA-FN-19	
												CBA-CS-5559	Control Switch with Indication	BL3	CB-F-1B-A						
												DG-HR4-HR9X	EPS Step Loading Relay	HR4	CB-F-1B-A						
												DG-HR4-RMO	EPS Manual Override Relay	HR4	CB-F-1B-A						
												CBA-BL3-42	Motor Starter	BL3	CB-F-1B-A						
												CBA-BL3-42X	Motor Starter Auxiliary Relay	BL3	CB-F-1B-A						
												CBA-BL3-49	Overload Relays	BL3	CB-F-1B-A						
												CBA-BL3-FU	Fuse	BL3	CB-F-1B-A						
14	CBA-FN-33	Control Building Train "B" SWGR Return Fan	CBA-20303	B	310443	CB-F-2C-A	X	X	X	-	NH5	CBA-BL4-52	460 V ac Circuit Breaker	BL4	CB-F-1B-A	BL4-NR4 BL4-NH5	BL4a	BL4c	EDE-MCC-621	CBA-FN-20	
												CBA-CS-5561	Control Switch with Indication	BL4	CB-F-1B-A						
												DG-HR4-HR9X	EPS Step Loading Relay	HR4	CB-F-1B-A						
												CBA-BL4-42	Motor Starter	BL4	CB-F-1B-A						
												CBA-BL4-49	Overload Relays	BL4	CB-F-1B-A						
												CBA-BL4-FU	Fuse	BL4	CB-F-1B-A						
												DG-HR4-RMO	EPS Manual Override Relay	HR4	CB-F-1B-A						

FUNCTION: DIESEL GENERATOR BUILDING AIR HANDLING

ITEM NO.	EQUIPMENT ID NO.	EQUIPMENT DESCRIPTION	P&ID/1-LINE DRAWING NO.	TRAIN	PHYSICAL LOCATION DRAWING NO.	FIRE AREA/ZONE	REQUIRED FOR		POWER		ELEC NODE	SUPPORTING CONTROL AND INSTRUMENTATION EQUIPMENT				CABLES	ELECTRICAL DRAWING NO.		SUPPORTING SYSTEMS	REDUNDANT COUNTERPART	REMARKS
							HOT STAND BY	COLD SHUT DOWN	ELEC	AIR		EQUIPMENT ID NO.	EQUIPMENT DESCRIPTION	ELEC NODE	FIRE AREA/ZONE		SCHEM.	CABLE			
1	DAH-FN-25A	DG-1A Room Supply Air Fan	DAH-20624	A	310525	DG-F-3A-Z	X	X	X	-	N37	DAH-B01-52	460 V AC Circuit Breaker	B01	CB-F-1A-A	B01-N37/1 B01-J1E B01-T3P B01-GN9	310928 B01a	B01c B01d	EDE-MCC-521 EDE-PP-11E	DAH-FN-25B	
												DAH-CS-5529	Control Switch with Fan Indicating Lights	B01	CB-F-1A-A						
												DAH-FISH-5529	Flow Switch	S40	DG-F-3A-Z						
												DAH-J1E-RTB	Temperature Bistable Auxiliary Relay	J1E	DG-F-2A-A						
												DAH-ED1-R2	Auxiliary Relay	ED1	CB-F-1A-A						
												DG-G29-HSR	DG-1A High Speed Relay	G29	DG-F-2A-A						
												DAH-B01-42	Motor Starter	B01	CB-F-1A-A						
												DAH-B01-42X	Motor Starter Auxiliary Relay	B01	CB-F-1A-A						
												DAH-B01-49	Overload Relays	B01	CB-F-1A-A						
												DAH-B01-FU	Fuse	B01	CB-F-1A-A						
												DAH-ED1-R1	Control Circuit Power Monitor Auxiliary Relay	E01	CB-F-1A-A						
												DAH-GN9-RS	EPS Permissive Auxiliary Relay	GN9	CB-F-1A-A						
												DAH-GN9-RD	Damper Position Auxiliary Relay	GN9	CB-F-1A-A						
												DAH-E3E/7-52	120 V AC Circuit Breaker	E3E	CB-F-1A-A	J1E-T3P (Non CASP) E3E-J1E	E3E/7a	E3E/7b	EDE-MCC-515 EDE-PP-E3E		
												DAH-TB-5529-1	Temperature Bistable	J1E	DG-F-2A-A						
												DAH-J1E-RTB	Temperature Bistable Auxiliary Relay	J1E	DG-F-2A-A						
												DAH-TE-5529-1	Temperature Element	T3P	DG-F-2A-A						
												DAH-TT-5529-1	Temperature Transmitter	J1E	DG-F-2A-A						
												DAH-CP-295	DG-A Room Air Handling Fans and Damper Control Panel	J1E	DG-F-2A-A						

*Notes
1. Air is not required for support as damper fails open.

FUNCTION: DIESEL GENERATOR BUILDING AIR HANDLING

ITEM NO.	EQUIPMENT ID NO.	EQUIPMENT DESCRIPTION	P&ID/1-LINE DRAWING NO.	TRAIN	PHYSICAL LOCATION DRAWING NO.	FIRE AREA/ZONE	REQUIRED FOR		POWER		ELEC NODE	SUPPORTING CONTROL AND INSTRUMENTATION EQUIPMENT				CABLES	ELECTRICAL DRAWING NO.		SUPPORTING SYSTEMS	REDUNDANT COUNTERPART	REMARKS
							HOT STAND BY	COLD SHUT DOWN	ELEC	AIR		EQUIPMENT ID NO.	EQUIPMENT DESCRIPTION	ELEC NODE	FIRE AREA/ZONE		SCHEM.	CABLE			
2	DAH-DP-16A	DG-1A Room Return Air Damper	DAH-20624	A	310524	DG-F-2A-A	X	X	X	X	UF9	DAH-ED1-R2 (B01 & B03)	Auxiliary Relays	ED1	CB-F-1A-A	B01-UF9/1 B01-J1E/1 EIS-GN9 EDI-GN9 B03-UF9 B01-HR2	E1S/6a	E1S/6c	EDE-MCC-521 EDE-PP-11E	DAH-DP-16B	Note 1
												DAH-DP-16A-20	Pilot Solenoid	UF9	DG-F-2A-A						
												DAH-TB-5529-1	Temperature Bistable	J1E	DG-F-2A-A						
												DAH-ZS-DP-16A	Damper TBA Position Switch	UF9	DG-F-2A-A						
												DG-HR2-PR1	EPS Permissive Auxiliary Relay	HR2	CB-F-1A-A						
												DG-HR2-HR8	EPS Permissive Auxiliary Relay	HR2	CB-F-1A-A						
												DG-HR2-SR1	EPS Permissive Auxiliary Relay	HR2	CB-F-1A-A						
												DAH-GN9-RS	EPS Permissive Auxiliary Relay	GN9	CB-F-1A-A						
												DAH-GN9-RD	Damper Position Auxiliary Relay	GN9	CB-F-1A-A						
												DAH-E1S/6-52	120 V AC Circuit Breaker	EIS	CB-F-1A-A						
												DAH-ZL-5529-4	Damper Position Indicating Lights	B03	CB-F-1A-A						
												DAH-E3E/7-52	120 V AC Circuit Breaker	E3E	CB-F-1A-A	J1E-T3P (Non CASP) E3E-J1E	E3E/7a	E3E/7b	EDE-MCC-515 EDE-PP-E3E		
												DAH-TB-5529-1	Temperature Bistable	J1E	DG-F-2A-A						
												DAH-TE-5529-1	Temperature Element	T3P	DG-F-2A-A						
												DAH-TT-5529-1	Temperature Transmitter	J1E	DG-F-2A-A						
												DAH-CP-295	DG-A Room Air Handling Fans and Damper Control Panel	J1E	DG-F-2A-A						

FUNCTION: DIESEL GENERATOR BUILDING AIR HANDLING

ITEM NO.	EQUIPMENT ID NO.	EQUIPMENT DESCRIPTION	P&ID/1-LINE DRAWING NO.	TRAIN	PHYSICAL LOCATION DRAWING NO.	FIRE AREA/ZONE	REQUIRED FOR		POWER		ELEC NODE	SUPPORTING CONTROL AND INSTRUMENTATION EQUIPMENT				CABLES	ELECTRICAL DRAWING NO.		SUPPORTING SYSTEMS	REDUNDANT COUNTERPART	REMARKS
							HOT STAND BY	COLD SHUT DOWN	ELEC	AIR		EQUIPMENT ID NO.	EQUIPMENT DESCRIPTION	ELEC NODE	FIRE AREA/ZONE		SCHEM.	CABLE			
3	DAH-FN-25B	DG-1B Room Supply Air Fan	DAH-20624	B	310525	DG-F-3B-Z	X	X	X	-	N38	DAH-B02-52	460 V AC Circuit Breaker	B02	CB-F-1B-A	B02-N38/1 B02-G30 B02-S41 B02-J1F B02-GN0 EE3-E3D	310928 B02a	B02c B02d	EDE-MCC-621 EDE-PP-11F	DAH-FN-25A	
												DAH-CS-5530	Control Switch with Fan Indicating Lights	B02	CB-F-1B-A						
												DAH-FISH-5530	Flow Switch	S41	DG-F-3B-Z						
												DAH-J1F-RTB	Temperature Bistable Auxiliary Relay	J1F	DG-F-2B-A						
												DAH-EE3-R2	Auxiliary Relay	EE3	CB-F-1B-A						
												DAH-B02-FU	Fuse	B02	CB-F-1B-A						
												DG-G30-HSR	DG-1B High Speed Relay	G30	DG-F-2B-A						
												DAH-B02-42	Motor Starter	B02	CB-F-1B-A						
												DAH-B02-42X	Motor Starter Auxiliary Relay	B02	CB-F-1B-A						
												DAH-B02-49	Overload Relays	B02	CB-F-1B-A						
												DAH-E3D-R1	Control Circuit Power Monitor Auxiliary Relay	E3D	CB-F-1B-A						
												DAH-GN0-RS	EPS Permissive Auxiliary Relay	GN0	CB-F-1B-A						
												DAH-GN0-RD	Damper Position Auxiliary Relay	GN0	CB-F-1B-A						
												DAH-E3F/7-52	120 V AC Circuit Breaker	E3F	CB-F-1B-A	J1F-T3Q (Non-CASP) E3F-J1F	E3F/7a	E3F/7b	EDE-MCC-615 EDE-PP-E3F		
												DAH-TB-5530-1	Temperature Bistable	J1F	DG-F-2B-A						
												DAH-J1F-RTB	Temperature Bistable Auxiliary Relay	J1F	DG-F-2B-A						
												DAH-TE-5330-1	Temperature Element	T3Q	DG-F-2B-A						
												DAH-TT-5530-1	Temperature Transmitter	J1F	DG-F-2B-A						
												DAH-CP-296	DG-B Room Air Handling Fans and Damper Control Panel	J1F	DG-F-2B-A						

FUNCTION: DIESEL GENERATOR BUILDING AIR HANDLING

ITEM NO.	EQUIPMENT ID NO.	EQUIPMENT DESCRIPTION	P&ID/1-LINE DRAWING NO.	TRAIN	PHYSICAL LOCATION DRAWING NO.	FIRE AREA/ZONE	REQUIRED FOR		POWER		ELEC NODE	SUPPORTING CONTROL AND INSTRUMENTATION EQUIPMENT				CABLES	ELECTRICAL DRAWING NO.		SUPPORTING SYSTEMS	REDUNDANT COUNTERPART	REMARKS
							HOT STAND BY	COLD SHUT DOWN	ELEC	AIR		EQUIPMENT ID NO.	EQUIPMENT DESCRIPTION	ELEC NODE	FIRE AREA/ZONE		SCHEM.	CABLE			
4	DAH-DP-16B	DG-1B Room Return Air Damper	DAH-20624	B	310524	DG-F-2B-A	X	X	X	X	UF0	DAH-EE3-R2 (B02 & B04)	Auxiliary Relay	EE3	CB-F-1B-A	B02-UF0/1 ED0-J1F B02-ED0 EE3-GN0/2 EIT-GN0 B01-HR4 B04-UF0	E1T/6a	E1T/6c	EDE-MCC-621 EDE-PP-11F	DAH-DP-16A	Note 1
												DAH-DP-16B-20	Pilot Solenoid	UF0	DG-F-2B-A						
												DAH-TB-5530-1	Temperature Bistable	J1F	DG-F-2B-A						
												DAH-ZS-DP-16B	Damper 16B Position Switch	UF0	DG-F-2B-A						
												DG-HR4-HRB	EPS Permissive Auxiliary Relay	HR4	CB-F-1B-A						
												DH-HR4-PR1	EPS Permissive Auxiliary Relay	HR4	CB-F-1B-A						
												DG-HR4-SR1	EPS Permissive Auxiliary Relay	HR4	CB-F-1B-A						
												DAH-GN0-RS	EPS Permissive Auxiliary Relay	GN0	CB-F-1B-A						
												DAH-GN0-RD	Damper Position Auxiliary Relay	GN0	CB-F-1B-A						
												DAH-E1T/6-52	120 V AC Circuit Breaker	E1T	CB-F-1B-A						
												DAH-ZL-5530-4	Damper Position Indicating Lights	B04	CB-F-1B-A						
												DAH-E3F/7-52	120 V AC Circuit Breaker	E3F	CB-F-1B-A	J1F-T3Q (Non-CASP) E3F-J1F	E3F/7a	E3F/7b	EDE-MCC-615 EDE-PP-E3F		
												DAH-TB-5530-1	Temperature Bistable	J1F	DG-F-2B-A						
												DAH-TE-5530-1	Temperature Element	T3Q	DG-F-2B-A						
												DAH-TT-5530-1	Temperature Transmitter	J1F	DG-F-2B-A						
												DAH-CP-296	DG-B Room Air Handling Fans and Damper Control Panel	J1F	DG-F-2B-A						

FUNCTION: DIESEL GENERATOR BUILDING AIR HANDLING

ITEM NO.	EQUIPMENT ID NO.	EQUIPMENT DESCRIPTION	P&ID/1-LINE DRAWING NO.	TRAIN	PHYSICAL LOCATION DRAWING NO.	FIRE AREA/ZONE	REQUIRED FOR		POWER		ELEC NODE	SUPPORTING CONTROL AND INSTRUMENTATION EQUIPMENT				CABLES	ELECTRICAL DRAWING NO.		SUPPORTING SYSTEMS	REDUNDANT COUNTERPART	REMARKS
							HOT STAND BY	COLD SHUT DOWN	ELEC	AIR		EQUIPMENT ID NO.	EQUIPMENT DESCRIPTION	ELEC NODE	FIRE AREA/ZONE		SCHEM.	CABLE			
5	DAH-FN-26A	DG-1A Room Return Air Fan	DAH-20624	A	310525	DG-F-2A-A	X	X	X	-	N39	DAH-B03-52	460 V AC Circuit Breaker	B03	CB-F-1A-A	B03-N39/1 B03-J1E G29-J1E B03-GN9	310928 B03a	B03c B03d	EDE-MCC-521 EDE-PP-11E	DAH-FN-26B	
												DAH-B03-42	Motor Starter	B03	CB-F-1A-A						
												DAH-B03-42X	Motor Starter Auxiliary Relays	B03	CB-F-1A-A						
												DAH-B03-49	Overload Relays	B03	CB-F-1A-A						
												DAH-B03-FU	Fuse	B03	CB-F-1A-A						
												DAH-J1E-RTB	Temperature Bistable Auxiliary Relay	J1E	DG-F-2A-A						
												DG-G29-HSR	DG-1A High Speed Relay	G29	DG-F-2A-A						
												DAH-CS-6058	Control Switch with Indicating Lights	B03	CB-F-1A-A						
												DAH-ED1-R2	Auxiliary Relay	ED1	CB-F-1A-A						
												DAH-ED1-R1	Control Circuit Power Monitor Auxiliary Relay	ED1	CB-F-1A-A						
												DAH-GN9-RS	EPS Permissive Auxiliary Relay	GN9	CB-F-1A-A						
												DAH-GN9-RD	Damper Position Auxiliary Relay	GN9	CB-F-1A-A						
												DAH-E3E/7-52	120 V AC Circuit Breaker	E3E	CB-F-1A-A	J1E-T3P (Non CASP) E3E-J1E	E3E/7a	E3E/7b	EDE-MCC-515 EDE-PP-E3E		
												DAH-TB-5529-1	Temperature Bistable	J1E	DG-F-2A-A						
												DAH-J1E-RTB	Temperature Bistable Auxiliary Relay	J1E	DG-F-2A-A						
												DAH-TE-5529-1	Temperature Element	T3P	DG-F-2A-A						
												DAH-TT-5529-1	Temperature Transmitter	J1E	DG-F-2A-A						
												DAH-CP-295	DG-A Room Air Handling Fans and Damper Control Panel	J1E	DG-F-2A-A						

FUNCTION: DIESEL GENERATOR BUILDING AIR HANDLING

ITEM NO.	EQUIPMENT ID NO.	EQUIPMENT DESCRIPTION	P&ID/1-LINE DRAWING NO.	TRAIN	PHYSICAL LOCATION DRAWING NO.	FIRE AREA/ZONE	REQUIRED FOR		POWER		ELEC NODE	SUPPORTING CONTROL AND INSTRUMENTATION EQUIPMENT				CABLES	ELECTRICAL DRAWING NO.		SUPPORTING SYSTEMS	REDUNDANT COUNTERPART	REMARKS
							HOT STAND BY	COLD SHUT DOWN	ELEC	AIR		EQUIPMENT ID NO.	EQUIPMENT DESCRIPTION	ELEC NODE	FIRE AREA/ZONE		SCHEM.	CABLE			
6	DAH-FN-26B	DG-1B Room Return Air Fan	DAH-20624	B	310525	DG-F-2B-A	X	X	X	-	N40	DAH-B04-52	460 V AC Circuit Breaker	B04	CB-F-1B-A	B04-N40/1 B04-J1F G30-J1F B04-GN	B04a	B04c B04d	EDE-MCC-621 EDE-PP-11F	DAH-FN-26A	
												DAH-B04-42	Motor Starter	B04	CB-F-1B-A						
												DAH-B04-42X	Motor Starter Auxiliary Relays	B04	CB-F-1B-A						
												DAH-B04-49	Overload Relays	B04	CB-F-1B-A						
												DAH-B04-FU	Fuse	B04	CB-F-1B-A						
												DAH-J1F-RTB	Temperature Bistable Auxiliary Relay	J1F	DG-F-2B-A						
												DG-G30-HSR	DG-1B High Speed Relay	G30	DG-F-2B-A						
												DAH-CS-6059	Control Switch with Indicating Lights	B04	CB-F-1B-A						
												DAH-EE3-R2	Auxiliary Relay	EE3	CB-F-1B-A						
												DAH-EE3-R1	Control Circuit Power Monitor Auxiliary Relay	EE3	CB-F-1B-A						
												DAH-GN0-RS	EPS Permissive Auxiliary Relay	GN0	CB-F-1B-A						
												DAH-GN0-RD	Damper Position Auxiliary Relay	GN0	CB-F-1B-A						
												DAH-E3F/7-52	120 V AC Circuit Breaker	E3F	CB-F-1B-A	J1F-T3Q (Non CASP) E3F-J1F	E3F/7a	E3F/7b	EDE-MCC-615 EDE-PP-E3F		
												DAH-TB-5530-1	Temperature Bistable	J1F	DG-F-2B-A						
												DAH-J1F-RTB	Temperature Bistable Auxiliary Relay	J1F	DG-F-2B-A						
												DAH-TE-5530-1	Temperature Element	T3Q	DG-F-2B-A						
												DAH-TT-5530-1	Temperature Transmitter	J1F	DG-F-2B-A						
												DAH-CP-296	DG-B Room Air Handling Fans and Damper Control Panel	J1F	DG-F-2B-A						

FUNCTION: CONTAINMENT ENCLOSURE AIR HANDLING

ITEM NO.	EQUIPMENT ID NO.	EQUIPMENT DESCRIPTION	P&ID/1-LINE DRAWING NO.	TRAIN	PHYSICAL LOCATION DRAWING NO.	FIRE AREA/ZONE	REQUIRED FOR		POWER		ELEC NODE	SUPPORTING CONTROL AND INSTRUMENTATION EQUIPMENT				CABLES	ELECTRICAL DRAWING NO.		SUPPORTING SYSTEMS	REDUNDANT COUNTERPART	REMARKS
							HOT STAND BY	COLD SHUT DOWN	ELEC	AIR		EQUIPMENT ID NO.	EQUIPMENT DESCRIPTION	ELEC NODE	FIRE AREA/ZONE		SCHEM.	CABLE			
1	EAH-FN-5A	Containment Enclosure Cooler AC-2A Fan	MAH-20495	A	310766	CE-F-1-Z	X	X	X	-	M80	EAH-AF5-52	480 V ac Circuit Breaker	AF5	CB-F-1A-A	AF5-G2H AF5-G2H/1 AF5/M80 AF5-YC3 L41-YC3	310932 AF5a AF5b AF5f	AF5e AF5g	EAH-FN-31A EDE-US-52 Primary Component Cooling Water	EAH-FN-5B	
												EAH-AF5-G, R	Indicating Lights	AF5	CB-F-1A-A						
												EAH-CS-5767-2	Control Switch with Indication	G2H	CB-F-1A-A						
												EAH-SS-5767	Selector Switch	G2H	CB-F-1A-A						
												EAH-ZL-5767-2	Outlet Damper Position Lights	G2H	CB-F-1A-A						
												EAH-ZS-DP-3A	Damper Position Switch	L41	CE-F-1-Z						
												EAH-AF5-AM	Ammeter	AF5	CB-F-1A-A						
												EAH-AF5-CT	Current Transformer (200/5)	AF5	CB-F-1A-A						
												EDE-AC3-94-3	Bus Undervoltage Relay	AC3	CB-F-1A-A						
												EAH-AF5-52H-1	Truck-Operated Contact	AF5	CB-F-1A-A						
												EDE-TBX-YC3	Terminal Box	YC3	CE-F-1-Z						
												EAH-AF5-FU	Fuses	AF5	CB-F-1A-A						
2	EAH-FN-5B	Containment Enclosure Cooler AC-2B Fan	MAH-20495	B	310766	CE-F-1-Z	X	X	X	-	M81	EAH-AF9-52	480 V ac Circuit Breaker	AF9	CB-F-1B-A	AF9-G2K AF9-G2K/1 AF9-G2K/2 AF9/M81 AF9-YB3 L42-YB3	AF9a AF9b AF9f	AF9e AF9g	EAH-FN-31B EDE-US-62 Primary Component Cooling Water	EAH-FN-5A	
												EAH-AF9-G, R	Indicating Lights	AF9	CB-F-1B-A						
												EAH-CS-5768-2	Control Switch with Indication	G2K	CB-F-1B-A						
												EAH-SS-5768	Selector Switch	G2K	CB-F-1B-A						
												EAH-ZL-5768-2	Outlet Damper Position Lights	G2K	CB-F-1B-A						
												EAH-ZS-DP-3B	Damper Position Switch	L42	CE-F-1-Z						
												EAH-AF9-AM	Ammeter	AF9	CB-F-1B-A						
												EAH-AF9-CT	Current Transformer (200/5)	AF9	CB-F-1B-A						
												EDE-AE3-94-3	Bus Undervoltage Relay	AE3	CB-F-1B-A						
												EAH-AF9-52H-1	Truck-Operated Contact	AF9	CB-F-1B-A						
												EDE-TBX-YB3	Terminal Box	YB3	CE-F-1-Z						
												EAH-AF9-FU	Fuses	AF9	CB-F-1B-A						
												EAH-AE3-R1	Auxiliary Relay	AE3	CB-F-1B-A						

Notes
1. Equipment is mechanical with no electrical requirements.
2. Air and electrical power are not required for support as damper fails closed.

FUNCTION: CONTAINMENT ENCLOSURE AIR HANDLING

ITEM NO.	EQUIPMENT ID NO.	EQUIPMENT DESCRIPTION	P&ID/1-LINE DRAWING NO.	TRAIN	PHYSICAL LOCATION DRAWING NO.	FIRE AREA/ZONE	REQUIRED FOR		POWER		ELEC NODE	SUPPORTING CONTROL AND INSTRUMENTATION EQUIPMENT				CABLES	ELECTRICAL DRAWING NO.		SUPPORTING SYSTEMS	REDUNDANT COUNTERPART	REMARKS
							HOT STAND BY	COLD SHUT DOWN	ELEC	AIR		EQUIPMENT ID NO.	EQUIPMENT DESCRIPTION	ELEC NODE	FIRE AREA/ZONE		SCHEM.	CABLE			
3	EAH-FN-31A	Containment Enclosure Return Fan "A"	MAH-20495	A	310765	CE-F-1-Z	-	X	X	-	ND5	EAH-BB2-52	460 V ac Circuit Breaker	BB2	CB-F-1A-A	BB2-ND5 BB2-VQ2	310932 BB2a	BB2c	EDE-MCC-512	EAH-FN-31B	
												EAH-BB2-FU	Fuse	BB2	CB-F-1A-A						
												EAH-CS-5769-2	Control Switch	BB2	CB-F-1A-A						
												EAH-BB2-G, R	Indicating Lights	BB2	CB-F-1A-A						
												EAH-SS-5769	Selector Switch	BB2	CB-F-1A-A						
												EAH-BB2-42	Motor Starter	BB2	CB-F-1A-A						
												EAH-BB2-42X	Motor Starter Auxiliary Relay	BB2	CB-F-1A-A						
												EAH-BB2-49	Overload Relays	BB2	CB-F-1A-A						
												EAH-ZS-DP-25A	Damper Position Switch	VQ2	CE-F-1-Z						
4	EAH-FN-31B	Containment Enclosure Return Fan "B"	MAH-20495	B	310765	CE-F-1-Z	-	X	X	-	NJ7	EAH-BC1-52	460 V ac Circuit Breaker	BC1	CB-F-1B-A	BC1-NJ7 BC1-VQ3	310932 BC1a	BC1c	EDE-MCC-612	EAH-FN-31A	
												EAH-BC1-FU	Fuse	BC1	CB-F-1B-A						
												EAH-CS-5770-2	Control Switch	BC1	CB-F-1B-A						
												EAH-BC1-G, R	Indicating Lights	BC1	CB-F-1B-A						
												EAH-SS-5770	Selector Switch	BC1	CB-F-1B-A						
												EAH-BC1-42	Motor Starter	BC1	CB-F-1B-A						
												EAH-BC1-42X	Motor Starter Auxiliary Relay	BC1	CB-F-1B-A						
												EAH-BC1-49	Overload Relays	BC1	CB-F-1B-A						
												EAH-ZS-DP-25B	Damper Position Switch	VQ3	CE-F-1-Z						
5	EAH-DP-3A	Containment Encl. Cooler AC-2A Damper	MAH-20495	A	310766	CE-F-1-Z	X	X	-	-	L41	-	-	-	-	-	-	-	-	EAH-DP-3B	Note 1
6	EAH-DP-3B	Containment Encl. Cooler AC-2B Damper	MAH-20495	B	310766	CE-F-1-Z	X	X	-	-	L42	-	-	-	-	-	-	-	-	EAH-DP-3A	Note 1
7	EAH-FN-174A	MS & FWPC Analyzer Room Supply Fan	MAH-20503	A	310586	MS-F-4A-Z	X	X	X	-	M4T	EAH-B8C-52	460 V ac Circuit Breaker	B8C	CB-F-1A-A	B8C-M4T B8C-S5G	B8Ca	B8Cc	CBA-FN-19 CBA-FN-20 EDE-MCC-515	EAH-FN-174B	
												EAH-B8C-FU	Fuse	B8C	CB-F-1A-A						
												EAH-CS-5136	Control Switch with Indication	B8C	CB-F-1A-A						
												EAH-B8C-42	Motor Starter	B8C	CB-F-1A-A						
												EAH-B8C-49	Overload Relays	B8C	CB-F-1A-A						
												EAH-TSH-5136	Temperature Switch	S5G	MS-F-4A-Z						

FUNCTION: CONTAINMENT ENCLOSURE AIR HANDLING

ITEM NO.	EQUIPMENT ID NO.	EQUIPMENT DESCRIPTION	P&ID/1-LINE DRAWING NO.	TRAIN	PHYSICAL LOCATION DRAWING NO.	FIRE AREA/ZONE	REQUIRED FOR		POWER		ELEC NODE	SUPPORTING CONTROL AND INSTRUMENTATION EQUIPMENT				CABLES	ELECTRICAL DRAWING NO.		SUPPORTING SYSTEMS	REDUNDANT COUNTERPART	REMARKS
							HOT STAND BY	COLD SHUT DOWN	ELEC	AIR		EQUIPMENT ID NO.	EQUIPMENT DESCRIPTION	ELEC NODE	FIRE AREA/ZONE		SCHEM.	CABLE			
8	EAH-FN-174B	MS & FWPC Analyzer Room Supply Fan	MAH-20503	B	310586	MS-F-4A-Z	X	X	X	-	M4U	EAH-B8E-52	460 V ac Circuit Breaker	B8E	CB-F-1B-A	B8E-M4U B8E-S5H	310932 B8Ea	B8Ec	CBA-FN-32 CBA-FN-33 EDE-MCC-615	EAH-FN-174A	
												EAH-B8E-FU	Fuse	B8E	CB-F-1B-A						
												EAH-CS-5763	Control Switch with Indication	B8E	CB-F-1B-A						
												EAH-B8E-42	Motor Starter	B8E	CB-F-1B-A						
												EAH-B8E-49	Overload Relays	B8E	CB-F-1B-A						
												EAH-TSH-5736	Temp. Switch	S5H	MS-F-4A-Z						
9	PAH-DP-35A PAH-DP-36A	CE Outboard Isolation Dampers	MAH-20495	A A	310766 310765	PAB-F-2A-Z PAB-F-2C-Z	X X	X X	X X	X X	VN8 VN0	PAH-CS-5370	Control Switch	F36	CB-F-3A-A	F36-VN8 F36-VN0	310930 E42/8a E42/8d	E42/8c			Note 2
												PAH-ZS-DP-35A	Position Switch	VN8	PAB-F-2A-Z						
												PAH-ZS-DP-36A	Position Switch	VN0	PAB-F-2C-Z						
												PAH-FY-DP-35A	Solenoid Valve	VN8	PAB-F-2A-Z						
												PAH-FY-DP-36A	Solenoid Valve	VN0	PAB-F-2C-Z						
10	PAH-DP-35B PAH-DP-36B	CE Inboard Isolation Dampers	MAH-20495	B B	310766 310765	CE-F-1-Z CE-F-1-Z	X X	X X	X X	X X	VN9 VP1	PAH-CS-5371	Control Switch	F37	CB-F-3A-A	F37-VP1 F37-VN9	310930 E50/8a	E50/8c			Note 2
												PAH-ZS-DP-35B	Position Switch	VN9	CE-F-1-Z						
												PAH-ZS-DP-36B	Position Switch	VP1	CE-F-1-Z						
												PAH-FY-DP-35B	Solenoid Valve	VN9	CE-F-1-Z						
												PAH-FY-DP-36B	Solenoid Valve	VP1	CE-F-1-Z						

FUNCTION: EMERGENCY FEEDWATER PUMPHOUSE AIR HANDLING

ITEM NO.	EQUIPMENT ID NO.	EQUIPMENT DESCRIPTION	P&ID/1-LINE DRAWING NO.	TRAIN	PHYSICAL LOCATION DRAWING NO.	FIRE AREA/ZONE	REQUIRED FOR		POWER		ELEC NODE	SUPPORTING CONTROL AND INSTRUMENTATION EQUIPMENT				CABLES	ELECTRICAL DRAWING NO.		SUPPORTING SYSTEMS	REDUNDANT COUNTERPART	REMARKS
							HOT STAND BY	COLD SHUT DOWN	ELEC	AIR		EQUIPMENT ID NO.	EQUIPMENT DESCRIPTION	ELEC NODE	FIRE AREA/ZONE		SCHEM.	CABLE			
1	EPA-FN-47A	Emergency Feedwater Pumphouse Intake Fan	MAH-20503	A	310708	EFP-F-1-A	X	X	X	-	NL8	EPA-BB7-52	460 V ac Circuit Breaker	BB7	CB-F-1A-A	BB7-NL8 BB7-UH3 BB7-VV6	310922 BB7a	BB7c BB7d	CBA-FN-19 CBA-FN-20 EDE-MCC-512	EPA-FN-47B	
												EPA-BB7-FU	Fuse	BB7	CB-F-1A-A						
												EPA-CS-5430-2	Control Switch	BB7	CB-F-1A-A						
												EPA-ZL-5430-4	Fan Indicating Lights	BB7	CB-F-1A-A						
												EPA-SS-5430	Selector Switch	BB7	CB-F-1A-A						
												EPA-EC8-RBB7	Damper Auxiliary Relay	EC8	CB-F-1A-A						
												EPA-ZS-DP-373	Damper Position Switch	UH3	EFP-F-1-A						
												EPA-ZS-DP-371	Damper Position Switch	VV6	EFP-F-1-A						
												EPA-ZL-5430-5	Damper DP-373 Position Lights	BB7	CB-F-1A-A						
												EPA-ZL-5430-6	Damper DP-371 Position Lights	BB7	CB-F-1A-A						
												EPA-BB7-42	Motor Starter	BB7	CB-F-1A-A						
												EPA-BB7-49	Overload Relays	BB7	CB-F-1A-A						
2	EPA-DP-373	Emergency Feedwater Pumphouse Exhaust Damper	MAH-20503	A	310708	EFP-F-1-A	X	X	X	X	UH3	EPA-BB7-FU	Fuse	BB7	CB-F-1A-A	BB7-UH3	BB7a	BB7c BB7d	CBA-FN-19 CBA-FN-20 EDE-MCC-512	EPA-DP-374	Note 1
												EPA-EC8-RBB7	Auxiliary Relay	EC8	CB-F-1A-A						
												EPA-DP-373-20	Pilot Solenoid	UH3	EFP-F-1-A						
3	EPA-FN-47B	Emergency Feedwater Pumphouse Intake Fan	MAH-20503	B	310708	EFP-F-1-A	X	X	X	-	NL9	EPA-BC7-52	460 V ac Circuit Breaker	BC7	CB-F-1B-A	BC7-NL9 BC7-UH4 BC7-VV7	BC7a	BC7c BC7d	CBA-FN-32 CBA-FN-33 EDE-MCC-612	EPA-FN-47A	
												EPA-BC7-FU	Fuses	BC7	CB-F-1B-A						
												EPA-ZL-5431-4	Fan Indicating Lights	BC7	CB-F-1B-A						
												EPA-SS-5431	Selector Switch	BC7	CB-F-1B-A						
												EPA-EDO-RBC7	Damper Auxiliary Relay	EDO	CB-F-1B-A						
												EPA-ZS-DP-374	Damper Position Switch	UH4	EFP-F-1-A						
												EPA-ZS-DP-372	Damper Position Switch	VV7	EFP-F-1-A						
												EPA-BC7-42	Motor Starter	BC7	CB-F-1B-A						
												EPA-BC7-49	Overload Relays	BC7	CB-F-1B-A						
												EPA-ZL-5431-5	Damper DP-374 Position Lights	BC7	CB-F-1B-A						
												EPA-ZL-5431-6	Damper DP-372 Position Lights	BC7	CB-F-1B-A						
												EPA-CS-5431-2	Control Switch	BC7	CB-F-1B-A						
												EPA-EDO-R1	Auxiliary Relay	EDO	CB-F-1B-A						

Notes
1. Air is not required for support as damper fails open.

FUNCTION: EMERGENCY FEEDWATER PUMPHOUSE AIR HANDLING

ITEM NO.	EQUIPMENT ID NO.	EQUIPMENT DESCRIPTION	P&ID/1-LINE DRAWING NO.	TRAIN	PHYSICAL LOCATION DRAWING NO.	FIRE AREA/ZONE	REQUIRED FOR		POWER		ELEC NODE	SUPPORTING CONTROL AND INSTRUMENTATION EQUIPMENT				CABLES	ELECTRICAL DRAWING NO.		SUPPORTING SYSTEMS	REDUNDANT COUNTERPART	REMARKS
							HOT STAND BY	COLD SHUT DOWN	ELEC	AIR		EQUIPMENT ID NO.	EQUIPMENT DESCRIPTION	ELEC NODE	FIRE AREA/ZONE		SCHEM.	CABLE			
4	EPA-DP-374	Emergency Feedwater Pumphouse Exhaust Damper	MAH-20503	B	310708	EFP-F-1-A	X	X	X	X	UH4	EPA-BC7-FU EPA-EDO-RBC7 EPA-DP-374-20 EPA-EDO-R1	Fuses Auxiliary Relay Pilot Solenoid Auxiliary Relay	BC7 EDO UH4 EDO	CB-F-1B-A CB-F-1B-A EFP-F-1-A CB-F-1B-A	BC7-UH4	310922 BC7a	BC7c BC7d	CBA-FN-32 CBA-FN-33 EDE-MCC-612	EPA-DP-373	Note 1

FUNCTION: PRIMARY AUXILIARY BUILDING AIR HANDLING

ITEM NO.	EQUIPMENT ID NO.	EQUIPMENT DESCRIPTION	P&ID/1-LINE DRAWING NO.	TRAIN	PHYSICAL LOCATION DRAWING NO.	FIRE AREA/ZONE	REQUIRED FOR HOT STAND BY	REQUIRED FOR COLD SHUT DOWN	POWER ELEC	POWER AIR	ELEC NODE	SUPPORTING CONTROL AND INSTRUMENTATION EQUIPMENT: EQUIPMENT ID NO.	EQUIPMENT DESCRIPTION	ELEC NODE	FIRE AREA/ZONE	CABLES	ELECTRICAL DRAWING NO. SCHEM.	ELECTRICAL DRAWING NO. CABLE	SUPPORTING SYSTEMS	REDUNDANT COUNTERPART	REMARKS
1	PAH-FN-42A	PAB Auxiliary Supply Fan "A"	MAH-20495	A	310765	PAB-F-2C-Z	X	X	X	-	M61	PAH-BF6-52	460 V ac Circuit Breaker	BF6	CB-F-1A-A	BF6-M61 BF6-ED1 BF6-UG5 BF6-UG7 UG5-UG7 BF6-UG5/1	310930 BF6a	BF6c BF6d	CBA-FN-19 CBA-FN-20 EDE-MCC-512	PAH-FN-42B	
												PAH-CS-5391-2	Control Switch	BF6	CB-F-1A-A						
												PAH-ZL-5391-4	Fan Indicating Lights	BF6	CB-F-1A-A						
												PAH-SS-5391	Selector Switch	BF6	CB-F-1A-A						
												PAH-ED1-R1	Damper Auxiliary Relay	ED1	CB-F-1A-A						
												PAH-ZS-DP-43A-1A PAH-ZS-DP-43A-1B PAH-ZS-DP-43A-2A	Damper Position Switch	UG5	PAB-F-1K-Z						
												PAH-ZS-DP-357	Damper Position Switch	UG7	PAB-F-2C-Z						
												PAH-BF6-42	Motor Starter	BF6	CB-F-1A-A						
												PAH-BF6-49	Overload Relays	BF6	CB-F-1A-A						
												PAH-DP-43A-20	Pilot Solenoid	UG5	PAB-F-1K-Z						
												PAH-DP-357-20	Pilot Solenoid	UG7	PAB-F-2C-Z						
												PAH-ZL-5391-5	Damper DP-43A Position Lights	BF6	CB-F-1A-A						
												PAH-ZL-5391-6	Damper DP-357 Position Lights	BF6	CB-F-1A-A						
												PAH-BF6-FU	Fuse	BF6	CB-F-1A-A						
2	PAN-DP-43A	PAB Auxiliary Fan Supply Damper	MAH-20495	A	310765	PAB-F-1K-Z	X	X	X	X	UG5	PAH-ED1-R1	Damper Auxiliary Relay	ED1	CB-F-1A-A	BF6-ED1 BF6-UG5 BF6-UG7 UG5-UG7 BF6-UG5/1	310930 BF6a	BF6c BF6d	CBA-FN-19 CBA-FN-20	PAH-DP-43B	Note 1
												PAH-DP-43A-20	Pilot Solenoid	UG5	PAB-F-1K-Z						
3	PAH-DP-357	PAB Auxiliary Fan Exhaust Damper	MAH-20495	A	310766	PAB-F-2C-Z	X	X	X	X	UG7	PAH-ED1-R1	Damper Auxiliary Relay	ED1	CB-F-1A-A	BF6-ED1 BF6-UG5	310930 BF6a	BF6c	CBA-FN-19 CBA-FN-20	PAH-DP-358	Note 1
												PAH-DP-357-20	Pilot Solenoid	UG7	PAB-F-2C-Z	BF6-UG7 UG5-UG7					

Notes
1. Air and electrical power are not required for support as damper fails open.
2. See Table RSS 3.1.3.12 for operation of dampers PAH-DP-35A, -35B, -36A & -36B.

FUNCTION: PRIMARY AUXILIARY BUILDING AIR HANDLING

ITEM NO.	EQUIPMENT ID NO.	EQUIPMENT DESCRIPTION	P&ID/1-LINE DRAWING NO.	TRAIN	PHYSICAL LOCATION DRAWING NO.	FIRE AREA/ZONE	REQUIRED FOR HOT STAND BY	REQUIRED FOR COLD SHUT DOWN	POWER ELEC	POWER AIR	ELEC NODE	SUPPORTING CONTROL AND INSTRUMENTATION EQUIPMENT: EQUIPMENT ID NO.	EQUIPMENT DESCRIPTION	ELEC NODE	FIRE AREA/ZONE	CABLES	ELECTRICAL DRAWING NO. SCHEM.	ELECTRICAL DRAWING NO. CABLE	SUPPORTING SYSTEMS	REDUNDANT COUNTERPART	REMARKS
4	PAH-FN-42B	PAB Auxiliary Supply Fan "B"	MAH-20495	B	310765	PAB-F-2C-Z	X	X	X	-	M62	PAH-BF7-52	460 V ac Circuit Breaker	BF7	CB-F-1B-A	BF7-E3D/1 BF7-M62 BF7-UG6 BF7-UG8 UG6-UG8	310930 BF7a	BF7c	CBA-FN-32 CBA-FN-33 EDE-MCC-612	PAH-FN-42A	
												PAH-CS-5393-2	Control Switch	BF7	CB-F-1B-A						
												PAH-ZL-5393-4	Fan Indicating Lights	BF7	CB-F-1B-A						
												PAH-SS-5393	Selector Switch	BF7	CB-F-1B-A						
												PAH-EDO-R1	Damper Auxiliary Relay	EDO	CB-F-1B-A						
												PAH-ZS-DP-43B-1A PAH-ZS-DP-43B-1B PAH-ZS-DP-43B-2A	Damper Position Switch	UG6	PAB-F-1K-Z						
												PAH-ZS-DP-358	Damper Position Switch	UG8	PAB-F-2C-Z						
												PAH-ZL-5393-5	Damper DP-43B Position Lights	BF7	CB-F-1B-A						
												PAH-DP-43B-20	Pilot Solenoid	UG6	PAB-F-1K-Z						
												PAH-DP-358-20	Pilot Solenoid	UG8	PAB-F-2C-Z						
												PAH-BF7-42	Motor Starter	BF7	CB-F-1B-A						
												PAH-BF7-49	Overload Relays	BF7	CB-F-1B-A						
												PAH-BF7-FU	Fuses	BF7	CB-F-1B-A						
												PAH-ZL-5393-6	Damper DP-358 Position Lights	BF7	CB-F-1B-A						
												PAH-E3D-R2	Auxiliary Relay	E3D	CB-F-1B-A						
5	PAH-DP-43B	PAB Auxiliary Fan Supply Damper	MAH-20495	B	310765	PAB-F-1K-Z	X	X	X	X	UG6	PAH-EDO-R1	Damper Auxiliary Relay	EDO	CB-F-1B-A	BF7-UG6 BF7-UG8 UG6-UG8	310930 BF7a	BF7c	CBA-FN-32 CBA-FN-33	PAH-DP-43A	Note 1
												PAH-DP-43B-20	Pilot Solenoid	UG6	PAB-F-1K-Z						
6	PAH-DP-358	PAB Auxiliary Fan Exhaust Damper	MAH-20495	B	310766	PAB-F-2C-Z	X	X	X	X	UG8	PAH-EDO-R1	Damper Auxiliary Relay	EDO	CB-F-1B-A	BF7-UG6 BF7-UG8 UG6-UG8	310930 BF7a	BF7c	CBA-FN-32 CBA-FN-33	PAH-DP-357	Note 1
												PAH-DP-358-20	Pilot Solenoid	UG8	PAB-F-2C-Z						
7	PAH-DP-35A	-	-	-	-	-	-	-	-	-	-	-	-	-	-	-	-		-	-	Note 2
8	PAH-DP-35B	-	-	-	-	-	-	-	-	-	-	-	-	-	-	-	-		-	-	Note 2
9	PAH-DP-36A	-	-	-	-	-	-	-	-	-	-	-	-	-	-	-	-		-	-	Note 2
10	PAH-DP-36B	-	-	-	-	-	-	-	-	-	-	-	-	-	-	-	-		-	-	Note 2

FUNCTION: SERVICE WATER AIR HANDLING

ITEM NO.	EQUIPMENT ID NO.	EQUIPMENT DESCRIPTION	P&ID/1-LINE DRAWING NO.	TRAIN	PHYSICAL LOCATION DRAWING NO.	FIRE AREA/ZONE	REQUIRED FOR		POWER		ELEC NODE	SUPPORTING CONTROL AND INSTRUMENTATION EQUIPMENT				CABLES	ELECTRICAL DRAWING NO.		SUPPORTING SYSTEMS	REDUNDANT COUNTERPART	REMARKS
							HOT STAND BY	COLD SHUT DOWN	ELEC	AIR		EQUIPMENT ID NO.	EQUIPMENT DESCRIPTION	ELEC NODE	FIRE AREA/ZONE		SCHEM.	CABLE			
1	SWA-FN-40A	Service Water Pumphouse Train "A" Switchgear Room Supply Fan	SWA-20372	A	301139	SW-F-ID-A	X	X	X	-	NJO	SWA-CR5-52	460 V ac Circuit Breaker	CR5	SW-F-1B-A	CR5-NJO CR5-G2H/1 CR5-G2H	301115 CR5a	CR5c	EDE-MCC-514	SWA-FN-40B	
												SWA-CR5-42	Motor Starter	CR5	SW-F-1B-A						
												SWA-CR5-49	Overload Relays	CR5	SW-F-1B-A						
												SWA-CS-5614-2	Control Switch with Indication	G2H	CB-F-1A-A						
												SWA-SS-5614	Selector Switch	G2H	CB-F-1A-A						
												SWA-CR5-FU	Fuse	CR5	SW-F-1B-A						
2	SWA-FN-40B	Service Water Pumphouse Train "B" Switchgear Room Supply Fan	SWA-20372	B	301139	SW-F-ID-A	X	X	X	-	NK1	SWA-CRO-52	460 V ac Circuit Breaker	CRO	SW-F-1C-A	CRO-NK1 CRO-G2K/1 CRO-G2K F37-G2K/2 CRO-G2K/2	CROa	CROc	EDE-MCC-614	SWA-FN-40A	
												SWA-CRO-42	Motor Starter	CRO	SW-F-1C-A						
												SWA-CRO-49	Overload Relays	CRO	SW-F-1C-A						
												SWA-CS-5615-2	Control Switch with Indication	G2K	CB-F-1B-A						
												SWA-SS-5615	Selector Switch	G2K	CB-F-1B-A						
												SWA-CRO-FU	Fuses	CRO	SW-F-1C-A						

FUNCTION: ELECTRICAL DISTRIBUTION EMERGENCY

ITEM NO.	EQUIPMENT ID NO.	EQUIPMENT DESCRIPTION	P&ID/1-LINE DRAWING NO.	TRAIN	PHYSICAL LOCATION DRAWING NO.	FIRE AREA/ZONE	REQUIRED FOR		POWER		ELEC NODE	SUPPORTING CONTROL AND INSTRUMENTATION EQUIPMENT				CABLES	ELECTRICAL DRAWING NO.		SUPPORTING SYSTEMS	REDUNDANT COUNTERPART	REMARKS
							HOT STAND BY	COLD SHUT DOWN	ELEC	AIR		EQUIPMENT ID NO.	EQUIPMENT DESCRIPTION	ELEC NODE	FIRE AREA/ZONE		SCHEM.	CABLE			
1	EDE-SWG-5	4160 V Bus E5 UAT Incoming Line SWGR	310007	A	310442	CB-F-1A-A	X	X	X	-	A51	EDE-A51-52	4160 V Circuit Breaker	A51	CB-F-1A-A	A51-G07 A51-G07/2 A51-G10 A51-HR9 GA6-GB0/4 A51-G07/1 A51-G07/3 A51-GB4 GA0-GB3/4 GC4-GC6/4 A51-G5X A51-G5X/1 A55-A5A A54-A5A/1	310102 A51a A51b A51c A51d A51e	A51h	CBA-FN-19 CBA-FN-20 ED-X-2A EDE-PP-111A DAH-FN-25A DAH-FN-26A	EDE-SWG-6 UAT	
												EDE-CS-9709-2	Control Switch	A51	CB-F-1A-A						
												EDE-CS-9709-3	Control Switch with Indication	G07	DG-F-2A-A						
												EDE-A51-G,R,W	Indicating Lights	A51	CB-F-1A-A						
												EDE-SS-9707	Selector Switch	G07	DG-F-2A-A						
												EDE-SS-9709	Selector Switch	G07	DG-F-2A-A						
												EDE-A51-52H	Truck Operated Contact	A51	CB-F-1A-A						
												EDE-A51-FU	Fuses	A51	CB-F-1A-A						
												EDE-A51-CT1	Current Transformer (2000/5)	A51	CB-F-1A-A						
												EDE-A51-TD-1	CT Test Device	A51	CB-F-1A-A						
												EDE-A51-AM	Ammeter	A51	CB-F-1A-A						
												EDE-A51-AS	Ammeter Switch	A51	CB-F-1A-A						
												EDE-A51-ATR	Current Transducer	A51	CB-F-1A-A						
												EDE-A51-CT2	Current Transformers (4000/5)	A51	CB-F-1A-A						
												EDE-A67-PT	Potential Transformer (4200-120 V)	A67	CB-F-1A-A						
												EDE-A51-TD-3	PT Test Device	A51	CB-F-1A-A						
												EDE-A51-VM	Voltmeter	A51	CB-F-1A-A						
												EDE-A51-86	Lockout Relay	A51	CB-F-1A-A						
												EDE-A54-52S	Mechanically Operated Contact	A54	CB-F-1A-A						
												EDE-A52-52S	Mechanically Operated Contact	A52	CB-F-1A-A						
												DG-G10-25Y1	Auxiliary Synchronizing Check Relay	G10	DG-F-2A-A						
												EDE-A53-25U	Synchronizing Check Relay	A53	CB-F-1A-A						
												EDE-SS-9709-1	Selector Switch	G5X	DG-F-2A-A						
												EDE-CS-9707-3	Control Switch	G07	DG-F-2A-A						
												EDE-SNS-9736-2	Synchronizing Switch	G06	DG-F-2A-A						
												EDE-A52-86	Lockout Relay	A52	CB-F-1A-A						
												EDE-A69-86B	Lockout Relay	A69	CB-F-1A-A						
												ED-86SB/2/1X-1	Lockout Relay	GA0	TB-F-1C-2						
												ED-86-2/2/B3	Lockout Relay	GA6	TB-F-1C-Z						
												ED-86UB/2/1X-2A	Lockout Relay	GA8	TB-F-1C-Z						
												ED-86UB/2/1X-2B	Lockout Relay	GA8	TB-F-1C-Z						
												ED-86BF/2/2/52/TG1	Lockout Relay	GA9	TB-F-1C-Z						
												ED-86GT/2/TG1	Lockout Relay	GA9	TB-F-1C-Z						
												ED-86-1/2/B3	Lockout Relay	GB0	TB-F-1C-Z						
												ED-86BF-2/2H	Lockout Relay	GB3	TB-F-1C-Z						
												ED-86BF-2/2K	Lockout Relay	GB4	TB-F-1C-Z						

FUNCTION: ELECTRICAL DISTRIBUTION EMERGENCY

ITEM NO.	EQUIPMENT ID NO.	EQUIPMENT DESCRIPTION	P&ID/1-LINE DRAWING NO.	TRAIN	PHYSICAL LOCATION DRAWING NO.	FIRE AREA/ZONE	REQUIRED FOR		POWER		ELEC NODE	SUPPORTING CONTROL AND INSTRUMENTATION EQUIPMENT				CABLES	ELECTRICAL DRAWING NO.		SUPPORTING SYSTEMS	REDUNDANT COUNTERPART	REMARKS
							HOT STAND BY	COLD SHUT DOWN	ELEC	AIR		EQUIPMENT ID NO.	EQUIPMENT DESCRIPTION	ELEC NODE	FIRE AREA/ZONE		SCHEM.	CABLE			
	EDE-SWG-5 (Continued)											ED-86UP/2/1X-2A	Lockout Relay	GC2	TB-F-1C-Z						
												ED-86UP/2/1X-2B	Lockout Relay	GC2	TB-F-1C-Z						
												ED-86BF-1/2/52/TG1	Lockout Relay	GC3	TB-F-1C-Z						
												ED-86SP/2/1X-1	Lockout Relay	GC4	TB-F-1C-Z						
												ED-86BF-1/2H	Lockout Relay	CG6	TB-F-1C-Z						
												ED-86BF-1/2E	Lockout Relay	CG7	TB-F-1C-Z						
												DG-HR9-RM0	EPS Auxiliary Relay	HR9	CB-F-1A-A						
												EDE-A51-3	Interposing Relay for SWYD Lockout Relays	A51	CB-F-1A-A						
												EDE-A51-TD-2	Lockout Relay Test Device (A51-86)	A51	CB-F-1A-A						
												EDE-A51-TD-4	Interposing Relay Test Device (A51/3)	A51	CB-F-1A-A						
												ED-GA0-TD-2	Lockout Relay Test Device (86SB/2/1X-1)	GA0	TB-F-1C-Z						
												ED-GA6-TD-2	Lockout Relay Test Device (86-2/2/B3)	GA6	TB-F-1C-Z						
												ED-GA8-TD-2	Lockout Relay Test Device (86UB/2/1X-2A)	GA8	TB-F-1C-Z						
												ED-GA8-TD-2	Lockout Relay Test Device (86UB/2/1X-2B)	GA8	TB-F-1C-Z						
												ED-GA9-TD-2	Lockout Relay Test Device (86BF-2/2/52/TG1)	GA9	TB-F-1C-Z						
												ED-GA9-TD-2	Lockout Relay Test Device (86GT/2/TG1)	GA9	TB-F-1C-Z						
												ED-GB0-TD-2	Lockout Relay Test Device (86-1/2/B3)	GB0	TB-F-1C-Z						
												ED-GB3-TD-2	Lockout Relay Test Device (86BF-2/2H)	GB3	TB-F-1C-Z						
												ED-GB4-TD-2	Lockout Relay Test Device (86BF-2/2E)	GB4	TB-F-1C-Z						
												ED-GC2-TD-2	Lockout Relay Test Device (86UP/2/1X-2A)	GC2	TB-F-1C-Z						
												ED-GC2-TD-2	Lockout Relay Test Device (86UP/2/1X-2B)	GC2	TB-F-1C-Z						
												ED-GC3-TD-2	Lockout Relay Test Device (86BF-1/2/52/TG1)	GC3	TB-F-1C-Z						
												ED-GC4-TD-2	Lockout Relay Test Device (86SP/2/1X-1)	GC4	TB-F-1C-Z						
												ED-GC6-TD-2	Lockout Relay Test Device (86BF-1/2H)	GC6	TB-F-1C-Z						
												ED-GC7-TD-2	Lockout Relay Test Device (86BF-1/2E)	GC7	TB-F-1C-Z						
												EDE-A51-51	Time Overcurrent Relays øA, øB, øC	A51	CB-F-1A-A						
												EDE-A51-51GS	Ground Sensor Relay	A51	CB-F-1A-A						
												EDE-A5A-52S	Mechanically Operated Contact	A5A	CB-F-1A-A						

FUNCTION: ELECTRICAL DISTRIBUTION EMERGENCY

ITEM NO.	EQUIPMENT ID NO.	EQUIPMENT DESCRIPTION	P&ID/1-LINE DRAWING NO.	TRAIN	PHYSICAL LOCATION DRAWING NO.	FIRE AREA/ZONE	REQUIRED FOR		POWER		ELEC NODE	SUPPORTING CONTROL AND INSTRUMENTATION EQUIPMENT				CABLES	ELECTRICAL DRAWING NO.		SUPPORTING SYSTEMS	REDUNDANT COUNTERPART	REMARKS
							HOT STAND BY	COLD SHUT DOWN	ELEC	AIR		EQUIPMENT ID NO.	EQUIPMENT DESCRIPTION	ELEC NODE	FIRE AREA/ZONE		SCHEM.	CABLE			
2	EDE-SWG-5	Grounding Transformer	310007	A	310442	CB-F-1A-A	X	X	X	-	A67	EDE-A67-XFMR	3-1ø 15 kVA Transformers	A67	CB-F-1A-A		310102		CBA-FN-19 CBA-FN-20 EDE-SWG-5	EDE-SWG-6 GRD XFMR	
												EDE-A67-FU	3-10A Fuses	A67	CB-F-1A-A		A67a				
												EDE-A67-52	120 V AC Circuit Breaker	A67	CB-F-1A-A						
												EDE-A67-RES	Grounding Resistor	A67	CB-F-1A-A						
												EDE-A67-64	Grounding Relay	A67	CB-F-1A-A						
												EDE-A67-TD-3	VM Test Device	A67	CB-F-1A-A						
												EDE-A67-VM	(3) Ground Voltmeters	A67	CB-F-1A-A						

FUNCTION: ELECTRICAL DISTRIBUTION EMERGENCY

ITEM NO.	EQUIPMENT ID NO.	EQUIPMENT DESCRIPTION	P&ID/1-LINE DRAWING NO.	TRAIN	PHYSICAL LOCATION DRAWING NO.	FIRE AREA/ZONE	REQUIRED FOR		POWER		ELEC NODE	SUPPORTING CONTROL AND INSTRUMENTATION EQUIPMENT				CABLES	ELECTRICAL DRAWING NO.		SUPPORTING SYSTEMS	REDUNDANT COUNTERPART	REMARKS
							HOT STAND BY	COLD SHUT DOWN	ELEC	AIR		EQUIPMENT ID NO.	EQUIPMENT DESCRIPTION	ELEC NODE	FIRE AREA/ZONE		SCHEM.	CABLE			
3	EDE-SWG-5	4160 V Bus E5 RAT Incoming Line SWGR	310007	A	310442	CB-F-1A-A	X	X	X	-	A52	EDE-A52-52	4160 V Circuit Breaker	A52	CB-F-1A-A	A52-G07/1 A52-G07/3 A52-G10 A52-HR2 GA7-GB7/4 GE6-GE7/4 A52-G5X A52-G5X/1 A52-G07/2 A52-G07/4 A52-GB7 AG2-HR9 GC1-GC0/4 A54-A5A/2	310102 A52a A52b A52c A52d A52e	A52J	CBA-FN-19 CBA-FN-20 ED-X-3A EDE-PP-111A DAH-FN-25A DAH-FN-26A	EDE-SWG-6 RAT	
												EDE-CS-9707-2	Control Switch	A52	CB-F-1A-A						
												EDE-CS-9707-3	Control Switch with Indication	G07	DG-F-2A-A						
												EDE-A52-G,R,W	Indicating Lights	A52	CB-F-1A-A						
												EDE-SS-9707	Selector Switch	G07	DG-F-2A-A						
												EDE-SS-9709	Selector Switch	G07	DG-F-2A-A						
												EDE-A52-52H	Truck Operated Contact	A52	CB-F-1A-A						
												EDE-A52-FU	Fuses	A52	CB-F-1A-A						
												EDE-A52-27/59	Under/Over Voltage Relay	A52	CB-F-1A-A						
												EDE-A52-27/59X1,X2	Under/Over Voltage Auxiliary Relay	A52	CB-F-1A-A						
												EDE-A52-52Z	Time Delay Relay	A52	CB-F-1A-A						
												EDE-SS-9707-1	Selector Switch	G5X	DG-F-2A-A						
												EDE-CS-9709-3	Control Switch	G07	DG-F-2A-A						
												EDE-A52-CT-1	Current Transformer (2000/5)	A52	CB-F-1A-A						
												EDE-A52-TD-1	CT Test Device	A52	CB-F-1A-A						
												EDE-A52-AM	Ammeter	A52	CB-F-1A-A						
												EDE-A52-AS	Ammeter Switch	A52	CB-F-1A-A						
												EDE-A52-ATR	Current Transducer	A52	CB-F-1A-A						
												EDE-A52-CT-2	Current Transformer (4000/5)	A52	CB-F-1A-A						
												EDE-A53-PT	Potential Transformer	A53	CB-F-1A-A						
												EDE-A52-TD-3	PT Test Device	A52	CB-F-1A-A						
												EE-A52-VM	Voltmeter	A52	CB-F-1A-A						
												EDE-A52-52S	Mechanically Operated Contact	A52	CB-F-1A-A						
												EDE-A69-86B	Lockout Relay	A69	CB-F-1A-A						
												EDE-A52-86	Lockout Relay	A52	CB-F-1A-A						
												EDE-A51-86	Lockout Relay	A51	CB-F-1A-A						
												DG-HR2-RM0	EPS Auxiliary Relay	HR2	CB-F-1A-A						
												DG-HR9-RM0	EPS Auxiliary Relay	HR9	CB-F-1A-A						
												EDE-A51-52S	Mechanically Operated Contact	A51	CB-F-1A-A						
												EDE-A54-52S	Mechanically Operated Contact	A54	CB-F-1A-A						
												EDE-SNS-9736-2	Synchronizing Switch	G06	DG-F-2A-A						
												DG-G10-25Y1	Auxiliary Synchronizing Check Relay	G10	DG-F-2A-A						
												EDE-A53-25RX	Auxiliary Synchronizing Check Relay	A53	CB-F-1A-A						
												EDE-A53-25R	Synchronizing Check Relay	A53	CB-F-1A-A						

FUNCTION: ELECTRICAL DISTRIBUTION EMERGENCY

ITEM NO.	EQUIPMENT ID NO.	EQUIPMENT DESCRIPTION	P&ID/1-LINE DRAWING NO.	TRAIN	PHYSICAL LOCATION DRAWING NO.	FIRE AREA/ZONE	REQUIRED FOR		POWER		ELEC NODE	SUPPORTING CONTROL AND INSTRUMENTATION EQUIPMENT				CABLES	ELECTRICAL DRAWING NO.		SUPPORTING SYSTEMS	REDUNDANT COUNTERPART	REMARKS
							HOT STAND BY	COLD SHUT DOWN	ELEC	AIR		EQUIPMENT ID NO.	EQUIPMENT DESCRIPTION	ELEC NODE	FIRE AREA/ZONE		SCHEM.	CABLE			
	EDE-SWG-5 (Continued)											EDE-A52-62 & 62X	Time Delay Relay	A52	CB-F-1A-A						
												EDE-A51-3	Interposing Relay for SWD Lockout Relays	A51	CB-F-1A-A						
												EDE-A52-TD-2	Lockout Relay Test Device (A52-86)	A52	CB-F-1A-A						
												EDE-A52-TD-4	Interposing Relay Test Device (A52-3)	A52	CB-F-1A-A						
												ED-86RB/2/1X-3A	Lockout Relay	GA7	TB-F-1C-Z						
												ED-86-2/2/B2	Lockout Relay	GB7	TB-F-1C-Z						
												ED-86-1/2/B2	Lockout Relay	GC0	TB-F-1C-Z						
												ED-86RP/2/1X-3A	Lockout Relay	GC1	TB-F-1C-Z						
												ED-86RP/2/1X-3B	Lockout Relay	GE6	TB-F-1C-Z						
												ED-86RB/2/1X-3B	Lockout Relay	GE7	TB-F-1C-Z						
												ED-GA7-TD-2	Lockout Relay Test Device (86RB/2/1X-3A)	GA7	TB-F-1C-Z						
												ED-GB7-TD-2	Lockout Relay Test Device (86-1/2/B2)	GB7	TB-F-1C-Z						
												ED-GC0-TD-2	Lockout Relay Test Device (86-1/2/B2)	GC0	TB-F-1C-Z						
												ED-GC1-TD-2	Lockout Relay Test Device (86RP/2/1X-3A)	GC1	TB-F-1C-Z						
												ED-GE6-TD-2	Lockout Relay Test Device (86RB/2/1X-3B)	GE6	TB-F-1C-Z						
												ED-G37-TD-2	Lockout Relay Test Device (86RP/2/1X-3B)	GE7	TB-F-1C-Z						
												EDE-A52-51	Time Overcurrent Relays øA, øB, øC	A52	CB-F-1A-A						
												EDE-A52-51GS	Ground Sensor Relay	A52	CB-F-1A-A						
												EDE-A52-27RB-1	Residual Undervoltage Relay	A52	CB-F-1A-A						
												EDE-A52-27RB-2	Residual Undervoltage Relay	A52	CB-F-1A-A						
												EDE-A5A-52S	Mechanically Operated Contact	A5A	CB-F-1A-A						

FUNCTION: ELECTRICAL DISTRIBUTION EMERGENCY

ITEM NO.	EQUIPMENT ID NO.	EQUIPMENT DESCRIPTION	P&ID/1-LINE DRAWING NO.	TRAIN	PHYSICAL LOCATION DRAWING NO.	FIRE AREA/ZONE	REQUIRED FOR		POWER		ELEC NODE	SUPPORTING CONTROL AND INSTRUMENTATION EQUIPMENT				CABLES	ELECTRICAL DRAWING NO.		SUPPORTING SYSTEMS	REDUNDANT COUNTERPART	REMARKS
							HOT STAND BY	COLD SHUT DOWN	ELEC	AIR		EQUIPMENT ID NO.	EQUIPMENT DESCRIPTION	ELEC NODE	FIRE AREA/ZONE		SCHEM.	CABLE			
4	EDE-SWG-5	4160 V Bus E5 PT Compartment	310007	A	310442	CB-F-1A-A	X	X	X	-	A53	EDE-A53-PT	Potential Transformers	A53	CB-F-1A-A	A53-AC2 A53-HR2 AF2-ED4 A53-G07 AC2-AF2 A54-A5A/4 A54-A5A/5 A55-A5A/1 A55-A5A/2	310102 A53a A53e A53h	A53d	CBA-FN-19 CBA-FN-20 EDE-SWG-5 EDE-PP-111A DAH-FN-25A DAH-FN-26A	EDE-SWG-6 PT	
												EDE-A53-VM	Voltmeter	A53	CB-F-1A-A						
												EDE-A53-VS	Voltmeter Switch	A53	CB-F-1A-A						
												EDE-A53-TD-3	PT Test Device	A53	CB-F-1A-A						
												EDE-A53-VTR-1	Voltage Transducer	A53	CB-F-1A-A						
												EDE-A53-VTR-2	Voltage Transducer	A53	CB-F-1A-A						
												EDE-SS-9709	Selector Switch	G07	DG-F-2A-A						
												EDE-SNS-9736-2	Synchronizing Switch	G06	DG-F-2A-A						
												EDE-A53-25U	Synchronizing Check Relay	A53	CB-F-1A-A						
												EDE-A53-25R	Synchronizing Check Relay	A53	CB-F-1A-A						
												EDE-A54-52S	Mechanically Operated Contact	A54	CB-F-1A-A						
												EDE-A53-27B-1	Instantaneous Undervoltage Relay	A53	CB-F-1A-A						
												EDE-A53-27B-2	Instantaneous Undervoltage Relay	A53	CB-F-1A-A						
												EDE-A53-TS-3	Undervoltage Relay Test Switch	A53	CB-F-1A-A						
												EDE-A53-27D-1	Instantaneous Undervoltage Relay	A53	CB-F-1A-A						
												EDE-A53-27-D-1-RES	Resistor	A53	CB-F-1A-A						
												EDE-A53-27D-2	Instantaneous Undervoltage Relay	A53	CB-F-1A-A						
												EDE-A53-27D-2-RES	Resistor	A53	CB-F-1A-A						
												EDE-A53-TS-1	Undervoltage Relays Test Switch	A53	CB-F-1A-A						
												EDE-A52-27RB-1,2	Residual Undervoltage Relay	A52	CB-F-1A-A						
												EDE-A53-62B	Time Delay Relay	A53	CB-F-1A-A						
												EDE-A53-62B-RES	Resistor	A53	CB-F-1A-A						
												EDE-A53-TS-4	Test Switch EDE-62B	A53	CB-F-1A-A						
												EDE-A53-62BX-1	Auxiliary Relay	A53	CB-F-1A-A						
												EDE-A53-62BX	Auxiliary Latch Relay	A53	CB-F-1A-A						
												EDE-A51-52S	Mechanically Operated Contact	A51	CB-F-1A-A						
												EDE-ED4-94-5	Undervoltage Tripping Relay	ED4	CB-F-1A-A						
												EDE-A52-27/59X1	Under/Over Voltage Auxiliary Relay	A52	CB-F-1A-A						
												EDE-AF3-94-4	Undervoltage Tripping Relay	AF3	CB-F-1A-A						
												DG-HR2-RM0	EPS Auxiliary Relay	HR2	CB-F-1A-A						

FUNCTION: ELECTRICAL DISTRIBUTION EMERGENCY

ITEM NO.	EQUIPMENT ID NO.	EQUIPMENT DESCRIPTION	P&ID/1-LINE DRAWING NO.	TRAIN	PHYSICAL LOCATION DRAWING NO.	FIRE AREA/ZONE	REQUIRED FOR		POWER		ELEC NODE	SUPPORTING CONTROL AND INSTRUMENTATION EQUIPMENT				CABLES	ELECTRICAL DRAWING NO.		SUPPORTING SYSTEMS	REDUNDANT COUNTERPART	REMARKS
							HOT STAND BY	COLD SHUT DOWN	ELEC	AIR		EQUIPMENT ID NO.	EQUIPMENT DESCRIPTION	ELEC NODE	FIRE AREA/ZONE		SCHEM.	CABLE			
	EDE-SWG-5 (Continued)											EDE-A53-94-1A	Undervoltage Tripping Relay	A53	CB-F-1A-A						
												EDE-A53-94-1B	Undervoltage Tripping Relay	A53	CB-F-1A-A						
												EDE-A53-94-2	Undervoltage Tripping Relay	A53	CB-F-1A-A						
												EDE-AC3-94-3	Undervoltage Tripping Relay	AC3	CB-F-1A-A						
												EDE-A53-FU	125 V DC 10A Fuses (2)	A53	CB-F-1A-A						
												EDE-A53-62D	Time Delay Relay	A53	CB-F-1A-A						
												EDE-A53-62D-RES	Resistor	A53	CB-F-1A-A						
												EDE-A53-TS-2	Test Switch Relay 62D	A53	CB-F-1A-A						
												EDE-A53-62DX	Auxiliary Relay	A53	CB-F-1A-A						
												EDE-A5A-52S	Mechanically Operated Contact	A5A	CB-F-1A-A						

FUNCTION: ELECTRICAL DISTRIBUTION EMERGENCY

ITEM NO.	EQUIPMENT ID NO.	EQUIPMENT DESCRIPTION	P&ID/1-LINE DRAWING NO.	TRAIN	PHYSICAL LOCATION DRAWING NO.	FIRE AREA/ZONE	REQUIRED FOR		POWER		ELEC NODE	SUPPORTING CONTROL AND INSTRUMENTATION EQUIPMENT				CABLES	ELECTRICAL DRAWING NO.		SUPPORTING SYSTEMS	REDUNDANT COUNTERPART	REMARKS
							HOT STAND BY	COLD SHUT DOWN	ELEC	AIR		EQUIPMENT ID NO.	EQUIPMENT DESCRIPTION	ELEC NODE	FIRE AREA/ZONE		SCHEM.	CABLE			
5	EDE-SWG-5	4160 V Bus E5 DG-1A Incoming Line SWGR	310010 310007	A	310442	CB-F-1A-A	X	X	X	-	A54	EDE-A54-52	4160 V Circuit Breaker	A54	CB-F-1A-A	A54-G06/2 A54-G06/4 A54-G07/1 A54-HN0 A54-G06/3 A54-G07 A54-G07/2 G06-G29/7 A54-A5A/3	310102 A54a A54b A54c A54d A54e A54f	A54k	CBA-FN-19 CBA-FN-20 DG-DG-1A DAH-FN-25A DAH-FN-26A EDE-PP-111A	EDE-SWG-6 DG-1B	
												EDE-CS-9700-2	Control Switch	A54	CB-F-1A-A						
												EDE-CS-9700-3	Control Switch with Indication	G06	DG-F-2A-A						
												EDE-A54-G,R,W	Indicating Lights	A54	CB-F-1A-A						
												EDE-SS-9700	Selector Switch	G06	DG-F-2A-A						
												EDE-SNS-9736-2	Synchronizing Switch	G06	DG-F-2A-A						
												EDE-A54-52H	Truck Operated Contact	A54	CB-F-1A-A						
												EDE-A54-FU	Fuses	A54	CB-F-1A-A						
												EDE-A54-CT	Current Transformers (2000/5)	A54	CB-F-1A-A						
												EDE-A54-DCT	Differential Current Transformers (2000/5)	A54	CB-F-1A-A						
												DG-HN0-DCT	DG-1A Neut. Diff. Current Transformers (2000/5)	HN0	DG-F-2A-A						
												DG-G06-CT	Auxiliary Current Transformers (5:10)	G06	DG-F-2A-A						
												EDE-A54-AM	Ammeter	A54	CB-F-1A-A						
												EDE-A54-AS-1	Ammeter Switch	A54	CB-F-1A-A						
												EDE-A54-ATR-1	Current Transducer	A54	CB-F-1A-A						
												EDE-A54-ATR-2	Current Transducer	A54	CB-F-1A-A						
												EDE-AM-9700-2	Ammeter	G06	DG-F-2A-A						
												EDE-G06-AS	Ammeter Switch	G06	DG-F-2A-A						
												DG-SM-9585	Governor Control (2301A)	G06	DG-F-2A-A						
												EDE-A69-PT	DG-1A Inc. Line Pot. Transformer (2) 4200-120 V	A69	CB-F-1A-A						
												EDE-A69-VM	Voltmeter	A69	CB-F-1A-A						
												EDE-A69-VS	Voltmeter Switch	A69	CB-F-1A-A						
												EDE-A69-TD-3	PT Test Device	A69	CB-F-1A-A						
												EDE-A69-VTR-1	Voltage Transducer	A69	CB-F-1A-A						
												EDE-A69-VTR-2	Voltage Transducer	A69	CB-F-1A-A						
												EDE-A54-27DG	Undervoltage Relay	A54	CB-F-1A-A						
												EDE-A69-FTR-1	Frequency Transducer	A69	CB-F-1A-A						
												EDE-A69-FTR-2	Frequency Transducer	A69	CB-F-1A-A						
												EDE-A69-W/WH-TR	Watt/Watthour Transducer	A69	CB-F-1A-A						
												EDE-A69-W/TR	Watt Transducer	A69	CB-F-1A-A						
												EDE-A69-VAR-TR	Var Transducer	A69	CB-F-1A-A						
												EDE-A54-TS	Test Start Switch	A54	CB-F-1A-A						
												EDE-A54-52Z	Time Delay Relay	A54	CB-F-1A-A						
												EDE-A54-81-RES	Resistor	A54	CB-F-1A-A						
												EDE-A54-86DP	Primary Lockout Relay	A54	CB-F-1A-A						
												EDE-A54-W	Indicating Light (A54-86DP)	A54	CB-F-1A-A						

FUNCTION: ELECTRICAL DISTRIBUTION EMERGENCY

ITEM NO.	EQUIPMENT ID NO.	EQUIPMENT DESCRIPTION	P&ID/1-LINE DRAWING NO.	TRAIN	PHYSICAL LOCATION DRAWING NO.	FIRE AREA/ZONE	REQUIRED FOR		POWER		ELEC NODE	SUPPORTING CONTROL AND INSTRUMENTATION EQUIPMENT				CABLES	ELECTRICAL DRAWING NO.		SUPPORTING SYSTEMS	REDUNDANT COUNTERPART	REMARKS
							HOT STAND BY	COLD SHUT DOWN	ELEC	AIR		EQUIPMENT ID NO.	EQUIPMENT DESCRIPTION	ELEC NODE	FIRE AREA/ZONE		SCHEM.	CABLE			
	EDE-SWG-5 (Continued)											EDE-A69-86B	Lockout Relay	A69	CB-F-1A-A						
												EDE-A69-86DB	Back-Up Lockout Relay	A69	CB-F-1A-A						
												EDE-A69-W	Indicating Light (A69-86B & A69-86DB)	A69	CB-F-1A-A						
												EDE-A51-86	Lockout Relay	A51	CB-F-1A-A						
												EDE-A52-86	Lockout Relay	A52	CB-F-1A-A						
												EDE-A51-52S	Mechanically Operated Contact	A51	CB-F-1A-A						
												EDE-A52-52S	Mechanically Operated Contact	A52	CB-F-1A-A						
												EDE-A54-52S	Mechanically Operated Contact	A54	CB-F-1A-A						
												EDE-A69-RLA	LOCA Seal Relay	A69	CB-F-1A-A						
												DG-G10-25Y	Auxiliary Sync Check Relay	G10	DG-F-2A-A						
												EDE-A69-RS	Fast Closure Relay	A69	CB-F-1A-A						
												EDE-A54-81	Frequency Relay	A54	CB-F-1A-A						
												EDE-A54-87DP	Primary Differential Relay	A54	CB-F-1A-A						
												EDE-A69-51B	Time Overcurrent Relays, øA, øB, øC	A69	CB-F-1A-A						
												EDE-A54-81X	Auxiliary Frequency Relay	A54	CB-F-1A-A						
												EDE-A69-60	Voltage Balance Relay	A69	CB-F-1A-A						
												EDE-A69-60AX	Auxiliary Voltage Balance Relay	A69	CB-F-1A-A						
												EDE-A69-60BX	Auxiliary Voltage Balance Relay	A69	CB-F-1A-A						
												EDE-A69-40	Loss of Field Relays øA, øB	A69	CB-F-1A-A						
												EDE-A54-40X	Auxiliary Loss of Field Relay	A54	CB-F-1A-A						
												EDE-A69-32	Power Directional Relay	A69	CB-F-1A-A						
												EDE-A69-TD-1	Lockout Relay Test Device (86B)	A69	CB-F-1A-A						
												EDE-A69-TD-2	Lockout Relay Test Device (86DB)	A69	CB-F-1A-A						
												EDE-A54-TD-2	Lockout Relay Test Device (86DP)	A54	CB-F-1A-A						
												DG-G07-R43L5	Selector Switch Auxiliary Relay (Local)	G07	DG-F-2A-A						
												DG-G07-R43R3	Selector Switch Auxiliary Relay (Remote)	G07	DG-F-2A-A						
												DG-G07-R43R4	Selector Switch Auxiliary Relay (Remote)	G07	DG-F-2A-A						
												DG-G07-R43R6	Selector Switch Auxiliary Relay (Remote)	G07	DG-F-2A-A						

FUNCTION: ELECTRICAL DISTRIBUTION EMERGENCY

ITEM NO.	EQUIPMENT ID NO.	EQUIPMENT DESCRIPTION	P&ID/1-LINE DRAWING NO.	TRAIN	PHYSICAL LOCATION DRAWING NO.	FIRE AREA/ZONE	REQUIRED FOR		POWER		ELEC NODE	SUPPORTING CONTROL AND INSTRUMENTATION EQUIPMENT				CABLES	ELECTRICAL DRAWING NO.		SUPPORTING SYSTEMS	REDUNDANT COUNTERPART	REMARKS
							HOT STAND BY	COLD SHUT DOWN	ELEC	AIR		EQUIPMENT ID NO.	EQUIPMENT DESCRIPTION	ELEC NODE	FIRE AREA/ZONE		SCHEM.	CABLE			
	EDE-SWG-5 (Continued)											DG-G29-5A	Shutdown Relay	G29	DG-F-2A-A						
												EDE-A69-51V	Time Overcurrent Voltage Restraint Relays, øA, øB, øC	A69	CB-F-1A-A						
												EDE-A69-51GS	Ground Sensor Relay	A69	CB-F-1A-A						
												EDE-A54-TD-1	Test Device	A54	CB-F-1A-A						
												EDE-A69-TD-3	Voltage Test Device	A69	CB-F-1A-A						
												EDE-A54-87DP Reactor	Primary Differential Relay Reactor Assembly	A54	CB-F-1A-A						
												EDE-A54-81Y	Time Delay Relay	A54	CB-F-1A-A						
												EDE-A5A-52S	Mechanically Operated Contact	A5A	CB-F-1A-A						

FUNCTION: ELECTRICAL DISTRIBUTION EMERGENCY

ITEM NO.	EQUIPMENT ID NO.	EQUIPMENT DESCRIPTION	P&ID/1-LINE DRAWING NO.	TRAIN	PHYSICAL LOCATION DRAWING NO.	FIRE AREA/ZONE	REQUIRED FOR		POWER		ELEC NODE	SUPPORTING CONTROL AND INSTRUMENTATION EQUIPMENT				CABLES	ELECTRICAL DRAWING NO.		SUPPORTING SYSTEMS	REDUNDANT COUNTERPART	REMARKS
							HOT STAND BY	COLD SHUT DOWN	ELEC	AIR		EQUIPMENT ID NO.	EQUIPMENT DESCRIPTION	ELEC NODE	FIRE AREA/ZONE		SCHEM.	CABLE			
6	DG-CP-75A	Diesel Generator 1A Control Panel Cubicle 2 Synchronizing System	310010	A	310524	DG-F-2A-A	X	X	X	-	G07	DG-G07-FU-17&18	125 V DC Fuses (6A)	G07	DG-F-2A-A		310102 G07/2c	G07/2g	DAH-FN-25A DAH-FN-26A EDE-SWG-11A	DG-CP-76A	
												EDE-SS-9700	Selector Switch	G06	DG-F-2A-A						
												EDE-SS-9709	Selector Switch	G07	DG-F-2A-A						
												EDE-SS-9707	Selector Switch	G07	DG-F-2A-A						
												DG-G07-R43R4	Selector Switch Auxiliary Relay (Remote)	G07	DG-F-2A-A						
												DG-G07-R43R6	Selector Switch Auxiliary Relay (Remote)	G07	DG-F-2A-A						
												DG-G07-RAX	Auxiliary Relay, Latch	G07	DG-F-2A-A						
												DG-G07-R43L4	Selector Switch Auxiliary Relay (Local)	G07	DG-F-2A-A						
												EDE-SNS-9736-2	Synchronizing Switch	G06	DG-F-2A-A						
												EDE-CS-9700-3	Control Switch	G06	DG-F-2A-A						
												EDE-CS-9707-3	Control Switch	G07	DG-F-2A-A						
												EDE-CS-9709-3	Control Switch	G07	DG-F-2A-A						
												DG-G06-25DG	Synchronizing Check Relay	G06	DG-F-2A-A						
												DG-G10-25Y	Auxiliary Synchronizing Check Relay	G10	DG-F-2A-A						
												DG-G10-25Y1	Auxiliary Synchronizing Check Relay	G10	DG-F-2A-A						
												EDE-A67-PT	UAT X-2A Inc. Line Potential Transformer	A67	CB-F-1A-A		7b	7f			
												EDE-A53-PT	RAT X-3A Inc. Line Potential Transformer	A53	CB-F-1A-A						
												EDE-A53-PT	Bus E5 Potential Transformer	A53	CB-F-1A-A						
												EDE-A69-PT	DG-1A Inc. Line Potential Transformer	A69	CB-F-1A-A						
												EDE-SNS-9736-2	Synchronizing Switch	G06	DG-F-2A-A						
												EDE-SS-9707	Selector Switch	G07	DG-F-2A-A						
												EDE-SS-9709	Selector Switch	G07	DG-F-2A-A						
												DG-G07-R43R3	Selector Switch Auxiliary Relay (Remote)	G07	DG-F-2A-A						
												DG-G07-R43R4	Selector Switch Auxiliary Relay (Remote)	G07	DG-F-2A-A						
												DG-G07-RAX	Auxiliary Relay Latch	G07	DG-F-2A-A						
												DG-G06-25DG	Synchronizing Check Relay	G06	DG-F-2A-A						
												EDE-SYN-9701	Synchroscope	G06	DG-F-2A-A						

FUNCTION: ELECTRICAL DISTRIBUTION EMERGENCY

ITEM NO.	EQUIPMENT ID NO.	EQUIPMENT DESCRIPTION	P&ID/1-LINE DRAWING NO.	TRAIN	PHYSICAL LOCATION DRAWING NO.	FIRE AREA/ZONE	REQUIRED FOR		POWER		ELEC NODE	SUPPORTING CONTROL AND INSTRUMENTATION EQUIPMENT				CABLES	ELECTRICAL DRAWING NO.		SUPPORTING SYSTEMS	REDUNDANT COUNTERPART	REMARKS
							HOT STAND BY	COLD SHUT DOWN	ELEC	AIR		EQUIPMENT ID NO.	EQUIPMENT DESCRIPTION	ELEC NODE	FIRE AREA/ZONE		SCHEM.	CABLE			
	DG-CP-75A (Continued)											EDE-ZL-9701	Synchronizing Lights	G06	DG-F-2A-A						
												EDE-VM-9701-1	Synchronizing Voltmeter Incoming	G06	DG-F-2A-A						
												EDE-VM-9701-2	Synchronizing Voltmeter Running	G06	DG-F-2A-A						

FUNCTION: ELECTRICAL DISTRIBUTION EMERGENCY

ITEM NO.	EQUIPMENT ID NO.	EQUIPMENT DESCRIPTION	P&ID/1-LINE DRAWING NO.	TRAIN	PHYSICAL LOCATION DRAWING NO.	FIRE AREA/ZONE	REQUIRED FOR		POWER		ELEC NODE	SUPPORTING CONTROL AND INSTRUMENTATION EQUIPMENT				CABLES	ELECTRICAL DRAWING NO.		SUPPORTING SYSTEMS	REDUNDANT COUNTERPART	REMARKS
							HOT STAND BY	COLD SHUT DOWN	ELEC	AIR		EQUIPMENT ID NO.	EQUIPMENT DESCRIPTION	ELEC NODE	FIRE AREA/ZONE		SCHEM.	CABLE			
7	EDE-SWG-5	4160 V Feed to 480 V Transformer EDE-X-5A for Substation Bus EDE-US-51	310007	A	310442	CB-F-1A-A	X	X	X	-	A55	EDE-A55-52	4160 V Circuit Breaker	A55	CB-F-1A-A	A55-AB1	310102		CBA-FN-19	EDE-SWG-6	
												EDE-A55-FU	Fuses	A55	CB-F-1A-A		A55a A55b A55c A55d	A55g	CBA-FN-20 EDE-PP-111A EDE-SWG-5	EDE-X-5C EDE-US-61	
												EDE-CS-9706	Control Switch	A55	CB-F-1A-A						
												EDE-A55-G,R,W	Indicating Lights	A55	CB-F-1A-A						
												EDE-SS-9706	Selector Switch	A55	CB-F-1A-A						
												EDE-A55-52H	Truck Operated Contact	A55	CB-F-1A-A						
												EDE-A55-86	Lockout Relay	A55	CB-F-1A-A						
												EDE-A55-TD2	Lockout Relay Test Device	A55	CB-F-1A-A						
												EDE-A55-50/51	Inst/Time Overcurrent Relays øA, øB, øC	A55	CB-F-1A-A						
												EDE-A55-CT	Current Transformers (300/5)	A55	CB-F-1A-A						
												EDE-A55-AM	Ammeter	A55	CB-F-1A-A						
												EDE-A55-AS	Ammeter Switch	A55	CB-F-1A-A						
												EDE-A55-ATR	Current Transducer	A55	CB-F-1A-A						
												EDE-A55-TD1	CT Test Device	A55	CB-F-1A-A						
												EDE-A55-51GS	Ground Sensor Relay	A55	CB-F-1A-A						
8	EDE-SWG-5	4160 V Feed to 480 V Transformer EDE-X-5B for Substation Bus EDE-US-52	310007	A	310442	CB-F-1A-A	X	X	X	-	A63	EDE-A63-52	4160 V Circuit Breaker	A63	CB-F-1A-A	A63-AC1	310102		CBA-FN-19	EDE-SWG-6	
												EDE-A63-FU	Fuses	A63	CB-F-1A-A		A63a A63b A63c A63d	A63g	CBA-FN-20 EDE-PP-111A EDE-SWG-5	EDE-X-5D EDE-US-62	
												EDE-CS-9703	Control Switch	A63	CB-F-1A-A						
												EDE-A63-G,R,W	Indicating Lights	A63	CB-F-1A-A						
												EDE-SS-9703	Selector Switch	A63	CB-F-1A-A						
												EDE-A63-52H	Truck Operated Contact	A63	CB-F-1A-A						
												EDE-A63-86	Lockout Relay	A63	CB-F-1A-A						
												EDE-A63-TD2	Lockout Relay Test Device	A63	CB-F-1A-A						
												EDE-A63-50/51	Inst/Time Overcurrent Relays øA, øB, øC	A63	CB-F-1A-A						
												EDE-A63-CT	Current Transformers (300/51)	A63	CB-F-1A-A						
												EDE-A63-AM	Ammeter	A63	CB-F-1A-A						
												EDE-A63-AS	Ammeter Switch	A63	CB-F-1A-A						
												EDE-A63-ATR	Current Transducer	A63	CB-F-1A-A						
												EDE-A63-TD1	CT Test Device	A63	CB-F-1A-A						
												EDE-A63-51GS	Ground Sensor Relay	A63	CB-F-1A-A						

FUNCTION: ELECTRICAL DISTRIBUTION EMERGENCY

ITEM NO.	EQUIPMENT ID NO.	EQUIPMENT DESCRIPTION	P&ID/1-LINE DRAWING NO.	TRAIN	PHYSICAL LOCATION DRAWING NO.	FIRE AREA/ZONE	REQUIRED FOR		POWER		ELEC NODE	SUPPORTING CONTROL AND INSTRUMENTATION EQUIPMENT				CABLES	ELECTRICAL DRAWING NO.		SUPPORTING SYSTEMS	REDUNDANT COUNTERPART	REMARKS
							HOT STAND BY	COLD SHUT DOWN	ELEC	AIR		EQUIPMENT ID NO.	EQUIPMENT DESCRIPTION	ELEC NODE	FIRE AREA/ZONE		SCHEM.	CABLE			
9	EDE-US-51	480 V Bus 51 Unit Substation	310013	A	310442	CB-F-1A-A	X	X	X	-	AB2	EDE-AB2-52	480 V ac Circuit Breaker	AB2	CB-F-1A-A		310103 AB2a	AB2b	CBA-FN-19 CBA-FN-20 EDE-X-5A	EDE-US-61	
												EDE-X-5A	4160-480 V Distribution Transformer	AB1	CB-F-1A-A						
												EDE-AB3-FU	Fuses	AB3	CB-F-1A-A						
												EDE-AB1-LA	6 kV Lightning Arrestors (3)	AB1	CB-F-1A-A						
												EDE-AB2-CT	Current Transformers (2000/5)	AB2	CB-F-1A-A						
												EDE-AB3-AM	Ammeter	AB3	CB-F-1A-A						
												EDE-AB3-AS	Ammeter Switch	AB3	CB-F-1A-A						
10	EDE-US-52	480 V Bus 51 Unit Substation	310013	A	310442	CB-F-1A-A	X	X	X	-	AC2	EDE-AC2-52	480 V AC Circuit Breaker	AC2	CB-F-1A-A		310103 AC2a	AC2b	CBA-FN-19 CBA-FN-20 EDE-X-5B	EDE-US-62	
												EDE-X-5B	4160-480 V Distribution Transformer	AC1	CB-F-1A-A						
												EDE-AC3-FU	Fuses	AC3	CB-F-1A-A						
												EDE-AC1-LA	6 kV Lightning Arrestors (3)	AC1	CB-F-1A-A						
												EDE-AC2-CT	Current Transformers (2000/5)	AC2	CB-F-1A-A						
												EDE-AC3-AM	Ammeter	AC3	CB-F-1A-A						
												EDE-AC3-AS	Ammeter Switch	AC3	CB-F-1A-A						
11	EDE-US-51	480 V Feed to 460 V Motor Control Center 512	310013	A	310442	CB-F-1A-A	X	X	X	-	AB6	EDE-AB6-52	480 V AC Circuit Breaker	AB6	CB-F-1A-A	AB6-B10 AB6-B10/1	310103 AB6	AB6	CBA-FN-19 CBA-FN-20 EDE-US-51	EDE-US-61 EDE-MCC-612	
12	EDE-US-51	480 V Feed to 460V Motor Control Center 514	310013	A	310442	CB-F-1A-A	X	X	X	-	A94	EDE-A94-52	480 V AC Circuit Breaker	A94	CB-F-1A-A	A94-C11	310103 A94	A94	CBA-FN-19 CBA-FN-20 EDE-US-51	EDE-US-61 EDE-MCC-614	
13	EDE-US-51	480 V Feed to 460 V Motor Control Center 515	310013	A	310442	CB-F-1A-A	X	X	X	-	AX8	EDE-AX8-52	480 V AC Circuit Breaker	AX8	CB-F-1A-A	AB6-B4D AB6-B4D/1	310103 AX8	AX8	CBA-FN-19 CBA-FN-20 EDE-US-51	EDE-US-61 EDE-MCC-615	
14	EDE-US-52	480 V Feed to 460 V Motor Control Center 521	310013	A	310442	CB-F-1A-A	X	X	X	-	AC8	EDE-AC8-52	480 V AC Circuit Breaker	AC8	CB-F-1A-A	AC8-B13 AC8-B13/1	310103 AC8	AC8	CBA-FN-19 CBA-FN-20 EDE-US-52	EDE-US-62 EDE-MCC-622	
15	EDE-US-52	480 V Feed to 460 V Motor Control Center 522	310013	A	310442	CB-F-1A-A	X	X	X	-	AW9	EDE-AW9-52	480 V AC Circuit Breaker	AW9	CB-F-1A-A	AW9-D12 AW9-G81/1 AW9-G81	310103 AW9a AW9b AW9c	AW9c	CBA-FN-19 CBA-FN-20 EDE-US-52	EDE-US-62 EDE-MCC-622	
												EDE-CS-9787-2	Control Switch with Indication	G81	CB-F-1A-A						
												EDE-SS-9787	Selector Switch	G81	CB-F-1A-A						
												EDE-AW9-52H	Truck Operated Contact	AW9	CB-F-1A-A						
												EDE-AW9-FU	Fuses	AW9	CB-F-1A-A						

FUNCTION: ELECTRICAL DISTRIBUTION EMERGENCY

ITEM NO.	EQUIPMENT ID NO.	EQUIPMENT DESCRIPTION	P&ID/1-LINE DRAWING NO.	TRAIN	PHYSICAL LOCATION DRAWING NO.	FIRE AREA/ZONE	REQUIRED FOR		POWER		ELEC NODE	SUPPORTING CONTROL AND INSTRUMENTATION EQUIPMENT				CABLES	ELECTRICAL DRAWING NO.		SUPPORTING SYSTEMS	REDUNDANT COUNTERPART	REMARKS
							HOT STAND BY	COLD SHUT DOWN	ELEC	AIR		EQUIPMENT ID NO.	EQUIPMENT DESCRIPTION	ELEC NODE	FIRE AREA/ZONE		SCHEM.	CABLE			
15a	EDE-US-51	480 V Feed to 460 V Motor Control Center 511	310013	A	310442	CB-F-1A-A	X	X	X	-	AB5	EDE-AB5-52	480 V AC Circuit Breaker	AB5	CB-F-1A-A	AB5-B09 AB5-B09/1	310103 AB5	AB5	CBA-FN-19 CBA-FN-20 EDE-US-51	EDE-US-61 EDE-MCC-611	
16	EDE-US-51	Grounding Transformer	310012	A	310442	CB-F-1A-A	X	X	X	-	AB3	EDE-AB3-XFMR	3-1ø 1 k VA Transformers	AB3	CB-F-1A-A		310103 AB3b		CBA-FN-19 CBA-FN-20 EDE-US-51	EDE-US-61 Ground Transformer	
												EDE-AB3-FU	Fuses	AB3	CB-F-1A-A						
												EDE-AB3-RES	Grounding Resistor	AB3	CB-F-1A-A						
												EDE-AB3-VM	Ground Voltmeters (3)	AB3	CB-F-1A-A						
												EDE-AB3-64	Ground Relay	AB3	CB-F-1A-A						
17	EDE-US-52	Grounding Transformer	310013	A	310442	CB-F-1A-A	X	X	X	-	AC3	EDE-AC3-XFMR	3-1ø 1 k VA Transformers	AC3	CB-F-1A-A		310103 AC3b		CBA-FN-19 CBA-FN-20 EDE-US-52	EDE-US-62 Ground Transformer	
												EDE-AC3-FU	Fuses	AC3	CB-F-1A-A						
												EDE-AC3-RES	Grounding Resistor	AC3	CB-F-1A-A						
												EDE-AC3-VM	Ground Voltmeters (3)	AC3	CB-F-1A-A						
												EDE-AC3-64	Ground Relay	AC3	CB-F-1A-A						
18	EDE-I-1E	Uniterruptible Power Supply	310043	A	310442	CB-F-1A-A	X	X	X	-	HF5	EDE-DD3-52	480 V AC Circuit Breaker	DD3	CB-F-1A-A	DD3-HF5/1 DM7-HF5/1	310105 DD3a	DD3b	CBA-FN-19 CBA-FN-20 EDE-MCC-512 EDE-SWG-11A	EDE-I-1F	
												EDE-DM7-72	125 V dc Circuit Breaker	DM7	CB-F-1A-A						
												EDE-HF5/2-52	460 V ac Inc. Line Circuit Breaker	HF5	CB-F-1A-A						
												EDE-HF5/1-72	125 V dc Inc. Line Circuit Breaker	HF5	CB-F-1A-A						
												EDE-HF5/3-52	120 V ac Output Circuit Breaker	HF5	CB-F-1A-A						
18A	EDE-CP-1E	Static Transfer Switch	310043	A	310442	CB-F-1A-A	X	X	X	-	E1Y	EDE-E1Y-F1	300A, 600 V Fuse	E1Y	CB-F-1A-A	E1Y-HF5 E1Y-HF5/1	310105 DD3a	DD3b	CBA-FN-19 CBA-FN-20 EDE-I-1E	EDE-CP-1F	
19	EDE-PP-1E	Vital Instrument Bus	310043	A	310442	CB-F-1A-A	X	X	X	-	EH9	EDE-EH9/NC-52	120 V ac Circuit Breaker-Inc. Feed from EDE-CP-1E (Norm. Closed)	EH9	CB-F-1A-A	EH9-E1Y	310105 DD3a EH9a	DD3b	CBA-FN-19 CBA-FN-20 EDE-CP-1E	EDE-PP-1F	
												EDE-EH9/NO-52	120 V ac Circuit Breaker-Inc. Feed from ED-X-31E (Norm. Open)	EH9	CB-F-1A-A						
20	EDE-PP-11E	Vital Instrument Bus	310043	A	310442	CB-F-1A-A	X	X	X	-	E1S	EDE-EH9/13-52	120 V ac Circuit Breaker	EH9	CB-F-1A-A	E1S-EH9	310105 DD3a E1Sa	DD3b	CBA-FN-19 CBA-FN-20 EDE-PP-1E	EDE-PP-11F	

FUNCTION: ELECTRICAL DISTRIBUTION EMERGENCY

ITEM NO.	EQUIPMENT ID NO.	EQUIPMENT DESCRIPTION	P&ID/1-LINE DRAWING NO.	TRAIN	PHYSICAL LOCATION DRAWING NO.	FIRE AREA/ZONE	REQUIRED FOR		POWER		ELEC NODE	SUPPORTING CONTROL AND INSTRUMENTATION EQUIPMENT				CABLES	ELECTRICAL DRAWING NO.		SUPPORTING SYSTEMS	REDUNDANT COUNTERPART	REMARKS
							HOT STAND BY	COLD SHUT DOWN	ELEC	AIR		EQUIPMENT ID NO.	EQUIPMENT DESCRIPTION	ELEC NODE	FIRE AREA/ZONE		SCHEM.	CABLE			
21	EDE-BC-1A	125 V dc Battery Charger	310042	A	310442	CB-F-1A-A	X	X	X	-	HR5	EDE-DB1-52	460 V ac Circuit Breaker	DB1	CB-F-1A-A	DB1-HR2 DB1-HR5	310107 DB1a DB1b DB1c	DB1f	CBA-FN-19 CBA-FN-20 EDE-MCC-512	EDE-BC-1B	
												EDE-DB1-42	Contactor	DB1	CB-F-1A-A						
												EDE-DB1-42X	Auxiliary Relay	DB1	CB-F-1A-A						
												DG-HR2-HR9 (K20)	EPS Relay	HR2	CB-F-1A-A						
												EDE-HR5/1-52	460 V ac Circuit Breaker-Incoming Feed	HR5	CB-F-1A-A						
												EDE-DB1-FU	Fuse	DB1	CB-F-1A-A						
22	EDE-B-1A	125 V dc Battery	310042	A	310442	CB-F-1D-A	X	X	X	-	HV4	EDE-J75-FU-1,2,3,4	1600 A Fuses	J75	CB-F-1A-A	HV4-J75 HV4-J75/1	310107 DB1a DB1b DB1c	DB1f	CBA-FN-19 CBA-FN-20 CBA-FN-21A EDE-BC-1A EDE-SWG-11A	EDE-B-1B	
												EDE-J75-SH	1000A, 100MV Shunt	J75	CB-F-1A-A						
												EDE-J75-ATR	Shunt Amplifier	J75	CB-F-1A-A						
23	EDE-SWG-11A	125 V dc Switchboard Auxiliary Buses 120 V ac and 125 V dc	310042	A	310442	CB-F-1A-A	X	X	X	-	DM1	EDE-HR5/2-72	125 V dc Circuit Breaker	HR5	CB-F-1A-A	DM3-J75 DM3-J75/1 DM2-HR5	310107 DB1a DB1b DB1c	DB1f	CBA-FN-19 CBA-FN-20 EDE-SWG-11A EDE-B-1A EDE-BC-1A EDE-PP-1E	EDE-SWG-11B	
												EDE-DL4-72	125 V dc Circuit Breaker	DL4	CB-F-1A-A						
												EDE-DM2-72	125 V dc Circuit Breaker	DM2	CB-F-1A-A						
												EDE-DM3-72	125 V dc Circuit Breaker	DM3	CB-F-1A-A						
												EDE-DM4-72	125 V dc Circuit Breaker	DM4	CB-F-1A-A						
												EDE-DM1-FU-1,2	15 amp Fuses	DM1	CB-F-1A-A						
												EDE-DM1-27BL	Undervoltage Relay	DM1	CB-F-1A-A						
												EDE-DM1-27BLL	Undervoltage Relay	DM1	CB-F-1A-A						
												EDE-DM1-VM	DC Voltmeter	DM1	CB-F-1A-A						
												EDE-DM1-VTR	Voltage Transducer	DM1	CB-F-1A-A						
												EDE-DM1-D10	Diodes	DM1	CB-F-1A-A						
												EDE-DM1-XS	Selector Switch	DM1	CB-F-1A-A						
												EDE-DM1-AMY	Ammeter Relay	DM1	CB-F-1A-A						
												EDE-EH9/5-52	120 V ac Circuit Breaker	EH9	CB-F-1A-A	DM1-EH9 DM1-J75/1	310105 EH9a	EH9b			
												EDE-DM1-27BL	Undervoltage Relay	DM1	CB-F-1A-A		310107 DB1a DB1c 5a	DB1f			
												EDE-DM1-62BL	Timing Relay	DM1	CB-F-1A-A						
												EDE-DM1-27BLL	Undervoltage Relay	DM1	CB-F-1A-A						
												EDE-DM1-62BLL	Timing Relay	DM1	CB-F-1A-A						
												EDE-DM2-72	Breaker Operated Contact	DM2	CB-F-1A-A						
												EDE-DM2-72STC	Circuit Breaker Shut Trip Coil	DM2	CB-F-1A-A						
												EDE-DM1-VTR	Voltage Transducer	DM1	CB-F-1A-A						
												EDE-J75-ATR	Current Transducer	J75	CB-F-1A-A						
												EDE-DM1-AMY	Ammeter Relay	DM1	CB-F-1A-A						
												EDE-DM1-52	120 V ac Inc. Feed Circuit Breaker	DM1	CB-F-1A-A						
												EDE-DM1-FU	120 V AC 15A and 1A Fuses	DM1	CB-F-1A-A						

FUNCTION: ELECTRICAL DISTRIBUTION EMERGENCY

ITEM NO.	EQUIPMENT ID NO.	EQUIPMENT DESCRIPTION	P&ID/1-LINE DRAWING NO.	TRAIN	PHYSICAL LOCATION DRAWING NO.	FIRE AREA/ZONE	REQUIRED FOR		POWER		ELEC NODE	SUPPORTING CONTROL AND INSTRUMENTATION EQUIPMENT				CABLES	ELECTRICAL DRAWING NO.		SUPPORTING SYSTEMS	REDUNDANT COUNTERPART	REMARKS
							HOT STAND BY	COLD SHUT DOWN	ELEC	AIR		EQUIPMENT ID NO.	EQUIPMENT DESCRIPTION	ELEC NODE	FIRE AREA/ZONE		SCHEM.	CABLE			
24	EDE-PP-111A	125 V dc Distribution Panel	310042	A	310442	CB-F-1A-A	X	X	X	-	E93	EDE-DM5-72 EDE-E93-72	125 V dc Circuit Breaker 125 V dc Circuit Breaker (Main)	DM5 E93	CB-F-1A-A CB-F-1A-A	DM5-E93	310107 DB1a E93a	DB1f	CBA-FN-19 CBA-FN-20 EDE-SWG-11A	EDE-PP-111B	
25	EDE-PP-112A	125 V dc Distribution Panel	310042	A	310442	CB-F-1A-A	X	X	X	-	E87	EDE-DM8-72 EDE-E87-72	125 V ac Circuit Breaker 125 V ac Circuit Breaker (Main)	DM8 E87	CB-F-1A-A CB-F-1A-A	DM8-E87	310107 DB1a E87a	DB1f	CBA-FN-19 CVA-FN-20 EDE-SWG-11A	EDE-PP-112B	
26	EDE-PP-113A	125 V dc Distribution Panel	310042	A	310442	CB-F-1A-A	X	X	X	-	E2T	EDE-DM0-72 EDE-E2T-72	125 V dc Circuit Breaker 125 V dc Circuit Breaker (Main)	DM0 E2T	CB-F-1A-A CB-F-1A-A	DM0-E2T	310107 DB1a DB1b E2Ta	DB1f	CBA-FN-19 CBA-FN-20 EDE-SWG-11A	EDE-PP-113B	
27	EDE-SWG-5	4160 V SWGR 125 V dc Control Bus		A	310442	CB-F-1A-A	X	X	X	-	A53	EDE-E93/1-72 EDE-A53-8	125 V dc Circuit Breaker 125 V dc Circuit Breaker (Main)	E93 A53	CB-F-1A-A CB-F-1A-A	A53-E93	310107 E93a 310102 5e 5g	E93b 5f 5h	CBA-FN-19 CBA-FN-20 EDE-PP-111A	EDE-SWG-6	
28	EDE-US-51	480 V Unit Substation 125 V dc Control Bus		A	310442	CB-F-1A-A	X	X	X	-	AB3	EDE-E93/2-72 EDE-AB3-8	125 V dc Circuit Breaker 125 V dc Circuit Breaker (Main)	E93 AB3	CB-F-1A-A CB-F-1A-A	AB3-E93	310107 E93a 310103 5m	E93b	CBA-FN-19 CBA-FN-20 EDE-PP-111A	EDE-US-61	
29	EDE-US-52	480 V Unit Substation 125 V dc Control Bus		A	310442	CB-F-1A-A	X	X	X	-	AC3	EDE-E93/3-72 EDE-AC3-8	125 V AC Circuit Breaker 125 V AC Circuit Breaker (Main)	E93 AC3	CB-F-1A-A CB-F-1A-A	AC3-E93	310107 E93a 310103 5n	E93b	CBA-FN-19 CBA-FN-20 EDE-PP-111A	EDE-US-62	
30	DG-CP-75A	Diesel Generator 1A Control Panel Cubicle 3 125 V dc Supply	310010 310042	A	310524	DG-F-2A-A	X	X	X	-	G10	EDE-DM9-72 DG-G10-72	125 V dc Circuit Breaker 125 V dc Circuit Breaker (Main)	DM9 G10	CB-F-1A-A DG-F-2A-A	DM9-G10	310102 DM9a 310107 DB1a	DM9b	DAH-FN-25A DAH-FN-26A EDE-SWG-11A CBA-FN-19 CBA-FN-20	DG-CP-76A	

FUNCTION: ELECTRICAL DISTRIBUTION EMERGENCY

ITEM NO.	EQUIPMENT ID NO.	EQUIPMENT DESCRIPTION	P&ID/1-LINE DRAWING NO.	TRAIN	PHYSICAL LOCATION DRAWING NO.	FIRE AREA/ZONE	REQUIRED FOR		POWER		ELEC NODE	SUPPORTING CONTROL AND INSTRUMENTATION EQUIPMENT				CABLES	ELECTRICAL DRAWING NO.		SUPPORTING SYSTEMS	REDUNDANT COUNTERPART	REMARKS
							HOT STAND BY	COLD SHUT DOWN	ELEC	AIR		EQUIPMENT ID NO.	EQUIPMENT DESCRIPTION	ELEC NODE	FIRE AREA/ZONE		SCHEM.	CABLE			
31	EDE-SWG-6	4160 V Bus E6 UAT Incoming Line Swgr.	310008	B	310442	CB-F-1B-A	X	X	X	-	A71	EDE-A71-52	4160 V Circuit Breaker	A71	CB-F-1B-A	A71-G19 A71-G19/2 A71-G20 A71-HR0 GA6-GB0/5 A71-G19/1 A71-G19/3 A71-GB4 GA0-CB3/5 GC4-GC6/5 A71-G5Y A71-G5Y/1 A75-A7A A74-A7A/1 DM1-EH9	310102 A71a A71b A71c A71d A71e	A71h	CBA-FN-32 CBA-FN-33 ED-X-2B EDE-PP-111B DAH-FN-25B DAH-FN-26B	EDE-SWG-5 UAT	
												EDE-CS-9719-2	Control Switch	A71	CB-F-1B-A						
												EDE-CS-9719-3	Control Switch with Indication	G19	DG-F-2B-A						
												EDE-A71-G,R,W	Indicating Lights	A71	CB-F-1B-A						
												EDE-SS-9717	Selector Switch	G19	DG-F-2B-A						
												EDE-SS-9719	Selector Switch	G19	DG-F-2B-A						
												EDE-A71-52H	Truck Operated Contact	A71	CB-F-1B-A						
												EDE-A71-FU	Fuses	A71	CB-F-1B-A						
												EDE-A71-CT1	Current Transformers (2000/5)	A71	CB-F-1B-A						
												EDE-A71-TD-1	CT Test Device	A71	CB-F-1B-A						
												EDE-A71-AM	Ammeter	A71	CB-F-1B-A						
												EDE-A71-AS	Ammeter Switch	A71	CB-F-1B-A						
												EDE-A71-ATR	Current Transducer	A71	CB-F-1B-A						
												EDE-A71-CT2	Current Transformers (4000/5)	A71	CB-F-1B-A						
												EDE-A87-PT	Potential Transformer	A87	CB-F-1B-A						
												EDE-A71-TD-3	PT Test Device	A71	CB-F-1B-A						
												EDE-A71-VM	Voltmeter	A71	CB-F-1B-A						
												EDE-A71-86	Lockout Relay	A71	CB-F-1B-A						
												EDE-A74-52S	Mech. Operated Contact	A74	CB-F-1B-A						
												EDE-A72-52S	Mech. Operated Contact	A72	CB-F-1B-A						
												DG-G20-25Y1	Auxiliary Sync. Check Relay	G20	DG-F-2B-A						
												EDE-A73-25U	Synchronizing Check Relay	A73	CB-F-1B-A						
												EDE-SS-9719-1	Selector Switch	G5Y	DG-F-2B-A						
												EDE-CS-9717-3	Control Switch	G19	DG-F-2B-A						
												EDE-SNS-9737-2	Synchronizing Switch	G18	DG-F-2B-A						
												EDE-A72-86	Lockout Relay	A72	CB-F-1B-A						
												EDE-A89-86B	Lockout Relay	A89	CB-F-1B-A						
												ED-86SB/2/1X-1	Lockout Relay	GA0	TB-F-1C-Z						
												ED-86-2/2/B3	Lockout Relay	GA6	TB-F-1C-Z						
												ED-86UB/2/1X-2A	Lockout Relay	GA8	TB-F-1C-Z						
												ED-86UB/2/1X-2B	Lockout Relay	GA8	TB-F-1C-Z						
												ED-86BF-2/S/52/TG1	Lockout Relay	GA9	TB-F-1C-Z						
												ED-86GT/2/TG-1	Lockout Relay	GA9	TB-F-1C-Z						
												ED-86-1/2/B3	Lockout Relay	GB0	TB-F-1C-Z						
												ED-86BF-2/2H	Lockout Relay	GB3	TB-F-1C-Z						
												ED-86BF-2/2E	Lockout Relay	GB4	TB-F-1C-Z						
												ED-86UP/2/1X-2A	Lockout Relay	GC2	TB-F-1C-Z						
												ED-86UP/2/1X-2B	Lockout Relay	GC2	TB-F-1C-Z						

FUNCTION: ELECTRICAL DISTRIBUTION EMERGENCY

ITEM NO.	EQUIPMENT ID NO.	EQUIPMENT DESCRIPTION	P&ID/1-LINE DRAWING NO.	TRAIN	PHYSICAL LOCATION DRAWING NO.	FIRE AREA/ZONE	REQUIRED FOR		POWER		ELEC NODE	SUPPORTING CONTROL AND INSTRUMENTATION EQUIPMENT				CABLES	ELECTRICAL DRAWING NO.		SUPPORTING SYSTEMS	REDUNDANT COUNTERPART	REMARKS
							HOT STAND BY	COLD SHUT DOWN	ELEC	AIR		EQUIPMENT ID NO.	EQUIPMENT DESCRIPTION	ELEC NODE	FIRE AREA/ZONE		SCHEM.	CABLE			
	EDE-SWG-6 (Continued)											ED-86BF-1/2/52/TG1	Lockout Relay	GC3	TB-F-1C-Z						
												ED-86SP/2/1X-1	Lockout Relay	GC4	TB-F-1C-Z						
												ED-86BF-1/2H	Lockout Relay	GC6	TB-F-1C-Z						
												ED-86BF-1/2E	Lockout Relay	GC7	TB-F-1C-Z						
												DG-HRO-RMO	EPS Auxiliary Relay	HRO	CB-F-1B-A						
												EDE-A71-3	Interposing Relay for SWYD Lockout Relays	A71	CB-F-1B-A						
												EDE-A71-TD-2	Lockout Relay Test Device (A71-86)	A71	CB-F-1B-A						
												EDE-A71-TD-4	Interposing Relay Test Device (A71-3)	A71	CB-F-1B-A						
												ED-GA0-TD-2	Lockout Relay Test Device (86SB/2/1X-1)	GA0	TB-F-1C-Z						
												ED-GA6-TD-2	Lockout Relay Test Device (86-2/2/B3)	GA6	TB-F-1C-Z						
												ED-GA8-TD-2	Lockout Relay Test Device (86UB/2/1X-2A)	GA8	TB-F-1C-Z						
												ED-GA8-TD-2	Lockout Relay Test Device (86UB/2/1X-2B)	GA8	TB-F-1C-Z						
												ED-GA9-TD-2	Lockout Relay Test Device (86BF-2/2/52/TG1)	GA9	TB-F-1C-Z						
												ED-GA9-TD-2	Lockout Relay Test Device (86GT/2/TG-1)	GA9	TB-F-1C-Z						
												ED-GB0-TD-2	Lockout Relay Test Device (86-1/2/B3)	GB0	TB-F-1C-Z						
												ED-GB3-TD-2	Lockout Relay Test Device (86BF-2/2H)	GB3	TB-F-1C-Z						
												ED-GB4-TD-2	Lockout Relay Test Device (86BF-2/2E)	GB4	TB-F-1C-Z						
												ED-GC2-TD-2	Lockout Relay Test Device (86UP/2/1X-2A)	GC2	TB-F-1C-Z						
												ED-GC2-TD-2	Lockout Relay Test Device (86UP/2/1X-2B)	GC2	TB-F-1C-Z						
												ED-GC3-TD-2	Lockout Relay Test Device (86BF-1/2/52/TG1)	GC3	TB-F-1C-Z						
												ED-GC4-TD-2	Lockout Relay Test Device (86SP/2/1X-1)	GC4	TB-F-1C-Z						
												ED-GC6-TD-2	Lockout Relay Test Device (86BF-1/2H)	GC6	TB-F-1C-Z						
												ED-GC7-TD-2	Lockout Relay Test Device (86BF-1/2E)	GC7	TB-F-1C-Z						
												EDE-A71-51	Time Overcurrent Relays øA, øB, øC	A71	CB-F-1B-A						
												EDE-A71-51GS	Ground Sensor Relay	A71	CB-F-1B-A						
												EDE-A7A-52S	Mechanically Operated Contact	A7A	CB-F-1B-A						

FUNCTION: ELECTRICAL DISTRIBUTION EMERGENCY

ITEM NO.	EQUIPMENT ID NO.	EQUIPMENT DESCRIPTION	P&ID/1-LINE DRAWING NO.	TRAIN	PHYSICAL LOCATION DRAWING NO.	FIRE AREA/ZONE	REQUIRED FOR		POWER		ELEC NODE	SUPPORTING CONTROL AND INSTRUMENTATION EQUIPMENT				CABLES	ELECTRICAL DRAWING NO.		SUPPORTING SYSTEMS	REDUNDANT COUNTERPART	REMARKS
							HOT STAND BY	COLD SHUT DOWN	ELEC	AIR		EQUIPMENT ID NO.	EQUIPMENT DESCRIPTION	ELEC NODE	FIRE AREA/ZONE		SCHEM.	CABLE			
32	EDE-SWG-6	Grounding Transformer	310008	B	310442	CB-F-1B-A	X	X	X	-	A87	EDE-A87-XFMR	3-1ø 15 k VA Transformers	A87	CB-F-1B-A		310102 A87a		CBA-FN-32 CBA-FN-33 EDE-SWG-6	EDE-SWG-5 Ground Transformer	
												EDE-A87-FU	3-10A Fuses	A87	CB-F-1B-A						
												EDE-A87-52	120 V ac Circuit Breaker	A87	CB-F-1B-A						
												EDE-A87-RES	Grounding Resistor	A87	CB-F-1B-A						
												EDE-A87-64	Ground Relay	A87	CB-F-1B-A						
												EDE-A87-TD-3	VM Test Device	A87	CB-F-1B-A						
												EDE-A87-VM	(3) Ground Voltmeters	A87	CB-F-1B-A						

FUNCTION: ELECTRICAL DISTRIBUTION EMERGENCY

ITEM NO.	EQUIPMENT ID NO.	EQUIPMENT DESCRIPTION	P&ID/1-LINE DRAWING NO.	TRAIN	PHYSICAL LOCATION DRAWING NO.	FIRE AREA/ZONE	REQUIRED FOR		POWER		ELEC NODE	SUPPORTING CONTROL AND INSTRUMENTATION EQUIPMENT				CABLES	ELECTRICAL DRAWING NO.		SUPPORTING SYSTEMS	REDUNDANT COUNTERPART	REMARKS
							HOT STAND BY	COLD SHUT DOWN	ELEC	AIR		EQUIPMENT ID NO.	EQUIPMENT DESCRIPTION	ELEC NODE	FIRE AREA/ZONE		SCHEM.	CABLE			
33	EDE-SWG-6	4160 V Bus E6 RAT Incoming Line SWGR	310008	B	310442	CB-F-1A-A	X	X	X	-	A72	EDE-A72-52	4160 V Circuit Breaker	A72	CB-F-1B-A	A72-G19 A72-G19/2 A72-G20 A72-HR4 GA7-GB7/5 GE6-GE7/5 A72-G19/1 A72-G19/3 A72-GB7 A72-HRO GC1-GC0/5 A72-G5Y A72-G5Y/1 A74-A7A/2	310102 A72a A72b A72c A72d A72e	A72j	CBA-FN-32 CBA-FN-33 ED-X-3B EDE-PP-111B DAH-FN-25B DAH-FN-26B	EDE-SWG-5 RAT	
												EDE-CS-9717-2	Control Switch	A72	CB-F-1B-A						
												EDE-CS-9717-3	Control Switch with Indication	G19	DG-F-2B-A						
												EDE-A72-G,R,W	Indicating Lights	A72	CB-F-1B-A						
												EDE-SS-9717	Selector Switch	G19	DG-F-2B-A						
												EDE-SS-9719	Selector Switch	G19	DG-F-2B-A						
												EDE-A72-52H	Truck Operated Contact	A72	CB-F-1B-A						
												EDE-A72-FU	Fuses	A72	CB-F-1B-A						
												EDE-A72-27/59	Under/Over Voltage Relay	A72	CB-F-1B-A						
												EDE-A72-27/59X1,X2	Under/Over Voltage Auxiliary Relay	A72	CB-F-1B-A						
												EDE-A72-CT1	Current Transformers (2000/5)	A72	CB-F-1B-A						
												EDE-A72-52Z	Time Delay Relay	A72	CB-F-1B-A						
												EDE-SS-9717-1	Selector Switch	G5Y	DG-F-2B-A						
												EDE-CS-9719-3	Control Switch	G19	DG-F-2B-A						
												EDE-A72-TD-1	CT Test Device	A72	CB-F-1B-A						
												EDE-A72-AM	Ammeter	A72	CB-F-1B-A						
												EDE-A72-AS	Ammeter Switch	A72	CB-F-1B-A						
												EDE-A72-ATR	Current Transducer	A72	CB-F-1B-A						
												EDE-A72-CT2	Current Transformers (4000/5)	A72	CB-F-1B-A						
												EDE-A73-PT	Potential Transformer	A73	CB-F-1B-A						
												EDE-A72-TD-3	PT Test Device	A72	CB-F-1B-A						
												EDE-A72-VM	Voltmeter	A72	CB-F-1B-A						
												EDE-A72-52S	Mechanically Operated Contact	A72	CB-F-1B-A						
												EDE-A72-86B	Lockout Relay	A89	CB-F-1B-A						
												EDE-A72-86	Lockout Relay	A72	CB-F-1B-A						
												EDE-A72-86	Lockout Relay	A71	CB-F-1B-A						
												DG-HR4-RMO	EPS Auxiliary Relay	HR4	CB-F-1B-A						
												DG-HRO-RMO	EPS Auxiliary Relay	HRO	CB-F-1B-A						
												EDE-A71-52S	Mechanically Operated Contact	A71	CB-F-1B-A						
												EDE-A74-52S	Mechanically Operated Contact	A74	CB-F-1B-A						
												EDE-SNS-9737-2	Synchronizing Switch	G18	DG-F-2B-A						
												DG-G20-25Y1	Auxiliary Sync Check Relay	G20	DG-F-2B-A						
												EDE-A73-25RX	Auxiliary Sync. Check Relay	A73	CB-F-1B-A						
												EDE-A73-25R	Synchronizing Check Relay	A73	CB-F-1B-A						

FUNCTION: ELECTRICAL DISTRIBUTION EMERGENCY

ITEM NO.	EQUIPMENT ID NO.	EQUIPMENT DESCRIPTION	P&ID/1-LINE DRAWING NO.	TRAIN	PHYSICAL LOCATION DRAWING NO.	FIRE AREA/ZONE	REQUIRED FOR		POWER		ELEC NODE	SUPPORTING CONTROL AND INSTRUMENTATION EQUIPMENT				CABLES	ELECTRICAL DRAWING NO.		SUPPORTING SYSTEMS	REDUNDANT COUNTERPART	REMARKS
							HOT STAND BY	COLD SHUT DOWN	ELEC	AIR		EQUIPMENT ID NO.	EQUIPMENT DESCRIPTION	ELEC NODE	FIRE AREA/ZONE		SCHEM.	CABLE			
	EDE-SWG-6 (Continued)											EDE-A72-62 & 62X	Time Delay Relay	A72	CB-F-1B-A						
												EDE-A71-3	Interposing Relay for SWYD Lockout Relays	A71	CB-F-1B-A						
												EDE-A72-TD-2	Lockout Relay Test Device (A72-86)	A72	CB-F-1B-A						
												EDE-TD-4	Interposing Relay Test Device (A72-3)	A72	CB-F-1B-A						
												EDE-A72-27RB-1	Residual Undervoltage Relay	A72	CB-F-1B-A						
												EDE-A72-27RB-2	Residual Undervoltage Relay	A72	CB-F-1B-A						
												EDE-86RB/2/1X-3A	Lockout Relay	GA7	TB-F-1C-Z						
												ED-86-2/2/B2	Lockout Relay	GB7	TB-F-1C-Z						
												ED-86-1/2/B2	Lockout Relay	GCO	TB-F-1C-Z						
												ED-86RP/2/1X-3A	Lockout Relay	CG1	TB-F-1C-Z						
												ED-86RP/2/1X-3B	Lockout Relay	GE6	TB-F-1C-Z						
												ED-86RB/2/1X-3B	Lockout Relay	GE7	TB-F-1C-Z						
												ED-GA7-TD-2	Lockout Relay Test Device (86RB/2/1x-3A)	GA7	TB-F-1C-Z						
												ED-GB7-TD-2	Lockout Relay Test Device (86-2/2/B2)	GB7	TB-F-1C-Z						
												ED-GCO-TD-2	Lockout Relay Test Device (86-1/2/B2)	GCO	TB-F-1C-Z						
												ED-GC1-TD-2	Lockout Relay Test Device (86RP/2/1x-3A)	GC1	TB-F-1C-Z						
												ED-GE6-TD-2	Lockout Relay Test Device (86RP/2/1x-3B)	GE6	TB-F-1C-Z						
												ED-GE7-TD-2	Lockout Relay Test Device (86RB/2/1x-3B)	GE7	TB-F-1C-Z						
												EDE-A72-51	Time Overcurrent Relays øA, øB, øC	A72	CB-F-1B-A						
												EDE-A72-51GS	Ground Sensor Relay	A72	CB-F-1B-A						
												EDE-A7A-52S	Mechanically Operated Contact	A7A	CB-F-1B-A						

FUNCTION: ELECTRICAL DISTRIBUTION EMERGENCY

ITEM NO.	EQUIPMENT ID NO.	EQUIPMENT DESCRIPTION	P&ID/1-LINE DRAWING NO.	TRAIN	PHYSICAL LOCATION DRAWING NO.	FIRE AREA/ZONE	REQUIRED FOR		POWER		ELEC NODE	SUPPORTING CONTROL AND INSTRUMENTATION EQUIPMENT				CABLES	ELECTRICAL DRAWING NO.		SUPPORTING SYSTEMS	REDUNDANT COUNTERPART	REMARKS
							HOT STAND BY	COLD SHUT DOWN	ELEC	AIR		EQUIPMENT ID NO.	EQUIPMENT DESCRIPTION	ELEC NODE	FIRE AREA/ZONE		SCHEM.	CABLE			
34	EDE-SWG-6	4160 V Bus E6 PT Compartment	310008	B	310442	CB-F-1B-A	X	X	X	-	A73	EDE-A73-PT	Potential Transformer	A73	CB-F-1B-A	A73-AE2 A73-G19 A73-HR4 AE2-AF7 AF7-EE6 AW2-EE6 A74-A7A/4 A74-A7A/5 A75-A7A/1 A75-A7A/1	310102 A73A A73e A73h	A73d	CBA-FN-32 CBA-FN-33 EDE-SWG-6 EDE-PP-111B DAH-FN-25B DAH-FN-26B	EDE-SWG-5 PT	
												EDE-A73-VM	Voltmeter	A73	CB-F-1B-A						
												EDE-A73-VS	Voltmeter Switch	A73	CB-F-1B-A						
												EDE-A73-TD-3	PT Test Device	A73	CB-F-1B-A						
												EDE-A73-VTR-1	Voltage Transducer	A73	CB-F-1B-A						
												EDE-A73-VTR-2	Voltage Transducer	A73	CB-F-1B-A						
												EDE-SS-9719	Selector Switch	G19	DG-F-2B-A						
												EDE-SNS-9737-2	Synchronizing Switch	G18	DG-F-2B-A						
												EDE-A73-25U	Synchronizing Check Relay	A73	CB-F-1B-A						
												EDE-A73-25R	Synchronizing Check Relay	A73	CB-F-1B-A						
												EDE-A74-52S	Mechanically Operated Contact	A74	CB-F-1B-A						
												EDE-A73-27B-1	Instantaneous Undervoltage Relay	A73	CB-F-1B-A						
												EDE-A73-27B-2	Instantaneous Undervoltage Relay	A73	CB-F-1B-A						
												EDE-A73-TS-3	UV Relays Test Switch	A73	CB-F-1B-A						
												EDE-A73-27D-1	Instantaneous Undervoltage Relay	A73	CB-F-1B-A						
												EDE-A73-27D-1-RES	Resistor	A73	CB-F-1B-A						
												EDE-A73-27D-2	Instantaneous Undervoltage Relay	A73	CB-F-1B-A						
												EDE-A73-27D-2-RES	Resistor	A73	CB-F-1B-A						
												EDE-A73-TS-1	UV Relays Test Switch	A73	CB-F-1B-A						
												EDE-A72-27RB-1,2	Residual Undervoltage Relay	A72	CB-F-1B-A						
												EDE-A73-62B	Time Delay Relay	A73	CB-F-1B-A						
												EDE-A73-62B-RES	Resistor	A73	CB-F-1B-A						
												EDE-A73-TS-4	Test Switch EDE-62B	A73	CB-F-1B-A						
												EDE-A73-62BX-1	Auxiliary Relay	A73	CB-F-1B-A						
												EDE-A73-62BX	Auxiliary Latch Relay	A73	CB-F-1B-A						
												EDE-A71-52S	Mechanically Operated Contact	A71	CB-F-1B-A						
												EDE-AW3-94-5	Undervoltage Tripping Relay	AW3	CB-F-1B-A						
												EDE-A72-27/59X1	Under/Over Voltage Auxiliary Relay	A72	CB-F-1B-A						
												EDE-AF8-94-4	Undervoltage Tripping Relay	AF8	CB-F-1B-A						
												DG-HR4-RMO	EPS Auxiliary Relay	HR4	CB-F-1B-A						
												EDE-A73-94-1A	Undervoltage Tripping Relay	A73	CB-F-1B-A						
												EDE-A73-94-1B	Undervoltage Tripping Relay	A73	CB-F-1B-A						

FUNCTION: ELECTRICAL DISTRIBUTION EMERGENCY

ITEM NO.	EQUIPMENT ID NO.	EQUIPMENT DESCRIPTION	P&ID/1-LINE DRAWING NO.	TRAIN	PHYSICAL LOCATION DRAWING NO.	FIRE AREA/ZONE	REQUIRED FOR		POWER		ELEC NODE	SUPPORTING CONTROL AND INSTRUMENTATION EQUIPMENT				CABLES	ELECTRICAL DRAWING NO.		SUPPORTING SYSTEMS	REDUNDANT COUNTERPART	REMARKS
							HOT STAND BY	COLD SHUT DOWN	ELEC	AIR		EQUIPMENT ID NO.	EQUIPMENT DESCRIPTION	ELEC NODE	FIRE AREA/ZONE		SCHEM.	CABLE			
	EDE-SWG-6 (Continued)											EDE-A73-94-2	Undervoltage Tripping Relay	A73	CB-F-1B-A						
												EDE-AE3-94-3	Undervoltage Tripping Relay	AE3	CB-F-1B-A						
												EDE-EE6-94-6	Tripping Relay	EE6	CB-F-1B-A						
												EDE-A73-FU	10A Fuses	A73	CB-F-1B-A						
												EDE-A73-62D	Time Delay Relay	A73	CB-F-1B-A						
												EDE-A73-62D-RES	Resistor	A73	CB-F-1B-A						
												EDE-A73-TS-2	Test Switch Relay 62D	A73	CB-F-1B-A						
												EDE-A73-62DX	Auxiliary Relay	A73	CB-F-1B-A						
												EDE-A7A-52S	Mechanically Operated Contact	A7A	CB-F-1B-A						

FUNCTION: ELECTRICAL DISTRIBUTION EMERGENCY

ITEM NO.	EQUIPMENT ID NO.	EQUIPMENT DESCRIPTION	P&ID/1-LINE DRAWING NO.	TRAIN	PHYSICAL LOCATION DRAWING NO.	FIRE AREA/ZONE	REQUIRED FOR		POWER		ELEC NODE	SUPPORTING CONTROL AND INSTRUMENTATION EQUIPMENT				CABLES	ELECTRICAL DRAWING NO.		SUPPORTING SYSTEMS	REDUNDANT COUNTERPART	REMARKS
							HOT STAND BY	COLD SHUT DOWN	ELEC	AIR		EQUIPMENT ID NO.	EQUIPMENT DESCRIPTION	ELEC NODE	FIRE AREA/ZONE		SCHEM.	CABLE			
35	EDE-SWG-6	4160 V Bus E6 DG-1B Incoming Line SWGR	310010 310008	B	310442	CB-F-1B-A	X	X	X	-	A74	EDE-A74-52	4160 V Circuit Breaker	A74	CB-F-1B-A	A74-G18/2 A74-G18/3 A74-G18/4 A74-G18/8 A74-G19 A74-G19/1 A74-G19/2 A74-HP1 G18-G30/7 A74-A7A/3	310102 A74a A74b A74c A74d A74e A74f	A74k A74n	CBA-FN-32 CBA-FN-33 DAH-FN-25B DAH-FN-26B EDE-PP-111B DG-DG-1B	EDE-SWG-5 DG-1A	
												EDE-CS-9710-2	Control Switch	A74	CB-F-1B-A						
												EDE-CS-9710-3	Control Switch with Indication	G18	DG-F-2B-A						
												EDE-A74-G,R,W	Indicating Lights	A74	CB-F-1B-A						
												EDE-SS-9710	Selector Switch	G18	DG-F-2B-A						
												EDE-SNS-9737-2	Synchronizing Switch	G18	DG-F-2B-A						
												EDE-A74-52H	Truck Operated Contact	A74	CB-F-1B-A						
												EDE-A74-FU	Fuses	A74	CB-F-1B-A						
												EDE-A74-CT	Current Transformers (2000/5)	A74	CB-F-1B-A						
												EDE-A74-DCT	Differential Current Transformers (2000/5)	A74	CB-F-1B-A						
												DG-HP1-DCT	DG-1B Neutral Differential Current Transformers (2000/5)	HP1	DG-F-2B-A						
												DG-G18-CT	Auxiliary Current Transformer (5:10)	G18	DG-F-2B-A						
												EDE-A74-AM	Ammeter	A74	CB-F-1B-A						
												EDE-A74-AS-1	Ammeter Switch	A74	CB-F-1B-A						
												EDE-A74-ATR-1	Current Transducer	A74	CB-F-1B-A						
												EDE-A74-ATR-2	Current Transducer	A74	CB-F-1B-A						
												EDE-AM-9710-2	Ammeter	G18	DG-F-2B-A						
												EDE-G18-AS	Ammeter Switch	G18	DG-F-2B-A						
												DG-SM-9587	Governor Control (2301A)	G18	DG-F-2B-A						
												EDE-A89-PT	DG-1B Inc. Line Pot. Transformer (2) 4200-120 V	A89	CB-F-1B-A						
												EDE-A89-VM	Voltmeter	A89	CB-F-1B-A						
												EDE-A89-VS	Voltmeter Switch	A89	CB-F-1B-A						
												EDE-A89-TD-3	PT Test Device	A89	CB-F-1B-A						
												EDE-A89-VTR-1	Voltage Transducer	A89	CB-F-1B-A						
												EDE-A89-VTR-2	Voltage Transducer	A89	CB-F-1B-A						
												EDE-A74-27DG	Undervoltage Relay	A74	CB-F-1B-A						
												EDE-A89-FTR-1	Frequency Transducer	A89	CB-F-1B-A						
												EDE-A89-FTR-2	Frequency Transducer	A89	CB-F-1B-A						
												EDE-A89-W/WH-TR	Watt/Watthour Transducer	A89	CB-F-1B-A						
												EDE-A89-W/TR	Watt Transducer	A89	CB-F-1B-A						
												EDE-A89-VAR-TR	Var Transducer	A89	CB-F-1B-A						
												EDE-A74-TS	Test Start Switch	A74	CB-F-1B-A						
												EDE-A74-52Z	Time Delay Relay	A74	CB-F-1B-A						
												EDE-A74-81-RES	Resistor	A74	CB-F-1B-A						

FUNCTION: ELECTRICAL DISTRIBUTION EMERGENCY

ITEM NO.	EQUIPMENT ID NO.	EQUIPMENT DESCRIPTION	P&ID/1-LINE DRAWING NO.	TRAIN	PHYSICAL LOCATION DRAWING NO.	FIRE AREA/ZONE	REQUIRED FOR		POWER		ELEC NODE	SUPPORTING CONTROL AND INSTRUMENTATION EQUIPMENT				CABLES	ELECTRICAL DRAWING NO.		SUPPORTING SYSTEMS	REDUNDANT COUNTERPART	REMARKS
							HOT STAND BY	COLD SHUT DOWN	ELEC	AIR		EQUIPMENT ID NO.	EQUIPMENT DESCRIPTION	ELEC NODE	FIRE AREA/ZONE		SCHEM.	CABLE			
	EDE-SWG-6 (Continued)											EDE-A89-86B	Lockout Relay	A89	CB-F-1B-A						
												EDE-A89-86DB	Back-Up Lockout Relay	A89	CB-F-1B-A						
												EDE-A89-W	Indicating Lights (A89-86B & A89-86DB)	A89	CB-F-1B-A						
												EDE-A74-W	Indicating Light (A74-86DP)	A74	CB-F-1B-A						
												EDE-A74-86DP	Primary Lockout Relay	A74	CB-F-1B-A						
												EDE-A71-86	Lockout Relay	A71	CB-F-1B-A						
												EDE-A72-86	Lockout Relay	A72	CB-F-1B-A						
												EDE-A71-52S	Mechanically Operated Contact	A71	CB-F-1B-A						
												EDE-A72-52S	Mechanically Operated Contact	A72	CB-F-1B-A						
												EDE-A74-52S	Mechanically Operated Contact	A74	CB-F-1B-A						
												EDE-A89-RLA	LOCA Seal Relay	A89	CB-F-1B-A						
												DG-G20-25Y	Auxiliary Sync Check Relay	G20	DG-F-2B-A						
												EDE-A89-RS	Fast Closure Relay	A89	CB-F-1B-A						
												EDE-A74-81	Frequency Relay	A74	CB-F-1B-A						
												EDE-A74-87DP	Primary Differential Relay	A74	CB-F-1B-A						
												EDE-A89-51B	Time Overcurrent Relays øA, øB, øC	A89	CB-F-1B-A						
												EDE-A74-81X	Auxiliary Frequency Relay	A74	CB-F-1B-A						
												EDE-A89-60	Voltage Balance Relay	A89	CB-F-1B-A						
												EDE-A89-60AX	Auxiliary Voltage Balance Relay	A89	CB-F-1B-A						
												EDE-A89-60BX	Auxiliary Voltage Balance Relay	A89	CB-F-1B-A						
												EDE-A89-40	Loss of Field Relays øA, øB	A89	CB-F-1B-A						
												EDE-A74-40X	Auxiliary Loss of Field Relay	A74	CB-F-1B-A						
												EDE-A89-32	Power Directional Relay	A89	CB-F-1B-A						
												EDE-A89-TD-1	Lockout Relay Test Device (86B)	A89	CB-F-1B-A						
												EDE-A89-TD-2	Lockout Relay Test Device (86DB)	A89	CB-F-1B-A						
												EDE-A74-TD-2	Lockout Relay Test Device (86DP)	A74	CB-F-1B-A						
												DG-G19-R43L5 & R43L6	Selector Switch Auxiliary Relay (Local)	G19	DG-F-2B-A						
												DG-G19-R43R4	Selector Switch Auxiliary Relay (Remote)	G19	DG-F-2B-A						
												DG-G19-R43R6	Selector Switch Auxiliary Relay (Remote)	G19	DG-F-2B-A						

FUNCTION: ELECTRICAL DISTRIBUTION EMERGENCY

ITEM NO.	EQUIPMENT ID NO.	EQUIPMENT DESCRIPTION	P&ID/1-LINE DRAWING NO.	TRAIN	PHYSICAL LOCATION DRAWING NO.	FIRE AREA/ZONE	REQUIRED FOR		POWER		ELEC NODE	SUPPORTING CONTROL AND INSTRUMENTATION EQUIPMENT				CABLES	ELECTRICAL DRAWING NO.		SUPPORTING SYSTEMS	REDUNDANT COUNTERPART	REMARKS
							HOT STAND BY	COLD SHUT DOWN	ELEC	AIR		EQUIPMENT ID NO.	EQUIPMENT DESCRIPTION	ELEC NODE	FIRE AREA/ZONE		SCHEM.	CABLE			
	EDE-SWG-6 (Continued)											DG-G30-5A	Shutdown Relay	G30	DG-F-2B-A						
												EDE-A89-51V	Time Overcurrent Voltage Restraint Relays øA, øB, øC	A89	CB-F-1B-A						
												DG-G19-R43R3	Selector Switch Auxiliary Relay (Remote)	G19	DG-F-2B-A						
												EDE-A89-51GS	Ground Sensor Relay	A89	CB-F-1B-A						
												EDE-A74-TD-1	Test Device	A74	CB-F-1B-A						
												EDE-A74-87DP Reactor	Primary Differential Relay Reactor Assembly	A74	CB-F-1B-A						
												EDE-A74-81Y	Time Delay Relay	A74	CB-F-1B-A						
												EDE-A7A-52S	Mechanically Operated Contact	A7A	CB-F-1B-A						

FUNCTION: ELECTRICAL DISTRIBUTION EMERGENCY

ITEM NO.	EQUIPMENT ID NO.	EQUIPMENT DESCRIPTION	P&ID/1-LINE DRAWING NO.	TRAIN	PHYSICAL LOCATION DRAWING NO.	FIRE AREA/ZONE	REQUIRED FOR		POWER		ELEC NODE	SUPPORTING CONTROL AND INSTRUMENTATION EQUIPMENT				CABLES	ELECTRICAL DRAWING NO.		SUPPORTING SYSTEMS	REDUNDANT COUNTERPART	REMARKS
							HOT STAND BY	COLD SHUT DOWN	ELEC	AIR		EQUIPMENT ID NO.	EQUIPMENT DESCRIPTION	ELEC NODE	FIRE AREA/ZONE		SCHEM.	CABLE			
36	DG-CP-76A	Diesel Generator 1B Control Panel Cubicle 2 Synchronizing System	310010	B	310524	DG-F-2B-A	X	X	X	-	G19	EDE-SS-9710	Selector Switch	G18	DG-F-2B-A		310102 G19/2c	G19/2g	DAH-FN-25B DAH-FN-26B EDE-SWG-11B	DG-CP-75A	
												EDE-SS-9719	Selector Switch	G19	DG-F-2B-A						
												EDE-SS-9717	Selector Switch	G19	DG-F-2B-A						
												DG-G19-FU	125 V DC Fuses	G19	DG-F-2B-A						
												DG-G19-R43R4	Selector Switch Auxiliary Relay (Remote)	G19	DG-F-2B-A						
												DG-G19-R43R6	Selector Switch Auxiliary Relay (Remote)	G19	DG-F-2B-A						
												DG-G19-RAX	Auxiliary Relay, Latch	G19	DG-F-2B-A						
												DG-G19-R43L4	Selector Switch Auxiliary Relay (Local)	G19	DG-F-2B-A						
												EDE-SNS-9737-2	Synchronizing Switch	G18	DG-F-2B-A						
												EDE-CS-9710-3	Control Switch	G18	DG-F-2B-A						
												EDE-CS-9717-3	Control Switch	G19	DG-F-2B-A						
												EDE-CS-9719-3	Control Switch	G19	DG-F-2B-A						
												DG-G18-25DG	Synchronizing Check Relay	G18	DG-F-2B-A						
												DG-G20-25Y	Auxiliary Synchronizing Check Relay	G20	DG-F-2B-A						
												DG-G20-25Y1	Auxiliary Synchronizing Check Relay	G20	DG-F-2B-A						
												EDE-A87-PT	UAT X-2B Inc. Line Potential Transformer	A87	CB-F-1B-A		7e	7g			
												EDE-A73-PT	RAT X-3B Inc. Line Potential Transformer	A73	CB-F-1B-A						
												EDE-A73-PT	Bus E6 Potential Transformer	A73	CB-F-1B-A						
												EDE-A89-PT	DG-1B Inc. Line Potential Transformer	A89	CB-F-1B-A						
												EDE-SNS-9737-2	Synchronizing Switch	G18	DG-F-2B-A						
												EDE-SS-9717	Selector Switch	G19	DG-F-2B-A						
												EDE-SS-9719	Selector Switch	G19	DG-F-2B-A						
												DG-G19-R43R3	Selector Switch Auxiliary Relay (Remote)	G19	DG-F-2B-A						
												DG-G19-R43R4	Selector Switch Auxiliary Relay (Remote)	G19	DG-F-2B-A						
												DG-G19-RAX	Auxiliary Relay, Latch	G19	DG-F-2B-A						
												DG-G18-25DG	Synchronizing Check Relay	G18	DG-F-2B-A						

FUNCTION: ELECTRICAL DISTRIBUTION EMERGENCY

ITEM NO.	EQUIPMENT ID NO.	EQUIPMENT DESCRIPTION	P&ID/1-LINE DRAWING NO.	TRAIN	PHYSICAL LOCATION DRAWING NO.	FIRE AREA/ZONE	REQUIRED FOR		POWER		ELEC NODE	SUPPORTING CONTROL AND INSTRUMENTATION EQUIPMENT				CABLES	ELECTRICAL DRAWING NO.		SUPPORTING SYSTEMS	REDUNDANT COUNTERPART	REMARKS
							HOT STAND BY	COLD SHUT DOWN	ELEC	AIR		EQUIPMENT ID NO.	EQUIPMENT DESCRIPTION	ELEC NODE	FIRE AREA/ZONE		SCHEM.	CABLE			
	DG-CP-76A (Continued)											EDE-SYN-9711	Synchroscope	G18	DG-F-2B-A						
												EDE-ZL-9711	Synchronizing Lights	G18	DG-F-2B-A						
												EDE-VM-9711-1	Synchronizing Voltmeter Incoming	G18	DG-F-2B-A						
												EDE-VM-9711-2	Synchronizing Voltmeter Running	G18	DG-F-2B-A						

FUNCTION: ELECTRICAL DISTRIBUTION EMERGENCY

ITEM NO.	EQUIPMENT ID NO.	EQUIPMENT DESCRIPTION	P&ID/1-LINE DRAWING NO.	TRAIN	PHYSICAL LOCATION DRAWING NO.	FIRE AREA/ZONE	REQUIRED FOR		POWER		ELEC NODE	SUPPORTING CONTROL AND INSTRUMENTATION EQUIPMENT				CABLES	ELECTRICAL DRAWING NO.		SUPPORTING SYSTEMS	REDUNDANT COUNTERPART	REMARKS
							HOT STAND BY	COLD SHUT DOWN	ELEC	AIR		EQUIPMENT ID NO.	EQUIPMENT DESCRIPTION	ELEC NODE	FIRE AREA/ZONE		SCHEM.	CABLE			
37	EDE-SWG-6	4160 V Feed to 480 V Transformer EDE-X-5C for Substation Bus EDE-US-61	310008	B	310442	CB-F-1B-A	X	X	X	-	A75	EDE-A75-52	4160 V Circuit Breaker	A75	CB-F-1B-A	A75-AD1	310102		CBA-FN-32 CBA-FN-33 EDE-PP-111B EDE-SWG-6	EDE-SWG-5 EDE-X-5A EDE-US-51	
												EDE-A75-FU	Fuses	A75	CB-F-1B-A		A75a A75b A75c A75d	A75g			
												EDE-CS-9716	Control Switch	A75	CB-F-1B-A						
												EDE-A75-G,R,W	Indicating Lights	A75	CB-F-1B-A						
												EDE-SS-9716	Selector Switch	A75	CB-F-1B-A						
												EDE-A75-52H	Truck Operated Contact	A75	CB-F-1B-A						
												EDE-A75-86	Lockout Relay	A75	CB-F-1B-A						
												EDE-A75-TD-2	Lockout Relay Test Device	A75	CB-F-1B-A						
												EDE-A75-50/51	Inst/Time Overcurrent Relays øA, øB, øC	A75	CB-F-1B-A						
												EDE-A75-CT	Current Transformers (300/5)	A75	CB-F-1B-A						
												EDE-A75-AM	Ammeter	A75	CB-F-1B-A						
												EDE-A75-AS	Ammeter Switch	A75	CB-F-1B-A						
												EDE-A75-ATR	Current Transducer	A75	CB-F-1B-A						
												EDE-A75-TD-1	CT Test Device	A75	CB-F-1B-A						
												EDE-A75-51GS	Ground Sensor Relay	A75	CB-F-1B-A						
38	EDE-SWG-6	4160 V Feed to 480 V Transformer EDE-X-5D for Substation Bus EDE-US-62	310008	B	310442	CB-F-1B-A	X	X	X	-	A83	EDE-A83-52	4160 V Circuit Breaker	A83	CB-F-1B-A	A83-AE1	310102		CBA-FN-32 CBA-FN-33 EDE-PP-111B EDE-SWG-6	EDE-SWG-5 EDE-X-5B EDE-US-52	
												EDE-A83-FU	Fuses	A83	CB-F-1B-A		A83a A83b A83c A83d	A83g			
												EDE-CS-9713	Control Switch	A83	CB-F-1B-A						
												EDE-A83-G,R,W	Indicating Lights	A83	CB-F-1B-A						
												EDE-SS-9713	Selector Switch	A83	CB-F-1B-A						
												EDE-A83-52H	Truck Operated Contact	A83	CB-F-1B-A						
												EDE-A83-86	Lockout Relay	A83	CB-F-1B-A						
												EDE-A83-TD-2	Lockout Relay Test Device	A83	CB-F-1B-A						
												EDE-A83-50/51	Inst/Time Overcurrent Relays øA, øB, øC	A83	CB-F-1B-A						
												EDE-A83-CT	Current Transformers (300/5)	A83	CB-F-1B-A						
												EDE-A83-AM	Ammeter	A83	CB-F-1B-A						
												EDE-A83-AS	Ammeter Switch	A83	CB-F-1B-A						
												EDE-A83-ATR	Current Transducer	A83	CB-F-1B-A						
												EDE-A83-TD-1	CT Test Device	A83	CB-F-1B-A						
												EDE-A83-51GS	Ground Sensor Relay	A83	CB-F-1B-A						

FUNCTION: ELECTRICAL DISTRIBUTION EMERGENCY

ITEM NO.	EQUIPMENT ID NO.	EQUIPMENT DESCRIPTION	P&ID/1-LINE DRAWING NO.	TRAIN	PHYSICAL LOCATION DRAWING NO.	FIRE AREA/ZONE	REQUIRED FOR		POWER		ELEC NODE	SUPPORTING CONTROL AND INSTRUMENTATION EQUIPMENT				CABLES	ELECTRICAL DRAWING NO.		SUPPORTING SYSTEMS	REDUNDANT COUNTERPART	REMARKS
							HOT STAND BY	COLD SHUT DOWN	ELEC	AIR		EQUIPMENT ID NO.	EQUIPMENT DESCRIPTION	ELEC NODE	FIRE AREA/ZONE		SCHEM.	CABLE			
39	EDE-US-61	480 V Bus 61 Unit Substation	310014	B	310442	CB-F-1B-A	X	X	X	-	AD2	EDE-AD2-52	480 V AC Circuit Breaker	AD2	CB-F-1B-A		310103		CBA-FN-32 CBA-FN-33 EDE-X-5C	EDE-US-51	
												EDE-X-5C	4160-480 V Distribution Transformer	AD1	CB-F-1B-A		AD2a	AD2b			
												EDE-AD3-FU	Fuses	AD3	CB-F-1B-A						
												EDE-AD1-LA	6 kV Lightning Arrestors (3)	AD1	CB-F-1B-A						
												EDE-AD2-CT	Current Transformers (2000/5)	AD2	CB-F-1B-A						
												EDE-AD3-AM	Ammeter	AD3	CB-F-1B-A						
												EDE-AD3-AS	Ammeter Switch	AD3	CB-F-1B-A						
40	EDE-US-62	480 V Bus 62 Unit Substation	310014	B	310442	CB-F-1B-A	X	X	X	-	AE2	EDE-AE2-52	480 V AC Circuit Breaker	AE2	CB-F-1B-A		310103		CBA-FN-32 CBA-FN-33 EDE-X-5D	EDE-US-52	
												EDE-X-5D	4160-480 V Distribution Transformer	AE1	CB-F-1B-A		AE2a	AE2b			
												EDE-AE3-FU	Fuses	AE3	CB-F-1B-A						
												EDE-AE1-LA	6 kV Lightning Arrestors (3)	AE1	CB-F-1B-A						
												EDE-AE2-CT	Current Transformers (2000/5)	AE2	CB-F-1B-A						
												EDE-AE3-AM	Ammeter	AE3	CB-F-1B-A						
												EDE-AE3-AS	Ammeter Switch	AE3	CB-F-1B-A						
41	EDE-US-61	480 V Feed to 460 V Motor Control 612	310014	B	310442	CB-F-1B-A	X	X	X	-	AD6	EDE-AD6-52	480 V AC Circuit Breaker	AD6	CB-F-1B-A	AD6-B16 AD6-B16/1	310103		CBA-FN-32 CBA-FN-33 EDE-US-61	EDE-US-51 EDE-MCC-512	
																	AD6	AD6			
42	EDE-US-61	480 V Feed to 460 V Motor Control 614	310014	B	310442	CB-F-1B-A	X	X	X	-	AA4	EDE-AA4-52	480 V AC Circuit Breaker	AA4	CB-F-1B-A	AA4-BF0	310103		CBA-FN-32 CBA-FN-33 EDE-US-61	EDE-US-51 EDE-MCC-514	
																	AA4	AA4			
43	EDE-US-61	480 V Feed to 460 V Motor Control 615	310014	B	310442	CB-F-1B-A	X	X	X	-	AX9	EDE-AX9-52	480 V AC Circuit Breaker	AX9	CB-F-1B-A	AX9-B4E AX9-B4E/1	310103		CBA-FN-32 CBA-FN-33 EDE-US-61	EDE-US-51 EDE-MCC-515	
																	AX9	AX9			
44	EDE-US-62	480 V Feed to 460 V Motor Control 621	310014	B	310442	CB-F-1B-A	X	X	X	-	AE8	EDE-AE8-52	480 V AC Circuit Breaker	AE8	CB-F-1B-A	AE8-B19 AE8-B19/1	310103		CBA-FN-32 CBA-FN-33 EDE-US-62	EDE-US-52 EDE-MCC-521	
																	AE8	AE8			
45	EDE-US-62	480 V Feed to 460 V Motor Control 622	310014	B	310442	CB-F-1B-A	X	X	X	-	AW0	EDE-AW0-52	480 V AC Circuit Breaker	AW0	CB-F-1B-A	AW0-D13 AW0-GZ0 AW0-GZ0/1	310103		CBA-FN-32 CBA-FN-33 EDE-US-62	EDE-US-52 EDE-MCC-522	
												EDE-CS-9788-2	Control Switch with Indication	GZ0	CB-F-1B-A		AW0a AW0b AW0c	AW0e			
												EDE-SS-9788	Selector Switch	GZ0	CB-F-1B-A						
												EDE-AW0-52H	Truck Operated Contact	AW0	CB-F-1B-A						
												EDE-AW0-FU	Fuses	AW0	CB-F-1B-A						

FUNCTION: ELECTRICAL DISTRIBUTION EMERGENCY

ITEM NO.	EQUIPMENT ID NO.	EQUIPMENT DESCRIPTION	P&ID/1-LINE DRAWING NO.	TRAIN	PHYSICAL LOCATION DRAWING NO.	FIRE AREA/ZONE	REQUIRED FOR		POWER		ELEC NODE	SUPPORTING CONTROL AND INSTRUMENTATION EQUIPMENT				CABLES	ELECTRICAL DRAWING NO.		SUPPORTING SYSTEMS	REDUNDANT COUNTERPART	REMARKS
							HOT STAND BY	COLD SHUT DOWN	ELEC	AIR		EQUIPMENT ID NO.	EQUIPMENT DESCRIPTION	ELEC NODE	FIRE AREA/ZONE		SCHEM.	CABLE			
46	EDE-US-61	Grounding Transformer	310014	B	310442	CB-F-1B-A	X	X	X	-	AD3	EDE-AD3-XFMR	3-1ø 1 kVA Transformers	AD3	CB-F-1B-A	-	310103 AE3b	-	CBA-FN-32 CBA-FN-33 EDE-US-61	EDE-US-51 GRD XFMR	
												EDE-AD3-FU	Fuses	AD3	CB-F-1B-A						
												EDE-AD3-RES	Grounding Resistor	AD3	CB-F-1B-A						
												EDE-AD3-VM	Ground Voltmeters (3)	AD3	CB-F-1B-A						
												EDE-AD3-64	Ground Relay	AD3	CB-F-1B-A						
46a	EDE-US-61	480 V Feed to 460 V Motor Control Center 611	310014	B	310442	CB-F-1B-A	X	X	X	-	AD5	EDE-AD5-52	480 V AC Circuit Breaker	AD5	CB-F-1B-A	AD5-B15 AD5-B15/1	310103 AD5	AD5	CBA-FN-32 CBA-FN-33 EDE-US-61	EDE-US-51 EDE-MCC-511	
47	EDE-US-62	Grounding Transformer	310014	B	310442	CB-F-1B-A	X	X	X	-	AE3	EDE-AE3-XFMR	3-1ø 1 kVA Transformers	AE3	CB-F-1B-A	-	310103 AE3b	-	CBA-FN-32 CBA-FN-33 EDE-US-62	EDE-US-52 GRD XFMR	
												EDE-AE3-FU	Fuses	AE3	CB-F-1B-A						
												EDE-AE3-RES	Grounding Resistor	AE3	CB-F-1B-A						
												EDE-AE3-VM	Ground Voltmeters (3)	AE3	CB-F-1B-A						
												EDE-AE3-64	Ground Relay	AE3	CB-F-1B-A						
48	EDE-1-1F	Uninterruptible Power Supply	310043	B	310442	CB-F-1B-A	X	X	X	-	HF6	EDE-DD5-52	460 V AC Circuit Breaker	DD5	CB-F-1B-A	DD5-HF6/1 DN0-HF6/1	310105 DD5a	DD5b	CBA-FN-32 CBA-FN-33 EDE-MCC-612 EDE-SWG-11B	EDE-I-1E	
												EDE-DN0-72	125 V DC Circuit Breaker	DN0	CB-F-1B-A						
												EDE-HF6/2-52	460 V AC Inc. Line Circuit Breaker	HF6	CB-F-1B-A						
												EDE-HF6/1-72	125 V DC Inc. Line Circuit Breaker	HF6	CB-F-1B-A						
												EDE-HF6/3-52	120 V AC Output Circuit Breaker	HF6	CB-F-1B-A						
48A	EDE-CP-1F	Static Transfer Switch	310043	B	310442	CB-F-1B-A	X	X	X	-	E2B	EDE-E2B-F1	300A, 600 V Fuse	E2B	CB-F-1B-A	E2B-HF6 E2B-HF6/1	310105 DD5a	DD5b	CBA-FN-32 CBA-FN-33 EDE-I-1F	EDE-CP-1E	
49	EDE-PP-1F	Vital Instrument Bus	310043	B	310442	CB-F-1B-A	X	X	X	-	EH0	EDE-EH0/NC-52	120 V AC Circuit Breaker - Inc. Line from EDE-CP-1F (Norm. Closed)	EH0	CB-F-1B-A	EH0-E2B	310105 DD5a EH0a	DD5b	CBA-FN-32 CBA-FN-33 EDE-CP-1F	EDE-PP-1E	
												EDE-EH0/NO-52	120 V AC Circuit Breaker - Inc. Line from ED-X-31F (Norm. Open)	EH0	CB-F-1B-A						
50	EDE-PP-11F	Vital Instrument Bus	310043	B	310442	CB-F-1B-A	X	X	X	-	E1T	EDE-EH0/13-52	120 V AC Circuit Breaker	EH0	CB-F-1B-A	E1T-EH0	310105 DD5a E1Ta	DD5b	CBA-FN-32 CBA-FN-33 EDE-PP-1F	EDE-PP-11E	

FUNCTION: ELECTRICAL DISTRIBUTION EMERGENCY

ITEM NO.	EQUIPMENT ID NO.	EQUIPMENT DESCRIPTION	P&ID/1-LINE DRAWING NO.	TRAIN	PHYSICAL LOCATION DRAWING NO.	FIRE AREA/ZONE	REQUIRED FOR		POWER		ELEC NODE	SUPPORTING CONTROL AND INSTRUMENTATION EQUIPMENT				CABLES	ELECTRICAL DRAWING NO.		SUPPORTING SYSTEMS	REDUNDANT COUNTERPART	REMARKS
							HOT STAND BY	COLD SHUT DOWN	ELEC	AIR		EQUIPMENT ID NO.	EQUIPMENT DESCRIPTION	ELEC NODE	FIRE AREA/ZONE		SCHEM.	CABLE			
51	EDE-BC-1B	125 V DC Battery Charger	310042	B	310442	CB-F-1B-A	X	X	X	-	HR6	EDE-DA1-52	460 V AC Circuit Breaker	DA1	CB-F-1B-A	DA1-HR4 DA1-HR6	310107 DA1a DA1b DA1c	DA1f	CBA-FN-32 CBA-FN-33 EDE-MCC-E612	EDE-BC-1A	
												EDE-DA1-42	Contactor	DA1	CB-F-1B-A						
												EDE-DA1-42X	Auxiliary Relay	DA1	CB-F-1B-A						
												DG-HR4-HR9(K20)	EPS Relay	HR4	CB-F-1B-A						
												EDE-HR6/1-52	460 V AC Circuit Breaker - Incoming Feed	HR6	CB-F-1B-A						
												EDE-DA1-FU	Fuse	DA1	CB-F-1B-A						
52	EDE-B-1B	125 V DC Battery	310042	B	310442	CB-F-1F-A	X	X	X	-	HV5	EDE-J76-FU-1,2,3,4	1600A Fuses	J76	CB-F-1B-A	HV5-J76 NV5-J76/1	310107 DA1a DA1b DA1c	DA1f	CBA-FN-32 CBA-FN-33 CBA-FN-21B EDE-BC-1B EDE-SWG-11B	EDE-B-1A	
												EDE-J76-SH	1000A, 100 MV Shunt	J76	CB-F-1B-A						
												EDE-J76-ATR	Shunt Amplifier	J76	CB-F-1B-A						

FUNCTION: ELECTRICAL DISTRIBUTION EMERGENCY

ITEM NO.	EQUIPMENT ID NO.	EQUIPMENT DESCRIPTION	P&ID/1-LINE DRAWING NO.	TRAIN	PHYSICAL LOCATION DRAWING NO.	FIRE AREA/ZONE	REQUIRED FOR		POWER		ELEC NODE	SUPPORTING CONTROL AND INSTRUMENTATION EQUIPMENT				CABLES	ELECTRICAL DRAWING NO.		SUPPORTING SYSTEMS	REDUNDANT COUNTERPART	REMARKS
							HOT STAND BY	COLD SHUT DOWN	ELEC	AIR		EQUIPMENT ID NO.	EQUIPMENT DESCRIPTION	ELEC NODE	FIRE AREA/ZONE		SCHEM.	CABLE			
53	EDE-SWG-11B	125 V DC Switchboard Auxiliary Buses 120 V AC and 125 V DC	310042	B	310442	CB-F-1B-A	X	X	X	-	DN3	EDE-HR6/2-72	125 V DC Circuit Breaker	HR6	CB-F-1B-A	DN5-J76 DN5-J76/1 DN4-HR6	310107 DA1a DA1b DA1c	DA1f	CBA-FN-32 CBA-FN-33 EDE-SWG-11B EDE-PP-1F EDE-B-1A EDE-BC-1A	EDE-SWG-11A	
												EDE-DL5-72	125 V DC Circuit Breaker	DL5	CB-F-1B-A						
												EDE-DN4-72	125 V DC Circuit Breaker	DN4	CB-F-1B-A						
												EDE-DN5-72	125 V DC Circuit Breaker	DN5	CB-F-1B-A						
												EDE-DN5-72	125 V DC Circuit Breaker	DN6	CB-F-1B-A						
												EDE-DN3-FU-1,2	10A Fuses	DN3	CB-F-1B-A						
												EDE-DN3-27BL	Undervoltage Relay	DN3	CB-F-1B-A						
												EDE-DN3-27BLL	Undervoltage Relay	DN3	CB-F-1B-A						
												EDE-DN3-VM	DC Voltmeter	DN3	CB-F-1B-A						
												EDE-DN3-VTR	Voltage Transducer	DN3	CB-F-1B-A						
												EDE-DN3-DIO	Diodes	DN3	CB-F-1B-A						
												EDE-DN3-XS	Selector Switch	DN3	CB-F-1B-A						
												EDE-DN3-AMY	Ammeter Relay	DN3	CB-F-1B-A						
												EDE-EHO/5-52	120 V AC Circuit Breaker	EHO	CB-F-1B-A	DN3-EHO DN3-J76/1	310105 EHOa	EHOb			
												EDE-DN3-27BL	Undervoltage Relay	DN3	CB-F-1B-A		310107 DA1a DA1c 5b	DA1f			
												EDE-DN3-62BL	Timing Relay	DN3	CB-F-1B-A						
												EDE-DN3-27BLL	Undervoltage Relay	DN3	CB-F-1B-A						
												EDE-DN3-62BLL	Timing Relay	DN3	CB-F-1B-A						
												EDE-DN4-72	Breaker Operated Contact	DN4	CB-F-1B-A						
												EDE-DN4-72STC	Circuit Breaker Shut Trip Coil	DN4	CB-F-1B-A						
												EDE-DN3-VTR	Voltage Transducer	DN3	CB-F-1B-A						
												EDE-J76-ATR	Current Transducer	J76	CB-F-1B-A						
												EDE-DN3-AMY	Ammeter Relay	DN3	CB-F-1B-A						
												EDE-DN3-FU	120 V AC 15A and 1A Fuses	DN3	CB-F-1B-A						
												EDE-DN3-52	120 V AC Incoming Feed Circuit Breaker	DN3	CB-F-1B-A						
54	EDE-PP-111B	125 V DC Distribution Panel	310042	B	310442	CB-F-1B-A	X	X	X	-	E94	EDE-DN7-72	125 V DC Circuit Breaker	DN7	CB-F-1B-A	DN7-E94	310107 DA1a E94a	DA1f	CBA-FN-32 CBA-FN-33 EDE-SWG-11B	EDE-PP-111A	
												EDE-E94-72	125 V DC Circuit Breaker (Main)	E94	CB-F-1B-A						
55	EDE-PP-112B	125 V DC Distribution Panel	310042	B	310442	CB-F-1B-A	X	X	X	-	E88	EDE-DN9-72	125 V DC Circuit Breaker	DN9	CB-F-1B-A	DN9-E88	310107 DA1a E88a	DA1f	CBA-FN-32 CBA-FN-33 EDE-SWG-11B	EDE-PP-112A	
												EDE-E88-72	125 V DC Circuit Breaker (Main)	E88	CB-F-1B-A						

FUNCTION: ELECTRICAL DISTRIBUTION EMERGENCY

ITEM NO.	EQUIPMENT ID NO.	EQUIPMENT DESCRIPTION	P&ID/1-LINE DRAWING NO.	TRAIN	PHYSICAL LOCATION DRAWING NO.	FIRE AREA/ZONE	REQUIRED FOR		POWER		ELEC NODE	SUPPORTING CONTROL AND INSTRUMENTATION EQUIPMENT				CABLES	ELECTRICAL DRAWING NO.		SUPPORTING SYSTEMS	REDUNDANT COUNTERPART	REMARKS
							HOT STAND BY	COLD SHUT DOWN	ELEC	AIR		EQUIPMENT ID NO.	EQUIPMENT DESCRIPTION	ELEC NODE	FIRE AREA/ZONE		SCHEM.	CABLE			
56	EDE-PP-113B	125 V DC Distribution Panel	310042	B	310442	CB-F-1B-A	X	X	X	-	E2U	EDE-DP2-72 EDE-E2U-72	125 V DC Circuit Breaker 125 V DC Circuit Breaker (Main)	DP2 E2U	CB-F-1B-A CB-F-1B-A	DP2-E2U	310107 DA1a DA1b E2Ua	DA1f	CBA-FN-32 CBA-FN-33 EDE-SWG-11B	EDE-PP-113A	
57	EDE-SWG-6	4160 V SWG 125 V DC Control Bus		B	310442	CB-F-1B-A	X	X	X	-	A73	EDE-E94/1-72 EDE-A73-8	125 V DC Circuit Breaker 125 V DC Circuit Breaker (Main)	E94 A73	CB-F-1B-A CB-F-1B-A	A73-E94	310107 E94a 310102 5i, 5j, 5k, 5l	E94b	CBA-FN-32 CBA-FN-33 EDE-PP-111B	EDE-SWG-5	
58	EDE-US-61	480 V Unit Substation 125 V DC Control Bus		B	310442	CB-F-1B-A	X	X	X	-	AD3	EDE-E94/2-72 EDE-AD3-8	125 V DC Circuit Breaker 125 V DC Circuit Breaker (Main)	E94 AD3	CB-F-1B-A CB-F-1B-A	AD3-E94	310107 E94a 310103 5q	E94b	CBA-FN-32 CBA-FN-33 EDE-PP-111B	EDE-US-51	
59	EDE-US-62	480 V Unit Substation 125 V DC Control Bus		B	310442	CB-F-1B-A	X	X	X	-	AE3	EDE-E94/3-72 EDE-AE3-8	125 V DC Circuit Breaker 125 V DC Circuit Breaker (Main)	E94 AE3	CB-F-1B-A CB-F-1B-A	AE3-E94	310107 E94a 310103 5r	E94b	CBA-FN-32 CBA-FN-33 EDE-PP-111B	EDE-US-52	
60	DG-CP-76A	Diesel Generator 1B Control Panel Cubicle 3 125 V DC Supply	310010 310042	B	310524	DG-F-2B-A	X	X	X	-	G20	EDE-DP1-72 DG-G20-72	125 V DC Circuit Breaker 125 V DC Circuit Breaker (Main)	DP1 G20	CB-F-1B-A DG-F-2B-A	DP1-G20	310102 DP1a 310107 DA1a	DP1b	DAH-FN-25B DAH-FN-26B EDE-SWG-11B CBA-FN-32 CBA-FN-33	DG-CP-75A	

FUNCTION: DIESEL GENERATORS

ITEM NO*	EQUIPMENT ID NO.	EQUIPMENT DESCRIPTION	P&ID/1-LINE DRAWING NO.	TRAIN	PHYSICAL LOCATION DRAWING NO.	FIRE AREA/ZONE	REQUIRED FOR		POWER		ELEC NODE	SUPPORTING CONTROL AND INSTRUMENTATION EQUIPMENT				CABLES	ELECTRICAL DRAWING NO.		SUPPORTING SYSTEMS	REDUNDANT COUNTERPART	REMARKS
							HOT STAND BY	COLD SHUT DOWN	ELEC	AIR		EQUIPMENT ID NO.	EQUIPMENT DESCRIPTION	ELEC NODE	FIRE AREA/ZONE		SCHEM.	CABLE			
1	DG-DG-1A	Diesel Generator 1A	DG-20462	A	310524	DG-F-2A-A	X	X	X	X	HA1	DG-CS-9510-2	Control Switch (Push Button)	G07	DG-F-2A-A	A54-G06/5 E93-G29/1 A54-G29 G06-G29 G06-G29/1 G06-HR2 C06-G29/2 G07-G29	310857 E93/8a E93/8b E93/8c E93/8d E93/8e E93/8f E93/8g E93/8r	E93/8n E93/8p	CBA-FN-19 CBA-FN-20 DAH-FN-25A DAH-FN-26A EDE-PP-111A D/G Starting Air	DG-DG-1B	
												DG-CS-9511	Control Switch (Push Button)	G07	DG-F-2A-A						
												DG-CS-9512-3	Control Switch (Push Button)	G07	DG-F-2A-A						
												DG-CS-9512-4	Control Switch (Push Button)	G07	DG-F-2A-A						
												DG-CS-9517-2	Control Switch (Push Button)	G07	DG-F-2A-A						
												DG-CS-9518-2	Control Switch (Push Button)	G07	DG-F-2A-A						
												EDE-SS-9700	Selector Switch	G06	DG-F-2A-A						
												DG-G29-OP2	Oil Pressure Relay	G29	DG-F-2A-A						
												DG-G29-CR1	Ready for Auto Start Relay	G29	DG-F-2A-A						
												DG-G29-4A	Start Relay	G29	DG-F-2A-A						
												DG-G29-T2A	Cranking Time Control Time Delay Relay	G29	DG-F-2A-A						
												DG-ZL-9580-9	Start Ckt No 1 Signal Indicating Light	G07	DG-F-2A-A						
												DG-G29-ES1	Emergency Start Relay	G29	DG-F-2A-A						
												DG-G10-TSR1	Test Start Relay	G10	DG-F-2A-A						
												DG-G10-TSR2	Test Start Relay	G10	DG-F-2A-A						
												DG-G10-TSR3	Test Start Relay	G10	DG-F-2A-A						
												DG-G10-RDT	Ramp Down Time Relay	G10	DG-F-2A-A						
												DG-G07-IOT	Idle Operate Time Relay	G07	DG-F-2A-A						
												DG-G06-LSRX	Low Speed Auxiliary Relay	G06	DG-F-2A-A						
												DG-FY-AS1	Air Start Solenoid Valve	G29	DG-F-2A-A						
												DG-G29-OP3	Oil Pressure Relay	G29	DG-F-2A-A						
												DG-G29-CR2	Ready for Auto Start Relay	G29	DG-F-2A-A						
												DG-G29-4B	Start Relay	G29	DG-F-2A-A						
												DG-G29-T2B	Cranking Time Control Time Delay Relay	G29	DG-F-2A-A						
												DG-ZL-9580-10	Start Ckt No 2 Signal Indicating Light	G07	DG-F-2A-A						
												DG-G29-ES2	Emergency Start Relay	G29	DG-F-2A-A						
												DG-FY-AS2	Air Start Solenoid Valve	G29	DG-F-2A-A						
												DG-G29-OP4	Oil Pressure Relay	G29	DG-F-2A-A						
												DG-G29-5E	Emergency Stop Relay	G29	DG-F-2A-A						
												DG-G29-5	Normal Stop Relay	G29	DG-F-2A-A						

* Table notes on last page of table

FUNCTION: DIESEL GENERATORS

ITEM NO.	EQUIPMENT ID NO.	EQUIPMENT DESCRIPTION	P&ID/1-LINE DRAWING NO.	TRAIN	PHYSICAL LOCATION DRAWING NO.	FIRE AREA/ZONE	REQUIRED FOR		POWER		ELEC NODE	SUPPORTING CONTROL AND INSTRUMENTATION EQUIPMENT				CABLES	ELECTRICAL DRAWING NO.		SUPPORTING SYSTEMS	REDUNDANT COUNTERPART	REMARKS
							HOT STAND BY	COLD SHUT DOWN	ELEC	AIR		EQUIPMENT ID NO.	EQUIPMENT DESCRIPTION	ELEC NODE	FIRE AREA/ZONE		SCHEM.	CABLE			
	DG-DG-1A (Continued)											DG-G29-5A	Shutdown Relay	G29	DG-F-2A-A						
												DG-FY-SDS	Shutdown Solenoid Valve	G29	DG-F-2A-A						
												DG-FY-ACD	Air Supply Cutoff Solenoid Valve	G29	DG-F-2A-A						
												DG-FY-CSV-A	Jacket Coolant Auxiliary Valves Solenoid	G29	DG-F-2A-A						
												DG-G29-T3A	Alarm Set Time Delay Relay	G29	DG-F-2A-A						
												DG-G29-TR	Engine Velocity Transmitter	G29	DG-F-2A-A						
												DG-FY-ISV-A	Intercooler Auxiliary Valves Solenoid	G29	DG-F-2A-A						
												DG-G29-SG	Signal Generator	G29	DG-F-2A-A						
												DG-G29-HSR	High-Speed Relay	G29	DG-F-2A-A						
												DG-G29-LSR	Low-Speed Relay	G29	DG-F-2A-A						
												DG-G29-ASR	Starting Air Shutoff Relay	G29	DG-F-2A-A						
												DG-G29-IPC	Coolant Pump Control Relay	G29	DG-F-2A-A						
												DG-G29-BDR	Barring Device Relay	G29	DG-F-2A-A						
												DG-G29-ASA	Air Start Relay	G29	DG-F-2A-A						
												DG-G29-ASB	Air Start Relay	G29	DG-F-2A-A						
												EDE-ZL-9574	Monitoring Circuit Indicator Light	G07	DG-F-2A-A						
												DG-G29-TACH	Tachometer	G29	DG-F-2A-A						
												DG-G29-SFR	Start Failure Relay	G29	DG-F-2A-A						
												EDE-ZL-9574-1	Monitoring Circuit Indicating Light	G29	DG-F-2A-A						
												DG-G29-SDR	Engine Trouble Shutdown Relay	G29	DG-F-2A-A						
												DG-G29-EOR	Engine Overspeed Relay	G29	DG-F-2A-A						
												EDE-A69-RLA	SI Signal Lockout Relay	A69	CB-F-1A-A						
												DG-G29-OTH	High Oil Temperature Relay	G29	DG-F-2A-A						
												DG-G29-CTH	High Coolant Temperature Relay	G29	DG-F-2A-A						
												DG-G29-ESX	Emergency Start Auxiliary Relay	G29	DG-F-2A-A						
												EDE-A54-TD2	Test Device	A54	CB-F-1A-A						
												EDE-A69-TD2	Test Device	A69	CB-F-1A-A						
												DG-G29-EST	Emergency Start Time Delay Relay	G29	DG-F-2A-A						
												DG-G29-RA1	Air Pressure Auxiliary Relay	G29	DG-F-2A-A						

FUNCTION: DIESEL GENERATORS

ITEM NO.	EQUIPMENT ID NO.	EQUIPMENT DESCRIPTION	P&ID/1-LINE DRAWING NO.	TRAIN	PHYSICAL LOCATION DRAWING NO.	FIRE AREA/ZONE	REQUIRED FOR		POWER		ELEC NODE	SUPPORTING CONTROL AND INSTRUMENTATION EQUIPMENT				CABLES	ELECTRICAL DRAWING NO.		SUPPORTING SYSTEMS	REDUNDANT COUNTERPART	REMARKS
							HOT STAND BY	COLD SHUT DOWN	ELEC	AIR		EQUIPMENT ID NO.	EQUIPMENT DESCRIPTION	ELEC NODE	FIRE AREA/ZONE		SCHEM.	CABLE			
	DG-DG-1A (Continued)											DG-G29-RA2	Air Pressure Auxiliary Relay	G29	DG-F-2A-A						
												DG-G29-CF3	Power Available Relay	G29	DG-F-2A-A						
												DG-G29-CF1	Power Available Relay	G29	DG-F-2A-A						
												DG-G29-CF2	Power Available Relay	G29	DG-F-2A-A						
												DG-G29-CF5	Power Available Relay	G29	DG-F-2A-A						
												DG-G29-OP1	Oil Pressure Relay	G29	DG-F-2A-A						
												DG-G29-FPL	Fuel Pressure Relay	G29	DG-F-2A-A						
												DG-G29-CPL	Jacket Coolant Pressure Relay	G29	DG-F-2A-A						
												DG-G29-IPL	Intercooler Pressure Relay	G29	DG-F-2A-A						
												DG-PS-OPL1	Oil Low Pressure Switch	G29	DG-F-2A-A						
												DG-PS-PPLA	Fuel Low Pressure Switch	G29	DG-F-2A-A						
												DG-PS-CPLA	Jacket Coolant Low Pressure Switch	G29	DG-F-2A-A						
												DG-PS-IPLA	Intercooler Low Pressure Switch	G29	DG-F-2A-A						
												DG-G29-OPC	Oil Pump Control Relay	G29	DG-F-2A-A						
												DG-G29-FPC	Auxiliary Fuel Oil Pump Control Relay	G29	DG-F-2A-A						
												DG-G29-CPC	Coolant Pump Control Relay	G29	DG-F-2A-A						
												DG-G29-CF4	Power Available Relay	G29	DG-F-2A-A						
												DG-G07-R43L1	Selector Switch Auxiliary Latch Relay (Local)	G07	DG-F-2A-A						
												DG-G07-R43L2	Selector Switch Auxiliary Relay (Local)	G07	DG-F-2A-A						
												DG-G07-R43L4	Selector Switch Auxiliary Relay (Local)	G07	DG-F-2A-A						
												DG-G07-R43M1	Selector Switch Auxiliary Latch Relay (Maintenance)	G07	DG-F-2A-A						
												DG-G07-R43R1	Selector Switch Auxiliary Latch Relay (Remote)	G07	DG-F-2A-A						
												DG-G07-R43R2	Selector Switch Auxiliary Latch Relay (Remote)	G07	DG-F-2A-A						
												DG-G07-R43R5	Selector Switch Auxiliary Relay (Remote)	G07	DG-F-2A-A						
												DG-HR2-PR1	ESP Auxiliary Relay	HR2	CB-F-1A-A						
												DG-HR2-PRIX	EPS Auxiliary Relay	HR2	CB-F-1A-A						
												DG-G29-D1	P-H Junction Diode	G29	DG-F-2A-A						
												DG-SS-EOS	Engine Overspeed Switch	G29	DG-F-2A-A						

FUNCTION: DIESEL GENERATORS

ITEM NO.	EQUIPMENT ID NO.	EQUIPMENT DESCRIPTION	P&ID/1-LINE DRAWING NO.	TRAIN	PHYSICAL LOCATION DRAWING NO.	FIRE AREA/ZONE	REQUIRED FOR		POWER		ELEC NODE	SUPPORTING CONTROL AND INSTRUMENTATION EQUIPMENT				CABLES	ELECTRICAL DRAWING NO.		SUPPORTING SYSTEMS	REDUNDANT COUNTERPART	REMARKS
							HOT STAND BY	COLD SHUT DOWN	ELEC	AIR		EQUIPMENT ID NO.	EQUIPMENT DESCRIPTION	ELEC NODE	FIRE AREA/ZONE		SCHEM.	CABLE			
	DG-DG-1A (Continued)											DG-PS-APL1	Air Pressure Low Switch	G29	DG-F-2A-A						
												DG-PS-APL2	Air Pressure Low Switch	G29	DG-F-2A-A						
												DG-PS-CPS	Coolant Pressure Switch	G29	DG-F-2A-A						
												DG-PS-OPL2	Oil Low Pressure Switch	G29	DG-F-2A-A						
												DG-PS-OPL3	Oil Low Pressure Switch	G29	DG-F-2A-A						
												DG-PS-OPL4	Oil Low Pressure Switch	G29	DG-F-2A-A						
												DG-G29-CTH-1	Coolant High Temperature Auxiliary Relay	G29	DG-F-2A-A						
												DG-G29-OTH-1	Oil High Temperature Auxiliary Relay	G29	DG-F-2A-A						
												DG-ZS-BD1	Barring Device Position Switch	G29	DG-F-2A-A						
												DG-ZS-BD2	Barring Device Position Switch	G29	DG-F-2A-A						
												EDE-A54-86DP	DG Primary Protection Lockout Relay	A54	CB-F-1A-A						
												EDE-A69-86DB	DG Backup Protection Lockout Relay	A69	CB-F-1A-A						
												EDE-A54-TS	Test Start Control Switch	A54	CB-F-1A-A						
												DG-G29-FU	10 Amp Fuses (10)	G29	DG-F-2A-A						
												DG-G29-TRP	TR Control Power Relay	G29	DG-F-2A-A						
												DG-G29-5B	Shutdown Auxiliary Relay	G29	DG-F-2A-A						
												EDE-G07-FU-17, 18	6 Amp Fuses (2)	G07	DG-F-2A-A	DM9-G10	310102				
												EDE-SS-9700	Selector Switch	G06	DG-F-2A-A		G07/2a	G07/2g	DAH-FN-25A		
												DG-G07-CF6	Auxiliary Relay	G07	DG-F-2A-A		G07/2b		DAH-FN-25B		
												DG-G07-R43L1	Selector Switch Auxiliary Latch Relay (Local)	G07	DG-F-2A-A		G07/2c		DG-CP-75A		
																	DM9a	DM9b	EDE-SWG-11A		
												DG-G07-R43L3	Selector Switch Auxiliary Relay (Local)	G07	DG-F-2A-A						
												DG-G07-R43L4	Selector Switch Auxiliary Relay (Local)	G07	DG-F-2A-A						
												DG-G07-R43L5	Selector Switch Auxiliary Relay (Local)	G07	DG-F-2A-A						
												DG-G07-R43R6	Selector Switch Auxiliary Relay (Remote)	G07	DG-F-2A-A						
												DG-G07-R43R2	Selector Switch Auxiliary Relay (Remote)	G07	DG-F-2A-A						

FUNCTION: DIESEL GENERATORS

ITEM NO.	EQUIPMENT ID NO.	EQUIPMENT DESCRIPTION	P&ID/1-LINE DRAWING NO.	TRAIN	PHYSICAL LOCATION DRAWING NO.	FIRE AREA/ZONE	REQUIRED FOR		POWER		ELEC NODE	SUPPORTING CONTROL AND INSTRUMENTATION EQUIPMENT				CABLES	ELECTRICAL DRAWING NO.		SUPPORTING SYSTEMS	REDUNDANT COUNTERPART	REMARKS
							HOT STAND BY	COLD SHUT DOWN	ELEC	AIR		EQUIPMENT ID NO.	EQUIPMENT DESCRIPTION	ELEC NODE	FIRE AREA/ZONE		SCHEM.	CABLE			
	DG-DG-1A (Continued)											DG-G07-R43R3	Selector Switch Auxiliary Relay (Remote)	G07	DG-F-2A-A						
												DG-G07-R43R4	Selector Switch Auxiliary Relay (Remote)	G07	DG-F-2A-A						
												DG-G07-R43R5	Selector Switch Auxiliary Relay (Remote)	G07	DG-F-2A-A						
												DG-G07-R43M1	Selector Switch Auxiliary Latch Relay (Maintenance)	G07	DG-F-2A-A						
												DG-G07-R43R1	Selector Switch Auxiliary Latch Relay (Remote)	G07	DG-F-2A-A						
												EDE-G06-FU-9, 10	50 Amp Fuses	G06	DG-F-2A-A	A69-G06	310102				
												DG-A69, XFMR	Grounding Transformer	A69	CB-F-1A-A	G06-HF7	HA1a	HA1c	DAH-FN-25A		
												DG-HF7-XF	DG Field	HF7	DG-F-2A-A	A69-HN0	HA1b	HA1d	DAH-FN-26A		
												DG-G07-SERV-PC	Static Exciter Voltage Regulator Power Chassis	G06	DG-F-2A-A	DH9-G10	DM9a	DM9b	CBA-FN-19		
																			EDE-SWG-11A		
												DG-SM-9585	Governor Control (2301A)	G06	DG-F-2A-A						
												DG-GT3-PT1	Potential Transformer	GT3	DG-F-2A-A						
												DG-GT3-PT2	Potential Transformer	GT3	DG-F-2A-A						
												DG-GT3-PPT4	Power Transformer	GT3	DG-F-2A-A						
												DG-HN0-NCB	DG Neutral Connection Box	HN0	DG-F-2A-A						
												DG-GT3-CCT	Current Transformer 2000/5	GT3	DG-F-2A-A						
												DG-G10-IDR1	Isochronous Droop Relay	G10	DG-F-2A-A						
												EDE-A69-60	Voltage Balance Relays	A69	CB-F-1A-A						
												DG-G06-K2	Field Flashing Contractor	G06	DG-F-2A-A						
												DG-G06-64F	Generator Field Failure Relay	G06	DG-F-2A-A						
												DG-G10-SEVR-CC	Static Exciter Voltage Regulator Control Chassis	G10	DG-F-2A-A						
												DG-GT3-XCT1, 2, 3	Generator Current Transformers (2000/5)	GT3	DG-F-2A-A						
												DG-VM-9702-2	Field Voltmeter	G10	DG-F-2A-A						
												DG-G10-DCT	Field Voltage Transducer	G10	DG-F-2A-A						
												DG-G06-SH	50 mV Field Shunt	G06	DG-F-2A-A						
												DG-AM-9702-2	DC Field Ammeter	G10	DG-F-2A-A						
												DG-G10-ATR	Current Transducer	G10	DG-F-2A-A						
												DG-G10-CF10	Loss of Power Relay	G10	DG-F-2A-A						
												DG-A69-64	Ground Fault Sensing Relay	A69	CB-F-1A-A						

FUNCTION: DIESEL GENERATORS

ITEM NO.	EQUIPMENT ID NO.	EQUIPMENT DESCRIPTION	P&ID/1-LINE DRAWING NO.	TRAIN	PHYSICAL LOCATION DRAWING NO.	FIRE AREA/ZONE	REQUIRED FOR		POWER		ELEC NODE	SUPPORTING CONTROL AND INSTRUMENTATION EQUIPMENT				CABLES	ELECTRICAL DRAWING NO.		SUPPORTING SYSTEMS	REDUNDANT COUNTERPART	REMARKS
							HOT STAND BY	COLD SHUT DOWN	ELEC	AIR		EQUIPMENT ID NO.	EQUIPMENT DESCRIPTION	ELEC NODE	FIRE AREA/ZONE		SCHEM.	CABLE			
	DG-DG-1A (Continued)											DG-G10-FU-22, 23	1 Amp Fuses	G10	DG-F-2A-A						
												DG-G07-IL10	Diode Failure Light	G07	DG-F-2A-A						
												EDE-G06-FU-1, 2	10 Amp Fuses (2)	G06	DG-F-2A-A	G06-G29/5 DM9-G10	310102				
												DG-G07-R43R5	Selector Switch Auxiliary Relay (Remote)	G07	DG-F-2A-A		G06/1a G06/1b G06/1c G06/1d	G06/1f	DAH-FN-25A DAH-FN-26A DG-CP-75A EDE-SWG-11A		
												EDE-CS-9820-2	Control Switch (Push Button)	G10	DG-F-2A-A		DM9a	DM9b			
												DG-G29-HSR	High Speed Relay	G29	DG-F-2A-A						
												DG-G29-LSR	Low Speed Relay	G29	DG-F-2A-A						
												DG-G29-ES1	Emergency Start Relay	G29	DG-F-2A-A						
												DG-G29-ES2	Emergency Start Relay	G29	DG-F-2A-A						
												DG-SS-9585	Selector Switch	G07	DG-F-2A-A						
												DG-ZL-9580-11	Field Flash Signal Indicating Light	G10	DG-F-2A-A						
												DG-G07-R43M1	Selector Switch Auxiliary Latch Relay (Maintenance)	G07	DG-F-2A-A						
												DG-G29-5A	DG - Shutdown Relay	G29	DG-F-2A-A						
												DG-G06-LSRX	Low Speed Auxiliary Relay	G06	DG-F-2A-A						
												DG-G06-LSRXX	Time Delay Relay	G06	DG-F-2A-A						
												EDE-CS-9801-1	Push Button	G10	DG-F-2A-A						
												EDE-CS-9801-2	Push Button	G10	DG-F-2A-A						
												DG-G06-SERV-PC	Static Exciter Voltage Regulator Power Chassis	G06	DG-F-2A-A						
												DG-G10-NM	Null Meter	G10	DG-F-2A-A						
												EDE-SS-9700	Selector Switch	G06	DG-F-2A-A						
												EDE-CS-9821-2	Control Switch	G10	DG-F-2A-A						
												EDE-CS-9822-2	Control Switch	G10	DG-F-2A-A						
												DG-G10-RR	Regulator Relay	G10	DG-F-2A-A						
												DG-G10-SERV-CC	Static Exciter Voltage Regulatory Control Chassis								
												DG-G10-CF-8	Loss of Power Relay	G10	DG-F-2A-A						
												DG-G07-R43R5	Selector Switch Auxiliary Relay (Remote)	G10	DG-F-2A-A						

FUNCTION: DIESEL GENERATORS

ITEM NO.	EQUIPMENT ID NO.	EQUIPMENT DESCRIPTION	P&ID/1-LINE DRAWING NO.	TRAIN	PHYSICAL LOCATION DRAWING NO.	FIRE AREA/ZONE	REQUIRED FOR		POWER		ELEC NODE	SUPPORTING CONTROL AND INSTRUMENTATION EQUIPMENT				CABLES	ELECTRICAL DRAWING NO.		SUPPORTING SYSTEMS	REDUNDANT COUNTERPART	REMARKS
							HOT STAND BY	COLD SHUT DOWN	ELEC	AIR		EQUIPMENT ID NO.	EQUIPMENT DESCRIPTION	ELEC NODE	FIRE AREA/ZONE		SCHEM.	CABLE			
	DG-DG-1A (Continued)											EDE-G06-FU-3, 4	6 Amp Fuses (2)	G06	DG-F-2A-A	G06-G29/6 G06-G29/8 G06-G29/9 EC7-G10 EC7-G07 EC7-HR2 DM9-G10	310102 G06/2a G06/2b G06/2e DM9a	G06/2d DM9b	DAH-FN-25A DAH-FN-26A DG-CP-75A EDE-SWG-11A		
												DG-C10-IDR1	Isochronous Droop Relay	G10	DG-F-2A-A						
												DG-G10-IDR2	Isochronous Droop Relay	G10	DG-F-2A-A						
												DG-SZ-9585	Governor Actuator	G29	DG-F-2A-A						
												DG-SC-9585	Digital Reference Unit (DRU)	G06	DG-F-2A-A						
												DG-SM-9585	2301A Governor Controller	G06	DG-F-2A-A						
												DG-ST-9585	Magnetic Pickup (MPU-1)	G29	DG-F-2A-A						
												DG-SS-9585	Selector Switch	G07	DG-F-2A-A						
												DG-G10-TSR1	Test Start Relay	G10	DG-F-2A-A						
												DG-G10-TSR2	Test Start Relay	G10	DG-F-2A-A						
												DG-G10-TSR3	Test Start Relay	G10	DG-F-2A-A						
												DG-G10-R21	Speed Adjust Auxiliary Relay	G10	DG-F-2A-A						
												DG-G10-RDT	Ramp Down Time Relay	G10	DG-F-2A-A						
												DG-G07-IOT	Idle Operate Time Relay	G07	DG-F-2A-A						
												EDE-SS-9700	Selector Switch	G06	DG-F-2A-A						
												EDE-CS-9823-2	Control Switch	G06	DG-F-2A-A						
												DG-G06-LSRX	Low Speed Auxiliary	G06	DG-F-2A-A						
												DG-G29-ES1	Emergency Start Auxiliary Relay	G29	DG-F-2A-A						
												DG-G29-ES2	Emergency Start Auxiliary Relay	G29	DG-F-2A-A						
												DG-G07-ESS	Emergency Start Auxiliary Relay	G07	DG-F-2A-A						
												DG-G10-CF-9	Loss of Power Relay	G10	DG-F-2A-A						
												DG-G07-R43R3	Selector Switch Auxiliary Relay (Remote)	G07	DG-F-2A-A						
												DG-HR2-PR1	EPS Auxiliary Relay	HR2	CB-F-1A-A						
												DG-HR2-HR8	EPS Auxiliary Relay	HR2	CB-F-1A-A						
												DG-EC7-R1	Auxiliary Relay	EC7	DG-F-2A-A						
												DG-G10-IDR4	Isochronous Droop Relay	G10	DG-F-2A-A						
												EDE-G10-FU-7, 8	10 Amp Fuses (2)	G10	DG-F-2A-A	A54-G10/1 A69-G10 G10-G29 DM9-G10	G10a G10b G10c DM9a	G10e DM9b	DAH-FN-25A DAH-FN-26A CBA-FN-19 CBA-FN-20 DG-CP-75A EDE-SWG-11A		
												DG-G29-CR1	Auto Start Ready Relay	G29	DG-F-2A-A						
												DG-G29-CR2	Auto Start Ready Relay	G29	DG-F-2A-A						
												DG-G29-RA1	Air Pressure Auxiliary Relay	G29	DG-F-2A-A						
												DG-G29-RA2	Air Pressure Auxiliary Relay	G29	DG-F-2A-A						

FUNCTION: DIESEL GENERATORS

ITEM NO.	EQUIPMENT ID NO.	EQUIPMENT DESCRIPTION	P&ID/1-LINE DRAWING NO.	TRAIN	PHYSICAL LOCATION DRAWING NO.	FIRE AREA/ZONE	REQUIRED FOR		POWER		ELEC NODE	SUPPORTING CONTROL AND INSTRUMENTATION EQUIPMENT				CABLES	ELECTRICAL DRAWING NO.		SUPPORTING SYSTEMS	REDUNDANT COUNTERPART	REMARKS
							HOT STAND BY	COLD SHUT DOWN	ELEC	AIR		EQUIPMENT ID NO.	EQUIPMENT DESCRIPTION	ELEC NODE	FIRE AREA/ZONE		SCHEM.	CABLE			
	DG-DG-1A (Continued)											DG-G07-R43L3	Selector Switch Auxiliary Relay (Local)	G07	DG-F-2A-A						
												DG-G07-ESS	Emergency Start Auxiliary Relay	G07	DG-F-2A-A						
												DG-G10-RR	Regulator Relay	G10	DG-F-2A-A						
												DG-G07-R43L4	Selector Switch Auxiliary Relay (Local)	G07	DG-F-2A-A						
												DG-G07-R43L5	Selector Switch Auxiliary Relay (Local)	G07	DG-F-2A-A						
												DG-G07-R43R3	Selector Switch Auxiliary Relay (Remote)	G07	DG-F-2A-A						
												DG-G07-R43R4	Selector Switch Auxiliary Relay (Remote)	G07	DG-F-2A-A						
												DG-G07-R43R5	Selector Switch Auxiliary Relay (Remote)	G07	DG-F-2A-A						
												DG-G07-R43R6	Selector Switch Auxiliary Relay (Remote)	G07	DG-F-2A-A						
												DG-G06-64F	Generator Field Ground Relay	G06	DG-F-2A-A						
												DG-G10-64FX	Generator Field Ground Auxiliary Relay	G10	DG-F-2A-A						
												DG-G07-64FXA	Generator Field Ground Auxiliary Relay	G07	DG-F-2A-A						
												EDE-CS-9824-2	Control Switch	G10	DG-F-2A-A						
												DG-G10-23	Thermostat	G10	DG-F-2A-A						
												DG-G10-23X	Thermostat Auxiliary Relay	G10	DG-F-2A-A						
												DG-G07-R-DNA	Diesel Motor Available Auxiliary Relay	G07	DG-F-2A-A						
												DG-G07-R-B/I	S.W.C.T Bypass/INOP Auxiliary Relay	G07	DG-F-2A-A						
												DG-G10-IDR1	Isochronous Droop Relay	G10	DG-F-2A-A						
												DG-G10-IDR2	Isochronous Droop Relay	G10	DG-F-2A-A						
												DG-G10-IDR3	Isochronous Droop Relay	G10	DG-F-2A-A						
												EDE-ZL-9802-2	Indicating Light	G07	DG-F-2A-A						
												DG-G10-IDR4	Isochronous Droop Relay	G10	DG-F-2A-A						
												EDE-SS-9700	Selector Switch	G06	DG-F-2A-A						
												EDE-SNS-9736-2	Synchronizing Switch	G06	DG-F-2A-A						
												EDE-A51-52S	Circuit Breaker Operated Contact	A51	CB-F-1A-A						

FUNCTION: DIESEL GENERATORS

ITEM NO.	EQUIPMENT ID NO.	EQUIPMENT DESCRIPTION	P&ID/1-LINE DRAWING NO.	TRAIN	PHYSICAL LOCATION DRAWING NO.	FIRE AREA/ZONE	REQUIRED FOR		POWER		ELEC NODE	SUPPORTING CONTROL AND INSTRUMENTATION EQUIPMENT				CABLES	ELECTRICAL DRAWING NO.		SUPPORTING SYSTEMS	REDUNDANT COUNTERPART	REMARKS
							HOT STAND BY	COLD SHUT DOWN	ELEC	AIR		EQUIPMENT ID NO.	EQUIPMENT DESCRIPTION	ELEC NODE	FIRE AREA/ZONE		SCHEM.	CABLE			
	DG-DG-1A (Continued)											EDE-A52-52S	Circuit Breaker Operated Contact	A52	CB-F-1A-A						
												EDE-A54-52S	Circuit Breaker Operated Contact	A54	CB-F-1A-A						
												EDE-A69-60AX	Voltage Balance Auxiliary Relay	A69	CB-F-1A-A						
												DG-ZL-9580-3	Indicating Light	G07	DG-F-2A-A						
												DG-ZL-9518-2	Indicating Light	G07	DG-F-2A-A						
												EDE-ZL-9824-1	Indicating Light	G10	DG-F-2A-A						
												EDE-ZL-9824-2	Indicating Light	G10	DG-F-2A-A						
												DG-ZL-9580-2	Indicating Light	G07	DG-F-2A-A						
												DG-ZL-9580-4	Indicating Light	G07	DG-F-2A-A						
												DG-ZL-9580-5	Indicating Light	G07	DG-F-2A-A						
												DG-G10-CF8	Loss of Control Power Relay	G10	DG-F-2A-A						
												DG-G10-CF9	Loss of Control Power Relay	G10	DG-F-2A-A						
												DG-G10-CF10	Loss of Control Power Relay	G10	DG-F-2A-A						
												DG-G10-CR45	Annunciator Auxiliary Relay	G10	DG-F-2A-A						
												DG-G10-CR42	Annunciator Auxiliary Relay	G10	DG-F-2A-A						

FUNCTION: DIESEL GENERATORS

ITEM NO.	EQUIPMENT ID NO.	EQUIPMENT DESCRIPTION	P&ID/1-LINE DRAWING NO.	TRAIN	PHYSICAL LOCATION DRAWING NO.	FIRE AREA/ZONE	REQUIRED FOR		POWER		ELEC NODE	SUPPORTING CONTROL AND INSTRUMENTATION EQUIPMENT				CABLES	ELECTRICAL DRAWING NO.		SUPPORTING SYSTEMS	REDUNDANT COUNTERPART	REMARKS
							HOT STAND BY	COLD SHUT DOWN	ELEC	AIR		EQUIPMENT ID NO.	EQUIPMENT DESCRIPTION	ELEC NODE	FIRE AREA/ZONE		SCHEM.	CABLE			
2	DG-TK-45A	Starting Air Compressor Skid Air Receiver Tank	DG-20460	A	310524	DG-F-2A-A	X	X	-	-	-	-	-	-	-	-	-	-	-	DG-TK-45C	Notes 1 and 5
3	DG-TK-45B	Starting Air Compressor Skid Air Receiver Tank	DG-20460	A	310524	DG-F-2A-A	X	X	-	-	-	-	-	-	-	-	-	-	-	DG-TK-45D	Notes 1 and 5
4	DG-MM-8A	Exhaust Silencer	DG-20462	A	310525	DG-F-3E-A	X	X	-	-	-	-	-	-	-	-	-	-	-	DG-MM-8B	Note 1
5	DG-F-36A	Air Intake Filter	DG-20462	A	310525	DG-F-3E-A	X	X	-	-	-	-	-	-	-	-	-	-	-	DG-F-36B	Note 1
6	DG-TK-26A	Fuel Oil Storage Tank	DG-20459	A	310525 202264	DG-F-1A-A	X	X	-	-	-	-	-	-	-	-	-	-	-	DG-TK-26B	Notes 1 and 2
7	DG-TK-78A	Fuel Oil Day Tank	DG-20459	A	310525	DG-F-3C-A	X	X	-	-	-	-	-	-	-	-	-	-	-	DG-TK-78B	Note 1
8	DG-P-38A	Fuel Oil Transfer Pump	DG-20459	A	310524 202265	DG-F-1A-A	X	X	X	-	H75	DG-BM-52 DG-CS-9503 DG-LS-FLC DG-BM7-42 DG-BM7-49 DG-BM7-FU	460 V AC Circuit Breaker Control Switch with Indication Fuel Low Level Switch Motor Starter Thermal Overload Relay Fuse	BM7 BE4 RT8 BM7 BM7 BM7	CB-F-1A-A DG-F-2A-A DG-F-3C-A CB-F-1A-A CB-F-1A-A CB-F-1A-A	BE4-BM7 BM7-RT8 BM7-N75	310857 BM7a 8M7c		CBA-FN-19 CBA-FN-20 DAH-FN-25A DAH-FN-26A EDE-MCC-521	DG-P-38B	
9	DG-P-119A	Engine-Driven Fuel Oil Pump	DG-20459	A	310524	DG-F-2A-A	X	X	-	-	-	-	-	-	-	-	-	-	-	DG-P-119B	Notes 1 and 4
10	DG-P-115A	Engine-Drive Fuel Oil Pump	DG-20458	A	310524	DG-F-2A-A	X	X	-	-	-	-	-	-	-	-	-	-	-	DG-P-115B	Notes 1 and 4
11	DG-TK-102A	Lube Oil Reservoir	DG-20458	A	310524	DG-F-2A-A	X	X	-	-	-	-	-	-	-	-	-	-	-	DG-TK-102B	Notes 1 and 4
12	DG-P-228A	Engine-Driver Rocker Arm Lube Pump	DG-20458	A	310524	DG-F-2A-A	X	X	-	-	-	-	-	-	-	-	-	-	-	DG-P-228B	Notes 1 and 4
13	DG-E-41A	Lube Oil Heat Exchanger	DG-2045B	A	310524	DG-F-2A-A	X	X	-	-	-	-	-	-	-	-	-	-	-	DG-E-41B	Notes 1 and 4
14	DG-TK-46A	Diesel Generator 1A Component Cooling Water Expansion Tank	DG-20461	A	310525	DG-F-3C-A	X	X	-	-	-	-	-	-	-	-	-	-	-	DG-TK-46B	Notes 1 and 4
15	DG-E-42A	Diesel Generator 1A Component Cooling Water Heat Exchanger	DG-20461	A	310767 805217	PAB-F-3A-Z	X	X	-	-	-	-	-	-	-	-	-	-	Service Water	DG-E-42B	Notes 1 and 3
16	DG-P-121A	Engine-Driven Jacket Coolant Pump	DG-20461	A	310524	DG-F-2A-A	X	X	-	-	-	-	-	-	-	-	-	-	-	DG-P-121B	Notes 1 and 4
17	DG-P-231A	Engine-Driven Air Coolant Pump	DG-20461	A	310524	DG-F-2A-A	X	X	-	-	-	-	-	-	-	-	-	-	-	DG-P-231B	Notes 1 and 4

FUNCTION: DIESEL GENERATORS

ITEM NO.	EQUIPMENT ID NO.	EQUIPMENT DESCRIPTION	P&ID/1-LINE DRAWING NO.	TRAIN	PHYSICAL LOCATION DRAWING NO.	FIRE AREA/ZONE	REQUIRED FOR		POWER		ELEC NODE	SUPPORTING CONTROL AND INSTRUMENTATION EQUIPMENT				CABLES	ELECTRICAL DRAWING NO.		SUPPORTING SYSTEMS	REDUNDANT COUNTERPART	REMARKS
							HOT STAND BY	COLD SHUT DOWN	ELEC	AIR		EQUIPMENT ID NO.	EQUIPMENT DESCRIPTION	ELEC NODE	FIRE AREA/ZONE		SCHEM.	CABLE			
17a	DG-C-2A	DG Starting Air Compressor	DG-20460	A	310524	DG-F-2A-A	X	X	X	-	NC3	DG-BM3-52	460 v AC Circuit Breaker	BM3	DG-F-2A-A	BM3-NC3 BM3-HM2 BM3-HR2	310857 BM3a	BM3c	DAH-FN-25A DAH-FN-26A EDE-MCC-511	DG-C-2-B	Note 5
												DG-CS-9559	Control Switch	BM3	DG-F-2A-A						
												DGA-PS-APCI	Pressure Switch	HM2	DG-F-2A-A						
												DG-PS-APCZ	Pressure Switch	HM2	DG-F-2A-A						
												DG-HR2-HR9	EPS Relay	HR2	CB-F-1A-A						
												DG-BM3-42	Motor Starter	BM3	CB-F-1A-A						
												DG-BM3-49	Thermal O. L.	BM3	CB-F-1A-A						
												DG-BM3-FU	Fuse	BM3	CB-F-1A-A						
17b	DG-SKD-17A	Diesel Generator 1A Starting Air Compressor Skid	DG-20460	A	310524	DG-F-2A-A	X	X	X	-	HM2	DG-E39/4-52	120 v AC Circuit Breaker	E39	DG-F-2A-A	E39-HM2 BM3-HM2	310857 E39/4a	E39/4b	DAH-FN-25A DAH-FN-26A EDE-MCC-E511 120v AC Dist. Panel	DG-SKD-17B	Note 5
												DG-HM2-52	120v AC Circuit Breaker	E9	DG-F-2A-A						
												DG-HM2-ATM	Auto Drain Timer	HM2	DG-F-2A-A						
												DG-V-253A	Auto Drain Solenoid Vlv.	HM2	DG-F-2A-A						
												DG-HM2-ICT	Motor Synchronous Timer	HM2	DG-F-2A-A						
												DG-V-279A	Left Chamber Inlet Sol. Vlv.	HM2	DG-F-2A-A						
												DG-V-280A	Right Chamber Inlet Sol. Vlv.	HM2	DG-F-2A-A						
												DG-V-285A	Repressurizing Sol. Vlv	HM2	DG-F-2A-A						
												DG-V-288A	Left Chamber Exhaust Sol. Vlv.	HM2	DG-F-2A-A						
												DG-V-289A	Right Chamber Exhaust Sol. Vlv.	HM2	DG-F-2A-A						
												DG-V-HM2-KR	Aux. Relay	HM2	DG-F-2A-A						
												DG-BM3-42	Motor Starter	BM3	CB-F-1A-A						
17c	DG-C-18A	DG Backup Operating Air Compressor	DG-20460	A	310524	DG-F-2A-A	X	X	X	-	ML7	DG-BS3-52	460 v AC Ckt Bkr.	BS3	DG-F-2A-A	BS3-ML7 BS3-HM2	310857 BS3a	BS3c	DAH-FN-25A DAH-FN-26A EDE-MCC-511	DG-C-18B	Note 5
												DG-BS3-42	Motor Starter	BS3	DG-F-2A-A						
												DG-BS3-49	Thermal O. L.	BS3	DG-F-2A-A						
												DG-BS3-FU	Fuse	BS3	DG-F-2A-A						
												DG-CS-9526	Control Switch	BS3	DG-F-2A-A						
												DGA-PS-APC3	Pressure Switch	HM2	DG-F-2A-A						
												DG-PS-APC4	Pressure Switch	HM2	DG-F-2A-A						
												DG-V-325A	Unloader Sol. Vlv.	UBO	DG-F-2A-A	B53-UBO					

FUNCTION: DIESEL GENERATORS

ITEM NO.	EQUIPMENT ID NO.	EQUIPMENT DESCRIPTION	P&ID/1-LINE DRAWING NO.	TRAIN	PHYSICAL LOCATION DRAWING NO.	FIRE AREA/ZONE	REQUIRED FOR		POWER		ELEC NODE	SUPPORTING CONTROL AND INSTRUMENTATION EQUIPMENT				CABLES	ELECTRICAL DRAWING NO.		SUPPORTING SYSTEMS	REDUNDANT COUNTERPART	REMARKS
							HOT STAND BY	COLD SHUT DOWN	ELEC	AIR		EQUIPMENT ID NO.	EQUIPMENT DESCRIPTION	ELEC NODE	FIRE AREA/ZONE		SCHEM.	CABLE			
18	DG-DG-1B	Diesel Generator 1B	DG-20467	B	310524	DG-F-2B-A	X	X	X	X	HA2	DG-CS-9520-2	Control Switch (Push Button)	G19	DG-F-2B-A	A74-G18/7 A74-G30/6	310857 E94/8a	E94/8n	CBA-FN-32 CBA-FN-33	DG-DG-1A	
												DG-CS-9521	Control Switch (Push Button)	G19	DG-F-2B-A	E94-G30/1 G18-G30	E94/8b E94/8c	E94/8p E94/8r	DAH-FN-25B DAH-FN-26B		
												DG-CS-9522-3	Control Switch (Push Button)	G19	DG-F-2B-A	G18-G30/1 G18-G30/2	E94/8d E94/8e		EDE-PP-11B D/G Starting Air		
												DG-CS-9522-4	Control Switch (Push Button)	G19	DG-F-2B-A	G18-HR4 G19-G30	E94/8f E94/8g				
												DG-CS-9527-2	Control Switch (Push Button)	G19	DG-F-2B-A	G19-G30/6 G18-G30/8	E94/8s				
												DG-CS-9528-2	Control Switch (Push Button)	G19	DG-F-2B-A						
												EDE-SS-9710	Selector Switch	G18	DG-F-2B-A						
												DG-G30-OP2	Oil Pressure Relay	G30	DG-F-2B-A						
												DG-G30-CR1	Ready for Auto Start Relay	G30	DG-F-2B-A						
												DG-G30-4A	Start Relay	G30	DG-F-2B-A						
												DG-G30-T2A	Cranking Time Control Time Delay Relay	G30	DG-F-2B-A						
												DG-ZL-9590-9	Start Ckt No 1 Signal Indicating Light	G19	DG-F-2B-A						
												DG-G30-ES1	Emergency Start Relay	G30	DG-F-2B-A						
												DG-G20-TSR1	Test Start Relay	G30	DG-F-2B-A						
												DG-G20-TSR2	Test Start Relay	G20	DG-F-2B-A						
												DG-G20-TSR3	Test Start Relay	G20	DG-F-2B-A						
												DG-G20-RDT	Ramp Down Time Relay	G20	DG-F-2B-A						
												DG-G19-IOT	Idle Operate Time Relay	G19	DG-F-2B-A						
												DG-G18-LSRX	Low Speed Auxiliary Relay	G18	DG-F-2B-A						
												DG-FY-AS1	Air Start Solenoid Valve	G30	DG-F-2B-A						
												DG-G30-OP3	Oil Pressure Relay	G30	DG-F-2B-A						
												DG-G30-CR2	Ready for Auto Start Relay	G30	DG-F-2B-A						
												DG-G30-TACH	Tachometer	G30	DG-F-2B-A						
												DG-G30-4B	Start Relay	G30	DG-F-2B-A						
												DG-G30-T2B	Cranking Time Control Time Delay Relay	G30	DG-F-2B-A						
												DG-ZL-9590-10	Start Ckt No 2 Signal Indicating Light	G19	DG-F-2B-A						
												DG-G30-ES2	Emergency Start Relay	G30	DG-F-2B-A						
												DG-FY-AS2	Air Start Solenoid Valve	G30	DG-F-2B-A						
												DG-G30-OP4	Oil Pressure Relay	G30	DG-F-2B-A						
												DG-G30-5E	Emergency Stop Relay	G30	DG-F-2B-A						
												DG-G30-5	Normal Stop Relay	G30	DG-F-2B-A						
												DG-G30-5A	Shutdown Relay	G30	DG-F-2B-A						

FUNCTION: DIESEL GENERATORS

ITEM NO.	EQUIPMENT ID NO.	EQUIPMENT DESCRIPTION	P&ID/1-LINE DRAWING NO.	TRAIN	PHYSICAL LOCATION DRAWING NO.	FIRE AREA/ZONE	REQUIRED FOR		POWER		ELEC NODE	SUPPORTING CONTROL AND INSTRUMENTATION EQUIPMENT				CABLES	ELECTRICAL DRAWING NO.		SUPPORTING SYSTEMS	REDUNDANT COUNTERPART	REMARKS
							HOT STAND BY	COLD SHUT DOWN	ELEC	AIR		EQUIPMENT ID NO.	EQUIPMENT DESCRIPTION	ELEC NODE	FIRE AREA/ZONE		SCHEM.	CABLE			
	DG-DG-1B (Continued)											DG-FY-SDS	Shutdown Solenoid Valve	G30	DG-F-2B-A						
												DG-FY-ACO	Air Supply Cutoff Solenoid	G30	DG-F-2B-A						
												DG-G30-T3A	Alarm Set Time Delay Relay	G30	DG-F-2B-A						
												DG-G30-TR	Engine Velocity Transmitter	G30	DG-F-28-A						
												DG-G30-SG	Signal Generator	G30	DG-F-2B-A						
												DG-G30-HSR	High Speed Relay	G30	DG-F-2B-A						
												DG-G30-LSR	Low Speed Relay	G30	DG-F-2B-A						
												DG-G30-ASR	Starting Air Shutoff Relay	G30	DG-F-2B-A						
												DG-G30-ASA	Air Start Relay	G30	DG-F-2B-A						
												DG-G30-ASB	Air Start Relay	G30	DG-F-2B-A						
												DG-G30-BDR	Barring Device Relay	G30	DG-F-2B-A						
												DG-G30-SFR	Start Failure Relay	G30	DG-F-2B-A						
												DG-G30-SDR	Engine Trouble Shutdown Relay	G30	DG-F-2B-A						
												DG-G30-EOR	Engine Overspeed Relay	G30	DG-F-2B-A						
												EDE-A89-RLA	SI Signal Lockout Relay	A89	CB-F-1B-A						
												DG-G30-OTH	High Oil Temperature Relay	G30	DG-F-2B-A						
												DG-G30-CTH	High Coolant Temperature Relay	G30	DG-F-2B-A						
												EDE-A74-TD2	Test Device	A74	CB-F-1B-A						
												EDE-A89-TD2	Test Device	A89	CB-F-1B-A						
												DG-G30-EST	Emergency Start Time Delay Relay	G30	DG-F-2B-A						
												DG-G30-ESX	Emergency Start Auxiliary Relay	G30	DG-F-2B-A						
												DG-G30-RA1	Air Pressure Auxiliary Relay	G30	DG-F-2B-A						
												DG-G30-RA2	Air Pressure Auxiliary Relay	G30	DG-F-2B-A						
												DG-G30-CF3	Power Available Relay	G30	DG-F-2B-A						
												DG-G30-CF4	Power Available Relay	G30	DG-F-2B-A						
												DG-G19-R43L1	Selector Switch Auxiliary Latch Relay (Local)	G19	DG-F-2B-A						
												DG-G19-R43L2	Selector Switch Auxiliary Relay (Local)	G19	DG-F-2B-A						
												DG-G19-R43L4	Selector Switch Auxiliary Relay (Local)	G19	DG-F-2B-A						
												DG-G19-R43M1	Selector Switch Auxiliary Latch Relay (Maintenance)	G19	DG-F-2B-A						
												DG-G30-FU	10 Amp Fuses (10)	G30	DG-F-2B-A						

FUNCTION: DIESEL GENERATORS

ITEM NO.	EQUIPMENT ID NO.	EQUIPMENT DESCRIPTION	P&ID/1-LINE DRAWING NO.	TRAIN	PHYSICAL LOCATION DRAWING NO.	FIRE AREA/ZONE	REQUIRED FOR		POWER		ELEC NODE	SUPPORTING CONTROL AND INSTRUMENTATION EQUIPMENT				CABLES	ELECTRICAL DRAWING NO.		SUPPORTING SYSTEMS	REDUNDANT COUNTERPART	REMARKS
							HOT STAND BY	COLD SHUT DOWN	ELEC	AIR		EQUIPMENT ID NO.	EQUIPMENT DESCRIPTION	ELEC NODE	FIRE AREA/ZONE		SCHEM.	CABLE			
	DG-DG-1B (Continued)											DG-G19-R43R1	Selector Switch Auxiliary Latch Relay (Remote)	G19	DG-F-2B-A						
												DG-G19-R43R2	Selector Switch Auxiliary Relay (Remote)	G19	DG-F-2B-A						
												DG-G19-R43R5	Selector Switch Auxiliary Relay (Remote)	G19	DG-F-2B-A						
												DG-HR4-PR1	EPS Auxiliary Relay	HR4	CB-F-1B-A						
												DG-HR4-PRIX	EPS Auxiliary Relay	HR4	CB-F-1B-A						
												DG-SS-EOS	Engine Overspeed Switch	G30	DG-F-2B-A						
												DG-PS-APL1	Air Pressure Low Switch	G30	DG-F-2B-A						
												DG-PS-APL2	Air Pressure Low Switch	G30	DG-F-2B-A						
												DG-PS-CPS	Coolant Pressure Switch	G30	DG-F-2B-A						
												DG-PS-OPL2	Oil Low Pressure Switch	G30	DG-F-2B-A						
												DG-PS-OPL3	Oil Low Pressure Switch	G30	DG-F-2B-A						
												DG-G19-FU	10 Amp Fuses (20)	G19	DG-F-2B-A						
												DG-G19-R43L5	Selector Switch Auxiliary Relay (Local)	G19	DG-F-2B-A						
												DG-PS-OPL4	Oil Low Pressure Switch	G30	DG-F-2B-A						
												DG-G30-CTH-1	Coolant High Temperature Auxiliary Relay	G30	DG-F-2B-A						
												DG-G30-OTH-1	Oil High Temperature Auxiliary Relay	G30	DG-F-2B-A						
												DG-ZS-BD1	Barring Device Position Switch	G30	DG-F-2B-A						
												DG-G30-D1	P-N Junction Diode	G30	DG-F-2B-A						
												DG-ZS-BD2	Barring Device Position Switch	G30	DG-F-2B-A						
												EDE-A74-86DP	DG Primary Protection Lockout Relay	A74	CB-F-1B-A						
												EDE-A89-86DB	DG Backup Protection Lockout Relay	A89	CB-F-1B-A						
												EDE-A74-TS	Test Start Control Switch	A74	CB-F-1B-A						
												DG-G30-CF1	Power Available Relay	G30	DG-F-2B-A						
												DG-G30-CF2	Power Available Relay	G30	DG-F-2B-A						
												EDE-ZL-9594	Monitoring Circuit Indicating Light	G19	DG-F-2B-A						
												EDE-ZL-9594-1	Monitoring Circuit Indicating Light	G30	DG-F-2B-A						
												DG-PS-OPL1	Oil Low Pressure Switch	G30	DG-F-2B-A						

FUNCTION: DIESEL GENERATORS

ITEM NO.	EQUIPMENT ID NO.	EQUIPMENT DESCRIPTION	P&ID/1-LINE DRAWING NO.	TRAIN	PHYSICAL LOCATION DRAWING NO.	FIRE AREA/ZONE	REQUIRED FOR		POWER		ELEC NODE	SUPPORTING CONTROL AND INSTRUMENTATION EQUIPMENT				CABLES	ELECTRICAL DRAWING NO.		SUPPORTING SYSTEMS	REDUNDANT COUNTERPART	REMARKS
							HOT STAND BY	COLD SHUT DOWN	ELEC	AIR		EQUIPMENT ID NO.	EQUIPMENT DESCRIPTION	ELEC NODE	FIRE AREA/ZONE		SCHEM.	CABLE			
	DG-DG-1B (Continued)											DG-G30-OP1	Oil Pressure Relay	G30	DG-F-2B-A						
												DG-PS-FPLA	Fuel Low Pressure Switch	G30	DG-F-2B-A						
												DG-G30-FPL	Fuel Pressure Relay	G30	DG-F-2B-A						
												DG-PS-CPLA	Jacket Coolant Low Pressure Switch	G30	DG-F-2B-A						
												DG-G30-CPL	Jacket Coolant Pressure Relay	G30	DG-F-28-A						
												DG-PS-IPLA	Intercooler Low Pressure Switch	G30	DG-F-2B-A						
												DG-G30-IPL	Intercoolant Pressure Relay	G30	DG-F-2B-A						
												DG-G30-CF5	Power Available Relay	G30	DG-F-2B-A						
												DG-G30-OPC	Oil Pump Control Relay	G30	DG-F-2B-A						
												DG-G30-FPC	Auxiliary Fuel Oil Pump Control Relay	G30	DG-F-2B-A						
												DG-G30-CPC	Coolant Pump Control Relay	G30	DG-F-2B-A						
												DG-G30-5B	Shutdown Auxiliary Relay	G30	DG-F-2B-A						
												DG-G30-TRP	TR Control Power Relay	G30	DG-F-2B-A						
												DG-FY-CSV-B	Jacket Coolant Auxiliary Valves Solenoid	G30	DG-F-2B-A						
												DG-G30-IPC	Coolant Pump Control Relay	G30	DG-F-2B-A						
												DG-FY-ISV-B	Intercoolant Auxiliary Valves Solenoid	G30	DG-F-2B-A						
												EDE-G19-FU-17, 18	6 Amp Fuses (2)	G19	DG-F-2B-A						
												EDE-SS-9710	Selector Switch	G18	DG-F-2B-A						
												DG-G19-CF6	Auxiliary Relay	G19	DG-F-2B-A	DPI-G20	310102				
												DG-G19-R43L1	Selector Switch Auxiliary Latch Relay (Local)	G19	DG-F-2B-A		G19/2a G19/2b DP1A	G19/2g G19/2c DP1b	DAH-FN-25B DAH-FN-26B DG-CP-75B		
												DG-G19-R43L2	Selector Switch Auxiliary Relay (Local)	G19	DG-F-2B-A				EDE-SWG-11B		
												DG-G19-R43L3	Selector Switch Auxiliary Relay (Local)	G19	DG-F-2B-A						
												DG-G19-R43L4	Selector Switch Auxiliary Relay (Local)	G19	DG-F-2B-A						
												DG-G19-R43L5	Selector Switch Auxiliary Relay (Local)	G19	DG-F-2B-A						
												DG-G19-R43R1	Selector Switch Auxiliary Latch Relay (Remote)	G19	DG-F-2B-A						

FUNCTION: DIESEL GENERATORS

ITEM NO.	EQUIPMENT ID NO.	EQUIPMENT DESCRIPTION	P&ID/1-LINE DRAWING NO.	TRAIN	PHYSICAL LOCATION DRAWING NO.	FIRE AREA/ZONE	REQUIRED FOR		POWER		ELEC NODE	SUPPORTING CONTROL AND INSTRUMENTATION EQUIPMENT				CABLES	ELECTRICAL DRAWING NO.		SUPPORTING SYSTEMS	REDUNDANT COUNTERPART	REMARKS
							HOT STAND BY	COLD SHUT DOWN	ELEC	AIR		EQUIPMENT ID NO.	EQUIPMENT DESCRIPTION	ELEC NODE	FIRE AREA/ZONE		SCHEM.	CABLE			
	DG-DG-1B (Continued)											DG-G19-R43M1	Selector Switch Auxiliary Latch Relay (Maintenance)	G19	DG-F-2B-A						
												DG-G19-R43R2	Selector Switch Auxiliary Relay (Remote)	G19	DG-F-2B-A						
												DG-G19-R43R3	Selector Switch Auxiliary Relay (Remote)	G19	DG-F-2B-A						
												DG-G19-R43R4	Selector Switch Auxiliary Relay (Remote)	G19	DG-F-2B-A						
												DG-G19-R43R5	Selector Switch Auxiliary Relay (Remote)	G19	DG-F-2B-A						
												DG-G19-R43R6	Selector Switch Auxiliary Relay (Remote)	G19	DG-F-2B-A						
												DG-G19-R43L6	Selector Switch Auxiliary Relay (Local)	G19	DG-F-2B-A						
												DG-G19-FU17B, 18B	6 Amp Fuses (2)	G19	DG-F-2B-A						
												EDE-G18-FU-9, 10	50 Amp Fuses	G18	DG-F-2B-A						
												DG-A89-XFMR	Grounding Transformer	A89	CB-F-1B-A	A89-G18	310102		DAH-FN-25B		
												DG-HF8-XF	D-F Field	HF8	DG-F-2B-A	G18-HF8	HA2a	HA2c	DAH-FN-26B		
												DG-G18-SEVR-PC	Static Exciter Voltage Regulator Power Chassis	G18	DG-F-2B-A	A89-HP1	HA2b	HA2d	CBA-FN-32		
																DP1-G20	DP1a	DP1b	CBA-FN-33		
																			EDE-SWG-11B		
												DG-SM-9587	Governor Control (2301A)	G18	DG-F-2B-A						
												DG-G20-SEVR-CC	Voltage Regulator Control Chassis	G20	DG-F-2B-A						
												DG-GT4-PT1	Potential Transformer	GT4	DG-F-2B-A						
												DG-GT4-PT2	Potential Transformer	GT4	DG-F-2B-A						
												DG-GT4-PPT4	Power Transformer	GT4	DG-F-2B-A						
												DG-GT4-CCT	Current Transformer 2000/5	GT4	DG-F-2B-A						
												DG-G20-IDR1	Isochronous Droop Relay	G20	DG-F-2B-A						
												EDE-A89-60	Voltage Balance Relays	A89	CB-F-1B-A						
												DG-G20-64F	Generator Field Failure Relay	G20	DG-F-2B-A						
												DG-HP1-NCB	DG Neutral Connection Box	HP1	DG-F-2B-A						
												DG-GT4-XCT1, 2, 3	Generator Current Transformers (2000/5) ΦA, ΦB, ΦC	GT4	DG-F-2B-A						
												DG-VM-9712-2	Field Voltmeter	G20	DG-F-2B-A						
												DG-G20-DCT	Field Voltage Transducer	G20	DG-F-2B-A						
												DG-G18-SH	50 mV Field Shunt	G18	DG-F-2B-A						
												DG-AM-9712-2	DG Field Ammeter	G20	DG-F-2B-A						

FUNCTION: DIESEL GENERATORS

ITEM NO.	EQUIPMENT ID NO.	EQUIPMENT DESCRIPTION	P&ID/1-LINE DRAWING NO.	TRAIN	PHYSICAL LOCATION DRAWING NO.	FIRE AREA/ZONE	REQUIRED FOR		POWER		ELEC NODE	SUPPORTING CONTROL AND INSTRUMENTATION EQUIPMENT				CABLES	ELECTRICAL DRAWING NO.		SUPPORTING SYSTEMS	REDUNDANT COUNTERPART	REMARKS
							HOT STAND BY	COLD SHUT DOWN	ELEC	AIR		EQUIPMENT ID NO.	EQUIPMENT DESCRIPTION	ELEC NODE	FIRE AREA/ZONE		SCHEM.	CABLE			
	DG-DG-1B (Continued)											DG-G20-ATR	Current Transducer	G20	DG-F-2B-A						
												DG-G20-CF10	Loss of Power Relay	G20	DG-F-2B-A						
												DG-A89-64	Ground Fault Sensing Relay	A89	CB-F-1B-A						
												DG-G20-FU-22, 23	1 Amp Fuses	G20	DG-F-2B-A						
												DG-G19-IL10	Diode Failure Light	G19	DG-F-2B-A						
												DG-G20-K2	Field Flashing Contactor	G20	DG-F-2B-A						
												EDE-G18-FU-1, 2, 1B, 2B	10 Amp Fuses (4)	G18	DG-F-2B-A	G18-G30/5 DP1-G20	310102 G18/1a	G18/1f	DAH-FN-25B DAH-FN-26B		
												DG-G19-R34R5	Selector Switch Auxiliary Relay (Remote)	G19	DG-F-2B-A		G18/1b G18/1c G18/1d		DC-CP-75B EDE-SWG-11B		
												EDE-CS-9825-2	Control Switch (Push Button)	G20	DG-F-2B-A		DP1a	DP1b			
												DG-G30-HSR	High Speed Relay	G30	DG-F-2B-A						
												DG-G30-LSR	Low Speed Relay	G30	DG-F-2B-A						
												DG-G30-ES1	Emergency Start Relay	G30	DG-F-2B-A						
												DG-G30-ES2	Emergency Start Relay	G30	DG-F-2B-A						
												DG-SS-9587	Selector Switch	G19	DG-F-2B-A						
												DG-ZL-9590-11	Field Flash Signal Indicating Light	G20	DG-F-2B-A						
												DG-G19-R43M1	Selector Switch Auxiliary Latch Relay (Maintenance)	G19							
												DG-G30-5A	DG Shutdown Relay	G30	DG-F-2B-A						
												DG-G18-LSRX	Low Speed Auxiliary Relay	G30	DG-F-2B-A						
												DG-G18-LSRXX	Time Delay Relay	G18	DG-F-2B-A						
												EDE-CS-9811-1	Push Button								
												EDE-CS-9811-2	Push Button	G18	DG-F-2B-A						
												DG-G18-SEVR-PC	Static Exciter Voltage Regulator Power Chassis	G20	DG-F-2B-A						
												EDE-G20-NM	Null Meter	G20	DG-F-2B-A						
												EDE-SS-9710	Selector Switch	G18	DG-F-2B-A						
												EDE-CS-9826-2	Control Switch	G20	DG-F-2B-A						
												EDE-CS-9827-2	Control Switch	G20	DG-F-2B-A						
												DG-G20-RR	Regulator Relay	G20	DG-F-2B-A						
												DG-G20-SEVR-CC	Static Exciter Voltage Regulator Control Chassis	G20	DG-F-2B-A						
												DG-G20-CF8	Loss of Power Relay	G20	DG-F-2B-A						
												DG-G19-R43R6	Selector Switch Auxiliary Relay (Remote)	G19	DG-F-2B-A						
												EDE-G18-FU-3, 4, 3B, 4B	6 Amp Fuses (4)	G18	DG-F-2B-A						

FUNCTION: DIESEL GENERATORS

ITEM NO.	EQUIPMENT ID NO.	EQUIPMENT DESCRIPTION	P&ID/1-LINE DRAWING NO.	TRAIN	PHYSICAL LOCATION DRAWING NO.	FIRE AREA/ZONE	REQUIRED FOR		POWER		ELEC NODE	SUPPORTING CONTROL AND INSTRUMENTATION EQUIPMENT				CABLES	ELECTRICAL DRAWING NO.		SUPPORTING SYSTEMS	REDUNDANT COUNTERPART	REMARKS
							HOT STAND BY	COLD SHUT DOWN	ELEC	AIR		EQUIPMENT ID NO.	EQUIPMENT DESCRIPTION	ELEC NODE	FIRE AREA/ZONE		SCHEM.	CABLE			
	DG-DG-1B (Continued)											DG-G20-IDR1	Isochronous Droop Relay	G20	DG-F-2B-A	G18-G30/6 G18-G30/9	G18/2a G18/2b	G18/2d	DAH-FN-25B DAH-FN-26B		
												DG-G20-IDR2	Isochronous Droop Relay	G20	DG-F-2B-A	G18-G30/A ED9-G20 ED9-G19 ED9-HR4	G18/2e		DG-CP-75B EDE-SWG-75B		
												DG-SZ-9587	Governor Actuator	G30	DG-F-2B-A	DP1-G20	DP1a	DP1b			
												DG-SC-9587	Digital Reference Unit (DRU)	G18	DG-F-2B-A						
												DG-SM-9587	2301A Governor Controller	G18	DG-F-2B-A						
												DG-ST-9587	Magnetic Pickup (MPU-1)	G30	DG-F-2B-A						
												DG-SS-9587	Selector Switch	G19	DG-F-2B-A						
												DG-G20-TSR1	Test Start Relay	G20	DG-F-2B-A						
												DG-G20-TSR2	Test Start Relay	G20	DG-F-2B-A						
												DG-G20-TSR3	Test Start Relay	G20	DG-F-2B-A						
												DG-G20-R21	Speed Adjust Auxiliary Relay	G20	DG-F-2B-A						
												DG-G20-RDT	Ramp Down Time Relay	G20	DG-F-2B-A						
												DG-G19-IOT	Idle Operate Time Relay	G19	DG-F-2B-A						
												EDE-SS-9710	Selector Switch	G18	DG-F-2B-A						
												EDE-CS-9828-2	Control Switch	G18	DG-F-2B-A						
												DG-G18-LSRX	Auxiliary Relay	G18	DG-F-2B-A						
												DG-G30-ES1	Emergency Start Auxiliary Relay	G30	DG-F-2B-A						
												DG-G19-ESS	Emergency Start Auxiliary Relay	G19	DG-F-2B-A						
												DG-G30-ES2	Emergency Start Auxiliary Relay	G30	DG-F-2B-A						
												DG-G20-CF-9	Loss of Power Relay	G20	DG-F-2B-A						
												DG-G19-R43R3	Selector Switch Auxiliary Relay (Remote)	G19	DG-F-2B-A						
												DG-HR4-PR1	EPS Auxiliary Relay	HR4	CB-F-1B-A						
												DG-HR4-HR8	EPS Auxiliary Relay	HR4	CF-F-1B-A						
												DG-ED9-R1	Auxiliary Relay	ED9	CB-F-1B-A						
												DG-G20-IDR4	Isochronous Droop Relay	G20	DG-F-2B-A						
												EDE-G20-FU-7, 8, 7B, 8B	10 Amp Fuses (4)	G20	DG-F-2B-A	A74-G20/1 G20-G30	G20a G20b	G20e	DAH-FN-25B DAH-FN-26B		
												DG-G30-CR1	Auto Start Ready Relay	G30	DG-F-2B-A	A89-G20 DP1-G20	G20c DP1a	DP1b	CBA-FN-32 CBA-FN-33		
												DG-G30-CR2	Auto Start Ready Relay	G30	DG-F-2B-A				DG-CP-75B EDE-SWG-11B		
												DG-G30-RA1	Air Pressure Auxiliary Relay	G30	DG-F-2B-A						
												DG-G30-RA2	Air Pressure Auxiliary Relay	G30	DG-F-2B-A						

FUNCTION: DIESEL GENERATORS

ITEM NO.	EQUIPMENT ID NO.	EQUIPMENT DESCRIPTION	P&ID/1-LINE DRAWING NO.	TRAIN	PHYSICAL LOCATION DRAWING NO.	FIRE AREA/ZONE	REQUIRED FOR		POWER		ELEC NODE	SUPPORTING CONTROL AND INSTRUMENTATION EQUIPMENT				CABLES	ELECTRICAL DRAWING NO.		SUPPORTING SYSTEMS	REDUNDANT COUNTERPART	REMARKS
							HOT STAND BY	COLD SHUT DOWN	ELEC	AIR		EQUIPMENT ID NO.	EQUIPMENT DESCRIPTION	ELEC NODE	FIRE AREA/ZONE		SCHEM.	CABLE			
	DG-DG-1B (Continued)											DG-G19-R43L6	Selector Switch Auxiliary Relay (Local)	G19	DG-F-2B-A						
												DG-G19-R-DNA	Diesel Not Available Auxiliary Relay	G19	DG-F-2B-A						
												DG-G19-R-B/I	S.W.C.T Bypass/Inoperable Auxiliary Relay	G19	DG-F-2B-A						
												DG-G19-R43L3	Selector Switch Auxiliary Relay	G19	DG-F-2B-A						
												DG-G19-ESS	Emergency Start Auxiliary Relay	G19	DG-F-2B-A						
												DG-G20-RR	Regulator Relay	G20	DG-F-2B-A						
												DG-G19-R43L4	Selector Switch Auxiliary Relay (Local)	G19	DG-F-2B-A						
												DG-G19-R43L5	Selector Switch Auxiliary Relay (Local)	G19	DG-F-2B-A						
												DG-G19-R43R3	Selector Switch Auxiliary Relay (Remote)	G19	DG-F-2B-A						
												DG-G19-R43R4	Selector Switch Auxiliary Relay (Remote)	G19	DG-F-2B-A						
												DG-G19-R43R5	Selector Switch Auxiliary Relay (Remote)	G19	DG-F-2B-A						
												DG-G19-R43R6	Selector Switch Auxiliary Relay (Remote)	G19	DG-F-2B-A						
												DG-G18-64F	Generator Field Ground Relay	G18	DG-F-2B-A						
												DG-G20-64FX	Generator Field Ground Auxiliary Relay	G20	DG-F-2B-A						
												DG-G19-64FXA	Generator Field Ground Auxiliary Relay	G19	DG-F-2B-A						
												EDE-CS-9829-2	Control Switch	G20	DG-F-2B-A						
												DG-G19-23	Thermostat	G19	DG-F-2B-A						
												DG-G20-23X	Thermostat Auxiliary Relay	G20	DG-F-2B-A						
												DG-G20-IDR1	Isochronous Droop Relay	G20	DG-F-2B-A						
												DG-G20-IDR2	Isochronous Droop Relay	G20	DG-F-2B-A						
												DG-G20-IDR3	Isochronous Droop Relay	G20	DG-F-2B-A						
												DG-G20-IDR4	Isochronous Droop Relay	G20	DG-F-2B-A						
												EDE-SS-9710	Selector Switch	G18	DG-F-2B-A						
												EDE-SNS-9737-2	Synchronizing Switch	G18	DG-F-2B-A						

FUNCTION: DIESEL GENERATORS

ITEM NO.	EQUIPMENT ID NO.	EQUIPMENT DESCRIPTION	P&ID/1-LINE DRAWING NO.	TRAIN	PHYSICAL LOCATION DRAWING NO.	FIRE AREA/ZONE	REQUIRED FOR		POWER		ELEC NODE	SUPPORTING CONTROL AND INSTRUMENTATION EQUIPMENT				CABLES	ELECTRICAL DRAWING NO.		SUPPORTING SYSTEMS	REDUNDANT COUNTERPART	REMARKS
							HOT STAND BY	COLD SHUT DOWN	ELEC	AIR		EQUIPMENT ID NO.	EQUIPMENT DESCRIPTION	ELEC NODE	FIRE AREA/ZONE		SCHEM.	CABLE			
	DG-DG-1B (Continued)											EDE-A71-52S	Circuit Breaker Operated Contact	A71	CB-F-1B-A						
												EDE-A72-52S	Circuit Breaker Operated Contact	A72	CB-F-1B-A						
												EDE-A74-52S	Circuit Breaker Operated Contact	A74	CB-F-1B-A						
												EDE-A89-60AX	Voltage Balance Auxiliary Relay	A89	CG-F-1B-A						
												DG-ZL-9590-2	Indicating Light	G19	DG-F-2B-A						
												DG-ZL-9590-3	Indicating Light	G19	DG-F-2B-A						
												DG-ZL-9528-2	Indicating Light	G20	DG-F-2B-A						
												EDE-ZL-9829-1	Indicating Light	G19	DG-F-2B-A						
												EDE-ZL-9812-2	Indicating Light	G19	DG-F-2B-A						
												EDE-ZL-9829-2	Indicating Light	G20	DG-F-2B-A						
												DG-ZL-9590-4	Indicating Light	G19	DG-F-2B-A						
												DG-ZL-9590-5	Indicating Light	G19	DG-F-2B-A						
												DG-G20-CF8	Loss of Control Power Relay	G20	DG-F-2B-A						
												DG-G20-CF9	Loss of Control Power Relay	G20	DG-F-2B-A						
												DG-G20-CF10	Loss of Control Power Relay	G20	DG-F-2B-A						
												DG-G20-CR45	Annunciator Auxiliary Relay	G20	DG-F-2B-A						
												DG-C20-CR42	Annunciator Auxiliary Relay	G20	DG-F-2B-A						
19	DG-TK-45C	Starting Air Compressor Skid Air Receiver Tank	DG-20465	B	310524	DG-F-2B-A	X	X	-	-	-	-	-	-	-	-	-	-	-	DG-TK-45A	Notes 1 and 7
20	DG-TK-45D	Starting Air Compressor Skid Air Receiver Tank	DG-20465	B	310524	DG-F-2B-A	X	X	-	-	-	-	-	-	-	-	-	-	-	DG-TK-45B	Notes 1 and 7
21	DG-MM-8B	Exhaust Silencer	DG-20467	B	310525	DG-F-3F-A	X	X	-	-	-	-	-	-	-	-	-	-	-	DG-MM-8A	Note 1
22	DG-F-36B	Air Intake Filter	DG-20467	B	310525	DG-F-3F-A	X	X	-	-	-	-	-	-	-	-	-	-	-	DG-F-36A	Note 1
23	DG-TK-26B	Fuel Oil Storage Tank	DG-20464	B	310524 202264	DG-F-1B-A	X	X	-	-	-	-	-	-	-	-	-	-	-	DG-TK-26A	Notes 1 and 2
24	DG-TK-78B	Fuel Oil Day Tank	DG-20459	B	310525	DG-F-3D-A	X	X	-	-	-	-	-	-	-	-	-	-	-	DG-TK-78A	Note 1

FUNCTION: DIESEL GENERATORS

ITEM NO.	EQUIPMENT ID NO.	EQUIPMENT DESCRIPTION	P&ID/1-LINE DRAWING NO.	TRAIN	PHYSICAL LOCATION DRAWING NO.	FIRE AREA/ZONE	REQUIRED FOR		POWER		ELEC NODE	SUPPORTING CONTROL AND INSTRUMENTATION EQUIPMENT				CABLES	ELECTRICAL DRAWING NO.		SUPPORTING SYSTEMS	REDUNDANT COUNTERPART	REMARKS
							HOT STAND BY	COLD SHUT DOWN	ELEC	AIR		EQUIPMENT ID NO.	EQUIPMENT DESCRIPTION	ELEC NODE	FIRE AREA/ZONE		SCHEM.	CABLE			
25	DG-P-38B	Fuel Oil Transfer Pump	DG-20464	B	310524 202264	DG-F-1B-A	X	X	X	-	N76	DG-BP7-52 DG-CS-9506 DG-LS-FLC DG-BP7-42 DG-BP7-49 DG-BP7-FU	460 V AC Circuit Breaker Control Switch with Indication Fuel Low Level Control Switch Motor Starter Thermal Overload Relay Fuse	BP7 BE5 RU1 BP7 BP7 BP7	CB-F-1B-A DG-F-2B-A DG-F-3D-A CB-F-1B-A CB-F-18-A CB-F-1B-A	BE5-BP7 BP7-RU1 BP7-N76	310857 BP7a	BP7c	CBA-FN-32 CBA-FN-33 DAH-FN-25B DAH-FN-26B	DG-F-38A	-
26	DG-P-119B	Engine-Driven Fuel Oil Pump	DG-20464	B	310524	DG-F-2B-A	X	X	-	-	-	-	-	-	-	-	-		-	DG-P-119A	Notes 1 and 6
27	DG-P-115B	Engine Driven Lube Oil Pump	DG-20463	B	310524	DG-F-2B-A	X	X	-	-	-	-	-	-	-	-	-	-	-	DG-P-115A	Notes 1 and 6
28	DG-TK-102B	Lube Oil Reservoir	DG-20463	B	310524	DG-F-2B-A	X	X	-	-	-	-	-	-	-	-	-	-	-	DG-TK-102A	Notes 1 and 6
29	DG-P-228B	Engine-Driven Rocker Arm Lube Pump	DG-20463	B	310524	DG-F-2B-A	X	X	-	-	-	-	-	-	-	-	-	-	-	DG-P-228A	Notes 1 and 6
30	DG-E-41B	Lube Oil Heat Exchanger	DG-20463	B	310524	DG-F-2B-A	X	X	-	-	-	-	-	-	-	-	-	-	-	DG-E-41A	Notes 1 and 6
31	DG-TK-46B	Diesel Generator 1B Component Cooling Water Expansion Tank	DG-20466	B	310525	DG-F-3D-A	X	X	-	-	-	-	-	-	-	-	-	-	-	DG-TK-46A	Note 1
32	DG-E-42B	Diesel Generator 1B Component Cooling Water Heat Exchanger	DG-20466	B	310767 805217	PAB-F-3A-Z	X	X	-	-	-	-	-	-	-	-	-	-	Service Water	DG-E-42A	Notes 1 and 3
33	DG-P-121B	Engine-Driven Jacket Coolant Pump	DG-20466	B	310524	DG-F-2B-A	X	X	-	-	-	-	-	-	-	-	-	-	-	DG-P-121A	Notes 1 and 4
34	DG-P-231B	Engine-Driven Air Coolant Pump	DG-20466	B	310524	DG-F-2B-A	X	X	-	-	-	-	-	-	-	-	-	-	-	DG-F-231A	Notes 1 and 6
35	DG-PV-7A-2	Lube Oil Cooler Differential Pressure Control Valve	DG-20461	A	310524	DG-F-2A-A	X	X	-	X	HA1	DG-PT-7A-3 DG-PT-7A-4 DG-PDT-7A-2 DG-PDC-7A-2	Pressure Relay Pneumatic Transmitter Pressure Relay Pneumatic Transmitter Differential Pressure Transmitter Differential Pressure Controller	HA1 HA1 HA1 HA1	DG-F-2A-A DG-F-2A-A DG-F-2A-A DG-F-2A-A	-	-	-	DAH-FN-25A DAH-FN-26A D/G Starting Air	DG-PV-7B-2	Note 8
36	DG-TCV-7A-2	Air Cooler Coolant Temperature Control Valve	DG-20461	A	310524	DG-F-2A-A	X	X	-	X	HA1	DG-TT-7A-2 DG-TC-7A-2	Temperature Transmitter Temperature Controller	HA1 HA1	DG-F-2A-A DG-F-2A-A	-	-	-	DAH-FN-25A DAH-FN-26A D/G Starting Air	DG-TCV-7B-2	Note 8

FUNCTION: DIESEL GENERATORS

ITEM NO.	EQUIPMENT ID NO.	EQUIPMENT DESCRIPTION	P&ID/1-LINE DRAWING NO.	TRAIN	PHYSICAL LOCATION DRAWING NO.	FIRE AREA/ZONE	REQUIRED FOR		POWER		ELEC NODE	SUPPORTING CONTROL AND INSTRUMENTATION EQUIPMENT				CABLES	ELECTRICAL DRAWING NO.		SUPPORTING SYSTEMS	REDUNDANT COUNTERPART	REMARKS
							HOT STAND BY	COLD SHUT DOWN	ELEC	AIR		EQUIPMENT ID NO.	EQUIPMENT DESCRIPTION	ELEC NODE	FIRE AREA/ZONE		SCHEM.	CABLE			
37	DG-PV-7A-1	Jacket Coolant Differential Pressure Control Valve	DG-20461	A	310524	DG-F-2A-A	X	X	-	X	HA1	DG-PT-7A-1 DG-PT-7A-2 DG-PDT-7A-1 DG-PDC-7A-1	Pressure Relay Pneumatic Transmitter Pressure Relay Pneumatic Transmitter Differential Pressure Transmitter Differential Pressure Controller	HA1 HA1 HA1 HA1	DG-F-2A-A DG-F-2A-A DG-F-2A-A DG-F-2A-A	-	-	-	DAH-FN-25A DAH-FN-26A D/G Starting Air	DG-PV-7B-1	Note 9
38	DG-TCV-7A-1	Air Cooler Coolant Temperature Control Valve	DG-20461	A	310524	DG-F-2A-A	X	X	-	X	HA1	DG-TT-7A-1 DG-TC-7A-1	Temperature Transmitter Temperature Controller	HA1 HA1	DG-F-2A-A DG-F-2A-A	-	-	-	DAH-FN-25A DAH-FN-26A D/G Starting Air	DG-TCV-7B-1	Note 9
39	DG-F-64A	Lube Oil Filter	DG-20458	A	310524	DG-F-2A-A	X	X	-	-	-	-	-	-	-	-	-	-	-	DG-F-64B	Notes 1 and 4
40	DG-F-23A	Lube Oil Duplex Filter	DG-20458	A	310524	DG-F-2A-A	X	X	-	-	-	-	-	-	-	-	-	-	-	DG-F-23B	Notes 1 and 4
41	DG-S-4A	Lube Oil Strainer	DG-20458	A	310524	DG-F-2A-A	X	X	-	-	-	-	-	-	-	-	-	-	-	DG-S-4B	Notes 1 and 4
42	DG-S-85A	Lube Oil Sump Suction Strainer	DG-20458	A	310524	DG-F-2A-A	X	X	-	-	-	-	-	-	-	-	-	-	-	DG-S-85B	Notes 1 and 4
43	DG-S-5A	Fuel Oil Storage Tank Duplex Strainer	DG-20459	A	310524 202264	DG-F-1A-A	X	X	-	-	-	-	-	-	-	-	-	-	-	DG-S-5B	Notes 1 and 2
44	DG-S-6A	Fuel Oil Day Tank Duplex Strainer	DG-20459	A	310524	DG-F-2A-A	X	X	-	-	-	-	-	-	-	-	-	-	-	DG-S-6B	Notes 1 and 4
45	DG-F-65A	Fuel Oil Duplex Filter	DG-20459	A	310524	DG-F-2A-A	X	X	-	-	-	-	-	-	-	-	-	-	-	DG-F-65B	Notes 1 and 4
46	DG-TK-110A	Fuel Oil Accumulator Tank	DG-20459	A	310524	DG-F-2A-A	X	X	-	-	-	-	-	-	-	-	-	-	-	DG-TK-110B	Notes 1 and 4
47	DG-PV-7B-2	Lube Oil Cooler Differential Pressure Control Valve	DG-20466	B	310524	DG-F-2B-A	X	X	-	X	HA2	DG-PT-7B-3 DG-PT-7B-4 DG-PDT-7B-2 DG-PDC-7B-2	Pressure Relay Pneumatic Transmitter Pressure Relay Pneumatic Transmitter Differential Pressure Transmitter Differential Pressure Controller	HA2 HA2 HA2 HA2	DG-F-2B-A DG-F-2B-A DG-F-2B-A DG-F-2B-A	-	-	-	DAH-FN-25B DAH-FN-26B D/G Starting Air	DC-PV-7A-2	Note 10

FUNCTION: DIESEL GENERATORS

ITEM NO.	EQUIPMENT ID NO.	EQUIPMENT DESCRIPTION	P&ID/1-LINE DRAWING NO.	TRAIN	PHYSICAL LOCATION DRAWING NO.	FIRE AREA/ZONE	REQUIRED FOR		POWER		ELEC NODE	SUPPORTING CONTROL AND INSTRUMENTATION EQUIPMENT				CABLES	ELECTRICAL DRAWING NO.		SUPPORTING SYSTEMS	REDUNDANT COUNTERPART	REMARKS
							HOT STAND BY	COLD SHUT DOWN	ELEC	AIR		EQUIPMENT ID NO.	EQUIPMENT DESCRIPTION	ELEC NODE	FIRE AREA/ZONE		SCHEM.	CABLE			
48	DG-TCV-7B-2	Air Cooler Coolant Temperature Control Valve	DG-20466	B	310524	DG-F-2B-A	X	X	-	X	HA2	DG-TT-7B-2 DG-TC-7B-2	Temperature Transmitter Temperature Controller	HA2 HA2	DG-F-2B-A DG-F-2B-A	-	-	-	DAH-FN-25B DAH-FN-26B D/G Starting Air	DG-TCV-7A-2	Note 10
49	DG-PV-7B-1	Jacket Coolant Differential Pressure Control Valve	DG-20466	B	310524	DG-F-2B-A	X	X	-	X	HA2	DG-PT-7B-1 DG-PT-7B-2 DG-PDT-7B-1 DG-PDC-7B-1	Pressure Relay Pneumatic Transmitter Pressure Relay Pneumatic Transmitter Differential Pressure Transmitter Differential Pressure Controller	HA2 HA2 HA2 HA2	DG-F-2B-A DG-F-2B-A DG-F-2B-A DG-F-2B-A	-	-	-	DAH-FN-25B DAH-FN-26B D/G Starting Air	DG-PV-7A-1	Note 11
50	DG-TCV-7B-1	Jacket Coolant Temperature Control Valve	DG-20466	B	310524	DG-F-2B-A	X	X	-	X	HA2	DG-TT-7B-1 DG-TC-7B-1	Temperature Transmitter Temperature Controller	HA2 HA2	DG-F-2B-A DG-F-2B-A	-	-	-	DAH-FN-25B DAH-FN-26B D/G Starting Air	DG-TCV-7A-1	Note 11
51	DG-F-64B	Lube Oil Filter	DG-20464	B	310524	DG-F-2B-A	X	X	-	-	-	-	-	-	-	-	-	-	-	DG-F-64A	Notes 1 and 6
52	DG-F-23B	Lube Oil Duplex Filter	DG-20463	B	310524	DG-F-2B-A	X	X	-	-	-	-	-	-	-	-	-	-	-	DG-F-23A	Notes 1 and 6
53	DG-S-4B	Lube Oil Strainer	DG-20463	B	310524	DG-F-2B-A	X	X	-	-	-	-	-	-	-	-	-	-	-	DG-S-4A	Notes 1 and 6
54	DG-S-85B	Lube Oil Sump Suction Strainer	DG-20463	B	310524	DG-F-2B-A	X	X	-	-	-	-	-	-	-	-	-	-	-	DG-S-85A	Notes 1 and 6
55	DG-S-5B	Fuel Oil Storage Tank Duplex Strainer	DG-20464	B	310524 202264	DG-F-1B-A	X	X	-	-	-	-	-	-	-	-	-	-	-	DG-S-5A	Notes 1 and 2
56	DG-S-6B	Fuel Oil Day Tank Duplex Strainer	DG-20464	B	310524	DG-F-2B-A	X	X	-	-	-	-	-	-	-	-	-	-	-	DG-S-6A	Notes 1 and 6
57	DG-F-65B	Fuel Oil Duplex Filter	DG-20464	B	310524	DG-F-2B-A	X	X	-	-	-	-	-	-	-	-	-	-	-	DG-F-65A	Notes 1 and 6
58	DG-TK-110B	Fuel Oil Accumulator Tank	DG-20464	B	310524	DG-F-2B-A	X	X	-	-	-	-	-	-	-	-	-	-	-	DG-TK-110A	Notes 1 and 6
59	DG-C-2B	DG Starting Air Compressor	DG-20465	B	310524	DG-F-2B-A	X	X	X	-	NC4	DG-BP3-52 DG-CS-9569 DGB-PS-APCI DGB-PS-APCZ DG-HR4-HR9 DG-BP3-42 DG-BP3-49 DG-BP3-FU	460 v AC Circuit Breaker Control Switch Pressure Switch Pressure Switch EPS Relay Motor Starter Thermal O. L. Fuse	BP3 BP3 HM3 HM3 HR3 BP3 BP3 BP3	DG-F-2B-A DG-F-2B-A DG-F-2B-A DG-F-2B-A CB-F-1B-A CB-F-1B-A CB-F-1B-A CB-F-1B-A	BP3-NC4 BP3-HM3 BP3-HR4	310857 BP3a	BP3c	DAH-FN-25B DAH-FN-26B EDE-MCC-611	DG-C-2A	Note 7
59a	DG-C-18B	DG Backup Operating Air Compressor	DG-20465	B	310524	DG-F-2B-A	X	X	X	-	ML8	DG-BS5-52 DG-BS5-42 DG-BS5-49 DG-BS5-FU DG-CS-9536 DGB-PS-APC3 DGB-PS-APC4 DG-V-325B	460 v AC Ckt Bkr. Motor Starter Thermal O. L. Fuse Control Switch Pressure Switch Pressure Switch Unloader Sol. Vlv.	BS5 BS5 BS5 BS5 BS5 HM3 HM3 UB1	DG-F-2B-A DG-F-2B-A DG-F-2B-A DG-F-2B-A DG-F-2B-A DG-F-2B-A DG-F-2B-A DG-F-2B-A	BS5-ML8 BS5-HM3 BS5-UB1	310857 BS5a	BS5c	DAH-FN-25B DAH-FN-26B EDE-MCC-611	DG-C-18A	Note 7

FUNCTION: DIESEL GENERATORS

ITEM NO.	EQUIPMENT ID NO.	EQUIPMENT DESCRIPTION	P&ID/1-LINE DRAWING NO.	TRAIN	PHYSICAL LOCATION DRAWING NO.	FIRE AREA/ZONE	REQUIRED FOR		POWER		ELEC NODE	SUPPORTING CONTROL AND INSTRUMENTATION EQUIPMENT				CABLES	ELECTRICAL DRAWING NO.		SUPPORTING SYSTEMS	REDUNDANT COUNTERPART	REMARKS
							HOT STAND BY	COLD SHUT DOWN	ELEC	AIR		EQUIPMENT ID NO.	EQUIPMENT DESCRIPTION	ELEC NODE	FIRE AREA/ZONE		SCHEM.	CABLE			
60	DG-SKD-17B	Diesel Generator 1B Starting Air Compressor Skid	DG-20465	B	310524	DG-F-2B-A	X	X	X	-	HM3	DG-E47/4-52	120 v AC Circuit Breaker	E47	DG-F-2B-A	E47-HM3 BP3-HM3/1	310857 E47/4a E47/4b		DAH-FN-25B DAH-FN-26B EDE-MCC-E611 120 v AC Dist. Panel	DG-SKD-17A	Note 7
												DG-HM3-52	120 v AC Circuit Breaker	HM3	DG-F-2B-A						
												DG-HM3-ATM	Auto Drain Timer	HM3	DG-F-2B-A						
												DG-V-253B	Auto Drain Solenoid Vlv.	HM3	DG-F-2B-A						
												DG-HM3-ICT	Motor Synchronous Timer	HM3	DG-F-2B-A						
												DG-V-279B	Left Chamber inlet Sol. Vlv.	HM3	DG-F-2B-A						
												DG-V-280B	Right Chamber inlet Sol. Vlv.	HM3	DG-F-2B-A						
												DG-V-285B	Repressurizing Sol. Vlv.	HM3	DG-F-2B-A						
												DG-V-288B	Left Chamber Exhaust Sol. Vlv.	HM3	DG-F-2B-A						
												DG-V-289B	Right Chamber Exhaust Sol. Vlv.	HM3	DG-F-2B-A						
												DG-V-HM3-KR	Aux. Relay	HM3	DG-F-2B-A						
												DG-BP3-42	Motor Starter	BP3	CB-F-1B-A						

NOTES

1. The equipment is mechanical with no electrical requirement.
2. Electrical conduit plan drawing, 310524, is listed only to show the fire zone corresponding to the location of this equipment in the Diesel Generator Building as identified in 202263.
3. Electrical conduit plan drawing, 310767, is listed only to show fire zone corresponding to the location of this equipment in the Primary Auxiliary Building as identified in 805217.
4. This equipment is located in the Diesel Generator Skid DG-SKD-7A.
5. This equipment is located in the Diesel Generator Skid DG-SKD-17A.
6. This equipment is located in the Diesel Generator Skid DG-SKD-7B.
7. This equipment is located in the Diesel Generator Skid DG-SKD-17B.
8. The pneumatic control diagram of this equipment is shown in the DG air cooler water control loop diagram, 506403.
9. The pneumatic control diagram of this equipment is shown in the diesel engine jacket cooling water control loop diagram, 506404.
10. The pneumatic control diagram of this equipment is shown in the DG air cooler water control loop diagram, 506405.
11. The pneumatic control diagram of this equipment is shown in the DG diesel engine jacket cooling water loop diagram, 506406.

FUNCTION: COMMUNICATION

ITEM NO.*	EQUIPMENT ID NO.	EQUIPMENT DESCRIPTION	P&ID/1-LINE DRAWING NO.	TRAIN	PHYSICAL LOCATION DRAWING NO.	FIRE AREA/ZONE	REQUIRED FOR		POWER		ELEC NODE	SUPPORTING CONTROL AND INSTRUMENTATION EQUIPMENT				CABLES	ELECTRICAL DRAWING NO.		SUPPORTING SYSTEMS	REDUNDANT COUNTERPART	REMARKS
							HOT STAND BY	COLD SHUT DOWN	ELEC	AIR		EQUIPMENT ID NO.	EQUIPMENT DESCRIPTION	ELEC NODE	FIRE AREA/ZONE		SCHEM.	CABLE			
1	SPC-RSS	Remote Safe Shutdown Sound Powered Telephone Loop	1-NHY-311868	A	310816 301820 301841		X	X	X	-	G07	SPC-J-1	SPC JACK	G07	DG-F-2A-A	G06-G5Y	311868		-	-	
						CB-F-1A-A					G19	SPC-J-2		G19	DG-F-2B-A	G06-G81	RSS	RSSa, b			
						CB-F-1B-A					G2G	SPC-J-3		G2G	CB-F-1A-A	G19-G5X					
						DG-F-2A-A					G2J	SPC-J-4		G2J	CB-F-1B-A	G19-XM9					
						DG-F-2B-A					GK0	SPC-J-5		GK0	RHR-F-4B-Z	G2J-GK0					
						RHR-F-4A-Z					GQ1	SPC-J-6		GQ1	RHR-F-4A-Z	G2J-XM9					
						RHR-F-4B-Z					G5X	SPC-J-7		G5X	DG-F-2A-A	G81-G2J					
											G5Y	SPC-J-8		G5Y	DG-F-2B-A	GK0-GQ1					

* Table notes on last page of table

Raceway Arrangement Drawings (Typical)

This section originally contained photographs of marked raceway arrangement drawings for several fire areas/zones of the plant containing redundant Safe Shutdown equipment and cables. The typical drawings included in this section were provided to only show the methodology used for the original report preparation. These typical drawings were not intended to be updated for report revisions.

These original drawings were typical of the raceway arrangement drawings which were marked for each fire area/zone containing safe shutdown equipment and cables.

The latest design documents, not these typical drawings, should be used to evaluate the Safe Shutdown Capability.