MITSUBISHI HEAVY INDUSTRIES, LTD.
16-5, KONAN 2-CHOME, MINATO-KU
TOKYO, JAPAN

April 23, 2013

Document Control Desk
U.S. Nuclear Regulatory Commission
Washington, DC 20555-0001

Attention: Mr. Jeffrey A. Ciocco

Docket No. 52-021
MHI Ref: UAP-HF-13098

Subject: MHI's Revised Response to US-APWR DCD RAI No. 861-6062 Revision 3 (SRP 15.06.05) Question No. 15.6.5-100

References:
1) Request for Additional Information No. 861-6062 Revision 3 - Loss of Coolant Accidents Resulting From Spectrum of Postulated Piping Breaks Within the Reactor Coolant Pressure Boundary", dated October 31, 2011 (ML113060529).
2) UAP-HF-11448, 2nd MHI's Responses to US-APWR DCD RAI No.861-6062 Revision 3 (SRP 15.06.05), dated December 22, 2011 (ML11362A466).

With this letter, Mitsubishi Heavy Industries, Ltd. ("MHI") transmits to the U.S. Nuclear Regulatory Commission ("NRC") the document entitled "MHI's Revised Response to US-APWR DCD RAI No. 861-6062 Revision 3, Question No. 15.6.5-100".

Enclosed is the revised response to Question 15.06.05-100, which includes further explanation regarding the impact of US-APWR core debris blockage on the post-LOCA long-term cooling evaluation.

As indicated in the enclosed materials, this document contains information that MHI considers proprietary, and therefore should be withheld from public disclosure pursuant to 10 C.F.R. § 2.390 (a)(4) as trade secrets and commercial or financial information which is privileged or confidential. A non-proprietary version of the document is also being submitted in this package (Enclosure 3). In the non-proprietary version, the proprietary information, bracketed in the proprietary version, is replaced by the designation "[ ]".

This letter includes a copy of the proprietary version of the RAI response (Enclosure 2), a copy of the non-proprietary version of the RAI response (Enclosure 3), and the Affidavit of Yoshiki Ogata (Enclosure 1) which identifies the reasons MHI respectfully requests that all material designated as "Proprietary" in Enclosure 2 be withheld from disclosure pursuant to 10 C.F.R. § 2.390 (a)(4).

Please contact Mr. Joseph Tapia, General Manager of Licensing Department, Mitsubishi Nuclear Energy Systems, Inc. if the NRC has questions concerning any aspect of this submittal. His contact information is provided below.

D081
NRO

Sincerely,

Y. Ogata

Yoshiki Ogata,
Executive Vice President
Mitsubishi Nuclear Energy Systems, Inc.
On behalf of Mitsubishi Heavy Industries, LTD.

Enclosures:

1. Affidavit of Ogata Yoshiki
2. MHI's Revised Response to US-APWR DCD RAI No. 861-6062 Revision 3, Question No. 15.6.5-100 (proprietary)
3. MHI's Revised Response to US-APWR DCD RAI No. 861-6062 Revision 3, Question No. 15.6.5-100 (non-proprietary)

CC: J. A. Ciocco
J. Tapia

Contact Information
Joseph Tapia, General Manager of Licensing Department
Mitsubishi Nuclear Energy Systems, Inc.
1001 19th Street North, Suite 710
Arlington, VA 22209
E-mail: joseph_tapia@mnes-us.com
Telephone: (703) 908 – 8055

ENCLOSURE 1

Docket No. 52-021
MHI Ref: UAP-HF-13098

MITSUBISHI HEAVY INDUSTRIES, LTD.

AFFIDAVIT

I, Yoshiki Ogata, state as follows:

1. I am Executive Vice President of Mitsubishi Nuclear Energy Systems, Inc., and have been delegated the function of reviewing MITSUBISHI HEAVY INDUSTRIES, LTD's ("MHI") US-APWR documentation to determine whether it contains information that should be withheld from public disclosure pursuant to 10 C.F.R. § 2.390 (a)(4) as trade secrets and commercial or financial information which is privileged or confidential.

2. In accordance with my responsibilities, I have reviewed the enclosed document entitled "MHI's Revised Response to US-APWR DCD RAI No. 861-6062 Revision 3, Question No. 15.6.5-100," and have determined that portions of the document contain proprietary information that should be withheld from public disclosure. Those pages containing proprietary information are identified with the label "Proprietary" on the top of the page and the proprietary information has been bracketed with an open and closed bracket as shown here "[ ]". The first page of the document indicates that all information identified as "Proprietary" should be withheld from public disclosure pursuant to 10 C.F.R. § 2.390 (a)(4).

3. The information identified as proprietary in the enclosed document has in the past been, and will continue to be, held in confidence by MHI and its disclosure outside the company is limited to regulatory bodies, customers and potential customers, and their agents, suppliers, and licensees, and others with a legitimate need for the information, and is always subject to suitable measures to protect it from unauthorized use or disclosure.

4. The basis for holding the referenced information confidential is that it describes the unique design information of the safety analysis, developed by MHI and not used in the exact form by any of MHI's competitors. This information was developed at significant cost to MHI, since it required the performance of Research and Development and detailed design for its software and hardware extending over several years.

5. The referenced information is being furnished to the Nuclear Regulatory Commission ("NRC") in confidence and solely for the purpose of information to the NRC staff.

6. The referenced information is not available in public sources and could not be gathered readily from other publicly available information. Other than through the provisions in paragraph 3 above, MHI knows of no way the information could be lawfully acquired by organizations or individuals outside of MHI.

7. Public disclosure of the referenced information would assist competitors of MHI in their design of new nuclear power plants without the costs or risks associated with the design of the subject systems. Therefore, disclosure of the information contained in the referenced document would have the following negative impacts on the competitive position of MHI in the U.S. nuclear plant market.

A. Loss of competitive advantage due to the costs associated with development of the US-APWR Safety Analysis. Providing public access to such information permits competitors to duplicate or mimic the safety analysis information without incurring the associated costs.

B. Loss of competitive advantage of the US-APWR created by benefits of enhanced US-APWR Safety Analysis development costs associated with the Safety Analysis.

I declare under penalty of perjury that the foregoing affidavit and the matters stated therein are true and correct to the best of my knowledge, information, and belief.

Executed on this 23rd day of April, 2013.

Y. Ogata

Yoshiki Ogata,
Executive Vice President
Mitsubishi Nuclear Energy Systems, Inc.

ENCLOSURE 3

UAP-HF-13098
Docket No. 52-021

MHI's Revised Response to US-APWR DCD RAI No. 861-6062
Revision 3, Question No. 15.6.5-100

April 2013

(Non-Proprietary)

RESPONSE TO REQUEST FOR ADDITIONAL INFORMATION

04/23/2013

US-APWR Design Certification

Mitsubishi Heavy Industries

Docket No. 52-021

RAI NO.: **NO. 861-6062 REVISION 3**

SRP SECTION: **15.06.05 – LOSS OF COOLANT ACCIDENTS RESULTING FROM SPECTRUM OF POSTULATED PIPING BREAKS WITHIN THE REACTOR COOLANT PRESSURE BOUNDARY**

APPLICATION SECTION: 15.6.5

DATE OF RAI ISSUE: **10/31/2011**

QUESTION NO.: 15.6.05-100

Follow-up to RAI 5352, Question 15.6.5-89:
Provide an updated response to RAI 719-5352, Question 15.6.5-89 that takes into consideration relevant and conforming findings related to US-APWR core debris blockage that also accounts for any experimental test results to assess the US-APWR core blockage. Currently, such additional information is planned to be included in Revision 2 of MUAP-080013-P, "US-APWR Sump Strainer Downstream Effects," scheduled for release by MHI on August 31, 2011.

ANSWER:

After the quenching of the core at the end of the reflood phase, continued operation of the ECCS supplies borated water from the RWSP to remove decay heat and to keep the core subcritical. The borated water from the RWSP is initially injected through the DVI lines. In such a situation, sump strainer bypass debris is also carried by the ECCS water, which has the potential to adversely affect the boric acid concentration behavior in the reactor vessel.

Chapter 4 of the technical report MUAP-08013-P Revision 2, "US-APWR Sump Strainer Downstream Effects" (Ref-(1)), describes in-vessel downstream effects of bypass debris on long-term core cooling and the boric acid mixing volume. In this response to the RAI, important effects which can impact post-LOCA long-term cooling evaluation are discussed.

<u>Trapping debris on grid spacer or cladding surface</u>

In the case where bypass debris physically or chemically adheres to grid spacer or cladding surfaces, the debris acts as an insulator and impedes heat transfer from the fuel rods to coolant in the core. It results in a small decrease in heat transfer, but the rate of heat transfer recovers in a short time period since fuel rod and cladding temperature increases slightly. The temperature differential between the cladding and the coolant also increases, which

compensates for the degradation of the heat transfer coefficient. The small increase in cladding and fuel rod temperature does not directly affect the accumulation of boric acid in the mixing volume. The accumulation of boric acid in the mixing volume is controlled by the core decay heat level, which is not affected by debris in the ECC. Therefore, it is concluded that debris trapping or plate out should not significantly affect the post-LOCA long term cooling evaluation.

Effect of suspended and settled sump debris on mixing volume

The suspended and settled debris transported into the vessel may have some impact on the mixing volume. The bypass debris settled or suspended in the coolant replaces water volume in the mixing volume. The amount of bypass debris that may exist in the mixing volume is described and estimated in Ref-(1) Appendix–D.

The lower plenum in the US-APWR has a large volume of more than one thousand cubic feet, thus the liquid volume potentially replaced by debris is a small fraction of the mixing volume assumed in the post-LOCA long term cooling evaluation. Because the fraction of the mixing volume displaced by debris is so small the debris effect on the mixing process and the boric acid contribution will be negligible.

Effect of core inlet blockage on mixing volume

The possibility of the core inlet blockage due to debris is discussed in Section 4.4.1 (2) of Ref-(1), which states that significant core inlet blockage will not take place in practice. As shown in the previous response to RAI 719-5352 Question 15.6.5-89[(Ref-2)], the mixing flow rate and velocity needed to maintain the boric acid concentration in the lower plenum is quite low.

MHI has carried out a core inlet blockage test to supplement the technical information in Ref-(1). The results of this additional test are reported in a technical report (Ref-(4)). According to the conservative test results, the debris that reaches the core may inhibit the core inlet flow as well as the mixing flow between the core and the lower plenum.

To confirm the flow pattern in and around the core under assumed core inlet blockage conditions a WCOBRA/TRAC analysis was performed. Attachment-1 shows the calculation conditions and provides the detailed results. From these analyses, it is concluded the high-concentration boric-acid water begins to flow from the upper plenum to the lower plenum though the neutron reflector (NR) region before the core fluid reaches the boric-acid precipitation concentration criterion, even though core inlet blockage may impede the mixing between the core and the lower plenum during the early portion of the post-LOCA long-term cooling period. The rate of this NR downward flow is sufficient to assure good mixing and mitigate the rate of additional concentration increase. The evaluation in Section 4 of Attachment-1 indicates the boric acid concentration becomes the same as the DCD reference case before the core fluid reaches the boric acid precipitation concentration criterion.

The results in Attachment-1 support MHI's conclusion that current assumption of including half of the lower plenum as a part of mixing volume is still valid even under core inlet blockage conditions.

Effect of two-phase core mixture level

In the post-LOCA long-term cooling evaluation, it is assumed that the core two-phase mixture

level will not fall below the bottom of the hot leg before the hot leg switch-over and that the mixing volume includes the upper plenum, below the hot leg. When the core inlet blockage by debris is considered, the two-phase mixture level is not expected to fall below the bottom of the hot leg elevation for the following reasons:

- As discussed above, the potential flow blockage would occur mainly at the fuel assembly bottom nozzle. The region below the fuel inlet nozzle elevation is filled with water at or below saturation temperature and core inlet flow velocity drops to a very low level early in the post-LOCA long-term cooling period.
- The evaluation of core flow driven by the RV pressure differential is discussed in the response to DCD RAI 861-6062, Question 15.06.05-94 (Ref-(3)). In that RAI response, it is shown that the estimated core flow rate driven by the RV pressure differential is much larger than the core makeup flow rate, which means that there is significant margin regarding available driving head to produce core flow.
- In the response to RAI 861-6062 Question 15.6.05-95 (Ref-(3)) it was shown that the void distribution and mixture level in the core and upper plenum is determined primarily by the core power level and axial power profile. Since these parameters do not change if debris is present the mixture level should not change.

Effect of blockage on alternate core coolant flow path

Sump debris may accumulate sufficiently to block some of the core bypass flow paths that are expected to dilute the boric acid concentration in the mixing volume (core). The following flow paths are considered as potential core bypass paths.

- Upper head spray nozzle through control guide tube
- Control-rod guide tubes, core thimble tubes
- Neutron reflector (NR)
- Hot leg nozzle gaps

The NR region is considered as an alternate flow path in terms of the mixing flow between the core and the lower plenum (Attachment-1). It is considered that the upward flow though the NR is continued during the early period of post-LOCA long-term cooling, so there is a possibility that part of the debris flows into the NR region. However, the entering debris will not be caught in NR region since the narrowest diameter in the NR is much larger than the strainer flow area diameter. None of the flow paths listed above, other the NR region, are modeled or credited in the post-LOCA long term cooling evaluation. Therefore, the sump debris in these core bypass paths has no impact on the post-LOCA long term cooling evaluation.

Conclusion

The above discussion show that the sump bypass debris may affect the post-LOCA long term cooling evaluation only in terms of core inlet clogging, but its impact on core cooling is limited. As a result, the core region mixing volume used in the US-APWR long term cooling analyses is still valid and there is no need to change the hot leg switch over time (4 hour).

References:

1. MUAP-08013-P(R2), "US-APWR Sump Strainer Downstream Effects", August 2011
2. MHI Letter No. UAP-HF-11139, "MHI's Response to US-APWR DCD RAI No. 719-5352 Revision 0 (15.06.05)", dated May 18,2011
3. MHI Letter No. UAP-HF-11416, "1st MHI's Responses to US-APWR DCD RAI No. 861-6062 Revision 3 (SRP 15.06.05)", dated December 2, 2011
4. MUAP-110022-P(R0), "US-APWR Additional Core Inlet Blockage Test", October 2011

Impact on DCD

There is no impact on the DCD.

Impact on R-COLA

There is no impact on the R-COLA.

Impact on S-COLA

There is no impact on the S-COLA.

Impact on PRA

There is no impact on the PRA.

Impact on Technical/Topical Report

There is no impact on a Technical/Topical Report.

Attachment-1 Core and Lower Plenum Mixing Phenomena under Core Inlet Blockage Conditions

1. Introduction

Regarding the post-LOCA long-term evaluation for the US-APWR, the mixing flow between the core and the lower plenum occurs due to the effects of solution density differences. Additionally, it is assumed that half of the lower plenum volume is included as part of the "mixing volume" where boric acid potentially precipitates, which is equivalent to the entire lower plenum volume being subjected to half of the core boric acid concentration (Ref-(1)).

In the case that the core inlet blockage is formed by debris, the flow communication between the core and the lower plenum is impacted. According the Ref-(2), most of the debris adheres the core fuel assembly bottom nozzles and chokes the flow area creating a large flow resistance. As a result, the mixing flow through the core fuel assembly bottom nozzles due to the solution density inversion decreases.

Regarding the mixing behavior in and around the core region, another mixing mechanism, other than solution density inversion, exists. The continuous liquid and droplet which are entrained by the vapor phase flows out from the core. Some of the entrained droplets go to the external loop(s) along with the vapor flow, whereas the remaining water returns to the core. Additionally, part of the returned water flows downward through the core outer area or neutron reflector (NR) region. In this case the condensed boric acid water is carried to the core bottom and top of the lower plenum. In practice, there is a possibility that the aforementioned mechanism is the dominant mixing flow rather than the mixing flow by the solution density inversion.

MHI assumes that condensed boric acid water generated in the core is carried to under the lower core support plate through the core outer channel and NR channel even under core inlet blockage conditions. To confirm the aforementioned flow pattern, MHI performed the WCOBRA/TRAC (M1.0) code based large break LOCA long-term core cooling analysis to demonstrate that the NR is an alternate flow path between the core and lower plenum and to confirm the flow direction and flow rate of the NR region.

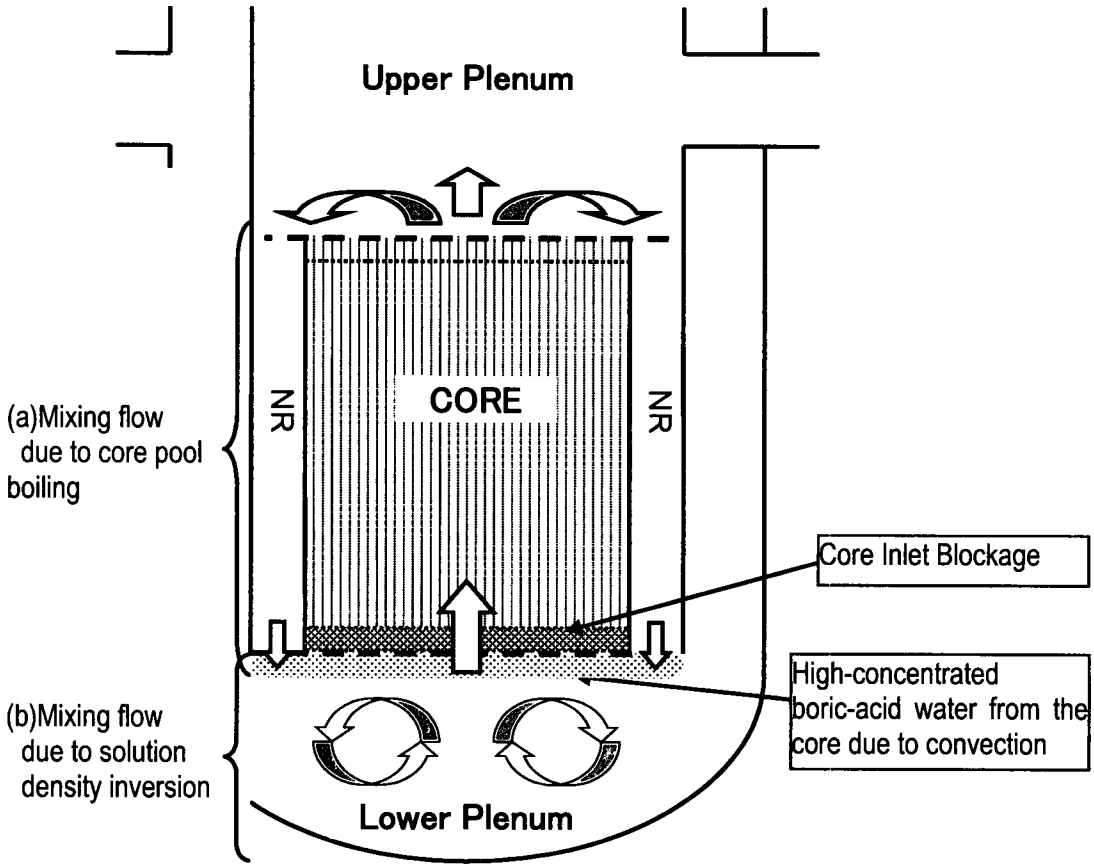

(a) NR downward flow appears during the post-LOCA long-term period
(b) Mixing flow due to unstable density difference has been shown by the BACCHUS test results.

Fig. 1-1 Expected Mixing Flow in the US-APWR

2. Estimation of Pressure Loss Coefficient Due to the Core Inlet Blockage

The pressure loss coefficient was estimated by the following procedure in order to simulate the impact of the fluid resistance due to the core inlet blockage by debris.

Technical report MUAP-110022-P (Ref-(2)) describes the core inlet blockage test performed by MHI and the test results. This test utilizes a single mock-up assembly to represent the US-APWR core. From the viewpoint of the post-LOCA long-term cooling evaluation, the core boric acid precipitation becomes a problem only in the case of a cold leg break LOCA, thus, the pressure loss coefficient was estimated from the results of the cold break LOCA condition test series described in Ref-(2). Considering the difference between the Ref-(2) test boundary condition and the WCOBRA/TRAC (M1.0) code calculation condition in terms of the core inlet flow, the pressure loss coefficient applied to the core inlet was calculated as follows.

Fig.2-1 shows the time history of the flow rate at the core inlet in the case of no core inlet blockage. The calculated core inlet flow rate becomes larger than the flow rate which was applied to the core inlet blockage test of Ref-(2) since the applied flow rate for the test was derived only from the boil-off rate generated by the core decay heat. As shown in this figure, the core inlet flow oscillates during the early period of the transient; it is considered that the average core inlet flow rate is [ ]. Then the representative core inlet flow rate was set to [ ], and the pressure loss coefficient corresponding to the flow rate was estimated from the test results described in Ref-(2).

The four CIB test cases for the cold leg break conditions, which were varied as discussed in Ref-(2) are the applicable test cases. The test results of case CL4-h were used since these results indicated the highest pressure loss. The test condition and test results of CL4-h are as follows.

<u>Test Condition (CL4-h)</u>

Volumetric Flow Rate	13.3 liters/min (100%)
	[ ]
	[ ]
	[ ]
System Pressure :	Atmospheric pressure
Fluid Temperature :	Room temperature

Test Results(CL4-h)

[ ]

The CL4-h test result indicates that the pressure loss is proportional to the volumetric flow rate. Therefore, the pressure loss coefficient to be applied to the WCOBRA/TRAC (M1.0) code analysis is estimated by extrapolating from the [ ] of the aforementioned test results. The correlating equation obtained from the test data is as follows.

[ ] (Fig. 2-2)

where;

ΔP: pressure loss (psi), Q: Flow Rate (converted to entire core flow rate) (ft^3/sec)

The pressure loss in case of [ ] of core inlet flow is

[ ] (psi)

The pressure loss at the core inlet is simulated as a form loss coefficient in the WCOBRA/TRAC (M1.0) code analysis. The form loss coefficient (K_{in}) is calculated as follows.

$$K_{in} = \Delta P_{in} \frac{2 \times 32.17 \times A_{in}{}^2 \times 144}{\rho_{in} \times Q_{in}{}^2}$$

where;

ρ_{in}= 59.25 lbm/ft^3	Liquid density (assumed as saturation liquid density under atmospheric pressure)
A_{in}: = [ ]	Core Inlet Flow Area
Q_{in}: = [ ]	Core Inlet Flow Rate
ΔP: = [ ]	Pressure Loss

As a result, the form loss coefficient applied to the WCOBRA/TRAC (M1.0) code analysis is obtained.

K_{in} = [ ] (Core inlet flow area (A_{in}) basis)

Fig.2-1 Core Inlet Flow Rate (No Core Inlet Blockage Condition)

Fig.2-2 Correlation of Pressure Loss at the Core Inlet under Debris Blockage Condition for the US-APWR

3. WCOBRA/TRAC Analysis Results (Core Inlet Blockage Condition)

Post large break LOCA long-term core cooling analysis using the WCOBRA/TRAC (M1.0) code was performed based on the DCD Rev. 3 reference case with the addition of simulated core inlet blockage. Only the core inlet form loss coefficient described in the previous section was changed from the base case.

The core inlet blockage occurs 850 seconds after the LOCA occurrence. In this analysis, the form loss coefficient is applied starting at 850 seconds after LOCA and linearly increased to the maximum value over the next [ ] seconds. Fig.3-1 shows the time history of the integral of the NR inlet flow rate. The core inlet flow is restricted since a large pressure loss is developed and the water head in the NR region increases to balance the core inlet head loss.

According to the analysis, the NR inlet flows [

] After the core inlet blockage begins at 850 seconds, the flow in the NR region [

] The downward flow in the NR region carries the condensed boric acid water from the core to the lower plenum as stated in the Section 1 and it is expected that the boric acid in the core (mixing volume) decreases after that time.

Fig.3-1 Integral of Mass Flow Rate at the NR Inlet (Bottom)

4. Boric-Acid Concentration Transient in the Core (Mixing Volume) Under Core Inlet Blockage Conditions

Assuming the reduction of the mixing communication between the core and the lower plenum caused by the core inlet blockage due to debris, a boric-acid concentration transient calculation was performed which excludes the entire lower plenum volume as a part of the mixing volume. The evaluation model is same as the DCD reference case, which is provided in Ref-(3). Fig. 4-1 shows the time history of boric acid concentration for the case the entire lower plenum volume is excluded, compared with the DCD reference case. In this case, the volume of mixing region significantly decreases compared with DCD reference case assumption, thus the boric-acid concentration rate rapidly increases. This case indicates that the boric-acid concentration exceeds the concentration criterion (29.27 wt.%) at about 6,800 seconds (1.9 hours).

On the other hand, as described in the previous section, the WCOBRA/TRAC (M1.0) code analysis indicates that the NR region flow turns downward around [ ] seconds. Therefore, it is expected that the boric-acid concentration in the core (mixing volume) decreases since the high-condensed boric-acid water generated in the core (mixing volume) flows out to the top of the lower plenum (under the lower core support plate) via the NR region.

Fig. 4-2 illustrates the rough estimation of NR average downward flow rate after [ ] seconds. According to the WCOBRA/TRAC (M1.0) code analysis results, a total liquid mass of [ ] lbm flows approximately linearly out from the NR region to the lower plenum between [ ] and 14,400 seconds (4 hours). Since the NR is almost filled with the liquid during the transient, the downward flow rate at the top of the NR region is same as at the bottom.

As shown in Fig. 4-2, the average flow rate through the NR region after [ ] seconds (W_{NR}) is as follows.

W_{NR}= [ ] lbm/sec

Assuming the constant downward flow rate through the NR region after [ ] seconds, the boric acid concentration in the core (mixing volume) is evaluated by the following calculation. Fig. 4-3 shows the evaluation model of post-LOCA long term cooling considering the constant NR downward flow under the core inlet blockage condition. In this evaluation, the lower plenum is independently modeled from the core mixing volume.

In this evaluation, the fundamental calculation method is basically the same as DCD reference case described in DCD Section 15.6.5.3.1.3.

(Assumptions)

- The following parameters are input as boundary conditions.
  - Core evaporation rate (from the DCD reference case)
  - Liquid phase volume above the core (from the DCD reference case)
  - RWSP boric acid concentration (from the DCD reference case)
  - NR downward flow rate (from the WCOBRA/TRAC (M1.0) code calculation)
- The core inlet flow is a summation of "core makeup flow (including core evaporation flow)" and "upward flow from the lower plenum".

  The core inlet flow rate estimated by the WCOBRA/TRAC (M1.0) code is much larger than this flow rate because the WCOBRA/TRAC (M1.0) code flow rate includes the entrained liquid droplet flow which flows out to the external loop(s) through the upper plenum. This outflow is conservatively excluded from the boric acid mass flow calculation since the entrained droplet contains boric-acid which could reduce boric acid concentration of the core (mixing volume).

- The mass and concentration exchange between the core and the lower plenum is calculated without considering the DVI water from the downcomer.

  As discussed in Ref-(1), it was observed that some heat transfer occurs from the core to the downcomer liquid through the core barrel, which results in lowering the density of the downcomer water. Consequently, the density of the downcomer becomes smaller than the lower plenum so that the downcomer water starts flow into the core without traveling down to the bottom of the lower plenum.
- The boric acid concentration in the core (mixing volume) is same as the case shown in Fig. 4-1 (no mixing between the core and lower plenum) before the NR downward flow starts. The boric acid concentration in the lower plenum remains at its initial value before the NR downward flow starts.
- Liquid densities of the boric acid solution in the lower plenum and in the mixing volume are calculated using the specific gravity of the boric acid solution obtained from Ref-(4) as a function of boric acid concentration.
- The boric acid concentration in the lower plenum does not exceed half of the core (mixing volume) concentration.

  This assumption assures that the core boric acid concentration does not become less than the concentration of the DCD reference case.

(Initial Condition)

- Calculation is initiated at the time when NR downward flow starts ([ ] sec).
- The initial condition of the core (mixing volume) is determined by the calculation results of the case shown in Fig. 4-1 (no mixing between the core and lower plenum).
- The lower plenum water concentration is assumed the same as initial RWSP water concentration (2.402 wt.%).

(Calculation Procedure)

1. Boric acid concentration in the lower plenum is calculated by the following equation.

$$CB_{LP} = \frac{MB_{LP} + (W_{NR} \times CB_{MV}) \times dt}{MF_{LP} + W_{NR} \times dt}$$

where;

CB_{LP}	Boric acid concentration in the entire lower plenum
MB_{LP}	Boric acid mass in the entire lower plenum
MF_{LP}	Boric acid solution mass in the entire lower plenum
CB_{MV}	Boric acid concentration in the core (mixing volume)
W_{NR}	NR downward flow rate
dt	Time step

2. Then, the boric acid concentration in the core (mixing volume) is calculated by the following equation.

$$CB_{MV} = \frac{MB_{MV} + \{W_{makeup} \times CB_{RWSP} + W_{NR} \times CB_{LP} - W_{NR}' \times CB_{MV}\} \times dt}{MF_{MV} + (W_{makeup} - W_{boil}) \times dt}$$

where

MB_{MV}	Boric acid mass in the core (mixing volume)
MF_{MV}	Boric acid solution mass in the core (mixing volume)
CB_{RWSP}	Boric acid concentration in the RWSP volume
W_{makeup}	Mixing volume makeup flow rate
W_{boil}	Core evaporation rate
W_{NR}'	Upward flow from the lower plenum to the core (mixing volume) W_{NR}' is a summation of W_{NR} and differential value of water mass in the lower plenum due to the liquid density change along with the boric acid concentration.

Fig. 4-4 shows the calculated time-history of the core (mixing volume) boric acid concentration considering the constant NR downward flow and the core Inlet blockage. Before the NR downward flow starts at [ ] seconds, the time-history of boric acid concentration is assumed to be the same as the no-mixing case shown in Fig. 4-1. After the NR downward flow starts from [ ] seconds, the increase of the core boric acid concentration is mitigated. The boric acid concentration in the lower plenum reaches half of the core (mixing volume) boric acid concentration at [ ] seconds, which means that the boric acid concentration becomes consistent with the concentration of the DCD reference case.

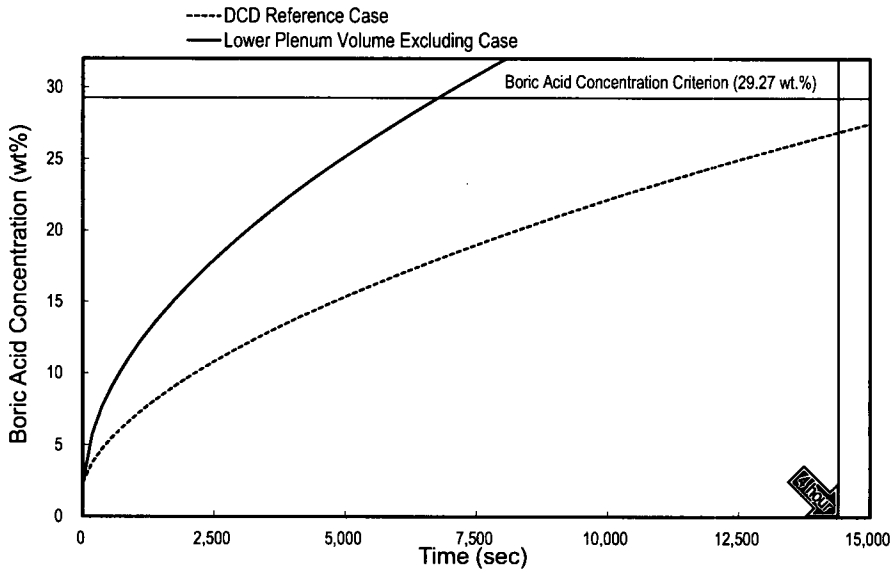

Fig.4-1 Boric Acid Concentration Transient

[ ]

Fig.4-2 Explanation of the Estimation of NR Average Downward Flow Rate

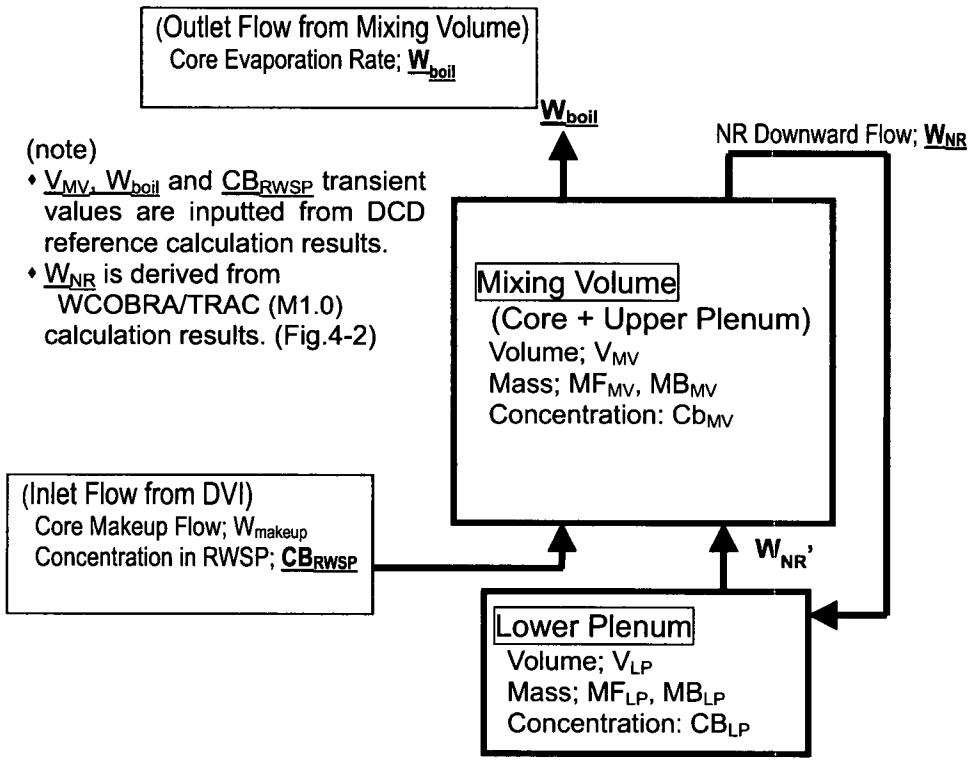

Fig.4-3 Evaluation Model of Post-LOCA Long Term Cooling with Constant NR Downward Flow under Core Inlet Blockage Condition

[ ]

(note) T1: NR downward flow starts ([ ] sec)
T2: Boric acid concentration at lower plenum reaches half of the core concentration ([ ] sec)

Fig.4-4 Boric Acid Concentration Transient Considering NR Downward Flow

5. Conclusion

The WCOBRA/TRAC (M1.0) code calculation result shown in Section 3 indicates that the downward flow from the upper plenum to the lower plenum support plate through the NR region is formed continuously, except during the early portion of the post-LOCA long-term cooling period. It is expected that the downward flow assures good mixing between the core and the lower plenum, and mitigates the rate of additional concentration increase in the core. The evaluation of boric acid concentration transient considering NR downward flow is provided in Section 4, which demonstrates the rate of downward flow is sufficient and the boric acid concentration can become the same as DCD reference case before the core fluid reaches the boric acid precipitation concentration criterion.

In conclusion, it is considered that the current assumption of including the half of the lower plenum as a part of the mixing volume is still valid because the downward flow through the NR region remains sufficient during the post-LOCA long-term cooling period to promote adequate mixing even in the case of core inlet blockage due to debris.

6. References

Ref-(1) MHI Letter No. UAP-HF-11139, "MHI's Response to US-APWR DCD RAI 719-5352 Revision 0 (15.06.05)" (May 18, 2011) RAI Question 15.6.5-89

Ref-(2) MUAP-110022-P(R0), "US-APWR Additional Core Inlet Blockage Test", October 2011

Ref-(3) MHI Letter No. UAP-HF-09384, "MHI's response to US-APWR DCD RAI No. 352-2369 Revision 1" (July 2009) RAI Question 15.6.5-44 Appendix-B

Ref-(4) "Boric Acid Application Guidelines for Intergranular Corrosion Inhibition," EPRI, Palo Alto, CA: 1987, NP-5558, page 2-27