National Aeronautics and
Space Administration

John H. Glenn Research Center
Lewis Field
Plum Brook Station
Sandusky, OH 44870

July 11, 2012

QD

Reply to Attn of:

U.S. Nuclear Regulatory Commission
Attn: Document Control Desk
Washington, D.C. 20555

Subject: Technical Basis Document, TBD-12-002, Rev. 0, Dose Assessment for Miscellaneous and Buried Piping for the Plum Brook Reactor Facility, Licenses Nos. TR-3, Docket No. 50-30 and R-93, Docket No, 50-185

Enclosed for your review is the Technical Basis Document TBD-12-002, Rev. 0, Dose Assessment for Miscellaneous and Buried Piping for the Plum Brook Reactor Facility. The dose assessment results will be incorporated into a revision of the Final Status Survey Report, Attachment 17, Buried and Miscellaneous Piping.

Should you have any questions or need additional information, please contact me a NASA Plum Brook Station, 6100 Columbus Avenue, Sandusky, Ohio 44870, or by telephone at (419) 621-3242.

Peter C. Kolb
NASA Decommissioning Program Manager

Enclosure
Technical Basis Document, TBD-12-002, Dose Assessment for Miscellaneous and Buried Piping dated 7-11-12

cc:
USNRC/C. J. Glenn (FSME)
USNRC/J. Webb (FSME)
USNRC/J. Tapp RIII/DNMS/DB
ODH/M. J. Rubadue

FSME20
FSME

Plum Brook Reactor Facility

Technical Basis Document

Dose Assessment for Miscellaneous and Buried Piping

TBD-12-002
Revision No. 0

Prepared By:	Bruce J. Mann	Date:	6/21/12
Independent Technical Review:	Roderick C. Case	Date:	7/10/12
Other Review:	N/A	Date:	
Other Review:	N/A	Date:	
Cognizant Manager Approval:	William G. Stoner	Date:	7/11/12
RSO Approval:	William G. Stoner	Date:	7/11/12

NASA PBRF DECOMMISSIONING PROJECT CHANGE/CANCELLATION RECORD		
DOCUMENT TITLE: Dose Assessment for Miscellaneous and Buried Piping	**DOCUMENT NO: TBD-12-002**	**REVISION NO: 0**
Revision 0: Initial issue of Document		

LIST OF EFFECTIVE PAGES

DOCUMENT NO: TBD-12-002 **REVISION NO.:** 0

Page No.	Revision Level	Page No.	Revision Level	Page No.	Revision Level
Cover Page	0				
Change/Cancellation Record	0				
LOEP	0				
Pages 1 thru 19	0				
Appendix A Pages 1 thru 7	0				
Appendix B Pages 1 thru 18	0				
Appendix C Pages 1 thru 217	0				
Appendix D Pages 1 thru 153	0				
Appendix E Pages 1 thru 15	0				

Table of Contents

List of Tables

1.0 Introduction

The PBRF Final Status Survey Plan indicated that some process and drain piping would remain in place at the facility [NASA 2007]. The piping would be decontaminated as necessary and surveyed as part of the final status survey (FSS). Embedded piping was defined as piping encased in concrete and located below three feet below grade. Buried piping was defined as any piping buried in soil and located outside the structural foundations of BPRF buildings. This included storm drains, footer drains and sanitary drains. The Plan presented derived concentration guideline levels (DCGLs) for embedded and buried piping.

Subsequently, a third category of piping was established to include piping not covered by the definitions of embedded or buried piping. This includes process piping, drains, conduit, ducting and penetrations in concrete and other piping partially or completely within concrete that was not surveyed as embedded piping and not filled with grout. This piping, here identified as "miscellaneous piping" was assigned gross activity DCGLs based on single radionuclide DCGLs for structures taking into account the radionuclide mixture and activity fraction associated with the structure or area where the piping was located.

Final status survey results for miscellaneous piping (MP) and buried piping (BP) were reported in Attachment 17 of the FSS Report [NASA 2012]. Upon their review of Attachment 17, the NRC Staff had several comments on the FSS approach and results for miscellaneous and buried piping. Two major concerns were identified:

1. The introduction of miscellaneous piping is outside the scope of the FSS Plan and this may be an un-reviewed safety issue requiring a license amendment.
2. NASA has not provided an adequate description of the methodology and approach for MP and BP. Thus, NRC Staff cannot determine if miscellaneous piping meets 10CFR20 Subpart E criteria for unrestricted use.

Following discussions with the NRC Staff, NASA has agreed to perform additional actions and evaluations to address the Staff concerns and to strengthen the demonstration that BP and MP meet the 10CFR20 Subpart E criteria. Specifically:

1. Attachment 17 of the FSS Report is being revised. As the major remaining PBRF buildings are being demolished, all piping located above the -3 ft. elevation is separated from the demolition rubble and will be either surveyed for free release or disposed of as radioactive waste. This will be reflected in the revised Attachment 17 by removal of this piping from the report.
2. Dose assessments are performed for the MP and BP which remains in the Attachment 17 report using calculation methods and assumptions consistent with what was used for embedded piping as reported in the FSS Plan. The dose to future site occupants is calculated for the MP and BP with piping contamination levels measured in the FSS as reported in Attachment 17. The objective is to demonstrate that the dose is well below the 25 mrem/y dose criterion including the dose contribution from residual contamination measured in the structures or land areas in which the piping resides.

This technical basis document presents the methods used and results of the dose assessments performed to demonstrate that the MP and BP which remains at the PBRF meets the 25 mrem/y dose criterion. The document is intended to be responsive to the NRC Staff concerns.[1]

2.0 Background

This section provides background information for the assessment of doses from contaminated buried and miscellaneous piping. It includes piping descriptions, locations and FSS measurement results. As indicated in the Introduction, piping above -3 ft. elevation has been removed from the PBRF buildings during building demolition. Table 1 lists the miscellaneous and buried piping which remains on the site.

Table 1, Miscellaneous and Buried Piping which Remains at the PBRF

Survey Unit	Survey Unit Description (1)	Further Description & Piping Location (1)(2)	Piping Length (ft.) (3)
BP-1-1	Sanitary System Drain SANS-11	Four-inch sanitary sewer drain piping approximately 23 ft. in length. Located in the Restricted Area just S & E of Reactor Security Bldg.	23
BP-1-2	PPH-101 Secondary Cooling Water	Secondary cooling supply line for PCW system. Approx. 27 ft. in length & 24 in. ID, located in and below PPH Rm.4.	20
BP-1-3	PPH-102 Secondary Cooling Water	Secondary cooling return line for PCW system. Approx. 28 ft. in length & 24 in. ID, located in and below PPH Rm.4.	16
BP-1-4	RPHD-1 PPH Sump Drain	Four-inch drain line from PPH Resin Pit, at the -10 ft. el. approximately 17 ft. in length.	17
BP-1-5	RPHD-2 PPH Sump Drain	Two-inch drain line from PPH Resin Pit, at the -8 ft. el. approximately 8 ft. in length.	8
BP-1-6	ED-1 PPH Sump Drain	One and ½ in. drain line from PPH Rm 8, approximately 10 ft. in length.	10
BP-1-7	RP-01 PPH Sump Drain	Two-inch drain line from PPH Rm 8, approximately 11 ft. in length.	11
BP-1-8	ROLB Source Well	Source storage well, 18 ¾ in. diameter vertical pipe, 44 ft. in length (depth) beneath ROLB Calibration room floor (Rm 13A) at the -15 ft. elevation.	32
BP-2-1	Pentolite Ditch Crossover	Two drain culvert pipes consisting of 31 in, 12 ga.	145

[1] In a June 7, 2010 letter to the NRC [NASA 2012a], NASA proposed the following description of a Technical Basis Document to address the NRC concerns: "NASA will prepare a Technical Basis Document (TBD) to address dose assessments for buried piping (BP) and miscellaneous piping (MP). The dose assessment will take into account all potential geometries and receptor points for both BP and MP. The most conservative piping configurations will be used to develop the conceptual dose models. That is, piping systems containing the highest concentrations of BP/MP and/or highest levels of radioactivity will be used to calculate dose to the receptor. The objective will be to demonstrate that the structural DCGLs (Table 3-2 of the PBRF Final Status Survey Plan (FSSP)) for BP and MP is an acceptable approach for all the piping remaining after building demolition and site restoration. NASA will describe the method in substantial detail for NRC staff to make the determination that the methodology and approach is consistent with the PBRF FSSP and meets 10CRF20 Subpart E criteria for unrestricted use."

Table 1, Miscellaneous and Buried Piping which Remains at the PBRF

Survey Unit	Survey Unit Description (1)	Further Description & Piping Location (1) (2)	Piping Length (ft.) (3)
		Corrugated metal pipes approximately 71 and 74 ft. in length.	
BP-2-2	WEMS Outfall	Drain culvert from WEMS to WEMS outfall, passing beneath Pentolite Rd., 31 in corrugated piping approximately 146 ft. long.	146
BP-2-3	Sanitary System Drain SANS-9	Sanitary sewer piping, 13 in., approximately 800 ft. long. Runs from manholes 2 to 6, N-S just W of Line 2 Rd. W of the Restricted Area.	40
MP-1-1	WHB SANS	A 4 in. shower and other services drain & vent line running from the 0 ft. to the -13 ft. elevation of the WHB; approx.45 ft. in length.	44
MP-2-1	Fan House Rooms 7 & 8 Penetrations	Two runs of 6 in piping through FH Basement wall through surrounding soil to the base of the FH Stack Room. Approx 52 ft. total length.	52
MP-3-1	HRA 0' Floor Drains	A 4 in. drain line in the HRA 0 ft. elevation floor, approximately 101 ft. in length.	101
MP-3-2	HRA Vault Perimeter Drains	A 4 in. terra-cotta drain piping system in the floor of the HRA Vault. It drains the vault footers to the HRA sump, approximately 225 ft. in length.	225
MP-5-1	CPT Floor Drains	A 4 in. drain pipe in the Cold Pipe Tunnel Floor, approximately 21 ft. in length.	21
MP-6-1	ROLB SANS Penetrations	Piping stubs in the ROLB Basement consisting of 2, 3 and 4 in. piping, approximately 10 ft. in total length.	10
MP-9-1	Interim Storage Lines	A cluster of four 2 in. conduit lines, ea. approx. 79 ft long in a 12 x 12 in concrete encasement. They run in the HPT upper wall-ceiling from the Interim Storage Room south along the HPT.	311
MP-10-1	RB -25' 2" Conduits	Two conduits; 2 in. (6 ft. long) and 1 in. (2 ft. long) in the RB -25 ft. trench.	8
MP-10-2	RB -25' 1.5" Conduits	A run of 1.5 in. conduit, approximately 81 ft. long in the RB -25 ft. PPP Room.	81
MP-10-3	Quad A Penetrations	Seventeen individual short runs of conduit & penetrations in Quad A floor and walls. Pipe sizes range from 1 to 6 in.	52
MP-10-4	Quad D Penetrations	Twenty four individual short runs of conduit & penetrations in Quad D floor and walls. Pipe sizes range from 1 to 6 in.	77
MP-10-5	Quads B&C Penetrations	Twenty five individual short runs of conduit & penetrations in Quad B & C floor and walls. Pipe sizes range from 1 to 6 in.	75
MP-10-6	Canal E Penetrations	Two short runs of 6 in. piping/penetrations in Canal E floor.	8

Table 1 Notes:

1. Acronyms/abbreviations are: CPT = Cold Pipe Tunnel, CV = Containment Vessel, ED = designator assigned to drain piping, FH = Fan House, ga. = gauge, HPT = Hot Pipe Tunnel, HRA = Hot Retention Area, PCW = Primary Cooling Water, PPH = Primary Pump House, ROLB = Reactor

Laboratory and Office Building, RPHD = designators used to identify Resin Pit and Valve Pit drains in the PPH, SANS = Sanitary Sewer, WEMS = Water Effluent Metering Station and WHB = Waste Handling Building.

2. Information for Further Description and Piping Location is from the individual release records.
3. Piping length shown in this column is the length of pipe surveyed, estimated from FSS measurements at one measurement per foot.

Table 2 shows the results of BP and MP FSS total surface beta activity measurements. These results are reported in Table 6 in Attachment 17 of the FSS Report.

Table 2, FSS Measurement Results for Miscellaneous and Buried Piping

Survey Unit	Survey Unit Description	No. of Measurements	Maximum Activity	Mean Activity	Standard Deviation
			dpm/100-cm^2		
BP-1-1	Sanitary System Drain SANS-11	23	24,148	14,086	4,312
BP-1-2	PPH-101 Secondary Cooling Water	20	6,567	4,004	1,012
BP-1-3	PPH-102 Secondary Cooling Water	16	5,599	3,718	836
BP-1-4	RPHD-1 PPH Sump Drain	17	13,178	6,578	3,223
BP-1-5	RPHD-2 PPH Sump Drain	8	6,589	5,093	1,199
BP-1-6	ED-1 PPH Sump Drain	10	10,967	4,136	2,805
BP-1-7	RP-01 PPH Sump Drain	11	10,923	6,600	2,068
BP-1-8	ROLB Source Well	32	2,860	2,255	308
BP-2-1	Pentolite Ditch Crossover	145	16,837	12,459	1,684
BP-2-2	WEMS Outfall	146	11,112	7,071	1,347
BP-2-3	Sanitary System Drain SANS-9	40	2,452	1,328	780
MP-1-1	WHB SANS	44	21,384	12,555	4,172
MP-2-1	Fan House Rooms 7 & 8 Penetrations	52	9,050	2,323	1,341
MP-3-1	HRA 0' Floor Drains	101	27,280	5,555	3,465
MP-3-2	HRA Vault Perimeter Drains	225	3,707	2,574	473
MP-5-1	CPT Floor Drains	21	11,043	7,795	1,949
MP-6-1	ROLB SANS Penetrations	10	27,312	15,739	7,175
MP-9-1	Interim Storage Lines	311	146,830	33,143	8,864
MP-10-1	RB -25' 2" Conduits	8	8,960	1,470	326
MP-10-2	RB -25' 1.5" Conduits	81	15,676	7,191	2,876

Table 2, FSS Measurement Results for Miscellaneous and Buried Piping

Survey Unit	Survey Unit Description	No. of Measurements	Maximum Activity	Mean Activity	Standard Deviation
			dpm/100-cm^2		
MP-10-3	Quad A Penetrations	52	27,438	10,626	6,053
MP-10-4	Quad D Penetrations	77	28,985	12,882	5,797
MP-10-5	Quads B&C Penetrations	75	31,132	12,453	6,656
MP-10-6	Canal E Penetrations	8	3,073	2,151	615

3.0 References

ANL 2001 Argonne National Laboratory, Environmental Assessment Division, *User's Manual for RESRAD Version 6,* ANL/EAD-4, July 2001.

D&M 2012 D&M Plastics, Inc. *HDPE Properties*, www.plasticmoulding.com, 2012.

JM 2012 JM Eagle, Inc., *Electrical Conduit Submittal and Data sheet, Rigid Non-Metallic Conduit for Use in Above Ground and Underground Installations, Schedule 80 Conduit*, www.jmeagle.com, 2012.

Grove 2007 Grove Software, Inc. (Radiationsoftware.com), *MicroShield® User's Manual, Version 7,* 2007.

IAEA 1975 International Atomic Energy Agency, R. G. Jaeger, Editor-in-Chief, *Engineering Compendium on Radiation Shielding*, Vol II, Springer-Verlag, New York, Heidelberg, Berlin, 1975.

NASA 2007 NASA Safety and Mission Assurance Directorate, *Final Status Survey Plan for the Plum Brook Reactor Facility,* Revision 1, February 2007.

NASA 2012 NASA Plum Brook Reactor Facility, *Final Status Survey Report, Attachment 17, Buried and Miscellaneous Piping*, Revision 0, March 2012.

PBRF 2006 Plum Brook Reactor Facility Decommissioning, Technical Basis Document, *Calculation of PBRF Embedded Piping DCGLs with Revised Conceptual Dose Model,* PBRF-TBD-06-001, January 2006.

PBRF 2006A Plum Brook Reactor Facility Decommissioning, Technical Basis Document, *Evaluation of DCGLs for Buried Piping at the PBRF*, PBRF-TBD-06-002, February 2006.

4.0 Dose Assessment Methods

This section describes the methods used to calculate doses to individuals who could be exposed to the miscellaneous and buried piping that remains on the site. An overview is provided, followed by a discussion of the selection of the piping survey units for a detailed dose assessment, based on ranking by exposure potential. The approaches for calculating doses from miscellaneous and buried piping are described.

4.1 Overview – General Approach

Dose assessment methods and supporting assumptions are consistent with those used to calculate DCGLs as described in the PBRF Final Status Survey Plan [NASA 2007]. For each selected piping survey unit, an exposure scenario is constructed which describes the piping layout and the spatial relationship to the location of the dose recipient.

4.2 Priority Ranking

In order to focus efforts on the piping survey units most likely to result in finite doses to future site occupants, the 24 miscellaneous and buried piping survey units are ranked by exposure potential. The ranking is based on the dose potential represented by the measured activity in each survey unit. The 24 MP and BP survey units were ranked by maximum measured activity, average measured activity and activity inventory (the product of average activity and piping surface area). An overall combined ranking was obtained for each survey unit. The ranking process and results are described in more detail in Appendix A. It was determined that detailed dose assessments for the six highest ranked survey units would be sufficient to demonstrate that the dose from each of the survey units is well below the 25 mrem/y dose criterion in 10CFR20 Subpart E. The six highest ranked survey units are shown in Table 3. The list includes four MP and two BP survey units.

Table 3, Priority Ranking of MP and BP for Dose Assessment

Survey Unit	Survey Unit Description	Priority for Dose Assessment
MP-9-1	Interim Storage Lines	1
MP-10-4	Quad D Penetrations	2
MP-10-5	Quads B&C Penetrations	3
BP-2-1	Pentolite Ditch Crossover	4
MP-10-3	Quad A Penetrations	5
BP-1-1	Sanitary System Drain SANS-11	6

4.3 Miscellaneous Piping Dose Calculations

For miscellaneous piping, the general approach to calculating doses is as outlined in Attachment C of the FSS Plan for calculation of DCGLs for embedded piping [NASA 2007]. The dose rate is calculated for unit activity concentration (one dpm/100-cm^2) assumed to be uniformly distributed on the piping inner surface. The dose rate is calculated for unit activity of each radionuclide identified in the radionuclide mixture reported in the release record for each survey unit. The doses are calculated using MicroShield® Version 7.02 [Grove 2007]. The general approach and assumptions for setting up the dose models (exposure geometry) and for the MicroShield calculations is as follows:

- The dose receptor (dose point) is located one meter above nearest floor surface to the piping that could be occupied by a future building occupant (building reuse).
- The dose point is typically located above the mid-point of horizontal piping lengths (except for alternative exposure scenarios where the receptor is located one meter above the floor in the near vicinity of a pipe end).
- All the pipes were cleaned to remove loose scale and loosely adherent surface contamination. The pipes were not filled with grout.
- All pipes in miscellaneous piping survey units except the electrical conduit in MP-10-4 and cast iron pipe in sanitary sewer lines were assumed to be schedule 40 steel.
- In survey units composed of multiple piping or penetrations, facility drawings were reviewed to identify pipes grouped in close proximity and in survey units where these were found, they were modeled as multiple sources (pipe clusters) to a dose receptor located in line with the geometric center of the cluster. This usually represents the most conservative conceptual dose model configuration in each case.
- For long pipe runs, sensitivity analyses were performed to determine the pipe length beyond which the dose to the receptor does not increase. This length is then used for all the case runs, regardless of the actual length. For short pipe runs, for example 3 ft. in the Quad Walls, the actual pipe length is used.
- The dose from individual pipes is calculated using MicroShield Geometry 10, "Cylindrical Surface Source–External Dose Point".
- The source is assumed to be a cylindrical shell of 0.025 cm thickness (iron oxide corrosion layer) modeled as iron (density 7.86) which lined the inner surface of the pipe cylindrical surface. The exception was the 2 in. conduit in MP-10-4 which was modeled as a 0.025 cm thickness of high density polyethylene (HDPE, density 0.94).
- The pipe walls are modeled as cylindrical shields of thickness per schedule 40 piping (or other piping specification for pipes that are not standard process piping).

- Layers of soil or concrete located between the pipe and the dose point are modeled as slab shields.
- Concrete is assumed to have a density of 2.4 (ordinary concrete).
- Soil and HDPE are setup in MicroShield as "custom shielding materials" with densities of 1.52 and 0.94, respectively.[2]
- The MicroShield output option was selected in mrem/h, with buildup. The dose rate output selected is deep dose equivalent rate, opposed/rotational geometry and converted from mSv/h to mrem/h, (ICRP 51 – 1987) [Grove 2007].
- The buildup medium for the dose calculations is selected as the shield with the highest number of "mean free path" lengths, usually the thickest shield.

The MicroShield results in mrem/h per dpm/100-cm^2 are tabulated for each radionuclide in each pipe that was modeled for a survey unit, usually Cs-137 and Co-60. The dose rate contributions from each radionuclide are obtained as the sum of the dose rates from the individual pipes. The radionuclide mixture assigned to each survey unit was obtained from the piping survey unit release record. The total Co-60 and Cs-137 dose rates are then weighted by (multiplied by) the respective gamma activity fractions. The resultant weighted dose rates are summed to obtain the total dose rate, mrem/h per dpm/100-cm^2 for the survey unit.

This calculation is expressed in the form of an equation as:

$$DR = \sum_j \left[\sum_i dr_{ij} * w_j \right] \qquad \textbf{Equation 1}$$

Where,

DR = dose rate from all radionuclides in all pipes in the survey unit (mrem/h per dpm/100-cm^2),

dr_{ij} = dose rate from radionuclide "j" in pipe "i" (mrem/h per dpm/100-cm^2),

w_j = weighting factor equal to the gamma activity fraction of radionuclide "j",

i = index denoting individual pipes, and

j = index denoting individual radionuclides.

[2] The material atomic composition for soil shields was obtained from the *Engineering Compendium on Radiation Shielding,* [IAEA 1975]. The material atomic composition for "average soil" was used. The custom material composition for HDPE was obtained from D&M Plastics fact sheet [D&M 2012].

The dose rate in mrem/h per unit activity (dpm/100-cm^2) is then multiplied by the residual contamination level measured in the FSS of the piping. This yields the dose rate delivered to the future site occupant from the piping uniformly contaminated with residual contamination present at measured levels. The total dose rates are calculated using two assumptions:

- The piping is uniformly contaminated at the average measured activity concentration and
- The piping is uniformly contaminated at the maximum measured activity concentration.

Finally, to obtain the dose in mrem/y for comparison to the 25 mrem/y criterion, the total dose rate is multiplied by the hours per year that the future site occupant is exposed. This is 2340 h/y under the Building Reuse assumption.

4.4 Buried Piping Dose Calculations

A two-fold approach is followed for evaluation of doses from residual surface contamination in buried piping. The primary approach is as used for the calculation of doses from embedded piping described above. This approach best represents the present condition of buried piping at the PBRF site. That is, the piping is buried beneath the ground and the most likely means by which individuals could receive exposure from residual contamination in the piping is exposure to gamma radiation to an individual in the immediate vicinity.

An alternative approach follows that of the Technical Basis Document TBD-06-002 [PBRF 2006A]. In this approach, the RESRAD code is used to calculate doses to a future site occupant. This is as described in Attachment B of the FSS Plan for the PBRF [NASA 2007] for calculation of DCGLs for soil. The underlying premise of this approach is that over time the contamination in the piping will migrate to the surrounding soil. The principal steps to apply this approach to buried piping are:

- The surface contamination within the buried piping is assumed to be transferred to the surrounding soil or sediment volume. This volume is assumed to be equivalent to the volume occupied by the buried pipes in the survey unit. It is conservatively assumed that this occurs over a short time, within a year or less.
- A source term for the RESRAD calculation is obtained by assuming that the entire residual surface activity inventory in the piping is uniformly distributed within in the soil volume which now occupies the piping. A concentration in pCi/g of soil is thus obtained (pCi/g in soil per dpm/100-cm^2 of piping surface contamination).
- The total activity in pCi/g of each radionuclide in the contaminated soil volume is calculated by scaling (multiplying) the pCi/g per dpm/100-cm^2 value by the measured piping contamination levels in dpm/100-cm^2 of each radionuclide.[3]

[3] Details of the calculation of piping activity inventory and conversion to soil volumetric activity concentration are provided in Appendix B.

- The area of the contaminated zone for the RESRAD calculation is the area occupied by the piping footprint, i.e., a plan view projection.
- The contaminated zone depth is set in the RESRAD model by placing a soil cover thickness over the contaminated zone equal to the distance from grade to the depth of the buried piping top surface.
- The total dose in mrem/y is calculated for unit soil concentration (one pCi/g) of each of the radionuclides in the radionuclide mixture reported in the buried piping survey unit release record.
- All RESRAD parameter values and pathways are those used in development of soil DCGLs as reported in Attachment B of the FSS Plan – the only modifications are the size and depth of the contaminated zone.
- The total dose to the future site occupant is obtained as the sum of the individual radionuclide dose contributions.

Evaluation of the dose from buried piping was also evaluated considering an alternative future site occupancy scenario. It is an "intruder scenario" where the contaminated buried piping/soil material described above (and in Appendix B) is excavated and brought to the surface. The contaminated zone for the RESRAD calculations is a thin layer of soil (typically 3 in.) whose surface area is calculated from the volume of soil which was formerly beneath the surface. The dose receptor is assumed to occupy the vicinity of the contaminated zone for 100 hours per year.[4] As the PBRF site is being converted to a wetland natural area, this individual could be a naturalist who spends time in the area performing observations or a maintenance worker performing light maintenance.

5.0 Dose Calculation Results

The doses calculated from the residual contamination measured during the recent FSS in miscellaneous and buried piping are presented for selected piping survey units. The selected survey units include the six with the highest dose potential. They include four miscellaneous piping survey units and two buried piping survey units. As shown in Tables 4 and 5 below, the calculated doses are quite low, ranging from 2.56E-14 to 1.72E-01 mrem/y. In calculating these results, it is assumed that that all the piping is uniformly contaminated at the maximum concentration measured in the FSS of each survey unit. The results for the individual survey units are presented below.

5.1 Miscellaneous Piping Results

The results for miscellaneous piping are presented in Table 4. The table shows that the calculated doses are quite low even for the cases with the largest number of pipes (pipe clusters). The eleven-pipe cluster in The Quad C wall contains the highest concentration of pipes found in the review of miscellaneous piping which remains. The calculated dose

---

[4] To obtain 100 hours per year, for the Intruder Scenario dose calculation, the RESRAD indoor occupancy fraction is set to zero and the outdoor occupancy fraction is set to 0.0114.

from this configuration is 2.6E-03 mrem/y. This result represents the worst case upper bound on the dose to a future building occupant, wherein it is assumed that the maximum measured concentration in the MP-10-5 survey unit, 31,132 dpm/100-cm^2 is uniformly distributed throughout the piping. Details of the MP dose assessment are provided in Appendix E.

Table 4, Summary of Results for Miscellaneous Piping

Survey Unit	Description	Dose (mrem/y)	Explanation
MP-9-1	Interim Storage Lines	2.3E-06	Base case. Dose to building occupant on Hot Lab, Hot Work Area floor. Dose point located above the center of the 79 foot long conduit sheath. MicroShield calculation with maximum measured activity, 146,830 dpm/100-cm^2 uniformly distributed on the piping, 2340 h/y exposure time. (1)
MP-9-1	Interim Storage Lines	9.73E-10	Alternate case. Dose to building occupant on HPT floor. The dose point has an end view of the conduit sheath which terminates in the upper HPT wall. MicroShield calculation with maximum measured activity, 146,830 dpm/100-cm^2 uniformly distributed on the piping, 2340 h/y exposure time.
MP-10-4	Quad D Penetrations	2.32E-11	Dose to building occupant on Quad D wall. MicroShield calculation with maximum measured activity, 28,985 dpm/100-cm^2 uniformly distributed on the piping, 2340 h/y exposure time. (2)
MP-10-5	Quad B&C Penetrations	2.63E-03	Base case. Dose to building occupant on Quad C wall directly above Line 397. MicroShield calculation with maximum measured activity, 31,132 dpm/100-cm^2 uniformly distributed on the piping, 2340 h/y exposure time. (3)
MP-10-5	Quad B&C Penetrations	1.23E-03	Alternate scenario. Dose to building occupant on Quad C wall directly above Line 387. All other parameters are the same as the MP-10-5 base case.(4)
MP-10-3	Quad A Penetrations	6.66E-11	Dose to building occupant on Quad A wall. MicroShield calculation with maximum measured activity, 27,438 dpm/100-cm^2 uniformly distributed on the piping, 2340 h/y exposure time. (5)

Table 4 Notes:

1. The MP-9-1 dose is calculated for a mixture of Cs-137 (gamma activity fraction, 0.993) and Co-60 (gamma activity fraction, 0.01). The exposure geometry is shown in Appendix B, Figure 1.
2. The MP-10-4 and MP-10-5 doses are calculated for a mixture of Cs-137 (gamma activity fraction, 0.67) and Co-60 (gamma activity fraction, 0.331). The layout for the MP-10-4 dose model is shown in Appendix B, Figure 2. The dose receptor location is directly above and centered between Lines 312 and 313.
3. Refer to Appendix B, Figure 3 for a detailed description of the MP-10-5 exposure geometry.

4. Refer to Appendix B, Figure 4 for a detailed description of the MP-10-5 alternate exposure geometry.
5. The MP-10-3 dose is calculated for a mixture of Cs-137 (gamma activity fraction, 0.250) and Co-60 (gamma activity fraction, 0.750). Refer to Appendix B, Figure 5 for a detailed description of the MP-10-3 exposure geometry.

5.2 Buried Piping Results

The results for buried piping are presented in Table 5. The doses to site occupants in the near future are those calculated using MicroShield. The most conservative results are obtained when the occupancy time used for Resident Farmer is applied to these MicroShield calculations. That is an occupancy time of 6750 h/y, a very unrealistic assumption. Under these assumptions, the annual dose from the Pentolite Ditch Crossover piping is 1.34E-04 mrem/y. The dose from the SANS-11 drain is 4.33E-07 mrem/y.

Doses calculated under the alternate method using RESRAD are higher. The worst case results are from the intruder scenarios. In these cases, the doses range from 3.51E-02 (BP-1-1) to 1.72E-01 (BP-2-1).[5] Details of the BP dose assessment are provided in Appendix E.

[5] It is noted that limitations arise in the calculation of doses using RESRAD in which the contaminated zones are very small. A principal limitation is that the food and water pathways are not realizable. In most cases, the calculated doses from these pathways are relatively small compared to the direct doses and this bias is ignored; the food pathway doses are included in the calculated dose results. However the Sr-90 results are significantly skewed because the food pathway doses dominate. In the most severe case, BP-1-1 Intruder, the food pathway doses are not included in the calculated dose result.

Table 5, Summary of Results for Buried Piping

Survey Unit	Description	Dose (mrem/y)	Explanation
BP-2-1	Pentolite Ditch Crossover	4.66E-05	Dose to future site occupant who occupies area in the center of the Crossover using MicroShield (2340 h/y occupancy). (1)
BP-2-1	Pentolite Ditch Crossover	1.34E-04	Dose to future site occupant who occupies area in the center of the Crossover using MicroShield (6750 h/y occupancy). (1)
BP-2-1	Pentolite Ditch Crossover	2.56E-14	Dose to Resident Farmer occupying area in the center of the Crossover using RESRAD (6750 h/y occupancy). (2)
BP-2-1	Pentolite Ditch Crossover	1.72E-01	Dose to Intruder or worker occupying area in proximity to the center of the Crossover where the contaminated soil was brought to the surface using RESRAD (100 h/y occupancy). (3)
BP-1-1	Sanitary System Drain SANS-11	2.57E-07	Dose to future site occupant who occupies area above the center of sanitary sewer line using MicroShield (2340 h/y occupancy).(4)
BP-1-1	Sanitary System Drain SANS-11	4.33E-07	Dose to future site occupant who occupies area above the center of the center of the sanitary sewer line using MicroShield (6750 h/y occupancy).(4)
BP-1-1	Sanitary System Drain SANS-11	1.69E-03	Dose to Resident Farmer occupying land area above the center of the buried sewer pipe using RESRAD (6750 h/y occupancy).(5)
BP-1-1	Sanitary System Drain SANS-11	3.51E-02	Dose to Intruder or worker occupying the area where the contaminated soil was brought to the surface using RESRAD (100 h/y occupancy).(6)

Table 5 Notes:

1. The dose to an individual from the BP-2-1 piping using MicroShield is calculated for a radionuclide mixture of Cs-137 (gamma activity fraction 0.924) and Co-60 (gamma activity fraction 0.076). The exposure geometry is shown in Appendix B, Figure 7.
2. The dose to an individual from the BP-2-1 piping using RESRAD for the Resident Farmer is calculated using the layout shown in Appendix B, Figure 8.
3. The dose to an individual from the BP-2-1 piping using RESRAD for the Intruder is calculated using the layout shown in Appendix B, Figure 9.
4. The dose to an individual from the BP-1-1 piping using MicroShield is calculated for a radionuclide mixture of Cs-137 (gamma activity fraction 0.896), Co-60 (gamma activity fraction 0.098) and Eu-154 (gamma activity fraction 0.006). The exposure geometry is shown in Appendix B, Figure 13.
5. The dose to an individual from the BP-1-1 piping using RESRAD for the Resident Farmer is calculated using the layout shown in Appendix B, Figure 12.
6. The dose to an individual from the BP-1-1 piping using RESRAD for the Intruder is calculated using the layout shown in Appendix B, Figure 13.

5.3 DCGLs Calculated Using MP and BP Dose Assessment Results

An ancillary result of the dose assessments reported above is that DCGLs were calculated for the six survey units evaluated in this report. These are called reference DCGLs for comparison with the actual DCGLs used in the FSS of MP and BP. The reference single

radionuclide DCGLs for Co-60 and CS-137 are summarized in Table 6. Note that for comparison, the single radionuclide DCGLs for structures in the FSS Plan are 1.1 E+04 for Co-60 and 4.05E+04 for Cs-137 (in dpm/100-cm^2). The table shows that in all cases, the reference DCGLs are above the FSS Plan single radionuclide DCGLs used to develop the gross activity DCGLs used in the FSS of MP and BP (in most cases they are well above).

Table 6, Summary of Reference DCGLs

Survey Unit	Description	Calculated Reference DCGLs (dpm/100-cm^2)	
		Co-60	Cs-137
MP-9-1	Base case from MicroShield Results	8.26E+08	1.34E+11
MP-9-1	Alternate case from MicroShield Results	1.14E+12	2.46E+15
MP-10-4	Base case from MicroShield Results	4.14E+14	4.89E+18
MP-10-5	Base case from MicroShield Results	4.40E+06	7.19E+07
MP-10-5	Alternate case from MicroShield Results	9.20E+06	1.81E+08
MP-10-3	Base case from MicroShield Results	3.09E+14	5.09E+18
BP-2-1	Base case from MicroShield Results	3.22E+07	2.22E+09
BP-2-1	Alternate case from RESRAD Results	6.33E+04	1.03E+05
BP-1-1	Base case from MicroShield Results	9.85E+09	3.11E+12
BP-1-1	Alternate case from RESRAD Results	2.53E+11	6.40E+13

6.0 Conclusions

From the evaluations performed and results presented in this Technical Basis Document, the principal conclusions are:

- The worst case dose to a future site occupant from miscellaneous and buried piping is very small, less than 0.2 mrem/y.
- This is less than 0.1% of the 10CFR20 Subpart E 25 mrem/y dose criterion published in the PBRF Final Status Survey Plan.
- The highest dose from residual contamination measured in any PBRF structure or open land survey unit is 2.0 mrem/y.[6]

[6] The Release Record for Open Land Survey Unit OL-3-2 in the Pentolite Ditch (see Attachment 4 of the FSS Report) reports an average unity factor of 0.088 for all 11 systematic soil samples. This is equivalent to a dose of

- Addition of the small dose increment attributed to miscellaneous and buried piping to this maximum dose yields a dose which is still well below the 25 mrem/y criterion.
- Using the dose calculation methods described in this report, single radionuclide DCGLs were calculated. They are well above the structure DCGLs used to develop the gross activity DCGLs for the FSS of miscellaneous and buried piping.
- In view of the results presented in this TBD, application of structure DCGLs for the FSS of miscellaneous and buried piping is shown to be a conservative approach.

7.0 Appendices

Appendix A – Ranking of Piping for Dose Assessment

Appendix B – Exposure Scenario Descriptions

Appendix C – MicroShield Case Run Reports

Appendix D – RESRAD Case Run Reports

Appendix E – Dose Assessment Details

1.98 mrem/y (0.088 x 22.5 mrem/y, where 22.5 mrem/y is the dose criterion of 25 mrem/y minus 10% for deselected radionuclides).

Dose Assessment for Miscellaneous and Buried Piping

TBD-12-002

Appendix A

Ranking of Piping for Dose Assessment

Table of Contents

List of Tables

1.0 Introduction

The MP and BP survey units are ranked to achieve an overall priority for dose assessment. Ranking criteria are based on measures of the potential piping source term for delivering a dose to a future site occupant. The ranking criteria are: maximum activity, average activity and activity inventory in the piping. Then an overall ranking is obtained by combining the ranks obtained from the individual criteria rankings.

2.0 Ranking by Maximum Activity

First the piping survey units are ranked by maximum measured activity. This is accomplished by sorting the survey units by maximum activity in decreasing order and assigning a ranking index of 1 to the piping with the highest maximum activity, 2 to the piping with the second highest activity and so on. The ranking by maximum activity is shown in Table 1. According to this criterion, the miscellaneous piping survey units MP-9-1 (Interim Storage Lines), MP-10-5 (Quad B&C Penetrations) and MP-10-4 (Quad D Penetrations) are the top three ranking survey units.

Table 1, Piping Survey Units Ranked by Maximum Activity

Survey Unit ID	Surface Area (m^2)	No. of Measurements	Max. Activity (dpm/100-cm^2)	Rank
MP-9-1	15.13	311	146,830	1
MP-10-5	7.21	75	31,132	2
MP-10-4	64.2	77	28,985	3
MP-10-3	5.17	52	27,438	4
MP-6-1	0.85	10	27,312	5
MP-3-1	9.82	101	27,280	6
BP-1-1	2.24	23	24,148	7
MP-1-1	4.3	44	21,384	8
BP-2-1	109.3	145	16,837	9
MP-10-2	2.995	81	15,676	10
BP-1-4	1.7	17	13,178	11
BP-2-2	110	146	11,112	12
MP-5-1	2.043	21	11,043	13
BP-1-6	0.4	10	10,967	14
BP-1-7	0.5	11	10,923	15
MP-2-1	7.6	52	9,050	16
MP-10-1	0.36	8	8,960	17
BP-1-5	0.4	8	6,589	18
BP-1-2	14	20	6,567	19
BP-1-3	14.6	16	5,599	20

Table 1, Piping Survey Units Ranked by Maximum Activity

Survey Unit ID	Surface Area (m^2)	No. of Measurements	Max. Activity (dpm/100-cm^2)	Rank
MP-3-2	21.1	225	3,707	21
MP-10-6	1.167	8	3,073	22
BP-1-8	20.23	32	2,860	23
BP-2-3	3.16	40	2,452	24

3.0 Ranking by Average Activity

Next, the piping survey units are ranked by average measured activity. The ranking is created following the same approach as with the ranking by maximum activity. The list of survey units is sorted by average activity and numerical ranking assigned thereto. The results are shown in Table 2. Based on this criterion the top three ranked survey units are MP-9-1 (Interim Storage Lines), MP-6-1 (ROLB Sanitary Penetrations) and BP-1-1(Sanitary System drain SANS-11).

Table 2, Piping Survey Units Ranked by Average Activity

Survey Unit ID	Surface Area (m^2)	No. of Measurements	Average Activity (dpm/1000-cm^2)	Rank
MP-9-1	15.13	311	33,143	1
MP-6-1	0.85	10	15,739	2
BP-1-1	2.24	23	14,086	3
MP-10-4	64.2	77	12,882	4
MP-1-1	4.3	44	12,555	5
BP-2-1	109.3	145	12,459	6
MP-10-5	7.21	75	12,453	7
MP-10-3	5.17	52	10,626	8
MP-5-1	2.043	21	7,795	9
MP-10-2	2.995	81	7,191	10
BP-2-2	110	146	7,071	11
BP-1-7	0.5	11	6,600	12
BP-1-4	1.7	17	6,578	13
MP-3-1	9.82	101	5,555	14
BP-1-5	0.4	8	5,093	15
BP-1-6	0.4	10	4,136	16
BP-1-2	14	20	4,004	17
BP-1-3	14.6	16	3,718	18
MP-3-2	21.1	225	2,574	19
MP-2-1	7.6	52	2,323	20

Table 2, Piping Survey Units Ranked by Average Activity

Survey Unit ID	Surface Area (m^2)	No. of Measurements	Average Activity (dpm/1000-cm^2)	Rank
BP-1-8	20.23	32	2,255	21
MP-10-6	1.167	8	2,151	22
MP-10-1	0.36	8	1,470	23
BP-2-3	3.16	40	1,328	24

4.0 Ranking by Activity Inventory

The piping survey units are next ranked by activity inventory. The activity inventory of each piping survey unit is estimated as the product of piping surface area and average measured surface activity. The listing is then sorted by activity inventory (calculated in μCi) in decreasing order and ranks assigned. The results are shown in Table 3. The table shows that the top three survey units ranked by inventory are BP-2-1 (Pentolite Ditch Crossover), BP-2-2 (WEMS Outfall) and MP-9-1 (Interim Storage Lines).

Table 3, Piping Survey Units Ranked by Activity Inventory

Survey Unit ID	Surface Area (m^2)	No. of Measurements	Average Activity (dpm/100-cm^2)	Activity Inventory (μCi)	Rank
BP-2-1	109.3	145	12,459	61.34	1
BP-2-2	110	146	7,071	35.04	2
MP-9-1	15.13	311	33,143	22.59	3
MP-10-5	7.21	75	12,453	4.04	4
MP-10-4	6.42	77	12,882	3.73	5
BP-1-2	14	20	4,004	2.53	6
MP-10-3	5.17	52	10,626	2.47	7
MP-3-1	9.82	101	5,555	2.46	8
MP-3-2	21.1	225	2,574	2.45	9
BP-1-3	14.6	16	3,718	2.45	10
MP-1-1	4.3	44	12,555	2.43	11
BP-1-8	20.23	32	2,255	2.05	12
BP-1-1	2.24	23	14,086	1.42	13
MP-10-2	2.995	81	7,191	0.97	14
MP-2-1	7.6	52	2,323	0.80	15
MP-5-1	2.043	21	7,795	0.72	16
MP-6-1	0.85	10	15,739	0.60	17
BP-1-4	1.7	17	6,578	0.50	18
BP-2-3	3.16	40	1,328	0.19	19
BP-1-7	0.5	11	6,600	0.15	20

Table 3, Piping Survey Units Ranked by Activity Inventory

Survey Unit ID	Surface Area (m^2)	No. of Measurements	Average Activity (dpm/100-cm^2)	Activity Inventory (μCi)	Rank
MP-10-6	1.167	8	2,151	0.11	21
BP-1-5	0.4	8	5,093	0.09	22
BP-1-6	0.4	10	4,136	0.07	23
MP-10-1	0.36	8	1,470	0.02	24

5.0 Overall Ranking

An overall ranking of the MP and BP survey units is obtained by combining the rankings obtained for maximum activity, average activity and piping inventory. This is achieved by calculating the arithmetic average of the ranks obtained for the three attributes (maximum activity, average activity and activity inventory). Using this method, the individual rankings for the three attributes are weighted equally. Then the overall ranking is obtained by sorting the listing on average rank in increasing order. The results are shown in Table 4.

Table 4, Overall Ranking of Piping Survey Units

Survey Unit	Survey Unit Description	Rank by Max. Activity	Rank by Avg. Activity	Rank by Activity Inventory	Overall Rank (Avg.)	Priority by Overall Rank
MP-9-1	Interim Storage Lines	1	1	3	1.67	1
MP-10-4	Quad D Penetrations	3	4	5	4.00	2
MP-10-5	Quads B&C Penetrations	2	7	4	4.33	3
BP-2-1	Pentolite Ditch Crossover	9	6	1	5.33	4
MP-10-3	Quad A Penetrations	4	8	7	6.33	5
BP-1-1	Sanitary System Drain SANS-11	7	3	13	7.67	6
MP-1-1	WHB SANS	8	5	11	8.00	7
MP-6-1	ROLB SANS Penetrations	5	2	17	8.00	8
BP-2-2	WEMS Outfall	12	11	2	8.33	9
MP-3-1	HRA 0' Floor Drains	6	14	8	9.33	10
MP-10-2	RB -25' 1.5" Conduits	10	10	14	11.33	11
MP-5-1	CPT Floor Drains	13	9	16	12.67	12
BP-1-2	PPH-101 Secondary Cooling Water	19	17	6	14.00	13
BP-1-4	RPHD-1 PPH Sump Drain	11	13	18	14.00	14
BP-1-7	RP-01 PPH Sump Drain	15	12	20	15.67	15

Table 4, Overall Ranking of Piping Survey Units

Survey Unit	Survey Unit Description	Rank by Max. Activity	Rank by Avg. Activity	Rank by Activity Inventory	Overall Rank (Avg.)	Priority by Overall Rank
BP-1-3	PPH-102 Secondary Cooling Water	20	18	10	16.00	16
MP-3-2	HRA Vault Perimeter Drains	21	19	9	16.33	17
MP-2-1	Fan House Rooms 7 & 8 Penetrations	16	20	15	17.00	18
BP-1-6	ED-1 PPH Sump Drain	14	16	23	17.67	19
BP-1-5	RPHD-2 PPH Sump Drain	18	15	22	18.33	20
BP-1-8	ROLB Source Well	23	21	12	18.67	21
MP-10-1	RB -25' 2" Conduits	17	23	24	21.33	22
MP-10-6	Canal E Penetrations	22	22	21	21.67	23
BP-2-3	Sanitary System Drain SANS-9	24	24	19	22.33	24

Dose Assessment for Miscellaneous and Buried Piping

TBD-12-002

Appendix B

Exposure Scenario Descriptions

Table of Contents

List of Tables

List of Figures

1.0 Introduction

Detailed descriptions are provided for the six highest ranked survey units identified in Appendix A. These are:

- MP-9-1, Interim Storage Lines
- MP-10-4, Quad D Penetrations
- MP-10-5, Quad B and C Penetrations
- MP-10-3, Quad A Penetrations
- BP-2-1, Pentolite Ditch Crossover
- BP-1-1, Sanitary System Drain SANS-11.

Layouts and dimensions are shown for the piping in each survey unit relative to the locations for dose receptors which represent future site occupants.

2.0 Occupancy Assumptions for Dose Calculations

The method for calculating doses from miscellaneous piping is similar to that used in the FSS Plan to calculate doses from embedded piping for development of DCGLs. This follows the general assumptions for occupancy under the Building Reuse scenario. In building reuse scenarios for miscellaneous piping, a future site occupant occupies a location in the vicinity (usually one meter from the wall or floor surface nearest the contaminated piping) for 2340 hours/y.

Buried piping is evaluated using a twofold approach. First, doses to individuals who could occupy the vicinity of buried piping are calculated using MicroShield. Doses calculated using MicroShield results (in mrem/h) are usually calculated for both Building Reuse and Resident Farmer occupancy assumptions. That is, either 2340 or 6750 h/y.

The secondary approach for buried piping is based on Resident Farmer occupancy assumptions used in the development of DCGLs for contaminated soil in outdoor areas. This is done since most of the buried piping discussed in this report is buried beneath the site soil. It is expected that some or all of the residual contamination in the piping will eventually reach the surrounding soil or downstream sediment (in the case of crossover and outfall pipes). The Resident Farmer occupancy factors are 0.66 for indoor occupancy (5786 h/y) and 0.11 for outdoor occupancy (964 h/y) with a total occupancy of 6750 h/y.

Alternative scenarios are developed for buried piping to provide conservative upper bound estimates of possible doses. These are identified as intruder scenarios. They involve excavation of the volume of contaminated soil which was assumed to be transferred from the piping to soil. The excavated soil is spread on the surface and an intruder is assumed to occupy the immediate vicinity for approximately 100 hours per year.

3.0 Piping Dimensions

Piping in the MP and BP survey units is comprised of several sizes and material compositions. Piping outside diameters (OD), wall thickness and inside diameters (ID) are shown in Table 1. The table shows dimensions in inches (in.) and centimeters (cm). For the dose calculation setups using MicroShield, the inside piping radius (IR) is a key parameter; it is included in the table, as is the outside radius (OR).

Table 1, Piping Dimensions

Description	Nominal Dia. (in)	OD (in)	Wall (in)	OD (cm)	Wall (cm)	ID (cm)	OR (cm)	IR (cm)
steel process piping (1)	1	1.315	0.133	3.34	0.338	2.66	1.67	1.33
steel process piping and electrical conduit (1)	2	2.375	0.154	6.03	0.391	5.25	3.02	2.63
steel process piping (1)	2.5	2.875	0.203	7.30	0.516	6.27	3.65	3.14
steel process piping (1)	3	3.500	0.216	8.89	0.549	7.79	4.45	3.90
steel process piping (1)	4	4.500	0.237	11.43	0.602	10.23	5.72	5.11
cast iron sewer pipe (2)	4	4.300	0.180	10.92	0.457	10.01	5.46	5.00
steel process piping (1)	6	6.625	0.280	16.83	0.711	15.41	8.41	7.70
corrugated pipe (3)	24	24.217	0.108	61.51	0.275	60.96	30.76	30.48
corrugated pipe (3)	31	31.217	0.108	79.29	0.275	78.74	39.65	39.37

Table 1 Notes:

1. Steel process piping schedule 40 pipe dimensions from "www.engineersedge.com".
2. Sewer pipe dimensions from "www.engineeringtoolbox.com" for service cast iron.
3. The wall thickness for 24 and 31 in. galvanized steel piping is 12 gauge – from "www.sheetmetalguy.com".

4.0 MP-9-1, Interim Storage Lines – Detailed Description

The Interim Storage Lines are evaluated under Building Reuse assumptions. The Interim Storage Lines are comprised of four, two-inch fiber conduits encased in a concrete sheath of 12 x 12 inch cross section and 79 ft. long. The four conduits run below the floor of the Hot Lab, from the Interim Storage Room in the Reactor Building to the Hot Pipe Tunnel upper wall.[1]

The dose rate to a future building occupant is calculated using MicroShield. The primary dose receptor is located in the Hot Lab one meter above the 0 ft. elevation main floor. The dose point is set at the mid-point of the 79 foot conduit sheath. An alternate location was evaluated with the dose point in the Hot Pipe Tunnel in view of the terminus of the conduit sheath on the wall

[1] Site drawings were reviewed to identify the exact location of the MP-9-1 conduit and to determine locations in closest proximity whereby a future site occupant could receive exposure from the contaminated conduit. The principal drawing reference is PF-04615, Hot Laboratory, Underground Tunnel Lights and Receptacles, Sept. 1957.

above. [2] The layout and dimensions for the Interim Storage Line dose calculations are shown in Figure 1.

The reference drawing (PF-04615) shows that the conduits and concrete sheath were on a slight incline. As shown in Figure 1, the position established for the second dose point is at the center of the 79 foot long conduit/sheath where the elevation of the sheath bottom is -4.96 ft. The figure shows that the individual conduits are located on 4 in. centers within the sheath. The MicroShield set up includes the shielding effect of the conduit wall, modeled as high density polyethylene (HDPE).[3] Figure 1 also shows the orientation of the MicroShield axes which locate the dose points relative to the cylindrical surface sources which represent the contamination inside the conduit.

[2] The exposure geometry for the dose to a receptor in the Hot Pipe Tunnel is very unfavorable relative to the dose point in the Hot Lab yielding doses about two orders of magnitude below the dose calculated for the Hot Lab receptor.

[3] Drawing PF-04615 identifies the conduit as "two inch fiber ducts", but no detailed specifications for the conduit could be found. It is noted that HPDE has been commonly used for industrial conduit in underground installations. Reference: JM Eagle Electrical Conduit, Submittal and Data Sheet [JM 2012].

Figure 1, MP-9-1 Layout for Dose Calculations

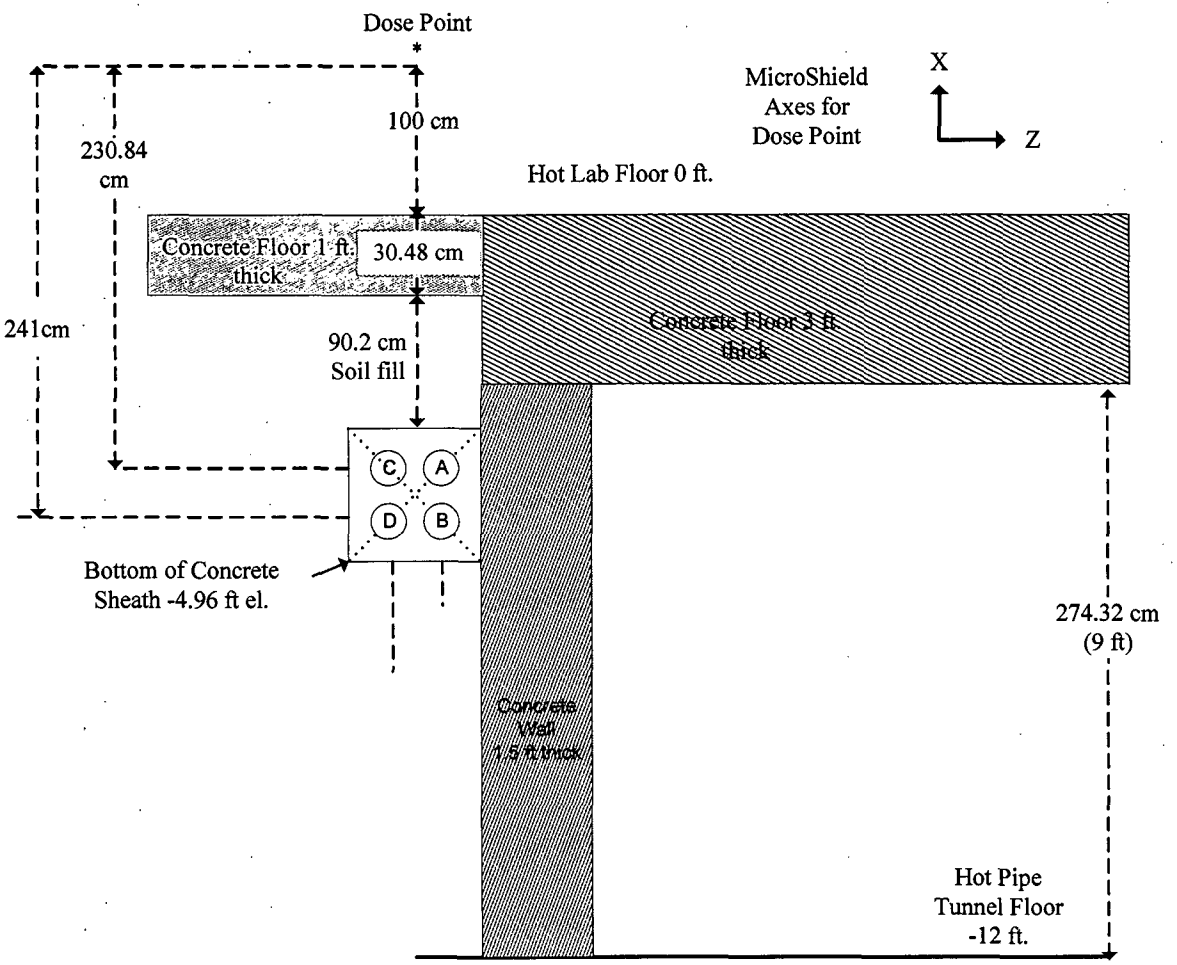

Conduit Sheath Details

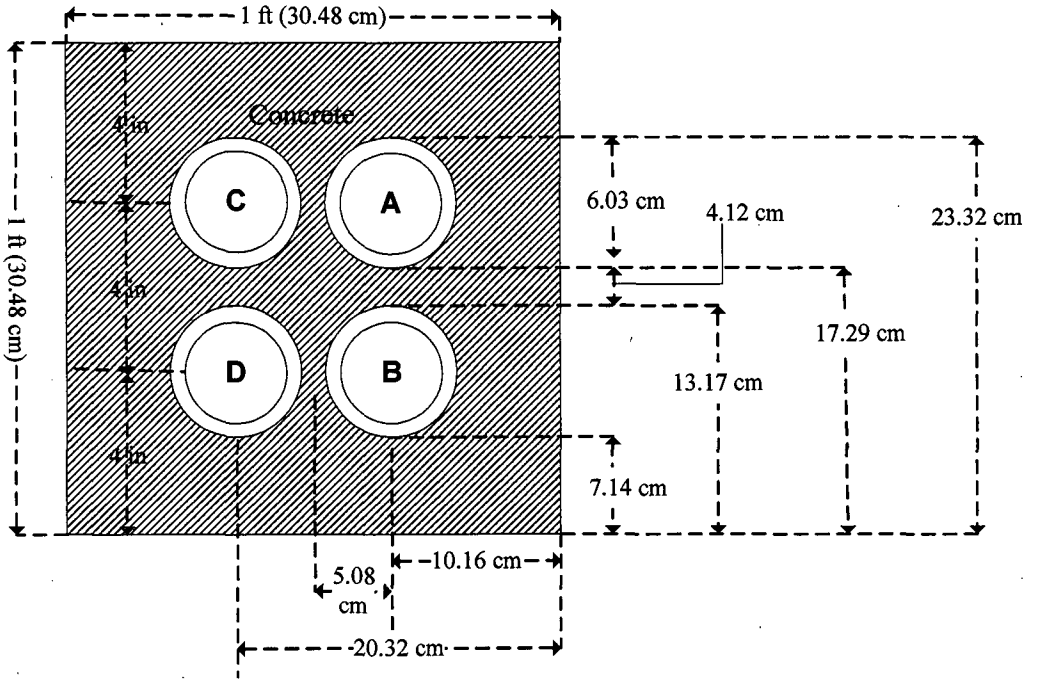

5.0 MP-10-4, Quad D Penetrations – Detailed Description

The PBRF Reactor Quadrants contained many runs of piping encased in concrete in the quadrant walls and floors. Most of these were cleaned, grouted and surveyed as embedded piping, particularly those below the -3 ft. elevation. The survey unit Release Record for MP-10-4 identifies 16 runs of piping identified as miscellaneous piping/penetrations in Quad D. This piping was cleaned to remove loose contamination and was surveyed for the FSS. The survey records and plant drawings were reviewed to identify the "best" candidates of the Quad D piping/penetrations for dose modeling. The focus was on groups of piping in proximity to where a future building occupant could be located. Most of the piping in MP-10-4 is comprised of individual pipe runs located throughout the quadrant. However, a cluster of six pipes/penetrations was identified which ran horizontally through the Quad D outer wall at the -6.5 ft. elevation. These were formerly service lines and cooling water lines for experiments in the water-filled Canal. [4]

A dose point was established on the walkway located on the wall between Quad D and the Dry Annulus inside the CV (Containment Vessel). The dose point is located directly above the approximate mid-point of the six-pipe cluster. The layout and geometry-dimensions for the MicroShield calculations are shown in Figure 2. The figure also shows the orientation of the MicroShield x and z axes relative to the piping. The y axis, not shown, is parallel to the pipe lengths. All the pipe sections are three feet in length.

[4] The principal reference drawing for dimensions and location of the six-pipe cluster in Quad D is: PF-00377, Reactor Facility RB Process Piping – North Half (Quadrants A, C and D), final rev 3/12/73.

Figure 2, MP-10-4 Layout for Dose Calculations

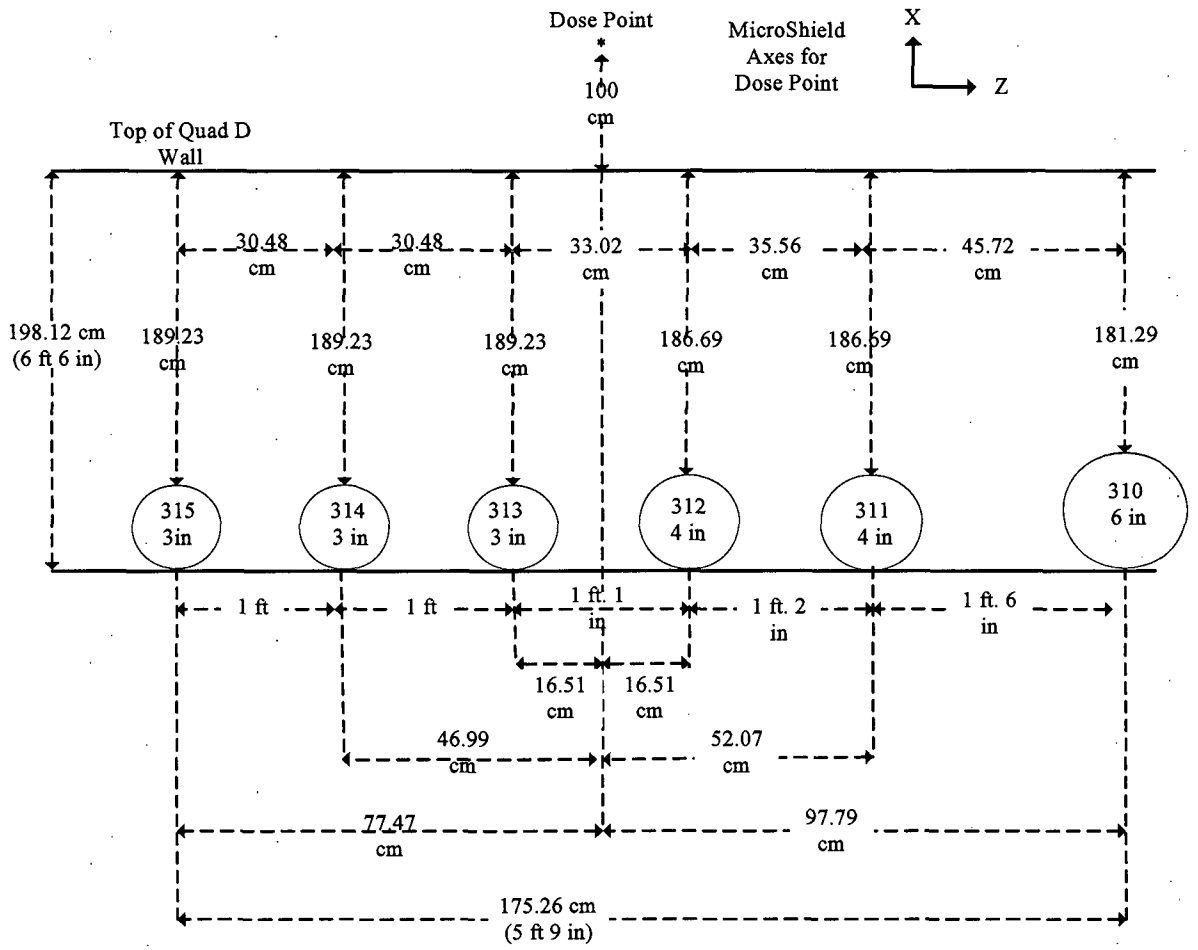

6.0 MP-10-5, Quad B and C Penetrations – Detailed Description

The survey unit Release Record for MP-10-5, Quad B and C penetrations/piping identifies 23 runs of piping identified as miscellaneous piping. This piping was cleaned to remove loose contamination and was surveyed for the FSS. The survey records and plant drawings were reviewed to identify candidates for dose modeling. The focus was on groups of piping in proximity to where a future building occupant could be located. Most of the piping in MP-10-5 is comprised of individual pipe runs located throughout the quadrant. However a cluster of eleven pipes/penetrations were identified which ran horizontally through the Quad C outer wall. Eight of the penetrations were at the -6.5 ft. elevation and three one-inch lines were located approximately 1.5 ft. below the top of the Quad wall. Figures 3 and 4 show the layouts for two dose calculations: the base case and a case with an alternate dose point location.[5] Both locations are on the CV 0 ft elevation floor above the Quad C penetrations.

[5] The small pipes/penetrations (one inch) at the top right of Figures 3 and 4 could not be found on any of the PBRF Quadrant and Canal drawings. Their location relative to the top of the Quad C wall was estimated from photos taken in support of the FSS.

Figure 3, MP-10-5, Layout for Base Case Dose Point

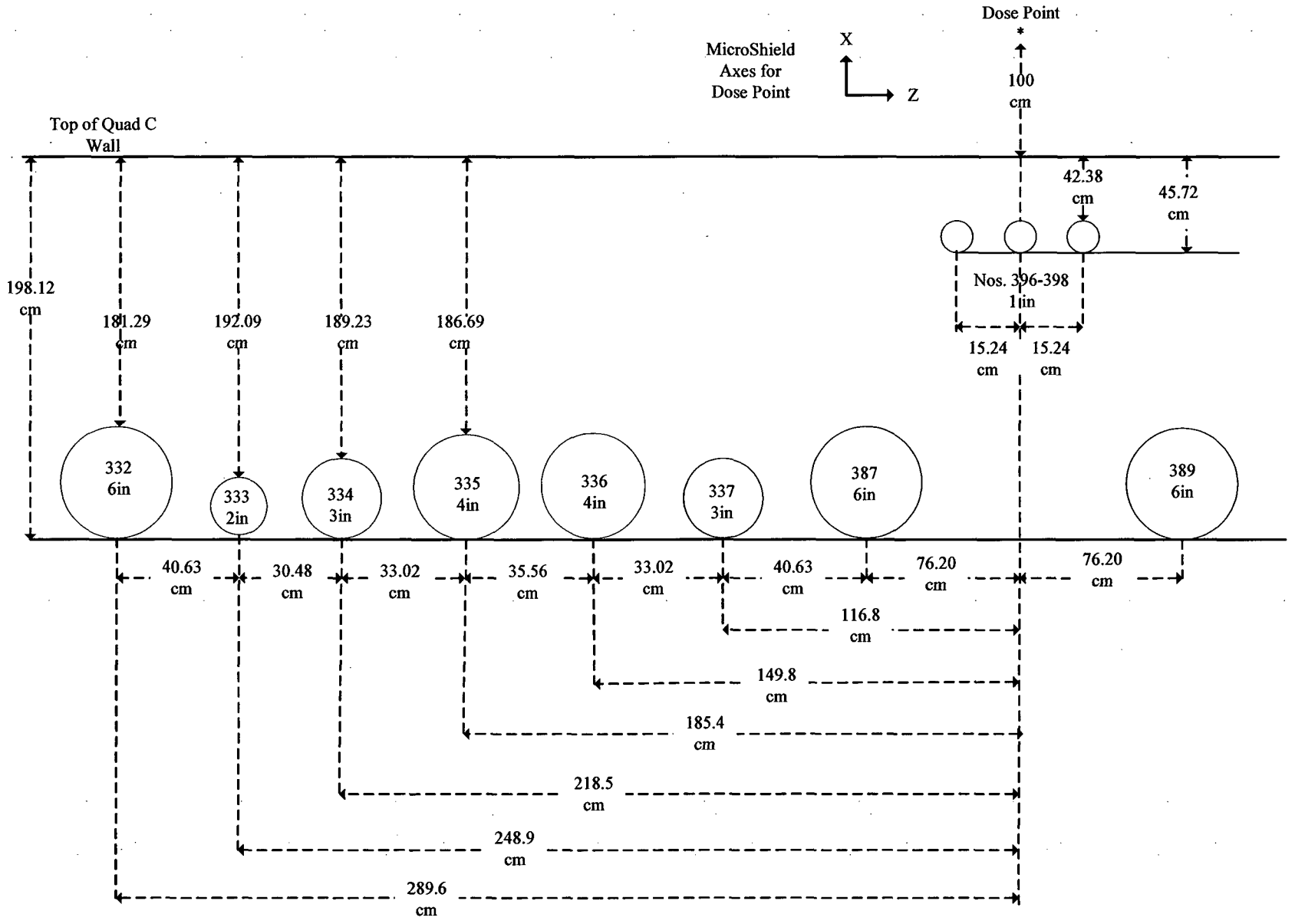

Figure 4, MP-10-5, Layout for Alternate Dose Point Location

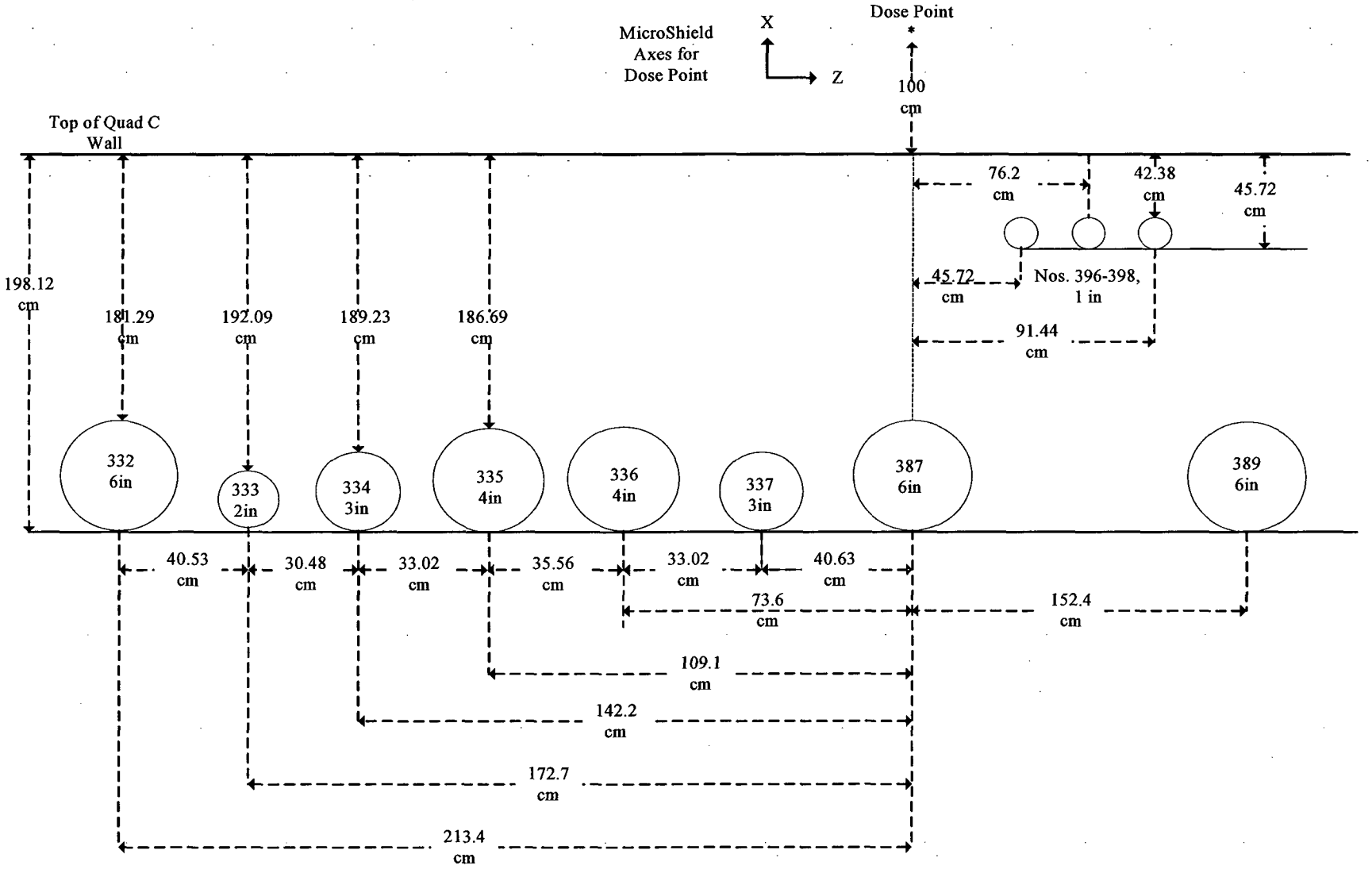

7.0 MP-10-3, Quad A Penetrations – Detailed Descriptions

The survey unit Release Record for miscellaneous piping in Quad A identifies 17 runs of piping. This piping was cleaned to remove loose contamination and was surveyed for the FSS. The survey records and plant drawings were reviewed to identify candidates for dose modeling. The focus was on groups of piping in proximity to where a future building occupant could be located. Most of the piping in MP-10-3 is comprised of individual pipe runs located throughout the quadrant. However, as with the other water-filled Quads, a cluster of pipes/penetrations were identified which ran horizontally through the Quad A outer wall at the -6.5 ft. elevation. These were formerly service lines and cooling water lines for experiments in the water-filled Canal. The layout for this six-pipe cluster is a mirror image of the layout of the six-pipe cluster in MP-10-4, Quad D Miscellaneous Piping. [6]

Figure 5, Layout for MP-10-3 Dose Calculations

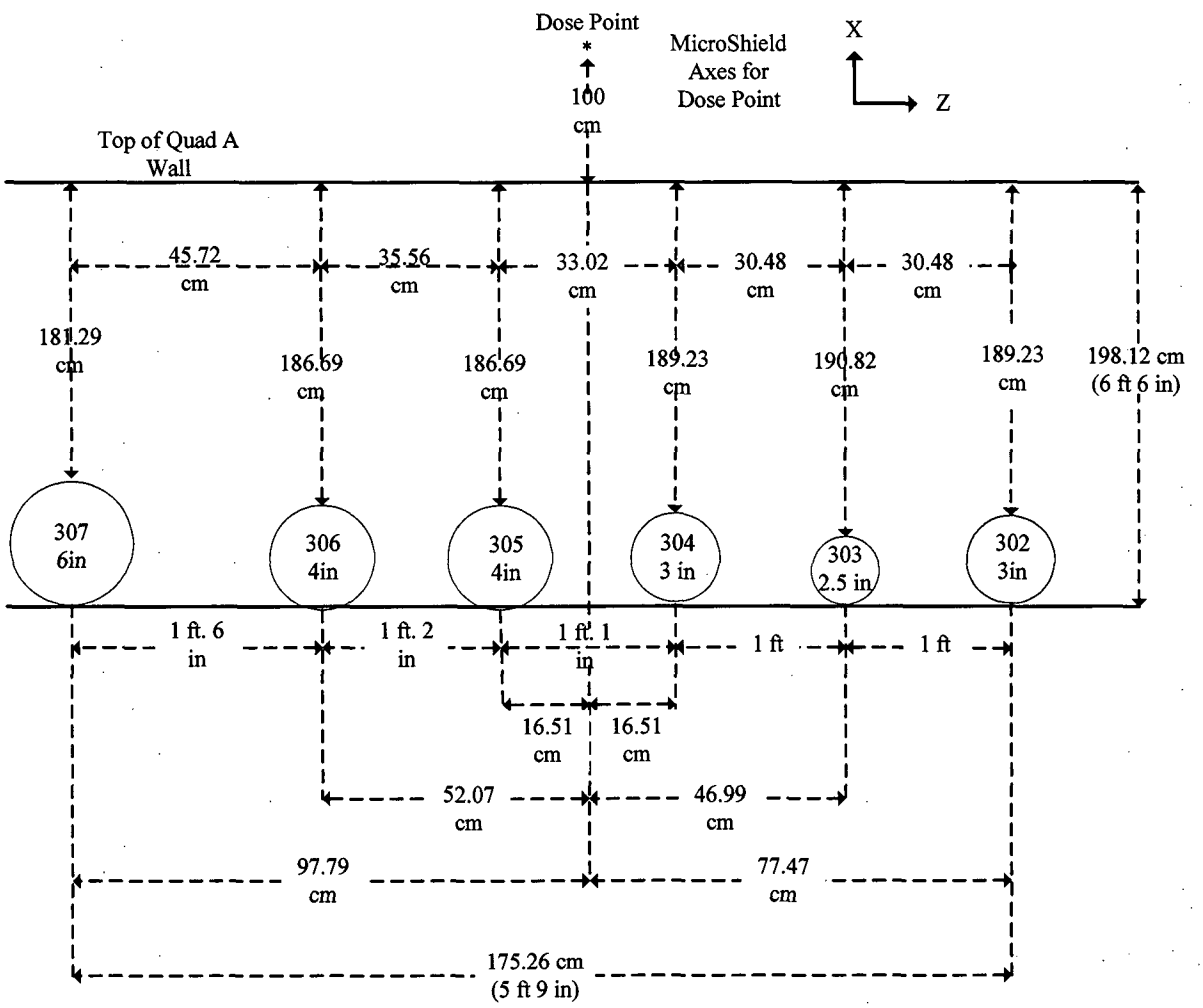

[6] The principal reference drawing for dimensions and location of the six-pipe cluster in Quad A is: PF-00377, Reactor Facility RB Process Piping – North Half (Quadrants A, C and D), final rev 31/12/73.

8.0 BP-2-1, Pentolite Ditch Crossover Drain – Detailed Description

The Pentolite Ditch Crossover Drain piping consists of two 31 inch diameter corrugated steel pipes which channel Pentolite Ditch water underneath the filled-in overcrossing.[7] The crossover pipes were repaired during the PBRF decommissioning to remove degraded and damaged piping at each end and install new end-sections. The two remaining original pipes which were surveyed as part of the FSS are of unequal length, approximately 71 and 74 feet. The general layout is shown in cross section in Figure 6.

Figure 6, General Layout of Pentolite Ditch Crossover Drain Piping

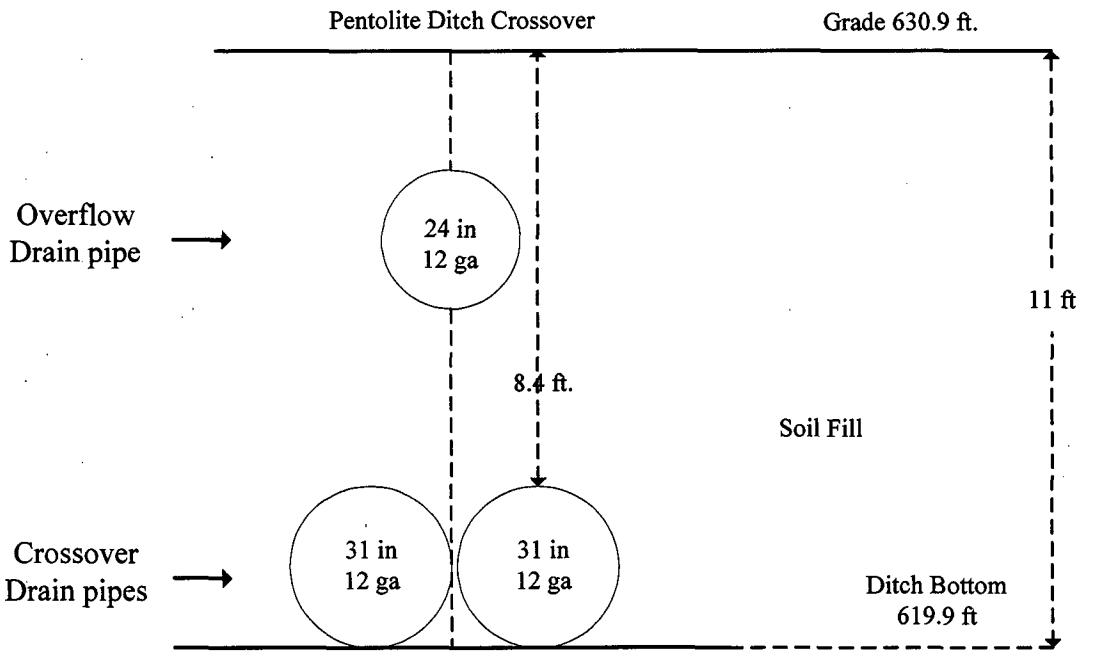

The primary approach for evaluation of the dose to future site occupants is very similar to the approach for miscellaneous piping described above. The layout for the MicroShield calculations is shown in Figure 7.

[7] A discrepancy is noted between the 1958 drawing CF 115321, Plan and Profile Main Drainage Pentolite Road Sta. E235 to Sta. 241 and the FSS Survey Unit Release Record in regard to the crossover drain pipe dimensions. The 1958 drawing identifies the drain pipes as oval corrugated pipe, 22 x 36 in. The FSS Release Record and supporting survey documentation identify the piping as 31 in. corrugated piping. The latter description is used in this report.

Figure 7, BP-2-1 Layout for MicroShield Dose Calculations

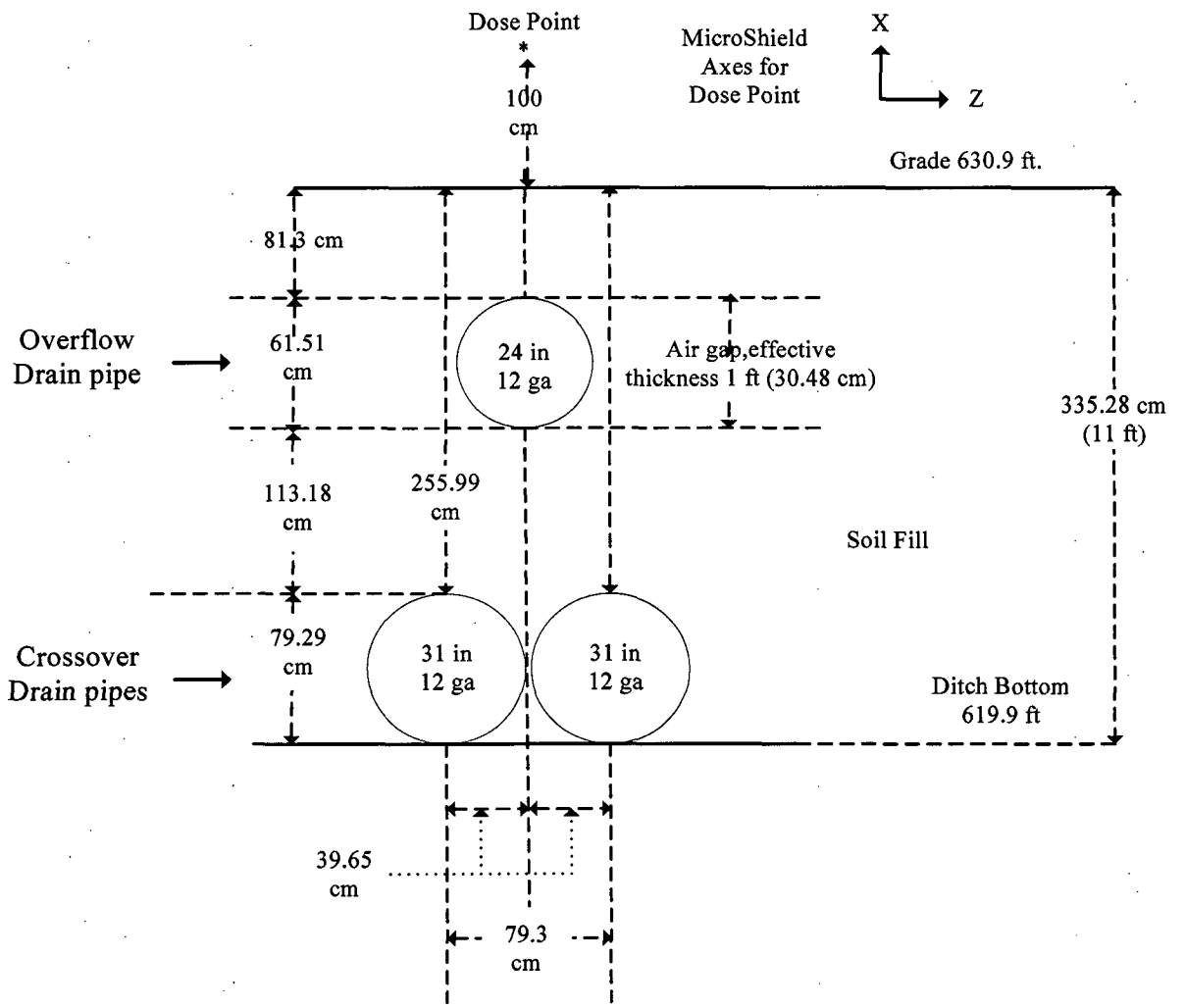

The alternative dose evaluation for the Pentolite Ditch Crossover piping and other buried piping is based on the Resident Farmer scenario assumptions described in the PBRF FSS Plan for contaminated outdoor soil areas where most of the buried piping resides. For the evaluation of doses to future site occupants from contamination in buried pipes using this approach, the residual surface contamination is assumed to be transferred from the piping to a volume of soil equivalent to the internal volume of the piping. The piping is displaced or assumed to be "corroded away" and is not considered further in the dose calculation. The soil volume is assumed to be uniformly contaminated by distributing the piping surface contamination inventory throughout the soil volume.

This calculation is summarized in Tables 2 and 3. Table 2 shows the total pipe inventory (in pCi) for 12,459 dpm/100-cm^2. This is the average surface activity concentration measured in the FSS (as reported in the BP-2-1 release record). The table also shows the piping inventory if it is assumed that the maximum measured concentration (16,837 dpm/100-cm^2) occurs throughout the piping. Table 3 summarizes the calculation of the equivalent volumetric concentration (in pCi/g) in the soil mass which fills the piping. The soil activity concentration is calculated under the assumptions that the average measured surface activity is uniformly distributed in the soil volume. This yields a soil

concentration of 1.86 pCi/g. If it is assumed that the maximum measured surface activity is uniformly distributed in the soil volume, the result is 2.51 pCi/g.

Table 2, Crossover Drain Pipe Radioactivity Inventory

Pipe ID (in/cm)	Total Pipe Length (ft/cm)	Pipe Surface (cm^2)	Total Inventory @ 1 dpm/100-cm^2 (pCi)	Total Inventory @ 12,459 dpm/100-cm^2 (pCi)	Total Inventory @ 16,837 dpm/100-cm^2 (pCi)
31.22/79.3	145/4419.6	1100925.0	4959.1	6.18E+07	8.35E+07

Table 3, Summary of Crossover Drain Pipe Soil Activity Calculation

Pipe ID (cm)	Total Pipe Length (cm)	Total Pipe Internal Volume (cm^3)	Total Mass of Soil in Pipe Internal Volume @ 1.52 g/cm^3 (g)	Soil Concentration @ 12459 dpm/100-cm^2 (pCi/g)	Soil Concentration @ 16837 dpm/100-cm^2 (pCi/g)
79.3	4119.6	2.18E+07	3.32E+07	1.86	2.51

The surface area of the corresponding contaminated zone, the source term for the RESRAD calculation of the dose to the Resident Farmer occupant of the Crossover Drain vicinity is approximately 36 m^2. This is a slab of soil 72.5 ft. long and 62 in. wide. These dimensions are the average length and combined width of the two side-by-side drain pipes. The cover zone depth is 2.65 meters (8.4 ft.) as seen in Figure 6. The configuration for the Resident Farmer dose calculation is shown in Figure 8.

Figure 8, Layout for BP-2-1 Resident Farmer Dose Calculation

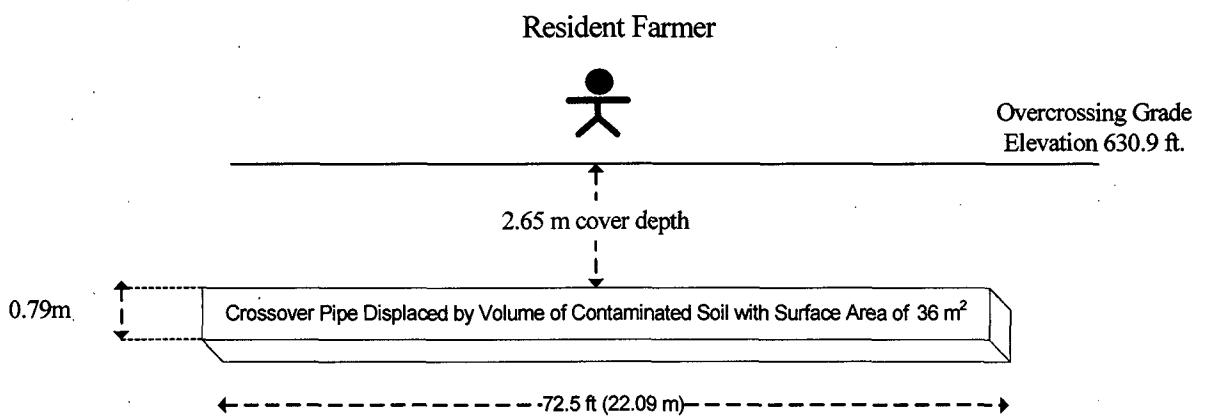

An additional scenario is examined - a variation on the Resident Farmer scenario. It is an intruder scenario, wherein the contaminated soil in the crossover piping is brought to the surface. It is distributed on the surface as a layer of soil three inches thick. This layout is shown in Figure 9.

Figure 9, Layout for BP-2-1 Intruder Dose Calculation

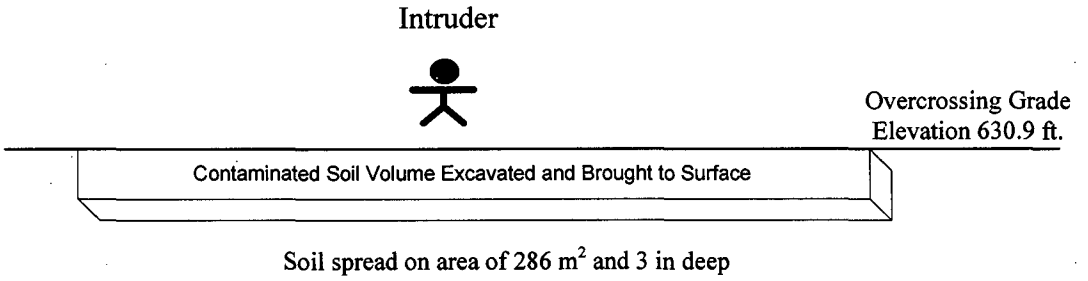

9.0 BP-1-1, Sanitary System Drain SANS-11 – Detailed Description

The buried piping in the BP-1-1 survey unit is a single run of 4 inch cast iron sewer pipe which runs south from the Reactor Security Building. It formerly tied in to the main E-W sanitary sewer line, which has been removed. This 23 ft. long section of piping is the remaining section of the SANS-11 piping. The average elevation of the piping is 627.9 ft. The depth of the piping at the center of the 23 ft. run is 5.61 ft (165.53 cm), from grade to the piping centerline. The general layout of the BP-1-1 piping is shown in Figure 10.

Figure 10, BP-1-1 General Layout

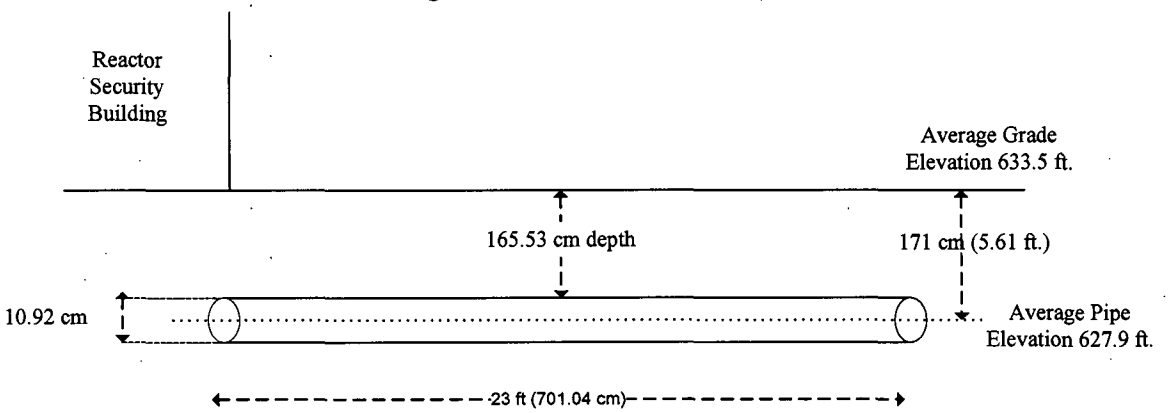

As with the dose evaluation for the Pentolite Ditch Crossover piping, the dose is calculated for a future site occupant using MicroShield as explained in Section 8.0. The layout and dimensions for this calculation are shown in Figure 11.

Figure 11, BP-1-1 Layout for MicroShield Dose Calculations

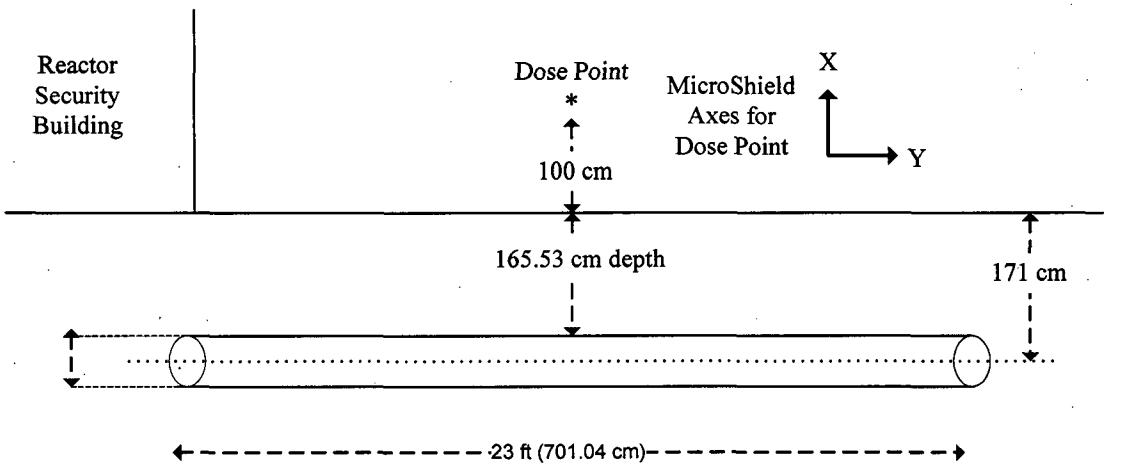

Pipe Dimensions:
OD 4.3 in (10.92 cm)
ID (3.94 in (10.0 cm)
IR 5.0 cm
Wall 0.547 cm

As with the Pentolite Ditch Crossover Piping, an alternative dose evaluation is represented by a resident farmer. The residual surface contamination is assumed to be transferred from the piping to a volume of soil equivalent to the internal volume of the piping. This soil volume is assumed to be uniformly contaminated by distributing the piping surface contamination inventory throughout the soil volume. The contaminated soil remains at the original depth of the sanitary sewer pipe.

The calculation of the piping inventory is summarized in Table 4. Table 4 shows the total pipe inventory (in pCi). It is calculated assuming that the average surface activity measured on the piping, 14,806 dpm/100-cm^2, is uniformly distributed throughout. This is the average surface activity concentration measured in the FSS (as reported in the BP-1-1 release record). Table 5 summarizes the calculation of the equivalent volumetric concentration (in pCi/g) in the soil mass which fills the piping. The soil activity concentration is calculated under the assumption that the average measured surface activity is uniformly distributed in the soil volume. This yields a soil volume with a uniform volumetric concentration of 16.66 pCi/g. If it is assumed that the maximum measured surface contamination is uniformly distributed on the piping and this inventory is transferred to the soil volume, the soil concentration is 28.57 pCi/g.

Table 4, Security Building Sanitary Drain Radioactivity Inventory

Pipe ID (in/cm)	Pipe Length (ft/cm)	Pipe Surface (cm^2)	Total Inventory @ 1 dpm/100-cm^2 (pCi)	Total Inventory @ 14,086 dpm/100-cm^2 (pCi)	Total Inventory @ 24,148 dpm/100-cm^2 (pCi)
3.94/10.0	23/701	22040.6	99.3	1.40E+06	2.40E+6

Table 5, Summary of Security Building Sanitary Drain Soil Activity Calculation

Total Pipe Length (cm)	Pipe ID (cm)	Total Pipe Internal Volume (cm^3)	Total Mass of Soil in Pipe Internal Volume @ 1.52 g/cm^3 (g)	Concentration @ 14,086 dpm/100-cm^2 (pCi/g)	Concentration @ 24,148 dpm/100-cm^2 (pCi/g)
701.04	10.0	5.51E+04	8.39E+04	16.66	28.57

The surface area of the contaminated zone which corresponds to the contaminated sanitary drain soil volume described above is calculated to be slightly less than one m^2 (0.7 m^2). This is the source term for the RESRAD calculation of the dose to the Resident Farmer-occupant of the sanitary drain vicinity. This is a slab of soil 23 ft. long and about 4 in. wide. The cover zone depth is 1.66 meters (5.45 ft.) as seen in Figure 10. The configuration for the RESRAD Resident Farmer dose calculation is shown in Figure 12.

Figure 12, Layout for BP-1-1 Resident Farmer Dose Calculation

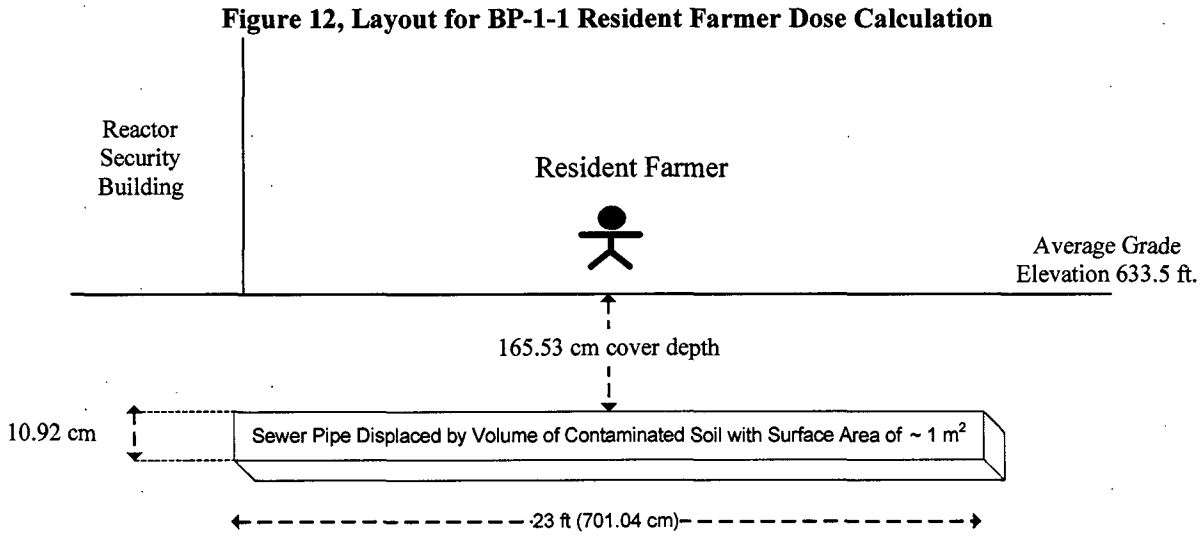

An additional scenario is examined. This is a variation on the Resident Farmer scenario, called the intruder scenario. In this scenario, the contaminated soil in the sanitary sewer piping is brought to the surface. It is distributed on the surface as a layer of soil three inches thick. This layout is shown in Figure 13. The dose to an intruder who occupies the area above the contaminated zone for 100 hours per year is calculated using RESRAD.

Figure 13, Layout for Sanitary Drain Intruder Scenario

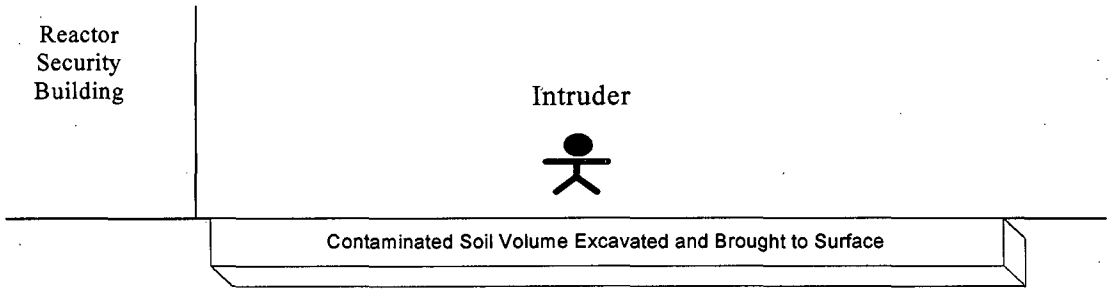

Soil is spread on area of approximately one m^2 and 3 in deep

Dose Assessment for Miscellaneous and Buried Piping

TBD-12-002

Appendix C

MicroShield Case Run Reports

MicroShield Case Run Index

Run Date	Case Title	Description	File Name	Result (mrem/h)
5/16/12	Line 1.21 A2	Benchmark to verify against TBD-06-001 case run result.	16-May-12-01	5.54E-10
5/22/12	MP-9-1-Co-60-1	Initial study of Line A with Unit Co-60 and full length conduit source = 77.75 ft.	MP-9-1-01	1.891E-14
5/24/12	MP-9-1-Co-60-2	Sensitivity analysis of Line A with source length = 20 ft.	MP-9-1-02	1.887E-14
5/24/12	MP-9-1-Co-60-3	Sensitivity analysis of Line A with source length = 25 ft.	MP-9-1-03	1.887E-14
5/24/12	MP-9-1-Co-60-4	Sensitivity analysis of Line A with source length = 30 ft.	MP-9-1-04	1.887E-14
5/24/12	MP-9-1-Co-60-5	Sensitivity analysis of Line A with source length = 40 ft.	MP-9-1-05	1.887E-14
5/24/12	MP-9-1-Co-60-6	Sensitivity analysis of Line A with source length = 50 ft.	MP-9-1-06	1.887E-14
5/24/12	MP-9-1-Co-60-7	Sensitivity analysis of Line A with source length = 60 ft.	MP-9-1-07	1.887E-14
5/24/12	MP-9-1-Co-60-8	Sensitivity analysis of Line A with source length = 70 ft.	MP-9-1-08	1.889E-14
6/21/12	MP-9-1-Co-60-12	Hot Lab exposure scenario, line A source, 25 ft. length with unit Co-60.	MP-9-1-12	1.528E-13
6/21/12	MP-9-1-Co-60-13	Hot Lab exposure scenario, line B source, 25 ft. length with unit Co-60.	MP-9-1-13	1.063E-13
6/21/12	MP-9-1-Cs-137-14	Hot Lab exposure scenario, line A source, 25 ft. length with unit Cs-137.	MP-9-1-14	8.951E-16
6/21/12	MP-9-1-Cs-137-15	Hot Lab exposure scenario, line B source, 25 ft. length with unit Cs-137.	MP-9-1-15	7.021E-16
5/29/12	BP-2-1 Case 1	Pent Ditch Crossover, 70 ft long pipe with unit Co-60. The 24 in overflow drain above the main culvert pipes is not modeled.	BP-2-1-01	4.725E-12
5/29/12	BP-2-1 Case 2	Pent Ditch Crossover, 70 ft long pipe with unit Co-60. The 24 in overflow drain above the main culvert pipes is modeled as an air gap with effective thickness of 12 in.	BP-2-1-02	6.141E-11
5/29/12	BP-2-1 Case 3	Pent Ditch Crossover. Sensitivity Anal. Same as BP2-1 Case 2 except crossover pipe is 25 ft. long.	BP-2-1-03	6.135E-11
5/29/12	BP-2-1 Case 4	Pent Ditch Crossover. Sensitivity Anal. Same as BP2-1 Case 2 except crossover pipe is 50 ft. long.	BP-2-1-04	6.140E-11
5/29/12	BP-2-1 Case 5	Pent Ditch Crossover. Sensitivity Anal. Same as BP2-1 Case 2 except crossover pipe is 40 ft. long.	BP-2-1-05	6.140E-11
5/29/12	BP-2-1 Case 6	Pent Ditch Crossover. Sensitivity Anal. Same as BP2-1 Case 2 except crossover pipe is 30 ft. long.	BP-2-1-06	6.139E-11
6/13/12	BP-2-1 Case 7	Pent Ditch Crossover, 40 ft long pipe with unit Cs-137 and revised dimensions (6/5/12). The 24 in overflow drain above the main culvert pipes is modeled as an air gap with effective thickness of 12 in.	BP-2-1-07	9.6314E-14

MicroShield Case Run Index

Run Date	Case Title	Description	File Name	Result (mrem/h)
6/13/12	BP-2-1 Case 7A	Pent Ditch Crossover, 40 ft long pipe with unit Co-60 and revised dimensions (6/5/12). The 24 in overflow drain above the main culvert pipes is modeled as an air gap with effective thickness of 12 in.	BP-2-1-07A	6.641E-12
6/1/12	BP-2-1 Case 8	Pent Ditch Crossover alternative scenario, worker in ditch exposed to pipe ends; unit Co-60.	BP-2-1-08	1.289E-12
6/1/12	BP-2-1 Case 9	Pent Ditch Crossover alternative scenario, worker in ditch exposed to pipe ends; unit Cs-137.	BP-2-1-09	1.290E-14
5/31/12	MP-10-4 Case 1	Quad D six in. schedule 40 horizontal pipe/penetration at -6.5 ft. elevation with unit Co-60. Dose point 1 m above Quad Floor. Alternate case to show dose is much lower here.	MP-10-4-01	1.599E-32
6/6/12	MP-10-4 Case 2	Quad D six pipe cluster with dose point above Quad outer wall. Pipe 310 with unit Co-60.	MP-10-4-02	2.502E-19
6/6/12	MP-10-4 Case 3	Quad D six pipe cluster with dose point above Quad outer wall. Pipe 311 with unit Co-60.	MP-10-4-03	2.948E-19
6/6/12	MP-10-4 Case 4	Quad D six pipe cluster with dose point above Quad outer wall. Pipe 312 with unit Co-60.	MP-10-4-04	4.30E-19
6/6/12	MP-10-4 Case 5	Quad D six pipe cluster with dose point above Quad outer wall. Pipe 313 with unit Co-60.	MP-10-4-05	2.666E-19
6/6/12	MP-10-4 Case 6	Quad D six pipe cluster with dose point above Quad outer wall. Pipe 314 with unit Co-60.	MP-10-4-06	1.977E-19
6/6/12	MP-10-4 Case 7	Quad D six pipe cluster with dose point above Quad outer wall. Pipe 315 with unit Co-60.	MP-10-4-07	1.105E-19
6/6/12	MP-10-4 Case 8	Quad D six pipe cluster with dose point above Quad outer wall. Pipe 310 with unit Cs-137.	MP-10-4-08	1.226E-23
6/6/12	MP-10-4 Case 9	Quad D six pipe cluster with dose point above Quad outer wall. Pipe 311 with unit Cs-137.	MP-10-4-09	1.662E-23
6/6/12	MP-10-4 Case 10	Quad D six pipe cluster with dose point above Quad outer wall. Pipe 312 with unit Cs-137.	MP-10-4-10	2.781E-23
6/6/12	MP-10-4 Case 11	Quad D six pipe cluster with dose point above Quad outer wall. Pipe 313 with unit Cs-137.	MP-10-4-11	1.556E-23
6/6/12	MP-10-4 Case 12	Quad D six pipe cluster with dose point above Quad outer wall. Pipe 314 with unit Cs-137.	MP-10-4-12	1.036E-23

MicroShield Case Run Index

Run Date	Case Title	Description	File Name	Result (mrem/h)
6/6/12	MP-10-4 Case 13	Quad D six pipe cluster with dose point above Quad outer wall. Pipe 315 with unit Cs-137.	MP-10-4-13	4.703E-24
5/31/12	BP-1-1 Case 1	4 in San Sewer line below grade, dose to receptor above grade from Unit Co-60	BP-1-1-01	4.337E-14
6/5/12	BP-1-1 Case 2	4 in San Sewer line below grade, dose to receptor above grade from Unit Cs-137	BP-1-1-02	1.372E-16
6/5/12	BP-1-1 Case 3	4 in San Sewer line below grade, dose to receptor above grade from Unit Eu-154	BP-1-1-03	2.723E-14
6/11/12	MP-10-5 Case 1	Quad C, 11 pipe cluster with dose point directly above Line 397. Source is Line 397. Unit Co-60 activity.	MP-10-5-01	3.312E-11
6/11/12	MP-10-5 Case 2	Quad C, 11 pipe cluster with dose point directly above Line 397. Source is Line 396/398. Unit Co-60 activity.	MP-10-5-02	3.192E-11
6/11/12	MP-10-5 Case 3	Quad C, 11 pipe cluster with dose point directly above Line 397. Source is Line 387/389. Unit Co-60 activity.	MP-10-5-03	4.433E-19
6/11/12	MP-10-5 Case 4	Quad C, 11 pipe cluster with dose point directly above Line 397. Source is Line 337. Unit Co-60 activity.	MP-10-5-04	3.535E-20
6/11/12	MP-10-5 Case 5	Quad C, 11 pipe cluster with dose point directly above Line 397. Source is Line 397. Unit Cs-137 activity.	MP-10-5-05	2.044E-12
6/11/12	MP-10-5 Case 6	Quad C, 11 pipe cluster with dose point directly above Line 397. Source is Line 396/398. Unit Cs-137 activity.	MP-10-5-06	1.951E-12
6/11/12	MP-10-5 Case 7	Quad C, 11 pipe cluster with dose point directly above Line 397. Source is Line 387/389. Unit Cs-137 activity.	MP-10-5-07	2.659E-23
6/11/12	MP-10-5 Case 8	Quad C, 11 pipe cluster with dose point directly above Line 397. Source is Line 337. Unit Co-60 activity.	MP-10-5-08	1.003E-24
6/12/12	MP-10-5 Case 9	Alternate scenario. Quad C, 11 pipe cluster with dose point directly above Line 387. Source is Line 387. Unit Co-60 activity.	MP-10-5-09	1.095E-18
6/12/12	MP-10-5 Case 10	Alternate scenario. Quad C, 11 pipe cluster with dose point directly above Line 387. Source is Line 396. Unit Co-60 activity.	MP-10-5-10	2.352E-11
6/12/12	MP-10-5 Case 11	Alternate scenario. Quad C, 11 pipe cluster with dose point directly above Line 387. Source is Line 397. Unit Co-60 activity.	MP-10-5-11	1.327E-11
6/12/12	MP-10-5 Case 12	Alternate scenario. Quad C, 11 pipe cluster with dose point directly above Line 387. Source is Line 398. Unit Co-60 activity.	MP-10-5-12	9.207E-12
6/12/12	MP-10-5 Case 13	Alternate scenario. Quad C, 11 pipe cluster with dose point directly above Line 387. Source is Line 337. Unit Co-60 activity.	MP-10-5-13	2.155E-19
6/12/12	MP-10-5 Case	Alternate scenario. Quad C, 11 pipe cluster	MP-10-5-14	3.455E-20

MicroShield Case Run Index

Run Date	Case Title	Description	File Name	Result (mrem/h)
	14	with dose point directly above Line 387. Source is Line 389. Unit Co-60 activity.		
6/12/12	MP-10-5 Case 15	Alternate scenario. Quad C, 11 pipe cluster with dose point directly above Line 387. Source is Line 387. Unit Cs-137 activity.	MP-10-5-15	9.070E-23
6/12/12	MP-10-5 Case 16	Alternate scenario. Quad C, 11 pipe cluster with dose point directly above Line 387. Source is Line 396. Unit Cs-137 activity.	MP-10-5-16	1.323E-12
6/12/12	MP-10-5 Case 17	Alternate scenario. Quad C, 11 pipe cluster with dose point directly above Line 387. Source is Line 397. Unit Cs-137 activity.	MP-10-5-17	6.368E-13
6/12/12	MP-10-5 Case 18	Alternate scenario. Quad C, 11 pipe cluster with dose point directly above Line 387. Source is Line 398. Unit Cs-137 activity.	MP-10-5-18	3.983E-13
6/12/12	MP-10-5 Case 19	Alternate scenario. Quad C, 11 pipe cluster with dose point directly above Line 387. Source is Line 337. Unit Cs-137 activity.	MP-10-5-19	1.165E-23
6/12/12	MP-10-5 Case 20	Alternate scenario. Quad C, 11 pipe cluster with dose point directly above Line 387. Source is Line 389. Unit Cs-137 activity.	MP-10-5-20	8.370E-25
6/12/12	MP-10-3 Case 1	Quad C 6 pipe cluster. Dose point above quad wall between lines 304 and 305. Source is Line 302, Co-60 with unit activity.	MP-3-01	1.105E-19
6/12/12	MP-10-3 Case 2	Quad C 6 pipe cluster. Dose point above quad wall between lines 304 and 305. Source is Line 303, Co-60 with unit activity.	MP-3-02	1.409E-19
6/12/12	MP-10-3 Case 3	Quad C 6 pipe cluster. Dose point above quad wall between lines 304 and 305. Source is Line 304, Co-60 with unit activity.	MP-3-03	2.665E-19
6/12/12	MP-10-3 Case 4	Quad C 6 pipe cluster. Dose point above quad wall between lines 304 and 305. Source is Line 305, Co-60 with unit activity.	MP-3-04	4.303E-19
6/12/12	MP-10-3 Case 5	Quad C 6 pipe cluster. Dose point above quad wall between lines 304 and 305. Source is Line 306, Co-60 with unit activity.	MP-3-05	2.948E-19
6/12/12	MP-10-3 Case 6	Quad C 6 pipe cluster. Dose point above quad wall between lines 304 and 305. Source is Line 307, Co-60 with unit activity.	MP-3-06	2.502E-19
6/12/12	MP-10-3 Case 7	Quad C 6 pipe cluster. Dose point above quad wall between lines 304 and 305. Source is Line 302, Cs-137 with unit activity.	MP-3-07	4.703E-24
6/12/12	MP-10-3 Case 8	Quad C 6 pipe cluster. Dose point above quad wall between lines 304 and 305. Source is Line 303, Cs-137 with unit activity.	MP-3-08	6.959E-24
6/12/12	MP-10-3 Case 9	Quad C 6 pipe cluster. Dose point above quad wall between lines 304 and 305. Source is Line 304, Cs-137 with unit	MP-3-09	1.556E-23

MicroShield Case Run Index

Run Date	Case Title	Description	File Name	Result (mrem/h)
		activity.		
6/12/12	MP-10-3 Case 10	Quad C 6 pipe cluster. Dose point above quad wall between lines 304 and 305. Source is Line 305, Cs-137 with unit activity.	MP-3-10	2.781E-23
6/12/12	MP-10-3 Case 11	Quad C 6 pipe cluster. Dose point above quad wall between lines 304 and 305. Source is Line 306, Cs-137 with unit activity.	MP-3-11	1.662E-23
6/12/12	MP-10-3 Case 12	Quad C 6 pipe cluster. Dose point above quad wall between lines 304 and 305. Source is Line 307, Cs-137 with unit activity.	MP-3-12	1.226E-23

MicroShield 7.02
LMCO ODIN (07-MSD-7.02-1385)

Date	By	Checked

Filename	Run Date	Run Time	Duration
16-May-12-01.ms7	May 16, 2012	5:11:43 PM	00:00:00

Project Info	
Case Title	Line 1.21 A2
Description	Verify TBD-06-001 Base Case w Co-60 Unit Activity
Geometry	10 - Cylinder Surface - External Dose Point

Source Dimensions	
Height	762.0 cm (25 ft)
Radius	7.62 cm (3.0 in)

Dose Points			
A	X	Y	Z
#1	138.78 cm (4 ft 6.6 in)	381.0 cm (12 ft 6.0 in)	45.7 cm (1 ft 6.0 in)

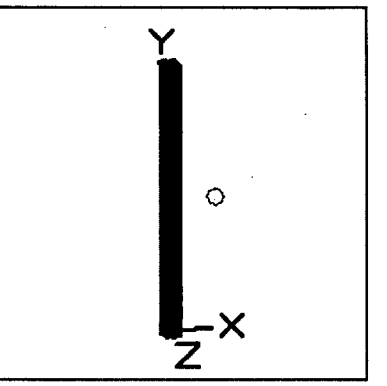

Shields			
Shield N	Dimension	Material	Density
Cyl. Radius	7.62 cm	Concrete	1.8
Shield 1	.65 cm	Iron	7.86
Transition		Concrete	2.4
Shield 3	30.48 cm	Concrete	2.4
Air Gap		Air	0.00122
Wall Clad	.025 cm	Iron	7.86

Source Input: Grouping Method - Actual Photon Energies				
Nuclide	Ci	Bq	μCi/cm²	Bq/cm²
Co-60	1.6417e-010	6.0744e+000	4.5000e-009	1.6650e-004

Buildup: The material reference is Cyl. Radius Integration Parameters	
Y Direction (axial)	20
Circumferential	20

Results

Energy	Activity	Fluence Rate	Fluence Rate MeV/cm²/sec	Exposure Rate	Exposure Rate mR/hr

(MeV)	(Photons/sec)	MeV/cm²/sec No Buildup	With Buildup	mR/hr No Buildup	With Buildup
0.6938	9.909e-04	3.041e-13	5.389e-12	5.872e-16	1.040e-14
1.1732	6.074e+00	1.656e-08	1.527e-07	2.959e-11	2.728e-10
1.3325	6.074e+00	2.723e-08	2.171e-07	4.723e-11	3.766e-10
Totals	**1.215e+01**	**4.378e-08**	**3.697e-07**	**7.682e-11**	**6.494e-10**

MicroShield 7.02 (07-MSD-7.02-1385)
LMCO ODIN
Conversion of calculated exposure in air to dose
FILE: C:\Program Files (x86)\MicroShield 7\Examples\CaseFiles\16-May-12-01.ms7
Case Title: Line 1.21 A2
This case was run on Wednesday, May 16, 2012 at 5:11:43 PM
Dose Point # 1 - (138.78,381,45.7) cm

Results (Summed over energies)	Units	Without Buildup	With Buildup
Photon Fluence Rate (flux)	Photons/cm²/sec	3.454e-008	2.930e-007
Photon Energy Fluence Rate	MeV/cm²/sec	4.378e-008	3.697e-007
Exposure and Dose Rates:			
Exposure Rate in Air	mR/hr	7.682e-011	6.494e-010
Absorbed Dose Rate in Air	mGy/hr	6.707e-013	5.670e-012
"	mrad/hr	6.707e-011	5.670e-010
Deep Dose Equivalent Rate	(ICRP 51 - 1987)		
o Parallel Geometry	mSv/hr	7.614e-013	6.438e-012
o Opposed	"	6.558e-013	5.542e-012
o Rotational	"	6.558e-013	5.542e-012
o Isotropic	"	5.858e-013	4.950e-012
Shallow Dose Equivalent Rate	(ICRP 51 - 1987)		
o Parallel Geometry	mSv/hr	8.105e-013	6.854e-012
o Opposed	"	7.804e-013	6.598e-012
o Rotational	"	7.804e-013	6.598e-012
o Isotropic	"	6.206e-013	5.246e-012
Effective Dose Equivalent Rate	(ICRP 51 - 1987)		
o Anterior/Posterior Geometry	mSv/hr	6.856e-013	5.797e-012
o Posterior/Anterior	"	6.316e-013	5.339e-012
o Lateral	"	5.024e-013	4.244e-012
o Rotational	"	5.687e-013	4.807e-012
o Isotropic	"	5.034e-013	4.253e-012

MicroShield 7.02
LMCO ODIN (07-MSD-7.02-1385)

Date	By	Checked

Filename	Run Date	Run Time	Duration
16-May-12-01.ms7	May 16, 2012	5:11:43 PM	00:00:00

Project Info	
Case Title	Line 1.21 A2
Description	Verify TBD-06-001 Base Case w Co-60 Unit Activity
Geometry	10 - Cylinder Surface - External Dose Point

Source Dimensions	
Height	762.0 cm (25 ft)
Radius	7.62 cm (3.0 in)

Dose Points			
A	X	Y	Z
#1	138.78 cm (4 ft 6.6 in)	381.0 cm (12 ft 6.0 in)	45.7 cm (1 ft 6.0 in)

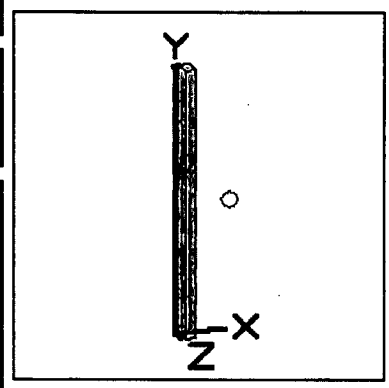

Shields			
Shield N	Dimension	Material	Density
Cyl. Radius	7.62 cm	Concrete	1.8
Shield 1	.65 cm	Iron	7.86
Transition		Concrete	2.4
Shield 3	30.48 cm	Concrete	2.4
Air Gap		Air	0.00122
Wall Clad	.025 cm	Iron	7.86

Source Input: Grouping Method - Actual Photon Energies				
Nuclide	Ci	Bq	µCi/cm²	Bq/cm²
Co-60	1.6417e-010	6.0744e+000	4.5000e-009	1.6650e-004

Buildup: The material reference is Cyl. Radius Integration Parameters	
Y Direction (axial)	20
Circumferential	20

Results					
Energy (MeV)	Activity (Photons/sec)	Fluence Rate MeV/cm²/sec No Buildup	Fluence Rate MeV/cm²/sec With Buildup	Exposure Rate mR/hr No Buildup	Exposure Rate mR/hr With Buildup
0.6938	9.909e-04	3.041e-13	5.389e-12	5.872e-16	1.040e-14
1.1732	6.074e+00	1.656e-08	1.527e-07	2.959e-11	2.728e-10
1.3325	6.074e+00	2.723e-08	2.171e-07	4.723e-11	3.766e-10
Totals	**1.215e+01**	**4.378e-08**	**3.697e-07**	**7.682e-11**	**6.494e-10**

MicroShield 7.02
LMCO ODIN (07-MSD-7.02-1385)

Date	By	Checked

Filename	Run Date	Run Time	Duration
MP9-1-01.ms7	May 22, 2012	5:47:36 PM	00:00:00

Project Info	
Case Title	MP-9-1-Co-60-1
Description	Dose to MP-9-1 Receptor from Unit Co-60 Activity
Geometry	10 - Cylinder Surface - External Dose Point

Source Dimensions	
Height	2.4e+3 cm (77 ft 9.0 in)
Radius	2.46 cm (1.0 in)

Dose Points			
A	X	Y	Z
#1	256.209 cm (8 ft 4.9 in)	1.2e+3 cm (38 ft 10.5 in)	8.12 cm (3.2 in)

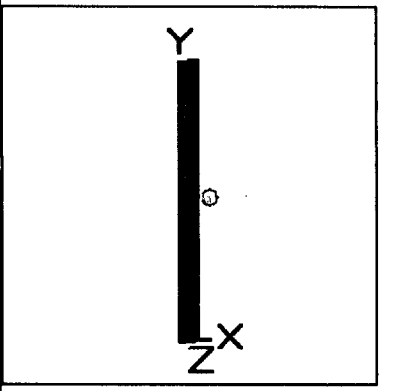

Shields			
Shield N	Dimension	Material	Density
Cyl. Radius	2.46 cm	Air	0.00122
Transition	.554 cm	HDPE	0.94
Shield 2	7.12 cm	Concrete	2.4
Shield 3	115.57 cm	Average Soil	1.52
Shield 4	30.48 cm	Concrete	2.4
Air Gap		Air	0.00122
Wall Clad	.025 cm	HDPE	0.94

Source Input: Grouping Method - Actual Photon Energies				
Nuclide	Ci	Bq	µCi/cm²	Bq/cm²
Co-60	1.6483e-010	6.0988e+000	4.5000e-009	1.6650e-004

Buildup: The material reference is Shield 3 Integration Parameters	
Y Direction (axial)	20
Circumferential	20

Results					
		Fluence	Fluence Rate	Exposure	Exposure Rate

Energy (MeV)	Activity (Photons/sec)	Rate MeV/cm²/sec No Buildup	MeV/cm²/sec With Buildup	Rate mR/hr No Buildup	mR/hr With Buildup
0.6938	9.948e-04	1.119e-19	9.523e-18	2.160e-22	1.839e-20
1.1732	6.099e+00	1.111e-13	3.625e-12	1.986e-16	6.477e-15
1.3325	6.099e+00	3.425e-13	9.028e-12	5.941e-16	1.566e-14
Totals	**1.220e+01**	**4.536e-13**	**1.265e-11**	**7.927e-16**	**2.214e-14**

MicroShield 7.02 (07-MSD-7.02-1385)
LMCO ODIN
Conversion of calculated exposure in air to dose
FILE: C:\Program Files (x86)\MicroShield 7\Examples\CaseFiles\MP9-1-01.ms7
Case Title: MP-9-1-Co-60-1
This case was run on Tuesday, May 22, 2012 at 6:01:53 PM
Dose Point # 1 - (256.209,1184.91,8.12) cm

Results (Summed over energies)	Units	Without Buildup	With Buildup
Photon Fluence Rate (flux)	Photons/cm²/sec	3.517e-013	9.865e-012
Photon Energy Fluence Rate	MeV/cm²/sec	4.536e-013	1.265e-011
Exposure and Dose Rates:			
Exposure Rate in Air	mR/hr	7.927e-016	2.214e-014
Absorbed Dose Rate in Air	mGy/hr	6.920e-018	1.933e-016
"	mrad/hr	6.920e-016	1.933e-014
Deep Dose Equivalent Rate	(ICRP 51 - 1987)		
o Parallel Geometry	mSv/hr	7.852e-018	2.193e-016
o Opposed	"	6.773e-018	1.891e-016
o Rotational	"	6.773e-018	1.891e-016
o Isotropic	"	6.054e-018	1.690e-016
Shallow Dose Equivalent Rate	(ICRP 51 - 1987)		
o Parallel Geometry	mSv/hr	8.354e-018	2.334e-016
o Opposed	"	8.049e-018	2.248e-016
o Rotational	"	8.049e-018	2.248e-016
o Isotropic	"	6.409e-018	1.790e-016
Effective Dose Equivalent Rate	(ICRP 51 - 1987)		
o Anterior/Posterior Geometry	mSv/hr	7.072e-018	1.975e-016
o Posterior/Anterior	"	6.521e-018	1.821e-016
o Lateral	"	5.197e-018	1.450e-016
o Rotational	"	5.874e-018	1.640e-016
o Isotropic	"	5.204e-018	1.453e-016

MicroShield 7.02
LMCO ODIN (07-MSD-7.02-1385)

Date	By	Checked

Filename	Run Date	Run Time	Duration
MP-9-1-Co-60-2.ms7	May 24, 2012	9:19:52 AM	00:00:00

Project Info	
Case Title	MP-9-1-Co-60-2
Description	Dose to MP-9-1 Receptor from Unit Co-60 Activity Sens Anal 1
Geometry	10 - Cylinder Surface - External Dose Point

Source Dimensions	
Height	609.6 cm (20 ft 0.0 in)
Radius	2.46 cm (1.0 in)

Dose Points			
A	X	Y	Z
#1	256.209 cm (8 ft 4.9 in)	304.8 cm (10 ft 0.0 in)	8.12 cm (3.2 in)

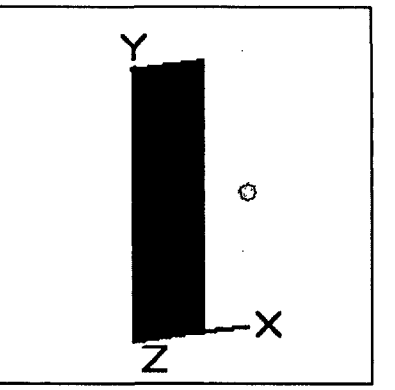

Shields			
Shield N	Dimension	Material	Density
Cyl. Radius	2.46 cm	Air	0.00122
Transition	.554 cm	HDPE	0.94
Shield 2	7.12 cm	Concrete	2.4
Shield 3	115.57 cm	Average Soil	1.52
Shield 4	30.48 cm	Concrete	2.4
Air Gap		Air	0.00122
Wall Clad	.025 cm	HDPE	0.94

Source Input: Grouping Method - Actual Photon Energies				
Nuclide	Ci	Bq	µCi/cm²	Bq/cm²
Co-60	4.2401e-011	1.5688e+000	4.5000e-009	1.6650e-004

Buildup: The material reference is Shield 3 Integration Parameters	
Y Direction (axial)	20
Circumferential	20

Results					
		Fluence	Fluence Rate	Exposure	Exposure Rate

Energy (MeV)	Activity (Photons/sec)	Rate MeV/cm²/sec No Buildup	MeV/cm²/sec With Buildup	Rate mR/hr No Buildup	mR/hr With Buildup
0.6938	2.559e-04	1.118e-19	9.506e-18	2.159e-22	1.835e-20
1.1732	1.569e+00	1.108e-13	3.616e-12	1.981e-16	6.461e-15
1.3325	1.569e+00	3.416e-13	9.007e-12	5.927e-16	1.563e-14
Totals	**3.138e+00**	**4.525e-13**	**1.262e-11**	**7.908e-16**	**2.209e-14**

MicroShield 7.02 (07-MSD-7.02-1385)
LMCO ODIN
Conversion of calculated exposure in air to dose
FILE: C:\Program Files (x86)\MicroShield 7\Examples\CaseFiles\MP-9-1-Co-60-2.ms7
Case Title: MP-9-1-Co-60-2
This case was run on Thursday, May 24, 2012 at 9:19:52 AM
Dose Point # 1 - (256.209,304.8,8.12) cm

Results (Summed over energies)	Units	Without Buildup	With Buildup
Photon Fluence Rate (flux)	Photons/cm²/sec	3.509e-013	9.841e-012
Photon Energy Fluence Rate	MeV/cm²/sec	4.525e-013	1.262e-011
Exposure and Dose Rates:			
Exposure Rate in Air	mR/hr	7.908e-016	2.209e-014
Absorbed Dose Rate in Air	mGy/hr	6.903e-018	1.928e-016
"	mrad/hr	6.903e-016	1.928e-014
Deep Dose Equivalent Rate	(ICRP 51 - 1987)		
o Parallel Geometry	mSv/hr	7.832e-018	2.188e-016
o Opposed	"	6.756e-018	1.887e-016
o Rotational	"	6.756e-018	1.887e-016
o Isotropic	"	6.039e-018	1.686e-016
Shallow Dose Equivalent Rate	(ICRP 51 - 1987)		
o Parallel Geometry	mSv/hr	8.333e-018	2.328e-016
o Opposed	"	8.029e-018	2.243e-016
o Rotational	"	8.029e-018	2.243e-016
o Isotropic	"	6.394e-018	1.785e-016
Effective Dose Equivalent Rate	(ICRP 51 - 1987)		
o Anterior/Posterior Geometry	mSv/hr	7.055e-018	1.971e-016
o Posterior/Anterior	"	6.505e-018	1.817e-016
o Lateral	"	5.184e-018	1.447e-016
o Rotational	"	5.859e-018	1.636e-016
o Isotropic	"	5.191e-018	1.449e-016

MicroShield 7.02
LMCO ODIN (07-MSD-7.02-1385)

Date	By	Checked

Filename	Run Date	Run Time	Duration
MP9-1-03.ms7	May 24, 2012	10:11:20 AM	00:00:00

Project Info	
Case Title	MP-9-1-Co-60-3
Description	Dose to MP-9-1 Receptor from Unit Co-60 Activity Sens Anal 2
Geometry	10 - Cylinder Surface - External Dose Point

Source Dimensions	
Height	762.0 cm (25 ft)
Radius	2.46 cm (1.0 in)

Dose Points			
A	X	Y	Z
#1	256.209 cm (8 ft 4.9 in)	381.8 cm (12 ft 6.3 in)	8.12 cm (3.2 in)

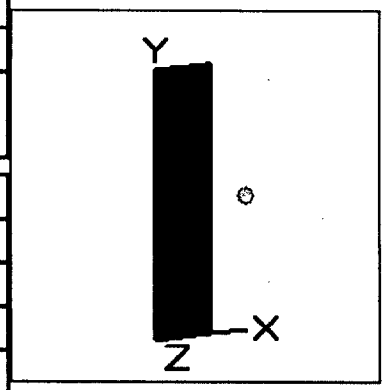

Shields			
Shield N	Dimension	Material	Density
Cyl. Radius	2.46 cm	Air	0.00122
Transition	.554 cm	HDPE	0.94
Shield 2	7.12 cm	Concrete	2.4
Shield 3	115.57 cm	Average Soil	1.52
Shield 4	30.48 cm	Concrete	2.4
Air Gap		Air	0.00122
Wall Clad	.025 cm	HDPE	0.94

Source Input: Grouping Method - Actual Photon Energies				
Nuclide	Ci	Bq	µCi/cm²	Bq/cm²
Co-60	5.3001e-011	1.9610e+000	4.5000e-009	1.6650e-004

Buildup: The material reference is Shield 3 Integration Parameters	
Y Direction (axial)	20
Circumferential	20

Results					
		Fluence	Fluence Rate	Exposure	Exposure Rate

Energy (MeV)	Activity (Photons/sec)	Rate MeV/cm²/sec No Buildup	MeV/cm²/sec With Buildup	Rate mR/hr No Buildup	mR/hr With Buildup
0.6938	3.199e-04	1.118e-19	9.506e-18	2.159e-22	1.835e-20
1.1732	1.961e+00	1.109e-13	3.616e-12	1.981e-16	6.461e-15
1.3325	1.961e+00	3.416e-13	9.007e-12	5.927e-16	1.563e-14
Totals	**3.922e+00**	**4.525e-13**	**1.262e-11**	**7.908e-16**	**2.209e-14**

MicroShield 7.02 (07-MSD-7.02-1385)
LMCO ODIN
Conversion of calculated exposure in air to dose
FILE: C:\Program Files (x86)\MicroShield 7\Examples\CaseFiles\MP9-1-03.ms7
Case Title: MP-9-1-Co-60-3
This case was run on Thursday, May 24, 2012 at 10:11:20 AM
Dose Point # 1 - (256.209,381.8,8.12) cm

Results (Summed over energies)	Units	Without Buildup	With Buildup
Photon Fluence Rate (flux)	Photons/cm²/sec	3.509e-013	9.842e-012
Photon Energy Fluence Rate	MeV/cm²/sec	4.525e-013	1.262e-011
Exposure and Dose Rates:			
Exposure Rate in Air	mR/hr	7.908e-016	2.209e-014
Absorbed Dose Rate in Air	mGy/hr	6.904e-018	1.928e-016
"	mrad/hr	6.904e-016	1.928e-014
Deep Dose Equivalent Rate	(ICRP 51 - 1987)		
o Parallel Geometry	mSv/hr	7.833e-018	2.188e-016
o Opposed	"	6.757e-018	1.887e-016
o Rotational	"	6.757e-018	1.887e-016
o Isotropic	"	6.039e-018	1.686e-016
Shallow Dose Equivalent Rate	(ICRP 51 - 1987)		
o Parallel Geometry	mSv/hr	8.334e-018	2.329e-016
o Opposed	"	8.029e-018	2.243e-016
o Rotational	"	8.029e-018	2.243e-016
o Isotropic	"	6.394e-018	1.785e-016
Effective Dose Equivalent Rate	(ICRP 51 - 1987)		
o Anterior/Posterior Geometry	mSv/hr	7.055e-018	1.971e-016
o Posterior/Anterior	"	6.505e-018	1.817e-016
o Lateral	"	5.184e-018	1.447e-016
o Rotational	"	5.860e-018	1.636e-016
o Isotropic	"	5.191e-018	1.449e-016

MicroShield 7.02
LMCO ODIN (07-MSD-7.02-1385)

Date	By	Checked

Filename	Run Date	Run Time	Duration
MP9-1-04.ms7	May 24, 2012	9:45:16 AM	00:00:00

Project Info	
Case Title	MP-9-1-Co-60-4
Description	Dose to MP-9-1 Receptor from Unit Co-60 Activity Sens Anal 3
Geometry	10 - Cylinder Surface - External Dose Point

Source Dimensions	
Height	914.4 cm (30 ft)
Radius	2.46 cm (1.0 in)

Dose Points			
A	X	Y	Z
#1	256.209 cm (8 ft 4.9 in)	457.2 cm (15 ft)	8.12 cm (3.2 in)

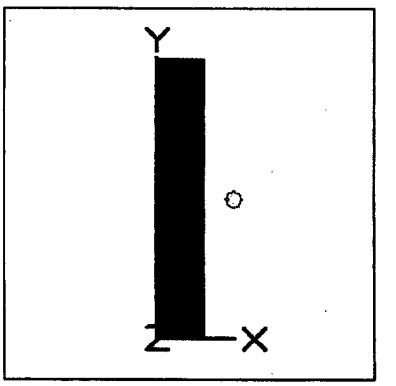

Shields			
Shield N	Dimension	Material	Density
Cyl. Radius	2.46 cm	Air	0.00122
Transition	.554 cm	HDPE	0.94
Shield 2	7.12 cm	Concrete	2.4
Shield 3	115.57 cm	Average Soil	1.52
Shield 4	30.48 cm	Concrete	2.4
Air Gap		Air	0.00122
Wall Clad	.025 cm	HDPE	0.94

Source Input: Grouping Method - Actual Photon Energies				
Nuclide	Ci	Bq	µCi/cm²	Bq/cm²
Co-60	6.3601e-011	2.3532e+000	4.5000e-009	1.6650e-004

Buildup: The material reference is Shield 3 Integration Parameters	
Y Direction (axial)	20
Circumferential	20

Results

Energy	Activity	Fluence Rate	Fluence Rate MeV/cm²/sec	Exposure Rate	Exposure Rate mR/hr

(MeV)	(Photons/sec)	MeV/cm²/sec No Buildup	With Buildup	mR/hr No Buildup	With Buildup
0.6938	3.839e-04	1.118e-19	9.506e-18	2.159e-22	1.835e-20
1.1732	2.353e+00	1.109e-13	3.616e-12	1.981e-16	6.461e-15
1.3325	2.353e+00	3.416e-13	9.008e-12	5.927e-16	1.563e-14
Totals	**4.707e+00**	**4.525e-13**	**1.262e-11**	**7.908e-16**	**2.209e-14**

MicroShield 7.02 (07-MSD-7.02-1385)
LMCO ODIN
Conversion of calculated exposure in air to dose
FILE: C:\Program Files (x86)\MicroShield 7\Examples\CaseFiles\MP9-1-04.ms7
Case Title: MP-9-1-Co-60-4
This case was run on Thursday, May 24, 2012 at 9:45:16 AM
Dose Point # 1 - (256.209,457.2,8.12) cm

Results (Summed over energies)	Units	Without Buildup	With Buildup
Photon Fluence Rate (flux)	Photons/cm²/sec	3.509e-013	9.842e-012
Photon Energy Fluence Rate	MeV/cm²/sec	4.525e-013	1.262e-011
Exposure and Dose Rates:			
Exposure Rate in Air	mR/hr	7.908e-016	2.209e-014
Absorbed Dose Rate in Air	mGy/hr	6.904e-018	1.928e-016
"	mrad/hr	6.904e-016	1.928e-014
Deep Dose Equivalent Rate	(ICRP 51 - 1987)		
o Parallel Geometry	mSv/hr	7.833e-018	2.188e-016
o Opposed	"	6.757e-018	1.887e-016
o Rotational	"	6.757e-018	1.887e-016
o Isotropic	"	6.039e-018	1.686e-016
Shallow Dose Equivalent Rate	(ICRP 51 - 1987)		
o Parallel Geometry	mSv/hr	8.334e-018	2.329e-016
o Opposed	"	8.029e-018	2.243e-016
o Rotational	"	8.029e-018	2.243e-016
o Isotropic	"	6.394e-018	1.786e-016
Effective Dose Equivalent Rate	(ICRP 51 - 1987)		
o Anterior/Posterior Geometry	mSv/hr	7.055e-018	1.971e-016
o Posterior/Anterior	"	6.505e-018	1.817e-016
o Lateral	"	5.184e-018	1.447e-016
o Rotational	"	5.860e-018	1.636e-016
o Isotropic	"	5.192e-018	1.449e-016

MicroShield 7.02
LMCO ODIN (07-MSD-7.02-1385)

Date	By	Checked

Filename	Run Date	Run Time	Duration
MP9-1-05.ms7	May 24, 2012	9:58:50 AM	00:00:00

Project Info	
Case Title	MP-9-1-Co-60-5
Description	Dose to MP-9-1 Receptor from Unit Co-60 Activity Sens Anal 4
Geometry	10 - Cylinder Surface - External Dose Point

Source Dimensions	
Height	1.2e+3 cm (40 ft 0.0 in)
Radius	2.46 cm (1.0 in)

Dose Points			
A	X	Y	Z
#1	256.209 cm (8 ft 4.9 in)	609.6 cm (20 ft 0.0 in)	8.12 cm (3.2 in)

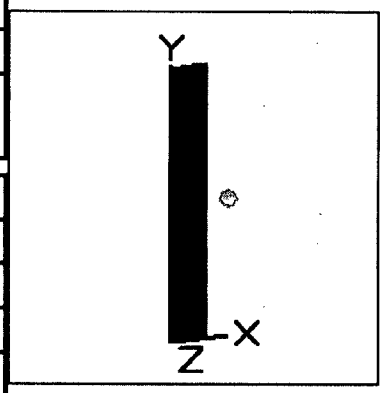

Shields			
Shield N	Dimension	Material	Density
Cyl. Radius	2.46 cm	Air	0.00122
Transition	.554 cm	HDPE	0.94
Shield 2	7.12 cm	Concrete	2.4
Shield 3	115.57 cm	Average Soil	1.52
Shield 4	30.48 cm	Concrete	2.4
Air Gap		Air	0.00122
Wall Clad	.025 cm	HDPE	0.94

Source Input: Grouping Method - Actual Photon Energies				
Nuclide	Ci	Bq	µCi/cm²	Bq/cm²
Co-60	8.4801e-011	3.1376e+000	4.5000e-009	1.6650e-004

Buildup: The material reference is Shield 3 Integration Parameters	
Y Direction (axial)	20
Circumferential	20

Results					
		Fluence	Fluence Rate	Exposure	Exposure Rate

Energy (MeV)	Activity (Photons/sec)	Rate MeV/cm²/sec No Buildup	MeV/cm²/sec With Buildup	Rate mR/hr No Buildup	mR/hr With Buildup
0.6938	5.118e-04	1.118e-19	9.505e-18	2.158e-22	1.835e-20
1.1732	3.138e+00	1.108e-13	3.616e-12	1.981e-16	6.461e-15
1.3325	3.138e+00	3.416e-13	9.007e-12	5.927e-16	1.563e-14
Totals	**6.276e+00**	**4.525e-13**	**1.262e-11**	**7.908e-16**	**2.209e-14**

MicroShield 7.02 (07-MSD-7.02-1385)
LMCO ODIN
Conversion of calculated exposure in air to dose
FILE: C:\Program Files (x86)\MicroShield 7\Examples\CaseFiles\MP9-1-05.ms7
Case Title: MP-9-1-Co-60-5
This case was run on Thursday, May 24, 2012 at 9:58:50 AM
Dose Point # 1 - (256.209,609.6,8.12) cm

Results (Summed over energies)	Units	Without Buildup	With Buildup
Photon Fluence Rate (flux)	Photons/cm²/sec	3.509e-013	9.842e-012
Photon Energy Fluence Rate	MeV/cm²/sec	4.525e-013	1.262e-011
Exposure and Dose Rates:			
Exposure Rate in Air	mR/hr	7.908e-016	2.209e-014
Absorbed Dose Rate in Air	mGy/hr	6.903e-018	1.928e-016
"	mrad/hr	6.903e-016	1.928e-014
Deep Dose Equivalent Rate	(ICRP 51 - 1987)		
o Parallel Geometry	mSv/hr	7.833e-018	2.188e-016
o Opposed	"	6.757e-018	1.887e-016
o Rotational	"	6.757e-018	1.887e-016
o Isotropic	"	6.039e-018	1.686e-016
Shallow Dose Equivalent Rate	(ICRP 51 - 1987)		
o Parallel Geometry	mSv/hr	8.333e-018	2.329e-016
o Opposed	"	8.029e-018	2.243e-016
o Rotational	"	8.029e-018	2.243e-016
o Isotropic	"	6.394e-018	1.785e-016
Effective Dose Equivalent Rate	(ICRP 51 - 1987)		
o Anterior/Posterior Geometry	mSv/hr	7.055e-018	1.971e-016
o Posterior/Anterior	"	6.505e-018	1.817e-016
o Lateral	"	5.184e-018	1.447e-016
o Rotational	"	5.859e-018	1.636e-016
o Isotropic	"	5.191e-018	1.449e-016

MicroShield 7.02
LMCO ODIN (07-MSD-7.02-1385)

Date	By	Checked

Filename	Run Date	Run Time	Duration
MP9-1-06.ms7	May 24, 2012	10:05:25 AM	00:00:00

Project Info	
Case Title	MP-9-1-Co-60-6
Description	Dose to MP-9-1 Receptor from Unit Co-60 Activity Sens Anal 5
Geometry	10 - Cylinder Surface - External Dose Point

Source Dimensions	
Height	1.5e+3 cm (50 ft)
Radius	2.46 cm (1.0 in)

Dose Points			
A	X	Y	Z
#1	256.209 cm (8 ft 4.9 in)	762.0 cm (25 ft)	8.12 cm (3.2 in)

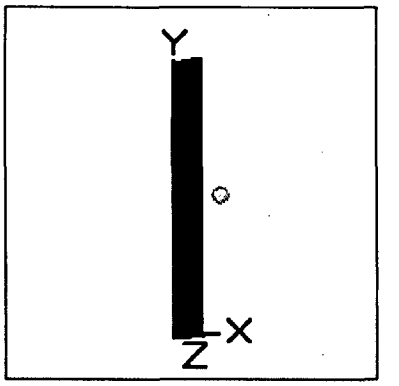

Shields			
Shield N	Dimension	Material	Density
Cyl. Radius	2.46 cm	Air	0.00122
Transition	.554 cm	HDPE	0.94
Shield 2	7.12 cm	Concrete	2.4
Shield 3	115.57 cm	Average Soil	1.52
Shield 4	30.48 cm	Concrete	2.4
Air Gap		Air	0.00122
Wall Clad	.025 cm	HDPE	0.94

Source Input: Grouping Method - Actual Photon Energies				
Nuclide	Ci	Bq	µCi/cm²	Bq/cm²
Co-60	1.0600e-010	3.9221e+000	4.5000e-009	1.6650e-004

Buildup: The material reference is Shield 3 Integration Parameters	
Y Direction (axial)	20
Circumferential	20

Results

Energy	Activity	Fluence Rate	Fluence Rate MeV/cm²/sec	Exposure Rate	Exposure Rate mR/hr

(MeV)	(Photons/sec)	MeV/cm²/sec No Buildup	With Buildup	mR/hr No Buildup	With Buildup
0.6938	6.398e-04	1.118e-19	9.505e-18	2.159e-22	1.835e-20
1.1732	3.922e+00	1.108e-13	3.615e-12	1.981e-16	6.460e-15
1.3325	3.922e+00	3.416e-13	9.006e-12	5.926e-16	1.563e-14
Totals	**7.845e+00**	**4.524e-13**	**1.262e-11**	**7.907e-16**	**2.209e-14**

MicroShield 7.02 (07-MSD-7.02-1385)
LMCO ODIN
Conversion of calculated exposure in air to dose
FILE: C:\Program Files (x86)\MicroShield 7\Examples\CaseFiles\MP9-1-06.ms7
Case Title: MP-9-1-Co-60-6
This case was run on Thursday, May 24, 2012 at 10:05:25 AM
Dose Point # 1 - (256.209,762,8.12) cm

Results (Summed over energies)	Units	Without Buildup	With Buildup
Photon Fluence Rate (flux)	Photons/cm²/sec	3.508e-013	9.840e-012
Photon Energy Fluence Rate	MeV/cm²/sec	4.524e-013	1.262e-011
Exposure and Dose Rates:			
Exposure Rate in Air	mR/hr	7.907e-016	2.209e-014
Absorbed Dose Rate in Air	mGy/hr	6.903e-018	1.928e-016
"	mrad/hr	6.903e-016	1.928e-014
Deep Dose Equivalent Rate	(ICRP 51 - 1987)		
o Parallel Geometry	mSv/hr	7.832e-018	2.188e-016
o Opposed	"	6.756e-018	1.887e-016
o Rotational	"	6.756e-018	1.887e-016
o Isotropic	"	6.038e-018	1.686e-016
Shallow Dose Equivalent Rate	(ICRP 51 - 1987)		
o Parallel Geometry	mSv/hr	8.332e-018	2.328e-016
o Opposed	"	8.028e-018	2.243e-016
o Rotational	"	8.028e-018	2.243e-016
o Isotropic	"	6.393e-018	1.785e-016
Effective Dose Equivalent Rate	(ICRP 51 - 1987)		
o Anterior/Posterior Geometry	mSv/hr	7.054e-018	1.971e-016
o Posterior/Anterior	"	6.504e-018	1.817e-016
o Lateral	"	5.183e-018	1.447e-016
o Rotational	"	5.859e-018	1.636e-016
o Isotropic	"	5.191e-018	1.449e-016

MicroShield 7.02
LMCO ODIN (07-MSD-7.02-1385)

Date	By	Checked

Filename	Run Date	Run Time	Duration
MP9-1-07.ms7	May 24, 2012	10:16:45 AM	00:00:00

Project Info	
Case Title	MP-9-1-Co-60-7
Description	Dose to MP-9-1 Receptor from Unit Co-60 Activity Sens Anal 6
Geometry	10 - Cylinder Surface - External Dose Point

Source Dimensions	
Height	1.8e+3 cm (60 ft)
Radius	2.46 cm (1.0 in)

Dose Points			
A	X	Y	Z
#1	256.209 cm (8 ft 4.9 in)	914.4 cm (30 ft)	8.12 cm (3.2 in)

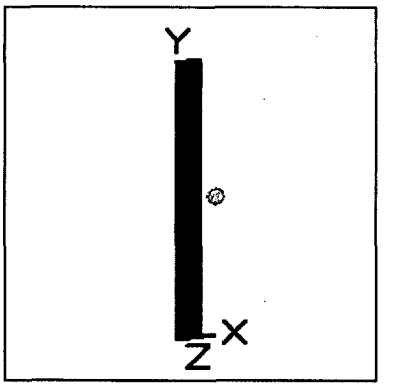

Shields			
Shield N	Dimension	Material	Density
Cyl. Radius	2.46 cm	Air	0.00122
Transition	.554 cm	HDPE	0.94
Shield 2	7.12 cm	Concrete	2.4
Shield 3	115.57 cm	Average Soil	1.52
Shield 4	30.48 cm	Concrete	2.4
Air Gap		Air	0.00122
Wall Clad	.025 cm	HDPE	0.94

Source Input: Grouping Method - Actual Photon Energies				
Nuclide	Ci	Bq	µCi/cm²	Bq/cm²
Co-60	1.2720e-010	4.7065e+000	4.5000e-009	1.6650e-004

Buildup: The material reference is Shield 3 Integration Parameters	
Y Direction (axial)	20
Circumferential	20

Results

Energy	Activity	Fluence Rate	Fluence Rate MeV/cm²/sec	Exposure Rate	Exposure Rate mR/hr

(MeV)	(Photons/sec)	MeV/cm²/sec No Buildup	With Buildup	mR/hr No Buildup	With Buildup
0.6938	7.677e-04	1.120e-19	9.518e-18	2.163e-22	1.838e-20
1.1732	4.706e+00	1.109e-13	3.617e-12	1.982e-16	6.463e-15
1.3325	4.706e+00	3.417e-13	9.009e-12	5.929e-16	1.563e-14
Totals	**9.414e+00**	**4.527e-13**	**1.263e-11**	**7.911e-16**	**2.209e-14**

MicroShield 7.02 (07-MSD-7.02-1385)
LMCO ODIN
Conversion of calculated exposure in air to dose
FILE: C:\Program Files (x86)\MicroShield 7\Examples\CaseFiles\MP9-1-07.ms7
Case Title: MP-9-1-Co-60-7
This case was run on Thursday, May 24, 2012 at 10:16:45 AM
Dose Point # 1 - (256.209,914.4,8.12) cm

Results (Summed over energies)	Units	Without Buildup	With Buildup
Photon Fluence Rate (flux)	Photons/cm²/sec	3.510e-013	9.843e-012
Photon Energy Fluence Rate	MeV/cm²/sec	4.527e-013	1.263e-011
Exposure and Dose Rates:			
Exposure Rate in Air	mR/hr	7.911e-016	2.209e-014
Absorbed Dose Rate in Air	mGy/hr	6.906e-018	1.929e-016
"	mrad/hr	6.906e-016	1.929e-014
Deep Dose Equivalent Rate	(ICRP 51 - 1987)		
o Parallel Geometry	mSv/hr	7.836e-018	2.189e-016
o Opposed	"	6.759e-018	1.887e-016
o Rotational	"	6.759e-018	1.887e-016
o Isotropic	"	6.041e-018	1.686e-016
Shallow Dose Equivalent Rate	(ICRP 51 - 1987)		
o Parallel Geometry	mSv/hr	8.337e-018	2.329e-016
o Opposed	"	8.032e-018	2.243e-016
o Rotational	"	8.032e-018	2.243e-016
o Isotropic	"	6.396e-018	1.786e-016
Effective Dose Equivalent Rate	(ICRP 51 - 1987)		
o Anterior/Posterior Geometry	mSv/hr	7.058e-018	1.971e-016
o Posterior/Anterior	"	6.508e-018	1.817e-016
o Lateral	"	5.186e-018	1.447e-016
o Rotational	"	5.862e-018	1.637e-016
o Isotropic	"	5.194e-018	1.450e-016

MicroShield 7.02
LMCO ODIN (07-MSD-7.02-1385)

Date	By	Checked

Filename	Run Date	Run Time	Duration
MP9-1-08.ms7	May 24, 2012	10:20:02 AM	00:00:00

Project Info	
Case Title	MP-9-1-Co-60-8
Description	Dose to MP-9-1 Receptor from Unit Co-60 Activity Sens Anal 7
Geometry	10 - Cylinder Surface - External Dose Point

Source Dimensions	
Height	2.1e+3 cm (70 ft)
Radius	2.46 cm (1.0 in)

Dose Points			
A	X	Y	Z
#1	256.209 cm (8 ft 4.9 in)	1.1e+3 cm (35 ft)	8.12 cm (3.2 in)

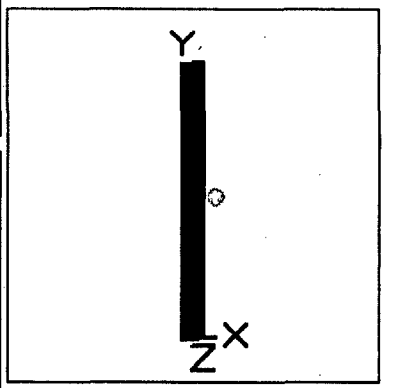

Shields			
Shield N	Dimension	Material	Density
Cyl. Radius	2.46 cm	Air	0.00122
Transition	.554 cm	HDPE	0.94
Shield 2	7.12 cm	Concrete	2.4
Shield 3	115.57 cm	Average Soil	1.52
Shield 4	30.48 cm	Concrete	2.4
Air Gap		Air	0.00122
Wall Clad	.025 cm	HDPE	0.94

Source Input: Grouping Method - Actual Photon Energies				
Nuclide	Ci	Bq	µCi/cm²	Bq/cm²
Co-60	1.4840e-010	5.4909e+000	4.5000e-009	1.6650e-004

Buildup: The material reference is Shield 3 Integration Parameters	
Y Direction (axial)	20
Circumferential	20

Results					
Energy	Activity	Fluence Rate	Fluence Rate MeV/cm²/sec	Exposure Rate	Exposure Rate mR/hr

(MeV)	(Photons/sec)	MeV/cm²/sec No Buildup	With Buildup	mR/hr No Buildup	With Buildup
0.6938	8.957e-04	1.121e-19	9.533e-18	2.165e-22	1.840e-20
1.1732	5.491e+00	1.111e-13	3.622e-12	1.985e-16	6.472e-15
1.3325	5.491e+00	3.422e-13	9.020e-12	5.937e-16	1.565e-14
Totals	**1.098e+01**	**4.533e-13**	**1.264e-11**	**7.923e-16**	**2.212e-14**

MicroShield 7.02 (07-MSD-7.02-1385)
LMCO ODIN
Conversion of calculated exposure in air to dose
FILE: C:\Program Files (x86)\MicroShield 7\Examples\CaseFiles\MP9-1-08.ms7
Case Title: MP-9-1-Co-60-8
This case was run on Thursday, May 24, 2012 at 10:20:02 AM
Dose Point # 1 - (256.209,1066.8,8.12) cm

Results (Summed over energies)	Units	Without Buildup	With Buildup
Photon Fluence Rate (flux)	Photons/cm²/sec	3.515e-013	9.856e-012
Photon Energy Fluence Rate	MeV/cm²/sec	4.533e-013	1.264e-011
Exposure and Dose Rates:			
Exposure Rate in Air	mR/hr	7.923e-016	2.212e-014
Absorbed Dose Rate in Air	mGy/hr	6.916e-018	1.931e-016
"	mrad/hr	6.916e-016	1.931e-014
Deep Dose Equivalent Rate	(ICRP 51 - 1987)		
o Parallel Geometry	mSv/hr	7.847e-018	2.191e-016
o Opposed	"	6.769e-018	1.889e-016
o Rotational	"	6.769e-018	1.889e-016
o Isotropic	"	6.050e-018	1.688e-016
Shallow Dose Equivalent Rate	(ICRP 51 - 1987)		
o Parallel Geometry	mSv/hr	8.349e-018	2.332e-016
o Opposed	"	8.044e-018	2.246e-016
o Rotational	"	8.044e-018	2.246e-016
o Isotropic	"	6.406e-018	1.788e-016
Effective Dose Equivalent Rate	(ICRP 51 - 1987)		
o Anterior/Posterior Geometry	mSv/hr	7.068e-018	1.974e-016
o Posterior/Anterior	"	6.517e-018	1.819e-016
o Lateral	"	5.194e-018	1.449e-016
o Rotational	"	5.870e-018	1.639e-016
o Isotropic	"	5.201e-018	1.451e-016

MicroShield 7.02
LMCO ODIN (07-MSD-7.02-1385)

Date	By	Checked

Filename	Run Date	Run Time	Duration
MP9-1-12.ms7	June 21, 2012	4:26:54 PM	00:00:00

Project Info	
Case Title	MP-9-1-Co-60-12
Description	MP-9-1 Hot Lab Dose from Unit Co-60 in Line A
Geometry	10 - Cylinder Surface - External Dose Point

Source Dimensions	
Height	762.0 cm (25 ft)
Radius	2.46 cm (1.0 in)

Dose Points			
A	X	Y	Z
#1	230.86 cm (7 ft 6.9 in)	381.0 cm (12 ft 6.0 in)	5.08 cm (2.0 in)

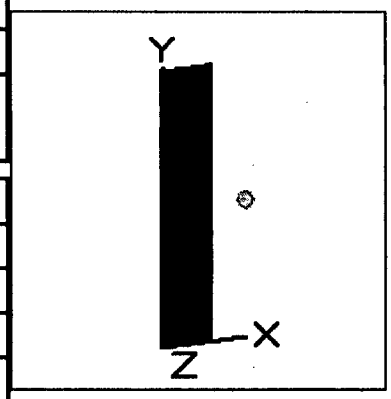

Shields			
Shield N	Dimension	Material	Density
Cyl. Radius	2.46 cm	Air	0.00122
Transition	.554 cm	HDPE	0.94
Shield 2	7.14 cm	Concrete	2.4
Shield 3	90.2 cm	Average Soil	1.52
Shield 4	30.48 cm	Concrete	2.4
Air Gap		Air	0.00122
Wall Clad	.025 cm	HDPE	0.94

Source Input: Grouping Method - Actual Photon Energies				
Nuclide	Ci	Bq	µCi/cm²	Bq/cm²
Co-60	5.3001e-011	1.9610e+000	4.5000e-009	1.6650e-004

Buildup: The material reference is Shield 3 Integration Parameters	
Y Direction (axial)	20
Circumferential	20

Results					
		Fluence	Fluence Rate	Exposure	Exposure Rate

Energy (MeV)	Activity (Photons/sec)	Rate MeV/cm²/sec No Buildup	MeV/cm²/sec With Buildup	Rate mR/hr No Buildup	mR/hr With Buildup
0.6938	3.199e-04	2.298e-18	1.511e-16	4.437e-21	2.918e-19
1.1732	1.961e+00	1.204e-12	3.202e-11	2.152e-15	5.722e-14
1.3325	1.961e+00	3.231e-12	7.015e-11	5.606e-15	1.217e-13
Totals	**3.922e+00**	**4.436e-12**	**1.022e-10**	**7.758e-15**	**1.789e-13**

MicroShield 7.02 (07-MSD-7.02-1385)
LMCO ODIN
Conversion of calculated exposure in air to dose
FILE: C:\Program Files (x86)\MicroShield 7\Examples\CaseFiles\MP9-1-12.ms7
Case Title: MP-9-1-Co-60-12
This case was run on Thursday, June 21, 2012 at 4:26:54 PM
Dose Point # 1 - (230.86,381,5.08) cm

Results (Summed over energies)	Units	Without Buildup	With Buildup
Photon Fluence Rate (flux)	Photons/cm²/sec	3.452e-012	7.994e-011
Photon Energy Fluence Rate	MeV/cm²/sec	4.436e-012	1.022e-010
Exposure and Dose Rates:			
Exposure Rate in Air	mR/hr	7.758e-015	1.789e-013
Absorbed Dose Rate in Air	mGy/hr	6.773e-017	1.562e-015
"	mrad/hr	6.773e-015	1.562e-013
Deep Dose Equivalent Rate	(ICRP 51 - 1987)		
o Parallel Geometry	mSv/hr	7.686e-017	1.773e-015
o Opposed	"	6.628e-017	1.528e-015
o Rotational	"	6.628e-017	1.528e-015
o Isotropic	"	5.923e-017	1.365e-015
Shallow Dose Equivalent Rate	(ICRP 51 - 1987)		
o Parallel Geometry	mSv/hr	8.178e-017	1.887e-015
o Opposed	"	7.878e-017	1.817e-015
o Rotational	"	7.878e-017	1.817e-015
o Isotropic	"	6.272e-017	1.446e-015
Effective Dose Equivalent Rate	(ICRP 51 - 1987)		
o Anterior/Posterior Geometry	mSv/hr	6.922e-017	1.597e-015
o Posterior/Anterior	"	6.382e-017	1.472e-015
o Lateral	"	5.084e-017	1.171e-015
o Rotational	"	5.748e-017	1.325e-015
o Isotropic	"	5.091e-017	1.174e-015

MicroShield 7.02
LMCO ODIN (07-MSD-7.02-1385)

Date	By	Checked

Filename	Run Date	Run Time	Duration
MP9-1-13.ms7	June 21, 2012	4:41:52 PM	00:00:00

Project Info	
Case Title	MP-9-1-Co-60-13
Description	MP-9-1 Hot Lab Dose from Unit Co-60 in Line B
Geometry	10 - Cylinder Surface - External Dose Point

Source Dimensions	
Height	762.0 cm (25 ft)
Radius	2.46 cm (1.0 in)

Dose Points			
A	X	Y	Z
#1	241.009 cm (7 ft 10.9 in)	381.0 cm (12 ft 6.0 in)	5.08 cm (2.0 in)

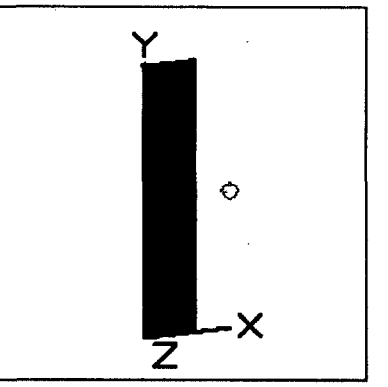

Shields			
Shield N	Dimension	Material	Density
Cyl. Radius	2.46 cm	Air	0.00122
Transition	.554 cm	HDPE	0.94
Shield 2	4.12 cm	Concrete	2.4
Shield 3	6.03 cm	Air	0.00122
Shield 4	7.14 cm	Concrete	2.4
Shield 5	90.2 cm	Average Soil	1.52
Shield 6	30.48 cm	Concrete	2.4
Air Gap		Air	0.00122
Wall Clad	.025 cm	HDPE	0.94

Source Input: Grouping Method - Actual Photon Energies				
Nuclide	Ci	Bq	µCi/cm²	Bq/cm²
Co-60	5.3001e-011	1.9610e+000	4.5000e-009	1.6650e-004

Buildup: The material reference is Shield 3 Integration Parameters	
Y Direction (axial)	20
Circumferential	20

Results

Energy (MeV)	Activity (Photons/sec)	Fluence Rate MeV/cm²/sec No Buildup	Fluence Rate MeV/cm²/sec With Buildup	Exposure Rate mR/hr No Buildup	Exposure Rate mR/hr With Buildup
0.6938	3.199e-04	1.021e-18	1.163e-16	1.971e-21	2.246e-19
1.1732	1.961e+00	6.321e-13	2.235e-11	1.130e-15	3.994e-14
1.3325	1.961e+00	1.759e-12	4.875e-11	3.052e-15	8.458e-14
Totals	**3.922e+00**	**2.391e-12**	**7.110e-11**	**4.182e-15**	**1.245e-13**

MicroShield 7.02 (07-MSD-7.02-1385)
LMCO ODIN
Conversion of calculated exposure in air to dose
FILE: C:\Program Files (x86)\MicroShield 7\Examples\CaseFiles\MP9-1-13.ms7
Case Title: MP-9-1-Co-60-13
This case was run on Thursday, June 21, 2012 at 4:41:52 PM
Dose Point # 1 - (241.009,381,5.08) cm

Results (Summed over energies)	Units	Without Buildup	With Buildup
Photon Fluence Rate (flux)	Photons/cm²/sec	1.859e-012	5.563e-011
Photon Energy Fluence Rate	MeV/cm²/sec	2.391e-012	7.110e-011
Exposure and Dose Rates:			
Exposure Rate in Air	mR/hr	4.182e-015	1.245e-013
Absorbed Dose Rate in Air	mGy/hr	3.651e-017	1.087e-015
"	mrad/hr	3.651e-015	1.087e-013
Deep Dose Equivalent Rate	(ICRP 51 - 1987)		
o Parallel Geometry	mSv/hr	4.142e-017	1.234e-015
o Opposed	"	3.572e-017	1.063e-015
o Rotational	"	3.572e-017	1.063e-015
o Isotropic	"	3.193e-017	9.501e-016
Shallow Dose Equivalent Rate	(ICRP 51 - 1987)		
o Parallel Geometry	mSv/hr	4.407e-017	1.313e-015
o Opposed	"	4.246e-017	1.265e-015
o Rotational	"	4.246e-017	1.265e-015
o Isotropic	"	3.381e-017	1.006e-015
Effective Dose Equivalent Rate	(ICRP 51 - 1987)		
o Anterior/Posterior Geometry	mSv/hr	3.731e-017	1.111e-015
o Posterior/Anterior	"	3.440e-017	1.024e-015
o Lateral	"	2.740e-017	8.152e-016
o Rotational	"	3.098e-017	9.222e-016
o Isotropic	"	2.744e-017	8.166e-016

MicroShield 7.02
LMCO ODIN (07-MSD-7.02-1385)

Date	By	Checked

Filename	Run Date	Run Time	Duration
MP9-1-14.ms7	June 21, 2012	4:32:50 PM	00:00:00

Project Info	
Case Title	MP-9-1-Cs-137-14
Description	MP-9-1 Hot Lab Dose from Unit Cs-137 in Line A
Geometry	10 - Cylinder Surface - External Dose Point

Source Dimensions	
Height	762.0 cm (25 ft)
Radius	2.46 cm (1.0 in)

Dose Points			
A	X	Y	Z
#1	230.86 cm (7 ft 6.9 in)	381.0 cm (12 ft 6.0 in)	5.08 cm (2.0 in)

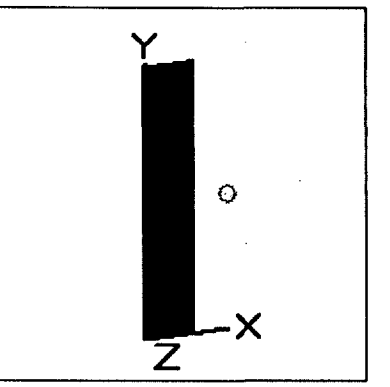

Shields			
Shield N	Dimension	Material	Density
Cyl. Radius	2.46 cm	Air	0.00122
Transition	.554 cm	HDPE	0.94
Shield 2	7.14 cm	Concrete	2.4
Shield 3	90.2 cm	Average Soil	1.52
Shield 4	30.48 cm	Concrete	2.4
Air Gap		Air	0.00122
Wall Clad	.025 cm	HDPE	0.94

Source Input: Grouping Method - Actual Photon Energies				
Nuclide	Ci	Bq	µCi/cm²	Bq/cm²
Ba-137m	5.0139e-011	1.8551e+000	4.2570e-009	1.5751e-004
Cs-137	5.3001e-011	1.9610e+000	4.5000e-009	1.6650e-004

Buildup: The material reference is Shield 3 Integration Parameters	
Y Direction (axial)	20
Circumferential	20

Results					
					Exposure

Energy (MeV)	Activity (Photons/sec)	Fluence Rate MeV/cm²/sec No Buildup	Fluence Rate MeV/cm²/sec With Buildup	Exposure Rate mR/hr No Buildup	Rate mR/hr With Buildup
0.0045	1.926e-02	0.000e+00	7.090e-37	0.000e+00	4.860e-37
0.0318	3.841e-02	7.309e-194	1.607e-35	6.088e-196	1.339e-37
0.0322	7.086e-02	8.260e-188	3.035e-35	6.647e-190	2.442e-37
0.0364	2.579e-02	1.800e-138	1.457e-35	1.023e-140	8.279e-38
0.6616	1.669e+00	7.811e-15	5.580e-13	1.514e-17	1.082e-15
Totals	**1.824e+00**	**7.811e-15**	**5.580e-13**	**1.514e-17**	**1.082e-15**

MicroShield 7.02 (07-MSD-7.02-1385)
LMCO ODIN
Conversion of calculated exposure in air to dose
FILE: C:\Program Files (x86)\MicroShield 7\Examples\CaseFiles\MP9-1-14.ms7
Case Title: MP-9-1-Cs-137-14
This case was run on Thursday, June 21, 2012 at 4:32:50 PM
Dose Point # 1 - (230.86,381,5.08) cm

Results (Summed over energies)	Units	Without Buildup	With Buildup
Photon Fluence Rate (flux)	Photons/cm²/sec	1.181e-014	8.433e-013
Photon Energy Fluence Rate	MeV/cm²/sec	7.811e-015	5.580e-013
Exposure and Dose Rates:			
Exposure Rate in Air	mR/hr	1.514e-017	1.082e-015
Absorbed Dose Rate in Air	mGy/hr	1.322e-019	9.443e-018
"	mrad/hr	1.322e-017	9.443e-016
Deep Dose Equivalent Rate	(ICRP 51 - 1987)		
o Parallel Geometry	mSv/hr	1.565e-019	1.118e-017
o Opposed	"	1.253e-019	8.951e-018
o Rotational	"	1.253e-019	8.951e-018
o Isotropic	"	1.108e-019	7.915e-018
Shallow Dose Equivalent Rate	(ICRP 51 - 1987)		
o Parallel Geometry	mSv/hr	1.664e-019	1.188e-017
o Opposed	"	1.580e-019	1.129e-017
o Rotational	"	1.580e-019	1.129e-017
o Isotropic	"	1.185e-019	8.462e-018
Effective Dose Equivalent Rate	(ICRP 51 - 1987)		
o Anterior/Posterior Geometry	mSv/hr	1.384e-019	9.886e-018
o Posterior/Anterior	"	1.222e-019	8.726e-018
o Lateral	"	9.059e-020	6.471e-018
o Rotational	"	1.092e-019	7.798e-018
o Isotropic	"	9.293e-020	6.638e-018

MicroShield 7.02
LMCO ODIN (07-MSD-7.02-1385)

Date	By	Checked

Filename	Run Date	Run Time	Duration
MP9-1-15.ms7	June 21, 2012	4:44:55 PM	00:00:00

Project Info	
Case Title	MP-9-1-Cs-137-15
Description	MP-9-1 Hot Lab Dose from Unit Cs-137 in Line B
Geometry	10 - Cylinder Surface - External Dose Point

Source Dimensions	
Height	762.0 cm (25 ft)
Radius	2.46 cm (1.0 in)

Dose Points			
A	X	Y	Z
#1	241.009 cm (7 ft 10.9 in)	381.0 cm (12 ft 6.0 in)	5.08 cm (2.0 in)

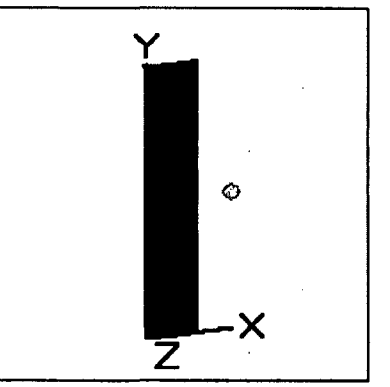

Shields			
Shield N	Dimension	Material	Density
Cyl. Radius	2.46 cm	Air	0.00122
Transition	.554 cm	HDPE	0.94
Shield 2	4.12 cm	Concrete	2.4
Shield 3	6.03 cm	Air	0.00122
Shield 4	7.14 cm	Concrete	2.4
Shield 5	90.2 cm	Average Soil	1.52
Shield 6	30.48 cm	Concrete	2.4
Air Gap		Air	0.00122
Wall Clad	.025 cm	HDPE	0.94

Source Input: Grouping Method - Actual Photon Energies				
Nuclide	Ci	Bq	µCi/cm²	Bq/cm²
Ba-137m	5.0139e-011	1.8551e+000	4.2570e-009	1.5751e-004
Cs-137	5.3001e-011	1.9610e+000	4.5000e-009	1.6650e-004

Buildup: The material reference is Shield 3 Integration Parameters	
Y Direction (axial)	20
Circumferential	20

Results					
Energy (MeV)	**Activity (Photons/sec)**	**Fluence Rate MeV/cm²/sec No Buildup**	**Fluence Rate MeV/cm²/sec With Buildup**	**Exposure Rate mR/hr No Buildup**	**Exposure Rate mR/hr With Buildup**
0.0045	1.926e-02	0.000e+00	1.224e-36	0.000e+00	8.393e-37
0.0318	3.841e-02	4.249e-198	6.749e-34	3.539e-200	5.621e-36
0.0322	7.086e-02	6.394e-192	1.354e-33	5.146e-194	1.090e-35
0.0364	2.579e-02	1.612e-141	1.200e-33	9.159e-144	6.820e-36
0.6616	1.669e+00	3.414e-15	4.376e-13	6.619e-18	8.484e-16
Totals	**1.824e+00**	**3.414e-15**	**4.376e-13**	**6.619e-18**	**8.484e-16**

MicroShield 7.02 (07-MSD-7.02-1385)
LMCO ODIN
Conversion of calculated exposure in air to dose
FILE: C:\Program Files (x86)\MicroShield 7\Examples\CaseFiles\MP9-1-15.ms7
Case Title: MP-9-1-Cs-137-15
This case was run on Thursday, June 21, 2012 at 4:44:55 PM
Dose Point # 1 - (241.009,381,5.08) cm

Results (Summed over energies)	Units	Without Buildup	With Buildup
Photon Fluence Rate (flux)	Photons/cm²/sec	5.160e-015	6.614e-013
Photon Energy Fluence Rate	MeV/cm²/sec	3.414e-015	4.376e-013
Exposure and Dose Rates:			
Exposure Rate in Air	mR/hr	6.619e-018	8.484e-016
Absorbed Dose Rate in Air	mGy/hr	5.778e-020	7.406e-018
"	mrad/hr	5.778e-018	7.406e-016
Deep Dose Equivalent Rate	(ICRP 51 - 1987)		
o Parallel Geometry	mSv/hr	6.841e-020	8.769e-018
o Opposed	"	5.477e-020	7.021e-018
o Rotational	"	5.477e-020	7.021e-018
o Isotropic	"	4.843e-020	6.208e-018
Shallow Dose Equivalent Rate	(ICRP 51 - 1987)		
o Parallel Geometry	mSv/hr	7.271e-020	9.320e-018
o Opposed	"	6.906e-020	8.852e-018
o Rotational	"	6.906e-020	8.852e-018
o Isotropic	"	5.178e-020	6.637e-018
Effective Dose Equivalent Rate	(ICRP 51 - 1987)		
o Anterior/Posterior Geometry	mSv/hr	6.049e-020	7.754e-018
o Posterior/Anterior	"	5.339e-020	6.844e-018
o Lateral	"	3.959e-020	5.075e-018
o Rotational	"	4.771e-020	6.116e-018
o Isotropic	"	4.062e-020	5.207e-018

MicroShield 7.02
LMCO ODIN (07-MSD-7.02-1385)

Date	By	Checked

Filename	Run Date	Run Time	Duration
BP2-1-01.ms7	May 29, 2012	10:24:22 AM	00:00:00

Project Info	
Case Title	BP2-1Case 1
Description	Pent Crossover - 70 ft length w unit Co-60
Geometry	10 - Cylinder Surface - External Dose Point

Source Dimensions	
Height	2.1e+3 cm (70 ft)
Radius	39.37 cm (1 ft 3.5 in)

Dose Points			
A	X	Y	Z
#1	259.76 cm (8 ft 6.3 in)	1.1e+3 cm (35 ft)	39.37 cm (1 ft 3.5 in)

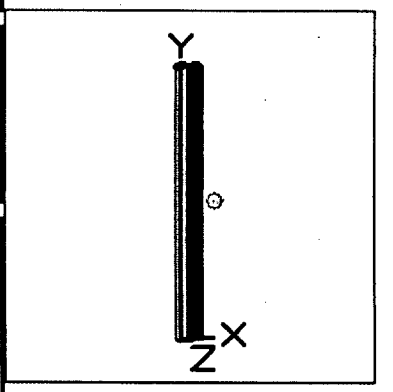

Shields			
Shield N	Dimension	Material	Density
Cyl. Radius	39.37 cm	Air	0.00122
Transition	.275 cm	Iron	7.86
Shield 2	120.09 cm	Average Soil	1.52
Air Gap		Air	0.00122
Wall Clad	.025 cm	Iron	7.86

Source Input: Grouping Method - Actual Photon Energies				
Nuclide	Ci	Bq	µCi/cm²	Bq/cm²
Co-60	2.3750e-009	8.7876e+001	4.5000e-009	1.6650e-004

Buildup: The material reference is Shield 2 Integration Parameters	
Y Direction (axial)	20
Circumferential	20

Results

Energy (MeV)	Activity (Photons/sec)	Fluence Rate MeV/cm²/sec	Fluence Rate MeV/cm²/sec With	Exposure Rate mR/hr	Exposure Rate mR/hr With

		No Buildup	Buildup	No Buildup	Buildup
0.6938	1.433e-02	1.706e-16	8.468e-15	3.294e-19	1.635e-17
1.1732	8.788e+01	4.978e-11	1.068e-09	8.897e-14	1.909e-12
1.3325	8.788e+01	1.177e-10	2.089e-09	2.042e-13	3.624e-12
Totals	**1.758e+02**	**1.675e-10**	**3.157e-09**	**2.931e-13**	**5.533e-12**

MicroShield 7.02 (07-MSD-7.02-1385)
LMCO ODIN
Conversion of calculated exposure in air to dose
FILE: C:\Program Files (x86)\MicroShield 7\Examples\CaseFiles\BP2-1-01.ms7
Case Title: BP2-1Case 1
This case was run on Tuesday, May 29, 2012 at 10:24:22 AM
Dose Point # 1 - (259.76,1066.8,39.37) cm

Results (Summed over energies)	Units	Without Buildup	With Buildup
Photon Fluence Rate (flux)	Photons/cm²/sec	1.308e-010	2.478e-009
Photon Energy Fluence Rate	MeV/cm²/sec	1.675e-010	3.157e-009
Exposure and Dose Rates:			
Exposure Rate in Air	mR/hr	2.931e-013	5.533e-012
Absorbed Dose Rate in Air	mGy/hr	2.559e-015	4.830e-014
"	mrad/hr	2.559e-013	4.830e-012
Deep Dose Equivalent Rate	(ICRP 51 - 1987)		
o Parallel Geometry	mSv/hr	2.904e-015	5.483e-014
o Opposed	"	2.504e-015	4.724e-014
o Rotational	"	2.504e-015	4.724e-014
o Isotropic	"	2.237e-015	4.221e-014
Shallow Dose Equivalent Rate	(ICRP 51 - 1987)		
o Parallel Geometry	mSv/hr	3.091e-015	5.835e-014
o Opposed	"	2.977e-015	5.620e-014
o Rotational	"	2.977e-015	5.620e-014
o Isotropic	"	2.369e-015	4.471e-014
Effective Dose Equivalent Rate	(ICRP 51 - 1987)		
o Anterior/Posterior Geometry	mSv/hr	2.616e-015	4.937e-014
o Posterior/Anterior	"	2.411e-015	4.550e-014
o Lateral	"	1.920e-015	3.621e-014
o Rotational	"	2.171e-015	4.097e-014
o Isotropic	"	1.923e-015	3.628e-014

MicroShield 7.02
LMCO ODIN (07-MSD-7.02-1385)

Date	By	Checked

Filename	Run Date	Run Time	Duration
BP2-1-02.ms7	May 29, 2012	11:49:21 AM	00:00:00

Project Info	
Case Title	BP2-1Case 2
Description	Pent Crossover - 70 ft length w unit Co-60 & overflow drain
Geometry	10 - Cylinder Surface - External Dose Point

Source Dimensions	
Height	2.1e+3 cm (70 ft)
Radius	39.37 cm (1 ft 3.5 in)

Dose Points			
A	X	Y	Z
#1	259.76 cm (8 ft 6.3 in)	1.1e+3 cm (35 ft)	39.37 cm (1 ft 3.5 in)

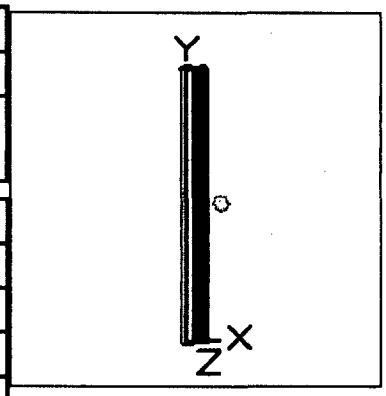

Shields			
Shield N	Dimension	Material	Density
Cyl. Radius	39.37 cm	Air	0.00122
Transition	.275 cm	Iron	7.86
Shield 2	30.48 cm	Air	0.00122
Shield 3	89.61 cm	Average Soil	1.52
Air Gap		Air	0.00122
Wall Clad	.025 cm	Iron	7.86

Source Input: Grouping Method - Actual Photon Energies				
Nuclide	Ci	Bq	µCi/cm²	Bq/cm²
Co-60	2.3750e-009	8.7876e+001	4.5000e-009	1.6650e-004

Buildup: The material reference is Shield 2 Integration Parameters	
Y Direction (axial)	20
Circumferential	20

Results					
Energy	Activity	Fluence Rate	Fluence Rate MeV/cm²/sec	Exposure Rate	Exposure Rate mR/hr

(MeV)	(Photons/sec)	MeV/cm²/sec No Buildup	With Buildup	mR/hr No Buildup	With Buildup
0.6938	1.433e-02	6.207e-15	3.068e-13	1.198e-17	5.924e-16
1.1732	8.788e+01	8.315e-10	1.561e-08	1.486e-12	2.790e-11
1.3325	8.788e+01	1.659e-09	2.539e-08	2.879e-12	4.404e-11
Totals	**1.758e+02**	**2.491e-09**	**4.100e-08**	**4.365e-12**	**7.194e-11**

MicroShield 7.02 (07-MSD-7.02-1385)
LMCO ODIN
Conversion of calculated exposure in air to dose
FILE: C:\Program Files (x86)\MicroShield 7\Examples\CaseFiles\BP2-1-02.ms7
Case Title: BP2-1Case 2
This case was run on Tuesday, May 29, 2012 at 11:49:21 AM
Dose Point # 1 - (259.76,1066.8,39.37) cm

Results (Summed over energies)	Units	Without Buildup	With Buildup
Photon Fluence Rate (flux)	Photons/cm²/sec	1.954e-009	3.236e-008
Photon Energy Fluence Rate	MeV/cm²/sec	2.491e-009	4.100e-008
Exposure and Dose Rates:			
Exposure Rate in Air	mR/hr	4.365e-012	7.194e-011
Absorbed Dose Rate in Air	mGy/hr	3.810e-014	6.281e-013
"	mrad/hr	3.810e-012	6.281e-011
Deep Dose Equivalent Rate	(ICRP 51 - 1987)		
o Parallel Geometry	mSv/hr	4.325e-014	7.130e-013
o Opposed	"	3.727e-014	6.141e-013
o Rotational	"	3.727e-014	6.141e-013
o Isotropic	"	3.330e-014	5.486e-013
Shallow Dose Equivalent Rate	(ICRP 51 - 1987)		
o Parallel Geometry	mSv/hr	4.603e-014	7.590e-013
o Opposed	"	4.433e-014	7.308e-013
o Rotational	"	4.433e-014	7.308e-013
o Isotropic	"	3.527e-014	5.812e-013
Effective Dose Equivalent Rate	(ICRP 51 - 1987)		
o Anterior/Posterior Geometry	mSv/hr	3.895e-014	6.421e-013
o Posterior/Anterior	"	3.589e-014	5.915e-013
o Lateral	"	2.856e-014	4.704e-013
o Rotational	"	3.232e-014	5.326e-013
o Isotropic	"	2.862e-014	4.714e-013

MicroShield 7.02
LMCO ODIN (07-MSD-7.02-1385)

Date	By	Checked

Filename	Run Date	Run Time	Duration
BP2-1-03.ms7	May 29, 2012	12:01:08 PM	00:00:00

Project Info	
Case Title	BP2-1Case 3
Description	Pent Crossover - 25 ft length w unit Co-60 & overflow drain
Geometry	10 - Cylinder Surface - External Dose Point

Source Dimensions	
Height	762.0 cm (25 ft)
Radius	39.37 cm (1 ft 3.5 in)

Dose Points			
A	X	Y	Z
#1	259.76 cm (8 ft 6.3 in)	381.0 cm (12 ft 6.0 in)	39.37 cm (1 ft 3.5 in)

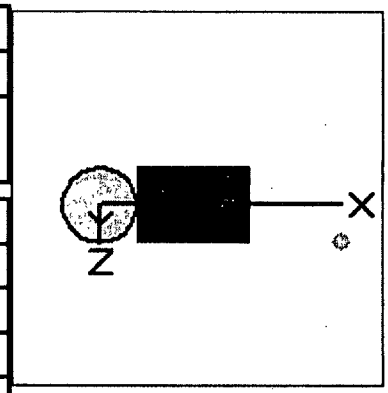

Shields			
Shield N	Dimension	Material	Density
Cyl. Radius	39.37 cm	Air	0.00122
Transition	.275 cm	Iron	7.86
Shield 2	30.48 cm	Air	0.00122
Shield 3	89.61 cm	Average Soil	1.52
Air Gap		Air	0.00122
Wall Clad	.025 cm	Iron	7.86

Source Input: Grouping Method - Actual Photon Energies				
Nuclide	Ci	Bq	µCi/cm²	Bq/cm²
Co-60	8.4823e-010	3.1384e+001	4.5000e-009	1.6650e-004

Buildup: The material reference is Shield 2 Integration Parameters	
Y Direction (axial)	20
Circumferential	20

Results					
Energy	Activity	Fluence Rate	Fluence Rate MeV/cm²/sec	Exposure Rate	Exposure Rate mR/hr

(MeV)	(Photons/sec)	MeV/cm²/sec No Buildup	With Buildup	mR/hr No Buildup	With Buildup
0.6938	5.119e-03	6.201e-15	3.066e-13	1.197e-17	5.920e-16
1.1732	3.138e+01	8.309e-10	1.560e-08	1.485e-12	2.788e-11
1.3325	3.138e+01	1.658e-09	2.536e-08	2.876e-12	4.400e-11
Totals	**6.277e+01**	**2.489e-09**	**4.096e-08**	**4.361e-12**	**7.187e-11**

MicroShield 7.02 (07-MSD-7.02-1385)
LMCO ODIN
Conversion of calculated exposure in air to dose
FILE: C:\Program Files (x86)\MicroShield 7\Examples\CaseFiles\BP2-1-03.ms7
Case Title: BP2-1Case 3
This case was run on Tuesday, May 29, 2012 at 12:01:08 PM
Dose Point # 1 - (259.76,381,39.37) cm

Results (Summed over energies)	Units	Without Buildup	With Buildup
Photon Fluence Rate (flux)	Photons/cm²/sec	1.952e-009	3.233e-008
Photon Energy Fluence Rate	MeV/cm²/sec	2.489e-009	4.096e-008
Exposure and Dose Rates:			
Exposure Rate in Air	mR/hr	4.361e-012	7.187e-011
Absorbed Dose Rate in Air	mGy/hr	3.807e-014	6.275e-013
"	mrad/hr	3.807e-012	6.275e-011
Deep Dose Equivalent Rate	(ICRP 51 - 1987)		
o Parallel Geometry	mSv/hr	4.322e-014	7.124e-013
o Opposed	"	3.724e-014	6.135e-013
o Rotational	"	3.724e-014	6.135e-013
o Isotropic	"	3.327e-014	5.480e-013
Shallow Dose Equivalent Rate	(ICRP 51 - 1987)		
o Parallel Geometry	mSv/hr	4.599e-014	7.583e-013
o Opposed	"	4.430e-014	7.301e-013
o Rotational	"	4.430e-014	7.301e-013
o Isotropic	"	3.524e-014	5.806e-013
Effective Dose Equivalent Rate	(ICRP 51 - 1987)		
o Anterior/Posterior Geometry	mSv/hr	3.892e-014	6.415e-013
o Posterior/Anterior	"	3.586e-014	5.909e-013
o Lateral	"	2.854e-014	4.700e-013
o Rotational	"	3.230e-014	5.321e-013
o Isotropic	"	2.860e-014	4.709e-013

MicroShield 7.02
LMCO ODIN (07-MSD-7.02-1385)

Date	By	Checked

Filename	Run Date	Run Time	Duration
BP2-1-04.ms7	May 29, 2012	12:06:18 PM	00:00:00

Project Info	
Case Title	BP2-1Case 4
Description	Pent Crossover - 50 ft length w unit Co-60 & overflow drain
Geometry	10 - Cylinder Surface - External Dose Point

Source Dimensions	
Height	1.5e+3 cm (50 ft)
Radius	39.37 cm (1 ft 3.5 in)

Dose Points			
A	X	Y	Z
#1	259.76 cm (8 ft 6.3 in)	762.0 cm (25 ft)	39.37 cm (1 ft 3.5 in)

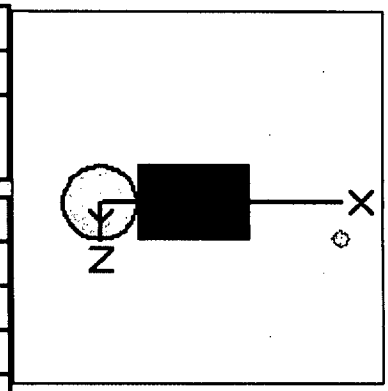

Shields			
Shield N	Dimension	Material	Density
Cyl. Radius	39.37 cm	Air	0.00122
Transition	.275 cm	Iron	7.86
Shield 2	30.48 cm	Air	0.00122
Shield 3	89.61 cm	Average Soil	1.52
Air Gap		Air	0.00122
Wall Clad	.025 cm	Iron	7.86

Source Input: Grouping Method - Actual Photon Energies				
Nuclide	Ci	Bq	µCi/cm²	Bq/cm²
Co-60	1.6965e-009	6.2769e+001	4.5000e-009	1.6650e-004

Buildup: The material reference is Shield 2 Integration Parameters	
Y Direction (axial)	20
Circumferential	20

Results

Energy	Activity	Fluence Rate	Fluence Rate MeV/cm²/sec	Exposure Rate	Exposure Rate mR/hr

(MeV)	(Photons/sec)	MeV/cm²/sec No Buildup	With Buildup	mR/hr No Buildup	With Buildup
0.6938	1.024e-02	6.201e-15	3.066e-13	1.197e-17	5.920e-16
1.1732	6.277e+01	8.311e-10	1.561e-08	1.485e-12	2.789e-11
1.3325	6.277e+01	1.659e-09	2.538e-08	2.878e-12	4.404e-11
Totals	**1.255e+02**	**2.490e-09**	**4.099e-08**	**4.363e-12**	**7.193e-11**

MicroShield 7.02 (07-MSD-7.02-1385)
LMCO ODIN
Conversion of calculated exposure in air to dose
FILE: C:\Program Files (x86)\MicroShield 7\Examples\CaseFiles\BP2-1-04.ms7
Case Title: BP2-1Case 4
This case was run on Tuesday, May 29, 2012 at 12:06:18 PM
Dose Point # 1 - (259.76,762,39.37) cm

Results (Summed over energies)	Units	Without Buildup	With Buildup
Photon Fluence Rate (flux)	Photons/cm²/sec	1.953e-009	3.235e-008
Photon Energy Fluence Rate	MeV/cm²/sec	2.490e-009	4.099e-008
Exposure and Dose Rates:			
Exposure Rate in Air	mR/hr	4.363e-012	7.193e-011
Absorbed Dose Rate in Air	mGy/hr	3.809e-014	6.280e-013
"	mrad/hr	3.809e-012	6.280e-011
Deep Dose Equivalent Rate	(ICRP 51 - 1987)		
o Parallel Geometry	mSv/hr	4.323e-014	7.129e-013
o Opposed	"	3.726e-014	6.140e-013
o Rotational	"	3.726e-014	6.140e-013
o Isotropic	"	3.329e-014	5.485e-013
Shallow Dose Equivalent Rate	(ICRP 51 - 1987)		
o Parallel Geometry	mSv/hr	4.601e-014	7.589e-013
o Opposed	"	4.431e-014	7.307e-013
o Rotational	"	4.431e-014	7.307e-013
o Isotropic	"	3.526e-014	5.811e-013
Effective Dose Equivalent Rate	(ICRP 51 - 1987)		
o Anterior/Posterior Geometry	mSv/hr	3.893e-014	6.420e-013
o Posterior/Anterior	"	3.588e-014	5.914e-013
o Lateral	"	2.855e-014	4.704e-013
o Rotational	"	3.231e-014	5.325e-013
o Isotropic	"	2.861e-014	4.713e-013

MicroShield 7.02
LMCO ODIN (07-MSD-7.02-1385)

Date	By	Checked

Filename	Run Date	Run Time	Duration
BP2-1-05.ms7	May 29, 2012	12:10:30 PM	00:00:00

Project Info	
Case Title	BP2-1Case 5
Description	Pent Crossover - 40 ft length w unit Co-60 & overflow drain
Geometry	10 - Cylinder Surface - External Dose Point

Source Dimensions	
Height	1.2e+3 cm (40 ft 0.0 in)
Radius	39.37 cm (1 ft 3.5 in)

Dose Points			
A	X	Y	Z
#1	259.76 cm (8 ft 6.3 in)	609.6 cm (20 ft 0.0 in)	39.37 cm (1 ft 3.5 in)

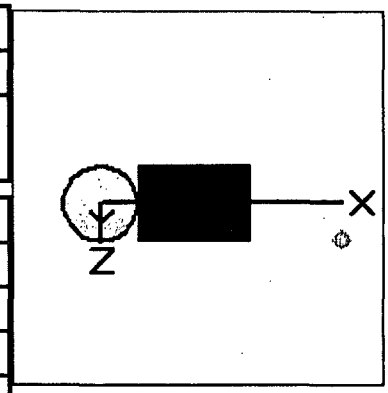

Shields			
Shield N	Dimension	Material	Density
Cyl. Radius	39.37 cm	Air	0.00122
Transition	.275 cm	Iron	7.86
Shield 2	30.48 cm	Air	0.00122
Shield 3	89.61 cm	Average Soil	1.52
Air Gap		Air	0.00122
Wall Clad	.025 cm	Iron	7.86

Source Input: Grouping Method - Actual Photon Energies				
Nuclide	Ci	Bq	µCi/cm²	Bq/cm²
Co-60	1.3572e-009	5.0215e+001	4.5000e-009	1.6650e-004

Buildup: The material reference is Shield 2 Integration Parameters	
Y Direction (axial)	20
Circumferential	20

Results

Energy	Activity	Fluence Rate	Fluence Rate MeV/cm²/sec	Exposure Rate	Exposure Rate mR/hr

(MeV)	(Photons/sec)	MeV/cm²/sec No Buildup	With Buildup	mR/hr No Buildup	With Buildup
0.6938	8.191e-03	6.201e-15	3.067e-13	1.197e-17	5.921e-16
1.1732	5.022e+01	8.312e-10	1.561e-08	1.485e-12	2.790e-11
1.3325	5.022e+01	1.659e-09	2.538e-08	2.878e-12	4.404e-11
Totals	**1.004e+02**	**2.490e-09**	**4.099e-08**	**4.363e-12**	**7.193e-11**

MicroShield 7.02 (07-MSD-7.02-1385)
LMCO ODIN
Conversion of calculated exposure in air to dose
FILE: C:\Program Files (x86)\MicroShield 7\Examples\CaseFiles\BP2-1-05.ms7
Case Title: BP2-1Case 5
This case was run on Tuesday, May 29, 2012 at 12:10:30 PM
Dose Point # 1 - (259.76,609.6,39.37) cm

Results (Summed over energies)	Units	Without Buildup	With Buildup
Photon Fluence Rate (flux)	Photons/cm²/sec	1.953e-009	3.236e-008
Photon Energy Fluence Rate	MeV/cm²/sec	2.490e-009	4.099e-008
Exposure and Dose Rates:			
Exposure Rate in Air	mR/hr	4.363e-012	7.193e-011
Absorbed Dose Rate in Air	mGy/hr	3.809e-014	6.280e-013
"	mrad/hr	3.809e-012	6.280e-011
Deep Dose Equivalent Rate	(ICRP 51 - 1987)		
o Parallel Geometry	mSv/hr	4.323e-014	7.129e-013
o Opposed	"	3.726e-014	6.140e-013
o Rotational	"	3.726e-014	6.140e-013
o Isotropic	"	3.329e-014	5.485e-013
Shallow Dose Equivalent Rate	(ICRP 51 - 1987)		
o Parallel Geometry	mSv/hr	4.601e-014	7.589e-013
o Opposed	"	4.432e-014	7.307e-013
o Rotational	"	4.432e-014	7.307e-013
o Isotropic	"	3.526e-014	5.811e-013
Effective Dose Equivalent Rate	(ICRP 51 - 1987)		
o Anterior/Posterior Geometry	mSv/hr	3.893e-014	6.420e-013
o Posterior/Anterior	"	3.588e-014	5.914e-013
o Lateral	"	2.856e-014	4.704e-013
o Rotational	"	3.231e-014	5.325e-013
o Isotropic	"	2.861e-014	4.713e-013

MicroShield 7.02
LMCO ODIN (07-MSD-7.02-1385)

Date	By	Checked

Filename	Run Date	Run Time	Duration
BP2-1-06.ms7	May 29, 2012	1:57:04 PM	00:00:00

Project Info	
Case Title	BP2-1Case 6
Description	Pent Crossover - 30 ft length w unit Co-60 & overflow drain
Geometry	10 - Cylinder Surface - External Dose Point

Source Dimensions	
Height	914.4 cm (30 ft)
Radius	39.37 cm (1 ft 3.5 in)

Dose Points			
A	X	Y	Z
#1	259.76 cm (8 ft 6.3 in)	457.2 cm (15 ft)	39.37 cm (1 ft 3.5 in)

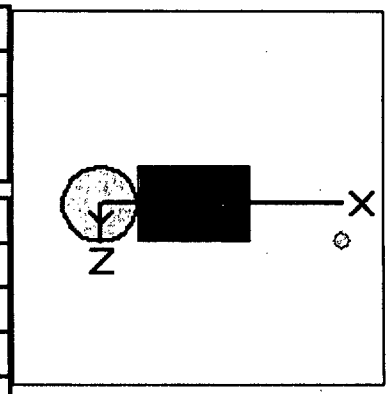

Shields			
Shield N	Dimension	Material	Density
Cyl. Radius	39.37 cm	Air	0.00122
Transition	.275 cm	Iron	7.86
Shield 2	30.48 cm	Air	0.00122
Shield 3	89.61 cm	Average Soil	1.52
Air Gap		Air	0.00122
Wall Clad	.025 cm	Iron	7.86

Source Input: Grouping Method - Actual Photon Energies				
Nuclide	Ci	Bq	µCi/cm²	Bq/cm²
Co-60	1.0179e-009	3.7661e+001	4.5000e-009	1.6650e-004

Buildup: The material reference is Shield 2 Integration Parameters	
Y Direction (axial)	20
Circumferential	20

Results					
Energy	Activity	Fluence Rate	Fluence Rate MeV/cm²/sec	Exposure Rate	Exposure Rate mR/hr

(MeV)	(Photons/sec)	MeV/cm²/sec No Buildup	With Buildup	mR/hr No Buildup	With Buildup
0.6938	6.143e-03	6.201e-15	3.067e-13	1.197e-17	5.921e-16
1.1732	3.766e+01	8.311e-10	1.561e-08	1.485e-12	2.789e-11
1.3325	3.766e+01	1.659e-09	2.538e-08	2.878e-12	4.403e-11
Totals	**7.533e+01**	**2.490e-09**	**4.099e-08**	**4.363e-12**	**7.192e-11**

MicroShield 7.02 (07-MSD-7.02-1385)
LMCO ODIN
Conversion of calculated exposure in air to dose
FILE: C:\Program Files (x86)\MicroShield 7\Examples\CaseFiles\BP2-1-06.ms7
Case Title: BP2-1Case 6
This case was run on Tuesday, May 29, 2012 at 1:57:04 PM
Dose Point # 1 - (259.76,457.2,39.37) cm

Results (Summed over energies)	Units	Without Buildup	With Buildup
Photon Fluence Rate (flux)	Photons/cm²/sec	1.953e-009	3.235e-008
Photon Energy Fluence Rate	MeV/cm²/sec	2.490e-009	4.099e-008
Exposure and Dose Rates:			
Exposure Rate in Air	mR/hr	4.363e-012	7.192e-011
Absorbed Dose Rate in Air	mGy/hr	3.809e-014	6.279e-013
"	mrad/hr	3.809e-012	6.279e-011
Deep Dose Equivalent Rate	(ICRP 51 - 1987)		
o Parallel Geometry	mSv/hr	4.323e-014	7.128e-013
o Opposed	"	3.725e-014	6.139e-013
o Rotational	"	3.725e-014	6.139e-013
o Isotropic	"	3.329e-014	5.484e-013
Shallow Dose Equivalent Rate	(ICRP 51 - 1987)		
o Parallel Geometry	mSv/hr	4.601e-014	7.588e-013
o Opposed	"	4.431e-014	7.306e-013
o Rotational	"	4.431e-014	7.306e-013
o Isotropic	"	3.526e-014	5.810e-013
Effective Dose Equivalent Rate	(ICRP 51 - 1987)		
o Anterior/Posterior Geometry	mSv/hr	3.893e-014	6.419e-013
o Posterior/Anterior	"	3.588e-014	5.913e-013
o Lateral	"	2.855e-014	4.703e-013
o Rotational	"	3.231e-014	5.325e-013
o Isotropic	"	2.861e-014	4.713e-013

MicroShield 7.02
LMCO ODIN (07-MSD-7.02-1385)

Date	By	Checked

Filename	Run Date	Run Time	Duration
BP2-1-07.ms7	June 13, 2012	9:10:21 AM	00:00:00

Project Info	
Case Title	BP2-1Case 7
Description	Pent Crossover - 40 ft length w unit Cs-137 & overflow drain
Geometry	10 - Cylinder Surface - External Dose Point

Source Dimensions	
Height	1.2e+3 cm (40 ft 0.0 in)
Radius	39.37 cm (1 ft 3.5 in)

Dose Points			
A	X	Y	Z
#1	364.63 cm (11 ft 11.6 in)	609.6 cm (20 ft 0.0 in)	39.645 cm (1 ft 3.6 in)

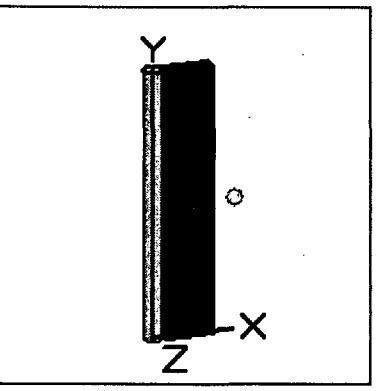

Shields			
Shield N	Dimension	Material	Density
Cyl. Radius	39.37 cm	Air	0.00122
Transition	.275 cm	Iron	7.86
Shield 2	113.18 cm	Air	0.00122
Shield 3	30.48 cm	Mixed ->	1.52122
		Air	0.00122
		Average Soil	1.52
Shield 4	81.3 cm	Average Soil	1.52
Air Gap		Air	0.00122
Wall Clad	.025 cm	Iron	7.86

Source Input: Grouping Method - Actual Photon Energies				
Nuclide	Ci	Bq	µCi/cm²	Bq/cm²
Ba-137m	1.2839e-009	4.7504e+001	4.2570e-009	1.5751e-004
Cs-137	1.3572e-009	5.0215e+001	4.5000e-009	1.6650e-004

Buildup: The material reference is Shield 4 Integration Parameters	
Y Direction (axial)	20
Circumferential	20

Results					
Energy (MeV)	**Activity (Photons/sec)**	**Fluence Rate MeV/cm²/sec No Buildup**	**Fluence Rate MeV/cm²/sec With Buildup**	**Exposure Rate mR/hr No Buildup**	**Exposure Rate mR/hr With Buildup**
0.0045	4.931e-01	0.000e+00	7.200e-36	0.000e+00	4.935e-36
0.0318	9.835e-01	4.428e-198	1.632e-34	3.688e-200	1.359e-36
0.0322	1.814e+00	8.845e-192	3.082e-34	7.118e-194	2.480e-36
0.0364	6.603e-01	2.994e-140	1.480e-34	1.701e-142	8.408e-37
0.6616	4.274e+01	1.267e-12	6.003e-11	2.457e-15	1.164e-13
Totals	**4.670e+01**	**1.267e-12**	**6.003e-11**	**2.457e-15**	**1.164e-13**

MicroShield 7.02 (07-MSD-7.02-1385)
LMCO ODIN
Conversion of calculated exposure in air to dose
FILE: C:\Program Files (x86)\MicroShield 7\Examples\CaseFiles\BP2-1-07.ms7
Case Title: BP2-1Case 7
This case was run on Wednesday, June 13, 2012 at 9:10:21 AM
Dose Point # 1 - (364.63,609.6,39.645) cm

Results (Summed over energies)	Units	Without Buildup	With Buildup
Photon Fluence Rate (flux)	Photons/cm²/sec	1.915e-012	9.073e-011
Photon Energy Fluence Rate	MeV/cm²/sec	1.267e-012	6.003e-011
Exposure and Dose Rates:			
Exposure Rate in Air	mR/hr	2.457e-015	1.164e-013
Absorbed Dose Rate in Air	mGy/hr	2.145e-017	1.016e-015
"	mrad/hr	2.145e-015	1.016e-013
Deep Dose Equivalent Rate	(ICRP 51 - 1987)		
o Parallel Geometry	mSv/hr	2.539e-017	1.203e-015
o Opposed	"	2.033e-017	9.631e-016
o Rotational	"	2.033e-017	9.631e-016
o Isotropic	"	1.798e-017	8.516e-016
Shallow Dose Equivalent Rate	(ICRP 51 - 1987)		
o Parallel Geometry	mSv/hr	2.699e-017	1.278e-015
o Opposed	"	2.563e-017	1.214e-015
o Rotational	"	2.563e-017	1.214e-015
o Isotropic	"	1.922e-017	9.104e-016
Effective Dose Equivalent Rate	(ICRP 51 - 1987)		
o Anterior/Posterior Geometry	mSv/hr	2.245e-017	1.064e-015
o Posterior/Anterior	"	1.982e-017	9.388e-016
o Lateral	"	1.470e-017	6.962e-016
o Rotational	"	1.771e-017	8.389e-016
o Isotropic	"	1.508e-017	7.142e-016

MicroShield 7.02
LMCO ODIN (07-MSD-7.02-1385)

Date	By	Checked

Filename	Run Date	Run Time	Duration
BP2-1-07A.ms7	June 13, 2012	9:07:38 AM	00:00:00

Project Info	
Case Title	BP2-1Case 7A
Description	Pent Crossover - 40 ft length w unit Co-60 & overflow drain
Geometry	10 - Cylinder Surface - External Dose Point

Source Dimensions	
Height	1.2e+3 cm (40 ft 0.0 in)
Radius	39.37 cm (1 ft 3.5 in)

Dose Points			
A	X	Y	Z
#1	364.63 cm (11 ft 11.6 in)	609.6 cm (20 ft 0.0 in)	39.645 cm (1 ft 3.6 in)

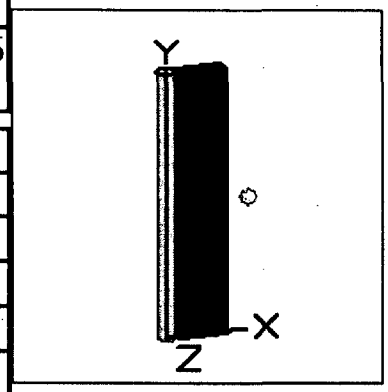

Shields			
Shield N	Dimension	Material	Density
Cyl. Radius	39.37 cm	Air	0.00122
Transition	.275 cm	Iron	7.86
Shield 2	113.18 cm	Air	0.00122
Shield 3	30.48 cm	Mixed ->	1.52122
		Air	0.00122
		Average Soil	1.52
Shield 4	81.3 cm	Average Soil	1.52
Air Gap		Air	0.00122
Wall Clad	.025 cm	Iron	7.86

Source Input: Grouping Method - Actual Photon Energies				
Nuclide	Ci	Bq	µCi/cm²	Bq/cm²
Co-60	1.3572e-009	5.0215e+001	4.5000e-009	1.6650e-004

Buildup: The material reference is Shield 4 Integration Parameters	
Y Direction (axial)	20
Circumferential	20

Results

Energy (MeV)	Activity (Photons/sec)	Fluence Rate MeV/cm²/sec No Buildup	Fluence Rate MeV/cm²/sec With Buildup	Exposure Rate mR/hr No Buildup	Exposure Rate mR/hr With Buildup
0.6938	8.191e-03	3.440e-16	1.513e-14	6.641e-19	2.921e-17
1.1732	5.022e+01	7.941e-11	1.547e-09	1.419e-13	2.765e-12
1.3325	5.022e+01	1.785e-10	2.890e-09	3.096e-13	5.014e-12
Totals	**1.004e+02**	**2.579e-10**	**4.437e-09**	**4.515e-13**	**7.778e-12**

MicroShield 7.02 (07-MSD-7.02-1385)
LMCO ODIN
Conversion of calculated exposure in air to dose
FILE: C:\Program Files (x86)\MicroShield 7\Examples\CaseFiles\BP2-1-07A.ms7
Case Title: BP2-1Case 7A
This case was run on Wednesday, June 13, 2012 at 9:07:38 AM
Dose Point # 1 - (364.63,609.6,39.645) cm

Results (Summed over energies)	Units	Without Buildup	With Buildup
Photon Fluence Rate (flux)	Photons/cm²/sec	2.016e-010	3.487e-009
Photon Energy Fluence Rate	MeV/cm²/sec	2.579e-010	4.437e-009
Exposure and Dose Rates:			
Exposure Rate in Air	mR/hr	4.515e-013	7.778e-012
Absorbed Dose Rate in Air	mGy/hr	3.942e-015	6.791e-014
"	mrad/hr	3.942e-013	6.791e-012
Deep Dose Equivalent Rate	(ICRP 51 - 1987)		
o Parallel Geometry	mSv/hr	4.473e-015	7.708e-014
o Opposed	"	3.856e-015	6.641e-014
o Rotational	"	3.856e-015	6.641e-014
o Isotropic	"	3.446e-015	5.933e-014
Shallow Dose Equivalent Rate	(ICRP 51 - 1987)		
o Parallel Geometry	mSv/hr	4.761e-015	8.204e-014
o Opposed	"	4.585e-015	7.901e-014
o Rotational	"	4.585e-015	7.901e-014
o Isotropic	"	3.649e-015	6.285e-014
Effective Dose Equivalent Rate	(ICRP 51 - 1987)		
o Anterior/Posterior Geometry	mSv/hr	4.029e-015	6.941e-014
o Posterior/Anterior	"	3.713e-015	6.396e-014
o Lateral	"	2.956e-015	5.089e-014
o Rotational	"	3.344e-015	5.760e-014
o Isotropic	"	2.961e-015	5.099e-014

MicroShield 7.02
LMCO ODIN (07-MSD-7.02-1385)

Date	By	Checked

Filename	Run Date	Run Time	Duration
BP2-1-08.ms7	June 6, 2012	1:31:59 PM	00:00:00

Project Info	
Case Title	BP2-1Case 8
Description	Pent Crossover - 40 ft length w unit Co-60, dose at pipe end
Geometry	10 - Cylinder Surface - External Dose Point

Source Dimensions	
Height	1.2e+3 cm (40 ft 0.0 in)
Radius	39.37 cm (1 ft 3.5 in)

Dose Points			
A	X	Y	Z
#1	39.67 cm (1 ft 3.6 in)	1.3e+3 cm (43 ft 3.4 in)	39.645 cm (1 ft 3.6 in)

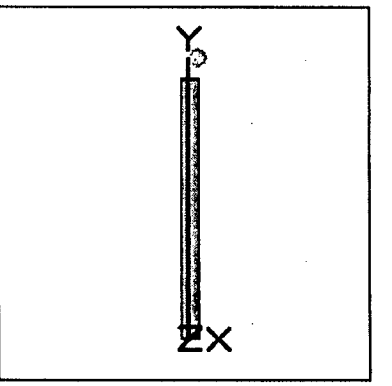

Shields			
Shield N	Dimension	Material	Density
Cyl. Radius	39.37 cm	Air	0.00122
Transition	.275 cm	Iron	7.86
Air Gap		Air	0.00122
Wall Clad	.025 cm	Iron	7.86

Source Input: Grouping Method - Actual Photon Energies				
Nuclide	Ci	Bq	µCi/cm²	Bq/cm²
Co-60	1.3572e-009	5.0215e+001	4.5000e-009	1.6650e-004

Buildup: The material reference is Transition Integration Parameters	
Y Direction (axial)	20
Circumferential	20

Results

Energy (MeV)	Activity (Photons/sec)	Fluence Rate MeV/cm²/sec No Buildup	Fluence Rate MeV/cm²/sec With Buildup	Exposure Rate mR/hr No Buildup	Exposure Rate mR/hr With Buildup

0.6938	8.191e-03	5.226e-17	1.717e-15	1.009e-19	3.314e-18
1.1732	5.022e+01	1.612e-11	2.859e-10	2.880e-14	5.109e-13
1.3325	5.022e+01	3.795e-11	5.755e-10	6.583e-14	9.984e-13
Totals	**1.004e+02**	**5.406e-11**	**8.613e-10**	**9.464e-14**	**1.509e-12**

MicroShield 7.02 (07-MSD-7.02-1385)
LMCO ODIN
Conversion of calculated exposure in air to dose
FILE: C:\Program Files (x86)\MicroShield 7\Examples\CaseFiles\BP2-1-08.ms7
Case Title: BP2-1Case 8
This case was run on Wednesday, June 6, 2012 at 1:31:59 PM
Dose Point # 1 - (39.67,1319.2,39.645) cm

Results (Summed over energies)	Units	Without Buildup	With Buildup
Photon Fluence Rate (flux)	Photons/cm²/sec	4.221e-011	6.755e-010
Photon Energy Fluence Rate	MeV/cm²/sec	5.406e-011	8.613e-010
Exposure and Dose Rates:			
Exposure Rate in Air	mR/hr	9.464e-014	1.509e-012
Absorbed Dose Rate in Air	mGy/hr	8.262e-016	1.318e-014
"	mrad/hr	8.262e-014	1.318e-012
Deep Dose Equivalent Rate	(ICRP 51 - 1987)		
o Parallel Geometry	mSv/hr	9.376e-016	1.496e-014
o Opposed	"	8.083e-016	1.289e-014
o Rotational	"	8.083e-016	1.289e-014
o Isotropic	"	7.223e-016	1.151e-014
Shallow Dose Equivalent Rate	(ICRP 51 - 1987)		
o Parallel Geometry	mSv/hr	9.977e-016	1.592e-014
o Opposed	"	9.610e-016	1.533e-014
o Rotational	"	9.610e-016	1.533e-014
o Isotropic	"	7.649e-016	1.220e-014
Effective Dose Equivalent Rate	(ICRP 51 - 1987)		
o Anterior/Posterior Geometry	mSv/hr	8.444e-016	1.347e-014
o Posterior/Anterior	"	7.783e-016	1.241e-014
o Lateral	"	6.198e-016	9.878e-015
o Rotational	"	7.010e-016	1.118e-014
o Isotropic	"	6.208e-016	9.896e-015

MicroShield 7.02
LMCO ODIN (07-MSD-7.02-1385)

Date	By	Checked

Filename	Run Date	Run Time	Duration
BP2-1-09.ms7	June 6, 2012	1:38:04 PM	00:00:00

Project Info	
Case Title	BP2-1Case 9
Description	Pent Crossover, 40 ft length w unit Cs-137, dose at pipe end
Geometry	10 - Cylinder Surface - External Dose Point

Source Dimensions	
Height	1.2e+3 cm (40 ft 0.0 in)
Radius	39.37 cm (1 ft 3.5 in)

Dose Points			
A	X	Y	Z
#1	39.67 cm (1 ft 3.6 in)	1.3e+3 cm (43 ft 3.4 in)	39.645 cm (1 ft 3.6 in)

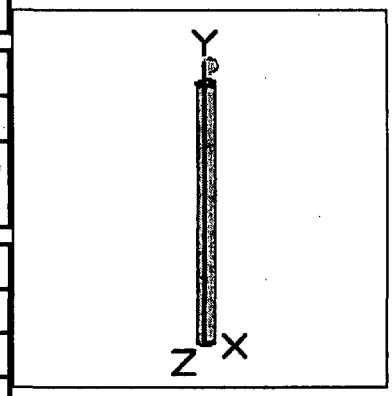

Shields			
Shield N	Dimension	Material	Density
Cyl. Radius	39.37 cm	Air	0.00122
Transition	.275 cm	Iron	7.86
Air Gap		Air	0.00122
Wall Clad	.025 cm	Iron	7.86

Source Input: Grouping Method - Actual Photon Energies				
Nuclide	Ci	Bq	µCi/cm²	Bq/cm²
Ba-137m	1.2839e-009	4.7504e+001	4.2570e-009	1.5751e-004
Cs-137	1.3572e-009	5.0215e+001	4.5000e-009	1.6650e-004

Buildup: The material reference is Transition Integration Parameters	
Y Direction (axial)	20
Circumferential	20

Results

Energy (MeV)	Activity (Photons/sec)	Fluence Rate MeV/cm²/sec	Fluence Rate MeV/cm²/sec With	Exposure Rate mR/hr	Exposure Rate mR/hr With

		No Buildup	Buildup	No Buildup	Buildup
0.0045	4.931e-01	0.000e+00	1.030e-35	0.000e+00	7.063e-36
0.0318	9.835e-01	0.000e+00	1.599e-34	0.000e+00	1.332e-36
0.0322	1.814e+00	0.000e+00	2.998e-34	0.000e+00	2.413e-36
0.0364	6.603e-01	0.000e+00	1.314e-34	0.000e+00	7.465e-37
0.6616	4.274e+01	1.862e-13	6.414e-12	3.609e-16	1.243e-14
Totals	**4.670e+01**	**1.862e-13**	**6.414e-12**	**3.609e-16**	**1.243e-14**

MicroShield 7.02 (07-MSD-7.02-1385)
LMCO ODIN
Conversion of calculated exposure in air to dose
FILE: C:\Program Files (x86)\MicroShield 7\Examples\CaseFiles\BP2-1-09.ms7
Case Title: BP2-1Case 9
This case was run on Wednesday, June 6, 2012 at 1:38:04 PM
Dose Point # 1 - (39.67,1319.2,39.645) cm

Results (Summed over energies)	Units	Without Buildup	With Buildup
Photon Fluence Rate (flux)	Photons/cm²/sec	2.814e-013	9.693e-012
Photon Energy Fluence Rate	MeV/cm²/sec	1.862e-013	6.414e-012
Exposure and Dose Rates:			
Exposure Rate in Air	mR/hr	3.609e-016	1.243e-014
Absorbed Dose Rate in Air	mGy/hr	3.151e-018	1.085e-016
"	mrad/hr	3.151e-016	1.085e-014
Deep Dose Equivalent Rate	(ICRP 51 - 1987)		
o Parallel Geometry	mSv/hr	3.730e-018	1.285e-016
o Opposed	"	2.987e-018	1.029e-016
o Rotational	"	2.987e-018	1.029e-016
o Isotropic	"	2.641e-018	9.099e-017
Shallow Dose Equivalent Rate	(ICRP 51 - 1987)		
o Parallel Geometry	mSv/hr	3.965e-018	1.366e-016
o Opposed	"	3.766e-018	1.297e-016
o Rotational	"	3.766e-018	1.297e-016
o Isotropic	"	2.823e-018	9.726e-017
Effective Dose Equivalent Rate	(ICRP 51 - 1987)		
o Anterior/Posterior Geometry	mSv/hr	3.298e-018	1.136e-016
o Posterior/Anterior	"	2.911e-018	1.003e-016
o Lateral	"	2.159e-018	7.438e-017
o Rotational	"	2.602e-018	8.963e-017
o Isotropic	"	2.215e-018	7.631e-017

MicroShield 7.02
LMCO ODIN (07-MSD-7.02-1385)

Date	By	Checked

Filename	Run Date	Run Time	Duration
MP10-4-01.ms7	May 31, 2012	3:42:02 PM	00:00:00

Project Info	
Case Title	MP10-4 Case 1
Description	Line 310, 6 in pipe DP at Quad wall 1 m above FL, unit Co-60
Geometry	10 - Cylinder Surface - External Dose Point

Source Dimensions	
Height	91.44 cm (3 ft)
Radius	7.7 cm (3.0 in)

Dose Points			
A	X	Y	Z
#1	463.46 cm (15 ft 2.5 in)	91.44 cm (3 ft)	0.0 cm (0.0 in)

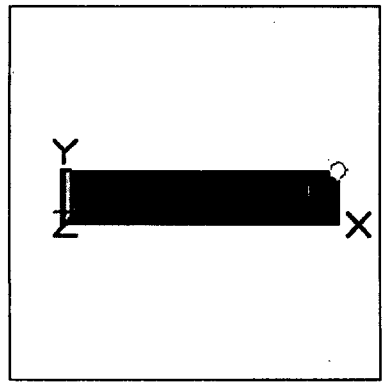

Shields			
Shield N	Dimension	Material	Density
Cyl. Radius	7.7 cm	Air	0.00122
Transition	.71 cm	Iron	7.86
Shield 2	455.025 cm	Concrete	2.4
Air Gap		Air	0.00122
Wall Clad	.025 cm	Iron	7.86

Source Input: Grouping Method - Actual Photon Energies				
Nuclide	Ci	Bq	µCi/cm²	Bq/cm²
Co-60	1.9908e-011	7.3658e-001	4.5000e-009	1.6650e-004

Buildup: The material reference is Shield 2 Integration Parameters	
Y Direction (axial)	20
Circumferential	20

Results

Energy (MeV)	Activity (Photons/sec)	Fluence Rate MeV/cm²/sec No Buildup	Fluence Rate MeV/cm²/sec With Buildup	Exposure Rate mR/hr No Buildup	Exposure Rate mR/hr With Buildup

0.6938	1.202e-04	6.993e-48	1.530e-34	1.350e-50	2.953e-37
1.1732	7.366e-01	9.412e-36	5.516e-31	1.682e-38	9.857e-34
1.3325	7.366e-01	6.430e-34	5.126e-31	1.116e-36	8.892e-34
Totals	**1.473e+00**	**6.524e-34**	**1.064e-30**	**1.132e-36**	**1.875e-33**

MicroShield 7.02 (07-MSD-7.02-1385)
LMCO ODIN
Conversion of calculated exposure in air to dose
FILE: C:\Program Files (x86)\MicroShield 7\Examples\CaseFiles\MP10-4-01.ms7
Case Title: MP10-4 Case 1
This case was run on Thursday, May 31, 2012 at 3:42:02 PM
Dose Point # 1 - (463.46,91.44,0) cm

Results (Summed over energies)	Units	Without Buildup	With Buildup
Photon Fluence Rate (flux)	Photons/cm²/sec	4.906e-034	8.550e-031
Photon Energy Fluence Rate	MeV/cm²/sec	6.524e-034	1.064e-030
Exposure and Dose Rates:			
Exposure Rate in Air	mR/hr	1.132e-036	1.875e-033
Absorbed Dose Rate in Air	mGy/hr	9.886e-039	1.637e-035
"	mrad/hr	9.886e-037	1.637e-033
Deep Dose Equivalent Rate	(ICRP 51 - 1987)		
o Parallel Geometry	mSv/hr	1.120e-038	1.860e-035
o Opposed	"	9.691e-039	1.599e-035
o Rotational	"	9.691e-039	1.599e-035
o Isotropic	"	8.671e-039	1.428e-035
Shallow Dose Equivalent Rate	(ICRP 51 - 1987)		
o Parallel Geometry	mSv/hr	1.191e-038	1.981e-035
o Opposed	"	1.149e-038	1.906e-035
o Rotational	"	1.149e-038	1.906e-035
o Isotropic	"	9.169e-039	1.514e-035
Effective Dose Equivalent Rate	(ICRP 51 - 1987)		
o Anterior/Posterior Geometry	mSv/hr	1.010e-038	1.674e-035
o Posterior/Anterior	"	9.325e-039	1.541e-035
o Lateral	"	7.455e-039	1.223e-035
o Rotational	"	8.403e-039	1.387e-035
o Isotropic	"	7.459e-039	1.226e-035

MicroShield 7.02
LMCO ODIN (07-MSD-7.02-1385)

Date	By	Checked

Filename	Run Date	Run Time	Duration
MP10-4-02.ms7	June 12, 2012	4:48:46 PM	00:00:00

Project Info	
Case Title	MP10-4 Case 2
Description	Pipe No. 310, 6in., 3 ft long DP above Quad Wall, Unit Co-60
Geometry	10 - Cylinder Surface - External Dose Point

Source Dimensions	
Height	91.44 cm (3 ft)
Radius	7.7 cm (3.0 in)

Dose Points			
A	X	Y	Z
#1	289.725 cm (9 ft 6.1 in)	45.72 cm (1 ft 6.0 in)	97.79 cm (3 ft 2.5 in)

Shields			
Shield N	Dimension	Material	Density
Cyl. Radius	7.7 cm	Air	0.00122
Transition	.71 cm	Iron	7.86
Shield 2	181.29 cm	Concrete	2.4
Air Gap		Air	0.00122
Wall Clad	.025 cm	Iron	7.86

Source Input: Grouping Method - Actual Photon Energies				
Nuclide	Ci	Bq	µCi/cm²	Bq/cm²
Co-60	1.9908e-011	7.3658e-001	4.5000e-009	1.6650e-004

Buildup: The material reference is Shield 2 Integration Parameters	
Y Direction (axial)	20
Circumferential	20

Results

Energy (MeV)	Activity (Photons/sec)	Fluence Rate MeV/cm²/sec	Fluence Rate MeV/cm²/sec With	Exposure Rate mR/hr	Exposure Rate mR/hr With

		No Buildup	Buildup	No Buildup	Buildup
0.6938	1.202e-04	1.182e-26	2.984e-24	2.283e-29	5.762e-27
1.1732	7.366e-01	3.665e-19	2.772e-17	6.550e-22	4.954e-20
1.3325	7.366e-01	2.410e-18	1.401e-16	4.181e-21	2.431e-19
Totals	**1.473e+00**	**2.776e-18**	**1.679e-16**	**4.836e-21**	**2.927e-19**

MicroShield 7.02 (07-MSD-7.02-1385)
LMCO ODIN
Conversion of calculated exposure in air to dose
FILE: C:\Program Files (x86)\MicroShield 7\Examples\CaseFiles\MP10-4-02.ms7
Case Title: MP10-4 Case 2
This case was run on Tuesday, June 12, 2012 at 4:48:46 PM
Dose Point # 1 - (289.725,45.72,97.79) cm

Results (Summed over energies)	Units	Without Buildup	With Buildup
Photon Fluence Rate (flux)	Photons/cm²/sec	2.121e-018	1.288e-016
Photon Energy Fluence Rate	MeV/cm²/sec	2.776e-018	1.679e-016
Exposure and Dose Rates:			
Exposure Rate in Air	mR/hr	4.836e-021	2.927e-019
Absorbed Dose Rate in Air	mGy/hr	4.222e-023	2.555e-021
"	mrad/hr	4.222e-021	2.555e-019
Deep Dose Equivalent Rate	(ICRP 51 - 1987)		
o Parallel Geometry	mSv/hr	4.787e-023	2.898e-021
o Opposed	"	4.135e-023	2.502e-021
o Rotational	"	4.135e-023	2.502e-021
o Isotropic	"	3.698e-023	2.237e-021
Shallow Dose Equivalent Rate	(ICRP 51 - 1987)		
o Parallel Geometry	mSv/hr	5.091e-023	3.082e-021
o Opposed	"	4.908e-023	2.971e-021
o Rotational	"	4.908e-023	2.971e-021
o Isotropic	"	3.913e-023	2.368e-021
Effective Dose Equivalent Rate	(ICRP 51 - 1987)		
o Anterior/Posterior Geometry	mSv/hr	4.313e-023	2.610e-021
o Posterior/Anterior	"	3.980e-023	2.408e-021
o Lateral	"	3.177e-023	1.921e-021
o Rotational	"	3.586e-023	2.170e-021
o Isotropic	"	3.180e-023	1.924e-021

MicroShield 7.02
LMCO ODIN (07-MSD-7.02-1385)

Date	By	Checked

Filename	Run Date	Run Time	Duration
MP10-4-03.ms7	June 12, 2012	4:56:33 PM	00:00:00

Project Info	
Case Title	MP10-4 Case 3
Description	Pipe No. 311, 4in., 3 ft., DP above Quad D Wall, Unit Co-60
Geometry	10 - Cylinder Surface - External Dose Point

Source Dimensions	
Height	91.44 cm (3 ft)
Radius	5.11 cm (2.0 in)

Dose Points			
A	X	Y	Z
#1	292.425 cm (9 ft 7.1 in)	45.72 cm (1 ft 6.0 in)	52.07 cm (1 ft 8.5 in)

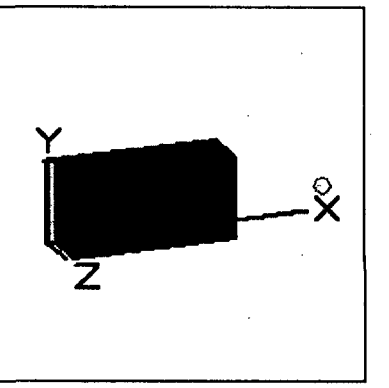

Shields			
Shield N	Dimension	Material	Density
Cyl. Radius	5.11 cm	Air	0.00122
Transition	.6 cm	Iron	7.86
Shield 2	186.69 cm	Concrete	2.4
Air Gap		Air	0.00122
Wall Clad	.025 cm	Iron	7.86

Source Input: Grouping Method - Actual Photon Energies				
Nuclide	Ci	Bq	μCi/cm²	Bq/cm²
Co-60	1.3211e-011	4.8882e-001	4.5000e-009	1.6650e-004

Buildup: The material reference is Shield 2 Integration Parameters	
Y Direction (axial)	20
Circumferential	20

Results

Energy (MeV)	Activity (Photons/sec)	Fluence Rate MeV/cm²/sec	Fluence Rate MeV/cm²/sec With	Exposure Rate mR/hr	Exposure Rate mR/hr With

		No Buildup	Buildup	No Buildup	Buildup
0.6938	7.974e-05	1.625e-26	4.003e-24	3.137e-29	7.729e-27
1.1732	4.888e-01	4.502e-19	3.335e-17	8.046e-22	5.959e-20
1.3325	4.888e-01	2.885e-18	1.644e-16	5.006e-21	2.852e-19
Totals	**9.777e-01**	**3.336e-18**	**1.977e-16**	**5.811e-21**	**3.448e-19**

MicroShield 7.02 (07-MSD-7.02-1385)
LMCO ODIN
Conversion of calculated exposure in air to dose
FILE: C:\Program Files (x86)\MicroShield 7\Examples\CaseFiles\MP10-4-03.ms7
Case Title: MP10-4 Case 3
This case was run on Tuesday, June 12, 2012 at 4:56:33 PM
Dose Point # 1 - (292.425,45.72,52.07) cm

Results (Summed over energies)	Units	Without Buildup	With Buildup
Photon Fluence Rate (flux)	Photons/cm²/sec	2.549e-018	1.518e-016
Photon Energy Fluence Rate	MeV/cm²/sec	3.336e-018	1.977e-016
Exposure and Dose Rates:			
Exposure Rate in Air	mR/hr	5.811e-021	3.448e-019
Absorbed Dose Rate in Air	mGy/hr	5.073e-023	3.010e-021
"	mrad/hr	5.073e-021	3.010e-019
Deep Dose Equivalent Rate	(ICRP 51 - 1987)		
o Parallel Geometry	mSv/hr	5.753e-023	3.414e-021
o Opposed	"	4.969e-023	2.948e-021
o Rotational	"	4.969e-023	2.948e-021
o Isotropic	"	4.443e-023	2.636e-021
Shallow Dose Equivalent Rate	(ICRP 51 - 1987)		
o Parallel Geometry	mSv/hr	6.118e-023	3.631e-021
o Opposed	"	5.897e-023	3.500e-021
o Rotational	"	5.897e-023	3.500e-021
o Isotropic	"	4.701e-023	2.789e-021
Effective Dose Equivalent Rate	(ICRP 51 - 1987)		
o Anterior/Posterior Geometry	mSv/hr	5.182e-023	3.075e-021
o Posterior/Anterior	"	4.782e-023	2.837e-021
o Lateral	"	3.817e-023	2.264e-021
o Rotational	"	4.309e-023	2.556e-021
o Isotropic	"	3.821e-023	2.266e-021

MicroShield 7.02
LMCO ODIN (07-MSD-7.02-1385)

Date	By	Checked

Filename	Run Date	Run Time	Duration
MP10-4-04.ms7	June 12, 2012	5:02:26 PM	00:00:00

Project Info	
Case Title	MP10-4 Case 4
Description	Pipe No. 312, 4in., 3 ft, DP above Quad D Wall, Unit Co-60
Geometry	10 - Cylinder Surface - External Dose Point

Source Dimensions	
Height	91.44 cm (3 ft)
Radius	5.11 cm (2.0 in)

Dose Points			
A	X	Y	Z
#1	292.425 cm (9 ft 7.1 in)	45.72 cm (1 ft 6.0 in)	16.51 cm (6.5 in)

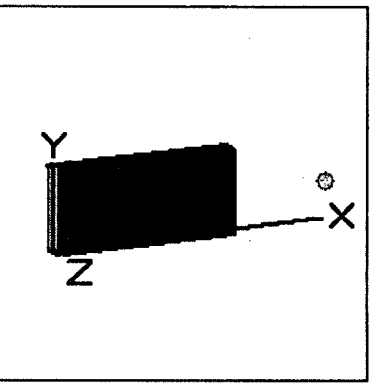

Shields			
Shield N	Dimension	Material	Density
Cyl. Radius	5.11 cm	Air	0.00122
Transition	.6 cm	Iron	7.86
Shield 2	186.69 cm	Concrete	2.4
Air Gap		Air	0.00122
Wall Clad	.025 cm	Iron	7.86

Source Input: Grouping Method - Actual Photon Energies				
Nuclide	Ci	Bq	µCi/cm²	Bq/cm²
Co-60	1.3211e-011	4.8882e-001	4.5000e-009	1.6650e-004

Buildup: The material reference is Shield 2 Integration Parameters	
Y Direction (axial)	20
Circumferential	20

Results

Energy (MeV)	Activity (Photons/sec)	Fluence Rate MeV/cm²/sec	Fluence Rate MeV/cm²/sec With	Exposure Rate mR/hr	Exposure Rate mR/hr With

		No Buildup	Buildup	No Buildup	Buildup
0.6938	7.974e-05	2.759e-26	6.629e-24	5.328e-29	1.280e-26
1.1732	4.888e-01	6.840e-19	4.963e-17	1.222e-21	8.868e-20
1.3325	4.888e-01	4.278e-18	2.390e-16	7.422e-21	4.147e-19
Totals	**9.777e-01**	**4.962e-18**	**2.886e-16**	**8.644e-21**	**5.034e-19**

MicroShield 7.02 (07-MSD-7.02-1385)
LMCO ODIN
Conversion of calculated exposure in air to dose
FILE: C:\Program Files (x86)\MicroShield 7\Examples\CaseFiles\MP10-4-04.ms7
Case Title: MP10-4 Case 4
This case was run on Tuesday, June 12, 2012 at 5:02:26 PM
Dose Point # 1 - (292.425,45.72,16.51) cm

Results (Summed over energies)	Units	Without Buildup	With Buildup
Photon Fluence Rate (flux)	Photons/cm²/sec	3.793e-018	2.217e-016
Photon Energy Fluence Rate	MeV/cm²/sec	4.962e-018	2.886e-016
Exposure and Dose Rates:			
Exposure Rate in Air	mR/hr	8.644e-021	5.034e-019
Absorbed Dose Rate in Air	mGy/hr	7.546e-023	4.394e-021
"	mrad/hr	7.546e-021	4.394e-019
Deep Dose Equivalent Rate	(ICRP 51 - 1987)		
o Parallel Geometry	mSv/hr	8.558e-023	4.984e-021
o Opposed	"	7.391e-023	4.303e-021
o Rotational	"	7.391e-023	4.303e-021
o Isotropic	"	6.609e-023	3.847e-021
Shallow Dose Equivalent Rate	(ICRP 51 - 1987)		
o Parallel Geometry	mSv/hr	9.101e-023	5.301e-021
o Opposed	"	8.773e-023	5.109e-021
o Rotational	"	8.773e-023	5.109e-021
o Isotropic	"	6.994e-023	4.072e-021
Effective Dose Equivalent Rate	(ICRP 51 - 1987)		
o Anterior/Posterior Geometry	mSv/hr	7.709e-023	4.490e-021
o Posterior/Anterior	"	7.114e-023	4.142e-021
o Lateral	"	5.678e-023	3.304e-021
o Rotational	"	6.410e-023	3.732e-021
o Isotropic	"	5.683e-023	3.308e-021

MicroShield 7.02
LMCO ODIN (07-MSD-7.02-1385)

Date	By	Checked

Filename	Run Date	Run Time	Duration
MP10-4-05.ms7	June 12, 2012	5:10:16 PM	00:00:00

Project Info	
Case Title	MP10-4 Case 5
Description	Pipe No. 313, 3in., 3 ft. DP above Quad D Wall, Unit Co-60
Geometry	10 - Cylinder Surface - External Dose Point

Source Dimensions	
Height	91.44 cm (3 ft)
Radius	3.9 cm (1.5 in)

Dose Points			
A	X	Y	Z
#1	293.7 cm (9 ft 7.6 in)	45.72 cm (1 ft 6.0 in)	16.51 cm (6.5 in)

Shields			
Shield N	Dimension	Material	Density
Cyl. Radius	3.9 cm	Air	0.00122
Transition	.55 cm	Iron	7.86
Shield 2	189.23 cm	Concrete	2.4
Air Gap		Air	0.00122
Wall Clad	.025 cm	Iron	7.86

Source Input: Grouping Method - Actual Photon Energies				
Nuclide	Ci	Bq	µCi/cm²	Bq/cm²
Co-60	1.0083e-011	3.7307e-001	4.5000e-009	1.6650e-004

Buildup: The material reference is Shield 2 Integration Parameters	
Y Direction (axial)	20
Circumferential	20

Results

Energy (MeV)	Activity (Photons/sec)	Fluence Rate MeV/cm²/sec	Fluence Rate MeV/cm²/sec With	Exposure Rate mR/hr	Exposure Rate mR/hr With

		No Buildup	Buildup	No Buildup	Buildup
0.6938	6.086e-05	1.526e-26	3.740e-24	2.947e-29	7.220e-27
1.1732	3.731e-01	4.116e-19	3.032e-17	7.355e-22	5.418e-20
1.3325	3.731e-01	2.620e-18	1.485e-16	4.546e-21	2.576e-19
Totals	**7.462e-01**	**3.032e-18**	**1.788e-16**	**5.282e-21**	**3.118e-19**

MicroShield 7.02 (07-MSD-7.02-1385)
LMCO ODIN
Conversion of calculated exposure in air to dose
FILE: C:\Program Files (x86)\MicroShield 7\Examples\CaseFiles\MP10-4-05.ms7
Case Title: MP10-4 Case 5
This case was run on Tuesday, June 12, 2012 at 5:10:16 PM
Dose Point # 1 - (293.7,45.72,16.51) cm

Results (Summed over energies)	Units	Without Buildup	With Buildup
Photon Fluence Rate (flux)	Photons/cm²/sec	2.317e-018	1.373e-016
Photon Energy Fluence Rate	MeV/cm²/sec	3.032e-018	1.788e-016
Exposure and Dose Rates:			
Exposure Rate in Air	mR/hr	5.282e-021	3.118e-019
Absorbed Dose Rate in Air	mGy/hr	4.611e-023	2.722e-021
"	mrad/hr	4.611e-021	2.722e-019
Deep Dose Equivalent Rate	(ICRP 51 - 1987)		
o Parallel Geometry	mSv/hr	5.229e-023	3.087e-021
o Opposed	"	4.516e-023	2.666e-021
o Rotational	"	4.516e-023	2.666e-021
o Isotropic	"	4.039e-023	2.383e-021
Shallow Dose Equivalent Rate	(ICRP 51 - 1987)		
o Parallel Geometry	mSv/hr	5.561e-023	3.284e-021
o Opposed	"	5.361e-023	3.165e-021
o Rotational	"	5.361e-023	3.165e-021
o Isotropic	"	4.273e-023	2.522e-021
Effective Dose Equivalent Rate	(ICRP 51 - 1987)		
o Anterior/Posterior Geometry	mSv/hr	4.711e-023	2.781e-021
o Posterior/Anterior	"	4.347e-023	2.566e-021
o Lateral	"	3.470e-023	2.047e-021
o Rotational	"	3.917e-023	2.312e-021
o Isotropic	"	3.473e-023	2.049e-021

MicroShield 7.02
LMCO ODIN (07-MSD-7.02-1385)

Date	By	Checked

Filename	Run Date	Run Time	Duration
MP10-4-06.ms7	June 12, 2012	5:16:51 PM	00:00:00

Project Info	
Case Title	MP10-4 Case 6
Description	Pipe No. 314, 3in., 3 ft DP above Quad D Wall, Unit Co-60
Geometry	10 - Cylinder Surface - External Dose Point

Source Dimensions	
Height	91.44 cm (3 ft)
Radius	3.9 cm (1.5 in)

Dose Points			
A	X	Y	Z
#1	293.705 cm (9 ft 7.6 in)	45.72 cm (1 ft 6.0 in)	46.99 cm (1 ft 6.5 in)

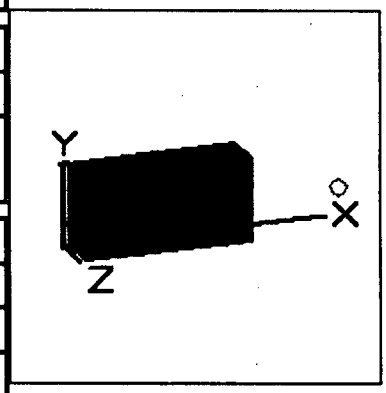

Shields			
Shield N	Dimension	Material	Density
Cyl. Radius	3.9 cm	Air	0.00122
Transition	.55 cm	Iron	7.86
Shield 2	189.23 cm	Concrete	2.4
Air Gap		Air	0.00122
Wall Clad	.025 cm	Iron	7.86

Source Input: Grouping Method - Actual Photon Energies				
Nuclide	Ci	Bq	µCi/cm²	Bq/cm²
Co-60	1.0083e-011	3.7307e-001	4.5000e-009	1.6650e-004

Buildup: The material reference is Shield 2 Integration Parameters	
Y Direction (axial)	20
Circumferential	20

Results

Energy (MeV)	Activity (Photons/sec)	Fluence Rate MeV/cm²/sec	Fluence Rate MeV/cm²/sec With	Exposure Rate mR/hr	Exposure Rate mR/hr With

		No Buildup	Buildup	No Buildup	Buildup
0.6938	6.086e-05	1.004e-26	2.510e-24	1.939e-29	4.847e-27
1.1732	3.731e-01	2.959e-19	2.215e-17	5.287e-22	3.958e-20
1.3325	3.731e-01	1.921e-18	1.105e-16	3.332e-21	1.917e-19
Totals	**7.462e-01**	**2.216e-18**	**1.327e-16**	**3.861e-21**	**2.313e-19**

MicroShield 7.02 (07-MSD-7.02-1385)
LMCO ODIN
Conversion of calculated exposure in air to dose
FILE: C:\Program Files (x86)\MicroShield 7\Examples\CaseFiles\MP10-4-06.ms7
Case Title: MP10-4 Case 6
This case was run on Tuesday, June 12, 2012 at 5:16:51 PM
Dose Point # 1 - (293.705,45.72,46.99) cm

Results (Summed over energies)	Units	Without Buildup	With Buildup
Photon Fluence Rate (flux)	Photons/cm²/sec	1.694e-018	1.018e-016
Photon Energy Fluence Rate	MeV/cm²/sec	2.216e-018	1.327e-016
Exposure and Dose Rates:			
Exposure Rate in Air	mR/hr	3.861e-021	2.313e-019
Absorbed Dose Rate in Air	mGy/hr	3.370e-023	2.019e-021
"	mrad/hr	3.370e-021	2.019e-019
Deep Dose Equivalent Rate	(ICRP 51 - 1987)		
o Parallel Geometry	mSv/hr	3.822e-023	2.290e-021
o Opposed	"	3.301e-023	1.977e-021
o Rotational	"	3.301e-023	1.977e-021
o Isotropic	"	2.952e-023	1.768e-021
Shallow Dose Equivalent Rate	(ICRP 51 - 1987)		
o Parallel Geometry	mSv/hr	4.065e-023	2.436e-021
o Opposed	"	3.918e-023	2.348e-021
o Rotational	"	3.918e-023	2.348e-021
o Isotropic	"	3.124e-023	1.871e-021
Effective Dose Equivalent Rate	(ICRP 51 - 1987)		
o Anterior/Posterior Geometry	mSv/hr	3.443e-023	2.063e-021
o Posterior/Anterior	"	3.178e-023	1.903e-021
o Lateral	"	2.536e-023	1.519e-021
o Rotational	"	2.863e-023	1.715e-021
o Isotropic	"	2.539e-023	1.520e-021

MicroShield 7.02
LMCO ODIN (07-MSD-7.02-1385)

Date	By	Checked

Filename	Run Date	Run Time	Duration
MP10-4-07.ms7	June 12, 2012	5:23:27 PM	00:00:00

Project Info	
Case Title	MP10-4 Case 7
Description	Pipe No. 315, 3in., 3 ft. DP above Quad D Wall, Unit Co-60
Geometry	10 - Cylinder Surface - External Dose Point

Source Dimensions	
Height	91.44 cm (3 ft)
Radius	3.9 cm (1.5 in)

Dose Points			
A	X	Y	Z
#1	293.705 cm (9 ft 7.6 in)	45.72 cm (1 ft 6.0 in)	77.47 cm (2 ft 6.5 in)

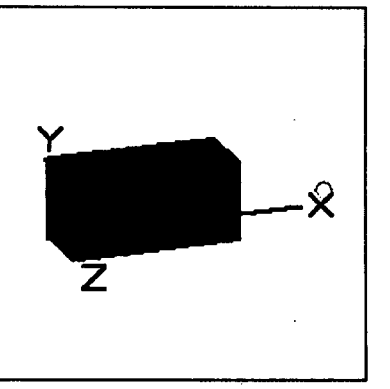

Shields			
Shield N	Dimension	Material	Density
Cyl. Radius	3.9 cm	Air	0.00122
Transition	.55 cm	Iron	7.86
Shield 2	189.23 cm	Concrete	2.4
Air Gap		Air	0.00122
Wall Clad	.025 cm	Iron	7.86

Source Input: Grouping Method - Actual Photon Energies				
Nuclide	Ci	Bq	µCi/cm²	Bq/cm²
Co-60	1.0083e-011	3.7307e-001	4.5000e-009	1.6650e-004

Buildup: The material reference is Shield 2 Integration Parameters	
Y Direction (axial)	20
Circumferential	20

Results

Energy (MeV)	Activity (Photons/sec)	Fluence Rate MeV/cm²/sec	Fluence Rate MeV/cm²/sec With	Exposure Rate mR/hr	Exposure Rate mR/hr With

		No Buildup	Buildup	No Buildup	Buildup
0.6938	6.086e-05	4.461e-27	1.158e-24	8.614e-30	2.235e-27
1.1732	3.731e-01	1.557e-19	1.202e-17	2.782e-22	2.147e-20
1.3325	3.731e-01	1.049e-18	6.213e-17	1.820e-21	1.078e-19
Totals	**7.462e-01**	**1.204e-18**	**7.414e-17**	**2.098e-21**	**1.293e-19**

MicroShield 7.02 (07-MSD-7.02-1385)
LMCO ODIN
Conversion of calculated exposure in air to dose
FILE: C:\Program Files (x86)\MicroShield 7\Examples\CaseFiles\MP10-4-07.ms7
Case Title: MP10-4 Case 7
This case was run on Tuesday, June 12, 2012 at 5:23:27 PM
Dose Point # 1 - (293.705,45.72,77.47) cm

Results (Summed over energies)	Units	Without Buildup	With Buildup
Photon Fluence Rate (flux)	Photons/cm²/sec	9.198e-019	5.687e-017
Photon Energy Fluence Rate	MeV/cm²/sec	1.204e-018	7.414e-017
Exposure and Dose Rates:			
Exposure Rate in Air	mR/hr	2.098e-021	1.293e-019
Absorbed Dose Rate in Air	mGy/hr	1.831e-023	1.128e-021
"	mrad/hr	1.831e-021	1.128e-019
Deep Dose Equivalent Rate	(ICRP 51 - 1987)		
o Parallel Geometry	mSv/hr	2.077e-023	1.280e-021
o Opposed	"	1.794e-023	1.105e-021
o Rotational	"	1.794e-023	1.105e-021
o Isotropic	"	1.604e-023	9.880e-022
Shallow Dose Equivalent Rate	(ICRP 51 - 1987)		
o Parallel Geometry	mSv/hr	2.209e-023	1.361e-021
o Opposed	"	2.129e-023	1.312e-021
o Rotational	"	2.129e-023	1.312e-021
o Isotropic	"	1.697e-023	1.046e-021
Effective Dose Equivalent Rate	(ICRP 51 - 1987)		
o Anterior/Posterior Geometry	mSv/hr	1.871e-023	1.153e-021
o Posterior/Anterior	"	1.727e-023	1.064e-021
o Lateral	"	1.378e-023	8.487e-022
o Rotational	"	1.556e-023	9.583e-022
o Isotropic	"	1.379e-023	8.496e-022

MicroShield 7.02
LMCO ODIN (07-MSD-7.02-1385)

Date	By	Checked

Filename	Run Date	Run Time	Duration
MP10-4-08.ms7	June 12, 2012	4:52:18 PM	00:00:00

Project Info	
Case Title	MP10-4 Case 8
Description	Pipe No 310, 6in., 3 ft long DP above Quad Wall, Unit Cs-137
Geometry	10 - Cylinder Surface - External Dose Point

Source Dimensions	
Height	91.44 cm (3 ft)
Radius	7.7 cm (3.0 in)

Dose Points			
A	X	Y	Z
#1	289.725 cm (9 ft 6.1 in)	45.72 cm (1 ft 6.0 in)	97.79 cm (3 ft 2.5 in)

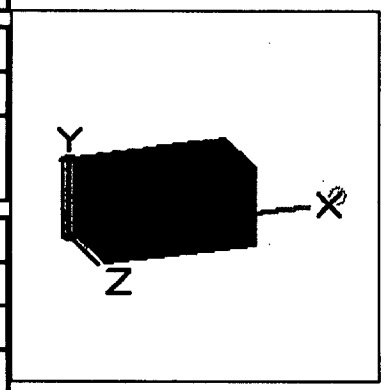

Shields			
Shield N	Dimension	Material	Density
Cyl. Radius	7.7 cm	Air	0.00122
Transition	.71 cm	Iron	7.86
Shield 2	181.29 cm	Concrete	2.4
Air Gap		Air	0.00122
Wall Clad	.025 cm	Iron	7.86

Source Input: Grouping Method - Actual Photon Energies				
Nuclide	Ci	Bq	µCi/cm²	Bq/cm²
Ba-137m	1.8833e-011	6.9681e-001	4.2570e-009	1.5751e-004
Cs-137	1.9908e-011	7.3658e-001	4.5000e-009	1.6650e-004

Buildup: The material reference is Shield 2 Integration Parameters	
Y Direction (axial)	20
Circumferential	20

Results

Energy	Activity	Fluence Rate	Fluence Rate MeV/cm²/sec	Exposure Rate	Exposure Rate mR/hr

(MeV)	(Photons/sec)	MeV/cm²/sec No Buildup	With Buildup	mR/hr No Buildup	With Buildup
0.0045	7.234e-03	0.000e+00	2.657e-37	0.000e+00	1.821e-37
0.0318	1.443e-02	7.633e-226	7.410e-36	6.358e-228	6.173e-38
0.0322	2.662e-02	3.500e-219	1.421e-35	2.817e-221	1.143e-37
0.0364	9.686e-03	7.796e-165	7.918e-36	4.429e-167	4.499e-38
0.6616	6.270e-01	2.707e-23	7.644e-21	5.248e-26	1.482e-23
Totals	**6.849e-01**	**2.707e-23**	**7.644e-21**	**5.248e-26**	**1.482e-23**

MicroShield 7.02 (07-MSD-7.02-1385)
LMCO ODIN
Conversion of calculated exposure in air to dose
FILE: C:\Program Files (x86)\MicroShield 7\Examples\CaseFiles\MP10-4-08.ms7
Case Title: MP10-4 Case 8
This case was run on Tuesday, June 12, 2012 at 4:52:18 PM
Dose Point # 1 - (289.725,45.72,97.79) cm

Results (Summed over energies)	Units	Without Buildup	With Buildup
Photon Fluence Rate (flux)	Photons/cm²/sec	4.091e-023	1.155e-020
Photon Energy Fluence Rate	MeV/cm²/sec	2.707e-023	7.644e-021
Exposure and Dose Rates:			
Exposure Rate in Air	mR/hr	5.248e-026	1.482e-023
Absorbed Dose Rate in Air	mGy/hr	4.581e-028	1.294e-025
"	mrad/hr	4.581e-026	1.294e-023
Deep Dose Equivalent Rate	(ICRP 51 - 1987)		
o Parallel Geometry	mSv/hr	5.424e-028	1.532e-025
o Opposed	"	4.343e-028	1.226e-025
o Rotational	"	4.343e-028	1.226e-025
o Isotropic	"	3.840e-028	1.084e-025
Shallow Dose Equivalent Rate	(ICRP 51 - 1987)		
o Parallel Geometry	mSv/hr	5.765e-028	1.628e-025
o Opposed	"	5.475e-028	1.546e-025
o Rotational	"	5.475e-028	1.546e-025
o Isotropic	"	4.105e-028	1.159e-025
Effective Dose Equivalent Rate	(ICRP 51 - 1987)		
o Anterior/Posterior Geometry	mSv/hr	4.796e-028	1.354e-025
o Posterior/Anterior	"	4.233e-028	1.195e-025
o Lateral	"	3.139e-028	8.865e-026
o Rotational	"	3.783e-028	1.068e-025
o Isotropic	"	3.221e-028	9.095e-026

MicroShield 7.02
LMCO ODIN (07-MSD-7.02-1385)

Date	By	Checked

Filename	Run Date	Run Time	Duration
MP10-4-10.ms7	June 12, 2012	5:07:32 PM	00:00:00

Project Info	
Case Title	MP10-4 Case 10
Description	Pipe No 312, 4in., 3 ft, DP above Quad D Wall, Unit Cs-137
Geometry	10 - Cylinder Surface - External Dose Point

Source Dimensions	
Height	91.44 cm (3 ft)
Radius	5.11 cm (2.0 in)

Dose Points			
A	X	Y	Z
#1	292.425 cm (9 ft 7.1 in)	45.72 cm (1 ft 6.0 in)	16.51 cm (6.5 in)

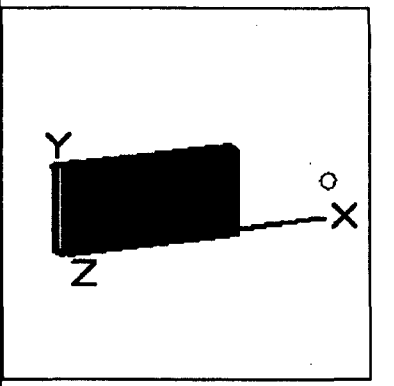

Shields			
Shield N	Dimension	Material	Density
Cyl. Radius	5.11 cm	Air	0.00122
Transition	.6 cm	Iron	7.86
Shield 2	186.69 cm	Concrete	2.4
Air Gap		Air	0.00122
Wall Clad	.025 cm	Iron	7.86

Source Input: Grouping Method - Actual Photon Energies				
Nuclide	Ci	Bq	µCi/cm²	Bq/cm²
Ba-137m	1.2498e-011	4.6243e-001	4.2570e-009	1.5751e-004
Cs-137	1.3211e-011	4.8882e-001	4.5000e-009	1.6650e-004

Buildup: The material reference is Shield 2 Integration Parameters	
Y Direction (axial)	20
Circumferential	20

Results

Energy	Activity	Fluence Rate	Fluence Rate MeV/cm²/sec	Exposure Rate	Exposure Rate mR/hr

(MeV)	(Photons/sec)	MeV/cm²/sec No Buildup	With Buildup	mR/hr No Buildup	With Buildup
0.0045	4.800e-03	0.000e+00	1.920e-37	0.000e+00	1.316e-37
0.0318	9.574e-03	9.297e-218	5.355e-36	7.744e-220	4.461e-38
0.0322	1.766e-02	2.362e-211	1.027e-35	1.901e-213	8.263e-38
0.0364	6.428e-03	3.386e-159	5.722e-36	1.924e-161	3.251e-38
0.6616	4.161e-01	6.455e-23	1.733e-20	1.251e-25	3.360e-23
Totals	**4.546e-01**	**6.455e-23**	**1.733e-20**	**1.251e-25**	**3.360e-23**

MicroShield 7.02 (07-MSD-7.02-1385)
LMCO ODIN
Conversion of calculated exposure in air to dose
FILE: C:\Program Files (x86)\MicroShield 7\Examples\CaseFiles\MP10-4-10.ms7
Case Title: MP10-4 Case 10
This case was run on Tuesday, June 12, 2012 at 5:07:32 PM
Dose Point # 1 - (292.425,45.72,16.51) cm

Results (Summed over energies)	Units	Without Buildup	With Buildup
Photon Fluence Rate (flux)	Photons/cm²/sec	9.755e-023	2.620e-020
Photon Energy Fluence Rate	MeV/cm²/sec	6.455e-023	1.733e-020
Exposure and Dose Rates:			
Exposure Rate in Air	mR/hr	1.251e-025	3.360e-023
Absorbed Dose Rate in Air	mGy/hr	1.092e-027	2.933e-025
"	mrad/hr	1.092e-025	2.933e-023
Deep Dose Equivalent Rate	(ICRP 51 - 1987)		
o Parallel Geometry	mSv/hr	1.293e-027	3.473e-025
o Opposed	"	1.036e-027	2.781e-025
o Rotational	"	1.036e-027	2.781e-025
o Isotropic	"	9.157e-028	2.459e-025
Shallow Dose Equivalent Rate	(ICRP 51 - 1987)		
o Parallel Geometry	mSv/hr	1.375e-027	3.691e-025
o Opposed	"	1.306e-027	3.506e-025
o Rotational	"	1.306e-027	3.506e-025
o Isotropic	"	9.789e-028	2.629e-025
Effective Dose Equivalent Rate	(ICRP 51 - 1987)		
o Anterior/Posterior Geometry	mSv/hr	1.144e-027	3.071e-025
o Posterior/Anterior	"	1.009e-027	2.711e-025
o Lateral	"	7.485e-028	2.010e-025
o Rotational	"	9.021e-028	2.422e-025
o Isotropic	"	7.680e-028	2.062e-025

MicroShield 7.02
LMCO ODIN (07-MSD-7.02-1385)

Date	By	Checked

Filename	Run Date	Run Time	Duration
MP10-4-11.ms7	June 12, 2012	5:12:50 PM	00:00:00

Project Info	
Case Title	MP10-4 Case 11
Description	Pipe No 313, 3in., 3 ft. DP above Quad D Wall, Unit Cs-137
Geometry	10 - Cylinder Surface - External Dose Point

Source Dimensions	
Height	91.44 cm (3 ft)
Radius	3.9 cm (1.5 in)

Dose Points			
A	X	Y	Z
#1	293.7 cm (9 ft 7.6 in)	45.72 cm (1 ft 6.0 in)	16.51 cm (6.5 in)

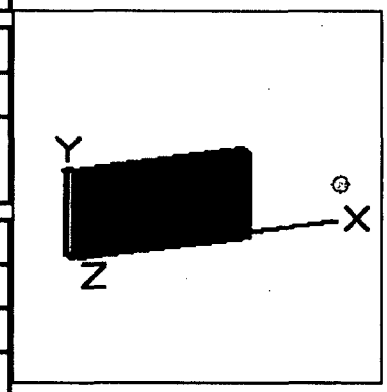

Shields			
Shield N	Dimension	Material	Density
Cyl. Radius	3.9 cm	Air	0.00122
Transition	.55 cm	Iron	7.86
Shield 2	189.23 cm	Concrete	2.4
Air Gap		Air	0.00122
Wall Clad	.025 cm	Iron	7.86

Source Input: Grouping Method - Actual Photon Energies				
Nuclide	Ci	Bq	µCi/cm²	Bq/cm²
Ba-137m	9.5386e-012	3.5293e-001	4.2570e-009	1.5751e-004
Cs-137	1.0083e-011	3.7307e-001	4.5000e-009	1.6650e-004

Buildup: The material reference is Shield 2 Integration Parameters	
Y Direction (axial)	20
Circumferential	20

Results

Energy	Activity	Fluence Rate	Fluence Rate MeV/cm²/sec	Exposure Rate	Exposure Rate mR/hr

(MeV)	(Photons/sec)	MeV/cm²/sec No Buildup	With Buildup	mR/hr No Buildup	With Buildup
0.0045	3.664e-03	0.000e+00	1.452e-37	0.000e+00	9.956e-38
0.0318	7.307e-03	3.169e-219	4.052e-36	2.640e-221	3.375e-38
0.0322	1.348e-02	8.774e-213	7.768e-36	7.061e-215	6.252e-38
0.0364	4.906e-03	2.572e-160	4.329e-36	1.462e-162	2.460e-38
0.6616	3.176e-01	3.540e-23	9.700e-21	6.863e-26	1.881e-23
Totals	**3.469e-01**	**3.540e-23**	**9.700e-21**	**6.863e-26**	**1.881e-23**

MicroShield 7.02 (07-MSD-7.02-1385)
LMCO ODIN
Conversion of calculated exposure in air to dose
FILE: C:\Program Files (x86)\MicroShield 7\Examples\CaseFiles\MP10-4-11.ms7
Case Title: MP10-4 Case 11
This case was run on Tuesday, June 12, 2012 at 5:12:50 PM
Dose Point # 1 - (293.7,45.72,16.51) cm

Results (Summed over energies)	Units	Without Buildup	With Buildup
Photon Fluence Rate (flux)	Photons/cm²/sec	5.350e-023	1.466e-020
Photon Energy Fluence Rate	MeV/cm²/sec	3.540e-023	9.700e-021
Exposure and Dose Rates:			
Exposure Rate in Air	mR/hr	6.863e-026	1.881e-023
Absorbed Dose Rate in Air	mGy/hr	5.991e-028	1.642e-025
"	mrad/hr	5.991e-026	1.642e-023
Deep Dose Equivalent Rate	(ICRP 51 - 1987)		
o Parallel Geometry	mSv/hr	7.094e-028	1.944e-025
o Opposed	"	5.679e-028	1.556e-025
o Rotational	"	5.679e-028	1.556e-025
o Isotropic	"	5.022e-028	1.376e-025
Shallow Dose Equivalent Rate	(ICRP 51 - 1987)		
o Parallel Geometry	mSv/hr	7.539e-028	2.066e-025
o Opposed	"	7.161e-028	1.962e-025
o Rotational	"	7.161e-028	1.962e-025
o Isotropic	"	5.369e-028	1.471e-025
Effective Dose Equivalent Rate	(ICRP 51 - 1987)		
o Anterior/Posterior Geometry	mSv/hr	6.272e-028	1.719e-025
o Posterior/Anterior	"	5.536e-028	1.517e-025
o Lateral	"	4.105e-028	1.125e-025
o Rotational	"	4.947e-028	1.356e-025
o Isotropic	"	4.212e-028	1.154e-025

MicroShield 7.02
LMCO ODIN (07-MSD-7.02-1385)

Date	By	Checked

Filename	Run Date	Run Time	Duration
MP10-4-12.ms7	June 12, 2012	5:19:54 PM	00:00:00

Project Info	
Case Title	MP10-4 Case 12
Description	Pipe No 314, 3in., 3 ft DP above Quad D Wall, Unit Cs-137
Geometry	10 - Cylinder Surface - External Dose Point

Source Dimensions	
Height	91.44 cm (3 ft)
Radius	3.9 cm (1.5 in)

Dose Points			
A	X	Y	Z
#1	293.705 cm (9 ft 7.6 in)	45.72 cm (1 ft 6.0 in)	46.99 cm (1 ft 6.5 in)

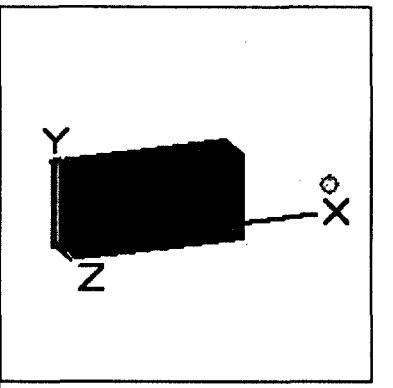

Shields			
Shield N	Dimension	Material	Density
Cyl. Radius	3.9 cm	Air	0.00122
Transition	.55 cm	Iron	7.86
Shield 2	189.23 cm	Concrete	2.4
Air Gap		Air	0.00122
Wall Clad	.025 cm	Iron	7.86

Source Input: Grouping Method - Actual Photon Energies				
Nuclide	Ci	Bq	µCi/cm²	Bq/cm²
Ba-137m	9.5386e-012	3.5293e-001	4.2570e-009	1.5751e-004
Cs-137	1.0083e-011	3.7307e-001	4.5000e-009	1.6650e-004

Buildup: The material reference is Shield 2 Integration Parameters	
Y Direction (axial)	20
Circumferential	20

Results

Energy	Activity	Fluence Rate	Fluence Rate MeV/cm²/sec	Exposure Rate	Exposure Rate mR/hr

(MeV)	(Photons/sec)	MeV/cm²/sec No Buildup	With Buildup	mR/hr No Buildup	With Buildup
0.0045	3.664e-03	0.000e+00	1.421e-37	0.000e+00	9.739e-38
0.0318	7.307e-03	2.205e-221	3.963e-36	1.836e-223	3.301e-38
0.0322	1.348e-02	7.090e-215	7.599e-36	5.706e-217	6.116e-38
0.0364	4.906e-03	7.369e-162	4.235e-36	4.187e-164	2.406e-38
0.6616	3.176e-01	2.310e-23	6.458e-21	4.478e-26	1.252e-23
Totals	**3.469e-01**	**2.310e-23**	**6.458e-21**	**4.478e-26**	**1.252e-23**

MicroShield 7.02 (07-MSD-7.02-1385)
LMCO ODIN
Conversion of calculated exposure in air to dose
FILE: C:\Program Files (x86)\MicroShield 7\Examples\CaseFiles\MP10-4-12.ms7
Case Title: MP10-4 Case 12
This case was run on Tuesday, June 12, 2012 at 5:19:54 PM
Dose Point # 1 - (293.705,45.72,46.99) cm

Results (Summed over energies)	Units	Without Buildup	With Buildup
Photon Fluence Rate (flux)	Photons/cm²/sec	3.491e-023	9.761e-021
Photon Energy Fluence Rate	MeV/cm²/sec	2.310e-023	6.458e-021
Exposure and Dose Rates:			
Exposure Rate in Air	mR/hr	4.478e-026	1.252e-023
Absorbed Dose Rate in Air	mGy/hr	3.909e-028	1.093e-025
"	mrad/hr	3.909e-026	1.093e-023
Deep Dose Equivalent Rate	(ICRP 51 - 1987)		
o Parallel Geometry	mSv/hr	4.628e-028	1.294e-025
o Opposed	"	3.706e-028	1.036e-025
o Rotational	"	3.706e-028	1.036e-025
o Isotropic	"	3.277e-028	9.162e-026
Shallow Dose Equivalent Rate	(ICRP 51 - 1987)		
o Parallel Geometry	mSv/hr	4.919e-028	1.375e-025
o Opposed	"	4.672e-028	1.306e-025
o Rotational	"	4.672e-028	1.306e-025
o Isotropic	"	3.503e-028	9.794e-026
Effective Dose Equivalent Rate	(ICRP 51 - 1987)		
o Anterior/Posterior Geometry	mSv/hr	4.093e-028	1.144e-025
o Posterior/Anterior	"	3.612e-028	1.010e-025
o Lateral	"	2.679e-028	7.490e-026
o Rotational	"	3.228e-028	9.026e-026
o Isotropic	"	2.748e-028	7.684e-026

MicroShield 7.02
LMCO ODIN (07-MSD-7.02-1385)

Date	By	Checked

Filename	Run Date	Run Time	Duration
MP10-4-13.ms7	June 12, 2012	5:34:55 PM	00:00:00

Project Info	
Case Title	MP10-4 Case 13
Description	Pipe No 315, 3in., 3 ft. DP above Quad D Wall, Unit Cs-137
Geometry	10 - Cylinder Surface - External Dose Point

Source Dimensions	
Height	91.44 cm (3 ft)
Radius	3.9 cm (1.5 in)

Dose Points			
A	X	Y	Z
#1	293.705 cm (9 ft 7.6 in)	45.72 cm (1 ft 6.0 in)	77.47 cm (2 ft 6.5 in)

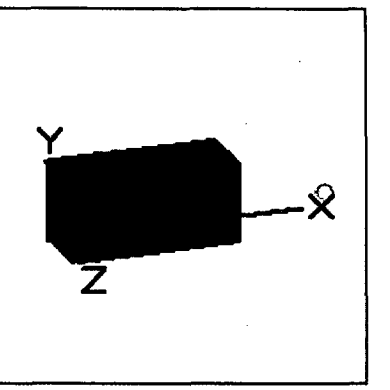

Shields			
Shield N	Dimension	Material	Density
Cyl. Radius	3.9 cm	Air	0.00122
Transition	.55 cm	Iron	7.86
Shield 2	189.23 cm	Concrete	2.4
Air Gap		Air	0.00122
Wall Clad	.025 cm	Iron	7.86

Source Input: Grouping Method - Actual Photon Energies				
Nuclide	Ci	Bq	µCi/cm²	Bq/cm²
Ba-137m	9.5386e-012	3.5293e-001	4.2570e-009	1.5751e-004
Cs-137	1.0083e-011	3.7307e-001	4.5000e-009	1.6650e-004

Buildup: The material reference is Shield 2 Integration Parameters	
Y Direction (axial)	20
Circumferential	20

Results

Energy	Activity	Fluence Rate	Fluence Rate MeV/cm²/sec	Exposure Rate	Exposure Rate mR/hr

(MeV)	(Photons/sec)	MeV/cm²/sec No Buildup	With Buildup	mR/hr No Buildup	With Buildup
0.0045	3.664e-03	0.000e+00	1.363e-37	0.000e+00	9.342e-38
0.0318	7.307e-03	2.431e-226	3.802e-36	2.025e-228	3.167e-38
0.0322	1.348e-02	1.073e-219	7.289e-36	8.639e-222	5.866e-38
0.0364	4.906e-03	1.775e-165	4.062e-36	1.009e-167	2.308e-38
0.6616	3.176e-01	1.009e-23	2.932e-21	1.957e-26	5.684e-24
Totals	**3.469e-01**	**1.009e-23**	**2.932e-21**	**1.957e-26**	**5.684e-24**

MicroShield 7.02 (07-MSD-7.02-1385)
LMCO ODIN
Conversion of calculated exposure in air to dose
FILE: C:\Program Files (x86)\MicroShield 7\Examples\CaseFiles\MP10-4-13.ms7
Case Title: MP10-4 Case 13
This case was run on Tuesday, June 12, 2012 at 5:34:55 PM
Dose Point # 1 - (293.705,45.72,77.47) cm

Results (Summed over energies)	Units	Without Buildup	With Buildup
Photon Fluence Rate (flux)	Photons/cm²/sec	1.525e-023	4.431e-021
Photon Energy Fluence Rate	MeV/cm²/sec	1.009e-023	2.932e-021
Exposure and Dose Rates:			
Exposure Rate in Air	mR/hr	1.957e-026	5.684e-024
Absorbed Dose Rate in Air	mGy/hr	1.708e-028	4.962e-026
"	mrad/hr	1.708e-026	4.962e-024
Deep Dose Equivalent Rate	(ICRP 51 - 1987)		
o Parallel Geometry	mSv/hr	2.022e-028	5.874e-026
o Opposed	"	1.619e-028	4.703e-026
o Rotational	"	1.619e-028	4.703e-026
o Isotropic	"	1.432e-028	4.159e-026
Shallow Dose Equivalent Rate	(ICRP 51 - 1987)		
o Parallel Geometry	mSv/hr	2.149e-028	6.244e-026
o Opposed	"	2.041e-028	5.930e-026
o Rotational	"	2.041e-028	5.930e-026
o Isotropic	"	1.531e-028	4.446e-026
Effective Dose Equivalent Rate	(ICRP 51 - 1987)		
o Anterior/Posterior Geometry	mSv/hr	1.788e-028	5.194e-026
o Posterior/Anterior	"	1.578e-028	4.585e-026
o Lateral	"	1.170e-028	3.400e-026
o Rotational	"	1.410e-028	4.097e-026
o Isotropic	"	1.201e-028	3.488e-026

MicroShield 7.02
LMCO ODIN (07-MSD-7.02-1385)

Date	By	Checked

Filename	Run Date	Run Time	Duration
BP1-1-01.ms7	June 13, 2012	4:51:08 PM	00:00:00

Project Info	
Case Title	BP1-1 Case 1
Description	San Sewer Line below grade DP above Grade, Unit Co-60
Geometry	10 - Cylinder Surface - External Dose Point

Source Dimensions	
Height	701.04 cm (23 ft)
Radius	5.0 cm (2.0 in)

Dose Points			
A	X	Y	Z
#1	271.102 cm (8 ft 10.7 in)	350.52 cm (11 ft 6.0 in)	0.0 cm (0.0 in)

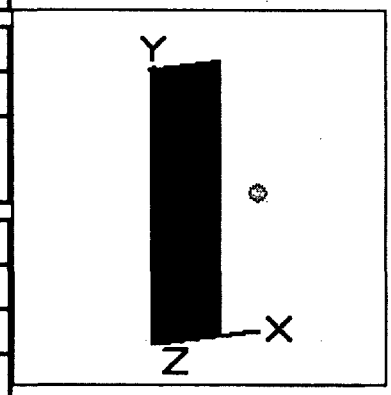

Shields			
Shield N	Dimension	Material	Density
Cyl. Radius	5.0 cm	Air	0.00122
Transition	.547 cm	Iron	7.86
Shield 2	165.53 cm	Average Soil	1.52
Air Gap		Air	0.00122
Wall Clad	.025 cm	Iron	7.86

Source Input: Grouping Method - Actual Photon Energies				
Nuclide	Ci	Bq	µCi/cm²	Bq/cm²
Co-60	9.9107e-011	3.6670e+000	4.5000e-009	1.6650e-004

Buildup: The material reference is Shield 2 Integration Parameters	
Y Direction (axial)	20
Circumferential	20

Results

Energy (MeV)	Activity (Photons/sec)	Fluence Rate MeV/cm²/sec	Fluence Rate MeV/cm²/sec With	Exposure Rate mR/hr	Exposure Rate mR/hr With

		No Buildup	Buildup	No Buildup	Buildup
0.6938	5.982e-04	2.999e-19	2.433e-17	5.791e-22	4.697e-20
1.1732	3.667e+00	2.674e-13	8.439e-12	4.779e-16	1.508e-14
1.3325	3.667e+00	8.042e-13	2.058e-11	1.395e-15	3.570e-14
Totals	**7.335e+00**	**1.072e-12**	**2.902e-11**	**1.873e-15**	**5.078e-14**

MicroShield 7.02 (07-MSD-7.02-1385)
LMCO ODIN
Conversion of calculated exposure in air to dose
FILE: C:\Program Files (x86)\MicroShield 7\Examples\CaseFiles\BP1-1-01.ms7
Case Title: BP1-1 Case 1
This case was run on Wednesday, June 13, 2012 at 4:51:08 PM
Dose Point # 1 - (271.102,350.52,0) cm

Results (Summed over energies)	Units	Without Buildup	With Buildup
Photon Fluence Rate (flux)	Photons/cm²/sec	8.315e-013	2.264e-011
Photon Energy Fluence Rate	MeV/cm²/sec	1.072e-012	2.902e-011
Exposure and Dose Rates:			
Exposure Rate in Air	mR/hr	1.873e-015	5.078e-014
Absorbed Dose Rate in Air	mGy/hr	1.635e-017	4.433e-016
"	mrad/hr	1.635e-015	4.433e-014
Deep Dose Equivalent Rate	(ICRP 51 - 1987)		
o Parallel Geometry	mSv/hr	1.855e-017	5.031e-016
o Opposed	"	1.600e-017	4.337e-016
o Rotational	"	1.600e-017	4.337e-016
o Isotropic	"	1.430e-017	3.876e-016
Shallow Dose Equivalent Rate	(ICRP 51 - 1987)		
o Parallel Geometry	mSv/hr	1.974e-017	5.354e-016
o Opposed	"	1.902e-017	5.157e-016
o Rotational	"	1.902e-017	5.157e-016
o Isotropic	"	1.514e-017	4.105e-016
Effective Dose Equivalent Rate	(ICRP 51 - 1987)		
o Anterior/Posterior Geometry	mSv/hr	1.671e-017	4.531e-016
o Posterior/Anterior	"	1.541e-017	4.177e-016
o Lateral	"	1.228e-017	3.326e-016
o Rotational	"	1.388e-017	3.762e-016
o Isotropic	"	1.230e-017	3.332e-016

MicroShield 7.02
LMCO ODIN (07-MSD-7.02-1385)

Date	By	Checked

Filename	Run Date	Run Time	Duration
BP1-1-02.ms7	June 13, 2012	4:54:54 PM	00:00:00

Project Info	
Case Title	BP1-1 Case 2
Description	San Sewer Line below grade DP above Grade, Unit Cs-137
Geometry	10 - Cylinder Surface - External Dose Point

Source Dimensions	
Height	701.04 cm (23 ft)
Radius	5.0 cm (2.0 in)

Dose Points			
A	X	Y	Z
#1	271.102 cm (8 ft 10.7 in)	350.52 cm (11 ft 6.0 in)	0.0 cm (0.0 in)

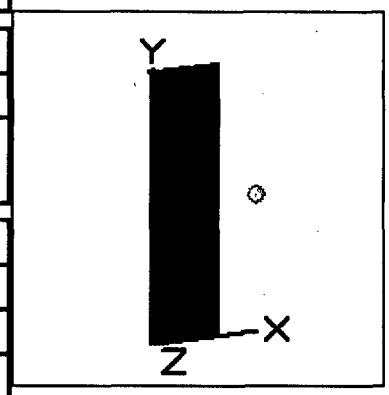

Shields			
Shield N	Dimension	Material	Density
Cyl. Radius	5.0 cm	Air	0.00122
Transition	.547 cm	Iron	7.86
Shield 2	165.53 cm	Average Soil	1.52
Air Gap		Air	0.00122
Wall Clad	.025 cm	Iron	7.86

Source Input: Grouping Method - Actual Photon Energies				
Nuclide	Ci	Bq	µCi/cm²	Bq/cm²
Ba-137m	9.3755e-011	3.4690e+000	4.2570e-009	1.5751e-004
Cs-137	9.9107e-011	3.6670e+000	4.5000e-009	1.6650e-004

Buildup: The material reference is Shield 2 Integration Parameters	
Y Direction (axial)	20
Circumferential	20

Results

Energy	Activity	Fluence Rate	Fluence Rate MeV/cm²/sec	Exposure Rate	Exposure Rate mR/hr

(MeV)	(Photons/sec)	MeV/cm²/sec No Buildup	With Buildup	mR/hr No Buildup	With Buildup
0.0045	3.601e-02	0.000e+00	1.092e-36	0.000e+00	7.484e-37
0.0318	7.182e-02	3.061e-290	2.475e-35	2.550e-292	2.061e-37
0.0322	1.325e-01	5.250e-281	4.673e-35	4.225e-283	3.761e-37
0.0364	4.822e-02	3.377e-204	2.244e-35	1.919e-206	1.275e-37
0.6616	3.121e+00	9.675e-16	8.553e-14	1.876e-18	1.658e-16
Totals	**3.410e+00**	**9.675e-16**	**8.553e-14**	**1.876e-18**	**1.658e-16**

MicroShield 7.02 (07-MSD-7.02-1385)
LMCO ODIN
Conversion of calculated exposure in air to dose
FILE: C:\Program Files (x86)\MicroShield 7\Examples\CaseFiles\BP1-1-02.ms7
Case Title: BP1-1 Case 2
This case was run on Wednesday, June 13, 2012 at 4:54:54 PM
Dose Point # 1 - (271.102,350.52,0) cm

Results (Summed over energies)	Units	Without Buildup	With Buildup
Photon Fluence Rate (flux)	Photons/cm²/sec	1.462e-015	1.293e-013
Photon Energy Fluence Rate	MeV/cm²/sec	9.675e-016	8.553e-014
Exposure and Dose Rates:			
Exposure Rate in Air	mR/hr	1.876e-018	1.658e-016
Absorbed Dose Rate in Air	mGy/hr	1.637e-020	1.447e-018
"	mrad/hr	1.637e-018	1.447e-016
Deep Dose Equivalent Rate	(ICRP 51 - 1987)		
o Parallel Geometry	mSv/hr	1.939e-020	1.714e-018
o Opposed	"	1.552e-020	1.372e-018
o Rotational	"	1.552e-020	1.372e-018
o Isotropic	"	1.373e-020	1.213e-018
Shallow Dose Equivalent Rate	(ICRP 51 - 1987)		
o Parallel Geometry	mSv/hr	2.061e-020	1.821e-018
o Opposed	"	1.957e-020	1.730e-018
o Rotational	"	1.957e-020	1.730e-018
o Isotropic	"	1.467e-020	1.297e-018
Effective Dose Equivalent Rate	(ICRP 51 - 1987)		
o Anterior/Posterior Geometry	mSv/hr	1.714e-020	1.515e-018
o Posterior/Anterior	"	1.513e-020	1.338e-018
o Lateral	"	1.122e-020	9.919e-019
o Rotational	"	1.352e-020	1.195e-018
o Isotropic	"	1.151e-020	1.018e-018

MicroShield 7.02
LMCO ODIN (07-MSD-7.02-1385)

Date	By	Checked

Filename	Run Date	Run Time	Duration
BP1-1-03.ms7	June 13, 2012	4:57:11 PM	00:00:00

Project Info	
Case Title	BP1-1 Case 3
Description	San Sewer Line below grade DP above Grade, Unit Eu-154
Geometry	10 - Cylinder Surface - External Dose Point

Source Dimensions	
Height	701.04 cm (23 ft)
Radius	5.0 cm (2.0 in)

Dose Points			
A	X	Y	Z
#1	271.102 cm (8 ft 10.7 in)	350.52 cm (11 ft 6.0 in)	0.0 cm (0.0 in)

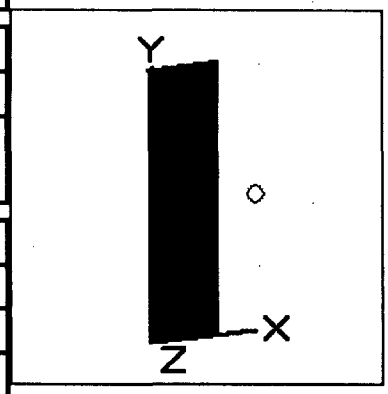

Shields			
Shield N	Dimension	Material	Density
Cyl. Radius	5.0 cm	Air	0.00122
Transition	.547 cm	Iron	7.86
Shield 2	165.53 cm	Average Soil	1.52
Air Gap		Air	0.00122
Wall Clad	.025 cm	Iron	7.86

Source Input: Grouping Method - Standard Indices
Number of Groups: 25
Lower Energy Cutoff: 0.015
Photons < 0.015: Included
Library: Grove

Nuclide	Ci	Bq	µCi/cm²	Bq/cm²
Eu-154	9.9107e-011	3.6670e+000	4.5000e-009	1.6650e-004

Buildup: The material reference is Shield 2 Integration Parameters	
Y Direction (axial)	20
Circumferential	20

Results

Energy (MeV)	Activity (Photons/sec)	Fluence Rate MeV/cm²/sec No Buildup	Fluence Rate MeV/cm²/sec With Buildup	Exposure Rate mR/hr No Buildup	Exposure Rate mR/hr With Buildup
0.015	2.799e-01	0.000e+00	2.847e-35	0.000e+00	2.442e-36
0.04	7.463e-01	7.031e-160	4.557e-34	3.109e-162	2.015e-36
0.05	1.896e-01	2.047e-95	2.802e-34	5.452e-98	7.464e-37
0.1	1.484e+00	6.297e-33	7.354e-31	9.634e-36	1.125e-33
0.2	2.504e-01	2.211e-23	8.175e-21	3.903e-26	1.443e-23
0.4	2.616e-02	3.454e-20	7.294e-18	6.729e-23	1.421e-20
0.5	7.940e-03	1.292e-19	1.884e-17	2.535e-22	3.698e-20
0.6	2.958e-01	3.348e-17	3.532e-15	6.536e-20	6.894e-18
0.8	1.430e+00	2.941e-15	1.841e-13	5.595e-18	3.502e-16
1.0	1.128e+00	1.933e-14	8.061e-13	3.563e-17	1.486e-15
1.5	1.431e+00	8.303e-13	1.768e-11	1.397e-15	2.975e-14
Totals	**7.269e+00**	**8.526e-13**	**1.868e-11**	**1.438e-15**	**3.159e-14**

MicroShield 7.02 (07-MSD-7.02-1385)
LMCO ODIN
Conversion of calculated exposure in air to dose
FILE: C:\Program Files (x86)\MicroShield 7\Examples\CaseFiles\BP1-1-03.ms7
Case Title: BP1-1 Case 3
This case was run on Wednesday, June 13, 2012 at 4:57:11 PM
Dose Point # 1 - (271.102,350.52,0) cm

Results (Summed over energies)	Units	Without Buildup	With Buildup
Photon Fluence Rate (flux)	Photons/cm²/sec	5.766e-013	1.283e-011
Photon Energy Fluence Rate	MeV/cm²/sec	8.526e-013	1.868e-011
Exposure and Dose Rates:			
Exposure Rate in Air	mR/hr	1.438e-015	3.159e-014
Absorbed Dose Rate in Air	mGy/hr	1.256e-017	2.758e-016
"	mrad/hr	1.256e-015	2.758e-014
Deep Dose Equivalent Rate	(ICRP 51 - 1987)		
o Parallel Geometry	mSv/hr	1.420e-017	3.122e-016
o Opposed	"	1.240e-017	2.723e-016
o Rotational	"	1.240e-017	2.723e-016
o Isotropic	"	1.113e-017	2.442e-016
Shallow Dose Equivalent Rate	(ICRP 51 - 1987)		
o Parallel Geometry	mSv/hr	1.503e-017	3.305e-016
o Opposed	"	1.455e-017	3.198e-016
o Rotational	"	1.455e-017	3.198e-016
o Isotropic	"	1.171e-017	2.570e-016
Effective Dose Equivalent Rate	(ICRP 51 - 1987)		
o Anterior/Posterior Geometry	mSv/hr	1.281e-017	2.814e-016
o Posterior/Anterior	"	1.190e-017	2.612e-016
o Lateral	"	9.626e-018	2.110e-016
o Rotational	"	1.074e-017	2.358e-016
o Isotropic	"	9.589e-018	2.103e-016

MicroShield 7.02
LMCO ODIN (07-MSD-7.02-1385)

Date	By	Checked

Filename	Run Date	Run Time	Duration
MP10-5-01.ms7	June 11, 2012	3:30:42 PM	00:00:00

Project Info	
Case Title	MP10-5 Case 1
Description	Pipe No. 397, 1 in., 3 ft. DP above the pipe, Unit Co-60
Geometry	10 - Cylinder Surface - External Dose Point

Source Dimensions	
Height	91.44 cm (3 ft)
Radius	1.33 cm (0.5 in)

Dose Points			
A	X	Y	Z
#1	144.075 cm (4 ft 8.7 in)	45.72 cm (1 ft 6.0 in)	0.0 cm (0.0 in)

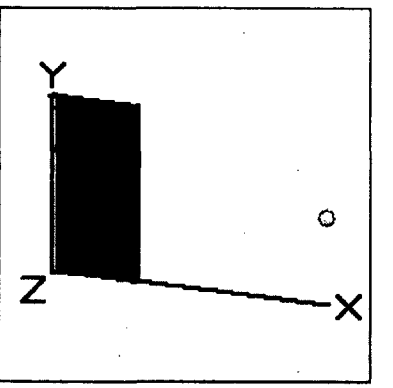

Shields			
Shield N	Dimension	Material	Density
Cyl. Radius	1.33 cm	Air	0.00122
Transition	.34 cm	Iron	7.86
Shield 2	42.38 cm	Concrete	2.4
Air Gap		Air	0.00122
Wall Clad	.025 cm	Iron	7.86

Source Input: Grouping Method - Actual Photon Energies				
Nuclide	Ci	Bq	µCi/cm²	Bq/cm²
Co-60	3.4386e-012	1.2723e-001	4.5000e-009	1.6650e-004

Buildup: The material reference is Shield 2 Integration Parameters	
Y Direction (axial)	20
Circumferential	20

Results

Energy (MeV)	Activity (Photons/sec)	Fluence Rate MeV/cm²/sec	Fluence Rate MeV/cm²/sec With	Exposure Rate mR/hr	Exposure Rate mR/hr With

		No Buildup	Buildup	No Buildup	Buildup
0.6938	2.075e-05	1.360e-14	2.863e-13	2.627e-17	5.527e-16
1.1732	1.272e-01	8.859e-10	9.022e-09	1.583e-12	1.612e-11
1.3325	1.272e-01	1.505e-09	1.308e-08	2.611e-12	2.269e-11
Totals	**2.545e-01**	**2.391e-09**	**2.210e-08**	**4.194e-12**	**3.881e-11**

MicroShield 7.02 (07-MSD-7.02-1385)
LMCO ODIN
Conversion of calculated exposure in air to dose
FILE: C:\Program Files (x86)\MicroShield 7\Examples\CaseFiles\MP10-5-01.ms7
Case Title: MP10-5 Case 1
This case was run on Monday, June 11, 2012 at 3:30:42 PM
Dose Point # 1 - (144.075,45.72,0) cm

Results (Summed over energies)	Units	Without Buildup	With Buildup
Photon Fluence Rate (flux)	Photons/cm²/sec	1.884e-009	1.750e-008
Photon Energy Fluence Rate	MeV/cm²/sec	2.391e-009	2.210e-008
Exposure and Dose Rates:			
Exposure Rate in Air	mR/hr	4.194e-012	3.881e-011
Absorbed Dose Rate in Air	mGy/hr	3.661e-014	3.388e-013
"	mrad/hr	3.661e-012	3.388e-011
Deep Dose Equivalent Rate	(ICRP 51 - 1987)		
o Parallel Geometry	mSv/hr	4.156e-014	3.847e-013
o Opposed	"	3.580e-014	3.312e-013
o Rotational	"	3.580e-014	3.312e-013
o Isotropic	"	3.198e-014	2.958e-013
Shallow Dose Equivalent Rate	(ICRP 51 - 1987)		
o Parallel Geometry	mSv/hr	4.424e-014	4.096e-013
o Opposed	"	4.260e-014	3.943e-013
o Rotational	"	4.260e-014	3.943e-013
o Isotropic	"	3.388e-014	3.135e-013
Effective Dose Equivalent Rate	(ICRP 51 - 1987)		
o Anterior/Posterior Geometry	mSv/hr	3.743e-014	3.464e-013
o Posterior/Anterior	"	3.448e-014	3.191e-013
o Lateral	"	2.743e-014	2.537e-013
o Rotational	"	3.105e-014	2.873e-013
o Isotropic	"	2.748e-014	2.542e-013

MicroShield 7.02
LMCO ODIN (07-MSD-7.02-1385)

Date	By	Checked

Filename	Run Date	Run Time	Duration
MP10-5-02.ms7	June 11, 2012	3:59:13 PM	00:00:00

Project Info	
Case Title	MP10-5 Case 2
Description	Pipe No. 396/8, 1 in., 3 ft. DP above pipe 397, Unit Co-60
Geometry	10 - Cylinder Surface - External Dose Point

Source Dimensions	
Height	91.44 cm (3 ft)
Radius	1.33 cm (0.5 in)

Dose Points			
A	X	Y	Z
#1	144.075 cm (4 ft 8.7 in)	45.72 cm (1 ft 6.0 in)	15.24 cm (6.0 in)

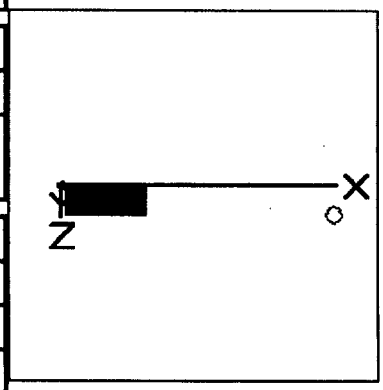

Shields			
Shield N	Dimension	Material	Density
Cyl. Radius	1.33 cm	Air	0.00122
Transition	.34 cm	Iron	7.86
Shield 2	42.38 cm	Concrete	2.4
Air Gap		Air	0.00122
Wall Clad	.025 cm	Iron	7.86

Source Input: Grouping Method - Actual Photon Energies				
Nuclide	Ci	Bq	µCi/cm²	Bq/cm²
Co-60	3.4386e-012	1.2723e-001	4.5000e-009	1.6650e-004

Buildup: The material reference is Shield 2 Integration Parameters	
Y Direction (axial)	20
Circumferential	20

Results

Energy (MeV)	Activity (Photons/sec)	Fluence Rate MeV/cm²/sec	Fluence Rate MeV/cm²/sec With	Exposure Rate mR/hr	Exposure Rate mR/hr With

		No Buildup	Buildup	No Buildup	Buildup
0.6938	2.075e-05	1.289e-14	2.734e-13	2.488e-17	5.278e-16
1.1732	1.272e-01	8.475e-10	8.686e-09	1.514e-12	1.552e-11
1.3325	1.272e-01	1.442e-09	1.261e-08	2.503e-12	2.188e-11
Totals	**2.545e-01**	**2.290e-09**	**2.130e-08**	**4.017e-12**	**3.741e-11**

MicroShield 7.02 (07-MSD-7.02-1385)
LMCO ODIN
Conversion of calculated exposure in air to dose
FILE: C:\Program Files (x86)\MicroShield 7\Examples\CaseFiles\MP10-5-02.ms7
Case Title: MP10-5 Case 2
This case was run on Monday, June 11, 2012 at 3:59:13 PM
Dose Point # 1 - (144.075,45.72,15.24) cm

Results (Summed over energies)	Units	Without Buildup	With Buildup
Photon Fluence Rate (flux)	Photons/cm²/sec	1.805e-009	1.687e-008
Photon Energy Fluence Rate	MeV/cm²/sec	2.290e-009	2.130e-008
Exposure and Dose Rates:			
Exposure Rate in Air	mR/hr	4.017e-012	3.741e-011
Absorbed Dose Rate in Air	mGy/hr	3.507e-014	3.266e-013
"	mrad/hr	3.507e-012	3.266e-011
Deep Dose Equivalent Rate	(ICRP 51 - 1987)		
o Parallel Geometry	mSv/hr	3.981e-014	3.708e-013
o Opposed	"	3.429e-014	3.192e-013
o Rotational	"	3.429e-014	3.192e-013
o Isotropic	"	3.063e-014	2.851e-013
Shallow Dose Equivalent Rate	(ICRP 51 - 1987)		
o Parallel Geometry	mSv/hr	4.238e-014	3.947e-013
o Opposed	"	4.081e-014	3.800e-013
o Rotational	"	4.081e-014	3.800e-013
o Isotropic	"	3.245e-014	3.021e-013
Effective Dose Equivalent Rate	(ICRP 51 - 1987)		
o Anterior/Posterior Geometry	mSv/hr	3.585e-014	3.339e-013
o Posterior/Anterior	"	3.303e-014	3.075e-013
o Lateral	"	2.627e-014	2.445e-013
o Rotational	"	2.974e-014	2.769e-013
o Isotropic	"	2.633e-014	2.450e-013

MicroShield 7.02
LMCO ODIN (07-MSD-7.02-1385)

Date	By	Checked

Filename	Run Date	Run Time	Duration
MP10-5-03.ms7	June 11, 2012	4:33:49 PM	00:00:00

Project Info	
Case Title	MP10-5 Case 3
Description	Pipe No. 387/9, 6 in., 3 ft. DP above pipe 397, Unit Co-60
Geometry	10 - Cylinder Surface - External Dose Point

Source Dimensions	
Height	91.44 cm (3 ft)
Radius	7.7 cm (3.0 in)

Dose Points			
A	X	Y	Z
#1	289.725 cm (9 ft 6.1 in)	45.72 cm (1 ft 6.0 in)	76.2 cm (2 ft 6.0 in)

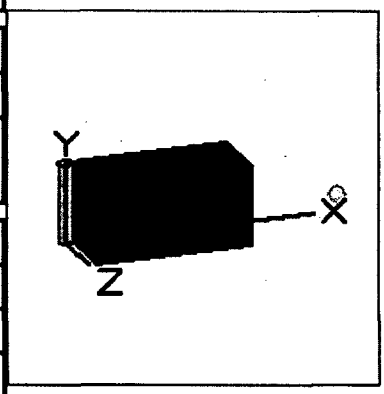

Shields			
Shield N	Dimension	Material	Density
Cyl. Radius	7.7 cm	Air	0.00122
Transition	.71 cm	Iron	7.86
Shield 2	181.29 cm	Concrete	2.4
Air Gap		Air	0.00122
Wall Clad	.025 cm	Iron	7.86

Source Input: Grouping Method - Actual Photon Energies				
Nuclide	Ci	Bq	µCi/cm²	Bq/cm²
Co-60	1.9908e-011	7.3658e-001	4.5000e-009	1.6650e-004

Buildup: The material reference is Shield 2 Integration Parameters	
Y Direction (axial)	20
Circumferential	20

Results

Energy (MeV)	Activity (Photons/sec)	Fluence Rate MeV/cm²/sec	Fluence Rate MeV/cm²/sec With	Exposure Rate mR/hr	Exposure Rate mR/hr With

		No Buildup	Buildup	No Buildup	Buildup
0.6938	1.202e-04	2.620e-26	6.373e-24	5.059e-29	1.230e-26
1.1732	7.366e-01	6.887e-19	5.055e-17	1.231e-21	9.034e-20
1.3325	7.366e-01	4.368e-18	2.468e-16	7.577e-21	4.283e-19
Totals	**1.473e+00**	**5.056e-18**	**2.974e-16**	**8.808e-21**	**5.186e-19**

MicroShield 7.02 (07-MSD-7.02-1385)
LMCO ODIN
Conversion of calculated exposure in air to dose
FILE: C:\Program Files (x86)\MicroShield 7\Examples\CaseFiles\MP10-5-03.ms7
Case Title: MP10-5 Case 3
This case was run on Monday, June 11, 2012 at 4:21:29 PM
Dose Point # 1 - (289.725,45.72,76.2) cm

Results (Summed over energies)	Units	Without Buildup	With Buildup
Photon Fluence Rate (flux)	Photons/cm²/sec	3.865e-018	2.283e-016
Photon Energy Fluence Rate	MeV/cm²/sec	5.056e-018	2.974e-016
Exposure and Dose Rates:			
Exposure Rate in Air	mR/hr	8.808e-021	5.186e-019
Absorbed Dose Rate in Air	mGy/hr	7.690e-023	4.527e-021
"	mrad/hr	7.690e-021	4.527e-019
Deep Dose Equivalent Rate	(ICRP 51 - 1987)		
o Parallel Geometry	mSv/hr	8.720e-023	5.135e-021
o Opposed	"	7.532e-023	4.433e-021
o Rotational	"	7.532e-023	4.433e-021
o Isotropic	"	6.735e-023	3.964e-021
Shallow Dose Equivalent Rate	(ICRP 51 - 1987)		
o Parallel Geometry	mSv/hr	9.274e-023	5.462e-021
o Opposed	"	8.939e-023	5.264e-021
o Rotational	"	8.939e-023	5.264e-021
o Isotropic	"	7.127e-023	4.195e-021
Effective Dose Equivalent Rate	(ICRP 51 - 1987)		
o Anterior/Posterior Geometry	mSv/hr	7.856e-023	4.626e-021
o Posterior/Anterior	"	7.249e-023	4.268e-021
o Lateral	"	5.786e-023	3.404e-021
o Rotational	"	6.531e-023	3.845e-021
o Isotropic	"	5.791e-023	3.408e-021

MicroShield 7.02
LMCO ODIN (07-MSD-7.02-1385)

Date	By	Checked

Filename	Run Date	Run Time	Duration
MP10-5-04.ms7	June 11, 2012	4:27:56 PM	00:00:00

Project Info	
Case Title	MP10-5 Case 4
Description	Pipe No. 337, 3 in., 3 ft. DP above pipe 397, Unit Co-60
Geometry	10 - Cylinder Surface - External Dose Point

Source Dimensions	
Height	91.44 cm (3 ft)
Radius	3.9 cm (1.5 in)

Dose Points			
A	X	Y	Z
#1	293.705 cm (9 ft 7.6 in)	45.72 cm (1 ft 6.0 in)	116.8 cm (3 ft 10.0 in)

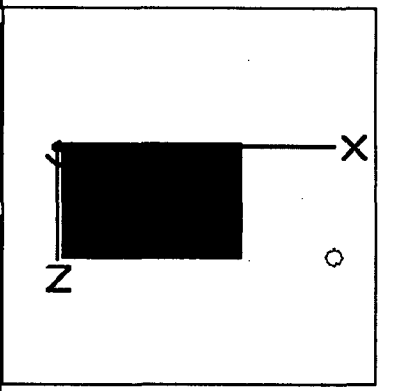

Shields			
Shield N	Dimension	Material	Density
Cyl. Radius	3.9 cm	Air	0.00122
Transition	.55 cm	Iron	7.86
Shield 2	189.23 cm	Concrete	2.4
Air Gap		Air	0.00122
Wall Clad	.025 cm	Iron	7.86

Source Input: Grouping Method - Actual Photon Energies				
Nuclide	Ci	Bq	µCi/cm²	Bq/cm²
Co-60	1.0083e-011	3.7307e-001	4.5000e-009	1.6650e-004

Buildup: The material reference is Shield 2 Integration Parameters	
Y Direction (axial)	20
Circumferential	20

Results

Energy (MeV)	Activity (Photons/sec)	Fluence Rate MeV/cm²/sec	Fluence Rate MeV/cm²/sec With	Exposure Rate mR/hr	Exposure Rate mR/hr With

		No Buildup	Buildup	No Buildup	Buildup
0.6938	6.086e-05	9.128e-28	2.543e-25	1.762e-30	4.910e-28
1.1732	3.731e-01	4.433e-20	3.625e-18	7.922e-23	6.477e-21
1.3325	3.731e-01	3.211e-19	2.010e-17	5.571e-22	3.486e-20
Totals	**7.462e-01**	**3.654e-19**	**2.372e-17**	**6.363e-22**	**4.134e-20**

MicroShield 7.02 (07-MSD-7.02-1385)
LMCO ODIN
Conversion of calculated exposure in air to dose
FILE: C:\Program Files (x86)\MicroShield 7\Examples\CaseFiles\MP10-5-04.ms7
Case Title: MP10-5 Case 4
This case was run on Monday, June 11, 2012 at 4:27:56 PM
Dose Point # 1 - (293.705,45.72,116.8) cm

Results (Summed over energies)	Units	Without Buildup	With Buildup
Photon Fluence Rate (flux)	Photons/cm²/sec	2.788e-019	1.817e-017
Photon Energy Fluence Rate	MeV/cm²/sec	3.654e-019	2.372e-017
Exposure and Dose Rates:			
Exposure Rate in Air	mR/hr	6.363e-022	4.134e-020
Absorbed Dose Rate in Air	mGy/hr	5.555e-024	3.609e-022
"	mrad/hr	5.555e-022	3.609e-020
Deep Dose Equivalent Rate	(ICRP 51 - 1987)		
o Parallel Geometry	mSv/hr	6.299e-024	4.093e-022
o Opposed	"	5.442e-024	3.535e-022
o Rotational	"	5.442e-024	3.535e-022
o Isotropic	"	4.866e-024	3.160e-022
Shallow Dose Equivalent Rate	(ICRP 51 - 1987)		
o Parallel Geometry	mSv/hr	6.699e-024	4.353e-022
o Opposed	"	6.458e-024	4.196e-022
o Rotational	"	6.458e-024	4.196e-022
o Isotropic	"	5.149e-024	3.344e-022
Effective Dose Equivalent Rate	(ICRP 51 - 1987)		
o Anterior/Posterior Geometry	mSv/hr	5.675e-024	3.687e-022
o Posterior/Anterior	"	5.237e-024	3.402e-022
o Lateral	"	4.181e-024	2.715e-022
o Rotational	"	4.719e-024	3.065e-022
o Isotropic	"	4.185e-024	2.718e-022

MicroShield 7.02
LMCO ODIN (07-MSD-7.02-1385)

Date	By	Checked

Filename	Run Date	Run Time	Duration
MP10-5-05.ms7	June 11, 2012	4:50:38 PM	00:00:00

Project Info	
Case Title	MP10-5 Case 5
Description	Pipe No. 397, 1 in., 3 ft. DP above the pipe, Unit Cs-137
Geometry	10 - Cylinder Surface - External Dose Point

Source Dimensions	
Height	91.44 cm (3 ft)
Radius	1.33 cm (0.5 in)

Dose Points			
A	X	Y	Z
#1	144.075 cm (4 ft 8.7 in)	45.72 cm (1 ft 6.0 in)	0.0 cm (0.0 in)

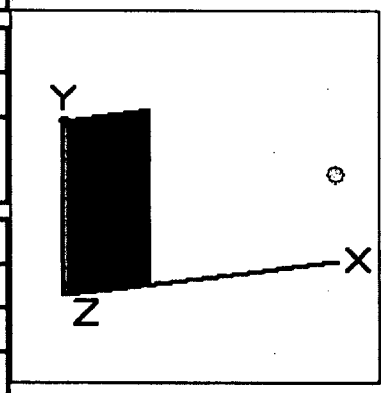

Shields			
Shield N	Dimension	Material	Density
Cyl. Radius	1.33 cm	Air	0.00122
Transition	.34 cm	Iron	7.86
Shield 2	42.38 cm	Concrete	2.4
Air Gap		Air	0.00122
Wall Clad	.025 cm	Iron	7.86

Source Input: Grouping Method - Actual Photon Energies				
Nuclide	Ci	Bq	µCi/cm²	Bq/cm²
Ba-137m	3.2529e-012	1.2036e-001	4.2570e-009	1.5751e-004
Cs-137	3.4386e-012	1.2723e-001	4.5000e-009	1.6650e-004

Buildup: The material reference is Shield 2 Integration Parameters	
Y Direction (axial)	20
Circumferential	20

Results					
Energy	Activity	Fluence Rate	Fluence Rate MeV/cm²/sec	Exposure Rate	Exposure Rate mR/hr

(MeV)	(Photons/sec)	MeV/cm²/sec No Buildup	With Buildup	mR/hr No Buildup	With Buildup
0.0045	1.249e-03	0.000e+00	2.015e-37	0.000e+00	1.381e-37
0.0318	2.492e-03	1.502e-63	5.621e-36	1.251e-65	4.682e-38
0.0322	4.597e-03	1.055e-61	1.078e-35	8.489e-64	8.674e-38
0.0364	1.673e-03	1.463e-48	6.006e-36	8.315e-51	3.413e-38
0.6616	1.083e-01	5.663e-11	1.274e-09	1.098e-13	2.470e-12
Totals	**1.183e-01**	**5.663e-11**	**1.274e-09**	**1.098e-13**	**2.470e-12**

MicroShield 7.02 (07-MSD-7.02-1385)
LMCO ODIN
Conversion of calculated exposure in air to dose
FILE: C:\Program Files (x86)\MicroShield 7\Examples\CaseFiles\MP10-5-05.ms7
Case Title: MP10-5 Case 5
This case was run on Monday, June 11, 2012 at 4:50:38 PM
Dose Point # 1 - (144.075,45.72,0) cm

Results (Summed over energies)	Units	Without Buildup	With Buildup
Photon Fluence Rate (flux)	Photons/cm²/sec	8.559e-011	1.926e-009
Photon Energy Fluence Rate	MeV/cm²/sec	5.663e-011	1.274e-009
Exposure and Dose Rates:			
Exposure Rate in Air	mR/hr	1.098e-013	2.470e-012
Absorbed Dose Rate in Air	mGy/hr	9.584e-016	2.156e-014
"	mrad/hr	9.584e-014	2.156e-012
Deep Dose Equivalent Rate	(ICRP 51 - 1987)		
o Parallel Geometry	mSv/hr	1.135e-015	2.553e-014
o Opposed	"	9.085e-016	2.044e-014
o Rotational	"	9.085e-016	2.044e-014
o Isotropic	"	8.034e-016	1.808e-014
Shallow Dose Equivalent Rate	(ICRP 51 - 1987)		
o Parallel Geometry	mSv/hr	1.206e-015	2.714e-014
o Opposed	"	1.145e-015	2.577e-014
o Rotational	"	1.145e-015	2.577e-014
o Isotropic	"	8.588e-016	1.932e-014
Effective Dose Equivalent Rate	(ICRP 51 - 1987)		
o Anterior/Posterior Geometry	mSv/hr	1.003e-015	2.258e-014
o Posterior/Anterior	"	8.856e-016	1.993e-014
o Lateral	"	6.567e-016	1.478e-014
o Rotational	"	7.914e-016	1.781e-014
o Isotropic	"	6.738e-016	1.516e-014

MicroShield 7.02
LMCO ODIN (07-MSD-7.02-1385)

Date	By	Checked

Filename	Run Date	Run Time	Duration
MP10-5-06.ms7	June 11, 2012	4:54:32 PM	00:00:00

Project Info	
Case Title	MP10-5 Case 6
Description	Pipe No. 396/8, 1 in., 3 ft. DP above pipe 397, Unit Cs-137
Geometry	10 - Cylinder Surface - External Dose Point

Source Dimensions	
Height	91.44 cm (3 ft)
Radius	1.33 cm (0.5 in)

Dose Points			
A	X	Y	Z
#1	144.075 cm (4 ft 8.7 in)	45.72 cm (1 ft 6.0 in)	15.24 cm (6.0 in)

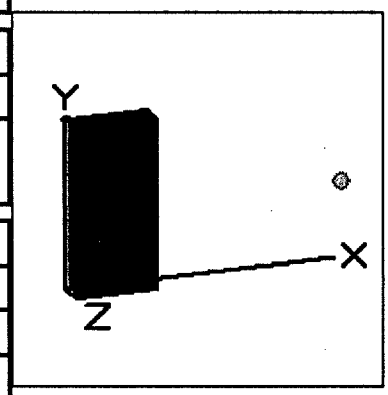

Shields			
Shield N	Dimension	Material	Density
Cyl. Radius	1.33 cm	Air	0.00122
Transition	.34 cm	Iron	7.86
Shield 2	42.38 cm	Concrete	2.4
Air Gap		Air	0.00122
Wall Clad	.025 cm	Iron	7.86

Source Input: Grouping Method - Actual Photon Energies				
Nuclide	Ci	Bq	µCi/cm²	Bq/cm²
Ba-137m	3.2529e-012	1.2036e-001	4.2570e-009	1.5751e-004
Cs-137	3.4386e-012	1.2723e-001	4.5000e-009	1.6650e-004

Buildup: The material reference is Shield 2 Integration Parameters	
Y Direction (axial)	20
Circumferential	20

Results

Energy	Activity	Fluence Rate	Fluence Rate MeV/cm²/sec	Exposure Rate	Exposure Rate mR/hr

(MeV)	(Photons/sec)	MeV/cm²/sec No Buildup	With Buildup	mR/hr No Buildup	With Buildup
0.0045	1.249e-03	0.000e+00	1.994e-37	0.000e+00	1.367e-37
0.0318	2.492e-03	1.321e-63	5.561e-36	1.100e-65	4.632e-38
0.0322	4.597e-03	9.243e-62	1.066e-35	7.439e-64	8.581e-38
0.0364	1.673e-03	1.213e-48	5.942e-36	6.893e-51	3.376e-38
0.6616	1.083e-01	5.359e-11	1.216e-09	1.039e-13	2.357e-12
Totals	**1.183e-01**	**5.359e-11**	**1.216e-09**	**1.039e-13**	**2.357e-12**

MicroShield 7.02 (07-MSD-7.02-1385)
LMCO ODIN
Conversion of calculated exposure in air to dose
FILE: C:\Program Files (x86)\MicroShield 7\Examples\CaseFiles\MP10-5-06.ms7
Case Title: MP10-5 Case 6
This case was run on Monday, June 11, 2012 at 4:54:32 PM
Dose Point # 1 - (144.075,45.72,15.24) cm

Results (Summed over energies)	Units	Without Buildup	With Buildup
Photon Fluence Rate (flux)	Photons/cm²/sec	8.099e-011	1.838e-009
Photon Energy Fluence Rate	MeV/cm²/sec	5.359e-011	1.216e-009
Exposure and Dose Rates:			
Exposure Rate in Air	mR/hr	1.039e-013	2.357e-012
Absorbed Dose Rate in Air	mGy/hr	9.070e-016	2.058e-014
"	mrad/hr	9.070e-014	2.058e-012
Deep Dose Equivalent Rate	(ICRP 51 - 1987)		
o Parallel Geometry	mSv/hr	1.074e-015	2.436e-014
o Opposed	"	8.597e-016	1.951e-014
o Rotational	"	8.597e-016	1.951e-014
o Isotropic	"	7.602e-016	1.725e-014
Shallow Dose Equivalent Rate	(ICRP 51 - 1987)		
o Parallel Geometry	mSv/hr	1.141e-015	2.589e-014
o Opposed	"	1.084e-015	2.459e-014
o Rotational	"	1.084e-015	2.459e-014
o Isotropic	"	8.127e-016	1.844e-014
Effective Dose Equivalent Rate	(ICRP 51 - 1987)		
o Anterior/Posterior Geometry	mSv/hr	9.495e-016	2.154e-014
o Posterior/Anterior	"	8.381e-016	1.902e-014
o Lateral	"	6.215e-016	1.410e-014
o Rotational	"	7.489e-016	1.699e-014
o Isotropic	"	6.376e-016	1.447e-014

MicroShield 7.02
LMCO ODIN (07-MSD-7.02-1385)

Date	By	Checked

Filename	Run Date	Run Time	Duration
MP10-5-07.ms7	June 11, 2012	5:00:42 PM	00:00:00

Project Info	
Case Title	MP10-5 Case 7
Description	Pipe No. 387/9, 6 in., 3 ft. DP above pipe 397, Unit Cs-137
Geometry	10 - Cylinder Surface - External Dose Point

Source Dimensions	
Height	91.44 cm (3 ft)
Radius	7.7 cm (3.0 in)

Dose Points			
A	X	Y	Z
#1	289.725 cm (9 ft 6.1 in)	45.72 cm (1 ft 6.0 in)	76.2 cm (2 ft 6.0 in)

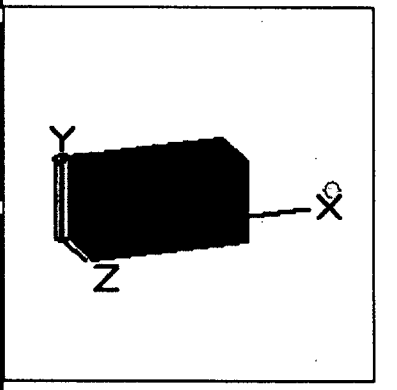

Shields			
Shield N	Dimension	Material	Density
Cyl. Radius	7.7 cm	Air	0.00122
Transition	.71 cm	Iron	7.86
Shield 2	181.29 cm	Concrete	2.4
Air Gap		Air	0.00122
Wall Clad	.025 cm	Iron	7.86

Source Input: Grouping Method - Actual Photon Energies				
Nuclide	Ci	Bq	µCi/cm²	Bq/cm²
Ba-137m	1.8833e-011	6.9681e-001	4.2570e-009	1.5751e-004
Cs-137	1.9908e-011	7.3658e-001	4.5000e-009	1.6650e-004

Buildup: The material reference is Shield 2 Integration Parameters	
Y Direction (axial)	20
Circumferential	20

Results					
Energy	Activity	Fluence Rate	Fluence Rate MeV/cm²/sec	Exposure Rate	Exposure Rate mR/hr

(MeV)	(Photons/sec)	MeV/cm²/sec No Buildup	With Buildup	mR/hr No Buildup	With Buildup
0.0045	7.234e-03	0.000e+00	2.767e-37	0.000e+00	1.897e-37
0.0318	1.443e-02	9.711e-222	7.718e-36	8.089e-224	6.429e-38
0.0322	2.662e-02	3.250e-215	1.480e-35	2.615e-217	1.191e-37
0.0364	9.686e-03	5.100e-162	8.247e-36	2.898e-164	4.686e-38
0.6616	6.270e-01	6.096e-23	1.658e-20	1.182e-25	3.214e-23
Totals	**6.849e-01**	**6.096e-23**	**1.658e-20**	**1.182e-25**	**3.214e-23**

MicroShield 7.02 (07-MSD-7.02-1385)
LMCO ODIN
Conversion of calculated exposure in air to dose
FILE: C:\Program Files (x86)\MicroShield 7\Examples\CaseFiles\MP10-5-07.ms7
Case Title: MP10-5 Case 7
This case was run on Monday, June 11, 2012 at 5:00:42 PM
Dose Point # 1 - (289.725,45.72,76.2) cm

Results (Summed over energies)	Units	Without Buildup	With Buildup
Photon Fluence Rate (flux)	Photons/cm²/sec	9.213e-023	2.505e-020
Photon Energy Fluence Rate	MeV/cm²/sec	6.096e-023	1.658e-020
Exposure and Dose Rates:			
Exposure Rate in Air	mR/hr	1.182e-025	3.214e-023
Absorbed Dose Rate in Air	mGy/hr	1.032e-027	2.805e-025
"	mrad/hr	1.032e-025	2.805e-023
Deep Dose Equivalent Rate	(ICRP 51 - 1987)		
o Parallel Geometry	mSv/hr	1.221e-027	3.322e-025
o Opposed	"	9.780e-028	2.659e-025
o Rotational	"	9.780e-028	2.659e-025
o Isotropic	"	8.648e-028	2.352e-025
Shallow Dose Equivalent Rate	(ICRP 51 - 1987)		
o Parallel Geometry	mSv/hr	1.298e-027	3.530e-025
o Opposed	"	1.233e-027	3.353e-025
o Rotational	"	1.233e-027	3.353e-025
o Isotropic	"	9.245e-028	2.514e-025
Effective Dose Equivalent Rate	(ICRP 51 - 1987)		
o Anterior/Posterior Geometry	mSv/hr	1.080e-027	2.937e-025
o Posterior/Anterior	"	9.533e-028	2.592e-025
o Lateral	"	7.069e-028	1.922e-025
o Rotational	"	8.519e-028	2.317e-025
o Isotropic	"	7.253e-028	1.972e-025

MicroShield 7.02
LMCO ODIN (07-MSD-7.02-1385)

Date	By	Checked

Filename	Run Date	Run Time	Duration
MP10-5-08.ms7	June 11, 2012	5:25:23 PM	00:00:00

Project Info	
Case Title	MP10-5 Case 8
Description	Pipe No. 337, 3 in., 3 ft. DP above pipe 397, Unit Co-60
Geometry	10 - Cylinder Surface - External Dose Point

Source Dimensions	
Height	91.44 cm (3 ft)
Radius	3.9 cm (1.5 in)

Dose Points			
A	X	Y	Z
#1	293.705 cm (9 ft 7.6 in)	45.72 cm (1 ft 6.0 in)	116.8 cm (3 ft 10.0 in)

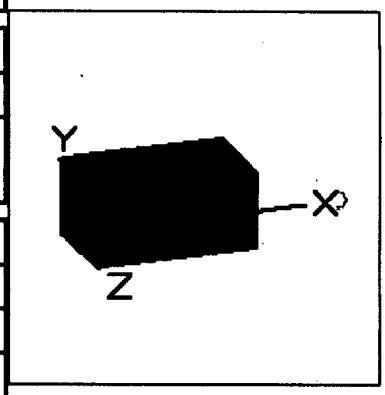

Shields			
Shield N	Dimension	Material	Density
Cyl. Radius	3.9 cm	Air	0.00122
Transition	.55 cm	Iron	7.86
Shield 2	189.23 cm	Concrete	2.4
Air Gap		Air	0.00122
Wall Clad	.025 cm	Iron	7.86

Source Input: Grouping Method - Actual Photon Energies				
Nuclide	Ci	Bq	µCi/cm²	Bq/cm²
Ba-137m	9.5386e-012	3.5293e-001	4.2570e-009	1.5751e-004
Cs-137	1.0083e-011	3.7307e-001	4.5000e-009	1.6650e-004

Buildup: The material reference is Shield 2 Integration Parameters	
Y Direction (axial)	20
Circumferential	20

Results

Energy	Activity	Fluence Rate	Fluence Rate MeV/cm²/sec	Exposure Rate	Exposure Rate mR/hr

(MeV)	(Photons/sec)	MeV/cm²/sec No Buildup	With Buildup	mR/hr No Buildup	With Buildup
0.0045	3.664e-03	0.000e+00	1.259e-37	0.000e+00	8.632e-38
0.0318	7.307e-03	9.023e-235	3.513e-36	7.516e-237	2.926e-38
0.0322	1.348e-02	7.216e-228	6.735e-36	5.807e-230	5.420e-38
0.0364	4.906e-03	1.827e-171	3.753e-36	1.038e-173	2.133e-38
0.6616	3.176e-01	2.000e-24	6.249e-22	3.877e-27	1.211e-24
Totals	**3.469e-01**	**2.000e-24**	**6.249e-22**	**3.877e-27**	**1.211e-24**

MicroShield 7.02 (07-MSD-7.02-1385)
LMCO ODIN
Conversion of calculated exposure in air to dose
FILE: C:\Program Files (x86)\MicroShield 7\Examples\CaseFiles\MP10-5-08.ms7
Case Title: MP10-5 Case 8
This case was run on Monday, June 11, 2012 at 5:25:23 PM
Dose Point # 1 - (293.705,45.72,116.8) cm

Results (Summed over energies)	Units	Without Buildup	With Buildup
Photon Fluence Rate (flux)	Photons/cm²/sec	3.022e-024	9.445e-022
Photon Energy Fluence Rate	MeV/cm²/sec	2.000e-024	6.249e-022
Exposure and Dose Rates:			
Exposure Rate in Air	mR/hr	3.877e-027	1.211e-024
Absorbed Dose Rate in Air	mGy/hr	3.384e-029	1.058e-026
"	mrad/hr	3.384e-027	1.058e-024
Deep Dose Equivalent Rate	(ICRP 51 - 1987)		
o Parallel Geometry	mSv/hr	4.007e-029	1.252e-026
o Opposed	"	3.208e-029	1.003e-026
o Rotational	"	3.208e-029	1.003e-026
o Isotropic	"	2.837e-029	8.865e-027
Shallow Dose Equivalent Rate	(ICRP 51 - 1987)		
o Parallel Geometry	mSv/hr	4.259e-029	1.331e-026
o Opposed	"	4.045e-029	1.264e-026
o Rotational	"	4.045e-029	1.264e-026
o Isotropic	"	3.033e-029	9.477e-027
Effective Dose Equivalent Rate	(ICRP 51 - 1987)		
o Anterior/Posterior Geometry	mSv/hr	3.543e-029	1.107e-026
o Posterior/Anterior	"	3.127e-029	9.773e-027
o Lateral	"	2.319e-029	7.247e-027
o Rotational	"	2.795e-029	8.734e-027
o Isotropic	"	2.379e-029	7.435e-027

MicroShield 7.02
LMCO ODIN (07-MSD-7.02-1385)

Date	By	Checked

Filename	Run Date	Run Time	Duration
MP10-5-09.ms7	June 12, 2012	7:45:14 AM	00:00:00

Project Info	
Case Title	MP10-5 Case 9
Description	Pipe No. 387, 6 in., 3 ft. DP above the pipe, Unit Co-60
Geometry	10 - Cylinder Surface - External Dose Point

Source Dimensions	
Height	91.44 cm (3 ft)
Radius	7.7 cm (3.0 in)

Dose Points			
A	X	Y	Z
#1	289.725 cm (9 ft 6.1 in)	45.72 cm (1 ft 6.0 in)	0.0 cm (0.0 in)

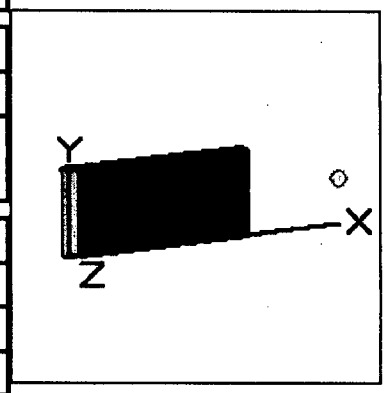

Shields			
Shield N	Dimension	Material	Density
Cyl. Radius	7.7 cm	Air	0.00122
Transition	.71 cm	Iron	7.86
Shield 2	181.29 cm	Concrete	2.4
Air Gap		Air	0.00122
Wall Clad	.025 cm	Iron	7.86

Source Input: Grouping Method - Actual Photon Energies				
Nuclide	Ci	Bq	µCi/cm²	Bq/cm²
Co-60	1.9908e-011	7.3658e-001	4.5000e-009	1.6650e-004

Buildup: The material reference is Shield 2 Integration Parameters	
Y Direction (axial)	20
Circumferential	20

Results

Energy (MeV)	Activity (Photons/sec)	Fluence Rate MeV/cm²/sec	Fluence Rate MeV/cm²/sec With	Exposure Rate mR/hr	Exposure Rate mR/hr With

		No Buildup	Buildup	No Buildup	Buildup
0.6938	1.202e-04	9.267e-26	2.121e-23	1.789e-28	4.094e-26
1.1732	7.366e-01	1.870e-18	1.306e-16	3.342e-21	2.335e-19
1.3325	7.366e-01	1.119e-17	6.035e-16	1.942e-20	1.047e-18
Totals	**1.473e+00**	**1.306e-17**	**7.342e-16**	**2.276e-20**	**1.281e-18**

MicroShield 7.02 (07-MSD-7.02-1385)
LMCO ODIN
Conversion of calculated exposure in air to dose
FILE: C:\Program Files (x86)\MicroShield 7\Examples\CaseFiles\MP10-5-09.ms7
Case Title: MP10-5 Case 9
This case was run on Tuesday, June 12, 2012 at 7:45:14 AM
Dose Point # 1 - (289.725,45.72,0) cm

Results (Summed over energies)	Units	Without Buildup	With Buildup
Photon Fluence Rate (flux)	Photons/cm²/sec	9.994e-018	5.643e-016
Photon Energy Fluence Rate	MeV/cm²/sec	1.306e-017	7.342e-016
Exposure and Dose Rates:			
Exposure Rate in Air	mR/hr	2.276e-020	1.281e-018
Absorbed Dose Rate in Air	mGy/hr	1.987e-022	1.118e-020
"	mrad/hr	1.987e-020	1.118e-018
Deep Dose Equivalent Rate	(ICRP 51 - 1987)		
o Parallel Geometry	mSv/hr	2.253e-022	1.268e-020
o Opposed	"	1.946e-022	1.095e-020
o Rotational	"	1.946e-022	1.095e-020
o Isotropic	"	1.740e-022	9.787e-021
Shallow Dose Equivalent Rate	(ICRP 51 - 1987)		
o Parallel Geometry	mSv/hr	2.397e-022	1.349e-020
o Opposed	"	2.310e-022	1.300e-020
o Rotational	"	2.310e-022	1.300e-020
o Isotropic	"	1.841e-022	1.036e-020
Effective Dose Equivalent Rate	(ICRP 51 - 1987)		
o Anterior/Posterior Geometry	mSv/hr	2.030e-022	1.142e-020
o Posterior/Anterior	"	1.873e-022	1.054e-020
o Lateral	"	1.495e-022	8.405e-021
o Rotational	"	1.688e-022	9.493e-021
o Isotropic	"	1.496e-022	8.415e-021

MicroShield 7.02
LMCO ODIN (07-MSD-7.02-1385)

Date	By	Checked

Filename	Run Date	Run Time	Duration
MP10-5-10.ms7	June 12, 2012	7:53:02 AM	00:00:00

Project Info	
Case Title	MP10-5 Case 10
Description	Pipe No. 396, 1 in., 3 ft. DP above pipe 387, Unit Co-60
Geometry	10 - Cylinder Surface - External Dose Point

Source Dimensions	
Height	91.44 cm (3 ft)
Radius	1.33 cm (0.5 in)

Dose Points			
A	X	Y	Z
#1	144.075 cm (4 ft 8.7 in)	45.72 cm (1 ft 6.0 in)	45.72 cm (1 ft 6.0 in)

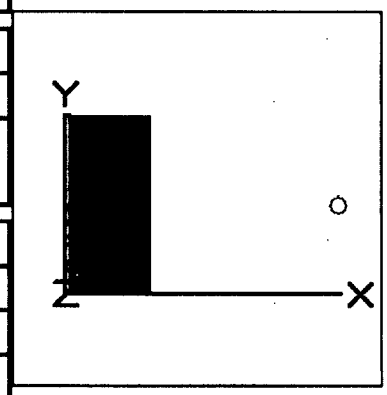

Shields			
Shield N	Dimension	Material	Density
Cyl. Radius	1.33 cm	Air	0.00122
Transition	.34 cm	Iron	7.86
Shield 2	42.38 cm	Concrete	2.4
Air Gap		Air	0.00122
Wall Clad	.025 cm	Iron	7.86

Source Input: Grouping Method - Actual Photon Energies				
Nuclide	Ci	Bq	µCi/cm²	Bq/cm²
Co-60	3.4386e-012	1.2723e-001	4.5000e-009	1.6650e-004

Buildup: The material reference is Shield 2 Integration Parameters	
Y Direction (axial)	20
Circumferential	20

Results

Energy (MeV)	Activity (Photons/sec)	Fluence Rate MeV/cm²/sec	Fluence Rate MeV/cm²/sec With	Exposure Rate mR/hr	Exposure Rate mR/hr With

		No Buildup	Buildup	No Buildup	Buildup
0.6938	2.075e-05	8.249e-15	1.867e-13	1.593e-17	3.604e-16
1.1732	1.272e-01	5.876e-10	6.345e-09	1.050e-12	1.134e-11
1.3325	1.272e-01	1.018e-09	9.349e-09	1.766e-12	1.622e-11
Totals	**2.545e-01**	**1.605e-09**	**1.569e-08**	**2.816e-12**	**2.756e-11**

MicroShield 7.02 (07-MSD-7.02-1385)
LMCO ODIN
Conversion of calculated exposure in air to dose
FILE: C:\Program Files (x86)\MicroShield 7\Examples\CaseFiles\MP10-5-10.ms7
Case Title: MP10-5 Case 10
This case was run on Tuesday, June 12, 2012 at 7:53:02 AM
Dose Point # 1 - (144.075,45.72,45.72) cm

Results (Summed over energies)	Units	Without Buildup	With Buildup
Photon Fluence Rate (flux)	Photons/cm²/sec	1.265e-009	1.242e-008
Photon Energy Fluence Rate	MeV/cm²/sec	1.605e-009	1.569e-008
Exposure and Dose Rates:			
Exposure Rate in Air	mR/hr	2.816e-012	2.756e-011
Absorbed Dose Rate in Air	mGy/hr	2.458e-014	2.406e-013
"	mrad/hr	2.458e-012	2.406e-011
Deep Dose Equivalent Rate	(ICRP 51 - 1987)		
o Parallel Geometry	mSv/hr	2.791e-014	2.732e-013
o Opposed	"	2.404e-014	2.352e-013
o Rotational	"	2.404e-014	2.352e-013
o Isotropic	"	2.147e-014	2.101e-013
Shallow Dose Equivalent Rate	(ICRP 51 - 1987)		
o Parallel Geometry	mSv/hr	2.970e-014	2.908e-013
o Opposed	"	2.860e-014	2.800e-013
o Rotational	"	2.860e-014	2.800e-013
o Isotropic	"	2.275e-014	2.226e-013
Effective Dose Equivalent Rate	(ICRP 51 - 1987)		
o Anterior/Posterior Geometry	mSv/hr	2.513e-014	2.460e-013
o Posterior/Anterior	"	2.315e-014	2.266e-013
o Lateral	"	1.842e-014	1.801e-013
o Rotational	"	2.085e-014	2.040e-013
o Isotropic	"	1.845e-014	1.805e-013

MicroShield 7.02
LMCO ODIN (07-MSD-7.02-1385)

Date	By	Checked

Filename	Run Date	Run Time	Duration
MP10-5-11.ms7	June 12, 2012	7:56:00 AM	00:00:00

Project Info	
Case Title	MP10-5 Case 11
Description	Pipe No. 397, 1 in., 3 ft. DP above pipe 387, Unit Co-60
Geometry	10 - Cylinder Surface - External Dose Point

Source Dimensions	
Height	91.44 cm (3 ft)
Radius	1.33 cm (0.5 in)

Dose Points			
A	X	Y	Z
#1	144.075 cm (4 ft 8.7 in)	45.72 cm (1 ft 6.0 in)	76.2 cm (2 ft 6.0 in)

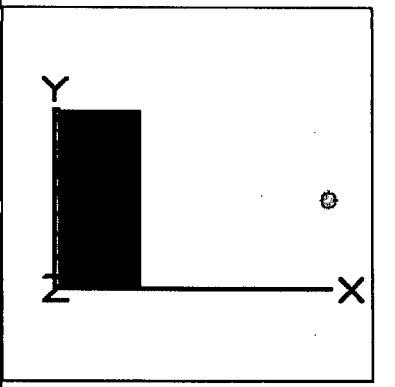

Shields			
Shield N	Dimension	Material	Density
Cyl. Radius	1.33 cm	Air	0.00122
Transition	.34 cm	Iron	7.86
Shield 2	42.38 cm	Concrete	2.4
Air Gap		Air	0.00122
Wall Clad	.025 cm	Iron	7.86

Source Input: Grouping Method - Actual Photon Energies				
Nuclide	Ci	Bq	μCi/cm²	Bq/cm²
Co-60	3.4386e-012	1.2723e-001	4.5000e-009	1.6650e-004

Buildup: The material reference is Shield 2 Integration Parameters	
Y Direction (axial)	20
Circumferential	20

Results

Energy (MeV)	Activity (Photons/sec)	Fluence Rate MeV/cm²/sec	Fluence Rate MeV/cm²/sec With	Exposure Rate mR/hr	Exposure Rate mR/hr With

		No Buildup	Buildup	No Buildup	Buildup
0.6938	2.075e-05	3.584e-15	9.098e-14	6.919e-18	1.757e-16
1.1732	1.272e-01	2.968e-10	3.522e-09	5.303e-13	6.294e-12
1.3325	1.272e-01	5.313e-10	5.334e-09	9.218e-13	9.254e-12
Totals	**2.545e-01**	**8.281e-10**	**8.856e-09**	**1.452e-12**	**1.555e-11**

MicroShield 7.02 (07-MSD-7.02-1385)
LMCO ODIN
Conversion of calculated exposure in air to dose
FILE: C:\Program Files (x86)\MicroShield 7\Examples\CaseFiles\MP10-5-11.ms7
Case Title: MP10-5 Case 11
This case was run on Tuesday, June 12, 2012 at 7:56:00 AM
Dose Point # 1 - (144.075,45.72,76.2) cm

Results (Summed over energies)	Units	Without Buildup	With Buildup
Photon Fluence Rate (flux)	Photons/cm²/sec	6.517e-010	7.005e-009
Photon Energy Fluence Rate	MeV/cm²/sec	8.281e-010	8.856e-009
Exposure and Dose Rates:			
Exposure Rate in Air	mR/hr	1.452e-012	1.555e-011
Absorbed Dose Rate in Air	mGy/hr	1.268e-014	1.357e-013
"	mrad/hr	1.268e-012	1.357e-011
Deep Dose Equivalent Rate	(ICRP 51 - 1987)		
o Parallel Geometry	mSv/hr	1.439e-014	1.541e-013
o Opposed	"	1.240e-014	1.327e-013
o Rotational	"	1.240e-014	1.327e-013
o Isotropic	"	1.108e-014	1.185e-013
Shallow Dose Equivalent Rate	(ICRP 51 - 1987)		
o Parallel Geometry	mSv/hr	1.532e-014	1.641e-013
o Opposed	"	1.475e-014	1.580e-013
o Rotational	"	1.475e-014	1.580e-013
o Isotropic	"	1.173e-014	1.256e-013
Effective Dose Equivalent Rate	(ICRP 51 - 1987)		
o Anterior/Posterior Geometry	mSv/hr	1.296e-014	1.388e-013
o Posterior/Anterior	"	1.194e-014	1.278e-013
o Lateral	"	9.500e-015	1.016e-013
o Rotational	"	1.075e-014	1.151e-013
o Isotropic	"	9.518e-015	1.019e-013

MicroShield 7.02
LMCO ODIN (07-MSD-7.02-1385)

Date	By	Checked

Filename	Run Date	Run Time	Duration
MP10-5-12.ms7	June 12, 2012	7:57:52 AM	00:00:00

Project Info	
Case Title	MP10-5 Case 12
Description	Pipe No. 398, 1 in., 3 ft. DP above pipe 387, Unit Co-60
Geometry	10 - Cylinder Surface - External Dose Point

Source Dimensions	
Height	91.44 cm (3 ft)
Radius	1.33 cm (0.5 in)

Dose Points			
A	X	Y	Z
#1	144.075 cm (4 ft 8.7 in)	45.72 cm (1 ft 6.0 in)	91.44 cm (3 ft)

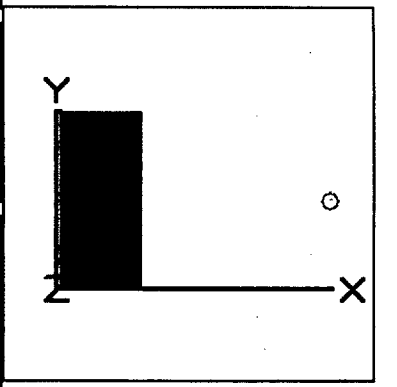

Shields			
Shield N	Dimension	Material	Density
Cyl. Radius	1.33 cm	Air	0.00122
Transition	.34 cm	Iron	7.86
Shield 2	42.38 cm	Concrete	2.4
Air Gap		Air	0.00122
Wall Clad	.025 cm	Iron	7.86

Source Input: Grouping Method - Actual Photon Energies				
Nuclide	Ci	Bq	µCi/cm²	Bq/cm²
Co-60	3.4386e-012	1.2723e-001	4.5000e-009	1.6650e-004

Buildup: The material reference is Shield 2 Integration Parameters	
Y Direction (axial)	20
Circumferential	20

Results

Energy (MeV)	Activity (Photons/sec)	Fluence Rate MeV/cm²/sec	Fluence Rate MeV/cm²/sec With	Exposure Rate mR/hr	Exposure Rate mR/hr With

		No Buildup	Buildup	No Buildup	Buildup
0.6938	2.075e-05	2.106e-15	5.736e-14	4.066e-18	1.108e-16
1.1732	1.272e-01	1.922e-10	2.417e-09	3.435e-13	4.320e-12
1.3325	1.272e-01	3.515e-10	3.727e-09	6.098e-13	6.467e-12
Totals	**2.545e-01**	**5.437e-10**	**6.145e-09**	**9.533e-13**	**1.079e-11**

MicroShield 7.02 (07-MSD-7.02-1385)
LMCO ODIN
Conversion of calculated exposure in air to dose
FILE: C:\Program Files (x86)\MicroShield 7\Examples\CaseFiles\MP10-5-12.ms7
Case Title: MP10-5 Case 12
This case was run on Tuesday, June 12, 2012 at 7:57:52 AM
Dose Point # 1 - (144.075,45.72,91.44) cm

Results (Summed over energies)	Units	Without Buildup	With Buildup
Photon Fluence Rate (flux)	Photons/cm²/sec	4.276e-010	4.858e-009
Photon Energy Fluence Rate	MeV/cm²/sec	5.437e-010	6.145e-009
Exposure and Dose Rates:			
Exposure Rate in Air	mR/hr	9.533e-013	1.079e-011
Absorbed Dose Rate in Air	mGy/hr	8.322e-015	9.417e-014
"	mrad/hr	8.322e-013	9.417e-012
Deep Dose Equivalent Rate	(ICRP 51 - 1987)		
o Parallel Geometry	mSv/hr	9.447e-015	1.069e-013
o Opposed	"	8.139e-015	9.207e-014
o Rotational	"	8.139e-015	9.207e-014
o Isotropic	"	7.271e-015	8.224e-014
Shallow Dose Equivalent Rate	(ICRP 51 - 1987)		
o Parallel Geometry	mSv/hr	1.006e-014	1.138e-013
o Opposed	"	9.683e-015	1.096e-013
o Rotational	"	9.683e-015	1.096e-013
o Isotropic	"	7.703e-015	8.714e-014
Effective Dose Equivalent Rate	(ICRP 51 - 1987)		
o Anterior/Posterior Geometry	mSv/hr	8.507e-015	9.627e-014
o Posterior/Anterior	"	7.839e-015	8.868e-014
o Lateral	"	6.237e-015	7.052e-014
o Rotational	"	7.059e-015	7.985e-014
o Isotropic	"	6.249e-015	7.067e-014

MicroShield 7.02
LMCO ODIN (07-MSD-7.02-1385)

Date	By	Checked

Filename	Run Date	Run Time	Duration
MP10-5-13.ms7	June 12, 2012	8:06:06 AM	00:00:00

Project Info	
Case Title	MP10-5 Case 13
Description	Pipe No. 337, 3 in., 3 ft. DP above pipe 387, Unit Co-60
Geometry	10 - Cylinder Surface - External Dose Point

Source Dimensions	
Height	91.44 cm (3 ft)
Radius	3.9 cm (1.5 in)

Dose Points			
A	X	Y	Z
#1	293.705 cm (9 ft 7.6 in)	45.72 cm (1 ft 6.0 in)	40.63 cm (1 ft 4.0 in)

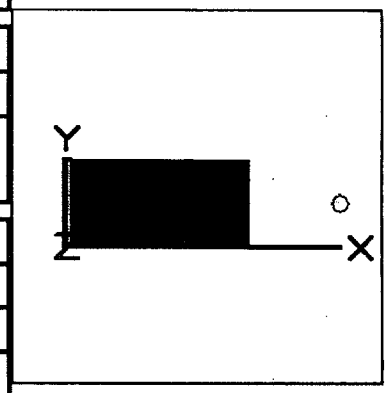

Shields			
Shield N	Dimension	Material	Density
Cyl. Radius	3.9 cm	Air	0.00122
Transition	.55 cm	Iron	7.86
Shield 2	189.23 cm	Concrete	2.4
Air Gap		Air	0.00122
Wall Clad	.025 cm	Iron	7.86

Source Input: Grouping Method - Actual Photon Energies				
Nuclide	Ci	Bq	µCi/cm²	Bq/cm²
Co-60	1.0083e-011	3.7307e-001	4.5000e-009	1.6650e-004

Buildup: The material reference is Shield 2 Integration Parameters	
Y Direction (axial)	20
Circumferential	20

Results

Energy (MeV)	Activity (Photons/sec)	Fluence Rate MeV/cm²/sec	Fluence Rate MeV/cm²/sec With	Exposure Rate mR/hr	Exposure Rate mR/hr With

		No Buildup	Buildup	No Buildup	Buildup
0.6938	6.086e-05	1.133e-26	2.816e-24	2.187e-29	5.436e-27
1.1732	3.731e-01	3.254e-19	2.425e-17	5.815e-22	4.333e-20
1.3325	3.731e-01	2.101e-18	1.203e-16	3.644e-21	2.088e-19
Totals	**7.462e-01**	**2.426e-18**	**1.446e-16**	**4.226e-21**	**2.521e-19**

MicroShield 7.02 (07-MSD-7.02-1385)
LMCO ODIN
Conversion of calculated exposure in air to dose
FILE: C:\Program Files (x86)\MicroShield 7\Examples\CaseFiles\MP10-5-13.ms7
Case Title: MP10-5 Case 13
This case was run on Tuesday, June 12, 2012 at 8:06:06 AM
Dose Point # 1 - (293.705,45.72,40.63) cm

Results (Summed over energies)	Units	Without Buildup	With Buildup
Photon Fluence Rate (flux)	Photons/cm²/sec	1.854e-018	1.110e-016
Photon Energy Fluence Rate	MeV/cm²/sec	2.426e-018	1.446e-016
Exposure and Dose Rates:			
Exposure Rate in Air	mR/hr	4.226e-021	2.521e-019
Absorbed Dose Rate in Air	mGy/hr	3.689e-023	2.201e-021
"	mrad/hr	3.689e-021	2.201e-019
Deep Dose Equivalent Rate	(ICRP 51 - 1987)		
o Parallel Geometry	mSv/hr	4.184e-023	2.496e-021
o Opposed	"	3.614e-023	2.155e-021
o Rotational	"	3.614e-023	2.155e-021
o Isotropic	"	3.231e-023	1.927e-021
Shallow Dose Equivalent Rate	(ICRP 51 - 1987)		
o Parallel Geometry	mSv/hr	4.449e-023	2.655e-021
o Opposed	"	4.289e-023	2.559e-021
o Rotational	"	4.289e-023	2.559e-021
o Isotropic	"	3.419e-023	2.039e-021
Effective Dose Equivalent Rate	(ICRP 51 - 1987)		
o Anterior/Posterior Geometry	mSv/hr	3.769e-023	2.249e-021
o Posterior/Anterior	"	3.478e-023	2.075e-021
o Lateral	"	2.776e-023	1.655e-021
o Rotational	"	3.134e-023	1.869e-021
o Isotropic	"	2.779e-023	1.657e-021

MicroShield 7.02
LMCO ODIN (07-MSD-7.02-1385)

Date	By	Checked

Filename	Run Date	Run Time	Duration
MP10-5-14.ms7	June 12, 2012	8:09:55 AM	00:00:00

Project Info	
Case Title	MP10-5 Case 14
Description	Pipe No. 389, 6 in., 3 ft. DP above pipe 387, Unit Co-60
Geometry	10 - Cylinder Surface - External Dose Point

Source Dimensions	
Height	91.44 cm (3 ft)
Radius	7.7 cm (3.0 in)

Dose Points			
A	X	Y	Z
#1	289.725 cm (9 ft 6.1 in)	45.72 cm (1 ft 6.0 in)	152.4 cm (5 ft 0.0 in)

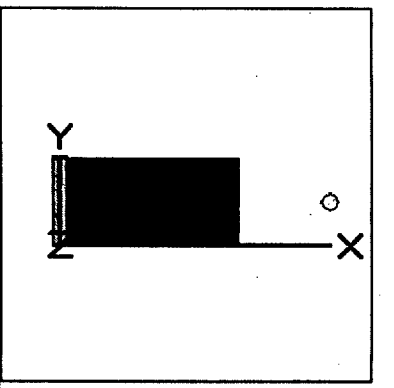

Shields			
Shield N	Dimension	Material	Density
Cyl. Radius	7.7 cm	Air	0.00122
Transition	.71 cm	Iron	7.86
Shield 2	181.29 cm	Concrete	2.4
Air Gap		Air	0.00122
Wall Clad	.025 cm	Iron	7.86

Source Input: Grouping Method - Actual Photon Energies				
Nuclide	Ci	Bq	µCi/cm²	Bq/cm²
Co-60	1.9908e-011	7.3658e-001	4.5000e-009	1.6650e-004

Buildup: The material reference is Shield 2 Integration Parameters	
Y Direction (axial)	20
Circumferential	20

Results

Energy (MeV)	Activity (Photons/sec)	Fluence Rate MeV/cm²/sec	Fluence Rate MeV/cm²/sec With	Exposure Rate mR/hr	Exposure Rate mR/hr With

		No Buildup	Buildup	No Buildup	Buildup
0.6938	1.202e-04	7.513e-28	2.147e-25	1.451e-30	4.146e-28
1.1732	7.366e-01	4.138e-20	3.459e-18	7.395e-23	6.182e-21
1.3325	7.366e-01	3.085e-19	1.973e-17	5.353e-22	3.423e-20
Totals	**1.473e+00**	**3.499e-19**	**2.319e-17**	**6.092e-22**	**4.041e-20**

MicroShield 7.02 (07-MSD-7.02-1385)
LMCO ODIN
Conversion of calculated exposure in air to dose
FILE: C:\Program Files (x86)\MicroShield 7\Examples\CaseFiles\MP10-5-14.ms7
Case Title: MP10-5 Case 14
This case was run on Tuesday, June 12, 2012 at 8:09:55 AM
Dose Point # 1 - (289.725,45.72,152.4) cm

Results (Summed over energies)	Units	Without Buildup	With Buildup
Photon Fluence Rate (flux)	Photons/cm²/sec	2.668e-019	1.776e-017
Photon Energy Fluence Rate	MeV/cm²/sec	3.499e-019	2.319e-017
Exposure and Dose Rates:			
Exposure Rate in Air	mR/hr	6.092e-022	4.041e-020
Absorbed Dose Rate in Air	mGy/hr	5.318e-024	3.528e-022
"	mrad/hr	5.318e-022	3.528e-020
Deep Dose Equivalent Rate	(ICRP 51 - 1987)		
o Parallel Geometry	mSv/hr	6.031e-024	4.001e-022
o Opposed	"	5.210e-024	3.455e-022
o Rotational	"	5.210e-024	3.455e-022
o Isotropic	"	4.659e-024	3.090e-022
Shallow Dose Equivalent Rate	(ICRP 51 - 1987)		
o Parallel Geometry	mSv/hr	6.413e-024	4.256e-022
o Opposed	"	6.182e-024	4.102e-022
o Rotational	"	6.182e-024	4.102e-022
o Isotropic	"	4.930e-024	3.270e-022
Effective Dose Equivalent Rate	(ICRP 51 - 1987)		
o Anterior/Posterior Geometry	mSv/hr	5.433e-024	3.604e-022
o Posterior/Anterior	"	5.014e-024	3.326e-022
o Lateral	"	4.003e-024	2.654e-022
o Rotational	"	4.518e-024	2.997e-022
o Isotropic	"	4.007e-024	2.657e-022

MicroShield 7.02
LMCO ODIN (07-MSD-7.02-1385)

Date	By	Checked

Filename	Run Date	Run Time	Duration
MP10-5-15.ms7	June 12, 2012	8:47:35 AM	00:00:00

Project Info	
Case Title	MP10-5 Case 15
Description	Pipe No. 387, 6 in., 3 ft. DP above the pipe, Unit Cs-137
Geometry	10 - Cylinder Surface - External Dose Point

Source Dimensions	
Height	91.44 cm (3 ft)
Radius	7.7 cm (3.0 in)

Dose Points			
A	X	Y	Z
#1	289.725 cm (9 ft 6.1 in)	45.72 cm (1 ft 6.0 in)	0.0 cm (0.0 in)

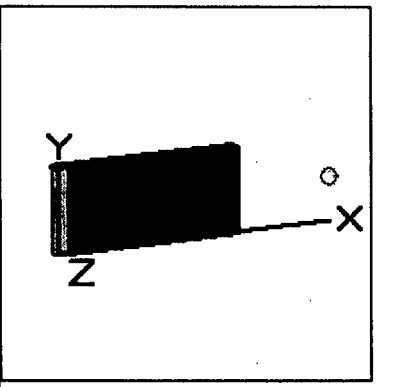

Shields			
Shield N	Dimension	Material	Density
Cyl. Radius	7.7 cm	Air	0.00122
Transition	.71 cm	Iron	7.86
Shield 2	181.29 cm	Concrete	2.4
Air Gap		Air	0.00122
Wall Clad	.025 cm	Iron	7.86

Source Input: Grouping Method - Actual Photon Energies				
Nuclide	Ci	Bq	µCi/cm²	Bq/cm²
Ba-137m	1.8833e-011	6.9681e-001	4.2570e-009	1.5751e-004
Cs-137	1.9908e-011	7.3658e-001	4.5000e-009	1.6650e-004

Buildup: The material reference is Shield 2 Integration Parameters	
Y Direction (axial)	20
Circumferential	20

Results					
Energy	Activity	Fluence Rate	Fluence Rate MeV/cm²/sec	Exposure Rate	Exposure Rate mR/hr

(MeV)	(Photons/sec)	MeV/cm²/sec No Buildup	With Buildup	mR/hr No Buildup	With Buildup
0.0045	7.234e-03	0.000e+00	2.957e-37	0.000e+00	2.027e-37
0.0318	1.443e-02	1.829e-214	8.248e-36	1.524e-216	6.871e-38
0.0322	2.662e-02	3.723e-208	1.581e-35	2.996e-210	1.273e-37
0.0364	9.686e-03	8.189e-157	8.813e-36	4.653e-159	5.007e-38
0.6616	6.270e-01	2.212e-22	5.653e-20	4.288e-25	1.096e-22
Totals	**6.849e-01**	**2.212e-22**	**5.653e-20**	**4.288e-25**	**1.096e-22**

MicroShield 7.02 (07-MSD-7.02-1385)
LMCO ODIN
Conversion of calculated exposure in air to dose
FILE: C:\Program Files (x86)\MicroShield 7\Examples\CaseFiles\MP10-5-15.ms7
Case Title: MP10-5 Case 15
This case was run on Tuesday, June 12, 2012 at 8:47:35 AM
Dose Point # 1 - (289.725,45.72,0) cm

Results (Summed over energies)	Units	Without Buildup	With Buildup
Photon Fluence Rate (flux)	Photons/cm²/sec	3.343e-022	8.544e-020
Photon Energy Fluence Rate	MeV/cm²/sec	2.212e-022	5.653e-020
Exposure and Dose Rates:			
Exposure Rate in Air	mR/hr	4.288e-025	1.096e-022
Absorbed Dose Rate in Air	mGy/hr	3.744e-027	9.568e-025
"	mrad/hr	3.744e-025	9.568e-023
Deep Dose Equivalent Rate	(ICRP 51 - 1987)		
o Parallel Geometry	mSv/hr	4.432e-027	1.133e-024
o Opposed	"	3.549e-027	9.070e-025
o Rotational	"	3.549e-027	9.070e-025
o Isotropic	"	3.138e-027	8.020e-025
Shallow Dose Equivalent Rate	(ICRP 51 - 1987)		
o Parallel Geometry	mSv/hr	4.711e-027	1.204e-024
o Opposed	"	4.474e-027	1.144e-024
o Rotational	"	4.474e-027	1.144e-024
o Isotropic	"	3.355e-027	8.573e-025
Effective Dose Equivalent Rate	(ICRP 51 - 1987)		
o Anterior/Posterior Geometry	mSv/hr	3.919e-027	1.002e-024
o Posterior/Anterior	"	3.459e-027	8.841e-025
o Lateral	"	2.565e-027	6.556e-025
o Rotational	"	3.091e-027	7.901e-025
o Isotropic	"	2.632e-027	6.726e-025

MicroShield 7.02
LMCO ODIN (07-MSD-7.02-1385)

Date	By	Checked

Filename	Run Date	Run Time	Duration
MP10-5-16.ms7	June 12, 2012	8:49:53 AM	00:00:00

Project Info	
Case Title	MP10-5 Case 16
Description	Pipe No. 396, 1 in., 3 ft. DP above pipe 387, Unit Cs-137
Geometry	10 - Cylinder Surface - External Dose Point

Source Dimensions	
Height	91.44 cm (3 ft)
Radius	1.33 cm (0.5 in)

Dose Points			
A	X	Y	Z
#1	144.075 cm (4 ft 8.7 in)	45.72 cm (1 ft 6.0 in)	45.72 cm (1 ft 6.0 in)

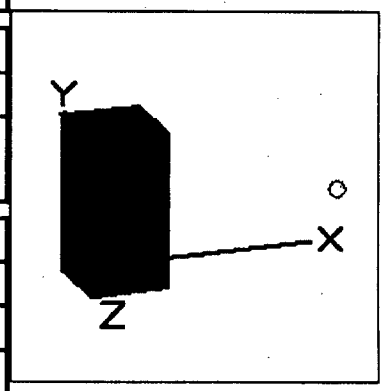

Shields			
Shield N	Dimension	Material	Density
Cyl. Radius	1.33 cm	Air	0.00122
Transition	.34 cm	Iron	7.86
Shield 2	42.38 cm	Concrete	2.4
Air Gap		Air	0.00122
Wall Clad	.025 cm	Iron	7.86

Source Input: Grouping Method - Actual Photon Energies				
Nuclide	Ci	Bq	µCi/cm²	Bq/cm²
Ba-137m	3.2529e-012	1.2036e-001	4.2570e-009	1.5751e-004
Cs-137	3.4386e-012	1.2723e-001	4.5000e-009	1.6650e-004

Buildup: The material reference is Shield 2 Integration Parameters	
Y Direction (axial)	20
Circumferential	20

Results					
Energy	Activity	Fluence Rate	Fluence Rate MeV/cm²/sec	Exposure Rate	Exposure Rate mR/hr

(MeV)	(Photons/sec)	MeV/cm²/sec No Buildup	With Buildup	mR/hr No Buildup	With Buildup
0.0045	1.249e-03	0.000e+00	1.836e-37	0.000e+00	1.259e-37
0.0318	2.492e-03	5.147e-66	5.122e-36	4.287e-68	4.266e-38
0.0322	4.597e-03	4.253e-64	9.820e-36	3.423e-66	7.903e-38
0.0364	1.673e-03	2.333e-50	5.472e-36	1.326e-52	3.109e-38
0.6616	1.083e-01	3.404e-11	8.247e-10	6.599e-14	1.599e-12
Totals	**1.183e-01**	**3.404e-11**	**8.247e-10**	**6.599e-14**	**1.599e-12**

MicroShield 7.02 (07-MSD-7.02-1385)
LMCO ODIN
Conversion of calculated exposure in air to dose
FILE: C:\Program Files (x86)\MicroShield 7\Examples\CaseFiles\MP10-5-16.ms7
Case Title: MP10-5 Case 16
This case was run on Tuesday, June 12, 2012 at 8:49:53 AM
Dose Point # 1 - (144.075,45.72,45.72) cm

Results (Summed over energies)	Units	Without Buildup	With Buildup
Photon Fluence Rate (flux)	Photons/cm²/sec	5.145e-011	1.246e-009
Photon Energy Fluence Rate	MeV/cm²/sec	3.404e-011	8.247e-010
Exposure and Dose Rates:			
Exposure Rate in Air	mR/hr	6.599e-014	1.599e-012
Absorbed Dose Rate in Air	mGy/hr	5.761e-016	1.396e-014
"	mrad/hr	5.761e-014	1.396e-012
Deep Dose Equivalent Rate	(ICRP 51 - 1987)		
o Parallel Geometry	mSv/hr	6.821e-016	1.652e-014
o Opposed	"	5.461e-016	1.323e-014
o Rotational	"	5.461e-016	1.323e-014
o Isotropic	"	4.829e-016	1.170e-014
Shallow Dose Equivalent Rate	(ICRP 51 - 1987)		
o Parallel Geometry	mSv/hr	7.249e-016	1.756e-014
o Opposed	"	6.885e-016	1.668e-014
o Rotational	"	6.885e-016	1.668e-014
o Isotropic	"	5.162e-016	1.251e-014
Effective Dose Equivalent Rate	(ICRP 51 - 1987)		
o Anterior/Posterior Geometry	mSv/hr	6.031e-016	1.461e-014
o Posterior/Anterior	"	5.323e-016	1.290e-014
o Lateral	"	3.948e-016	9.564e-015
o Rotational	"	4.757e-016	1.153e-014
o Isotropic	"	4.050e-016	9.812e-015

MicroShield 7.02
LMCO ODIN (07-MSD-7.02-1385)

Date	By	Checked

Filename	Run Date	Run Time	Duration
MP10-5-17.ms7	June 12, 2012	8:52:23 AM	00:00:00

Project Info	
Case Title	MP10-5 Case 17
Description	Pipe No. 397, 1 in., 3 ft. DP above pipe 387, Unit Cs-137
Geometry	10 - Cylinder Surface - External Dose Point

Source Dimensions	
Height	91.44 cm (3 ft)
Radius	1.33 cm (0.5 in)

Dose Points			
A	X	Y	Z
#1	144.075 cm (4 ft 8.7 in)	45.72 cm (1 ft 6.0 in)	76.2 cm (2 ft 6.0 in)

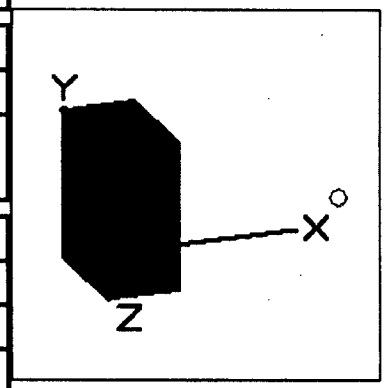

Shields			
Shield N	Dimension	Material	Density
Cyl. Radius	1.33 cm	Air	0.00122
Transition	.34 cm	Iron	7.86
Shield 2	42.38 cm	Concrete	2.4
Air Gap		Air	0.00122
Wall Clad	.025 cm	Iron	7.86

Source Input: Grouping Method - Actual Photon Energies				
Nuclide	Ci	Bq	µCi/cm²	Bq/cm²
Ba-137m	3.2529e-012	1.2036e-001	4.2570e-009	1.5751e-004
Cs-137	3.4386e-012	1.2723e-001	4.5000e-009	1.6650e-004

Buildup: The material reference is Shield 2 Integration Parameters	
Y Direction (axial)	20
Circumferential	20

Results

Energy	Activity	Fluence Rate	Fluence Rate MeV/cm²/sec	Exposure Rate	Exposure Rate mR/hr

(MeV)	(Photons/sec)	MeV/cm²/sec No Buildup	With Buildup	mR/hr No Buildup	With Buildup
0.0045	1.249e-03	0.000e+00	1.586e-37	0.000e+00	1.087e-37
0.0318	2.492e-03	1.472e-70	4.423e-36	1.226e-72	3.684e-38
0.0322	4.597e-03	1.666e-68	8.479e-36	1.341e-70	6.824e-38
0.0364	1.673e-03	1.377e-53	4.725e-36	7.826e-56	2.685e-38
0.6616	1.083e-01	1.457e-11	3.970e-10	2.825e-14	7.696e-13
Totals	**1.183e-01**	**1.457e-11**	**3.970e-10**	**2.825e-14**	**7.696e-13**

MicroShield 7.02 (07-MSD-7.02-1385)
LMCO ODIN
Conversion of calculated exposure in air to dose
FILE: C:\Program Files (x86)\MicroShield 7\Examples\CaseFiles\MP10-5-17.ms7
Case Title: MP10-5 Case 17
This case was run on Tuesday, June 12, 2012 at 8:52:23 AM
Dose Point # 1 - (144.075,45.72,76.2) cm

Results (Summed over energies)	Units	Without Buildup	With Buildup
Photon Fluence Rate (flux)	Photons/cm²/sec	2.203e-011	5.999e-010
Photon Energy Fluence Rate	MeV/cm²/sec	1.457e-011	3.970e-010
Exposure and Dose Rates:			
Exposure Rate in Air	mR/hr	2.825e-014	7.696e-013
Absorbed Dose Rate in Air	mGy/hr	2.467e-016	6.718e-015
"	mrad/hr	2.467e-014	6.718e-013
Deep Dose Equivalent Rate	(ICRP 51 - 1987)		
o Parallel Geometry	mSv/hr	2.920e-016	7.954e-015
o Opposed	"	2.338e-016	6.368e-015
o Rotational	"	2.338e-016	6.368e-015
o Isotropic	"	2.068e-016	5.631e-015
Shallow Dose Equivalent Rate	(ICRP 51 - 1987)		
o Parallel Geometry	mSv/hr	3.104e-016	8.454e-015
o Opposed	"	2.948e-016	8.029e-015
o Rotational	"	2.948e-016	8.029e-015
o Isotropic	"	2.210e-016	6.020e-015
Effective Dose Equivalent Rate	(ICRP 51 - 1987)		
o Anterior/Posterior Geometry	mSv/hr	2.582e-016	7.033e-015
o Posterior/Anterior	"	2.279e-016	6.208e-015
o Lateral	"	1.690e-016	4.603e-015
o Rotational	"	2.037e-016	5.548e-015
o Isotropic	"	1.734e-016	4.723e-015

MicroShield 7.02
LMCO ODIN (07-MSD-7.02-1385)

Date	By	Checked

Filename	Run Date	Run Time	Duration
MP10-5-18.ms7	June 12, 2012	8:57:07 AM	00:00:00

Project Info	
Case Title	MP10-5 Case 18
Description	Pipe No. 398, 1 in., 3 ft. DP above pipe 387, Unit Cs-137
Geometry	10 - Cylinder Surface - External Dose Point

Source Dimensions	
Height	91.44 cm (3 ft)
Radius	1.33 cm (0.5 in)

Dose Points			
A	X	Y	Z
#1	144.075 cm (4 ft 8.7 in)	45.72 cm (1 ft 6.0 in)	91.44 cm (3 ft)

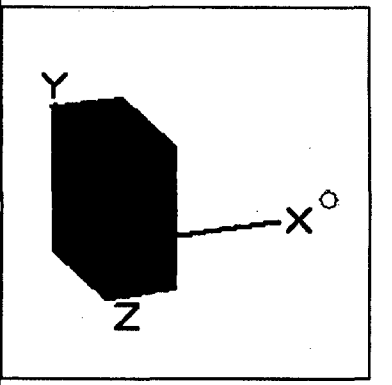

Shields			
Shield N	Dimension	Material	Density
Cyl. Radius	1.33 cm	Air	0.00122
Transition	.34 cm	Iron	7.86
Shield 2	42.38 cm	Concrete	2.4
Air Gap		Air	0.00122
Wall Clad	.025 cm	Iron	7.86

Source Input: Grouping Method - Actual Photon Energies				
Nuclide	Ci	Bq	µCi/cm²	Bq/cm²
Ba-137m	3.2529e-012	1.2036e-001	4.2570e-009	1.5751e-004
Cs-137	3.4386e-012	1.2723e-001	4.5000e-009	1.6650e-004

Buildup: The material reference is Shield 2 Integration Parameters	
Y Direction (axial)	20
Circumferential	20

Results

Energy	Activity	Fluence Rate	Fluence Rate MeV/cm²/sec	Exposure Rate	Exposure Rate mR/hr

(MeV)	(Photons/sec)	MeV/cm²/sec No Buildup	With Buildup	mR/hr No Buildup	With Buildup
0.0045	1.249e-03	0.000e+00	1.450e-37	0.000e+00	9.936e-38
0.0318	2.492e-03	3.685e-73	4.043e-36	3.069e-75	3.368e-38
0.0322	4.597e-03	4.948e-71	7.752e-36	3.982e-73	6.239e-38
0.0364	1.673e-03	1.731e-55	4.320e-36	9.833e-58	2.455e-38
0.6616	1.083e-01	8.485e-12	2.483e-10	1.645e-14	4.814e-13
Totals	**1.183e-01**	**8.485e-12**	**2.483e-10**	**1.645e-14**	**4.814e-13**

MicroShield 7.02 (07-MSD-7.02-1385)
LMCO ODIN
Conversion of calculated exposure in air to dose
FILE: C:\Program Files (x86)\MicroShield 7\Examples\CaseFiles\MP10-5-18.ms7
Case Title: MP10-5 Case 18
This case was run on Tuesday, June 12, 2012 at 8:57:07 AM
Dose Point # 1 - (144.075,45.72,91.44) cm

Results (Summed over energies)	Units	Without Buildup	With Buildup
Photon Fluence Rate (flux)	Photons/cm²/sec	1.282e-011	3.753e-010
Photon Energy Fluence Rate	MeV/cm²/sec	8.485e-012	2.483e-010
Exposure and Dose Rates:			
Exposure Rate in Air	mR/hr	1.645e-014	4.814e-013
Absorbed Dose Rate in Air	mGy/hr	1.436e-016	4.202e-015
"	mrad/hr	1.436e-014	4.202e-013
Deep Dose Equivalent Rate	(ICRP 51 - 1987)		
o Parallel Geometry	mSv/hr	1.700e-016	4.975e-015
o Opposed	"	1.361e-016	3.983e-015
o Rotational	"	1.361e-016	3.984e-015
o Isotropic	"	1.204e-016	3.523e-015
Shallow Dose Equivalent Rate	(ICRP 51 - 1987)		
o Parallel Geometry	mSv/hr	1.807e-016	5.288e-015
o Opposed	"	1.716e-016	5.023e-015
o Rotational	"	1.716e-016	5.023e-015
o Isotropic	"	1.287e-016	3.766e-015
Effective Dose Equivalent Rate	(ICRP 51 - 1987)		
o Anterior/Posterior Geometry	mSv/hr	1.503e-016	4.399e-015
o Posterior/Anterior	"	1.327e-016	3.883e-015
o Lateral	"	9.840e-017	2.880e-015
o Rotational	"	1.186e-016	3.470e-015
o Isotropic	"	1.010e-016	2.954e-015

MicroShield 7.02
LMCO ODIN (07-MSD-7.02-1385)

Date	By	Checked

Filename	Run Date	Run Time	Duration
MP10-5-19.ms7	June 12, 2012	8:59:21 AM	00:00:00

Project Info	
Case Title	MP10-5 Case 19
Description	Pipe No. 337, 3 in., 3 ft. DP above pipe 387, Unit Cs-137
Geometry	10 - Cylinder Surface - External Dose Point

Source Dimensions	
Height	91.44 cm (3 ft)
Radius	3.9 cm (1.5 in)

Dose Points			
A	X	Y	Z
#1	293.705 cm (9 ft 7.6 in)	45.72 cm (1 ft 6.0 in)	40.63 cm (1 ft 4.0 in)

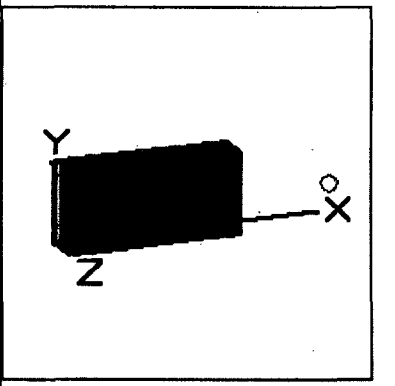

Shields			
Shield N	Dimension	Material	Density
Cyl. Radius	3.9 cm	Air	0.00122
Transition	.55 cm	Iron	7.86
Shield 2	189.23 cm	Concrete	2.4
Air Gap		Air	0.00122
Wall Clad	.025 cm	Iron	7.86

Source Input: Grouping Method - Actual Photon Energies				
Nuclide	Ci	Bq	µCi/cm²	Bq/cm²
Ba-137m	9.5386e-012	3.5293e-001	4.2570e-009	1.5751e-004
Cs-137	1.0083e-011	3.7307e-001	4.5000e-009	1.6650e-004

Buildup: The material reference is Shield 2 Integration Parameters	
Y Direction (axial)	20
Circumferential	20

Results

Energy	Activity	Fluence Rate	Fluence Rate MeV/cm²/sec	Exposure Rate	Exposure Rate mR/hr

(MeV)	(Photons/sec)	MeV/cm²/sec No Buildup	With Buildup	mR/hr No Buildup	With Buildup
0.0045	3.664e-03	0.000e+00	1.430e-37	0.000e+00	9.801e-38
0.0318	7.307e-03	1.425e-220	3.988e-36	1.187e-222	3.322e-38
0.0322	1.348e-02	4.330e-214	7.647e-36	3.484e-216	6.154e-38
0.0364	4.906e-03	2.757e-161	4.261e-36	1.566e-163	2.421e-38
0.6616	3.176e-01	2.612e-23	7.261e-21	5.063e-26	1.408e-23
Totals	**3.469e-01**	**2.612e-23**	**7.261e-21**	**5.063e-26**	**1.408e-23**

MicroShield 7.02 (07-MSD-7.02-1385)
LMCO ODIN
Conversion of calculated exposure in air to dose
FILE: C:\Program Files (x86)\MicroShield 7\Examples\CaseFiles\MP10-5-19.ms7
Case Title: MP10-5 Case 19
This case was run on Tuesday, June 12, 2012 at 8:59:21 AM
Dose Point # 1 - (293.705,45.72,40.63) cm

Results (Summed over energies)	Units	Without Buildup	With Buildup
Photon Fluence Rate (flux)	Photons/cm²/sec	3.947e-023	1.097e-020
Photon Energy Fluence Rate	MeV/cm²/sec	2.612e-023	7.261e-021
Exposure and Dose Rates:			
Exposure Rate in Air	mR/hr	5.063e-026	1.408e-023
Absorbed Dose Rate in Air	mGy/hr	4.420e-028	1.229e-025
"	mrad/hr	4.420e-026	1.229e-023
Deep Dose Equivalent Rate	(ICRP 51 - 1987)		
o Parallel Geometry	mSv/hr	5.234e-028	1.455e-025
o Opposed	"	4.190e-028	1.165e-025
o Rotational	"	4.190e-028	1.165e-025
o Isotropic	"	3.705e-028	1.030e-025
Shallow Dose Equivalent Rate	(ICRP 51 - 1987)		
o Parallel Geometry	mSv/hr	5.562e-028	1.546e-025
o Opposed	"	5.283e-028	1.469e-025
o Rotational	"	5.283e-028	1.469e-025
o Isotropic	"	3.961e-028	1.101e-025
Effective Dose Equivalent Rate	(ICRP 51 - 1987)		
o Anterior/Posterior Geometry	mSv/hr	4.628e-028	1.286e-025
o Posterior/Anterior	"	4.085e-028	1.136e-025
o Lateral	"	3.029e-028	8.420e-026
o Rotational	"	3.650e-028	1.015e-025
o Isotropic	"	3.107e-028	8.639e-026

MicroShield 7.02
LMCO ODIN (07-MSD-7.02-1385)

Date	By	Checked

Filename	Run Date	Run Time	Duration
MP10-5-20.ms7	June 12, 2012	9:03:10 AM	00:00:00

Project Info	
Case Title	MP10-5 Case 20
Description	Pipe No. 389, 6 in., 3 ft. DP above pipe 387, Unit Co-60
Geometry	10 - Cylinder Surface - External Dose Point

Source Dimensions	
Height	91.44 cm (3 ft)
Radius	7.7 cm (3.0 in)

Dose Points

A	X	Y	Z
#1	289.725 cm (9 ft 6.1 in)	45.72 cm (1 ft 6.0 in)	152.4 cm (5 ft 0.0 in)

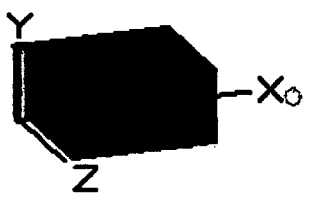

Shields

Shield N	Dimension	Material	Density
Cyl. Radius	7.7 cm	Air	0.00122
Transition	.71 cm	Iron	7.86
Shield 2	181.29 cm	Concrete	2.4
Air Gap		Air	0.00122
Wall Clad	.025 cm	Iron	7.86

Source Input: Grouping Method - Actual Photon Energies

Nuclide	Ci	Bq	µCi/cm²	Bq/cm²
Ba-137m	1.8833e-011	6.9681e-001	4.2570e-009	1.5751e-004
Cs-137	1.9908e-011	7.3658e-001	4.5000e-009	1.6650e-004

Buildup: The material reference is Shield 2
Integration Parameters

Y Direction (axial)	20
Circumferential	20

Results

Energy	Activity	Fluence Rate	Fluence Rate MeV/cm²/sec	Exposure Rate	Exposure Rate mR/hr

(MeV)	(Photons/sec)	MeV/cm²/sec No Buildup	With Buildup	mR/hr No Buildup	With Buildup
0.0045	7.234e-03	0.000e+00	2.320e-37	0.000e+00	1.590e-37
0.0318	1.443e-02	3.405e-242	6.471e-36	2.836e-244	5.390e-38
0.0322	2.662e-02	4.606e-235	1.241e-35	3.707e-237	9.985e-38
0.0364	9.686e-03	1.124e-176	6.914e-36	6.389e-179	3.928e-38
0.6616	6.270e-01	1.627e-24	5.217e-22	3.154e-27	1.011e-24
Totals	**6.849e-01**	**1.627e-24**	**5.217e-22**	**3.154e-27**	**1.011e-24**

MicroShield 7.02 (07-MSD-7.02-1385)
LMCO ODIN
Conversion of calculated exposure in air to dose
FILE: C:\Program Files (x86)\MicroShield 7\Examples\CaseFiles\MP10-5-20.ms7
Case Title: MP10-5 Case 20
This case was run on Tuesday, June 12, 2012 at 9:03:10 AM
Dose Point # 1 - (289.725,45.72,152.4) cm

Results (Summed over energies)	Units	Without Buildup	With Buildup
Photon Fluence Rate (flux)	Photons/cm²/sec	2.459e-024	7.885e-022
Photon Energy Fluence Rate	MeV/cm²/sec	1.627e-024	5.217e-022
Exposure and Dose Rates:			
Exposure Rate in Air	mR/hr	3.154e-027	1.011e-024
Absorbed Dose Rate in Air	mGy/hr	2.753e-029	8.830e-027
"	mrad/hr	2.753e-027	8.830e-025
Deep Dose Equivalent Rate	(ICRP 51 - 1987)		
o Parallel Geometry	mSv/hr	3.260e-029	1.045e-026
o Opposed	"	2.610e-029	8.370e-027
o Rotational	"	2.610e-029	8.370e-027
o Isotropic	"	2.308e-029	7.402e-027
Shallow Dose Equivalent Rate	(ICRP 51 - 1987)		
o Parallel Geometry	mSv/hr	3.464e-029	1.111e-026
o Opposed	"	3.290e-029	1.055e-026
o Rotational	"	3.290e-029	1.055e-026
o Isotropic	"	2.467e-029	7.912e-027
Effective Dose Equivalent Rate	(ICRP 51 - 1987)		
o Anterior/Posterior Geometry	mSv/hr	2.882e-029	9.244e-027
o Posterior/Anterior	"	2.544e-029	8.160e-027
o Lateral	"	1.887e-029	6.051e-027
o Rotational	"	2.273e-029	7.292e-027
o Isotropic	"	1.935e-029	6.208e-027

MicroShield 7.02
LMCO ODIN (07-MSD-7.02-1385)

Date	By	Checked

Filename	Run Date	Run Time	Duration
MP3-01.ms7	June 12, 2012	1:47:03 PM	00:00:00

Project Info	
Case Title	MP10-3 Case 1
Description	Pipe No. 302, 3 in., 3 ft. DP on Quad A wall, Unit Co-60
Geometry	10 - Cylinder Surface - External Dose Point

Source Dimensions	
Height	91.44 cm (3 ft)
Radius	3.9 cm (1.5 in)

Dose Points			
A	X	Y	Z
#1	293.705 cm (9 ft 7.6 in)	45.72 cm (1 ft 6.0 in)	77.47 cm (2 ft 6.5 in)

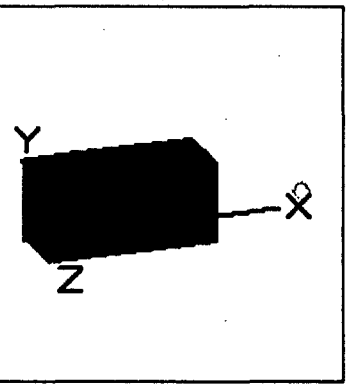

Shields			
Shield N	Dimension	Material	Density
Cyl. Radius	3.9 cm	Air	0.00122
Transition	.55 cm	Iron	7.86
Shield 2	189.23 cm	Concrete	2.4
Air Gap		Air	0.00122
Wall Clad	.025 cm	Iron	7.86

Source Input: Grouping Method - Actual Photon Energies				
Nuclide	Ci	Bq	μCi/cm²	Bq/cm²
Co-60	1.0083e-011	3.7307e-001	4.5000e-009	1.6650e-004

Buildup: The material reference is Shield 2 Integration Parameters	
Y Direction (axial)	20
Circumferential	20

Results

Energy (MeV)	Activity (Photons/sec)	Fluence Rate MeV/cm²/sec	Fluence Rate MeV/cm²/sec With	Exposure Rate mR/hr	Exposure Rate mR/hr With

		No Buildup	Buildup	No Buildup	Buildup
0.6938	6.086e-05	4.461e-27	1.158e-24	8.614e-30	2.235e-27
1.1732	3.731e-01	1.557e-19	1.202e-17	2.782e-22	2.147e-20
1.3325	3.731e-01	1.049e-18	6.213e-17	1.820e-21	1.078e-19
Totals	**7.462e-01**	**1.204e-18**	**7.414e-17**	**2.098e-21**	**1.293e-19**

MicroShield 7.02 (07-MSD-7.02-1385)
LMCO ODIN
Conversion of calculated exposure in air to dose
FILE: C:\Program Files (x86)\MicroShield 7\Examples\CaseFiles\MP3-01.ms7
Case Title: MP10-3 Case 1
This case was run on Tuesday, June 12, 2012 at 1:47:03 PM
Dose Point # 1 - (293.705,45.72,77.47) cm

Results (Summed over energies)	Units	Without Buildup	With Buildup
Photon Fluence Rate (flux)	Photons/cm²/sec	9.198e-019	5.687e-017
Photon Energy Fluence Rate	MeV/cm²/sec	1.204e-018	7.414e-017
Exposure and Dose Rates:			
Exposure Rate in Air	mR/hr	2.098e-021	1.293e-019
Absorbed Dose Rate in Air	mGy/hr	1.831e-023	1.128e-021
"	mrad/hr	1.831e-021	1.128e-019
Deep Dose Equivalent Rate	(ICRP 51 - 1987)		
o Parallel Geometry	mSv/hr	2.077e-023	1.280e-021
o Opposed	"	1.794e-023	1.105e-021
o Rotational	"	1.794e-023	1.105e-021
o Isotropic	"	1.604e-023	9.880e-022
Shallow Dose Equivalent Rate	(ICRP 51 - 1987)		
o Parallel Geometry	mSv/hr	2.209e-023	1.361e-021
o Opposed	"	2.129e-023	1.312e-021
o Rotational	"	2.129e-023	1.312e-021
o Isotropic	"	1.697e-023	1.046e-021
Effective Dose Equivalent Rate	(ICRP 51 - 1987)		
o Anterior/Posterior Geometry	mSv/hr	1.871e-023	1.153e-021
o Posterior/Anterior	"	1.727e-023	1.064e-021
o Lateral	"	1.378e-023	8.487e-022
o Rotational	"	1.556e-023	9.583e-022
o Isotropic	"	1.379e-023	8.496e-022

MicroShield 7.02
LMCO ODIN (07-MSD-7.02-1385)

Date	By	Checked

Filename	Run Date	Run Time	Duration
MP3-02.ms7	June 12, 2012	1:54:12 PM	00:00:00

Project Info	
Case Title	MP10-3 Case 2
Description	Pipe No. 303, 2.5 in., 3 ft. DP on Quad A wall, Unit Co-60
Geometry	10 - Cylinder Surface - External Dose Point

Source Dimensions	
Height	91.44 cm (3 ft)
Radius	3.14 cm (1.2 in)

Dose Points			
A	X	Y	Z
#1	294.505 cm (9 ft 7.9 in)	45.72 cm (1 ft 6.0 in)	46.99 cm (1 ft 6.5 in)

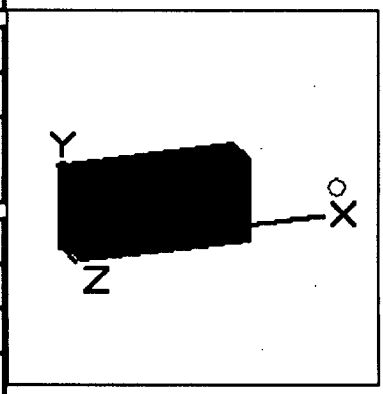

Shields			
Shield N	Dimension	Material	Density
Cyl. Radius	3.14 cm	Air	0.00122
Transition	.52 cm	Iron	7.86
Shield 2	190.82 cm	Concrete	2.4
Air Gap		Air	0.00122
Wall Clad	.025 cm	Iron	7.86

Source Input: Grouping Method - Actual Photon Energies				
Nuclide	Ci	Bq	µCi/cm²	Bq/cm²
Co-60	8.1182e-012	3.0037e-001	4.5000e-009	1.6650e-004

Buildup: The material reference is Shield 2 Integration Parameters	
Y Direction (axial)	20
Circumferential	20

Results

Energy (MeV)	Activity (Photons/sec)	Fluence Rate MeV/cm²/sec	Fluence Rate MeV/cm²/sec With	Exposure Rate mR/hr	Exposure Rate mR/hr With

		No Buildup	Buildup	No Buildup	Buildup
0.6938	4.900e-05	6.701e-27	1.694e-24	1.294e-29	3.270e-27
1.1732	3.004e-01	2.073e-19	1.565e-17	3.705e-22	2.798e-20
1.3325	3.004e-01	1.360e-18	7.887e-17	2.359e-21	1.368e-19
Totals	**6.008e-01**	**1.567e-18**	**9.453e-17**	**2.730e-21**	**1.648e-19**

MicroShield 7.02 (07-MSD-7.02-1385)
LMCO ODIN
Conversion of calculated exposure in air to dose
FILE: C:\Program Files (x86)\MicroShield 7\Examples\CaseFiles\MP3-02.ms7
Case Title: MP10-3 Case 2
This case was run on Tuesday, June 12, 2012 at 1:54:12 PM
Dose Point # 1 - (294.505,45.72,46.99) cm

Results (Summed over energies)	Units	Without Buildup	With Buildup
Photon Fluence Rate (flux)	Photons/cm²/sec	1.197e-018	7.254e-017
Photon Energy Fluence Rate	MeV/cm²/sec	1.567e-018	9.453e-017
Exposure and Dose Rates:			
Exposure Rate in Air	mR/hr	2.730e-021	1.648e-019
Absorbed Dose Rate in Air	mGy/hr	2.383e-023	1.439e-021
"	mrad/hr	2.383e-021	1.439e-019
Deep Dose Equivalent Rate	(ICRP 51 - 1987)		
o Parallel Geometry	mSv/hr	2.702e-023	1.632e-021
o Opposed	"	2.334e-023	1.409e-021
o Rotational	"	2.334e-023	1.409e-021
o Isotropic	"	2.087e-023	1.260e-021
Shallow Dose Equivalent Rate	(ICRP 51 - 1987)		
o Parallel Geometry	mSv/hr	2.874e-023	1.736e-021
o Opposed	"	2.770e-023	1.673e-021
o Rotational	"	2.770e-023	1.673e-021
o Isotropic	"	2.209e-023	1.333e-021
Effective Dose Equivalent Rate	(ICRP 51 - 1987)		
o Anterior/Posterior Geometry	mSv/hr	2.434e-023	1.470e-021
o Posterior/Anterior	"	2.247e-023	1.356e-021
o Lateral	"	1.793e-023	1.082e-021
o Rotational	"	2.024e-023	1.222e-021
o Isotropic	"	1.795e-023	1.083e-021

MicroShield 7.02
LMCO ODIN (07-MSD-7.02-1385)

Date	By	Checked

Filename	Run Date	Run Time	Duration
MP3-03.ms7	June 12, 2012	2:00:31 PM	00:00:00

Project Info	
Case Title	MP10-3 Case 3
Description	Pipe No. 304, 3 in., 3 ft. DP on Quad A wall, Unit Co-60
Geometry	10 - Cylinder Surface - External Dose Point

Source Dimensions	
Height	91.44 cm (3 ft)
Radius	3.9 cm (1.5 in)

Dose Points			
A	X	Y	Z
#1	293.705 cm (9 ft 7.6 in)	45.72 cm (1 ft 6.0 in)	16.51 cm (6.5 in)

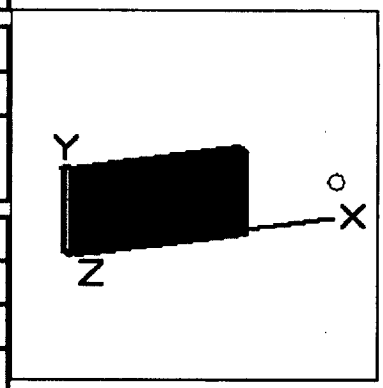

Shields			
Shield N	Dimension	Material	Density
Cyl. Radius	3.9 cm	Air	0.00122
Transition	.55 cm	Iron	7.86
Shield 2	189.23 cm	Concrete	2.4
Air Gap		Air	0.00122
Wall Clad	.025 cm	Iron	7.86

Source Input: Grouping Method - Actual Photon Energies				
Nuclide	Ci	Bq	µCi/cm²	Bq/cm²
Co-60	1.0083e-011	3.7307e-001	4.5000e-009	1.6650e-004

Buildup: The material reference is Shield 2 Integration Parameters	
Y Direction (axial)	20
Circumferential	20

Results

Energy (MeV)	Activity (Photons/sec)	Fluence Rate MeV/cm²/sec	Fluence Rate MeV/cm²/sec With	Exposure Rate mR/hr	Exposure Rate mR/hr With

		No Buildup	Buildup	No Buildup	Buildup
0.6938	6.086e-05	1.526e-26	3.740e-24	2.947e-29	7.220e-27
1.1732	3.731e-01	4.116e-19	3.032e-17	7.355e-22	5.418e-20
1.3325	3.731e-01	2.620e-18	1.485e-16	4.546e-21	2.576e-19
Totals	**7.462e-01**	**3.032e-18**	**1.788e-16**	**5.282e-21**	**3.118e-19**

MicroShield 7.02 (07-MSD-7.02-1385)
LMCO ODIN
Conversion of calculated exposure in air to dose
FILE: C:\Program Files (x86)\MicroShield 7\Examples\CaseFiles\MP3-03.ms7
Case Title: MP10-3 Case 3
This case was run on Tuesday, June 12, 2012 at 2:00:31 PM
Dose Point # 1 - (293.705,45.72,16.51) cm

Results (Summed over energies)	Units	Without Buildup	With Buildup
Photon Fluence Rate (flux)	Photons/cm²/sec	2.317e-018	1.373e-016
Photon Energy Fluence Rate	MeV/cm²/sec	3.032e-018	1.788e-016
Exposure and Dose Rates:			
Exposure Rate in Air	mR/hr	5.282e-021	3.118e-019
Absorbed Dose Rate in Air	mGy/hr	4.611e-023	2.722e-021
"	mrad/hr	4.611e-021	2.722e-019
Deep Dose Equivalent Rate	(ICRP 51 - 1987)		
o Parallel Geometry	mSv/hr	5.229e-023	3.087e-021
o Opposed	"	4.516e-023	2.665e-021
o Rotational	"	4.516e-023	2.665e-021
o Isotropic	"	4.039e-023	2.383e-021
Shallow Dose Equivalent Rate	(ICRP 51 - 1987)		
o Parallel Geometry	mSv/hr	5.561e-023	3.284e-021
o Opposed	"	5.360e-023	3.165e-021
o Rotational	"	5.360e-023	3.165e-021
o Isotropic	"	4.273e-023	2.522e-021
Effective Dose Equivalent Rate	(ICRP 51 - 1987)		
o Anterior/Posterior Geometry	mSv/hr	4.710e-023	2.781e-021
o Posterior/Anterior	"	4.347e-023	2.566e-021
o Lateral	"	3.469e-023	2.047e-021
o Rotational	"	3.916e-023	2.311e-021
o Isotropic	"	3.473e-023	2.049e-021

MicroShield 7.02
LMCO ODIN (07-MSD-7.02-1385)

Date	By	Checked

Filename	Run Date	Run Time	Duration
MP3-04.ms7	June 12, 2012	2:11:32 PM	00:00:00

Project Info	
Case Title	MP10-3 Case 4
Description	Pipe No. 305, 4 in., 3 ft. DP on Quad A wall, Unit Co-60
Geometry	10 - Cylinder Surface - External Dose Point

Source Dimensions	
Height	91.44 cm (3 ft)
Radius	5.11 cm (2.0 in)

Dose Points			
A	X	Y	Z
#1	292.425 cm (9 ft 7.1 in)	45.72 cm (1 ft 6.0 in)	16.51 cm (6.5 in)

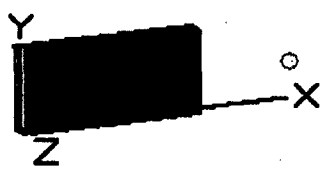

Shields			
Shield N	Dimension	Material	Density
Cyl. Radius	5.11 cm	Air	0.00122
Transition	.6 cm	Iron	7.86
Shield 2	186.69 cm	Concrete	2.4
Air Gap		Air	0.00122
Wall Clad	.025 cm	Iron	7.86

Source Input: Grouping Method - Actual Photon Energies				
Nuclide	Ci	Bq	µCi/cm²	Bq/cm²
Co-60	1.3211e-011	4.8882e-001	4.5000e-009	1.6650e-004

Buildup: The material reference is Shield 2 Integration Parameters	
Y Direction (axial)	20
Circumferential	20

Results

Energy (MeV)	Activity (Photons/sec)	Fluence Rate MeV/cm²/sec	Fluence Rate MeV/cm²/sec With	Exposure Rate mR/hr	Exposure Rate mR/hr With

		No Buildup	Buildup	No Buildup	Buildup
0.6938	7.974e-05	2.759e-26	6.629e-24	5.328e-29	1.280e-26
1.1732	4.888e-01	6.840e-19	4.963e-17	1.222e-21	8.868e-20
1.3325	4.888e-01	4.278e-18	2.390e-16	7.422e-21	4.147e-19
Totals	**9.777e-01**	**4.962e-18**	**2.886e-16**	**8.644e-21**	**5.034e-19**

MicroShield 7.02 (07-MSD-7.02-1385)
LMCO ODIN
Conversion of calculated exposure in air to dose
FILE: C:\Program Files (x86)\MicroShield 7\Examples\CaseFiles\MP3-04.ms7
Case Title: MP10-3 Case 4
This case was run on Tuesday, June 12, 2012 at 2:11:32 PM
Dose Point # 1 - (292.425,45.72,16.51) cm

Results (Summed over energies)	Units	Without Buildup	With Buildup
Photon Fluence Rate (flux)	Photons/cm²/sec	3.793e-018	2.217e-016
Photon Energy Fluence Rate	MeV/cm²/sec	4.962e-018	2.886e-016
Exposure and Dose Rates:			
Exposure Rate in Air	mR/hr	8.644e-021	5.034e-019
Absorbed Dose Rate in Air	mGy/hr	7.546e-023	4.394e-021
"	mrad/hr	7.546e-021	4.394e-019
Deep Dose Equivalent Rate	(ICRP 51 - 1987)		
o Parallel Geometry	mSv/hr	8.558e-023	4.984e-021
o Opposed	"	7.391e-023	4.303e-021
o Rotational	"	7.391e-023	4.303e-021
o Isotropic	"	6.609e-023	3.847e-021
Shallow Dose Equivalent Rate	(ICRP 51 - 1987)		
o Parallel Geometry	mSv/hr	9.101e-023	5.301e-021
o Opposed	"	8.773e-023	5.109e-021
o Rotational	"	8.773e-023	5.109e-021
o Isotropic	"	6.994e-023	4.072e-021
Effective Dose Equivalent Rate	(ICRP 51 - 1987)		
o Anterior/Posterior Geometry	mSv/hr	7.709e-023	4.490e-021
o Posterior/Anterior	"	7.114e-023	4.142e-021
o Lateral	"	5.678e-023	3.304e-021
o Rotational	"	6.410e-023	3.732e-021
o Isotropic	"	5.683e-023	3.308e-021

MicroShield 7.02
LMCO ODIN (07-MSD-7.02-1385)

Date	By	Checked

Filename	Run Date	Run Time	Duration
MP3-05.ms7	June 12, 2012	2:17:14 PM	00:00:00

Project Info	
Case Title	MP10-3 Case 5
Description	Pipe No. 306, 4 in., 3 ft. DP on Quad A wall, Unit Co-60
Geometry	10 - Cylinder Surface - External Dose Point

Source Dimensions	
Height	91.44 cm (3 ft)
Radius	5.11 cm (2.0 in)

Dose Points			
A	X	Y	Z
#1	292.425 cm (9 ft 7.1 in)	45.72 cm (1 ft 6.0 in)	52.07 cm (1 ft 8.5 in)

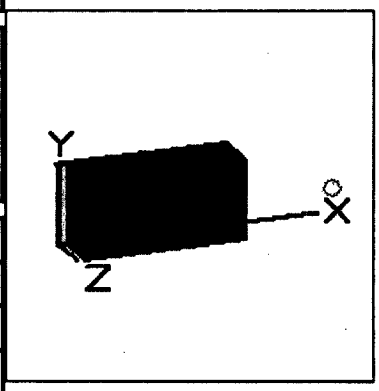

Shields			
Shield N	Dimension	Material	Density
Cyl. Radius	5.11 cm	Air	0.00122
Transition	.6 cm	Iron	7.86
Shield 2	186.69 cm	Concrete	2.4
Air Gap		Air	0.00122
Wall Clad	.025 cm	Iron	7.86

Source Input: Grouping Method - Actual Photon Energies				
Nuclide	Ci	Bq	µCi/cm²	Bq/cm²
Co-60	1.3211e-011	4.8882e-001	4.5000e-009	1.6650e-004

Buildup: The material reference is Shield 2 Integration Parameters	
Y Direction (axial)	20
Circumferential	20

Results

Energy (MeV)	Activity (Photons/sec)	Fluence Rate MeV/cm²/sec	Fluence Rate MeV/cm²/sec With	Exposure Rate mR/hr	Exposure Rate mR/hr With

		No Buildup	Buildup	No Buildup	Buildup
0.6938	7.974e-05	1.625e-26	4.003e-24	3.137e-29	7.729e-27
1.1732	4.888e-01	4.502e-19	3.335e-17	8.046e-22	5.959e-20
1.3325	4.888e-01	2.885e-18	1.644e-16	5.006e-21	2.852e-19
Totals	**9.777e-01**	**3.336e-18**	**1.977e-16**	**5.811e-21**	**3.448e-19**

MicroShield 7.02 (07-MSD-7.02-1385)
LMCO ODIN
Conversion of calculated exposure in air to dose
FILE: C:\Program Files (x86)\MicroShield 7\Examples\CaseFiles\MP3-05.ms7
Case Title: MP10-3 Case 5
This case was run on Tuesday, June 12, 2012 at 2:17:14 PM
Dose Point # 1 - (292.425,45.72,52.07) cm

Results (Summed over energies)	Units	Without Buildup	With Buildup
Photon Fluence Rate (flux)	Photons/cm²/sec	2.549e-018	1.518e-016
Photon Energy Fluence Rate	MeV/cm²/sec	3.336e-018	1.977e-016
Exposure and Dose Rates:			
Exposure Rate in Air	mR/hr	5.811e-021	3.448e-019
Absorbed Dose Rate in Air	mGy/hr	5.073e-023	3.010e-021
"	mrad/hr	5.073e-021	3.010e-019
Deep Dose Equivalent Rate	(ICRP 51 - 1987)		
o Parallel Geometry	mSv/hr	5.753e-023	3.414e-021
o Opposed	"	4.969e-023	2.948e-021
o Rotational	"	4.969e-023	2.948e-021
o Isotropic	"	4.443e-023	2.636e-021
Shallow Dose Equivalent Rate	(ICRP 51 - 1987)		
o Parallel Geometry	mSv/hr	6.118e-023	3.631e-021
o Opposed	"	5.897e-023	3.500e-021
o Rotational	"	5.897e-023	3.500e-021
o Isotropic	"	4.701e-023	2.789e-021
Effective Dose Equivalent Rate	(ICRP 51 - 1987)		
o Anterior/Posterior Geometry	mSv/hr	5.182e-023	3.075e-021
o Posterior/Anterior	"	4.782e-023	2.837e-021
o Lateral	"	3.817e-023	2.264e-021
o Rotational	"	4.309e-023	2.556e-021
o Isotropic	"	3.821e-023	2.266e-021

MicroShield 7.02
LMCO ODIN (07-MSD-7.02-1385)

Date	By	Checked

Filename	Run Date	Run Time	Duration
MP3-06.ms7	June 12, 2012	2:24:00 PM	00:00:00

Project Info	
Case Title	MP10-3 Case 6
Description	Pipe No. 307, 6 in., 3 ft. DP on Quad A wall, Unit Co-60
Geometry	10 - Cylinder Surface - External Dose Point

Source Dimensions	
Height	91.44 cm (3 ft)
Radius	7.7 cm (3.0 in)

Dose Points			
A	X	Y	Z
#1	289.725 cm (9 ft 6.1 in)	45.72 cm (1 ft 6.0 in)	97.79 cm (3 ft 2.5 in)

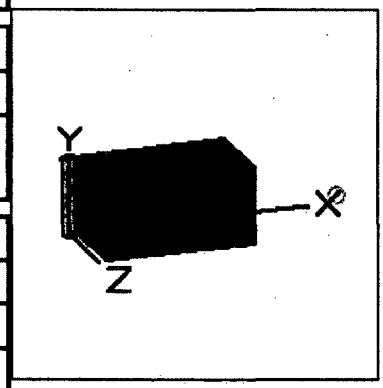

Shields			
Shield N	Dimension	Material	Density
Cyl. Radius	7.7 cm	Air	0.00122
Transition	.71 cm	Iron	7.86
Shield 2	181.29 cm	Concrete	2.4
Air Gap		Air	0.00122
Wall Clad	.025 cm	Iron	7.86

Source Input: Grouping Method - Actual Photon Energies				
Nuclide	Ci	Bq	µCi/cm²	Bq/cm²
Co-60	1.9908e-011	7.3658e-001	4.5000e-009	1.6650e-004

Buildup: The material reference is Shield 2 Integration Parameters	
Y Direction (axial)	20
Circumferential	20

Results

Energy (MeV)	Activity (Photons/sec)	Fluence Rate MeV/cm²/sec	Fluence Rate MeV/cm²/sec With	Exposure Rate mR/hr	Exposure Rate mR/hr With

		No Buildup	Buildup	No Buildup	Buildup
0.6938	1.202e-04	1.182e-26	2.984e-24	2.283e-29	5.762e-27
1.1732	7.366e-01	3.665e-19	2.772e-17	6.550e-22	4.954e-20
1.3325	7.366e-01	2.410e-18	1.401e-16	4.181e-21	2.431e-19
Totals	**1.473e+00**	**2.776e-18**	**1.679e-16**	**4.836e-21**	**2.927e-19**

MicroShield 7.02 (07-MSD-7.02-1385)
LMCO ODIN
Conversion of calculated exposure in air to dose
FILE: C:\Program Files (x86)\MicroShield 7\Examples\CaseFiles\MP3-06.ms7
Case Title: MP10-3 Case 6
This case was run on Tuesday, June 12, 2012 at 2:24:00 PM
Dose Point # 1 - (289.725,45.72,97.79) cm

Results (Summed over energies)	Units	Without Buildup	With Buildup
Photon Fluence Rate (flux)	Photons/cm²/sec	2.121e-018	1.288e-016
Photon Energy Fluence Rate	MeV/cm²/sec	2.776e-018	1.679e-016
Exposure and Dose Rates:			
Exposure Rate in Air	mR/hr	4.836e-021	2.927e-019
Absorbed Dose Rate in Air	mGy/hr	4.222e-023	2.555e-021
"	mrad/hr	4.222e-021	2.555e-019
Deep Dose Equivalent Rate	(ICRP 51 - 1987)		
o Parallel Geometry	mSv/hr	4.787e-023	2.898e-021
o Opposed	"	4.135e-023	2.502e-021
o Rotational	"	4.135e-023	2.502e-021
o Isotropic	"	3.698e-023	2.237e-021
Shallow Dose Equivalent Rate	(ICRP 51 - 1987)		
o Parallel Geometry	mSv/hr	5.091e-023	3.082e-021
o Opposed	"	4.908e-023	2.971e-021
o Rotational	"	4.908e-023	2.971e-021
o Isotropic	"	3.913e-023	2.368e-021
Effective Dose Equivalent Rate	(ICRP 51 - 1987)		
o Anterior/Posterior Geometry	mSv/hr	4.313e-023	2.610e-021
o Posterior/Anterior	"	3.980e-023	2.408e-021
o Lateral	"	3.177e-023	1.921e-021
o Rotational	"	3.586e-023	2.170e-021
o Isotropic	"	3.180e-023	1.924e-021

MicroShield 7.02
LMCO ODIN (07-MSD-7.02-1385)

Date	By	Checked

Filename	Run Date	Run Time	Duration
MP3-07.ms7	June 12, 2012	1:49:52 PM	00:00:00

Project Info	
Case Title	MP10-3 Case 7
Description	Pipe No. 302, 3 in., 3 ft. DP on Quad A wall, Unit Cs-137
Geometry	10 - Cylinder Surface - External Dose Point

Source Dimensions	
Height	91.44 cm (3 ft)
Radius	3.9 cm (1.5 in)

Dose Points			
A	X	Y	Z
#1	293.705 cm (9 ft 7.6 in)	45.72 cm (1 ft 6.0 in)	77.47 cm (2 ft 6.5 in)

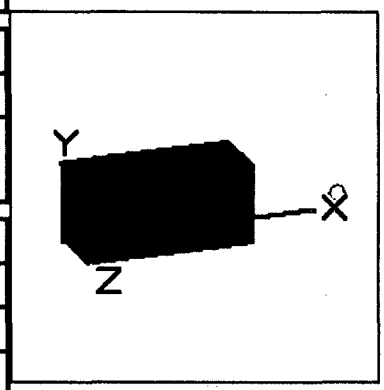

Shields			
Shield N	Dimension	Material	Density
Cyl. Radius	3.9 cm	Air	0.00122
Transition	.55 cm	Iron	7.86
Shield 2	189.23 cm	Concrete	2.4
Air Gap		Air	0.00122
Wall Clad	.025 cm	Iron	7.86

Source Input: Grouping Method - Actual Photon Energies				
Nuclide	Ci	Bq	µCi/cm²	Bq/cm²
Ba-137m	9.5386e-012	3.5293e-001	4.2570e-009	1.5751e-004
Cs-137	1.0083e-011	3.7307e-001	4.5000e-009	1.6650e-004

Buildup: The material reference is Shield 2 Integration Parameters	
Y Direction (axial)	20
Circumferential	20

Results

Energy	Activity	Fluence Rate	Fluence Rate MeV/cm²/sec	Exposure Rate	Exposure Rate mR/hr

(MeV)	(Photons/sec)	MeV/cm²/sec No Buildup	With Buildup	mR/hr No Buildup	With Buildup
0.0045	3.664e-03	0.000e+00	1.363e-37	0.000e+00	9.342e-38
0.0318	7.307e-03	2.431e-226	3.802e-36	2.025e-228	3.167e-38
0.0322	1.348e-02	1.073e-219	7.289e-36	8.639e-222	5.866e-38
0.0364	4.906e-03	1.775e-165	4.062e-36	1.009e-167	2.308e-38
0.6616	3.176e-01	1.009e-23	2.932e-21	1.957e-26	5.684e-24
Totals	**3.469e-01**	**1.009e-23**	**2.932e-21**	**1.957e-26**	**5.684e-24**

MicroShield 7.02 (07-MSD-7.02-1385)
LMCO ODIN
Conversion of calculated exposure in air to dose
FILE: C:\Program Files (x86)\MicroShield 7\Examples\CaseFiles\MP3-07.ms7
Case Title: MP10-3 Case 7
This case was run on Tuesday, June 12, 2012 at 1:49:52 PM
Dose Point # 1 - (293.705,45.72,77.47) cm

Results (Summed over energies)	Units	Without Buildup	With Buildup
Photon Fluence Rate (flux)	Photons/cm²/sec	1.525e-023	4.431e-021
Photon Energy Fluence Rate	MeV/cm²/sec	1.009e-023	2.932e-021
Exposure and Dose Rates:			
Exposure Rate in Air	mR/hr	1.957e-026	5.684e-024
Absorbed Dose Rate in Air	mGy/hr	1.708e-028	4.962e-026
"	mrad/hr	1.708e-026	4.962e-024
Deep Dose Equivalent Rate	(ICRP 51 - 1987)		
o Parallel Geometry	mSv/hr	2.022e-028	5.874e-026
o Opposed	"	1.619e-028	4.703e-026
o Rotational	"	1.619e-028	4.703e-026
o Isotropic	"	1.432e-028	4.159e-026
Shallow Dose Equivalent Rate	(ICRP 51 - 1987)		
o Parallel Geometry	mSv/hr	2.149e-028	6.244e-026
o Opposed	"	2.041e-028	5.930e-026
o Rotational	"	2.041e-028	5.930e-026
o Isotropic	"	1.531e-028	4.446e-026
Effective Dose Equivalent Rate	(ICRP 51 - 1987)		
o Anterior/Posterior Geometry	mSv/hr	1.788e-028	5.194e-026
o Posterior/Anterior	"	1.578e-028	4.585e-026
o Lateral	"	1.170e-028	3.400e-026
o Rotational	"	1.410e-028	4.097e-026
o Isotropic	"	1.201e-028	3.488e-026

MicroShield 7.02
LMCO ODIN (07-MSD-7.02-1385)

Date	By	Checked

Filename	Run Date	Run Time	Duration
MP3-08.ms7	June 12, 2012	1:57:26 PM	00:00:00

Project Info	
Case Title	MP10-3 Case 8
Description	Pipe No. 303, 2.5 in., 3 ft. DP on Quad A wall, Unit Cs-137
Geometry	10 - Cylinder Surface - External Dose Point

Source Dimensions	
Height	91.44 cm (3 ft)
Radius	3.14 cm (1.2 in)

Dose Points			
A	X	Y	Z
#1	294.505 cm (9 ft 7.9 in)	45.72 cm (1 ft 6.0 in)	46.99 cm (1 ft 6.5 in)

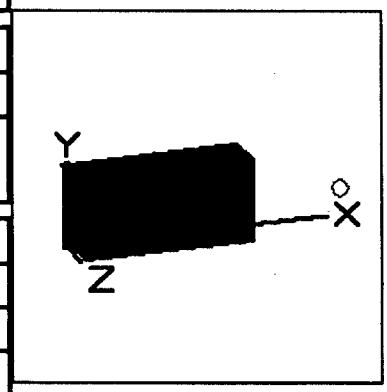

Shields			
Shield N	Dimension	Material	Density
Cyl. Radius	3.14 cm	Air	0.00122
Transition	.52 cm	Iron	7.86
Shield 2	190.82 cm	Concrete	2.4
Air Gap		Air	0.00122
Wall Clad	.025 cm	Iron	7.86

Source Input: Grouping Method - Actual Photon Energies				
Nuclide	Ci	Bq	µCi/cm²	Bq/cm²
Ba-137m	7.6798e-012	2.8415e-001	4.2570e-009	1.5751e-004
Cs-137	8.1182e-012	3.0037e-001	4.5000e-009	1.6650e-004

Buildup: The material reference is Shield 2 Integration Parameters	
Y Direction (axial)	20
Circumferential	20

Results					
Energy	Activity	Fluence Rate	Fluence Rate MeV/cm²/sec	Exposure Rate	Exposure Rate mR/hr

(MeV)	(Photons/sec)	MeV/cm²/sec No Buildup	With Buildup	mR/hr No Buildup	With Buildup
0.0045	2.950e-03	0.000e+00	1.138e-37	0.000e+00	7.800e-38
0.0318	5.883e-03	2.381e-222	3.174e-36	1.983e-224	2.644e-38
0.0322	1.085e-02	8.080e-216	6.086e-36	6.503e-218	4.898e-38
0.0364	3.950e-03	1.324e-162	3.391e-36	7.522e-165	1.927e-38
0.6616	2.557e-01	1.533e-23	4.338e-21	2.973e-26	8.409e-24
Totals	**2.793e-01**	**1.533e-23**	**4.338e-21**	**2.973e-26**	**8.409e-24**

MicroShield 7.02 (07-MSD-7.02-1385)
LMCO ODIN
Conversion of calculated exposure in air to dose
FILE: C:\Program Files (x86)\MicroShield 7\Examples\CaseFiles\MP3-08.ms7
Case Title: MP10-3 Case 8
This case was run on Tuesday, June 12, 2012 at 1:57:26 PM
Dose Point # 1 - (294.505,45.72,46.99) cm

Results (Summed over energies)	Units	Without Buildup	With Buildup
Photon Fluence Rate (flux)	Photons/cm²/sec	2.318e-023	6.556e-021
Photon Energy Fluence Rate	MeV/cm²/sec	1.533e-023	4.338e-021
Exposure and Dose Rates:			
Exposure Rate in Air	mR/hr	2.973e-026	8.409e-024
Absorbed Dose Rate in Air	mGy/hr	2.595e-028	7.341e-026
"	mrad/hr	2.595e-026	7.341e-024
Deep Dose Equivalent Rate	(ICRP 51 - 1987)		
o Parallel Geometry	mSv/hr	3.073e-028	8.692e-026
o Opposed	"	2.460e-028	6.959e-026
o Rotational	"	2.460e-028	6.959e-026
o Isotropic	"	2.175e-028	6.154e-026
Shallow Dose Equivalent Rate	(ICRP 51 - 1987)		
o Parallel Geometry	mSv/hr	3.266e-028	9.238e-026
o Opposed	"	3.102e-028	8.774e-026
o Rotational	"	3.102e-028	8.774e-026
o Isotropic	"	2.325e-028	6.578e-026
Effective Dose Equivalent Rate	(ICRP 51 - 1987)		
o Anterior/Posterior Geometry	mSv/hr	2.717e-028	7.685e-026
o Posterior/Anterior	"	2.398e-028	6.784e-026
o Lateral	"	1.778e-028	5.030e-026
o Rotational	"	2.143e-028	6.062e-026
o Isotropic	"	1.824e-028	5.161e-026

MicroShield 7.02
LMCO ODIN (07-MSD-7.02-1385)

Date	By	Checked

Filename	Run Date	Run Time	Duration
MP3-09.ms7	June 12, 2012	2:03:33 PM	00:00:00

Project Info	
Case Title	MP10-3 Case 9
Description	Pipe No. 304, 3 in., 3 ft. DP on Quad A wall, Unit Cs-137
Geometry	10 - Cylinder Surface - External Dose Point

Source Dimensions	
Height	91.44 cm (3 ft)
Radius	3.9 cm (1.5 in)

Dose Points			
A	X	Y	Z
#1	293.705 cm (9 ft 7.6 in)	45.72 cm (1 ft 6.0 in)	16.51 cm (6.5 in)

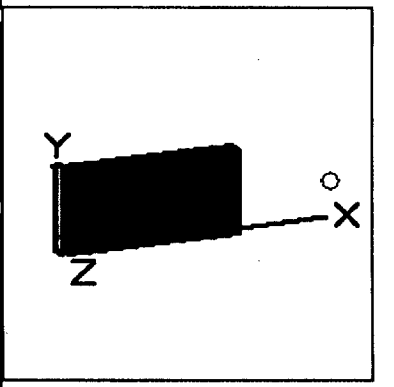

Shields			
Shield N	Dimension	Material	Density
Cyl. Radius	3.9 cm	Air	0.00122
Transition	.55 cm	Iron	7.86
Shield 2	189.23 cm	Concrete	2.4
Air Gap		Air	0.00122
Wall Clad	.025 cm	Iron	7.86

Source Input: Grouping Method - Actual Photon Energies				
Nuclide	Ci	Bq	µCi/cm²	Bq/cm²
Ba-137m	9.5386e-012	3.5293e-001	4.2570e-009	1.5751e-004
Cs-137	1.0083e-011	3.7307e-001	4.5000e-009	1.6650e-004

Buildup: The material reference is Shield 2 Integration Parameters	
Y Direction (axial)	20
Circumferential	20

Results

Energy	Activity	Fluence Rate	Fluence Rate MeV/cm²/sec	Exposure Rate	Exposure Rate mR/hr

(MeV)	(Photons/sec)	MeV/cm²/sec No Buildup	With Buildup	mR/hr No Buildup	With Buildup
0.0045	3.664e-03	0.000e+00	1.452e-37	0.000e+00	9.956e-38
0.0318	7.307e-03	3.169e-219	4.051e-36	2.640e-221	3.375e-38
0.0322	1.348e-02	8.774e-213	7.768e-36	7.061e-215	6.251e-38
0.0364	4.906e-03	2.572e-160	4.329e-36	1.462e-162	2.459e-38
0.6616	3.176e-01	3.540e-23	9.700e-21	6.863e-26	1.880e-23
Totals	**3.469e-01**	**3.540e-23**	**9.700e-21**	**6.863e-26**	**1.880e-23**

MicroShield 7.02 (07-MSD-7.02-1385)
LMCO ODIN
Conversion of calculated exposure in air to dose
FILE: C:\Program Files (x86)\MicroShield 7\Examples\CaseFiles\MP3-09.ms7
Case Title: MP10-3 Case 9
This case was run on Tuesday, June 12, 2012 at 2:03:33 PM
Dose Point # 1 - (293.705,45.72,16.51) cm

Results (Summed over energies)	Units	Without Buildup	With Buildup
Photon Fluence Rate (flux)	Photons/cm²/sec	5.350e-023	1.466e-020
Photon Energy Fluence Rate	MeV/cm²/sec	3.540e-023	9.700e-021
Exposure and Dose Rates:			
Exposure Rate in Air	mR/hr	6.863e-026	1.880e-023
Absorbed Dose Rate in Air	mGy/hr	5.991e-028	1.642e-025
"	mrad/hr	5.991e-026	1.642e-023
Deep Dose Equivalent Rate	(ICRP 51 - 1987)		
o Parallel Geometry	mSv/hr	7.093e-028	1.944e-025
o Opposed	"	5.679e-028	1.556e-025
o Rotational	"	5.679e-028	1.556e-025
o Isotropic	"	5.022e-028	1.376e-025
Shallow Dose Equivalent Rate	(ICRP 51 - 1987)		
o Parallel Geometry	mSv/hr	7.539e-028	2.066e-025
o Opposed	"	7.161e-028	1.962e-025
o Rotational	"	7.161e-028	1.962e-025
o Isotropic	"	5.369e-028	1.471e-025
Effective Dose Equivalent Rate	(ICRP 51 - 1987)		
o Anterior/Posterior Geometry	mSv/hr	6.272e-028	1.719e-025
o Posterior/Anterior	"	5.536e-028	1.517e-025
o Lateral	"	4.105e-028	1.125e-025
o Rotational	"	4.947e-028	1.356e-025
o Isotropic	"	4.212e-028	1.154e-025

MicroShield 7.02
LMCO ODIN (07-MSD-7.02-1385)

Date	By	Checked

Filename	Run Date	Run Time	Duration
MP3-10.ms7	June 12, 2012	2:13:58 PM	00:00:00

Project Info	
Case Title	MP10-3 Case 10
Description	Pipe No. 305, 4 in., 3 ft. DP on Quad A wall, Unit Cs-137
Geometry	10 - Cylinder Surface - External Dose Point

Source Dimensions	
Height	91.44 cm (3 ft)
Radius	5.11 cm (2.0 in)

Dose Points			
A	X	Y	Z
#1	292.425 cm (9 ft 7.1 in)	45.72 cm (1 ft 6.0 in)	16.51 cm (6.5 in)

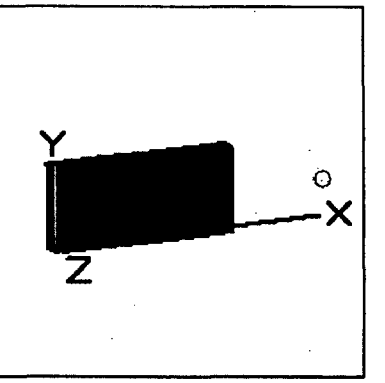

Shields			
Shield N	Dimension	Material	Density
Cyl. Radius	5.11 cm	Air	0.00122
Transition	.6 cm	Iron	7.86
Shield 2	186.69 cm	Concrete	2.4
Air Gap		Air	0.00122
Wall Clad	.025 cm	Iron	7.86

Source Input: Grouping Method - Actual Photon Energies				
Nuclide	Ci	Bq	µCi/cm²	Bq/cm²
Ba-137m	1.2498e-011	4.6243e-001	4.2570e-009	1.5751e-004
Cs-137	1.3211e-011	4.8882e-001	4.5000e-009	1.6650e-004

Buildup: The material reference is Shield 2 Integration Parameters	
Y Direction (axial)	20
Circumferential	20

Results

Energy	Activity	Fluence Rate	Fluence Rate MeV/cm²/sec	Exposure Rate	Exposure Rate mR/hr

(MeV)	(Photons/sec)	MeV/cm²/sec No Buildup	With Buildup	mR/hr No Buildup	With Buildup
0.0045	4.800e-03	0.000e+00	1.920e-37	0.000e+00	1.316e-37
0.0318	9.574e-03	9.297e-218	5.355e-36	7.744e-220	4.461e-38
0.0322	1.766e-02	2.362e-211	1.027e-35	1.901e-213	8.263e-38
0.0364	6.428e-03	3.386e-159	5.722e-36	1.924e-161	3.251e-38
0.6616	4.161e-01	6.455e-23	1.733e-20	1.251e-25	3.360e-23
Totals	**4.546e-01**	**6.455e-23**	**1.733e-20**	**1.251e-25**	**3.360e-23**

MicroShield 7.02 (07-MSD-7.02-1385)
LMCO ODIN
Conversion of calculated exposure in air to dose
FILE: C:\Program Files (x86)\MicroShield 7\Examples\CaseFiles\MP3-10.ms7
Case Title: MP10-3 Case 10
This case was run on Tuesday, June 12, 2012 at 2:13:58 PM
Dose Point # 1 - (292.425,45.72,16.51) cm

Results (Summed over energies)	Units	Without Buildup	With Buildup
Photon Fluence Rate (flux)	Photons/cm²/sec	9.755e-023	2.620e-020
Photon Energy Fluence Rate	MeV/cm²/sec	6.455e-023	1.733e-020
Exposure and Dose Rates:			
Exposure Rate in Air	mR/hr	1.251e-025	3.360e-023
Absorbed Dose Rate in Air	mGy/hr	1.092e-027	2.933e-025
"	mrad/hr	1.092e-025	2.933e-023
Deep Dose Equivalent Rate	(ICRP 51 - 1987)		
o Parallel Geometry	mSv/hr	1.293e-027	3.473e-025
o Opposed	"	1.036e-027	2.781e-025
o Rotational	"	1.036e-027	2.781e-025
o Isotropic	"	9.157e-028	2.459e-025
Shallow Dose Equivalent Rate	(ICRP 51 - 1987)		
o Parallel Geometry	mSv/hr	1.375e-027	3.691e-025
o Opposed	"	1.306e-027	3.506e-025
o Rotational	"	1.306e-027	3.506e-025
o Isotropic	"	9.789e-028	2.629e-025
Effective Dose Equivalent Rate	(ICRP 51 - 1987)		
o Anterior/Posterior Geometry	mSv/hr	1.144e-027	3.071e-025
o Posterior/Anterior	"	1.009e-027	2.711e-025
o Lateral	"	7.485e-028	2.010e-025
o Rotational	"	9.021e-028	2.422e-025
o Isotropic	"	7.680e-028	2.062e-025

MicroShield 7.02
LMCO ODIN (07-MSD-7.02-1385)

Date	By	Checked

Filename	Run Date	Run Time	Duration
MP3-11.ms7	June 12, 2012	2:19:49 PM	00:00:00

Project Info	
Case Title	MP10-3 Case 11
Description	Pipe No. 306, 4 in., 3 ft. DP on Quad A wall, Unit Cs-137
Geometry	10 - Cylinder Surface - External Dose Point

Source Dimensions	
Height	91.44 cm (3 ft)
Radius	5.11 cm (2.0 in)

Dose Points			
A	X	Y	Z
#1	292.425 cm (9 ft 7.1 in)	45.72 cm (1 ft 6.0 in)	52.07 cm (1 ft 8.5 in)

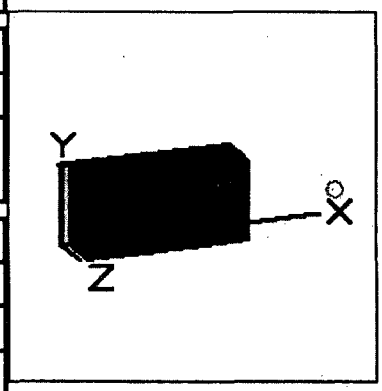

Shields			
Shield N	Dimension	Material	Density
Cyl. Radius	5.11 cm	Air	0.00122
Transition	.6 cm	Iron	7.86
Shield 2	186.69 cm	Concrete	2.4
Air Gap		Air	0.00122
Wall Clad	.025 cm	Iron	7.86

Source Input: Grouping Method - Actual Photon Energies				
Nuclide	Ci	Bq	µCi/cm²	Bq/cm²
Ba-137m	1.2498e-011	4.6243e-001	4.2570e-009	1.5751e-004
Cs-137	1.3211e-011	4.8882e-001	4.5000e-009	1.6650e-004

Buildup: The material reference is Shield 2 Integration Parameters	
Y Direction (axial)	20
Circumferential	20

Results

Energy	Activity	Fluence Rate	Fluence Rate MeV/cm²/sec	Exposure Rate	Exposure Rate mR/hr

(MeV)	(Photons/sec)	MeV/cm²/sec No Buildup	With Buildup	mR/hr No Buildup	With Buildup
0.0045	4.800e-03	0.000e+00	1.867e-37	0.000e+00	1.280e-37
0.0318	9.574e-03	1.037e-220	5.208e-36	8.640e-223	4.338e-38
0.0322	1.766e-02	3.235e-214	9.986e-36	2.603e-216	8.036e-38
0.0364	6.428e-03	2.654e-161	5.565e-36	1.508e-163	3.162e-38
0.6616	4.161e-01	3.760e-23	1.036e-20	7.289e-26	2.008e-23
Totals	**4.546e-01**	**3.760e-23**	**1.036e-20**	**7.289e-26**	**2.008e-23**

MicroShield 7.02 (07-MSD-7.02-1385)
LMCO ODIN
Conversion of calculated exposure in air to dose
FILE: C:\Program Files (x86)\MicroShield 7\Examples\CaseFiles\MP3-11.ms7
Case Title: MP10-3 Case 11
This case was run on Tuesday, June 12, 2012 at 2:19:49 PM
Dose Point # 1 - (292.425,45.72,52.07) cm

Results (Summed over energies)	Units	Without Buildup	With Buildup
Photon Fluence Rate (flux)	Photons/cm²/sec	5.683e-023	1.566e-020
Photon Energy Fluence Rate	MeV/cm²/sec	3.760e-023	1.036e-020
Exposure and Dose Rates:			
Exposure Rate in Air	mR/hr	7.289e-026	2.008e-023
Absorbed Dose Rate in Air	mGy/hr	6.363e-028	1.753e-025
"	mrad/hr	6.363e-026	1.753e-023
Deep Dose Equivalent Rate	(ICRP 51 - 1987)		
o Parallel Geometry	mSv/hr	7.534e-028	2.076e-025
o Opposed	"	6.032e-028	1.662e-025
o Rotational	"	6.032e-028	1.662e-025
o Isotropic	"	5.334e-028	1.470e-025
Shallow Dose Equivalent Rate	(ICRP 51 - 1987)		
o Parallel Geometry	mSv/hr	8.007e-028	2.206e-025
o Opposed	"	7.605e-028	2.095e-025
o Rotational	"	7.605e-028	2.095e-025
o Isotropic	"	5.702e-028	1.571e-025
Effective Dose Equivalent Rate	(ICRP 51 - 1987)		
o Anterior/Posterior Geometry	mSv/hr	6.662e-028	1.835e-025
o Posterior/Anterior	"	5.880e-028	1.620e-025
o Lateral	"	4.360e-028	1.201e-025
o Rotational	"	5.255e-028	1.448e-025
o Isotropic	"	4.473e-028	1.233e-025

MicroShield 7.02
LMCO ODIN (07-MSD-7.02-1385)

Date	By	Checked

Filename	Run Date	Run Time	Duration
MP3-12.ms7	June 12, 2012	2:26:44 PM	00:00:00

Project Info	
Case Title	MP10-3 Case 12
Description	Pipe No. 307, 6 in., 3 ft. DP on Quad A wall, Unit Cs-137
Geometry	10 - Cylinder Surface - External Dose Point

Source Dimensions	
Height	91.44 cm (3 ft)
Radius	7.7 cm (3.0 in)

Dose Points			
A	X	Y	Z
#1	289.725 cm (9 ft 6.1 in)	45.72 cm (1 ft 6.0 in)	97.79 cm (3 ft 2.5 in)

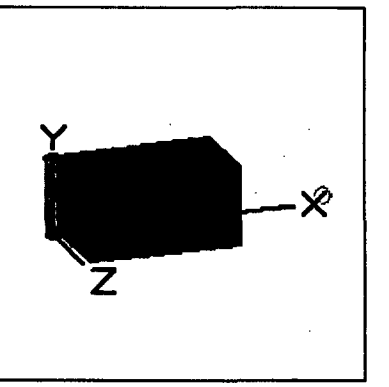

Shields			
Shield N	Dimension	Material	Density
Cyl. Radius	7.7 cm	Air	0.00122
Transition	.71 cm	Iron	7.86
Shield 2	181.29 cm	Concrete	2.4
Air Gap		Air	0.00122
Wall Clad	.025 cm	Iron	7.86

Source Input: Grouping Method - Actual Photon Energies				
Nuclide	Ci	Bq	µCi/cm²	Bq/cm²
Ba-137m	1.8833e-011	6.9681e-001	4.2570e-009	1.5751e-004
Cs-137	1.9908e-011	7.3658e-001	4.5000e-009	1.6650e-004

Buildup: The material reference is Shield 2 Integration Parameters	
Y Direction (axial)	20
Circumferential	20

Results

Energy	Activity	Fluence Rate	Fluence Rate MeV/cm²/sec	Exposure Rate	Exposure Rate mR/hr

(MeV)	(Photons/sec)	MeV/cm²/sec No Buildup	With Buildup	mR/hr No Buildup	With Buildup
0.0045	7.234e-03	0.000e+00	2.657e-37	0.000e+00	1.821e-37
0.0318	1.443e-02	7.633e-226	7.410e-36	6.358e-228	6.173e-38
0.0322	2.662e-02	3.500e-219	1.421e-35	2.817e-221	1.143e-37
0.0364	9.686e-03	7.796e-165	7.918e-36	4.429e-167	4.499e-38
0.6616	6.270e-01	2.707e-23	7.644e-21	5.248e-26	1.482e-23
Totals	**6.849e-01**	**2.707e-23**	**7.644e-21**	**5.248e-26**	**1.482e-23**

MicroShield 7.02 (07-MSD-7.02-1385)
LMCO ODIN
Conversion of calculated exposure in air to dose
FILE: C:\Program Files (x86)\MicroShield 7\Examples\CaseFiles\MP3-12.ms7
Case Title: MP10-3 Case 12
This case was run on Tuesday, June 12, 2012 at 2:26:44 PM
Dose Point # 1 - (289.725,45.72,97.79) cm

Results (Summed over energies)	Units	Without Buildup	With Buildup
Photon Fluence Rate (flux)	Photons/cm²/sec	4.091e-023	1.155e-020
Photon Energy Fluence Rate	MeV/cm²/sec	2.707e-023	7.644e-021
Exposure and Dose Rates:			
Exposure Rate in Air	mR/hr	5.248e-026	1.482e-023
Absorbed Dose Rate in Air	mGy/hr	4.581e-028	1.294e-025
"	mrad/hr	4.581e-026	1.294e-023
Deep Dose Equivalent Rate	(ICRP 51 - 1987)		
o Parallel Geometry	mSv/hr	5.424e-028	1.532e-025
o Opposed	"	4.343e-028	1.226e-025
o Rotational	"	4.343e-028	1.226e-025
o Isotropic	"	3.840e-028	1.084e-025
Shallow Dose Equivalent Rate	(ICRP 51 - 1987)		
o Parallel Geometry	mSv/hr	5.765e-028	1.628e-025
o Opposed	"	5.475e-028	1.546e-025
o Rotational	"	5.475e-028	1.546e-025
o Isotropic	"	4.105e-028	1.159e-025
Effective Dose Equivalent Rate	(ICRP 51 - 1987)		
o Anterior/Posterior Geometry	mSv/hr	4.796e-028	1.354e-025
o Posterior/Anterior	"	4.233e-028	1.195e-025
o Lateral	"	3.139e-028	8.865e-026
o Rotational	"	3.783e-028	1.068e-025
o Isotropic	"	3.221e-028	9.095e-026

Dose Assessment for Buried and Miscellaneous Piping

TBD-12-002

Appendix D

RESRAD Case Run Reports

RESRAD Case Run Index

Run Date	Case Title	Description	Pages	File Name	Result (mrem)	
					Deterministic (1)	Probabilistic (2)
5/30/12	Baseline 1, Rev A	Test to confirm model using FSS Plan Att. B Parameter values. Used Cs-137 unit conc.	Part I, pp 1-9, 17. Part VI, pp 2, 3, 23.	05301201	1.60E00	1.52±0.27E00
6/19/12	Baseline 2	Test to confirm model using FSS Plan Att. B Parameter values. Used Co-60 unit conc.	Part I, pp 1-9, 17. Part VI, pp 2, 3, 23.	06191201	6.39E00	6.12±1.1E00
6/19/12	BP-2-1 Case 1 Cs	Pentolite Ditch Crossover Resident Farmer. Contam. Zone 2.65 m below grade. Unit Cs-137 activity.	Part I, pp 1-8. Part VI, pp 2, 3, 23.	06191202	3.18E-17	2.93±0.78E-17
6/19/12	BP-2-1 Case 1 Co	Pentolite Ditch Crossover Resident Farmer. Contam. Zone 2.65 m below grade. Unit Co-60 activity.	Part I, pp 1-8. Part VI, pp 2, 3, 23.	06191203	1.344E-13	1.23±0.34E-13
6/19/12	BP-2-1 Case 2 Cs	Pentolite Ditch Crossover Intruder, 100 h/y occupancy. Contam. Zone on surface. Unit Cs-137 activity.	Part I, pp 1-8. Part VI, pp 2, 3, 23.	06191204	6.522E-02	8.60±8.87E-02
6/19/12	BP-2-1 Case 2 Co	Pentolite Ditch Crossover. Intruder, 100 h/y occupancy. Contam. Zone on surface. Unit Co-60 activity.	Part I, pp 1-8. Part VI, pp 2, 3, 23.	06191205	1.061E-01	1.13±1.11E-01
6/14/12	BP-1-1 Case 1 Cs	Reactor Security Bldg San Sewer Line. Resident Farmer. Contam. Zone 166 cm below grade. Unit Cs-137 activity.	Part I, pp 1-9. Part VI, pp 2, 3, 23.	06141201	1.320E-11	1.01±0.92E-11
6/14/12	BP1-1 Case 1 Co	Reactor Security Bldg San Sewer Line. Resident Farmer. Contam. Zone 166 cm below grade. Unit Co-60 activity.	Part I, pp 1-9. 14 Part VI, pp 2, 3, 5, 13, 15, 16, 17, 23.	06141202	3.341E-09	2.79±2.57E-09
6/21/12	BP-1-1 Case 1 Sr	Reactor Security Bldg San Sewer Line. Resident Farmer. Contam. Zone 166 cm below grade. Unit Sr-90 activity.	Part I, pp 1-9. Part VI, pp 2, 3, 23.	06211201	Total 1.28E-04 Direct 2.52E-16 (3)	2.03±3.09E-04
6/14/12	BP-1-1 Case 2 Cs	Reactor Security Bldg San Sewer Line. Intruder. 100 h/y occupancy. Contam. Zone on surface. Unit Cs-137 activity.	Part I, pp 1-9. Part VI, pp 2, 3, 23.	06141204	Total 4.461E-02 Direct 1.754E-03	7.12±7.6E-02
6/14/12	BP-1-1 Case 2 Co	Reactor Security Bldg San Sewer Line. Intruder. 100 h/y occupancy. Contam. Zone on surface. Unit Co-60 activity.	Part I, pp 1-9. Part VI, pp 2, 3, 23.	06141205	Total 2.476E-02 Direct 6.908E-03	4.78±5.33E-01
6/14/12	BP-1-1 Case 2 Sr	Reactor Security Bldg San Sewer Line. Intruder. 100 hour occupancy. Contam. Zone on surface. Unit Sr-90 activity.	Part I, pp 1-9. Part VI, pp 2, 3, 23.	06141206	Total 2.058E-01 Direct 1.528E-05	6.35±7.96E-01

RESRAD Case Run Index Notes:

1. Deterministic results are total dose, except where noted. Maximum total dose was at time 0.0 y, unless otherwise noted.
2. Probabilistic results are all for total dose.
3. The maximum dose time for BP-1-1, Case 1 Sr, is 91.5 years (deterministic) and from 90 to 100 years (probabilistic). The maximum direct dose time is at 0.0 years.

Table of Contents

Part I: Mixture Sums and Single Radionuclide Guidelines

Dose Conversion Factor (and Related) Parameter Summary
Dose Library: FGR 11

Menu	Parameter	Current Value#	Base Case*	Parameter Name
A-1	DCF's for external ground radiation, (mrem/yr)/(pCi/g)			
A-1	Ba-137m (Source: FGR 12)	3.606E+00	3.606E+00	DCF1(1)
A-1	Cs-137 (Source: FGR 12)	7.510E-04	7.510E-04	DCF1(2)
B-1	Dose conversion factors for inhalation, mrem/pCi:			
B-1	Cs-137+D	3.190E-05	3.190E-05	DCF2(1)
D-1	Dose conversion factors for ingestion, mrem/pCi:			
D-1	Cs-137+D	5.000E-05	5.000E-05	DCF3(1)
D-34	Food transfer factors:			
D-34	Cs-137+D , plant/soil concentration ratio, dimensionless	4.000E-02	4.000E-02	RTF(1,1)
D-34	Cs-137+D , beef/livestock-intake ratio, (pCi/kg)/(pCi/d)	3.000E-02	3.000E-02	RTF(1,2)
D-34	Cs-137+D , milk/livestock-intake ratio, (pCi/L)/(pCi/d)	8.000E-03	8.000E-03	RTF(1,3)
D-5	Bioaccumulation factors, fresh water, L/kg:			
D-5	Cs-137+D , fish	2.000E+03	2.000E+03	BIOFAC(1,1)
D-5	Cs-137+D , crustacea and mollusks	1.000E+02	1.000E+02	BIOFAC(1,2)

#For DCF1(xxx) only, factors are for infinite depth & area. See ETFG table in Ground Pathway of Detailed Report.
*Base Case means Default.Lib w/o Associate Nuclide contributions.

Site-Specific Parameter Summary

Menu	Parameter	User Input	Default	Used by RESRAD (If different from user input)	Parameter Name
R011	Area of contaminated zone (m**2)	1.091E+05	1.000E+04	---	AREA
R011	Thickness of contaminated zone (m)	1.000E+00	2.000E+00	---	THICK0
R011	Length parallel to aquifer flow (m)	3.650E+02	1.000E+02	---	LCZPAQ
R011	Basic radiation dose limit (mrem/yr)	2.500E+01	3.000E+01	---	BRDL
R011	Time since placement of material (yr)	0.000E+00	0.000E+00	---	TI
R011	Times for calculations (yr)	1.000E+00	1.000E+00	---	T(2)
R011	Times for calculations (yr)	3.000E+00	3.000E+00	---	T(3)
R011	Times for calculations (yr)	1.000E+01	1.000E+01	---	T(4)
R011	Times for calculations (yr)	3.000E+01	3.000E+01	---	T(5)
R011	Times for calculations (yr)	1.000E+02	1.000E+02	---	T(6)
R011	Times for calculations (yr)	3.000E+02	3.000E+02	---	T(7)
R011	Times for calculations (yr)	1.000E+03	1.000E+03	---	T(8)
R011	Times for calculations (yr)	not used	0.000E+00	---	T(9)
R011	Times for calculations (yr)	not used	0.000E+00	---	T(10)
R012	Initial principal radionuclide (pCi/g): Cs-137	1.000E+00	0.000E+00	---	S1(1)
R012	Concentration in groundwater (pCi/L): Cs-137	not used	0.000E+00	---	W1(1)
R013	Cover depth (m)	0.000E+00	0.000E+00	---	COVER0
R013	Density of cover material (g/cm**3)	not used	1.500E+00	---	DENSCV
R013	Cover depth erosion rate (m/yr)	not used	1.000E-03	---	VCV
R013	Density of contaminated zone (g/cm**3)	1.520E+00	1.500E+00	---	DENSCZ
R013	Contaminated zone erosion rate (m/yr)	1.000E-03	1.000E-03	---	VCZ
R013	Contaminated zone total porosity	4.500E-01	4.000E-01	---	TPCZ
R013	Contaminated zone field capacity	2.000E-01	2.000E-01	---	FCCZ
R013	Contaminated zone hydraulic conductivity (m/yr)	2.700E+02	1.000E+01	---	HCCZ
R013	Contaminated zone b parameter	7.120E+00	5.300E+00	---	BCZ
R013	Average annual wind speed (m/sec)	2.000E+00	2.000E+00	---	WIND
R013	Humidity in air (g/m**3)	not used	8.000E+00	---	HUMID
R013	Evapotranspiration coefficient	5.000E-01	5.000E-01	---	EVAPTR
R013	Precipitation (m/yr)	8.600E-01	1.000E+00	---	PRECIP
R013	Irrigation (m/yr)	1.040E+00	2.000E-01	---	RI
R013	Irrigation mode	overhead	overhead	---	IDITCH
R013	Runoff coefficient	3.000E-01	2.000E-01	---	RUNOFF
R013	Watershed area for nearby stream or pond (m**2)	1.000E+06	1.000E+06	---	WAREA
R013	Accuracy for water/soil computations	1.000E-03	1.000E-03	---	EPS
R014	Density of saturated zone (g/cm**3)	1.520E+00	1.500E+00	---	DENSAQ
R014	Saturated zone total porosity	4.500E-01	4.000E-01	---	TPSZ
R014	Saturated zone effective porosity	2.000E-01	2.000E-01	---	EPSZ
R014	Saturated zone field capacity	2.000E-01	2.000E-01	---	FCSZ
R014	Saturated zone hydraulic conductivity (m/yr)	2.700E+02	1.000E+02	---	HCSZ
R014	Saturated zone hydraulic gradient	5.000E-03	2.000E-02	---	HGWT
R014	Saturated zone b parameter	not used	5.300E+00	---	BSZ
R014	Water table drop rate (m/yr)	0.000E+00	1.000E-03	---	VWT
R014	Well pump intake depth (m below water table)	8.000E+00	1.000E+01	---	DWIBWT
R014	Model: Nondispersion (ND) or Mass-Balance (MB)	ND	ND	---	MODEL
R014	Well pumping rate (m**3/yr)	1.180E+02	2.500E+02	---	UW
R015	Number of unsaturated zone strata	1	1	---	NS

Site-Specific Parameter Summary (continued)

Menu	Parameter	User Input	Default	Used by RESRAD (If different from user input)	Parameter Name
R015	Unsat. zone 1, thickness (m)	3.000E+00	4.000E+00	---	H(1)
R015	Unsat. zone 1, soil density (g/cm**3)	1.520E+00	1.500E+00	---	DENSUZ(1)
R015	Unsat. zone 1, total porosity	4.500E-01	4.000E-01	---	TPUZ(1)
R015	Unsat. zone 1, effective porosity	2.000E-01	2.000E-01	---	EPUZ(1)
R015	Unsat. zone 1, field capacity	2.000E-01	2.000E-01	---	FCUZ(1)
R015	Unsat. zone 1, soil-specific b parameter	7.130E+00	5.300E+00	---	BUZ(1)
R015	Unsat. zone 1, hydraulic conductivity (m/yr)	2.700E+02	1.000E+01	---	HCUZ(1)
R016	Distribution coefficients for Cs-137				
R016	Contaminated zone (cm**3/g)	4.470E+02	4.600E+03	---	DCNUCC(1)
R016	Unsaturated zone 1 (cm**3/g)	4.770E+02	4.600E+03	---	DCNUCU(1,1)
R016	Saturated zone (cm**3/g)	4.470E+02	4.600E+03	---	DCNUCS(1)
R016	Leach rate (/yr)	0.000E+00	0.000E+00	1.208E-03	ALEACH(1)
R016	Solubility constant	0.000E+00	0.000E+00	not used	SOLUBK(1)
R017	Inhalation rate (m**3/yr)	8.400E+03	8.400E+03	---	INHALR
R017	Mass loading for inhalation (g/m**3)	6.000E-06	1.000E-04	---	MLINH
R017	Exposure duration	3.652E+02	3.000E+01	---	ED
R017	Shielding factor, inhalation	4.000E-01	4.000E-01	---	SHF3
R017	Shielding factor, external gamma	4.700E-01	7.000E-01	---	SHF1
R017	Fraction of time spent indoors	6.600E-01	5.000E-01	---	FIND
R017	Fraction of time spent outdoors (on site)	1.100E-01	2.500E-01	---	FOTD
R017	Shape factor flag, external gamma	1.000E+00	1.000E+00	>0 shows circular AREA.	FS
R017	Radii of shape factor array (used if FS = -1):				
R017	Outer annular radius (m), ring 1:	not used	5.000E+01	---	RAD_SHAPE(1)
R017	Outer annular radius (m), ring 2:	not used	7.071E+01	---	RAD_SHAPE(2)
R017	Outer annular radius (m), ring 3:	not used	0.000E+00	---	RAD_SHAPE(3)
R017	Outer annular radius (m), ring 4:	not used	0.000E+00	---	RAD_SHAPE(4)
R017	Outer annular radius (m), ring 5:	not used	0.000E+00	---	RAD_SHAPE(5)
R017	Outer annular radius (m), ring 6:	not used	0.000E+00	---	RAD_SHAPE(6)
R017	Outer annular radius (m), ring 7:	not used	0.000E+00	---	RAD_SHAPE(7)
R017	Outer annular radius (m), ring 8:	not used	0.000E+00	---	RAD_SHAPE(8)
R017	Outer annular radius (m), ring 9:	not used	0.000E+00	---	RAD_SHAPE(9)
R017	Outer annular radius (m), ring 10:	not used	0.000E+00	---	RAD_SHAPE(10)
R017	Outer annular radius (m), ring 11:	not used	0.000E+00	---	RAD_SHAPE(11)
R017	Outer annular radius (m), ring 12:	not used	0.000E+00	---	RAD_SHAPE(12)

Site-Specific Parameter Summary (continued)

Menu	Parameter	User Input	Default	Used by RESRAD (If different from user input)	Parameter Name
R017	Fractions of annular areas within AREA:				
R017	Ring 1	not used	1.000E+00	---	FRACA(1)
R017	Ring 2	not used	2.732E-01	---	FRACA(2)
R017	Ring 3	not used	0.000E+00	---	FRACA(3)
R017	Ring 4	not used	0.000E+00	---	FRACA(4)
R017	Ring 5	not used	0.000E+00	---	FRACA(5)
R017	Ring 6	not used	0.000E+00	---	FRACA(6)
R017	Ring 7	not used	0.000E+00	---	FRACA(7)
R017	Ring 8	not used	0.000E+00	---	FRACA(8)
R017	Ring 9	not used	0.000E+00	---	FRACA(9)
R017	Ring 10	not used	0.000E+00	---	FRACA(10)
R017	Ring 11	not used	0.000E+00	---	FRACA(11)
R017	Ring 12	not used	0.000E+00	---	FRACA(12)
R018	Fruits, vegetables and grain consumption (kg/yr)	7.800E+01	1.600E+02	---	DIET(1)
R018	Leafy vegetable consumption (kg/yr)	1.500E+01	1.400E+01	---	DIET(2)
R018	Milk consumption (L/yr)	1.180E+02	9.200E+01	---	DIET(3)
R018	Meat and poultry consumption (kg/yr)	5.200E+01	6.300E+01	---	DIET(4)
R018	Fish consumption (kg/yr)	1.600E+01	5.400E+00	---	DIET(5)
R018	Other seafood consumption (kg/yr)	0.000E+00	9.000E-01	---	DIET(6)
R018	Soil ingestion rate (g/yr)	1.830E+01	3.650E+01	---	SOIL
R018	Drinking water intake (L/yr)	4.780E+02	5.100E+02	---	DWI
R018	Contamination fraction of drinking water	1.000E+00	1.000E+00	---	FDW
R018	Contamination fraction of household water	not used	1.000E+00	---	FHHW
R018	Contamination fraction of livestock water	1.000E+00	1.000E+00	---	FLW
R018	Contamination fraction of irrigation water	1.000E+00	1.000E+00	---	FIRW
R018	Contamination fraction of aquatic food	5.000E-01	5.000E-01	---	FR9
R018	Contamination fraction of plant food	5.000E-01	-1	---	FPLANT
R018	Contamination fraction of meat	1.000E+00	-1	---	FMEAT
R018	Contamination fraction of milk	1.000E+00	-1	---	FMILK
R019	Livestock fodder intake for meat (kg/day)	8.500E+00	6.800E+01	---	LFI5
R019	Livestock fodder intake for milk (kg/day)	1.700E+01	5.500E+01	---	LFI6
R019	Livestock water intake for meat (L/day)	5.000E+01	5.000E+01	---	LWI5
R019	Livestock water intake for milk (L/day)	1.600E+02	1.600E+02	---	LWI6
R019	Livestock soil intake (kg/day)	5.000E-01	5.000E-01	---	LSI
R019	Mass loading for foliar deposition (g/m**3)	1.000E-04	1.000E-04	---	MLFD
R019	Depth of soil mixing layer (m)	1.500E-01	1.500E-01	---	DM
R019	Depth of roots (m)	9.000E-01	9.000E-01	---	DROOT
R019	Drinking water fraction from ground water	1.000E+00	1.000E+00	---	FGWDW
R019	Household water fraction from ground water	not used	1.000E+00	---	FGWHH
R019	Livestock water fraction from ground water	1.000E+00	1.000E+00	---	FGWLW
R019	Irrigation fraction from ground water	1.000E+00	1.000E+00	---	FGWIR
R19B	Wet weight crop yield for Non-Leafy (kg/m**2)	7.000E-01	7.000E-01	---	YV(1)
R19B	Wet weight crop yield for Leafy (kg/m**2)	1.500E+00	1.500E+00	---	YV(2)
R19B	Wet weight crop yield for Fodder (kg/m**2)	1.100E+00	1.100E+00	---	YV(3)
R19B	Growing Season for Non-Leafy (years)	1.700E-01	1.700E-01	---	TE(1)
R19B	Growing Season for Leafy (years)	2.500E-01	2.500E-01	---	TE(2)
R19B	Growing Season for Fodder (years)	8.000E-02	8.000E-02	---	TE(3)

Site-Specific Parameter Summary (continued)

Menu	Parameter	User Input	Default	Used by RESRAD (If different from user input)	Parameter Name
R19B	Translocation Factor for Non-Leafy	1.000E-01	1.000E-01	---	TIV(1)
R19B	Translocation Factor for Leafy	1.000E+00	1.000E+00	---	TIV(2)
R19B	Translocation Factor for Fodder	1.000E+00	1.000E+00	---	TIV(3)
R19B	Dry Foliar Interception Fraction for Non-Leafy	2.500E-01	2.500E-01	---	RDRY(1)
R19B	Dry Foliar Interception Fraction for Leafy	2.500E-01	2.500E-01	---	RDRY(2)
R19B	Dry Foliar Interception Fraction for Fodder	2.500E-01	2.500E-01	---	RDRY(3)
R19B	Wet Foliar Interception Fraction for Non-Leafy	2.500E-01	2.500E-01	---	RWET(1)
R19B	Wet Foliar Interception Fraction for Leafy	2.500E-01	2.500E-01	---	RWET(2)
R19B	Wet Foliar Interception Fraction for Fodder	2.500E-01	2.500E-01	---	RWET(3)
R19B	Weathering Removal Constant for Vegetation	2.000E+01	2.000E+01	---	WLAM
C14	C-12 concentration in water (g/cm**3)	not used	2.000E-05	---	C12WTR
C14	C-12 concentration in contaminated soil (g/g)	not used	3.000E-02	---	C12CZ
C14	Fraction of vegetation carbon from soil	not used	2.000E-02	---	CSOIL
C14	Fraction of vegetation carbon from air	not used	9.800E-01	---	CAIR
C14	C-14 evasion layer thickness in soil (m)	not used	3.000E-01	---	DMC
C14	C-14 evasion flux rate from soil (1/sec)	not used	7.000E-07	---	EVSN
C14	C-12 evasion flux rate from soil (1/sec)	not used	1.000E-10	---	REVSN
C14	Fraction of grain in beef cattle feed	not used	8.000E-01	---	AVFG4
C14	Fraction of grain in milk cow feed	not used	2.000E-01	---	AVFG5
STOR	Storage times of contaminated foodstuffs (days):				
STOR	Fruits, non-leafy vegetables, and grain	1.400E+01	1.400E+01	---	STOR_T(1)
STOR	Leafy vegetables	1.000E+00	1.000E+00	---	STOR_T(2)
STOR	Milk	1.000E+00	1.000E+00	---	STOR_T(3)
STOR	Meat and poultry	2.000E+01	2.000E+01	---	STOR_T(4)
STOR	Fish	7.000E+00	7.000E+00	---	STOR_T(5)
STOR	Crustacea and mollusks	7.000E+00	7.000E+00	---	STOR_T(6)
STOR	Well water	1.000E+00	1.000E+00	---	STOR_T(7)
STOR	Surface water	1.000E+00	1.000E+00	---	STOR_T(8)
STOR	Livestock fodder	4.500E+01	4.500E+01	---	STOR_T(9)
R021	Thickness of building foundation (m)	not used	1.500E-01	---	FLOOR1
R021	Bulk density of building foundation (g/cm**3)	not used	2.400E+00	---	DENSFL
R021	Total porosity of the cover material	not used	4.000E-01	---	TPCV
R021	Total porosity of the building foundation	not used	1.000E-01	---	TPFL
R021	Volumetric water content of the cover material	not used	5.000E-02	---	PH2OCV
R021	Volumetric water content of the foundation	not used	3.000E-02	---	PH2OFL
R021	Diffusion coefficient for radon gas (m/sec):				
R021	in cover material	not used	2.000E-06	---	DIFCV
R021	in foundation material	not used	3.000E-07	---	DIFFL
R021	in contaminated zone soil	not used	2.000E-06	---	DIFCZ
R021	Radon vertical dimension of mixing (m)	not used	2.000E+00	---	HMIX
R021	Average building air exchange rate (1/hr)	not used	5.000E-01	---	REXG
R021	Height of the building (room) (m)	not used	2.500E+00	---	HRM
R021	Building interior area factor	not used	0.000E+00	---	FAI
R021	Building depth below ground surface (m)	not used	-1.000E+00	---	DMFL
R021	Emanating power of Rn-222 gas	not used	2.500E-01	---	EMANA(1)
R021	Emanating power of Rn-220 gas	not used	1.500E-01	---	EMANA(2)
TITL	Number of graphical time points	32	---	---	NPTS

Site-Specific Parameter Summary (continued)

Menu	Parameter	User Input	Default	Used by RESRAD (If different from user input)	Parameter Name
TITL	Maximum number of integration points for dose	17	---	---	LYMAX
TITL	Maximum number of integration points for risk	257	---	---	KYMAX

Summary of Pathway Selections

Pathway	User Selection
1 -- external gamma	active
2 -- inhalation (w/o radon)	active
3 -- plant ingestion	active
4 -- meat ingestion	active
5 -- milk ingestion	active
6 -- aquatic foods	active
7 -- drinking water	active
8 -- soil ingestion	active
9 -- radon	suppressed
Find peak pathway doses	active

Contaminated Zone Dimensions		Initial Soil Concentrations, pCi/g	
Area:	109100.00 square meters	Cs-137	1.000E+00
Thickness:	1.00 meters		
Cover Depth:	0.00 meters		

Total Dose TDOSE(t), mrem/yr
Basic Radiation Dose Limit = 2.500E+01 mrem/yr
Total Mixture Sum M(t) = Fraction of Basic Dose Limit Received at Time (t)

t (years):	0.000E+00	1.000E+00	3.000E+00	1.000E+01	3.000E+01	1.000E+02	3.000E+02	1.000E+03
TDOSE(t):	1.600E+00	1.561E+00	1.487E+00	1.254E+00	7.714E-01	1.406E-01	1.065E-03	2.920E-17
M(t):	6.399E-02	6.245E-02	5.949E-02	5.018E-02	3.086E-02	5.626E-03	4.259E-05	1.168E-18

Maximum TDOSE(t): 1.600E+00 mrem/yr at t = 0.000E+00 years

Total Dose Contributions TDOSE(i,p,t) for Individual Radionuclides (i) and Pathways (p)
As mrem/yr and Fraction of Total Dose At t = 0.000E+00 years

Water Independent Pathways (Inhalation excludes radon)

Radio-	Ground		Inhalation		Radon		Plant		Meat		Milk		Soil	
Nuclide	mrem/yr	fract.	mrem/yr	fract.	mrem/yr	fract.	mrem/yr	fract.	mrem/yr	fract.	mrem/yr	fract.	mrem/yr	frac
Cs-137	1.387E+00	0.8672	1.280E-07	0.0000	0.000E+00	0.0000	9.189E-02	0.0574	6.474E-02	0.0405	5.503E-02	0.0344	6.961E-04	0.00
Total	1.387E+00	0.8672	1.280E-07	0.0000	0.000E+00	0.0000	9.189E-02	0.0574	6.474E-02	0.0405	5.503E-02	0.0344	6.961E-04	0.00

Total Dose Contributions TDOSE(i,p,t) for Individual Radionuclides (i) and Pathways (p)
As mrem/yr and Fraction of Total Dose At t = 0.000E+00 years

Water Dependent Pathways

Radio-	Water		Fish		Radon		Plant		Meat		Milk		All Pathways	
Nuclide	mrem/yr	fract.	mrem/yr	fract.	mrem/yr	fract.	mrem/yr	fract.	mrem/yr	fract.	mrem/yr	fract.	mrem/yr	frac
Cs-137	0.000E+00	0.0000	0.000E+00	0.0000	0.000E+00	0.0000	0.000E+00	0.0000	0.000E+00	0.0000	0.000E+00	0.0000	1.600E+00	1.00
Total	0.000E+00	0.0000	0.000E+00	0.0000	0.000E+00	0.0000	0.000E+00	0.0000	0.000E+00	0.0000	0.000E+00	0.0000	1.600E+00	1.00

*Sum of all water independent and dependent pathways.

Dose/Source Ratios Summed Over All Pathways
Parent and Progeny Principal Radionuclide Contributions Indicated

Parent (i)	Product (j)	Thread Fraction	DSR(j,t) At Time in Years (mrem/yr)/(pCi/g) 0.000E+00	1.000E+00	3.000E+00	1.000E+01	3.000E+01	1.000E+02	3.000E+02	1.000E+03
Cs-137+D	Cs-137+D	1.000E+00	1.600E+00	1.561E+00	1.487E+00	1.254E+00	7.714E-01	1.406E-01	1.065E-03	2.920E-17

The DSR includes contributions from associated (half-life ≤ 180 days) daughters.

Single Radionuclide Soil Guidelines G(i,t) in pCi/g
Basic Radiation Dose Limit = 2.500E+01 mrem/yr

Nuclide (i)	t= 0.000E+00	1.000E+00	3.000E+00	1.000E+01	3.000E+01	1.000E+02	3.000E+02	1.000E+03
Cs-137	1.563E+01	1.601E+01	1.681E+01	1.993E+01	3.241E+01	1.778E+02	2.348E+04	*8.704E+13

*At specific activity limit

Summed Dose/Source Ratios DSR(i,t) in (mrem/yr)/(pCi/g)
and Single Radionuclide Soil Guidelines G(i,t) in pCi/g
at tmin = time of minimum single radionuclide soil guideline
and at tmax = time of maximum total dose = 0.000E+00 years

Nuclide (i)	Initial (pCi/g)	tmin (years)	DSR(i,tmin)	G(i,tmin) (pCi/g)	DSR(i,tmax)	G(i,tmax) (pCi/g)
Cs-137	1.000E+00	0.000E+00	1.600E+00	1.563E+01	1.600E+00	1.563E+01

Probabilistic Input

Number of Sample Runs: 300

Number	Name	Distribution	Parameters			
1	AREA	TRIANGULAR	25000	109100	250000	
2	THICK0	NORMAL	1	.5		
3	DENSCZ	TRUNCATED NORMAL	1.52	.23	.001	.999

Probabilistic Total Dose Summary

Nuclide (j)	Peak Time	Peak Dose	t= 0.00E+00	1.00E+00	3.00E+00	1.00E+01	3.00E+01	1.00E+02	3.00E+02	1.00E+03
			DOSE(j,t), mrem/yr							
Cs-137										
Min	0.00E+00	0.00E+00	0.00E+00	0.00E+00	0.00E+00	0.00E+00	0.00E+00	0.00E+00	0.00E+00	0.00E+00
Max	0.00E+00	1.61E+00	1.61E+00	1.57E+00	1.50E+00	1.27E+00	7.90E-01	1.52E-01	1.37E-03	9.39E-11
Avg	0.00E+00	1.52E+00	1.52E+00	1.48E+00	1.41E+00	1.19E+00	7.22E-01	1.28E-01	9.38E-04	2.67E-11
Std	0.00E+00	2.74E-01	2.74E-01	2.70E-01	2.61E-01	2.25E-01	1.47E-01	3.27E-02	3.61E-04	3.01E-11
∑ALL										
Min	0.00E+00	0.00E+00	0.00E+00	0.00E+00	0.00E+00	0.00E+00	0.00E+00	0.00E+00	0.00E+00	0.00E+00
Max	0.00E+00	1.61E+00	1.61E+00	1.57E+00	1.50E+00	1.27E+00	7.90E-01	1.52E-01	1.37E-03	9.39E-11
Avg	0.00E+00	1.52E+00	1.52E+00	1.48E+00	1.41E+00	1.19E+00	7.22E-01	1.28E-01	9.38E-04	2.67E-11
Std	0.00E+00	2.74E-01	2.74E-01	2.70E-01	2.61E-01	2.25E-01	1.47E-01	3.27E-02	3.61E-04	3.01E-11

∑ALL is total dose summed for all nuclides.

Title : PBRF FSS Plan ATT B Base Casew unit Cs-137 Rev A
Input File : C:\RESRAD_FAMILY\RESRAD\USERFILES\PBRF BP\05301201.RAD

Coefficients for peak of mean dose time Dose

Coefficient =	PCC		SRC		PRCC		SRRC	
Repetition =	1		1		1		1	
Description of Probabilistic Variable	Sig	Coeff	Sig	Coeff	Sig	Coeff	Sig	Coeff
Area of contaminated zone	2	-0.04	2	-0.04	2	0.62	2	0.38
Thickness of contaminated zone	1	0.53	1	0.53	1	0.86	1	0.79
Density of contaminated zone	3	0.00	3	0.00	3	0.14	3	0.07
R-SQUARE		0.28		0.28		0.77		0.77

-Rank is set to zero if the dose is zero or the correlation matrix is singular.
-R-SQUARE varies between 0 and 1 and is called the coefficient of determination; it provides a measure of the variation in the dependent variable (Dose) explained by regression on the independent variables.

Table of Contents

Part I: Mixture Sums and Single Radionuclide Guidelines

Co-60
Baseline to
check Res
Farm Parameter
in FSSP APPB

Dose Conversion Factor (and Related) Parameter Summary
Dose Library: FGR 11

Menu	Parameter	Current Value#	Base Case*	Parameter Name
A-1	DCF's for external ground radiation, (mrem/yr)/(pCi/g)			
A-1	Co-60 (Source: FGR 12)	1.622E+01	1.622E+01	DCF1(1)
B-1	Dose conversion factors for inhalation, mrem/pCi:			
B-1	Co-60	2.190E-04	2.190E-04	DCF2(1)
D-1	Dose conversion factors for ingestion, mrem/pCi:			
D-1	Co-60	2.690E-05	2.690E-05	DCF3(1)
D-34	Food transfer factors:			
D-34	Co-60 , plant/soil concentration ratio, dimensionless	8.000E-02	8.000E-02	RTF(1,1)
D-34	Co-60 , beef/livestock-intake ratio, (pCi/kg)/(pCi/d)	2.000E-02	2.000E-02	RTF(1,2)
D-34	Co-60 , milk/livestock-intake ratio, (pCi/L)/(pCi/d)	2.000E-03	2.000E-03	RTF(1,3)
D-5	Bioaccumulation factors, fresh water, L/kg:			
D-5	Co-60 , fish	3.000E+02	3.000E+02	BIOFAC(1,1)
D-5	Co-60 , crustacea and mollusks	2.000E+02	2.000E+02	BIOFAC(1,2)

#For DCF1(xxx) only, factors are for infinite depth & area. See ETFG table in Ground Pathway of Detailed Report.
*Base Case means Default.Lib w/o Associate Nuclide contributions.

Site-Specific Parameter Summary

Menu	Parameter	User Input	Default	Used by RESRAD (If different from user input)	Parameter Name
R011	Area of contaminated zone (m**2)	1.091E+05	1.000E+04	---	AREA
R011	Thickness of contaminated zone (m)	1.000E+00	2.000E+00	---	THICK0
R011	Length parallel to aquifer flow (m)	3.650E+02	1.000E+02	---	LCZPAQ
R011	Basic radiation dose limit (mrem/yr)	2.500E+01	3.000E+01	---	BRDL
R011	Time since placement of material (yr)	0.000E+00	0.000E+00	---	TI
R011	Times for calculations (yr)	1.000E+00	1.000E+00	---	T(2)
R011	Times for calculations (yr)	3.000E+00	3.000E+00	---	T(3)
R011	Times for calculations (yr)	1.000E+01	1.000E+01	---	T(4)
R011	Times for calculations (yr)	3.000E+01	3.000E+01	---	T(5)
R011	Times for calculations (yr)	1.000E+02	1.000E+02	---	T(6)
R011	Times for calculations (yr)	3.000E+02	3.000E+02	---	T(7)
R011	Times for calculations (yr)	1.000E+03	1.000E+03	---	T(8)
R011	Times for calculations (yr)	not used	0.000E+00	---	T(9)
R011	Times for calculations (yr)	not used	0.000E+00	---	T(10)
R012	Initial principal radionuclide (pCi/g): Co-60	1.000E+00	0.000E+00	---	S1(1)
R012	Concentration in groundwater (pCi/L): Co-60	not used	0.000E+00	---	W1(1)
R013	Cover depth (m)	0.000E+00	0.000E+00	---	COVER0
R013	Density of cover material (g/cm**3)	not used	1.500E+00	---	DENSCV
R013	Cover depth erosion rate (m/yr)	not used	1.000E-03	---	VCV
R013	Density of contaminated zone (g/cm**3)	1.520E+00	1.500E+00	---	DENSCZ
R013	Contaminated zone erosion rate (m/yr)	1.000E-03	1.000E-03	---	VCZ
R013	Contaminated zone total porosity	4.500E-01	4.000E-01	---	TPCZ
R013	Contaminated zone field capacity	2.000E-01	2.000E-01	---	FCCZ
R013	Contaminated zone hydraulic conductivity (m/yr)	2.700E+02	1.000E+01	---	HCCZ
R013	Contaminated zone b parameter	7.120E+00	5.300E+00	---	BCZ
R013	Average annual wind speed (m/sec)	2.000E+00	2.000E+00	---	WIND
R013	Humidity in air (g/m**3)	not used	8.000E+00	---	HUMID
R013	Evapotranspiration coefficient	5.000E-01	5.000E-01	---	EVAPTR
R013	Precipitation (m/yr)	8.600E-01	1.000E+00	---	PRECIP
R013	Irrigation (m/yr)	1.040E+00	2.000E-01	---	RI
R013	Irrigation mode	overhead	overhead	---	IDITCH
R013	Runoff coefficient	3.000E-01	2.000E-01	---	RUNOFF
R013	Watershed area for nearby stream or pond (m**2)	1.000E+06	1.000E+06	---	WAREA
R013	Accuracy for water/soil computations	1.000E-03	1.000E-03	---	EPS
R014	Density of saturated zone (g/cm**3)	1.520E+00	1.500E+00	---	DENSAQ
R014	Saturated zone total porosity	4.500E-01	4.000E-01	---	TPSZ
R014	Saturated zone effective porosity	2.000E-01	2.000E-01	---	EPSZ
R014	Saturated zone field capacity	2.000E-01	2.000E-01	---	FCSZ
R014	Saturated zone hydraulic conductivity (m/yr)	2.700E+02	1.000E+02	---	HCSZ
R014	Saturated zone hydraulic gradient	5.000E-03	2.000E-02	---	HGWT
R014	Saturated zone b parameter	not used	5.300E+00	---	BSZ
R014	Water table drop rate (m/yr)	0.000E+00	1.000E-03	---	VWT
R014	Well pump intake depth (m below water table)	8.000E+00	1.000E+01	---	DWIBWT
R014	Model: Nondispersion (ND) or Mass-Balance (MB)	ND	ND	---	MODEL
R014	Well pumping rate (m**3/yr)	1.180E+02	2.500E+02	---	UW
R015	Number of unsaturated zone strata	1	1	---	NS

Site-Specific Parameter Summary (continued)

Menu	Parameter	User Input	Default	Used by RESRAD (If different from user input)	Parameter Name
R015	Unsat. zone 1, thickness (m)	3.000E+00	4.000E+00	---	H(1)
R015	Unsat. zone 1, soil density (g/cm**3)	1.520E+00	1.500E+00	---	DENSUZ(1)
R015	Unsat. zone 1, total porosity	4.500E-01	4.000E-01	---	TPUZ(1)
R015	Unsat. zone 1, effective porosity	2.000E-01	2.000E-01	---	EPUZ(1)
R015	Unsat. zone 1, field capacity	2.000E-01	2.000E-01	---	FCUZ(1)
R015	Unsat. zone 1, soil-specific b parameter	7.130E+00	5.300E+00	---	BUZ(1)
R015	Unsat. zone 1, hydraulic conductivity (m/yr)	2.700E+02	1.000E+01	---	HCUZ(1)
R016	Distribution coefficients for Co-60				
R016	Contaminated zone (cm**3/g)	1.000E+03	1.000E+03	---	DCNUCC(1)
R016	Unsaturated zone 1 (cm**3/g)	1.000E+03	1.000E+03	---	DCNUCU(1,1)
R016	Saturated zone (cm**3/g)	1.000E+03	1.000E+03	---	DCNUCS(1)
R016	Leach rate (/yr)	0.000E+00	0.000E+00	5.400E-04	ALEACH(1)
R016	Solubility constant	0.000E+00	0.000E+00	not used	SOLUBK(1)
R017	Inhalation rate (m**3/yr)	8.400E+03	8.400E+03	---	INHALR
R017	Mass loading for inhalation (g/m**3)	6.000E-06	1.000E-04	---	MLINH
R017	Exposure duration	3.652E+02	3.000E+01	---	ED
R017	Shielding factor, inhalation	4.000E-01	4.000E-01	---	SHF3
R017	Shielding factor, external gamma	4.700E-01	7.000E-01	---	SHF1
R017	Fraction of time spent indoors	6.600E-01	5.000E-01	---	FIND
R017	Fraction of time spent outdoors (on site)	1.100E-01	2.500E-01	---	FOTD
R017	Shape factor flag, external gamma	1.000E+00	1.000E+00	>0 shows circular AREA.	FS
R017	Radii of shape factor array (used if FS = -1):				
R017	Outer annular radius (m), ring 1:	not used	5.000E+01	---	RAD_SHAPE(1)
R017	Outer annular radius (m), ring 2:	not used	7.071E+01	---	RAD_SHAPE(2)
R017	Outer annular radius (m), ring 3:	not used	0.000E+00	---	RAD_SHAPE(3)
R017	Outer annular radius (m), ring 4:	not used	0.000E+00	---	RAD_SHAPE(4)
R017	Outer annular radius (m), ring 5:	not used	0.000E+00	---	RAD_SHAPE(5)
R017	Outer annular radius (m), ring 6:	not used	0.000E+00	---	RAD_SHAPE(6)
R017	Outer annular radius (m), ring 7:	not used	0.000E+00	---	RAD_SHAPE(7)
R017	Outer annular radius (m), ring 8:	not used	0.000E+00	---	RAD_SHAPE(8)
R017	Outer annular radius (m), ring 9:	not used	0.000E+00	---	RAD_SHAPE(9)
R017	Outer annular radius (m), ring 10:	not used	0.000E+00	---	RAD_SHAPE(10)
R017	Outer annular radius (m), ring 11:	not used	0.000E+00	---	RAD_SHAPE(11)
R017	Outer annular radius (m), ring 12:	not used	0.000E+00	---	RAD_SHAPE(12)

Site-Specific Parameter Summary (continued)

Menu	Parameter	User Input	Default	Used by RESRAD (If different from user input)	Parameter Name
R017	Fractions of annular areas within AREA:				
R017	Ring 1	not used	1.000E+00	---	FRACA(1)
R017	Ring 2	not used	2.732E-01	---	FRACA(2)
R017	Ring 3	not used	0.000E+00	---	FRACA(3)
R017	Ring 4	not used	0.000E+00	---	FRACA(4)
R017	Ring 5	not used	0.000E+00	---	FRACA(5)
R017	Ring 6	not used	0.000E+00	---	FRACA(6)
R017	Ring 7	not used	0.000E+00	---	FRACA(7)
R017	Ring 8	not used	0.000E+00	---	FRACA(8)
R017	Ring 9	not used	0.000E+00	---	FRACA(9)
R017	Ring 10	not used	0.000E+00	---	FRACA(10)
R017	Ring 11	not used	0.000E+00	---	FRACA(11)
R017	Ring 12	not used	0.000E+00	---	FRACA(12)
R018	Fruits, vegetables and grain consumption (kg/yr)	7.800E+01	1.600E+02	---	DIET(1)
R018	Leafy vegetable consumption (kg/yr)	1.500E+01	1.400E+01	---	DIET(2)
R018	Milk consumption (L/yr)	1.180E+02	9.200E+01	---	DIET(3)
R018	Meat and poultry consumption (kg/yr)	5.200E+01	6.300E+01	---	DIET(4)
R018	Fish consumption (kg/yr)	1.600E+01	5.400E+00	---	DIET(5)
R018	Other seafood consumption (kg/yr)	0.000E+00	9.000E-01	---	DIET(6)
R018	Soil ingestion rate (g/yr)	1.830E+01	3.650E+01	---	SOIL
R018	Drinking water intake (L/yr)	4.780E+02	5.100E+02	---	DWI
R018	Contamination fraction of drinking water	1.000E+00	1.000E+00	---	FDW
R018	Contamination fraction of household water	not used	1.000E+00	---	FHHW
R018	Contamination fraction of livestock water	1.000E+00	1.000E+00	---	FLW
R018	Contamination fraction of irrigation water	1.000E+00	1.000E+00	---	FIRW
R018	Contamination fraction of aquatic food	5.000E-01	5.000E-01	---	FR9
R018	Contamination fraction of plant food	5.000E-01	-1	---	FPLANT
R018	Contamination fraction of meat	1.000E+00	-1	---	FMEAT
R018	Contamination fraction of milk	1.000E+00	-1	---	FMILK
R019	Livestock fodder intake for meat (kg/day)	8.500E+00	6.800E+01	---	LFI5
R019	Livestock fodder intake for milk (kg/day)	1.700E+01	5.500E+01	---	LFI6
R019	Livestock water intake for meat (L/day)	5.000E+01	5.000E+01	---	LWI5
R019	Livestock water intake for milk (L/day)	1.600E+02	1.600E+02	---	LWI6
R019	Livestock soil intake (kg/day)	5.000E-01	5.000E-01	---	LSI
R019	Mass loading for foliar deposition (g/m**3)	1.000E-04	1.000E-04	---	MLFD
R019	Depth of soil mixing layer (m)	1.500E-01	1.500E-01	---	DM
R019	Depth of roots (m)	9.000E-01	9.000E-01	---	DROOT
R019	Drinking water fraction from ground water	1.000E+00	1.000E+00	---	FGWDW
R019	Household water fraction from ground water	not used	1.000E+00	---	FGWHH
R019	Livestock water fraction from ground water	1.000E+00	1.000E+00	---	FGWLW
R019	Irrigation fraction from ground water	1.000E+00	1.000E+00	---	FGWIR
R19B	Wet weight crop yield for Non-Leafy (kg/m**2)	7.000E-01	7.000E-01	---	YV(1)
R19B	Wet weight crop yield for Leafy (kg/m**2)	1.500E+00	1.500E+00	---	YV(2)
R19B	Wet weight crop yield for Fodder (kg/m**2)	1.100E+00	1.100E+00	---	YV(3)
R19B	Growing Season for Non-Leafy (years)	1.700E-01	1.700E-01	---	TE(1)
R19B	Growing Season for Leafy (years)	2.500E-01	2.500E-01	---	TE(2)
R19B	Growing Season for Fodder (years)	8.000E-02	8.000E-02	---	TE(3)

Site-Specific Parameter Summary (continued)

Menu	Parameter	User Input	Default	Used by RESRAD (If different from user input)	Parameter Name
R19B	Translocation Factor for Non-Leafy	1.000E-01	1.000E-01	---	TIV(1)
R19B	Translocation Factor for Leafy	1.000E+00	1.000E+00	---	TIV(2)
R19B	Translocation Factor for Fodder	1.000E+00	1.000E+00	---	TIV(3)
R19B	Dry Foliar Interception Fraction for Non-Leafy	2.500E-01	2.500E-01	---	RDRY(1)
R19B	Dry Foliar Interception Fraction for Leafy	2.500E-01	2.500E-01	---	RDRY(2)
R19B	Dry Foliar Interception Fraction for Fodder	2.500E-01	2.500E-01	---	RDRY(3)
R19B	Wet Foliar Interception Fraction for Non-Leafy	2.500E-01	2.500E-01	---	RWET(1)
R19B	Wet Foliar Interception Fraction for Leafy	2.500E-01	2.500E-01	---	RWET(2)
R19B	Wet Foliar Interception Fraction for Fodder	2.500E-01	2.500E-01	---	RWET(3)
R19B	Weathering Removal Constant for Vegetation	2.000E+01	2.000E+01	---	WLAM
C14	C-12 concentration in water (g/cm**3)	not used	2.000E-05	---	C12WTR
C14	C-12 concentration in contaminated soil (g/g)	not used	3.000E-02	---	C12CZ
C14	Fraction of vegetation carbon from soil	not used	2.000E-02	---	CSOIL
C14	Fraction of vegetation carbon from air	not used	9.800E-01	---	CAIR
C14	C-14 evasion layer thickness in soil (m)	not used	3.000E-01	---	DMC
C14	C-14 evasion flux rate from soil (1/sec)	not used	7.000E-07	---	EVSN
C14	C-12 evasion flux rate from soil (1/sec)	not used	1.000E-10	---	REVSN
C14	Fraction of grain in beef cattle feed	not used	8.000E-01	---	AVFG4
C14	Fraction of grain in milk cow feed	not used	2.000E-01	---	AVFG5
STOR	Storage times of contaminated foodstuffs (days):				
STOR	Fruits, non-leafy vegetables, and grain	1.400E+01	1.400E+01	---	STOR_T(1)
STOR	Leafy vegetables	1.000E+00	1.000E+00	---	STOR_T(2)
STOR	Milk	1.000E+00	1.000E+00	---	STOR_T(3)
STOR	Meat and poultry	2.000E+01	2.000E+01	---	STOR_T(4)
STOR	Fish	7.000E+00	7.000E+00	---	STOR_T(5)
STOR	Crustacea and mollusks	7.000E+00	7.000E+00	---	STOR_T(6)
STOR	Well water	1.000E+00	1.000E+00	---	STOR_T(7)
STOR	Surface water	1.000E+00	1.000E+00	---	STOR_T(8)
STOR	Livestock fodder	4.500E+01	4.500E+01	---	STOR_T(9)
R021	Thickness of building foundation (m)	not used	1.500E-01	---	FLOOR1
R021	Bulk density of building foundation (g/cm**3)	not used	2.400E+00	---	DENSFL
R021	Total porosity of the cover material	not used	4.000E-01	---	TPCV
R021	Total porosity of the building foundation	not used	1.000E-01	---	TPFL
R021	Volumetric water content of the cover material	not used	5.000E-02	---	PH2OCV
R021	Volumetric water content of the foundation	not used	3.000E-02	---	PH2OFL
R021	Diffusion coefficient for radon gas (m/sec):				
R021	in cover material	not used	2.000E-06	---	DIFCV
R021	in foundation material	not used	3.000E-07	---	DIFFL
R021	in contaminated zone soil	not used	2.000E-06	---	DIFCZ
R021	Radon vertical dimension of mixing (m)	not used	2.000E+00	---	HMIX
R021	Average building air exchange rate (1/hr)	not used	5.000E-01	---	REXG
R021	Height of the building (room) (m)	not used	2.500E+00	---	HRM
R021	Building interior area factor	not used	0.000E+00	---	FAI
R021	Building depth below ground surface (m)	not used	-1.000E+00	---	DMFL
R021	Emanating power of Rn-222 gas	not used	2.500E-01	---	EMANA(1)
R021	Emanating power of Rn-220 gas	not used	1.500E-01	---	EMANA(2)
TITL	Number of graphical time points	32	---	---	NPTS

Site-Specific Parameter Summary (continued)

Menu	Parameter	User Input	Default	Used by RESRAD (If different from user input)	Parameter Name
TITL	Maximum number of integration points for dose	17	---	---	LYMAX
TITL	Maximum number of integration points for risk	1	---	---	KYMAX

Summary of Pathway Selections

Pathway	User Selection
1 -- external gamma	active
2 -- inhalation (w/o radon)	active
3 -- plant ingestion	active
4 -- meat ingestion	active
5 -- milk ingestion	active
6 -- aquatic foods	active
7 -- drinking water	active
8 -- soil ingestion	active
9 -- radon	suppressed
Find peak pathway doses	active

Summary : PBRF FSS Plan ATT B Base Casew unit Co-60
File : C:\RESRAD_FAMILY\RESRAD\USERFILES\PBRF BP\06191201.RAD

Contaminated Zone Dimensions		Initial Soil Concentrations, pCi/g	
Area:	109100.00 square meters	Co-60	1.000E+00
Thickness:	1.00 meters		
Cover Depth:	0.00 meters		

Total Dose TDOSE(t), mrem/yr
Basic Radiation Dose Limit = 2.500E+01 mrem/yr
Total Mixture Sum M(t) = Fraction of Basic Dose Limit Received at Time (t)

t (years):	0.000E+00	1.000E+00	3.000E+00	1.000E+01	3.000E+01	1.000E+02	3.000E+02	1.000E+03
TDOSE(t):	6.389E+00	5.599E+00	4.300E+00	1.706E+00	1.216E-01	1.177E-05	3.981E-17	0.000E+00
M(t):	2.556E-01	2.240E-01	1.720E-01	6.825E-02	4.866E-03	4.710E-07	1.592E-18	0.000E+00

Maximum TDOSE(t): 6.389E+00 mrem/yr at t = 0.000E+00 years

Total Dose Contributions TDOSE(i,p,t) for Individual Radionuclides (i) and Pathways (p)
As mrem/yr and Fraction of Total Dose At t = 0.000E+00 years

Water Independent Pathways (Inhalation excludes radon)

Radio-	Ground		Inhalation		Radon		Plant		Meat		Milk		Soil	
Nuclide	mrem/yr	fract.	mrem/yr	fract.	mrem/yr	fract.	mrem/yr	fract.	mrem/yr	fract.	mrem/yr	fract.	mrem/yr	frac
Co-60	6.253E+00	0.9787	8.333E-07	0.0000	0.000E+00	0.0000	9.375E-02	0.0147	3.093E-02	0.0048	1.106E-02	0.0017	3.551E-04	0.00
Total	6.253E+00	0.9787	8.333E-07	0.0000	0.000E+00	0.0000	9.375E-02	0.0147	3.093E-02	0.0048	1.106E-02	0.0017	3.551E-04	0.00

Total Dose Contributions TDOSE(i,p,t) for Individual Radionuclides (i) and Pathways (p)
As mrem/yr and Fraction of Total Dose At t = 0.000E+00 years

Water Dependent Pathways

Radio-	Water		Fish		Radon		Plant		Meat		Milk		All Pathways	
Nuclide	mrem/yr	fract.	mrem/yr	fract.	mrem/yr	fract.	mrem/yr	fract.	mrem/yr	fract.	mrem/yr	fract.	mrem/yr	frac
Co-60	0.000E+00	0.0000	0.000E+00	0.0000	0.000E+00	0.0000	0.000E+00	0.0000	0.000E+00	0.0000	0.000E+00	0.0000	6.389E+00	1.00
Total	0.000E+00	0.0000	0.000E+00	0.0000	0.000E+00	0.0000	0.000E+00	0.0000	0.000E+00	0.0000	0.000E+00	0.0000	6.389E+00	1.00

*Sum of all water independent and dependent pathways.

Probabilistic Input

Number of Sample Runs: 300

Number	Name	Distribution	Parameters			
1	AREA	TRIANGULAR	25000	109100	250000	
2	THICK0	NORMAL	1	.5		
3	DENSCZ	TRUNCATED NORMAL	1.52	.23	.001	.999

Probabilistic Total Dose Summary

Nuclide (j)	Peak Time	Peak Dose	t= 0.00E+00	1.00E+00	3.00E+00	1.00E+01	3.00E+01	1.00E+02	3.00E+02	1.00E+03
			DOSE(j,t), mrem/yr							
Co-60										
Min	0.00E+00	0.00E+00	0.00E+00	0.00E+00	0.00E+00	0.00E+00	0.00E+00	0.00E+00	0.00E+00	0.00E+00
Max	0.00E+00	6.42E+00	6.42E+00	5.63E+00	4.32E+00	1.72E+00	1.23E-01	1.22E-05	4.43E-17	0.00E+00
Avg	0.00E+00	6.12E+00	6.12E+00	5.36E+00	4.11E+00	1.63E+00	1.15E-01	1.09E-05	3.51E-17	0.00E+00
Std	0.00E+00	1.10E+00	1.10E+00	9.70E-01	7.54E-01	3.04E-01	2.25E-02	2.54E-06	1.20E-17	0.00E+00
∑ALL										
Min	0.00E+00	0.00E+00	0.00E+00	0.00E+00	0.00E+00	0.00E+00	0.00E+00	0.00E+00	0.00E+00	0.00E+00
Max	0.00E+00	6.42E+00	6.42E+00	5.63E+00	4.32E+00	1.72E+00	1.23E-01	1.22E-05	4.43E-17	0.00E+00
Avg	0.00E+00	6.12E+00	6.12E+00	5.36E+00	4.11E+00	1.63E+00	1.15E-01	1.09E-05	3.51E-17	0.00E+00
Std	0.00E+00	1.10E+00	1.10E+00	9.70E-01	7.54E-01	3.04E-01	2.25E-02	2.54E-06	1.20E-17	0.00E+00

∑ALL is total dose summed for all nuclides.

Title : PBRF FSS Plan ATT B Base Casew unit Co-60
Input File : C:\RESRAD_FAMILY\RESRAD\USERFILES\PBRF BP\06191201.RAD

Coefficients for peak of mean dose time Dose

Coefficient =	PCC		SRC		PRCC		SRRC	
Repetition =	1		1		1		1	
Description of Probabilistic Variable	Sig	Coeff	Sig	Coeff	Sig	Coeff	Sig	Coeff
Area of contaminated zone	2	-0.04	2	-0.04	2	0.73	2	0.55
Thickness of contaminated zone	1	0.48	1	0.48	1	0.79	1	0.66
Density of contaminated zone	3	0.01	3	0.00	3	0.14	3	0.07
R-SQUARE		0.23		0.23		0.74		0.74

-Rank is set to zero if the dose is zero or the correlation matrix is singular.
-R-SQUARE varies between 0 and 1 and is called the coefficient of determination; it provides a measure of the variation in the dependent variable (Dose) explained by regression on the independent variables.

Table of Contents

Part I: Mixture Sums and Single Radionuclide Guidelines

Dose Conversion Factor (and Related) Parameter Summary
Dose Library: FGR 11

Menu	Parameter	Current Value#	Base Case*	Parameter Name
A-1	DCF's for external ground radiation, (mrem/yr)/(pCi/g)			
A-1	Ba-137m (Source: FGR 12)	3.606E+00	3.606E+00	DCF1(1)
A-1	Cs-137 (Source: FGR 12)	7.510E-04	7.510E-04	DCF1(2)
B-1	Dose conversion factors for inhalation, mrem/pCi:			
B-1	Cs-137+D	3.190E-05	3.190E-05	DCF2(1)
D-1	Dose conversion factors for ingestion, mrem/pCi:			
D-1	Cs-137+D	5.000E-05	5.000E-05	DCF3(1)
D-34	Food transfer factors:			
D-34	Cs-137+D , plant/soil concentration ratio, dimensionless	4.000E-02	4.000E-02	RTF(1,1)
D-34	Cs-137+D , beef/livestock-intake ratio, (pCi/kg)/(pCi/d)	3.000E-02	3.000E-02	RTF(1,2)
D-34	Cs-137+D , milk/livestock-intake ratio, (pCi/L)/(pCi/d)	8.000E-03	8.000E-03	RTF(1,3)
D-5	Bioaccumulation factors, fresh water, L/kg:			
D-5	Cs-137+D , fish	2.000E+03	2.000E+03	BIOFAC(1,1)
D-5	Cs-137+D , crustacea and mollusks	1.000E+02	1.000E+02	BIOFAC(1,2)

#For DCF1(xxx) only, factors are for infinite depth & area. See ETFG table in Ground Pathway of Detailed Report.
*Base Case means Default.Lib w/o Associate Nuclide contributions.

Site-Specific Parameter Summary

Menu	Parameter	User Input	Default	Used by RESRAD (If different from user input)	Parameter Name
R011	Area of contaminated zone (m**2)	3.600E+01	1.000E+04	---	AREA
R011	Thickness of contaminated zone (m)	7.870E-01	2.000E+00	---	THICK0
R011	Length parallel to aquifer flow (m)	2.290E+01	1.000E+02	---	LCZPAQ
R011	Basic radiation dose limit (mrem/yr)	2.500E+01	3.000E+01	---	BRDL
R011	Time since placement of material (yr)	0.000E+00	0.000E+00	---	TI
R011	Times for calculations (yr)	1.000E+00	1.000E+00	---	T(2)
R011	Times for calculations (yr)	3.000E+00	3.000E+00	---	T(3)
R011	Times for calculations (yr)	1.000E+01	1.000E+01	---	T(4)
R011	Times for calculations (yr)	3.000E+01	3.000E+01	---	T(5)
R011	Times for calculations (yr)	1.000E+02	1.000E+02	---	T(6)
R011	Times for calculations (yr)	3.000E+02	3.000E+02	---	T(7)
R011	Times for calculations (yr)	1.000E+03	1.000E+03	---	T(8)
R011	Times for calculations (yr)	not used	0.000E+00	---	T(9)
R011	Times for calculations (yr)	not used	0.000E+00	---	T(10)
R012	Initial principal radionuclide (pCi/g): Cs-137	1.000E+00	0.000E+00	---	S1(1)
R012	Concentration in groundwater (pCi/L): Cs-137	not used	0.000E+00	---	W1(1)
R013	Cover depth (m)	2.650E+00	0.000E+00	---	COVER0
R013	Density of cover material (g/cm**3)	1.520E+00	1.500E+00	---	DENSCV
R013	Cover depth erosion rate (m/yr)	1.000E-03	1.000E-03	---	VCV
R013	Density of contaminated zone (g/cm**3)	1.520E+00	1.500E+00	---	DENSCZ
R013	Contaminated zone erosion rate (m/yr)	1.000E-03	1.000E-03	---	VCZ
R013	Contaminated zone total porosity	4.500E-01	4.000E-01	---	TPCZ
R013	Contaminated zone field capacity	2.000E-01	2.000E-01	---	FCCZ
R013	Contaminated zone hydraulic conductivity (m/yr)	2.700E+02	1.000E+01	---	HCCZ
R013	Contaminated zone b parameter	7.120E+00	5.300E+00	---	BCZ
R013	Average annual wind speed (m/sec)	2.000E+00	2.000E+00	---	WIND
R013	Humidity in air (g/m**3)	not used	8.000E+00	---	HUMID
R013	Evapotranspiration coefficient	5.000E-01	5.000E-01	---	EVAPTR
R013	Precipitation (m/yr)	8.600E-01	1.000E+00	---	PRECIP
R013	Irrigation (m/yr)	1.040E+00	2.000E-01	---	RI
R013	Irrigation mode	overhead	overhead	---	IDITCH
R013	Runoff coefficient	3.000E-01	2.000E-01	---	RUNOFF
R013	Watershed area for nearby stream or pond (m**2)	1.000E+06	1.000E+06	---	WAREA
R013	Accuracy for water/soil computations	1.000E-03	1.000E-03	---	EPS
R014	Density of saturated zone (g/cm**3)	1.520E+00	1.500E+00	---	DENSAQ
R014	Saturated zone total porosity	4.500E-01	4.000E-01	---	TPSZ
R014	Saturated zone effective porosity	2.000E-01	2.000E-01	---	EPSZ
R014	Saturated zone field capacity	2.000E-01	2.000E-01	---	FCSZ
R014	Saturated zone hydraulic conductivity (m/yr)	2.700E+02	1.000E+02	---	HCSZ
R014	Saturated zone hydraulic gradient	5.000E-03	2.000E-02	---	HGWT
R014	Saturated zone b parameter	not used	5.300E+00	---	BSZ
R014	Water table drop rate (m/yr)	0.000E+00	1.000E-03	---	VWT
R014	Well pump intake depth (m below water table)	8.000E+00	1.000E+01	---	DWIBWT
R014	Model: Nondispersion (ND) or Mass-Balance (MB)	ND	ND	---	MODEL
R014	Well pumping rate (m**3/yr)	1.180E+02	2.500E+02	---	UW
R015	Number of unsaturated zone strata	1	1	---	NS

Site-Specific Parameter Summary (continued)

Menu	Parameter	User Input	Default	Used by RESRAD (If different from user input)	Parameter Name
R015	Unsat. zone 1, thickness (m)	3.000E+00	4.000E+00	---	H(1)
R015	Unsat. zone 1, soil density (g/cm**3)	1.520E+00	1.500E+00	---	DENSUZ(1)
R015	Unsat. zone 1, total porosity	4.500E-01	4.000E-01	---	TPUZ(1)
R015	Unsat. zone 1, effective porosity	2.000E-01	2.000E-01	---	EPUZ(1)
R015	Unsat. zone 1, field capacity	2.000E-01	2.000E-01	---	FCUZ(1)
R015	Unsat. zone 1, soil-specific b parameter	7.130E+00	5.300E+00	---	BUZ(1)
R015	Unsat. zone 1, hydraulic conductivity (m/yr)	2.700E+02	1.000E+01	---	HCUZ(1)
R016	Distribution coefficients for Cs-137				
R016	Contaminated zone (cm**3/g)	4.470E+02	4.600E+03	---	DCNUCC(1)
R016	Unsaturated zone 1 (cm**3/g)	4.770E+02	4.600E+03	---	DCNUCU(1,1)
R016	Saturated zone (cm**3/g)	4.470E+02	4.600E+03	---	DCNUCS(1)
R016	Leach rate (/yr)	0.000E+00	0.000E+00	1.535E-03	ALEACH(1)
R016	Solubility constant	0.000E+00	0.000E+00	not used	SOLUBK(1)
R017	Inhalation rate (m**3/yr)	8.400E+03	8.400E+03	---	INHALR
R017	Mass loading for inhalation (g/m**3)	6.000E-06	1.000E-04	---	MLINH
R017	Exposure duration	3.652E+02	3.000E+01	---	ED
R017	Shielding factor, inhalation	4.000E-01	4.000E-01	---	SHF3
R017	Shielding factor, external gamma	4.700E-01	7.000E-01	---	SHF1
R017	Fraction of time spent indoors	6.600E-01	5.000E-01	---	FIND
R017	Fraction of time spent outdoors (on site)	1.100E-01	2.500E-01	---	FOTD
R017	Shape factor flag, external gamma	1.000E+00	1.000E+00	>0 shows circular AREA.	FS
R017	Radii of shape factor array (used if FS = -1):				
R017	Outer annular radius (m), ring 1:	not used	5.000E+01	---	RAD_SHAPE(1)
R017	Outer annular radius (m), ring 2:	not used	7.071E+01	---	RAD_SHAPE(2)
R017	Outer annular radius (m), ring 3:	not used	0.000E+00	---	RAD_SHAPE(3)
R017	Outer annular radius (m), ring 4:	not used	0.000E+00	---	RAD_SHAPE(4)
R017	Outer annular radius (m), ring 5:	not used	0.000E+00	---	RAD_SHAPE(5)
R017	Outer annular radius (m), ring 6:	not used	0.000E+00	---	RAD_SHAPE(6)
R017	Outer annular radius (m), ring 7:	not used	0.000E+00	---	RAD_SHAPE(7)
R017	Outer annular radius (m), ring 8:	not used	0.000E+00	---	RAD_SHAPE(8)
R017	Outer annular radius (m), ring 9:	not used	0.000E+00	---	RAD_SHAPE(9)
R017	Outer annular radius (m), ring 10:	not used	0.000E+00	---	RAD_SHAPE(10)
R017	Outer annular radius (m), ring 11:	not used	0.000E+00	---	RAD_SHAPE(11)
R017	Outer annular radius (m), ring 12:	not used	0.000E+00	---	RAD_SHAPE(12)

Site-Specific Parameter Summary (continued)

Menu	Parameter	User Input	Default	Used by RESRAD (If different from user input)	Parameter Name
R017	Fractions of annular areas within AREA:				
R017	Ring 1	not used	1.000E+00	---	FRACA(1)
R017	Ring 2	not used	2.732E-01	---	FRACA(2)
R017	Ring 3	not used	0.000E+00	---	FRACA(3)
R017	Ring 4	not used	0.000E+00	---	FRACA(4)
R017	Ring 5	not used	0.000E+00	---	FRACA(5)
R017	Ring 6	not used	0.000E+00	---	FRACA(6)
R017	Ring 7	not used	0.000E+00	---	FRACA(7)
R017	Ring 8	not used	0.000E+00	---	FRACA(8)
R017	Ring 9	not used	0.000E+00	---	FRACA(9)
R017	Ring 10	not used	0.000E+00	---	FRACA(10)
R017	Ring 11	not used	0.000E+00	---	FRACA(11)
R017	Ring 12	not used	0.000E+00	---	FRACA(12)
R018	Fruits, vegetables and grain consumption (kg/yr)	7.800E+01	1.600E+02	---	DIET(1)
R018	Leafy vegetable consumption (kg/yr)	1.500E+01	1.400E+01	---	DIET(2)
R018	Milk consumption (L/yr)	1.180E+02	9.200E+01	---	DIET(3)
R018	Meat and poultry consumption (kg/yr)	5.200E+01	6.300E+01	---	DIET(4)
R018	Fish consumption (kg/yr)	1.600E+01	5.400E+00	---	DIET(5)
R018	Other seafood consumption (kg/yr)	0.000E+00	9.000E-01	---	DIET(6)
R018	Soil ingestion rate (g/yr)	1.830E+01	3.650E+01	---	SOIL
R018	Drinking water intake (L/yr)	4.780E+02	5.100E+02	---	DWI
R018	Contamination fraction of drinking water	1.000E+00	1.000E+00	---	FDW
R018	Contamination fraction of household water	not used	1.000E+00	---	FHHW
R018	Contamination fraction of livestock water	1.000E+00	1.000E+00	---	FLW
R018	Contamination fraction of irrigation water	1.000E+00	1.000E+00	---	FIRW
R018	Contamination fraction of aquatic food	5.000E-01	5.000E-01	---	FR9
R018	Contamination fraction of plant food	5.000E-01	-1	---	FPLANT
R018	Contamination fraction of meat	1.000E+00	-1	---	FMEAT
R018	Contamination fraction of milk	1.000E+00	-1	---	FMILK
R019	Livestock fodder intake for meat (kg/day)	8.500E+00	6.800E+01	---	LFI5
R019	Livestock fodder intake for milk (kg/day)	1.700E+01	5.500E+01	---	LFI6
R019	Livestock water intake for meat (L/day)	5.000E+01	5.000E+01	---	LWI5
R019	Livestock water intake for milk (L/day)	1.600E+02	1.600E+02	---	LWI6
R019	Livestock soil intake (kg/day)	5.000E-01	5.000E-01	---	LSI
R019	Mass loading for foliar deposition (g/m**3)	1.000E-04	1.000E-04	---	MLFD
R019	Depth of soil mixing layer (m)	1.500E-01	1.500E-01	---	DM
R019	Depth of roots (m)	9.000E-01	9.000E-01	---	DROOT
R019	Drinking water fraction from ground water	1.000E+00	1.000E+00	---	FGWDW
R019	Household water fraction from ground water	not used	1.000E+00	---	FGWHH
R019	Livestock water fraction from ground water	1.000E+00	1.000E+00	---	FGWLW
R019	Irrigation fraction from ground water	1.000E+00	1.000E+00	---	FGWIR
R19B	Wet weight crop yield for Non-Leafy (kg/m**2)	7.000E-01	7.000E-01	---	YV(1)
R19B	Wet weight crop yield for Leafy (kg/m**2)	1.500E+00	1.500E+00	---	YV(2)
R19B	Wet weight crop yield for Fodder (kg/m**2)	1.100E+00	1.100E+00	---	YV(3)
R19B	Growing Season for Non-Leafy (years)	1.700E-01	1.700E-01	---	TE(1)
R19B	Growing Season for Leafy (years)	2.500E-01	2.500E-01	---	TE(2)
R19B	Growing Season for Fodder (years)	8.000E-02	8.000E-02	---	TE(3)

Site-Specific Parameter Summary (continued)

Menu	Parameter	User Input	Default	Used by RESRAD (If different from user input)	Parameter Name
R19B	Translocation Factor for Non-Leafy	1.000E-01	1.000E-01	---	TIV(1)
R19B	Translocation Factor for Leafy	1.000E+00	1.000E+00	---	TIV(2)
R19B	Translocation Factor for Fodder	1.000E+00	1.000E+00	---	TIV(3)
R19B	Dry Foliar Interception Fraction for Non-Leafy	2.500E-01	2.500E-01	---	RDRY(1)
R19B	Dry Foliar Interception Fraction for Leafy	2.500E-01	2.500E-01	---	RDRY(2)
R19B	Dry Foliar Interception Fraction for Fodder	2.500E-01	2.500E-01	---	RDRY(3)
R19B	Wet Foliar Interception Fraction for Non-Leafy	2.500E-01	2.500E-01	---	RWET(1)
R19B	Wet Foliar Interception Fraction for Leafy	2.500E-01	2.500E-01	---	RWET(2)
R19B	Wet Foliar Interception Fraction for Fodder	2.500E-01	2.500E-01	---	RWET(3)
R19B	Weathering Removal Constant for Vegetation	2.000E+01	2.000E+01	---	WLAM
C14	C-12 concentration in water (g/cm**3)	not used	2.000E-05	---	C12WTR
C14	C-12 concentration in contaminated soil (g/g)	not used	3.000E-02	---	C12CZ
C14	Fraction of vegetation carbon from soil	not used	2.000E-02	---	CSOIL
C14	Fraction of vegetation carbon from air	not used	9.800E-01	---	CAIR
C14	C-14 evasion layer thickness in soil (m)	not used	3.000E-01	---	DMC
C14	C-14 evasion flux rate from soil (1/sec)	not used	7.000E-07	---	EVSN
C14	C-12 evasion flux rate from soil (1/sec)	not used	1.000E-10	---	REVSN
C14	Fraction of grain in beef cattle feed	not used	8.000E-01	---	AVFG4
C14	Fraction of grain in milk cow feed	not used	2.000E-01	---	AVFG5
STOR	Storage times of contaminated foodstuffs (days):				
STOR	Fruits, non-leafy vegetables, and grain	1.400E+01	1.400E+01	---	STOR_T(1)
STOR	Leafy vegetables	1.000E+00	1.000E+00	---	STOR_T(2)
STOR	Milk	1.000E+00	1.000E+00	---	STOR_T(3)
STOR	Meat and poultry	2.000E+01	2.000E+01	---	STOR_T(4)
STOR	Fish	7.000E+00	7.000E+00	---	STOR_T(5)
STOR	Crustacea and mollusks	7.000E+00	7.000E+00	---	STOR_T(6)
STOR	Well water	1.000E+00	1.000E+00	---	STOR_T(7)
STOR	Surface water	1.000E+00	1.000E+00	---	STOR_T(8)
STOR	Livestock fodder	4.500E+01	4.500E+01	---	STOR_T(9)
R021	Thickness of building foundation (m)	not used	1.500E-01	---	FLOOR1
R021	Bulk density of building foundation (g/cm**3)	not used	2.400E+00	---	DENSFL
R021	Total porosity of the cover material	not used	4.000E-01	---	TPCV
R021	Total porosity of the building foundation	not used	1.000E-01	---	TPFL
R021	Volumetric water content of the cover material	not used	5.000E-02	---	PH2OCV
R021	Volumetric water content of the foundation	not used	3.000E-02	---	PH2OFL
R021	Diffusion coefficient for radon gas (m/sec):				
R021	in cover material	not used	2.000E-06	---	DIFCV
R021	in foundation material	not used	3.000E-07	---	DIFFL
R021	in contaminated zone soil	not used	2.000E-06	---	DIFCZ
R021	Radon vertical dimension of mixing (m)	not used	2.000E+00	---	HMIX
R021	Average building air exchange rate (1/hr)	not used	5.000E-01	---	REXG
R021	Height of the building (room) (m)	not used	2.500E+00	---	HRM
R021	Building interior area factor	not used	0.000E+00	---	FAI
R021	Building depth below ground surface (m)	not used	-1.000E+00	---	DMFL
R021	Emanating power of Rn-222 gas	not used	2.500E-01	---	EMANA(1)
R021	Emanating power of Rn-220 gas	not used	1.500E-01	---	EMANA(2)
TITL	Number of graphical time points	32	---	---	NPTS

Site-Specific Parameter Summary (continued)

Menu	Parameter	User Input	Default	Used by RESRAD (If different from user input)	Parameter Name
TITL	Maximum number of integration points for dose	17	---	---	LYMAX
TITL	Maximum number of integration points for risk	1	---	---	KYMAX

Summary of Pathway Selections

Pathway	User Selection
1 -- external gamma	active
2 -- inhalation (w/o radon)	active
3 -- plant ingestion	active
4 -- meat ingestion	active
5 -- milk ingestion	active
6 -- aquatic foods	active
7 -- drinking water	active
8 -- soil ingestion	active
9 -- radon	suppressed
Find peak pathway doses	active

Contaminated Zone Dimensions		Initial Soil Concentrations, pCi/g	
Area:	36.00 square meters	Cs-137	1.000E+00
Thickness:	0.79 meters		
Cover Depth:	2.65 meters		

Total Dose TDOSE(t), mrem/yr
Basic Radiation Dose Limit = 2.500E+01 mrem/yr
Total Mixture Sum M(t) = Fraction of Basic Dose Limit Received at Time (t)

t (years):	0.000E+00	1.000E+00	3.000E+00	1.000E+01	3.000E+01	1.000E+02	3.000E+02	1.000E+03
TDOSE(t):	3.184E-17	3.152E-17	3.088E-17	2.875E-17	2.345E-17	1.148E-17	1.493E-18	1.184E-21
M(t):	1.274E-18	1.261E-18	1.235E-18	1.150E-18	9.379E-19	4.593E-19	5.973E-20	4.736E-23

Maximum TDOSE(t): 3.184E-17 mrem/yr at t = 0.000E+00 years

Total Dose Contributions TDOSE(i,p,t) for Individual Radionuclides (i) and Pathways (p)
As mrem/yr and Fraction of Total Dose At t = 0.000E+00 years

Water Independent Pathways (Inhalation excludes radon)

Radio-	Ground		Inhalation		Radon		Plant		Meat		Milk		Soil	
Nuclide	mrem/yr	fract.	mrem/yr	fract.	mrem/yr	fract.	mrem/yr	fract.	mrem/yr	fract.	mrem/yr	fract.	mrem/yr	frac
Cs-137	3.184E-17	1.0000	0.000E+00	0.0000	0.000E+00	0.0000	0.000E+00	0.0000	0.000E+00	0.0000	0.000E+00	0.0000	0.000E+00	0.00
Total	3.184E-17	1.0000	0.000E+00	0.0000	0.000E+00	0.0000	0.000E+00	0.0000	0.000E+00	0.0000	0.000E+00	0.0000	0.000E+00	0.00

Total Dose Contributions TDOSE(i,p,t) for Individual Radionuclides (i) and Pathways (p)
As mrem/yr and Fraction of Total Dose At t = 0.000E+00 years

Water Dependent Pathways

Radio-	Water		Fish		Radon		Plant		Meat		Milk		All Pathways	
Nuclide	mrem/yr	fract.	mrem/yr	fract.	mrem/yr	fract.	mrem/yr	fract.	mrem/yr	fract.	mrem/yr	fract.	mrem/yr	frac
Cs-137	0.000E+00	0.0000	0.000E+00	0.0000	0.000E+00	0.0000	0.000E+00	0.0000	0.000E+00	0.0000	0.000E+00	0.0000	3.184E-17	1.00
Total	0.000E+00	0.0000	0.000E+00	0.0000	0.000E+00	0.0000	0.000E+00	0.0000	0.000E+00	0.0000	0.000E+00	0.0000	3.184E-17	1.00

*Sum of all water independent and dependent pathways.

Probabilistic Input

Number of Sample Runs: 300

Number	Name	Distribution	Parameters			
1	AREA	TRIANGULAR	10	36	100	
2	THICKO	NORMAL	.787	.5		
3	DENSCZ	TRUNCATED NORMAL	1.52	.23	.001	.999

Probabilistic results summary : Pentolite Ditch Crossover BP2-1 Res Farmer w Unit Cs-137 File: C:\RESRAD_FAMILY\RESRAD\USERFILES\PBRF BP\06191202.RAD

Probabilistic Total Dose Summary

Nuclide (j)	Peak Time	Peak Dose	DOSE(j,t), mrem/yr t= 0.00E+00	1.00E+00	3.00E+00	1.00E+01	3.00E+01	1.00E+02	3.00E+02	1.00E+03
Cs-137										
Min	0.00E+00	0.00E+00	0.00E+00	0.00E+00	0.00E+00	0.00E+00	0.00E+00	0.00E+00	0.00E+00	0.00E+00
Max	0.00E+00	3.19E-17	3.19E-17	3.16E-17	3.10E-17	2.91E-17	2.42E-17	1.27E-17	2.04E-18	3.35E-21
Avg	0.00E+00	2.93E-17	2.93E-17	2.90E-17	2.84E-17	2.63E-17	2.12E-17	1.01E-17	1.29E-18	1.17E-21
Std	0.00E+00	7.88E-18	7.88E-18	7.82E-18	7.69E-18	7.27E-18	6.16E-18	3.37E-18	5.71E-19	8.89E-22
∑ALL										
Min	0.00E+00	0.00E+00	0.00E+00	0.00E+00	0.00E+00	0.00E+00	0.00E+00	0.00E+00	0.00E+00	0.00E+00
Max	0.00E+00	3.19E-17	3.19E-17	3.16E-17	3.10E-17	2.91E-17	2.42E-17	1.27E-17	2.04E-18	3.35E-21
Avg	0.00E+00	2.93E-17	2.93E-17	2.90E-17	2.84E-17	2.63E-17	2.12E-17	1.01E-17	1.29E-18	1.17E-21
Std	0.00E+00	7.88E-18	7.88E-18	7.82E-18	7.69E-18	7.27E-18	6.16E-18	3.37E-18	5.71E-19	8.89E-22

∑ALL is total dose summed for all nuclides.

Title : Pentolite Ditch Crossover BP2-1 Res Farmer w Unit Cs-137
Input File : C:\RESRAD_FAMILY\RESRAD\USERFILES\PBRF BP\06191202.RAD

Coefficients for peak of mean dose time Dose

Coefficient =	PCC		SRC		PRCC		SRRC	
Repetition =	1		1		1		1	
Description of Probabilistic Variable	Sig	Coeff	Sig	Coeff	Sig	Coeff	Sig	Coeff
Area of contaminated zone	2	-0.07	2	-0.06	3	0.17	3	0.05
Thickness of contaminated zone	1	0.59	1	0.59	1	0.96	1	0.93
Density of contaminated zone	3	0.05	3	0.04	2	0.67	2	0.24
R-SQUARE		0.35		0.35		0.93		0.93

-Rank is set to zero if the dose is zero or the correlation matrix is singular.

-R-SQUARE varies between 0 and 1 and is called the coefficient of determination; it provides a measure of the variation in the dependent variable (Dose) explained by regression on the independent variables.

Table of Contents

Part I: Mixture Sums and Single Radionuclide Guidelines

Dose Conversion Factor (and Related) Parameter Summary
Dose Library: FGR 11

Menu	Parameter	Current Value#	Base Case*	Parameter Name
A-1	DCF's for external ground radiation, (mrem/yr)/(pCi/g)			
A-1	Co-60 (Source: FGR 12)	1.622E+01	1.622E+01	DCF1(1)
B-1	Dose conversion factors for inhalation, mrem/pCi:			
B-1	Co-60	2.190E-04	2.190E-04	DCF2(1)
D-1	Dose conversion factors for ingestion, mrem/pCi:			
D-1	Co-60	2.690E-05	2.690E-05	DCF3(1)
D-34	Food transfer factors:			
D-34	Co-60 , plant/soil concentration ratio, dimensionless	8.000E-02	8.000E-02	RTF(1,1)
D-34	Co-60 , beef/livestock-intake ratio, (pCi/kg)/(pCi/d)	2.000E-02	2.000E-02	RTF(1,2)
D-34	Co-60 , milk/livestock-intake ratio, (pCi/L)/(pCi/d)	2.000E-03	2.000E-03	RTF(1,3)
D-5	Bioaccumulation factors, fresh water, L/kg:			
D-5	Co-60 , fish	3.000E+02	3.000E+02	BIOFAC(1,1)
D-5	Co-60 , crustacea and mollusks	2.000E+02	2.000E+02	BIOFAC(1,2)

#For DCF1(xxx) only, factors are for infinite depth & area. See ETFG table in Ground Pathway of Detailed Report.
*Base Case means Default.Lib w/o Associate Nuclide contributions.

Site-Specific Parameter Summary

Menu	Parameter	User Input	Default	Used by RESRAD (If different from user input)	Parameter Name
R011	Area of contaminated zone (m**2)	3.600E+01	1.000E+04	---	AREA
R011	Thickness of contaminated zone (m)	7.870E-01	2.000E+00	---	THICK0
R011	Length parallel to aquifer flow (m)	2.290E+01	1.000E+02	---	LCZPAQ
R011	Basic radiation dose limit (mrem/yr)	2.500E+01	3.000E+01	---	BRDL
R011	Time since placement of material (yr)	0.000E+00	0.000E+00	---	TI
R011	Times for calculations (yr)	1.000E+00	1.000E+00	---	T(2)
R011	Times for calculations (yr)	3.000E+00	3.000E+00	---	T(3)
R011	Times for calculations (yr)	1.000E+01	1.000E+01	---	T(4)
R011	Times for calculations (yr)	3.000E+01	3.000E+01	---	T(5)
R011	Times for calculations (yr)	1.000E+02	1.000E+02	---	T(6)
R011	Times for calculations (yr)	3.000E+02	3.000E+02	---	T(7)
R011	Times for calculations (yr)	1.000E+03	1.000E+03	---	T(8)
R011	Times for calculations (yr)	not used	0.000E+00	---	T(9)
R011	Times for calculations (yr)	not used	0.000E+00	---	T(10)
R012	Initial principal radionuclide (pCi/g): Co-60	1.000E+00	0.000E+00	---	S1(1)
R012	Concentration in groundwater (pCi/L): Co-60	not used	0.000E+00	---	W1(1)
R013	Cover depth (m)	2.650E+00	0.000E+00	---	COVER0
R013	Density of cover material (g/cm**3)	1.520E+00	1.500E+00	---	DENSCV
R013	Cover depth erosion rate (m/yr)	1.000E-03	1.000E-03	---	VCV
R013	Density of contaminated zone (g/cm**3)	1.520E+00	1.500E+00	---	DENSCZ
R013	Contaminated zone erosion rate (m/yr)	1.000E-03	1.000E-03	---	VCZ
R013	Contaminated zone total porosity	4.500E-01	4.000E-01	---	TPCZ
R013	Contaminated zone field capacity	2.000E-01	2.000E-01	---	FCCZ
R013	Contaminated zone hydraulic conductivity (m/yr)	2.700E+02	1.000E+01	---	HCCZ
R013	Contaminated zone b parameter	7.120E+00	5.300E+00	---	BCZ
R013	Average annual wind speed (m/sec)	2.000E+00	2.000E+00	---	WIND
R013	Humidity in air (g/m**3)	not used	8.000E+00	---	HUMID
R013	Evapotranspiration coefficient	5.000E-01	5.000E-01	---	EVAPTR
R013	Precipitation (m/yr)	8.600E-01	1.000E+00	---	PRECIP
R013	Irrigation (m/yr)	1.040E+00	2.000E-01	---	RI
R013	Irrigation mode	overhead	overhead	---	IDITCH
R013	Runoff coefficient	3.000E-01	2.000E-01	---	RUNOFF
R013	Watershed area for nearby stream or pond (m**2)	1.000E+06	1.000E+06	---	WAREA
R013	Accuracy for water/soil computations	1.000E-03	1.000E-03	---	EPS
R014	Density of saturated zone (g/cm**3)	1.520E+00	1.500E+00	---	DENSAQ
R014	Saturated zone total porosity	4.500E-01	4.000E-01	---	TPSZ
R014	Saturated zone effective porosity	2.000E-01	2.000E-01	---	EPSZ
R014	Saturated zone field capacity	2.000E-01	2.000E-01	---	FCSZ
R014	Saturated zone hydraulic conductivity (m/yr)	2.700E+02	1.000E+02	---	HCSZ
R014	Saturated zone hydraulic gradient	5.000E-03	2.000E-02	---	HGWT
R014	Saturated zone b parameter	not used	5.300E+00	---	BSZ
R014	Water table drop rate (m/yr)	0.000E+00	1.000E-03	---	VWT
R014	Well pump intake depth (m below water table)	8.000E+00	1.000E+01	---	DWIBWT
R014	Model: Nondispersion (ND) or Mass-Balance (MB)	ND	ND	---	MODEL
R014	Well pumping rate (m**3/yr)	1.180E+02	2.500E+02	---	UW
R015	Number of unsaturated zone strata	1	1	---	NS

Site-Specific Parameter Summary (continued)

Menu	Parameter	User Input	Default	Used by RESRAD (If different from user input)	Parameter Name
R015	Unsat. zone 1, thickness (m)	3.000E+00	4.000E+00	---	H(1)
R015	Unsat. zone 1, soil density (g/cm**3)	1.520E+00	1.500E+00	---	DENSUZ(1)
R015	Unsat. zone 1, total porosity	4.500E-01	4.000E-01	---	TPUZ(1)
R015	Unsat. zone 1, effective porosity	2.000E-01	2.000E-01	---	EPUZ(1)
R015	Unsat. zone 1, field capacity	2.000E-01	2.000E-01	---	FCUZ(1)
R015	Unsat. zone 1, soil-specific b parameter	7.130E+00	5.300E+00	---	BUZ(1)
R015	Unsat. zone 1, hydraulic conductivity (m/yr)	2.700E+02	1.000E+01	---	HCUZ(1)
R016	Distribution coefficients for Co-60				
R016	Contaminated zone (cm**3/g)	1.000E+03	1.000E+03	---	DCNUCC(1)
R016	Unsaturated zone 1 (cm**3/g)	1.000E+03	1.000E+03	---	DCNUCU(1,1)
R016	Saturated zone (cm**3/g)	1.000E+03	1.000E+03	---	DCNUCS(1)
R016	Leach rate (/yr)	0.000E+00	0.000E+00	6.862E-04	ALEACH(1)
R016	Solubility constant	0.000E+00	0.000E+00	not used	SOLUBK(1)
R017	Inhalation rate (m**3/yr)	8.400E+03	8.400E+03	---	INHALR
R017	Mass loading for inhalation (g/m**3)	6.000E-06	1.000E-04	---	MLINH
R017	Exposure duration	3.652E+02	3.000E+01	---	ED
R017	Shielding factor, inhalation	4.000E-01	4.000E-01	---	SHF3
R017	Shielding factor, external gamma	4.700E-01	7.000E-01	---	SHF1
R017	Fraction of time spent indoors	6.600E-01	5.000E-01	---	FIND
R017	Fraction of time spent outdoors (on site)	1.100E-01	2.500E-01	---	FOTD
R017	Shape factor flag, external gamma	1.000E+00	1.000E+00	>0 shows circular AREA.	FS
R017	Radii of shape factor array (used if FS = -1):				
R017	Outer annular radius (m), ring 1:	not used	5.000E+01	---	RAD_SHAPE(1)
R017	Outer annular radius (m), ring 2:	not used	7.071E+01	---	RAD_SHAPE(2)
R017	Outer annular radius (m), ring 3:	not used	0.000E+00	---	RAD_SHAPE(3)
R017	Outer annular radius (m), ring 4:	not used	0.000E+00	---	RAD_SHAPE(4)
R017	Outer annular radius (m), ring 5:	not used	0.000E+00	---	RAD_SHAPE(5)
R017	Outer annular radius (m), ring 6:	not used	0.000E+00	---	RAD_SHAPE(6)
R017	Outer annular radius (m), ring 7:	not used	0.000E+00	---	RAD_SHAPE(7)
R017	Outer annular radius (m), ring 8:	not used	0.000E+00	---	RAD_SHAPE(8)
R017	Outer annular radius (m), ring 9:	not used	0.000E+00	---	RAD_SHAPE(9)
R017	Outer annular radius (m), ring 10:	not used	0.000E+00	---	RAD_SHAPE(10)
R017	Outer annular radius (m), ring 11:	not used	0.000E+00	---	RAD_SHAPE(11)
R017	Outer annular radius (m), ring 12:	not used	0.000E+00	---	RAD_SHAPE(12)

Site-Specific Parameter Summary (continued)

Menu	Parameter	User Input	Default	Used by RESRAD (If different from user input)	Parameter Name
R017	Fractions of annular areas within AREA:				
R017	Ring 1	not used	1.000E+00	---	FRACA(1)
R017	Ring 2	not used	2.732E-01	---	FRACA(2)
R017	Ring 3	not used	0.000E+00	---	FRACA(3)
R017	Ring 4	not used	0.000E+00	---	FRACA(4)
R017	Ring 5	not used	0.000E+00	---	FRACA(5)
R017	Ring 6	not used	0.000E+00	---	FRACA(6)
R017	Ring 7	not used	0.000E+00	---	FRACA(7)
R017	Ring 8	not used	0.000E+00	---	FRACA(8)
R017	Ring 9	not used	0.000E+00	---	FRACA(9)
R017	Ring 10	not used	0.000E+00	---	FRACA(10)
R017	Ring 11	not used	0.000E+00	---	FRACA(11)
R017	Ring 12	not used	0.000E+00	---	FRACA(12)
R018	Fruits, vegetables and grain consumption (kg/yr)	7.800E+01	1.600E+02	---	DIET(1)
R018	Leafy vegetable consumption (kg/yr)	1.500E+01	1.400E+01	---	DIET(2)
R018	Milk consumption (L/yr)	1.180E+02	9.200E+01	---	DIET(3)
R018	Meat and poultry consumption (kg/yr)	5.200E+01	6.300E+01	---	DIET(4)
R018	Fish consumption (kg/yr)	1.600E+01	5.400E+00	---	DIET(5)
R018	Other seafood consumption (kg/yr)	0.000E+00	9.000E-01	---	DIET(6)
R018	Soil ingestion rate (g/yr)	1.830E+01	3.650E+01	---	SOIL
R018	Drinking water intake (L/yr)	4.780E+02	5.100E+02	---	DWI
R018	Contamination fraction of drinking water	1.000E+00	1.000E+00	---	FDW
R018	Contamination fraction of household water	not used	1.000E+00	---	FHHW
R018	Contamination fraction of livestock water	1.000E+00	1.000E+00	---	FLW
R018	Contamination fraction of irrigation water	1.000E+00	1.000E+00	---	FIRW
R018	Contamination fraction of aquatic food	5.000E-01	5.000E-01	---	FR9
R018	Contamination fraction of plant food	5.000E-01	-1	---	FPLANT
R018	Contamination fraction of meat	1.000E+00	-1	---	FMEAT
R018	Contamination fraction of milk	1.000E+00	-1	---	FMILK
R019	Livestock fodder intake for meat (kg/day)	8.500E+00	6.800E+01	---	LFI5
R019	Livestock fodder intake for milk (kg/day)	1.700E+01	5.500E+01	---	LFI6
R019	Livestock water intake for meat (L/day)	5.000E+01	5.000E+01	---	LWI5
R019	Livestock water intake for milk (L/day)	1.600E+02	1.600E+02	---	LWI6
R019	Livestock soil intake (kg/day)	5.000E-01	5.000E-01	---	LSI
R019	Mass loading for foliar deposition (g/m**3)	1.000E-04	1.000E-04	---	MLFD
R019	Depth of soil mixing layer (m)	1.500E-01	1.500E-01	---	DM
R019	Depth of roots (m)	9.000E-01	9.000E-01	---	DROOT
R019	Drinking water fraction from ground water	1.000E+00	1.000E+00	---	FGWDW
R019	Household water fraction from ground water	not used	1.000E+00	---	FGWHH
R019	Livestock water fraction from ground water	1.000E+00	1.000E+00	---	FGWLW
R019	Irrigation fraction from ground water	1.000E+00	1.000E+00	---	FGWIR
R19B	Wet weight crop yield for Non-Leafy (kg/m**2)	7.000E-01	7.000E-01	---	YV(1)
R19B	Wet weight crop yield for Leafy (kg/m**2)	1.500E+00	1.500E+00	---	YV(2)
R19B	Wet weight crop yield for Fodder (kg/m**2)	1.100E+00	1.100E+00	---	YV(3)
R19B	Growing Season for Non-Leafy (years)	1.700E-01	1.700E-01	---	TE(1)
R19B	Growing Season for Leafy (years)	2.500E-01	2.500E-01	---	TE(2)
R19B	Growing Season for Fodder (years)	8.000E-02	8.000E-02	---	TE(3)

Site-Specific Parameter Summary (continued)

Menu	Parameter	User Input	Default	Used by RESRAD (If different from user input)	Parameter Name
R19B	Translocation Factor for Non-Leafy	1.000E-01	1.000E-01	---	TIV(1)
R19B	Translocation Factor for Leafy	1.000E+00	1.000E+00	---	TIV(2)
R19B	Translocation Factor for Fodder	1.000E+00	1.000E+00	---	TIV(3)
R19B	Dry Foliar Interception Fraction for Non-Leafy	2.500E-01	2.500E-01	---	RDRY(1)
R19B	Dry Foliar Interception Fraction for Leafy	2.500E-01	2.500E-01	---	RDRY(2)
R19B	Dry Foliar Interception Fraction for Fodder	2.500E-01	2.500E-01	---	RDRY(3)
R19B	Wet Foliar Interception Fraction for Non-Leafy	2.500E-01	2.500E-01	---	RWET(1)
R19B	Wet Foliar Interception Fraction for Leafy	2.500E-01	2.500E-01	---	RWET(2)
R19B	Wet Foliar Interception Fraction for Fodder	2.500E-01	2.500E-01	---	RWET(3)
R19B	Weathering Removal Constant for Vegetation	2.000E+01	2.000E+01	---	WLAM
C14	C-12 concentration in water (g/cm**3)	not used	2.000E-05	---	C12WTR
C14	C-12 concentration in contaminated soil (g/g)	not used	3.000E-02	---	C12CZ
C14	Fraction of vegetation carbon from soil	not used	2.000E-02	---	CSOIL
C14	Fraction of vegetation carbon from air	not used	9.800E-01	---	CAIR
C14	C-14 evasion layer thickness in soil (m)	not used	3.000E-01	---	DMC
C14	C-14 evasion flux rate from soil (1/sec)	not used	7.000E-07	---	EVSN
C14	C-12 evasion flux rate from soil (1/sec)	not used	1.000E-10	---	REVSN
C14	Fraction of grain in beef cattle feed	not used	8.000E-01	---	AVFG4
C14	Fraction of grain in milk cow feed	not used	2.000E-01	---	AVFG5
STOR	Storage times of contaminated foodstuffs (days):				
STOR	Fruits, non-leafy vegetables, and grain	1.400E+01	1.400E+01	---	STOR_T(1)
STOR	Leafy vegetables	1.000E+00	1.000E+00	---	STOR_T(2)
STOR	Milk	1.000E+00	1.000E+00	---	STOR_T(3)
STOR	Meat and poultry	2.000E+01	2.000E+01	---	STOR_T(4)
STOR	Fish	7.000E+00	7.000E+00	---	STOR_T(5)
STOR	Crustacea and mollusks	7.000E+00	7.000E+00	---	STOR_T(6)
STOR	Well water	1.000E+00	1.000E+00	---	STOR_T(7)
STOR	Surface water	1.000E+00	1.000E+00	---	STOR_T(8)
STOR	Livestock fodder	4.500E+01	4.500E+01	---	STOR_T(9)
R021	Thickness of building foundation (m)	not used	1.500E-01	---	FLOOR1
R021	Bulk density of building foundation (g/cm**3)	not used	2.400E+00	---	DENSFL
R021	Total porosity of the cover material	not used	4.000E-01	---	TPCV
R021	Total porosity of the building foundation	not used	1.000E-01	---	TPFL
R021	Volumetric water content of the cover material	not used	5.000E-02	---	PH2OCV
R021	Volumetric water content of the foundation	not used	3.000E-02	---	PH2OFL
R021	Diffusion coefficient for radon gas (m/sec):				
R021	in cover material	not used	2.000E-06	---	DIFCV
R021	in foundation material	not used	3.000E-07	---	DIFFL
R021	in contaminated zone soil	not used	2.000E-06	---	DIFCZ
R021	Radon vertical dimension of mixing (m)	not used	2.000E+00	---	HMIX
R021	Average building air exchange rate (1/hr)	not used	5.000E-01	---	REXG
R021	Height of the building (room) (m)	not used	2.500E+00	---	HRM
R021	Building interior area factor	not used	0.000E+00	---	FAI
R021	Building depth below ground surface (m)	not used	-1.000E+00	---	DMFL
R021	Emanating power of Rn-222 gas	not used	2.500E-01	---	EMANA(1)
R021	Emanating power of Rn-220 gas	not used	1.500E-01	---	EMANA(2)
TITL	Number of graphical time points	32	---	---	NPTS

Site-Specific Parameter Summary (continued)

Menu	Parameter	User Input	Default	Used by RESRAD (If different from user input)	Parameter Name
TITL	Maximum number of integration points for dose	17	---	---	LYMAX
TITL	Maximum number of integration points for risk	1	---	---	KYMAX

Summary of Pathway Selections

Pathway	User Selection
1 -- external gamma	active
2 -- inhalation (w/o radon)	active
3 -- plant ingestion	active
4 -- meat ingestion	active
5 -- milk ingestion	active
6 -- aquatic foods	active
7 -- drinking water	active
8 -- soil ingestion	active
9 -- radon	suppressed
Find peak pathway doses	active

Contaminated Zone Dimensions		Initial Soil Concentrations, pCi/g	
Area:	36.00 square meters	Co-60	1.000E+00
Thickness:	0.79 meters		
Cover Depth:	2.65 meters		

Total Dose TDOSE(t), mrem/yr
Basic Radiation Dose Limit = 2.500E+01 mrem/yr
Total Mixture Sum M(t) = Fraction of Basic Dose Limit Received at Time (t)

t (years):	0.000E+00	1.000E+00	3.000E+00	1.000E+01	3.000E+01	1.000E+02	3.000E+02	1.000E+03
TDOSE(t):	1.344E-13	1.192E-13	9.368E-14	4.035E-14	3.636E-15	7.989E-19	2.822E-29	0.000E+00
M(t):	5.376E-15	4.767E-15	3.747E-15	1.614E-15	1.454E-16	3.195E-20	1.129E-30	0.000E+00

Maximum TDOSE(t): 1.344E-13 mrem/yr at t = 0.000E+00 years

Total Dose Contributions TDOSE(i,p,t) for Individual Radionuclides (i) and Pathways (p)
As mrem/yr and Fraction of Total Dose At t = 0.000E+00 years

Water Independent Pathways (Inhalation excludes radon)

Radio-	Ground		Inhalation		Radon		Plant		Meat		Milk		Soil	
Nuclide	mrem/yr	fract.	mrem/yr	fract.	mrem/yr	fract.	mrem/yr	fract.	mrem/yr	fract.	mrem/yr	fract.	mrem/yr	frac
Co-60	1.344E-13	1.0000	0.000E+00	0.0000	0.000E+00	0.0000	0.000E+00	0.0000	0.000E+00	0.0000	0.000E+00	0.0000	0.000E+00	0.00
Total	1.344E-13	1.0000	0.000E+00	0.0000	0.000E+00	0.0000	0.000E+00	0.0000	0.000E+00	0.0000	0.000E+00	0.0000	0.000E+00	0.00

Total Dose Contributions TDOSE(i,p,t) for Individual Radionuclides (i) and Pathways (p)
As mrem/yr and Fraction of Total Dose At t = 0.000E+00 years

Water Dependent Pathways

Radio-	Water		Fish		Radon		Plant		Meat		Milk		All Pathways	
Nuclide	mrem/yr	fract.	mrem/yr	fract.	mrem/yr	fract.	mrem/yr	fract.	mrem/yr	fract.	mrem/yr	fract.	mrem/yr	frac
Co-60	0.000E+00	0.0000	0.000E+00	0.0000	0.000E+00	0.0000	0.000E+00	0.0000	0.000E+00	0.0000	0.000E+00	0.0000	1.344E-13	1.00
Total	0.000E+00	0.0000	0.000E+00	0.0000	0.000E+00	0.0000	0.000E+00	0.0000	0.000E+00	0.0000	0.000E+00	0.0000	1.344E-13	1.00

*Sum of all water independent and dependent pathways.

Probabilistic Input

Number of Sample Runs: 300

Number	Name	Distribution	Parameters			
1	AREA	TRIANGULAR	10	36	100	
2	THICK0	NORMAL	.787	.5		
3	DENSCZ	TRUNCATED NORMAL	1.52	.23	.001	.999

Probabilistic Total Dose Summary

Nuclide (j)	Peak Time	Peak Dose	DOSE(j,t), mrem/yr t= 0.00E+00	1.00E+00	3.00E+00	1.00E+01	3.00E+01	1.00E+02	3.00E+02	1.00E+03
Co-60										
Min	0.00E+00	0.00E+00	0.00E+00	0.00E+00	0.00E+00	0.00E+00	0.00E+00	0.00E+00	0.00E+00	0.00E+00
Max	0.00E+00	1.34E-13	1.34E-13	1.19E-13	9.38E-14	4.06E-14	3.69E-15	8.37E-19	3.25E-29	0.00E+00
Avg	0.00E+00	1.23E-13	1.23E-13	1.09E-13	8.57E-14	3.68E-14	3.30E-15	7.15E-19	2.46E-29	0.00E+00
Std	0.00E+00	3.36E-14	3.36E-14	2.98E-14	2.35E-14	1.02E-14	9.35E-16	2.17E-19	0.00E+00	0.00E+00
∑ALL										
Min	0.00E+00	0.00E+00	0.00E+00	0.00E+00	0.00E+00	0.00E+00	0.00E+00	0.00E+00	0.00E+00	0.00E+00
Max	0.00E+00	1.34E-13	1.34E-13	1.19E-13	9.38E-14	4.06E-14	3.69E-15	8.37E-19	3.25E-29	0.00E+00
Avg	0.00E+00	1.23E-13	1.23E-13	1.09E-13	8.57E-14	3.68E-14	3.30E-15	7.15E-19	2.46E-29	0.00E+00
Std	0.00E+00	3.36E-14	3.36E-14	2.98E-14	2.35E-14	1.02E-14	9.35E-16	2.17E-19	0.00E+00	0.00E+00

∑ALL is total dose summed for all nuclides.

Coefficients for peak of mean dose time Dose

Coefficient =	PCC		SRC		PRCC		SRRC	
Repetition =	1		1		1		1	
Description of Probabilistic Variable	Sig	Coeff	Sig	Coeff	Sig	Coeff	Sig	Coeff
Area of contaminated zone	2	-0.07	2	-0.06	3	0.18	3	0.05
Thickness of contaminated zone	1	0.61	1	0.61	1	0.96	1	0.93
Density of contaminated zone	3	0.05	3	0.04	2	0.67	2	0.24
R-SQUARE		0.37		0.37		0.93		0.93

-Rank is set to zero if the dose is zero or the correlation matrix is singular.

-R-SQUARE varies between 0 and 1 and is called the coefficient of determination; it provides a measure of the variation in the dependent variable (Dose) explained by regression on the independent variables.

Table of Contents

Part I: Mixture Sums and Single Radionuclide Guidelines

Dose Conversion Factor (and Related) Parameter Summary
Dose Library: FGR 11

Menu	Parameter	Current Value#	Base Case*	Parameter Name
A-1	DCF's for external ground radiation, (mrem/yr)/(pCi/g)			
A-1	Ba-137m (Source: FGR 12)	3.606E+00	3.606E+00	DCF1(1)
A-1	Cs-137 (Source: FGR 12)	7.510E-04	7.510E-04	DCF1(2)
B-1	Dose conversion factors for inhalation, mrem/pCi:			
B-1	Cs-137+D	3.190E-05	3.190E-05	DCF2(1)
D-1	Dose conversion factors for ingestion, mrem/pCi:			
D-1	Cs-137+D	5.000E-05	5.000E-05	DCF3(1)
D-34	Food transfer factors:			
D-34	Cs-137+D , plant/soil concentration ratio, dimensionless	4.000E-02	4.000E-02	RTF(1,1)
D-34	Cs-137+D , beef/livestock-intake ratio, (pCi/kg)/(pCi/d)	3.000E-02	3.000E-02	RTF(1,2)
D-34	Cs-137+D , milk/livestock-intake ratio, (pCi/L)/(pCi/d)	8.000E-03	8.000E-03	RTF(1,3)
D-5	Bioaccumulation factors, fresh water, L/kg:			
D-5	Cs-137+D , fish	2.000E+03	2.000E+03	BIOFAC(1,1)
D-5	Cs-137+D , crustacea and mollusks	1.000E+02	1.000E+02	BIOFAC(1,2)

#For DCF1(xxx) only, factors are for infinite depth & area. See ETFG table in Ground Pathway of Detailed Report.
*Base Case means Default.Lib w/o Associate Nuclide contributions.

Site-Specific Parameter Summary

Menu	Parameter	User Input	Default	Used by RESRAD (If different from user input)	Parameter Name
R011	Area of contaminated zone (m**2)	2.860E+02	1.000E+04	---	AREA
R011	Thickness of contaminated zone (m)	7.600E-02	2.000E+00	---	THICK0
R011	Length parallel to aquifer flow (m)	2.290E+01	1.000E+02	---	LCZPAQ
R011	Basic radiation dose limit (mrem/yr)	2.500E+01	3.000E+01	---	BRDL
R011	Time since placement of material (yr)	0.000E+00	0.000E+00	---	TI
R011	Times for calculations (yr)	1.000E+00	1.000E+00	---	T(2)
R011	Times for calculations (yr)	3.000E+00	3.000E+00	---	T(3)
R011	Times for calculations (yr)	1.000E+01	1.000E+01	---	T(4)
R011	Times for calculations (yr)	3.000E+01	3.000E+01	---	T(5)
R011	Times for calculations (yr)	1.000E+02	1.000E+02	---	T(6)
R011	Times for calculations (yr)	3.000E+02	3.000E+02	---	T(7)
R011	Times for calculations (yr)	1.000E+03	1.000E+03	---	T(8)
R011	Times for calculations (yr)	not used	0.000E+00	---	T(9)
R011	Times for calculations (yr)	not used	0.000E+00	---	T(10)
R012	Initial principal radionuclide (pCi/g): Cs-137	1.000E+00	0.000E+00	---	S1(1)
R012	Concentration in groundwater (pCi/L): Cs-137	not used	0.000E+00	---	W1(1)
R013	Cover depth (m)	0.000E+00	0.000E+00	---	COVER0
R013	Density of cover material (g/cm**3)	not used	1.500E+00	---	DENSCV
R013	Cover depth erosion rate (m/yr)	not used	1.000E-03	---	VCV
R013	Density of contaminated zone (g/cm**3)	1.520E+00	1.500E+00	---	DENSCZ
R013	Contaminated zone erosion rate (m/yr)	1.000E-03	1.000E-03	---	VCZ
R013	Contaminated zone total porosity	4.500E-01	4.000E-01	---	TPCZ
R013	Contaminated zone field capacity	2.000E-01	2.000E-01	---	FCCZ
R013	Contaminated zone hydraulic conductivity (m/yr)	2.700E+02	1.000E+01	---	HCCZ
R013	Contaminated zone b parameter	7.120E+00	5.300E+00	---	BCZ
R013	Average annual wind speed (m/sec)	2.000E+00	2.000E+00	---	WIND
R013	Humidity in air (g/m**3)	not used	8.000E+00	---	HUMID
R013	Evapotranspiration coefficient	5.000E-01	5.000E-01	---	EVAPTR
R013	Precipitation (m/yr)	8.600E-01	1.000E+00	---	PRECIP
R013	Irrigation (m/yr)	1.040E+00	2.000E-01	---	RI
R013	Irrigation mode	overhead	overhead	---	IDITCH
R013	Runoff coefficient	3.000E-01	2.000E-01	---	RUNOFF
R013	Watershed area for nearby stream or pond (m**2)	1.000E+06	1.000E+06	---	WAREA
R013	Accuracy for water/soil computations	1.000E-03	1.000E-03	---	EPS
R014	Density of saturated zone (g/cm**3)	1.520E+00	1.500E+00	---	DENSAQ
R014	Saturated zone total porosity	4.500E-01	4.000E-01	---	TPSZ
R014	Saturated zone effective porosity	2.000E-01	2.000E-01	---	EPSZ
R014	Saturated zone field capacity	2.000E-01	2.000E-01	---	FCSZ
R014	Saturated zone hydraulic conductivity (m/yr)	2.700E+02	1.000E+02	---	HCSZ
R014	Saturated zone hydraulic gradient	5.000E-03	2.000E-02	---	HGWT
R014	Saturated zone b parameter	not used	5.300E+00	---	BSZ
R014	Water table drop rate (m/yr)	0.000E+00	1.000E-03	---	VWT
R014	Well pump intake depth (m below water table)	8.000E+00	1.000E+01	---	DWIBWT
R014	Model: Nondispersion (ND) or Mass-Balance (MB)	ND	ND	---	MODEL
R014	Well pumping rate (m**3/yr)	1.180E+02	2.500E+02	---	UW
R015	Number of unsaturated zone strata	1	1	---	NS

Site-Specific Parameter Summary (continued)

Menu	Parameter	User Input	Default	Used by RESRAD (If different from user input)	Parameter Name
R015	Unsat. zone 1, thickness (m)	3.000E+00	4.000E+00	---	H(1)
R015	Unsat. zone 1, soil density (g/cm**3)	1.520E+00	1.500E+00	---	DENSUZ(1)
R015	Unsat. zone 1, total porosity	4.500E-01	4.000E-01	---	TPUZ(1)
R015	Unsat. zone 1, effective porosity	2.000E-01	2.000E-01	---	EPUZ(1)
R015	Unsat. zone 1, field capacity	2.000E-01	2.000E-01	---	FCUZ(1)
R015	Unsat. zone 1, soil-specific b parameter	7.130E+00	5.300E+00	---	BUZ(1)
R015	Unsat. zone 1, hydraulic conductivity (m/yr)	2.700E+02	1.000E+01	---	HCUZ(1)
R016	Distribution coefficients for Cs-137				
R016	Contaminated zone (cm**3/g)	4.470E+02	4.600E+03	---	DCNUCC(1)
R016	Unsaturated zone 1 (cm**3/g)	4.470E+02	4.600E+03	---	DCNUCU(1,1)
R016	Saturated zone (cm**3/g)	4.470E+02	4.600E+03	---	DCNUCS(1)
R016	Leach rate (/yr)	0.000E+00	0.000E+00	1.589E-02	ALEACH(1)
R016	Solubility constant	0.000E+00	0.000E+00	not used	SOLUBK(1)
R017	Inhalation rate (m**3/yr)	8.400E+03	8.400E+03	---	INHALR
R017	Mass loading for inhalation (g/m**3)	6.000E-06	1.000E-04	---	MLINH
R017	Exposure duration	3.652E+02	3.000E+01	---	ED
R017	Shielding factor, inhalation	4.000E-01	4.000E-01	---	SHF3
R017	Shielding factor, external gamma	4.700E-01	7.000E-01	---	SHF1
R017	Fraction of time spent indoors	0.000E+00	5.000E-01	---	FIND
R017	Fraction of time spent outdoors (on site)	1.140E-02	2.500E-01	---	FOTD
R017	Shape factor flag, external gamma	1.000E+00	1.000E+00	>0 shows circular AREA.	FS
R017	Radii of shape factor array (used if FS = -1):				
R017	Outer annular radius (m), ring 1:	not used	5.000E+01	---	RAD_SHAPE(1)
R017	Outer annular radius (m), ring 2:	not used	7.071E+01	---	RAD_SHAPE(2)
R017	Outer annular radius (m), ring 3:	not used	0.000E+00	---	RAD_SHAPE(3)
R017	Outer annular radius (m), ring 4:	not used	0.000E+00	---	RAD_SHAPE(4)
R017	Outer annular radius (m), ring 5:	not used	0.000E+00	---	RAD_SHAPE(5)
R017	Outer annular radius (m), ring 6:	not used	0.000E+00	---	RAD_SHAPE(6)
R017	Outer annular radius (m), ring 7:	not used	0.000E+00	---	RAD_SHAPE(7)
R017	Outer annular radius (m), ring 8:	not used	0.000E+00	---	RAD_SHAPE(8)
R017	Outer annular radius (m), ring 9:	not used	0.000E+00	---	RAD_SHAPE(9)
R017	Outer annular radius (m), ring 10:	not used	0.000E+00	---	RAD_SHAPE(10)
R017	Outer annular radius (m), ring 11:	not used	0.000E+00	---	RAD_SHAPE(11)
R017	Outer annular radius (m), ring 12:	not used	0.000E+00	---	RAD_SHAPE(12)

Site-Specific Parameter Summary (continued)

Menu	Parameter	User Input	Default	Used by RESRAD (If different from user input)	Parameter Name
R017	Fractions of annular areas within AREA:				
R017	Ring 1	not used	1.000E+00	---	FRACA(1)
R017	Ring 2	not used	2.732E-01	---	FRACA(2)
R017	Ring 3	not used	0.000E+00	---	FRACA(3)
R017	Ring 4	not used	0.000E+00	---	FRACA(4)
R017	Ring 5	not used	0.000E+00	---	FRACA(5)
R017	Ring 6	not used	0.000E+00	---	FRACA(6)
R017	Ring 7	not used	0.000E+00	---	FRACA(7)
R017	Ring 8	not used	0.000E+00	---	FRACA(8)
R017	Ring 9	not used	0.000E+00	---	FRACA(9)
R017	Ring 10	not used	0.000E+00	---	FRACA(10)
R017	Ring 11	not used	0.000E+00	---	FRACA(11)
R017	Ring 12	not used	0.000E+00	---	FRACA(12)
R018	Fruits, vegetables and grain consumption (kg/yr)	7.800E+01	1.600E+02	---	DIET(1)
R018	Leafy vegetable consumption (kg/yr)	1.500E+01	1.400E+01	---	DIET(2)
R018	Milk consumption (L/yr)	1.180E+02	9.200E+01	---	DIET(3)
R018	Meat and poultry consumption (kg/yr)	5.200E+01	6.300E+01	---	DIET(4)
R018	Fish consumption (kg/yr)	1.600E+01	5.400E+00	---	DIET(5)
R018	Other seafood consumption (kg/yr)	0.000E+00	9.000E-01	---	DIET(6)
R018	Soil ingestion rate (g/yr)	1.830E+01	3.650E+01	---	SOIL
R018	Drinking water intake (L/yr)	4.780E+02	5.100E+02	---	DWI
R018	Contamination fraction of drinking water	1.000E+00	1.000E+00	---	FDW
R018	Contamination fraction of household water	not used	1.000E+00	---	FHHW
R018	Contamination fraction of livestock water	1.000E+00	1.000E+00	---	FLW
R018	Contamination fraction of irrigation water	1.000E+00	1.000E+00	---	FIRW
R018	Contamination fraction of aquatic food	5.000E-01	5.000E-01	---	FR9
R018	Contamination fraction of plant food	5.000E-01	-1	---	FPLANT
R018	Contamination fraction of meat	1.000E+00	-1	---	FMEAT
R018	Contamination fraction of milk	1.000E+00	-1	---	FMILK
R019	Livestock fodder intake for meat (kg/day)	8.500E+00	6.800E+01	---	LFI5
R019	Livestock fodder intake for milk (kg/day)	1.700E+01	5.500E+01	---	LFI6
R019	Livestock water intake for meat (L/day)	5.000E+01	5.000E+01	---	LWI5
R019	Livestock water intake for milk (L/day)	1.600E+02	1.600E+02	---	LWI6
R019	Livestock soil intake (kg/day)	5.000E-01	5.000E-01	---	LSI
R019	Mass loading for foliar deposition (g/m**3)	1.000E-04	1.000E-04	---	MLFD
R019	Depth of soil mixing layer (m)	1.500E-01	1.500E-01	---	DM
R019	Depth of roots (m)	9.000E-01	9.000E-01	---	DROOT
R019	Drinking water fraction from ground water	1.000E+00	1.000E+00	---	FGWDW
R019	Household water fraction from ground water	not used	1.000E+00	---	FGWHH
R019	Livestock water fraction from ground water	1.000E+00	1.000E+00	---	FGWLW
R019	Irrigation fraction from ground water	1.000E+00	1.000E+00	---	FGWIR
R19B	Wet weight crop yield for Non-Leafy (kg/m**2)	7.000E-01	7.000E-01	---	YV(1)
R19B	Wet weight crop yield for Leafy (kg/m**2)	1.500E+00	1.500E+00	---	YV(2)
R19B	Wet weight crop yield for Fodder (kg/m**2)	1.100E+00	1.100E+00	---	YV(3)
R19B	Growing Season for Non-Leafy (years)	1.700E-01	1.700E-01	---	TE(1)
R19B	Growing Season for Leafy (years)	2.500E-01	2.500E-01	---	TE(2)
R19B	Growing Season for Fodder (years)	8.000E-02	8.000E-02	---	TE(3)

Site-Specific Parameter Summary (continued)

Menu	Parameter	User Input	Default	Used by RESRAD (If different from user input)	Parameter Name
R19B	Translocation Factor for Non-Leafy	1.000E-01	1.000E-01	---	TIV(1)
R19B	Translocation Factor for Leafy	1.000E+00	1.000E+00	---	TIV(2)
R19B	Translocation Factor for Fodder	1.000E+00	1.000E+00	---	TIV(3)
R19B	Dry Foliar Interception Fraction for Non-Leafy	2.500E-01	2.500E-01	---	RDRY(1)
R19B	Dry Foliar Interception Fraction for Leafy	2.500E-01	2.500E-01	---	RDRY(2)
R19B	Dry Foliar Interception Fraction for Fodder	2.500E-01	2.500E-01	---	RDRY(3)
R19B	Wet Foliar Interception Fraction for Non-Leafy	2.500E-01	2.500E-01	---	RWET(1)
R19B	Wet Foliar Interception Fraction for Leafy	2.500E-01	2.500E-01	---	RWET(2)
R19B	Wet Foliar Interception Fraction for Fodder	2.500E-01	2.500E-01	---	RWET(3)
R19B	Weathering Removal Constant for Vegetation	2.000E+01	2.000E+01	---	WLAM
C14	C-12 concentration in water (g/cm**3)	not used	2.000E-05	---	C12WTR
C14	C-12 concentration in contaminated soil (g/g)	not used	3.000E-02	---	C12CZ
C14	Fraction of vegetation carbon from soil	not used	2.000E-02	---	CSOIL
C14	Fraction of vegetation carbon from air	not used	9.800E-01	---	CAIR
C14	C-14 evasion layer thickness in soil (m)	not used	3.000E-01	---	DMC
C14	C-14 evasion flux rate from soil (1/sec)	not used	7.000E-07	---	EVSN
C14	C-12 evasion flux rate from soil (1/sec)	not used	1.000E-10	---	REVSN
C14	Fraction of grain in beef cattle feed	not used	8.000E-01	---	AVFG4
C14	Fraction of grain in milk cow feed	not used	2.000E-01	---	AVFG5
STOR	Storage times of contaminated foodstuffs (days):				
STOR	Fruits, non-leafy vegetables, and grain	1.400E+01	1.400E+01	---	STOR_T(1)
STOR	Leafy vegetables	1.000E+00	1.000E+00	---	STOR_T(2)
STOR	Milk	1.000E+00	1.000E+00	---	STOR_T(3)
STOR	Meat and poultry	2.000E+01	2.000E+01	---	STOR_T(4)
STOR	Fish	7.000E+00	7.000E+00	---	STOR_T(5)
STOR	Crustacea and mollusks	7.000E+00	7.000E+00	---	STOR_T(6)
STOR	Well water	1.000E+00	1.000E+00	---	STOR_T(7)
STOR	Surface water	1.000E+00	1.000E+00	---	STOR_T(8)
STOR	Livestock fodder	4.500E+01	4.500E+01	---	STOR_T(9)
R021	Thickness of building foundation (m)	not used	1.500E-01	---	FLOOR1
R021	Bulk density of building foundation (g/cm**3)	not used	2.400E+00	---	DENSFL
R021	Total porosity of the cover material	not used	4.000E-01	---	TPCV
R021	Total porosity of the building foundation	not used	1.000E-01	---	TPFL
R021	Volumetric water content of the cover material	not used	5.000E-02	---	PH2OCV
R021	Volumetric water content of the foundation	not used	3.000E-02	---	PH2OFL
R021	Diffusion coefficient for radon gas (m/sec):				
R021	in cover material	not used	2.000E-06	---	DIFCV
R021	in foundation material	not used	3.000E-07	---	DIFFL
R021	in contaminated zone soil	not used	2.000E-06	---	DIFCZ
R021	Radon vertical dimension of mixing (m)	not used	2.000E+00	---	HMIX
R021	Average building air exchange rate (1/hr)	not used	5.000E-01	---	REXG
R021	Height of the building (room) (m)	not used	2.500E+00	---	HRM
R021	Building interior area factor	not used	0.000E+00	---	FAI
R021	Building depth below ground surface (m)	not used	-1.000E+00	---	DMFL
R021	Emanating power of Rn-222 gas	not used	2.500E-01	---	EMANA(1)
R021	Emanating power of Rn-220 gas	not used	1.500E-01	---	EMANA(2)
TITL	Number of graphical time points	32	---	---	NPTS

Site-Specific Parameter Summary (continued)

Menu	Parameter	User Input	Default	Used by RESRAD (If different from user input)	Parameter Name
TITL	Maximum number of integration points for dose	17	---	---	LYMAX
TITL	Maximum number of integration points for risk	1	---	---	KYMAX

Summary of Pathway Selections

Pathway	User Selection
1 -- external gamma	active
2 -- inhalation (w/o radon)	active
3 -- plant ingestion	active
4 -- meat ingestion	active
5 -- milk ingestion	active
6 -- aquatic foods	active
7 -- drinking water	active
8 -- soil ingestion	active
9 -- radon	suppressed
Find peak pathway doses	active

Contaminated Zone Dimensions		Initial Soil Concentrations, pCi/g	
Area:	286.00 square meters	Cs-137	1.000E+00
Thickness:	0.08 meters		
Cover Depth:	0.00 meters		

Total Dose TDOSE(t), mrem/yr
Basic Radiation Dose Limit = 2.500E+01 mrem/yr
Total Mixture Sum M(t) = Fraction of Basic Dose Limit Received at Time (t)

t (years):	0.000E+00	1.000E+00	3.000E+00	1.000E+01	3.000E+01	1.000E+02	3.000E+02	1.000E+03
TDOSE(t):	6.522E-02	6.202E-02	5.605E-02	3.913E-02	1.301E-02	0.000E+00	0.000E+00	0.000E+00
M(t):	2.609E-03	2.481E-03	2.242E-03	1.565E-03	5.205E-04	0.000E+00	0.000E+00	0.000E+00

Maximum TDOSE(t): 6.522E-02 mrem/yr at t = 0.000E+00 years

Total Dose Contributions TDOSE(i,p,t) for Individual Radionuclides (i) and Pathways (p)
As mrem/yr and Fraction of Total Dose At t = 0.000E+00 years

Water Independent Pathways (Inhalation excludes radon)

Radio-	Ground		Inhalation		Radon		Plant		Meat		Milk		Soil	
Nuclide	mrem/yr	fract.	mrem/yr	fract.	mrem/yr	fract.	mrem/yr	fract.	mrem/yr	fract.	mrem/yr	fract.	mrem/yr	frac
Cs-137	2.178E-02	0.3339	1.057E-09	0.0000	0.000E+00	0.0000	7.660E-03	0.1175	2.147E-02	0.3293	1.430E-02	0.2193	1.473E-06	0.00
Total	2.178E-02	0.3339	1.057E-09	0.0000	0.000E+00	0.0000	7.660E-03	0.1175	2.147E-02	0.3293	1.430E-02	0.2193	1.473E-06	0.00

Total Dose Contributions TDOSE(i,p,t) for Individual Radionuclides (i) and Pathways (p)
As mrem/yr and Fraction of Total Dose At t = 0.000E+00 years

Water Dependent Pathways

Radio-	Water		Fish		Radon		Plant		Meat		Milk		All Pathways	
Nuclide	mrem/yr	fract.	mrem/yr	fract.	mrem/yr	fract.	mrem/yr	fract.	mrem/yr	fract.	mrem/yr	fract.	mrem/yr	frac
Cs-137	0.000E+00	0.0000	0.000E+00	0.0000	0.000E+00	0.0000	0.000E+00	0.0000	0.000E+00	0.0000	0.000E+00	0.0000	6.522E-02	1.00
Total	0.000E+00	0.0000	0.000E+00	0.0000	0.000E+00	0.0000	0.000E+00	0.0000	0.000E+00	0.0000	0.000E+00	0.0000	6.522E-02	1.00

*Sum of all water independent and dependent pathways.

Probabilistic Input

Number of Sample Runs: 300

Number	Name	Distribution	Parameters			
1	AREA	TRIANGULAR	50	286	1000	
2	THICK0	NORMAL	.076	.5		
3	DENSCZ	TRUNCATED NORMAL	1.52	.23	.001	.999

Probabilistic Total Dose Summary

Nuclide (j)	Peak Time	Peak Dose	t= 0.00E+00	1.00E+00	3.00E+00	1.00E+01	3.00E+01	1.00E+02	3.00E+02	1.00E+03
			DOSE(j,t), mrem/yr							
Cs-137										
Min	0.00E+00	0.00E+00	0.00E+00	0.00E+00	0.00E+00	0.00E+00	0.00E+00	0.00E+00	0.00E+00	0.00E+00
Max	0.00E+00	2.45E-01	2.45E-01	2.40E-01	2.28E-01	1.93E-01	1.20E-01	2.27E-02	1.94E-04	1.02E-11
Avg	0.00E+00	8.60E-02	8.60E-02	8.36E-02	7.89E-02	6.46E-02	3.69E-02	5.40E-03	2.48E-05	1.15E-13
Std	0.00E+00	8.87E-02	8.87E-02	8.65E-02	8.22E-02	6.87E-02	4.13E-02	6.99E-03	4.47E-05	7.87E-13
∑ALL										
Min	0.00E+00	0.00E+00	0.00E+00	0.00E+00	0.00E+00	0.00E+00	0.00E+00	0.00E+00	0.00E+00	0.00E+00
Max	0.00E+00	2.45E-01	2.45E-01	2.40E-01	2.28E-01	1.93E-01	1.20E-01	2.27E-02	1.94E-04	1.02E-11
Avg	0.00E+00	8.60E-02	8.60E-02	8.36E-02	7.89E-02	6.46E-02	3.69E-02	5.40E-03	2.48E-05	1.15E-13
Std	0.00E+00	8.87E-02	8.87E-02	8.65E-02	8.22E-02	6.87E-02	4.13E-02	6.99E-03	4.47E-05	7.87E-13

∑ALL is total dose summed for all nuclides.

Title : Pentolite Ditch Crossover BP2-1 Intruder w Unit Cs-137
Input File : C:\RESRAD_FAMILY\RESRAD\USERFILES\PBRF BP\06191204.RAD

Coefficients for peak of mean dose time Dose

Coefficient =	PCC		SRC		PRCC		SRRC	
Repetition =	1		1		1		1	
Description of Probabilistic Variable	Sig	Coeff	Sig	Coeff	Sig	Coeff	Sig	Coeff
Area of contaminated zone	2	0.17	2	0.07	2	0.13	2	0.04
Thickness of contaminated zone	1	0.91	1	0.91	1	0.96	1	0.96
Density of contaminated zone	3	0.03	3	0.01	3	0.07	3	0.02
R-SQUARE		0.83		0.83		0.92		0.92

-Rank is set to zero if the dose is zero or the correlation matrix is singular.
-R-SQUARE varies between 0 and 1 and is called the coefficient of determination; it provides a measure of the variation in the dependent variable (Dose) explained by regression on the independent variables.

Table of Contents

Part I: Mixture Sums and Single Radionuclide Guidelines

Dose Conversion Factor (and Related) Parameter Summary
Dose Library: FGR 11

Menu	Parameter	Current Value#	Base Case*	Parameter Name
A-1	DCF's for external ground radiation, (mrem/yr)/(pCi/g)			
A-1	Co-60 (Source: FGR 12)	1.622E+01	1.622E+01	DCF1(1)
B-1	Dose conversion factors for inhalation, mrem/pCi:			
B-1	Co-60	2.190E-04	2.190E-04	DCF2(1)
D-1	Dose conversion factors for ingestion, mrem/pCi:			
D-1	Co-60	2.690E-05	2.690E-05	DCF3(1)
D-34	Food transfer factors:			
D-34	Co-60 , plant/soil concentration ratio, dimensionless	8.000E-02	8.000E-02	RTF(1,1)
D-34	Co-60 , beef/livestock-intake ratio, (pCi/kg)/(pCi/d)	2.000E-02	2.000E-02	RTF(1,2)
D-34	Co-60 , milk/livestock-intake ratio, (pCi/L)/(pCi/d)	2.000E-03	2.000E-03	RTF(1,3)
D-5	Bioaccumulation factors, fresh water, L/kg:			
D-5	Co-60 , fish	3.000E+02	3.000E+02	BIOFAC(1,1)
D-5	Co-60 , crustacea and mollusks	2.000E+02	2.000E+02	BIOFAC(1,2)

#For DCF1(xxx) only, factors are for infinite depth & area. See ETFG table in Ground Pathway of Detailed Report.
*Base Case means Default.Lib w/o Associate Nuclide contributions.

Site-Specific Parameter Summary

Menu	Parameter	User Input	Default	Used by RESRAD (If different from user input)	Parameter Name
R011	Area of contaminated zone (m**2)	2.860E+02	1.000E+04	---	AREA
R011	Thickness of contaminated zone (m)	7.600E-02	2.000E+00	---	THICK0
R011	Length parallel to aquifer flow (m)	2.290E+01	1.000E+02	---	LCZPAQ
R011	Basic radiation dose limit (mrem/yr)	2.500E+01	3.000E+01	---	BRDL
R011	Time since placement of material (yr)	0.000E+00	0.000E+00	---	TI
R011	Times for calculations (yr)	1.000E+00	1.000E+00	---	T(2)
R011	Times for calculations (yr)	3.000E+00	3.000E+00	---	T(3)
R011	Times for calculations (yr)	1.000E+01	1.000E+01	---	T(4)
R011	Times for calculations (yr)	3.000E+01	3.000E+01	---	T(5)
R011	Times for calculations (yr)	1.000E+02	1.000E+02	---	T(6)
R011	Times for calculations (yr)	3.000E+02	3.000E+02	---	T(7)
R011	Times for calculations (yr)	1.000E+03	1.000E+03	---	T(8)
R011	Times for calculations (yr)	not used	0.000E+00	---	T(9)
R011	Times for calculations (yr)	not used	0.000E+00	---	T(10)
R012	Initial principal radionuclide (pCi/g): Co-60	1.000E+00	0.000E+00	---	S1(1)
R012	Concentration in groundwater (pCi/L): Co-60	not used	0.000E+00	---	W1(1)
R013	Cover depth (m)	0.000E+00	0.000E+00	---	COVER0
R013	Density of cover material (g/cm**3)	not used	1.500E+00	---	DENSCV
R013	Cover depth erosion rate (m/yr)	not used	1.000E-03	---	VCV
R013	Density of contaminated zone (g/cm**3)	1.520E+00	1.500E+00	---	DENSCZ
R013	Contaminated zone erosion rate (m/yr)	1.000E-03	1.000E-03	---	VCZ
R013	Contaminated zone total porosity	4.500E-01	4.000E-01	---	TPCZ
R013	Contaminated zone field capacity	2.000E-01	2.000E-01	---	FCCZ
R013	Contaminated zone hydraulic conductivity (m/yr)	2.700E+02	1.000E+01	---	HCCZ
R013	Contaminated zone b parameter	7.120E+00	5.300E+00	---	BCZ
R013	Average annual wind speed (m/sec)	2.000E+00	2.000E+00	---	WIND
R013	Humidity in air (g/m**3)	not used	8.000E+00	---	HUMID
R013	Evapotranspiration coefficient	5.000E-01	5.000E-01	---	EVAPTR
R013	Precipitation (m/yr)	8.600E-01	1.000E+00	---	PRECIP
R013	Irrigation (m/yr)	1.040E+00	2.000E-01	---	RI
R013	Irrigation mode	overhead	overhead	---	IDITCH
R013	Runoff coefficient	3.000E-01	2.000E-01	---	RUNOFF
R013	Watershed area for nearby stream or pond (m**2)	1.000E+06	1.000E+06	---	WAREA
R013	Accuracy for water/soil computations	1.000E-03	1.000E-03	---	EPS
R014	Density of saturated zone (g/cm**3)	1.520E+00	1.500E+00	---	DENSAQ
R014	Saturated zone total porosity	4.500E-01	4.000E-01	---	TPSZ
R014	Saturated zone effective porosity	2.000E-01	2.000E-01	---	EPSZ
R014	Saturated zone field capacity	2.000E-01	2.000E-01	---	FCSZ
R014	Saturated zone hydraulic conductivity (m/yr)	2.700E+02	1.000E+02	---	HCSZ
R014	Saturated zone hydraulic gradient	5.000E-03	2.000E-02	---	HGWT
R014	Saturated zone b parameter	not used	5.300E+00	---	BSZ
R014	Water table drop rate (m/yr)	0.000E+00	1.000E-03	---	VWT
R014	Well pump intake depth (m below water table)	8.000E+00	1.000E+01	---	DWIBWT
R014	Model: Nondispersion (ND) or Mass-Balance (MB)	ND	ND	---	MODEL
R014	Well pumping rate (m**3/yr)	1.180E+02	2.500E+02	---	UW
R015	Number of unsaturated zone strata	1	1	---	NS

Site-Specific Parameter Summary (continued)

Menu	Parameter	User Input	Default	Used by RESRAD (If different from user input)	Parameter Name
R015	Unsat. zone 1, thickness (m)	3.000E+00	4.000E+00	---	H(1)
R015	Unsat. zone 1, soil density (g/cm**3)	1.520E+00	1.500E+00	---	DENSUZ(1)
R015	Unsat. zone 1, total porosity	4.500E-01	4.000E-01	---	TPUZ(1)
R015	Unsat. zone 1, effective porosity	2.000E-01	2.000E-01	---	EPUZ(1)
R015	Unsat. zone 1, field capacity	2.000E-01	2.000E-01	---	FCUZ(1)
R015	Unsat. zone 1, soil-specific b parameter	7.130E+00	5.300E+00	---	BUZ(1)
R015	Unsat. zone 1, hydraulic conductivity (m/yr)	2.700E+02	1.000E+01	---	HCUZ(1)
R016	Distribution coefficients for Co-60				
R016	Contaminated zone (cm**3/g)	1.000E+03	1.000E+03	---	DCNUCC(1)
R016	Unsaturated zone 1 (cm**3/g)	1.000E+03	1.000E+03	---	DCNUCU(1,1)
R016	Saturated zone (cm**3/g)	1.000E+03	1.000E+03	---	DCNUCS(1)
R016	Leach rate (/yr)	0.000E+00	0.000E+00	7.105E-03	ALEACH(1)
R016	Solubility constant	0.000E+00	0.000E+00	not used	SOLUBK(1)
R017	Inhalation rate (m**3/yr)	8.400E+03	8.400E+03	---	INHALR
R017	Mass loading for inhalation (g/m**3)	6.000E-06	1.000E-04	---	MLINH
R017	Exposure duration	3.652E+02	3.000E+01	---	ED
R017	Shielding factor, inhalation	4.000E-01	4.000E-01	---	SHF3
R017	Shielding factor, external gamma	4.700E-01	7.000E-01	---	SHF1
R017	Fraction of time spent indoors	0.000E+00	5.000E-01	---	FIND
R017	Fraction of time spent outdoors (on site)	1.140E-02	2.500E-01	---	FOTD
R017	Shape factor flag, external gamma	1.000E+00	1.000E+00	>0 shows circular AREA.	FS
R017	Radii of shape factor array (used if FS = -1):				
R017	Outer annular radius (m), ring 1:	not used	5.000E+01	---	RAD_SHAPE(1)
R017	Outer annular radius (m), ring 2:	not used	7.071E+01	---	RAD_SHAPE(2)
R017	Outer annular radius (m), ring 3:	not used	0.000E+00	---	RAD_SHAPE(3)
R017	Outer annular radius (m), ring 4:	not used	0.000E+00	---	RAD_SHAPE(4)
R017	Outer annular radius (m), ring 5:	not used	0.000E+00	---	RAD_SHAPE(5)
R017	Outer annular radius (m), ring 6:	not used	0.000E+00	---	RAD_SHAPE(6)
R017	Outer annular radius (m), ring 7:	not used	0.000E+00	---	RAD_SHAPE(7)
R017	Outer annular radius (m), ring 8:	not used	0.000E+00	---	RAD_SHAPE(8)
R017	Outer annular radius (m), ring 9:	not used	0.000E+00	---	RAD_SHAPE(9)
R017	Outer annular radius (m), ring 10:	not used	0.000E+00	---	RAD_SHAPE(10)
R017	Outer annular radius (m), ring 11:	not used	0.000E+00	---	RAD_SHAPE(11)
R017	Outer annular radius (m), ring 12:	not used	0.000E+00	---	RAD_SHAPE(12)

Site-Specific Parameter Summary (continued)

Menu	Parameter	User Input	Default	Used by RESRAD (If different from user input)	Parameter Name
R017	Fractions of annular areas within AREA:				
R017	Ring 1	not used	1.000E+00	---	FRACA(1)
R017	Ring 2	not used	2.732E-01	---	FRACA(2)
R017	Ring 3	not used	0.000E+00	---	FRACA(3)
R017	Ring 4	not used	0.000E+00	---	FRACA(4)
R017	Ring 5	not used	0.000E+00	---	FRACA(5)
R017	Ring 6	not used	0.000E+00	---	FRACA(6)
R017	Ring 7	not used	0.000E+00	---	FRACA(7)
R017	Ring 8	not used	0.000E+00	---	FRACA(8)
R017	Ring 9	not used	0.000E+00	---	FRACA(9)
R017	Ring 10	not used	0.000E+00	---	FRACA(10)
R017	Ring 11	not used	0.000E+00	---	FRACA(11)
R017	Ring 12	not used	0.000E+00	---	FRACA(12)
R018	Fruits, vegetables and grain consumption (kg/yr)	7.800E+01	1.600E+02	---	DIET(1)
R018	Leafy vegetable consumption (kg/yr)	1.500E+01	1.400E+01	---	DIET(2)
R018	Milk consumption (L/yr)	1.180E+02	9.200E+01	---	DIET(3)
R018	Meat and poultry consumption (kg/yr)	5.200E+01	6.300E+01	---	DIET(4)
R018	Fish consumption (kg/yr)	1.600E+01	5.400E+00	---	DIET(5)
R018	Other seafood consumption (kg/yr)	0.000E+00	9.000E-01	---	DIET(6)
R018	Soil ingestion rate (g/yr)	1.830E+01	3.650E+01	---	SOIL
R018	Drinking water intake (L/yr)	4.780E+02	5.100E+02	---	DWI
R018	Contamination fraction of drinking water	1.000E+00	1.000E+00	---	FDW
R018	Contamination fraction of household water	not used	1.000E+00	---	FHHW
R018	Contamination fraction of livestock water	1.000E+00	1.000E+00	---	FLW
R018	Contamination fraction of irrigation water	1.000E+00	1.000E+00	---	FIRW
R018	Contamination fraction of aquatic food	5.000E-01	5.000E-01	---	FR9
R018	Contamination fraction of plant food	5.000E-01	-1	---	FPLANT
R018	Contamination fraction of meat	1.000E+00	-1	---	FMEAT
R018	Contamination fraction of milk	1.000E+00	-1	---	FMILK
R019	Livestock fodder intake for meat (kg/day)	8.500E+00	6.800E+01	---	LFI5
R019	Livestock fodder intake for milk (kg/day)	1.700E+01	5.500E+01	---	LFI6
R019	Livestock water intake for meat (L/day)	5.000E+01	5.000E+01	---	LWI5
R019	Livestock water intake for milk (L/day)	1.600E+02	1.600E+02	---	LWI6
R019	Livestock soil intake (kg/day)	5.000E-01	5.000E-01	---	LSI
R019	Mass loading for foliar deposition (g/m**3)	1.000E-04	1.000E-04	---	MLFD
R019	Depth of soil mixing layer (m)	1.500E-01	1.500E-01	---	DM
R019	Depth of roots (m)	9.000E-01	9.000E-01	---	DROOT
R019	Drinking water fraction from ground water	1.000E+00	1.000E+00	---	FGWDW
R019	Household water fraction from ground water	not used	1.000E+00	---	FGWHH
R019	Livestock water fraction from ground water	1.000E+00	1.000E+00	---	FGWLW
R019	Irrigation fraction from ground water	1.000E+00	1.000E+00	---	FGWIR
R19B	Wet weight crop yield for Non-Leafy (kg/m**2)	7.000E-01	7.000E-01	---	YV(1)
R19B	Wet weight crop yield for Leafy (kg/m**2)	1.500E+00	1.500E+00	---	YV(2)
R19B	Wet weight crop yield for Fodder (kg/m**2)	1.100E+00	1.100E+00	---	YV(3)
R19B	Growing Season for Non-Leafy (years)	1.700E-01	1.700E-01	---	TE(1)
R19B	Growing Season for Leafy (years)	2.500E-01	2.500E-01	---	TE(2)
R19B	Growing Season for Fodder (years)	8.000E-02	8.000E-02	---	TE(3)

Site-Specific Parameter Summary (continued)

Menu	Parameter	User Input	Default	Used by RESRAD (If different from user input)	Parameter Name
R19B	Translocation Factor for Non-Leafy	1.000E-01	1.000E-01	---	TIV(1)
R19B	Translocation Factor for Leafy	1.000E+00	1.000E+00	---	TIV(2)
R19B	Translocation Factor for Fodder	1.000E+00	1.000E+00	---	TIV(3)
R19B	Dry Foliar Interception Fraction for Non-Leafy	2.500E-01	2.500E-01	---	RDRY(1)
R19B	Dry Foliar Interception Fraction for Leafy	2.500E-01	2.500E-01	---	RDRY(2)
R19B	Dry Foliar Interception Fraction for Fodder	2.500E-01	2.500E-01	---	RDRY(3)
R19B	Wet Foliar Interception Fraction for Non-Leafy	2.500E-01	2.500E-01	---	RWET(1)
R19B	Wet Foliar Interception Fraction for Leafy	2.500E-01	2.500E-01	---	RWET(2)
R19B	Wet Foliar Interception Fraction for Fodder	2.500E-01	2.500E-01	---	RWET(3)
R19B	Weathering Removal Constant for Vegetation	2.000E+01	2.000E+01	---	WLAM
C14	C-12 concentration in water (g/cm**3)	not used	2.000E-05	---	C12WTR
C14	C-12 concentration in contaminated soil (g/g)	not used	3.000E-02	---	C12CZ
C14	Fraction of vegetation carbon from soil	not used	2.000E-02	---	CSOIL
C14	Fraction of vegetation carbon from air	not used	9.800E-01	---	CAIR
C14	C-14 evasion layer thickness in soil (m)	not used	3.000E-01	---	DMC
C14	C-14 evasion flux rate from soil (1/sec)	not used	7.000E-07	---	EVSN
C14	C-12 evasion flux rate from soil (1/sec)	not used	1.000E-10	---	REVSN
C14	Fraction of grain in beef cattle feed	not used	8.000E-01	---	AVFG4
C14	Fraction of grain in milk cow feed	not used	2.000E-01	---	AVFG5
STOR	Storage times of contaminated foodstuffs (days):				
STOR	Fruits, non-leafy vegetables, and grain	1.400E+01	1.400E+01	---	STOR_T(1)
STOR	Leafy vegetables	1.000E+00	1.000E+00	---	STOR_T(2)
STOR	Milk	1.000E+00	1.000E+00	---	STOR_T(3)
STOR	Meat and poultry	2.000E+01	2.000E+01	---	STOR_T(4)
STOR	Fish	7.000E+00	7.000E+00	---	STOR_T(5)
STOR	Crustacea and mollusks	7.000E+00	7.000E+00	---	STOR_T(6)
STOR	Well water	1.000E+00	1.000E+00	---	STOR_T(7)
STOR	Surface water	1.000E+00	1.000E+00	---	STOR_T(8)
STOR	Livestock fodder	4.500E+01	4.500E+01	---	STOR_T(9)
R021	Thickness of building foundation (m)	not used	1.500E-01	---	FLOOR1
R021	Bulk density of building foundation (g/cm**3)	not used	2.400E+00	---	DENSFL
R021	Total porosity of the cover material	not used	4.000E-01	---	TPCV
R021	Total porosity of the building foundation	not used	1.000E-01	---	TPFL
R021	Volumetric water content of the cover material	not used	5.000E-02	---	PH2OCV
R021	Volumetric water content of the foundation	not used	3.000E-02	---	PH2OFL
R021	Diffusion coefficient for radon gas (m/sec):				
R021	in cover material	not used	2.000E-06	---	DIFCV
R021	in foundation material	not used	3.000E-07	---	DIFFL
R021	in contaminated zone soil	not used	2.000E-06	---	DIFCZ
R021	Radon vertical dimension of mixing (m)	not used	2.000E+00	---	HMIX
R021	Average building air exchange rate (1/hr)	not used	5.000E-01	---	REXG
R021	Height of the building (room) (m)	not used	2.500E+00	---	HRM
R021	Building interior area factor	not used	0.000E+00	---	FAI
R021	Building depth below ground surface (m)	not used	-1.000E+00	---	DMFL
R021	Emanating power of Rn-222 gas	not used	2.500E-01	---	EMANA(1)
R021	Emanating power of Rn-220 gas	not used	1.500E-01	---	EMANA(2)
TITL	Number of graphical time points	32	---	---	NPTS

Site-Specific Parameter Summary (continued)

Menu	Parameter	User Input	Default	Used by RESRAD (If different from user input)	Parameter Name
TITL	Maximum number of integration points for dose	17	---	---	LYMAX
TITL	Maximum number of integration points for risk	1	---	---	KYMAX

Summary of Pathway Selections

Pathway	User Selection
1 -- external gamma	active
2 -- inhalation (w/o radon)	active
3 -- plant ingestion	active
4 -- meat ingestion	active
5 -- milk ingestion	active
6 -- aquatic foods	active
7 -- drinking water	active
8 -- soil ingestion	active
9 -- radon	suppressed
Find peak pathway doses	active

Contaminated Zone Dimensions	
Area:	286.00 square meters
Thickness:	0.08 meters
Cover Depth:	0.00 meters

Initial Soil Concentrations, pCi/g	
Co-60	1.000E+00

Total Dose TDOSE(t), mrem/yr
Basic Radiation Dose Limit = 2.500E+01 mrem/yr
Total Mixture Sum M(t) = Fraction of Basic Dose Limit Received at Time (t)

t (years):	0.000E+00	1.000E+00	3.000E+00	1.000E+01	3.000E+01	1.000E+02	3.000E+02	1.000E+03
TDOSE(t):	1.061E-01	9.158E-02	6.814E-02	2.409E-02	1.145E-03	0.000E+00	0.000E+00	0.000E+00
M(t):	4.246E-03	3.663E-03	2.726E-03	9.635E-04	4.578E-05	0.000E+00	0.000E+00	0.000E+00

Maximum TDOSE(t): 1.061E-01 mrem/yr at t = 0.000E+00 years

Total Dose Contributions TDOSE(i,p,t) for Individual Radionuclides (i) and Pathways (p)
As mrem/yr and Fraction of Total Dose At t = 0.000E+00 years

Water Independent Pathways (Inhalation excludes radon)

Radio-	Ground		Inhalation		Radon		Plant		Meat		Milk		Soil	
Nuclide	mrem/yr	fract.	mrem/yr	fract.	mrem/yr	fract.	mrem/yr	fract.	mrem/yr	fract.	mrem/yr	fract.	mrem/yr	frac
Co-60	8.805E-02	0.8295	6.912E-09	0.0000	0.000E+00	0.0000	7.845E-03	0.0739	8.078E-03	0.0761	2.170E-03	0.0204	7.545E-07	0.00
Total	8.805E-02	0.8295	6.912E-09	0.0000	0.000E+00	0.0000	7.845E-03	0.0739	8.078E-03	0.0761	2.170E-03	0.0204	7.545E-07	0.00

Total Dose Contributions TDOSE(i,p,t) for Individual Radionuclides (i) and Pathways (p)
As mrem/yr and Fraction of Total Dose At t = 0.000E+00 years

Water Dependent Pathways

Radio-	Water		Fish		Radon		Plant		Meat		Milk		All Pathways	
Nuclide	mrem/yr	fract.	mrem/yr	fract.	mrem/yr	fract.	mrem/yr	fract.	mrem/yr	fract.	mrem/yr	fract.	mrem/yr	frac
Co-60	0.000E+00	0.0000	0.000E+00	0.0000	0.000E+00	0.0000	0.000E+00	0.0000	0.000E+00	0.0000	0.000E+00	0.0000	1.061E-01	1.00
Total	0.000E+00	0.0000	0.000E+00	0.0000	0.000E+00	0.0000	0.000E+00	0.0000	0.000E+00	0.0000	0.000E+00	0.0000	1.061E-01	1.00

*Sum of all water independent and dependent pathways.

Probabilistic results summary : Pentolite Ditch Crossover BP2-1 Intruder w Unit Co-60 File: C:\RESRAD_FAMILY\RESRAD\USERFILES\PBRF BP\06191205.RAD

Probabilistic Input

Number of Sample Runs: 300

Number	Name	Distribution	Parameters			
1	AREA	TRIANGULAR	50	286	1000	
2	THICKO	NORMAL	.076	.5		
3	DENSCZ	TRUNCATED NORMAL	1.52	.23	.001	.999

Probabilistic Total Dose Summary

Nuclide (j)	Peak Time	Peak Dose	t= 0.00E+00	1.00E+00	3.00E+00	1.00E+01	3.00E+01	1.00E+02	3.00E+02	1.00E+03
			DOSE(j,t), mrem/yr							
Co-60										
Min	0.00E+00	0.00E+00	0.00E+00	0.00E+00	0.00E+00	0.00E+00	0.00E+00	0.00E+00	0.00E+00	0.00E+00
Max	0.00E+00	2.89E-01	2.89E-01	2.54E-01	1.95E-01	7.72E-02	5.52E-03	5.43E-07	1.93E-18	0.00E+00
Avg	0.00E+00	1.13E-01	1.13E-01	9.90E-02	7.55E-02	2.94E-02	1.98E-03	1.61E-07	3.38E-19	0.00E+00
Std	0.00E+00	1.11E-01	1.11E-01	9.76E-02	7.49E-02	2.95E-02	2.08E-03	1.91E-07	5.54E-19	0.00E+00
∑ALL										
Min	0.00E+00	0.00E+00	0.00E+00	0.00E+00	0.00E+00	0.00E+00	0.00E+00	0.00E+00	0.00E+00	0.00E+00
Max	0.00E+00	2.89E-01	2.89E-01	2.54E-01	1.95E-01	7.72E-02	5.52E-03	5.43E-07	1.93E-18	0.00E+00
Avg	0.00E+00	1.13E-01	1.13E-01	9.90E-02	7.55E-02	2.94E-02	1.98E-03	1.61E-07	3.38E-19	0.00E+00
Std	0.00E+00	1.11E-01	1.11E-01	9.76E-02	7.49E-02	2.95E-02	2.08E-03	1.91E-07	5.54E-19	0.00E+00

∑ALL is total dose summed for all nuclides.

Coefficients for peak of mean dose time Dose

Coefficient =	PCC		SRC		PRCC		SRRC	
Repetition =	1		1		1		1	
Description of Probabilistic Variable	Sig	Coeff	Sig	Coeff	Sig	Coeff	Sig	Coeff
Area of contaminated zone	2	0.18	2	0.08	2	0.20	2	0.06
Thickness of contaminated zone	1	0.90	1	0.90	1	0.96	1	0.95
Density of contaminated zone	3	0.08	3	0.03	3	0.11	3	0.03
R-SQUARE		0.81		0.81		0.92		0.92

-Rank is set to zero if the dose is zero or the correlation matrix is singular.

-R-SQUARE varies between 0 and 1 and is called the coefficient of determination; it provides a measure of the variation in the dependent variable (Dose) explained by regression on the independent variables.

Table of Contents

Part I: Mixture Sums and Single Radionuclide Guidelines

Dose Conversion Factor (and Related) Parameter Summary
Dose Library: FGR 11

Menu	Parameter	Current Value#	Base Case*	Parameter Name
A-1	DCF's for external ground radiation, (mrem/yr)/(pCi/g)			
A-1	Ba-137m (Source: FGR 12)	3.606E+00	3.606E+00	DCF1(1)
A-1	Cs-137 (Source: FGR 12)	7.510E-04	7.510E-04	DCF1(2)
B-1	Dose conversion factors for inhalation, mrem/pCi:			
B-1	Cs-137+D	3.190E-05	3.190E-05	DCF2(1)
D-1	Dose conversion factors for ingestion, mrem/pCi:			
D-1	Cs-137+D	5.000E-05	5.000E-05	DCF3(1)
D-34	Food transfer factors:			
D-34	Cs-137+D , plant/soil concentration ratio, dimensionless	4.000E-02	4.000E-02	RTF(1,1)
D-34	Cs-137+D , beef/livestock-intake ratio, (pCi/kg)/(pCi/d)	3.000E-02	3.000E-02	RTF(1,2)
D-34	Cs-137+D , milk/livestock-intake ratio, (pCi/L)/(pCi/d)	8.000E-03	8.000E-03	RTF(1,3)
D-5	Bioaccumulation factors, fresh water, L/kg:			
D-5	Cs-137+D , fish	2.000E+03	2.000E+03	BIOFAC(1,1)
D-5	Cs-137+D , crustacea and mollusks	1.000E+02	1.000E+02	BIOFAC(1,2)

#For DCF1(xxx) only, factors are for infinite depth & area. See ETFG table in Ground Pathway of Detailed Report.
*Base Case means Default.Lib w/o Associate Nuclide contributions.

Site-Specific Parameter Summary

Menu	Parameter	User Input	Default	Used by RESRAD (If different from user input)	Parameter Name
R011	Area of contaminated zone (m**2)	1.000E+00	1.000E+04	---	AREA
R011	Thickness of contaminated zone (m)	1.000E-01	2.000E+00	---	THICK0
R011	Length parallel to aquifer flow (m)	7.010E+00	1.000E+02	---	LCZPAQ
R011	Basic radiation dose limit (mrem/yr)	2.500E+01	3.000E+01	---	BRDL
R011	Time since placement of material (yr)	0.000E+00	0.000E+00	---	TI
R011	Times for calculations (yr)	1.000E+00	1.000E+00	---	T(2)
R011	Times for calculations (yr)	3.000E+00	3.000E+00	---	T(3)
R011	Times for calculations (yr)	1.000E+01	1.000E+01	---	T(4)
R011	Times for calculations (yr)	3.000E+01	3.000E+01	---	T(5)
R011	Times for calculations (yr)	1.000E+02	1.000E+02	---	T(6)
R011	Times for calculations (yr)	3.000E+02	3.000E+02	---	T(7)
R011	Times for calculations (yr)	1.000E+03	1.000E+03	---	T(8)
R011	Times for calculations (yr)	not used	0.000E+00	---	T(9)
R011	Times for calculations (yr)	not used	0.000E+00	---	T(10)
R012	Initial principal radionuclide (pCi/g): Cs-137	1.000E+00	0.000E+00	---	S1(1)
R012	Concentration in groundwater (pCi/L): Cs-137	not used	0.000E+00	---	W1(1)
R013	Cover depth (m)	1.660E+00	0.000E+00	---	COVER0
R013	Density of cover material (g/cm**3)	1.520E+00	1.500E+00	---	DENSCV
R013	Cover depth erosion rate (m/yr)	1.000E-03	1.000E-03	---	VCV
R013	Density of contaminated zone (g/cm**3)	1.520E+00	1.500E+00	---	DENSCZ
R013	Contaminated zone erosion rate (m/yr)	1.000E-03	1.000E-03	---	VCZ
R013	Contaminated zone total porosity	4.500E-01	4.000E-01	---	TPCZ
R013	Contaminated zone field capacity	2.000E-01	2.000E-01	---	FCCZ
R013	Contaminated zone hydraulic conductivity (m/yr)	2.700E+02	1.000E+01	---	HCCZ
R013	Contaminated zone b parameter	7.120E+00	5.300E+00	---	BCZ
R013	Average annual wind speed (m/sec)	2.000E+00	2.000E+00	---	WIND
R013	Humidity in air (g/m**3)	not used	8.000E+00	---	HUMID
R013	Evapotranspiration coefficient	5.000E-01	5.000E-01	---	EVAPTR
R013	Precipitation (m/yr)	8.600E-01	1.000E+00	---	PRECIP
R013	Irrigation (m/yr)	1.040E+00	2.000E-01	---	RI
R013	Irrigation mode	overhead	overhead	---	IDITCH
R013	Runoff coefficient	3.000E-01	2.000E-01	---	RUNOFF
R013	Watershed area for nearby stream or pond (m**2)	1.000E+06	1.000E+06	---	WAREA
R013	Accuracy for water/soil computations	1.000E-03	1.000E-03	---	EPS
R014	Density of saturated zone (g/cm**3)	1.520E+00	1.500E+00	---	DENSAQ
R014	Saturated zone total porosity	4.500E-01	4.000E-01	---	TPSZ
R014	Saturated zone effective porosity	2.000E-01	2.000E-01	---	EPSZ
R014	Saturated zone field capacity	2.000E-01	2.000E-01	---	FCSZ
R014	Saturated zone hydraulic conductivity (m/yr)	2.700E+02	1.000E+02	---	HCSZ
R014	Saturated zone hydraulic gradient	5.000E-03	2.000E-02	---	HGWT
R014	Saturated zone b parameter	not used	5.300E+00	---	BSZ
R014	Water table drop rate (m/yr)	0.000E+00	1.000E-03	---	VWT
R014	Well pump intake depth (m below water table)	8.000E+00	1.000E+01	---	DWIBWT
R014	Model: Nondispersion (ND) or Mass-Balance (MB)	ND	ND	---	MODEL
R014	Well pumping rate (m**3/yr)	1.180E+02	2.500E+02	---	UW
R015	Number of unsaturated zone strata	1	1	---	NS

Site-Specific Parameter Summary (continued)

Menu	Parameter	User Input	Default	Used by RESRAD (If different from user input)	Parameter Name
R015	Unsat. zone 1, thickness (m)	3.000E+00	4.000E+00	---	H(1)
R015	Unsat. zone 1, soil density (g/cm**3)	1.520E+00	1.500E+00	---	DENSUZ(1)
R015	Unsat. zone 1, total porosity	4.500E-01	4.000E-01	---	TPUZ(1)
R015	Unsat. zone 1, effective porosity	2.000E-01	2.000E-01	---	EPUZ(1)
R015	Unsat. zone 1, field capacity	2.000E-01	2.000E-01	---	FCUZ(1)
R015	Unsat. zone 1, soil-specific b parameter	7.130E+00	5.300E+00	---	BUZ(1)
R015	Unsat. zone 1, hydraulic conductivity (m/yr)	2.700E+02	1.000E+01	---	HCUZ(1)
R016	Distribution coefficients for Cs-137				
R016	Contaminated zone (cm**3/g)	4.470E+02	4.600E+03	---	DCNUCC(1)
R016	Unsaturated zone 1 (cm**3/g)	4.770E+02	4.600E+03	---	DCNUCU(1,1)
R016	Saturated zone (cm**3/g)	4.470E+02	4.600E+03	---	DCNUCS(1)
R016	Leach rate (/yr)	0.000E+00	0.000E+00	1.208E-02	ALEACH(1)
R016	Solubility constant	0.000E+00	0.000E+00	not used	SOLUBK(1)
R017	Inhalation rate (m**3/yr)	8.400E+03	8.400E+03	---	INHALR
R017	Mass loading for inhalation (g/m**3)	6.000E-06	1.000E-04	---	MLINH
R017	Exposure duration	3.652E+02	3.000E+01	---	ED
R017	Shielding factor, inhalation	4.000E-01	4.000E-01	---	SHF3
R017	Shielding factor, external gamma	4.700E-01	7.000E-01	---	SHF1
R017	Fraction of time spent indoors	6.600E-01	5.000E-01	---	FIND
R017	Fraction of time spent outdoors (on site)	1.100E-01	2.500E-01	---	FOTD
R017	Shape factor flag, external gamma	1.000E+00	1.000E+00	>0 shows circular AREA.	FS
R017	Radii of shape factor array (used if FS = -1):				
R017	Outer annular radius (m), ring 1:	not used	5.000E+01	---	RAD_SHAPE(1)
R017	Outer annular radius (m), ring 2:	not used	7.071E+01	---	RAD_SHAPE(2)
R017	Outer annular radius (m), ring 3:	not used	0.000E+00	---	RAD_SHAPE(3)
R017	Outer annular radius (m), ring 4:	not used	0.000E+00	---	RAD_SHAPE(4)
R017	Outer annular radius (m), ring 5:	not used	0.000E+00	---	RAD_SHAPE(5)
R017	Outer annular radius (m), ring 6:	not used	0.000E+00	---	RAD_SHAPE(6)
R017	Outer annular radius (m), ring 7:	not used	0.000E+00	---	RAD_SHAPE(7)
R017	Outer annular radius (m), ring 8:	not used	0.000E+00	---	RAD_SHAPE(8)
R017	Outer annular radius (m), ring 9:	not used	0.000E+00	---	RAD_SHAPE(9)
R017	Outer annular radius (m), ring 10:	not used	0.000E+00	---	RAD_SHAPE(10)
R017	Outer annular radius (m), ring 11:	not used	0.000E+00	---	RAD_SHAPE(11)
R017	Outer annular radius (m), ring 12:	not used	0.000E+00	---	RAD_SHAPE(12)

Site-Specific Parameter Summary (continued)

Menu	Parameter	User Input	Default	Used by RESRAD (If different from user input)	Parameter Name
R017	Fractions of annular areas within AREA:				
R017	Ring 1	not used	1.000E+00	---	FRACA(1)
R017	Ring 2	not used	2.732E-01	---	FRACA(2)
R017	Ring 3	not used	0.000E+00	---	FRACA(3)
R017	Ring 4	not used	0.000E+00	---	FRACA(4)
R017	Ring 5	not used	0.000E+00	---	FRACA(5)
R017	Ring 6	not used	0.000E+00	---	FRACA(6)
R017	Ring 7	not used	0.000E+00	---	FRACA(7)
R017	Ring 8	not used	0.000E+00	---	FRACA(8)
R017	Ring 9	not used	0.000E+00	---	FRACA(9)
R017	Ring 10	not used	0.000E+00	---	FRACA(10)
R017	Ring 11	not used	0.000E+00	---	FRACA(11)
R017	Ring 12	not used	0.000E+00	---	FRACA(12)
R018	Fruits, vegetables and grain consumption (kg/yr)	7.800E+01	1.600E+02	---	DIET(1)
R018	Leafy vegetable consumption (kg/yr)	1.500E+01	1.400E+01	---	DIET(2)
R018	Milk consumption (L/yr)	1.180E+02	9.200E+01	---	DIET(3)
R018	Meat and poultry consumption (kg/yr)	5.200E+01	6.300E+01	---	DIET(4)
R018	Fish consumption (kg/yr)	1.600E+01	5.400E+00	---	DIET(5)
R018	Other seafood consumption (kg/yr)	0.000E+00	9.000E-01	---	DIET(6)
R018	Soil ingestion rate (g/yr)	1.830E+01	3.650E+01	---	SOIL
R018	Drinking water intake (L/yr)	4.780E+02	5.100E+02	---	DWI
R018	Contamination fraction of drinking water	1.000E+00	1.000E+00	---	FDW
R018	Contamination fraction of household water	not used	1.000E+00	---	FHHW
R018	Contamination fraction of livestock water	1.000E+00	1.000E+00	---	FLW
R018	Contamination fraction of irrigation water	1.000E+00	1.000E+00	---	FIRW
R018	Contamination fraction of aquatic food	5.000E-01	5.000E-01	---	FR9
R018	Contamination fraction of plant food	5.000E-01	-1	---	FPLANT
R018	Contamination fraction of meat	1.000E+00	-1	---	FMEAT
R018	Contamination fraction of milk	1.000E+00	-1	---	FMILK
R019	Livestock fodder intake for meat (kg/day)	8.500E+00	6.800E+01	---	LFI5
R019	Livestock fodder intake for milk (kg/day)	1.700E+01	5.500E+01	---	LFI6
R019	Livestock water intake for meat (L/day)	5.000E+01	5.000E+01	---	LWI5
R019	Livestock water intake for milk (L/day)	1.600E+02	1.600E+02	---	LWI6
R019	Livestock soil intake (kg/day)	5.000E-01	5.000E-01	---	LSI
R019	Mass loading for foliar deposition (g/m**3)	1.000E-04	1.000E-04	---	MLFD
R019	Depth of soil mixing layer (m)	1.500E-01	1.500E-01	---	DM
R019	Depth of roots (m)	9.000E-01	9.000E-01	---	DROOT
R019	Drinking water fraction from ground water	1.000E+00	1.000E+00	---	FGWDW
R019	Household water fraction from ground water	not used	1.000E+00	---	FGWHH
R019	Livestock water fraction from ground water	1.000E+00	1.000E+00	---	FGWLW
R019	Irrigation fraction from ground water	1.000E+00	1.000E+00	---	FGWIR
R19B	Wet weight crop yield for Non-Leafy (kg/m**2)	7.000E-01	7.000E-01	---	YV(1)
R19B	Wet weight crop yield for Leafy (kg/m**2)	1.500E+00	1.500E+00	---	YV(2)
R19B	Wet weight crop yield for Fodder (kg/m**2)	1.100E+00	1.100E+00	---	YV(3)
R19B	Growing Season for Non-Leafy (years)	1.700E-01	1.700E-01	---	TE(1)
R19B	Growing Season for Leafy (years)	2.500E-01	2.500E-01	---	TE(2)
R19B	Growing Season for Fodder (years)	8.000E-02	8.000E-02	---	TE(3)

Site-Specific Parameter Summary (continued)

Menu	Parameter	User Input	Default	Used by RESRAD (If different from user input)	Parameter Name
R19B	Translocation Factor for Non-Leafy	1.000E-01	1.000E-01	---	TIV(1)
R19B	Translocation Factor for Leafy	1.000E+00	1.000E+00	---	TIV(2)
R19B	Translocation Factor for Fodder	1.000E+00	1.000E+00	---	TIV(3)
R19B	Dry Foliar Interception Fraction for Non-Leafy	2.500E-01	2.500E-01	---	RDRY(1)
R19B	Dry Foliar Interception Fraction for Leafy	2.500E-01	2.500E-01	---	RDRY(2)
R19B	Dry Foliar Interception Fraction for Fodder	2.500E-01	2.500E-01	---	RDRY(3)
R19B	Wet Foliar Interception Fraction for Non-Leafy	2.500E-01	2.500E-01	---	RWET(1)
R19B	Wet Foliar Interception Fraction for Leafy	2.500E-01	2.500E-01	---	RWET(2)
R19B	Wet Foliar Interception Fraction for Fodder	2.500E-01	2.500E-01	---	RWET(3)
R19B	Weathering Removal Constant for Vegetation	2.000E+01	2.000E+01	---	WLAM
C14	C-12 concentration in water (g/cm**3)	not used	2.000E-05	---	C12WTR
C14	C-12 concentration in contaminated soil (g/g)	not used	3.000E-02	---	C12CZ
C14	Fraction of vegetation carbon from soil	not used	2.000E-02	---	CSOIL
C14	Fraction of vegetation carbon from air	not used	9.800E-01	---	CAIR
C14	C-14 evasion layer thickness in soil (m)	not used	3.000E-01	---	DMC
C14	C-14 evasion flux rate from soil (1/sec)	not used	7.000E-07	---	EVSN
C14	C-12 evasion flux rate from soil (1/sec)	not used	1.000E-10	---	REVSN
C14	Fraction of grain in beef cattle feed	not used	8.000E-01	---	AVFG4
C14	Fraction of grain in milk cow feed	not used	2.000E-01	---	AVFG5
STOR	Storage times of contaminated foodstuffs (days):				
STOR	Fruits, non-leafy vegetables, and grain	1.400E+01	1.400E+01	---	STOR_T(1)
STOR	Leafy vegetables	1.000E+00	1.000E+00	---	STOR_T(2)
STOR	Milk	1.000E+00	1.000E+00	---	STOR_T(3)
STOR	Meat and poultry	2.000E+01	2.000E+01	---	STOR_T(4)
STOR	Fish	7.000E+00	7.000E+00	---	STOR_T(5)
STOR	Crustacea and mollusks	7.000E+00	7.000E+00	---	STOR_T(6)
STOR	Well water	1.000E+00	1.000E+00	---	STOR_T(7)
STOR	Surface water	1.000E+00	1.000E+00	---	STOR_T(8)
STOR	Livestock fodder	4.500E+01	4.500E+01	---	STOR_T(9)
R021	Thickness of building foundation (m)	not used	1.500E-01	---	FLOOR1
R021	Bulk density of building foundation (g/cm**3)	not used	2.400E+00	---	DENSFL
R021	Total porosity of the cover material	not used	4.000E-01	---	TPCV
R021	Total porosity of the building foundation	not used	1.000E-01	---	TPFL
R021	Volumetric water content of the cover material	not used	5.000E-02	---	PH2OCV
R021	Volumetric water content of the foundation	not used	3.000E-02	---	PH2OFL
R021	Diffusion coefficient for radon gas (m/sec):				
R021	in cover material	not used	2.000E-06	---	DIFCV
R021	in foundation material	not used	3.000E-07	---	DIFFL
R021	in contaminated zone soil	not used	2.000E-06	---	DIFCZ
R021	Radon vertical dimension of mixing (m)	not used	2.000E+00	---	HMIX
R021	Average building air exchange rate (1/hr)	not used	5.000E-01	---	REXG
R021	Height of the building (room) (m)	not used	2.500E+00	---	HRM
R021	Building interior area factor	not used	0.000E+00	---	FAI
R021	Building depth below ground surface (m)	not used	-1.000E+00	---	DMFL
R021	Emanating power of Rn-222 gas	not used	2.500E-01	---	EMANA(1)
R021	Emanating power of Rn-220 gas	not used	1.500E-01	---	EMANA(2)
TITL	Number of graphical time points	32	---	---	NPTS

Site-Specific Parameter Summary (continued)

Menu	Parameter	User Input	Default	Used by RESRAD (If different from user input)	Parameter Name
TITL	Maximum number of integration points for dose	17	---	---	LYMAX
TITL	Maximum number of integration points for risk	1	---	---	KYMAX

Summary of Pathway Selections

Pathway	User Selection
1 -- external gamma	active
2 -- inhalation (w/o radon)	active
3 -- plant ingestion	active
4 -- meat ingestion	active
5 -- milk ingestion	active
6 -- aquatic foods	active
7 -- drinking water	active
8 -- soil ingestion	active
9 -- radon	suppressed
Find peak pathway doses	active

Contaminated Zone Dimensions		Initial Soil Concentrations, pCi/g	
Area:	1.00 square meters	Cs-137	1.000E+00
Thickness:	0.10 meters		
Cover Depth:	1.66 meters		

Total Dose TDOSE(t), mrem/yr
Basic Radiation Dose Limit = 2.500E+01 mrem/yr
Total Mixture Sum M(t) = Fraction of Basic Dose Limit Received at Time (t)

t (years):	0.000E+00	1.000E+00	3.000E+00	1.000E+01	3.000E+01	1.000E+02	3.000E+02	1.000E+03
TDOSE(t):	1.320E-11	1.293E-11	1.241E-11	1.073E-11	7.087E-12	1.659E-12	2.619E-14	8.716E-18
M(t):	5.282E-13	5.173E-13	4.963E-13	4.292E-13	2.835E-13	6.637E-14	1.048E-15	3.486E-19

Maximum TDOSE(t): 1.320E-11 mrem/yr at t = 0.000E+00 years

Total Dose Contributions TDOSE(i,p,t) for Individual Radionuclides (i) and Pathways (p)
As mrem/yr and Fraction of Total Dose At t = 0.000E+00 years

Water Independent Pathways (Inhalation excludes radon)

Radio-	Ground		Inhalation		Radon		Plant		Meat		Milk		Soil	
Nuclide	mrem/yr	fract.	mrem/yr	fract.	mrem/yr	fract.	mrem/yr	fract.	mrem/yr	fract.	mrem/yr	fract.	mrem/yr	frac
Cs-137	1.320E-11	1.0000	0.000E+00	0.0000	0.000E+00	0.0000	0.000E+00	0.0000	0.000E+00	0.0000	0.000E+00	0.0000	0.000E+00	0.00
Total	1.320E-11	1.0000	0.000E+00	0.0000	0.000E+00	0.0000	0.000E+00	0.0000	0.000E+00	0.0000	0.000E+00	0.0000	0.000E+00	0.00

Total Dose Contributions TDOSE(i,p,t) for Individual Radionuclides (i) and Pathways (p)
As mrem/yr and Fraction of Total Dose At t = 0.000E+00 years

Water Dependent Pathways

Radio-	Water		Fish		Radon		Plant		Meat		Milk		All Pathways	
Nuclide	mrem/yr	fract.	mrem/yr	fract.	mrem/yr	fract.	mrem/yr	fract.	mrem/yr	fract.	mrem/yr	fract.	mrem/yr	frac
Cs-137	0.000E+00	0.0000	0.000E+00	0.0000	0.000E+00	0.0000	0.000E+00	0.0000	0.000E+00	0.0000	0.000E+00	0.0000	1.320E-11	1.00
Total	0.000E+00	0.0000	0.000E+00	0.0000	0.000E+00	0.0000	0.000E+00	0.0000	0.000E+00	0.0000	0.000E+00	0.0000	1.320E-11	1.00

*Sum of all water independent and dependent pathways.

Probabilistic Input

Number of Sample Runs: 300

Number	Name	Distribution	Parameters			
1	AREA	TRIANGULAR	.5	1	2	
2	THICK0	NORMAL	.1	.5		
3	DENSCZ	TRUNCATED NORMAL	1.52	.23	.001	.999

Probabilistic Total Dose Summary

Nuclide (j)	Peak Time	Peak Dose	t= 0.00E+00	1.00E+00	3.00E+00	1.00E+01	3.00E+01	1.00E+02	3.00E+02	1.00E+03
			DOSE(j,t), mrem/yr							
Cs-137										
Min	0.00E+00	0.00E+00	0.00E+00	0.00E+00	0.00E+00	0.00E+00	0.00E+00	0.00E+00	0.00E+00	0.00E+00
Max	0.00E+00	2.34E-11	2.34E-11	2.31E-11	2.27E-11	2.11E-11	1.71E-11	8.36E-12	1.20E-12	1.86E-12
Avg	0.00E+00	1.01E-11	1.01E-11	9.92E-12	9.66E-12	8.80E-12	6.80E-12	2.89E-12	2.93E-13	1.92E-13
Std	0.00E+00	9.16E-12	9.16E-12	9.05E-12	8.85E-12	8.16E-12	6.49E-12	3.00E-12	3.65E-13	3.57E-13
∑ALL										
Min	0.00E+00	0.00E+00	0.00E+00	0.00E+00	0.00E+00	0.00E+00	0.00E+00	0.00E+00	0.00E+00	0.00E+00
Max	0.00E+00	2.34E-11	2.34E-11	2.31E-11	2.27E-11	2.11E-11	1.71E-11	8.36E-12	1.20E-12	1.86E-12
Avg	0.00E+00	1.01E-11	1.01E-11	9.92E-12	9.66E-12	8.80E-12	6.80E-12	2.89E-12	2.93E-13	1.92E-13
Std	0.00E+00	9.16E-12	9.16E-12	9.05E-12	8.85E-12	8.16E-12	6.49E-12	3.00E-12	3.65E-13	3.57E-13

∑ALL is total dose summed for all nuclides.

Title : Reactor Security Bldg San Sewer BP1-1 Resident Farmer w Unit Cs-137
Input File : C:\RESRAD_FAMILY\RESRAD\USERFILES\PBRF BP\06141201.RAD

Coefficients for peak of mean dose time Dose

Coefficient =	PCC		SRC		PRCC		SRRC	
Repetition =	1		1		1		1	
Description of Probabilistic Variable	Sig	Coeff	Sig	Coeff	Sig	Coeff	Sig	Coeff
Area of contaminated zone	2	0.25	2	0.13	2	0.54	2	0.25
Thickness of contaminated zone	1	0.85	1	0.84	1	0.92	1	0.88
Density of contaminated zone	3	0.13	3	0.07	3	0.17	3	0.07
R-SQUARE		0.72		0.72		0.85		0.85

-Rank is set to zero if the dose is zero or the correlation matrix is singular.
-R-SQUARE varies between 0 and 1 and is called the coefficient of determination; it provides a measure of the variation in the dependent variable (Dose) explained by regression on the independent variables.

Summary : Reactor Security Bldg San Sewer BP1-1 Res Farmer w Unit Co-60
File : C:\RESRAD_FAMILY\RESRAD\USERFILES\PBRF BP\06141202.RAD

Table of Contents

Part I: Mixture Sums and Single Radionuclide Guidelines

Dose Conversion Factor (and Related) Parameter Summary
Dose Library: FGR 11

Menu	Parameter	Current Value#	Base Case*	Parameter Name
A-1	DCF's for external ground radiation, (mrem/yr)/(pCi/g)			
A-1	Co-60 (Source: FGR 12)	1.622E+01	1.622E+01	DCF1(1)
B-1	Dose conversion factors for inhalation, mrem/pCi:			
B-1	Co-60	2.190E-04	2.190E-04	DCF2(1)
D-1	Dose conversion factors for ingestion, mrem/pCi:			
D-1	Co-60	2.690E-05	2.690E-05	DCF3(1)
D-34	Food transfer factors:			
D-34	Co-60 , plant/soil concentration ratio, dimensionless	8.000E-02	8.000E-02	RTF(1,1)
D-34	Co-60 , beef/livestock-intake ratio, (pCi/kg)/(pCi/d)	2.000E-02	2.000E-02	RTF(1,2)
D-34	Co-60 , milk/livestock-intake ratio, (pCi/L)/(pCi/d)	2.000E-03	2.000E-03	RTF(1,3)
D-5	Bioaccumulation factors, fresh water, L/kg:			
D-5	Co-60 , fish	3.000E+02	3.000E+02	BIOFAC(1,1)
D-5	Co-60 , crustacea and mollusks	2.000E+02	2.000E+02	BIOFAC(1,2)

#For DCF1(xxx) only, factors are for infinite depth & area. See ETFG table in Ground Pathway of Detailed Report.
*Base Case means Default.Lib w/o Associate Nuclide contributions.

Site-Specific Parameter Summary

Menu	Parameter	User Input	Default	Used by RESRAD (If different from user input)	Parameter Name
R011	Area of contaminated zone (m**2)	1.000E+00	1.000E+04	---	AREA
R011	Thickness of contaminated zone (m)	1.000E-01	2.000E+00	---	THICK0
R011	Length parallel to aquifer flow (m)	7.010E+00	1.000E+02	---	LCZPAQ
R011	Basic radiation dose limit (mrem/yr)	2.500E+01	3.000E+01	---	BRDL
R011	Time since placement of material (yr)	0.000E+00	0.000E+00	---	TI
R011	Times for calculations (yr)	1.000E+00	1.000E+00	---	T(2)
R011	Times for calculations (yr)	3.000E+00	3.000E+00	---	T(3)
R011	Times for calculations (yr)	1.000E+01	1.000E+01	---	T(4)
R011	Times for calculations (yr)	3.000E+01	3.000E+01	---	T(5)
R011	Times for calculations (yr)	1.000E+02	1.000E+02	---	T(6)
R011	Times for calculations (yr)	3.000E+02	3.000E+02	---	T(7)
R011	Times for calculations (yr)	1.000E+03	1.000E+03	---	T(8)
R011	Times for calculations (yr)	not used	0.000E+00	---	T(9)
R011	Times for calculations (yr)	not used	0.000E+00	---	T(10)
R012	Initial principal radionuclide (pCi/g): Co-60	1.000E+00	0.000E+00	---	S1(1)
R012	Concentration in groundwater (pCi/L): Co-60	not used	0.000E+00	---	W1(1)
R013	Cover depth (m)	1.660E+00	0.000E+00	---	COVER0
R013	Density of cover material (g/cm**3)	1.520E+00	1.500E+00	---	DENSCV
R013	Cover depth erosion rate (m/yr)	1.000E-03	1.000E-03	---	VCV
R013	Density of contaminated zone (g/cm**3)	1.520E+00	1.500E+00	---	DENSCZ
R013	Contaminated zone erosion rate (m/yr)	1.000E-03	1.000E-03	---	VCZ
R013	Contaminated zone total porosity	4.500E-01	4.000E-01	---	TPCZ
R013	Contaminated zone field capacity	2.000E-01	2.000E-01	---	FCCZ
R013	Contaminated zone hydraulic conductivity (m/yr)	2.700E+02	1.000E+01	---	HCCZ
R013	Contaminated zone b parameter	7.120E+00	5.300E+00	---	BCZ
R013	Average annual wind speed (m/sec)	2.000E+00	2.000E+00	---	WIND
R013	Humidity in air (g/m**3)	not used	8.000E+00	---	HUMID
R013	Evapotranspiration coefficient	5.000E-01	5.000E-01	---	EVAPTR
R013	Precipitation (m/yr)	8.600E-01	1.000E+00	---	PRECIP
R013	Irrigation (m/yr)	1.040E+00	2.000E-01	---	RI
R013	Irrigation mode	overhead	overhead	---	IDITCH
R013	Runoff coefficient	3.000E-01	2.000E-01	---	RUNOFF
R013	Watershed area for nearby stream or pond (m**2)	1.000E+06	1.000E+06	---	WAREA
R013	Accuracy for water/soil computations	1.000E-03	1.000E-03	---	EPS
R014	Density of saturated zone (g/cm**3)	1.520E+00	1.500E+00	---	DENSAQ
R014	Saturated zone total porosity	4.500E-01	4.000E-01	---	TPSZ
R014	Saturated zone effective porosity	2.000E-01	2.000E-01	---	EPSZ
R014	Saturated zone field capacity	2.000E-01	2.000E-01	---	FCSZ
R014	Saturated zone hydraulic conductivity (m/yr)	2.700E+02	1.000E+02	---	HCSZ
R014	Saturated zone hydraulic gradient	5.000E-03	2.000E-02	---	HGWT
R014	Saturated zone b parameter	not used	5.300E+00	---	BSZ
R014	Water table drop rate (m/yr)	0.000E+00	1.000E-03	---	VWT
R014	Well pump intake depth (m below water table)	8.000E+00	1.000E+01	---	DWIBWT
R014	Model: Nondispersion (ND) or Mass-Balance (MB)	ND	ND	---	MODEL
R014	Well pumping rate (m**3/yr)	1.180E+02	2.500E+02	---	UW
R015	Number of unsaturated zone strata	1	1	---	NS

Site-Specific Parameter Summary (continued)

Menu	Parameter	User Input	Default	Used by RESRAD (If different from user input)	Parameter Name
R015	Unsat. zone 1, thickness (m)	3.000E+00	4.000E+00	---	H(1)
R015	Unsat. zone 1, soil density (g/cm**3)	1.520E+00	1.500E+00	---	DENSUZ(1)
R015	Unsat. zone 1, total porosity	4.500E-01	4.000E-01	---	TPUZ(1)
R015	Unsat. zone 1, effective porosity	2.000E-01	2.000E-01	---	EPUZ(1)
R015	Unsat. zone 1, field capacity	2.000E-01	2.000E-01	---	FCUZ(1)
R015	Unsat. zone 1, soil-specific b parameter	7.130E+00	5.300E+00	---	BUZ(1)
R015	Unsat. zone 1, hydraulic conductivity (m/yr)	2.700E+02	1.000E+01	---	HCUZ(1)
R016	Distribution coefficients for Co-60				
R016	Contaminated zone (cm**3/g)	1.000E+03	1.000E+03	---	DCNUCC(1)
R016	Unsaturated zone 1 (cm**3/g)	1.000E+03	1.000E+03	---	DCNUCU(1,1)
R016	Saturated zone (cm**3/g)	1.000E+03	1.000E+03	---	DCNUCS(1)
R016	Leach rate (/yr)	0.000E+00	0.000E+00	5.400E-03	ALEACH(1)
R016	Solubility constant	0.000E+00	0.000E+00	not used	SOLUBK(1)
R017	Inhalation rate (m**3/yr)	8.400E+03	8.400E+03	---	INHALR
R017	Mass loading for inhalation (g/m**3)	6.000E-06	1.000E-04	---	MLINH
R017	Exposure duration	3.652E+02	3.000E+01	---	ED
R017	Shielding factor, inhalation	4.000E-01	4.000E-01	---	SHF3
R017	Shielding factor, external gamma	4.700E-01	7.000E-01	---	SHF1
R017	Fraction of time spent indoors	6.600E-01	5.000E-01	---	FIND
R017	Fraction of time spent outdoors (on site)	1.100E-01	2.500E-01	---	FOTD
R017	Shape factor flag, external gamma	1.000E+00	1.000E+00	>0 shows circular AREA.	FS
R017	Radii of shape factor array (used if FS = -1):				
R017	Outer annular radius (m), ring 1:	not used	5.000E+01	---	RAD_SHAPE(1)
R017	Outer annular radius (m), ring 2:	not used	7.071E+01	---	RAD_SHAPE(2)
R017	Outer annular radius (m), ring 3:	not used	0.000E+00	---	RAD_SHAPE(3)
R017	Outer annular radius (m), ring 4:	not used	0.000E+00	---	RAD_SHAPE(4)
R017	Outer annular radius (m), ring 5:	not used	0.000E+00	---	RAD_SHAPE(5)
R017	Outer annular radius (m), ring 6:	not used	0.000E+00	---	RAD_SHAPE(6)
R017	Outer annular radius (m), ring 7:	not used	0.000E+00	---	RAD_SHAPE(7)
R017	Outer annular radius (m), ring 8:	not used	0.000E+00	---	RAD_SHAPE(8)
R017	Outer annular radius (m), ring 9:	not used	0.000E+00	---	RAD_SHAPE(9)
R017	Outer annular radius (m), ring 10:	not used	0.000E+00	---	RAD_SHAPE(10)
R017	Outer annular radius (m), ring 11:	not used	0.000E+00	---	RAD_SHAPE(11)
R017	Outer annular radius (m), ring 12:	not used	0.000E+00	---	RAD_SHAPE(12)

Site-Specific Parameter Summary (continued)

Menu	Parameter	User Input	Default	Used by RESRAD (If different from user input)	Parameter Name
R017	Fractions of annular areas within AREA:				
R017	Ring 1	not used	1.000E+00	---	FRACA(1)
R017	Ring 2	not used	2.732E-01	---	FRACA(2)
R017	Ring 3	not used	0.000E+00	---	FRACA(3)
R017	Ring 4	not used	0.000E+00	---	FRACA(4)
R017	Ring 5	not used	0.000E+00	---	FRACA(5)
R017	Ring 6	not used	0.000E+00	---	FRACA(6)
R017	Ring 7	not used	0.000E+00	---	FRACA(7)
R017	Ring 8	not used	0.000E+00	---	FRACA(8)
R017	Ring 9	not used	0.000E+00	---	FRACA(9)
R017	Ring 10	not used	0.000E+00	---	FRACA(10)
R017	Ring 11	not used	0.000E+00	---	FRACA(11)
R017	Ring 12	not used	0.000E+00	---	FRACA(12)
R018	Fruits, vegetables and grain consumption (kg/yr)	7.800E+01	1.600E+02	---	DIET(1)
R018	Leafy vegetable consumption (kg/yr)	1.500E+01	1.400E+01	---	DIET(2)
R018	Milk consumption (L/yr)	1.180E+02	9.200E+01	---	DIET(3)
R018	Meat and poultry consumption (kg/yr)	5.200E+01	6.300E+01	---	DIET(4)
R018	Fish consumption (kg/yr)	1.600E+01	5.400E+00	---	DIET(5)
R018	Other seafood consumption (kg/yr)	0.000E+00	9.000E-01	---	DIET(6)
R018	Soil ingestion rate (g/yr)	1.830E+01	3.650E+01	---	SOIL
R018	Drinking water intake (L/yr)	4.780E+02	5.100E+02	---	DWI
R018	Contamination fraction of drinking water	1.000E+00	1.000E+00	---	FDW
R018	Contamination fraction of household water	not used	1.000E+00	---	FHHW
R018	Contamination fraction of livestock water	1.000E+00	1.000E+00	---	FLW
R018	Contamination fraction of irrigation water	1.000E+00	1.000E+00	---	FIRW
R018	Contamination fraction of aquatic food	5.000E-01	5.000E-01	---	FR9
R018	Contamination fraction of plant food	5.000E-01	-1	---	FPLANT
R018	Contamination fraction of meat	1.000E+00	-1	---	FMEAT
R018	Contamination fraction of milk	1.000E+00	-1	---	FMILK
R019	Livestock fodder intake for meat (kg/day)	8.500E+00	6.800E+01	---	LFI5
R019	Livestock fodder intake for milk (kg/day)	1.700E+01	5.500E+01	---	LFI6
R019	Livestock water intake for meat (L/day)	5.000E+01	5.000E+01	---	LWI5
R019	Livestock water intake for milk (L/day)	1.600E+02	1.600E+02	---	LWI6
R019	Livestock soil intake (kg/day)	5.000E-01	5.000E-01	---	LSI
R019	Mass loading for foliar deposition (g/m**3)	1.000E-04	1.000E-04	---	MLFD
R019	Depth of soil mixing layer (m)	1.500E-01	1.500E-01	---	DM
R019	Depth of roots (m)	9.000E-01	9.000E-01	---	DROOT
R019	Drinking water fraction from ground water	1.000E+00	1.000E+00	---	FGWDW
R019	Household water fraction from ground water	not used	1.000E+00	---	FGWHH
R019	Livestock water fraction from ground water	1.000E+00	1.000E+00	---	FGWLW
R019	Irrigation fraction from ground water	1.000E+00	1.000E+00	---	FGWIR
R19B	Wet weight crop yield for Non-Leafy (kg/m**2)	7.000E-01	7.000E-01	---	YV(1)
R19B	Wet weight crop yield for Leafy (kg/m**2)	1.500E+00	1.500E+00	---	YV(2)
R19B	Wet weight crop yield for Fodder (kg/m**2)	1.100E+00	1.100E+00	---	YV(3)
R19B	Growing Season for Non-Leafy (years)	1.700E-01	1.700E-01	---	TE(1)
R19B	Growing Season for Leafy (years)	2.500E-01	2.500E-01	---	TE(2)
R19B	Growing Season for Fodder (years)	8.000E-02	8.000E-02	---	TE(3)

Site-Specific Parameter Summary (continued)

Menu	Parameter	User Input	Default	Used by RESRAD (If different from user input)	Parameter Name
R19B	Translocation Factor for Non-Leafy	1.000E-01	1.000E-01	---	TIV(1)
R19B	Translocation Factor for Leafy	1.000E+00	1.000E+00	---	TIV(2)
R19B	Translocation Factor for Fodder	1.000E+00	1.000E+00	---	TIV(3)
R19B	Dry Foliar Interception Fraction for Non-Leafy	2.500E-01	2.500E-01	---	RDRY(1)
R19B	Dry Foliar Interception Fraction for Leafy	2.500E-01	2.500E-01	---	RDRY(2)
R19B	Dry Foliar Interception Fraction for Fodder	2.500E-01	2.500E-01	---	RDRY(3)
R19B	Wet Foliar Interception Fraction for Non-Leafy	2.500E-01	2.500E-01	---	RWET(1)
R19B	Wet Foliar Interception Fraction for Leafy	2.500E-01	2.500E-01	---	RWET(2)
R19B	Wet Foliar Interception Fraction for Fodder	2.500E-01	2.500E-01	---	RWET(3)
R19B	Weathering Removal Constant for Vegetation	2.000E+01	2.000E+01	---	WLAM
C14	C-12 concentration in water (g/cm**3)	not used	2.000E-05	---	C12WTR
C14	C-12 concentration in contaminated soil (g/g)	not used	3.000E-02	---	C12CZ
C14	Fraction of vegetation carbon from soil	not used	2.000E-02	---	CSOIL
C14	Fraction of vegetation carbon from air	not used	9.800E-01	---	CAIR
C14	C-14 evasion layer thickness in soil (m)	not used	3.000E-01	---	DMC
C14	C-14 evasion flux rate from soil (1/sec)	not used	7.000E-07	---	EVSN
C14	C-12 evasion flux rate from soil (1/sec)	not used	1.000E-10	---	REVSN
C14	Fraction of grain in beef cattle feed	not used	8.000E-01	---	AVFG4
C14	Fraction of grain in milk cow feed	not used	2.000E-01	---	AVFG5
STOR	Storage times of contaminated foodstuffs (days):				
STOR	Fruits, non-leafy vegetables, and grain	1.400E+01	1.400E+01	---	STOR_T(1)
STOR	Leafy vegetables	1.000E+00	1.000E+00	---	STOR_T(2)
STOR	Milk	1.000E+00	1.000E+00	---	STOR_T(3)
STOR	Meat and poultry	2.000E+01	2.000E+01	---	STOR_T(4)
STOR	Fish	7.000E+00	7.000E+00	---	STOR_T(5)
STOR	Crustacea and mollusks	7.000E+00	7.000E+00	---	STOR_T(6)
STOR	Well water	1.000E+00	1.000E+00	---	STOR_T(7)
STOR	Surface water	1.000E+00	1.000E+00	---	STOR_T(8)
STOR	Livestock fodder	4.500E+01	4.500E+01	---	STOR_T(9)
R021	Thickness of building foundation (m)	not used	1.500E-01	---	FLOOR1
R021	Bulk density of building foundation (g/cm**3)	not used	2.400E+00	---	DENSFL
R021	Total porosity of the cover material	not used	4.000E-01	---	TPCV
R021	Total porosity of the building foundation	not used	1.000E-01	---	TPFL
R021	Volumetric water content of the cover material	not used	5.000E-02	---	PH2OCV
R021	Volumetric water content of the foundation	not used	3.000E-02	---	PH2OFL
R021	Diffusion coefficient for radon gas (m/sec):				
R021	in cover material	not used	2.000E-06	---	DIFCV
R021	in foundation material	not used	3.000E-07	---	DIFFL
R021	in contaminated zone soil	not used	2.000E-06	---	DIFCZ
R021	Radon vertical dimension of mixing (m)	not used	2.000E+00	---	HMIX
R021	Average building air exchange rate (1/hr)	not used	5.000E-01	---	REXG
R021	Height of the building (room) (m)	not used	2.500E+00	---	HRM
R021	Building interior area factor	not used	0.000E+00	---	FAI
R021	Building depth below ground surface (m)	not used	-1.000E+00	---	DMFL
R021	Emanating power of Rn-222 gas	not used	2.500E-01	---	EMANA(1)
R021	Emanating power of Rn-220 gas	not used	1.500E-01	---	EMANA(2)
TITL	Number of graphical time points	32	---	---	NPTS

Site-Specific Parameter Summary (continued)

Menu	Parameter	User Input	Default	Used by RESRAD (If different from user input)	Parameter Name
TITL	Maximum number of integration points for dose	17	---	---	LYMAX
TITL	Maximum number of integration points for risk	1	---	---	KYMAX

Summary of Pathway Selections

Pathway	User Selection
1 -- external gamma	active
2 -- inhalation (w/o radon)	active
3 -- plant ingestion	active
4 -- meat ingestion	active
5 -- milk ingestion	active
6 -- aquatic foods	active
7 -- drinking water	active
8 -- soil ingestion	active
9 -- radon	suppressed
Find peak pathway doses	active

Contaminated Zone Dimensions		Initial Soil Concentrations, pCi/g	
Area:	1.00 square meters	Co-60	1.000E+00
Thickness:	0.10 meters		
Cover Depth:	1.66 meters		

Total Dose TDOSE(t), mrem/yr
Basic Radiation Dose Limit = 2.500E+01 mrem/yr
Total Mixture Sum M(t) = Fraction of Basic Dose Limit Received at Time (t)

t (years):	0.000E+00	1.000E+00	3.000E+00	1.000E+01	3.000E+01	1.000E+02	3.000E+02	1.000E+03
TDOSE(t):	3.341E-09	2.948E-09	2.296E-09	9.568E-10	7.847E-11	1.239E-14	1.705E-25	0.000E+00
M(t):	1.336E-10	1.179E-10	9.184E-11	3.827E-11	3.139E-12	4.958E-16	6.822E-27	0.000E+00

Maximum TDOSE(t): 3.341E-09 mrem/yr at t = 0.000E+00 years

Total Dose Contributions TDOSE(i,p,t) for Individual Radionuclides (i) and Pathways (p)
As mrem/yr and Fraction of Total Dose At t = 0.000E+00 years

Water Independent Pathways (Inhalation excludes radon)

Radio-	Ground		Inhalation		Radon		Plant		Meat		Milk		Soil	
Nuclide	mrem/yr	fract.	mrem/yr	fract.	mrem/yr	fract.	mrem/yr	fract.	mrem/yr	fract.	mrem/yr	fract.	mrem/yr	frac
Co-60	3.341E-09	1.0000	0.000E+00	0.0000	0.000E+00	0.0000	0.000E+00	0.0000	0.000E+00	0.0000	0.000E+00	0.0000	0.000E+00	0.00
Total	3.341E-09	1.0000	0.000E+00	0.0000	0.000E+00	0.0000	0.000E+00	0.0000	0.000E+00	0.0000	0.000E+00	0.0000	0.000E+00	0.00

Total Dose Contributions TDOSE(i,p,t) for Individual Radionuclides (i) and Pathways (p)
As mrem/yr and Fraction of Total Dose At t = 0.000E+00 years

Water Dependent Pathways

Radio-	Water		Fish		Radon		Plant		Meat		Milk		All Pathways	
Nuclide	mrem/yr	fract.	mrem/yr	fract.	mrem/yr	fract.	mrem/yr	fract.	mrem/yr	fract.	mrem/yr	fract.	mrem/yr	frac
Co-60	0.000E+00	0.0000	0.000E+00	0.0000	0.000E+00	0.0000	0.000E+00	0.0000	0.000E+00	0.0000	0.000E+00	0.0000	3.341E-09	1.00
Total	0.000E+00	0.0000	0.000E+00	0.0000	0.000E+00	0.0000	0.000E+00	0.0000	0.000E+00	0.0000	0.000E+00	0.0000	3.341E-09	1.00

*Sum of all water independent and dependent pathways.

Probabilistic Input

Number of Sample Runs: 300

Number	Name	Distribution	Parameters			
1	AREA	TRIANGULAR	.5	1	2	
2	THICKO	NORMAL	.1	.5		
3	DENSCZ	TRUNCATED NORMAL	1.52	.23	.001	.999

Probabilistic Total Dose Summary

Nuclide (j)	Peak Time	Peak Dose	DOSE(j,t), mrem/yr t= 0.00E+00	1.00E+00	3.00E+00	1.00E+01	3.00E+01	1.00E+02	3.00E+02	1.00E+03
Co-60										
Min	0.00E+00	0.00E+00	0.00E+00	0.00E+00	0.00E+00	0.00E+00	0.00E+00	0.00E+00	0.00E+00	0.00E+00
Max	0.00E+00	6.85E-09	6.85E-09	6.07E-09	4.77E-09	2.05E-09	1.85E-10	4.02E-14	1.44E-24	0.00E+00
Avg	0.00E+00	2.79E-09	2.79E-09	2.47E-09	1.94E-09	8.26E-10	7.25E-11	1.48E-14	4.47E-25	0.00E+00
Std	0.00E+00	2.57E-09	2.57E-09	2.28E-09	1.79E-09	7.69E-10	6.85E-11	1.46E-14	0.00E+00	0.00E+00
∑ALL										
Min	0.00E+00	0.00E+00	0.00E+00	0.00E+00	0.00E+00	0.00E+00	0.00E+00	0.00E+00	0.00E+00	0.00E+00
Max	0.00E+00	6.85E-09	6.85E-09	6.07E-09	4.77E-09	2.05E-09	1.85E-10	4.02E-14	1.44E-24	0.00E+00
Avg	0.00E+00	2.79E-09	2.79E-09	2.47E-09	1.94E-09	8.26E-10	7.25E-11	1.48E-14	4.47E-25	0.00E+00
Std	0.00E+00	2.57E-09	2.57E-09	2.28E-09	1.79E-09	7.69E-10	6.85E-11	1.46E-14	0.00E+00	0.00E+00

∑ALL is total dose summed for all nuclides.

RESRAD Regression and Correlation output 06/14/12 09:51 Page: Coef 1
Title : Reactor Security Bldg San Sewer BP1-1 Res Farmer w Unit Co-60
Input File : C:\RESRAD_FAMILY\RESRAD\USERFILES\PBRF BP\06141202.RAD

Coefficients for peak of mean dose time Dose

Coefficient =	PCC		SRC		PRCC		SRRC	
Repetition =	1		1		1		1	
Description of Probabilistic Variable	Sig	Coeff	Sig	Coeff	Sig	Coeff	Sig	Coeff
Area of contaminated zone	2	0.28	2	0.15	2	0.53	2	0.24
Thickness of contaminated zone	1	0.85	1	0.84	1	0.92	1	0.89
Density of contaminated zone	3	0.13	3	0.07	3	0.18	3	0.07
R-SQUARE		0.74		0.74		0.86		0.86

-Rank is set to zero if the dose is zero or the correlation matrix is singular.
-R-SQUARE varies between 0 and 1 and is called the coefficient of determination; it provides a measure of the variation in the dependent variable (Dose) explained by regression on the independent variables.

Table of Contents

Part I: Mixture Sums and Single Radionuclide Guidelines

Dose Conversion Factor (and Related) Parameter Summary
Dose Library: FGR 11

Menu	Parameter	Current Value#	Base Case*	Parameter Name
A-1	DCF's for external ground radiation, (mrem/yr)/(pCi/g)			
A-1	Sr-90 (Source: FGR 12)	7.043E-04	7.043E-04	DCF1(1)
A-1	Y-90 (Source: FGR 12)	2.391E-02	2.391E-02	DCF1(2)
B-1	Dose conversion factors for inhalation, mrem/pCi:			
B-1	Sr-90+D	1.308E-03	1.300E-03	DCF2(1)
D-1	Dose conversion factors for ingestion, mrem/pCi:			
D-1	Sr-90+D	1.528E-04	1.420E-04	DCF3(1)
D-34	Food transfer factors:			
D-34	Sr-90+D , plant/soil concentration ratio, dimensionless	3.000E-01	3.000E-01	RTF(1,1)
D-34	Sr-90+D , beef/livestock-intake ratio, (pCi/kg)/(pCi/d)	8.000E-03	8.000E-03	RTF(1,2)
D-34	Sr-90+D , milk/livestock-intake ratio, (pCi/L)/(pCi/d)	2.000E-03	2.000E-03	RTF(1,3)
D-5	Bioaccumulation factors, fresh water, L/kg:			
D-5	Sr-90+D , fish	6.000E+01	6.000E+01	BIOFAC(1,1)
D-5	Sr-90+D , crustacea and mollusks	1.000E+02	1.000E+02	BIOFAC(1,2)

#For DCF1(xxx) only, factors are for infinite depth & area. See ETFG table in Ground Pathway of Detailed Report.
*Base Case means Default.Lib w/o Associate Nuclide contributions.

Site-Specific Parameter Summary

Menu	Parameter	User Input	Default	Used by RESRAD (If different from user input)	Parameter Name
R011	Area of contaminated zone (m**2)	1.000E+00	1.000E+04	---	AREA
R011	Thickness of contaminated zone (m)	1.000E-01	2.000E+00	---	THICK0
R011	Length parallel to aquifer flow (m)	7.010E+00	1.000E+02	---	LCZPAQ
R011	Basic radiation dose limit (mrem/yr)	2.500E+01	3.000E+01	---	BRDL
R011	Time since placement of material (yr)	0.000E+00	0.000E+00	---	TI
R011	Times for calculations (yr)	1.000E+00	1.000E+00	---	T(2)
R011	Times for calculations (yr)	3.000E+00	3.000E+00	---	T(3)
R011	Times for calculations (yr)	1.000E+01	1.000E+01	---	T(4)
R011	Times for calculations (yr)	3.000E+01	3.000E+01	---	T(5)
R011	Times for calculations (yr)	1.000E+02	1.000E+02	---	T(6)
R011	Times for calculations (yr)	3.000E+02	3.000E+02	---	T(7)
R011	Times for calculations (yr)	1.000E+03	1.000E+03	---	T(8)
R011	Times for calculations (yr)	not used	0.000E+00	---	T(9)
R011	Times for calculations (yr)	not used	0.000E+00	---	T(10)
R012	Initial principal radionuclide (pCi/g): Sr-90	1.000E+00	0.000E+00	---	S1(1)
R012	Concentration in groundwater (pCi/L): Sr-90	not used	0.000E+00	---	W1(1)
R013	Cover depth (m)	1.660E+00	0.000E+00	---	COVER0
R013	Density of cover material (g/cm**3)	1.520E+00	1.500E+00	---	DENSCV
R013	Cover depth erosion rate (m/yr)	1.000E-03	1.000E-03	---	VCV
R013	Density of contaminated zone (g/cm**3)	1.520E+00	1.500E+00	---	DENSCZ
R013	Contaminated zone erosion rate (m/yr)	1.000E-03	1.000E-03	---	VCZ
R013	Contaminated zone total porosity	4.500E-01	4.000E-01	---	TPCZ
R013	Contaminated zone field capacity	2.000E-01	2.000E-01	---	FCCZ
R013	Contaminated zone hydraulic conductivity (m/yr)	2.700E+02	1.000E+01	---	HCCZ
R013	Contaminated zone b parameter	7.120E+00	5.300E+00	---	BCZ
R013	Average annual wind speed (m/sec)	2.000E+00	2.000E+00	---	WIND
R013	Humidity in air (g/m**3)	not used	8.000E+00	---	HUMID
R013	Evapotranspiration coefficient	5.000E-01	5.000E-01	---	EVAPTR
R013	Precipitation (m/yr)	8.600E-01	1.000E+00	---	PRECIP
R013	Irrigation (m/yr)	1.040E+00	2.000E-01	---	RI
R013	Irrigation mode	overhead	overhead	---	IDITCH
R013	Runoff coefficient	3.000E-01	2.000E-01	---	RUNOFF
R013	Watershed area for nearby stream or pond (m**2)	1.000E+06	1.000E+06	---	WAREA
R013	Accuracy for water/soil computations	1.000E-03	1.000E-03	---	EPS
R014	Density of saturated zone (g/cm**3)	1.520E+00	1.500E+00	---	DENSAQ
R014	Saturated zone total porosity	4.500E-01	4.000E-01	---	TPSZ
R014	Saturated zone effective porosity	2.000E-01	2.000E-01	---	EPSZ
R014	Saturated zone field capacity	2.000E-01	2.000E-01	---	FCSZ
R014	Saturated zone hydraulic conductivity (m/yr)	2.700E+02	1.000E+02	---	HCSZ
R014	Saturated zone hydraulic gradient	5.000E-03	2.000E-02	---	HGWT
R014	Saturated zone b parameter	not used	5.300E+00	---	BSZ
R014	Water table drop rate (m/yr)	0.000E+00	1.000E-03	---	VWT
R014	Well pump intake depth (m below water table)	8.000E+00	1.000E+01	---	DWIBWT
R014	Model: Nondispersion (ND) or Mass-Balance (MB)	ND	ND	---	MODEL
R014	Well pumping rate (m**3/yr)	1.180E+02	2.500E+02	---	UW
R015	Number of unsaturated zone strata	1	1	---	NS

Site-Specific Parameter Summary (continued)

Menu	Parameter	User Input	Default	Used by RESRAD (If different from user input)	Parameter Name
R015	Unsat. zone 1, thickness (m)	3.000E+00	4.000E+00	---	H(1)
R015	Unsat. zone 1, soil density (g/cm**3)	1.520E+00	1.500E+00	---	DENSUZ(1)
R015	Unsat. zone 1, total porosity	4.500E-01	4.000E-01	---	TPUZ(1)
R015	Unsat. zone 1, effective porosity	2.000E-01	2.000E-01	---	EPUZ(1)
R015	Unsat. zone 1, field capacity	2.000E-01	2.000E-01	---	FCUZ(1)
R015	Unsat. zone 1, soil-specific b parameter	7.130E+00	5.300E+00	---	BUZ(1)
R015	Unsat. zone 1, hydraulic conductivity (m/yr)	2.700E+02	1.000E+01	---	HCUZ(1)
R016	Distribution coefficients for Sr-90				
R016	Contaminated zone (cm**3/g)	3.200E+01	3.000E+01	---	DCNUCC(1)
R016	Unsaturated zone 1 (cm**3/g)	3.200E+01	3.000E+01	---	DCNUCU(1,1)
R016	Saturated zone (cm**3/g)	3.200E+01	3.000E+01	---	DCNUCS(1)
R016	Leach rate (/yr)	0.000E+00	0.000E+00	1.677E-01	ALEACH(1)
R016	Solubility constant	0.000E+00	0.000E+00	not used	SOLUBK(1)
R017	Inhalation rate (m**3/yr)	8.400E+03	8.400E+03	---	INHALR
R017	Mass loading for inhalation (g/m**3)	6.000E-06	1.000E-04	---	MLINH
R017	Exposure duration	3.652E+02	3.000E+01	---	ED
R017	Shielding factor, inhalation	4.000E-01	4.000E-01	---	SHF3
R017	Shielding factor, external gamma	4.700E-01	7.000E-01	---	SHF1
R017	Fraction of time spent indoors	6.600E-01	5.000E-01	---	FIND
R017	Fraction of time spent outdoors (on site)	1.100E-01	2.500E-01	---	FOTD
R017	Shape factor flag, external gamma	1.000E+00	1.000E+00	>0 shows circular AREA.	FS
R017	Radii of shape factor array (used if FS = -1):				
R017	Outer annular radius (m), ring 1:	not used	5.000E+01	---	RAD_SHAPE(1)
R017	Outer annular radius (m), ring 2:	not used	7.071E+01	---	RAD_SHAPE(2)
R017	Outer annular radius (m), ring 3:	not used	0.000E+00	---	RAD_SHAPE(3)
R017	Outer annular radius (m), ring 4:	not used	0.000E+00	---	RAD_SHAPE(4)
R017	Outer annular radius (m), ring 5:	not used	0.000E+00	---	RAD_SHAPE(5)
R017	Outer annular radius (m), ring 6:	not used	0.000E+00	---	RAD_SHAPE(6)
R017	Outer annular radius (m), ring 7:	not used	0.000E+00	---	RAD_SHAPE(7)
R017	Outer annular radius (m), ring 8:	not used	0.000E+00	---	RAD_SHAPE(8)
R017	Outer annular radius (m), ring 9:	not used	0.000E+00	---	RAD_SHAPE(9)
R017	Outer annular radius (m), ring 10:	not used	0.000E+00	---	RAD_SHAPE(10)
R017	Outer annular radius (m), ring 11:	not used	0.000E+00	---	RAD_SHAPE(11)
R017	Outer annular radius (m), ring 12:	not used	0.000E+00	---	RAD_SHAPE(12)

Site-Specific Parameter Summary (continued)

Menu	Parameter	User Input	Default	Used by RESRAD (If different from user input)	Parameter Name
R017	Fractions of annular areas within AREA:				
R017	Ring 1	not used	1.000E+00	---	FRACA(1)
R017	Ring 2	not used	2.732E-01	---	FRACA(2)
R017	Ring 3	not used	0.000E+00	---	FRACA(3)
R017	Ring 4	not used	0.000E+00	---	FRACA(4)
R017	Ring 5	not used	0.000E+00	---	FRACA(5)
R017	Ring 6	not used	0.000E+00	---	FRACA(6)
R017	Ring 7	not used	0.000E+00	---	FRACA(7)
R017	Ring 8	not used	0.000E+00	---	FRACA(8)
R017	Ring 9	not used	0.000E+00	---	FRACA(9)
R017	Ring 10	not used	0.000E+00	---	FRACA(10)
R017	Ring 11	not used	0.000E+00	---	FRACA(11)
R017	Ring 12	not used	0.000E+00	---	FRACA(12)
R018	Fruits, vegetables and grain consumption (kg/yr)	7.800E+01	1.600E+02	---	DIET(1)
R018	Leafy vegetable consumption (kg/yr)	1.500E+01	1.400E+01	---	DIET(2)
R018	Milk consumption (L/yr)	1.180E+02	9.200E+01	---	DIET(3)
R018	Meat and poultry consumption (kg/yr)	5.200E+01	6.300E+01	---	DIET(4)
R018	Fish consumption (kg/yr)	1.600E+01	5.400E+00	---	DIET(5)
R018	Other seafood consumption (kg/yr)	0.000E+00	9.000E-01	---	DIET(6)
R018	Soil ingestion rate (g/yr)	1.830E+01	3.650E+01	---	SOIL
R018	Drinking water intake (L/yr)	4.780E+02	5.100E+02	---	DWI
R018	Contamination fraction of drinking water	1.000E+00	1.000E+00	---	FDW
R018	Contamination fraction of household water	not used	1.000E+00	---	FHHW
R018	Contamination fraction of livestock water	1.000E+00	1.000E+00	---	FLW
R018	Contamination fraction of irrigation water	1.000E+00	1.000E+00	---	FIRW
R018	Contamination fraction of aquatic food	5.000E-01	5.000E-01	---	FR9
R018	Contamination fraction of plant food	5.000E-01	-1	---	FPLANT
R018	Contamination fraction of meat	1.000E+00	-1	---	FMEAT
R018	Contamination fraction of milk	1.000E+00	-1	---	FMILK
R019	Livestock fodder intake for meat (kg/day)	8.500E+00	6.800E+01	---	LFI5
R019	Livestock fodder intake for milk (kg/day)	1.700E+01	5.500E+01	---	LFI6
R019	Livestock water intake for meat (L/day)	5.000E+01	5.000E+01	---	LWI5
R019	Livestock water intake for milk (L/day)	1.600E+02	1.600E+02	---	LWI6
R019	Livestock soil intake (kg/day)	5.000E-01	5.000E-01	---	LSI
R019	Mass loading for foliar deposition (g/m**3)	1.000E-04	1.000E-04	---	MLFD
R019	Depth of soil mixing layer (m)	1.500E-01	1.500E-01	---	DM
R019	Depth of roots (m)	9.000E-01	9.000E-01	---	DROOT
R019	Drinking water fraction from ground water	1.000E+00	1.000E+00	---	FGWDW
R019	Household water fraction from ground water	not used	1.000E+00	---	FGWHH
R019	Livestock water fraction from ground water	1.000E+00	1.000E+00	---	FGWLW
R019	Irrigation fraction from ground water	1.000E+00	1.000E+00	---	FGWIR
R19B	Wet weight crop yield for Non-Leafy (kg/m**2)	7.000E-01	7.000E-01	---	YV(1)
R19B	Wet weight crop yield for Leafy (kg/m**2)	1.500E+00	1.500E+00	---	YV(2)
R19B	Wet weight crop yield for Fodder (kg/m**2)	1.100E+00	1.100E+00	---	YV(3)
R19B	Growing Season for Non-Leafy (years)	1.700E-01	1.700E-01	---	TE(1)
R19B	Growing Season for Leafy (years)	2.500E-01	2.500E-01	---	TE(2)
R19B	Growing Season for Fodder (years)	8.000E-02	8.000E-02	---	TE(3)

Site-Specific Parameter Summary (continued)

Menu	Parameter	User Input	Default	Used by RESRAD (If different from user input)	Parameter Name
R19B	Translocation Factor for Non-Leafy	1.000E-01	1.000E-01	---	TIV(1)
R19B	Translocation Factor for Leafy	1.000E+00	1.000E+00	---	TIV(2)
R19B	Translocation Factor for Fodder	1.000E+00	1.000E+00	---	TIV(3)
R19B	Dry Foliar Interception Fraction for Non-Leafy	2.500E-01	2.500E-01	---	RDRY(1)
R19B	Dry Foliar Interception Fraction for Leafy	2.500E-01	2.500E-01	---	RDRY(2)
R19B	Dry Foliar Interception Fraction for Fodder	2.500E-01	2.500E-01	---	RDRY(3)
R19B	Wet Foliar Interception Fraction for Non-Leafy	2.500E-01	2.500E-01	---	RWET(1)
R19B	Wet Foliar Interception Fraction for Leafy	2.500E-01	2.500E-01	---	RWET(2)
R19B	Wet Foliar Interception Fraction for Fodder	2.500E-01	2.500E-01	---	RWET(3)
R19B	Weathering Removal Constant for Vegetation	2.000E+01	2.000E+01	---	WLAM
C14	C-12 concentration in water (g/cm**3)	not used	2.000E-05	---	C12WTR
C14	C-12 concentration in contaminated soil (g/g)	not used	3.000E-02	---	C12CZ
C14	Fraction of vegetation carbon from soil	not used	2.000E-02	---	CSOIL
C14	Fraction of vegetation carbon from air	not used	9.800E-01	---	CAIR
C14	C-14 evasion layer thickness in soil (m)	not used	3.000E-01	---	DMC
C14	C-14 evasion flux rate from soil (1/sec)	not used	7.000E-07	---	EVSN
C14	C-12 evasion flux rate from soil (1/sec)	not used	1.000E-10	---	REVSN
C14	Fraction of grain in beef cattle feed	not used	8.000E-01	---	AVFG4
C14	Fraction of grain in milk cow feed	not used	2.000E-01	---	AVFG5
STOR	Storage times of contaminated foodstuffs (days):				
STOR	Fruits, non-leafy vegetables, and grain	1.400E+01	1.400E+01	---	STOR_T(1)
STOR	Leafy vegetables	1.000E+00	1.000E+00	---	STOR_T(2)
STOR	Milk	1.000E+00	1.000E+00	---	STOR_T(3)
STOR	Meat and poultry	2.000E+01	2.000E+01	---	STOR_T(4)
STOR	Fish	7.000E+00	7.000E+00	---	STOR_T(5)
STOR	Crustacea and mollusks	7.000E+00	7.000E+00	---	STOR_T(6)
STOR	Well water	1.000E+00	1.000E+00	---	STOR_T(7)
STOR	Surface water	1.000E+00	1.000E+00	---	STOR_T(8)
STOR	Livestock fodder	4.500E+01	4.500E+01	---	STOR_T(9)
R021	Thickness of building foundation (m)	not used	1.500E-01	---	FLOOR1
R021	Bulk density of building foundation (g/cm**3)	not used	2.400E+00	---	DENSFL
R021	Total porosity of the cover material	not used	4.000E-01	---	TPCV
R021	Total porosity of the building foundation	not used	1.000E-01	---	TPFL
R021	Volumetric water content of the cover material	not used	5.000E-02	---	PH2OCV
R021	Volumetric water content of the foundation	not used	3.000E-02	---	PH2OFL
R021	Diffusion coefficient for radon gas (m/sec):				
R021	in cover material	not used	2.000E-06	---	DIFCV
R021	in foundation material	not used	3.000E-07	---	DIFFL
R021	in contaminated zone soil	not used	2.000E-06	---	DIFCZ
R021	Radon vertical dimension of mixing (m)	not used	2.000E+00	---	HMIX
R021	Average building air exchange rate (1/hr)	not used	5.000E-01	---	REXG
R021	Height of the building (room) (m)	not used	2.500E+00	---	HRM
R021	Building interior area factor	not used	0.000E+00	---	FAI
R021	Building depth below ground surface (m)	not used	-1.000E+00	---	DMFL
R021	Emanating power of Rn-222 gas	not used	2.500E-01	---	EMANA(1)
R021	Emanating power of Rn-220 gas	not used	1.500E-01	---	EMANA(2)
TITL	Number of graphical time points	32	---	---	NPTS

Site-Specific Parameter Summary (continued)

Menu	Parameter	User Input	Default	Used by RESRAD (If different from user input)	Parameter Name
TITL	Maximum number of integration points for dose	17	---	---	LYMAX
TITL	Maximum number of integration points for risk	1	---	---	KYMAX

Summary of Pathway Selections

Pathway	User Selection
1 -- external gamma	active
2 -- inhalation (w/o radon)	active
3 -- plant ingestion	active
4 -- meat ingestion	active
5 -- milk ingestion	active
6 -- aquatic foods	active
7 -- drinking water	active
8 -- soil ingestion	active
9 -- radon	suppressed
Find peak pathway doses	active

Contaminated Zone Dimensions		Initial Soil Concentrations, pCi/g	
Area:	1.00 square meters	Sr-90	1.000E+00
Thickness:	0.10 meters		
Cover Depth:	1.66 meters		

Total Dose TDOSE(t), mrem/yr
Basic Radiation Dose Limit = 2.500E+01 mrem/yr
Total Mixture Sum M(t) = Fraction of Basic Dose Limit Received at Time (t)

t (years):	0.000E+00	1.000E+00	3.000E+00	1.000E+01	3.000E+01	1.000E+02	3.000E+02	1.000E+03
TDOSE(t):	2.525E-16	2.123E-16	1.500E-16	4.452E-17	1.384E-18	1.159E-04	1.479E-14	0.000E+00
M(t):	1.010E-17	8.492E-18	6.001E-18	1.781E-18	5.536E-20	4.634E-06	5.917E-16	0.000E+00

Maximum TDOSE(t): 1.281E-04 mrem/yr at t = 91.5 ± 0.2 years

Total Dose Contributions TDOSE(i,p,t) for Individual Radionuclides (i) and Pathways (p)
As mrem/yr and Fraction of Total Dose At t = 9.152E+01 years

Water Independent Pathways (Inhalation excludes radon)

Radio-Nuclide	Ground		Inhalation		Radon		Plant		Meat		Milk		Soil	
Nuclide	mrem/yr	fract.	mrem/yr	fract.	mrem/yr	fract.	mrem/yr	fract.	mrem/yr	fract.	mrem/yr	fract.	mrem/yr	frac
Sr-90	3.191E-23	0.0000	0.000E+00	0.0000	0.000E+00	0.0000	0.000E+00	0.0000	0.000E+00	0.0000	0.000E+00	0.0000	0.000E+00	0.00
Total	3.191E-23	0.0000	0.000E+00	0.0000	0.000E+00	0.0000	0.000E+00	0.0000	0.000E+00	0.0000	0.000E+00	0.0000	0.000E+00	0.00

Total Dose Contributions TDOSE(i,p,t) for Individual Radionuclides (i) and Pathways (p)
As mrem/yr and Fraction of Total Dose At t = 9.152E+01 years

Water Dependent Pathways

Radio-Nuclide	Water		Fish		Radon		Plant		Meat		Milk		All Pathways	
Nuclide	mrem/yr	fract.	mrem/yr	fract.	mrem/yr	fract.	mrem/yr	fract.	mrem/yr	fract.	mrem/yr	fract.	mrem/yr	frac
Sr-90	8.148E-05	0.6362	1.175E-08	0.0001	0.000E+00	0.0000	2.441E-05	0.1906	9.251E-06	0.0722	1.292E-05	0.1009	1.281E-04	1.00
Total	8.148E-05	0.6362	1.175E-08	0.0001	0.000E+00	0.0000	2.441E-05	0.1906	9.251E-06	0.0722	1.292E-05	0.1009	1.281E-04	1.00

*Sum of all water independent and dependent pathways.

Total Dose Contributions TDOSE(i,p,t) for Individual Radionuclides (i) and Pathways (p)
As mrem/yr and Fraction of Total Dose At t = 0.000E+00 years

Water Independent Pathways (Inhalation excludes radon)

Radio-	Ground		Inhalation		Radon		Plant		Meat		Milk		Soil	
Nuclide	mrem/yr	fract.	mrem/yr	fract.	mrem/yr	fract.	mrem/yr	fract.	mrem/yr	fract.	mrem/yr	fract.	mrem/yr	frac
Sr-90	2.525E-16	1.0000	0.000E+00	0.0000	0.000E+00	0.0000	0.000E+00	0.0000	0.000E+00	0.0000	0.000E+00	0.0000	0.000E+00	0.00
Total	2.525E-16	1.0000	0.000E+00	0.0000	0.000E+00	0.0000	0.000E+00	0.0000	0.000E+00	0.0000	0.000E+00	0.0000	0.000E+00	0.00

Total Dose Contributions TDOSE(i,p,t) for Individual Radionuclides (i) and Pathways (p)
As mrem/yr and Fraction of Total Dose At t = 0.000E+00 years

Water Dependent Pathways

Radio-	Water		Fish		Radon		Plant		Meat		Milk		All Pathways	
Nuclide	mrem/yr	fract.	mrem/yr	fract.	mrem/yr	fract.	mrem/yr	fract.	mrem/yr	fract.	mrem/yr	fract.	mrem/yr	frac
Sr-90	0.000E+00	0.0000	0.000E+00	0.0000	0.000E+00	0.0000	0.000E+00	0.0000	0.000E+00	0.0000	0.000E+00	0.0000	2.525E-16	1.00
Total	0.000E+00	0.0000	0.000E+00	0.0000	0.000E+00	0.0000	0.000E+00	0.0000	0.000E+00	0.0000	0.000E+00	0.0000	2.525E-16	1.00

*Sum of all water independent and dependent pathways.

Total Dose Contributions TDOSE(i,p,t) for Individual Radionuclides (i) and Pathways (p)
As mrem/yr and Fraction of Total Dose At t = 1.000E+02 years

Water Independent Pathways (Inhalation excludes radon)

Radio-	Ground		Inhalation		Radon		Plant		Meat		Milk		Soil	
Nuclide	mrem/yr	fract.	mrem/yr	fract.	mrem/yr	fract.	mrem/yr	fract.	mrem/yr	fract.	mrem/yr	fract.	mrem/yr	frac
Sr-90	7.330E-24	0.0000	0.000E+00	0.0000	0.000E+00	0.0000	0.000E+00	0.0000	0.000E+00	0.0000	0.000E+00	0.0000	0.000E+00	0.00
Total	7.330E-24	0.0000	0.000E+00	0.0000	0.000E+00	0.0000	0.000E+00	0.0000	0.000E+00	0.0000	0.000E+00	0.0000	0.000E+00	0.00

Total Dose Contributions TDOSE(i,p,t) for Individual Radionuclides (i) and Pathways (p)
As mrem/yr and Fraction of Total Dose At t = 1.000E+02 years

Water Dependent Pathways

Radio-	Water		Fish		Radon		Plant		Meat		Milk		All Pathways	
Nuclide	mrem/yr	fract.	mrem/yr	fract.	mrem/yr	fract.	mrem/yr	fract.	mrem/yr	fract.	mrem/yr	fract.	mrem/yr	frac
Sr-90	7.367E-05	0.6359	1.063E-08	0.0001	0.000E+00	0.0000	2.208E-05	0.1906	8.386E-06	0.0724	1.170E-05	0.1010	1.159E-04	1.00
Total	7.367E-05	0.6359	1.063E-08	0.0001	0.000E+00	0.0000	2.208E-05	0.1906	8.386E-06	0.0724	1.170E-05	0.1010	1.159E-04	1.00

*Sum of all water independent and dependent pathways.

Probabilistic Input

Number of Sample Runs: 300

Number	Name	Distribution	Parameters			
1	AREA	TRIANGULAR	.5	1	2	
2	THICK0	NORMAL	.1	.5		
3	DENSCZ	TRUNCATED NORMAL	1.52	.23	.001	.999
4	DCACTC(1)	LOGNORMAL-N	3.45	2.12		

Probabilistic Total Dose Summary

Nuclide (j)	Peak Time	Peak Dose	DOSE(j,t), mrem/yr t= 0.00E+00	1.00E+00	3.00E+00	1.00E+01	3.00E+01	1.00E+02	3.00E+02	1.00E+03
Sr-90										
Min	0.00E+00	0.00E+00	0.00E+00	0.00E+00	0.00E+00	0.00E+00	0.00E+00	0.00E+00	0.00E+00	0.00E+00
Max	1.21E+02	1.92E-03	4.59E-16	4.55E-16	4.46E-16	4.17E-16	3.45E-16	1.43E-03	3.95E-06	2.41E-11
Avg	5.82E+01	2.03E-04	1.76E-16	1.55E-16	1.33E-16	9.74E-17	5.78E-17	1.75E-04	2.51E-07	5.07E-13
Std	5.05E+01	3.09E-04	1.68E-16	1.61E-16	1.52E-16	1.30E-16	9.48E-17	2.62E-04	6.40E-07	2.87E-12
∑ALL										
Min	0.00E+00	0.00E+00	0.00E+00	0.00E+00	0.00E+00	0.00E+00	0.00E+00	0.00E+00	0.00E+00	0.00E+00
Max	1.21E+02	1.92E-03	4.59E-16	4.55E-16	4.46E-16	4.17E-16	3.45E-16	1.43E-03	3.95E-06	2.41E-11
Avg	5.82E+01	2.03E-04	1.76E-16	1.55E-16	1.33E-16	9.74E-17	5.78E-17	1.75E-04	2.51E-07	5.07E-13
Std	5.05E+01	3.09E-04	1.68E-16	1.61E-16	1.52E-16	1.30E-16	9.48E-17	2.62E-04	6.40E-07	2.87E-12

∑ALL is total dose summed for all nuclides.

Probabilistic Dose vs Pathway(i): Ground External

Nuclide (j)	DOSE(i,j,t), mrem/yr t= 0.00E+00	1.00E+00	3.00E+00	1.00E+01	3.00E+01	1.00E+02	3.00E+02	1.00E+03
Sr-90								
Min	0.00E+00	0.00E+00	0.00E+00	0.00E+00	0.00E+00	0.00E+00	0.00E+00	0.00E+00
Max	4.59E-16	4.55E-16	4.46E-16	4.17E-16	3.45E-16	2.16E-16	6.00E-17	8.46E-19
Avg	1.76E-16	1.55E-16	1.33E-16	9.74E-17	5.78E-17	1.94E-17	2.83E-18	1.77E-20
Std	1.68E-16	1.61E-16	1.52E-16	1.30E-16	9.48E-17	4.63E-17	9.83E-18	9.97E-20
∑ALL								
Min	0.00E+00	0.00E+00	0.00E+00	0.00E+00	0.00E+00	0.00E+00	0.00E+00	0.00E+00
Max	4.59E-16	4.55E-16	4.46E-16	4.17E-16	3.45E-16	2.16E-16	6.00E-17	8.46E-19
Avg	1.76E-16	1.55E-16	1.33E-16	9.74E-17	5.78E-17	1.94E-17	2.83E-18	1.77E-20
Std	1.68E-16	1.61E-16	1.52E-16	1.30E-16	9.48E-17	4.63E-17	9.83E-18	9.97E-20

∑ALL is total pathway dose summed for all nuclides.

Probabilistic results summary : Reactor Security Bldg San Sewer BP1-1 Res Farmer w Unit Sr-90 File: C:\RESRAD_FAMILY\RESRAD\USERFILES\PBRF BP\06211201.RAD

Probabilistic Dose vs Pathway(i): Fish Ingestion

Nuclide (j)	DOSE(i,j,t), mrem/yr t= 0.00E+00	1.00E+00	3.00E+00	1.00E+01	3.00E+01	1.00E+02	3.00E+02	1.00E+03
Sr-90								
Min	0.00E+00	0.00E+00	0.00E+00	0.00E+00	0.00E+00	0.00E+00	0.00E+00	0.00E+00
Max	0.00E+00	0.00E+00	0.00E+00	0.00E+00	0.00E+00	1.31E-07	3.63E-10	3.04E-18
Avg	0.00E+00	0.00E+00	0.00E+00	0.00E+00	0.00E+00	1.60E-08	2.30E-11	9.15E-20
Std	0.00E+00	0.00E+00	0.00E+00	0.00E+00	0.00E+00	2.40E-08	5.87E-11	3.86E-19
∑ALL								
Min	0.00E+00	0.00E+00	0.00E+00	0.00E+00	0.00E+00	0.00E+00	0.00E+00	0.00E+00
Max	0.00E+00	0.00E+00	0.00E+00	0.00E+00	0.00E+00	1.31E-07	3.63E-10	3.04E-18
Avg	0.00E+00	0.00E+00	0.00E+00	0.00E+00	0.00E+00	1.60E-08	2.30E-11	9.15E-20
Std	0.00E+00	0.00E+00	0.00E+00	0.00E+00	0.00E+00	2.40E-08	5.87E-11	3.86E-19

∑ALL is total pathway dose summed for all nuclides.

Probabilistic Dose vs Pathway(i): Plant (Water Dep.)

Nuclide (j)	DOSE(i,j,t), mrem/yr t= 0.00E+00	1.00E+00	3.00E+00	1.00E+01	3.00E+01	1.00E+02	3.00E+02	1.00E+03
Sr-90								
Min	0.00E+00	0.00E+00	0.00E+00	0.00E+00	0.00E+00	0.00E+00	0.00E+00	0.00E+00
Max	0.00E+00	0.00E+00	0.00E+00	0.00E+00	0.00E+00	2.72E-04	7.54E-07	6.31E-15
Avg	0.00E+00	0.00E+00	0.00E+00	0.00E+00	0.00E+00	3.33E-05	4.79E-08	1.90E-16
Std	0.00E+00	0.00E+00	0.00E+00	0.00E+00	0.00E+00	4.98E-05	1.22E-07	8.03E-16
∑ALL								
Min	0.00E+00	0.00E+00	0.00E+00	0.00E+00	0.00E+00	0.00E+00	0.00E+00	0.00E+00
Max	0.00E+00	0.00E+00	0.00E+00	0.00E+00	0.00E+00	2.72E-04	7.54E-07	6.31E-15
Avg	0.00E+00	0.00E+00	0.00E+00	0.00E+00	0.00E+00	3.33E-05	4.79E-08	1.90E-16
Std	0.00E+00	0.00E+00	0.00E+00	0.00E+00	0.00E+00	4.98E-05	1.22E-07	8.03E-16

∑ALL is total pathway dose summed for all nuclides.

Probabilistic Dose vs Pathway(i): Meat (Water Dep.)

Nuclide (j)	DOSE(i,j,t), mrem/yr t= 0.00E+00	1.00E+00	3.00E+00	1.00E+01	3.00E+01	1.00E+02	3.00E+02	1.00E+03
Sr-90								
Min	0.00E+00	0.00E+00	0.00E+00	0.00E+00	0.00E+00	0.00E+00	0.00E+00	0.00E+00
Max	0.00E+00	0.00E+00	0.00E+00	0.00E+00	0.00E+00	1.03E-04	2.86E-07	2.40E-15
Avg	0.00E+00	0.00E+00	0.00E+00	0.00E+00	0.00E+00	1.26E-05	1.82E-08	7.23E-17
Std	0.00E+00	0.00E+00	0.00E+00	0.00E+00	0.00E+00	1.89E-05	4.64E-08	3.05E-16
∑ALL								
Min	0.00E+00	0.00E+00	0.00E+00	0.00E+00	0.00E+00	0.00E+00	0.00E+00	0.00E+00
Max	0.00E+00	0.00E+00	0.00E+00	0.00E+00	0.00E+00	1.03E-04	2.86E-07	2.40E-15
Avg	0.00E+00	0.00E+00	0.00E+00	0.00E+00	0.00E+00	1.26E-05	1.82E-08	7.23E-17
Std	0.00E+00	0.00E+00	0.00E+00	0.00E+00	0.00E+00	1.89E-05	4.64E-08	3.05E-16

∑ALL is total pathway dose summed for all nuclides.

Probabilistic Dose vs Pathway(i): Milk (Water Dep.)

Nuclide (j)	DOSE(i,j,t), mrem/yr t= 0.00E+00	1.00E+00	3.00E+00	1.00E+01	3.00E+01	1.00E+02	3.00E+02	1.00E+03
Sr-90								
Min	0.00E+00	0.00E+00	0.00E+00	0.00E+00	0.00E+00	0.00E+00	0.00E+00	0.00E+00
Max	0.00E+00	0.00E+00	0.00E+00	0.00E+00	0.00E+00	1.44E-04	3.99E-07	3.34E-15
Avg	0.00E+00	0.00E+00	0.00E+00	0.00E+00	0.00E+00	1.76E-05	2.54E-08	1.01E-16
Std	0.00E+00	0.00E+00	0.00E+00	0.00E+00	0.00E+00	2.64E-05	6.46E-08	4.25E-16
∑ALL								
Min	0.00E+00	0.00E+00	0.00E+00	0.00E+00	0.00E+00	0.00E+00	0.00E+00	0.00E+00
Max	0.00E+00	0.00E+00	0.00E+00	0.00E+00	0.00E+00	1.44E-04	3.99E-07	3.34E-15
Avg	0.00E+00	0.00E+00	0.00E+00	0.00E+00	0.00E+00	1.76E-05	2.54E-08	1.01E-16
Std	0.00E+00	0.00E+00	0.00E+00	0.00E+00	0.00E+00	2.64E-05	6.46E-08	4.25E-16

∑ALL is total pathway dose summed for all nuclides.

Coefficients for peak of mean dose time Dose

Coefficient =	PCC		SRC		PRCC		SRRC	
Repetition =	1		1		1		1	
Description of Probabilistic Variable	Sig	Coeff	Sig	Coeff	Sig	Coeff	Sig	Coeff
Area of contaminated zone	3	0.13	3	0.10	4	0.12	4	0.05
Thickness of contaminated zone	1	0.62	1	0.61	1	0.90	1	0.84
Density of contaminated zone	4	-0.04	4	-0.03	3	0.15	3	0.06
Kd of Sr-90 in Contaminated Zone	2	-0.18	2	-0.14	2	-0.62	2	-0.31
R-SQUARE		0.42		0.42		0.84		0.84

-Rank is set to zero if the dose is zero or the correlation matrix is singular.

-R-SQUARE varies between 0 and 1 and is called the coefficient of determination; it provides a measure of the variation in the dependent variable (Dose) explained by regression on the independent variables.

Table of Contents

Part I: Mixture Sums and Single Radionuclide Guidelines

Dose Conversion Factor (and Related) Parameter Summary
Dose Library: FGR 11

Menu	Parameter	Current Value#	Base Case*	Parameter Name
A-1	DCF's for external ground radiation, (mrem/yr)/(pCi/g)			
A-1	Ba-137m (Source: FGR 12)	3.606E+00	3.606E+00	DCF1(1)
A-1	Cs-137 (Source: FGR 12)	7.510E-04	7.510E-04	DCF1(2)
B-1	Dose conversion factors for inhalation, mrem/pCi:			
B-1	Cs-137+D	3.190E-05	3.190E-05	DCF2(1)
D-1	Dose conversion factors for ingestion, mrem/pCi:			
D-1	Cs-137+D	5.000E-05	5.000E-05	DCF3(1)
D-34	Food transfer factors:			
D-34	Cs-137+D , plant/soil concentration ratio, dimensionless	4.000E-02	4.000E-02	RTF(1,1)
D-34	Cs-137+D , beef/livestock-intake ratio, (pCi/kg)/(pCi/d)	3.000E-02	3.000E-02	RTF(1,2)
D-34	Cs-137+D , milk/livestock-intake ratio, (pCi/L)/(pCi/d)	8.000E-03	8.000E-03	RTF(1,3)
D-5	Bioaccumulation factors, fresh water, L/kg:			
D-5	Cs-137+D , fish	2.000E+03	2.000E+03	BIOFAC(1,1)
D-5	Cs-137+D , crustacea and mollusks	1.000E+02	1.000E+02	BIOFAC(1,2)

#For DCF1(xxx) only, factors are for infinite depth & area. See ETFG table in Ground Pathway of Detailed Report.
*Base Case means Default.Lib w/o Associate Nuclide contributions.

Site-Specific Parameter Summary

Menu	Parameter	User Input	Default	Used by RESRAD (If different from user input)	Parameter Name
R011	Area of contaminated zone (m**2)	1.000E+00	1.000E+04	---	AREA
R011	Thickness of contaminated zone (m)	7.500E-02	2.000E+00	---	THICK0
R011	Length parallel to aquifer flow (m)	7.010E+00	1.000E+02	---	LCZPAQ
R011	Basic radiation dose limit (mrem/yr)	2.500E+01	3.000E+01	---	BRDL
R011	Time since placement of material (yr)	0.000E+00	0.000E+00	---	TI
R011	Times for calculations (yr)	1.000E+00	1.000E+00	---	T(2)
R011	Times for calculations (yr)	3.000E+00	3.000E+00	---	T(3)
R011	Times for calculations (yr)	1.000E+01	1.000E+01	---	T(4)
R011	Times for calculations (yr)	3.000E+01	3.000E+01	---	T(5)
R011	Times for calculations (yr)	1.000E+02	1.000E+02	---	T(6)
R011	Times for calculations (yr)	3.000E+02	3.000E+02	---	T(7)
R011	Times for calculations (yr)	1.000E+03	1.000E+03	---	T(8)
R011	Times for calculations (yr)	not used	0.000E+00	---	T(9)
R011	Times for calculations (yr)	not used	0.000E+00	---	T(10)
R012	Initial principal radionuclide (pCi/g): Cs-137	1.000E+00	0.000E+00	---	S1(1)
R012	Concentration in groundwater (pCi/L): Cs-137	not used	0.000E+00	---	W1(1)
R013	Cover depth (m)	0.000E+00	0.000E+00	---	COVER0
R013	Density of cover material (g/cm**3)	not used	1.500E+00	---	DENSCV
R013	Cover depth erosion rate (m/yr)	not used	1.000E-03	---	VCV
R013	Density of contaminated zone (g/cm**3)	1.520E+00	1.500E+00	---	DENSCZ
R013	Contaminated zone erosion rate (m/yr)	1.000E-03	1.000E-03	---	VCZ
R013	Contaminated zone total porosity	4.500E-01	4.000E-01	---	TPCZ
R013	Contaminated zone field capacity	2.000E-01	2.000E-01	---	FCCZ
R013	Contaminated zone hydraulic conductivity (m/yr)	2.700E+02	1.000E+01	---	HCCZ
R013	Contaminated zone b parameter	7.120E+00	5.300E+00	---	BCZ
R013	Average annual wind speed (m/sec)	2.000E+00	2.000E+00	---	WIND
R013	Humidity in air (g/m**3)	not used	8.000E+00	---	HUMID
R013	Evapotranspiration coefficient	5.000E-01	5.000E-01	---	EVAPTR
R013	Precipitation (m/yr)	8.600E-01	1.000E+00	---	PRECIP
R013	Irrigation (m/yr)	1.040E+00	2.000E-01	---	RI
R013	Irrigation mode	overhead	overhead	---	IDITCH
R013	Runoff coefficient	3.000E-01	2.000E-01	---	RUNOFF
R013	Watershed area for nearby stream or pond (m**2)	1.000E+06	1.000E+06	---	WAREA
R013	Accuracy for water/soil computations	1.000E-03	1.000E-03	---	EPS
R014	Density of saturated zone (g/cm**3)	1.520E+00	1.500E+00	---	DENSAQ
R014	Saturated zone total porosity	4.500E-01	4.000E-01	---	TPSZ
R014	Saturated zone effective porosity	2.000E-01	2.000E-01	---	EPSZ
R014	Saturated zone field capacity	2.000E-01	2.000E-01	---	FCSZ
R014	Saturated zone hydraulic conductivity (m/yr)	2.700E+02	1.000E+02	---	HCSZ
R014	Saturated zone hydraulic gradient	5.000E-03	2.000E-02	---	HGWT
R014	Saturated zone b parameter	not used	5.300E+00	---	BSZ
R014	Water table drop rate (m/yr)	0.000E+00	1.000E-03	---	VWT
R014	Well pump intake depth (m below water table)	8.000E+00	1.000E+01	---	DWIBWT
R014	Model: Nondispersion (ND) or Mass-Balance (MB)	ND	ND	---	MODEL
R014	Well pumping rate (m**3/yr)	1.180E+02	2.500E+02	---	UW
R015	Number of unsaturated zone strata	1	1	---	NS

Site-Specific Parameter Summary (continued)

Menu	Parameter	User Input	Default	Used by RESRAD (If different from user input)	Parameter Name
R015	Unsat. zone 1, thickness (m)	3.000E+00	4.000E+00	---	H(1)
R015	Unsat. zone 1, soil density (g/cm**3)	1.520E+00	1.500E+00	---	DENSUZ(1)
R015	Unsat. zone 1, total porosity	4.500E-01	4.000E-01	---	TPUZ(1)
R015	Unsat. zone 1, effective porosity	2.000E-01	2.000E-01	---	EPUZ(1)
R015	Unsat. zone 1, field capacity	2.000E-01	2.000E-01	---	FCUZ(1)
R015	Unsat. zone 1, soil-specific b parameter	7.130E+00	5.300E+00	---	BUZ(1)
R015	Unsat. zone 1, hydraulic conductivity (m/yr)	2.700E+02	1.000E+01	---	HCUZ(1)
R016	Distribution coefficients for Cs-137				
R016	Contaminated zone (cm**3/g)	4.470E+02	4.600E+03	---	DCNUCC(1)
R016	Unsaturated zone 1 (cm**3/g)	4.770E+02	4.600E+03	---	DCNUCU(1,1)
R016	Saturated zone (cm**3/g)	4.470E+02	4.600E+03	---	DCNUCS(1)
R016	Leach rate (/yr)	0.000E+00	0.000E+00	1.610E-02	ALEACH(1)
R016	Solubility constant	0.000E+00	0.000E+00	not used	SOLUBK(1)
R017	Inhalation rate (m**3/yr)	8.400E+03	8.400E+03	---	INHALR
R017	Mass loading for inhalation (g/m**3)	6.000E-06	1.000E-04	---	MLINH
R017	Exposure duration	3.652E+02	3.000E+01	---	ED
R017	Shielding factor, inhalation	4.000E-01	4.000E-01	---	SHF3
R017	Shielding factor, external gamma	4.700E-01	7.000E-01	---	SHF1
R017	Fraction of time spent indoors	0.000E+00	5.000E-01	---	FIND
R017	Fraction of time spent outdoors (on site)	1.150E-02	2.500E-01	---	FOTD
R017	Shape factor flag, external gamma	1.000E+00	1.000E+00	>0 shows circular AREA.	FS
R017	Radii of shape factor array (used if FS = -1):				
R017	Outer annular radius (m), ring 1:	not used	5.000E+01	---	RAD_SHAPE(1)
R017	Outer annular radius (m), ring 2:	not used	7.071E+01	---	RAD_SHAPE(2)
R017	Outer annular radius (m), ring 3:	not used	0.000E+00	---	RAD_SHAPE(3)
R017	Outer annular radius (m), ring 4:	not used	0.000E+00	---	RAD_SHAPE(4)
R017	Outer annular radius (m), ring 5:	not used	0.000E+00	---	RAD_SHAPE(5)
R017	Outer annular radius (m), ring 6:	not used	0.000E+00	---	RAD_SHAPE(6)
R017	Outer annular radius (m), ring 7:	not used	0.000E+00	---	RAD_SHAPE(7)
R017	Outer annular radius (m), ring 8:	not used	0.000E+00	---	RAD_SHAPE(8)
R017	Outer annular radius (m), ring 9:	not used	0.000E+00	---	RAD_SHAPE(9)
R017	Outer annular radius (m), ring 10:	not used	0.000E+00	---	RAD_SHAPE(10)
R017	Outer annular radius (m), ring 11:	not used	0.000E+00	---	RAD_SHAPE(11)
R017	Outer annular radius (m), ring 12:	not used	0.000E+00	---	RAD_SHAPE(12)

Site-Specific Parameter Summary (continued)

Menu	Parameter	User Input	Default	Used by RESRAD (If different from user input)	Parameter Name
R017	Fractions of annular areas within AREA:				
R017	Ring 1	not used	1.000E+00	---	FRACA(1)
R017	Ring 2	not used	2.732E-01	---	FRACA(2)
R017	Ring 3	not used	0.000E+00	---	FRACA(3)
R017	Ring 4	not used	0.000E+00	---	FRACA(4)
R017	Ring 5	not used	0.000E+00	---	FRACA(5)
R017	Ring 6	not used	0.000E+00	---	FRACA(6)
R017	Ring 7	not used	0.000E+00	---	FRACA(7)
R017	Ring 8	not used	0.000E+00	---	FRACA(8)
R017	Ring 9	not used	0.000E+00	---	FRACA(9)
R017	Ring 10	not used	0.000E+00	---	FRACA(10)
R017	Ring 11	not used	0.000E+00	---	FRACA(11)
R017	Ring 12	not used	0.000E+00	---	FRACA(12)
R018	Fruits, vegetables and grain consumption (kg/yr)	7.800E+01	1.600E+02	---	DIET(1)
R018	Leafy vegetable consumption (kg/yr)	1.500E+01	1.400E+01	---	DIET(2)
R018	Milk consumption (L/yr)	1.180E+02	9.200E+01	---	DIET(3)
R018	Meat and poultry consumption (kg/yr)	5.200E+01	6.300E+01	---	DIET(4)
R018	Fish consumption (kg/yr)	1.600E+01	5.400E+00	---	DIET(5)
R018	Other seafood consumption (kg/yr)	0.000E+00	9.000E-01	---	DIET(6)
R018	Soil ingestion rate (g/yr)	1.830E+01	3.650E+01	---	SOIL
R018	Drinking water intake (L/yr)	4.780E+02	5.100E+02	---	DWI
R018	Contamination fraction of drinking water	1.000E+00	1.000E+00	---	FDW
R018	Contamination fraction of household water	not used	1.000E+00	---	FHHW
R018	Contamination fraction of livestock water	1.000E+00	1.000E+00	---	FLW
R018	Contamination fraction of irrigation water	1.000E+00	1.000E+00	---	FIRW
R018	Contamination fraction of aquatic food	5.000E-01	5.000E-01	---	FR9
R018	Contamination fraction of plant food	5.000E-01	-1	---	FPLANT
R018	Contamination fraction of meat	1.000E+00	-1	---	FMEAT
R018	Contamination fraction of milk	1.000E+00	-1	---	FMILK
R019	Livestock fodder intake for meat (kg/day)	8.500E+00	6.800E+01	---	LFI5
R019	Livestock fodder intake for milk (kg/day)	1.700E+01	5.500E+01	---	LFI6
R019	Livestock water intake for meat (L/day)	5.000E+01	5.000E+01	---	LWI5
R019	Livestock water intake for milk (L/day)	1.600E+02	1.600E+02	---	LWI6
R019	Livestock soil intake (kg/day)	5.000E-01	5.000E-01	---	LSI
R019	Mass loading for foliar deposition (g/m**3)	1.000E-04	1.000E-04	---	MLFD
R019	Depth of soil mixing layer (m)	1.500E-01	1.500E-01	---	DM
R019	Depth of roots (m)	9.000E-01	9.000E-01	---	DROOT
R019	Drinking water fraction from ground water	1.000E+00	1.000E+00	---	FGWDW
R019	Household water fraction from ground water	not used	1.000E+00	---	FGWHH
R019	Livestock water fraction from ground water	1.000E+00	1.000E+00	---	FGWLW
R019	Irrigation fraction from ground water	1.000E+00	1.000E+00	---	FGWIR
R19B	Wet weight crop yield for Non-Leafy (kg/m**2)	7.000E-01	7.000E-01	---	YV(1)
R19B	Wet weight crop yield for Leafy (kg/m**2)	1.500E+00	1.500E+00	---	YV(2)
R19B	Wet weight crop yield for Fodder (kg/m**2)	1.100E+00	1.100E+00	---	YV(3)
R19B	Growing Season for Non-Leafy (years)	1.700E-01	1.700E-01	---	TE(1)
R19B	Growing Season for Leafy (years)	2.500E-01	2.500E-01	---	TE(2)
R19B	Growing Season for Fodder (years)	8.000E-02	8.000E-02	---	TE(3)

Site-Specific Parameter Summary (continued)

Menu	Parameter	User Input	Default	Used by RESRAD (If different from user input)	Parameter Name
R19B	Translocation Factor for Non-Leafy	1.000E-01	1.000E-01	---	TIV(1)
R19B	Translocation Factor for Leafy	1.000E+00	1.000E+00	---	TIV(2)
R19B	Translocation Factor for Fodder	1.000E+00	1.000E+00	---	TIV(3)
R19B	Dry Foliar Interception Fraction for Non-Leafy	2.500E-01	2.500E-01	---	RDRY(1)
R19B	Dry Foliar Interception Fraction for Leafy	2.500E-01	2.500E-01	---	RDRY(2)
R19B	Dry Foliar Interception Fraction for Fodder	2.500E-01	2.500E-01	---	RDRY(3)
R19B	Wet Foliar Interception Fraction for Non-Leafy	2.500E-01	2.500E-01	---	RWET(1)
R19B	Wet Foliar Interception Fraction for Leafy	2.500E-01	2.500E-01	---	RWET(2)
R19B	Wet Foliar Interception Fraction for Fodder	2.500E-01	2.500E-01	---	RWET(3)
R19B	Weathering Removal Constant for Vegetation	2.000E+01	2.000E+01	---	WLAM
C14	C-12 concentration in water (g/cm**3)	not used	2.000E-05	---	C12WTR
C14	C-12 concentration in contaminated soil (g/g)	not used	3.000E-02	---	C12CZ
C14	Fraction of vegetation carbon from soil	not used	2.000E-02	---	CSOIL
C14	Fraction of vegetation carbon from air	not used	9.800E-01	---	CAIR
C14	C-14 evasion layer thickness in soil (m)	not used	3.000E-01	---	DMC
C14	C-14 evasion flux rate from soil (1/sec)	not used	7.000E-07	---	EVSN
C14	C-12 evasion flux rate from soil (1/sec)	not used	1.000E-10	---	REVSN
C14	Fraction of grain in beef cattle feed	not used	8.000E-01	---	AVFG4
C14	Fraction of grain in milk cow feed	not used	2.000E-01	---	AVFG5
STOR	Storage times of contaminated foodstuffs (days):				
STOR	Fruits, non-leafy vegetables, and grain	1.400E+01	1.400E+01	---	STOR_T(1)
STOR	Leafy vegetables	1.000E+00	1.000E+00	---	STOR_T(2)
STOR	Milk	1.000E+00	1.000E+00	---	STOR_T(3)
STOR	Meat and poultry	2.000E+01	2.000E+01	---	STOR_T(4)
STOR	Fish	7.000E+00	7.000E+00	---	STOR_T(5)
STOR	Crustacea and mollusks	7.000E+00	7.000E+00	---	STOR_T(6)
STOR	Well water	1.000E+00	1.000E+00	---	STOR_T(7)
STOR	Surface water	1.000E+00	1.000E+00	---	STOR_T(8)
STOR	Livestock fodder	4.500E+01	4.500E+01	---	STOR_T(9)
R021	Thickness of building foundation (m)	not used	1.500E-01	---	FLOOR1
R021	Bulk density of building foundation (g/cm**3)	not used	2.400E+00	---	DENSFL
R021	Total porosity of the cover material	not used	4.000E-01	---	TPCV
R021	Total porosity of the building foundation	not used	1.000E-01	---	TPFL
R021	Volumetric water content of the cover material	not used	5.000E-02	---	PH2OCV
R021	Volumetric water content of the foundation	not used	3.000E-02	---	PH2OFL
R021	Diffusion coefficient for radon gas (m/sec):				
R021	in cover material	not used	2.000E-06	---	DIFCV
R021	in foundation material	not used	3.000E-07	---	DIFFL
R021	in contaminated zone soil	not used	2.000E-06	---	DIFCZ
R021	Radon vertical dimension of mixing (m)	not used	2.000E+00	---	HMIX
R021	Average building air exchange rate (1/hr)	not used	5.000E-01	---	REXG
R021	Height of the building (room) (m)	not used	2.500E+00	---	HRM
R021	Building interior area factor	not used	0.000E+00	---	FAI
R021	Building depth below ground surface (m)	not used	-1.000E+00	---	DMFL
R021	Emanating power of Rn-222 gas	not used	2.500E-01	---	EMANA(1)
R021	Emanating power of Rn-220 gas	not used	1.500E-01	---	EMANA(2)
TITL	Number of graphical time points	32	---	---	NPTS

Site-Specific Parameter Summary (continued)

Menu	Parameter	User Input	Default	Used by RESRAD (If different from user input)	Parameter Name
TITL	Maximum number of integration points for dose	17	---	---	LYMAX
TITL	Maximum number of integration points for risk	1	---	---	KYMAX

Summary of Pathway Selections

Pathway	User Selection
1 -- external gamma	active
2 -- inhalation (w/o radon)	active
3 -- plant ingestion	active
4 -- meat ingestion	active
5 -- milk ingestion	active
6 -- aquatic foods	active
7 -- drinking water	active
8 -- soil ingestion	active
9 -- radon	suppressed
Find peak pathway doses	active

Contaminated Zone Dimensions		Initial Soil Concentrations, pCi/g	
Area:	1.00 square meters	Cs-137	1.000E+00
Thickness:	0.08 meters		
Cover Depth:	0.00 meters		

Total Dose TDOSE(t), mrem/yr
Basic Radiation Dose Limit = 2.500E+01 mrem/yr
Total Mixture Sum M(t) = Fraction of Basic Dose Limit Received at Time (t)

t (years):	0.000E+00	1.000E+00	3.000E+00	1.000E+01	3.000E+01	1.000E+02	3.000E+02	1.000E+03
TDOSE(t):	4.461E-02	4.233E-02	3.808E-02	2.613E-02	8.248E-03	0.000E+00	0.000E+00	0.000E+00
M(t):	1.784E-03	1.693E-03	1.523E-03	1.045E-03	3.299E-04	0.000E+00	0.000E+00	0.000E+00

Maximum TDOSE(t): 4.461E-02 mrem/yr at t = 0.000E+00 years

Total Dose Contributions TDOSE(i,p,t) for Individual Radionuclides (i) and Pathways (p)
As mrem/yr and Fraction of Total Dose At t = 0.000E+00 years

Water Independent Pathways (Inhalation excludes radon)

Radio-	Ground		Inhalation		Radon		Plant		Meat		Milk		Soil	
Nuclide	mrem/yr	fract.	mrem/yr	fract.	mrem/yr	fract.	mrem/yr	fract.	mrem/yr	fract.	mrem/yr	fract.	mrem/yr	frac
Cs-137	1.754E-03	0.0393	5.714E-10	0.0000	0.000E+00	0.0000	7.557E-03	0.1694	2.119E-02	0.4750	1.411E-02	0.3163	5.125E-09	0.00
Total	1.754E-03	0.0393	5.714E-10	0.0000	0.000E+00	0.0000	7.557E-03	0.1694	2.119E-02	0.4750	1.411E-02	0.3163	5.125E-09	0.00

Total Dose Contributions TDOSE(i,p,t) for Individual Radionuclides (i) and Pathways (p)
As mrem/yr and Fraction of Total Dose At t = 0.000E+00 years

Water Dependent Pathways

Radio-	Water		Fish		Radon		Plant		Meat		Milk		All Pathways	
Nuclide	mrem/yr	fract.	mrem/yr	fract.	mrem/yr	fract.	mrem/yr	fract.	mrem/yr	fract.	mrem/yr	fract.	mrem/yr	frac
Cs-137	0.000E+00	0.0000	0.000E+00	0.0000	0.000E+00	0.0000	0.000E+00	0.0000	0.000E+00	0.0000	0.000E+00	0.0000	4.461E-02	1.00
Total	0.000E+00	0.0000	0.000E+00	0.0000	0.000E+00	0.0000	0.000E+00	0.0000	0.000E+00	0.0000	0.000E+00	0.0000	4.461E-02	1.00

*Sum of all water independent and dependent pathways.

Probabilistic Input

Number of Sample Runs: 300

Number	Name	Distribution	Parameters			
1	AREA	TRIANGULAR	.5	1	2	
2	THICK0	NORMAL	.075	.5		
3	DENSCZ	TRUNCATED NORMAL	1.52	.23	.001	.999

Probabilistic Total Dose Summary

Nuclide (j)	Peak Time	Peak Dose	t= 0.00E+00	1.00E+00	3.00E+00	1.00E+01	3.00E+01	1.00E+02	3.00E+02	1.00E+03
			DOSE(j,t), mrem/yr							
Cs-137										
Min	0.00E+00	0.00E+00	0.00E+00	0.00E+00	0.00E+00	0.00E+00	0.00E+00	0.00E+00	0.00E+00	0.00E+00
Max	0.00E+00	2.17E-01	2.17E-01	2.12E-01	2.02E-01	1.71E-01	1.06E-01	2.00E-02	1.72E-04	8.88E-12
Avg	0.00E+00	7.12E-02	7.12E-02	6.91E-02	6.53E-02	5.35E-02	3.06E-02	4.47E-03	2.04E-05	9.03E-14
Std	0.00E+00	7.60E-02	7.60E-02	7.41E-02	7.05E-02	5.90E-02	3.54E-02	5.99E-03	3.79E-05	6.51E-13
∑ALL										
Min	0.00E+00	0.00E+00	0.00E+00	0.00E+00	0.00E+00	0.00E+00	0.00E+00	0.00E+00	0.00E+00	0.00E+00
Max	0.00E+00	2.17E-01	2.17E-01	2.12E-01	2.02E-01	1.71E-01	1.06E-01	2.00E-02	1.72E-04	8.88E-12
Avg	0.00E+00	7.12E-02	7.12E-02	6.91E-02	6.53E-02	5.35E-02	3.06E-02	4.47E-03	2.04E-05	9.03E-14
Std	0.00E+00	7.60E-02	7.60E-02	7.41E-02	7.05E-02	5.90E-02	3.54E-02	5.99E-03	3.79E-05	6.51E-13

∑ALL is total dose summed for all nuclides.

Coefficients for peak of mean dose time Dose

Coefficient =	PCC		SRC		PRCC		SRRC	
Repetition =	1		1		1		1	
Description of Probabilistic Variable	Sig	Coeff	Sig	Coeff	Sig	Coeff	Sig	Coeff
Area of contaminated zone	2	0.17	2	0.07	2	0.13	2	0.04
Thickness of contaminated zone	1	0.91	1	0.91	1	0.96	1	0.96
Density of contaminated zone	3	0.01	3	0.00	3	0.06	3	0.02
R-SQUARE		0.83		0.83		0.92		0.92

-Rank is set to zero if the dose is zero or the correlation matrix is singular.

-R-SQUARE varies between 0 and 1 and is called the coefficient of determination; it provides a measure of the variation in the dependent variable (Dose) explained by regression on the independent variables.

Table of Contents

Part I: Mixture Sums and Single Radionuclide Guidelines

Dose Conversion Factor (and Related) Parameter Summary
Dose Library: FGR 11

Menu	Parameter	Current Value#	Base Case*	Parameter Name
A-1	DCF's for external ground radiation, (mrem/yr)/(pCi/g)			
A-1	Co-60 (Source: FGR 12)	1.622E+01	1.622E+01	DCF1(1)
B-1	Dose conversion factors for inhalation, mrem/pCi:			
B-1	Co-60	2.190E-04	2.190E-04	DCF2(1)
D-1	Dose conversion factors for ingestion, mrem/pCi:			
D-1	Co-60	2.690E-05	2.690E-05	DCF3(1)
D-34	Food transfer factors:			
D-34	Co-60 , plant/soil concentration ratio, dimensionless	8.000E-02	8.000E-02	RTF(1,1)
D-34	Co-60 , beef/livestock-intake ratio, (pCi/kg)/(pCi/d)	2.000E-02	2.000E-02	RTF(1,2)
D-34	Co-60 , milk/livestock-intake ratio, (pCi/L)/(pCi/d)	2.000E-03	2.000E-03	RTF(1,3)
D-5	Bioaccumulation factors, fresh water, L/kg:			
D-5	Co-60 , fish	3.000E+02	3.000E+02	BIOFAC(1,1)
D-5	Co-60 , crustacea and mollusks	2.000E+02	2.000E+02	BIOFAC(1,2)

#For DCF1(xxx) only, factors are for infinite depth & area. See ETFG table in Ground Pathway of Detailed Report.
*Base Case means Default.Lib w/o Associate Nuclide contributions.

Site-Specific Parameter Summary

Menu	Parameter	User Input	Default	Used by RESRAD (If different from user input)	Parameter Name
R011	Area of contaminated zone (m**2)	1.000E+00	1.000E+04	---	AREA
R011	Thickness of contaminated zone (m)	7.500E-02	2.000E+00	---	THICK0
R011	Length parallel to aquifer flow (m)	7.010E+00	1.000E+02	---	LCZPAQ
R011	Basic radiation dose limit (mrem/yr)	2.500E+01	3.000E+01	---	BRDL
R011	Time since placement of material (yr)	0.000E+00	0.000E+00	---	TI
R011	Times for calculations (yr)	1.000E+00	1.000E+00	---	T(2)
R011	Times for calculations (yr)	3.000E+00	3.000E+00	---	T(3)
R011	Times for calculations (yr)	1.000E+01	1.000E+01	---	T(4)
R011	Times for calculations (yr)	3.000E+01	3.000E+01	---	T(5)
R011	Times for calculations (yr)	1.000E+02	1.000E+02	---	T(6)
R011	Times for calculations (yr)	3.000E+02	3.000E+02	---	T(7)
R011	Times for calculations (yr)	1.000E+03	1.000E+03	---	T(8)
R011	Times for calculations (yr)	not used	0.000E+00	---	T(9)
R011	Times for calculations (yr)	not used	0.000E+00	---	T(10)
R012	Initial principal radionuclide (pCi/g): Co-60	1.000E+00	0.000E+00	---	S1(1)
R012	Concentration in groundwater (pCi/L): Co-60	not used	0.000E+00	---	W1(1)
R013	Cover depth (m)	0.000E+00	0.000E+00	---	COVER0
R013	Density of cover material (g/cm**3)	not used	1.500E+00	---	DENSCV
R013	Cover depth erosion rate (m/yr)	not used	1.000E-03	---	VCV
R013	Density of contaminated zone (g/cm**3)	1.520E+00	1.500E+00	---	DENSCZ
R013	Contaminated zone erosion rate (m/yr)	1.000E-03	1.000E-03	---	VCZ
R013	Contaminated zone total porosity	4.500E-01	4.000E-01	---	TPCZ
R013	Contaminated zone field capacity	2.000E-01	2.000E-01	---	FCCZ
R013	Contaminated zone hydraulic conductivity (m/yr)	2.700E+02	1.000E+01	---	HCCZ
R013	Contaminated zone b parameter	7.120E+00	5.300E+00	---	BCZ
R013	Average annual wind speed (m/sec)	2.000E+00	2.000E+00	---	WIND
R013	Humidity in air (g/m**3)	not used	8.000E+00	---	HUMID
R013	Evapotranspiration coefficient	5.000E-01	5.000E-01	---	EVAPTR
R013	Precipitation (m/yr)	8.600E-01	1.000E+00	---	PRECIP
R013	Irrigation (m/yr)	1.040E+00	2.000E-01	---	RI
R013	Irrigation mode	overhead	overhead	---	IDITCH
R013	Runoff coefficient	3.000E-01	2.000E-01	---	RUNOFF
R013	Watershed area for nearby stream or pond (m**2)	1.000E+06	1.000E+06	---	WAREA
R013	Accuracy for water/soil computations	1.000E-03	1.000E-03	---	EPS
R014	Density of saturated zone (g/cm**3)	1.520E+00	1.500E+00	---	DENSAQ
R014	Saturated zone total porosity	4.500E-01	4.000E-01	---	TPSZ
R014	Saturated zone effective porosity	2.000E-01	2.000E-01	---	EPSZ
R014	Saturated zone field capacity	2.000E-01	2.000E-01	---	FCSZ
R014	Saturated zone hydraulic conductivity (m/yr)	2.700E+02	1.000E+02	---	HCSZ
R014	Saturated zone hydraulic gradient	5.000E-03	2.000E-02	---	HGWT
R014	Saturated zone b parameter	not used	5.300E+00	---	BSZ
R014	Water table drop rate (m/yr)	0.000E+00	1.000E-03	---	VWT
R014	Well pump intake depth (m below water table)	8.000E+00	1.000E+01	---	DWIBWT
R014	Model: Nondispersion (ND) or Mass-Balance (MB)	ND	ND	---	MODEL
R014	Well pumping rate (m**3/yr)	1.180E+02	2.500E+02	---	UW
R015	Number of unsaturated zone strata	1	1	---	NS

Site-Specific Parameter Summary (continued)

Menu	Parameter	User Input	Default	Used by RESRAD (If different from user input)	Parameter Name
R015	Unsat. zone 1, thickness (m)	3.000E+00	4.000E+00	---	H(1)
R015	Unsat. zone 1, soil density (g/cm**3)	1.520E+00	1.500E+00	---	DENSUZ(1)
R015	Unsat. zone 1, total porosity	4.500E-01	4.000E-01	---	TPUZ(1)
R015	Unsat. zone 1, effective porosity	2.000E-01	2.000E-01	---	EPUZ(1)
R015	Unsat. zone 1, field capacity	2.000E-01	2.000E-01	---	FCUZ(1)
R015	Unsat. zone 1, soil-specific b parameter	7.130E+00	5.300E+00	---	BUZ(1)
R015	Unsat. zone 1, hydraulic conductivity (m/yr)	2.700E+02	1.000E+01	---	HCUZ(1)
R016	Distribution coefficients for Co-60				
R016	Contaminated zone (cm**3/g)	1.000E+03	1.000E+03	---	DCNUCC(1)
R016	Unsaturated zone 1 (cm**3/g)	1.000E+03	1.000E+03	---	DCNUCU(1,1)
R016	Saturated zone (cm**3/g)	1.000E+03	1.000E+03	---	DCNUCS(1)
R016	Leach rate (/yr)	0.000E+00	0.000E+00	7.200E-03	ALEACH(1)
R016	Solubility constant	0.000E+00	0.000E+00	not used	SOLUBK(1)
R017	Inhalation rate (m**3/yr)	8.400E+03	8.400E+03	---	INHALR
R017	Mass loading for inhalation (g/m**3)	6.000E-06	1.000E-04	---	MLINH
R017	Exposure duration	3.652E+02	3.000E+01	---	ED
R017	Shielding factor, inhalation	4.000E-01	4.000E-01	---	SHF3
R017	Shielding factor, external gamma	4.700E-01	7.000E-01	---	SHF1
R017	Fraction of time spent indoors	0.000E+00	5.000E-01	---	FIND
R017	Fraction of time spent outdoors (on site)	1.150E-02	2.500E-01	---	FOTD
R017	Shape factor flag, external gamma	1.000E+00	1.000E+00	>0 shows circular AREA.	FS
R017	Radii of shape factor array (used if FS = -1):				
R017	Outer annular radius (m), ring 1:	not used	5.000E+01	---	RAD_SHAPE(1)
R017	Outer annular radius (m), ring 2:	not used	7.071E+01	---	RAD_SHAPE(2)
R017	Outer annular radius (m), ring 3:	not used	0.000E+00	---	RAD_SHAPE(3)
R017	Outer annular radius (m), ring 4:	not used	0.000E+00	---	RAD_SHAPE(4)
R017	Outer annular radius (m), ring 5:	not used	0.000E+00	---	RAD_SHAPE(5)
R017	Outer annular radius (m), ring 6:	not used	0.000E+00	---	RAD_SHAPE(6)
R017	Outer annular radius (m), ring 7:	not used	0.000E+00	---	RAD_SHAPE(7)
R017	Outer annular radius (m), ring 8:	not used	0.000E+00	---	RAD_SHAPE(8)
R017	Outer annular radius (m), ring 9:	not used	0.000E+00	---	RAD_SHAPE(9)
R017	Outer annular radius (m), ring 10:	not used	0.000E+00	---	RAD_SHAPE(10)
R017	Outer annular radius (m), ring 11:	not used	0.000E+00	---	RAD_SHAPE(11)
R017	Outer annular radius (m), ring 12:	not used	0.000E+00	---	RAD_SHAPE(12)

Site-Specific Parameter Summary (continued)

Menu	Parameter	User Input	Default	Used by RESRAD (If different from user input)	Parameter Name
R017	Fractions of annular areas within AREA:				
R017	Ring 1	not used	1.000E+00	---	FRACA(1)
R017	Ring 2	not used	2.732E-01	---	FRACA(2)
R017	Ring 3	not used	0.000E+00	---	FRACA(3)
R017	Ring 4	not used	0.000E+00	---	FRACA(4)
R017	Ring 5	not used	0.000E+00	---	FRACA(5)
R017	Ring 6	not used	0.000E+00	---	FRACA(6)
R017	Ring 7	not used	0.000E+00	---	FRACA(7)
R017	Ring 8	not used	0.000E+00	---	FRACA(8)
R017	Ring 9	not used	0.000E+00	---	FRACA(9)
R017	Ring 10	not used	0.000E+00	---	FRACA(10)
R017	Ring 11	not used	0.000E+00	---	FRACA(11)
R017	Ring 12	not used	0.000E+00	---	FRACA(12)
R018	Fruits, vegetables and grain consumption (kg/yr)	7.800E+01	1.600E+02	---	DIET(1)
R018	Leafy vegetable consumption (kg/yr)	1.500E+01	1.400E+01	---	DIET(2)
R018	Milk consumption (L/yr)	1.180E+02	9.200E+01	---	DIET(3)
R018	Meat and poultry consumption (kg/yr)	5.200E+01	6.300E+01	---	DIET(4)
R018	Fish consumption (kg/yr)	1.600E+01	5.400E+00	---	DIET(5)
R018	Other seafood consumption (kg/yr)	0.000E+00	9.000E-01	---	DIET(6)
R018	Soil ingestion rate (g/yr)	1.830E+01	3.650E+01	---	SOIL
R018	Drinking water intake (L/yr)	4.780E+02	5.100E+02	---	DWI
R018	Contamination fraction of drinking water	1.000E+00	1.000E+00	---	FDW
R018	Contamination fraction of household water	not used	1.000E+00	---	FHHW
R018	Contamination fraction of livestock water	1.000E+00	1.000E+00	---	FLW
R018	Contamination fraction of irrigation water	1.000E+00	1.000E+00	---	FIRW
R018	Contamination fraction of aquatic food	5.000E-01	5.000E-01	---	FR9
R018	Contamination fraction of plant food	5.000E-01	-1	---	FPLANT
R018	Contamination fraction of meat	1.000E+00	-1	---	FMEAT
R018	Contamination fraction of milk	1.000E+00	-1	---	FMILK
R019	Livestock fodder intake for meat (kg/day)	8.500E+00	6.800E+01	---	LFI5
R019	Livestock fodder intake for milk (kg/day)	1.700E+01	5.500E+01	---	LFI6
R019	Livestock water intake for meat (L/day)	5.000E+01	5.000E+01	---	LWI5
R019	Livestock water intake for milk (L/day)	1.600E+02	1.600E+02	---	LWI6
R019	Livestock soil intake (kg/day)	5.000E-01	5.000E-01	---	LSI
R019	Mass loading for foliar deposition (g/m**3)	1.000E-04	1.000E-04	---	MLFD
R019	Depth of soil mixing layer (m)	1.500E-01	1.500E-01	---	DM
R019	Depth of roots (m)	9.000E-01	9.000E-01	---	DROOT
R019	Drinking water fraction from ground water	1.000E+00	1.000E+00	---	FGWDW
R019	Household water fraction from ground water	not used	1.000E+00	---	FGWHH
R019	Livestock water fraction from ground water	1.000E+00	1.000E+00	---	FGWLW
R019	Irrigation fraction from ground water	1.000E+00	1.000E+00	---	FGWIR
R19B	Wet weight crop yield for Non-Leafy (kg/m**2)	7.000E-01	7.000E-01	---	YV(1)
R19B	Wet weight crop yield for Leafy (kg/m**2)	1.500E+00	1.500E+00	---	YV(2)
R19B	Wet weight crop yield for Fodder (kg/m**2)	1.100E+00	1.100E+00	---	YV(3)
R19B	Growing Season for Non-Leafy (years)	1.700E-01	1.700E-01	---	TE(1)
R19B	Growing Season for Leafy (years)	2.500E-01	2.500E-01	---	TE(2)
R19B	Growing Season for Fodder (years)	8.000E-02	8.000E-02	---	TE(3)

Site-Specific Parameter Summary (continued)

Menu	Parameter	User Input	Default	Used by RESRAD (If different from user input)	Parameter Name
R19B	Translocation Factor for Non-Leafy	1.000E-01	1.000E-01	---	TIV(1)
R19B	Translocation Factor for Leafy	1.000E+00	1.000E+00	---	TIV(2)
R19B	Translocation Factor for Fodder	1.000E+00	1.000E+00	---	TIV(3)
R19B	Dry Foliar Interception Fraction for Non-Leafy	2.500E-01	2.500E-01	---	RDRY(1)
R19B	Dry Foliar Interception Fraction for Leafy	2.500E-01	2.500E-01	---	RDRY(2)
R19B	Dry Foliar Interception Fraction for Fodder	2.500E-01	2.500E-01	---	RDRY(3)
R19B	Wet Foliar Interception Fraction for Non-Leafy	2.500E-01	2.500E-01	---	RWET(1)
R19B	Wet Foliar Interception Fraction for Leafy	2.500E-01	2.500E-01	---	RWET(2)
R19B	Wet Foliar Interception Fraction for Fodder	2.500E-01	2.500E-01	---	RWET(3)
R19B	Weathering Removal Constant for Vegetation	2.000E+01	2.000E+01	---	WLAM
C14	C-12 concentration in water (g/cm**3)	not used	2.000E-05	---	C12WTR
C14	C-12 concentration in contaminated soil (g/g)	not used	3.000E-02	---	C12CZ
C14	Fraction of vegetation carbon from soil	not used	2.000E-02	---	CSOIL
C14	Fraction of vegetation carbon from air	not used	9.800E-01	---	CAIR
C14	C-14 evasion layer thickness in soil (m)	not used	3.000E-01	---	DMC
C14	C-14 evasion flux rate from soil (1/sec)	not used	7.000E-07	---	EVSN
C14	C-12 evasion flux rate from soil (1/sec)	not used	1.000E-10	---	REVSN
C14	Fraction of grain in beef cattle feed	not used	8.000E-01	---	AVFG4
C14	Fraction of grain in milk cow feed	not used	2.000E-01	---	AVFG5
STOR	Storage times of contaminated foodstuffs (days):				
STOR	Fruits, non-leafy vegetables, and grain	1.400E+01	1.400E+01	---	STOR_T(1)
STOR	Leafy vegetables	1.000E+00	1.000E+00	---	STOR_T(2)
STOR	Milk	1.000E+00	1.000E+00	---	STOR_T(3)
STOR	Meat and poultry	2.000E+01	2.000E+01	---	STOR_T(4)
STOR	Fish	7.000E+00	7.000E+00	---	STOR_T(5)
STOR	Crustacea and mollusks	7.000E+00	7.000E+00	---	STOR_T(6)
STOR	Well water	1.000E+00	1.000E+00	---	STOR_T(7)
STOR	Surface water	1.000E+00	1.000E+00	---	STOR_T(8)
STOR	Livestock fodder	4.500E+01	4.500E+01	---	STOR_T(9)
R021	Thickness of building foundation (m)	not used	1.500E-01	---	FLOOR1
R021	Bulk density of building foundation (g/cm**3)	not used	2.400E+00	---	DENSFL
R021	Total porosity of the cover material	not used	4.000E-01	---	TPCV
R021	Total porosity of the building foundation	not used	1.000E-01	---	TPFL
R021	Volumetric water content of the cover material	not used	5.000E-02	---	PH2OCV
R021	Volumetric water content of the foundation	not used	3.000E-02	---	PH2OFL
R021	Diffusion coefficient for radon gas (m/sec):				
R021	in cover material	not used	2.000E-06	---	DIFCV
R021	in foundation material	not used	3.000E-07	---	DIFFL
R021	in contaminated zone soil	not used	2.000E-06	---	DIFCZ
R021	Radon vertical dimension of mixing (m)	not used	2.000E+00	---	HMIX
R021	Average building air exchange rate (1/hr)	not used	5.000E-01	---	REXG
R021	Height of the building (room) (m)	not used	2.500E+00	---	HRM
R021	Building interior area factor	not used	0.000E+00	---	FAI
R021	Building depth below ground surface (m)	not used	-1.000E+00	---	DMFL
R021	Emanating power of Rn-222 gas	not used	2.500E-01	---	EMANA(1)
R021	Emanating power of Rn-220 gas	not used	1.500E-01	---	EMANA(2)
TITL	Number of graphical time points	32	---	---	NPTS

Site-Specific Parameter Summary (continued)

Menu	Parameter	User Input	Default	Used by RESRAD (If different from user input)	Parameter Name
TITL	Maximum number of integration points for dose	17	---	---	LYMAX
TITL	Maximum number of integration points for risk	1	---	---	KYMAX

Summary of Pathway Selections

Pathway	User Selection
1 -- external gamma	active
2 -- inhalation (w/o radon)	active
3 -- plant ingestion	active
4 -- meat ingestion	active
5 -- milk ingestion	active
6 -- aquatic foods	active
7 -- drinking water	active
8 -- soil ingestion	active
9 -- radon	suppressed
Find peak pathway doses	active

Contaminated Zone Dimensions		Initial Soil Concentrations, pCi/g	
Area:	1.00 square meters	Co-60	1.000E+00
Thickness:	0.08 meters		
Cover Depth:	0.00 meters		

Total Dose TDOSE(t), mrem/yr
Basic Radiation Dose Limit = 2.500E+01 mrem/yr
Total Mixture Sum M(t) = Fraction of Basic Dose Limit Received at Time (t)

t (years):	0.000E+00	1.000E+00	3.000E+00	1.000E+01	3.000E+01	1.000E+02	3.000E+02	1.000E+03
TDOSE(t):	2.476E-02	2.128E-02	1.571E-02	5.392E-03	2.350E-04	0.000E+00	0.000E+00	0.000E+00
M(t):	9.904E-04	8.512E-04	6.282E-04	2.157E-04	9.399E-06	0.000E+00	0.000E+00	0.000E+00

Maximum TDOSE(t): 2.476E-02 mrem/yr at t = 0.000E+00 years

Total Dose Contributions TDOSE(i,p,t) for Individual Radionuclides (i) and Pathways (p)
As mrem/yr and Fraction of Total Dose At t = 0.000E+00 years

Water Independent Pathways (Inhalation excludes radon)

Radio-	Ground		Inhalation		Radon		Plant		Meat		Milk		Soil	
Nuclide	mrem/yr	fract.	mrem/yr	fract.	mrem/yr	fract.	mrem/yr	fract.	mrem/yr	fract.	mrem/yr	fract.	mrem/yr	frac
Co-60	6.908E-03	0.2790	3.736E-09	0.0000	0.000E+00	0.0000	7.741E-03	0.3126	7.971E-03	0.3219	2.141E-03	0.0865	2.626E-09	0.00
Total	6.908E-03	0.2790	3.736E-09	0.0000	0.000E+00	0.0000	7.741E-03	0.3126	7.971E-03	0.3219	2.141E-03	0.0865	2.626E-09	0.00

Total Dose Contributions TDOSE(i,p,t) for Individual Radionuclides (i) and Pathways (p)
As mrem/yr and Fraction of Total Dose At t = 0.000E+00 years

Water Dependent Pathways

Radio-	Water		Fish		Radon		Plant		Meat		Milk		All Pathways	
Nuclide	mrem/yr	fract.	mrem/yr	fract.	mrem/yr	fract.	mrem/yr	fract.	mrem/yr	fract.	mrem/yr	fract.	mrem/yr	frac
Co-60	0.000E+00	0.0000	0.000E+00	0.0000	0.000E+00	0.0000	0.000E+00	0.0000	0.000E+00	0.0000	0.000E+00	0.0000	2.476E-02	1.00
Total	0.000E+00	0.0000	0.000E+00	0.0000	0.000E+00	0.0000	0.000E+00	0.0000	0.000E+00	0.0000	0.000E+00	0.0000	2.476E-02	1.00

*Sum of all water independent and dependent pathways.

Probabilistic Input

Number of Sample Runs: 300

Number	Name	Distribution	Parameters			
1	AREA	TRIANGULAR	.5	1	2	
2	THICKO	NORMAL	.075	.5		
3	DENSCZ	TRUNCATED NORMAL	1.52	.23	.001	.999

Probabilistic Total Dose Summary

Nuclide (j)	Peak Time	Peak Dose	DOSE(j,t), mrem/yr t= 0.00E+00	1.00E+00	3.00E+00	1.00E+01	3.00E+01	1.00E+02	3.00E+02	1.00E+03
Co-60										
Min	0.00E+00	0.00E+00	0.00E+00	0.00E+00	0.00E+00	0.00E+00	0.00E+00	0.00E+00	0.00E+00	0.00E+00
Max	0.00E+00	1.61E-01	1.61E-01	1.41E-01	1.08E-01	4.30E-02	3.07E-03	2.97E-07	1.05E-18	0.00E+00
Avg	0.00E+00	4.78E-02	4.78E-02	4.18E-02	3.19E-02	1.24E-02	8.36E-04	6.73E-08	1.35E-19	0.00E+00
Std	0.00E+00	5.33E-02	5.33E-02	4.67E-02	3.58E-02	1.41E-02	9.90E-04	8.99E-08	2.47E-19	0.00E+00
∑ALL										
Min	0.00E+00	0.00E+00	0.00E+00	0.00E+00	0.00E+00	0.00E+00	0.00E+00	0.00E+00	0.00E+00	0.00E+00
Max	0.00E+00	1.61E-01	1.61E-01	1.41E-01	1.08E-01	4.30E-02	3.07E-03	2.97E-07	1.05E-18	0.00E+00
Avg	0.00E+00	4.78E-02	4.78E-02	4.18E-02	3.19E-02	1.24E-02	8.36E-04	6.73E-08	1.35E-19	0.00E+00
Std	0.00E+00	5.33E-02	5.33E-02	4.67E-02	3.58E-02	1.41E-02	9.90E-04	8.99E-08	2.47E-19	0.00E+00

∑ALL is total dose summed for all nuclides.

Coefficients for peak of mean dose time Dose

Coefficient =	PCC		SRC		PRCC		SRRC	
Repetition =	1		1		1		1	
Description of Probabilistic Variable	Sig	Coeff	Sig	Coeff	Sig	Coeff	Sig	Coeff
Area of contaminated zone	2	0.23	2	0.09	2	0.18	2	0.05
Thickness of contaminated zone	1	0.91	1	0.91	1	0.96	1	0.96
Density of contaminated zone	3	0.00	3	0.00	3	0.08	3	0.02
R-SQUARE		0.83		0.83		0.92		0.92

-Rank is set to zero if the dose is zero or the correlation matrix is singular.
-R-SQUARE varies between 0 and 1 and is called the coefficient of determination; it provides a measure of the variation in the dependent variable (Dose) explained by regression on the independent variables.

Table of Contents

Part I: Mixture Sums and Single Radionuclide Guidelines

Dose Conversion Factor (and Related) Parameter Summary
Dose Library: FGR 11

Menu	Parameter	Current Value#	Base Case*	Parameter Name
A-1	DCF's for external ground radiation, (mrem/yr)/(pCi/g)			
A-1	Sr-90 (Source: FGR 12)	7.043E-04	7.043E-04	DCF1(1)
A-1	Y-90 (Source: FGR 12)	2.391E-02	2.391E-02	DCF1(2)
B-1	Dose conversion factors for inhalation, mrem/pCi:			
B-1	Sr-90+D	1.308E-03	1.300E-03	DCF2(1)
D-1	Dose conversion factors for ingestion, mrem/pCi:			
D-1	Sr-90+D	1.528E-04	1.420E-04	DCF3(1)
D-34	Food transfer factors:			
D-34	Sr-90+D , plant/soil concentration ratio, dimensionless	3.000E-01	3.000E-01	RTF(1,1)
D-34	Sr-90+D , beef/livestock-intake ratio, (pCi/kg)/(pCi/d)	8.000E-03	8.000E-03	RTF(1,2)
D-34	Sr-90+D , milk/livestock-intake ratio, (pCi/L)/(pCi/d)	2.000E-03	2.000E-03	RTF(1,3)
D-5	Bioaccumulation factors, fresh water, L/kg:			
D-5	Sr-90+D , fish	6.000E+01	6.000E+01	BIOFAC(1,1)
D-5	Sr-90+D , crustacea and mollusks	1.000E+02	1.000E+02	BIOFAC(1,2)

#For DCF1(xxx) only, factors are for infinite depth & area. See ETFG table in Ground Pathway of Detailed Report.
*Base Case means Default.Lib w/o Associate Nuclide contributions.

Site-Specific Parameter Summary

Menu	Parameter	User Input	Default	Used by RESRAD (If different from user input)	Parameter Name
R011	Area of contaminated zone (m**2)	1.000E+00	1.000E+04	---	AREA
R011	Thickness of contaminated zone (m)	7.500E-02	2.000E+00	---	THICK0
R011	Length parallel to aquifer flow (m)	7.010E+00	1.000E+02	---	LCZPAQ
R011	Basic radiation dose limit (mrem/yr)	2.500E+01	3.000E+01	---	BRDL
R011	Time since placement of material (yr)	0.000E+00	0.000E+00	---	TI
R011	Times for calculations (yr)	1.000E+00	1.000E+00	---	T(2)
R011	Times for calculations (yr)	3.000E+00	3.000E+00	---	T(3)
R011	Times for calculations (yr)	1.000E+01	1.000E+01	---	T(4)
R011	Times for calculations (yr)	3.000E+01	3.000E+01	---	T(5)
R011	Times for calculations (yr)	1.000E+02	1.000E+02	---	T(6)
R011	Times for calculations (yr)	3.000E+02	3.000E+02	---	T(7)
R011	Times for calculations (yr)	1.000E+03	1.000E+03	---	T(8)
R011	Times for calculations (yr)	not used	0.000E+00	---	T(9)
R011	Times for calculations (yr)	not used	0.000E+00	---	T(10)
R012	Initial principal radionuclide (pCi/g): Sr-90	1.000E+00	0.000E+00	---	S1(1)
R012	Concentration in groundwater (pCi/L): Sr-90	not used	0.000E+00	---	W1(1)
R013	Cover depth (m)	0.000E+00	0.000E+00	---	COVER0
R013	Density of cover material (g/cm**3)	not used	1.500E+00	---	DENSCV
R013	Cover depth erosion rate (m/yr)	not used	1.000E-03	---	VCV
R013	Density of contaminated zone (g/cm**3)	1.520E+00	1.500E+00	---	DENSCZ
R013	Contaminated zone erosion rate (m/yr)	1.000E-03	1.000E-03	---	VCZ
R013	Contaminated zone total porosity	4.500E-01	4.000E-01	---	TPCZ
R013	Contaminated zone field capacity	2.000E-01	2.000E-01	---	FCCZ
R013	Contaminated zone hydraulic conductivity (m/yr)	2.700E+02	1.000E+01	---	HCCZ
R013	Contaminated zone b parameter	7.120E+00	5.300E+00	---	BCZ
R013	Average annual wind speed (m/sec)	2.000E+00	2.000E+00	---	WIND
R013	Humidity in air (g/m**3)	not used	8.000E+00	---	HUMID
R013	Evapotranspiration coefficient	5.000E-01	5.000E-01	---	EVAPTR
R013	Precipitation (m/yr)	8.600E-01	1.000E+00	---	PRECIP
R013	Irrigation (m/yr)	1.040E+00	2.000E-01	---	RI
R013	Irrigation mode	overhead	overhead	---	IDITCH
R013	Runoff coefficient	3.000E-01	2.000E-01	---	RUNOFF
R013	Watershed area for nearby stream or pond (m**2)	1.000E+06	1.000E+06	---	WAREA
R013	Accuracy for water/soil computations	1.000E-03	1.000E-03	---	EPS
R014	Density of saturated zone (g/cm**3)	1.520E+00	1.500E+00	---	DENSAQ
R014	Saturated zone total porosity	4.500E-01	4.000E-01	---	TPSZ
R014	Saturated zone effective porosity	2.000E-01	2.000E-01	---	EPSZ
R014	Saturated zone field capacity	2.000E-01	2.000E-01	---	FCSZ
R014	Saturated zone hydraulic conductivity (m/yr)	2.700E+02	1.000E+02	---	HCSZ
R014	Saturated zone hydraulic gradient	5.000E-03	2.000E-02	---	HGWT
R014	Saturated zone b parameter	not used	5.300E+00	---	BSZ
R014	Water table drop rate (m/yr)	0.000E+00	1.000E-03	---	VWT
R014	Well pump intake depth (m below water table)	8.000E+00	1.000E+01	---	DWIBWT
R014	Model: Nondispersion (ND) or Mass-Balance (MB)	ND	ND	---	MODEL
R014	Well pumping rate (m**3/yr)	1.180E+02	2.500E+02	---	UW
R015	Number of unsaturated zone strata	1	1	---	NS

Site-Specific Parameter Summary (continued)

Menu	Parameter	User Input	Default	Used by RESRAD (If different from user input)	Parameter Name
R015	Unsat. zone 1, thickness (m)	3.000E+00	4.000E+00	---	H(1)
R015	Unsat. zone 1, soil density (g/cm**3)	1.520E+00	1.500E+00	---	DENSUZ(1)
R015	Unsat. zone 1, total porosity	4.500E-01	4.000E-01	---	TPUZ(1)
R015	Unsat. zone 1, effective porosity	2.000E-01	2.000E-01	---	EPUZ(1)
R015	Unsat. zone 1, field capacity	2.000E-01	2.000E-01	---	FCUZ(1)
R015	Unsat. zone 1, soil-specific b parameter	7.130E+00	5.300E+00	---	BUZ(1)
R015	Unsat. zone 1, hydraulic conductivity (m/yr)	2.700E+02	1.000E+01	---	HCUZ(1)
R016	Distribution coefficients for Sr-90				
R016	Contaminated zone (cm**3/g)	3.200E+01	3.000E+01	---	DCNUCC(1)
R016	Unsaturated zone 1 (cm**3/g)	3.200E+01	3.000E+01	---	DCNUCU(1,1)
R016	Saturated zone (cm**3/g)	3.200E+01	3.000E+01	---	DCNUCS(1)
R016	Leach rate (/yr)	0.000E+00	0.000E+00	2.236E-01	ALEACH(1)
R016	Solubility constant	0.000E+00	0.000E+00	not used	SOLUBK(1)
R017	Inhalation rate (m**3/yr)	8.400E+03	8.400E+03	---	INHALR
R017	Mass loading for inhalation (g/m**3)	6.000E-06	1.000E-04	---	MLINH
R017	Exposure duration	3.652E+02	3.000E+01	---	ED
R017	Shielding factor, inhalation	4.000E-01	4.000E-01	---	SHF3
R017	Shielding factor, external gamma	4.700E-01	7.000E-01	---	SHF1
R017	Fraction of time spent indoors	0.000E+00	5.000E-01	---	FIND
R017	Fraction of time spent outdoors (on site)	1.150E-02	2.500E-01	---	FOTD
R017	Shape factor flag, external gamma	1.000E+00	1.000E+00	>0 shows circular AREA.	FS
R017	Radii of shape factor array (used if FS = -1):				
R017	Outer annular radius (m), ring 1:	not used	5.000E+01	---	RAD_SHAPE(1)
R017	Outer annular radius (m), ring 2:	not used	7.071E+01	---	RAD_SHAPE(2)
R017	Outer annular radius (m), ring 3:	not used	0.000E+00	---	RAD_SHAPE(3)
R017	Outer annular radius (m), ring 4:	not used	0.000E+00	---	RAD_SHAPE(4)
R017	Outer annular radius (m), ring 5:	not used	0.000E+00	---	RAD_SHAPE(5)
R017	Outer annular radius (m), ring 6:	not used	0.000E+00	---	RAD_SHAPE(6)
R017	Outer annular radius (m), ring 7:	not used	0.000E+00	---	RAD_SHAPE(7)
R017	Outer annular radius (m), ring 8:	not used	0.000E+00	---	RAD_SHAPE(8)
R017	Outer annular radius (m), ring 9:	not used	0.000E+00	---	RAD_SHAPE(9)
R017	Outer annular radius (m), ring 10:	not used	0.000E+00	---	RAD_SHAPE(10)
R017	Outer annular radius (m), ring 11:	not used	0.000E+00	---	RAD_SHAPE(11)
R017	Outer annular radius (m), ring 12:	not used	0.000E+00	---	RAD_SHAPE(12)

Site-Specific Parameter Summary (continued)

Menu	Parameter	User Input	Default	Used by RESRAD (If different from user input)	Parameter Name
R017	Fractions of annular areas within AREA:				
R017	Ring 1	not used	1.000E+00	---	FRACA(1)
R017	Ring 2	not used	2.732E-01	---	FRACA(2)
R017	Ring 3	not used	0.000E+00	---	FRACA(3)
R017	Ring 4	not used	0.000E+00	---	FRACA(4)
R017	Ring 5	not used	0.000E+00	---	FRACA(5)
R017	Ring 6	not used	0.000E+00	---	FRACA(6)
R017	Ring 7	not used	0.000E+00	---	FRACA(7)
R017	Ring 8	not used	0.000E+00	---	FRACA(8)
R017	Ring 9	not used	0.000E+00	---	FRACA(9)
R017	Ring 10	not used	0.000E+00	---	FRACA(10)
R017	Ring 11	not used	0.000E+00	---	FRACA(11)
R017	Ring 12	not used	0.000E+00	---	FRACA(12)
R018	Fruits, vegetables and grain consumption (kg/yr)	7.800E+01	1.600E+02	---	DIET(1)
R018	Leafy vegetable consumption (kg/yr)	1.500E+01	1.400E+01	---	DIET(2)
R018	Milk consumption (L/yr)	1.180E+02	9.200E+01	---	DIET(3)
R018	Meat and poultry consumption (kg/yr)	5.200E+01	6.300E+01	---	DIET(4)
R018	Fish consumption (kg/yr)	1.600E+01	5.400E+00	---	DIET(5)
R018	Other seafood consumption (kg/yr)	0.000E+00	9.000E-01	---	DIET(6)
R018	Soil ingestion rate (g/yr)	1.830E+01	3.650E+01	---	SOIL
R018	Drinking water intake (L/yr)	4.780E+02	5.100E+02	---	DWI
R018	Contamination fraction of drinking water	1.000E+00	1.000E+00	---	FDW
R018	Contamination fraction of household water	not used	1.000E+00	---	FHHW
R018	Contamination fraction of livestock water	1.000E+00	1.000E+00	---	FLW
R018	Contamination fraction of irrigation water	1.000E+00	1.000E+00	---	FIRW
R018	Contamination fraction of aquatic food	5.000E-01	5.000E-01	---	FR9
R018	Contamination fraction of plant food	5.000E-01	-1	---	FPLANT
R018	Contamination fraction of meat	1.000E+00	-1	---	FMEAT
R018	Contamination fraction of milk	1.000E+00	-1	---	FMILK
R019	Livestock fodder intake for meat (kg/day)	8.500E+00	6.800E+01	---	LFI5
R019	Livestock fodder intake for milk (kg/day)	1.700E+01	5.500E+01	---	LFI6
R019	Livestock water intake for meat (L/day)	5.000E+01	5.000E+01	---	LWI5
R019	Livestock water intake for milk (L/day)	1.600E+02	1.600E+02	---	LWI6
R019	Livestock soil intake (kg/day)	5.000E-01	5.000E-01	---	LSI
R019	Mass loading for foliar deposition (g/m**3)	1.000E-04	1.000E-04	---	MLFD
R019	Depth of soil mixing layer (m)	1.500E-01	1.500E-01	---	DM
R019	Depth of roots (m)	9.000E-01	9.000E-01	---	DROOT
R019	Drinking water fraction from ground water	1.000E+00	1.000E+00	---	FGWDW
R019	Household water fraction from ground water	not used	1.000E+00	---	FGWHH
R019	Livestock water fraction from ground water	1.000E+00	1.000E+00	---	FGWLW
R019	Irrigation fraction from ground water	1.000E+00	1.000E+00	---	FGWIR
R19B	Wet weight crop yield for Non-Leafy (kg/m**2)	7.000E-01	7.000E-01	---	YV(1)
R19B	Wet weight crop yield for Leafy (kg/m**2)	1.500E+00	1.500E+00	---	YV(2)
R19B	Wet weight crop yield for Fodder (kg/m**2)	1.100E+00	1.100E+00	---	YV(3)
R19B	Growing Season for Non-Leafy (years)	1.700E-01	1.700E-01	---	TE(1)
R19B	Growing Season for Leafy (years)	2.500E-01	2.500E-01	---	TE(2)
R19B	Growing Season for Fodder (years)	8.000E-02	8.000E-02	---	TE(3)

Site-Specific Parameter Summary (continued)

Menu	Parameter	User Input	Default	Used by RESRAD (If different from user input)	Parameter Name
R19B	Translocation Factor for Non-Leafy	1.000E-01	1.000E-01	---	TIV(1)
R19B	Translocation Factor for Leafy	1.000E+00	1.000E+00	---	TIV(2)
R19B	Translocation Factor for Fodder	1.000E+00	1.000E+00	---	TIV(3)
R19B	Dry Foliar Interception Fraction for Non-Leafy	2.500E-01	2.500E-01	---	RDRY(1)
R19B	Dry Foliar Interception Fraction for Leafy	2.500E-01	2.500E-01	---	RDRY(2)
R19B	Dry Foliar Interception Fraction for Fodder	2.500E-01	2.500E-01	---	RDRY(3)
R19B	Wet Foliar Interception Fraction for Non-Leafy	2.500E-01	2.500E-01	---	RWET(1)
R19B	Wet Foliar Interception Fraction for Leafy	2.500E-01	2.500E-01	---	RWET(2)
R19B	Wet Foliar Interception Fraction for Fodder	2.500E-01	2.500E-01	---	RWET(3)
R19B	Weathering Removal Constant for Vegetation	2.000E+01	2.000E+01	---	WLAM
C14	C-12 concentration in water (g/cm**3)	not used	2.000E-05	---	C12WTR
C14	C-12 concentration in contaminated soil (g/g)	not used	3.000E-02	---	C12CZ
C14	Fraction of vegetation carbon from soil	not used	2.000E-02	---	CSOIL
C14	Fraction of vegetation carbon from air	not used	9.800E-01	---	CAIR
C14	C-14 evasion layer thickness in soil (m)	not used	3.000E-01	---	DMC
C14	C-14 evasion flux rate from soil (1/sec)	not used	7.000E-07	---	EVSN
C14	C-12 evasion flux rate from soil (1/sec)	not used	1.000E-10	---	REVSN
C14	Fraction of grain in beef cattle feed	not used	8.000E-01	---	AVFG4
C14	Fraction of grain in milk cow feed	not used	2.000E-01	---	AVFG5
STOR	Storage times of contaminated foodstuffs (days):				
STOR	Fruits, non-leafy vegetables, and grain	1.400E+01	1.400E+01	---	STOR_T(1)
STOR	Leafy vegetables	1.000E+00	1.000E+00	---	STOR_T(2)
STOR	Milk	1.000E+00	1.000E+00	---	STOR_T(3)
STOR	Meat and poultry	2.000E+01	2.000E+01	---	STOR_T(4)
STOR	Fish	7.000E+00	7.000E+00	---	STOR_T(5)
STOR	Crustacea and mollusks	7.000E+00	7.000E+00	---	STOR_T(6)
STOR	Well water	1.000E+00	1.000E+00	---	STOR_T(7)
STOR	Surface water	1.000E+00	1.000E+00	---	STOR_T(8)
STOR	Livestock fodder	4.500E+01	4.500E+01	---	STOR_T(9)
R021	Thickness of building foundation (m)	not used	1.500E-01	---	FLOOR1
R021	Bulk density of building foundation (g/cm**3)	not used	2.400E+00	---	DENSFL
R021	Total porosity of the cover material	not used	4.000E-01	---	TPCV
R021	Total porosity of the building foundation	not used	1.000E-01	---	TPFL
R021	Volumetric water content of the cover material	not used	5.000E-02	---	PH2OCV
R021	Volumetric water content of the foundation	not used	3.000E-02	---	PH2OFL
R021	Diffusion coefficient for radon gas (m/sec):				
R021	in cover material	not used	2.000E-06	---	DIFCV
R021	in foundation material	not used	3.000E-07	---	DIFFL
R021	in contaminated zone soil	not used	2.000E-06	---	DIFCZ
R021	Radon vertical dimension of mixing (m)	not used	2.000E+00	---	HMIX
R021	Average building air exchange rate (1/hr)	not used	5.000E-01	---	REXG
R021	Height of the building (room) (m)	not used	2.500E+00	---	HRM
R021	Building interior area factor	not used	0.000E+00	---	FAI
R021	Building depth below ground surface (m)	not used	-1.000E+00	---	DMFL
R021	Emanating power of Rn-222 gas	not used	2.500E-01	---	EMANA(1)
R021	Emanating power of Rn-220 gas	not used	1.500E-01	---	EMANA(2)
TITL	Number of graphical time points	32	---	---	NPTS

Site-Specific Parameter Summary (continued)

Menu	Parameter	User Input	Default	Used by RESRAD (If different from user input)	Parameter Name
TITL	Maximum number of integration points for dose	17	---	---	LYMAX
TITL	Maximum number of integration points for risk	1	---	---	KYMAX

Summary of Pathway Selections

Pathway	User Selection
1 -- external gamma	active
2 -- inhalation (w/o radon)	active
3 -- plant ingestion	active
4 -- meat ingestion	active
5 -- milk ingestion	active
6 -- aquatic foods	active
7 -- drinking water	active
8 -- soil ingestion	active
9 -- radon	suppressed
Find peak pathway doses	active

Contaminated Zone Dimensions	
Area:	1.00 square meters
Thickness:	0.08 meters
Cover Depth:	0.00 meters

Initial Soil Concentrations, pCi/g	
Sr-90	1.000E+00

Total Dose TDOSE(t), mrem/yr
Basic Radiation Dose Limit = 2.500E+01 mrem/yr
Total Mixture Sum M(t) = Fraction of Basic Dose Limit Received at Time (t)

t (years):	0.000E+00	1.000E+00	3.000E+00	1.000E+01	3.000E+01	1.000E+02	3.000E+02	1.000E+03
TDOSE(t):	2.058E-01	1.587E-01	9.413E-02	1.503E-02	7.367E-05	8.366E-05	0.000E+00	0.000E+00
M(t):	8.231E-03	6.348E-03	3.765E-03	6.012E-04	2.947E-06	3.347E-06	0.000E+00	0.000E+00

Maximum TDOSE(t): 2.058E-01 mrem/yr at t = 0.000E+00 years

Total Dose Contributions TDOSE(i,p,t) for Individual Radionuclides (i) and Pathways (p)
As mrem/yr and Fraction of Total Dose At t = 0.000E+00 years

Water Independent Pathways (Inhalation excludes radon)

Radio-	Ground		Inhalation		Radon		Plant		Meat		Milk		Soil	
Nuclide	mrem/yr	fract.	mrem/yr	fract.	mrem/yr	fract.	mrem/yr	fract.	mrem/yr	fract.	mrem/yr	fract.	mrem/yr	frac
Sr-90	1.258E-05	0.0001	2.118E-08	0.0000	0.000E+00	0.0000	1.575E-01	0.7652	2.651E-02	0.1288	2.180E-02	0.1059	1.415E-08	0.00
Total	1.258E-05	0.0001	2.118E-08	0.0000	0.000E+00	0.0000	1.575E-01	0.7652	2.651E-02	0.1288	2.180E-02	0.1059	1.415E-08	0.00

Total Dose Contributions TDOSE(i,p,t) for Individual Radionuclides (i) and Pathways (p)
As mrem/yr and Fraction of Total Dose At t = 0.000E+00 years

Water Dependent Pathways

Radio-	Water		Fish		Radon		Plant		Meat		Milk		All Pathways	
Nuclide	mrem/yr	fract.	mrem/yr	fract.	mrem/yr	fract.	mrem/yr	fract.	mrem/yr	fract.	mrem/yr	fract.	mrem/yr	frac
Sr-90	0.000E+00	0.0000	0.000E+00	0.0000	0.000E+00	0.0000	0.000E+00	0.0000	0.000E+00	0.0000	0.000E+00	0.0000	2.058E-01	1.00
Total	0.000E+00	0.0000	0.000E+00	0.0000	0.000E+00	0.0000	0.000E+00	0.0000	0.000E+00	0.0000	0.000E+00	0.0000	2.058E-01	1.00

*Sum of all water independent and dependent pathways.

Probabilistic Input

Number of Sample Runs: 300

Number	Name	Distribution	Parameters			
1	AREA	TRIANGULAR	.5	1	2	
2	THICK0	NORMAL	.075	.5		
3	DENSCZ	TRUNCATED NORMAL	1.52	.23	.001	.999
4	DCACTC(1)	NORMAL	32	.5		

Probabilistic Total Dose Summary

Nuclide (j)	Peak Time	Peak Dose	DOSE(j,t), mrem/yr t= 0.00E+00	1.00E+00	3.00E+00	1.00E+01	3.00E+01	1.00E+02	3.00E+02	1.00E+03
Sr-90										
Min	0.00E+00	0.00E+00	0.00E+00	0.00E+00	0.00E+00	0.00E+00	0.00E+00	0.00E+00	0.00E+00	0.00E+00
Max	0.00E+00	2.49E+00	2.49E+00	2.41E+00	2.25E+00	1.78E+00	9.14E-01	8.86E-02	1.15E-04	6.47E-15
Avg	0.00E+00	6.35E-01	6.35E-01	5.95E-01	5.25E-01	3.47E-01	1.19E-01	4.58E-03	1.46E-06	2.62E-17
Std	0.00E+00	7.96E-01	7.96E-01	7.61E-01	6.94E-01	5.05E-01	2.09E-01	1.18E-02	9.00E-06	3.80E-16
∑ALL										
Min	0.00E+00	0.00E+00	0.00E+00	0.00E+00	0.00E+00	0.00E+00	0.00E+00	0.00E+00	0.00E+00	0.00E+00
Max	0.00E+00	2.49E+00	2.49E+00	2.41E+00	2.25E+00	1.78E+00	9.14E-01	8.86E-02	1.15E-04	6.47E-15
Avg	0.00E+00	6.35E-01	6.35E-01	5.95E-01	5.25E-01	3.47E-01	1.19E-01	4.58E-03	1.46E-06	2.62E-17
Std	0.00E+00	7.96E-01	7.96E-01	7.61E-01	6.94E-01	5.05E-01	2.09E-01	1.18E-02	9.00E-06	3.80E-16

∑ALL is total dose summed for all nuclides.

RESRAD Regression and Correlation output 06/14/12 11:38 Page: Coef 1
Title : Reactor Security Bldg San Sewer BP1-1 Intruder Scenario w Unit Sr-90
Input File : C:\RESRAD_FAMILY\RESRAD\USERFILES\PBRF BP\06141206.RAD

Coefficients for peak of mean dose time Dose

Coefficient =	PCC		SRC		PRCC		SRRC	
Repetition =	1		1		1		1	
Description of Probabilistic Variable	Sig	Coeff	Sig	Coeff	Sig	Coeff	Sig	Coeff
Area of contaminated zone	3	0.19	3	0.08	3	0.19	3	0.05
Thickness of contaminated zone	1	0.90	1	0.89	1	0.96	1	0.95
Density of contaminated zone	4	-0.15	4	-0.06	4	-0.04	4	-0.01
Kd of Sr-90 in Contaminated Zone	2	-0.31	2	-0.14	2	-0.25	2	-0.07
R-SQUARE		0.82		0.82		0.92		0.92

-Rank is set to zero if the dose is zero or the correlation matrix is singular.
-R-SQUARE varies between 0 and 1 and is called the coefficient of determination; it provides a measure of the variation in the dependent variable (Dose) explained by regression on the independent variables.

Dose Assessment for Miscellaneous and Buried Piping

TBD-12-002

Appendix E

Dose Assessment Details

Table of Contents

List of Tables

List of Figures

1.0 Introduction – Dose Calculation Methods

This Appendix presents the methods used to convert the outputs from MicroShield and RESRAD to dose to individuals in mrem/y. The MicroShield outputs are dose to a dose receptor in mrem/y for unit concentration of specified radionuclides in an individual pipe. The dose to receptors from all radionuclides from all pipes for the specified number of hours per year occupancy is calculated using an EXCEL spreadsheet template. To illustrate the method, an image of a typical template is shown in Figure 1.

Figure 1, Example Dose Calculation Template using MicroShield Output

	A	B	C	D	E	F
1	**Nuclide Activity Fractions**					
2	Nuclide	Cs-137	Co-60	Sr-90	Sum	
3	Activity Fraction	0.84	0.01	0.16	1.00	
4	Gamma Activity Fraction	0.993	0.007		1.00	
5					**Annual Dose**	
6	**Dose from Unit Activity - MicroShield Output**				Activity dpm/100-cm^2	
7	Pipe No.	Co-60	Cs-137		Average	Maximum
8		mrem/h per dpm/100-cm^2				
9	A	7.16E-17	4.53E-22		33143	146830
10	B	1.15E-16	8.63E-20		Dose (mrem/h)	
11	C	7.16E-17	4.53E-22		9.39E-14	4.16E-13
12	D	1.15E-16	8.63E-20		hr/y	
13	Total	3.73E-16	1.73E-19		2340	
14	Activity Weighted Total	2.66E-18	1.72E-19		Dose (mrem/y)	
15	Grand Total	2.83E-18			2.20E-10	9.73E-10
16	**DCGL Calculation**					
17	Nuclide	Co-60	Cs-137			
18	DCGL (dpm/100-cm^2 per mrem/y)	1.14E+12	2.46E+15			
19	**Cell Formulas**					
20	Cell	Formula				
21	B13	=SUM(B9:B12)				
22	C13	=SUM(C9:C12)				
23	B14	=B13*C4				
24	C14	=C13*B4				
25	B15	=B14+C14				
26	E11	=B15*E9				
27	F11	=B15*F9				
28	E15	=E11*E13				
29	F15	=F11*E13				
30	B18	=1/(B12*E13)				
31	C18	=1/(C13+E13)				

The method for calculating doses and DCGLs for buried piping from MicroShield outputs uses EXCEL templates similar to that shown in Figure 1, with some minor differences. An example of a template for dose calculations for buried piping using RESRAD results is shown in Figure 2. The example is for the dose to the Resident Farmer for the BP-1-1 case.

Figure 2, Example Dose Calculation Template for Buried Piping using RESRAD Output

	A	B	C	D	E
2	**BP-1-1Nuclide Activity Fractions**				
3	Nuclide	Cs-137	Co-60	Sr-90	Sum
4	Act Fract.	0.399	0.044	0.378	0.821
5	Normalized Act Fract	0.49	0.05	0.46	1.000
6	**BP-1-1 Soil Radionuclide Inventory (from Inventory Calculations)**				
7	BP-1-1 Soil Radionuclide Inventory	Total activity (pCi/g)	Cs-137 Activity (pCi/g)	Co-60 Activity (pCi/g)	Sr-90 Activity (pCi/g)
8	Avg	16.66	8.09	0.89	7.68
9	Max	28.57	13.88	1.52	13.17
10	**BP-1-1 Resident Farmer Dose Calc**				
11		Cs-137	Co-60	Sr-90	
12	RESRAD Results	(mrem/y per pCi/g)	(mrem/y per pCi/g)	(mrem/y per pCi/g)	
13		1.32E-11	3.34E-09	1.28E-04	
14	**BP-1-1 Dose Calculation**				
15	Dose from	Cs-137	Co-60	Sr-90	Total Dose (mrem/y)
16	Avg Conc	1.07E-10	2.96E-09	9.83E-04	9.83E-04
17	Max Conc	1.83E-10	5.08E-09	1.69E-03	1.69E-03
18	**BP-1-1 DCGL Calculation**				
19		Cs-137	Co-60	Sr-90	
20	RESRAD Results (mrem/y per pCi/g)	1.32E-11	3.34E-09	1.28E-04	
21	pCi/g per dpm/100-cm^2 (from inventory calc)	1.18E-03	1.18E-03	1.18E-03	
22	DCGL (dpm/100-cm^2 per mrem/y)	6.40E+13	2.53E+11	6.60E+06	
23					
24	**Example Cell Formulas**				
25	Cell	Formula			
26	B16	=B13*C8			
27	B17	=B13*C9			
28	B22	=1/(B20*B21)			

2.0 MP-9-1, Interim Storage Lines

The dose and DCGL calculation details and results for the MP-9-1 Interim Storage Lines are shown in Table 1. These results are for the MP-9-1 base case where the dose receptor is located in the Hot Lab above the center of the conduit sheath length. The calculations for the alternate case, where the dose receptor is located in the Hot Pipe Tunnel are shown in Table 2.

Table 1, MP-9-1 Base Case Dose Calculation Details

Activity Fractions					
Nuclide	Cs-137	Co-60	Sr-90	Sum	
Activity Fraction	0.84	0.01	0.16	1.00	
Gamma Activity Fraction	0.993	0.007		1.00	
Dose Calculation				Activity dpm/100-cm^2	
Pipe No.	Co-60	Cs-137		Average	Maximum
	mrem/h per dpm/100-cm^2				
A	1.53E-13	8.95E-16		33143	146830
B	1.06E-13	7.02E-16		Dose (mrem/h)	
C	1.53E-13	8.95E-16		2.27E-10	1.01E-09
D	1.06E-13	7.02E-16		hr/y	
Total	5.18E-13	3.19E-15		2340	
Activity Weighted Total	3.69E-15	3.17E-15		Dose (mrem/y)	
Grand Total	6.86E-15			5.32E-07	2.36E-06
DCGL Calculation					
Nuclide	Co-60	Cs-137			
DCGL (dpm/100-cm^2 per mrem/y)	8.26E+08	1.34E+11			

Table 2, MP-9-1 Alternate Case Dose Calculation Details

Nuclide Activity Fractions					
Nuclide	Cs-137	Co-60	Sr-90	Sum	
Activity Fraction.	0.84	0.01	0.16	1.00	
Gamma Activity Fraction	0.993	0.007		1.00	
Dose from Unit Activity - MicroShield Output				Activity dpm/100-cm^2	
Pipe No.	Co-60	Cs-137		Average	Maximum
	mrem/h per dpm/100-cm^2				
A	7.16E-17	4.53E-22		33143	146830
B	1.15E-16	8.63E-20		Dose (mrem/h)	
C	7.16E-17	4.53E-22		9.39E-14	4.16E-13
D	1.15E-16	8.63E-20		hr/y	
Total	3.73E-16	1.73E-19		2340	
Activity Weighted Total	2.66E-18	1.72E-19		Dose (mrem/y)	
Grand Total	2.83E-18			2.20E-10	9.73E-10
DCGL Calculation					
Nuclide	Co-60	Cs-137			
DCGL (dpm/100-cm^2 per mrem/y)	1.14E+12	2.46E+15			

3.0 MP-10-4, Quad D Penetrations

The dose and DCGL calculation results for the MP-10-4 Quad D Penetrations are shown in Table 3. These results are for the case where the dose receptor is located above six pipe cluster. The dose receptor is 1 meter above the Quad D wall on the walkway between the wall and the Dry Annulus.

Table 3, MP-10-4 Dose Calculation Details

Dose Point is Above Quad D Wall, in line with the center of lines 312 and 313.					
Nuclide	Cs-137	Co-60	Sr-90	Sum	
Act Fraction	0.670	0.331	0.000	1.00	
Gamma Act Fraction	0.670	0.331		1.00	
				Activity dpm/100-cm^2	
Pipe No.	Co-60	Cs-137		Average	Maximum
	mrem/h per dpm/100-cm^2				
310	2.502-19	1.23E-23		12882	28985
311	2.95E-19	1.66E-23		Dose (mrem/h)	
312	4.30E-19	2.78E-23		4.40E-15	9.90E-15
313	2.666-19	1.56E-23		hr/y	
314	1.98E-19	1.04E-23		2340	
315	1.11E-19	4.70E-24		Dose (mrem/y)	
Total	1.03E-18	8.73E-23		1.03E-11	2.32E-11
Act Weighted Total	3.41E-19	5.85E-23			
Grand Tot	3.41E-19				
DCGL Calculation					
Nuclide	Co-60	Cs-137			
DCGL (dpm/100-cm^2 per mrem/y)	4.14E+14	4.89E+18			

4.0 MP-10-5 Quad B and C Penetrations

The dose and DCGL calculation results for the MP-10-5 Quad B and C Penetrations are shown in Table 3. These results are for the case where the dose receptor is located on the walkway above the Quad C wall. Two cases were evaluated for MP-10-5. The details and results for the base case, the dose point with the highest expected dose, are shown in Table 4. The calculations for the alternate case are shown in Table 5.

Table 4, MP-10-5 Base Case Dose Calculation Details

Base Case Dose Point is Above Quad C Wall, directly above Line 397.					
Nuclide	Cs-137	Co-60	Sr-90	Sum	
Activity Fraction	0.670	0.331	0.000	1.00	
Gamma Activity Fraction	0.670	0.331		1.00	
				Activity dpm/100-cm^2	
Pipe No.	Co-60	Cs-137		Average	Maximum
	mrem/h per dpm/100-cm^2				
397	3.32E-11	2.04E-12		12453	31132
396	3.19E-11	1.95E-12		Dose (mrem/h)	
398	3.19E-11	1.95E-12		4.49E-07	1.12E-06
387	4.43E-19	2.66E-23		hr/y	
389	4.43E-19	2.66E-23		2340	
337	3.54E-20	1.00E-24		Dose (mrem/y)	
Total	9.71E-11	5.95E-12		1.05E-03	2.63E-03
Activity Weighted Total	3.21E-11	3.98E-12			
Grand Total	3.61E-11				
DCGL Calculation					
Nuclide	Co-60	Cs-137			
DCGL (dpm/100-cm^2 per mrem/y)	4.40E+06	7.19E+07			

Table 5, MP-10-5 Alternate Case Dose Calculation Details

In the Alternative Scenario, the dose Point is Above Quad C Wall, directly above Line 387.						
Nuclide	Cs-137	Co-60	Sr-90	Sum		
Activity Fraction	0.670	0.331	0.000	1.00		
Gamma Activity Fraction	0.670	0.331		1.00		
				Activity dpm/100-cm^2		
Pipe No.	Co-60	Cs-137		Average	Maximum	
	mrem/h per dpm/100-cm^2					
387	1.10E-18	9.07E-23		12453	31132	
396	2.35E-11	1.32E-12		Dose (mrem/h)		
397	1.37E-11	6.37E-13		2.11E-07	5.27E-07	
398	9.21E-12	3.98E-13		hr/y		
337	2.16E-19	1.17E-23		2340		
389	3.46E-20	8.37E-25		Dose (mrem/y)		
Total	4.64E-11	2.36E-12		4.93E-04	1.23E-03	
Activity Weighted Total	1.54E-11	1.58E-12				
Grand Tot	1.69E-11					
DCGL Calculation						
Nuclide	Co-60	Cs-137				
DCGL (dpm/100-cm^2 per mrem/y)	9.20E+06	1.81E+08				

5.0 MP-10-3 Quad A Penetrations

The dose and DCGL calculation results for the MP-10-3 Quad A Penetrations are shown in Table 6. These results are for the case where the dose receptor is located on the walkway above the Quad A wall.

Table 6, MP-10-3 Dose Calculation Details

Dose Point is Above Quad A Wall, above the center of lines 304 and 305.					
Nuclide	Cs-137	Co-60	Sr-90	Sum	
Activity Fraction.	0.250	0.750	0.000	1.00	
Gamma Activity Fraction	0.250	0.750		1.00	
				Activity dpm/100-cm^2	
Pipe No.	Co-60	Cs-137		Average	Maximum
	mrem/h per dpm/100-cm^2				
302	1.11E-19	4.70E-24		10626	27438
303	1.41E-19	6.96E-24		Dose (mrem/h)	
304	2.67E-19	1.57E-23		1.10E-14	2.85E-14
305	4.30E-19	2.78E-23		hr/y	
306	2.95E-19	1.66E-23		2340	
307	2.50E-19	1.23E-23		Dose (mrem/y)	
Total	1.38E-18	8.40E-23		2.58E-11	6.66E-11
Activity Weighted Total	1.04E-18	2.10E-23			
Grand Total	1.04E-18				
DCGL Calculation					
Nuclide	Co-60	Cs-137			
DCGL (dpm/100-cm^2 per mrem/y)	3.09E+14	5.09E+18			

6.0 BP-2-1 Pentolite Ditch Crossover

Dose calculations for BP-2-1, the Pentolite Ditch Crossover were calculated using both MicroShield and RESRAD results. Details of the dose and DCGL calculations using MicroShield results are shown in Table 7. The dose calculations using RESRAD results are shown in Table 8.

Table 7, BP-2-1 Dose Calculation Details using MicroShield Results

Pentolite Ditch Crossover with Dose Point above the Pipes on the Crossover						
Nuclide	Cs-137	Co-60	Sr-90	Sum		
Activity Fraction	0.924	0.076	0.000	1.00		
Gamma Activity Fraction	0.924	0.076		1.00		
					Activity dpm/100-cm^2	
Pipe No.	Co-60	Cs-137			Average	Maximum
	mrem/h per dpm/100-cm2					
A	6.64E-12	9.63E-14			12459	16837
B	6.64E-12	9.63E-14			Dose (mrem/h)	
Total	1.33E-11	1.93E-13			1.47E-08	1.99E-08
Activity Weighted Total	1.00E-12	1.78E-13			hr/y	
Grand Total	1.18E-12				2340	
					Dose (mrem/y)	
					3.45E-05	4.66E-05
				Occupancy (h/y)	Dose From Average Activity (mrem)	Dose From Max Activity (mrem)
				100	1.47E-06	1.99E-06
				2340	3.45E-05	4.66E-05
				6750	9.94E-05	1.34E-04
DCGL Calculation						
Nuclide	Co-60	Cs-137				
DCGL (dpm/100-cm^2 per mrem/y)	3.22E+07	2.22E+09				

Table 8, BP-2-1 Dose Calculation Details using RESRAD Results

Nuclide	Cs-137	Co-60	Sr-90	Sum
Act Fraction	0.924	0.076	0.000	1.00
Gamma Act Fraction	0.924	0.076		1.00
BP-2-1 Radionuclide Inventory	Total activity (pCi/g)	Cs-137 Activity (pCi/g)	Co-60 Activity (pCi/g)	Sr-90 Activity (pCi/g)
Avg.	1.86	1.72	0.14	
Max	2.51	2.32	0.19	
BP-2-1 Resident Farmer Dose calc				
	Cs-137	Co-60	Sr-90	
RESRAD Results	(mrem/y per pCi/g)	(mrem/y per pCi/g)	(mrem/y per pCi/g)	
	3.18E-17	1.34E-13		
Dose from	Cs-137	Co-60	Sr-90	Total Dose (mrem/y)
Avg. Concentration	5.47E-17	1.89E-14		1.90E-14
Max. Concentration	7.39E-17	2.55E-14		2.56E-14
BP-2-1 DCGL Calculation				
	Cs-137	Co-60	Sr-90	
RESRAD Results (mrem/y per pCi/g)	6.52E-02	1.06E-01		
pCi/g per dpm/100-cm^2 (from inventory calc)	1.49E-04	1.49E-04		
DCGL (dpm/100-cm^2 per mrem/y)	1.03E+05	6.33E+04		

7.0 BP-1-1 Sanitary System Drain SANS 11

Dose calculations for BP-2-1, the Sanitary System SANA 11 were calculated using both MicroShield and RESRAD. Details of the dose and DCGL calculations using MicroShield results are shown in Table 9. The dose calculations using RESRAD results are shown in Table 10.

Table 9, BP-1-1 Dose Calculation Details using MicroShield Results

Reactor Security Building Sanitary Sewer - dose calculation using MicroShield Results								
Nuclide	Cs-137	Co-60	Sr-90	Eu-154	Am-241	Ni-63	H-3	Sum
Activity Fraction	0.399	0.044	0.378	0.0028	0.0119	0.1637	0.0003	1.00
Gamma Activity Fraction	0.896	0.098		0.006				1.00
					Activity dpm/100-cm^2			
Pipe No.	Co-60	Cs-137	Eu-154		Average	Maximum		
	mrem/h per dpm/100-cm2							
BP-1-1	4.34E-14	1.37E-16	2.72E-14		14086	24148		
Total	4.34E-14	1.37E-16	2.72E-14		Dose (mrem/h)			
Activity Weighted Total	4.26E-15	1.23E-16	1.71E-16		6.41E-11	1.10E-10		
Grand Total	4.55E-15				hr/y			
					2340			
					Dose (mrem/y)			
					1.50E-07	2.57E-07		
				Occupancy (h/y)	Dose From Average Activity (mrem)	Dose From Max Activity (mrem)		
				100	6.41E-09	1.10E-08		
				2340	1.50E-07	2.57E-07		
				6750	4.33E-07	7.42E-07		
Nuclide	Co-60	Cs-137						
DCGL (dpm/100-cm^2 per mrem/y)	9.85E+09	3.11E+12						

Table 10, BP-1-1 Dose Calculation Details using RESRAD Results

BP-1-1Nuclide Activity Fractions				
Nuclide	Cs-137	Co-60	Sr-90	Sum
Activity Fraction	0.399	0.044	0.378	0.821
Normalized Act Fraction	0.49	0.05	0.46	1.000
BP-1-1 Soil Radionuclide Inventory (from Inventory Calculations)				
BP-1-1 Soil Radionuclide Inventory	Total activity (pCi/g)	Cs-137 Activity (pCi/g)	Co-60 Activity (pCi/g)	Sr-90 Activity (pCi/g)
Average	16.66	8.09	0.89	7.68
Max	28.57	13.88	1.52	13.17
BP-1-1 Resident Farmer Dose Calc				
	Cs-137	Co-60	Sr-90	
RESRAD Results	(mrem/y per pCi/g)	(mrem/y per pCi/g)	(mrem/y per pCi/g)	
	1.32E-11	3.34E-09	1.28E-04	
BP-1-1 Dose Calculation				
Dose from	Cs-137	Co-60	Sr-90	Total Dose (mrem/y)
Average Concentration	1.07E-10	2.96E-09	9.83E-04	9.83E-04
Maximum Concentration	1.83E-10	5.08E-09	1.69E-03	1.69E-03
BP-1-1 DCGL Calculation				
	Cs-137	Co-60	Sr-90	
RESRAD Results (mrem/y per pCi/g)	1.32E-11	3.34E-09	1.28E-04	
pCi/g per dpm/100-cm^2 (from inventory calc)	1.18E-03	1.18E-03	1.18E-03	
DCGL (dpm/100-cm^2 per mrem/y)	6.40E+13	2.53E+11	6.60E+06	